2010 TRANSMISSION

Automatic Transmission - 6L45/6L50/6L80/6L90 - Camaro

COMPONENT LOCATOR

DISASSEMBLED VIEWS (6L50)

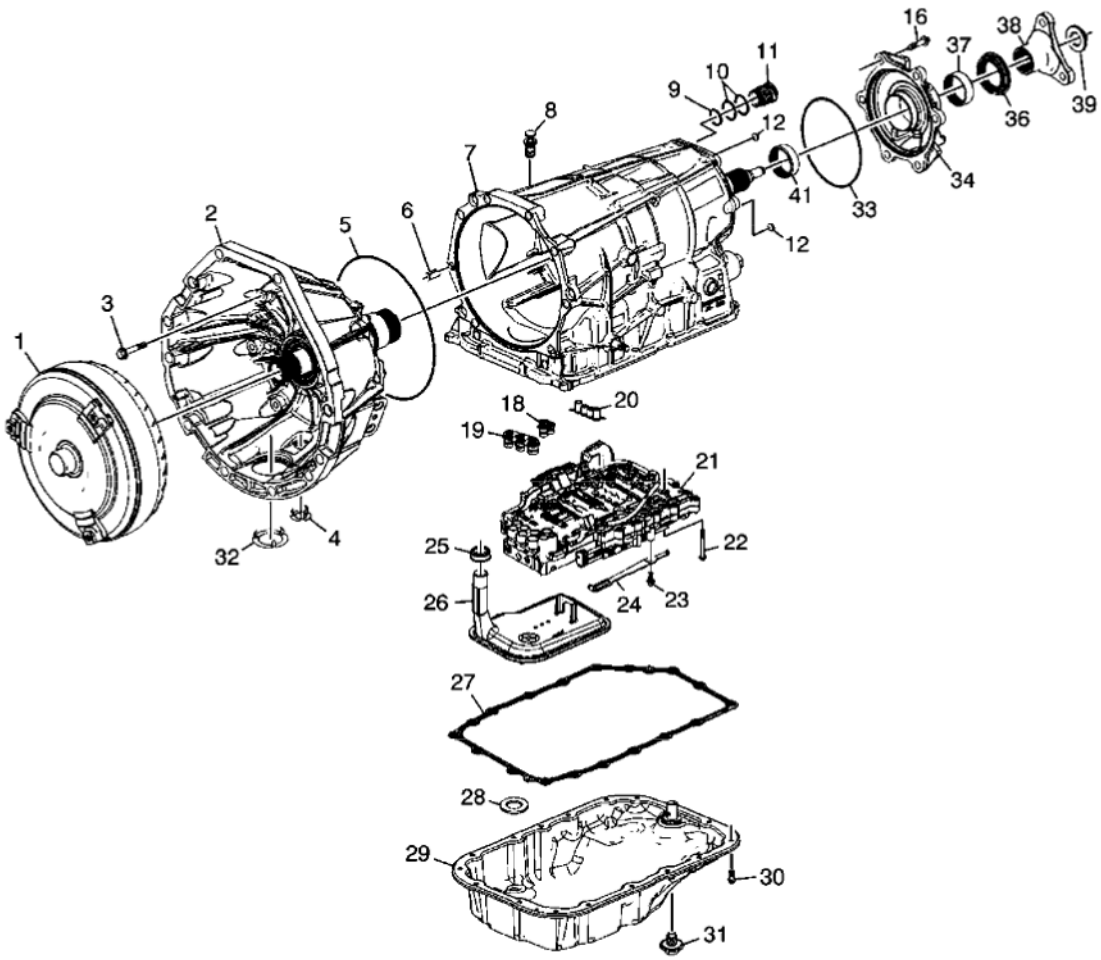

Fig. 1: Case & Associated Parts
Courtesy of GENERAL MOTORS CORP.

Callout	Component Name
1	Torque Converter Assembly
2	Torque Converter (with Fluid Pump) Housing Assembly
3	Bolt, M10 x 50 mm
4	Torque Converter Housing Access Hole Cover
5	A/Trans Fluid Pump Seal

cardiagn.com

6	Torque Converter Housing Locator Pin
7	A/Trans Case Assembly
8	Trans Fluid Fill Tube Plug Assembly
9	A/Trans Connector Seal
10	A/Trans Connector (O-ring) Seal
11	A/Trans Electrical Connector Passage Sleeve
12	A/Trans Case Plug
16	Bolt, M10 x 40 mm - Model Dependent
18	A/Trans Fluid Pump Seal Assembly
19	A/Trans Fluid Pump Seal Assembly
20	Center Support Fluid Passage Seal Assembly
21	Control (with Body and Valve) Valve Assembly
22	Bolt, M5 x 73 mm
23	Bolt, M6 x 14.5 mm
24	Manual Shaft Detent Assembly
25	A/Trans Fluid Filter Seal Assembly
26	A/Trans Fluid Filter Assembly
27	A/Trans Fluid Pan Gasket
28	A/Trans Fluid Pan Magnet
29	A/Trans Fluid Pan Assembly
30	Bolt, M6 x 20 mm
31	Trans Oil Level Check Plug
32	Torque Converter Housing Access Hole Cover
33	A/Trans Case Extension Seal
34	A/Trans Case Extension
36	Output Shaft Seal Assembly
37	Output Shaft Bearing Assembly
38	Prop Shaft Trans Flange
39	Front Prop Shaft Flange Nut
41	Output Shaft Bearing Assembly - Case

cardiagn.com

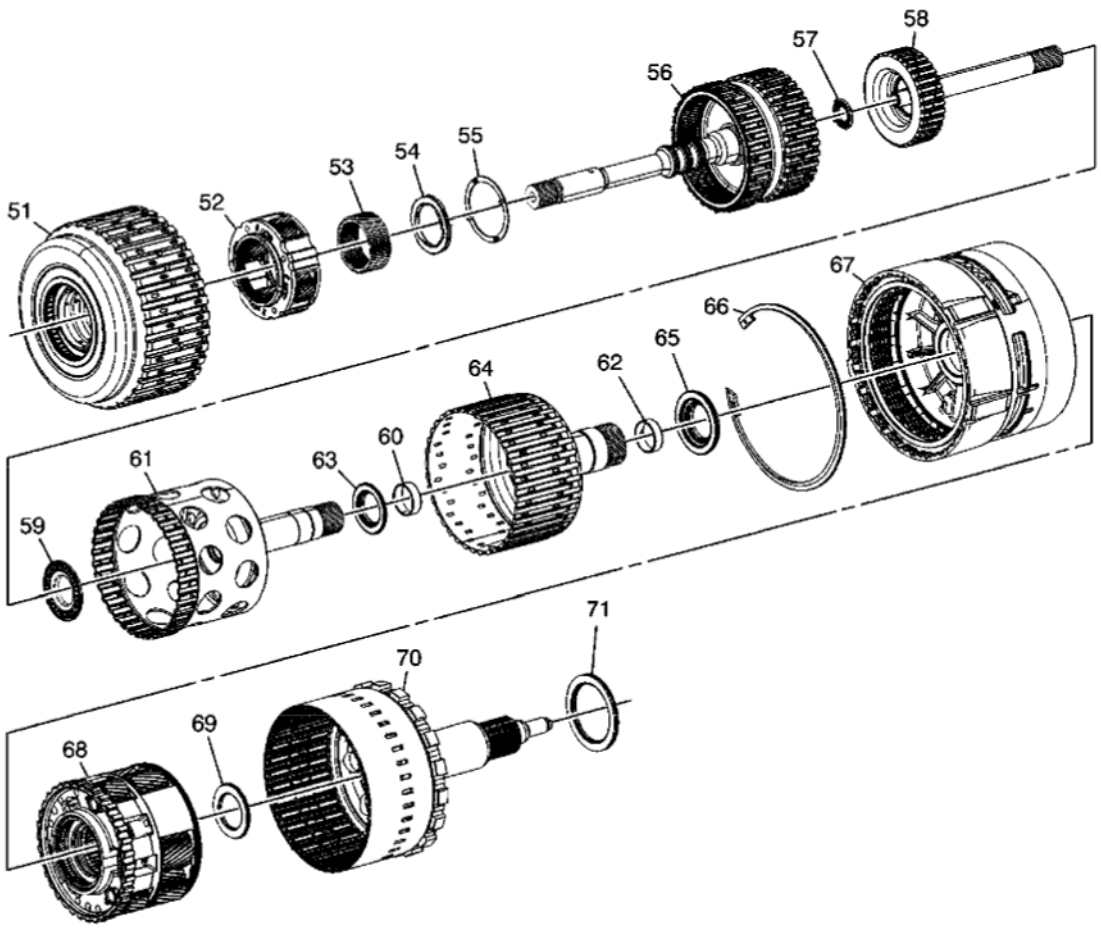

Fig. 2: Clutch Assemblies & Associated Parts
Courtesy of GENERAL MOTORS CORP.

Callout	Component Name
51	1-2-3-4 and 3-5 Reverse Clutch Assembly
52	Input Carrier Assembly
53	Input Sun Gear
54	Input Sun Gear Thrust Bearing
55	Input Sun Gear Thrust Washer
56	4-5-6 (w/ Turbine Shaft) Clutch Assembly
57	Turbine Shaft Thrust Bearing Assembly
58	4-5-6 Clutch (w/ Output Carrier Shaft and Dampener) Hub Assembly
59	4-5-6 Clutch Hub Thrust Bearing Assembly
60	Output Carrier Inner Sun Gear Shaft (Front) Bushing
61	1-2-3-4 Clutch (w/ Output Carrier Inner Sun Gear Shaft) Hub Assembly
62	Output Carrier Inner Sun Gear Shaft Bushing
63	1-2-3-4 Clutch Hub Thrust Bearing Assembly

cardiagn.com

64	2-6 and 3-5 Reverse Clutch (w/ Output Carrier Outer Sun Gear Shaft) Hub Assembly
65	2-6 and 3-5 Reverse Clutch Hub Thrust Bearing Assembly
66	Center Support Retaining Ring
67	Center (w/ 2-6 Low and Reverse Clutch) Support Assembly
68	Output Carrier Assembly
69	Output Carrier Thrust Bearing Assembly
70	Output Shaft Assembly
71	Output Shaft Thrust Bearing Assembly

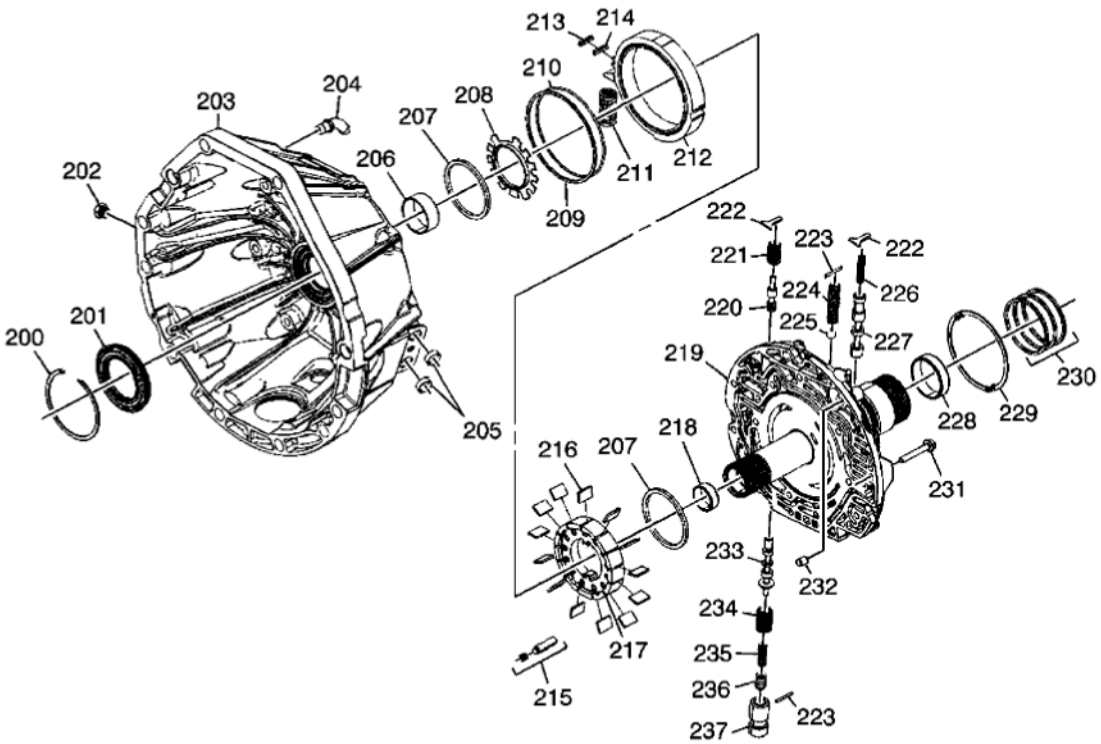

Fig. 3: Torque Converter (W/Fluid Pump) Housing Assembly
Courtesy of GENERAL MOTORS CORP.

Callout	Component Name
200	Torque Converter Fluid Seal Retaining Ring
201	Torque Converter Fluid Seal Assembly
202	Line Pressure Test Hole Plug
203	Torque Converter Housing - Model Dependent
204	A/Trans Vent Pipe
205	Trans Fluid Cooler Pipe Fitting Seal
206	Torque Converter Bushing
207	A/Trans Fluid Pump Vane Ring

cardiagn.com

208	A/Trans Fluid Pump Rotor Guide
209	A/Trans Fluid Pump Slide Fluid Seal Ring
210	A/Trans Fluid Pump Slide (O-ring) Seal
211	A/Trans Fluid Pump Slide Outer Spring
212	A/Trans Fluid Pump Slide
213	A/Trans Fluid Pump Slide Seal
214	A/Trans Fluid Pump Slide Seal Support
215	A/Trans Fluid Pump Slide Pivot Pin
216	A/Trans Fluid Pump Vane
217	A/Trans Fluid Pump Rotor
218	Turbine Shaft Front Bushing
219	A/Trans Fluid Pump Cover Assembly
220	Converter Feed Limit Valve
221	Converter Feed Limit Valve Spring
222	Valve Spring Retainer
223	Pressure Relief Ball Valve Spring Pin
224	Pressure Relief Ball Valve Spring
225	Pressure Relief Ball Valve
226	TCC Control Valve Spring
227	TCC Control Valve
228	Turbine Shaft Rear Bushing
229	1-2-3-4 and 3-5 Reverse Clutch Housing Thrust Washer
230	1-2-3-4 and 3-5 Reverse Clutch Fluid Seal Ring
231	Bolt, M6 x 40 mm
232	A/Trans Fluid Pump Locator Pin
233	Pressure Regulator Valve
234	Pressure Regulator Valve Outer Spring
235	Pressure Regulator Valve Inner Spring
236	Isolator Valve
237	Isolator Valve Sleeve

cardiagn.com

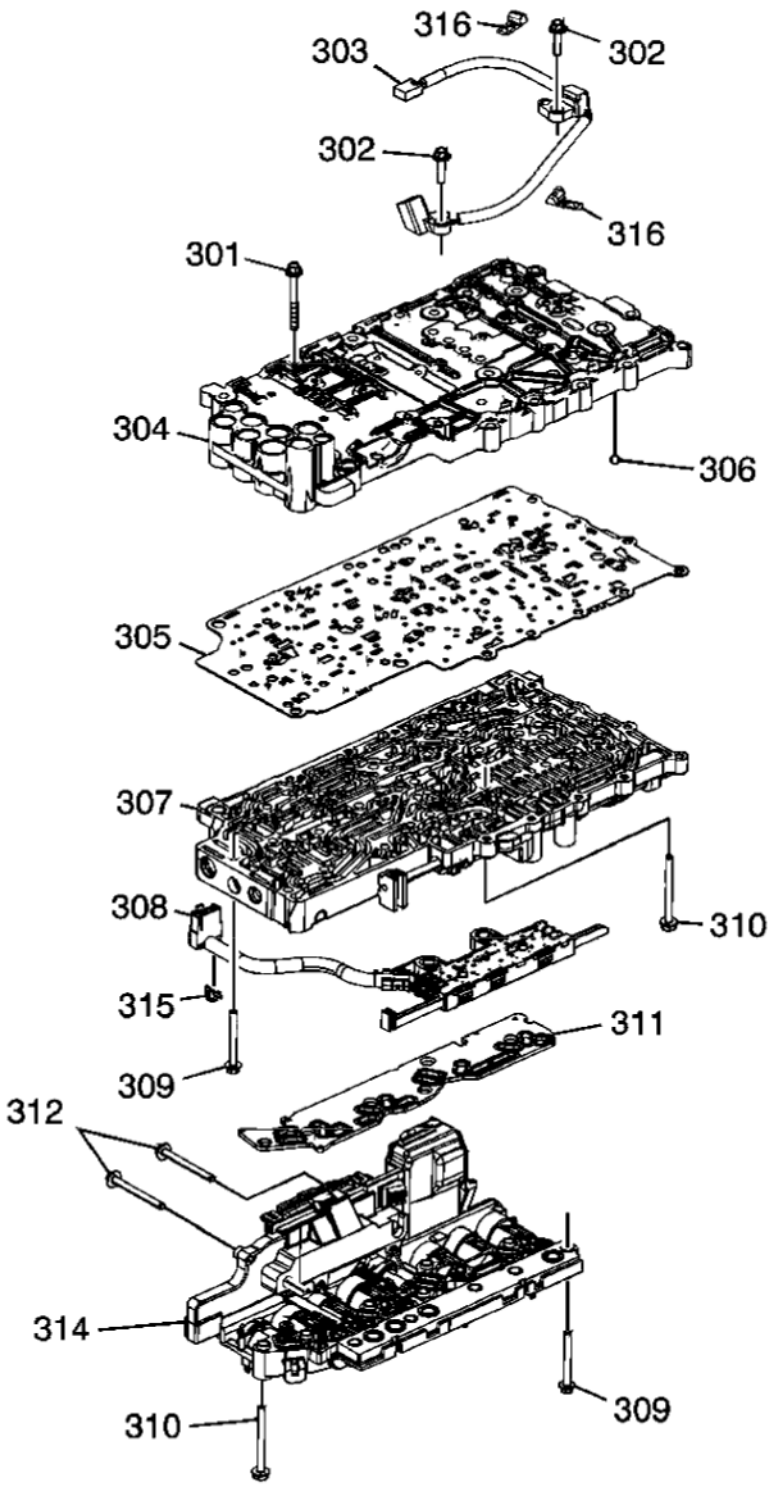

Fig. 4: Control (With Body & Valve) Valve Assembly
Courtesy of GENERAL MOTORS CORP.

Callout	Component Name

cardiagn.com

301	Bolt, M5 x 36 mm
302	Bolt, M6 x 20 mm
303	A/Trans Input and Output Speed Sensor Assembly
304	Control Valve Upper Body Assembly
305	Control Valve Body Spacer (w/ Gasket) Plate Assembly
306	Control Valve Body Ball Check Valve
307	Control Valve Lower Body Assembly
308	A/Trans Manual Shift Shaft Position Switch Assembly
309	Bolt, M5 x 45 mm
310	Bolt, M5 x 55 mm
311	Filter Plate Assembly
312	Bolt, M5 x 53 mm
314	Control Solenoid (w/ Body and TCM) Valve Assembly
315	A/Trans Manual Shaft Position Switch Wiring Harness Clip
316	A/Trans Input and Output Speed Sensor Wiring Harness Clip

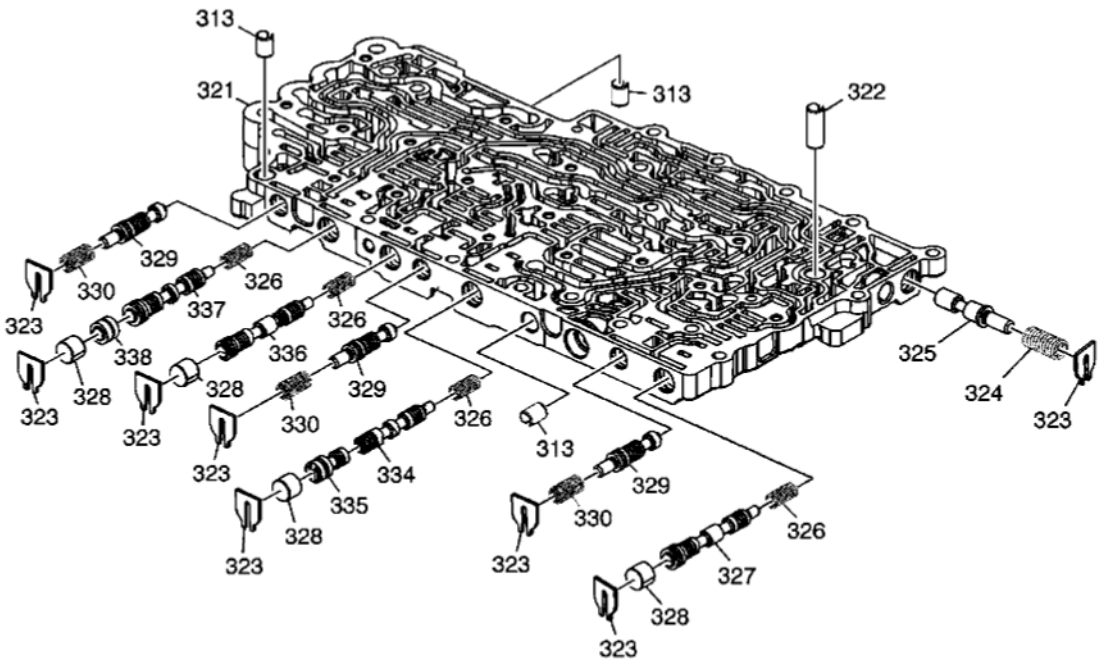

Fig. 5: Upper Control Valve Body Assembly
Courtesy of GENERAL MOTORS CORP.

Callout	Component Name
313	Control Valve Body Locator Pin
321	Control Valve Upper Body
322	Control Valve Body Locator Pin
323	Retainer

cardiagn.com

324	Actuator Feed Limit Valve Spring
325	Actuator Feed Limit Valve
326	Clutch Regulator Valve Spring
327	CBR1/4-5-6 Clutch Regulator Valve
328	Clutch Regulator Valve Bore Plug
329	Clutch Boost Valve
330	Clutch Boost Valve Spring
334	2-6 Clutch Regulator Valve
335	2-6 Clutch Regulator Valve Gain Valve
336	3-5 Reverse Clutch Regulator Valve
337	1-2-3-4 Clutch Regulator Valve
338	Shuttle Valve

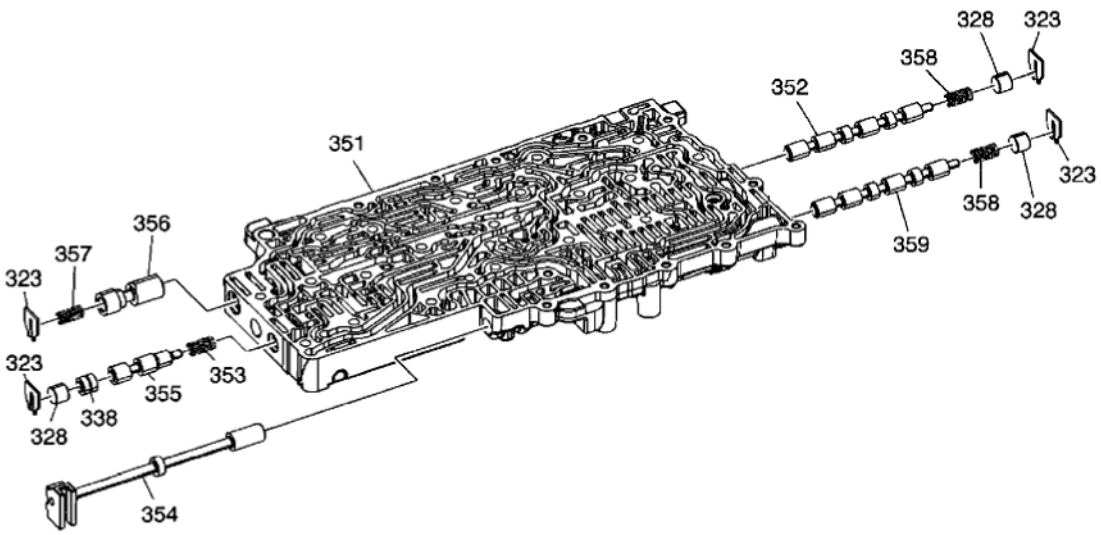

Fig. 6: Lower Control Valve Body Assembly
Courtesy of GENERAL MOTORS CORP.

Callout	Component Name
323	Retainer
328	Clutch Regulator Valve Bore Plug
338	Shuttle Valve
351	Control Valve Lower Body
352	Clutch Select Solenoid Valve 3
353	TCC Regulator Apply Valve Spring
354	Manual Valve
355	TCC Regulator Apply Valve
356	Clutch Piston Dam Feed Regulator Valve
357	Clutch Piston Dam Feed Regulator Valve Spring

cardiagn.com

358	Clutch Select Solenoid Valve Spring
359	Clutch Select Solenoid Valve 2

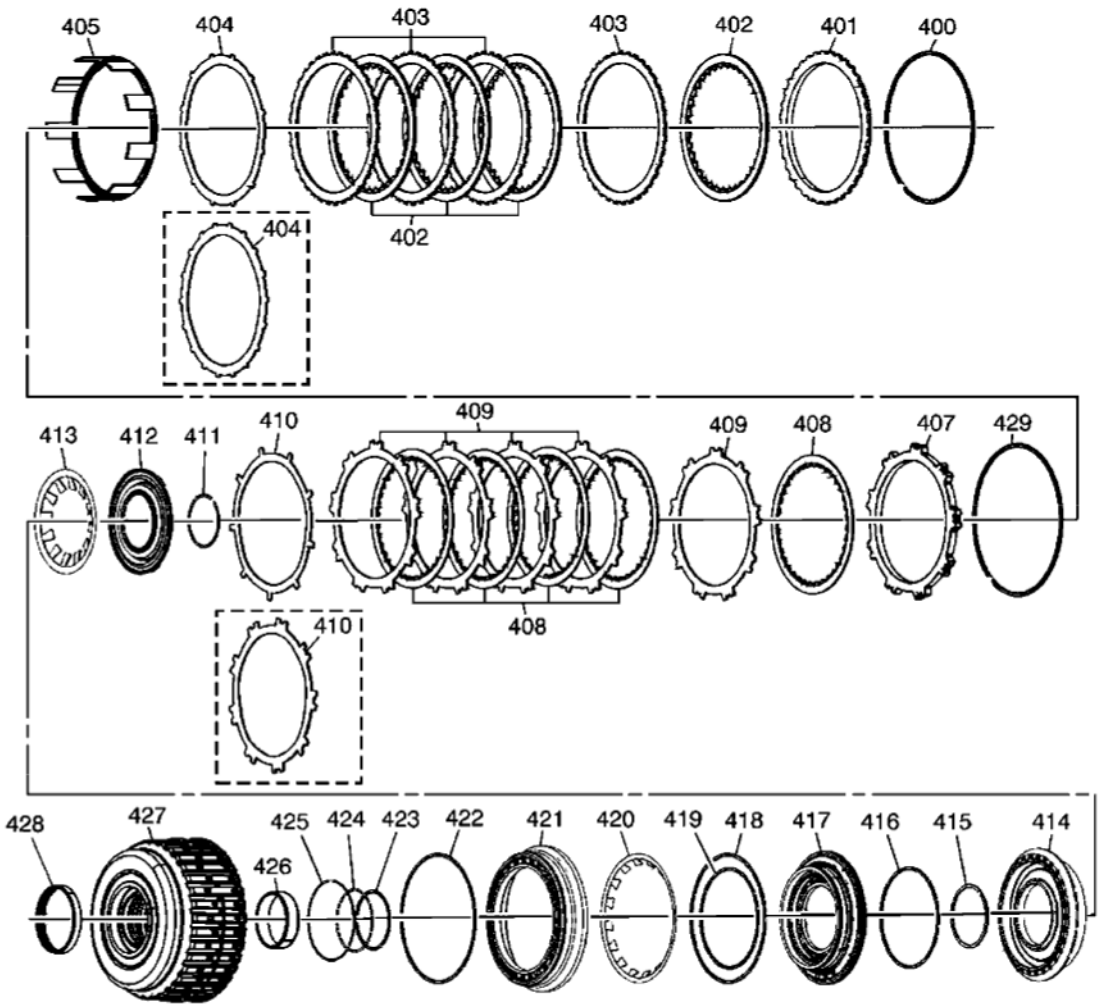

Fig. 7: 1-2-3-4 & 3-5 Reverse Clutch Assembly
Courtesy of GENERAL MOTORS CORP.

Callout	Component Name
400	3-5 Reverse Clutch Backing Plate Retaining Ring
401	3-5 Reverse Clutch Backing Plate
402	3-5 Reverse Clutch Plate Assembly
403	3-5 Reverse Clutch Plate
404	3-5 Reverse Clutch (Waved) Plate
405	3-5 Reverse Clutch Apply Ring
407	1-2-3-4 Clutch Backing Plate
408	1-2-3-4 Clutch Plate Assembly

cardiagn.com

409	1-2-3-4 Clutch Plate
410	1-2-3-4 Clutch (Waved) Plate
411	1-2-3-4 Clutch Piston Dam Retaining Ring
412	1-2-3-4 Clutch Piston Dam Assembly
413	1-2-3-4 Clutch Spring
414	1-2-3-4 Clutch Piston
415	1-2-3-4 Clutch Piston Housing Retaining Ring
416	1-2-3-4 Clutch Piston Seal
417	1-2-3-4 Clutch Piston Housing
418	3-5 Reverse Clutch Piston Dam (O-ring) Seal
419	3-5 Reverse Clutch Piston Inner Seal
420	3-5 Reverse Clutch Spring
421	3-5 Reverse Clutch Piston
422	3-5 Reverse Clutch Piston Outer Seal
423	1-2-3-4 Clutch Piston Inner Seal
424	1-2-3-4 Clutch Piston Housing Seal
425	1-2-3-4 Clutch Piston Housing Seal
426	1-2-3-4 and 3-5 Reverse Clutch Housing Rear Bushing
427	1-2-3-4 and 3-5 Reverse Clutch Housing Assembly
428	1-2-3-4 and 3-5 Reverse Clutch Bearing Assembly
429	1-2-3-4 Clutch Backing Plate Retaining Ring

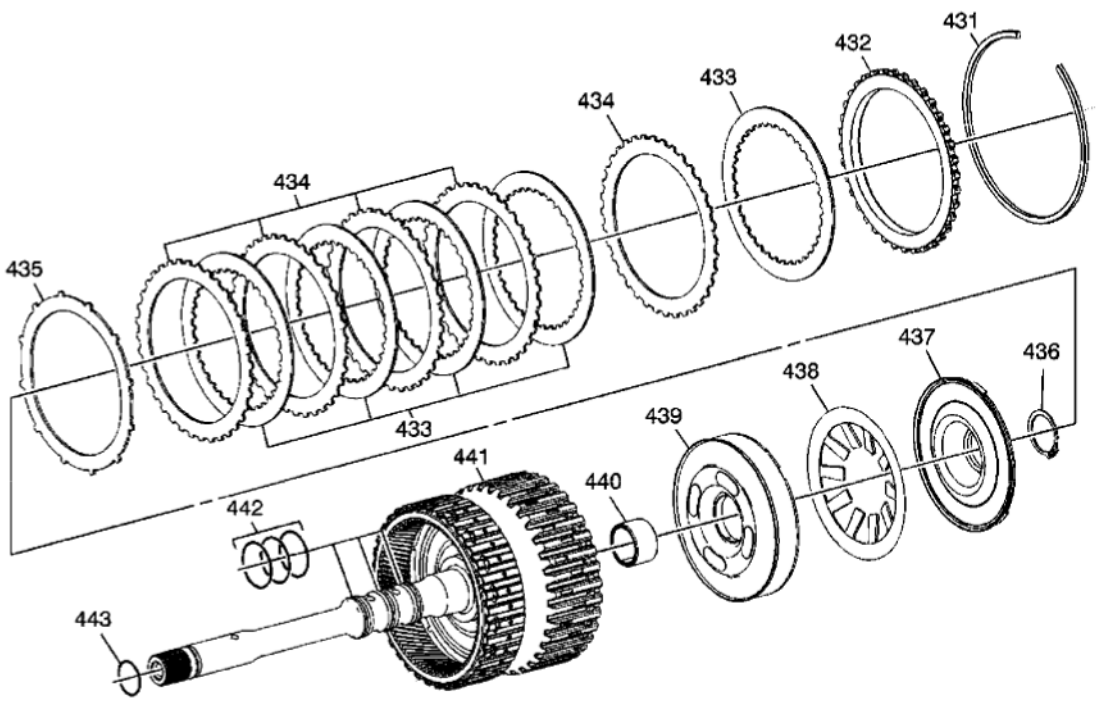

Fig. 8: 4-5-6 (W/Turbine Shaft) Clutch Assembly

cardiagn.com

Courtesy of GENERAL MOTORS CORP.

Callout	Component Name
431	4-5-6 Clutch Backing Plate Retaining Ring
432	4-5-6 Clutch Backing Plate
433	4-5-6 Clutch Plate Assembly
434	4-5-6 Clutch Plate
435	4-5-6 Clutch (Waved) Plate
436	4-5-6 Clutch Piston Dam Retaining Ring
437	4-5-6 Clutch Piston Dam Assembly
438	4-5-6 Clutch Spring
439	4-5-6 Clutch Piston Assembly
440	Output Carrier Shaft Housing Bushing
441	4-5-6 (w/Turbine Shaft) Housing Assembly
442	Turbine Shaft Fluid Seal Ring
443	Turbine Shaft (O-ring) Seal

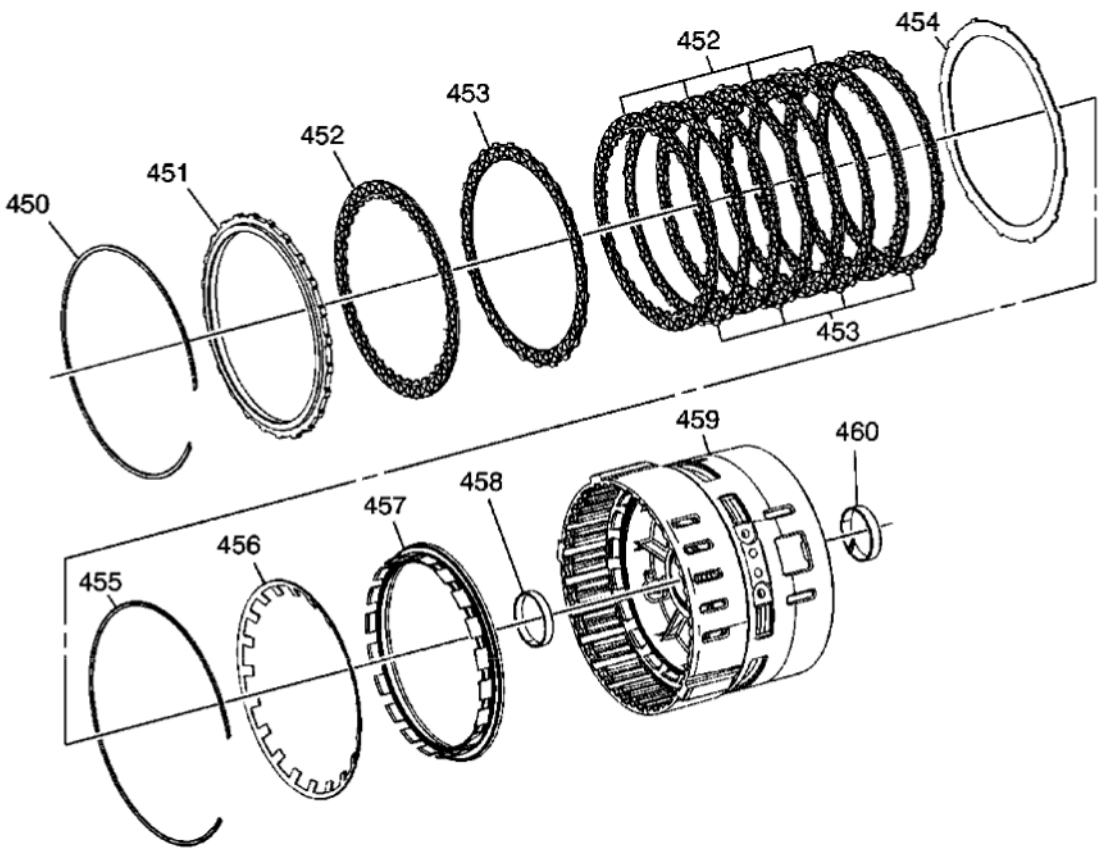

Fig. 9: 2-6 Clutch Assembly
Courtesy of GENERAL MOTORS CORP.

cardiagn.com

Callout	Component Name
450	2-6 Clutch Backing Plate Retaining Ring
451	2-6 Clutch Backing Plate
452	2-6 Clutch Plate Assembly
453	2-6 Clutch Plate
454	2-6 Clutch (Waved) Plate
455	2-6 Clutch Spring Retaining Ring
456	2-6 Clutch Spring
457	2-6 Clutch Piston Assembly
458	Output Carrier Outer Sun Gear Shaft (Front) Bushing
459	Center Support Assembly
460	Output Carrier Outer Sun Gear Shaft Rear Bushing

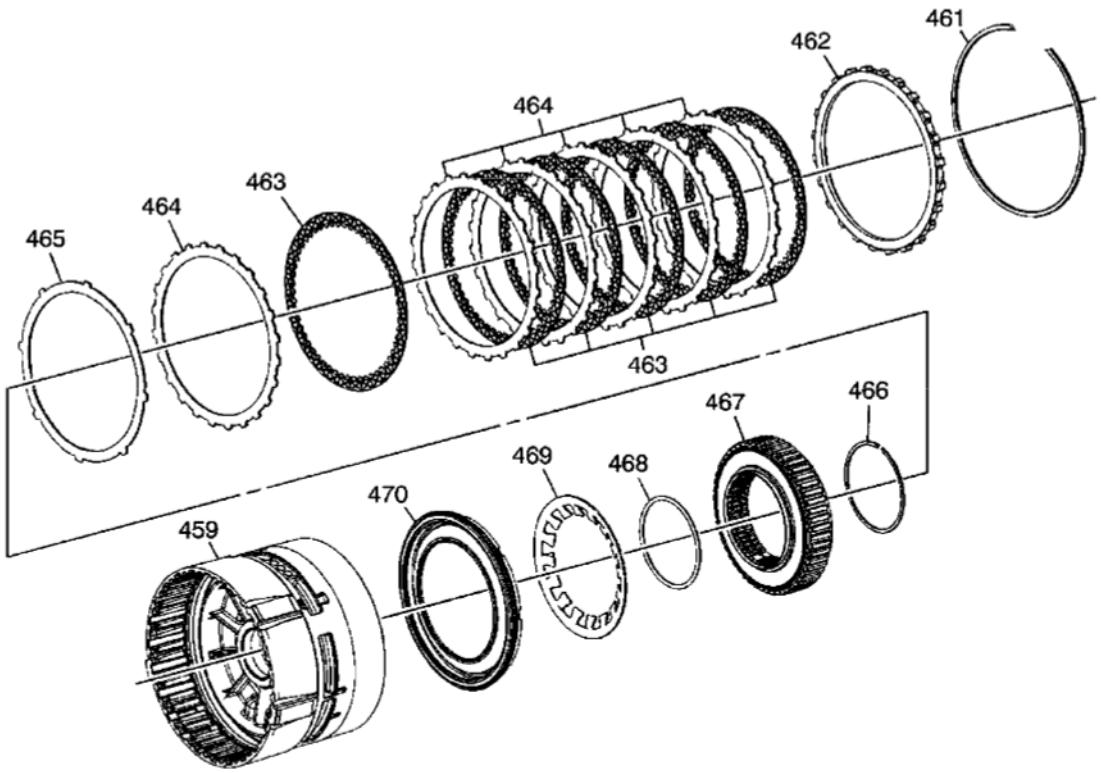

Fig. 10: Low & Reverse Clutch Assembly
Courtesy of GENERAL MOTORS CORP.

Callout	Component Name
459	Center Support Assembly
461	Low and Reverse Clutch Backing Plate Retaining Ring
462	Low and Reverse Clutch Backing Plate
463	Low and Reverse Clutch Plate Assembly

cardiagn.com

464	Low and Reverse Clutch Plate
465	Low and Reverse Clutch (Waved) Plate
466	Low and Reverse Clutch Spring Retaining Ring
467	Low Clutch Sprag Assembly
468	Low Clutch Sprag Seal
469	Low and Reverse Clutch Spring
470	Low and Reverse Clutch Piston Assembly

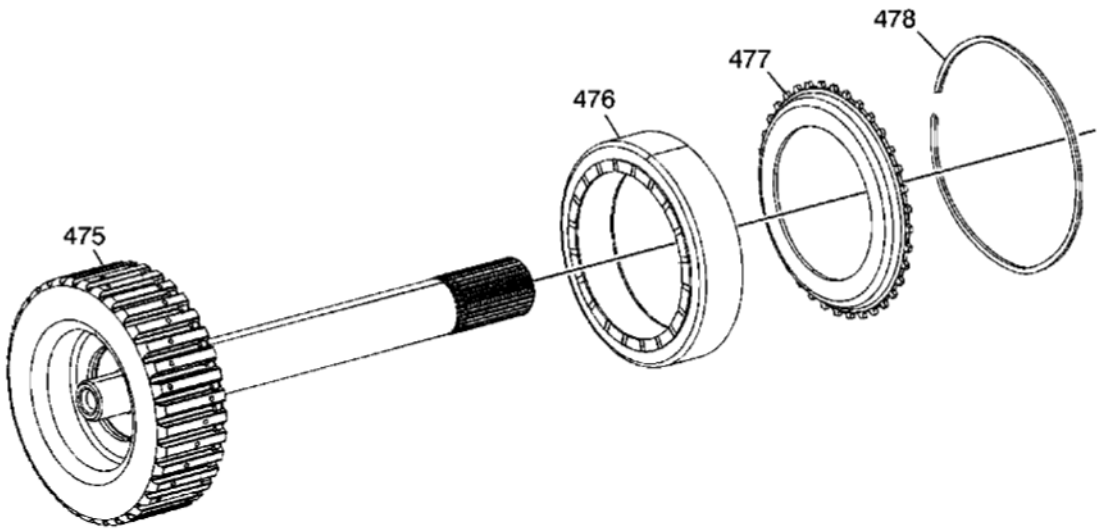

Fig. 11: 4-5-6 Clutch Hub Assembly
Courtesy of GENERAL MOTORS CORP.

Callout	Component Name
475	4-5-6 Clutch (w/ Output Carrier Shaft) Hub Assembly
476	4-5-6 Clutch Dampener
477	4-5-6 Clutch Dampener Apply Plate
478	4-5-6 Clutch Dampener Retaining Ring

cardiagn.com

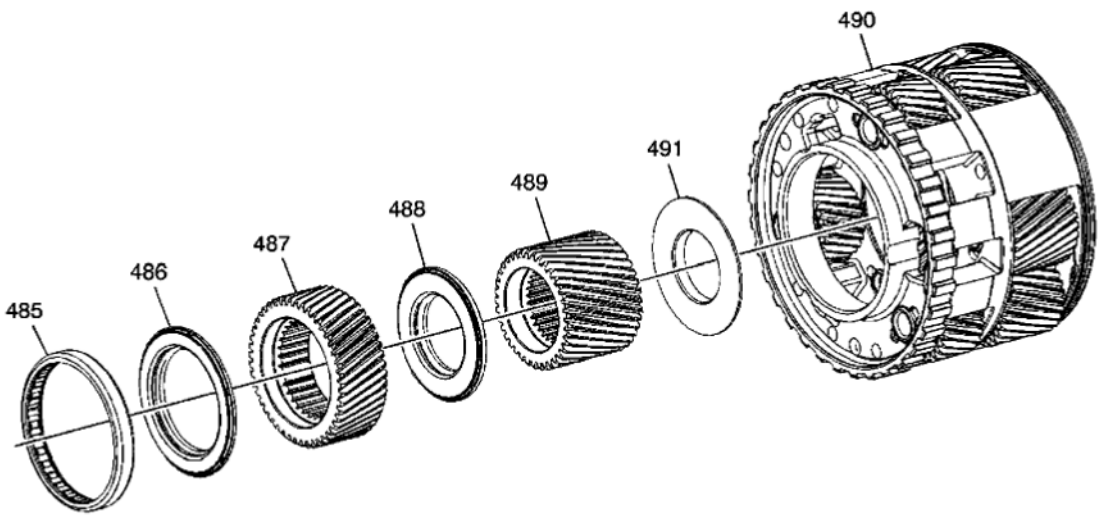

Fig. 12: Output Carrier Assembly
Courtesy of GENERAL MOTORS CORP.

Callout	Component Name
485	Center Support Roller Bearing Assembly
486	Output Carrier Front Sun Gear Thrust Bearing Assembly
487	Output Carrier Front Sun Gear
488	Output Carrier Front Sun Gear Rear Thrust Bearing Assembly
489	Output Carrier Rear Sun Gear
490	Output Carrier
491	Output Carrier Rear Sun Gear Thrust Bearing Assembly - Captured

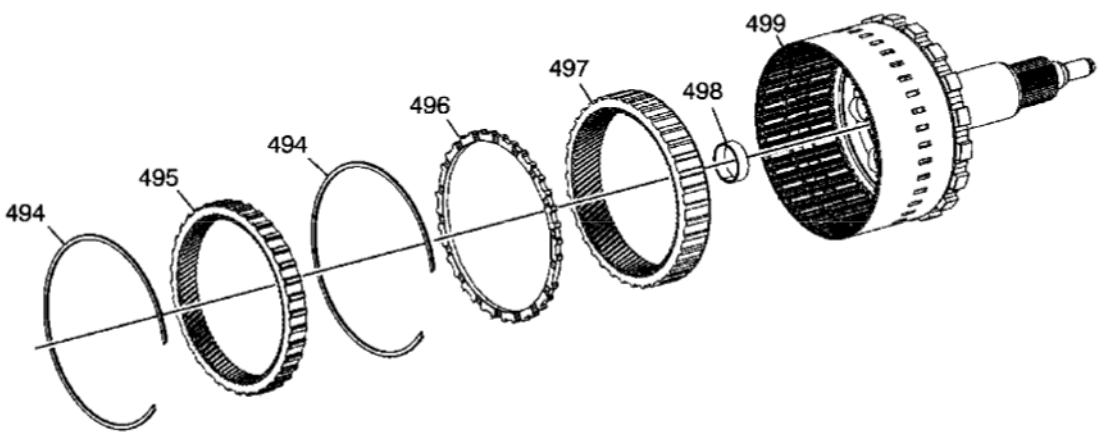

Fig. 13: Output Shaft Assembly
Courtesy of GENERAL MOTORS CORP.

cardiagn.com

Callout	Component Name
494	Output Carrier Internal Gear Retaining Ring
495	Output Carrier Internal Front Gear
496	Output Carrier Internal Gear Spacer
497	Output Carrier Internal Rear Gear
498	Output Carrier Bushing
499	Output Shaft Assembly

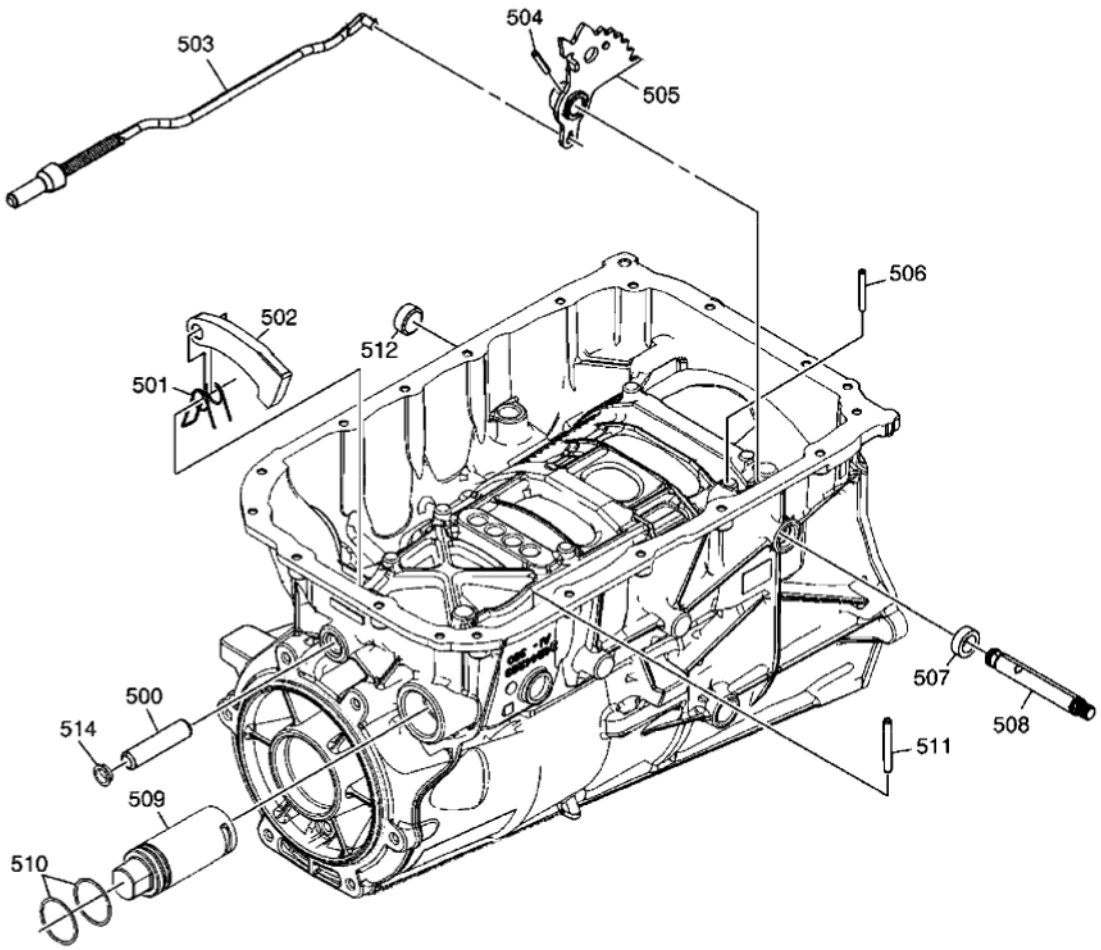

Fig. 14: Park System Components
Courtesy of GENERAL MOTORS CORP.

Callout	Component Name
500	Park Pawl Shaft
501	Park Pawl Spring
502	Park Pawl
503	Park Pawl Actuator Assembly
504	Manual Shaft Detent Lever Hub Pin

cardiagn.com

505	Manual Shaft Detent Lever Assembly
506	Manual Shift Shaft Pin
507	Manual Shift Shaft Seal
508	Manual Shift Shaft
509	Park Pawl Actuator Guide
510	Park Pawl Actuator Guide (O-ring) Seal
511	Park Pawl Actuator Guide Pin
512	Manual Shift Shaft Hole Plug
514	Park Pawl Shaft Hole Plug

DISASSEMBLED VIEWS (6L80)

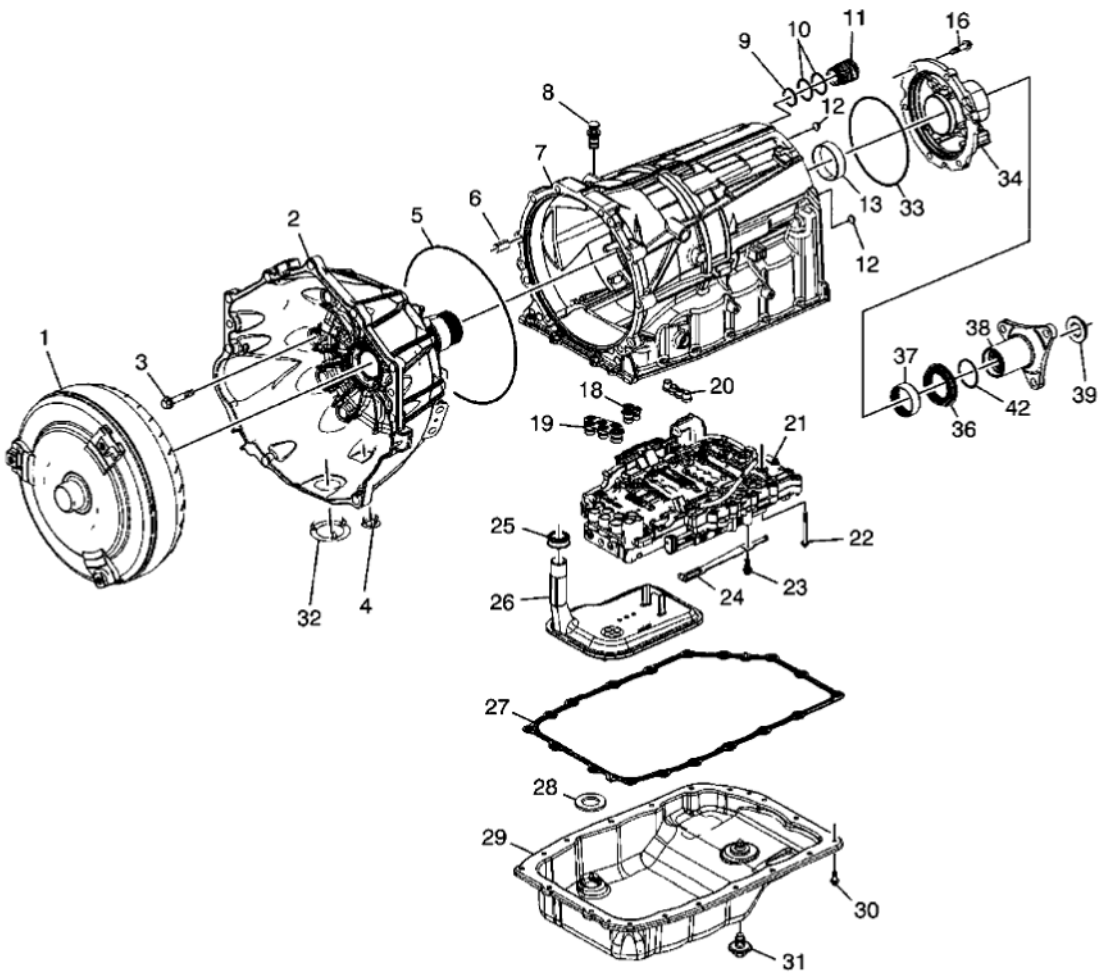

Fig. 15: Case & Associated Parts
Courtesy of GENERAL MOTORS CORP.

Callout	Component Name

cardiagn.com

1	Torque Converter Assembly
2	Torque Converter (with Fluid Pump) Housing Assembly
3	Bolt/Screw, M10 x 50 mm
4	Torque Converter Housing Access Hole Cover
5	A/Trans Fluid Pump Seal
6	Torque Converter Housing Locator Pin
7	A/Trans Case Assembly
8	Transmission Fluid Fill Tube Plug Assembly
9	A/Trans Connector Seal
10	A/Trans Connector (O-ring) Seal
11	A/Trans Electrical Connector Passage Sleeve
12	A/Trans Case Plug
13	Output Shaft Bushing
18	A/Trans Fluid Pump Seal Assembly
19	A/Trans Fluid Pump Seal Assembly
20	Center Support Fluid Passage Seal Assembly
21	Control (with Body and Valve) Valve Assembly
22	Bolt/Screw, M5 x 73 mm
23	Bolt/Screw, M6 x 14.5 mm
24	Manual Shaft Detent Assembly
25	A/Trans Fluid Filter Seal Assembly
26	A/Trans Fluid Filter Assembly
27	A/Trans Fluid Pan Gasket
28	A/Trans Fluid Pan Magnet
29	A/Trans Fluid Pan Assembly
30	Bolt/Screw, M6 x 20 mm
31	Trans Oil Level Check Plug
32	Torque Converter Housing Access Hole Cover
33	A/Trans Case Extension Seal
34	A/Trans Case Extension
36	Prop Shaft Trans Flange Seal Assembly
37	Prop Shaft Front Slip Yoke Bushing
38	Prop Shaft Trans Flange
39	Front Prop Shaft Flange Nut
42	Prop Shaft Trans Flange O-ring Seal

cardiagn.com

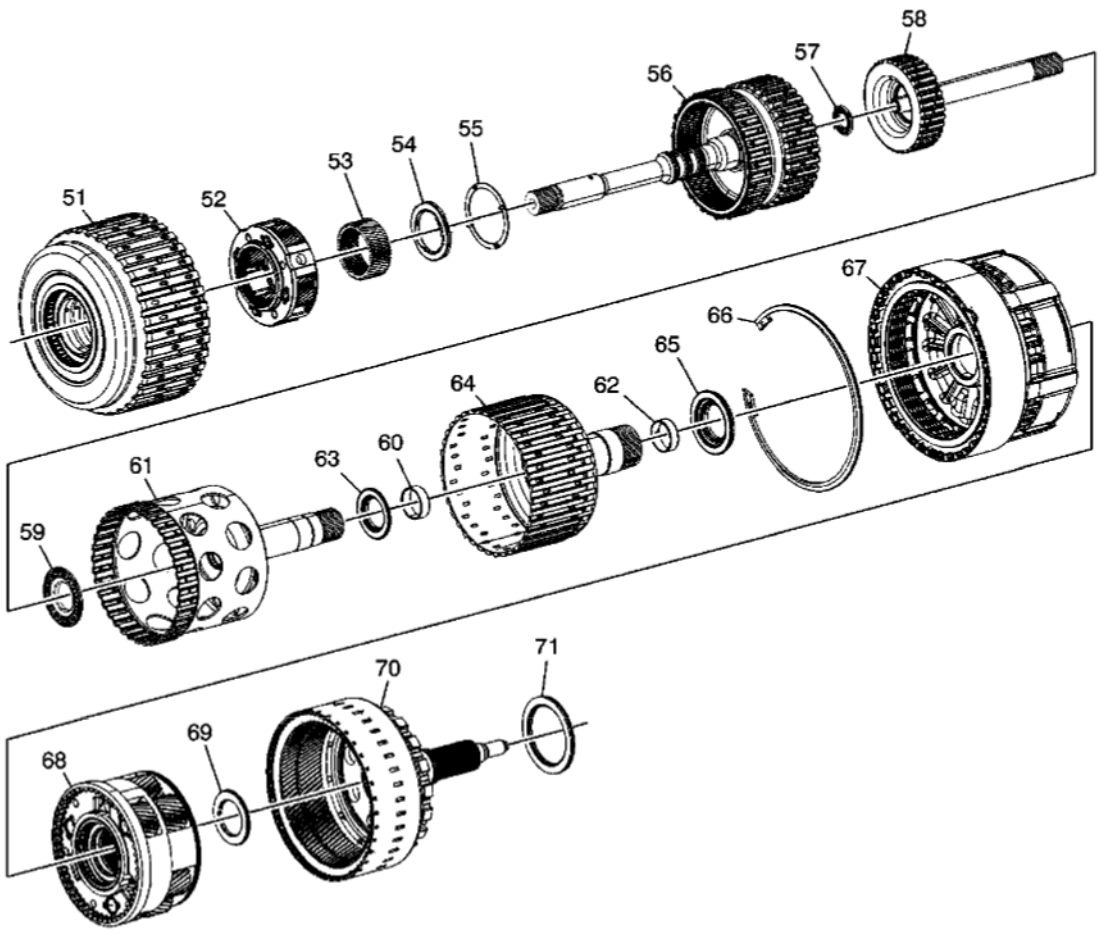

Fig. 16: Clutch Assemblies & Associated Parts
Courtesy of GENERAL MOTORS CORP.

Callout	Component Name
51	1-2-3-4 and 3-5 Reverse Clutch Assembly
52	Input Carrier Assembly
53	Input Sun Gear
54	Input Sun Gear Thrust Bearing
55	Input Sun Gear Thrust Washer
56	4-5-6 (w/ Turbine Shaft) Clutch Assembly
57	Turbine Shaft Thrust Bearing Assembly
58	4-5-6 Clutch (w/ Output Carrier Shaft and Dampener) Hub Assembly
59	4-5-6 Clutch Hub Thrust Bearing Assembly
60	Output Carrier Inner Sun Gear Shaft (Front) Bushing
61	1-2-3-4 Clutch (w/ Output Carrier Inner Sun Gear Shaft) Hub Assembly
62	Output Carrier Inner Sun Gear Shaft Bushing
63	1-2-3-4 Clutch Hub Thrust Bearing Assembly

cardiagn.com

64	2-6 and 3-5 Reverse Clutch (w/ Output Carrier Outer Sun Gear Shaft) Hub Assembly
65	2-6 and 3-5 Reverse Clutch Hub Thrust Bearing Assembly
66	Center Support Retaining Ring
67	Center (w/ 2-6 Low and Reverse Clutch) Support Assembly
68	Output Carrier Assembly
69	Output Carrier Thrust Bearing Assembly
70	Output Shaft Assembly
71	Output Shaft Thrust Bearing Assembly

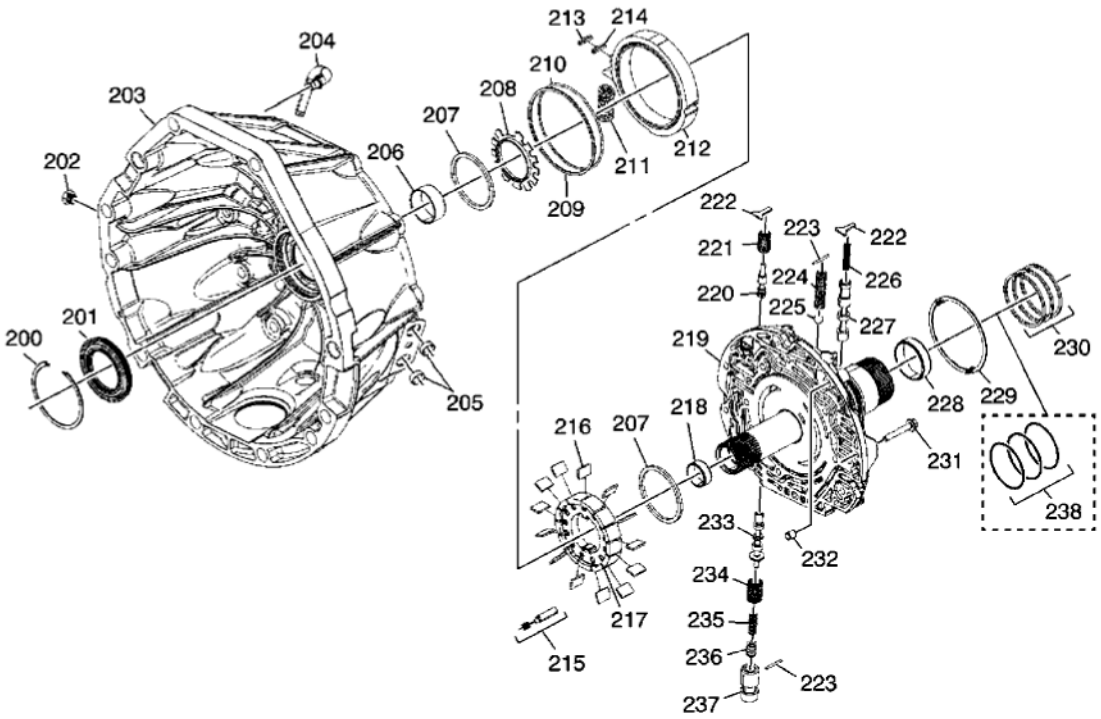

Fig. 17: Torque Converter (W/Fluid Pump) Housing Assembly
Courtesy of GENERAL MOTORS CORP.

Callout	Component Name
200	Torque Converter Fluid Seal Retaining Ring
201	Torque Converter Fluid Seal Assembly
202	Line Pressure Test Hole Plug
203	Torque Converter Housing
204	A/Trans Vent Pipe (Model Dependent)
205	Trans Fluid Cooler Pipe Fitting Seal
206	Torque Converter Bushing
207	A/Trans Fluid Pump Vane Ring

cardiagn.com

208	A/Trans Fluid Pump Rotor Guide
209	A/Trans Fluid Pump Slide Fluid Seal Ring
210	A/Trans Fluid Pump Slide (O-ring) Seal
211	A/Trans Fluid Pump Slide Outer Spring
212	A/Trans Fluid Pump Slide
213	A/Trans Fluid Pump Slide Seal
214	A/Trans Fluid Pump Slide Seal Support
215	A/Trans Fluid Pump Slide Pivot Pin
216	A/Trans Fluid Pump Vane
217	A/Trans Fluid Pump Rotor
218	Turbine Shaft Front Bushing
219	A/Trans Fluid Pump Cover Assembly
220	Converter Feed Limit Valve
221	Converter Feed Limit Valve Spring
222	Valve Spring Retainer
223	Pressure Relief Ball Valve Spring Pin
224	Pressure Relief Ball Valve Spring
225	Pressure Relief Ball Valve
226	TCC Control Valve Spring
227	TCC Control Valve
228	Turbine Shaft Rear Bushing
229	1-2-3-4 and 3-5 Reverse Clutch Housing Thrust Washer
230	1-2-3-4 and 3-5 Reverse Clutch Fluid Seal Ring
231	Bolt/Screw, M6 x 40 mm
232	A/Trans Fluid Pump Locator Pin
233	Pressure Regulator Valve
234	Pressure Regulator Valve Outer Spring
235	Pressure Regulator Valve Inner Spring
236	Isolator Valve
237	Isolator Valve Sleeve
238	1-2-3-4 and 3-5 Reverse Clutch Fluid Seal Ring - Inner O-Ring (Qty: 3) - Model Dependent

cardiagn.com

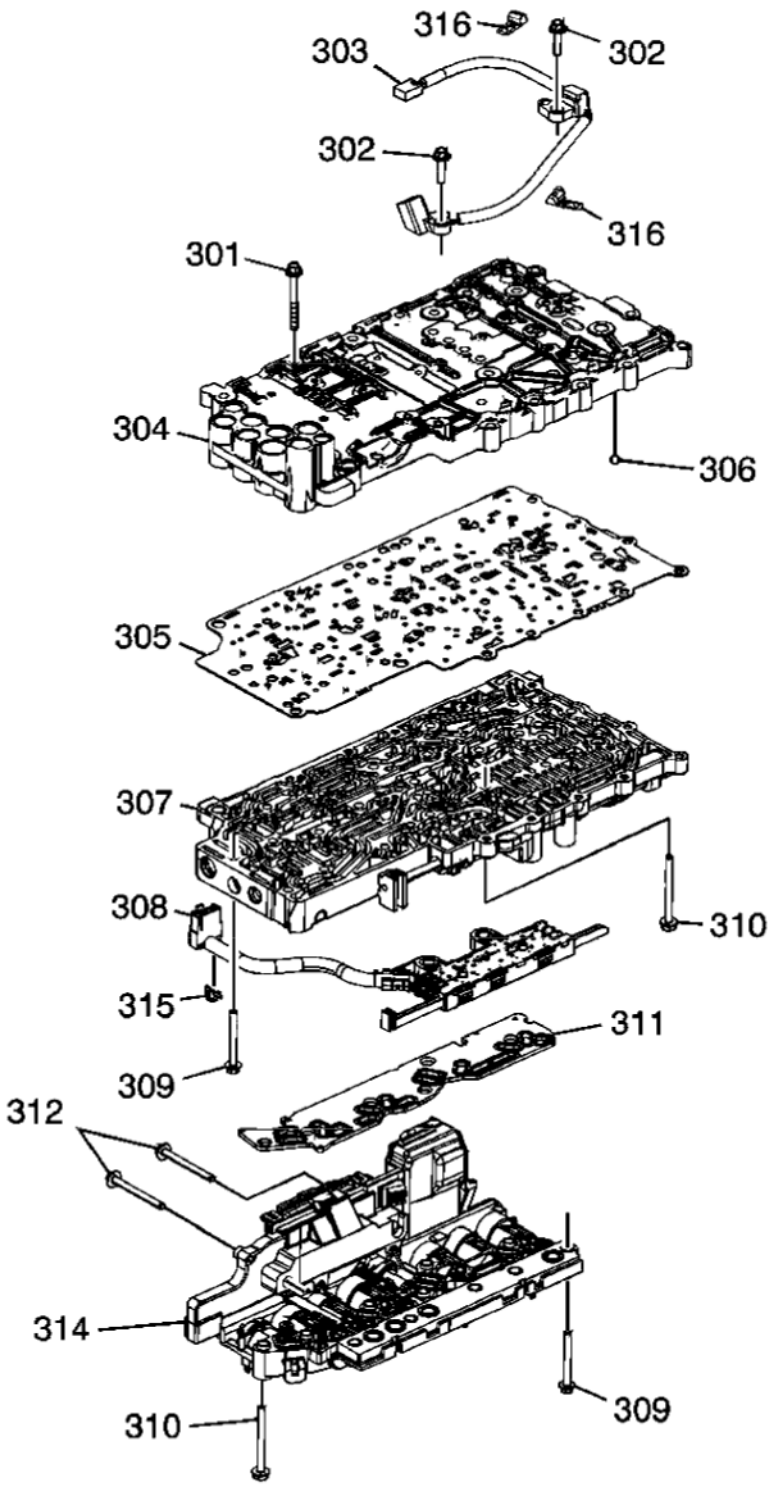

Fig. 18: Control (With Body & Valve) Valve Assembly
Courtesy of GENERAL MOTORS CORP.

Callout	Component Name

cardiagn.com

301	Bolt, M5 x 36 mm
302	Bolt, M6 x 20 mm
303	A/Trans Input and Output Speed Sensor Assembly
304	Control Valve Upper Body Assembly
305	Control Valve Body Spacer (w/ Gasket) Plate Assembly
306	Control Valve Body Ball Check Valve
307	Control Valve Lower Body Assembly
308	A/Trans Manual Shift Shaft Position Switch Assembly
309	Bolt, M5 x 45 mm
310	Bolt, M5 x 55 mm
311	Filter Plate Assembly
312	Bolt, M5 x 53 mm
314	Control Solenoid (w/ Body and TCM) Valve Assembly
315	A/Trans Manual Shaft Position Switch Wiring Harness Clip
316	A/Trans Input and Output Speed Sensor Wiring Harness Clip

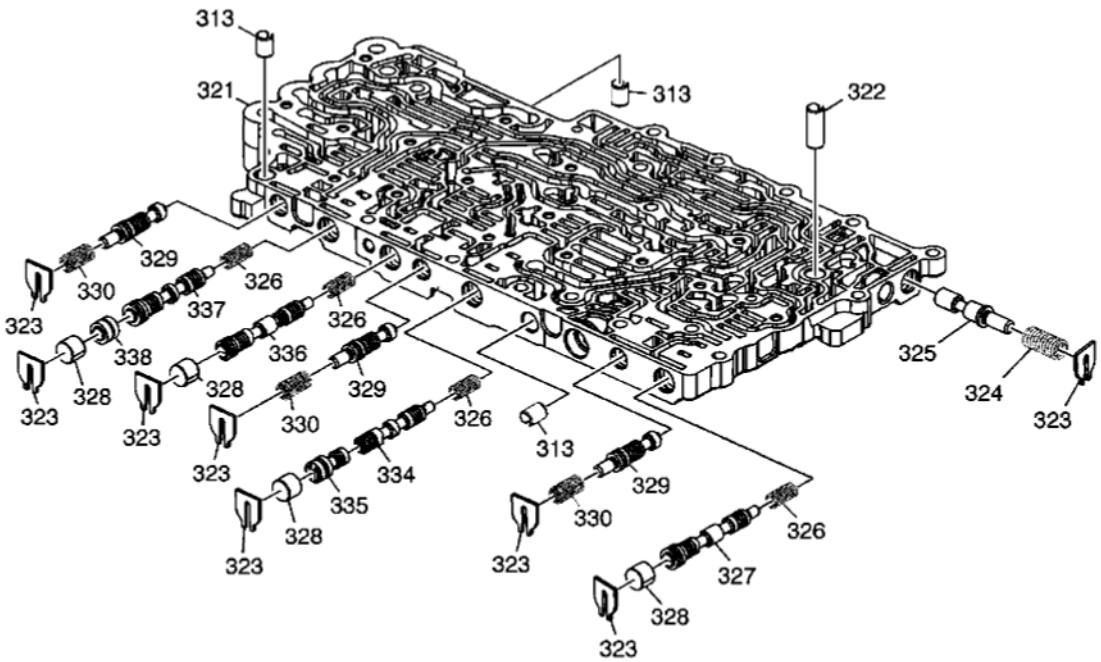

Fig. 19: Upper Control Valve Body Assembly
Courtesy of GENERAL MOTORS CORP.

Callout	Component Name
313	Control Valve Body Locator Pin
321	Control Valve Upper Body
322	Control Valve Body Locator Pin
323	Retainer

cardiagn.com

324	Actuator Feed Limit Valve Spring
325	Actuator Feed Limit Valve
326	Clutch Regulator Valve Spring
327	CBR1/4-5-6 Clutch Regulator Valve
328	Clutch Regulator Valve Bore Plug
329	Clutch Boost Valve
330	Clutch Boost Valve Spring
334	2-6 Clutch Regulator Valve
335	2-6 Clutch Regulator Valve Gain Valve
336	3-5 Reverse Clutch Regulator Valve
337	1-2-3-4 Clutch Regulator Valve
338	Shuttle Valve

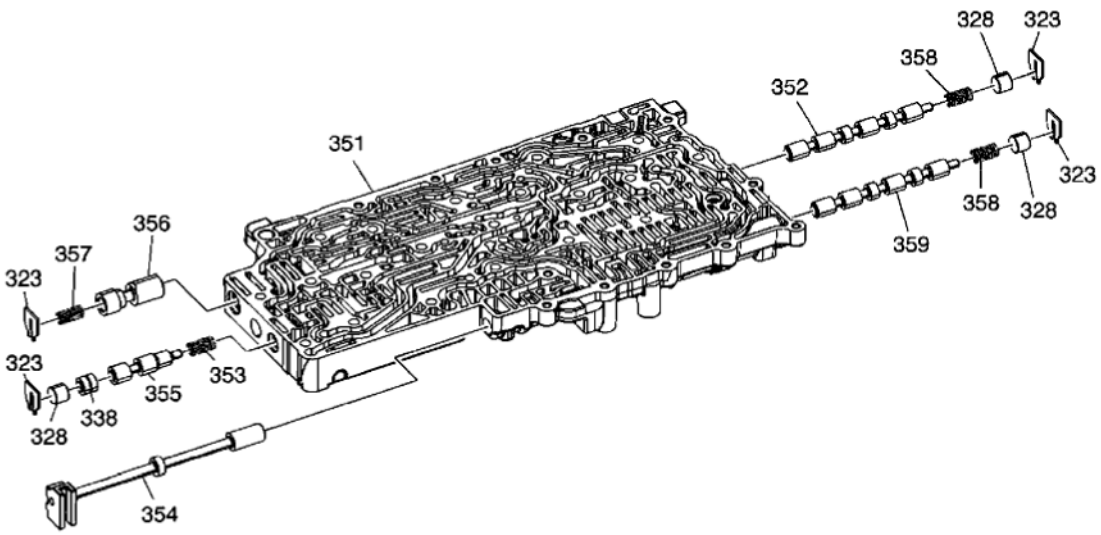

Fig. 20: Lower Control Valve Body Assembly
Courtesy of GENERAL MOTORS CORP.

Callout	Component Name
323	Retainer
328	Clutch Regulator Valve Bore Plug
338	Shuttle Valve
351	Control Valve Lower Body
352	Clutch Select Solenoid Valve 3
353	TCC Regulator Apply Valve Spring
354	Manual Valve
355	TCC Regulator Apply Valve
356	Clutch Piston Dam Feed Regulator Valve
357	Clutch Piston Dam Feed Regulator Valve Spring

cardiagn.com

358	Clutch Select Solenoid Valve Spring
359	Clutch Select Solenoid Valve 2

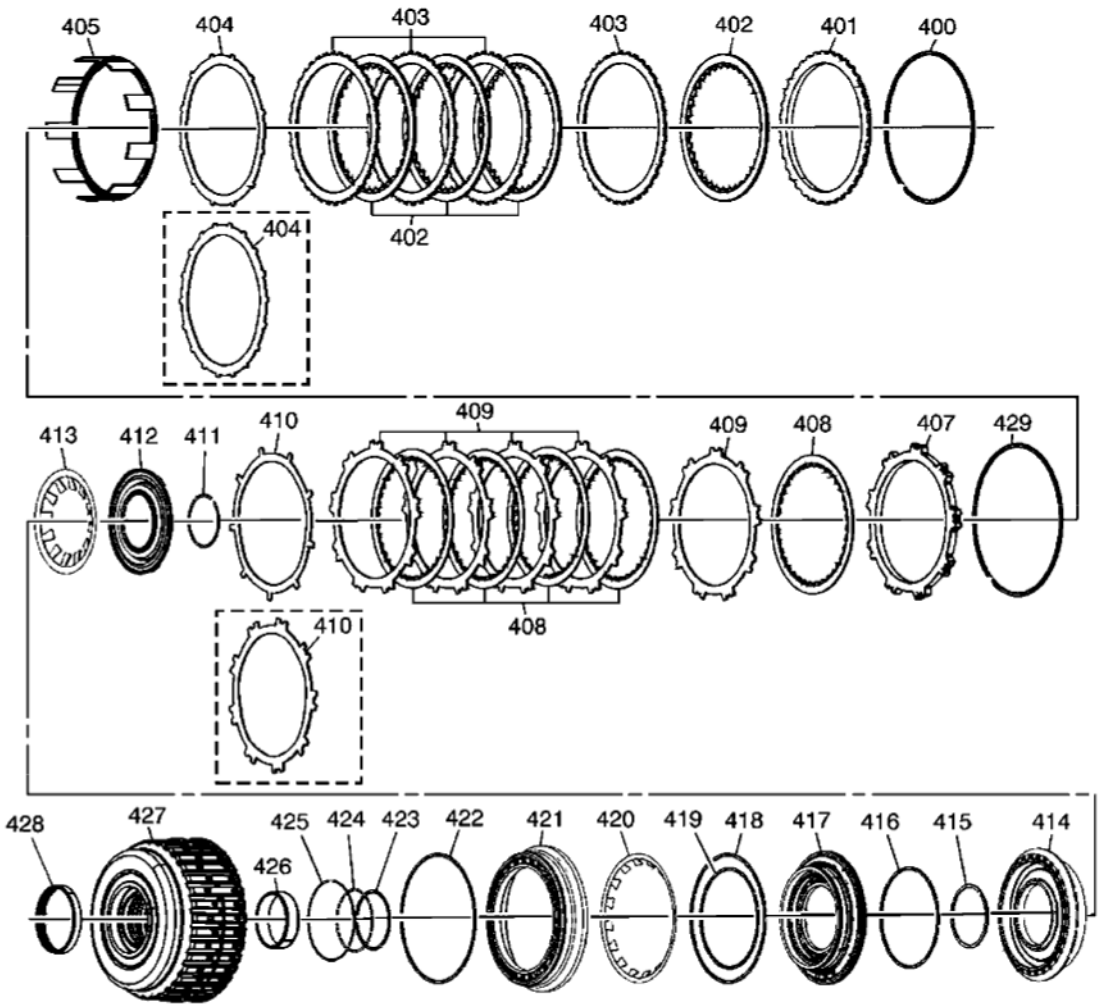

Fig. 21: 1-2-3-4 & 3-5 Reverse Clutch Assembly
Courtesy of GENERAL MOTORS CORP.

Callout	Component Name
400	3-5 Reverse Clutch Backing Plate Retaining Ring
401	3-5 Reverse Clutch Backing Plate
402	3-5 Reverse Clutch Plate Assembly
403	3-5 Reverse Clutch Plate
404	3-5 Reverse Clutch (Waved) Plate
405	3-5 Reverse Clutch Apply Ring
407	1-2-3-4 Clutch Backing Plate
408	1-2-3-4 Clutch Plate Assembly

cardiagn.com

409	1-2-3-4 Clutch Plate
410	1-2-3-4 Clutch (Waved) Plate
411	1-2-3-4 Clutch Piston Dam Retaining Ring
412	1-2-3-4 Clutch Piston Dam Assembly
413	1-2-3-4 Clutch Spring
414	1-2-3-4 Clutch Piston
415	1-2-3-4 Clutch Piston Housing Retaining Ring
416	1-2-3-4 Clutch Piston Seal
417	1-2-3-4 Clutch Piston Housing
418	3-5 Reverse Clutch Piston Dam (O-ring) Seal
419	3-5 Reverse Clutch Piston Inner Seal
420	3-5 Reverse Clutch Spring
421	3-5 Reverse Clutch Piston
422	3-5 Reverse Clutch Piston Outer Seal
423	1-2-3-4 Clutch Piston Inner Seal
424	1-2-3-4 Clutch Piston Housing Seal
425	1-2-3-4 Clutch Piston Housing Seal
426	1-2-3-4 and 3-5 Reverse Clutch Housing Rear Bushing
427	1-2-3-4 and 3-5 Reverse Clutch Housing Assembly
428	1-2-3-4 and 3-5 Reverse Clutch Bearing Assembly
429	1-2-3-4 Clutch Backing Plate Retaining Ring

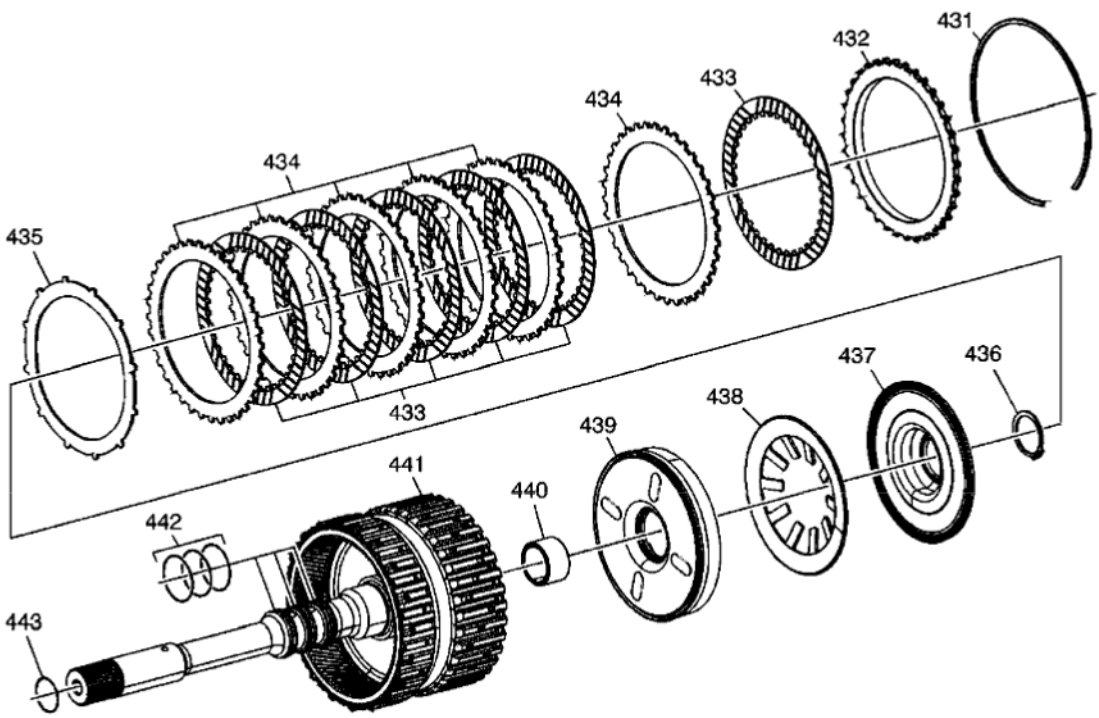

cardiagn.com

Fig. 22: 4-5-6 (W/Turbine Shaft) Clutch Assembly
Courtesy of GENERAL MOTORS CORP.

Callout	Component Name
431	4-5-6 Clutch Backing Plate Retaining Ring
432	4-5-6 Clutch Backing Plate
433	4-5-6 Clutch Plate Assembly
434	4-5-6 Clutch Plate
435	4-5-6 Clutch (Waved) Plate
436	4-5-6 Clutch Piston Dam Retaining Ring
437	4-5-6 Clutch Piston Dam Assembly
438	4-5-6 Clutch Spring
439	4-5-6 Clutch Piston Assembly
440	Output Carrier Shaft Housing Bushing
441	4-5-6 (w/Turbine Shaft) Housing Assembly
442	Turbine Shaft Fluid Seal Ring
443	Turbine Shaft (O-ring) Seal

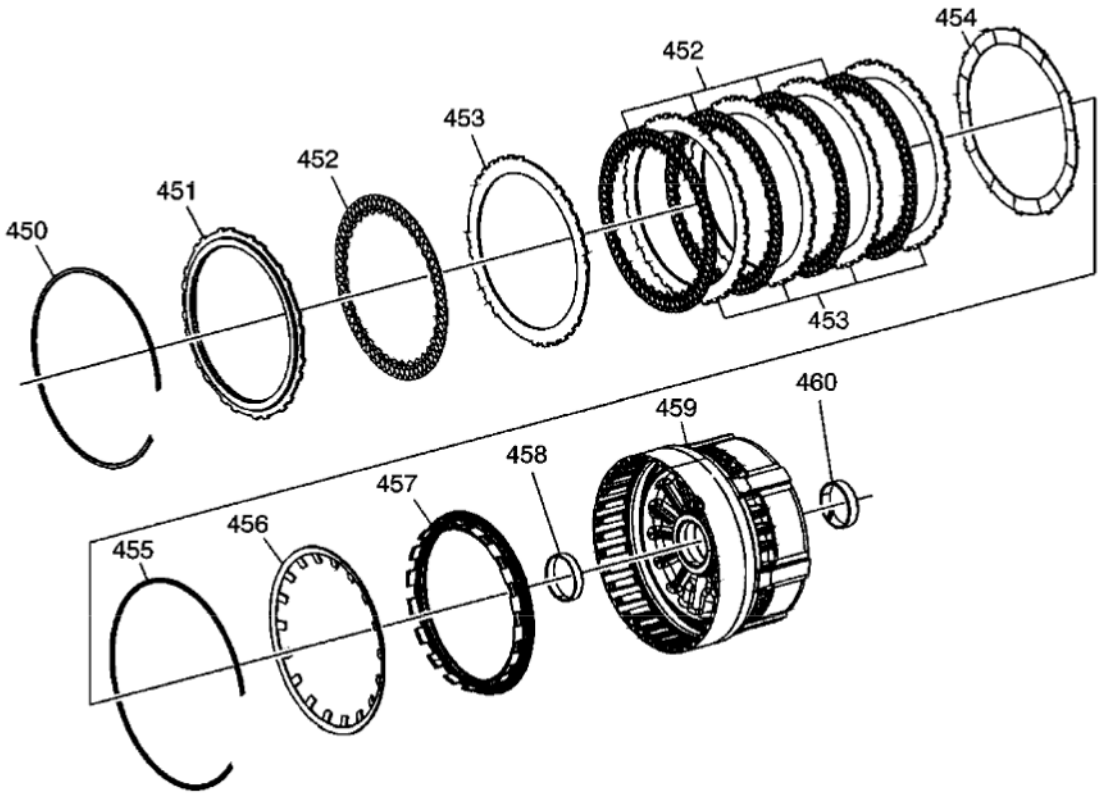

Fig. 23: 2-6 Clutch Assembly
Courtesy of GENERAL MOTORS CORP.

cardiagn.com

Callout	Component Name
450	2-6 Clutch Backing Plate Retaining Ring
451	2-6 Clutch Backing Plate
452	2-6 Clutch Plate Assembly
453	2-6 Clutch Plate
454	2-6 Clutch (Waved) Plate
455	2-6 Clutch Spring Retaining Ring
456	2-6 Clutch Spring
457	2-6 Clutch Piston Assembly
458	Output Carrier Outer Sun Gear Shaft (Front) Bushing
459	Center Support Assembly
460	Output Carrier Outer Sun Gear Shaft Rear Bushing

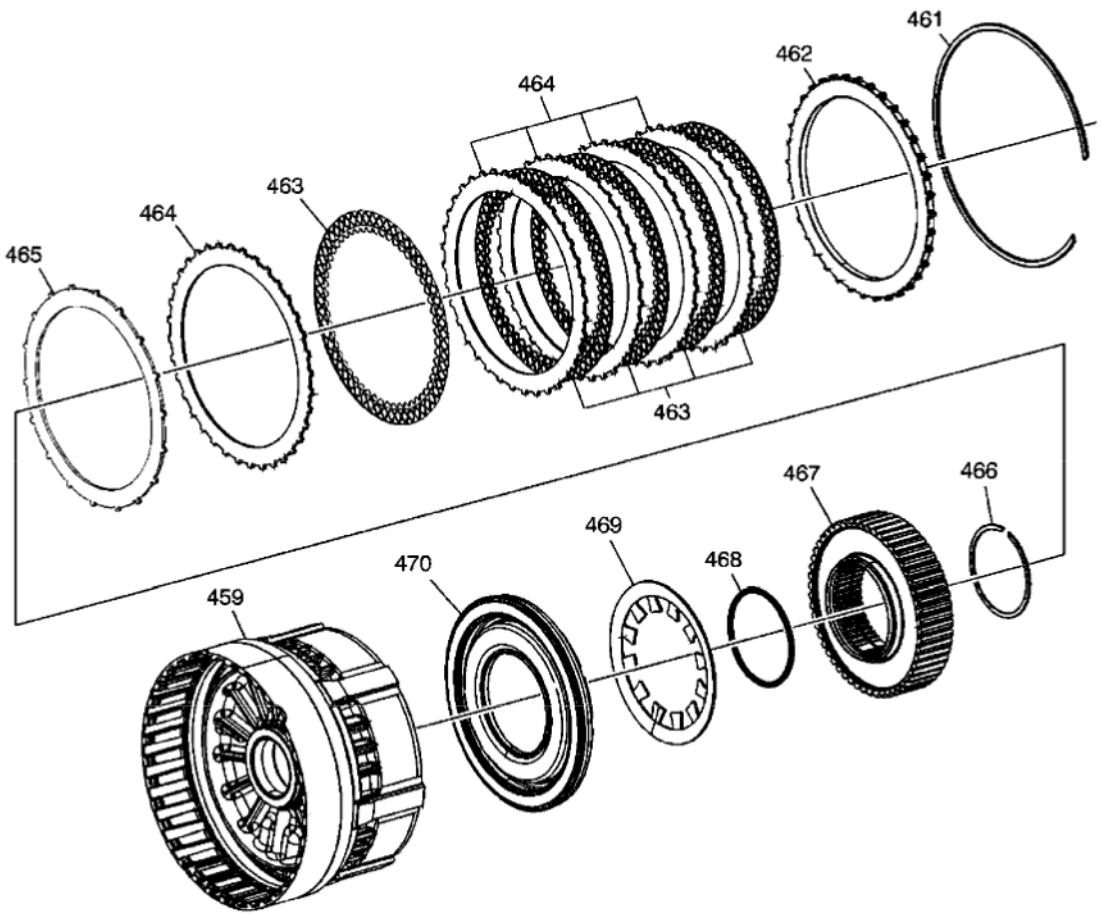

Fig. 24: Low & Reverse Clutch Assembly
Courtesy of GENERAL MOTORS CORP.

Callout	Component Name
459	Center Support Assembly

cardiagn.com

461	Low and Reverse Clutch Backing Plate Retaining Ring
462	Low and Reverse Clutch Backing Plate
463	Low and Reverse Clutch Plate Assembly
464	Low and Reverse Clutch Plate
465	Low and Reverse Clutch (Waved) Plate
466	Low and Reverse Clutch Spring Retaining Ring
467	Low Clutch Sprag Assembly
468	Low Clutch Sprag Seal
469	Low and Reverse Clutch Spring
470	Low and Reverse Clutch Piston Assembly

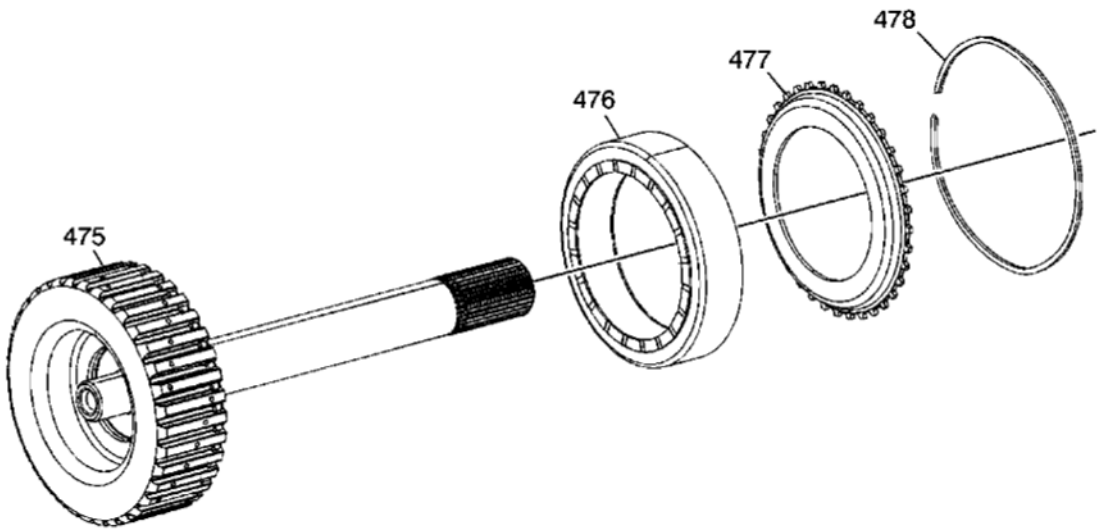

Fig. 25: 4-5-6 Clutch Hub Assembly
Courtesy of GENERAL MOTORS CORP.

Callout	Component Name
475	4-5-6 Clutch (w/ Output Carrier Shaft) Hub Assembly
476	4-5-6 Clutch Dampener
477	4-5-6 Clutch Dampener Apply Plate
478	4-5-6 Clutch Dampener Retaining Ring

cardiagn.com

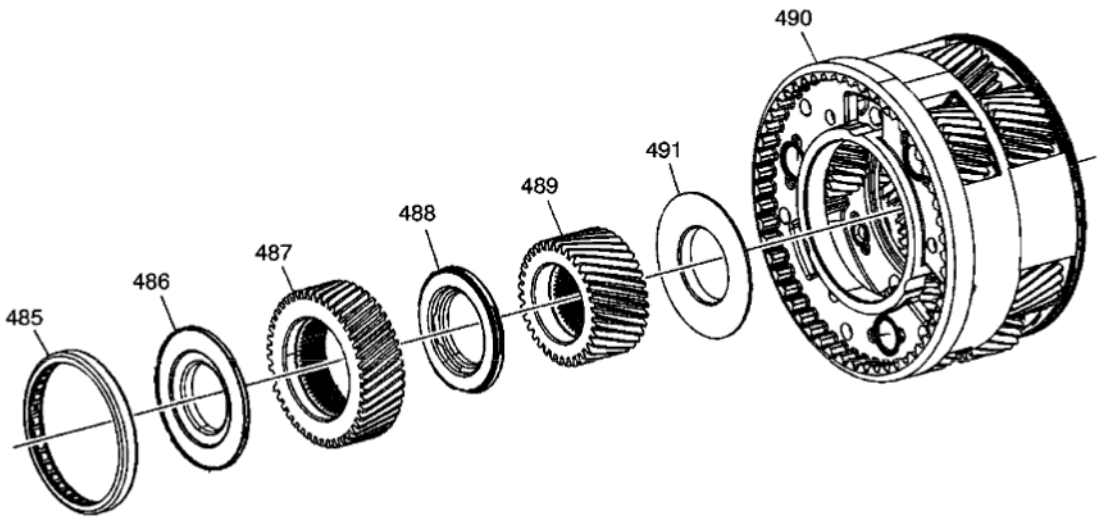

Fig. 26: Output Carrier Assembly
Courtesy of GENERAL MOTORS CORP.

Callout	Component Name
485	Center Support Roller Bearing Assembly
486	Output Carrier Front Sun Gear Thrust Bearing Assembly
487	Output Carrier Front Sun Gear
488	Output Carrier Front Sun Gear Rear Thrust Bearing Assembly
489	Output Carrier Rear Sun Gear
490	Output Carrier
491	Output Carrier Rear Sun Gear Thrust Bearing Assembly - Captured

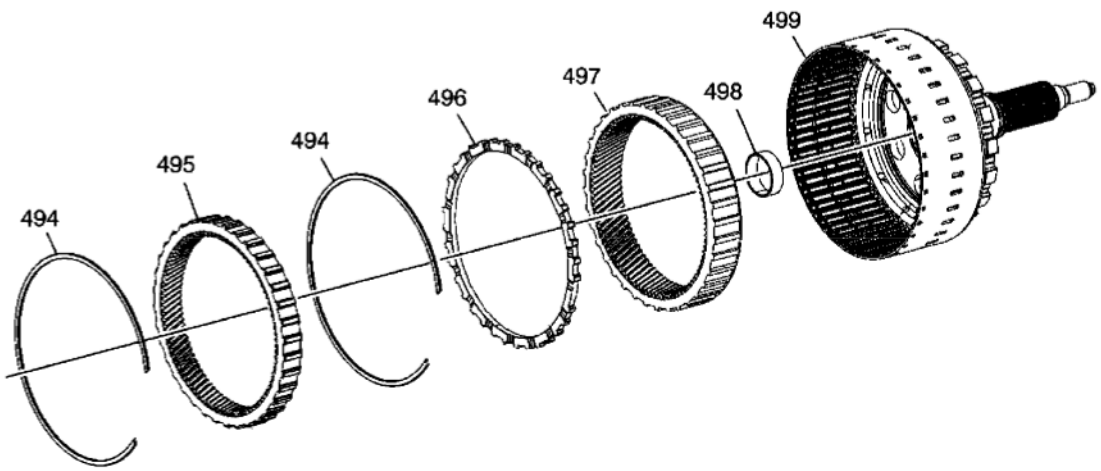

Fig. 27: Output Shaft Assembly
Courtesy of GENERAL MOTORS CORP.

cardiagn.com

Callout	Component Name
494	Output Carrier Internal Gear Retaining Ring
495	Output Carrier Internal Front Gear
496	Output Carrier Internal Gear Spacer
497	Output Carrier Internal Rear Gear
498	Output Carrier Bushing
499	Output Shaft Assembly

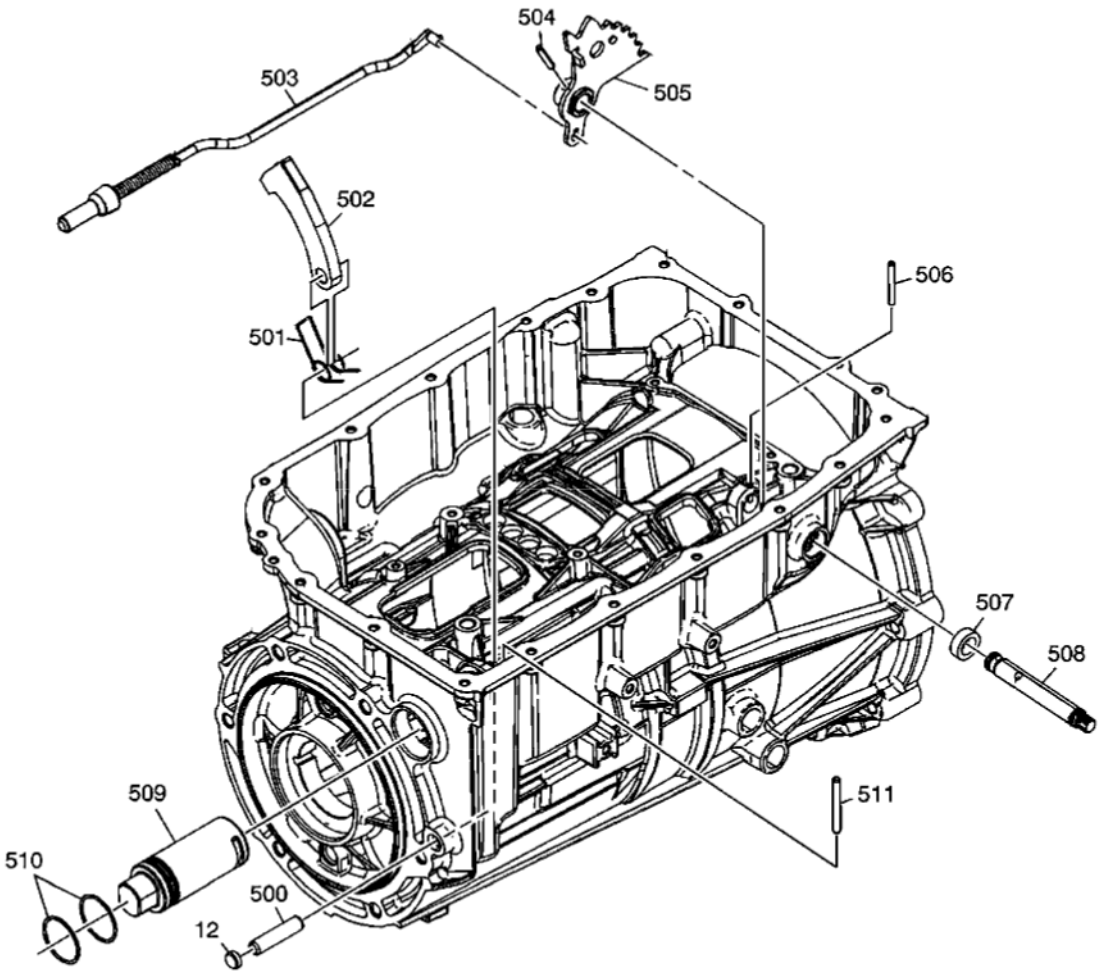

Fig. 28: Park System Components
Courtesy of GENERAL MOTORS CORP.

Callout	Component Name
12	A/Trans Case Plug
500	Park Pawl Shaft
501	Park Pawl Spring
502	Park Pawl

cardiagn.com

503	Park Pawl Actuator Assembly
504	Manual Shaft Detent Lever Hub Pin
505	Manual Shaft Detent Lever Assembly
506	Manual Shift Shaft Pin
507	Manual Shift Shaft Seal
508	Manual Shift Shaft
509	Park Pawl Actuator Guide
510	Park Pawl Actuator Guide (O-ring) Seal
511	Park Pawl Actuator Guide Pin

COMPONENT LOCATION (6L50/80/90)

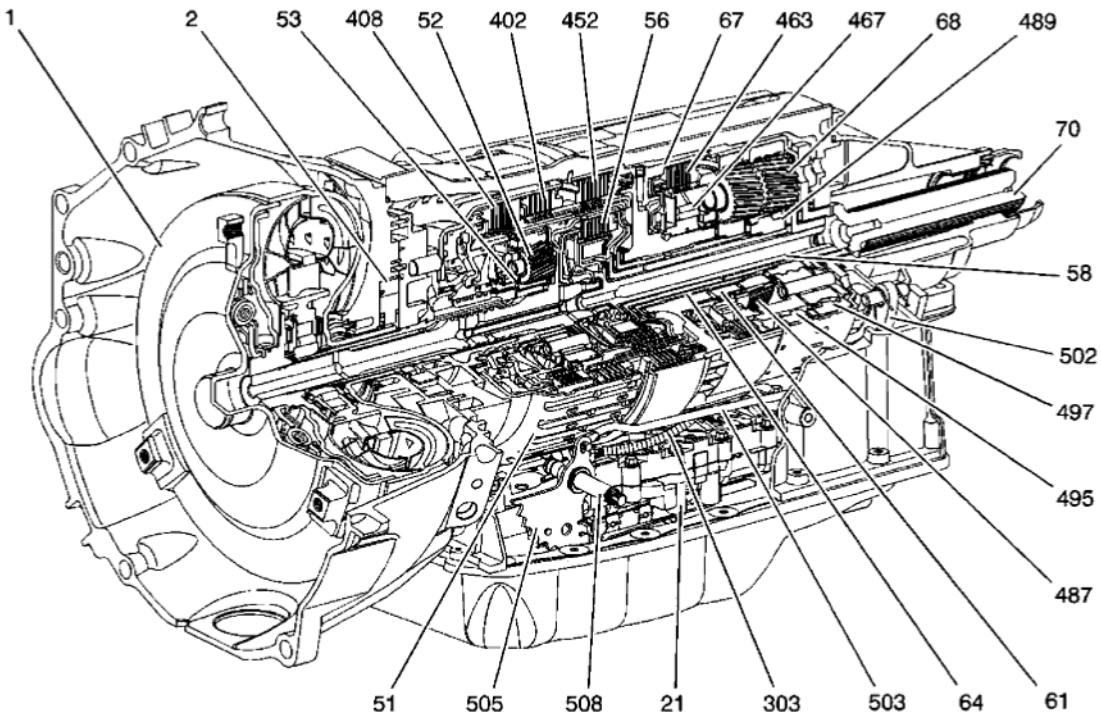

Fig. 29: Component Locations
Courtesy of GENERAL MOTORS CORP.

Callout	Component Name
1	Torque Converter Assembly
2	Torque Converter (with Fluid Pump) Housing Assembly
21	Control (with Body and Valve) Valve Assembly
51	1-2-3-4 and 3-5 Reverse Clutch Assembly
52	Input Carrier Assembly
53	Input Sun Gear
56	4-5-6 (w/Turbine Shaft) Clutch Assembly

cardiagn.com

58	4-5-6 Clutch (w/Output Carrier Shaft and Dampener) Hub Assembly
61	1-2-3-4 Clutch (w/Output Carrier Inner Sun Gear Shaft) Hub Assembly
64	2-6 and 3-5 Reverse Clutch (w/Output Carrier Outer Sun Gear Shaft) Hub Assembly
67	Center (w/2-6 Low and Reverse Clutch) Support Assembly
68	Output Carrier Assembly
70	Output Shaft Assembly
303	A/Trans Input and Output Speed Sensor Assembly
402	3-5 Reverse Clutch Plate Assembly
408	1-2-3-4 Clutch Plate Assembly
452	2-6 Clutch Plate Assembly
463	Low and Reverse Clutch Plate Assembly
467	Low Clutch Sprag Assembly
487	Output Carrier Front Sun Gear
489	Output Carrier Rear Sun Gear
495	Output Carrier Internal Front Gear
497	Output Carrier Internal Rear Gear
502	Park Pawl
503	Park Pawl Actuator Assembly
505	Manual Shaft Detent Lever Assembly
508	Manual Shift Shaft

BUSHING, BEARING, AND WASHER LOCATIONS (6L50)

cardiagn.com

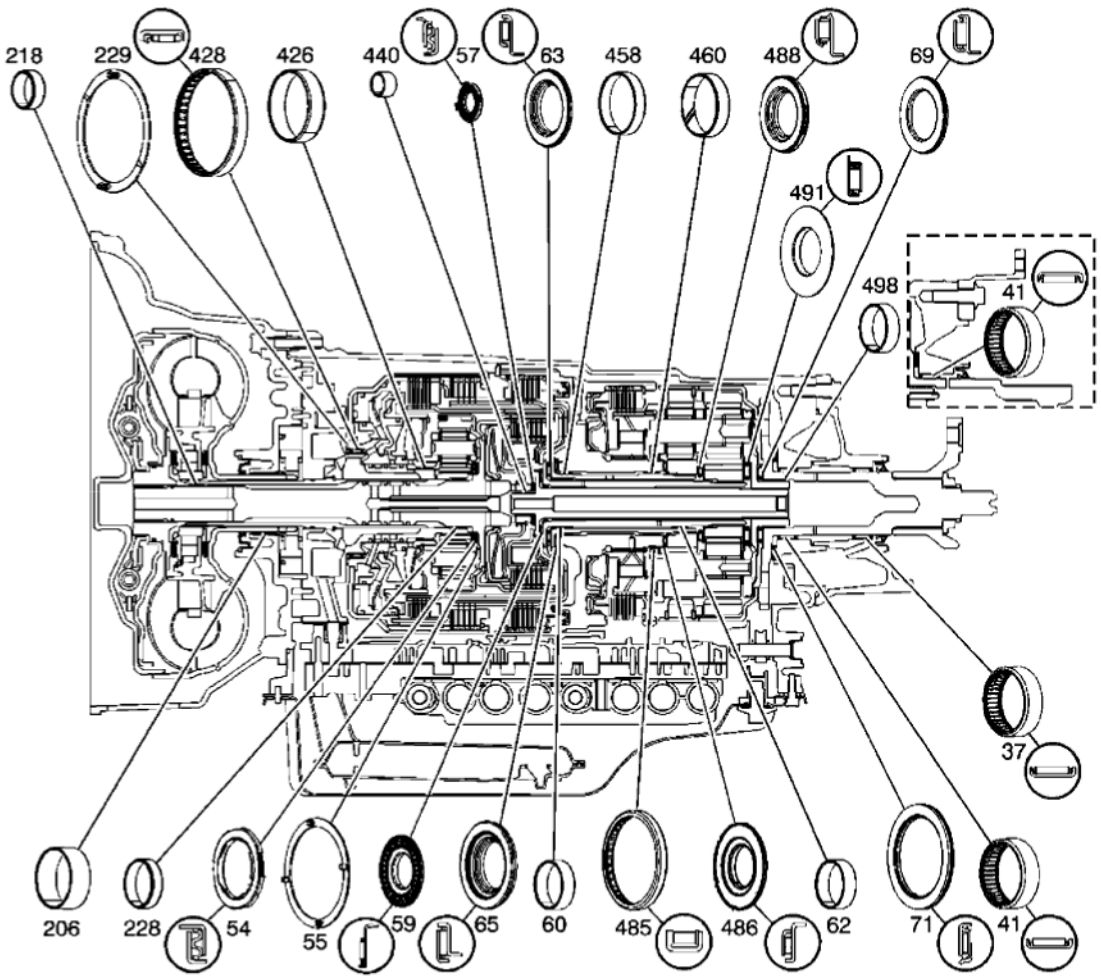

Fig. 30: Bushing, Bearing & Washer Component Views
Courtesy of GENERAL MOTORS CORP.

Callout	Component Name
37	Output Shaft Bearing Assembly - 2WD Models Only
41	Output Shaft Bearing Assembly - Case
54	Input Sun Gear Thrust Bearing
55	Input Sun Gear Thrust Washer
57	Turbine Shaft Thrust Bearing Assembly
59	4-5-6 Clutch Hub Thrust Bearing Assembly
60	Output Carrier Inner Sun Gear Shaft (Front) Bushing
62	Output Carrier Inner Sun Gear Shaft Bushing
63	1-2-3-4 Clutch Hub Thrust Bearing Assembly
65	2-6 and 3-5 Reverse Clutch Hub Thrust Bearing Assembly
69	Output Carrier Thrust Bearing Assembly
71	Output Shaft Thrust Bearing Assembly

cardiagn.com

206	Torque Converter Bushing
218	Turbine Shaft Front Bushing
228	Turbine Shaft Rear Bushing
229	1-2-3-4 and 3-5 Reverse Clutch Housing Thrust Washer
426	1-2-3-4 and 3-5 Reverse Clutch Housing Rear Bushing
428	1-2-3-4 and 3-5 Reverse Clutch Bearing Assembly
440	Output Carrier Shaft Housing Bushing
458	Output Carrier Outer Sun Gear Shaft (Front) Bushing
460	Output Carrier Outer Sun Gear Shaft Rear Bushing
485	Center Support Roller Bearing Assembly
486	Output Carrier Front Sun Gear Thrust Bearing Assembly
488	Output Carrier Front Sun Gear Rear Thrust Bearing Assembly
491	Output Carrier Rear Sun Gear Thrust Bearing - Captured
498	Output Carrier Bushing

BUSHING, BEARING, AND WASHER LOCATIONS (6L80)

cardiagn.com

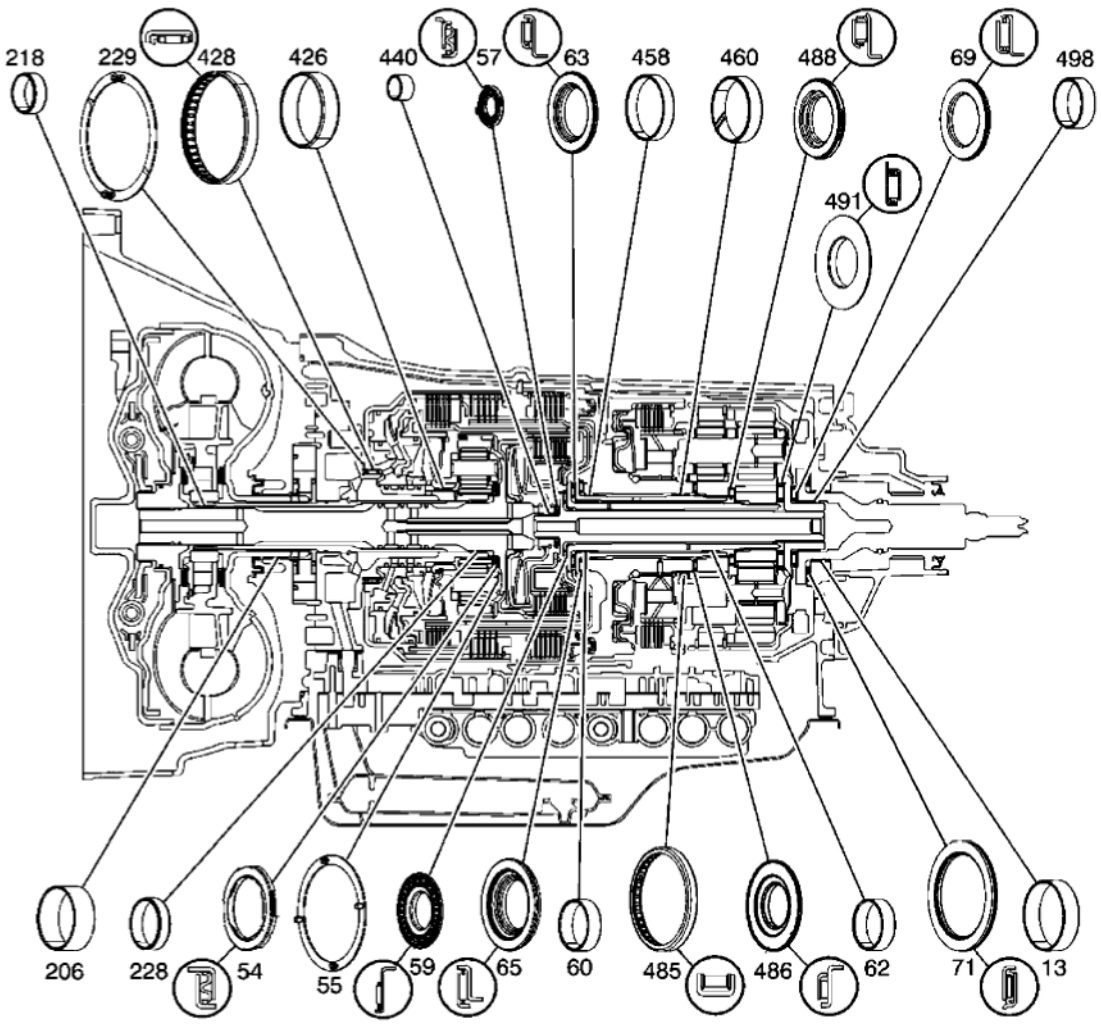

Fig. 31: Bushing, Bearing & Washer Locations
Courtesy of GENERAL MOTORS CORP.

Callout	Component Name
13	Output Shaft Bushing
54	Input Sun Gear Thrust Bearing
55	Input Sun Gear Thrust Washer
57	Turbine Shaft Thrust Bearing Assembly
59	4-5-6 Clutch Hub Thrust Bearing Assembly
60	Output Carrier Inner Sun Gear Shaft (Front) Bushing
62	Output Carrier Inner Sun Gear Shaft Bushing
63	1-2-3-4 Clutch Hub Thrust Bearing Assembly
65	2-6 and 3-5 Reverse Clutch Hub Thrust Bearing Assembly
69	Output Carrier Thrust Bearing Assembly
71	Output Shaft Thrust Bearing Assembly

cardiagn.com

206	Torque Converter Bushing
218	Turbine Shaft Front Bushing
228	Turbine Shaft Rear Bushing
229	1-2-3-4 and 3-5 Reverse Clutch Housing Thrust Washer
426	1-2-3-4 and 3-5 Reverse Clutch Housing Rear Bushing
428	1-2-3-4 and 3-5 Reverse Clutch Bearing Assembly
440	Output Carrier Shaft Housing Bushing
458	Output Carrier Outer Sun Gear Shaft (Front) Bushing
460	Output Carrier Outer Sun Gear Shaft Rear Bushing
485	Center Support Roller Bearing Assembly
486	Output Carrier Front Sun Gear Thrust Bearing Assembly
488	Output Carrier Front Sun Gear Rear Thrust Bearing Assembly
491	Output Carrier Rear Sun Gear Thrust Bearing - Captured
498	Output Carrier Bushing

SEAL LOCATIONS (6L50)

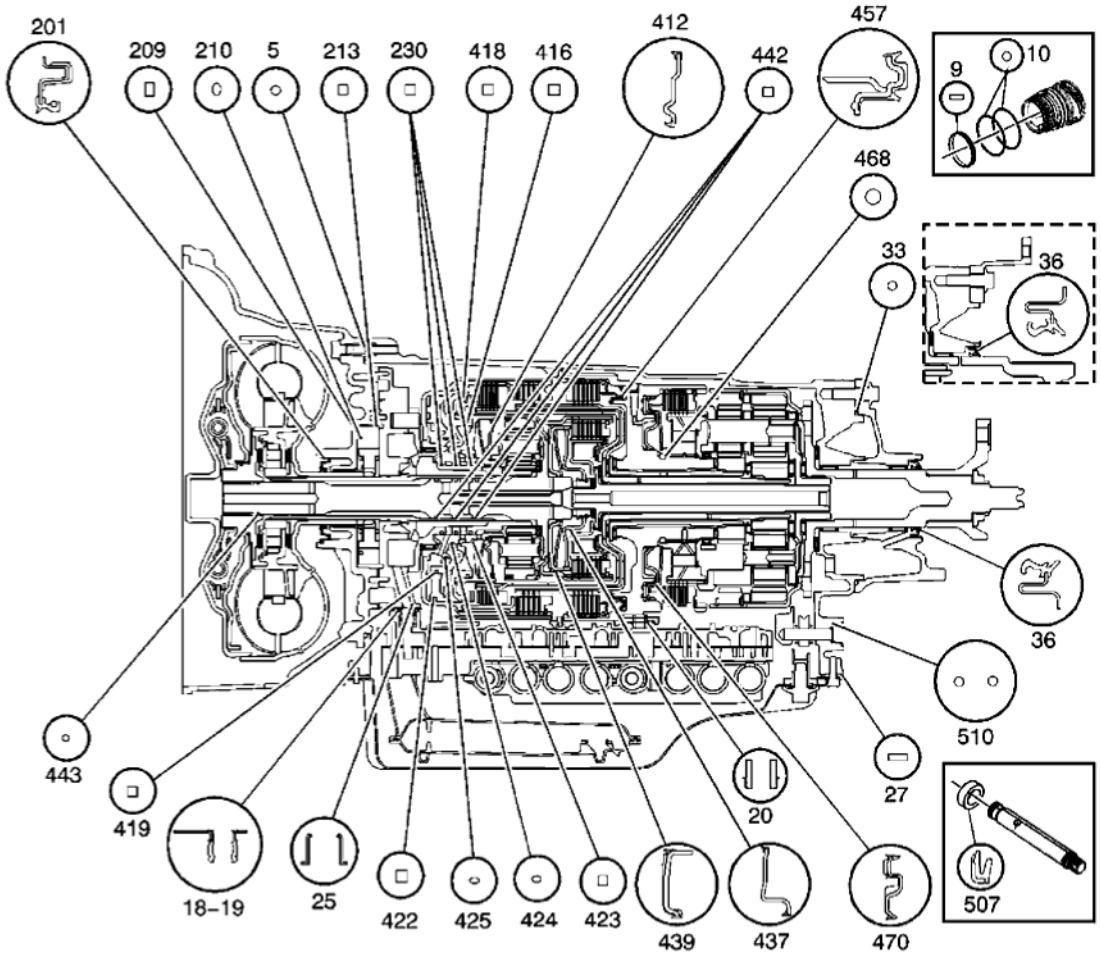

cardiagn.com

Fig. 32: Seal Locations
Courtesy of GENERAL MOTORS CORP.

Callout	Component Name
5	A/Trans Fluid Pump Seal
9	A/Trans Connector Seal
10	A/Trans Connector (O-ring) Seal
18	A/Trans Fluid Pump Seal Assembly
19	A/Trans Fluid Pump Seal Assembly
20	Center Support Fluid Passage Seal Assembly
25	A/Trans Fluid Filter Seal Assembly
27	A/Trans Fluid Pan Gasket
33	A/Trans Case Extension Seal - 2WD Models Only
36	Output Shaft Seal Assembly
201	Torque Converter Fluid Seal Assembly
209	A/Trans Fluid Pump Slide Fluid Seal Ring
210	A/Trans Fluid Pump Slide (O-ring) Seal
213	A/Trans Fluid Pump Slide Seal
230	1-2-3-4 and 3-5 Reverse Clutch Fluid Seal Ring
412	1-2-3-4 Clutch Piston Dam Assembly
416	1-2-3-4 Clutch Piston Seal
418	3-5 Reverse Clutch Piston Dam (O-ring) Seal
419	3-5 Reverse Clutch Piston Inner Seal
422	3-5 Reverse Clutch Piston Outer Seal
423	1-2-3-4 Clutch Piston Inner Seal
424	1-2-3-4 Clutch Piston Housing Seal
425	1-2-3-4 Clutch Piston Housing Seal
437	4-5-6 Clutch Piston Dam Assembly
439	4-5-6 Clutch Piston Assembly
442	Turbine Shaft Fluid Seal Ring
443	Turbine Shaft (O-ring) Seal
457	2-6 Clutch Piston Assembly
468	Low Clutch Sprag Seal
470	Low and Reverse Clutch Piston Assembly
507	Manual Shift Shaft Seal
510	Park Pawl Actuator Guide (O-ring) Seal

SEAL LOCATIONS (6L80)

cardiagn.com

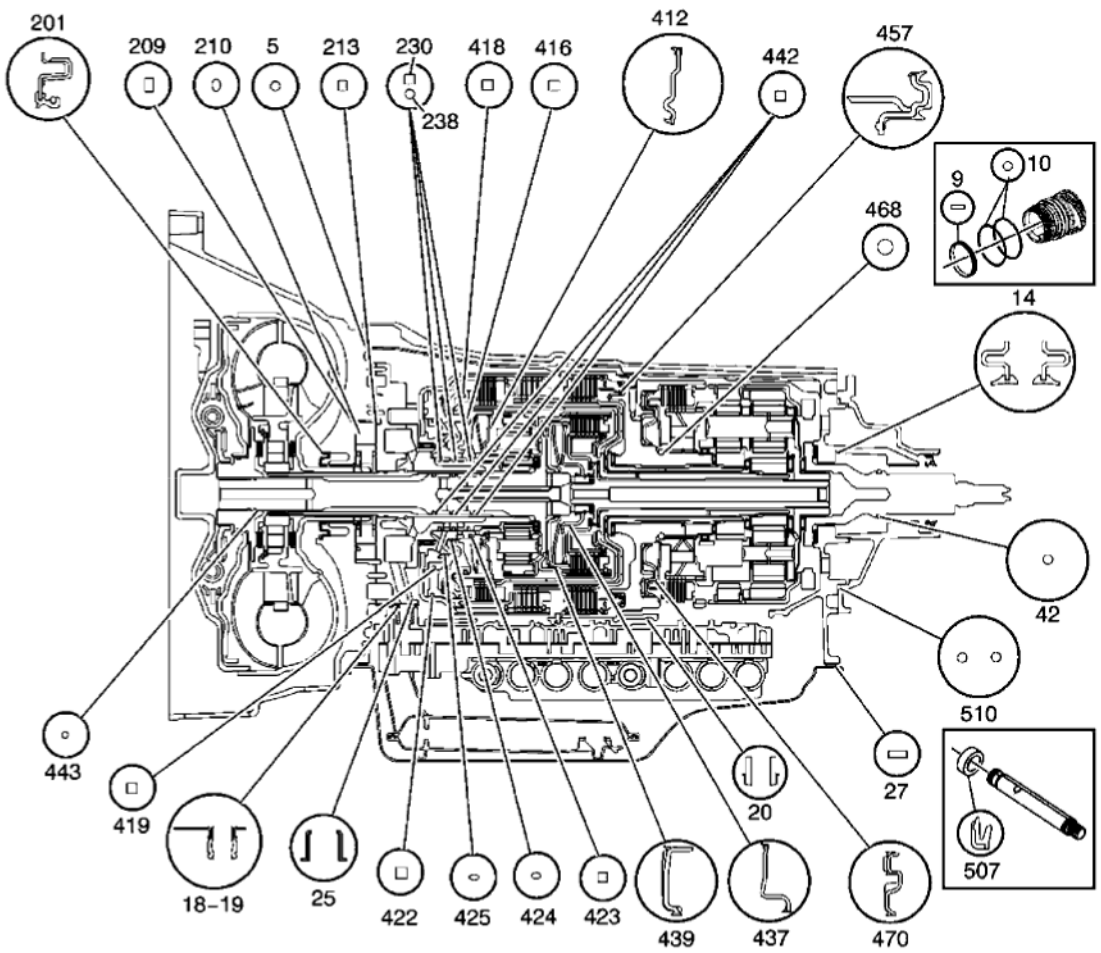

Fig. 33: Seal Locations
Courtesy of GENERAL MOTORS CORP.

Callout	Component Name
5	A/Trans Fluid Pump Seal
9	A/Trans Connector Seal
10	A/Trans Connector (O-ring) Seal
14	Output Shaft Seal Assembly
18	A/Trans Fluid Pump Seal Assembly
19	A/Trans Fluid Pump Seal Assembly
20	Center Support Fluid Passage Seal Assembly
25	A/Trans Fluid Filter Seal Assembly
27	A/Trans Fluid Pan Gasket
42	Prop Shaft Trans Flange O-ring Seal
201	Torque Converter Fluid Seal Assembly
209	A/Trans Fluid Pump Slide Fluid Seal Ring
210	A/Trans Fluid Pump Slide (O-ring) Seal

cardiagn.com

213	A/Trans Fluid Pump Slide Seal
230	1-2-3-4 and 3-5 Reverse Clutch Fluid Seal Ring
238	1-2-3-4 and 3-5 Reverse Clutch Fluid Seal Rings - Inner O-rings
412	1-2-3-4 Clutch Piston Dam Assembly
416	1-2-3-4 Clutch Piston Seal
418	3-5 Reverse Clutch Piston Dam (O-ring) Seal
419	3-5 Reverse Clutch Piston Inner Seal
422	3-5 Reverse Clutch Piston Outer Seal
423	1-2-3-4 Clutch Piston Inner Seal
424	1-2-3-4 Clutch Piston Housing Seal
425	1-2-3-4 Clutch Piston Housing Seal
437	4-5-6 Clutch Piston Dam Assembly
439	4-5-6 Clutch Piston Assembly
442	Turbine Shaft Fluid Seal Ring
443	Turbine Shaft (O-ring) Seal
457	2-6 Clutch Piston Assembly
468	Low Clutch Sprag Seal
470	Low and Reverse Clutch Piston Assembly
507	Manual Shift Shaft Seal
510	Park Pawl Actuator Guide (O-ring) Seal

BALL CHECK VALVE LOCATIONS

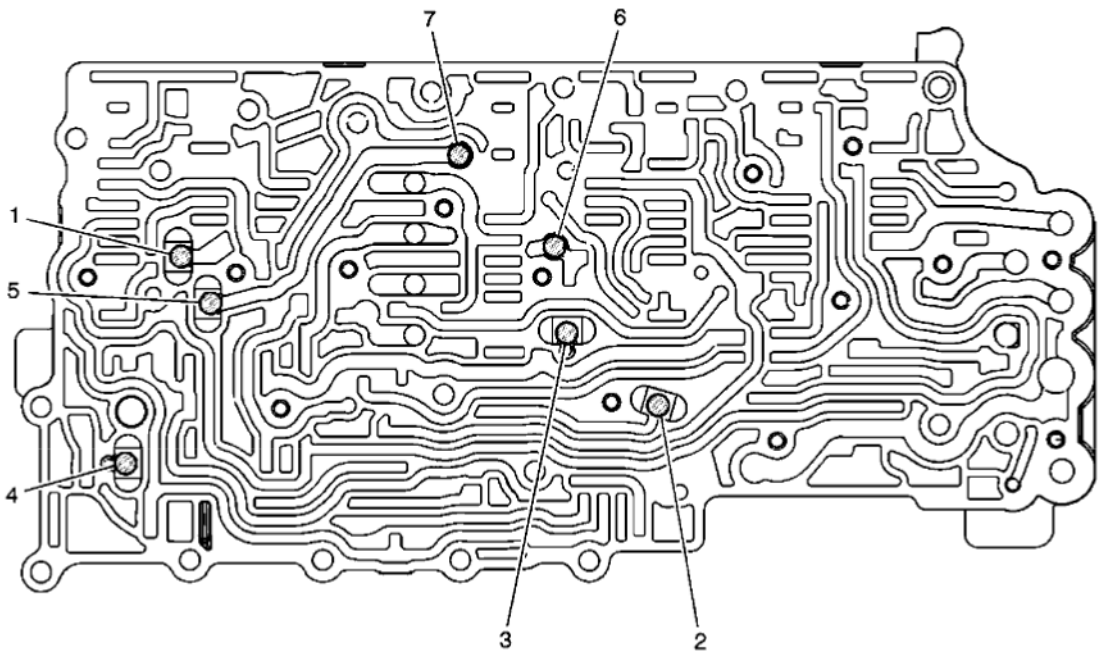

Fig. 34: Ball Check Valve Locations

cardiagn.com

Courtesy of GENERAL MOTORS CORP.

I.D.	Input Oil	Input Oil	Output Oil
1	Drive 1-6	DRV B	CB26/C1234 FD
2	Sol 1	Reverse (Park)	CSV2 Enable
3	Sol 2	C456	CSV3 Enable
4	PS4	C456	CSV2 Latch
5	Drive 1-6	C35R Rev FD	C35R Supply
6	CB26/C1234 FD	-	C1234 FD
7	C35R Supply	-	C35R FD

cardiagn.com

2010 TRANSMISSION

Automatic Transmission - 6L45/6L50/6L80/6L90 - Camaro

DESCRIPTION AND OPERATION

DEFINITIONS AND ABBREVIATIONS

Throttle Positions

Engine Braking

A condition where the engine is used to slow the vehicle by manually downshifting during a zero throttle coastdown.

Full Throttle Detent Downshift

A quick apply of the accelerator pedal to its full travel, forcing a downshift.

Heavy Throttle

Approximately 3/4 of accelerator pedal travel, 75 percent throttle position.

Light Throttle

Approximately 1/4 of accelerator pedal travel, 25 percent throttle position.

Medium Throttle

Approximately 1/2 of accelerator pedal travel, 50 percent throttle position.

Minimum Throttle

The least amount of throttle opening required for an upshift.

Wide Open Throttle (WOT)

Full travel of the accelerator pedal, 100 percent throttle position.

Zero Throttle Coastdown

A full release of the accelerator pedal while the vehicle is in motion and in drive range.

Shift Condition Definitions

Bump

cardiagn.com

A sudden and forceful apply of a clutch or a band.

Chuggle

A bucking or jerking. This condition may be most noticeable when the converter clutch is engaged. It is similar to the feel of towing a trailer.

Delayed

A condition where a shift is expected but does not occur for a period of time. This could be described as a clutch or band engagement that does not occur as quickly as expected during a part throttle or wide open throttle apply of the accelerator, or during manual downshifting to a lower range. This term is also defined as LATE or EXTENDED.

Double Bump - Double Feel

Two sudden and forceful applies of a clutch or a band.

Early

A condition where the shift occurs before the car has reached proper speed. This condition tends to labor the engine after the upshift.

End Bump

A firmer feel at the end of a shift than at the start of the shift. This is also defined as END FEEL or SLIP BUMP.

Firm

A noticeably quick apply of a clutch or band that is considered normal with a medium to heavy throttle. This apply should not be confused with HARSH or ROUGH.

Flare

A quick increase in engine RPM along with a momentary loss of torque. This most generally occurs during a shift. This condition is also defined as SLIPPING.

Harsh - Rough

A more noticeable apply of a clutch or band than FIRM. This condition is considered undesirable at any throttle position.

Hunting

A repeating quick series of upshifts and downshifts that causes a noticeable change in engine RPM, such as a 4-3-4 shift pattern. This condition is also defined as BUSYNESS.

cardiagn.com

Initial Feel

A distinctly firmer feel at the start of a shift than at the finish of the shift.

Late

A shift that occurs when the engine RPM is higher than normal for a given amount of throttle.

Shudder

A repeating jerking condition similar to CHUGGLE but more severe and rapid. This condition may be most noticeable during certain ranges of vehicle speed.

Slipping

A noticeable increase in engine RPM without a vehicle speed increase. A slip usually occurs during or after initial clutch or band apply.

Soft

A slow, almost unnoticeable clutch or band apply with very little shift feel.

Surge

A repeating engine related condition of acceleration and deceleration that is less intense than CHUGGLE.

Tie-Up

A condition where two opposing clutch and/or bands are attempting to apply at the same time causing the engine to labor with a noticeable loss of engine RPM.

Noise Conditions

Drive Link Noise

A whine or growl that increases or fades with vehicle speed, and is most noticeable under a light throttle acceleration. It may also be noticeable in PARK or NEUTRAL operating ranges with the vehicle stationary.

Final Drive Noise

A hum related to vehicle speed which is most noticeable under a light throttle acceleration.

Planetary Gear Noise

A whine related to vehicle speed, which is most noticeable in FIRST gear, SECOND gear, FOURTH gear or REVERSE. The condition may become less noticeable, or go away, after an upshift.

cardiagn.com

Pump Noise

A high pitched whine that increases in intensity with engine RPM. This condition may also be noticeable in all operating ranges with the vehicle stationary or moving.

Torque Converter Noise

A whine usually noticed when a vehicle is stopped, and the transmission is in DRIVE or REVERSE. The noise will increase with engine RPM.

Driver Shift Control

Driver shift control (DSC) allows the driver to change gears similar to a manual transmission.

Transmission Abbreviations

A/C

Air Conditioning

AC

Alternating Current

AT

Automatic Transmission

CCDIC

Climate Control Driver Information Center

DC

Direct Current

DIC

Driver Information Center

DLC

Diagnostic Link Connector

DMM

Digital Multimeter

cardiagn.com

DSC:

Driver Shift Control

DTC

Diagnostic Trouble Code

EBTCM

Electronic Brake/Traction Control Module

ECCC

Electronically-Controlled Capacity Clutch

ECT

Engine Coolant Temperature

EMI

Electromagnetic Interference

IAT

Intake Air Temperature

IGN

Ignition

IMS

Internal Mode Switch

ISS

Input Speed Sensor

MAP

Manifold Absolute Pressure

MIL

Malfunction Indicator Lamp

cardiagn.com

NC

Normally Closed

NO

Normally Open

OBD

On Board Diagnostic

OSS

Output Speed Sensor

PC

Pressure Control

PCM

Powertrain Control Module

PCS

Pressure Control Solenoid

PS

Pressure Switch

PWM

Pulse Width Modulation

RPM

Revolutions Per Minute

SS

Shift Solenoid

STL

Service Transmission Lamp

cardiagn.com

TAP

Transmission Adaptive Pressure

TCC

Torque Converter Clutch

TFP

Transmission Fluid Pressure

TFT

Transmission Fluid Temperature

TP

Throttle Position

VSS

Vehicle Speed Sensor

WOT

Wide Open Throttle

TRANSMISSION IDENTIFICATION INFORMATION

cardiagn.com

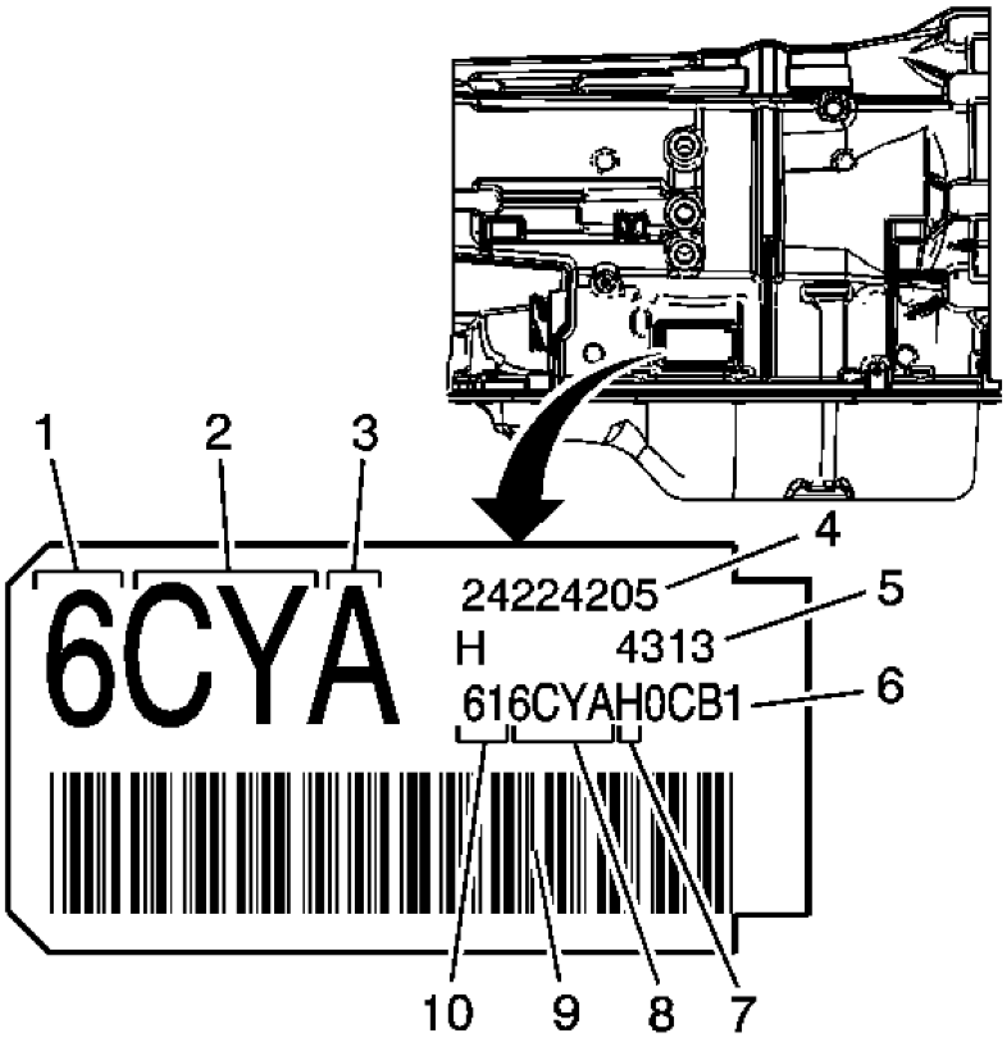

Fig. 1: Transmission Identification Information
Courtesy of GENERAL MOTORS CORP.

Callout	Component Name
1	Model Year
2	Model Code
3	Transmission Family
4	Transmission Assembly Number
5	Julian date
6	Sequential Serial Number

cardiagn.com

7	Source Code
8	Broadcast Code
9	Bar Code
10	Transmission I.D.

TRANSMISSION GENERAL DESCRIPTION

The Hydra-matic 6-Speed RWD is a fully automatic, 6-speed, rear-wheel drive, electronic-controlled transmission. It consists primarily of a 4-element torque converter, an integral fluid pump and converter housing, a single and double planetary gear set, friction and mechanical clutch assemblies, and a hydraulic pressurization and control system. There are four variants of the transmission, all based on torque capacity. Architecture is common between the variants, and component differences are primarily related to size.

The 4-element torque converter contains a pump, a turbine, a pressure plate splined to the turbine, and a stator assembly. The torque converter acts as a fluid coupling to smoothly transmit power from the engine to the transmission. It also hydraulically provides additional torque multiplication when required. The pressure plate, when applied, provides a mechanical direct drive coupling of the engine to the transmission.

The planetary gear sets provide the 6 forward gear ratios and reverse. Changing gear ratios is fully automatic and is accomplished through the use of a transmission control module (TCM) located inside the transmission. The TCM receives and monitors various electronic sensor inputs and uses this information to shift the transmission at the optimum time.

The TCM commands shift solenoids and variable bleed pressure control solenoids to control shift timing and feel. The TCM also controls the apply and release of the torque converter clutch which allows the engine to deliver the maximum fuel efficiency without sacrificing vehicle performance. All the solenoids, including the TCM, are packaged into a self-contained control solenoid valve assembly.

The hydraulic system primarily consists of a vane-type pump, 2 control valve body assemblies, converter housing and case. The pump maintains the working pressures needed to stroke the clutch pistons that apply or release the friction components. These friction components, when applied or released, support the automatic shifting qualities of the transmission.

The friction components used in this transmission consist of 5 multiple disc clutches. The multiple disc clutches combine with one mechanical sprag clutch to deliver 7 different gear ratios, 6 forward and one reverse, through the gear sets. The gear sets then transfer torque through the output shaft.

The transmission may be operated in any of the following gear ranges:

PARK (P)

This position locks the rear wheels and prevents the vehicle from rolling either forward or backward. PARK is the best position to use when starting the vehicle. Because the transmission utilizes a shift lock control system, it is necessary to fully depress the brake pedal before shifting out of PARK. For safety reasons, use the parking brake in addition to the PARK position.

REVERSE (R)

cardiagn.com

This position allows the vehicle to be operated in a rearward direction.

NEUTRAL (N)

This position allows the engine to be started and operated while driving the vehicle. If necessary, you may select this position in order to restart the engine with the vehicle moving. This position should also be used when towing the vehicle.

DRIVE (D)

Drive range should be used for all normal driving conditions for maximum efficiency and fuel economy. Drive range allows the transmission to operate in each of the 6 forward gear ratios. Downshifts to a lower gear, or higher gear ratio, are available for safe passing by depressing the accelerator or by manually selecting a lower gear in the manual mode range.

MANUAL (M) SPORT MODE (S)

This position allows the driver to utilize the Driver Shift Control (DSC) system, or manual mode. When the shift selector lever is moved to the M/S position, the driver may select upshifts or downshifts by using the paddle switches located on the front side, of the steering wheel horizontal cross bar. An upshift to the next gear is commanded by pushing the plus (+) button once. A downshift is commanded by pushing the minus (-) button once.
To protect the engine or transmission from damage, the TCM will only allow you to upshift or downshift into a selected gear, appropriate for the current operating engine RPM's and vehicle speed. If a manual upshift or downshift does not occur within the calibrated range, the TCM will select the appropriate gear, to protect the engine or transmission from damage.

TRANSMISSION COMPONENT AND SYSTEM DESCRIPTION

The mechanical components of the 6-Speed RWD are as follows:

- A torque converter with an electronically controlled capacity clutch (ECCC). ECCC was developed to reduce the possibility of noise, vibration, or chuggle caused by TCC apply. In a torque converter with ECCC, the pressure plate does not always fully lock to the torque converter cover. Instead, the pressure plate maintains a small amount of slippage. In RWD 6-Speed transmissions, this slippage can range from 0-50 RPM. Full lockup (0 RPM slip) is still available on some applications. TCC may apply in 2nd, 3rd, 4th, 5th, or 6th gears. The specific TCC apply points and the amount of clutch slippage are determined by a number of operating conditions, including throttle position, vehicle speed, gear, as well as specific vehicle application. Transmission fluid temperature will also affect TCC apply points.
- Vane-type fluid pump assembly
- 1-2-3-4 and 3-5 Reverse clutch assembly
- Input sun gear and carrier assembly
- 4-5-6 clutch assembly with turbine shaft
- 4-5-6 clutch hub assembly
- 1-2-3-4 clutch hub assembly
- 2-6 and 3-5 reverse clutch hub assembly

cardiagn.com

- Center support assembly, with 2-6 clutch assembly, and low and Reverse clutch assembly
- Low clutch sprag assembly
- A double planetary output carrier assembly
- Output shaft assembly
- Control valve body assembly

The electrical components of the 6-Speed RWD are as follows:

- Input and output speed sensor assembly
- Manual shift shaft position switch
- Control solenoid valve assembly, which contains the following components:
  - Transmission control module (TCM)
  - 5 variable bleed line pressure control (PC) solenoids
  - Transmission fluid pressure (TFP) switch assembly
  - Torque converter clutch (TCC) pressure control solenoid
  - 2 shift solenoids

For more information, refer to **Electronic Component Description**.

TRANSMISSION ADAPTIVE FUNCTIONS

The Hydra-Matic® 6-Speed RWD transmission utilizes a line pressure control system during upshifts to compensate for the normal wear of transmission components. As the apply components within the transmission wear or change over time, shift time (the time required to apply a clutch) increase or decreases. In order to compensate for these changes, the transmission control module (TCM) adjusts the pressure commands to the various PC solenoids, to maintain the originally calibrated shift timing. The automatic adjusting process is referred to as "adaptive learning" and it is used to ensure consistent shift feel plus increase transmission durability. The TCM monitors the A/T input speed sensor (ISS) and the A/T output speed sensor (OSS) during commanded shifts to determine if a shift is occurring too fast (harsh) or too slow (soft) and adjusts the corresponding pressure control (PC) solenoid signal to maintain the set shift feel.

The purpose of the adapt function is to automatically compensate the shift quality for the various vehicle shift control systems. The adapt function is a continuous process that will help to maintain optimal shift quality throughout the life of the vehicle.

TRANSMISSION INDICATORS AND MESSAGES

The following transmission-related indicators and messages may be displayed on the Instrument Panel Cluster (IPC). For a complete listing and description of all vehicle indicators and messages, refer to **Indicator/Warning Message Description and Operation** .

"TRANSMISSION HOT IDLE ENGINE"

This message is displayed when the TCM detects a transmission fluid temperature (TFT) equal to or

cardiagn.com

greater than 130°C (266°F) for 5 seconds.

"SERVICE TRANSMISSION"

This message displays when there is a problem with the transmission.

ELECTRONIC COMPONENT DESCRIPTION

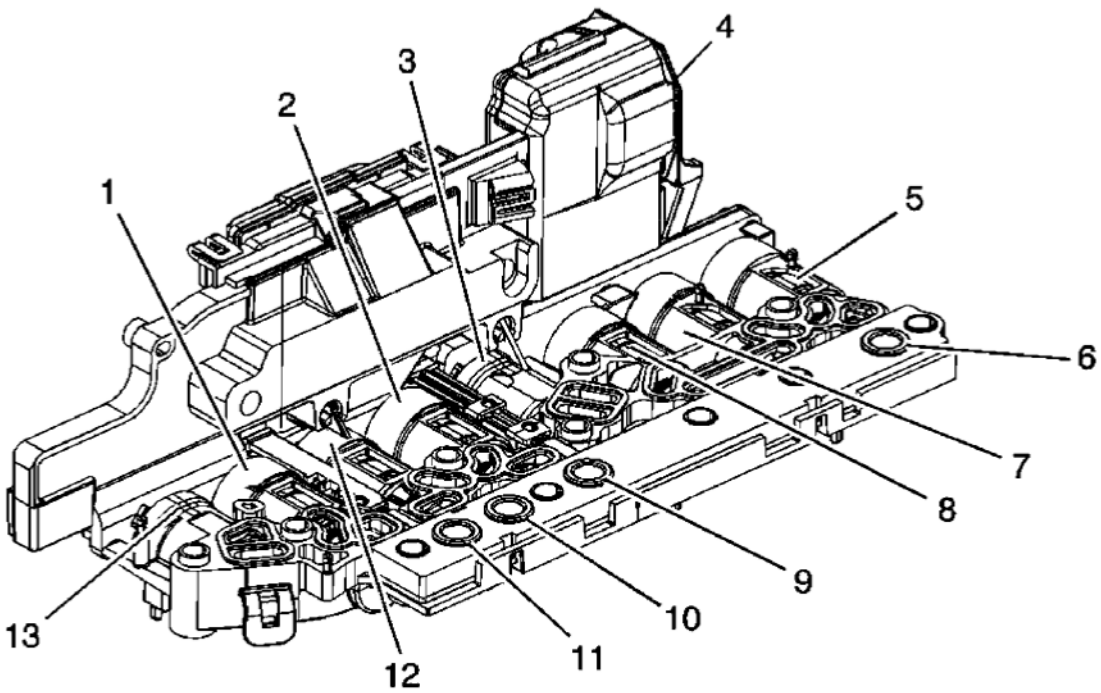

Fig. 2: Control Solenoid (W/Body & TCM) Valve Assembly
Courtesy of GENERAL MOTORS CORP.

Callout	Component Name
1	Line Pressure Control (PC) Solenoid
2	Torque Converter Clutch (TCC) Pressure Control (PC) Solenoid
3	Shift Solenoid (SS) 2
4	16 Pin Connector
5	Pressure Control (PC) Solenoid 3
6	Transmission Fluid Pressure (TFP) Switch 5
7	Pressure Control (PC) Solenoid 4
8	Pressure Control (PC) Solenoid 2
9	Transmission Fluid Pressure (TFP) Switch 3
10	Transmission Fluid Pressure (TFP) Switch 1
11	Transmission Fluid Pressure (TFP) Switch 4
12	Pressure Control (PC) Solenoid 5

cardiagn.com

13	Shift Solenoid (SS) 1

The control solenoid valve assembly contains the following components:

- Transmission control module (TCM)
- Clutch pressure control solenoids (Clutch PC Sol)
- Shift solenoids (SS)
- Line pressure control solenoid (Line PC Sol)
- Torque converter clutch pressure control solenoid (TCC PC Sol)
- Transmission fluid temperature sensor (TFT Sensor)
- TCM temperature sensor
- Power-up temperature sensor
- Transmission fluid pressure switches (TFP Sw)

These components are not serviced separately. The control solenoid valve assembly utilizes a lead-frame system to connect these components electrically to the TCM. No wires are used for these components. The control solenoid valve assembly bolts directly to the lower and upper valve body assemblies inside the transmission. The control solenoid valve assembly connects to the engine harness 16-way connector via a pass-thru sleeve.

Internal Mode Switch (IMS)

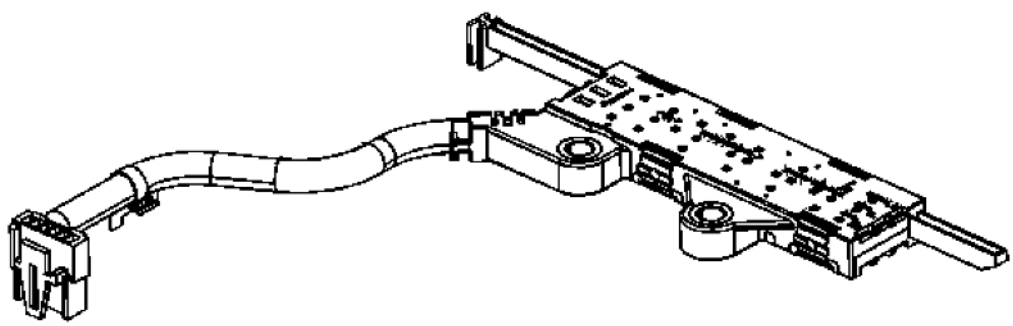

Fig. 3: Internal Mode Switch (IMS)
Courtesy of GENERAL MOTORS CORP.

The transmission manual shift shaft switch assembly is a sliding contact switch attached to the manual shift shaft inside the transmission case. The five inputs to the TCM from the transmission manual shift shaft switch assembly indicate the transmission gear selector lever position. This information is used for engine controls as well as determining the transmission shift patterns. The state of each input is available for display on the scan tool. The five input parameters represented are Signal A, Signal B, Signal C, Signal P (Parity) and Signal N

cardiagn.com

(P/N Start).

Input Speed Sensor (ISS)

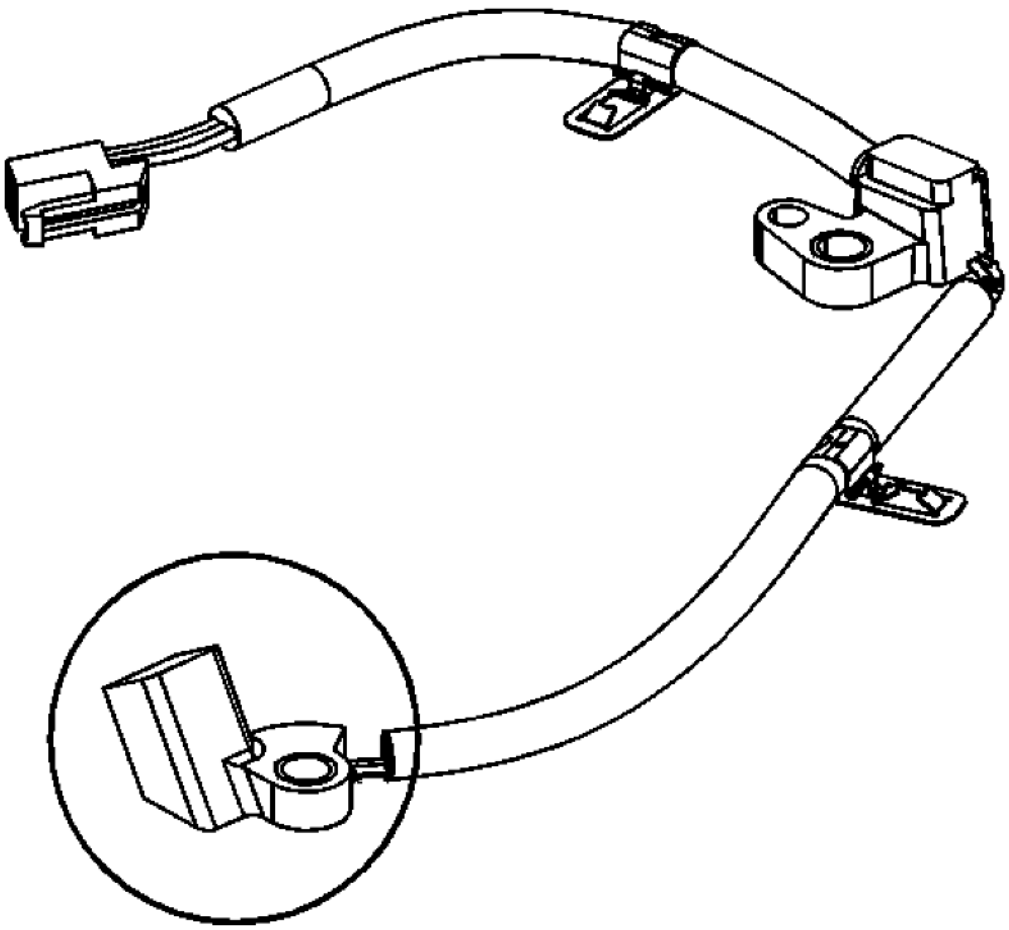

Fig. 4: Input Speed Sensor (ISS)
Courtesy of GENERAL MOTORS CORP.

The input speed sensor (ISS) is a hall-effect type sensor. The ISS mounts to the control valve upper body assembly and connects to the control solenoid valve assembly through a wire harness and connector. The sensor faces the 1-2-3-4 and 3-5-R clutch housing machined teeth surface. The sensor receives 8.3-9.3 volts on the ISS/OSS Supply Voltage circuit from the TCM. As the 1-2-3-4 and 3-5-R clutch housing rotates, the sensor produces a signal frequency based on the machined surface of the 1-2-3-4 and 3-5-R clutch housing. This signal is transmitted through the ISS signal circuit to the control solenoid valve assembly. The control solenoid valve assembly uses the ISS signal to determine line pressure, transmission shift patterns, torque converter clutch (TCC) slip speed and gear ratio.

cardiagn.com

Output Speed Sensor (OSS)

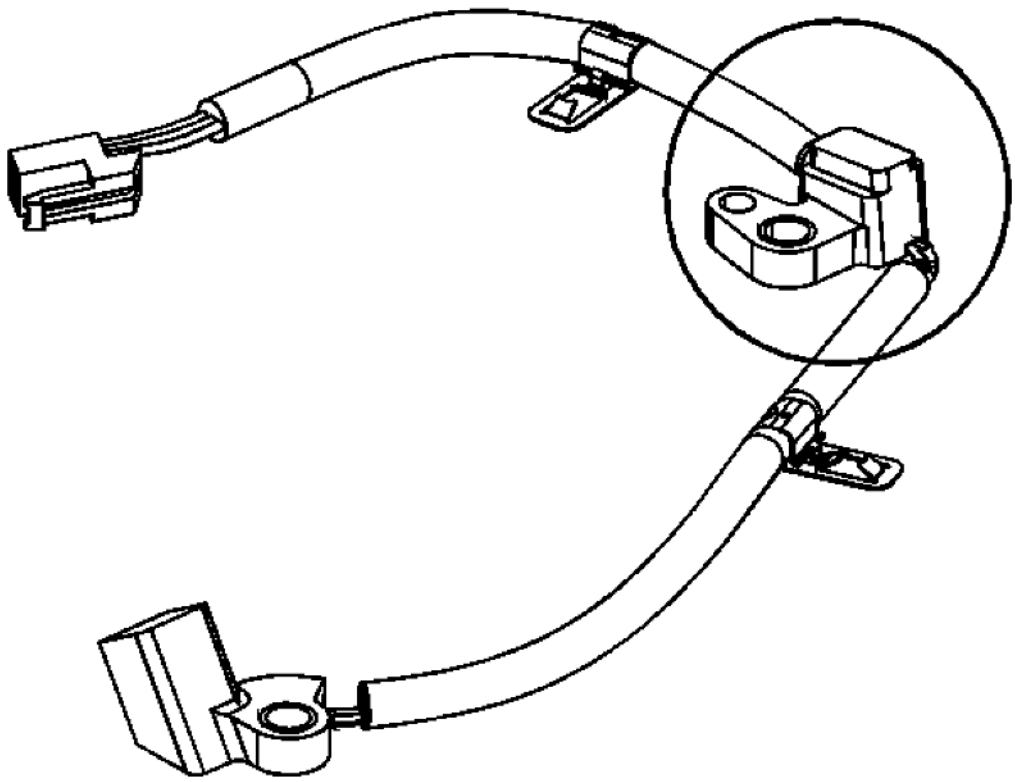

Fig. 5: Output Speed Sensor (OSS)
Courtesy of GENERAL MOTORS CORP.

The output speed sensor (OSS) is a hall-effect type sensor. The OSS mounts to the control valve upper body assembly and connects to the control solenoid valve assembly through a wire harness and connector. The sensor faces the output shaft machined teeth surface. The sensor receives 8.3-9.3 volts on the ISS/OSS supply voltage circuit from the TCM. As the output shaft rotates, the sensor produces a signal frequency based on the machined surface of the output shaft. This signal is transmitted through the OSS signal circuit to the TCM. The TCM uses the OSS signal to determine line pressure, transmission shift patterns, torque converter clutch (TCC) slip speed and gear ratio.

AUTOMATIC TRANSMISSION INLINE 16-WAY CONNECTOR DESCRIPTION

cardiagn.com

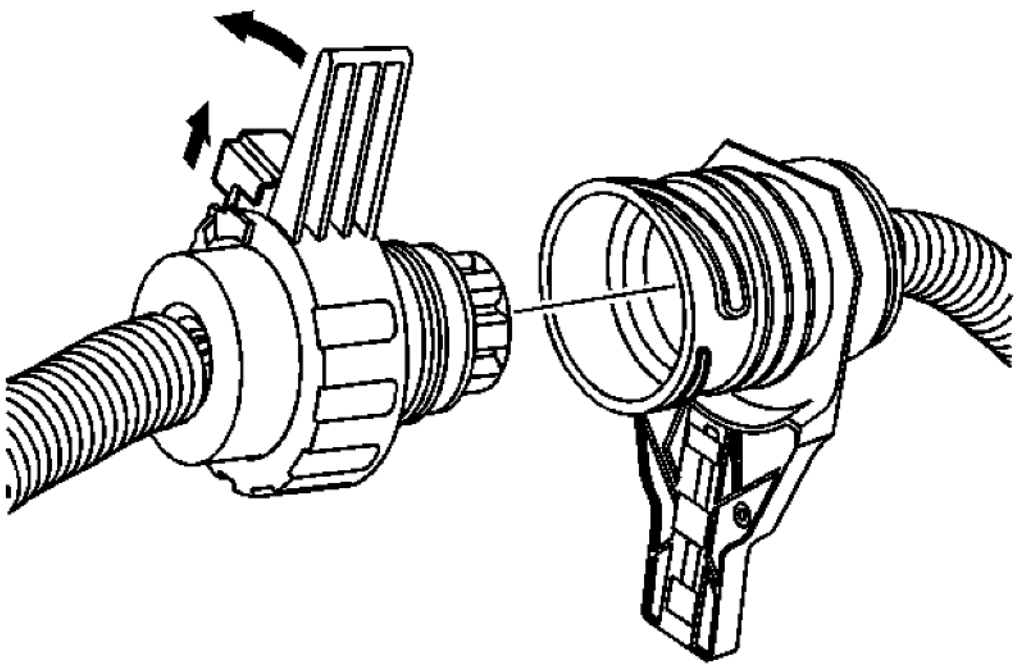

Fig. 6: Automatic Transmission Inline 16-Way Connector
Courtesy of GENERAL MOTORS CORP.

The transmission electrical connector is an important part of the transmission operating system. Any interference with the electrical connection can cause the transmission to set diagnostic trouble codes or affect proper operation. The following items can affect the electrical connection:

- Bent pins in the connector from rough handling during connection and disconnection
- Wires backing away from the pins or coming uncrimped, in the external wiring harness
- Dirt contamination entering the connector when disconnected
- Transmission fluid leaking into the connector, wicking up into the external wiring harness and degrading the wire insulation
- Moisture intrusion in the connector
- Low pin retention in the external connector from excessive connection and disconnection of the wiring connector assembly
- Pin corrosion from contamination
- Damaged connector assembly

Remember the following points:

cardiagn.com

- Limit twisting or wiggling the connector during removal. Bent pins can occur.
- Do not pry the connector off with a screwdriver or other tool.
- Whenever the transmission external wiring connector is disconnected from the internal harness and the engine is operating, DTCs will set. Clear these DTCs after reconnecting the external connector.

Use the following procedure to disconnect the engine side of the 16-way connector from the transmission side:

1. Unlock the slide lock on the engine wiring harness connector.
2. Rotate the connector lever counterclockwise and remove the connector from the electrical connector passage sleeve.

Use the following procedure to reconnect the engine side of the 16-way connector to the transmission side:

1. Orient the alignment slot on the engine side of the connector with the alignment tab on the electrical connector passage sleeve.
2. Slide the engine side connector through the electrical connector passage sleeve and into the transmission side connector.
3. Rotate the connector lever clockwise until the connector is fully seated.
4. Lock the slide lock on the connector.

PARK - ENGINE RUNNING

When the gear selector lever is in the Park (P) position, fluid is drawn into the pump through the transmission fluid filter assembly, from the transmission fluid pan assembly. Line pressure is then directed to the following valves:

Fluid Pressure Directed in Preparation for a Shift

Manual Valve

Mechanically controlled by the gear selector lever, the manual valve is in the Park (P) position and prevents line pressure from the pressure regulator valve from entering the reverse and drive circuits.

CBR1/C456 Pressure Control (PC) Solenoid 3

The CBR1/C456 pressure control solenoid (PCS) is energized (HIGH) allowing actuator feed limit fluid to enter the PCS CBR1/C456 CL fluid circuit. PCS CBR1/C456 CL fluid is then routed through orifice #31 to the 4-5-6 clutch boost valve and through orifice #39 to the CBR1/ C456 clutch regulator valve.

CBR1/C456 Clutch Regulator Valve

PCS CBR1/C456 CL fluid at the CBR1/C4-5-6 clutch regulator valve moves the valve against CBR1/C4-5-6 clutch regulator spring force and CBR1/FDBK fluid. This allows line pressure to pass through the valve and enter the CBR1/456CL FD circuit. CBR1/456CL FD is then routed to clutch select valve 2.

Shift Solenoid 1

cardiagn.com

Shift solenoid 1 is energized (ON) allowing actuator feed limit fluid to enter the solenoid 1 circuit. Solenoid 1 fluid is routed to the #2 ball check valve and through orifice #10 to the torque converter clutch (TCC) regulator valve and shuttle valve (SHTL).

TCC Regulator Valve and Shuttle Valve

Solenoid 1 fluid is routed to the TCC regulator valve and shuttle valve and moves the valve against TCC regulator valve spring force.

#2 Ball Check Valve

Solenoid 1 fluid seats the #2 ball check valve against the reverse fluid passage and fluid is forced through orifice #22 into the CSV2 enable fluid circuit.

Clutch Select Valve 2

CSV2 enable fluid is routed to the clutch select valve 2 and moves the valve against clutch select valve 2 spring force. This allows CBR1/456 CL FD fluid to pass through the valve and enter the CBR1/CBR FD circuit. CBR1/CBR FD fluid is then routed: to clutch select valve 3, into the CBR1 fluid circuit and, through orifice #49 where it enters the CBR fluid circuit and an exhaust passage at the clutch select valve 3 (this fluid is intended to keep the low and reverse clutch full of fluid but not pressurized). CBR1 fluid is then routed to the low & reverse clutch assembly in preparation for a shift into low or reverse gear.

Shift Solenoid 2

Shift solenoid 2 is energized (ON) allowing actuator feed limit fluid to enter the solenoid 2 fluid circuit and is then routed to the #3 ball check valve.

3-5 Reverse Clutch Regulator Valve

Actuator feed limit fluid is routed through the valve and into the PS1 fluid passage. PS1 fluid is then sent to the normally closed #1 pressure switch and opens the switch.

#3 Ball Check Valve

Solenoid 2 fluid seats the #3 ball check valve against 456 CL fluid passage and fluid is forced through orifice #20 into the CSV3 enable fluid circuit. CSV3 enable fluid is then routed to the clutch select valve 3.

Clutch Select Valve #3

CSV3 enable fluid moves the clutch select valve 3 against clutch select valve 3 spring force. CBR fluid at the clutch select valve 3 passes through the valve and exhausts.

cardiagn.com

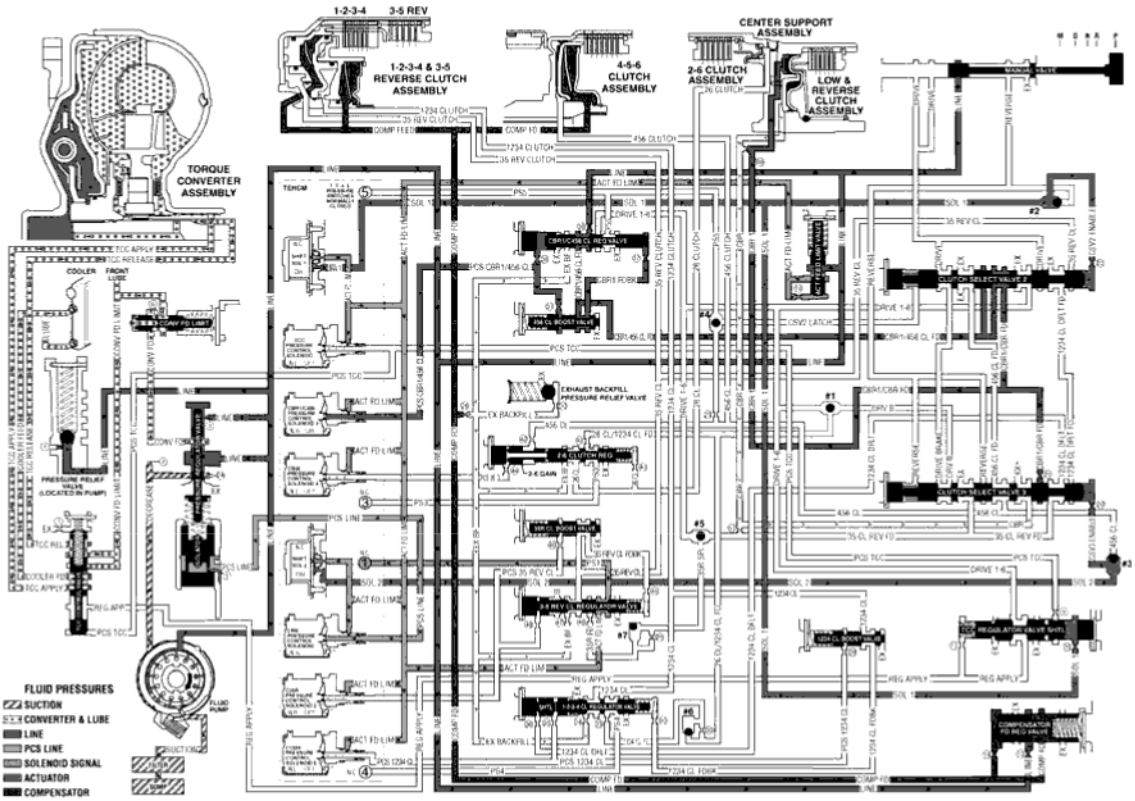

Fig. 7: Park - Engine Running
Courtesy of GENERAL MOTORS CORP.

REVERSE

When the gear selector lever is moved to the Reverse (R) position (from the Park position) the normally high C35R pressure control solenoid 2 is commanded ON and the following changes occur in the transmission's hydraulic and electrical systems:

Fluid Pressure Directed in Preparation for a Shift

Manual Valve

With the manual valve in the reverse position, line pressure is directed into the reverse fluid circuit to the #2 ball check valve and clutch select valve 3.

#2 Ball Check Valve

Reverse fluid seats the #2 ball check valve against the solenoid 1 fluid passage and fluid is forced through orifice #22 into the CSV2 enable circuit.

Clutch Select Valve 2

CSV2 enable fluid, present at the valve from Park position, continues to hold the clutch select valve 2 against clutch select valve 2 spring force.

cardiagn.com

Low and Reverse Clutch Applies

Clutch Select Valve 3

Reverse fluid from the manual valve is routed to clutch select valve 3 to combine with clutch select valve 3 spring force to keep the valve in the off position. This allows reverse fluid to pass through the valve and enter the 3-5 clutch reverse feed circuit. The 3-5 clutch reverse feed fluid from the clutch select valve 3 is also routed to #5 ball check valve. CBR1/CBR FD fluid is also directed through the clutch select valve 3 to the low and reverse clutch assembly.

Low and Reverse Clutch

CBR and CBR1 fluid pressures are routed to both the inner and outer areas of the low and reverse clutch piston to hold the piston against spring force and hold the low and reverse clutch plates. The clutch was already applied in Park, but is applied with more holding capacity in Reverse (both piston areas are pressurized).

#5 Ball Check Valve

The 3-5 clutch reverse feed fluid seats #5 ball check valve against the drive 1-6 circuit allowing 3-5 clutch reverse feed fluid to enter the 3-5 reverse supply circuit. The 3-5 reverse supply fluid is then routed to #7 ball check valve and through orifice #25 where it enters the 3-5 reverse feed circuit. The 3-5 reverse feed passes through orifice #46 and then is routed to the 3-5 reverse clutch regulator valve.

3-5 Reverse Clutch Applies

C35R Pressure Control Solenoid 2

The C35R pressure control solenoid 2 is energized (HIGH) allowing actuator feed limit fluid to enter the PCS 3-5 reverse clutch circuit. PCS 3-5 reverse clutch fluid is then routed through orifice #48 to the 3-5 reverse clutch regulator valve and through orifice #40 to the 3-5 reverse boost valve.

3-5 Reverse Clutch Regulator Valve

PCS 3-5 reverse clutch fluid moves the 3-5 reverse clutch regulator valve against 3-5 reverse clutch regulator valve spring force and 3-5 reverse clutch feedback fluid. This allows 3-5 reverse feed to pass through the valve and enter the 3-5 reverse clutch circuit. The 3-5 reverse clutch fluid is then routed to the 3-5 reverse clutch and the 3-5 reverse boost valve. PS1 fluid from pressure switch 1 exhausts through the valve allowing the switch to close.

3-5 Reverse Boost Valve

PCS 3-5 reverse clutch fluid pressure acts on a differential area moving the 3-5 reverse clutch boost valve against the 3-5 reverse clutch boost valve spring. The 3-5 reverse clutch fluid passes through the valve and enters the 3-5 reverse clutch feedback circuit. As PCS 3-5 reverse clutch fluid pressure is increased to a given value, the 3-5 reverse clutch boost valve opens the 3-5 reverse clutch feedback circuit to exhaust. This results in the 3-5 reverse clutch regulator valve moving to the full feed position sending full 3-5 clutch reverse feed pressure (full line pressure) to the clutch.

3-5 Reverse Clutch

cardiagn.com

The 3-5 reverse clutch fluid enters the 1-2-3-4 and reverse clutch housing to move the piston against spring force and compensator feed fluid to apply the 3-5 reverse clutch plates.

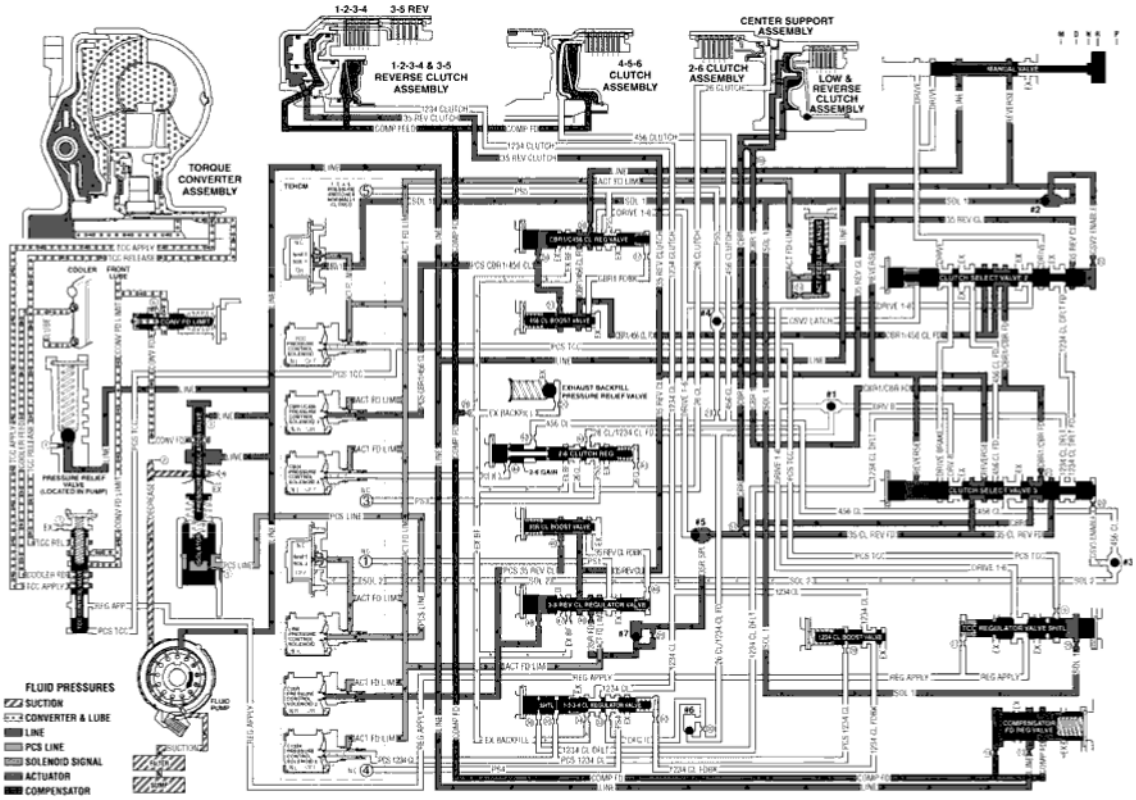

Fig. 8: Reverse
Courtesy of GENERAL MOTORS CORP.

NEUTRAL - ENGINE RUNNING

When the gear selector is moved to the Neutral (N) position, the hydraulic and electrical system operation is identical to Park (P) range. However, if Neutral is selected after the vehicle was operating in Reverse (R), the normally high C35R pressure control solenoid 2 is commanded OFF and the following changes would occur in the hydraulic system:

3-5 Reverse Clutch Releases

Manual Valve

The manual valve is moved to the Neutral position and blocks line pressure from entering the reverse and drive fluid circuits. The reverse fluid from the #2 ball check valve and clutch select valve 3 is opened to an exhaust passage at the manual valve.

C35R Pressure Control Solenoid 2

The C35R pressure control solenoid 2 is commanded OFF allowing PCS 3-5 reverse clutch fluid from the 3-5 reverse clutch boost valve and 3-5 reverse clutch regulator valve to exhaust.

cardiagn.com

3-5 Reverse Clutch Boost Valve

The 3-5 reverse boost valve spring force moves the valve to allow 3-5 reverse clutch feedback fluid from the 3-5 reverse clutch regulator valve to enter the 3-5 reverse clutch circuit and exhaust.

3-5 Reverse Clutch Regulator Valve

The 3-5 reverse clutch regulator valve spring force moves the valve to allow 3-5 reverse clutch fluid from the 3-5 reverse clutch and clutch select valve 2 to pass through the valve and enter the exhaust backfill fluid circuit. The 3-5 reverse clutch fluid then enters the exhaust backfill fluid circuit and is routed through orifice #30 to the exhaust backfill pressure relief valve where excess pressure is exhausted.

3-5 Reverse Clutch

The 3-5 reverse clutch spring force combined with a force from the compensator moves the 3-5 reverse clutch piston to release the 3-5 reverse clutch plates and force 3-5 reverse clutch fluid to exhaust from the 1-2-3-4 and 3-5 reverse clutch housing. The 3-5 reverse clutch fluid is then routed to the 3-5 reverse clutch regulator valve allowing the 3-5 reverse clutch to release.

Clutch Select Valve 3

When reverse fluid exhausts through the manual valve, CSV3 enable fluid moves the valve against clutch select valve 3 spring force. The 3-5 reverse feed fluid is routed around #7 ball check valve and into the 3-5 reverse supply circuit. The 3-5 reverse supply fluid is routed around #5 ball check valve and into the 3-5 clutch reverse feed circuit and exhausts at the clutch select valve 3.

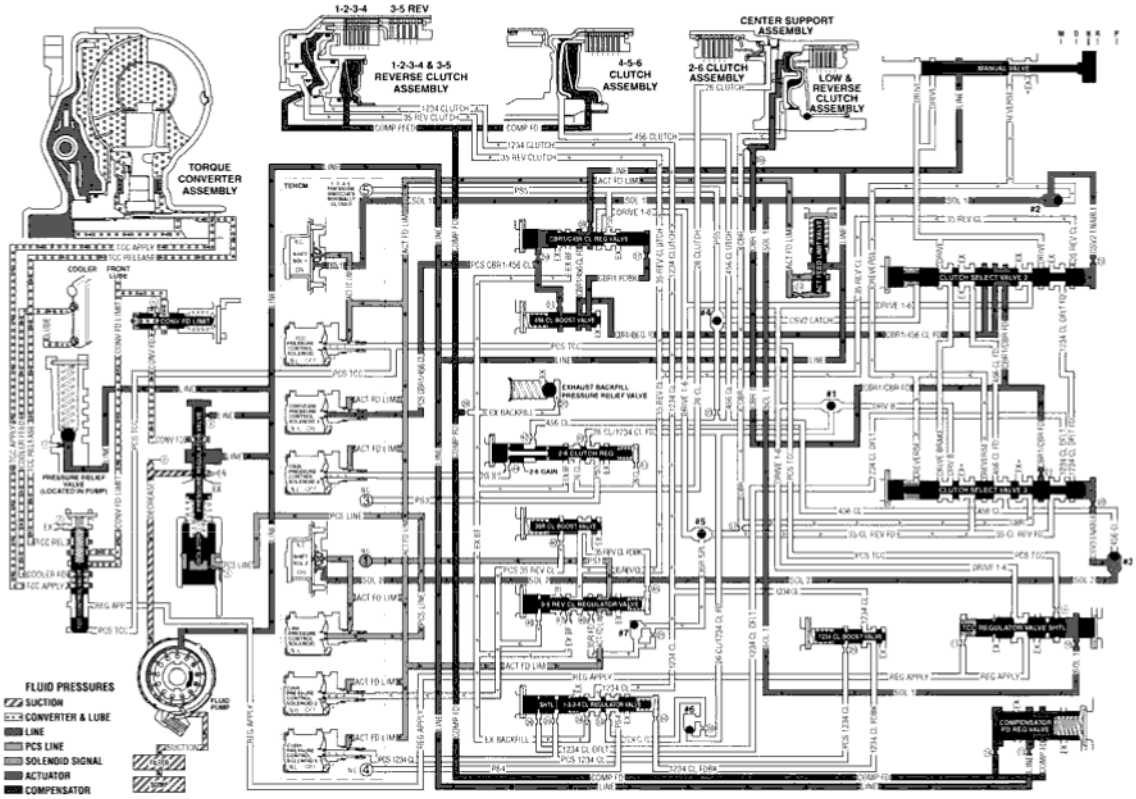

cardiagn.com

Fig. 9: Neutral - Engine Running
Courtesy of GENERAL MOTORS CORP.

DRIVE RANGE, FIRST GEAR ENGINE BRAKING

When the gear selector lever is moved to the Drive (D) range from the Neutral (N) position, the transmission will provide engine braking. In this operating range, the normally-low C1234 pressure control solenoid 5 is commanded ON and in the engine braking mode the following changes occur within the hydraulic circuits:

Fluid Pressure is Directed to the 1-2-3-4 Clutch and the Low and Reverse Clutch to Provide Engine Braking

Manual Valve

The manual valve is moved to the Drive (D) position and allows line fluid pressure to enter the drive fluid circuit. Drive fluid is then routed to the clutch select valve 2.

Clutch Select Valve 2

Drive fluid at the clutch select valve 2 passes through the valve and enters the drive brake circuit. Drive brake fluid is then routed to the clutch select valve 3.

Clutch Select Valve 3

Drive brake fluid at the clutch select valve 3 passes through the valve and enters the Drive B fluid circuit. Drive B fluid is then routed to #1 ball check valve.

#1 Ball Check Valve

Drive B fluid seats the #1 ball check valve against drive 1-6 fluid to force drive B fluid into the CB26/C1234 feed passage. CB26/C1234 feed fluid is routed to the #6 ball check valve, through orifice #43 and, to the 2-6 clutch regulator valve. CB26/C1234 feed fluid passes through the 2-6 clutch regulator valve and enters the pressure switch 3 (PS3) fluid circuit. PS3 fluid is then routed to the normally closed pressure switch 3 and opens the switch.

#6 Ball Check Valve

CB26/C1234 feed fluid seats the #6 ball check valve against the 1234 clutch feed passage forcing CB26/C1234 feed fluid through orifice #32 before entering the 1234 clutch feed circuit. The 1234 clutch feed fluid is routed through orifice #33 and then to the 1-2-3-4 clutch regulator valve.

1-2-3-4 Clutch Applies

C1234 Pressure Control Solenoid 5

The C1234 pressure control solenoid 5 is commanded ON allowing actuator feed limit fluid to enter the PCS1234 clutch fluid circuit. PCS1234 clutch fluid is then routed through orifice #35 to the 1-2-3-4 clutch regulator valve. PCS1234 clutch fluid is also routed through orifice #29 and then to the 1-2-3-4 clutch boost valve.

cardiagn.com

1-2-3-4 Clutch Regulator Valve

PCS1234 clutch fluid moves the 1-2-3-4 clutch regulator valve against 1-2-3-4 clutch regulator valve spring force to allow 1234 clutch feed fluid to pass through the valve and enter the 1234 clutch fluid circuit. The 1234 clutch fluid is then routed to the 1234 clutch boost valve and the 1-2-3-4 clutch.

1-2-3-4 Clutch Boost Valve

PCS1234 clutch fluid pressure acts on a differential area moving the 1234 clutch boost valve against the 1234 clutch boost valve spring. The 1234 clutch fluid passes through the valve and enters the 1234 clutch feedback circuit. As PCS 1234 clutch fluid pressure is increased to a given value, the 1234 clutch boost valve opens the 1234 clutch feedback circuit to exhaust. This results in the 1234 clutch regulator valve moving to the full feed position sending full 26 CL/1234 CL feed pressure (full line pressure) to the clutch.

1-2-3-4 Clutch

The 1234 clutch fluid enters the 1234 clutch housing to move the piston against spring force and compensator feed fluid to apply the 1-2-3-4 clutch plates.

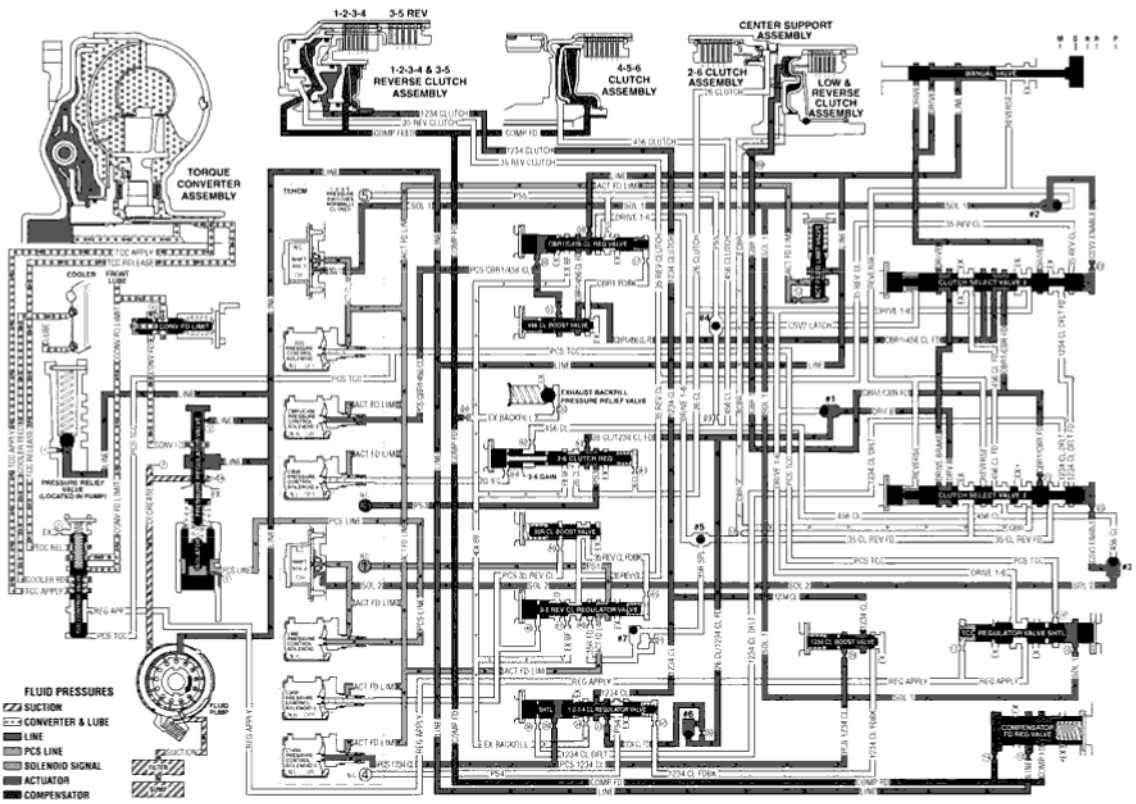

Fig. 10: Drive Range, First Gear Engine Braking
Courtesy of GENERAL MOTORS CORP.

DRIVE RANGE, FIRST GEAR

As the vehicle speed increases, the transmission control module (TCM) receives input signals from the automatic transmission input and output speed sensors, throttle position sensor and other vehicle sensors to

cardiagn.com

determine the precise moment to deenergize or "turn off" shift solenoid 1 and command OFF the normally-high CBR1/C456 pressure control solenoid 3.

Low & Reverse Clutch Releases

Shift Solenoid 1

When shift solenoid 1 is "turned OFF", CSV2 enable fluid from the clutch select valve 2 passes by the #2 ball check valve and enters the solenoid 1 fluid circuit. Solenoid 1 fluid from the #2 ball check valve and TCC regulator valve is then routed to the solenoid where it exhausts.

Clutch Select Valve 2

Clutch select valve 2 (CSV2) enable fluid is exhausted from the clutch select valve 2 and clutch select valve 2 spring force moves the valve to the released position. With clutch select valve 2 in the released position, drive fluid from the manual valve passes through the valve and enters the drive 1-6 fluid circuit. Drive 1-6 fluid then feeds all clutch regulator valves and the TCC regulator valve.

CBR1/C456 Pressure Control Solenoid 3

The CBR1/C456 pressure control solenoid 3 is commanded OFF allowing PCS CBR1/C456 fluid from the CBR1/C456 clutch regulator valve and 456 clutch boost valve to exhaust.

CBR1/C456 Clutch Regulator Valve

CBR1/C456 clutch regulator valve spring force moves the valve to exhaust the CBR1/456 clutch feed circuit and allow drive 1-6 fluid to enter the PS5 fluid circuit. PS5 fluid is then routed to the normally-closed pressure switch 5 and opens the switch. PS5 fluid is also routed to the #4 ball check valve and flows into the CSV2 latch fluid circuit.

#4 Ball Check Valve

PS5 fluid pressure seats the #4 ball check valve against the 456 clutch fluid circuit. PS5 fluid is then directed into the CSV2 latch fluid circuit and routed to the clutch select valve 2. CSV2 latch fluid combines with clutch select valve 2 spring force and holds the valve in this position during all 6 forward gear ranges.

#5 Ball Check Valve

Drive 1-6 fluid pressure seats the #5 ball check valve against the 35 clutch reverse feed fluid passage. Drive 1-6 fluid is then directed into the 35R supply fluid circuit which is routed to the #7 ball check valve and orifice #25.

#7 Ball Check Valve

The 35R supply fluid seats the #7 ball check valve against the 35R feed fluid passage to force 35R supply fluid through orifice #25 before entering the 35R feed circuit. The 35R feed fluid is then routed to the 3-5 reverse clutch regulator valve.

Low and Reverse Clutch

cardiagn.com

Low and reverse clutch spring force moves the low and reverse clutch piston which forces clutch braking (CBR) and CBR1 fluid out of the center support. CBR fluid is routed to the clutch select valve 3 where it exhausts. CBR1 fluid is routed to the clutch select valve 2 where it exhausts. The low and reverse clutch is in the released position.

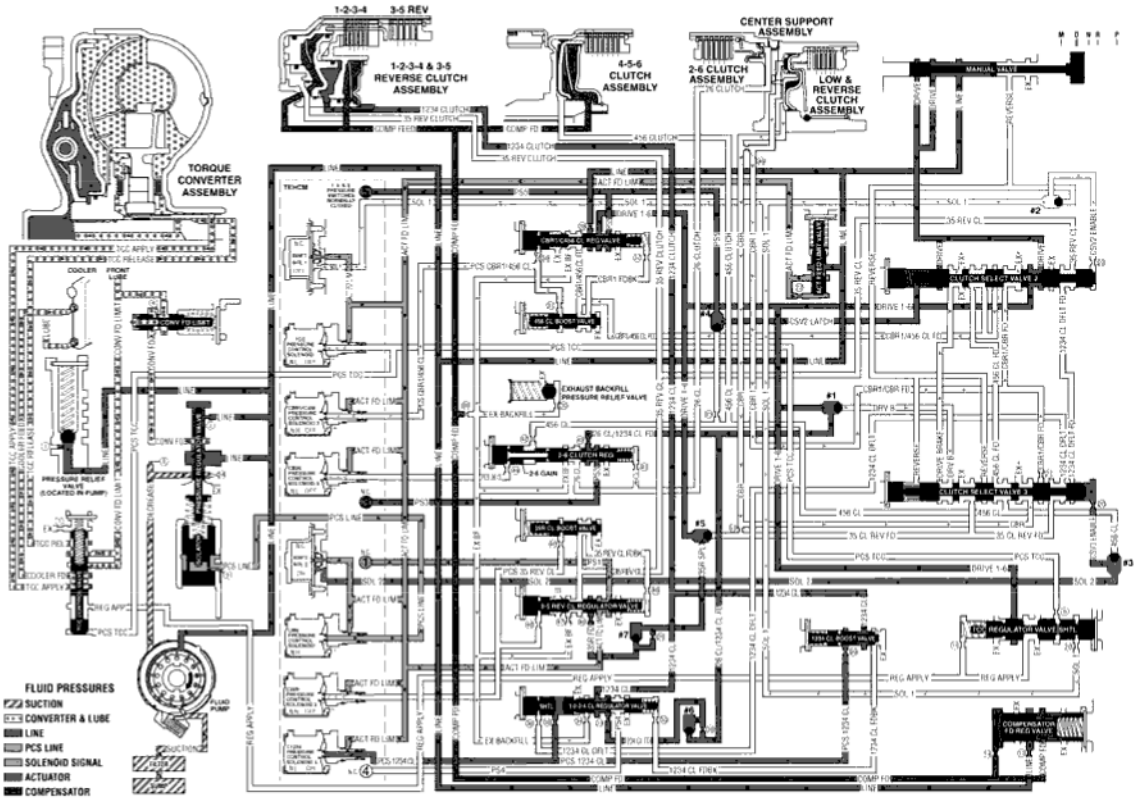

Fig. 11: Drive Range, First Gear
Courtesy of GENERAL MOTORS CORP.

DRIVE RANGE, SECOND GEAR

As the vehicle speed increases, the transmission control module (TCM) receives input signals from the automatic transmission input and output speed sensors, the throttle position sensor and other vehicle sensors to determine the precise moment to command ON the normally-low pressure control solenoid 4.

Second Clutch Applies

CB26 Pressure Control Solenoid 4

The CB26 pressure control solenoid 4 is commanded ON, allowing actuator feed limit fluid to enter the pressure control solenoid (PCS) 26 clutch fluid circuit. PCS 26 clutch fluid is then routed through orifice #44 to the 2-6 clutch regulator gain valve.

2-6 Clutch Regulator Gain Valve

The 2-6 clutch regulator gain valve allows the gain (valve input to output pressure magnification factor) of the

cardiagn.com

2-6 clutch regulator valve to be different for a 1-2 shift verses a 5-6 shift. For a 1-2 shift, PCS 26 clutch fluid pressure acts on a differential area resulting in the "high gain" pressure output.

2-6 Clutch Regulator Valve

PCS 26 clutch fluid moves the 2-6 clutch regulator / gain valve assembly against the 2-6 clutch regulator valve spring force to allow 26 clutch/1234 clutch feed fluid to pass through the valve. The 26 clutch/1234 clutch feed fluid is routed into the 26 clutch fluid circuit where it passes through orifice #41 and then to the spring end of the 2-6 clutch regulator valve, and to the 2-6 clutch within the center support.

2-6 Clutch

The 26 clutch fluid from the 2-6 clutch regulator valve is routed through the center support and to the 2-6 clutch piston assembly. The 26 clutch fluid pressure moves the piston against 2-6 clutch spring force to apply the 2-6 clutch plates.

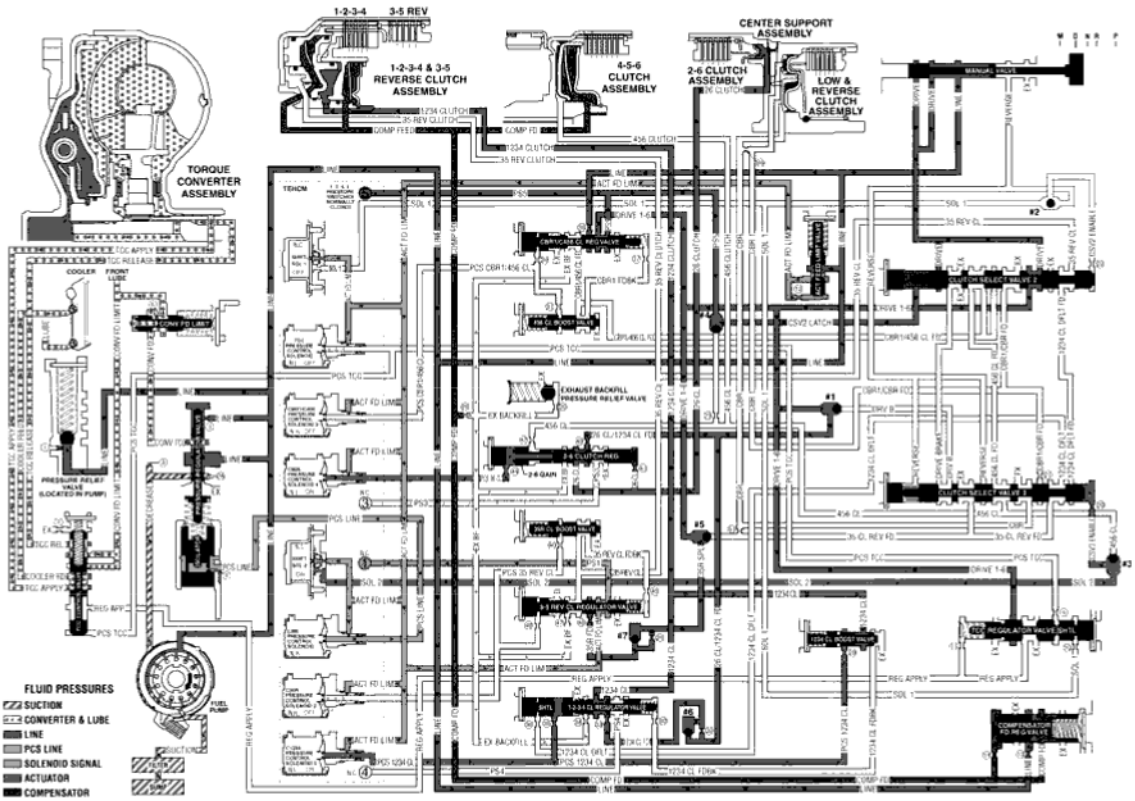

Fig. 12: Drive Range, Second Gear
Courtesy of GENERAL MOTORS CORP.

DRIVE RANGE, THIRD GEAR

As the vehicle speed increases, the transmission control module (TCM) receives input signals from the automatic transmission input and output speed sensors, the throttle position sensor and other vehicle sensors to determine the precise moment to command OFF the normally-low CB26 pressure control solenoid 4. At the same time the C35R pressure control solenoid 2 is also commanded ON to regulate 3-5 clutch apply.

cardiagn.com

3-5 Reverse Clutch Applies

C35R Pressure Control Solenoid 2

The C35R pressure control solenoid 2 is commanded ON allowing actuator feed fluid to enter the pressure control solenoid (PCS) 35 reverse clutch fluid circuit. PCS 35 reverse clutch fluid is routed through orifice #48 and then to the 3-5 reverse clutch regulator valve. PCS 35 reverse clutch fluid is also routed through orifice #40 and then to the 3-5 reverse clutch boost valve.

3-5 Reverse Clutch Boost Valve

PCS 35 reverse clutch fluid pressure acts on a differential area moving the 3-5 reverse clutch boost valve against the 3-5 reverse clutch boost valve spring. The 35 reverse clutch fluid passes through the valve and enters the 35 reverse clutch feedback circuit. As PCS 35 reverse clutch fluid pressure is increased to a given value, the 3-5 reverse clutch boost valve opens the 35 reverse clutch feedback circuit to exhaust. This results in the 3-5 reverse clutch regulator valve moving to the full feed position sending full 35 reverse clutch feed pressure (full line pressure) to the clutch.

3-5 Reverse Clutch Regulator Valve

PCS 35 reverse clutch fluid moves the 3-5 reverse clutch regulator valve against 3-5 reverse clutch regulator valve spring force and 35 reverse clutch feedback fluid. This allows 35 reverse feed to pass through the valve and enter the 35 reverse clutch circuit. The 35 reverse clutch fluid is then routed to the 3-5 reverse clutch, the 3-5 reverse boost valve and the clutch select valve 2. When the 3-5 reverse clutch regulator valve is in this position, PS1 fluid from the pressure switch 1 exhausts through the valve allowing the switch to close.

3-5 Reverse Clutch

The 35 reverse clutch fluid enters the 1-2-3-4 and 3-5 reverse clutch housing to move the piston against spring force combined with force from the compensator to apply the 3-5 reverse clutch plates.

2-6 Clutch Releases

CB26 Pressure Control Solenoid 4

The CB26 pressure control solenoid 4 is commanded OFF allowing PCS 26 clutch fluid from the 2-6 clutch regulator valve to exhaust. The 26 clutch/1234 clutch feed fluid at the 2-6 clutch regulator valve passes through the valve and enters the PS3 fluid circuit. PS3 fluid is then routed to pressure switch 3 and opens the normally-closed switch.

2-6 Clutch Regulator Valve

The 2-6 clutch regulator valve spring force moves the valve to allow 26 clutch fluid from the 2-6 clutch to pass through the valve and enter the exhaust backfill fluid circuit.

2-6 Clutch

The 2-6 clutch spring force moves the 2-6 clutch piston to release the 2-6 clutch plates and forces 26 clutch fluid to exhaust from the center support. The 26 clutch fluid is routed through the 2-6 clutch regulator valve

cardiagn.com

where it enters the exhaust backfill fluid circuit and is routed through orifice #30 to the exhaust backfill pressure relief valve where excess pressure is exhausted.

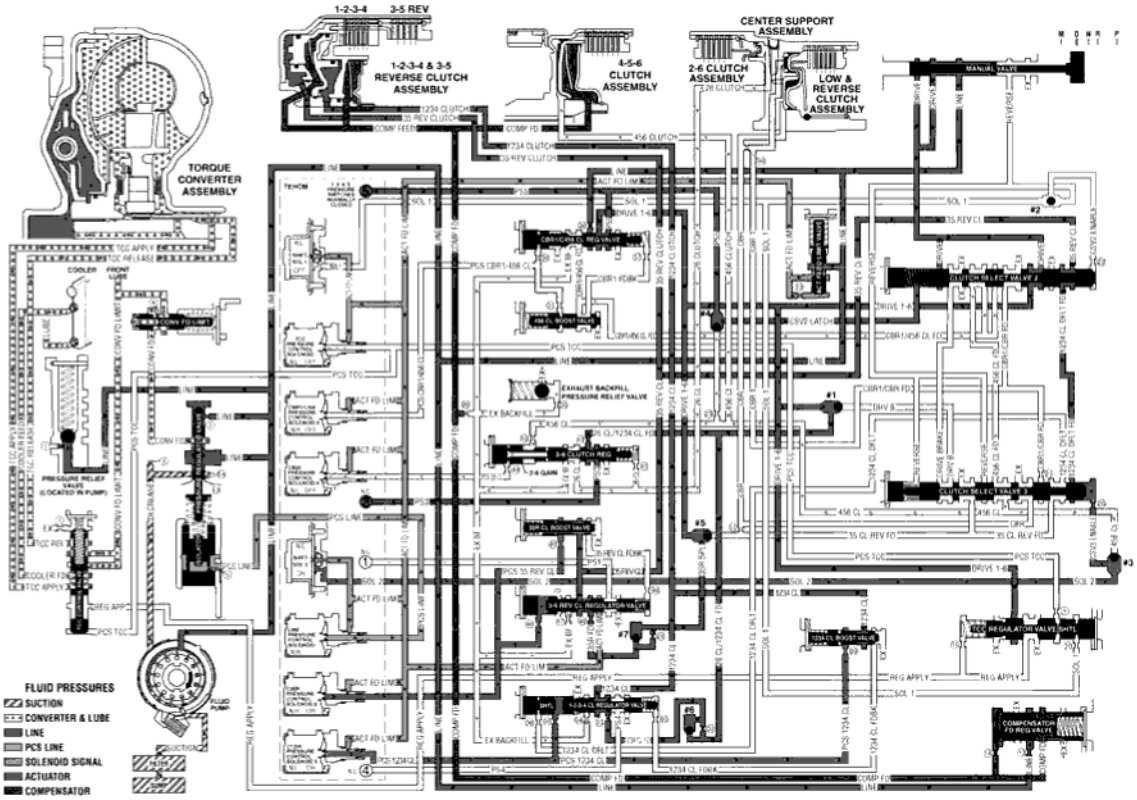

Fig. 13: Drive Range, Third Gear
Courtesy of GENERAL MOTORS CORP.

DRIVE RANGE, THIRD GEAR DEFAULT

If the transmission is in 1st, 2nd or 3rd gear during a transmission electrical component failure, the transmission will default to 3rd gear. All solenoids will default to their normal state. If the torque converter clutch was applied, it will release. This default action will enable the vehicle to be safely driven to a service center.

1-2-3-4 Clutch Stays Applied

Shift Solenoid 2

Shift solenoid 2 defaults to it's normally-closed state (OFF), and SOL 2 fluid exhausts through the solenoid.

Clutch Select Valve 3

Solenoid 2 fluid pressure no longer holds the clutch select valve 3 open. When the valve moves back to the closed position, it opens the 1234 clutch default fluid circuit, and 1234 default fluid is routed to the 1-2-3-4 clutch regulator valve.

1-2-3-4 Clutch Regulator Valve

cardiagn.com

With the absence of PCS 1234 clutch fluid, due to the default state of the C1234 pressure control solenoid 5, the 1-2-3-4 regulator valve would close from spring force. However, the 1234 clutch default fluid enters behind the 1-2-3-4 regulator shuttle valve and keeps the valve in the open position.

1-2-3-4 Clutch

With the 1-2-3-4 clutch regulator valve still held in the open position, the 1-2-3-4 clutch will stay applied.

3-5 Reverse Clutch Applied or Applies

C35R Pressure Control Solenoid 2

The normal state for the C35R pressure control solenoid 2 is ON, therefore PSC 35 reverse clutch fluid will still be routed to the 3-5 reverse clutch regulator valve and the 3-5 reverse clutch boost valve.

3-5 Reverse Clutch Regulator Valve

PCS 3-5 reverse clutch fluid moves the 3-5 reverse clutch regulator valve against 3-5 reverse clutch regulator valve spring force and 3-5 reverse clutch feedback fluid. This allows 3-5 reverse feed to pass through the valve and enter the 3-5 reverse clutch circuit. 3-5 reverse clutch fluid is then routed to the 3-5 reverse clutch, the 3-5 reverse boost valve and the clutch select valve 2. When the 3-5 reverse clutch regulator valve is in this position, PS1 fluid from the pressure switch 1 exhausts through the valve, allowing the switch to close.

3-5 Reverse Clutch Boost Valve

PCS 3-5 reverse clutch fluid pressure acts on a differential area moving the 3-5 reverse clutch boost valve against the 3-5 reverse clutch boost valve spring. The 3-5 reverse clutch fluid passes through the valve and enters the 3-5 reverse clutch feedback circuit. As PCS 3-5 reverse clutch fluid pressure is increased to a given value, the 3-5 reverse clutch boost valve opens the 3-5 reverse clutch feedback circuit to exhaust. This results in the 3-5 reverse clutch regulator valve moving to the full feed position sending full 3-5 reverse clutch feed pressure (full line pressure) to the clutch.

3-5 Reverse Clutch

The 3-5 reverse clutch fluid enters the 1-2-3-4 and 3-5 reverse clutch housing to move the piston against spring force combined with force from the compensator to apply the 3-5 reverse clutch plates.

cardiagn.com

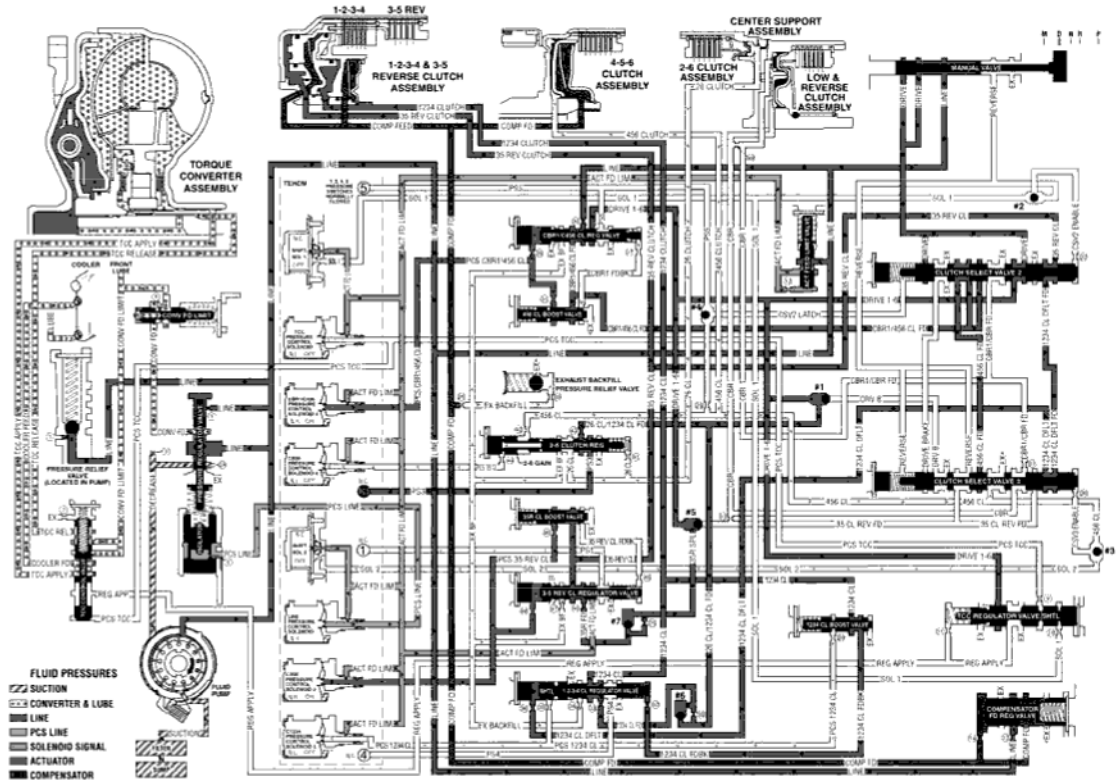

Fig. 14: Drive Range, Third Gear Default
Courtesy of GENERAL MOTORS CORP.

DRIVE RANGE - FOURTH GEAR

As the vehicle speed increases, the transmission control module (TCM) receives input signals from the automatic transmission input and output speed sensors, the throttle position sensor and other vehicle sensors to determine the precise moment to command OFF the normally-high C35R pressure control solenoid 2. At the same time the normally-low CBR1/C456 pressure control solenoid 3 is commanded ON to regulate 4-5-6 clutch apply.

4-5-6 Clutch Applies

CBR1/C456 Pressure Control Solenoid 3

The CBR1/C456 pressure control solenoid 3 (PCS) is commanded ON allowing actuator feed fluid to enter the PCS CBR1/456 clutch fluid circuit. PCS CBR1/456 clutch fluid is routed through orifice #39 to the CBR1/C456 clutch regulator valve and, through orifice #31 to the CBR1/C456 clutch boost valve.

CBR1/C456 Clutch Regulator Valve

PCS CBR1/456 clutch fluid moves the CBR1/C456 clutch regulator valve against CBR1/C456 clutch regulator valve spring force to allow line fluid to pass through the valve an enter the CBR1/456 clutch feed circuit. CBR1/456 clutch feed is then routed to the 4-5-6 clutch boost valve and clutch select valve 2.

cardiagn.com

4-5-6 Clutch Boost Valve

PCS CBR1/456 clutch fluid pressure acts on a differential area moving the CBR1/456 clutch boost valve against the CBR1/456 clutch boost valve spring. CBR1/456 clutch fluid passes through the valve and enters the CBR1/456 clutch feedback circuit. As PCS CBR1/456 clutch fluid pressure is increased to a given value, the CBR1/456 clutch boost valve opens the CBR1/456 clutch feedback circuit to exhaust. This results in the CBR1/456 clutch regulator valve moving to the full feed position, sending full line pressure to the clutch.

Clutch Select Valve 2

CBR1/456 clutch feed fluid passes through the clutch select valve 2 and enters the 456 clutch feed circuit. The 456 clutch feed fluid is routed to the clutch select valve 3 where it passes through the valve and enters the 456 clutch fluid circuit. The 456 clutch fluid is routed to the 4-5-6 clutch, the 2-6 clutch regulator gain valve and to the #3 ball check valve. The 456 clutch fluid seats the #3 ball check valve against solenoid 2 fluid passage and directed into the CSV3 enable fluid circuit where it is routed through orifice #20 and to clutch select valve 3.

4-5-6 Clutch

The 456 clutch fluid enters the 4-5-6 clutch housing to move the piston against spring force, combined with force from the compensator to apply the 4-5-6 clutch plates.

3-5 Reverse Clutch Releases

C35R Pressure Control Solenoid 2

The C35R pressure control solenoid 2 is commanded OFF, allowing PCS 35 reverse clutch fluid from the 3-5 reverse clutch boost valve and the 3-5 reverse clutch regulator valve to exhaust through the solenoid.

3-5 Reverse Clutch Boost Valve

The 3-5 reverse boost valve spring force moves the valve to allow 35 reverse clutch feedback fluid from the 3-5 reverse clutch regulator valve to enter the 35 reverse clutch fluid circuit and exhaust.

3-5 Reverse Clutch Regulator Valve

The 3-5 reverse clutch regulator valve spring force moves the valve to allow 35 reverse clutch fluid from the 3-5 reverse clutch to pass through the valve and enter the exhaust backfill fluid circuit. The 35 reverse clutch fluid then enters the exhaust backfill fluid circuit and is routed through orifice #30 to the exhaust backfill pressure relief valve where excess pressure is exhausted.

3-5 Reverse Clutch

The 3-5 reverse clutch spring force combined with force from the compensator move the 3-5 reverse clutch piston to release the 3-5 clutch plates and forces 35 reverse clutch fluid to exhaust from 1- 2-3-4 and 3-5 reverse clutch housing. The 35 reverse clutch fluid is then routed to the 3-5 reverse clutch regulator valve and exhausted.

cardiagn.com

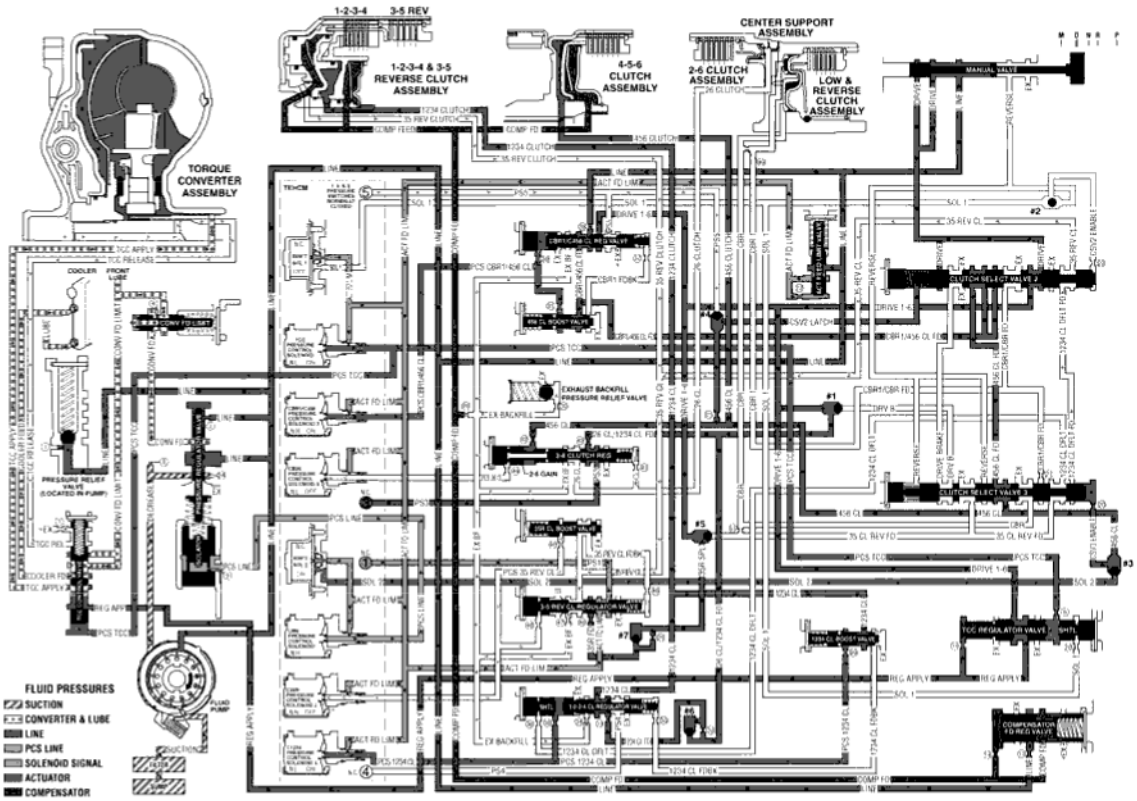

Fig. 15: Drive Range, Fourth Gear
Courtesy of GENERAL MOTORS CORP.

DRIVE RANGE, FIFTH GEAR

As the vehicle speed increases, the transmission control module (TCM) receives input signals from the automatic transmission input and output speed sensors, the throttle position sensor and other vehicle sensors to determine the precise moment to command ON the normally-high C35R pressure control solenoid 2. At the same time the normally-low C1234 pressure control solenoid 5 is commanded OFF.

3-5 Reverse Clutch Applies

C35R Pressure Control Solenoid 2

The C35R pressure control solenoid 2 is commanded ON, allowing actuator feed fluid to enter the PCS 35 reverse clutch fluid circuit. PCS 35 reverse clutch fluid is routed through orifice #48 and then to the 3-5 reverse clutch regulator valve. PCS 35 reverse clutch fluid is also routed through orifice #40 and then to the 3-5 reverse clutch boost valve.

3-5 Reverse Clutch Boost Valve

PCS 35 reverse clutch fluid pressure acts on a differential area moving the PCS 3-5 reverse clutch boost valve against the 3-5 reverse clutch boost valve spring. The 35 reverse clutch fluid passes through the valve and enters the 35 reverse clutch feedback circuit. As PCS 35 reverse clutch fluid pressure is increased to a given value, the 3-5 reverse clutch boost valve opens the 35 reverse clutch feedback circuit to exhaust. This results in the 3-5

cardiagn.com

reverse clutch regulator valve moving to the full feed position sending full 35 reverse clutch feed pressure (full line pressure) to the clutch.

3-5 Reverse Clutch Regulator Valve

PCS 35 reverse clutch fluid moves the 3-5 reverse clutch regulator valve against 3-5 reverse clutch regulator valve spring force and 35 reverse clutch feedback fluid. This allows 35 reverse feed to pass through the valve and enter the 35 reverse clutch circuit. The 35 reverse clutch fluid is then routed to the 3-5 reverse clutch, the 3-5 reverse boost valve and the clutch select valve 2. When the 3-5 reverse clutch regulator valve is in this position, PS1 fluid from the pressure switch 1 exhausts through the valve allowing the switch to close.

Clutch Select Valve 2

The 35 reverse clutch fluid passes through the clutch select valve 2 and enters the 1234 clutch default feed fluid circuit. The 1234 clutch default feed fluid is then routed to the clutch select valve 3.

3-5 Reverse Clutch

The 35 reverse clutch fluid enters the 1-2-3-4 and 3-5 reverse clutch housing to move the piston against spring force combined with force from the compensator to apply the 3-5 reverse clutch plates.

1-2-3-4 Clutch Releases

C1234 Pressure Control Solenoid 5

The C1234 pressure control solenoid 5 is commanded OFF, allowing PCS 1234 clutch fluid from the 1-2-3-4 clutch regulator valve and 1-2-3-4 clutch boost valve to exhaust.

1-2-3-4 Clutch Regulator Valve

The 1-2-3-4 clutch regulator valve spring force moves the valve to allow 1234 clutch feed fluid from the 1-2-3-4 clutch to pass through the valve and enter the exhaust backfill fluid circuit. The 1234 clutch fluid the enters the exhaust backfill fluid circuit and is routed through orifice #30 to the exhaust backfill pressure relief valve where excess pressure is exhausted. Also, 1234 clutch regulator valve spring force moves the valve to allow 1234 clutch feed fluid to pass through the valve and enter the PS4 fluid circuit. PS4 fluid is then routed to pressure switch 4 and opens the normally-closed switch.

1-2-3-4 Clutch Boost Valve

The 1-2-3-4 clutch boost valve spring force moves the valve to allow 1234 clutch feedback fluid from the 1-2-3-4 clutch regulator valve to enter the 1234 clutch circuit and exhaust.

1-2-3-4 Clutch

The 1-2-3-4 clutch spring force combined with force from the compensator moves the 1-2-3-4 clutch piston to release the clutch plates and force 1234 clutch fluid from the 1-2-3-4 and 3-5 reverse clutch housing. The 1234 clutch fluid is routed through the 1-2-3-4 clutch regulator valve where it enters the exhaust backfill fluid circuit.

cardiagn.com

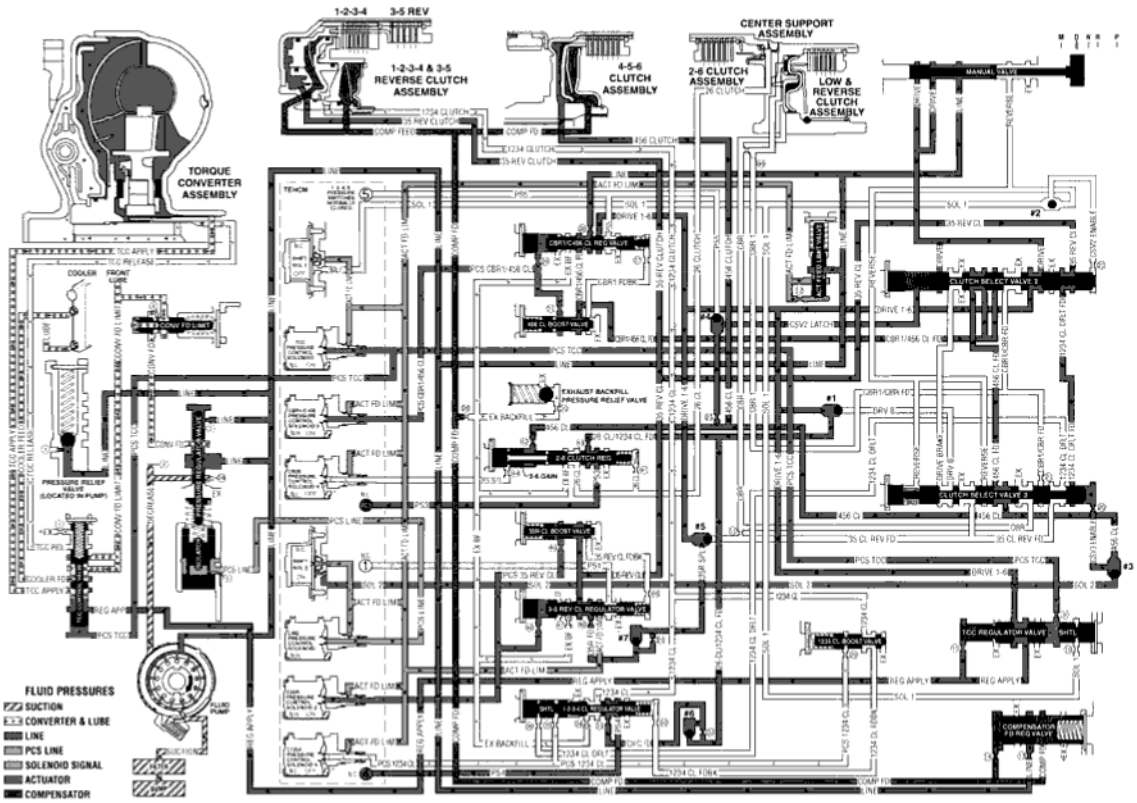

Fig. 16: Drive Range, Fifth Gear
Courtesy of GENERAL MOTORS CORP.

DRIVE RANGE, FIFTH GEAR DEFAULT

If the transmission is in 4th, 5th or 6th gear during a transmission electrical component failure, the transmission will default to 5th gear. All solenoids will default to their normal state. If the torque converter clutch was applied, it will release. The transmission will stay in 5th gear default range until the ignition has been turned off or transmission shifted to reverse. When the vehicle is restarted, and shifted back into drive, the transmission will then operate in the 3rd gear default range. This default action will enable the vehicle to be safely driven to a service center.

3-5 Reverse Clutch Applies

C35R Pressure Control Solenoid 2

The C35R pressure control solenoid 2 defaults to ON, allowing actuator feed fluid to enter the pressure control solenoid (PCS) 35 reverse clutch fluid circuit. PCS 35 reverse clutch fluid is routed through orifice #48 and then to the 3-5 reverse clutch regulator valve. PCS 35 reverse clutch fluid is also routed through orifice #40 and then to the 3-5 reverse clutch boost valve.

3-5 Reverse Clutch Boost Valve

PCS 3-5 reverse clutch fluid pressure acts on a differential area moving the PCS 3-5 reverse clutch boost valve against the 3-5 reverse clutch boost valve spring. The 3-5 reverse clutch fluid passes through the valve and enters the 3-5 reverse clutch feedback circuit. As PCS 3-5 reverse clutch fluid pressure is increased to a given

cardiagn.com

value, the 3-5 reverse clutch boost valve opens the 3-5 reverse clutch feedback circuit to exhaust. This results in the 3-5 reverse clutch regulator valve moving to the full feed position sending full 3-5 reverse clutch feed pressure (full line pressure) to the clutch.

3-5 Reverse Clutch Regulator Valve

PCS 3-5 reverse clutch fluid moves the 3-5 reverse clutch regulator valve against 3-5 reverse clutch regulator valve spring force and 3-5 reverse clutch feedback fluid. This allows 3-5 reverse feed to pass through the valve and enter the 3-5 reverse clutch circuit. The 3-5 reverse clutch fluid is then routed to the 3-5 reverse clutch, the 3-5 reverse boost valve and the clutch select valve 2. When the 3-5 reverse clutch regulator valve is in this position, PS1 fluid from the pressure switch 1 exhausts through the valve, allowing the switch to close.

3-5 Reverse Clutch

The 3-5 reverse clutch fluid enters the 1-2-3-4 and 3-5 reverse clutch housing to move the piston against spring force combined with force from the compensator to apply the 3-5 reverse clutch plates.

Clutch Select Valve 3

Once the clutch select valve 3 is moved to the ON position in 4th gear, it will remain in this position throughout the 5th gear default range, until the ignition has been turned OFF. When the ignition is OFF, fluid will exhaust from the valve, thus when the vehicle is restarted, the transmission will then be in the 3rd gear default range.

1-2-3-4 Clutch Releases or 2-6 Clutch Releases

C1234 Pressure Control Solenoid 5

If the transmission was in 4th gear when an electrical condition commands a protection mode, the C1234 pressure control solenoid 5 defaults to the OFF position, allowing PCS 1234 clutch fluid from the 1-2-3-4 clutch, the 1-2-3-4 clutch regulator valve and 1- 2-3-4 clutch boost valve to exhaust.

2-6 CB26 Pressure Control Solenoid 4

If the transmission was in 6th gear when an electrical condition commands a protection mode, the CB26 pressure control solenoid 4 defaults to the OFF position, allowing PCS 26 clutch fluid from the 2-6 clutch regulator valve, and the 2-6 clutch to exhaust.

Torque Converter Clutch Releases

TCC Pressure Control Solenoid

The torque converter clutch (TCC) pressure control solenoid will default to it's normal state, OFF. PCS TCC fluid will exhaust from the TCC control valve, and spring force will shuttle the valve to the off position. TCC apply fluid will then be routed to the cooler, and TCC release fluid will be routed to the torque converter for complete TCC release.

cardiagn.com

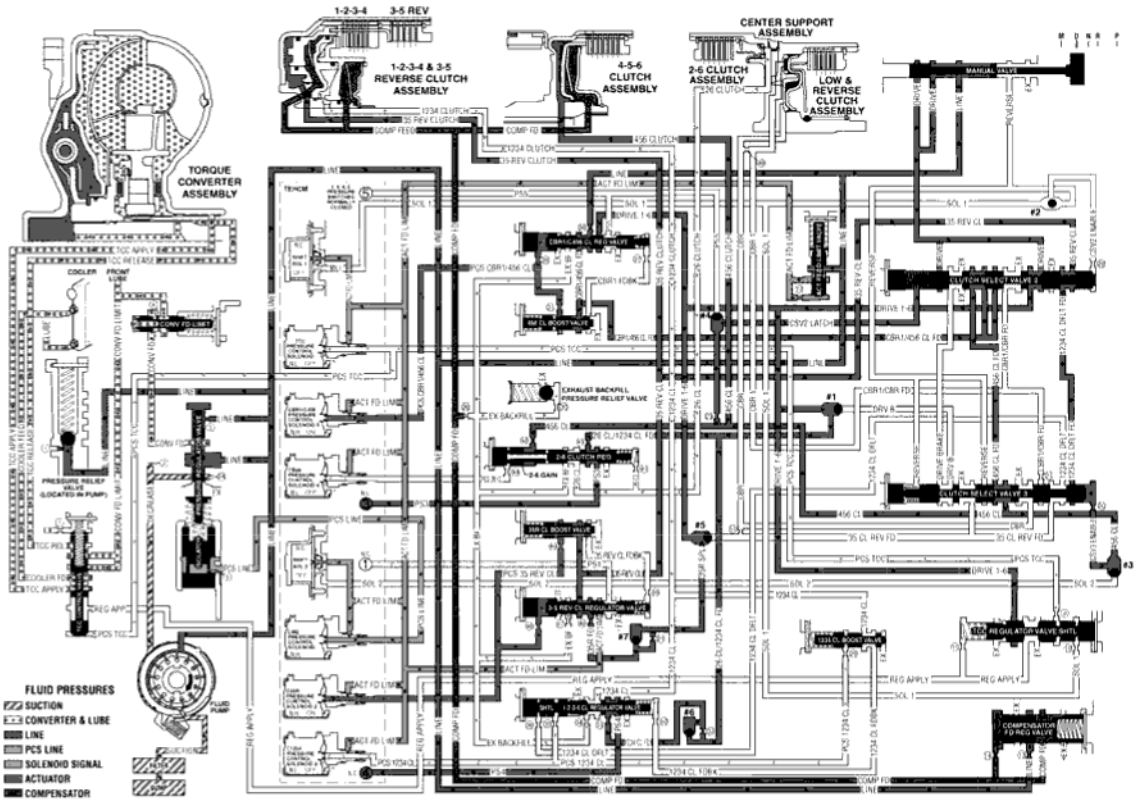

Fig. 17: Drive Range, Fifth Gear Default
Courtesy of GENERAL MOTORS CORP.

DRIVE RANGE, SIXTH GEAR

As the vehicle speed increases, the transmission control module (TCM) receives input signals from the automatic transmission input and output speed sensors, the throttle position sensor and other vehicle sensors to determine the precise moment to command ON the normally-low CB26 pressure control solenoid 4 (PCS). At the same time the normally-high C35R pressure control solenoid 2 is commanded OFF.

2-6 Clutch Applies

CB26 Pressure Control Solenoid 4

The CB26 pressure control solenoid 4 is commanded ON, allowing actuator feed fluid to enter the PCS 26 clutch fluid circuit. PCS 26 fluid is routed through orifice #44 and then to the 2-6 clutch regulator gain valve.

2-6 Clutch Regulator Gain Valve

The 2-6 clutch regulator gain valve allows the gain (valve input to output pressure magnification factor) of the 2-6 clutch regulator valve to be different for a 1-2 shift verses a 5-6 shift. For a 5-6 shift PCS 26 clutch fluid pressure passes through the hollow valve and only acts on the 26 regulator valve area, resulting in the "low gain" pressure output.

2-6 Clutch Regulator Valve

cardiagn.com

PCS 26 clutch fluid moves the 2-6 clutch regulator/gain valve assembly against the 2-6 clutch regulator valve spring force to allow 26 clutch/1234 clutch feed fluid to pass through the valve. The 26 clutch/1234 clutch feed fluid is routed into the 26 clutch fluid circuit where it passes through orifice #41 and then to the spring end of the 2-6 clutch regulator valve, and to the 2-6 clutch within the center support.

2-6 Clutch

The 26 clutch fluid from the 2-6 clutch regulator valve is routed through the center support and to the 2-6 clutch piston assembly. The 26 clutch fluid pressure moves the piston against 2-6 clutch spring force to apply the 2-6 clutch plates.

3-5 Clutch Releases

C35R Pressure Control Solenoid 2

The C35R pressure control solenoid 2 is commanded OFF, allowing PCS 35 reverse clutch fluid from the 3-5 reverse clutch boost valve and the 3-5 reverse clutch regulator valve to exhaust through the solenoid.

3-5 Reverse Clutch Boost Valve

The 3-5 reverse boost valve spring force moves the valve to allow 35 reverse clutch feedback fluid from the 3-5 reverse clutch regulator valve to enter the 35 reverse clutch circuit and exhaust.

3-5 Reverse Clutch Regulator Valve

The 3-5 reverse clutch regulator valve spring force moves the valve to allow 35 reverse clutch fluid from the 3-5 reverse clutch to pass through the valve and enter the exhaust backfill fluid circuit. The 35 reverse clutch fluid then enters the exhaust backfill fluid circuit and is routed through orifice #30 to the exhaust backfill pressure relief valve where excess pressure is exhausted.

3-5 Reverse Clutch

The 3-5 reverse clutch spring force combined with force from the compensator move the 3-5 reverse clutch piston to release the 3-5 clutch plates and forces 35 reverse clutch fluid to exhaust from 1-2-3-4 and 3-5 reverse clutch housing. The 35 reverse clutch fluid is then routed to the 3-5 reverse clutch regulator valve where it enters the exhaust backfill circuit.

cardiagn.com

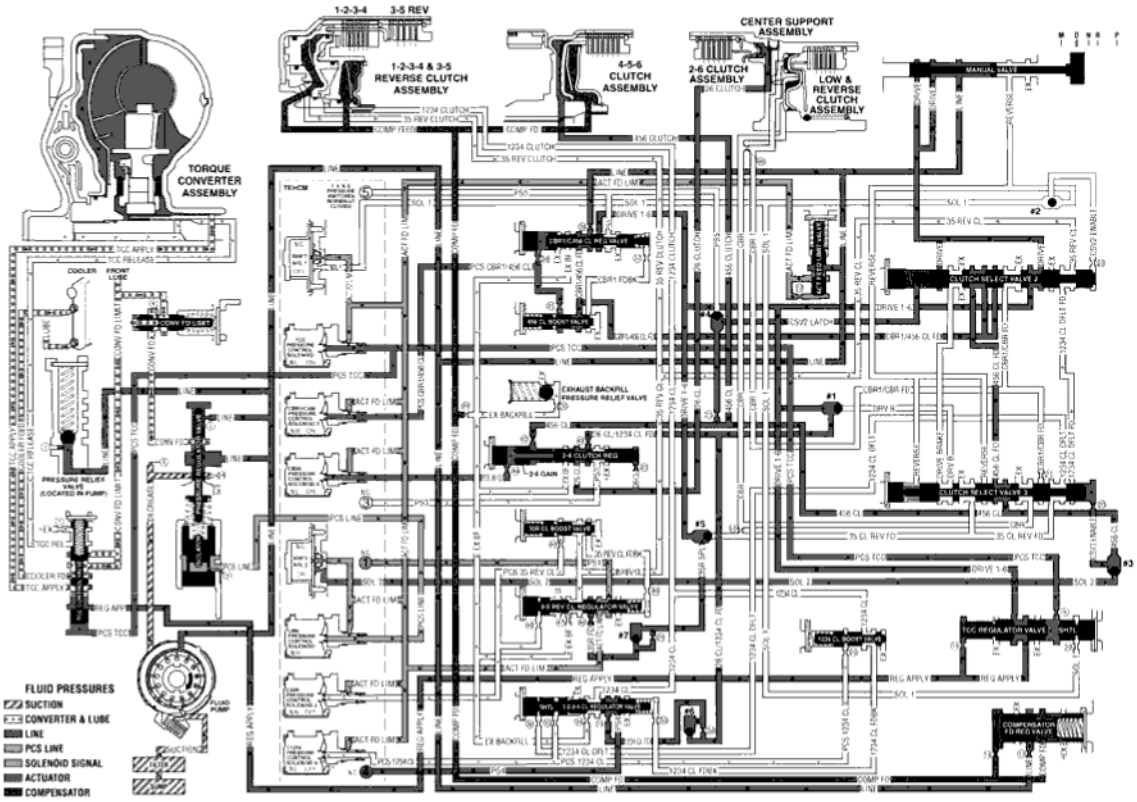

Fig. 18: Drive Range, Sixth Gear
Courtesy of GENERAL MOTORS CORP.

FLUID PASSAGES

cardiagn.com

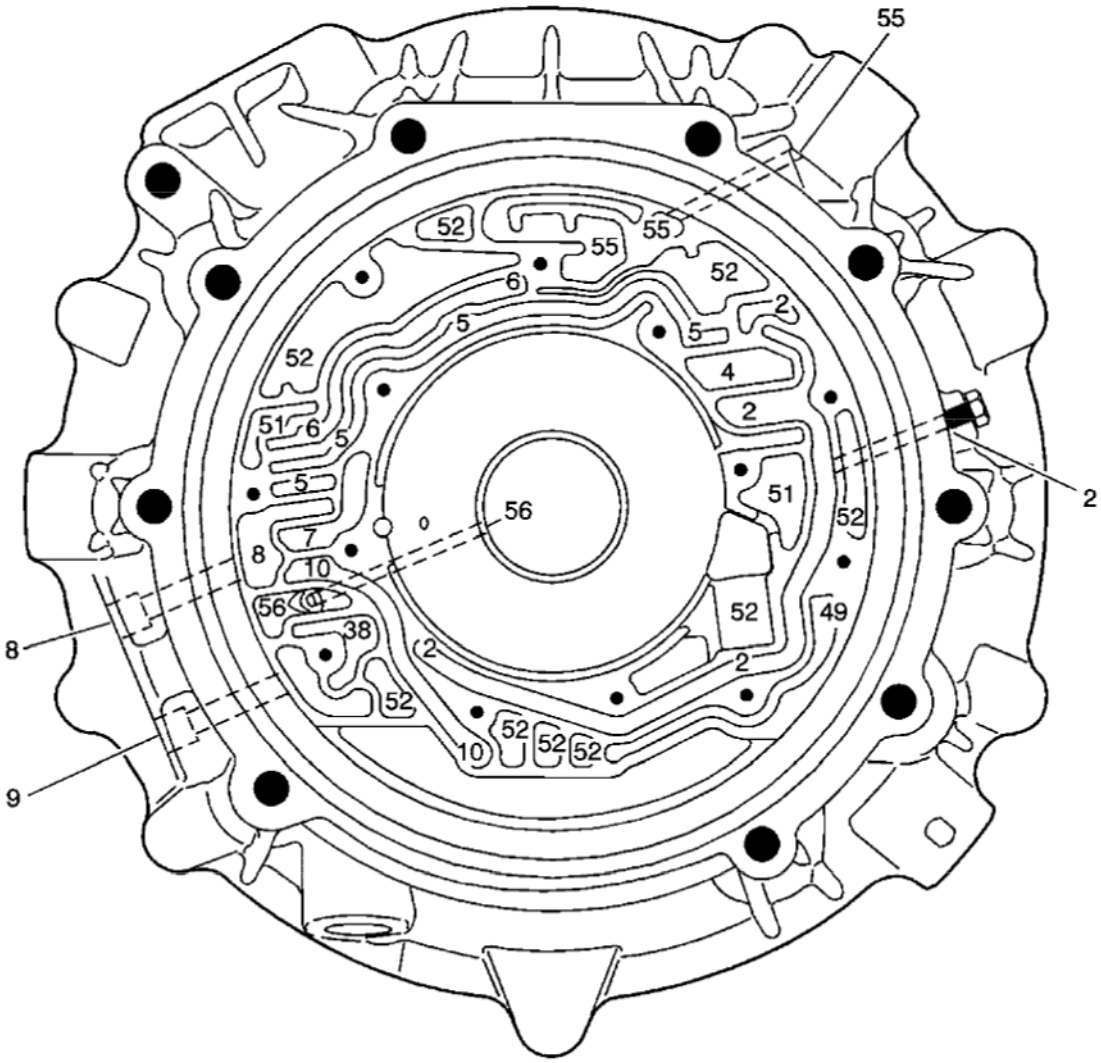

Fig. 19: Torque Converter Housing - Fluid Pump Cover Side
Courtesy of GENERAL MOTORS CORP.

Callout	Component Name
2	Line
4	Converter Feed
5	Converter Feed Limit
6	TCC Release
7	TCC Apply
8	Cooler Feed
9	Center Lube
10	Regulator Apply
38	PCS TCC
49	PCS Line

cardiagn.com

51	Exhaust
52	Void
55	Vent
56	Torque Converter Seal Drainback

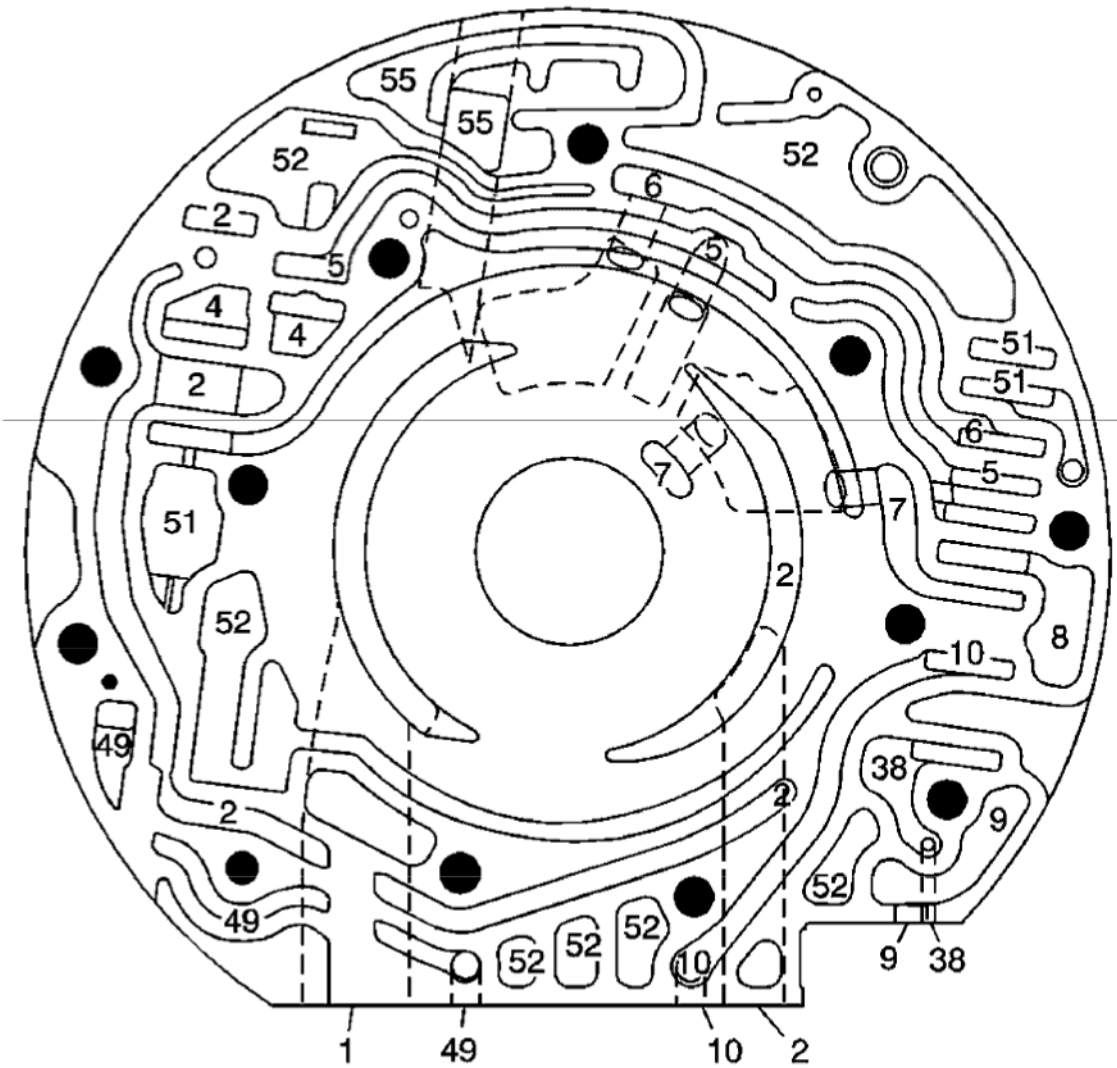

Fig. 20: Fluid Pump Cover - Torque Converter Housing Side
Courtesy of GENERAL MOTORS CORP.

Callout	Component Name
1	Suction
2	Line
4	Converter Feed
5	Converter Feed Limit
6	TCC Release

cardiagn.com

7	TCC Apply
8	Cooler Feed
9	Center Lube
10	Regulator Apply
38	PCS TCC
49	PCS Line
51	Exhaust
52	Void
55	Vent

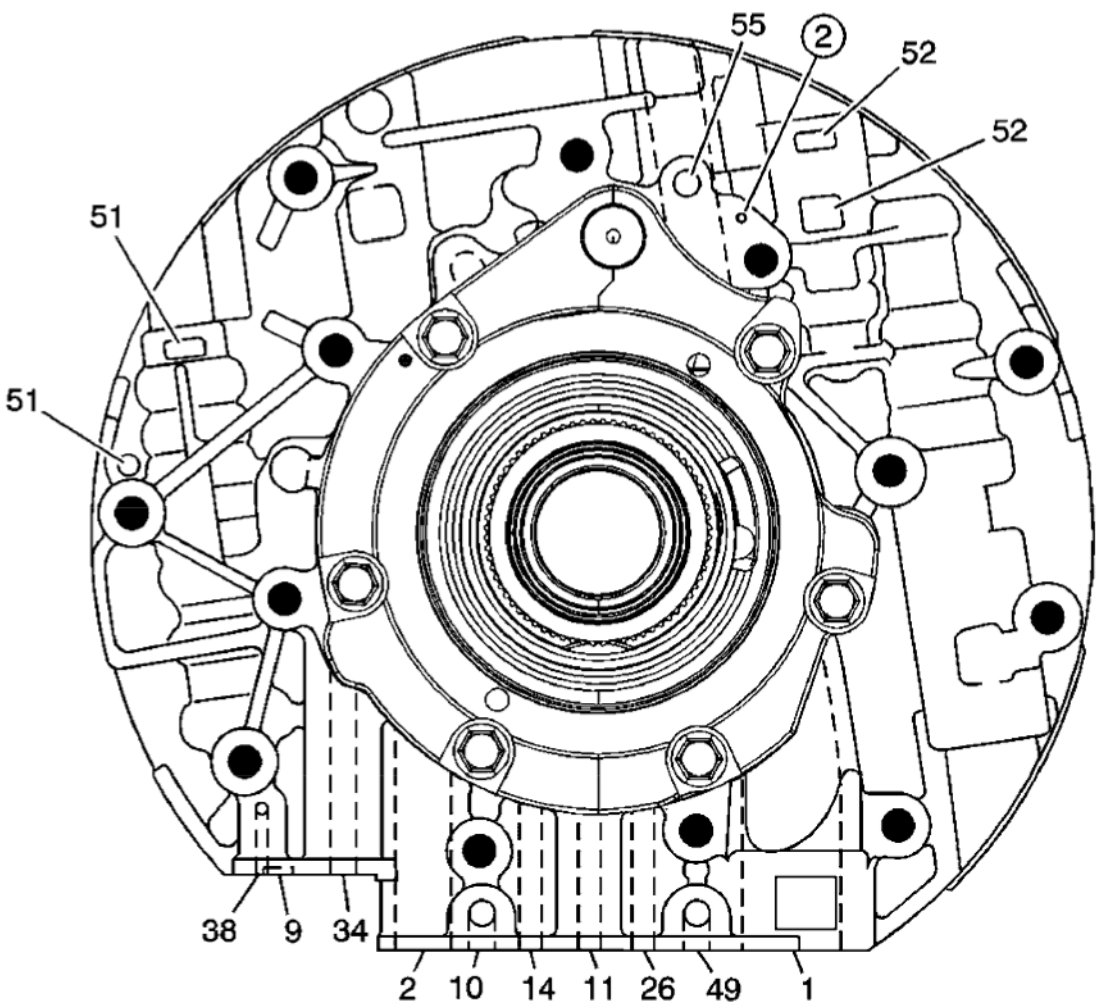

Fig. 21: Fluid Pump Cover - Case Side
Courtesy of GENERAL MOTORS CORP.

Callout	Component Name
1	Suction

cardiagn.com

2	Line
9	Center Lube
10	Regulator Apply
11	Compensator Feed
14	3-5 Reverse Clutch
26	1-2-3-4 Clutch
34	4-5-6 Clutch
38	PCS TCC
49	PSC Line
51	Exhaust
52	Empty
55	Ventilate

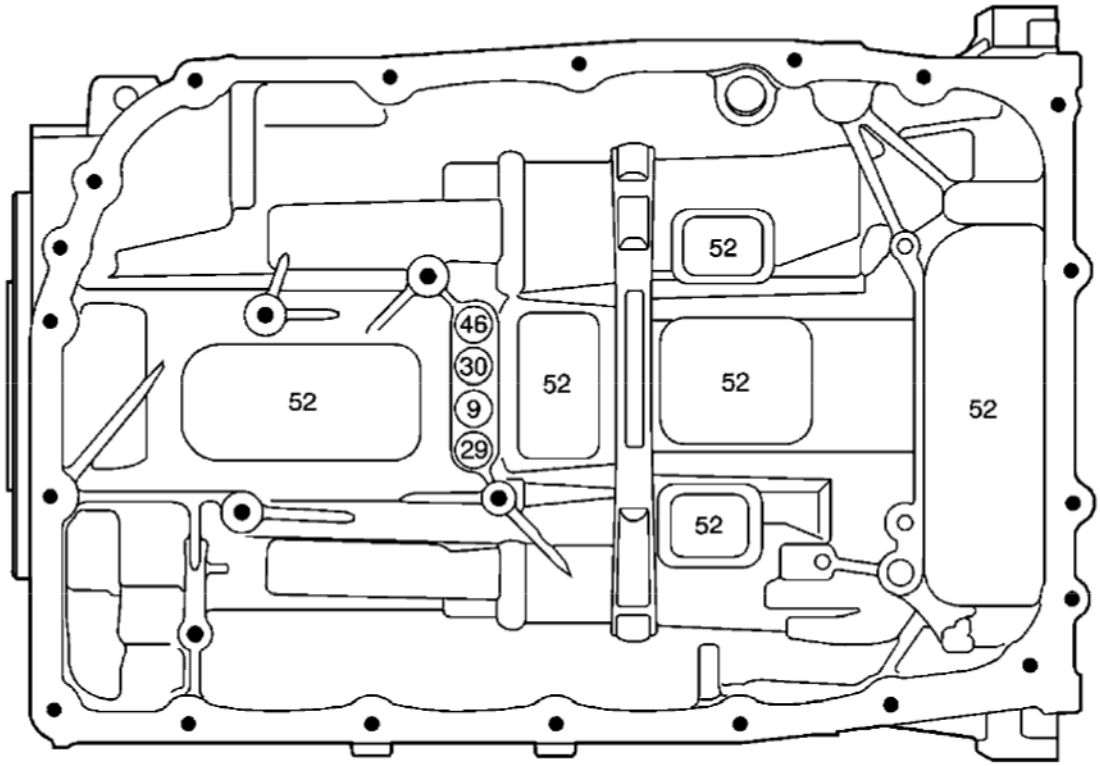

Fig. 22: Case - Top Channel Plate Side
Courtesy of GENERAL MOTORS CORP.

Callout	Component Name
9	Center Lube
29	CBR1
30	CBR
46	26 Clutch

cardiagn.com

52	Void

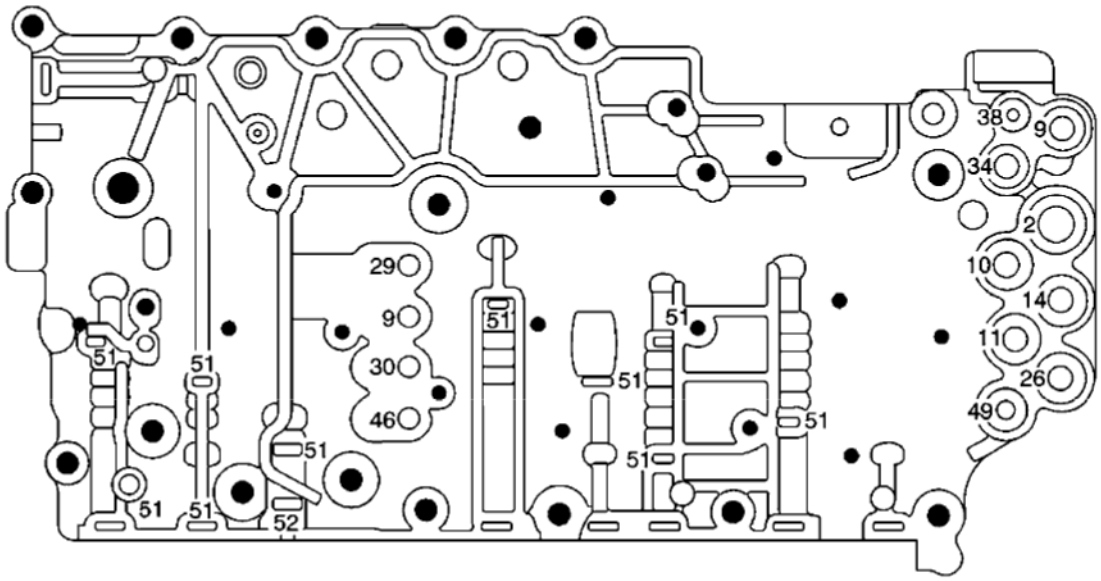

Fig. 23: Control Valve Upper Body Assembly - Case Side
Courtesy of GENERAL MOTORS CORP.

Callout	Component Name
2	Line
9	Center Lube
10	Regulator Apply
11	Compensator Feed
14	3-5 Reverse Clutch
26	1-2-3-4 Clutch
29	CBR1
30	CBR
34	4-5-6 Clutch
38	PCS TCC
46	2-6 Clutch
49	PCS Line
51	Exhaust
52	Empty

cardiagn.com

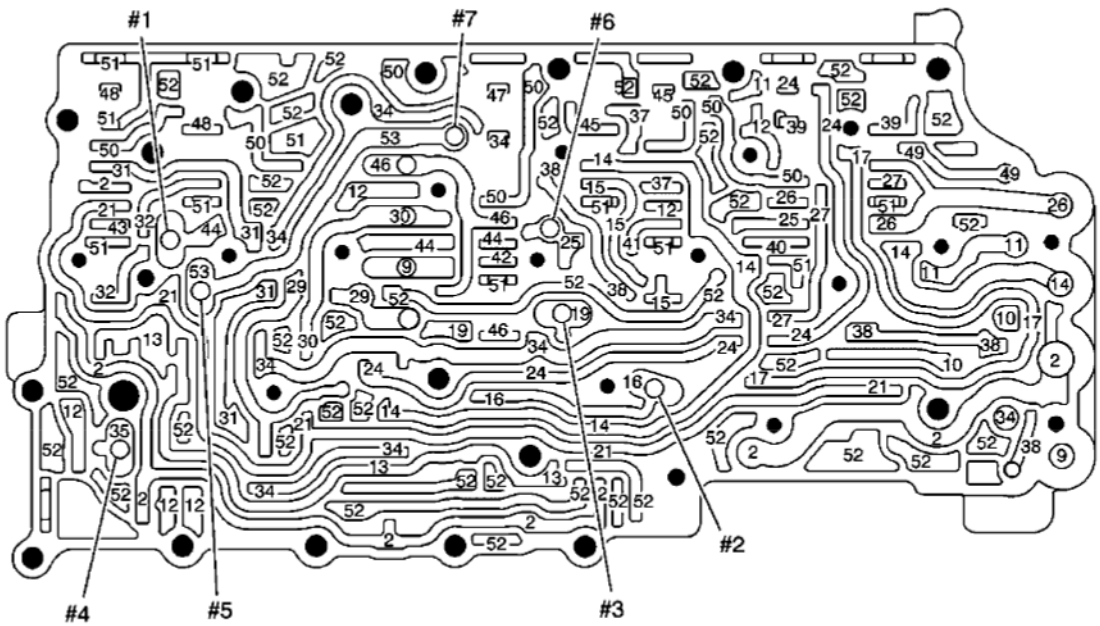

Fig. 24: Control Valve Upper Body Assembly - Bottom Channel Plate Side
Courtesy of GENERAL MOTORS CORP.

Callout	Component Name
2	Line
9	Center Lube
10	Regulator Apply
11	Compensator Feed
12	Actuator Feed Limit
13	Reverse
14	3-5 Reverse Clutch
15	3-5 Reverse Clutch Feedback
16	CSV2 Enable
17	Solenoid 1
19	CSV3 Enable
21	Drive 1-6
24	1-2-3-4 Clutch DFLT
25	1-2-3-4 Clutch Feed
26	1-2-3-4 Clutch
27	1-2-3-4 Clutch Feedback
29	CBR1
30	CBR
31	CBR1/4-5-6 Clutch Feed
32	CBR1 Feedback
34	4-5-6 Clutch

cardiagn.com

35	CSV2 Latch
37	3-5 Reverse Feed
38	PCS TCC
39	PCS 1-2-3-4 Clutch
40	PS4
41	PS1
42	PS3
43	PS5
44	2-6 Clutch/1-2-3-4CL Feed
45	PCS 3-5 Rev Clutch
46	2-6 Clutch
47	PCS 2-6 Clutch
48	PCS CBR1/4-5-6 Clutch
49	PCS Line
50	Exhaust BF
51	Exhaust
52	Empty
53	3-5 Rear Feed

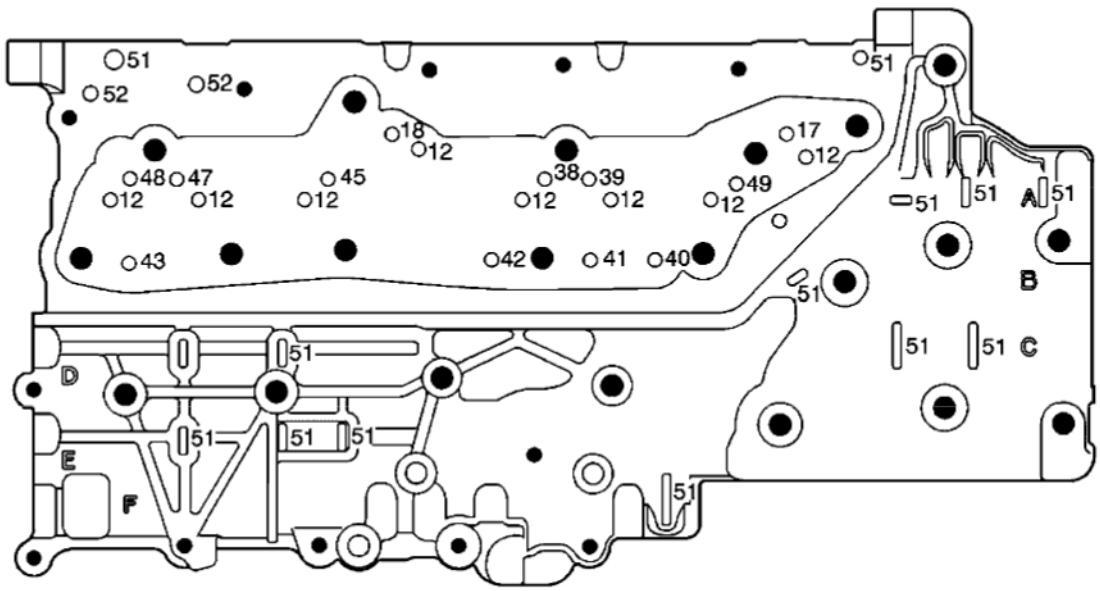

Fig. 25: Control Valve Upper Body Assembly - Control Solenoid Valve Assembly Side
Courtesy of GENERAL MOTORS CORP.

Callout	Component Name
12	Actuator Feed Limit
17	Solenoid 1

cardiagn.com

18	Solenoid 2
38	PCS TCC
39	PCS 1-2-3-4 Clutch
40	PS4
41	PS1
42	PS3
43	PS5
45	PCS 3-5 Rev Clutch
47	PCS 2-6 Clutch
48	PCS CBR1/4-5-6 Clutch
49	PCS Line
51	Exhaust
52	Empty

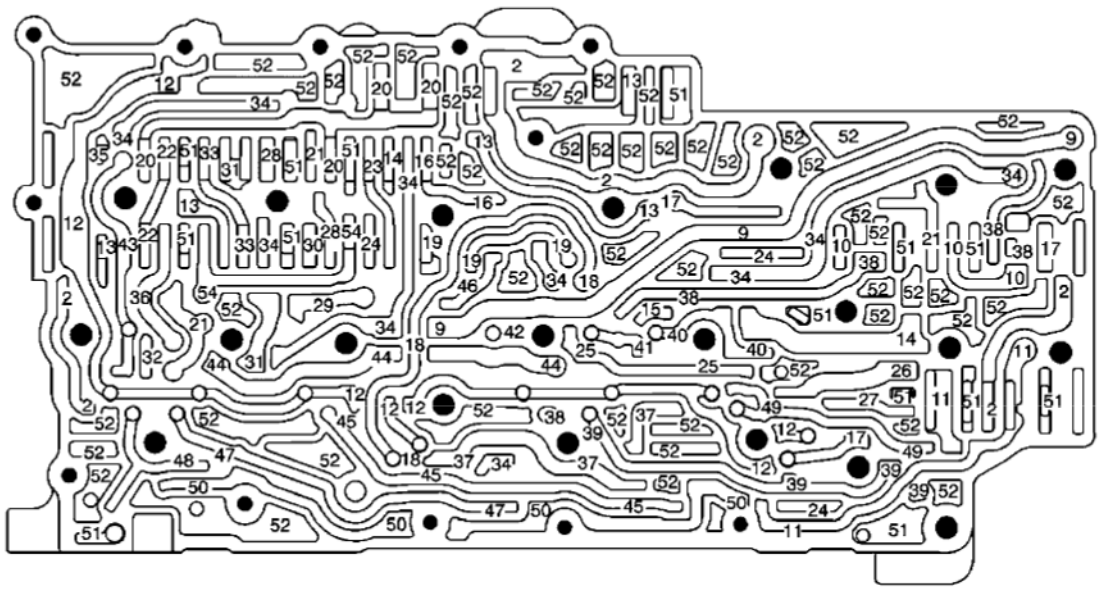

Fig. 26: Control Valve Lower Body Assembly - Control Valve Upper Body Assembly Side
Courtesy of GENERAL MOTORS CORP.

Callout	Component Name
2	Line
9	Center Lube
10	Regulator Apply
11	Compensator Feed
12	Actuator Feed Limit
13	Reverse
14	3-5 Reverse Clutch

cardiagn.com

15	3-5 Reverse Clutch Feedback
16	CSV2 Enable
17	Solenoid 1
18	Solenoid 2
19	CSV3 Enable
20	Drive
21	Drive 1-6
22	Drive Brake
23	1-2-3-4 Clutch DFLT Feed
24	1-2-3-4 Clutch DFLT
25	1-2-3-4 Clutch Feed
26	1-2-3-4 Clutch
27	1-2-3-4 Clutch Feedback
28	CBR1/CBR Feed
29	CBR1
30	CBR
31	CBR1/4-5-6 Clutch Feed
32	CBR1 Feedback
33	4-5-6 Clutch Feed
34	4-5-6 Clutch
35	CSV2 Latch
36	Drive Brake
37	3-5 Reverse Feed
38	PCS TCC
39	PCS 1-2-3-4 Clutch
40	PS4
41	PS1
42	PS3
43	PS5
44	2-6 Clutch/1-2-3-4 CL Feed
45	PCS 3-5 Rev Clutch
46	2-6 Clutch
47	PCS 2-6 Clutch
48	PCS CBR1/4-5-6 Clutch
49	PSC Line
50	Exhaust BF
51	Exhaust
52	Empty
54	3-5 Clutch Reverse Feed

cardiagn.com

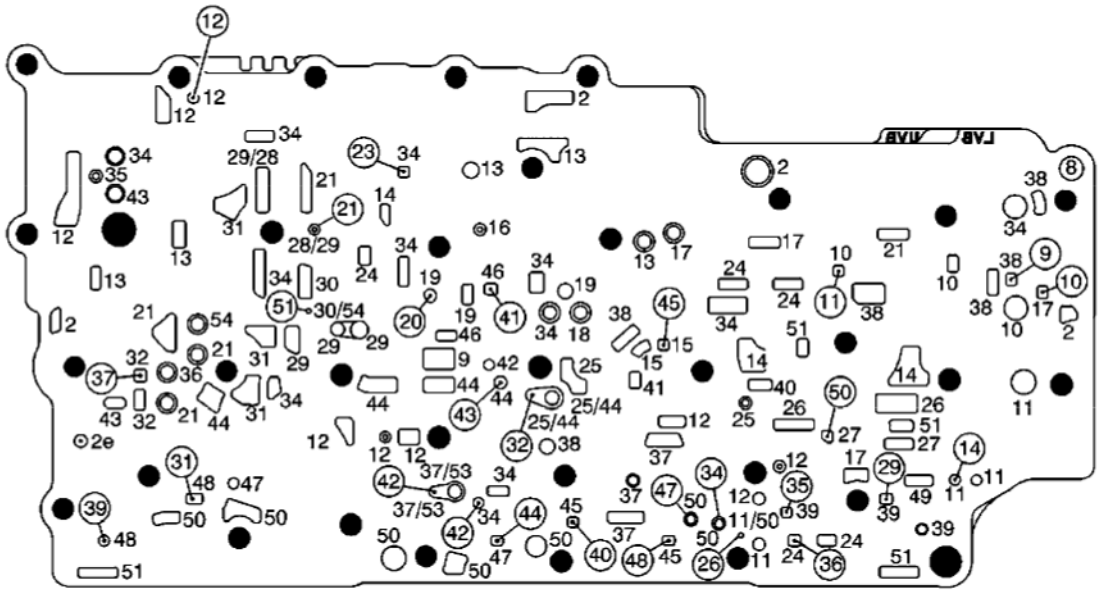

Fig. 27: Control Valve Body Spacer Plate Assembly - Bottom Channel Plate Side
Courtesy of GENERAL MOTORS CORP.

Callout	Component Name
2	Line
8	Cooler Feed
9	Center Lube
10	Regulator Apply
11	Compensator Feed
12	Actuator Feed Limit
13	Reverse
14	3-5 Reverse Clutch
15	3-5 Reverse Clutch Feedback
16	CSV2 Enable
17	Solenoid 1
18	Solenoid 2
19	CSV3 Enable
21	Drive 1-6
24	1-2-3-4 Clutch DFLT
25	1-2-3-4 Clutch Feed
26	1-2-3-4 Clutch
27	1-2-3-4 Clutch Feedback
28	CBR1/CBR Feed
29	CBR1
30	CBR

cardiagn.com

31	CBR1/4-5-6 Clutch Feed
32	CBR1 Feedback
34	4-5-6 Clutch
35	CSV2 Latch
36	Drive Brake
37	3-5 Reverse Feed
38	PCS TCC
39	PCS 1-2-3-4 Clutch
40	PS4
41	PS1
42	PS3
43	PS5
44	2-6 Clutch/1-2-3-4 CL Feed
45	PCS 3-5 Rev Clutch
46	2-6 Clutch
47	PCS 2-6 Clutch
48	PCS CBR1/4-5-6 Clutch
49	PCS Line
50	Exhaust BF
51	Exhaust
53	3-5 Rear Feed
54	3-5 Clutch Reverse Feed

cardiagn.com

2010 TRANSMISSION

Automatic Transmission - 6L45/6L50/6L80/6L90 - Camaro

DIAGNOSTIC CODE INDEX

DIAGNOSTIC CODE INDEX

DTC	Description
DTC P0218	P0218: Transmission Fluid Overtemperature
DTC P0562 or P0563	P0562: System Voltage Low P0563: System Voltage High
DTC P0601-P0604 or P062F	** DESCRIPTION NOT COLLECTED **
DTC P0634	P0634: Transmission Control Module (TCM) Overtemperature
DTC P0658 or P0659	P0658: Solenoid High Control Circuit Group 1 Low Voltage P0659: Solenoid High Control Circuit Group 1 High Voltage
DTC P0667, P0668, or P0669	P0667: Transmission Control Module (TCM) Temperature Sensor Performance P0668: Transmission Control Module (TCM) Temperature Sensor Circuit Low Voltage P0669: Transmission Control Module (TCM) Temperature Sensor Circuit High Voltage
DTC P06AC, P06AD, or P06AE	P06AC: Transmission Control Module (TCM) Power Up Temperature Sensor Performance P06AD: Transmission Control Module (TCM) Power Up Temperature Sensor Circuit Low Voltage P06AE: Transmission Control Module (TCM) Power Up Temperature Sensor Circuit High Voltage
DTC P0711, P0712, or P0713	P0711: Transmission Fluid Temperature (TFT) Sensor Performance P0712: Transmission Fluid Temperature (TFT) Sensor Circuit Low Voltage P0713: Transmission Fluid Temperature (TFT) Sensor Circuit High Voltage
DTC P0716 or P0717	P0716: Input Speed Sensor Performance P0717: Input Speed Sensor Circuit Low Voltage
DTC P0722 or P0723	P0722: Output Speed Sensor (OSS) Circuit Low Voltage P0723: Output Speed Sensor (OSS) Intermittent
DTC P0741 or P0742	P0741: Torque Converter Clutch (TCC) - Stuck Off P0742: Torque Converter Clutch (TCC) - Stuck On
DTC P0751 or P0752	P0751: Shift Solenoid (SS) 1 Valve Performance - Stuck OFF P0752: Shift Solenoid (SS) 1 Valve Performance - Stuck ON
DTC P0756	P0756: Shift Solenoid (SS) 2 Valve Performance - Stuck Off
DTC P0776 or P0777	P0776: Clutch Pressure Control (PC) Solenoid 2 - Stuck Off P0777: Clutch Pressure Control (PC) Solenoid 2 - Stuck On
DTC P0796 or P0797	P0796: Clutch Pressure Control (PC) Solenoid 3 - Stuck Off P0797: Clutch Pressure Control (PC) Solenoid 3 - Stuck On

cardiagn.com

DTC P0815, P0816, P0826, or P1876	P0815: Upshift Switch Circuit P0816: Downshift Switch Circuit P0826: Up and Down Shift Switch Circuit P1876: Up and Down Shift Enable Switch Circuit Low Voltage
DTC P0842 or P0843	P0842: Transmission Fluid Pressure (TFP) Switch 1 Circuit Low Voltage P0843: Transmission Fluid Pressure (TFP) Switch 1 Circuit High Voltage
DTC P0850-P0852	P0850: Park/Neutral Position (PNP) Switch Circuit P0851: Park/Neutral Position (PNP) Switch Circuit Low Voltage P0852: Park/Neutral Position (PNP) Switch Circuit High Voltage
DTC P0872 or P0873	P0872: Transmission Fluid Pressure (TFP) Switch 3 Circuit Low Voltage P0873: Transmission Fluid Pressure (TFP) Switch 3 Circuit High Voltage
DTC P0877 or P0878	P0877: Transmission Fluid Pressure (TFP) Switch 4 Circuit Low Voltage P0878: Transmission Fluid Pressure (TFP) Switch 4 Circuit High Voltage
DTC P0961-P0963	P0961: Line Pressure Control (PC) Solenoid System Performance P0962: Line Pressure Control (PC) Solenoid Control Circuit Low Voltage P0963: Line Pressure Control (PC) Solenoid Control Circuit High Voltage
DTC P0965-P0967	P0965: Clutch Pressure Control (PC) Solenoid 2 System Performance P0966: Clutch Pressure Control (PC) Solenoid 2 Control Circuit Low Voltage P0967: Clutch Pressure Control (PC) Solenoid 2 Control Circuit High Voltage
DTC P0969-P0971	P0969: Clutch Pressure Control (PC) Solenoid 3 System Performance P0970: Clutch Pressure Control (PC) Solenoid 3 Control Circuit Low Voltage P0971: Clutch Pressure Control (PC) Solenoid 3 Control Circuit High Voltage
DTC P0973 or P0974	P0973: Shift Solenoid (SS) 1 Control Circuit Low Voltage P0974: Shift Solenoid (SS) 1 Control Circuit High Voltage
DTC P0976 or P0977	P0976: Shift Solenoid (SS) 2 Control Circuit Low Voltage P0977: Shift Solenoid (SS) 2 Control Circuit High Voltage
DTC P0989 or P0990	P0989: Transmission Fluid Pressure (TFP) Switch 5 Circuit Low Voltage P0990: Transmission Fluid Pressure (TFP) Switch 5 Circuit High Voltage
DTC P150C	P150C: Transmission Control Module Engine Speed Request Signal Message Counter Incorrect
DTC P1751	P1751: Shift Valve 1 Performance
DTC P1761	P1761: Tap Up Tap Down Shift Switch Signal Message Counter
DTC P182E or P1915	P182E: Internal Mode Switch - Invalid Range P1915: Internal Mode Switch Does Not Indicate Park/Neutral (P/N) During Start

cardiagn.com

DTC P2534	P2534: Ignition 1 Switch Circuit Low Voltage
DTC P2714 or P2715	P2714: Clutch Pressure Control (PC) Solenoid 4 - Stuck Off P2715: Clutch Pressure Control (PC) Solenoid 4 - Stuck On
DTC P2719-P2721	P2719: Clutch Pressure Control (PC) Solenoid 4 System Performance P2720: Clutch Pressure Control (PC) Solenoid 4 Control Circuit Low Voltage P2721: Clutch Pressure Control (PC) Solenoid 4 Control Circuit High Voltage
DTC P2723 or P2724	P2723: Clutch Pressure Control (PC) Solenoid 5 - Stuck Off P2724: Clutch Pressure Control (PC) Solenoid 5 - Stuck On
DTC P2728-P2730	P2728: Clutch Pressure Control (PC) Solenoid 5 System Performance P2729: Clutch Pressure Control (PC) Solenoid 5 Control Circuit Low Voltage P2730: Clutch Pressure Control (PC) Solenoid 5 Control Circuit High Voltage
DTC P2762, P2763, or P2764	P2762: Torque Converter Clutch (TCC) Pressure Control Solenoid System Performance P2763: Torque Converter Clutch (TCC) Pressure Control Solenoid Control Circuit High Voltage P2764: Torque Converter Clutch (TCC) Pressure Control Solenoid Control Circuit Low Voltage

cardiagn.com

2010 TRANSMISSION

Automatic Transmission - 6L45/6L50/6L80/6L90 - Camaro

DTC P0218

DIAGNOSTIC INSTRUCTIONS

- Perform the **Diagnostic System Check - Vehicle** prior to using this diagnostic procedure.
- Review **Strategy Based Diagnosis** for an overview of the diagnostic approach.
- **Diagnostic Procedure Instructions** provides an overview of each diagnostic category.

DTC DESCRIPTOR

DTC P0218

Transmission Fluid Overtemperature

CIRCUIT/SYSTEM DESCRIPTION

The primary source of heat in the transmission is the torque converter. Hot oil exits the torque converter through the torque converter clutch (TCC) control valve and flows to the transmission cooler supply line. The supply line connects to the cooler, which is in the radiator. From the cooler, the oil returns through the oil cooler return line and enters the lubrication circuits. After lubricating the internal components, the oil returns to the oil pan. The transmission fluid temperature (TFT) sensor is located in the control solenoid valve assembly which has no serviceable parts.

CONDITIONS FOR RUNNING THE DTC

- Ignition voltage is 8.6 volts or greater.
- The TFT is -39 to +149°C (-38 to +300°F) for 5 seconds.

CONDITIONS FOR SETTING THE DTC

The TFT is greater than 140°C (284°F) for 1 minute.

ACTION TAKEN WHEN THE DTC SETS

DTC P0218 is a Type C DTC.

CONDITIONS FOR CLEARING THE DTC

DTC P0218 is a Type C DTC.

DIAGNOSTIC AIDS

cardiagn.com

The driver information center (DIC), if equipped, will display 'TRANSMISSION HOT- Idle Engine' when the transmission fluid temperature reaches 132°C (270°F). The Transmission Fluid Temperature parameter on the scan tool should rise steadily to a normal operating temperature, and then stabilize. Ask about the customer's driving habits, trailer towing, etc. Trailer towing should occur in D4. Ensure the engine cooling system is functioning normally.

REFERENCE INFORMATION

Description and Operation

- **Transmission General Description**
- **Transmission Indicators and Messages**

DTC Type Reference

Powertrain Diagnostic Trouble Code (DTC) Type Definitions

CIRCUIT/SYSTEM VERIFICATION

1. Review the Failure Records when the DTC set. Verify the engine coolant temperature was less than 125° C (257°F).
    - If greater than the specified range, refer to **Engine Overheating** .
2. Inspect the transmission cooling system for restrictions or damage.
3. Perform the **Transmission Fluid Level and Condition Check** to verify correct fluid level and condition.
4. Perform the **Transmission Fluid Cooler Flushing and Flow Test** , to verify correct transmission oil cooler flow.
5. Perform the **Line Pressure Check** , to verify correct transmission line pressure.
6. Operate the vehicle within the Conditions for Running the DTC to verify the DTC does not reset. You may also operate the vehicle within the conditions that you observed from the Freeze Frame/Failure Records data.

REPAIR PROCEDURES

Perform the **Diagnostic Repair Verification** after completing the diagnostic procedure.

Perform the **Service Fast Learn Adapts** following all transmission related repairs.

DTC P0562 OR P0563

DIAGNOSTIC INSTRUCTIONS

- Perform the **Diagnostic System Check - Vehicle** prior to using this diagnostic procedure.
- Review **Strategy Based Diagnosis** for an overview of the diagnostic approach.
- **Diagnostic Procedure Instructions** provides an overview of each diagnostic category.

cardiagn.com

DTC DESCRIPTORS

DTC P0562

System Voltage Low

DTC P0563

System Voltage High

DIAGNOSTIC FAULT INFORMATION

Circuit	Short to Ground	Open/High Resistance	Short to Voltage
IGN	P0562	-	P0563
Ground	-	P0562	-

CIRCUIT/SYSTEM DESCRIPTION

The transmission control module (TCM) continuously monitors the system voltage on the Ignition 1 voltage circuits. Lower than normal voltage may be inadequate to operate the transmission control solenoids properly. Improper solenoid operation may cause erratic transmission operation, which may result in internal damage. Theses DTC detects high or low TCM voltage for an extended period.

CONDITIONS FOR RUNNING THE DTC

DTC P0562

- Ignition voltage is 8.6 volts or greater.
- Engine speed is 1200 RPM or greater.
- DTC P0563 is not set.

DTC P0563

- Ignition voltage is 8.6 volts or greater.
- DTC P0563 is not set.

CONDITIONS FOR SETTING THE DTC

DTC P0562

The TCM detects system voltage is less than 8.6 volts for 12 seconds.

DTC P0563

The TCM detects system voltage is 18 volts or greater for 12 seconds.

cardiagn.com

ACTION TAKEN WHEN THE DTC SETS

DTCs P0562 and P0563 are Type C DTCs.

CONDITIONS FOR CLEARING THE DTC

DTCs P0562 and P0563 are Type C DTCs.

REFERENCE INFORMATION

Schematic Reference

Automatic Transmission Controls Schematics

Connector End View Reference

- Component Connector End Views
- Inline Harness Connector End Views

Description and Operation

- Transmission General Description
- Transmission Component and System Description
- Electronic Component Description

Electrical Information Reference

- Circuit Testing
- Connector Repairs
- Testing for Intermittent Conditions and Poor Connections
- Wiring Repairs

DTC Type Reference

Powertrain Diagnostic Trouble Code (DTC) Type Definitions

Scan Tool Reference

Control Module References for scan tool information

Special Tools

DT-47825-10: Jumper Harness

CIRCUIT/SYSTEM VERIFICATION

cardiagn.com

1. Engine Running, accessories OFF, measure and record the battery voltage with a DMM. The battery voltage should be between 12.6-15 volts.
    - If the voltage is not within the specified value, or the charge indicator light is ON, refer to **Charging System Test** .
2. Observe the scan tool TCM Ignition Voltage parameter. The reading should be between 12.6-15 volts.
3. Operate the vehicle within the Conditions for Running the DTC to verify the DTC does not reset. You may also operate the vehicle within the conditions that you observed from the Freeze Frame/Failure Records data.

CIRCUIT/SYSTEM TESTING

1. Ignition OFF, disconnect the X1 16-way harness connector at the transmission.
2. Connect the **DT-47825-10:** harness to the X1 16-way vehicle harness connector.
3. Test for less than 5 ohms between the ground circuit terminals listed below and ground.
    - Terminal 2 and ground at the transmission case
    - Terminal 5 and ground at the transmission case
    - If greater than the specified range, test the ground circuit for an open/high resistance.
4. Ignition ON, verify that a test lamp illuminates between the ignition voltage circuit terminals listed below and ground.
    - Terminal 1 and ground at the transmission case
    - Terminal 4 and ground at the transmission case
    - Terminal 12 and ground at the transmission case
    - If the test lamp does not illuminate, test the ignition circuit for a short to ground or an open/high resistance.
5. If all circuits test normal, replace the Q8 control solenoid valve assembly.

REPAIR PROCEDURES

Perform the **Diagnostic Repair Verification** after completing the diagnostic procedure.

- Refer to **Control Module References** for Control Solenoid Valve Assembly Replacement, Setup, and Programming.
- Perform the **Service Fast Learn Adapts** following all transmission related repairs.

DTC P0601-P0604 OR P062F

DIAGNOSTIC INSTRUCTIONS

- Perform the **Diagnostic System Check - Vehicle** prior to using this diagnostic procedure.
- Review **Strategy Based Diagnosis** for an overview of the diagnostic approach.
- **Diagnostic Procedure Instructions** provides an overview of each diagnostic category.

cardiagn.com

DTC DESCRIPTORS

NOTE: DTCs P0601, P0602, P0603, P0604 or P062F could set in other control modules. Verify the DTCs are set in the transmission control module (TCM).

DTC P0601

Control Module Read Only Memory (ROM)

DTC P0602

Control Module Not Programmed

DTC P0603

Control Module Long Term Memory Reset

DTC P0604

Control Module Random Access Memory (RAM)

DTC P062F

Control Module Long Term Memory Performance

CIRCUIT/SYSTEM DESCRIPTION

This is an internal fault detection of the control solenoid valve assembly. This fault is carried out inside the control solenoid valve assembly and no external circuits are involved.

CONDITIONS FOR RUNNING THE DTC

- DTCs P0601, P0602, P0603, P0604, or P062F are not set.
- Ignition voltage is 8.6 volts or greater.

CONDITIONS FOR SETTING THE DTC

P0601

The read only memory (ROM) test has failed 5 or more times.

P0602

The transmission control module (TCM) has not been programmed.

P0603

cardiagn.com

The TCM has detected a memory checksum error.

P0604

The TCM random access memory (RAM) test has failed 5 or more times.

P062F

The TCM has detected non-volatile memory is incorrect during power-down.

ACTION TAKEN WHEN THE DTC SETS

- DTCs P0601, P0602, P0603, P0604, and P062F are Type A DTCs.
- The TCM shifts to a default gear, shuts down, and turns OFF.

CONDITIONS FOR CLEARING THE DTC

DTCs P0601, P0602, P0603, P0604, and P062F are Type A DTCs.

REFERENCE INFORMATION

Description and Operation

Electronic Component Description

DTC Type Reference

Powertrain Diagnostic Trouble Code (DTC) Type Definitions

CIRCUIT/SYSTEM VERIFICATION

1. Ignition OFF for one minute.

CAUTION: Before programming a control module, the following must be observed, or control module damage may occur:

- **The scan tool and the terminal must have the latest software.**
- **The vehicle battery must be fully charged. The battery voltage should be between 12-14 volts.**
- **The scan tool and the terminal cable connections must be secure.**
- **A battery charger must NOT be connected to the battery when programming a control module.**

2. Ignition ON, with a scan tool verify that DTC P0602 is not set.
   - If DTC P0602 is set, program the transmission control module. Refer to **Service Programming**

cardiagn.com

System (SPS) and **Control Solenoid Valve and Transmission Control Module Assembly Programming and Setup (6L45/6L50/6L80/6L90)** .

3. Verify with a scan tool that DTCs P0601, P0603, P0604, or P062F are not set.
   - If DTCs P0601, P0603, P0604, or P062F are set, replace the control solenoid valve and transmission control module assembly.
4. Operate the vehicle within the Conditions for Running the DTC to verify the DTC does not reset. You may also operate the vehicle within the conditions that you observed from the Freeze Frame/Failure Records data.

REPAIR PROCEDURES

Perform the **Diagnostic Repair Verification** after completing the diagnostic procedure.

- Perform the **Service Fast Learn Adapts** following all transmission related repairs.
- **Control Module References** for control solenoid valve assembly replacement, setup, and programming.

DTC P0634

DIAGNOSTIC INSTRUCTIONS

- Perform the **Diagnostic System Check - Vehicle** prior to using this diagnostic procedure.
- Review **Strategy Based Diagnosis** for an overview of the diagnostic approach.
- **Diagnostic Procedure Instructions** provides an overview of each diagnostic category.

DTC DESCRIPTOR

DTC P0634

Transmission Control Module (TCM) Overtemperature

CIRCUIT/SYSTEM DESCRIPTION

The transmission control module (TCM) temperature sensor is located inside of the control solenoid valve assembly which has no serviceable parts. The TCM monitors the TCM sensor for over temperature protection.

CONDITIONS FOR RUNNING THE DTC

- Ignition voltage is between 8.6 volts or greater.
- The TCM temperature is between 0°C (32°F) and 170°C (338°F) for 0.25 seconds.
- DTC P0634 and has not set this ignition.

CONDITIONS FOR SETTING THE DTC

Condition 1

cardiagn.com

The TCM has detected an internal temperature condition greater than 142°C (288°F) for 5 seconds.

Condition 2

Ignition voltage is equal to or greater than 18 volts and the TCM temperature is greater than 50°C (122°F) for 2 seconds.

ACTION TAKEN WHEN THE DTC SETS

- DTC P0634 is a Type A DTC.
- The TCM shifts to a default gear, shuts down, and turns OFF.
- The TCM disables TAP shift operation.
- The TCM enables torque management.

CONDITIONS FOR CLEARING THE DTC

DTC P0634 is a Type A DTC.

DIAGNOSTIC AIDS

During a road test, the TCM temperature should steadily increase to a normal operating temperature, then stabilize.

REFERENCE INFORMATION

Description and Operation

Electronic Component Description

DTC Type Reference

Powertrain Diagnostic Trouble Code (DTC) Type Definitions

CIRCUIT/SYSTEM VERIFICATION

NOTE: If DTC P0218 is set, diagnose that DTC first.

1. Perform the **Transmission Fluid Level and Condition Check** to verify correct fluid level and condition.
2. Operate the vehicle to normal engine temperature is reached. Verify with a scan tool the engine coolant temperature (ECT) sensor parameter is less than 125°C (257°F).
   - If greater than the specified value, refer to **Symptoms - Engine Cooling** .
3. Operate the vehicle till normal engine temperature is reached. Verify with a scan tool, the TCM temperature parameter is less than 142°C (287°F).
   - If greater than the specified value, inspect the transmission fluid lines for being misrouted, kinked, or damage.

cardiagn.com

4. If all items test normal, replace the Q8 control solenoid valve assembly.
5. Operate the vehicle within the Conditions for Running the DTC to verify the DTC does not reset. You may also operate the vehicle within the conditions that you observed from the Freeze Frame/Failure Records data.

REPAIR PROCEDURES

Perform the **Diagnostic Repair Verification** after completing the diagnostic procedure.

- Control solenoid valve assembly replacement. Refer to **Control Module References** for replacement, setup, and programming.
- Perform the **Service Fast Learn Adapts** following all transmission related repairs.

DTC P0658 OR P0659

DIAGNOSTIC INSTRUCTIONS

- Perform the **Diagnostic System Check - Vehicle** prior to using this diagnostic procedure.
- Review **Strategy Based Diagnosis** for an overview of the diagnostic approach.
- **Diagnostic Procedure Instructions** provides an overview of each diagnostic category.

DTC DESCRIPTORS

DTC P0658

Solenoid High Control Circuit Group 1 Low Voltage

DTC P0659

Solenoid High Control Circuit Group 1 High Voltage

DIAGNOSTIC FAULT INFORMATION

Circuit	Short to Ground	Open/High Resistance	Short to Voltage
High Side Driver 1	P0658	P0658	P0659

CIRCUIT/SYSTEM DESCRIPTION

The transmission control module (TCM) high side driver 1 is located inside of the control solenoid valve assembly which has no serviceable parts. The high side driver 1 provides power to the TCM pressure control solenoids and shift solenoids. This fault is handled inside the TCM and no external circuits are involved.

CONDITIONS FOR RUNNING THE DTC

cardiagn.com

P0658

- The engine speed is greater than 500 RPM for 5 seconds.
- Ignition voltage is 8.6 volts or greater.
- High side driver 1 is enabled.
- DTC P0658 has not set this ignition.

P0659

- DTC P0659 has not set this ignition.
- Ignition voltage is 8.6 volts or greater.
- Ignition switch transitions from OFF to run position.

CONDITIONS FOR SETTING THE DTC

P0658

The TCM detects an internal open or short to ground on the high side driver 1 for 1 second.

P0659

The TCM detects an internal short to voltage on the high side driver 1 circuit for 1 second after engine start.

ACTION TAKEN WHEN THE DTC SETS

P0658

- DTC P0658 is a Type A DTC.
- The TCM turns OFF high side driver.
- The TCM turns OFF all solenoids.
- The TCM commands maximum line pressure.
- The TCM freezes transmission adaptive functions.
- The TCM commands the TCC OFF.
- The TCM allows the vehicle to operate in transmission protection mode.
- The TCM inhibits the TAP Up/Down function.
- The TCM inhibits manual shifting of forward gears.

P0659

DTC P0659 is a Type C DTC.

CONDITIONS FOR CLEARING THE DTC

- DTC P0658 is a Type A DTC.

cardiagn.com

- DTC P0659 is a Type C DTC.

DIAGNOSTIC AIDS

When DTC P0658 sets, the line pressure control solenoid, and pressure control solenoids 2 and 3, will default to maximum pressure. This results in maximum line pressure to the 3-5 reverse clutch, low/reverse clutch and the 4-5-6 clutch assemblies.

REFERENCE INFORMATION

Schematic Reference

Automatic Transmission Controls Schematics

Connector End View Reference

- **Component Connector End Views**
- **Inline Harness Connector End Views**

Description and Operation

- **Transmission General Description**
- **Transmission Component and System Description**
- **Electronic Component Description**

Electrical Information Reference

- **Circuit Testing**
- **Connector Repairs**
- **Testing for Intermittent Conditions and Poor Connections**
- **Wiring Repairs**

DTC Type Reference

Powertrain Diagnostic Trouble Code (DTC) Type Definitions

Scan Tool Reference

Control Module References for scan tool information

Special Tools

DT-47825-10: Jumper Harness

CIRCUIT/SYSTEM VERIFICATION

cardiagn.com

1. Ignition ON, verify with a scan tool the high side driver 1 parameter displays ON.
2. Engine Running, gear selector lever in Park position. Verify with a scan tool the following test status parameters displays OK:
   - High Side Driver 1 Circuit High Voltage Test Status
   - High Side Driver 1 Circuit Open Test Status
   - High Side Driver 1 Circuit Low Voltage Test Status
3. Operate the vehicle within the Conditions for Running the DTC to verify the DTC does not reset. You may also operate the vehicle within the conditions that you observed from the Freeze Frame/Failure Records data.

CIRCUIT/SYSTEM TESTING

NOTE: You must perform the Circuit/System Verification first.

1. Ignition OFF, remove the Q8 control solenoid valve assembly. Refer to **Control Solenoid Valve and Transmission Control Module Assembly Replacement** .
2. Perform the **Control Solenoid Valve and Transmission Control Module Assembly Inspection** .
3. Place the Q8 control solenoid valve assembly on a clean work surface near the transmission assembly.
4. Connect **DT-47825-10:** jumper harness between the vehicle wire harness electrical connector, and the Q8 control solenoid valve assembly electrical connector.
5. Ignition ON, verify with a scan tool the following test status parameters display OK:
   - High Side Driver 1 Circuit High Voltage Test Status
   - High Side Driver 1 Circuit Open Test Status
   - High Side Driver 1 Circuit Low Voltage Test Status

   - If any test status parameter displays Fault or Malfunction, replace the Q8 control solenoid valve assembly.

REPAIR PROCEDURES

Perform the **Diagnostic Repair Verification** after completing the diagnostic procedure.

- **Control Module References** for control solenoid valve assembly replacement, setup, and programming.
- Perform the **Service Fast Learn Adapts** following all transmission related repairs.

DTC P0667, P0668, OR P0669

DIAGNOSTIC INSTRUCTIONS

- Perform the **Diagnostic System Check - Vehicle** prior to using this diagnostic procedure.
- Review **Strategy Based Diagnosis** for an overview of the diagnostic approach.
- **Diagnostic Procedure Instructions** provides an overview of each diagnostic category.

cardiagn.com

DTC DESCRIPTORS

DTC P0667

Transmission Control Module (TCM) Temperature Sensor Performance

DTC P0668

Transmission Control Module (TCM) Temperature Sensor Circuit Low Voltage

DTC P0669

Transmission Control Module (TCM) Temperature Sensor Circuit High Voltage

CIRCUIT/SYSTEM DESCRIPTION

The transmission control module (TCM) temperature sensor is located inside of the control solenoid valve assembly which has no serviceable parts. The TCM temperature sensor provides the temperature of the TCM. This temperature reading is used in various diagnostic routines in the TCM software. This fault is handled inside the TCM and no external circuits are involved.

CONDITIONS FOR RUNNING THE DTC

DTC P0667, P0668, or P0669

- DTCs P0667, P0716, P0717, P0722, or P0723 are not set.
- The TCM internal temperature is between -55°C and +150°C (-67°F and +302°F).
- The engine speed is 500 RPM or more for 5 seconds.
- The ignition voltage is 8.6V or greater.

CONDITIONS FOR SETTING THE DTC

P0667

Condition 1

- Vehicle speed is 8 km/h (5 mph) or greater for 5 minutes.
- Torque converter clutch (TCC) slip speed is greater than 150 RPM for 3 minutes.
- The TCM internal temperature is between -55°C and +21°C (-67°F and +70°F).
- The TCM internal temperature has changed by less than 2.0°C (3.6°F) in 2 minutes.
- The transmission fluid temperature (TFT) is greater than 70°C (158°F).
- The TFT has increased by 55°C (99°F) since startup.

Condition 2

cardiagn.com

- Vehicle speed is 8 km/h (5 mph) or greater for 5 minutes.
- TCC slip speed is greater than 120 RPM for 5 minutes.
- The TCM internal temperature is between 120-150°C (248-302°F).
- The TCM internal temperature has changed by less than 2.0°C (3.6°F) in 2 minutes.
- The TFT is 70°C (158°F) or greater.
- The TFT has increased by 55°C (99°F) since startup.

Condition 3

The TCM internal temperature changes by 20°C (36°F) or greater 14 times over 7 seconds.

P0668

The TCM internal temperature is 249°C (480°F) or greater for 4 seconds or more.

P0669

The TCM internal temperature is -249°C (-416°F) or greater for 4 seconds or more.

ACTION TAKEN WHEN THE DTC SETS

- DTCs P0667, P0668, and P0669 are Type C DTCs.
- The TCM allows the vehicle to operate in transmission protection mode.

CONDITIONS FOR CLEARING THE DTC

DTCs P0667, P0668, and P0669 are Type C DTCs.

DIAGNOSTIC AIDS

During a road test, the TCM temperature should steadily increase to a normal operating temperature, and then stabilize.

REFERENCE INFORMATION

Schematic Reference

Automatic Transmission Controls Schematics

Connector End View Reference

- **Component Connector End Views**
- **Inline Harness Connector End Views**

Electrical Information Reference

cardiagn.com

- **Circuit Testing**
- **Connector Repairs**
- **Testing for Intermittent Conditions and Poor Connections**
- **Wiring Repairs**

Description and Operation

- **Electronic Component Description**
- **Transmission General Description**
- **Transmission Component and System Description**

DTC Type Reference

Powertrain Diagnostic Trouble Code (DTC) Type Definitions

CIRCUIT/SYSTEM VERIFICATION

1. Engine idling at normal operating temperature, verify the scan tool TCM Temperature parameter is between -247 and +247°C (-412 and +477°F).
    - If not within the specified range, replace the Q8 control solenoid valve assembly.
2. Operate the vehicle at 64 km/h (40 mph) for 10 minutes. Monitor the TCM Temperature parameter and the Transmission Fluid Temperature parameter with a scan tool. The TCM Temperature parameter should increase by more than 2°C (3.5°F). Also, the TCM Temperature parameter and the Transmission Fluid Temperature parameter should be within 10°C (18°F) of each other.
    - If the TCM Temperature parameter does not increase by more than 2°C (3.5°F) or the TCM Temperature parameter value is not within 10°C (18°F) of the Transmission Fluid Temperature parameter, then replace the Q8 control solenoid valve assembly.
3. Operate the vehicle within the Conditions for Running the DTC to verify the DTC does not reset. You may also operate the vehicle within the conditions that you observed from the Freeze Frame/Failure Records data.

REPAIR PROCEDURES

Perform the **Diagnostic Repair Verification** after completing the diagnostic procedure.

- Control solenoid valve assembly replacement. Refer to **Control Module References** for replacement, setup, and programming.
- Perform the **Service Fast Learn Adapts** following all transmission related repairs.

DTC P06AC, P06AD, OR P06AE

DIAGNOSTIC INSTRUCTIONS

- Perform the **Diagnostic System Check - Vehicle** prior to using this diagnostic procedure.

cardiagn.com

- Review **Strategy Based Diagnosis** for an overview of the diagnostic approach.
- **Diagnostic Procedure Instructions** provides an overview of each diagnostic category.

DTC DESCRIPTORS

DTC P06AC

Transmission Control Module (TCM) Power Up Temperature Sensor Performance

DTC P06AD

Transmission Control Module (TCM) Power Up Temperature Sensor Circuit Low Voltage

DTC P06AE

Transmission Control Module (TCM) Power Up Temperature Sensor Circuit High Voltage

CIRCUIT/SYSTEM DESCRIPTION

The transmission control module (TCM) power up temperature sensor is located inside of the control solenoid valve assembly which has no serviceable parts. The TCM power up temperature sensor provides the temperature of the TCM when the TCM power is on. This temperature reading is used in various shifting and diagnostic routines and also to protect the control solenoid valve assembly and TCM. This fault is handled inside the TCM and no external circuits are involved.

CONDITIONS FOR RUNNING THE DTC

P06AC

- DTCs P06AC, P0716, P0717, P0722, or P0723 are not set.
- The engine speed is 500 RPM or greater for 5 seconds.
- The ignition voltage is 8.6 volts or greater.
- The TCM power up temperature is between -40 and +150°C (-40 and +302°F).

P06AD

- DTCs P06AD, P0716, P0717, P0722, or P0723 are not set.
- The transmission output shaft speed is 200 RPM or greater for 4 minutes.
- The torque converter clutch (TCC) slip speed is 120 RPM or greater for 4 minutes.
- The engine speed is 500 RPM or greater for 5 seconds.
- The ignition voltage is 8.6 volts or greater.

P06AE

- The engine speed is 500 RPM or greater for 5 seconds.

cardiagn.com

- The ignition voltage is 8.6 volts or greater.
- DTC P06AE has not failed set this ignition.

CONDITIONS FOR SETTING THE DTC

P06AC

Condition 1

- Vehicle speed is greater than 8 km/h (5 mph) for 5 minutes.
- TCC slip speed is greater than 150 RPM for 5 minutes.
- The TCM power up temperature is between -40 and +150°C (-40 and +302°F).
- The TCM power up temperature has changed by less than 2°C (3.6°F) in 100 seconds.
- The transmission fluid temperature (TFT) is 70°C (158°F) or greater.
- The TFT has increased by 55°C (99°F) since startup.

Condition 2

- Vehicle speed is 8 km/h (5 mph) or greater for 300 seconds cumulative.
- TCC slip speed is greater than 120 RPM for 300 seconds cumulative.
- The TCM temperature sensor is between 120-150°C (248-302°F).
- The TCM power up temperature has changed by less than 2°C (3.6°F) in 2 minutes.
- The TFT is 70°C (158°F) or greater.
- The TFT has increased by 55°C (99°F) since startup.

Condition 3

The TCM power up temperature changes by 20°C (36°F) or greater 5 times over 7 seconds.

P06AD

- The TCM power up temperature is -59°C (-74°F) or less for 13 seconds or greater.
- The TFT is 140°C (284°F) or greater for 60 seconds or more.

P06AE

The TCM power up temperature is 164°C (327°F) or greater for 10 seconds or more.

ACTION TAKEN WHEN THE DTC SETS

- DTCs P06AC, P06AD, and P06AE are Type C DTCs.
- The TCM allows the vehicle to operate in transmission protection mode.

CONDITIONS FOR CLEARING THE DTC

cardiagn.com

DTCs P06AC, P06AD, and P06AE are Type C DTCs.

DIAGNOSTIC AIDS

During a road test, the TCM Power-Up temperature should steadily increase to a normal operating temperature, and then stabilize.

REFERENCE INFORMATION

Schematic Reference

Automatic Transmission Controls Schematics

Connector End View Reference

Component Connector End Views

Electrical Information Reference

- **Circuit Testing**
- **Connector Repairs**
- **Testing for Intermittent Conditions and Poor Connections**
- **Wiring Repairs**

Description and Operation

Electronic Component Description

DTC Type Reference

Powertrain Diagnostic Trouble Code (DTC) Type Definitions

Scan Tool Reference

Control Module References for scan tool information

CIRCUIT/SYSTEM VERIFICATION

1. Ignition ON, clear the DTCs with a scan tool.
2. Operate the vehicle at 64 km/h (40 mph) for 10 minutes. Monitor the TCM Power-Up Temperature parameter and the TCM Temperature parameter with a scan tool. The TCM Power-Up Temperature parameter and the TCM Temperature parameter should be within 10°C (18°F) of each other.
    - If the TCM Power-Up Temperature parameter is not within the specified value of the TCM Temperature parameter, then replace the Q8 control solenoid valve assembly.
3. Operate the vehicle within the Conditions for Running the DTC to verify the DTC does not reset. You may also operate the vehicle within the conditions that you observed from the Freeze Frame/Failure

cardiagn.com

Records data.

REPAIR PROCEDURES

Perform the **Diagnostic Repair Verification** after completing the diagnostic procedure.

- Control solenoid valve assembly replacement. Refer to **Control Module References** for replacement, setup, and programming.
- Perform the **Service Fast Learn Adapts** following all transmission related repairs.

DTC P0711, P0712, OR P0713

DIAGNOSTIC INSTRUCTIONS

- Perform the **Diagnostic System Check - Vehicle** prior to using this diagnostic procedure.
- Review **Strategy Based Diagnosis** for an overview of the diagnostic approach.
- **Diagnostic Procedure Instructions** provides an overview of each diagnostic category.

DTC DESCRIPTORS

DTC P0711

Transmission Fluid Temperature (TFT) Sensor Performance

DTC P0712

Transmission Fluid Temperature (TFT) Sensor Circuit Low Voltage

DTC P0713

Transmission Fluid Temperature (TFT) Sensor Circuit High Voltage

CIRCUIT/SYSTEM DESCRIPTION

The transmission fluid temperature (TFT) sensor is located inside of the transmission control module (TCM) assembly which has no serviceable parts. The TFT sensor provides transmission fluid temperature to the TCM. This fault is handled inside the TCM and no external circuits are involved.

CONDITIONS FOR RUNNING THE DTC

P0711

- DTCs P0101, P0102, P0103, P0116, P0117, P0118, P0121, P0122, P0123, P0336, P0337, P0338, P0711, P0716, P0722, P0723, P0742, or P2726 are not set.
- Ignition voltage is 8.6 volts or greater.
- The engine coolant temperature (ECT) is valid.

cardiagn.com

- The TCM internal temperature is -50°C to +170°C (-56°F and +336°F) at start up.
- The engine speed is 500 RPM or greater for 5 seconds.
- The vehicle speed is 8 km/h (5 mph) or greater for 5 minutes.
- The engine coolant temperature is between -39°C and 149°C (-38°F and 300°F).
- The accelerator pedal position signal is valid.
- The engine torque signal is valid.

P0712 or P0713

- DTCs P0712, P0713, P0716, P0717, P0722, or P0723 are not set.
- Ignition voltage is 8.6 volts or greater.
- The engine speed is 500 RPM or greater for 5 seconds.

CONDITIONS FOR SETTING THE DTC

P0711

Condition 1

- Vehicle speed is 8 km/h (5 mph) or greater for 5 minutes.
- TCC slip speed is 150 RPM or greater.
- The TFT is between -50°C and +21°C (-58°F and +70°F) at start up.
- The TFT has changed by less than 2.0°C (3.6°F) in 2 minutes.
- The ECT is 70°C (158°F) or greater.
- The ECT has increased by 55°C (99°F) since startup.

Condition 2

- Vehicle speed is 8 km/h (5 mph) or greater for 5 minutes.
- TCC slip speed is 120 RPM or greater for 5 minutes.
- The TFT is between 129-170°C (264-507°F).
- The TFT has changed by less than 2.0°C (3.6°F) in 2 minutes.
- The ECT is 70°C (158°F) or greater.
- The ECT has increased by 55°C (99°F) since startup.

Condition 3

The TFT changes by 20°C (36°F) or greater 5 times over 7 seconds.

Condition 4

The TFT has not changed more than 20°C (36°F) during the following conditions:

cardiagn.com

- The TFT temperature at start up is -50°C (-58°F) for 42 minutes.
- The TFT temperature at start up is -25°C (-13°F) for 17 minutes.
- The TFT temperature at start up is -10°C (14°F) for 14 minutes.
- The TFT temperature at start up is -5°C (23°F) for 9 minutes.
- The TFT temperature at start up is 20°C (68°F) for 4 minutes.

P0712

The TFT is -74°C (-101°F) or less for 13 seconds or more.

P0713

The TFT is 174°C (345°F) or greater for 10 seconds or more.

ACTION TAKEN WHEN THE DTC SETS

- DTCs P0711, P0712, and P0713 are Type C DTCs.
- The TCM freezes transmission adaptive functions.
- The TCM allows the vehicle to operate in transmission protection mode.

CONDITIONS FOR CLEARING THE DTC

DTCs P0711, P0712, and P0713 are Type C DTCs.

DIAGNOSTIC AIDS

During a road test, the transmission fluid temperature (TFT) should steadily increase to a normal operating temperature, and then stabilize.

REFERENCE INFORMATION

Schematic Reference

Automatic Transmission Controls Schematics

Connector End View Reference

- **Component Connector End Views**
- **Inline Harness Connector End Views**

Electrical Information Reference

- **Circuit Testing**
- **Connector Repairs**
- **Testing for Intermittent Conditions and Poor Connections**

cardiagn.com

- **Wiring Repairs**

Description and Operation

- **Electronic Component Description**
- **Transmission General Description**
- **Transmission Component and System Description**

DTC Type Reference

Powertrain Diagnostic Trouble Code (DTC) Type Definitions

CIRCUIT/SYSTEM VERIFICATION

1. Engine idling at normal operating temperature, verify the scan tool Trans Fluid Temp. parameter is between -74 and +174°C (-101 and +345°F).
    - If not within the specified range, replace the Q8 control solenoid valve assembly.
2. Operate the vehicle at 64 km/h (40 mph) for 10 minutes. Monitor the Transmission Fluid Temperature parameter and the TCM Temperature parameter with a scan tool. The Transmission Fluid Temperature parameter should increase by more than 2°C (3.5°F). Also, the Transmission Fluid Temperature parameter and the TCM Temperature parameter should be within 10°C (18°F) of each other.
    - If the Transmission Fluid Temperature parameter does not increase by more than 2°C (3.5°F) or the Transmission Fluid Temperature parameter is not within 10°C (18°F) of the TCM Temperature parameter, then replace the Q8 control solenoid valve assembly.
3. Operate the vehicle within the Conditions for Running the DTC to verify the DTC does not reset. You may also operate the vehicle within the conditions that you observed from the Freeze Frame/Failure Records data.

REPAIR PROCEDURES

Perform the **Diagnostic Repair Verification** after completing the diagnostic procedure.

- Control solenoid valve assembly replacement. Refer to **Control Module References** for replacement, setup, and programming.
- Perform the **Service Fast Learn Adapts** following all transmission related repairs.

DTC P0716 OR P0717

DIAGNOSTIC INSTRUCTIONS

- Perform the **Diagnostic System Check - Vehicle** prior to using this diagnostic procedure.
- Review **Strategy Based Diagnosis** for an overview of the diagnostic approach.
- **Diagnostic Procedure Instructions** provides an overview of each diagnostic category.

cardiagn.com

DTC DESCRIPTORS

DTC P0716

Input Speed Sensor Performance

DTC P0717

Input Speed Sensor Circuit Low Voltage

DIAGNOSTIC FAULT INFORMATION

Circuit	Short to Ground	Open/High Resistance	Short to Voltage	Signal Performance
Input Speed Sensor Supply Voltage	P0716, P0717	P0716, P0717	P0716, P0717	P0716
Input Speed Sensor Signal	P0716, P0717	P0716, P0717	P0716, P0717	P0716

TYPICAL SCAN TOOL DATA

ISS Signal

Circuit	Normal Range	Short to Ground	Open/High Resistance	Short to Voltage
Operating Conditions: Engine running, normal operating temperature				
ISS Signal	450-7,000 RPM	0 RPM	0 RPM	0 RPM
ISS/OSS Supply Voltage	-	0 RPM	0 RPM	0 RPM

ISS/OSS Supply Voltage

Circuit	Normal Range	Short to Ground	Open/High Resistance	Short to Voltage
Operating Conditions: Key ON, Engine OFF or Engine running, normal operating temperature				
ISS Signal	OK	OK	OK	OK
ISS/OSS Supply Voltage	OK	Out of range	Out of range	Out of range

CIRCUIT/SYSTEM DESCRIPTION

The automatic transmission (AT) input and output speed sensor (ISS and OSS) assembly each are part of a single harness. The ISS is a hall-effect type sensor. The ISS/OSS mounts to the control valve upper body assembly. The ISS sensor end faces the splines on the 1-2-3-4 and 3-5-R clutch housing outside diameter surface. The sensor receives 8.3-9.3 volts on the ISS/OSS supply voltage circuit from the control solenoid valve assembly. As the 1-2-3-4 and 3-5-R clutch housing rotates, the sensor produces a signal frequency based on the splines on the clutch housing outside diameter surface. This signal is transmitted through the ISS signal circuit to the control solenoid valve assembly. The control solenoid valve assembly uses the ISS signal to determine line pressure, transmission shift patterns, torque converter clutch (TCC) slip speed and gear ratio.

CONDITIONS FOR RUNNING THE DTC

cardiagn.com

P0716

- DTCs P0101, P0102, P0103, P0121, P0122, P0123, P0716, P0717, P0722, P0723, P0723, P0752, P0973, or P0974 are not set.
- The engine speed is 500 RPM or greater for 5 seconds.
- Engine torque is between 0-1492 N.m (0-1100 lb ft).
- Ignition voltage is 8.6 volts or greater.
- The vehicle speed is greater than 0 km/h (0 mph).
- The throttle position must be greater than 0 percent.

P0717

- DTCs P0101, P0102, P0103, P0716, P0717, P0722, or P0723 are not set.
- The engine speed is 500 RPM or greater for 5 seconds.
- Ignition voltage is 8.6 volts or greater.
- The TCM must receive a valid torque signal from the ECM.
- The vehicle speed is greater than 16 km/h (10 mph).
- The engine torque is greater than 50 N.m (37 lb ft).

CONDITIONS FOR SETTING THE DTC

P0716

The transmission input speed sensor RPM drop is greater than 882 RPM for 1 second.

P0717

Transmission input shaft speed is less than 35 RPM for 4 seconds.

ACTION TAKEN WHEN THE DTC SETS

P0716

- DTC P0716 is a Type A DTC.
- The TCM freezes transmission adaptive functions.
- The TCM turns OFF all solenoids.
- The TCM inhibits Tap Up/Down functions.
- The transmission defaults to second gear.
- The TCM enables torque management.
- The TCM inhibits manual shifting of forward gears.

P0717

cardiagn.com

- DTC P0717 is a Type A DTC.
- The high side driver is turned OFF.
- The TCM turns OFF all solenoids.
- The TCM freezes transmission adaptive functions.
- The TCM inhibits Tap Up/Down functions.
- The TCM inhibits manual shifting of forward gears.

CONDITIONS FOR CLEARING THE DTC

P0716 and P0717 are Type A DTCs.

DIAGNOSTIC AIDS

Inspect the ISS/OSS, harness, connector, and control solenoid valve assembly for metallic debris and the 1-2-3-4 and 3-5-R clutch housing splines on the outside diameter surface for damage or misalignment. Proper torque of the ISS/OSS mounting bolt is critical to proper speed signal operation.

REFERENCE INFORMATION

Schematic Reference

Automatic Transmission Controls Schematics

Connector End View Reference

- **Component Connector End Views**
- **Inline Harness Connector End Views**

Electrical Information Reference

- **Circuit Testing**
- **Connector Repairs**
- **Testing for Intermittent Conditions and Poor Connections**
- **Wiring Repairs**

Description and Operation

Electronic Component Description

DTC Type Reference

Powertrain Diagnostic Trouble Code (DTC) Type Definitions

Scan Tool Reference

cardiagn.com

Control Module References for scan tool information

Special Tools

DT-47825-10: Jumper Harness

For equivalent regional tools, refer to **Special Tools** .

CIRCUIT/SYSTEM VERIFICATION

1. Ignition ON, verify with a scan tool the transmission ISS/OSS supply voltage test status parameter displays OK.
2. Engine idling in Park, observe the Transmission ISS parameter on the scan tool while varying the engine speed. The Transmission ISS parameter should vary with the engine speed and not drop out.
3. Operate the vehicle within the Conditions for Running the DTC to verify the DTC does not reset. You may also operate the vehicle within the conditions that you observed from the Freeze Frame/Failure Records data.

CIRCUIT/SYSTEM TESTING

NOTE: You must perform the Circuit/System Verification first.

1. Ignition OFF, remove the Q8 control solenoid valve assembly. Refer to **Control Solenoid Valve and Transmission Control Module Assembly Replacement** .
2. Connect the **DT-47825-10:** jumper harness between the vehicle wire harness electrical connector, and the Q8 control solenoid valve assembly electrical connector.
3. Ignition ON, test for 8.3-9.3 volts between the ISS/OSS voltage circuit terminal B on the Q8 control solenoid valve assembly and ground at the transmission case.
    - If not within the specified range, replace the control solenoid valve assembly.
4. Perform the **Control Solenoid Valve and Transmission Control Module Assembly Input Shaft Speed/Output Shaft Speed Input Test** .
5. Inspect the machined teeth on the 1-2-3-4 and 3-5 clutch housing outer surface for damage or misalignment. Repair or replace as necessary.
6. If all of the above test normal, replace the B14A/B14C ISS/OSS assembly.

REPAIR PROCEDURES

Perform the **Diagnostic Repair Verification** after completing the diagnostic procedure.

- Perform the **Input and Output Speed Sensor Replacement** .
- Control solenoid valve assembly - refer to **Control Module References** for replacement, setup, and programming.
- Perform the **Control Solenoid Valve and Transmission Control Module Assembly Input Shaft Speed/Output Shaft Speed Input Test** .

cardiagn.com

- Perform the **Service Fast Learn Adapts** following all transmission related repairs.

DTC P0722 OR P0723

DIAGNOSTIC INSTRUCTIONS

- Perform the **Diagnostic System Check - Vehicle** prior to using this diagnostic procedure.
- Review **Strategy Based Diagnosis** for an overview of the diagnostic approach.
- **Diagnostic Procedure Instructions** provides an overview of each diagnostic category.

DTC DESCRIPTORS

DTC P0722

Output Speed Sensor (OSS) Circuit Low Voltage

DTC P0723

Output Speed Sensor (OSS) Intermittent

DIAGNOSTIC FAULT INFORMATION

Circuit	Short to Ground	Open/High Resistance	Short to Voltage	Signal Performance
OSS Supply Voltage	P0722, P0723	P0722, P0723	P0722, P0723	P0723
OSS Signal	P0722, P0723	P0722, P0723	P0722, P0723	P0723

TYPICAL SCAN TOOL DATA

Output Speed Sensor (OSS) Signal

Circuit	Normal Range	Short to Ground	Open/High Resistance	Short to Voltage
Operating Conditions: Engine running, normal operating temperature				
OSS Signal	0-7,000 RPM	0 RPM	0 RPM	0 RPM
ISS/OSS Supply Voltage	-	0 RPM	0 RPM	0 RPM

ISS/OSS Supply Voltage

Circuit	Normal Range	Short to Ground	Open/High Resistance	Short to Voltage
Operating Conditions: Key ON, engine OFF or engine running				
OSS Signal	OK	OK	OK	OK
ISS/OSS Supply Voltage	OK	Out of range	Out of range	Out of range

CIRCUIT/SYSTEM DESCRIPTION

cardiagn.com

The automatic transmission (AT) input and output speed sensor (ISS and OSS) assembly each are part of a single harness. The OSS is a hall-effect type sensor. The ISS/OSS mounts to the control valve upper body assembly. The sensor end faces the output shaft housing machined slots. The sensor receives 8.3-9.3 volts on the ISS/OSS supply voltage circuit from the control solenoid valve assembly. As the output shaft rotates, the sensor produces a signal frequency based on the machined slots of the output shaft housing. This signal is transmitted through the OSS signal circuit to the control solenoid valve assembly. The control solenoid valve assembly uses the OSS signal to determine line pressure, transmission shift patterns, torque converter clutch (TCC) slip speed and gear ratio.

CONDITIONS FOR RUNNING THE DTC

P0722

- DTCs P0101, P0102, P0103, P0121, P0122, P0123, P0716, P0717, or P0722 are not set.
- Ignition voltage is 8.6 volts or greater.
- The engine speed is 500 RPM or greater for 5 seconds.
- The TCM must receive a valid torque signal from the ECM.
- The engine torque is between 50-1,492 N.m (36-1,100 lb ft).
- Accelerator pedal position signal is valid.
- Transmission fluid temperature (TFT) is greater than 0°C (32°F).
- The selected range is not PARK or NEUTRAL.
- The transmission input speed is between 653-5350 RPM.
- The throttle position is greater than 5 percent.

P0723

- DTCs P0101, P0102, P0103, P0121, P0122, P0123, P0716, P0717, P0722, P0723, P0973, P0974, P0976, or P0977 are not set.
- Ignition voltage is 8.6 volts or greater.
- The engine speed is 3200 RPM or greater for 5 seconds.
- Greater than 5 seconds since last range change.
- The TCM must receive a valid torque signal from the ECM.
- Accelerator pedal position signal is valid.

CONDITIONS FOR SETTING THE DTC

P0722

- The TCM detects no output shaft speed when there is vehicle speed.
- The transmission output speed is 35 RPM or less for 4 seconds.

P0723

cardiagn.com

- The TCM detects an unrealistic drop in output shaft speed.
- The transmission input speed has not changed by more than 4100 RPM for 2 seconds.
- The transmission output speed has not changed by more than 8200 RPM for 2 seconds.
- The transmission output speed drops 650 RPM and does not recover for 1.5 seconds.

ACTION TAKEN WHEN THE DTC SETS

P0722

- DTC P0722 is a Type A DTC.
- The transmission defaults to second gear.
- The TCM enables torque management.
- The TCM freezes transmission adaptive functions.
- The TCM turns OFF all solenoids.
- The TCM turns OFF the TCC solenoid.

P0723

- DTC P0723 is a Type A DTC.
- The high side driver is turned OFF.
- The TCM turns OFF all solenoids.
- The TCM freezes transmission adaptive functions.
- The TCM enables torque management.

CONDITIONS FOR CLEARING THE DIC/DTC

DTCs P0722 and P0723 are Type A DTCs.

DIAGNOSTIC AIDS

Inspect the ISS/OSS, harness, connector and control solenoid valve assembly for metallic debris and output shaft housing machined slots for damage or misalignment. Proper torque of the ISS/OSS mounting bolt is critical to proper speed sensor operation.

REFERENCE INFORMATION

Schematic Reference

Automatic Transmission Controls Schematics

Connector End View Reference

- **Component Connector End Views**
- **Inline Harness Connector End Views**

cardiagn.com

Electrical Information Reference

- **Circuit Testing**
- **Connector Repairs**
- **Testing for Intermittent Conditions and Poor Connections**
- **Wiring Repairs**

Description and Operation

Electronic Component Description

DTC Type Reference

Powertrain Diagnostic Trouble Code (DTC) Type Definitions

Scan Tool Reference

Control Module References for scan tool information

Special Tools

DT-47825-10: Jumper Harness

For equivalent regional tools, refer to **Special Tools** .

CIRCUIT/SYSTEM VERIFICATION

1. Ignition ON, verify with a scan tool the transmission ISS/OSS supply voltage test status parameter displays OK.
2. Operate the vehicle at 16-32 km/h (10-20 mph) while observing the Transmission OSS parameter on the scan tool. The Transmission OSS parameter should vary with the vehicle speed and not drop out.
3. Operate the vehicle within the Conditions for Running the DTC to verify the DTC does not reset. You may also operate the vehicle within the conditions that you observed from the Freeze Frame/Failure Records data.

CIRCUIT/SYSTEM TESTING

NOTE: You must perform the Circuit/System Verification first.

1. Ignition OFF, remove the control solenoid valve assembly. Refer to **Control Solenoid Valve and Transmission Control Module Assembly Replacement** .
2. Connect the **DT-47825-10:** jumper harness between the vehicle wire harness electrical connector, and the control solenoid valve assembly electrical connector.
3. Ignition ON, test for 8.3-9.3 volts between the ISS/OSS voltage circuit terminal B on the Q8 control solenoid valve assembly and ground at the transmission case.

cardiagn.com

- If not within the specified range, replace the control solenoid valve assembly.

4. Perform the **Control Solenoid Valve and Transmission Control Module Assembly Input Shaft Speed/Output Shaft Speed Input Test** .
5. Inspect the machined slots on the output shaft housing outer surface for damage or misalignment. Repair or replace as necessary.
6. If all of the above test normal, replace the B14A/B14C ISS/OSS assembly.

REPAIR PROCEDURES

Perform the **Diagnostic Repair Verification** after completing the diagnostic procedure.

- Perform the **Input and Output Speed Sensor Replacement** .
- Control solenoid valve assembly - refer to **Control Module References** for replacement, setup, and programming.
- Perform the **Control Solenoid Valve and Transmission Control Module Assembly Input Shaft Speed/Output Shaft Speed Input Test** .
- Perform the **Service Fast Learn Adapts** following all transmission related repairs.

DTC P0741 OR P0742

DIAGNOSTIC INSTRUCTIONS

- Perform the **Diagnostic System Check - Vehicle** prior to using this diagnostic procedure.
- Review **Strategy Based Diagnosis** for an overview of the diagnostic approach.
- **Diagnostic Procedure Instructions** provides an overview of each diagnostic category.

DTC DESCRIPTORS

DTC P0741

Torque Converter Clutch (TCC) - Stuck Off

DTC P0742

Torque Converter Clutch (TCC) - Stuck On

CIRCUIT/SYSTEM DESCRIPTION

The torque converter clutch (TCC) pressure control (PC) solenoid is part of the control solenoid valve assembly which has no serviceable parts. The TCC PC solenoid is a normally low pressure control solenoid. The TCC PC solenoid regulates transmission fluid to the TCC regulator valve in the lower valve body and the TCC control valve in the pump cover. When vehicle operating conditions are appropriate to apply the converter clutch, the transmission control module (TCM) will increase TCC PC current flow (duty cycle) to the TCC solenoid. The TCC PC solenoid directs fluid pressure to move the TCC control valve to the apply position, and moves the TCC regulator apply valve to the regulating position. The TCC regulator valve regulates TCC apply fluid

cardiagn.com

pressure proportional to TCC solenoid pressure. When the TCC is fully applied, the engine is coupled directly to the transmission. TCC release is accomplished by the TCM decreasing current flow to the TCC PC solenoid. This results in decreasing the apply pressure which allows the TCC control valve to move to the release position. The TCM calculates torque converter slip speed based on engine speed and transmission input shaft speed.

CONDITIONS FOR RUNNING THE DTC

P0741

- DTCs P0101, P0102, P0103, P0121, P0122, P0123, P0716, P0717, P0722, P0723, P0742, P2762, P2763, or P2764 are not set.
- Ignition voltage is 8.6 volts or greater.
- The engine run time is greater than 5 seconds.
- The transmission fluid temperature (TFT) is 20-130°C (68-266°F).
- The accelerator pedal position signal is valid.
- The throttle position is greater than 8 percent.
- The TCM must receive a valid torque signal from the ECM.
- The engine torque is greater than 50 N.m (36 lb ft).
- The TCC is commanded ON and PWM duty cycle is greater than 60 percent for 5 seconds.
- The following 6L80/6L90 gear ratios are achieved in the specified gear range while the TCC is commanded On:
  - The 2nd gear ratio is between 2.19-2.52.
  - The 3rd gear ratio is between 1.42-1.63.
  - The 4th gear ratio is between 1.07-1.23.
  - The 5th gear is between 0.79-0.91.
  - The 6th gear is between 0.62-0.71.
- The following 6L50 gear ratios are achieved in the specified gear range while the TCC is commanded On:
  - The 2nd gear ratio is between 2.20-2.53.
  - The 3rd gear ratio is between 1.44-1.65.
  - The 4th gear ratio is between 1.07-1.23.
  - The 5th gear is between 0.79-0.91.
  - The 6th gear is between 0.62-0.72.

P0742

- DTCs P0101, P0102, P0103, P0121, P0122, P0123, P0716, P0717, P0722, P0723, P0741, P0742, P1751, P2762, P2763, or P2764 are not set.
- DTC P0742 has not passed this key ON.
- Ignition voltage is between 8.6-18.0 volts.
- The engine run time is greater than 5 seconds.

cardiagn.com

- The transmission fluid temperature (TFT) is 20-130°C (68-266°F).
- The accelerator pedal position signal is valid.
- The throttle position is greater than 8 percent.
- The TCM must receive a valid torque signal from the ECM.
- The engine torque is greater than 115 N.m (85 lb ft).
- The engine speed is greater than 500 RPM.
- The vehicle speed is greater than 16 km/h (10 mph).
- The gear ratio is between 0.62-1.63.
- The commanded gear is 2nd.
- The TCC is commanded OFF.

CONDITIONS FOR SETTING THE DTC

P0741

- The TCC Pressure is greater than 800 Kpa for 5 seconds.
- The TCM detects TCC slip greater than 125 RPM for 5 seconds when the TCC is commanded ON. This must occur 4 times.

P0742

The TCM detects the TCC slip between -20 and +40 RPM for 4 seconds when the TCC is commanded OFF. This must occur 3 times.

ACTION TAKEN WHEN THE DTC SETS

- DTCs P0741 and P0742 are Type A DTCs.
- Inhibit high gear in Hot Mode.
- The TCM inhibits TCC.
- The TCM freezes transmission adaptive functions.

CONDITIONS FOR CLEARING THE DIC/DTC

DTCs P0741 and P0742 are Type A DTCs.

DIAGNOSTIC AIDS

Before performing a road test, configure and setup the scan tool for snapshot mode. This will allow you to display, monitor, and verify multiple transmission data parameters at one time, after the road test.

REFERENCE INFORMATION

Schematic Reference

cardiagn.com

Automatic Transmission Controls Schematics

Description and Operation

- Electronic Component Description
- Transmission Component and System Description
- Transmission General Description
- Park - Engine Running
- Reverse
- Neutral - Engine Running
- Drive Range, First Gear Engine Braking
- Drive Range, First Gear
- Drive Range, Second Gear
- Drive Range, Third Gear
- Drive Range, Third Gear Default
- Drive Range - Fourth Gear
- Drive Range, Fifth Gear
- Drive Range, Fifth Gear Default
- Drive Range, Sixth Gear
- Fluid Passages

DTC Type Reference

Powertrain Diagnostic Trouble Code (DTC) Type Definitions

Scan Tool Reference

Control Module References for scan tool information

Special Tools

DT-47825: Control Solenoid Test Plate

For equivalent regional tools, refer to Special Tools .

CIRCUIT/SYSTEM VERIFICATION

NOTE: If other DTCs are set, diagnose those DTCs first.

1. Engine idling in Park, with parking brake applied and drive wheels chocked.
2. Perform the Transmission Fluid Level and Condition Check , to verify correct fluid level and condition.

cardiagn.com

3. Engine idling in Park, verify with a scan tool the Transmission ISS/OSS supply voltage test status parameter displays OK.
4. Engine idling in Park. Observe the Transmission ISS parameter on the scan tool, while varying the engine speed. The Transmission ISS parameter should vary with engine speed and not drop out.
5. Operate the vehicle at 16-32 km/h (10-20 mph) while observing the Transmission OSS parameter on the scan tool. The Transmission OSS parameter should vary with the vehicle speed and not drop out.

NOTE: Perform a scan tool snapshot, during the road test.

6. Perform the **Road Test** . Verify the transmission operation performs as indicated, in the road test instructions.
7. Review the Tech 2 snapshot transmission data parameters. Verify the engine and transmission data parameters display the correct values in all forward gear ranges:
   - Engine Speed
   - Engine Coolant Temperature
   - Transmission ISS
   - Transmission OSS
   - Vehicle Speed
   - Transmission Fluid Temperature
   - Brake Pedal Switch
   - TCC Pressure Control Solenoid Valve Pressure Command
   - TCC Duty Cycle
   - TCC Slip Speed
8. Operate the vehicle within the Condition for Running the DTC to verify the DTC does not reset. You may also operate the vehicle within the conditions that you observed from the Freeze Frame/Failure Records data.

CIRCUIT/SYSTEM TESTING

1. Perform the **Line Pressure Check** . Verify the transmission line pressures are within the specified ranges.
   - If not within the specified ranges, refer to **Fluid Pressure High or Low** .
2. Ignition OFF, remove the Q8 control solenoid valve assembly. Refer to **Control Solenoid Valve and Transmission Control Module Assembly Replacement** .
3. Perform the **Control Solenoid Valve and Transmission Control Module Assembly Solenoid Performance Test** . Test all solenoids on the Q8 control solenoid valve assembly. A pressure change should occur for each solenoid.
   - If the Q8 control solenoid valve assembly does not pass the performance test, replace the Q8 control solenoid valve assembly.
4. Listed in the chart below are conditions for each component that could set DTC P0741 or P0742. Carefully inspect each component for that condition. Repair or replace as necessary.

DTC	Component	Condition

cardiagn.com

P0741 P0742	A/Trans Fluid Pump Cover Assembly (219)	• TCC Control Valve (227) stuck / sticking - debris, binding, damaged valve, or scored bore • Converter Feed Limit Valve (220) stuck / sticking - debris, binding, damaged valve, or scored bore • Pressure Regulator Valve (233) stuck / sticking - debris, binding, damaged valve, or scored bore • Turbine Shaft Bushings (218), (228) damaged or loose • Leak between stator / tower assembly and cover
P0741	4-5-6 (w/Turbine Shaft) Housing Assembly (441)	TCC Turbine Shaft O-Ring Seal (443) damaged or leaking
P0741	Torque Converter Assembly (1)	• TCC friction material debonded or excessively worn • One way stator clutch distressed • Internal leak - missing or damaged seal • Overheated due to lack of lubrication / cooler flow
P0741 P0742	Lower Control Valve Body Assembly (351)	• TCC Regulator Apply Valve (355) stuck / sticking - debris, binding, damaged valve, or scored bore. Bore plug (328) undersized or leaking • Clutch Select Valve 2 (352) stuck / sticking - debris, binding, damaged valve, or scored bore
P0741 P0742	Q8 Control Solenoid Valve Assembly (314)	TCM incorrectly reporting high OSS, causing early TCC apply or late TCC release
P0742	B14A/b14C A/Trans Input and Output Speed Sensor Assembly (303)	Incorrect (high) OSS signal, causing early TCC apply or late TCC release
P0741	Control Solenoid Valve Assembly (21)	A/Trans Fluid Pump Seal Assembly (18) damaged or leaking
P0741	Torque Converter (w/Fluid Pump) Housing Assembly (203)	Torque Converter Bushing (206) damaged or loose
P0741	Torque Converter Diagnosis	Refer to **No Torque Converter Clutch Apply** .
P0742	Torque Converter Diagnosis	Refer to **No Torque Converter Clutch Release** .

REPAIR PROCEDURES

Perform the **Diagnostic Repair Verification** after completing the diagnostic procedure.

- Control solenoid valve assembly replacement: Refer to **Control Module References** for replacement,

cardiagn.com

setup, and programming.

- Perform the **Service Fast Learn Adapts** following all transmission related repairs.

DTC P0751 OR P0752

DIAGNOSTIC INSTRUCTIONS

- Perform the **Diagnostic System Check - Vehicle** prior to using this diagnostic procedure.
- Review **Strategy Based Diagnosis** for an overview of the diagnostic approach.
- **Diagnostic Procedure Instructions** provides an overview of each diagnostic category.

DTC DESCRIPTOR

DTC P0751

Shift Solenoid (SS) 1 Valve Performance - Stuck OFF

DTC P0752

Shift Solenoid (SS) 1 Valve Performance - Stuck ON

CIRCUIT/SYSTEM DESCRIPTION

The shift solenoid (SS) 1 is part of the control solenoid valve assembly which has no serviceable parts. The control solenoid valve assembly is attached to the lower control valve body. The solenoid operates by the TCM opening or closing the ground circuit. With the solenoid circuit grounded (solenoid on), the internal plunger and metering ball block the exhaust fluid creating signal fluid pressure. The signal fluid acts against the clutch select valve 2 to overcome the valve spring force moving it to the apply position, allowing the shift. The TCM shifts the transmission by operating the solenoids in on/off combinations.

CONDITIONS FOR RUNNING THE DTC

P0751 or P0752

- DTCs P0121, P0122, P0123, P0716, P0717, P0722, P0723, and P0182E are not set.
- Ignition voltage is 8.6 V or greater.
- The engine speed is 500 RPM or greater for 5 seconds.
- The IMS range is not PARK, NEUTRAL or REVERSE.
- High Side Driver (HSD) is enabled.
- The transmission fluid temperature is 0-130°C (32-266°F).
- Accelerator pedal position signal is valid.
- The throttle position signal is valid.
- The output shaft speed is 0 RPM or greater.
- The TCM must receive a valid torque signal from the ECM.

cardiagn.com

CONDITIONS FOR SETTING THE DTC

P0751

- Commanded gear slip is 200 RPM for 1.1 seconds.
- First gear locked is commanded.
- The closest gear ratio is 4th gear.

P0752

- Gear slip is 200 RPM or greater for 5 seconds.
- Commanded gear is 3rd.
- Transmission has achieved second gear.

ACTION TAKEN WHEN THE DTC SETS

- DTC P0751 is a Type B DTC.
- DTC P0752 is a Type A DTC.

CONDITIONS FOR CLEARING THE DTC

- DTC P0751 is a Type B DTC.
- DTC P0752 is a Type A DTC.

DIAGNOSTIC AIDS

Before performing a road test, configure and setup the scan tool for snapshot mode. This will allow you to display, monitor, and verify multiple transmission data parameters at one time, after the road test.

REFERENCE INFORMATION

Schematic Reference

Automatic Transmission Controls Schematics

Description and Operation

- **Electronic Component Description**
- **Transmission General Description**
- **Transmission Component and System Description**
- **Park - Engine Running**
- **Reverse**
- **Neutral - Engine Running**
- **Drive Range, First Gear Engine Braking**

cardiagn.com

- **Drive Range, First Gear**
- **Drive Range, Second Gear**
- **Drive Range, Third Gear**
- **Drive Range, Third Gear Default**
- **Drive Range - Fourth Gear**
- **Drive Range, Fifth Gear**
- **Drive Range, Fifth Gear Default**
- **Drive Range, Sixth Gear**
- **Fluid Passages**

DTC Type Reference

Powertrain Diagnostic Trouble Code (DTC) Type Definitions

Scan Tool Reference

Control Module References for scan tool information

Special Tools

- **DT-47825:** Control Solenoid Test Plate
- **J 21867:** Pressure Gauge

For equivalent regional tools, refer to **Special Tools** .

CIRCUIT/SYSTEM VERIFICATION

NOTE: If other DTCs are set, diagnose those DTCs first.

1. Engine idling in Park, with parking brake applied and drive wheels chocked.
2. Perform the **Transmission Fluid Level and Condition Check** to verify correct fluid level and condition.

NOTE: Perform a scan tool snapshot, during the road test.

3. Perform the **Road Test** . Verify the transmission operation performs as indicated, in the road test instructions.
4. Review the scan tool snapshot transmission data parameters. Verify the engine and transmission data parameters display the correct values in all forward gear ranges:
   - Engine Speed
   - Transmission ISS
   - Transmission OSS
   - Vehicle Speed

cardiagn.com

- Shift Solenoid 1
- TFP Switches

5. Operate the vehicle within the Condition for Running the DTC to verify the DTC does not reset. You may also operate the vehicle within the conditions that you observed from the Freeze Frame/Failure Records data.

CIRCUIT/SYSTEM TESTING

1. Perform the **Line Pressure Check** . Verify the transmission line pressures are within the specified ranges.
   - If not within the specified ranges, refer to **Fluid Pressure High or Low** .
2. Ignition OFF, remove the Q8 control solenoid valve assembly. Refer to **Control Solenoid Valve and Transmission Control Module Assembly Replacement** .
3. Perform the **Control Solenoid Valve and Transmission Control Module Assembly Solenoid Performance Test** . Test all solenoids on the Q8 control solenoid valve assembly. A pressure change should occur for each solenoid.
   - If the Q8 control solenoid valve assembly does not pass the performance test, replace the Q8 control solenoid valve assembly.
4. Listed in the chart below are conditions for each component that could set DTC P0751 or P0752. Carefully inspect each component for that condition. Repair or replace as necessary.

DTC	Component	Condition
P0751 P0752	Lower Control Valve Body	Clutch select valve 2 stuck - debris, sediment, binding or scored bore
P0751	Upper Control Valve Body	Bore Plug - Clutch Select Valve 2, Leaking, undersized bore plug, or damaged
P0751	Upper Control Valve Body	• Check Ball #2 missing, damaged, or leaking • Check Ball #2 Seat damaged or leaking
P0751 P0752	Q8 Control Solenoid Valve Assembly	Shift Solenoid (SS) 1: • O-ring seals leaking • Control signal fluid supply leak - valve body filter plate assembly cracked or damaged gasket seal

REPAIR PROCEDURES

Perform the **Diagnostic Repair Verification** after completing the diagnostic procedure.

- Replace the control solenoid valve assembly. Refer to **Control Module References** for replacement, setup, or programming.
- Perform the **Service Fast Learn Adapts** following all transmission related repairs.

DTC P0756

cardiagn.com

DIAGNOSTIC INSTRUCTIONS

- Perform the **Diagnostic System Check - Vehicle** prior to using this diagnostic procedure.
- Review **Strategy Based Diagnosis** for an overview of the diagnostic approach.
- **Diagnostic Procedure Instructions** provides an overview of each diagnostic category.

DTC DESCRIPTOR

DTC P0756

Shift Solenoid (SS) 2 Valve Performance - Stuck Off

CIRCUIT/SYSTEM DESCRIPTION

The shift solenoid (SS) 2 is part of the control solenoid valve assembly which has no serviceable parts. The control solenoid valve assembly is attached to the lower control valve body. The solenoid operates by the TCM opening or closing the ground circuit. With the solenoid circuit grounded (solenoid on), the internal plunger and metering ball block the exhaust fluid creating signal fluid pressure. The signal fluid acts against the clutch select valve 3 to overcome the valve spring force moving it to the apply position, allowing the shift. The TCM shifts the transmission by operating the solenoids in on/off combinations.

CONDITIONS FOR RUNNING THE DTC

- DTCs P0121, P0122, P0123, P0716, P0717, P0722, P0723, or P182E are not set.
- Ignition voltage is 8.6 volts or greater.
- The engine speed is greater than 500 RPM.
- The engine run time is greater than 5 seconds.
- High Side Driver (HSD) 1 is enabled.
- Accelerator pedal position signal is valid
- The TCM must receive a valid torque signal from the ECM.
- Throttle position is 0.5 percent or greater.
- Transmission fluid temperature (TFT) is 0°C (32°F) or greater.

CONDITIONS FOR SETTING THE DTC

- Commanded gear is 1st locked.
- Transmission gearbox slip is 200 RPM for 10 seconds.
- Transmission forces 2nd gear.
- Transmission has obtained a valid 2nd for 3 seconds.

ACTION TAKEN WHEN THE DTC SETS

- DTC P0756 is a Type A DTC.
- The TCM inhibits TAP function.

cardiagn.com

- The TCM inhibits TCC.
- The TCM freezes transmission adaptive functions.
- The TCM commands high line pressure.
- The transmission defaults to Park, Reverse, Neutral, or 2nd gear.

CONDITIONS FOR CLEARING THE DTC

DTC P0756 is a Type A DTC.

DIAGNOSTIC AIDS

Before performing a road test, configure and setup the scan tool for snapshot mode. This will allow you to display, monitor, and verify multiple transmission data parameters at one time, after the road test.

REFERENCE INFORMATION

Schematic Reference

Automatic Transmission Controls Schematics

Description and Operation

- **Electronic Component Description**
- **Transmission Component and System Description**
- **Transmission General Description**
- **Park - Engine Running**
- **Reverse**
- **Neutral - Engine Running**
- **Drive Range, First Gear Engine Braking**
- **Drive Range, First Gear**
- **Drive Range, Second Gear**
- **Drive Range, Third Gear**
- **Drive Range, Third Gear Default**
- **Drive Range - Fourth Gear**
- **Drive Range, Fifth Gear**
- **Drive Range, Fifth Gear Default**
- **Drive Range, Sixth Gear**
- **Fluid Passages**

DTC Type Reference

Powertrain Diagnostic Trouble Code (DTC) Type Definitions

cardiagn.com

Scan Tool Reference

Control Module References for scan tool information

Special Tools

- **DT-47825:** Control Solenoid Test Plate
- **J 21867:** Pressure Gauge

For equivalent regional tools, refer to **Special Tools** .

CIRCUIT/SYSTEM VERIFICATION

NOTE: If other DTCs are set, diagnose those DTCs first.

1. Engine idling in Park, with parking brake applied and drive wheels chocked.
2. Perform the **Transmission Fluid Level and Condition Check** to verify correct fluid level and condition.

NOTE: Perform a scan tool snapshot, during the road test.

3. Perform the **Road Test** . Verify the transmission operation performs as indicated, in the road test instructions.
4. Review the scan tool snapshot transmission data parameters. Verify the engine and transmission data parameters display the correct values in all forward gear ranges:
   - Engine Speed
   - Transmission ISS
   - Transmission OSS
   - Vehicle Speed
   - Shift Solenoid 2
   - TFP Switches
5. Record the Freeze Frame/Failure Records data. Clear the DTCs.
6. Engine running, brakes applied, transmission gear shift selector in reverse. Shift to drive and accelerate to 56 km/h (35 mph) with calculated throttle position greater than 15 percent. Perform this test 5 consecutive times. The DTC should not set.
7. Operate the vehicle within the Condition for Running the DTC to verify the DTC does not reset. You may also operate the vehicle within the conditions that you observed from the Freeze Frame/Failure Records data.

CIRCUIT/SYSTEM TESTING

1. Perform the **Line Pressure Check** . Verify the transmission line pressures are within the specified ranges.
   - If not within the specified ranges, refer to **Fluid Pressure High or Low** .
2. Ignition OFF, remove the Q8 control solenoid valve assembly. Refer to **Control Solenoid Valve and**

cardiagn.com

Transmission Control Module Assembly Replacement .

3. Perform the **Control Solenoid Valve and Transmission Control Module Assembly Solenoid Performance Test** . Test all solenoids on the Q8 control solenoid valve assembly. A pressure change should occur for each solenoid valve.
    - If the Q8 control solenoid valve assembly does not pass the performance test, replace the Q8 control solenoid valve assembly.
4. Listed in the chart below are conditions for each component that could set DTC P0756. Carefully inspect each component for that condition. Repair or replace as necessary.

DTC	Component	Condition
P0756	Lower Control Valve Body (351)	Clutch select valve 3 stuck off - debris, sediment, binding or scored bore
P0756	Lower Control Valve Body (351)	Bore Plug - Clutch Select Valve 3 leaking, undersized bore plug, damaged
P0756	Lower Control Valve Body (351)	• Check Ball #3 missing, damaged, leaking • Check Ball #3 Spacer plate seat damaged, leaking
P0756	Q8 Control Solenoid Valve Assembly (314)	Shift Solenoid (SS) 2: • O-ring seals leaking • Control signal fluid supply leak - valve body filter plate assembly cracked or damaged gasket seal
P0756	1-2-3-4 and 3-5-R Clutch Housing Assembly (51)	1-2-3-4 clutch backing plate retaining ring not seated, causing the piston to over travel and cut the 1-2-3-4 clutch piston seal
P0756	Fluid Pump Cover Assembly	Fluid pump cover vanes and fluid pump rotor broken
P0756	Low Clutch Sprag Assembly	Broken or incapable of holding torque
P0756	Pump Seal	Seal is cut, torn causing a leak due to pump speed and capacity

REPAIR PROCEDURES

Perform the **Diagnostic Repair Verification** after completing the diagnostic procedure.

- Perform the **Service Fast Learn Adapts** following all transmission related repairs.
- **Control Module References** for control solenoid valve assembly replacement, setup, or programming.

DTC P0776 OR P0777

DIAGNOSTIC INSTRUCTIONS

- Perform the **Diagnostic System Check - Vehicle** prior to using this diagnostic procedure.
- Review **Strategy Based Diagnosis** for an overview of the diagnostic approach.

cardiagn.com

- **Diagnostic Procedure Instructions** provides an overview of each diagnostic category.

DTC DESCRIPTORS

DTC P0776

Clutch Pressure Control (PC) Solenoid 2 - Stuck Off

DTC P0777

Clutch Pressure Control (PC) Solenoid 2 - Stuck On

CIRCUIT/SYSTEM DESCRIPTION

The clutch pressure control (PC) solenoid 2 is part of the control solenoid valve assembly, which has no serviceable parts. The PC solenoid 2 regulates transmission fluid pressure to the 3-5-Reverse clutch regulator valve which controls pressure to the 3-5-Reverse clutch. The TCM calculates gear ratio based on the RPM signals from the input speed sensor (ISS) and the output speed sensor (OSS). The TCM compares the expected transmission gear ratio to the calculated gear ratio for each commanded gear.

CONDITIONS FOR RUNNING THE DTC

P0776

- DTCs P0121, P0122, P0123, P0716, P0717, P0722, P0723, or P182E are not set.
- Ignition voltage is 8.6 volts or greater.
- Engine speed is 500 RPM or greater for 5 seconds.
- Transmission fluid temperature (TFT) is equal to or greater than 0°C (32°F).
- High side driver is enabled.
- Average driven wheel speed is 80 RPM or more.
- Side to side average wheel speed between driven and non-driven wheel is 150 RPM or less for 6 seconds.
- The transmission input shaft speed is greater than 60 RPM.
- PC solenoid 2 is commanded ON.
- 3rd or 5th gear ratio has been achieved.

P0777

- DTCs P0716, P0717, P0722, P0723, or P182E are not set.
- Transmission fluid temperature (TFT) is equal to or greater than 0°C (32°F).
- Ignition voltage is 8.6 volts or greater.
- Engine speed is 500 RPM or greater for 5 seconds.
- High side driver is enabled.
- The transmission input and output shaft speed is greater than 200 RPM.

cardiagn.com

- PC solenoid 2 is commanded OFF.

CONDITIONS FOR SETTING THE DTC

P0776

The TCM detects an incorrect on-coming clutch gear ratio, or flare, when the 3-5-R clutch is commanded ON for 2.25 seconds and the transmission input shaft speed is 60-100 RPM or greater from the anticipated input shaft speed.

P0777

The TCM detects an incorrect off-going clutch gear ratio, or tie-up, when the 3-5-R clutch is commanded OFF for 1.2 seconds and the transmission input shaft speed is 40 RPM or less from the anticipated input shaft speed.

ACTION TAKEN WHEN THE DTC SETS

- DTCs P0776 and P0777 are Type A DTCs.
- The TCM commands maximum line pressure.
- The TCM inhibits TCC.
- The TCM freezes transmission adaptive functions.
- The TCM inhibits TAP Up/Down function.

CONDITIONS FOR CLEARING THE DIC/DTC

DTCs P0776 and P0777 are Type A DTCs.

DIAGNOSTIC AIDS

Before performing a road test, configure and setup the scan tool for snapshot mode. This will allow you to display, monitor, and verify multiple transmission data parameters at one time, after the road test.

REFERENCE INFORMATION

Connector End View Reference

- **Component Connector End Views**
- **Inline Harness Connector End Views**

Description and Operation

- **Electronic Component Description**
- **Transmission General Description**
- **Transmission Component and System Description**
- **Park - Engine Running**

cardiagn.com

- **Reverse**
- **Neutral - Engine Running**
- **Drive Range, First Gear Engine Braking**
- **Drive Range, First Gear**
- **Drive Range, Second Gear**
- **Drive Range, Third Gear**
- **Drive Range, Third Gear Default**
- **Drive Range - Fourth Gear**
- **Drive Range, Fifth Gear**
- **Drive Range, Fifth Gear Default**
- **Drive Range, Sixth Gear**
- **Fluid Passages**

DTC Type Reference

Powertrain Diagnostic Trouble Code (DTC) Type Definitions

Scan Tool Reference

Control Module References for scan tool information

Special Tools

- **DT-47825:** Control Solenoid Test Plate
- **J 21867:** Pressure Gauge

For equivalent regional tools, refer to **Special Tools** .

CIRCUIT/SYSTEM VERIFICATION

NOTE: If other DTCs are set, diagnose those DTCs first.

1. Engine idling in Park, with parking brake applied and drive wheels chocked.
2. Perform the **Transmission Fluid Level and Condition Check** to verify correct fluid level and condition.
3. Monitor the Transmission Fluid Pressure (TFP) switch 1 with a scan tool. Place the gear select lever in Park, Reverse, and Neutral range. Verify the TFP switch 1 parameter states are correct for Park, Reverse, and Neutral. Refer to **Transmission Fluid Pressure Switch Logic** .
4. Place the gear select lever in Drive range. Command the shift transmission with a scan tool through all forward ranges. Verify the TFP switch 1 parameter states are correct for all forward ranges. Refer to **Transmission Fluid Pressure Switch Logic** .
5. Engine idling in Park, verify with a scan tool the Transmission ISS/OSS supply voltage test status parameter displays OK.

cardiagn.com

6. Engine idling in Park. Observe the Transmission ISS parameter on the scan tool, while varying the engine speed. The Transmission ISS parameter should vary with engine speed and not drop out.
7. Operate the vehicle at 16-32 km/h (10-20 mph) while observing the Transmission OSS parameter on the scan tool. The Transmission OSS parameter should vary with the vehicle speed and not drop out.

NOTE: Perform a scan tool snapshot, during the road test.

8. Perform the **Road Test** . Verify the transmission operation performs as indicated in the road test instructions.
9. Review the scan tool snapshot data. Verify the following transmission data parameters display the correct values for each gear range:
   - Transmission ISS
   - Transmission OSS
   - PC Solenoid 2
   - TFP Switch 1
10. Operate the vehicle within the Condition for Running the DTC to verify the DTC does not reset. You may also operate the vehicle within the conditions that you observed from the Freeze Frame/Failure Records data.

CIRCUIT/SYSTEM TESTING

NOTE: You must perform the Circuit/System Verification first.

1. Perform the **Line Pressure Check** . Verify the transmission line pressures are within the specified ranges.
   - If not within the specified ranges, refer to **Fluid Pressure High or Low** .
2. Ignition OFF, remove the control solenoid valve assembly. Refer to **Control Solenoid Valve and Transmission Control Module Assembly Replacement** .
3. Perform the **Control Solenoid Valve and Transmission Control Module Assembly Solenoid Performance Test** . Test all solenoids on the Q8 control solenoid valve assembly. A pressure change should occur for each solenoid valve.
   - If the Q8 control solenoid valve assembly does not pass the performance test, replace the Q8 control solenoid valve assembly.
4. Listed in the chart below, are conditions for each component that could set DTC P0776 or P0777. Carefully inspect each component for that condition. Repair or replace as necessary.

DTC	Component	Condition
P0776	Control Valve Upper Body Assembly (304)	3-5-R Regulator Valve (336) stuck / sticking - debris, binding, damaged valve, or scored bore
P0777	Control Valve Upper Body Assembly (304)	B-2-6 Regulator Valve (334) stuck / sticking - debris, binding, damaged valve, or scored bore

cardiagn.com

P0776 P0777	Q8 Control Solenoid Valve Assembly (314)	• O-ring seals leaking • Valve body filter plate assembly cracked, blocked or damaged gasket seal
P0776 P0777	Control Valve Upper Body Assembly (304)	• Actuator feed limit circuit supply fluid to solenoids restricted or not available (debris or sediment blockage) • B-R-1 / 4-5-6 clutch regulator valve (327) not in the applied position - debris, binding, damaged valve, or scored bore • 4-5-6 clutch boost valve (329) not exhausting - debris, binding, damaged valve, or scored bore
P0776 P0777	Torque Converter (w/Fluid Pump) Housing Assembly (2)	Fluid pump housing vanes / rotor / slide damaged / scored
P0776 P0777	A/Trans Fluid Pump Cover Assembly (219)	Isolator valve (236) stuck / sticking - debris, binding, damaged valve, or scored bore
P0776	1-2-3-4 and 3-5-R Clutch Housing Assembly (51)	3-5-R clutch backing plate retaining ring (400) not seated
P0776 P0777	1-2-3-4 and 3-5-R Clutch Housing Assembly (51)	1-2-3-4 clutch backing plate retaining ring (429) not seated, causing clutch pack / piston over travel
P0776	4-5-6 Hub / Shaft Assembly (58)	4-5-6 Hub / Shaft - broken hub weld

REPAIR PROCEDURES

Perform the **Diagnostic Repair Verification** after completing the diagnostic procedure.

- Control solenoid valve assembly replacement. Refer to **Control Module References** for replacement, setup, and programming.
- Perform the **Service Fast Learn Adapts** following all transmission related repairs.

DTC P0796 OR P0797

DIAGNOSTIC INSTRUCTIONS

- Perform the **Diagnostic System Check - Vehicle** prior to using this diagnostic procedure.
- Review **Strategy Based Diagnosis** for an overview of the diagnostic approach.
- **Diagnostic Procedure Instructions** provides an overview of each diagnostic category.

cardiagn.com

DTC DESCRIPTORS

DTC P0796

Clutch Pressure Control (PC) Solenoid 3 - Stuck Off

DTC P0797

Clutch Pressure Control (PC) Solenoid 3 - Stuck On

CIRCUIT/SYSTEM DESCRIPTION

The clutch pressure control (PC) solenoid 3 is part of the control solenoid valve assembly, which has no serviceable parts. The PC solenoid 3 regulates transmission fluid pressure to the CBR1/C 4-5-6 clutch regulator valve which controls pressure to the 4-5-6 clutch. The TCM calculates gear ratio based on the RPM signals from the input speed sensor (ISS) and the output speed sensor (OSS). The TCM compares the expected transmission gear ratio to the calculated gear ratio for each commanded gear.

CONDITIONS FOR RUNNING THE DTC

P0796

- DTCs P0716, P0717, P0722, P0723, P182E or P1915 are not set.
- High side driver (HSD) is enabled.
- The throttle position is 10 percent or greater.
- The transmission input shaft speed is 60 RPM or greater.
- Low and reverse/4-5-6 clutch is commanded ON.

P0797

- DTCs P0716, P0717, P0722, P0723, P182E or P1915 are not set.
- High side driver (HSD) is enabled.
- The throttle position is 10 percent or greater.
- The transmission output shaft speed is 200 RPM or greater.
- Low and reverse/4-5-6 clutch is commanded OFF.

CONDITIONS FOR SETTING THE DTC

P0796

The TCM detects an incorrect on-coming clutch gear ratio, or flare, when the low and reverse/4-5-6 clutch is commanded ON for 2 seconds and the transmission input shaft speed is 75 RPM or greater from the anticipated input shaft speed.

P0797

cardiagn.com

The TCM detects an incorrect off-going clutch gear ratio, or tie-up, when the low and reverse/4-5-6 clutch is commanded OFF for 2 seconds and the transmission input shaft speed is 40 RPM or less from the anticipated input shaft speed.

ACTION TAKEN WHEN THE DTC SETS

- DTCs P0796 and P0797 are Type A DTCs.
- The TCM commands maximum line pressure.
- The TCM inhibits TCC.
- The TCM freezes transmission adaptive functions.
- The TCM enables torque management.

CONDITIONS FOR CLEARING THE DIC/DTC

DTCs P0796 and P0797 are Type A DTCs.

DIAGNOSTIC AIDS

Before performing a road test, configure and setup the scan tool for snapshot mode. This will allow you to display, monitor, and verify multiple transmission data parameters at one time, after the road test.

REFERENCE INFORMATION

Connector End View Reference

- **Component Connector End Views**
- **Inline Harness Connector End Views**

Description and Operation

- **Electronic Component Description**
- **Transmission General Description**
- **Transmission Component and System Description**
- **Park - Engine Running**
- **Reverse**
- **Neutral - Engine Running**
- **Drive Range, First Gear Engine Braking**
- **Drive Range, First Gear**
- **Drive Range, Second Gear**
- **Drive Range, Third Gear**
- **Drive Range, Third Gear Default**
- **Drive Range - Fourth Gear**
- **Drive Range, Fifth Gear**

cardiagn.com

- **Drive Range, Fifth Gear Default**
- **Drive Range, Sixth Gear**
- **Fluid Passages**

DTC Type Reference

Powertrain Diagnostic Trouble Code (DTC) Type Definitions

Scan Tool Reference

Control Module References for scan tool information

Special Tools

- **DT-47825:** Control Solenoid Test Plate
- **J 21867:** Pressure Gauge

For equivalent regional tools, refer to **Special Tools** .

CIRCUIT/SYSTEM VERIFICATION

NOTE: If other DTCs are set, diagnose those DTCs first.

1. Engine idling in Park, with parking brake applied and drive wheels chocked.
2. Perform the **Transmission Fluid Level and Condition Check** to verify correct fluid level and condition.
3. Monitor the Transmission Fluid Pressure (TFP) switch 5 with a scan tool. Place the gear select lever in Park, Reverse, and Neutral range. Verify the TFP switch 5 parameter states are correct for Park, Reverse, and Neutral. Refer to **Transmission Fluid Pressure Switch Logic** .
4. Place the gear select lever in Drive range. Command the shift transmission with a scan tool through all forward ranges. Verify the TFP switch 5 parameter states are correct for all forward ranges. Refer to **Transmission Fluid Pressure Switch Logic** .
5. Engine idling in Park, verify with a scan tool the Transmission ISS/OSS supply voltage test status parameter displays OK.
6. Engine idling in Park. Observe the Transmission ISS parameter on the scan tool, while varying the engine speed. The Transmission ISS parameter should vary with engine speed and not drop out.
7. Operate the vehicle at 16-32 km/h (10-20 mph) while observing the Transmission OSS parameter on the scan tool. The Transmission OSS parameter should vary with the vehicle speed and not drop out.

NOTE: Perform a scan tool snapshot, during the road test.

8. Perform the **Road Test** . Verify the transmission operation performs as indicated in the road test instructions.
9. Review the scan tool snapshot data. Verify the following transmission data parameters display the correct values for each gear range:

cardiagn.com

- Transmission ISS
- Transmission OSS
- PC Solenoid 3
- TFP Switch 5

10. Operate the vehicle within the Condition for Running the DTC to verify the DTC does not reset. You may also operate the vehicle within the conditions that you observed from the Freeze Frame/Failure Records data.

CIRCUIT/SYSTEM TESTING

1. Perform the **Line Pressure Check** . Verify the transmission line pressures are within the specified ranges.
   - If not within the specified ranges, refer to **Fluid Pressure High or Low** .
2. Ignition OFF, remove the Q8 control solenoid valve assembly. Refer to **Control Solenoid Valve and Transmission Control Module Assembly Replacement** .
3. Perform the **Control Solenoid Valve and Transmission Control Module Assembly Solenoid Performance Test** . Test all solenoids on the Q8 control solenoid valve assembly. A pressure change should occur for each solenoid valve.
   - If the Q8 control solenoid valve assembly does not pass the performance test, replace the Q8 control solenoid valve assembly.
4. Listed in the chart below, are conditions for each component that could set DTC P0796 or P0797. Carefully inspect each component for that condition. Repair or replace as necessary.

DTC	Component	Condition
P0796 P0797	Control Valve Upper Body Assembly (304)	4-5-6 Regulator Valve (327) stuck / sticking - debris, binding, damaged valve, or scored bore
P0796	4-5-6 Clutch Housing Assembly (441)	Turbine Shaft Seals (442) damaged or leaking
P0796 P0797	Q8 Control Solenoid Valve Assembly (314)	• O-ring seals leaking • Valve body filter plate assembly cracked, blocked or damaged gasket seal
P0796 P0797	Control Valve Lower Body Assembly (307)	Clutch select valve (352) stuck / sticking - debris, binding, damaged valve, or scored bore
P0796	4-5-6 Clutch Housing Assembly (441)	4-5-6 Clutch Piston Assembly (439) damaged / leaking
P0796	Transmission Cooling / Lubrication	• Restriction / leak in OAC (oil to air) cooler / radiator • Restricted / leaking / kinked / damaged transmission oil cooler lines • Restriction / leak in transmission fluid pump assembly
P0796	Torque Converter (w/Fluid Pump) Housing Assembly (2)	• Fluid pump housing vanes / rotor / slide damaged / scored • Fluid pump or torque converter overstressed due to high temperature
	4-5-6 Hub / Shaft Assembly	

cardiagn.com

P0796	(58)	4-5-6 Hub / Shaft - broken hub weld
P0796	Automatic Transmission Fluid Filter Assembly (26)	Oil filter (26) or filter seal (25) loose or damaged
P0796	1-2-3-4 and 3-5-R Clutch Housing Assembly (51)	1-2-3-4 Clutch Backing Plate Retaining Ring (429) not seated / oriented, causing clutch pack / piston over travel
P0796	Control (with body and valve) Valve Assembly (21)	Valve Body to Pump Transfer Seal Assembly (18) damaged / leaking

REPAIR PROCEDURES

Perform the **Diagnostic Repair Verification** after completing the diagnostic procedure.

- Control solenoid valve assembly replacement. Refer to **Control Module References** for replacement, setup, and programming.
- Perform the **Service Fast Learn Adapts** following all transmission related repairs.

DTC P0815, P0816, P0826, OR P1876

DIAGNOSTIC INSTRUCTIONS

- Perform the **Diagnostic System Check - Vehicle** prior to using this diagnostic procedure.
- Review **Strategy Based Diagnosis** for an overview of the diagnostic approach.
- **Diagnostic Procedure Instructions** provides an overview of each diagnostic category.

DTC DESCRIPTORS

DTC P0815

Upshift Switch Circuit

DTC P0816

Downshift Switch Circuit

DTC P0826

Up and Down Shift Switch Circuit

DTC P1876

Up and Down Shift Enable Switch Circuit Low Voltage

DIAGNOSTIC FAULT INFORMATION

Driver Shift Request

cardiagn.com

Circuit	Short to Ground	Open/High Resistance	Short to Voltage	Signal Performance
Normal Range = None				
Tap Up/Tap Down Switch Signal Circuit	0 V	0 V	5-12 V	-

CIRCUIT/SYSTEM DESCRIPTION

When the shift lever is placed in manual mode (M) this activates the driver shift request (DSR), also known as the tap shift function. The DSR allows the vehicle operator to shift gears by pressing the plus (+) button for an upshift or the minus (-) button for a downshift. A 12 volt signal circuit is provided by the Body Control Module (BCM) to the plus or minus buttons. When a plus or minus button is pressed, a corresponding voltage drop occurs across the resistor network embedded in the switches. This voltage drop is monitored by the BCM. The BCM will send the request to transmission control module to perform the upshift or downshift.

CONDITIONS FOR RUNNING THE DTC

P0815, P0816, P0826 or P1876

- DTCs P0815, P0816, P0826, P1761, P182E, or P1876 are not set.
- Ignition voltage is 8.6 volts or greater.
- Engine speed is 500 RPM or greater for at least 5 seconds.
- The time since the last gear selector range change is greater than 1 second.

CONDITIONS FOR SETTING THE DTC

P0815

The TCM detects a Stuck ON upshift switch for 3 seconds in PARK, REVERSE, NEUTRAL, or D6 - and for 600 seconds in PARK, REVERSE, NEUTRAL, D2, D4, or D6.

P0816

The TCM detects a Stuck ON downshift switch for 3 seconds in PARK, REVERSE, NEUTRAL, or D6 - and for 600 seconds in PARK, REVERSE, NEUTRAL, D2, D4, or D6.

P0826

The TCM detects an invalid voltage on the TAP up/down signal circuit for 8 seconds.

P1876

The BCM detects a Tap enable switch request 3 times when not in manual mode range for 2 seconds.

ACTION TAKEN WHEN THE DTC SETS

cardiagn.com

- DTCs P0815, P0816, P0826, and P1876 are Type C DTCs.
- The TCM disables TAP shift operation.

CONDITIONS FOR CLEARING THE DTC

DTCs P0815, P0816, P0826, and P1876 are Type C DTCs.

REFERENCE INFORMATION

Schematic Reference

Automatic Transmission Controls Schematics

Connector End View Reference

- **Component Connector End Views**
- **Inline Harness Connector End Views**

Description and Operation

- **Transmission General Description**
- **Transmission Component and System Description**
- **Electronic Component Description**

Electrical Information Reference

- **Circuit Testing**
- **Connector Repairs**
- **Testing for Intermittent Conditions and Poor Connections**
- **Wiring Repairs**

DTC Type Reference

Powertrain Diagnostic Trouble Code (DTC) Type Definitions

Scan Tool Reference

Control Module References for scan tool information

CIRCUIT/SYSTEM VERIFICATION

1. Select the following scan tool parameters, and add to your watch list:
   - Driver Shift Control Mode - Displays inactive till after the first manual shift event. After the first shift is completed, will display active till the next ignition cycle.
   - Internal Mode Switch - Displays Manual when the gear shift lever is placed in manual mode (M)

cardiagn.com

position.

- Driver Shift Request - Momentary displays upshift when the plus button is pushed or downshift when the minus button is pushed.
- Gear Command - Displays 1 through 6 indicating each gear range when manually upshifting or downshifting.

2. Operate the vehicle in manual mode, while observing the above scan tool parameters. The scan tool parameter should display the correct values for each upshift or downshift event.
3. Operate the vehicle within the Conditions for Running the DTC to verify the DTC does not reset. You may also operate the vehicle within the conditions that you observed from the Freeze Frame/Failure Records data.

CIRCUIT/SYSTEM TESTING

1. Ignition OFF, disconnect the S2R automatic transmission manual shift switch - right and the S2L automatic transmission manual shift switch - left electrical connectors
2. Test for less than 5 ohms between terminal 1 on the S2R automatic transmission manual shift switch - right electrical connector and ground at the battery negative post.
    - If greater than the specified value, test the ground circuit for an open/high resistance.
3. Ignition ON, test for 10-12 volts between terminal 2 on the S2R automatic transmission manual shift switch - right electrical connector and ground at the battery negative post.
    - If less than the specified value, test for a short to ground or an open/high resistance in the signal circuit. If the circuit tests normal, replace the BCM.

COMPONENT TESTING

1. Ignition OFF, disconnect the electrical connectors from the S2L automatic transmission manual shift switch - left and the S2R automatic transmission manual shift switch - right.
2. Test for infinite resistance between terminal 1 and terminal 2 on the S2R automatic transmission manual shift switch - right, with the switch open.
    - If less than the specified value, replace the S2R automatic transmission manual shift switch - right.
3. Test for 600-660 ohms, between terminal 1 and terminal 2 on the S2R automatic transmission manual shift switch - right, with the switch closed.
    - If not within the specified range, replaced the S2R automatic transmission manual shift switch - right.
4. Test for 5420-5560 ohms between the terminal 1 and terminal 2 on the S2L automatic transmission manual shift switch - left, with the switch open.
    - If not within the specified range, replace the S2L automatic transmission manual shift switch - left.
5. Test for 1310-1430 ohms between the terminal 1 and terminal 2 on the S2L automatic transmission manual shift switch - left, with the switch closed.
    - If not within the specified range, replace the S2L automatic transmission manual shift switch - left.

REPAIR PROCEDURES

cardiagn.com

Perform the **Diagnostic Repair Verification** after completing the diagnostic procedure.

- Replace the AT TAP shift switch. Refer to **Manual Shift Auxiliary Position Switch Replacement - Steering Wheel** .
- Replace the control solenoid valve assembly. Refer to **Control Module References** for replacement, setup, and programming.
- Perform the **Service Fast Learn Adapts** following all transmission related repairs.

DTC P0842 OR P0843

DIAGNOSTIC INSTRUCTIONS

- Perform the **Diagnostic System Check - Vehicle** prior to using this diagnostic procedure.
- Review **Strategy Based Diagnosis** for an overview of the diagnostic approach.
- **Diagnostic Procedure Instructions** provides an overview of each diagnostic category.

DTC DESCRIPTORS

DTC P0842

Transmission Fluid Pressure (TFP) Switch 1 Circuit Low Voltage

DTC P0843

Transmission Fluid Pressure (TFP) Switch 1 Circuit High Voltage

DIAGNOSTIC FAULT INFORMATION

Circuit	Short to Ground	Open/High Resistance	Short to Voltage	Signal Performance
TFP Switch 1 Signal	P0842	P0843	P0843	-
TFP Switch 3 Signal	P0872	P0873	P0873	-
TFP Switch 4 Signal	P0877	P0878	P0878	-
TFP Switch 5 Signal	P0989	P0990	P0990	-

TYPICAL SCAN TOOL DATA

TFP Switches

Circuit	Short to Ground	Open/High Resistance	Short to Voltage
Operating Conditions: Engine running, normal operating temperature **Parameter Normal Range:** 12 Volts = Hi, 0 Volts = Low			
TFP Switch 1	Low	Hi	Hi
TFP Switch 3	Low	Hi	Hi

cardiagn.com

TFP Switch 4	Low	Hi	Hi
TFP Switch 5	Low	Hi	Hi

CIRCUIT/SYSTEM DESCRIPTION

The transmission fluid pressure (TFP) switch 1 is part of the control solenoid valve assembly which has no serviceable parts. The TCM supplies a signal circuit to the TFP Switch 1. The TFP Switch 1 has an internal case ground. TFP Switch 1 is normally closed or LOW. When oil pressure is present at the TFP Switch 1, the switch is open or HIGH. The normally high clutch pressure control (PC) solenoid 2 controls pressure to the 3-5 reverse clutch regulator valve. The TCM monitors the TFP switch 1 to determine the position of the 3-5 reverse clutch regulator valve. When the 3-5 reverse clutch is commanded OFF, pressure is present on the TFP switch 1. When the 3-5 reverse clutch is commanded ON, the 3-5 reverse clutch regulator valve moves and pressure to the TFP switch 1 is exhausted through the 3-5 reverse clutch regulator valve.

CONDITIONS FOR RUNNING THE DTC

P0842 or P0843

- DTCs P0751, P0752, P0756, P0757, P0973, P0974, P0977, P1825 or P1915 are not set.
- Ignition voltage is 8.6 volts or greater.
- The transmission fluid temperature (TFT) is 0-120°C (32-248°F).
- Engine speed is 500 RPM or greater for 5 seconds.

CONDITIONS FOR SETTING THE DTC

P0842

The TCM detects that the TFP switch 1 signal voltage remains LOW after the 3-5-R clutch transitions from a HIGH pressure state to a LOW pressure state. The TCM counts each incident. The DTC sets when 35 counts are accumulated.

P0843

The TCM detects that the TFP switch 1 signal voltage remains HIGH after the 3-5-R clutch transitions from a LOW pressure state to a HIGH pressure state. The TCM counts each incident. The DTC sets when 25 counts are accumulated.

ACTION TAKEN WHEN THE DTC SETS

- DTCs P0842 and P0843 are Type C DTCs.
- The TCM freezes transmission adaptive functions.

CONDITIONS FOR CLEARING THE DTC

DTCs P0842 and P0843 are Type C DTCs.

cardiagn.com

DIAGNOSTIC AIDS

A TFP switch may malfunction due to normal debris in the transmission fluid causing a TFP Switch DTC to intermittently set. This type of condition should not be immediately noticeable to a customer, as the switch outputs are used for shift adaptive pressure and do not cause transmission symptoms unless the switch malfunctions continuously for an extended period of time.

REFERENCE INFORMATION

Schematic Reference

Automatic Transmission Controls Schematics

Connector End View Reference

- **Component Connector End Views**
- **Inline Harness Connector End Views**

Electrical Information Reference

- **Circuit Testing**
- **Connector Repairs**
- **Testing for Intermittent Conditions and Poor Connections**
- **Wiring Repairs**

Description and Operation

- **Electronic Component Description**
- **Transmission General Description**
- **Transmission Component and System Description**

DTC Type Reference

Powertrain Diagnostic Trouble Code (DTC) Type Definitions

Scan Tool Reference

Control Module References for scan tool information

Special Tool Reference

DT-47825-10: Jumper Harness

CIRCUIT/SYSTEM VERIFICATION

1. Engine idling in Park with parking brake applied, and drive wheels chocked.

cardiagn.com

2. Monitor the Transmission Fluid Pressure Switch 1, Transmission Fluid Pressure Switch 3, Transmission Fluid Pressure Switch 4, and Transmission Fluid Pressure Switch 5 parameters with a scan tool.
3. Place the gear select lever in Park, Reverse, and Neutral range. Verify the TFP switch parameter states are correct for each range. Refer to **Transmission Fluid Pressure Switch Logic** .
4. Place the gear select lever in Drive range. Command the shift transmission with a scan tool through all forward ranges. Verify the TFP switch parameter states are correct for each range. Refer to **Transmission Fluid Pressure Switch Logic** .
5. Operate the vehicle within the conditions for running the DTC to verify the TDC does not reset. You may also operate the vehicle within the conditions that you observed from the Freeze Frame/Failure Records data.

CIRCUIT/SYSTEM TESTING

NOTE: You must perform the Circuit/System Verification first.

1. Ignition OFF. Remove the Q8 control solenoid valve assembly. Refer to **Control Valve Body Assembly Removal** .
2. Perform the **Control Solenoid Valve and Transmission Control Module Assembly Inspection** .
3. Place the Q8 control solenoid valve assembly on a clean work surface near the transmission assembly.
4. Connect the **DT-47825-10:** jumper harness between the vehicle wire harness electrical connector, and the Q8 control solenoid valve assembly electrical connector.
5. Ignition ON, verify with a scan tool that each TFP switch parameter changes states when gently pushing on each TFP switch with the eraser end of a pencil.
    - If any TFP switch parameter does not change states, replace the Q8 control solenoid valve assembly.

REPAIR PROCEDURES

Perform the **Diagnostic Repair Verification** after completing the diagnostic procedure.

- control solenoid valve assembly replacement. Refer to **Control Module References** for replacement, setup, and programming.
- Perform the **Service Fast Learn Adapts** following all transmission related repairs.

DTC P0850-P0852

DIAGNOSTIC INSTRUCTIONS

- Perform the **Diagnostic System Check - Vehicle** prior to using this diagnostic procedure.
- Review **Strategy Based Diagnosis** for an overview of the diagnostic approach.
- **Diagnostic Procedure Instructions** provides an overview of each diagnostic category.

DTC DESCRIPTORS

cardiagn.com

DTC P0850

Park/Neutral Position (PNP) Switch Circuit

DTC P0851

Park/Neutral Position (PNP) Switch Circuit Low Voltage

DTC P0852

Park/Neutral Position (PNP) Switch Circuit High Voltage

DIAGNOSTIC FAULT INFORMATION

Circuit	Short to Ground	Open/High Resistance	Short to Voltage	Signal Performance
Park/Neutral Signal	P0850/P0851	P0850/P0852	P0850/P0852	-

TYPICAL SCAN TOOL DATA

PNP Switch

Circuit	Normal Range	Short to Ground	Open/High Resistance	Short to Voltage
Operating Conditions: Engine running, normal operating temperature, range selector in Park. **Parameter Normal Range:** 12 Volts = In-Gear, 0 Volts = Park/Neutral				
Park/Neutral Signal	Park/Neutral	Park/Neutral	In-Gear	In-Gear

CIRCUIT/SYSTEM DESCRIPTION

The transmission manual shift shaft switch assembly, also known as the internal mode switch (IMS), is a sliding contact switch attached to the manual shift shaft inside the transmission case. The park/neutral position (PNP) switch is integrated into the IMS and connects to the transmission control module (TCM) lead-frame through a short wire harness. The circuit uses the TCM as a pass-through connector only.

The Park/Neutral Signal is sent from the park/neutral switch directly to the engine control module (ECM) and is used for engine start enable.

CONDITIONS FOR RUNNING THE DTC

- Ignition voltage is between 11-18 volts.
- Engine Speed is 1000 RPM or greater.
- TP is 8 percent or greater.
- Engine torque is 75 N.m (55 lb ft) or greater.
- Vehicle speed is 10 km/h (6 mph) or greater.

cardiagn.com

CONDITIONS FOR SETTING THE DTC

P0850 or P0851

The ECM detects the Park/Neutral switch signal equals 0 volts, Low, when the IMS reports a Drive range.

P0852

The ECM detects the Park/Neutral switch signal equals 12 volts, High, when the IMS reports a Park/Neutral range.

ACTION TAKEN WHEN THE DTC SETS

- DTCs P0850, P0851, and P0852 are Type C DTCs.
- The ECM uses IMS Range for engine start-up.

CONDITIONS FOR CLEARING THE DTC

DTCs P0850, P0851, and P0852 are Type C DTCs.

REFERENCE INFORMATION

Schematic Reference

- **Automatic Transmission Controls Schematics**
- **Engine Controls Schematics**

Connector End View Reference

- **Component Connector End Views**
- **Inline Harness Connector End Views**

Description and Operation

- **Transmission General Description**
- **Transmission Component and System Description**
- **Electronic Component Description**

Electrical Information Reference

- **Circuit Testing**
- **Connector Repairs**
- **Testing for Intermittent Conditions and Poor Connections**
- **Wiring Repairs**

cardiagn.com

DTC Type Reference

Powertrain Diagnostic Trouble Code (DTC) Type Definitions

Scan Tool Reference

Control Module References for scan tool information

Special Tools

DT-47825-10: Jumper Harness

For equivalent regional tools, refer to **Special Tools** .

CIRCUIT/SYSTEM VERIFICATION

1. If there are any other transmission DTCs set, diagnose those DTCs first. Refer to **Diagnostic Trouble Code (DTC) List - Vehicle** .
2. Ignition ON, observe the scan tool ECM Park/Neutral switch parameter while moving the gear shift lever from Park and through all ranges. The parameter should display Park/Neutral when in Park or Neutral and In-Gear when in Reverse or Drive.
3. Observe the scan tool TCM IMS parameter while slowly moving the gear shift lever from Park through all ranges. Verify the gear position matches the scan tool parameter. Refer to **Transmission Internal Mode Switch Logic** .
    - If not the specified value, refer to **Shift Control Linkage Adjustment** .
4. Operate the vehicle within the Conditions for Running the DTC to verify the DTC does not reset. You may also operate the vehicle within the conditions that you observed from the Freeze Frame/Failure Records data.

CIRCUIT/SYSTEM TESTING

1. Ignition OFF, disconnect the T12 automatic transmission assembly X1 connector.
2. Install the **DT-47825-10:** jumper harness to the X1 vehicle wire harness connector.
3. Ignition OFF, test for less than 5 ohms between terminal 5 at the **DT-47825-10:** jumper harness and ground at the transmission case.
    - If greater than the specified value, test the ground circuit for an open/high resistance.
4. Ignition ON, verify with a scan tool the Park/Neutral parameter displays In Gear.
    - If the Park/Neutral parameter displays Park/Neutral, test the signal circuit for a short to ground. If the circuit tests normal, replace the K20 ECM.
5. Ignition ON, connect a 3A fused jumper wire between terminal 3 on the **DT-47825-10:** jumper harness and ground at the transmission case. Verify with a scan tool the Park/Neutral parameter displays Park/Neutral.
    - If the Park/neutral parameter displays In Gear, test the signal circuit for an open/high resistance. If the circuit tests normal, replace the K20 ECM.

cardiagn.com

6. Ignition OFF, disconnect the **DT-47825-10:** jumper harness from the X1 vehicle harness connector.
7. Connect the X1 vehicle harness connector to the Q8 control solenoid valve assembly.
8. Remove the transmission fluid pan. Refer to **Automatic Transmission Fluid, Fluid Pan and/or Filter Replacement** .
9. Disconnect the B15 automatic transmission internal mode switch electrical connector from the K71 TCM.
10. Ignition ON, test for 11-13 volts between terminal F on the K71 TCM and ground at the transmission case.
    - If not within the specified range, replace the Q8 control solenoid valve assembly.
11. If all circuits test normal, replace the B15 automatic transmission internal mode switch.

REPAIR PROCEDURES

Perform the **Diagnostic Repair Verification** after completing the diagnostic procedure.

- **Control Module References** for control solenoid valve assembly or ECM replacement, setup, and programming.

NOTE: **If the IMS switch has been replaced, inspect the valve body detent spring to be sure it is centered over the detent lever. This prevents the detent spring from hitting the IMS switch.**

- **Manual Shift Shaft Position Switch Replacement** for IMS replacement.

DTC P0872 OR P0873

DIAGNOSTIC INSTRUCTIONS

- Perform the **Diagnostic System Check - Vehicle** prior to using this diagnostic procedure.
- Review **Strategy Based Diagnosis** for an overview of the diagnostic approach.
- **Diagnostic Procedure Instructions** provides an overview of each diagnostic category.

DTC DESCRIPTORS

DTC P0872

Transmission Fluid Pressure (TFP) Switch 3 Circuit Low Voltage

DTC P0873

Transmission Fluid Pressure (TFP) Switch 3 Circuit High Voltage

DIAGNOSTIC FAULT INFORMATION

	Short to	Open/High	Short to	Signal

cardiagn.com

Circuit	Ground	Resistance	Voltage	Performance
TFP Switch 1 Signal	P0842	P0843	P0843	-
TFP Switch 3 Signal	P0872	P0873	P0873	-
TFP Switch 4 Signal	P0877	P0878	P0878	-
TFP Switch 5 Signal	P0989	P0990	P0990	-

TYPICAL SCAN TOOL DATA

TFP Switches

Circuit	Short to Ground	Open/High Resistance	Short to Voltage
Operating Conditions: Engine running, normal operating temperature **Parameter Normal Range:** 12 Volts = Hi, 0 Volts = Low			
TFP Switch 1	Low	Hi	Hi
TFP Switch 3	Low	Hi	Hi
TFP Switch 4	Low	Hi	Hi
TFP Switch 5	Low	Hi	Hi

CIRCUIT/SYSTEM DESCRIPTION

The transmission fluid pressure (TFP) switch 3 is part of the control solenoid valve assembly which has no serviceable parts. The TCM supplies a signal circuit to the TFP switch 3. The TFP switch 3 has an internal case ground. TFP switch 3 is normally closed or LOW. When oil pressure is present at the TFP switch 3, the switch is open or HIGH. The normally low clutch pressure control (PC) solenoid 4 controls pressure to the 2-6 clutch regulator valve. The TCM monitors the TFP switch 3 to determine the position of the 2-6 clutch regulator valve. When the 2-6 clutch is commanded OFF, pressure is present on the TFP switch 3. When the 2-6 clutch is commanded ON, the 2-6 clutch regulator valve moves and pressure is exhausted through the 2-6 clutch regulator valve.

CONDITIONS FOR RUNNING THE DTC

P0872 or P0873

- DTCs P0711, P0712, P0713, P0973, P0974, P0976, P0977, P1915, or P182E are not set.
- Ignition voltage is 8.6 volts or greater.
- The transmission fluid temperature (TFT) is 0-120°C (32-248°F).
- Engine speed is 500 RPM or greater for 5 seconds.

CONDITIONS FOR SETTING THE DTC

P0872

The TCM detects that the TFP switch 3 signal voltage remains LOW after the 2-6 clutch transitions from a HIGH pressure state to a LOW pressure state. The TCM counts each incident. The DTC sets when 20 counts are accumulated.

cardiagn.com

P0873

The TCM detects that the TFP switch 3 signal voltage remains HIGH after the 2-6 clutch transitions from a LOW pressure state to a HIGH pressure state. The TCM counts each incident. The DTC sets when 18 counts are accumulated.

ACTION TAKEN WHEN THE DTC SETS

- DTCs P0872 and P0873 are Type C DTCs.
- The TCM freezes transmission adaptive functions.

CONDITIONS FOR CLEARING THE DTC

DTCs P0872 and P0873 are Type C DTCs.

DIAGNOSTIC AIDS

A TFP switch may malfunction due to normal debris in the transmission fluid causing a TFP Switch DTC to intermittently set. This type of condition should not be immediately noticeable to a customer, as the switch outputs are used for shift adaptive pressure and do not cause transmission symptoms unless the switch malfunctions continuously for an extended period of time.

REFERENCE INFORMATION

Schematic Reference

Automatic Transmission Controls Schematics

Connector End View Reference

- **Component Connector End Views**
- **Inline Harness Connector End Views**

Electrical Information Reference

- **Circuit Testing**
- **Connector Repairs**
- **Testing for Intermittent Conditions and Poor Connections**
- **Wiring Repairs**

Description and Operation

- **Electronic Component Description**
- **Transmission General Description**
- **Transmission Component and System Description**

cardiagn.com

DTC Type Reference

Powertrain Diagnostic Trouble Code (DTC) Type Definitions

Scan Tool Reference

Control Module References for scan tool information

Special Tools

DT-47825-10: Jumper Harness

CIRCUIT/SYSTEM VERIFICATION

1. Engine idling in Park with parking brake applied, and drive wheels chocked.
2. Monitor the Transmission Fluid Pressure Switch 1, Transmission Fluid Pressure Switch 3, Transmission Fluid Pressure Switch 4, and Transmission Fluid Pressure Switch 5 parameters with a scan tool.
3. Place the gear select lever in Park, Reverse, and Neutral range. Verify the TFP switch parameter states are correct for each range. Refer to **Transmission Fluid Pressure Switch Logic** .
4. Place the gear select lever in Drive range. Command the shift transmission with a scan tool through all forward ranges. Verify the TFP switch parameter states are correct for each range. Refer to **Transmission Fluid Pressure Switch Logic** .
5. Operate the vehicle within the conditions for running the DTC to verify the TDC does not reset. You may also operate the vehicle within the conditions that you observed from the Freeze Frame/Failure Records data.

CIRCUIT/SYSTEM TESTING

NOTE: You must perform the Circuit/System Verification first.

1. Ignition OFF. Remove the Q8 control solenoid assembly. Refer to **Control Valve Body Assembly Removal** .
2. Perform the **Control Solenoid Valve and Transmission Control Module Assembly Inspection** .
3. Place the Q8 control solenoid valve assembly on a clean work surface near the transmission assembly.
4. Connect the **DT-47825-10:** jumper harness between the vehicle wire harness electrical connector, and the Q8 control solenoid valve assembly electrical connector.
5. Ignition ON, verify with a scan tool that each TFP switch parameter changes states when gently pushing on each TFP switch with the eraser end of a pencil.
    - If any TFP switch parameter does not change states, replace the Q8 control solenoid valve assembly.

REPAIR PROCEDURES

Perform the **Diagnostic Repair Verification** after completing the diagnostic procedure.

cardiagn.com

- Control solenoid valve assembly replacement. Refer to **Control Module References** for replacement, setup, and programming.
- Perform the **Service Fast Learn Adapts** following all transmission related repairs.

DTC P0877 OR P0878

DIAGNOSTIC INSTRUCTIONS

- Perform the **Diagnostic System Check - Vehicle** prior to using this diagnostic procedure.
- Review **Strategy Based Diagnosis** for an overview of the diagnostic approach.
- **Diagnostic Procedure Instructions** provides an overview of each diagnostic category.

DTC DESCRIPTORS

DTC P0877

Transmission Fluid Pressure (TFP) Switch 4 Circuit Low Voltage

DTC P0878

Transmission Fluid Pressure (TFP) Switch 4 Circuit High Voltage

DIAGNOSTIC FAULT INFORMATION

Circuit	Short to Ground	Open/High Resistance	Short to Voltage	Signal Performance
TFP Switch 1 Signal	P0842	P0843	P0843	-
TFP Switch 3 Signal	P0872	P0873	P0873	-
TFP Switch 4 Signal	P0877	P0878	P0878	-
TFP Switch 5 Signal	P0989	P0990	P0990	-

TYPICAL SCAN TOOL DATA

TFP Switches

Circuit	Short to Ground	Open/High Resistance	Short to Voltage
Operating Conditions: Engine running, normal operating temperature **Parameter Normal Range:** 12 Volts = Hi, 0 Volts = Low			
TFP Switch 1	Low	Hi	Hi
TFP Switch 3	Low	Hi	Hi
TFP Switch 4	Low	Hi	Hi
TFP Switch 5	Low	Hi	Hi

CIRCUIT/SYSTEM DESCRIPTION

cardiagn.com

The transmission fluid pressure (TFP) switch 4 is part of the control solenoid valve assembly which has no serviceable parts. The TCM supplies a signal circuit to the TFP switch 4. The TFP switch 4 has an internal case ground. TFP switch 4 is normally closed or LOW. When oil pressure is present at the TFP switch 4, the switch is open or HIGH. The normally LOW pressure control solenoid 5 controls pressure to the 1-2-3-4 clutch regulator valve. The TCM monitors the TFP switch 4 to determine the position of the 1-2-3-4 clutch regulator valve. When the 1-2-3-4 clutch is commanded OFF, pressure is present on the TFP switch 4. When the 1-2-3-4 clutch is commanded ON, the 1-2-3-4 clutch regulator valve moves and pressure to the TFP switch is exhausted through the 1-2-3-4 clutch regulator valve.

CONDITIONS FOR RUNNING THE DTC

P0877 or P0878

- DTCs P0711, P0712, P0713, P0973, P0974, P0976, P0977, P1915, or P182E are not set.
- Ignition voltage is 8.6 volts or greater.
- The transmission fluid temperature (TFT) is 0-120°C (32-248°F).
- Engine speed is 500 RPM or greater for 5 seconds.

CONDITIONS FOR SETTING THE DTC

P0877

The TCM detects that the TFP switch 4 signal voltage remains LOW after the 1-2-3-4 clutch transitions from a HIGH pressure state to a LOW pressure state. The TCM counts each incident. The DTC sets when 20 counts are accumulated.

P0878

The TCM detects that the TFP switch 4 signal voltage remains HIGH after the 1-2-3-4 clutch transitions from a LOW pressure state to a HIGH pressure state. The TCM counts each incident. The DTC sets when 18 counts are accumulated.

ACTION TAKEN WHEN THE DTC SETS

- DTCs P0877 and P0878 are Type C DTCs.
- The TCM freezes transmission adaptive functions.

CONDITIONS FOR CLEARING THE DTC

DTCs P0877 and P0878 are Type C DTCs.

DIAGNOSTIC AIDS

A TFP switch may malfunction due to normal debris in the transmission fluid causing a TFP Switch DTC to intermittently set. This type of condition should not be immediately noticeable to a customer, as the switch outputs are used for shift adaptive pressure and do not cause transmission symptoms unless the switch malfunctions continuously for an extended period of time.

cardiagn.com

REFERENCE INFORMATION

Schematic Reference

Automatic Transmission Controls Schematics

Connector End View Reference

- **Component Connector End Views**
- **Inline Harness Connector End Views**

Electrical Information Reference

- **Circuit Testing**
- **Connector Repairs**
- **Testing for Intermittent Conditions and Poor Connections**
- **Wiring Repairs**

Description and Operation

- **Electronic Component Description**
- **Transmission General Description**
- **Transmission Component and System Description**

DTC Type Reference

Powertrain Diagnostic Trouble Code (DTC) Type Definitions

Scan Tool Reference

Control Module References for scan tool information

Special Tools

DT-47825-10: Jumper Harness

CIRCUIT/SYSTEM VERIFICATION

1. Engine idling in Park with parking brake applied, and drive wheels chocked.
2. Monitor the Transmission Fluid Pressure Switch 1, Transmission Fluid Pressure Switch 3, Transmission Fluid Pressure Switch 4, and Transmission Fluid Pressure Switch 5 parameters with a scan tool.
3. Place the gear select lever in Park, Reverse, and Neutral range. Verify the TFP switch parameter states are correct for each range. Refer to **Transmission Fluid Pressure Switch Logic** .
4. Place the gear select lever in Drive range. Command the shift transmission with a scan tool through all forward ranges. Verify the TFP switch parameter states are correct for each range. Refer to **Transmission**

cardiagn.com

Fluid Pressure Switch Logic .

5. Operate the vehicle within the conditions for running the DTC to verify the TDC does not reset. You may also operate the vehicle within the conditions that you observed from the Freeze Frame/Failure Records data.

CIRCUIT/SYSTEM TESTING

NOTE: You must perform the Circuit/System Verification first.

1. Ignition OFF. Remove the Q8 control solenoid valve assembly. Refer to **Control Valve Body Assembly Removal** .
2. Perform the **Control Solenoid Valve and Transmission Control Module Assembly Inspection** .
3. Place the Q8 control solenoid valve assembly on a clean work surface near the transmission assembly.
4. Connect the **DT-47825-10:** jumper harness between the vehicle wire harness electrical connector, and the Q8 control solenoid valve assembly electrical connector.
5. Ignition ON, verify with a scan tool that each TFP switch parameters changes states when gently pushing on each TFP switch with the eraser end of a pencil.
    - If any TFP switch parameter does not change states, replace the Q8 control solenoid valve assembly.

REPAIR PROCEDURES

Perform the **Diagnostic Repair Verification** after completing the diagnostic procedure.

- Control solenoid valve assembly replacement. Refer to **Control Module References** for replacement, setup, and programming.
- Perform the **Service Fast Learn Adapts** following all transmission related repairs.

DTC P0961-P0963

DIAGNOSTIC INSTRUCTIONS

- Perform the **Diagnostic System Check - Vehicle** prior to using this diagnostic procedure.
- Review **Strategy Based Diagnosis** for an overview of the diagnostic approach.
- **Diagnostic Procedure Instructions** provides an overview of each diagnostic category.

DTC DESCRIPTORS

DTC P0961

Line Pressure Control (PC) Solenoid System Performance

DTC P0962

cardiagn.com

Line Pressure Control (PC) Solenoid Control Circuit Low Voltage

DTC P0963

Line Pressure Control (PC) Solenoid Control Circuit High Voltage

DIAGNOSTIC FAULT INFORMATION

Circuit	Short to Ground	Open/High Resistance	Short to Voltage	Signal Performance
Line PC Solenoid Control	P0962	P0963	P0963	P0961

TYPICAL SCAN TOOL DATA

Line PC Solenoid

Circuit	Short to Ground	Open/High Resistance	Short to Voltage	Signal Performance
Operating Conditions: Engine running, normal operating temperature **Parameter Normal Range:** OK				
Line Pressure Control (PC) Solenoid Performance Test Status	-	-	-	Fault or Malfunction
Line Pressure Control (PC) Solenoid Control Circuit Low Voltage Test Status	Fault or Malfunction	-	-	-
Line Pressure Control (PC) Solenoid Control Circuit High Voltage Test Status	-	Fault or Malfunction	Fault or Malfunction	-

CIRCUIT/SYSTEM DESCRIPTION

The line pressure control (PC) solenoid is part of the control solenoid valve assembly which has no serviceable parts. The normally high line PC solenoid regulates and directs the PC solenoid oil pressure to the isolator/pressure regulator valve. Increasing PC solenoid line pressure increases transmission line pressure. The TCM varies the current to the line PC solenoid through a low side driver. Decreasing the current to the line PC solenoid increases line PC solenoid oil pressure by closing OFF the solenoid exhaust port. Increasing the current to the line PC solenoid decreases line PC oil pressure by opening the solenoid exhaust port. Line PC solenoid power is supplied by the TCM through a high side driver (HSD). The HSD protects the circuit and components from excessive current flow. If excessive current flow is detected, the HSD will turn OFF. When the fault is corrected the HSD will reset.

CONDITIONS FOR RUNNING THE DTC

P0961, P0962, or P0963

- The engine speed is greater than 500 RPM for 5 seconds.
- The ignition voltage is 8.6 volts or greater.

cardiagn.com

- DTCs P0961, P0962 or P0963 are not set.

CONDITIONS FOR SETTING THE DTC

P0961

The TCM detects an internal electrical malfunction of the line PC solenoid where the measured line PC solenoid current does not equal the commanded line PC solenoid current for 5 seconds.

P0962

The TCM detects a short to ground or an open/high resistance on the line PC solenoid control circuit for 1 second.

P0963

The TCM detects a short to voltage on the line PC solenoid control circuit for 1 second.

ACTION TAKEN WHEN THE DTC SETS

P0961

- DTC P0961 is a Type A DTC.
- The TCM freezes transmission adaptive functions.

P0962

- DTC P0962 is a Type A DTC.
- The TCM turns the high side driver OFF.
- The TCM defaults the transmission to 3rd gear if the current gear is 1st, 2nd, or 3rd, or 5th gear if the current gear is 4th, 5th, or 6th gear.
- The TCM inhibits the torque converter clutch (TCC).
- The TCM commands maximum line pressure.
- The TCM freezes transmission adaptive functions.

P0963

- DTC P0963 is a Type C DTC.
- The TCM freezes transmission adaptive functions.
- The TCM commands maximum line pressure.

CONDITIONS FOR CLEARING THE DIC/DTC

- DTCs P0961 and P0963 are Type C DTCs.
- DTC P0962 is a Type A DTC.

cardiagn.com

REFERENCE INFORMATION

Schematic Reference

Automatic Transmission Controls Schematics

Connector End View Reference

- **Component Connector End Views**
- **Inline Harness Connector End Views**

Description and Operation

- **Transmission General Description**
- **Transmission Component and System Description**
- **Electronic Component Description**

Electrical Information Reference

- **Circuit Testing**
- **Connector Repairs**
- **Testing for Intermittent Conditions and Poor Connections**
- **Wiring Repairs**

DTC Type Reference

Powertrain Diagnostic Trouble Code (DTC) Type Definitions

Scan Tool Reference

Control Module References for scan tool information

Special Tools

DT-47825-10: Jumper Harness

CIRCUIT/SYSTEM VERIFICATION

1. Engine running in Park position. Move the gear shifter lever into each gear position and back into Park position. Verify with a scan tool the following test status parameters display OK:
   - Line Pressure Control Solenoid Performance Test Status
   - Line Pressure Control Solenoid Control Circuit High Voltage Test Status
   - Line Pressure Control Solenoid Control Circuit Low Voltage Test Status
2. Operate the vehicle within the Conditions for Running the DTC to verify the DTC does not reset. You may also operate the vehicle within the conditions that you observed from the Freeze Frame/Failure

cardiagn.com

Records data.

CIRCUIT/SYSTEM TESTING

NOTE: You must perform the Circuit/System Verification first.

1. Ignition OFF, remove the Q8 control solenoid valve assembly. Refer to **Control Solenoid Valve and Transmission Control Module Assembly Replacement** .
2. Perform the **Control Solenoid Valve and Transmission Control Module Assembly Inspection** .
3. Place the Q8 control solenoid valve assembly on a clean work surface near the transmission assembly.
4. Connect **DT-47825-10:** jumper harness between the vehicle wire harness electrical connector, and the Q8 control solenoid valve assembly electrical connector.
5. Ignition ON, verify with a scan tool the following test status parameters display OK:
   - Line Pressure Control Solenoid Performance Test Status
   - Line Pressure Control Solenoid Control Circuit High Voltage Test Status
   - Line Pressure Control Solenoid Control Circuit Low Voltage Test

   - If any test status parameter displays Fault or Malfunction, replace the Q8 control solenoid valve assembly.

REPAIR PROCEDURES

Perform the **Diagnostic Repair Verification** after completing the diagnostic procedure.

- Control solenoid valve assembly replacement. Refer to **Control Module References** for replacement, setup, and programming.
- Perform the **Service Fast Learn Adapts** following all transmission related repairs.

DTC P0965-P0967

DIAGNOSTIC INSTRUCTIONS

- Perform the **Diagnostic System Check - Vehicle** prior to using this diagnostic procedure.
- Review **Strategy Based Diagnosis** for an overview of the diagnostic approach.
- **Diagnostic Procedure Instructions** provides an overview of each diagnostic category.

DTC DESCRIPTORS

DTC P0965

Clutch Pressure Control (PC) Solenoid 2 System Performance

DTC P0966

cardiagn.com

Clutch Pressure Control (PC) Solenoid 2 Control Circuit Low Voltage

DTC P0967

Clutch Pressure Control (PC) Solenoid 2 Control Circuit High Voltage

DIAGNOSTIC FAULT INFORMATION

Circuit	Short to Ground	Open/High Resistance	Short to Voltage	Signal Performance
Clutch PC Solenoid 2 Control	P0966	P0977	P0977	P0965

TYPICAL SCAN TOOL DATA

Clutch PC Solenoid 2

Circuit	Short to Ground	Open	Short to Voltage	Signal Performance
Operating Conditions: Engine running, normal operating temperature Parameter Normal Range: OK				
Pressure Control Solenoid Valve 2 Performance Test Status	-	-	-	Fault or Malfunction
Pressure Control Solenoid Valve 2 Control Circuit Low Voltage Test Status	Fault or Malfunction	-	-	-
Pressure Control Solenoid Valve 2 Control Circuit High Voltage	-	Fault or Malfunction	Fault or Malfunction	-

CIRCUIT/SYSTEM DESCRIPTION

The clutch pressure (PC) solenoid 2 is part of the control solenoid valve assembly which has no serviceable parts. The normally high clutch PC solenoid 2 regulates and directs the clutch PC solenoid 2 oil pressure to the 3-5 reverse clutch regulator valve and 3-5 reverse clutch boost valve. Increasing clutch PC solenoid 2 pressure increases pressure to the 3-5 reverse clutch. The TCM varies the current to the PC solenoid 2 through a low side driver. Decreasing the current to the clutch PC solenoid 2 increases clutch PC solenoid 2 oil pressure by closing OFF the solenoid exhaust port. Increasing the current to the clutch PC solenoid 2, decreases clutch PC solenoid 2 oil pressure by opening the solenoid exhaust port. Clutch PC solenoid 2 power is supplied by the TCM through a high side driver (HSD). The HSD protects the circuit and components from excessive current flow. If excessive current flow is detected, the HSD will turn OFF. When the fault is corrected, the HSD will reset.

CONDITIONS FOR RUNNING THE DTC

P0965, P0966, or P0967

- DTCs P0965, P0966, or P0967 have not set this ignition.
- The ignition voltage is 8.6 volts or greater.
- The engine run time is greater than 5 seconds.

cardiagn.com

- The clutch PC solenoid 2 is commanded ON.

CONDITIONS FOR SETTING THE DTC

P0965

The TCM detects an internal electrical performance malfunction of the clutch PC solenoid 2 control circuit where the measured clutch PC solenoid 2 current does not equal the commanded clutch PC solenoid 2 current for 5 seconds.

P0966

The TCM detects a short to ground on the clutch PC solenoid 2 control circuit for 1 second.

P0967

The TCM detects an open or short to voltage on the clutch PC solenoid 2 control circuit, for 1 second.

ACTION TAKEN WHEN THE DTC SETS

P0965

- DTC P0965 is a Type C DTC.
- The TCM freezes transmission adaptive functions.

P0966

- DTC P0966 is a Type A DTC.
- The TCM forces HSD1 OFF.
- The TCM forces TCC OFF.
- The TCM freezes transmission adaptive functions.
- The TCM commands maximum line pressure.
- The TCM enables Torque management.
- The TCM inhibits TAP Up/Down function.
- The TCM defaults the transmission to a limited shift pattern utilizing 2 forward gears and reverse gear based on the fault detected.
- The TCM inhibits manual shifting of forward gears.

P0967

- DTC P0967 is a Type A DTC.
- The TCM defaults the transmission to 3rd gear or reverse gear.
- The TCM forces TCC OFF.
- The TCM freezes transmission adaptive functions.

cardiagn.com

- The TCM commands maximum line pressure.
- The TCM enables Torque management.
- The TCM inhibits TAP Up/Down function.
- The TCM inhibits manual shifting of forward gears.

CONDITIONS FOR CLEARING THE DTC

- DTC P0965 is a Type C DTC.
- DTCs P0966 and P0967 are Type A DTCs.

REFERENCE INFORMATION

Schematic Reference

Automatic Transmission Controls Schematics

Connector End View Reference

- **Component Connector End Views**
- **Inline Harness Connector End Views**

Description and Operation

- **Transmission General Description**
- **Transmission Component and System Description**
- **Electronic Component Description**

Electrical Information Reference

- **Circuit Testing**
- **Connector Repairs**
- **Testing for Intermittent Conditions and Poor Connections**
- **Wiring Repairs**

DTC Type Reference

Powertrain Diagnostic Trouble Code (DTC) Type Definitions

Scan Tool Reference

Control Module References for scan tool information

Special Tools

cardiagn.com

DT-47825-10: Jumper Harness

CIRCUIT/SYSTEM VERIFICATION

1. Operate the vehicle in second gear long enough to ensure at least a 3°C (5°F) rise in TCM temperature, then operate the vehicle in Park for 5 seconds.
2. Operate the vehicle in drive range. Allow the transmission to shift through all forward gear ranges. Verify with a scan tool the following test status parameters display OK:
   - Pressure Control Solenoid Valve 2 Performance Test Status
   - Pressure Control Solenoid Valve 2 Control Circuit High Voltage Test Status
   - Pressure Control Solenoid Valve 2 Control Circuit Low Voltage Test Status
3. Operate the vehicle within the Conditions for Running the DTC to verify the DTC does not reset. You may also operate the vehicle within the conditions that you observed from the Freeze Frame/Failure Records data.

CIRCUIT/SYSTEM TESTING

NOTE: You must perform the Circuit/System Verification first.

1. Ignition OFF, remove the Q8 control solenoid valve assembly. Refer to **Control Solenoid Valve and Transmission Control Module Assembly Replacement** .
2. Perform the **Control Solenoid Valve and Transmission Control Module Assembly Inspection** .
3. Place the Q8 control solenoid valve assembly on a clean work surface near the transmission assembly.
4. Connect **DT-47825-10:** jumper harness between the vehicle wire harness electrical connector, and the Q8 control solenoid valve assembly electrical connector.
5. Ignition ON, verify with a scan tool the following test status parameters display OK:
   - Pressure Control Solenoid Valve 2 Performance Test Status
   - Pressure Control Solenoid Valve 2 Control Circuit High Voltage Test Status
   - Pressure Control Solenoid Valve 2 Control Circuit Low Voltage Test Status

   - If any test status parameter displays Fault or Malfunction, replace the Q8 control solenoid valve assembly.

REPAIR PROCEDURES

Perform the **Diagnostic Repair Verification** after completing the diagnostic procedure.

- Perform the **Service Fast Learn Adapts** following all transmission related repairs.
- Replace the control solenoid valve assembly. Refer to **Control Module References** for replacement, setup, and programming.

DTC P0969-P0971

cardiagn.com

DIAGNOSTIC INSTRUCTIONS

- Perform the **Diagnostic System Check - Vehicle** prior to using this diagnostic procedure.
- Review **Strategy Based Diagnosis** for an overview of the diagnostic approach.
- **Diagnostic Procedure Instructions** provides an overview of each diagnostic category.

DTC DESCRIPTORS

DTC P0969

Clutch Pressure Control (PC) Solenoid 3 System Performance

DTC P0970

Clutch Pressure Control (PC) Solenoid 3 Control Circuit Low Voltage

DTC P0971

Clutch Pressure Control (PC) Solenoid 3 Control Circuit High Voltage

DIAGNOSTIC FAULT INFORMATION

Circuit	Short to Ground	Open/High Resistance	Short to Voltage	Signal Performance
Clutch PC Solenoid 3 Control	P0970	P0971	P0971	P0969

TYPICAL SCAN TOOL DATA

Clutch PC Solenoid 3

Circuit	Short to Ground	Open/High Resistance	Short to Voltage	Signal Performance
Pressure Control Solenoid Valve 3 Performance Test Status	-	-	-	Fault or Malfunction
Pressure Control Solenoid Valve 3 Control Circuit Low Voltage Test Status	Fault or Malfunction	-	-	-
Pressure Control Solenoid Valve 3 Control Circuit High Voltage Test Status	-	Fault or Malfunction	Fault or Malfunction	-

CIRCUIT/SYSTEM DESCRIPTION

The clutch pressure (PC) solenoid 3 is part of the control solenoid valve assembly which has no serviceable parts. The normally high clutch PC solenoid 3 regulates and directs the clutch PC solenoid 3 oil pressure to the 4-5-6 clutch regulator valve and 4-5-6 clutch boost valve. Increasing clutch PC solenoid 3 oil pressure increases oil pressure to the 4-5-6 clutch assembly. The TCM varies the current to the PC solenoid 3 through a low side

cardiagn.com

driver. Decreasing the current to the clutch PC solenoid 3 increases clutch PC solenoid 3 oil pressure by closing OFF the solenoid exhaust port. Increasing the current to the clutch PC solenoid 3, decreases clutch PC solenoid 3 oil pressure by opening the solenoid exhaust port. Clutch PC solenoid 3 power is supplied by the TCM through a high side driver (HSD). The HSD protects the circuit and components from excessive current flow. If excessive current flow is detected, the HSD will turn OFF. When the fault is corrected the HSD will reset.

CONDITIONS FOR RUNNING THE DTC

P0969, P0970, or P0971

- DTCs P0969, P0970, or P0971 have not set this ignition.
- The ignition voltage is 8.6 volts or greater.
- The engine speed is 500 RPM or greater for 5 seconds.
- The clutch PC solenoid 3 is commanded ON.

CONDITIONS FOR SETTING THE DTC

P0969

The TCM detects an internal electrical malfunction on the clutch PC solenoid 3 control circuit where the measured PC solenoid 3 current does not equal the commanded clutch PC solenoid 3 current for 5 seconds.

P0970

The TCM detects a short to ground on the clutch PC solenoid 3 control circuit for 1 second.

P0971

The TCM detects an open or short to voltage on the Clutch PC solenoid 3 control circuit for 1 second.

ACTION TAKEN WHEN THE DTC SETS

P0969

- DTC P0969 is a Type C DTCs.
- The TCM freezes transmission adaptive functions.

P0970

- DTC P0970 is a Type A DTC.
- The TCM defaults the transmission to a limited shift pattern utilizing 2 forward gears and reverse gear based on the default detected.
- The TCM forces HSD1 OFF.
- The TCM forces TCC OFF.
- The TCM freezes transmission adaptive functions.

cardiagn.com

- The TCM commands maximum line pressure.
- The TCM enables Torque management.
- The TCM inhibits TAP Up/Down function.

P0971

- DTC P0971 is a Type A DTC.
- The TCM defaults the transmission to a limited shift pattern utilizing 2 forward gears and reverse gear based on the default detected.
- The TCM forces TCC OFF.
- The TCM freezes transmission adaptive functions.
- The TCM commands maximum line pressure.
- The TCM enables Torque management.
- The TCM inhibits TAP Up/Down function.
- The TCM inhibits manual shifting of forward gears.

CONDITIONS FOR CLEARING THE DTC

- DTC P0969 is a Type C DTCs.
- DTCs P0970 and P0971 are Type A DTCs.

REFERENCE INFORMATION

Schematic Reference

Automatic Transmission Controls Schematics

Connector End View Reference

- **Component Connector End Views**
- **Inline Harness Connector End Views**

Description and Operation

- **Transmission General Description**
- **Transmission Component and System Description**
- **Electronic Component Description**

Electrical Information Reference

- **Circuit Testing**
- **Connector Repairs**
- **Testing for Intermittent Conditions and Poor Connections**

cardiagn.com

- **Wiring Repairs**

DTC Type Reference

Powertrain Diagnostic Trouble Code (DTC) Type Definitions

Scan Tool Reference

Control Module References for scan tool information

Special Tools

DT-47825-10: Jumper Harness

CIRCUIT/SYSTEM VERIFICATION

1. Operate the vehicle in second gear long enough to ensure at least a 3°C (5°F) rise in TCM temperature, then operate the vehicle in Park for 5 seconds.
2. Operate the vehicle in drive range. Allow the transmission to shift through all forward gear ranges. Verify with a scan tool the following test status parameters display OK:
   - Pressure Control Solenoid Valve 3 Performance Test Status
   - Pressure Control Solenoid Valve 3 Control Circuit High Voltage Test Status
   - Pressure Control Solenoid Valve 3 Control Circuit Low Voltage Test Status
3. Operate the vehicle within the Conditions for Running the DTC to verify the DTC does not reset. You may also operate the vehicle within the conditions that you observed from the Freeze Frame/Failure Records data.

CIRCUIT/SYSTEM TESTING

NOTE: You must perform the Circuit/System Verification first.

1. Ignition OFF, remove the Q8 control solenoid valve assembly. Refer to **Control Solenoid Valve and Transmission Control Module Assembly Replacement** .
2. Perform the **Control Solenoid Valve and Transmission Control Module Assembly Inspection** .
3. Place the Q8 control solenoid valve assembly on a clean work surface near the transmission assembly.
4. Connect **DT-47825-10:** jumper harness between the vehicle wire harness electrical connector, and the Q8 control solenoid valve assembly electrical connector.
5. Ignition ON, verify with a scan tool the following test status parameters display OK:
   - Pressure Control Solenoid Valve 3 Performance Test Status
   - Pressure Control Solenoid Valve 3 Control Circuit High Voltage Test Status
   - Pressure Control Solenoid Valve 3 Control Circuit Low Voltage Test Status

   - If any test status parameter displays Fault or Malfunction, replace the Q8 control solenoid valve assembly.

cardiagn.com

REPAIR PROCEDURES

Perform the **Diagnostic Repair Verification** after completing the diagnostic procedure.

- Perform the **Service Fast Learn Adapts** following all transmission related repairs.
- Replace the Q8, K71 control solenoid valve assembly. Refer to **Control Module References** for replacement, setup, and programming.

DTC P0973 OR P0974

DIAGNOSTIC INSTRUCTIONS

- Perform the **Diagnostic System Check - Vehicle** prior to using this diagnostic procedure.
- Review **Strategy Based Diagnosis** for an overview of the diagnostic approach.
- **Diagnostic Procedure Instructions** provides an overview of each diagnostic category.

DTC DESCRIPTORS

DTC P0973

Shift Solenoid (SS) 1 Control Circuit Low Voltage

DTC P0974

Shift Solenoid (SS) 1 Control Circuit High Voltage

DIAGNOSTIC FAULT INFORMATION

Circuit	Short to Ground	Open/High Resistance	Short to Voltage	Signal Performance
Shift Solenoid (SS) 1 Control	P0973	P0974	P0974	-

TYPICAL SCAN TOOL DATA

Shift Solenoid (SS) 1

Circuit	Short to Ground	Open/High Resistance	Short to Voltage
Operating Conditions: Engine running, normal operating temperature **Parameter Normal Range:** OK			
Shift Solenoid Valve 1 Control Circuit High Voltage Test Status	-	-	Fault or Malfunction
Shift Solenoid Valve 1 Control Circuit Open Test Status	-	Fault or Malfunction	-
Shift Solenoid Valve 1 Control Circuit Low Voltage Test Status	Fault or Malfunction	-	-

cardiagn.com

CIRCUIT/SYSTEM DESCRIPTION

The shift solenoid (SS) 1 is part of the control solenoid valve assembly which has no serviceable parts. SS 1 is a normally closed (NC) ON/OFF solenoid and is controlled by the TCM through a low side driver. When the SS 1 is energized (ON), SS 1 fluid pressure is directed to the clutch select valve 2. Power to the SS 1 is supplied by the TCM through a high side driver (HSD). The HSD protects the circuit and components from excessive current flow. If excessive current flow is detected, the HSD will turn OFF. When the fault is corrected, the HSD will reset.

CONDITIONS FOR RUNNING THE DTC

P0973 or P0974

- DTCs P0973 or P0974 have not set this ignition.
- The ignition voltage is 8.6 volts or greater.
- The engine speed is 500 RPM or greater for 5 seconds.

CONDITIONS FOR SETTING THE DTC

P0973

The control solenoid valve assembly detects an internal low voltage electrical malfunction of the SS 1 control circuit when the SS 1 is commanded OFF for 2 seconds.

P0974

The control solenoid valve assembly detects an internal high voltage electrical malfunction of the SS 1 control circuit when the SS 1 is commanded ON for 2 seconds.

ACTION TAKEN WHEN THE DTC SETS

P0973

- DTC P0973 is a Type A DTC.
- The TCM defaults the transmission to 2nd gear or reverse gear.
- The TCM forces the torque converter clutch (TCC) OFF.
- The TCM commands maximum line pressure.
- The TCM freezes transmission adaptive functions.
- The TCM enables Torque Management.
- The TCM inhibits TAP function.
- The TCM inhibits manual shifting of forward gears.

P0974

- DTC P0974 is a Type B DTC.

cardiagn.com

- The TCM inhibits 1st gear.

CONDITIONS FOR CLEARING THE DIC/DTC

- DTC P0973 is a Type A DTC.
- DTC P0974 is a Type B DTC.

REFERENCE INFORMATION

Schematic Reference

Automatic Transmission Controls Schematics

Connector End View Reference

- **Component Connector End Views**
- **Inline Harness Connector End Views**

Description and Operation

- **Transmission General Description**
- **Transmission Component and System Description**
- **Electronic Component Description**

Electrical Information Reference

- **Circuit Testing**
- **Connector Repairs**
- **Testing for Intermittent Conditions and Poor Connections**
- **Wiring Repairs**

DTC Type Reference

Powertrain Diagnostic Trouble Code (DTC) Type Definitions

Scan Tool Reference

Control Module References for scan tool information

Special Tools

DT-47825-10: Jumper Harness

CIRCUIT/SYSTEM VERIFICATION

cardiagn.com

1. Operate the vehicle in 2nd gear long enough to ensure at least a 3°C (5°F) rise in TCM temperature.
2. Place the gear selector in Reverse for 5 seconds and then idle the vehicle in Park for 5 seconds. Verify with a scan tool the following test status parameters displays OK:
   - Shift Solenoid Valve 1 Control Circuit High Voltage Test Status
   - Shift Solenoid Valve 1 Control Circuit Open Test Status
   - Shift Solenoid Valve 1 Control Circuit Low Voltage Test Status
3. Operate the vehicle within the Conditions for Running the DTC to verify the DTC does not reset. You may also operate the vehicle within the conditions that you observed from the Freeze Frame/Failure Records data.

CIRCUIT/SYSTEM TESTING

NOTE: You must perform the Circuit/System Verification first.

1. Ignition OFF, remove the Q8 control solenoid valve assembly. Refer to **Control Solenoid Valve and Transmission Control Module Assembly Replacement** .
2. Perform the **Control Solenoid Valve and Transmission Control Module Assembly Inspection** .
3. Place the Q8 control solenoid valve assembly on a clean work surface near the transmission assembly.
4. Connect **DT-47825-10:** jumper harness between the vehicle wire harness electrical connector, and the Q8 control solenoid valve assembly electrical connector.
5. Ignition ON, verify with a scan tool the following test status parameters display OK:
   - Shift Solenoid Valve 1 Control Circuit High Voltage Test Status
   - Shift Solenoid Valve 1 Control Circuit Open Test Status
   - Shift Solenoid Valve 1 Control Circuit Low Voltage Test Status

   - If any test status parameter displays Fault or Malfunction, replace the Q8 control solenoid valve assembly.

REPAIR PROCEDURES

Perform the **Diagnostic Repair Verification** after completing the diagnostic procedure.

- Perform the **Service Fast Learn Adapts** following all transmission related repairs.
- Before replacing the TCM, perform the **Control Solenoid Valve and Transmission Control Module Assembly Inspection** .
- **Control Module References** for control solenoid valve assembly replacement, setup, and programming.

DTC P0976 OR P0977

DIAGNOSTIC INSTRUCTIONS

- Perform the **Diagnostic System Check - Vehicle** prior to using this diagnostic procedure.
- Review **Strategy Based Diagnosis** for an overview of the diagnostic approach.

cardiagn.com

- **Diagnostic Procedure Instructions** provides an overview of each diagnostic category.

DTC DESCRIPTORS

DTC P0976

Shift Solenoid (SS) 2 Control Circuit Low Voltage

DTC P0977

Shift Solenoid (SS) 2 Control Circuit High Voltage

DIAGNOSTIC FAULT INFORMATION

Circuit	Short to Ground	Open/High Resistance	Short to Voltage	Signal Performance
Shift Solenoid (SS) 2 Control	P0976	P0977	P0977	-

TYPICAL SCAN TOOL DATA

Shift Solenoid (SS) 2

Circuit	Short to Ground	Open/High Resistance	Short to Voltage
Operating Conditions: Engine running, normal operating temperature **Parameter Normal Range:** OK			
Shift Solenoid Valve 2 Control Circuit High Voltage Test Status	-	-	Fault or Malfunction
Shift Solenoid Valve 2 Control Circuit Open Test Status	-	Fault or Malfunction	-
Shift Solenoid Valve 2 Control Circuit Low Voltage Test Status	Fault or Malfunction	-	-

CIRCUIT/SYSTEM DESCRIPTION

The shift solenoid (SS) 2 is part of the control solenoid valve assembly which has no serviceable parts. SS 2 is a normally closed (NC) ON/OFF solenoid and is controlled by the TCM through a low side driver. When the SS 2 is energized (ON), SS 2 fluid pressure is directed to the clutch select valve 3. Power to the SS 2 is supplied by the TCM through a high side driver (HSD). The HSD protects the circuit and components from excessive current flow. If excessive current flow is detected, the HSD will turn OFF. When the fault is corrected, the HSD will reset.

CONDITIONS FOR RUNNING THE DTC

P0976 or P0977

- DTCs P0976 or P0977 have not set this ignition.

cardiagn.com

- The ignition voltage is 8.6 volts or greater
- The engine speed is 500 RPM or greater for 5 seconds.
- The SS 2 is commanded ON or OFF.

CONDITIONS FOR SETTING THE DTC

P0976

The TCM detects an internal low voltage electrical malfunction of the SS 2 control circuit when the SS 2 is commanded OFF for 2 seconds.

P0977

The TCM detects an internal high voltage electrical malfunction of the SS 2 control circuit when the SS 2 is commanded ON for 2 seconds.

ACTION TAKEN WHEN THE DTC SETS

P0976

- DTC P0976 is a Type A DTC.
- The TCM defaults the transmission to 3rd gear or reverse gear.
- The TCM forces the torque converter clutch (TCC) OFF.
- The TCM commands maximum line pressure.
- The TCM freezes transmission adaptive functions.
- The TCM enables Torque Management.
- The TCM inhibits TAP Up/Down function.
- The TCM inhibits manual shifting of forward gears.

P0977

- DTC P0977 is a Type B DTC.
- The TCM inhibits 1st gear.

CONDITIONS FOR CLEARING THE DIC/DTC

- DTC P0976 is a Type A DTC.
- DTC P0977 is a Type B DTC.

REFERENCE INFORMATION

Schematic Reference

Automatic Transmission Controls Schematics

cardiagn.com

Connector End View Reference

- **Component Connector End Views**
- **Inline Harness Connector End Views**

Description and Operation

- **Transmission General Description**
- **Transmission Component and System Description**
- **Electronic Component Description**

Electrical Information Reference

- **Circuit Testing**
- **Connector Repairs**
- **Testing for Intermittent Conditions and Poor Connections**
- **Wiring Repairs**

DTC Type Reference

Powertrain Diagnostic Trouble Code (DTC) Type Definitions

Scan Tool Reference

Control Module References for scan tool information

Special Tools

DT-47825-10: Jumper Harness

CIRCUIT/SYSTEM VERIFICATION

1. Operate the vehicle in 3rd gear long enough to ensure at least a 3°C (5°F) rise in TCM temperature.
2. Place the gear selector in Reverse for 5 seconds and then idle the vehicle in Park for 5 seconds. Verify with a scan tool the following test status parameters displays OK:
   - Shift Solenoid Valve 2 Control Circuit High Voltage Test Status
   - Shift Solenoid Valve 2 Control Circuit Open Test Status
   - Shift Solenoid Valve 2 Control Circuit Low Voltage Test Status
3. Operate the vehicle within the Conditions for Running the DTC to verify the DTC does not reset. You may also operate the vehicle within the conditions that you observed from the Freeze Frame/Failure Records data.

CIRCUIT/SYSTEM TESTING

cardiagn.com

NOTE: You must perform the Circuit/System Verification first.

1. Ignition OFF, remove the Q8 control solenoid valve assembly. Refer to **Control Solenoid Valve and Transmission Control Module Assembly Replacement** .
2. Perform the **Control Solenoid Valve and Transmission Control Module Assembly Inspection** .
3. Place the Q8 control solenoid valve assembly on a clean work surface near the transmission assembly.
4. Connect **DT-47825-10:** jumper harness between the vehicle wire harness electrical connector, and the Q8 control solenoid valve assembly electrical connector.
5. Ignition ON, verify with a scan tool the following test status parameters display OK:
    - Shift Solenoid Valve 2 Control Circuit High Voltage Test Status
    - Shift Solenoid Valve 2 Control Circuit Open Test Status
    - Shift Solenoid Valve 2 Control Circuit Low Voltage Test Status

    - If any test status parameter displays Fault or Malfunction, replace the Q8 control solenoid valve assembly.

REPAIR PROCEDURES

Perform the **Diagnostic Repair Verification** after completing the diagnostic procedure.

- Perform the **Service Fast Learn Adapts** following all transmission related repairs.
- Before replacing the TCM, perform the **Control Solenoid Valve and Transmission Control Module Assembly Inspection** .
- **Control Module References** for control solenoid valve assembly replacement, setup, and programming.

cardiagn.com

2010 TRANSMISSION

Automatic Transmission - 6L45/6L50/6L80/6L90 - Camaro

DTC P0989 OR P0990

DIAGNOSTIC INSTRUCTIONS

- Perform the **Diagnostic System Check - Vehicle** prior to using this diagnostic procedure.
- Review **Strategy Based Diagnosis** for an overview of the diagnostic approach.
- **Diagnostic Procedure Instructions** provides an overview of each diagnostic category.

DTC DESCRIPTORS

DTC P0989

Transmission Fluid Pressure (TFP) Switch 5 Circuit Low Voltage

DTC P0990

Transmission Fluid Pressure (TFP) Switch 5 Circuit High Voltage

DIAGNOSTIC FAULT INFORMATION

Circuit	Short to Ground	Open/High Resistance	Short to Voltage	Signal Performance
TFP Switch 1 Signal	P0842	P0843	P0843	-
TFP Switch 3 Signal	P0872	P0873	P0873	-
TFP Switch 4 Signal	P0877	P0878	P0878	-
TFP Switch 5 Signal	P0989	P0990	P0990	-

TYPICAL SCAN TOOL DATA

TFP Switches

Circuit	Short to Ground	Open/High Resistance	Short to Voltage
Operating Conditions: Engine running, normal operating temperature **Parameter Normal Range:** 12 Volts = Hi, 0 Volts = Low			
TFP Switch 1	Low	Hi	Hi
TFP Switch 3	Low	Hi	Hi
TFP Switch 4	Low	Hi	Hi
TFP Switch 5	Low	Hi	Hi

CIRCUIT/SYSTEM DESCRIPTION

cardiagn.com

The transmission fluid pressure (TFP) switch 5 is part of the control solenoid valve assembly which has no serviceable parts. The TCM supplies a signal circuit to the TFP switch 5. The TFP switch 5 has an internal case ground. TFP switch 5 is normally closed or LOW. When oil pressure is present at the TFP switch 5, the switch is open or HIGH. The normally high pressure control (PC) solenoid 3 controls pressure to the CBR1/4-5-6 clutch regular valve. The TCM monitors the TFP switch 5 signal circuit to determine the position of the CBR1/4-5-6 clutch regulator valve. When the 4-5-6 clutch is commanded OFF, pressure is present on the TFP switch 5. When the 4-5-6 clutch is commanded ON, the CBR1/4-5-6 clutch regulator valve moves and pressure to the TFP switch 5 is exhausted through the CBR1/4-5-6 clutch regulator valve.

CONDITIONS FOR RUNNING THE DTC

P0989 or P0990

- DTCs P0711, P0712, P0713, P0973, P0974, P0976, P0977, P1915, or P182E are not set.
- Ignition voltage is 8.6 volts or greater.
- The transmission fluid temperature (TFT) is 0-120°C (32-248°F).
- Engine speed is 500 RPM or greater for 5 seconds.

CONDITIONS FOR SETTING THE DTC

P0989

The TCM detects that the TFP switch 5 signal voltage remains LOW after the 4-5-6 clutch transitions from a HIGH pressure state to a LOW pressure state. The TCM counts each incident. The DTC sets when 15 counts are accumulated.

P0990

The TCM detects that the TFP switch 5 signal voltage remains HIGH after the 4-5-6 clutch transitions from a LOW pressure state to a HIGH pressure state. The TCM counts each incident. The DTC sets when 18 counts are accumulated.

ACTION TAKEN WHEN THE DTC SETS

- DTCs P0989 and P0990 are Type C DTCs.
- The TCM freezes transmission adaptive functions.

CONDITIONS FOR CLEARING THE DTC

DTCs P0989 and P0990 are Type C DTCs.

DIAGNOSTIC AIDS

A TFP switch may malfunction due to normal debris in the transmission fluid causing a TFP Switch DTC to intermittently set. This type of condition should not be immediately noticeable to a customer, as the switch outputs are used for shift adaptive pressure and do not cause transmission symptoms unless the switch malfunctions continuously for an extended period of time.

cardiagn.com

REFERENCE INFORMATION

Schematic Reference

Automatic Transmission Controls Schematics

Connector End View Reference

- **Component Connector End Views**
- **Inline Harness Connector End Views**

Electrical Information Reference

- **Circuit Testing**
- **Connector Repairs**
- **Testing for Intermittent Conditions and Poor Connections**
- **Wiring Repairs**

Description and Operation

- **Electronic Component Description**
- **Transmission General Description**
- **Transmission Component and System Description**

DTC Type Reference

Powertrain Diagnostic Trouble Code (DTC) Type Definitions

Scan Tool Reference

Control Module References for scan tool information

Special Tools

DT-47825-10: Jumper Harness

CIRCUIT/SYSTEM VERIFICATION

1. Engine idling in Park with parking brake applied, and drive wheels chocked.
2. Monitor the Transmission Fluid Pressure Switch 1, Transmission Fluid Pressure Switch 3, Transmission Fluid Pressure Switch 4, and Transmission Fluid Pressure Switch 5 parameters with a scan tool.
3. Place the gear select lever in Park, Reverse, and Neutral range. Verify the TFP switch parameter states are correct for each range. Refer to **Transmission Fluid Pressure Switch Logic** .
4. Place the gear select lever in Drive range. Command the shift transmission with a scan tool through all forward ranges. Verify the TFP switch parameter states are correct for each range. Refer to **Transmission**

cardiagn.com

Fluid Pressure Switch Logic .

5. Operate the vehicle within the conditions for running the DTC to verify the TDC does not reset. You may also operate the vehicle within the conditions that you observed from the Freeze Frame/Failure Records data.

CIRCUIT/SYSTEM TESTING

NOTE: You must perform the Circuit/System Verification first.

1. Ignition OFF. Remove the Q8 control solenoid valve assembly. Refer to **Control Solenoid Valve and Transmission Control Module Assembly Replacement** .
2. Perform the **Control Solenoid Valve and Transmission Control Module Assembly Inspection** .
3. Place the Q8 control solenoid valve assembly on a clean work surface near the transmission assembly.
4. Connect the **DT-47825-10:** jumper harness between the vehicle wire harness electrical connector, and the Q8 control solenoid valve assembly electrical connector.
5. Ignition ON, verify with a scan tool that each TFP switch parameter changes states when gently pushing on each TFP switch with the eraser end of a pencil.
    - If any TFP switch parameter does not change states, replace the Q8 control solenoid valve assembly.

REPAIR PROCEDURES

Perform the **Diagnostic Repair Verification** after completing the diagnostic procedure.

- Control solenoid valve assembly replacement. Refer to **Control Module References** for replacement, setup, and programming.
- Perform the **Service Fast Learn Adapts** following all transmission related repairs.

DTC P150C

DIAGNOSTIC INSTRUCTIONS

- Perform the **Diagnostic System Check - Vehicle** prior to using this diagnostic procedure.
- Review **Strategy Based Diagnosis** for an overview of the diagnostic approach.
- **Diagnostic Procedure Instructions** provides an overview of each diagnostic category.

DTC DESCRIPTOR

DTC P150C

Transmission Control Module Engine Speed Request Signal Message Counter Incorrect

CIRCUIT/SYSTEM DESCRIPTION

cardiagn.com

To improve vehicle shift feel, the transmission control module (TCM) is constantly sending the engine control module (ECM) serial data messages with information regarding its request for modifying engine speed or torque. The ECM sets this code when it detects a discrepancy in the structure of this message causing its integrity to be questioned.

An intermittent fault in the controller area network (CAN) circuits will cause DTC P150C to set.

CONDITIONS FOR RUNNING THE DTC

- The engine run time is greater than 5 seconds.
- No other CAN errors are present.

CONDITIONS FOR SETTING THE DTC

- DTC P150C is a Type B DTC.
- An intermittent fault in the CAN circuits.

ACTION TAKEN WHEN THE DTC SETS

- DTC P150C is a Type B DTC.
- The TCM commands maximum line pressure during shifts, which results in very harsh shifts.

CONDITIONS FOR CLEARING THE DTC

DTC P150C is a Type B DTC.

REFERENCE INFORMATION

DTC Type Reference

Powertrain Diagnostic Trouble Code (DTC) Type Definitions

CIRCUIT/SYSTEM VERIFICATION

1. DTC P150C is an informational DTC. Diagnose all other Engine Control DTCs prior to DTC P150C. Refer to **Diagnostic Trouble Code (DTC) List - Vehicle** .
2. If there are no other Engine Controls DTCs, diagnosis is accomplished by looking for an intermittent CAN circuit fault. Refer to **Scan Tool Does Not Communicate with High Speed GMLAN Device** .

DTC P1751

DIAGNOSTIC INSTRUCTIONS

- Perform the **Diagnostic System Check - Vehicle** prior to using this diagnostic procedure.
- Review **Strategy Based Diagnosis** for an overview of the diagnostic approach.

cardiagn.com

- **Diagnostic Procedure Instructions** provides an overview of each diagnostic category.

DTC DESCRIPTOR

DTC P1751

Shift Valve 1 Performance

CIRCUIT/SYSTEM DESCRIPTION

The shift solenoid (SS) 1 is part of the control solenoid valve assembly, which has no serviceable parts. SS 1 provides fluid pressure to control the operation of the clutch select valve 2, which is located in the control valve lower body assembly. SS 1, in conjunction with clutch select valve 2, controls fluid to the R1 and 4-5-6 clutches. A diagnostic test is performed by the transmission control module (TCM) to determine the state of the clutch select valve 2. During this diagnostic test, the TCM commands the SS 1 ON, supplying pressure to move the clutch select valve 2 toward its spring. At the same time, line pressure is elevated slightly to assist the spring side pressure. If the spring is broken, or the clutch select valve 2 cannot move due to another mechanical condition the DTC will set.

CONDITIONS FOR RUNNING THE DTC

- DTCs P0716, P0717, P0722, P0723, P0741, P0742, P1751, P2762, P2763, or P2764 are not set.
- The engine speed is 500 RPM or greater for 5 seconds or greater.
- The transmission fluid temperature (TFT) is 20-130°C (68-266°F).
- The calculated throttle position is between 8-90 percent.
- The engine torque is greater than 50 N.m (36 lb ft).
- No upshift or downshift in process.
- The attained gear slip is 70 RPM or greater.

CONDITIONS FOR SETTING THE DTC

The TCM detects attained gear slip is 75 RPM or greater for 1 second.

ACTION TAKEN WHEN THE DTC SETS

DTC P1751 is a Type B DTC.

CONDITIONS FOR CLEARING THE DTC

- DTC P1751 is a Type B DTC.
- The TCM freezes transmission adaptive functions.

DIAGNOSTIC AIDS

Before performing a road test, configure and setup the scan tool for snapshot mode. This will allow you to

cardiagn.com

display, monitor, and verify multiple transmission data parameters at one time, after the road test.

REFERENCE INFORMATION

Connector End View Reference

- **Component Connector End Views**
- **Inline Harness Connector End Views**

Electrical Information Reference

- **Circuit Testing**
- **Connector Repairs**
- **Testing for Intermittent Conditions and Poor Connections**
- **Wiring Repairs**

Description and Operation

- **Electronic Component Description**
- **Transmission General Description**
- **Transmission Component and System Description**
- **Park - Engine Running**
- **Reverse**
- **Neutral - Engine Running**
- **Drive Range, First Gear Engine Braking**
- **Drive Range, First Gear**
- **Drive Range, Second Gear**
- **Drive Range, Third Gear**
- **Drive Range, Third Gear Default**
- **Drive Range - Fourth Gear**
- **Drive Range, Fifth Gear**
- **Drive Range, Fifth Gear Default**
- **Drive Range, Sixth Gear**
- **Fluid Passages**

DTC Type Reference

Powertrain Diagnostic Trouble Code (DTC) Type Definitions

Scan Tool Reference

Control Module References for scan tool information

cardiagn.com

CIRCUIT/SYSTEM VERIFICATION

NOTE: If other DTCs are set, diagnose those DTCs first.

1. Engine idling in Park, with parking brake applied and drive wheels chocked.
2. Perform the **Transmission Fluid Level and Condition Check** to verify correct fluid level and condition.

NOTE: Perform a scan tool snapshot, during the road test.

3. Perform the **Road Test** . Verify the transmission operation performs as indicated in the road test instructions.
4. Review the scan tool snapshot transmission data parameters. Verify the engine and transmission data parameters display the correct values in all forward gear ranges:
   - Engine Speed
   - Vehicle Speed
   - Transmission ISS
   - Transmission OSS
   - Shift Solenoid Valve 1
   - Gear Command
5. Operate the vehicle within the Condition for Running the DTC to verify the DTC does not reset. You may also operate the vehicle within the conditions that you observed from the Freeze Frame/Failure Records data.

CIRCUIT/SYSTEM TESTING

1. Perform the **Line Pressure Check** . Verify the transmission line pressures are within the specified ranges.
   - If not within the specified ranges, refer to **Fluid Pressure High or Low** .
2. Ignition OFF, remove the Q8 control solenoid valve assembly. Refer to **Control Solenoid Valve and Transmission Control Module Assembly Replacement** .
3. Perform the **Control Solenoid Valve and Transmission Control Module Assembly Solenoid Performance Test** .
   - If the Q8 control solenoid valve assembly does not pass the performance test, replace the Q8 control solenoid valve assembly.
4. Listed in the chart below, are conditions for each component that could set DTC P1751. Carefully inspect each component for that condition. Repair or replace as necessary.

DTC	Component	Condition
P1751	Lower control valve body (307)	Clutch select valve 2 spring broken, debris, or damage
P1751	Control Valve Body Spacer (w/gasket) Plate Assembly (305)	Orifice # 23 blocked, obstructed, or irregular shaped
	Control Valve Body Spacer	Checkball # 4 ball seat blocked, obstructed, or

cardiagn.com

P1751	(w/gasket) Plate Assembly (305)	irregular shaped (burr or flashing on hole/s)
P1751	Control Valve Upper Body Assembly (304)	Checkball # 4 damaged or irregular shaped
P1751	Q8 Control Solenoid Valve Assembly (314)	Control signal fluid supply leak - valve body filter plate assembly cracked or damaged gasket seal

REPAIR PROCEDURES

Perform the **Diagnostic Repair Verification** after completing the diagnostic procedure.

- Replace the control valve body. Refer to **Control Valve Lower Body and Upper Body Replacement** .
- Perform the **Service Fast Learn Adapts** following all transmission related repairs.

DTC P1761

DIAGNOSTIC INSTRUCTIONS

- Perform the **Diagnostic System Check - Vehicle** prior to using this diagnostic procedure.
- Review **Strategy Based Diagnosis** for an overview of the diagnostic approach.
- **Diagnostic Procedure Instructions** provides an overview of each diagnostic category.

DTC DESCRIPTOR

DTC P1761

Tap Up Tap Down Shift Switch Signal Message Counter

CIRCUIT/SYSTEM DESCRIPTION

A 12 volt signal circuit is provided by the body control module (BCM) to the plus or minus buttons. When a plus or minus button is pressed, a corresponding voltage drop occurs across the resistor network embedded in the switches. This voltage drop is monitored by the BCM. The BCM will send the request to the transmission control module (TCM) to perform the upshift or downshift. The TCM is constantly monitoring the serial data sent from the BCM for the correct number and sequence of counts for Tap Up and Tap Down function.

CONDITIONS FOR RUNNING THE DTC

- The TCM rolling counter diagnostic is enabled.
- The Tap Up and Tap Down health message health is received from the BCM.
- The ignition voltage is 8.6 volts or greater.
- The engine speed is 500 RPM or greater for at least 5 seconds.

CONDITIONS FOR SETTING THE DTC

The TCM detects an error in the rolling count value that does not match with the BCM count, within 10

cardiagn.com

seconds.

ACTION TAKEN WHEN THE DTC SETS

- DTC P1761 is a Type C DTC.
- The TCM disables TAP Shift operation.

CONDITIONS FOR CLEARING THE DTC

DTC P1761 is a Type C DTC.

REFERENCE INFORMATION

Schematic Reference

- Automatic Transmission Controls Schematics
- Data Communication Schematics
- Body Control System Schematics

Connector End View Reference

- Component Connector End Views
- Inline Harness Connector End Views

Description and Operation

- Transmission General Description
- Transmission Component and System Description
- Electronic Component Description
- Body Control System Description and Operation

Electrical Information Reference

- Circuit Testing
- Connector Repairs
- Testing for Intermittent Conditions and Poor Connections
- Wiring Repairs

Description and Operation

Electronic Component Description

DTC Type Reference

Powertrain Diagnostic Trouble Code (DTC) Type Definitions

cardiagn.com

Scan Tool Reference

Control Module References for scan tool information

CIRCUIT/SYSTEM VERIFICATION

1. DTC P1761 is an informational DTC. Diagnose all other body control module DTCs prior to DTC P1761. Refer to **Diagnostic Trouble Code (DTC) List - Vehicle** .
2. If there are no other body control DTCs, diagnosis is accomplished by looking for an intermittent CAN circuit fault. Refer to **Scan Tool Does Not Communicate with High Speed GMLAN Device** .
3. Operate the vehicle within the Conditions for Running the DTC to verify the DTC does not reset. You may also operate the vehicle within the conditions that you observed from the Freeze Frame/Failure Records data.

REPAIR PROCEDURES

Perform the **Diagnostic Repair Verification** after completing the repair.

Perform the **Service Fast Learn Adapts** following all transmission related repairs.

DTC P182E OR P1915

DIAGNOSTIC INSTRUCTIONS

- Perform the **Diagnostic System Check - Vehicle** prior to using this diagnostic procedure.
- Review **Strategy Based Diagnosis** for an overview of the diagnostic approach.
- **Diagnostic Procedure Instructions** provides an overview of each diagnostic category.

DTC DESCRIPTORS

DTC P182E

Internal Mode Switch - Invalid Range

DTC P1915

Internal Mode Switch Does Not Indicate Park/Neutral (P/N) During Start

DIAGNOSTIC FAULT INFORMATION

Circuit	Short to Ground	Open/High Resistance	Short to Voltage	Signal Performance
Transmission Range Signal A	P182E	P1915	P1915	P182E, P1915
Transmission Range Signal B	P1915	P182E	P182E	P182E, P1915
Transmission Range Signal C	P1915	P182E	P182E	P182E, P1915

cardiagn.com

Transmission Range Signal P	P182E	P1915	P1915	P182E, P1915
Ground	-	P182E	P182E	P182E, P1915

TYPICAL SCAN TOOL DATA

IMS A/B/C/P

Circuit	Normal Range	Short to Ground	Open	Short to Voltage
Operating Conditions: Ignition ON, range selector in Park				
Transmission Range Switch Signal A	LOW	LOW	HI	HI
Transmission Range Switch Signal B	HI	LOW	HI	HI
Transmission Range Switch Signal C	HI	LOW	HI	HI
Transmission Range Switch Signal P	LOW	LOW	HI	HI
HI = 12 volts LOW = 0 volts				

CIRCUIT/SYSTEM DESCRIPTION

The manual shift detent lever with shaft position switch assembly or internal mode switch (IMS) assembly is a sliding contact switch attached to the control valve body within the transmission. The 4 inputs to the transmission control module (TCM) from the switch indicate which position is selected by the transmission manual shaft. The input voltage at the TCM is high when the switch is open and low when the switch is closed to ground. The state of each input is displayed on the scan tool as IMS. The IMS input parameters represented are transmission range signal A, Signal B, signal C, and signal P.

CONDITIONS FOR RUNNING THE DTC

P182E

- The engine speed is greater than 400 RPM for 5 seconds.
- The ignition voltage is greater than 8.6 volts.
- Engine torque signal is valid.
- DTCs P0101, P0102, P0103, P0106, P0107, P0108, P0171, P0171, or P0172 are not set.

P1915

- No OSS DTCs P0722 or P0723 and are not Fault Active or Test Fail this Key ON.
- The transmission output shaft speed is less than 90 RPM or less.
- The ignition voltage is between 6.0 volts and 18.0 volts.

CONDITIONS FOR SETTING THE DTC

P182E

cardiagn.com

The IMS does not indicate a valid Park, Reverse, Neutral or Drive Range gear position for 7 seconds.

P1915

The manual shift shaft IMS switch assembly does not indicate Park or Neutral during the following sequence:

- The engine speed is less than 50 RPM for more than 0.15 seconds.
- The engine speed is 50-480 RPM for more than 0.07 seconds.
- The engine speed is greater than 525 RPM for more than 3.25 seconds.
- The transmission input shaft speed is 200 RPM or greater.

ACTION TAKEN WHEN THE DTC SETS

- DTCs P182E and P1915 are Type A DTCs.
- The TCM commands maximum line pressure.
- The TCM turns off all solenoids - HSD1 and HSD2.
- The TCM freezes transmission adaptive functions.
- The TCM defaults the transmission to third gear if the current gear is 1st, 2nd, or 3rd; or fifth gear if the current gear is 4th, 5th, or 6th gear.
- The TCM inhibits TCC.
- The TCM inhibits Tap up and Tap down functions.

CONDITIONS FOR CLEARING THE DTC

DTCs P182E and P1915 are Type A DTCs.

REFERENCE INFORMATION

Schematic Reference

Automatic Transmission Controls Schematics

Connector End View Reference

- **Component Connector End Views**
- **Inline Harness Connector End Views**

Electrical Information Reference

- **Circuit Testing**
- **Connector Repairs**
- **Testing for Intermittent Conditions and Poor Connections**
- **Wiring Repairs**

cardiagn.com

Description and Operation

- **Electronic Component Description**
- **Transmission General Description**
- **Transmission Component and System Description**

DTC Type Reference

Powertrain Diagnostic Trouble Code (DTC) Type Definitions

Scan Tool Reference

Control Module References for scan tool information

CIRCUIT/SYSTEM VERIFICATION

1. Perform the **Shift Control Linkage Adjustment** procedure to verify proper adjustment.
2. Ignition ON, observe the scan tool IMS parameter while moving the gear shift lever from Park, through all gear selector positions, and back to Park. The parameter should match each gear range that is selected. Refer to **Transmission Internal Mode Switch Logic** .
3. Observe the scan tool Engine Control Module P/N switch parameter with the gear selector in Park and Neutral position. The parameter should display Park in park position and Neutral in neutral position.
4. Operate the vehicle within the Conditions for Running the DTC to verify the DTC does not reset. You may also operate the vehicle within the conditions that you observed from the Freeze Frame/Failure Records data.

CIRCUIT/SYSTEM TESTING

NOTE: You must perform Circuit/System Verification first.

1. Ignition OFF, remove the automatic transmission fluid pan. Refer to **Automatic Transmission Fluid, Fluid Pan and/or Filter Replacement** .
2. Disconnect the IMS connector at the Q8 control solenoid valve assembly.

NOTE: Under certain driving conditions, DTC P182E could set due to an intermittent low voltage fault on the P/N signal circuit, before conditions for setting DTC P0851 are met.

3. Ignition ON, verify the scan tool engine control module (ECM) P/N switch displays In Gear.
   - If not the specified value, test the P/N signal circuit for a short to ground. If the circuit tests normal, replace the engine control module.
4. Verify the scan tool IMS A/B/C/P parameter displays HI for all four signal circuits.
   - If not the specified value, replace the Q8 control solenoid valve assembly.
5. Connect a 3A fused jumper wire between each transmission range signal circuit terminals listed below

cardiagn.com

and the IMS ground circuit. The appropriate scan tool IMS A/B/C/P parameter should display LOW when the terminal is connected to the IMS ground circuit.

- Switch Signal A: terminal E to terminal A
- Switch Signal B: terminal D to terminal A
- Switch Signal C: terminal C to terminal A
- Switch Signal P: terminal P to terminal A
  - If not the specified value, replace the Q8 control solenoid valve assembly.

6. If all circuits test normal, test or replace the IMS.

REPAIR PROCEDURES

Perform the **Diagnostic Repair Verification** after completing the diagnostic procedure.

NOTE:

- **Perform the Control Solenoid Valve and Transmission Control Module Assembly Inspection before replacing any internal transmission components.**
- **Perform the Service Fast Learn Adapts following all transmission repairs.**

- **Manual Shift Shaft Position Switch Replacement** for internal mode switch (IMS) replacement.
- **Control Module References** for control solenoid valve assembly replacement, setup, and programming.

DTC P2534

DIAGNOSTIC INSTRUCTIONS

- Perform the **Diagnostic System Check - Vehicle** prior to using this diagnostic procedure.
- Review **Strategy Based Diagnosis** for an overview of the diagnostic approach.
- **Diagnostic Procedure Instructions** provides an overview of each diagnostic category.

DTC DESCRIPTOR

DTC P2534

Ignition 1 Switch Circuit Low Voltage

CIRCUIT/SYSTEM DESCRIPTION

The transmission control module (TCM) samples the system voltage on the Ignition 1 voltage circuit every 0.1 seconds. Lower than normal voltage may be inadequate to operate the transmission control solenoids properly. Improper solenoid operation may cause erratic transmission operation, which may result in internal damage.

CONDITIONS FOR RUNNING THE DTC

- The engine speed is greater than 500 RPM.

cardiagn.com

- Ignition voltage is between 8.6-19.0 volts.

CONDITIONS FOR SETTING THE DTC

The TCM detects 6 volts or less on the ignition 1 voltage circuit at the TCM for 1.0 second or more.

ACTION TAKEN WHEN THE DTC SETS

- DTC P2534 is a Type A DTC.
- The TCM turns OFF HSD1 and HSD2.
- The TCM turns OFF all solenoids.
- The TCM commands maximum line pressure.
- The TCM freezes transmission adaptive functions.
- The TCM commands the TCC OFF.
- The TCM allows the vehicle to operate in transmission protection mode.
- The TCM disables Tap up and Tap down functions.

CONDITIONS FOR CLEARING THE DTC

DTC P2534 is a Type A DTC.

DIAGNOSTIC AIDS

If all circuit tests are OK, ensure the transmission pass through connector and harness terminals are clean and not damaged, and the charging system is functioning correctly.

REFERENCE INFORMATION

Schematic Reference

Automatic Transmission Controls Schematics

Connector End View Reference

Component Connector End Views

Electrical Information Reference

- **Circuit Testing**
- **Connector Repairs**
- **Testing for Intermittent Conditions and Poor Connections**
- **Wiring Repairs**

Description and Operation

cardiagn.com

- **Transmission General Description**
- **Transmission Component and System Description**

DTC Type Reference

Powertrain Diagnostic Trouble Code (DTC) Type Definitions

Scan Tool Reference

Control Module References for scan tool information

CIRCUIT/SYSTEM VERIFICATION

1. Engine ON, accessories OFF, measure and record the battery voltage with a DMM. The battery voltage should be between 12.5-14.5 volts.
    - If the voltage is not within the specified value, or the charge indicator light is ON, refer to **Symptoms - Engine Electrical** .
2. Observe the scan tool TCM Ignition Voltage parameter. The reading should be between 12.5-14.5 volts.
3. Operate the vehicle within the Conditions for Running the DTC to verify the DTC does not reset. You may also operate the vehicle within the conditions that you observed from the Freeze Frame/Failure Records data.

CIRCUIT/SYSTEM TESTING

1. Ignition OFF, disconnect the X1 16-way harness connector at the T12 automatic transmission assembly.
2. Ignition OFF, test for less than 5 ohms at connector X1 vehicle harness side, on the following terminals:
    - Terminal 2 and ground at the transmission case
    - Terminal 5 and ground at the transmission case
    - If greater than then specified valve, test the ground circuits for an open/high resistance.
3. Ignition ON, verify that a test lamp illuminates at connector X1 vehicle harness side and the following terminals:
    - Terminal 1 and ground at the transmission case
    - Terminal 4 and ground at the transmission case
    - Terminal 12 and ground at the transmission case
    - If the test lamp does not illuminate on any circuit, test the ignition or B+ circuit for a short to ground or an open/high resistance.
4. If all circuits test normal, replace the Q8 control solenoid valve assembly.

REPAIR PROCEDURES

Perform the **Diagnostic Repair Verification** after completing the diagnostic procedure.

Perform the **Service Fast Learn Adapts** following all transmission related repairs.

cardiagn.com

DTC P2714 OR P2715

DIAGNOSTIC INSTRUCTIONS

- Perform the **Diagnostic System Check - Vehicle** prior to using this diagnostic procedure.
- Review **Strategy Based Diagnosis** for an overview of the diagnostic approach.
- **Diagnostic Procedure Instructions** provides an overview of each diagnostic category.

DTC DESCRIPTORS

DTC P2714

Clutch Pressure Control (PC) Solenoid 4 - Stuck Off

DTC P2715

Clutch Pressure Control (PC) Solenoid 4 - Stuck On

CIRCUIT/SYSTEM DESCRIPTION

The clutch pressure control (PC) solenoid 4 is part of the control solenoid valve assembly, which has no serviceable parts. The PC solenoid 4 regulates transmission fluid pressure to the 2-6 clutch regulator valve which controls pressure to the 2-6 clutch. The TCM calculates gear ratio based on the RPM signals from the input speed sensor (ISS) and the output speed sensor (OSS). The TCM compares the expected transmission gear ratio to the calculated gear ratio for each commanded gear.

CONDITIONS FOR RUNNING THE DTC

P2714

- DTCs P0716, P0717, P0722, P0723, P1825, or P1915 are not set.
- The transmission input shaft speed is greater than 60 RPM.
- 2-6 clutch is commanded ON.

P2715

- DTCs P0716, P0717, P0722, P0723, P1825, or P1915 are not set.
- The transmission output shaft speed is greater than 200 RPM.
- 2-6 clutch is commanded OFF.

CONDITIONS FOR SETTING THE DTC

P2714

The TCM detects an incorrect on-coming clutch gear ratio, or flare, when the 2-6 clutch is commanded ON for 0.5 seconds and the transmission input shaft speed is greater than 75 RPM from the anticipated input shaft

cardiagn.com

speed.

P2715

The TCM detects an incorrect off-going clutch gear ratio, or tie-up, when the 2-6 clutch is commanded OFF for 0.5 seconds and the transmission input shaft speed is greater than 40 RPM from the anticipated input shaft speed.

ACTION TAKEN WHEN THE DTC SETS

- DTCs P2714 and P2715 are Type A DTCs.
- The TCM commands maximum line pressure.
- The TCM inhibits TCC.
- The TCM freezes transmission adaptive functions.

CONDITIONS FOR CLEARING THE DIC/DTC

DTCs P2714 and P2715 are Type A DTCs.

DIAGNOSTIC AIDS

Before performing a road test, configure and setup the scan tool for snapshot mode. This will allow you to display, monitor, and verify multiple transmission data parameters at one time, after the road test.

REFERENCE INFORMATION

Connector End View Reference

- **Component Connector End Views**
- **Inline Harness Connector End Views**

Electrical Information Reference

- **Circuit Testing**
- **Connector Repairs**
- **Testing for Intermittent Conditions and Poor Connections**
- **Wiring Repairs**

Description and Operation

- **Electronic Component Description**
- **Transmission General Description**
- **Transmission Component and System Description**
- **Park - Engine Running**

cardiagn.com

- **Reverse**
- **Neutral - Engine Running**
- **Drive Range, First Gear Engine Braking**
- **Drive Range, First Gear**
- **Drive Range, Second Gear**
- **Drive Range, Third Gear**
- **Drive Range, Third Gear Default**
- **Drive Range - Fourth Gear**
- **Drive Range, Fifth Gear**
- **Drive Range, Fifth Gear Default**
- **Drive Range, Sixth Gear**
- **Fluid Passages**

DTC Type Reference

Powertrain Diagnostic Trouble Code (DTC) Type Definitions

Scan Tool Reference

Control Module References for scan tool information

Special Tools

- **DT-47825:** Control Solenoid Test Plate
- **DT-47825-10:** Jumper Harness

For equivalent regional tools, refer to **Special Tools** .

CIRCUIT/SYSTEM VERIFICATION

NOTE: If other DTCs are set, diagnose those DTCs first.

1. Engine idling in Park, with parking brake applied and drive wheels chocked.
2. Perform the **Transmission Fluid Level and Condition Check** to verify correct fluid level and condition.
3. Monitor the Transmission Fluid Pressure (TFP) switch 3 with a scan tool. Place the gear select lever in Park, Reverse, and Neutral range. Verify the TFP switch 3 parameter states are correct for Park, Reverse, and Neutral. Refer to **Transmission Fluid Pressure Switch Logic** .
4. Place the gear select lever in Drive range. Command the shift transmission with a scan tool through all forward ranges. Verify the TFP switch 3 parameter states are correct for all forward ranges. Refer to **Transmission Fluid Pressure Switch Logic** .
5. Engine idling in Park, verify with a scan tool the Transmission ISS/OSS supply voltage test status parameter displays OK.

cardiagn.com

6. Engine idling in Park. Observe the Transmission ISS parameter on the scan tool, while varying the engine speed. The Transmission ISS parameter should vary with engine speed and not drop out.
7. Operate the vehicle at 16-32 km/h (10-20 mph) while observing the Transmission OSS parameter on the scan tool. The Transmission OSS parameter should vary with the vehicle speed and not drop out.

NOTE: Perform a scan tool snapshot, during the road test.

8. Perform the **Road Test** . Verify the transmission operation performs as indicated in the road test instructions.
9. Review the scan tool snapshot data. Verify the following transmission data parameters display the correct values for each gear range:
   - Transmission ISS
   - Transmission OSS
   - PC Solenoid 4
   - TFP Switch 3
10. Operate the vehicle within the Condition for Running the DTC to verify the DTC does not reset. You may also operate the vehicle within the conditions that you observed from the Freeze Frame/Failure Records data.

CIRCUIT/SYSTEM TESTING

1. Perform the **Line Pressure Check** . Verify the transmission line pressures are within the specified ranges.
   - If not within the specified ranges, refer to **Fluid Pressure High or Low** .
2. Ignition OFF, remove the Q8 control solenoid valve assembly. Refer to **Control Solenoid Valve and Transmission Control Module Assembly Replacement** .
3. Perform the **Control Solenoid Valve and Transmission Control Module Assembly Solenoid Performance Test** . Test all solenoids on the Q8 control solenoid valve assembly. A pressure change should occur for each solenoid valve.
   - If the Q8 control solenoid valve assembly does not pass the performance test, replace the Q8 control solenoid valve assembly.
4. Listed in the chart below, are conditions for each component that could set DTC P2714 or P2715. Carefully inspect each component for that condition. Repair or replace as necessary.

DTC	Component	Condition
P2714 P2715	Control Valve Upper Body Assembly (304)	2-6 clutch regulator valve (334) stuck / sticky - debris, binding, damaged valve, or scored bore
P2714	Q8 Control Solenoid Valve Assembly (314)	Refer to document PIP 4304A. DTC P2714 may be set with DTC P0878
P2714 P2715	Q8 Control Solenoid Valve Assembly (314)	• Control signal fluid supply leak - valve body filter plate assembly cracked or damaged gasket seal • O-ring seals leaking
		• 2-6 clutch return spring retaining ring (455) not

cardiagn.com

P2714 P2715	Center (w/2-6 and Low/Rev Clutch) Support Assembly (67)	seated in groove • 2-6 clutch piston assembly - seal damaged or leaking • 2-6 clutch plates (451-453) worn or damaged • Center support transfer seal assembly (20) incorrectly installed
P2714	1-2-3-4 and 3-5-R Clutch Housing Assembly (51)	• 1-2-3-4 clutch backing plate retaining ring (429) not seated / oriented correctly • 1-2-3-4 clutch piston (414) - seals damaged or leaking • 1-2-3-4 clutch piston (414) - cracked or damaged
P2714	4-5-6 (w/turbine shaft) Clutch Assembly (56)	• Turbine shaft fluid seal rings (442) damaged or leaking • 4-5-6 clutch piston assembly (439) - seals damaged or leaking
P2714	A/Trans Fluid Pump Cover Assembly (219)	Pump tower seals (230) damaged or leaking
P2714	Torque Converter (w/fluid pump) Housing Assembly (2)	Fluid pump housing / vanes / rotor / slide damaged / scored
P2714	A/Trans Fluid Filter Assembly (26)	Oil filter (26) or filter seal (25) loose or damaged

REPAIR PROCEDURES

Perform the **Diagnostic Repair Verification** after completing the diagnostic procedure.

- Control solenoid valve assembly replacement. Refer to **Control Module References** for replacement, setup, and programming.
- Perform the **Service Fast Learn Adapts** following all transmission related repairs.

DTC P2719-P2721

DIAGNOSTIC INSTRUCTIONS

- Perform the **Diagnostic System Check - Vehicle** prior to using this diagnostic procedure.
- Review **Strategy Based Diagnosis** for an overview of the diagnostic approach.
- **Diagnostic Procedure Instructions** provides an overview of each diagnostic category.

DTC DESCRIPTORS

DTC P2719

Clutch Pressure Control (PC) Solenoid 4 System Performance

cardiagn.com

DTC P2720

Clutch Pressure Control (PC) Solenoid 4 Control Circuit Low Voltage

DTC P2721

Clutch Pressure Control (PC) Solenoid 4 Control Circuit High Voltage

DIAGNOSTIC FAULT INFORMATION

Circuit	Short to Ground	Open/High Resistance	Short to Voltage	Signal Performance
Clutch PC Solenoid 4 Control	P2720	P2721	P2721	P2719

TYPICAL SCAN TOOL DATA

Clutch PC Solenoid 4 Scan Tool Data

Circuit	Short to Ground	Open/High Resistance	Short to Voltage	Signal Performance
Operating Conditions: Engine running, normal operating temperature **Parameter Normal Range:** OK				
Pressure Control Solenoid Valve 4 Performance Test Status	-	-	-	Fault or Malfunction
Pressure Control Solenoid Valve 4 Control Circuit Low Voltage Test Status	Fault or Malfunction	-	-	-
Pressure Control Solenoid Valve 4 Control Circuit High Voltage	-	Fault or Malfunction	Fault or Malfunction	-

CIRCUIT/SYSTEM DESCRIPTION

The clutch pressure control (PC) solenoid 4 is part of the control solenoid valve assembly which has no serviceable parts. The normally low PC solenoid 4 regulates and directs oil pressure to the 2-6 clutch regulator valve. Increasing PC solenoid 4 pressure, increases pressure to the 2-6 clutch regulator valve. The TCM varies the current to the PC solenoid 4 through a low side driver. Increasing the current to PC solenoid 4 increases oil pressure by closing OFF the solenoid exhaust port. Decreasing the current to PC solenoid 4 decreases oil pressure by opening the exhaust port. PC solenoid 4 power is supplied by the TCM through a high side driver (HSD). The HSD protects the circuit and components from excessive current flow. If excessive current flow is detected, the HSD will turn OFF. When the fault is corrected the HSD will reset.

CONDITIONS FOR RUNNING THE DTC

P2719, P2720, or P2721

- DTCs P2719, P2720, or P2721 have not set this ignition.
- The ignition voltage is 8.6 volts or greater.

cardiagn.com

- The engine speed is 500 RPM or greater, for 5 seconds.
- The clutch PC solenoid 4 is commanded ON.

CONDITIONS FOR SETTING THE DTC

P2719

The TCM detects an internal electrical malfunction on the clutch PC solenoid 4 control circuit where the measured PC solenoid 4 current does not equal the commanded clutch PC solenoid 4 current for 5 seconds.

P2720

The TCM detects a short to ground on the clutch PC solenoid 4 control circuit for 1 second.

P2721

The TCM detects an open or short to voltage on the clutch PC solenoid 4 control circuit for 1 second.

ACTION TAKEN WHEN THE DTC SETS

P2719

- DTC P2719 is a Type C DTC.
- The TCM freezes transmission adaptive functions.

P2720

- DTC P2720 is a Type A DTC.
- The TCM defaults the transmission to a limited shift pattern utilizing 2nd gear and reverse gear.
- The TCM forces TCC OFF.
- The TCM freezes transmission adaptive functions.
- The TCM commands maximum line pressure.
- The TCM enables Torque management.
- The TCM inhibits TAP Up/Down function.
- The TCM inhibits manual shifting of forward gears.

P2721

- DTC P2721 is a Type A DTC.
- The TCM defaults the transmission to a limited shift pattern utilizing 3rd gear and reverse gear.
- The TCM forces TCC OFF.
- The TCM freezes transmission adaptive functions.
- The TCM commands maximum line pressure.
- The TCM enables Torque management.

cardiagn.com

- The TCM inhibits TAP Up/Down function.
- The TCM inhibits manual shifting of forward gears.

CONDITIONS FOR CLEARING THE DTC

- DTC P2719 is a Type C DTC.
- DTCs P2720 and P2721 are Type A DTCs.

REFERENCE INFORMATION

Schematic Reference

Automatic Transmission Controls Schematics

Connector End View Reference

- **Component Connector End Views**
- **Inline Harness Connector End Views**

Description and Operation

- **Transmission General Description**
- **Transmission Component and System Description**
- **Electronic Component Description**

Electrical Information Reference

- **Circuit Testing**
- **Connector Repairs**
- **Testing for Intermittent Conditions and Poor Connections**
- **Wiring Repairs**

DTC Type Reference

Powertrain Diagnostic Trouble Code (DTC) Type Definitions

Scan Tool Reference

Control Module References for scan tool information

Special Tools

DT-47825-10: Jumper Harness

CIRCUIT/SYSTEM VERIFICATION

cardiagn.com

1. Operate the vehicle in second gear long enough to ensure at least a 3°C (5°F) rise in TCM temperature, then operate the vehicle in Park for 5 seconds.
2. Operate the vehicle in drive range. Allow the transmission to shift through all forward gear ranges. Verify with a scan tool the following test status parameters display OK:
   - Pressure Control Solenoid Valve 4 Performance Test Status
   - Pressure Control Solenoid Valve 4 Control Circuit High Voltage Test Status
   - Pressure Control Solenoid Valve 4 Control Circuit Low Voltage Test Status
3. Operate the vehicle within the Conditions for Running the DTC to verify the DTC does not reset. You may also operate the vehicle within the conditions that you observed from the Freeze Frame/Failure Records data.

CIRCUIT/SYSTEM TESTING

NOTE: You must perform the Circuit/System Verification first.

1. Ignition OFF, remove the Q8 control solenoid valve assembly. Refer to **Control Solenoid Valve and Transmission Control Module Assembly Replacement** .
2. Perform the **Control Solenoid Valve and Transmission Control Module Assembly Inspection** .
3. Place the Q8 control solenoid valve assembly on a clean work surface near the transmission assembly.
4. Connect **DT-47825-10:** jumper harness between the vehicle wire harness electrical connector, and the Q8 control solenoid valve assembly electrical connector.
5. Ignition ON, verify with a scan tool the following test status parameters display OK:
   - Pressure Control Solenoid Valve 4 Performance Test Status
   - Pressure Control Solenoid Valve 4 Control Circuit High Voltage Test Status
   - Pressure Control Solenoid Valve 4 Control Circuit Low Voltage Test Status

   - If any test status parameter displays Fault or Malfunction, replace the Q8 control solenoid valve assembly.

REPAIR PROCEDURES

Perform the **Diagnostic Repair Verification** after completing the diagnostic procedure.

- Perform the **Service Fast Learn Adapts** following all transmission related repairs.
- Replace the control solenoid valve assembly. Refer to **Control Module References** for replacement, setup, and programming.

DTC P2723 OR P2724

DIAGNOSTIC INSTRUCTIONS

- Perform the **Diagnostic System Check - Vehicle** prior to using this diagnostic procedure.
- Review **Strategy Based Diagnosis** for an overview of the diagnostic approach.

cardiagn.com

- **Diagnostic Procedure Instructions** provides an overview of each diagnostic category.

DTC DESCRIPTORS

DTC P2723

Clutch Pressure Control (PC) Solenoid 5 - Stuck Off

DTC P2724

Clutch Pressure Control (PC) Solenoid 5 - Stuck On

CIRCUIT/SYSTEM DESCRIPTION

The clutch pressure control (PC) solenoid 5 is part of the control solenoid valve assembly, which has no serviceable parts. The PC solenoid 5 regulates transmission fluid pressure to the 1-2-3-4 clutch regulator valve which controls pressure to the 1-2-3-4 clutch. The TCM calculates gear ratio based on the RPM signals from the input speed sensor (ISS) and the output speed sensor (OSS). The TCM compares the expected transmission gear ratio to the calculated gear ratio for each commanded gear.

CONDITIONS FOR RUNNING THE DTC

P2723

- DTCs P0716, P0717, P0722, P0723, P1825, or P1915 are not set.
- The transmission input shaft speed is greater than 60 RPM.
- 1-2-3-4 clutch is commanded ON.

P2724

- DTCs P0716, P0717, P0722, P0723, P1825, or P1915 are not set.
- The transmission input speed is equal to or greater than 200 RPM.
- The transmission output shaft speed is equal to or greater than 200 RPM.
- 1-2-3-4 clutch is commanded OFF.

CONDITIONS FOR SETTING THE DTC

P2723

The TCM detects an incorrect on-coming clutch gear ratio, or flare, when the 1-2-3-4 clutch is commanded ON for 0.5 seconds and either fail case below is achieved:

Condition 1

- Output shaft speed is greater than 60 RPM.
- The transmission input shaft speed is greater than 75 RPM from the anticipated input shaft speed.

cardiagn.com

Condition 2

- Output shaft speed is less than 60 RPM.
- The transmission input shaft speed is greater than 75 RPM from the anticipated input shaft speed.

P2724

The TCM detects an incorrect off-going clutch gear ratio, or tie-up, when the 1-2-3-4 clutch is commanded OFF for 0.5 seconds and the following is achieved:

- The 1-2-3-4 clutch commanded pressure is 0 kPa for a calculated amount of time.
- The transmission input shaft speed is less than 40 RPM from the anticipated input shaft speed.
- The output shaft speed is greater than 60 RPM.

ACTION TAKEN WHEN THE DTC SETS

- DTCs P2723 and P2724 are Type A DTCs.
- The TCM freezes transmission adaptive functions.
- DTC P2723 defaults to Reverse, Park, Neutral, 5th, or 6th gear.
- DTC P2724 defaults to Reverse, Park, Neutral, 1st, or 2nd gear.

CONDITIONS FOR CLEARING THE DIC/DTC

DTCs P2723 and P2724 are Type A DTCs.

DIAGNOSTIC AIDS

Before performing a road test, configure and setup the scan tool for snapshot mode. This will allow you to display, monitor, and verify multiple transmission data parameters at one time, after the road test.

REFERENCE INFORMATION

Connector End View Reference

- **Component Connector End Views**
- **Inline Harness Connector End Views**

Electrical Information Reference

- **Circuit Testing**
- **Connector Repairs**
- **Testing for Intermittent Conditions and Poor Connections**
- **Wiring Repairs**

Description and Operation

cardiagn.com

- **Electronic Component Description**
- **Transmission General Description**
- **Transmission Component and System Description**
- **Park - Engine Running**
- **Reverse**
- **Neutral - Engine Running**
- **Drive Range, First Gear Engine Braking**
- **Drive Range, First Gear**
- **Drive Range, Second Gear**
- **Drive Range, Third Gear**
- **Drive Range, Third Gear Default**
- **Drive Range - Fourth Gear**
- **Drive Range, Fifth Gear**
- **Drive Range, Fifth Gear Default**
- **Drive Range, Sixth Gear**
- **Fluid Passages**

DTC Type Reference

Powertrain Diagnostic Trouble Code (DTC) Type Definitions

Scan Tool Reference

Control Module References for scan tool information

Special Tools

- **DT-47825:** Control Solenoid Test Plate
- **DT-47825-10:** Jumper Harness

For equivalent regional tools, refer to **Special Tools** .

CIRCUIT/SYSTEM VERIFICATION

NOTE: If other DTCs are set, diagnose those DTCs first.

1. Engine idling in Park, with parking brake applied and drive wheels chocked.
2. Perform the **Transmission Fluid Level and Condition Check** to verify correct fluid level and condition.
3. Monitor the Transmission Fluid Pressure (TFP) switch 4 with a scan tool. Place the gear select lever in Park, Reverse, and Neutral range. Verify the TFP switch 4 parameter states are correct for Park, Reverse, and Neutral. Refer to **Transmission Fluid Pressure Switch Logic** .
4. Place the gear select lever in Drive range. Command the shift transmission with a scan tool through all

cardiagn.com

forward ranges. Verify the TFP switch 4 parameter states are correct for all forward ranges. Refer to **Transmission Fluid Pressure Switch Logic** .

5. Engine idling in Park, verify with a scan tool the Transmission ISS/OSS supply voltage test status parameter displays OK.
6. Engine idling in Park. Observe the Transmission ISS parameter on the scan tool, while varying the engine speed. The Transmission ISS parameter should vary with engine speed and not drop out.
7. Operate the vehicle at 16-32 km/h (10-20 mph) while observing the Transmission OSS parameter on the scan tool. The Transmission OSS parameter should vary with the vehicle speed and not drop out.

NOTE: Perform a scan tool snapshot, during the road test.

8. Perform the **Road Test** . Verify the transmission operation performs as indicated in the road test instructions.
9. Review the scan tool snapshot data. Verify the following transmission data parameters display the correct values for each gear range:
   - Transmission ISS
   - Transmission OSS
   - PC Solenoid 5
   - TFP Switch 4
10. Operate the vehicle within the Condition for Running the DTC to verify the DTC does not reset. You may also operate the vehicle within the conditions that you observed from the Freeze Frame/Failure Records data.

CIRCUIT/SYSTEM TESTING

1. Perform the **Line Pressure Check** . Verify the transmission line pressures are within the specified ranges.
   - If not within the specified ranges, refer to **Fluid Pressure High or Low** .
2. Ignition OFF, remove the Q8 control solenoid valve assembly. Refer to **Control Solenoid Valve and Transmission Control Module Assembly Replacement** .
3. Perform the **Control Solenoid Valve and Transmission Control Module Assembly Solenoid Performance Test** . Test all solenoids on the Q8 control solenoid valve assembly. A pressure change should occur for each solenoid valve.
   - If the Q8 control solenoid valve assembly does not pass the performance test, replace the Q8 control solenoid valve assembly.
4. Listed in the chart below, are conditions for each component that could set DTC P2723 or P2724. Carefully inspect each component for that condition. Repair or replace as necessary.

DTC	Component	Condition
P2723 P2724	Control Valve Upper Body Assembly (304)	1-2-3-4 Clutch Regulator Valve (337) stuck / sticking - debris, binding, damaged valve, or scored bore
P2723	Q8 Control Solenoid Valve Assembly (314)	Refer to document PIP 4304A. DTC P2723 may be set with DTC P0878
		• O-ring seals leaking

cardiagn.com

P2723 P2724	Q8 Control Solenoid Valve Assembly (314)	• Valve body filter plate assembly cracked, blocked, or damaged gasket seal
P2723	Control Valve Upper Body Assembly (304)	Clutch Select Valve 3 (352) stuck / sticking - debris, binding, damaged valve, or scored bore
P2723	A/Trans Fluid Pump Cover Assembly (219)	Pump Tower Seals (230) damaged / leaking
P2723	1-2-3-4 and 3-5-R Clutch Housing Assembly (51)	1-2-3-4 Clutch Piston (414) cracked / damaged / leaking
P2723	1-2-3-4 and 3-5-R Clutch Housing Assembly (51)	Housing / hub weld cracked / leaking
P2723	1-2-3-4 and 3-5-R Clutch Housing Assembly (51)	1-2-3-4 Clutch Backing Plate Retaining Ring (429) not seated / oriented, causing clutch pack / piston over travel
P2723	Control (with body and valve) Valve Assembly (21)	Valve Body to Pump Transfer Seal Assembly (19) damaged / leaking
P2723	Torque Converter (w/Fluid Pump) Housing Assembly (2)	• Fluid pump housing vanes / rotor / slide damaged / scored • Fluid pump or torque converter overstressed due to high temperatures
P2723	Automatic Transmission Fluid Filter Assembly (26)	Oil filter (26) or filter seal (25) loose or damaged

REPAIR PROCEDURES

Perform the **Diagnostic Repair Verification** after completing the diagnostic procedure.

- Control solenoid valve assembly replacement. Refer to **Control Module References** for replacement, setup, and programming.
- Perform the **Service Fast Learn Adapts** following all transmission related repairs.

DTC P2728-P2730

DIAGNOSTIC INSTRUCTIONS

- Perform the **Diagnostic System Check - Vehicle** prior to using this diagnostic procedure.
- Review **Strategy Based Diagnosis** for an overview of the diagnostic approach.
- **Diagnostic Procedure Instructions** provides an overview of each diagnostic category.

DTC DESCRIPTORS

DTC P2728

Clutch Pressure Control (PC) Solenoid 5 System Performance

cardiagn.com

DTC P2729

Clutch Pressure Control (PC) Solenoid 5 Control Circuit Low Voltage

DTC P2730

Clutch Pressure Control (PC) Solenoid 5 Control Circuit High Voltage

DIAGNOSTIC FAULT INFORMATION

Circuit	Short to Ground	Open/High Resistance	Short to Voltage	Signal Performance
Clutch PC Solenoid 5 Control	P2729	P2730	P2730	P2728

TYPICAL SCAN TOOL DATA

Clutch PC Solenoid 5

Circuit	Short to Ground	Open/High Resistance	Short to Voltage	Signal Performance
Operating Conditions: Engine running, normal operating temperature **Parameter Normal Range:** OK				
Pressure Control Solenoid Valve 5 Performance Test Status	-	-	-	Fault or Malfunction
Pressure Control Solenoid Valve 5 Control Circuit Low Voltage Test Status	Fault or Malfunction	-	-	-
Pressure Control Solenoid Valve 5 Control Circuit High Voltage Test Status	-	Fault or Malfunction	Fault or Malfunction	-

CIRCUIT/SYSTEM DESCRIPTION

The clutch pressure control (PC) solenoid 5 is part of the control solenoid valve assembly which has no serviceable parts. The normally low PC solenoid 5 regulates and directs oil pressure to the 1-2-3-4 clutch regulator valve and 1-2-3-4 clutch boost valve. Increasing PC solenoid 5 pressure increases pressure to the 1-2-3-4 clutch. The TCM varies the current to the PC solenoid 5 through a low side driver. Increasing the current to PC solenoid 5 increases oil pressure by closing OFF the solenoid exhaust port. Decreasing the current to PC solenoid 5 decreases oil pressure by opening the exhaust port. PC solenoid 5 power is supplied by the TCM through a high side driver (HSD). The HSD protects the circuit and components from excessive current flow. If excessive current flow is detected, the HSD will turn OFF. When the fault is corrected, the HSD will reset.

CONDITIONS FOR RUNNING THE DTC

P2728, P2729, or P2730

- DTCs P2728, P2729, or P2730 have not set this ignition.

cardiagn.com

- The ignition voltage is 8.6 volts or greater.
- The engine speed is 400 RPM or greater for 5 seconds.
- The clutch PC solenoid 5 is commanded ON.

CONDITIONS FOR SETTING THE DTC

P2728

The TCM detects an internal electrical performance malfunction of the clutch PC solenoid 5 control circuit where the measured clutch PC solenoid 5 current does not equal the commanded clutch PC solenoid 5 current for 5 seconds.

P2729

The TCM detects a short to ground on the clutch PC solenoid 5 control circuit for 1 second.

P2730

The TCM detects an open or short to voltage on the clutch PC solenoid 5 control circuit for 1 second.

ACTION TAKEN WHEN THE DTC SETS

P2728

- DTC P2728 is a Type C DTC.
- The TCM freezes transmission adaptive functions.

P2729

- DTC P2729 is a Type A DTC.
- The transmission defaults to 2nd gear or reverse gear.
- The TCM forces TCC OFF.
- The TCM freezes transmission adaptive functions.
- The TCM commands maximum line pressure.
- The TCM enables Torque management.
- The TCM inhibits TAP Up/Down function.

P2730

- DTC P2730 is a Type A DTC.
- The transmission defaults to 5th gear or reverse gear.
- The TCM forces TCC OFF.
- The TCM freezes transmission adaptive functions.
- The TCM commands maximum line pressure.

cardiagn.com

- The TCM enables Torque management.
- The TCM inhibits TAP Up/Down function.
- The TCM turns OFF the high side driver.

CONDITIONS FOR CLEARING THE DTC

- DTC P2728 is a Type C DTC.
- DTCs P2729 and P2730 are Type A DTCs.

REFERENCE INFORMATION

Schematic Reference

Automatic Transmission Controls Schematics

Connector End View Reference

- **Component Connector End Views**
- **Inline Harness Connector End Views**

Description and Operation

- **Transmission General Description**
- **Transmission Component and System Description**
- **Electronic Component Description**

Electrical Information Reference

- **Circuit Testing**
- **Connector Repairs**
- **Testing for Intermittent Conditions and Poor Connections**
- **Wiring Repairs**

DTC Type Reference

Powertrain Diagnostic Trouble Code (DTC) Type Definitions

Scan Tool Reference

Control Module References for scan tool information

Special Tools

DT-47825-10: Jumper Harness

cardiagn.com

CIRCUIT/SYSTEM VERIFICATION

1. Operate the vehicle in second gear long enough to ensure at least a 3°C (5°F) rise in TCM temperature.
2. Operate the vehicle in drive range. Allow the transmission to shift through all forward gear ranges. Verify with a scan tool the following test status parameters display OK:
   - Pressure Control Solenoid Valve 5 Performance Test Status
   - Pressure Control Solenoid Valve 5 Control Circuit High Voltage Test Status
   - Pressure Control Solenoid Valve 5 Control Circuit Low Voltage Test Status
3. Operate the vehicle within the Conditions for Running the DTC to verify the DTC does not reset. You may also operate the vehicle within the conditions that you observed from the Freeze Frame/Failure Records data.

CIRCUIT/SYSTEM TESTING

NOTE: You must perform the Circuit/System Verification first.

1. Ignition OFF, remove the Q8 control solenoid valve assembly. Refer to **Control Solenoid Valve and Transmission Control Module Assembly Replacement** .
2. Perform the **Control Solenoid Valve and Transmission Control Module Assembly Inspection** .
3. Place the Q8 control solenoid valve assembly on a clean work surface near the transmission assembly.
4. Connect **DT-47825-10:** jumper harness between the vehicle wire harness electrical connector, and the Q8 control solenoid valve assembly electrical connector.
5. Ignition ON, verify with a scan tool the following test status parameters display OK:
   - Pressure Control Solenoid Valve 5 Performance Test Status
   - Pressure Control Solenoid Valve 5 Control Circuit High Voltage Test Status
   - Pressure Control Solenoid Valve 5 Control Circuit Low Voltage Test Status

   - If any test status parameter displays Fault or Malfunction, replace the Q8 control solenoid valve assembly.

REPAIR PROCEDURES

Perform the **Diagnostic Repair Verification** after completing the diagnostic procedure.

- Perform the **Service Fast Learn Adapts** following all transmission related repairs.
- Replace the control solenoid valve assembly. Refer to **Control Module References** for replacement, setup, and programming.

DTC P2762, P2763, OR P2764

DIAGNOSTIC INSTRUCTIONS

- Perform the **Diagnostic System Check - Vehicle** prior to using this diagnostic procedure.

cardiagn.com

- Review **Strategy Based Diagnosis** for an overview of the diagnostic approach.
- **Diagnostic Procedure Instructions** provides an overview of each diagnostic category.

DTC DESCRIPTORS

DTC P2762

Torque Converter Clutch (TCC) Pressure Control Solenoid System Performance

DTC P2763

Torque Converter Clutch (TCC) Pressure Control Solenoid Control Circuit High Voltage

DTC P2764

Torque Converter Clutch (TCC) Pressure Control Solenoid Control Circuit Low Voltage

DIAGNOSTIC FAULT INFORMATION

Circuit	Short to Ground	Open/High Resistance	Short to Voltage	Signal Performance
TCC Pressure Control Solenoid	P2764	P2763	P2763	P2762

TYPICAL SCAN TOOL DATA

TCC PC Solenoid

Circuit	Short to Ground	Open/High Resistance	Short to Voltage	Signal Performance
Operating Conditions: Engine running, normal operating temperature **Parameter Normal Range:** OK				
TCC Pressure Control Solenoid Valve Performance Test Status	-	-	-	Fault or Malfunction
TCC Pressure Control Solenoid Valve Control Circuit High Voltage Test Status	-	Fault or Malfunction	Fault or Malfunction	-
TCC Pressure Control Solenoid Valve Control Circuit Low Voltage Test Status	Fault or Malfunction	-	-	-

CIRCUIT/SYSTEM DESCRIPTION

The torque converter clutch (TCC) pressure control solenoid is part of the control solenoid valve assembly which has no serviceable parts. The normally low TCC PC solenoid regulates oil pressure to the TCC regulator valve and TCC control valve. Increasing TCC PC solenoid oil pressure increases oil pressure to the torque converter to apply the clutch. The TCM varies the current to the TCC PC solenoid through a low side driver.

cardiagn.com

Increasing current to the TCC PC solenoid increase oil pressure by closing OFF the solenoid exhaust port. Decreasing current to the TCC PC solenoid decreases oil pressure by opening up the solenoid exhaust port. The TCC PC solenoid power is supplied by the TCM through a high side driver (HSD). The HSD protects the circuit and components from excessive current flow. If excessive current flow is detected, the HSD will turn OFF. When the fault is corrected, the HSD will reset.

CONDITIONS FOR RUNNING THE DTC

P2762

- DTC P2762 has not set this ignition cycle.
- The engine speed is 500 RPM or greater for 5 seconds.
- The ignition voltage is 8.6 volts or greater.
- Transmission fluid temperature is 140°C (284°F) or greater.

P2763

- DTCs P2763, P2764, P0658, or P0659 have not set this ignition cycle.
- The engine speed is 500 RPM or greater for 5 seconds.
- The ignition voltage is 8.6 volts or greater.
- The high side driver is enabled.

P2764

- DTC P2764 has not set this ignition cycle.
- The engine speed is 500 RPM or greater for 5 seconds.
- The ignition voltage is 8.6 volts or greater.
- The high side driver is enabled.
- Transmission fluid temperature is 140°C (284°F) or greater.

CONDITIONS FOR SETTING THE DTC

P2762

The TCM detects an internal electrical performance malfunction of the TCC PC solenoid control circuit where the measured TCC PC solenoid current does not equal the commanded TCC PC solenoid for 5 seconds.

P2763

The TCM detects an open/high resistance or short to voltage on the TCC pressure solenoid control circuit for 5 seconds.

P2764

The TCM detects a short to ground on the TCC pressure solenoid control circuit for 1 minute.

cardiagn.com

ACTION TAKEN WHEN THE DTC SETS

P2762

DTC P2762 is a Type C DTC.

P2763 or P2764

- DTCs P2763 and P2764 are Type A DTCs.
- The TCM inhibits TCC.
- The TCM commands maximum line pressure.
- The TCM freezes transmission adaptive functions.
- The TCM enables Torque management.
- The TCM inhibits TAP Up/Down function.
- The TCM inhibits manual shifting of forward gears.

CONDITIONS FOR CLEARING THE DIC/DTC

- DTC P2762 is a Type C DTC.
- DTCs P2763 and P2764 are Type A DTCs.

REFERENCE INFORMATION

Schematic Reference

Automatic Transmission Controls Schematics

Connector End View Reference

- **Component Connector End Views**
- **Inline Harness Connector End Views**

Description and Operation

- **Transmission General Description**
- **Transmission Component and System Description**
- **Electronic Component Description**

Electrical Information Reference

- **Circuit Testing**
- **Connector Repairs**
- **Testing for Intermittent Conditions and Poor Connections**
- **Wiring Repairs**

cardiagn.com

DTC Type Reference

Powertrain Diagnostic Trouble Code (DTC) Type Definitions

Scan Tool Reference

Control Module References for scan tool information

Special Tools

DT-47825-10: Jumper Harness

CIRCUIT/SYSTEM VERIFICATION

1. Operate the vehicle in 2nd gear long enough to ensure at least a 3°C (5°F) rise in TCM temperature.
2. Operate the vehicle in drive range and ensure TCC is commanded ON for 1 minute. Verify with a scan tool the following test status parameters display OK:
   - TCC Pressure Control Solenoid Valve Performance Test Status
   - TCC Pressure Control Solenoid Valve Control Circuit High Voltage Test Status
   - TCC Pressure Control Solenoid Valve Control Circuit Low Voltage Test Status
3. Operate the vehicle within the Conditions for Running the DTC to verify the DTC does not reset. You may also operate the vehicle within the conditions that you observed from the Freeze Frame/Failure Records data.

CIRCUIT/SYSTEM TESTING

NOTE: You must perform the Circuit/System Verification first.

1. Ignition OFF, remove the Q8 control solenoid valve assembly. Refer to **Control Solenoid Valve and Transmission Control Module Assembly Replacement** .
2. Perform the **Control Solenoid Valve and Transmission Control Module Assembly Inspection** .
3. Place the Q8 control solenoid valve assembly on a clean work surface near the transmission assembly.
4. Connect **DT-47825-10:** jumper harness between the vehicle wire harness electrical connector, and the Q8 control solenoid valve assembly electrical connector.
5. Ignition ON, verify with a scan tool the following test status parameters display OK:
   - TCC Pressure Control Solenoid Valve Performance Test Status
   - TCC Pressure Control Solenoid Valve Control Circuit High Voltage Test Status
   - TCC Pressure Control Solenoid Valve Control Circuit Low Voltage Test Status

   - If any test status parameter displays Fault or Malfunction, replace the Q8 control solenoid valve assembly.

REPAIR PROCEDURES

cardiagn.com

Perform the **Diagnostic Repair Verification** after completing the diagnostic procedure.

- Perform the **Service Fast Learn Adapts** following all transmission related repairs.
- **Control Module References** for control solenoid valve assembly replacement, setup, and programming.

cardiagn.com

2010 TRANSMISSION

Automatic Transmission - 6L45/6L50/6L80/6L90 - Camaro

REPAIR INSTRUCTIONS - OFF VEHICLE

TORQUE CONVERTER REMOVAL AND HOLDING FIXTURE INSTALLATION (6L50)

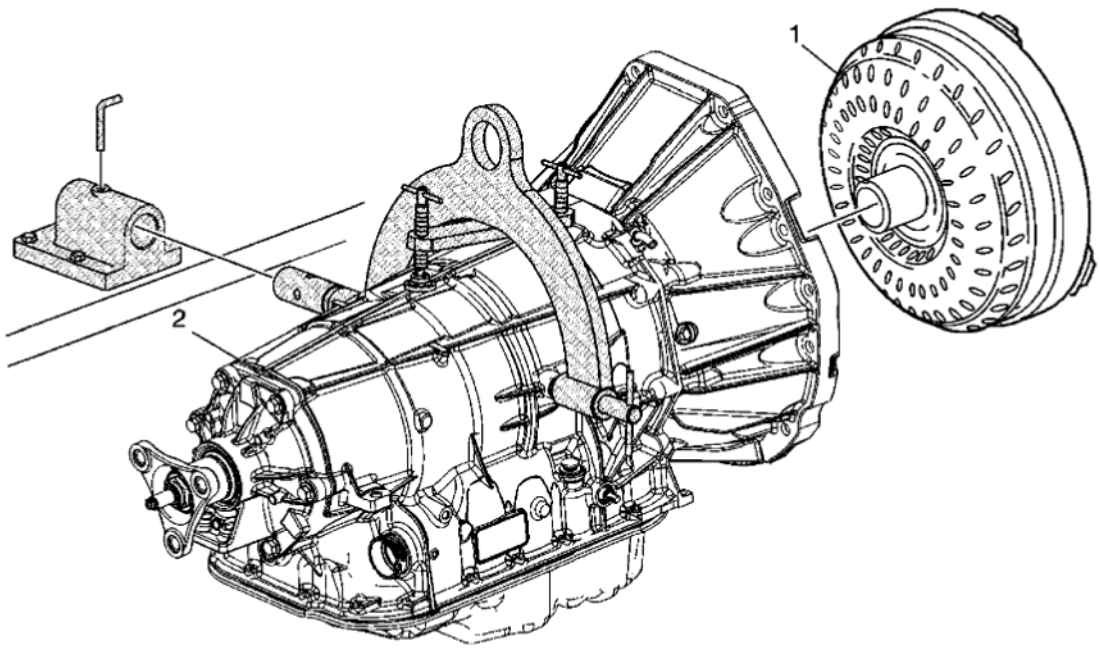

Fig. 1: Torque Converter Removal & Holding Fixture Installation (6L50)
Courtesy of GENERAL MOTORS CORP.

Callout	Component Name
1	Torque Converter Assembly
2	Transmission Case Assembly **Procedure** 1. Rotate the transmission so that the converter housing is up and secure with locking pin. 2. Allow any remaining transmission fluid to drain from the case extension. 3. Some transmission cases will not have the boss to enable the use of **DT-48989:** holding fixture. **Special Tools** • **DT-48989:** Holding Fixture

cardiagn.com

	• **J 3289-20:** Holding Fixture Base Assembly For equivalent regional tools, refer to **Special Tools** .

TORQUE CONVERTER REMOVAL AND HOLDING FIXTURE INSTALLATION (6L80)

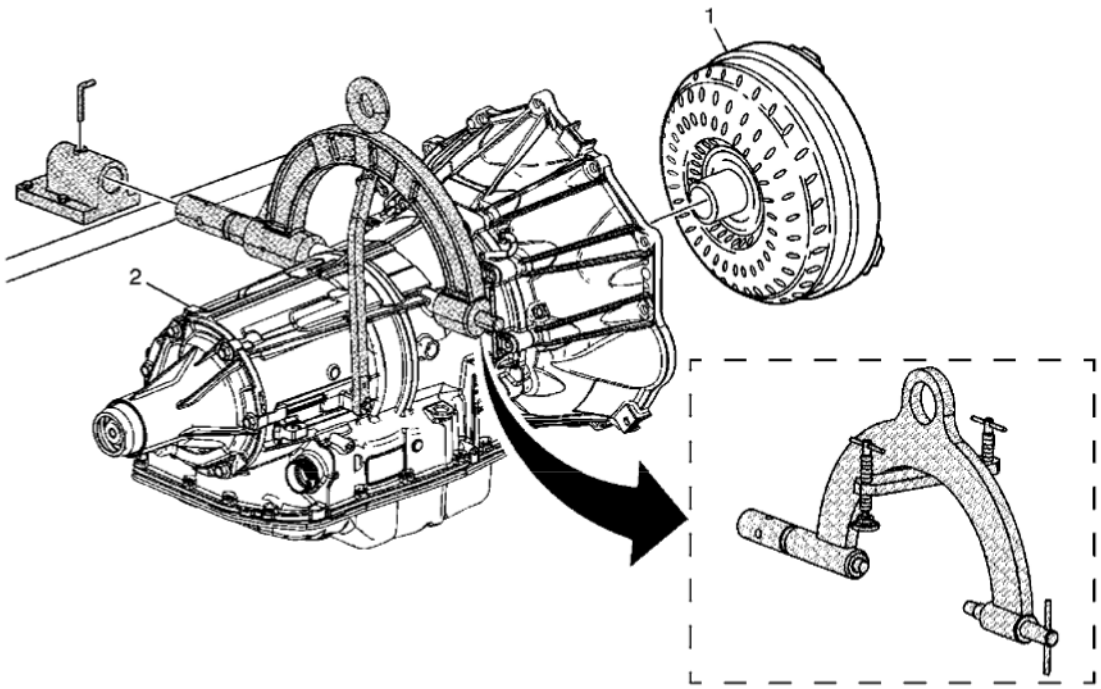

Fig. 2: Torque Converter Removal & Holding Fixture Installation (6L80)
Courtesy of GENERAL MOTORS CORP.

Callout	Component Name
1	Torque Converter Assembly
2	Transmission Case Assembly **Tip:** 1. Rotate the transmission so that the converter housing is up and secure with locking pin. 2. Allow any remaining transmission fluid to drain from the case extension. **Special Tools** • **DT 47605:** Holding Fixture Adapter • **DT 48989:** Holding Fixture • **J 3289-20:** Holding Fixture Base Assembly

cardiagn.com

	• **J 8763-B:** Holding Fixture For equivalent regional tools, refer to **Special Tools** .

PROPELLER SHAFT TRANSMISSION FLANGE REMOVAL (6L50)

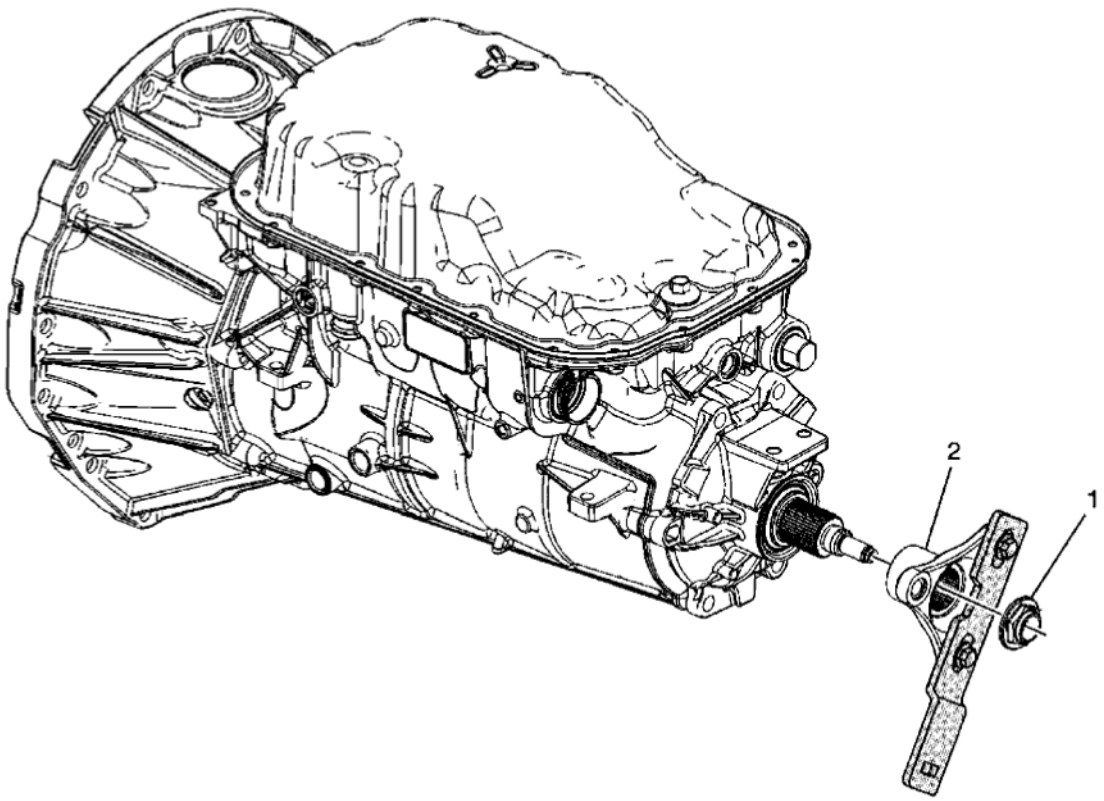

Fig. 3: Propeller Shaft Transmission Flange (6L50)
Courtesy of GENERAL MOTORS CORP.

Callout	Component Name
1	Front Prop Shaft Flange Nut **CAUTION:** **Do not reuse the flange nut. Reusing the flange nut may cause damage to the transmission.** **Special Tool:** **J 45012:** Holding Fixture For equivalent regional tools, refer to **Special Tools** .
2	Prop Shaft Trans Flange

cardiagn.com

PROPELLER SHAFT TRANSMISSION FLANGE REMOVAL (6L80)

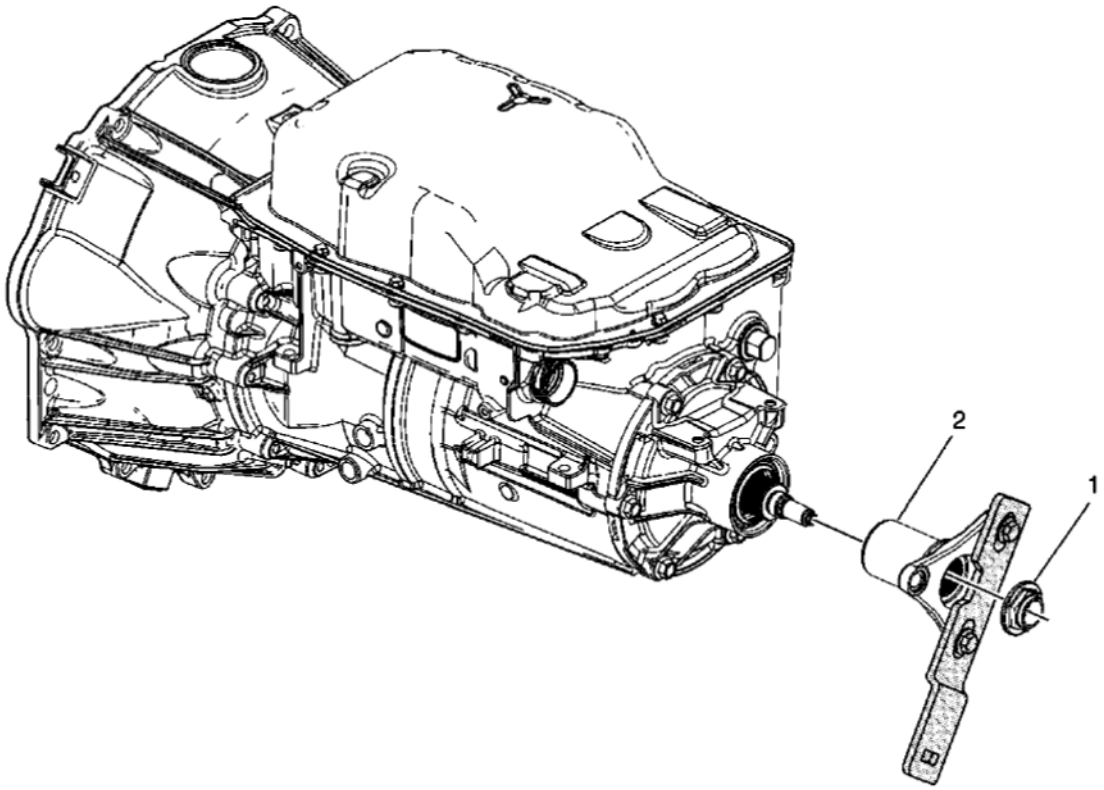

Fig. 4: Propeller Shaft Transmission Flange (6L80)
Courtesy of GENERAL MOTORS CORP.

Callout	Component Name
1	Front Prop Shaft Flange Nut **CAUTION:** **Do not reuse the flange nut. Reusing the flange nut may cause damage to the transmission.** **Special Tool:** **J 45012:** Holding Fixture For equivalent regional tools, refer to **Special Tools** .
2	Prop Shaft Trans Flange

CASE EXTENSION ASSEMBLY REMOVAL (6L50)

cardiagn.com

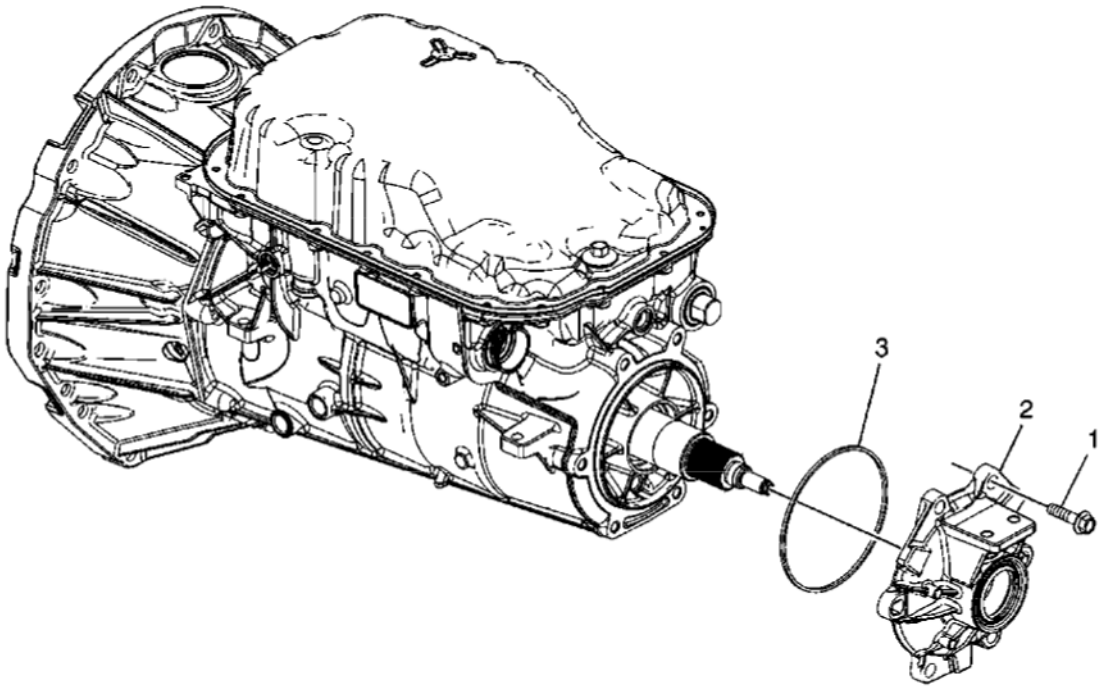

Fig. 5: Case Extension Assembly (6L50)
Courtesy of GENERAL MOTORS CORP.

Callout	Component Name
1	Bolt M10 x 40 (Qty: 6)
2	Case Extension
3	Case Extension Seal

CASE EXTENSION ASSEMBLY REMOVAL (6L80)

cardiagn.com

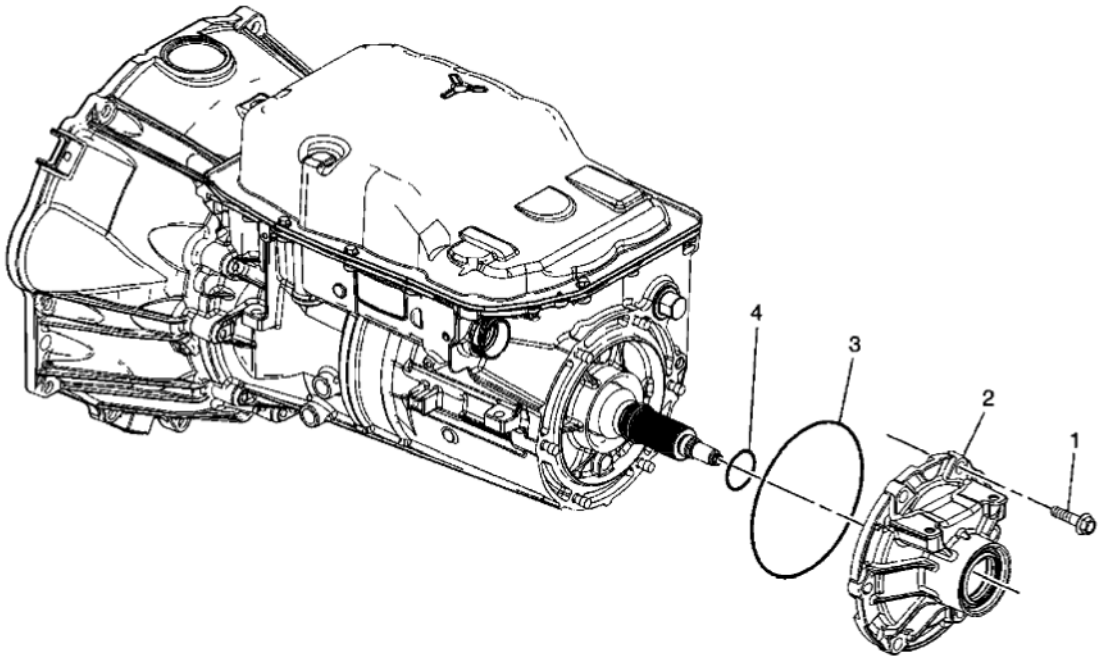

Fig. 6: Case Extension Assembly (6L80)
Courtesy of GENERAL MOTORS CORP.

Callout	Component Name
1	Bolt M10 x 40 (Quantity: 6)
2	Case Extension
3	Case Extension Seal
4	Prop Shaft Trans Flange O-ring Seal

TRANSMISSION FLUID PAN, FILTER AND ELECTRICAL CONNECTOR PASSAGE SLEEVE REMOVAL (6L50)

cardiagn.com

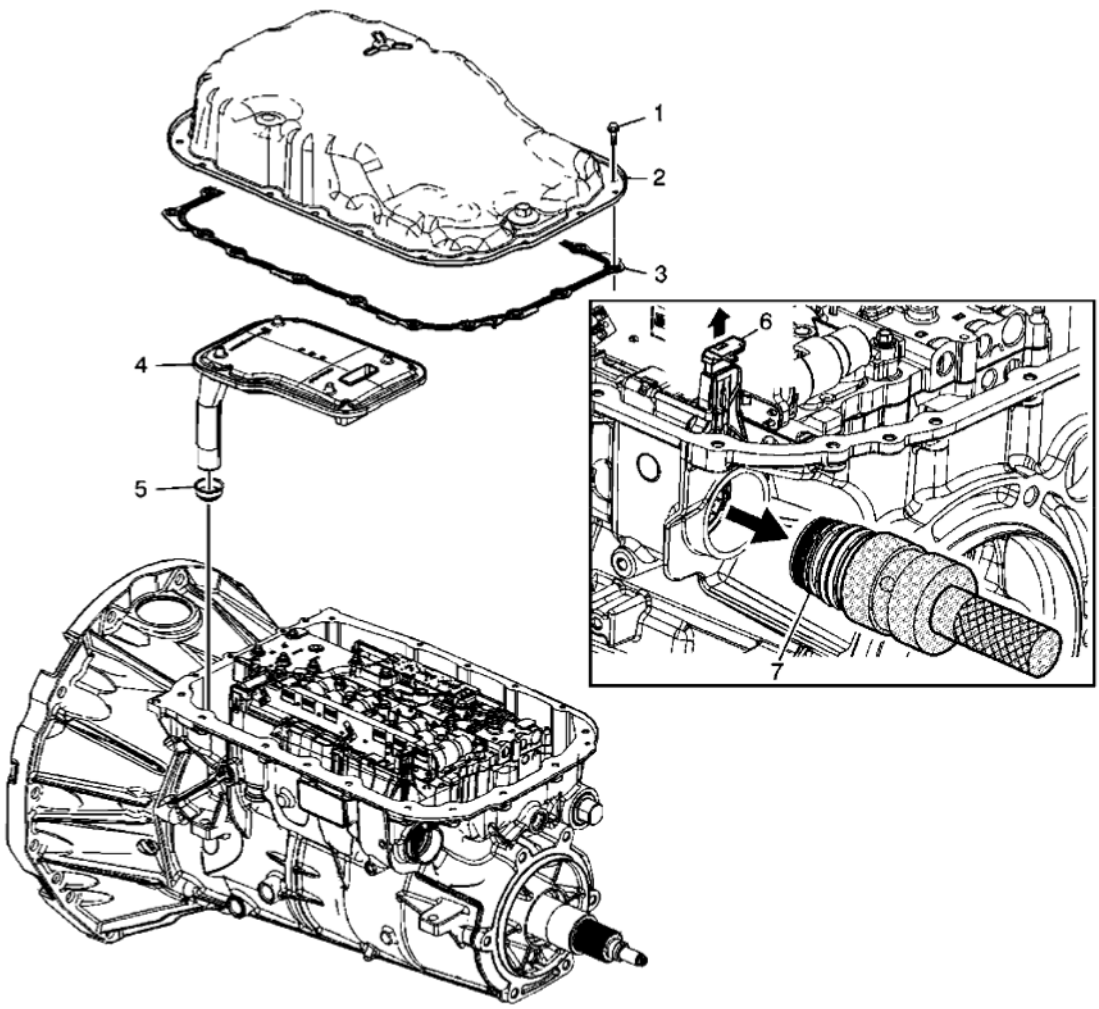

Fig. 7: Transmission Fluid Pan, Filter & Electrical Connector Passage Sleeve (6L50)
Courtesy of GENERAL MOTORS CORP.

Callout	Component Name
1	Bolt M6 x 20 (Qty: 17)
2	Fluid Pan Assembly
3	Fluid Pan Gasket **Tip:** The fluid pan gasket is reusable. Inspect the gasket to determine if it may be reused. If the gasket is stuck to the case or pan, it should be replaced.
4	Fluid Filter Assembly **CAUTION:** **Pull the fluid filter assembly straight out to avoid damage. Do not bend or twist the filter neck.**
	Fluid Filter Seal Assembly

cardiagn.com

5	**CAUTION:** **Do not damage the case sealing surface when removing the filter seal assembly.** **Tip:** Use a screwdriver or snap ring pliers.
6	Electrical Connector Slide Lock **CAUTION:** **Pull up on the electrical connector slide lock to avoid damage to the connector.**
7	Electrical Connector Passage Sleeve **Tip:** Engage **DT 47715:** connector passage sleeve remover/installer on sleeve and pull straight out. **Special Tools** • **DT 47715:** Electrical Connector Passage Sleeve Remover/Installer • **J 42183:** Driver Handle For equivalent regional tools, refer to **Special Tools** .

TRANSMISSION FLUID PAN, FILTER AND ELECTRICAL CONNECTOR PASSAGE SLEEVE REMOVAL (6L80)

cardiagn.com

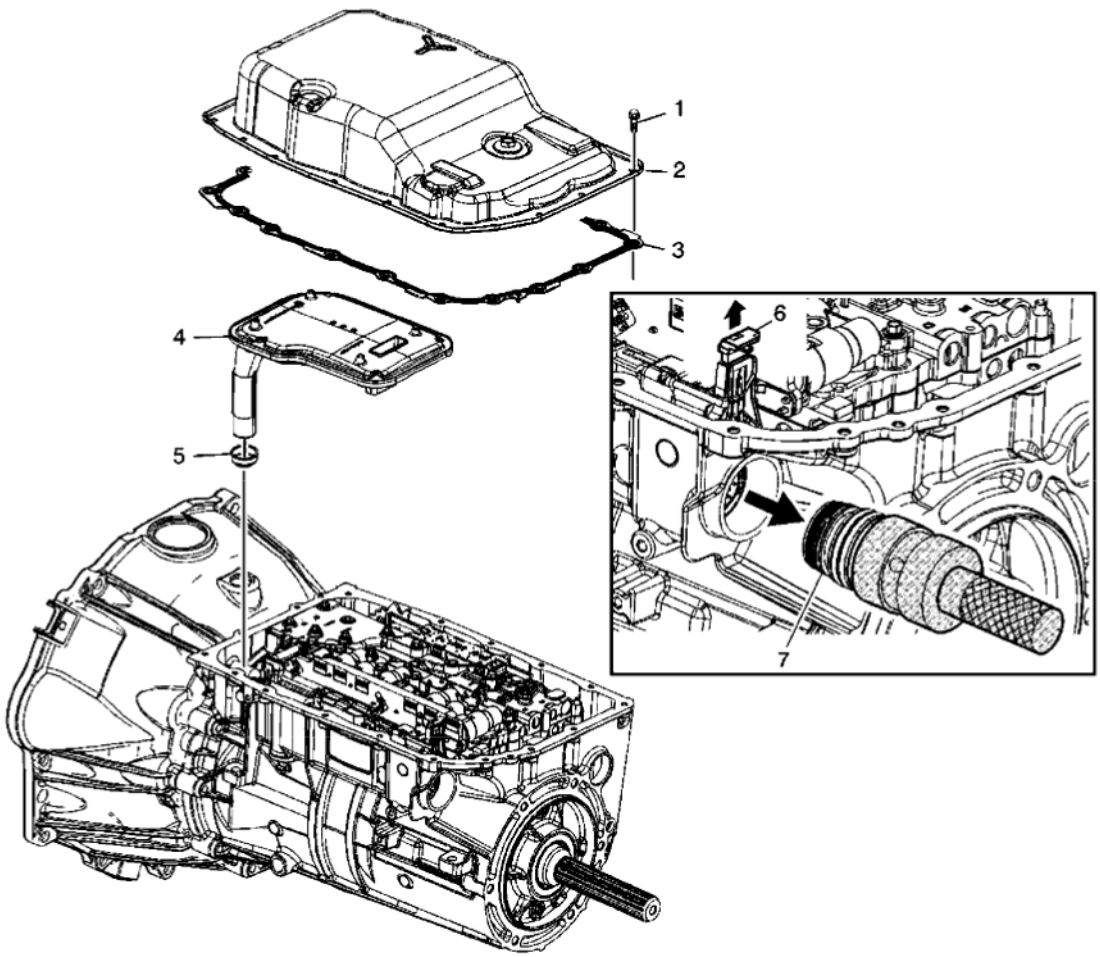

Fig. 8: Transmission Fluid Pan, Filter & Electrical Connector Passage Sleeve (6L80)
Courtesy of GENERAL MOTORS CORP.

Callout	Component Name
1	Bolt M6 x 20 (Qty: 18)
2	Fluid Pan Assembly
3	Fluid Pan Gasket **Tip:** The fluid pan gasket is reusable. Inspect the gasket to determine if it may be reused. If the gasket is stuck to the case or pan, it should be replaced.
4	Fluid Filter Assembly **CAUTION:** **Pull the fluid filter assembly straight out to avoid damage. Do not bend or twist the filter neck.**
	Fluid Filter Seal Assembly **CAUTION:**

cardiagn.com

5	**Do not damage the case sealing surface when removing the filter seal assembly.** **Tip:** Use a screwdriver or snap ring pliers.
6	Electrical Connector Slide Lock **CAUTION:** **Pull up on the electrical connector slide lock to avoid damage to the connector.**
7	Electrical Connector Passage Sleeve **Tip:** Engage **DT 47715:** electrical connector passage sleeve remover/installer on sleeve and pull straight out. **Special Tools** • **DT 47715:** Electrical Connector Passage Sleeve Remover/Installer • **J 42183:** Driver Handle For equivalent regional tools, refer to **Special Tools** .

CONTROL VALVE BODY ASSEMBLY REMOVAL

cardiagn.com

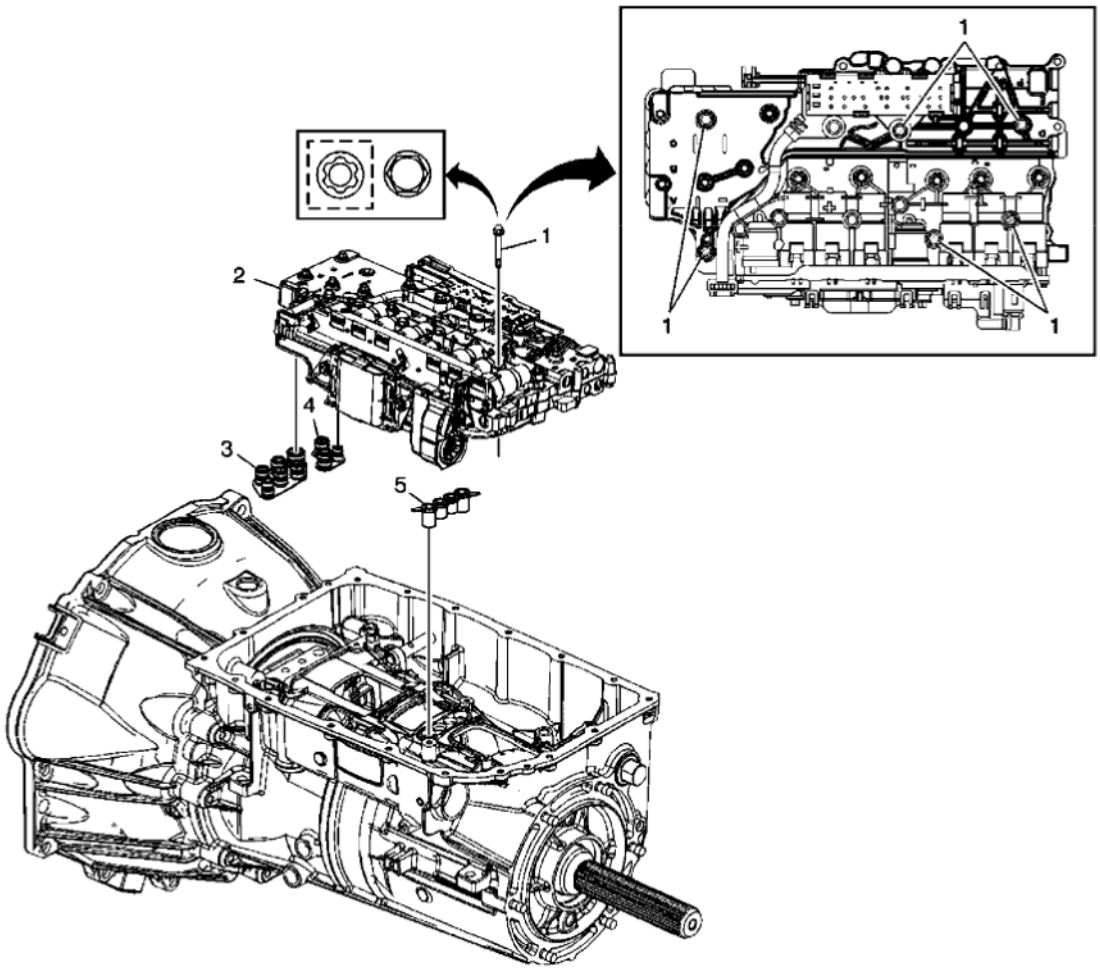

Fig. 9: Control Valve Body Assembly
Courtesy of GENERAL MOTORS CORP.

Callout	Component Name
1	Bolt M5 x 73 (Qty: 6) **Tip:** Do not remove all the bolts in the control valve body assembly. Remove only the bolts indicated. **Special Tool:** **DT-48285:** Valve Body Torx Plus Socket (if applicable) For equivalent regional tools, refer to **Special Tools** .
2	Control Valve Body Assembly **CAUTION:** **Use care when handling the control valve body assembly. If dropped, damage to the internal components of the control solenoid valve assembly, including the transmission control module (TCM), may result.**
	Fluid Pump Seal Assembly

cardiagn.com

3	**CAUTION:** **Use care when removing the seal assemblies to avoid damaging the valve body seal bores.** **CAUTION:** **Refer to Seal Reuse Caution .**
4	Fluid Pump Seal Assembly **CAUTION:** **Use care when removing the seal assemblies to avoid damaging the valve body seal bores.** **CAUTION:** **Refer to Seal Reuse Caution .**
5	Center Support Fluid Passage Seal Assembly **CAUTION:** **Use care when removing the seal assemblies to avoid damaging the case seal bores.** **CAUTION:** **Refer to Seal Reuse Caution .**

TORQUE CONVERTER HOUSING WITH FLUID PUMP REMOVAL

cardiagn.com

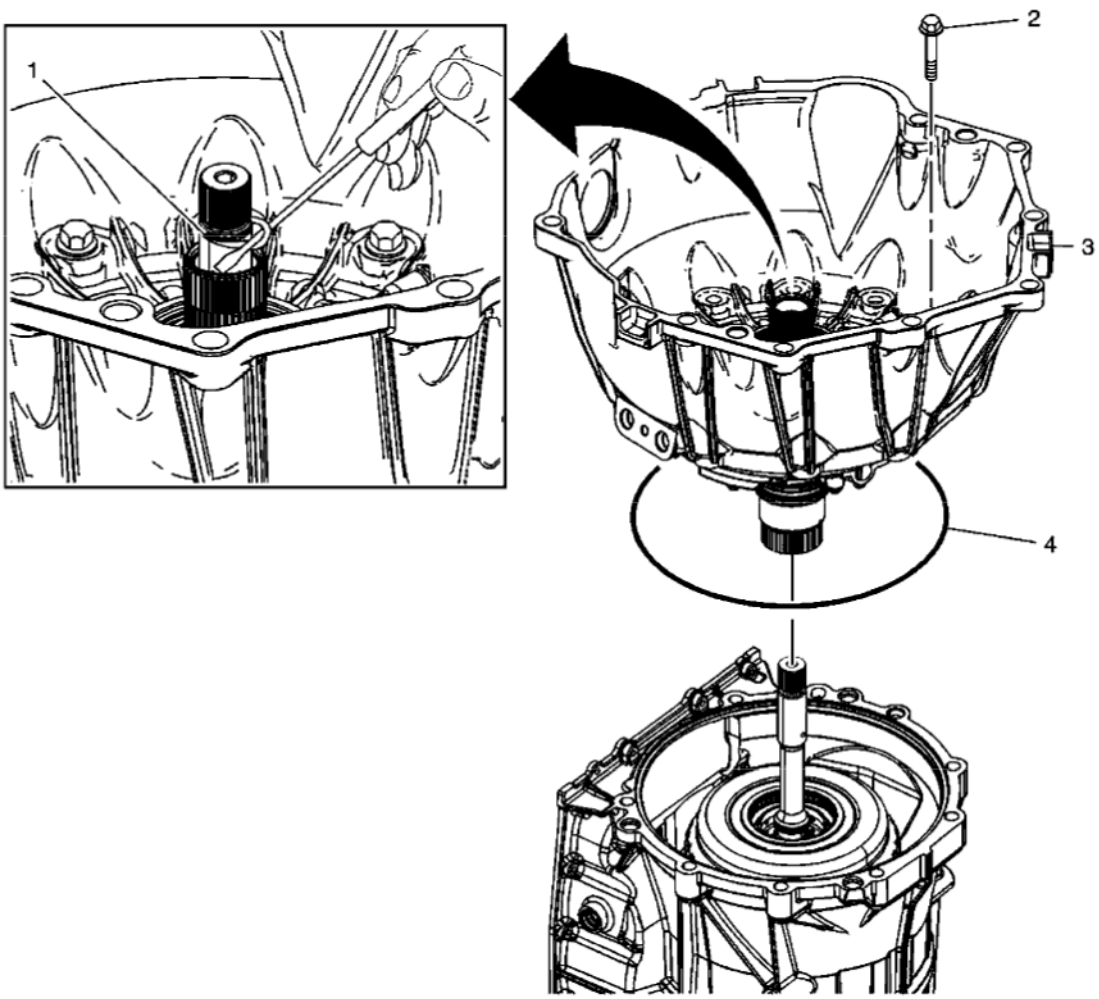

Fig. 10: Torque Converter Housing With Fluid Pump
Courtesy of GENERAL MOTORS CORP.

Callout	Component Name
CAUTION: **The valve body assembly must be removed prior to removing the torque converter (with fluid pump) housing assembly. Failure to ensure this will cause severe damage to both fluid pump seal assemblies. Also, the load of the valve body pushing on the seals, which in turn push on the pump, may prevent proper pump installation into the case. Refer to control valve body assembly removal.**	
1	Turbine Shaft (O-ring) Seal
2	Bolt **Tip:** • 6L50 Bolt M8 x 1.25 x 50 (Qty: 8) • 6L80 Bolt M10 x 1.5 x 50 (Qty: 9)
3	Torque Converter (With Fluid Pump) Housing Assembly

cardiagn.com

4	Fluid Pump Seal

1-2-3-4 AND 3-5 REVERSE CLUTCH ASSEMBLY AND 4-5-6 CLUTCH ASSEMBLY REMOVAL (6L50/80/90)

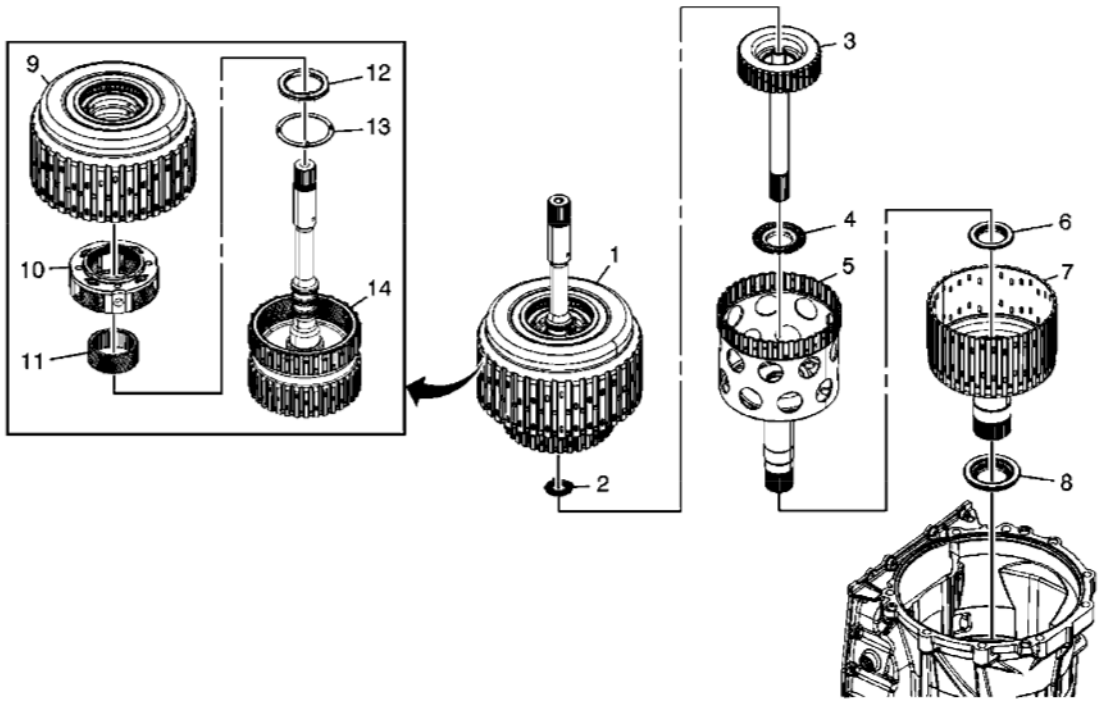

Fig. 11: 1-2-3-4 & 3-5 Reverse Clutch Assembly & 4-5-6 Clutch Assembly (6L50/80/90)
Courtesy of GENERAL MOTORS CORP.

Callout	Component Name
1	1-2-3-4 and 3-5 Reverse Clutch Assembly and 4-5-6 (With Turbine Shaft) Clutch Assembly
2	Turbine Shaft Thrust Bearing Assembly
3	4-5-6 Clutch (With Output Carrier Shaft and Dampener) Hub Assembly
4	4-5-6 Clutch Hub Thrust Bearing Assembly
5	1-2-3-4 Clutch (With Output Carrier Inner Sun Gear Shaft) Hub Assembly
6	1-2-3-4 Clutch Hub Thrust Bearing Assembly
7	2-6 and 3-5 Reverse Clutch (With Output Carrier Outer Sun Gear Shaft) Hub Assembly
8	2-6 and 3-5 Reverse Clutch Hub Thrust Bearing Assembly
9	1-2-3-4 and 3-5 Reverse Clutch Assembly
10	Input Carrier Assembly
11	Input Sun Gear
12	Input Sun Gear Thrust Bearing

cardiagn.com

13	Input Sun Gear Thrust Washer
14	4-5-6 (With Turbine Shaft) Clutch Assembly

CENTER SUPPORT, OUTPUT CARRIER AND OUTPUT SHAFT REMOVAL (6L50)

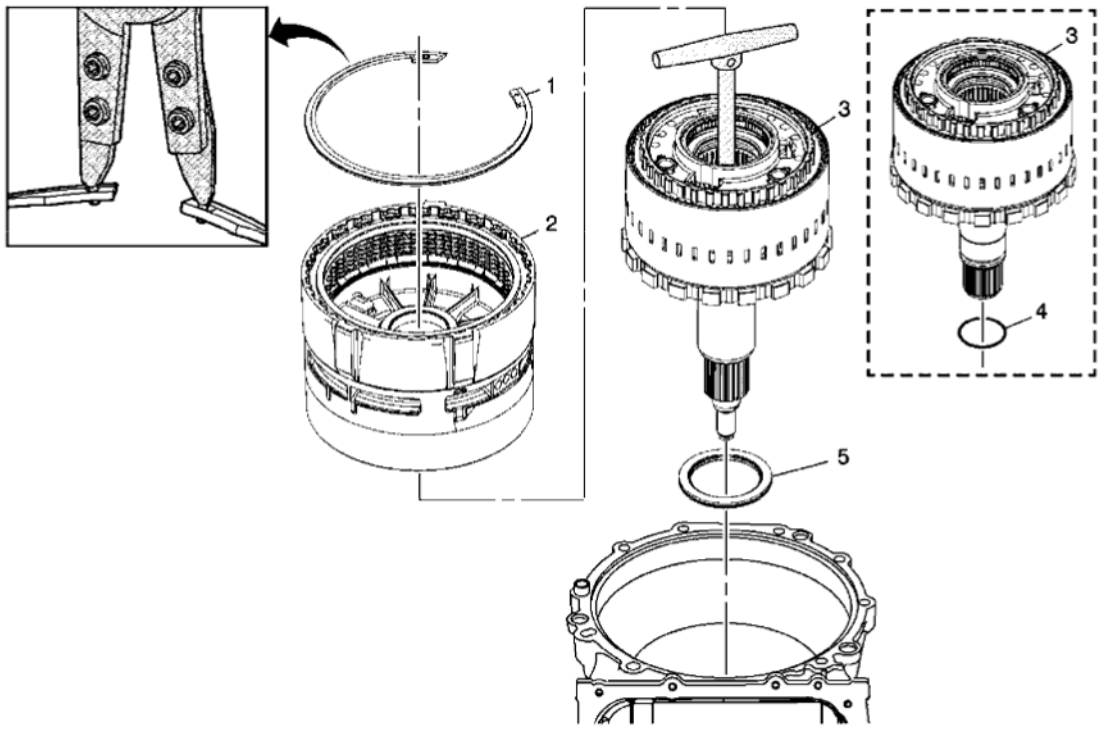

Fig. 12: Center Support, Output Carrier & Output Shaft (6L50)
Courtesy of GENERAL MOTORS CORP.

Callout	Component Name
1	Center Support Retaining Ring **WARNING:** **Use care when removing or installing the retaining ring. Ensure the J 45126 is installed properly onto the retaining ring or bodily injury may occur.** **Tip:** To release tension on the retaining ring, place the retaining ring flat on the floor and step on it, then remove the tool. **Special Tool:** **J 45126:** Snap Ring Pliers For equivalent regional tools, refer to **Special Tools** .
2	Center (with 2-6 Low and Reverse Clutch) Support Assembly
	Output Carrier Assembly and Output Shaft Assembly

cardiagn.com

3	**CAUTION:** **Ensure the DT 47786 is completely threaded into the output shaft assembly. Due to the weight of the assembly, incomplete threading may cause the assembly to break free from the DT 47786, causing component damage.** **Special Tool:** **DT 47786:** Output Carrier/Shaft Lifting Tool For equivalent regional tools, refer to **Special Tools** .
4	Output Shaft Thrust Bearing Assembly

CENTER SUPPORT, OUTPUT CARRIER AND OUTPUT SHAFT REMOVAL (6L80)

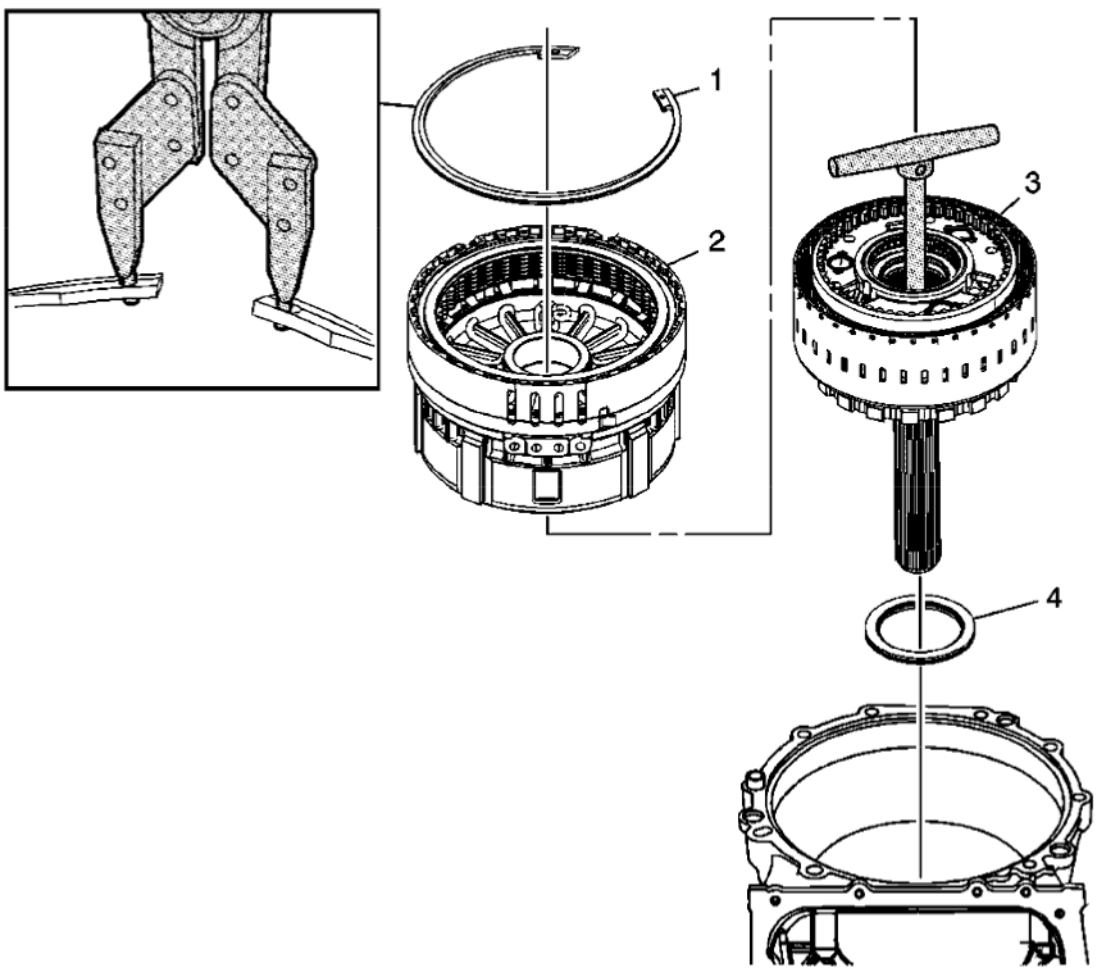

Fig. 13: Center Support, Output Carrier & Output Shaft (6L80)
Courtesy of GENERAL MOTORS CORP.

Callout	Component Name

cardiagn.com

1	Center Support Retaining Ring **WARNING:** **Use care when removing or installing the retaining ring. Ensure the J 45126 and DT 47773 are installed properly onto the retaining ring or bodily injury may occur.** **Tip:** To release tension on the retaining ring, place the retaining ring flat on the floor and step on it, then remove the tool. **Special Tools** • **DT 47773** Snap Ring Pliers Adapter Set. See **Special Tools** . • **J 45126** Snap Ring Pliers. See **Special Tools** .
2	Center (with 2-6 Low and Reverse Clutch) Support Assembly
3	Output Carrier Assembly and Output Shaft Assembly **CAUTION:** **Ensure the DT 47786 is completely threaded into the output shaft assembly. Due to the weight of the assembly, incomplete threading may cause the assembly to break free from the DT 47786, causing component damage.** **Special Tool:** **DT 47786** Output Carrier/Shaft Lifting Tool. See **Special Tools** .
4	Output Shaft Thrust Bearing Assembly

MANUAL SHIFT SHAFT AND PARKING SYSTEM COMPONENTS OVERHAUL (6L50)

cardiagn.com

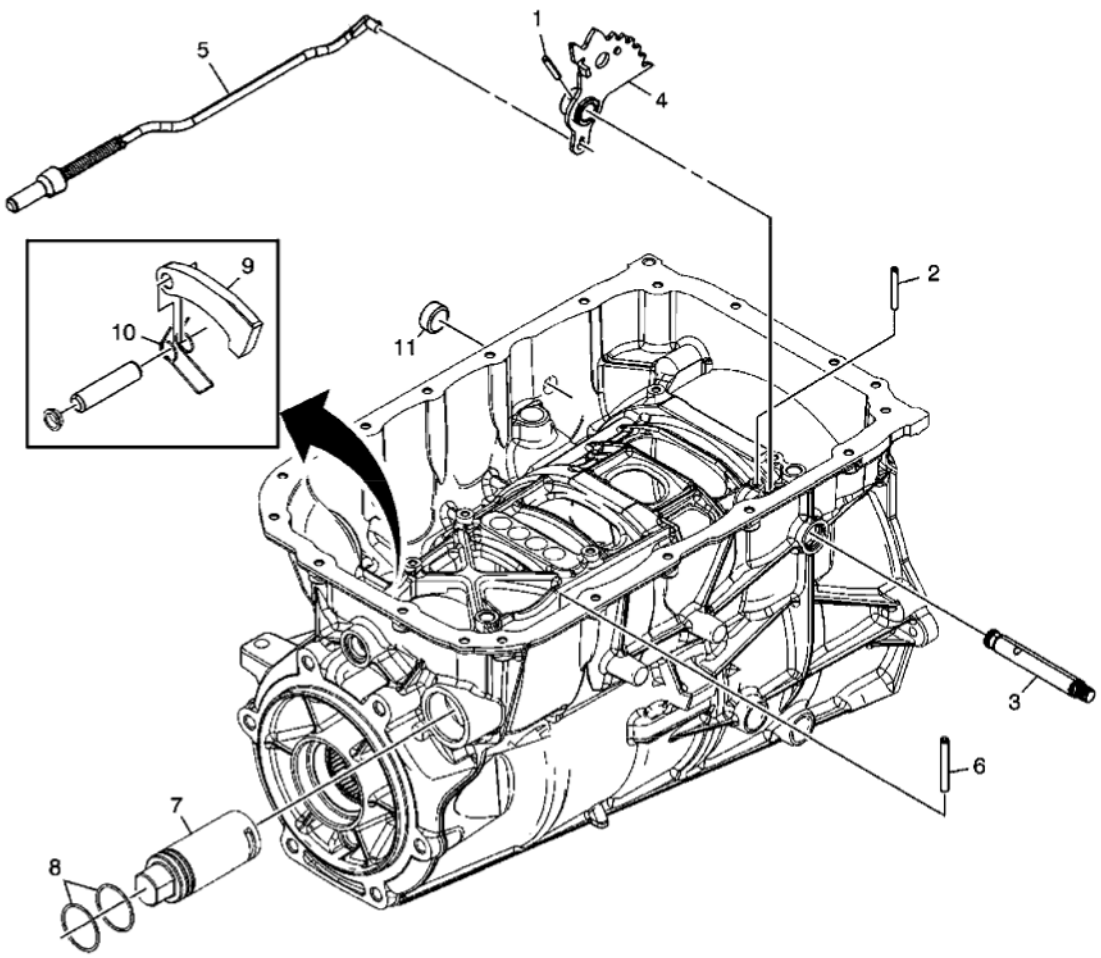

Fig. 14: Manual Shift Shaft & Parking System Components (6L50)
Courtesy of GENERAL MOTORS CORP.

Callout	Component Name
1	Manual Shaft Detent Lever Hub Pin **CAUTION:** **Refer to Pin Reuse Caution .**
2	Manual Shift Shaft Pin **CAUTION:** **Refer to Pin Reuse Caution .**
3	Manual Shift Shaft **CAUTION:** **Install the gear flat side down. Failure to install the gear flat side down may result in transmission damage.**

cardiagn.com

	Tip: Refer to **Manual Shift Shaft Seal Replacement**.
4	Manual Shaft Detent Lever Assembly
5	Park Pawl Actuator Assembly
6	Park Pawl Actuator Guide Pin **CAUTION:** **Refer to Pin Reuse Caution .** **Tip:** Use a large pair of side cutters to "walk" the pin out.
7	Park Pawl Actuator Guide
8	Park Pawl Actuator Guide (O-ring) Seals **CAUTION:** **Refer to Seal Reuse Caution .**
9	Park Pawl **Tip:** Inspect for damage only. Do not remove. The park pawl is not a serviceable component.
10	Park Pawl Spring **Tip:** Inspect for damage only. Do not remove. The park pawl spring is not a serviceable component.
11	Manual Shift Shaft Hole Plug **Tip:** Press plug to seat. Ensure plug is installed evenly.

MANUAL SHIFT SHAFT AND PARKING SYSTEM COMPONENTS OVERHAUL (6L80/6L90)

cardiagn.com

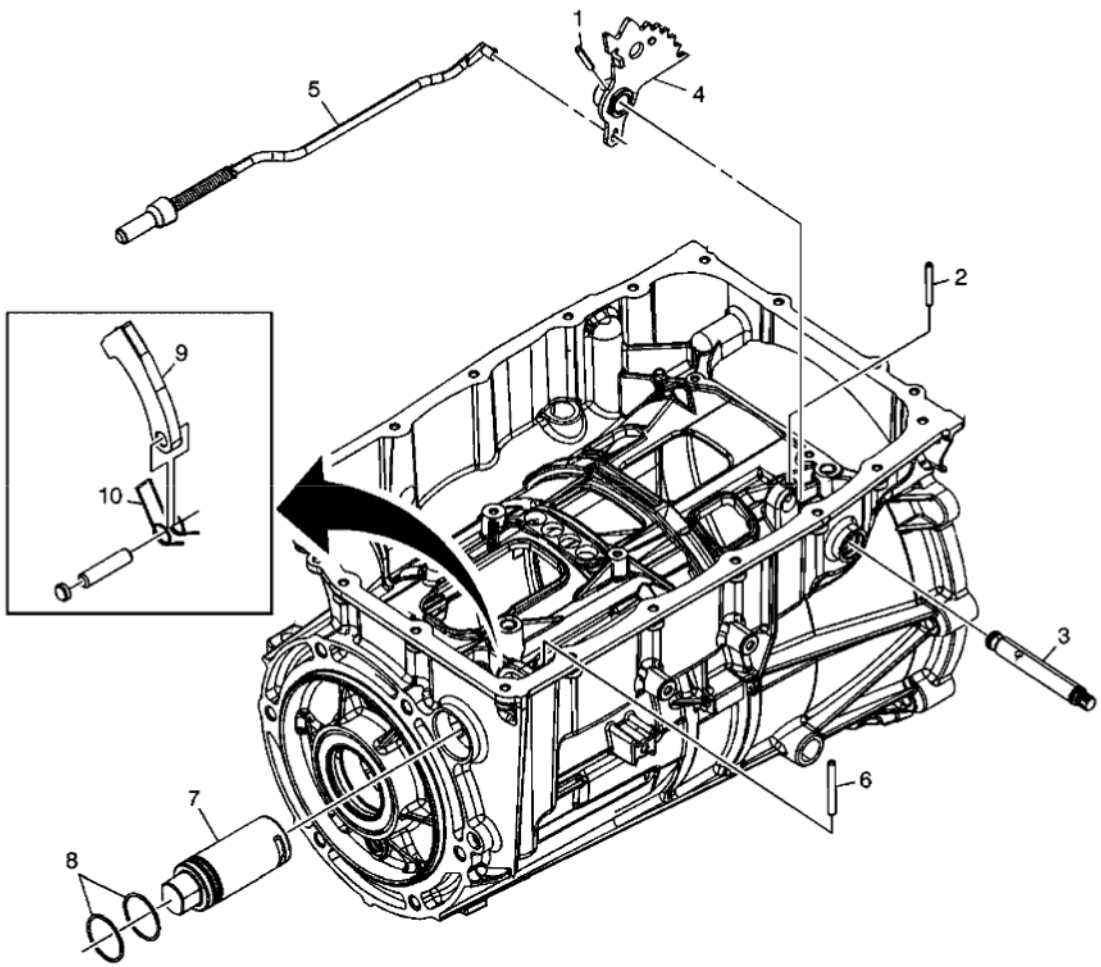

Fig. 15: Manual Shift Shaft & Parking System Components (6L80/6L90)
Courtesy of GENERAL MOTORS CORP.

Callout	Component Name
1	Manual Shaft Detent Lever Hub Pin **CAUTION:** **Refer to Pin Reuse Caution .**
2	Manual Shift Shaft Pin **CAUTION:** **Refer to Pin Reuse Caution .**
3	Manual Shift Shaft **CAUTION:** **Install the gear flat side down. Failure to install the gear flat side down may result in transmission damage.**

cardiagn.com

	Tip: Refer to **Manual Shift Shaft Seal Replacement**.
4	Manual Shaft Detent Lever Assembly
5	Park Pawl Actuator Assembly
6	Park Pawl Actuator Guide Pin **CAUTION:** **Refer to Pin Reuse Caution .** **Tip:** Use a large pair of side cutters to "walk" the pin out.
7	Park Pawl Actuator Guide
8	Park Pawl Actuator Guide (O-ring) Seals **CAUTION:** **Refer to Seal Reuse Caution .**
9	Park Pawl **Tip:** Inspect for damage only. Do not remove. The park pawl is not a serviceable component.
10	Park Pawl Spring **Tip:** Inspect for damage only. Do not remove. The park pawl spring is not a serviceable component.

MANUAL SHIFT SHAFT SEAL REPLACEMENT

cardiagn.com

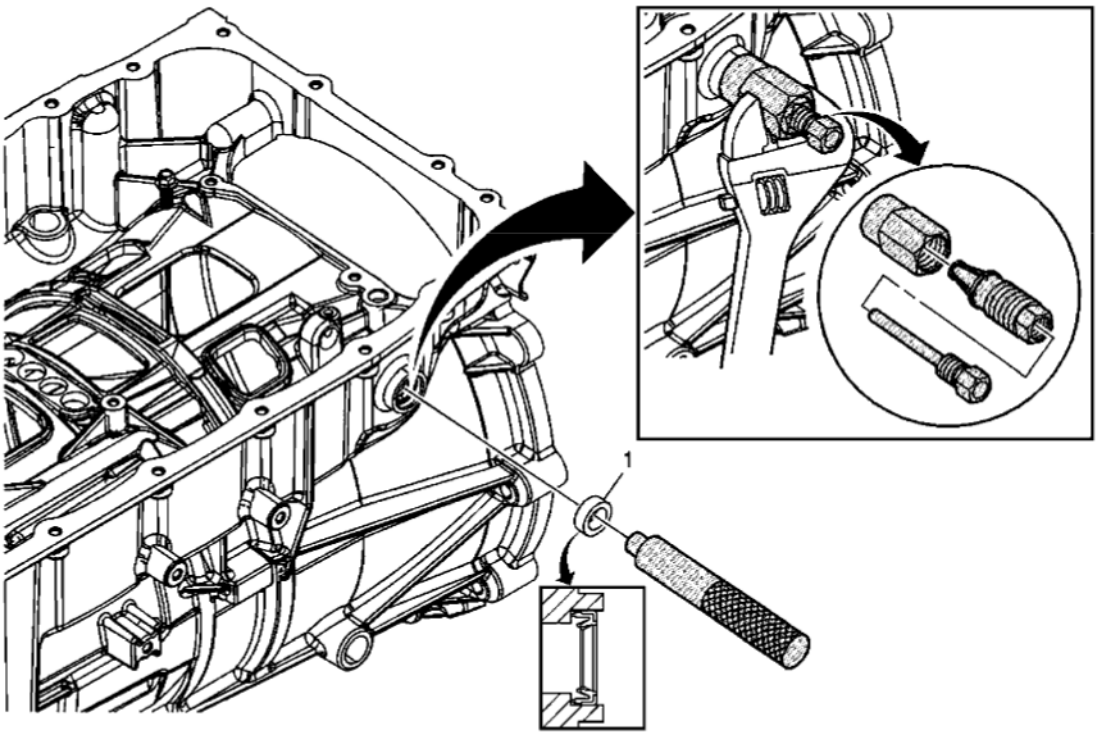

Fig. 16: Manual Shift Shaft Seal
Courtesy of GENERAL MOTORS CORP.

Callout	Component Procedure
	Manual Shift Shaft Seal **CAUTION:** **Do not damage the case bore during removal of the manual shift shaft seal.** **CAUTION:** **When installing the seal, ensure the seal lip is firmly seated against the case bore surface. Do not allow the seal lip to be crushed, or a leak may result.**
1	**CAUTION:** **Refer to Seal Reuse Caution .** **Special Tools** • **DT 47770:** Seal Installer • **J 45201:** Cooler Line Seal Remover For equivalent regional tools, refer to **Special Tools** .

cardiagn.com

OUTPUT SHAFT BEARING REPLACEMENT - CASE (6L50)

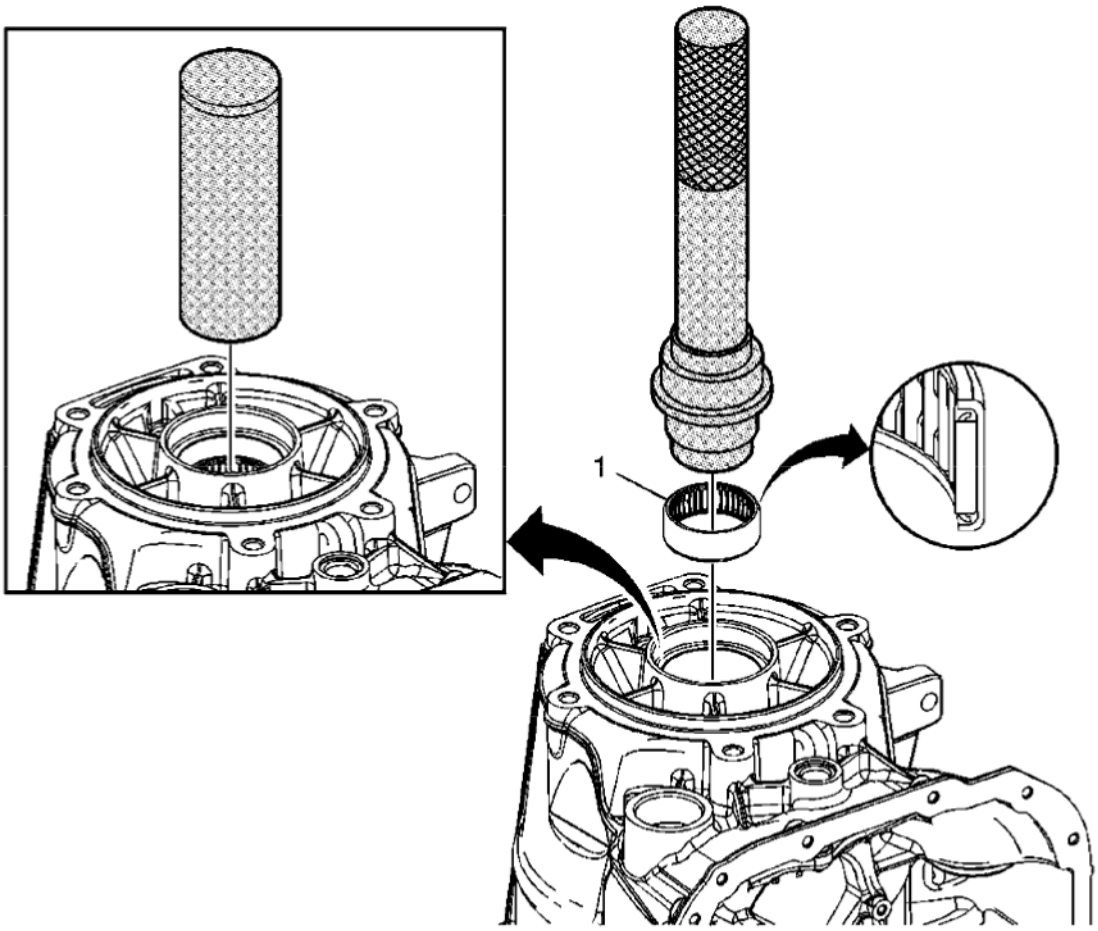

Fig. 17: Output Shaft Bearing - Case (6L50)
Courtesy of GENERAL MOTORS CORP.

Callout	Component Name
1	Output Shaft Bearing Assembly **Tip:** Use **J 35512:** bearing installer to remove the bearing and **DT 48222:** bearing installer and **J 8092:** driver handle to install the bearing. **Special Tools** • **DT 48222:** Bearing Installer • **J 8092:** Driver Handle • **J 35512:** Inner Pinion Bearing Installer For equivalent regional tools, refer to **Special Tools** .

cardiagn.com

CASE INSPECTION

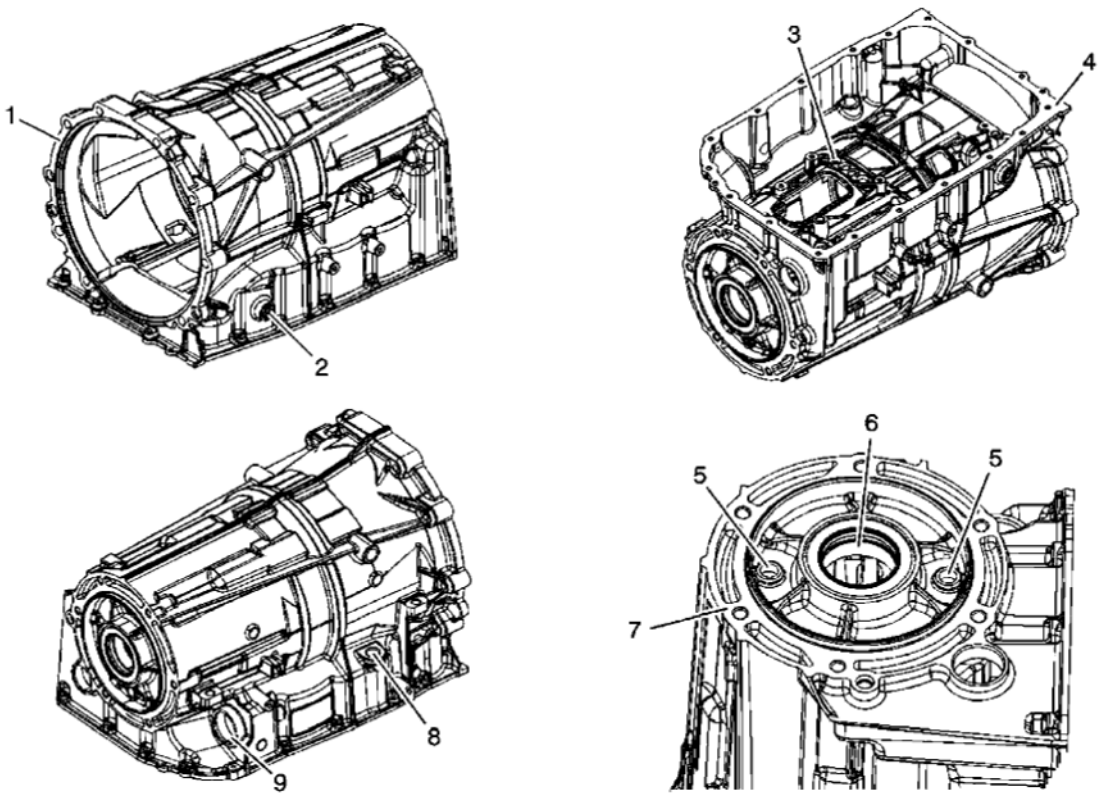

Fig. 18: Case
Courtesy of GENERAL MOTORS CORP.

Callout	Component Name
CAUTION: **After cleaning the transmission components, allow to air dry. Do not use cloth or paper towels in order to dry any transmission components. Lint from the towels can cause component failure.** **CAUTION:** **Do not reuse cleaning solvents. Previously used solvents may deposit sediment which may damage the component.** **Preliminary Procedures** 1. Thoroughly clean the transmission case assembly, including case threads, with clean solvent. 2. Clean gasket sealing surfaces. Remove all residual gasket material. 3. Inspect all threaded holes. If necessary, repair any thread damage.	
1	Front Case Sealing Surface
2	Manual Shift Shaft Seal **Tip:** Refer to **Manual Shift Shaft Seal Replacement**.

cardiagn.com

3	Center Support Fluid Passage Seal Bores
4	Fluid Pan Sealing Surface
5	Case Plugs
6	Output Shaft Bushing or Bearing (model specific)
7	Rear Case Sealing Surface
8	Fill Tube Bore
9	Electrical Connector Passage Sleeve Bore

OUTPUT SHAFT DISASSEMBLE

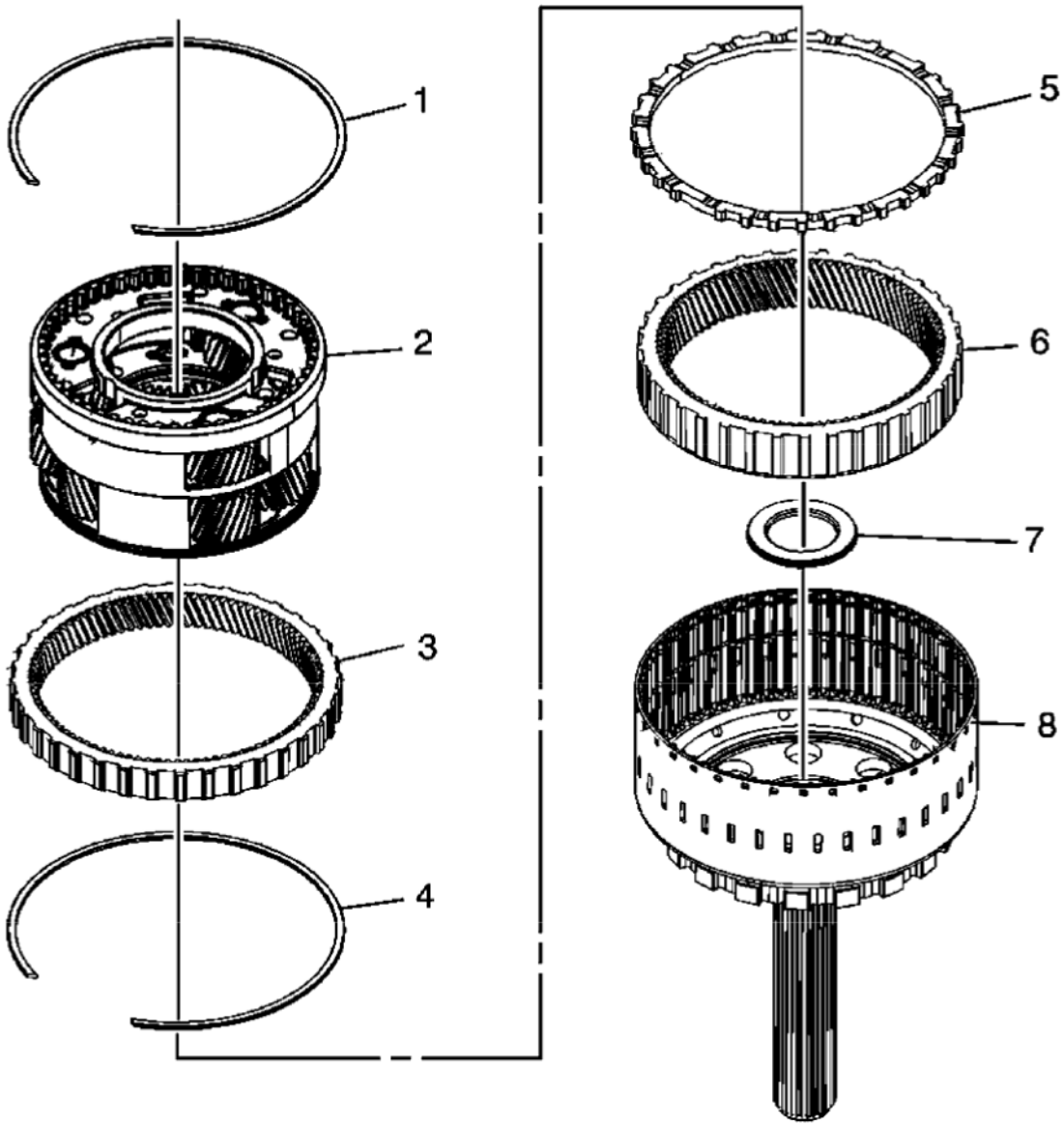

Fig. 19: Output Shaft
Courtesy of GENERAL MOTORS CORP.

cardiagn.com

Callout	Component Name
Tip: Inspect each component and replace as necessary.	
1	Output Carrier Internal Gear Retaining Ring
2	Output Carrier Assembly
3	Output Carrier Internal Front Gear
4	Output Carrier Internal Gear Retaining Ring
5	Output Carrier Internal Gear Spacer
6	Output Carrier Internal Rear Gear
7	Output Carrier Thrust Bearing Assembly
8	Output Shaft Assembly

OUTPUT SHAFT ASSEMBLE (6L50/80/90)

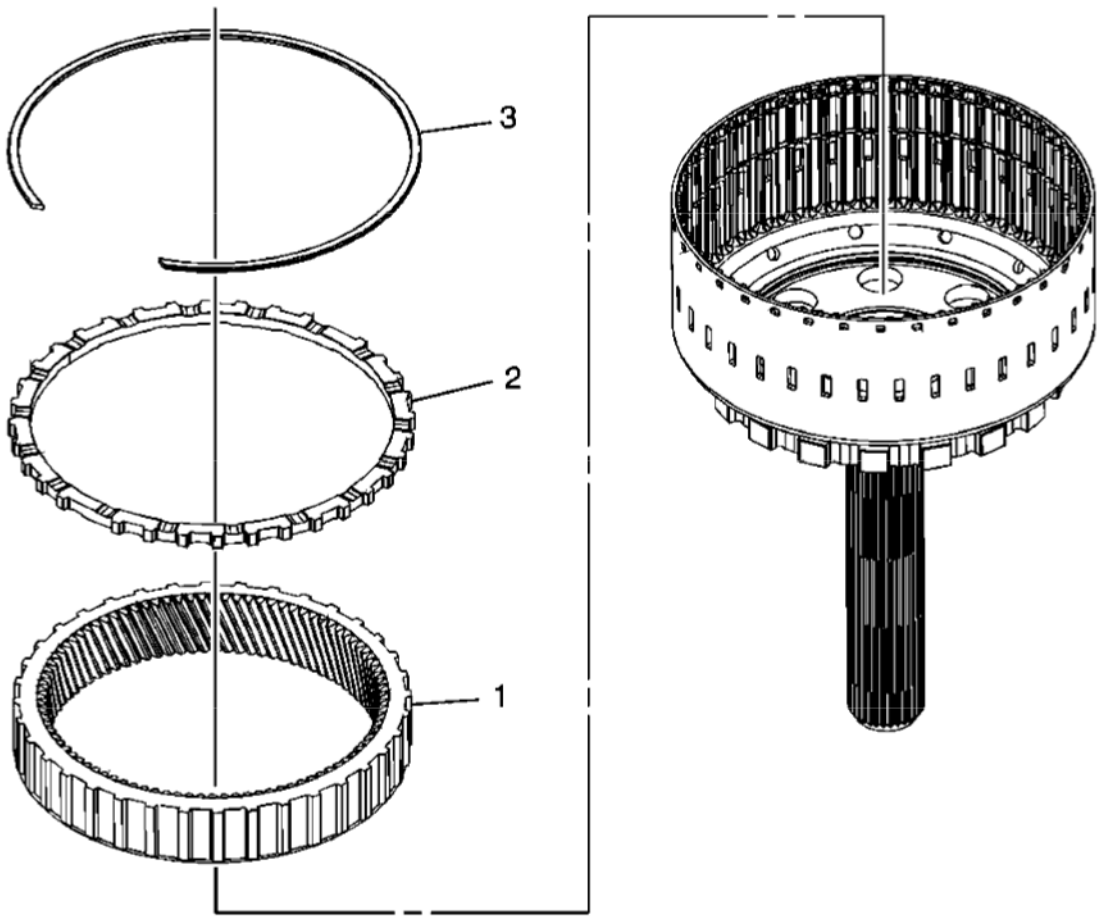

Fig. 20: Output Shaft (6L50/80/90)
Courtesy of GENERAL MOTORS CORP.

Callout	Component Name
	Output Carrier Internal Rear Gear

cardiagn.com

1	**CAUTION:** **Install the gear chamfer side down. Failure to install the gear chamfer side down may result in transmission damage.**
2	Output Gear Internal Gear Spacer
3	Output Carrier Internal Gear Retaining Ring **Tip:** Do not install the output carrier internal front gear and retaining ring yet. These components will be installed during assembly of the output carrier to the output shaft.

OUTPUT CARRIER ASSEMBLY OVERHAUL (6L50)

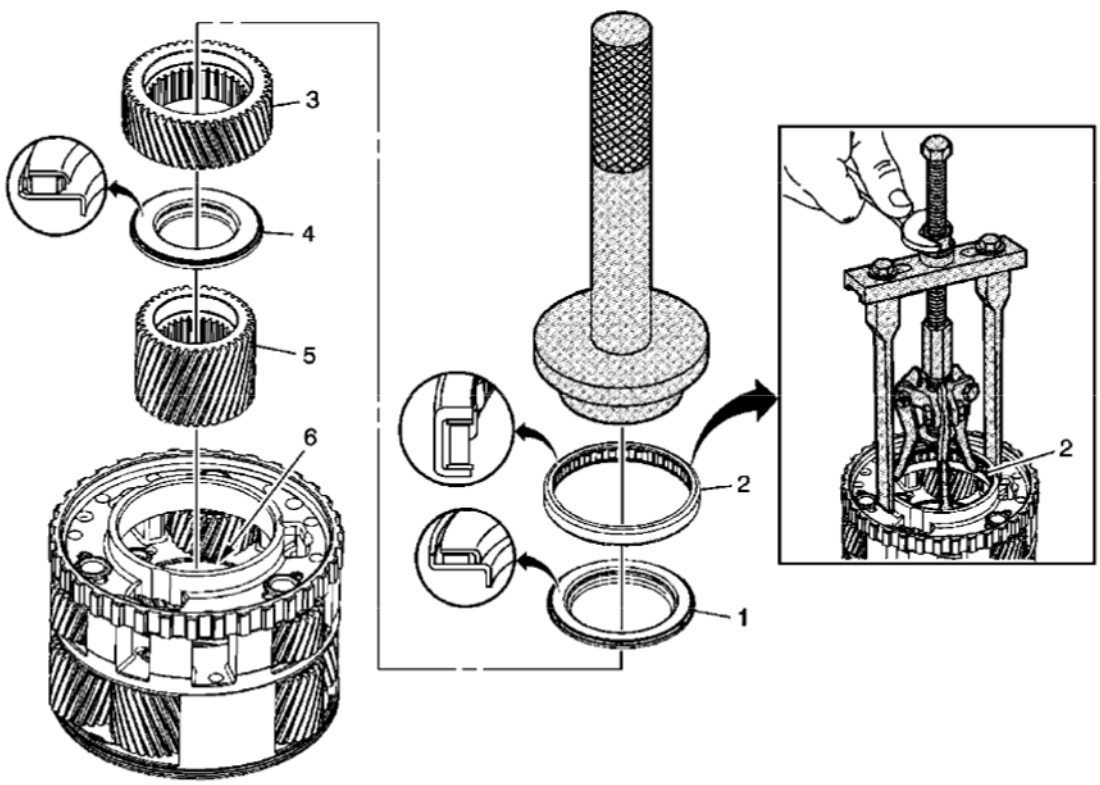

Fig. 21: Output Carrier Assembly (6L50)
Courtesy of GENERAL MOTORS CORP.

Callout	Component Name
1	Output Carrier Front Sun Gear Thrust Bearing Assembly
	Center Support Roller Bearing **CAUTION:** **Do not reuse the center support roller bearing. Install a NEW center support roller bearing. Reusing an old bearing may result in damage to the output carrier.**

cardiagn.com

2	**Tip:** The thick side of the bearing shell faces up. **Special Tools** • **DT 47857:** Bearing Installer • **DT 47865:** Bearing Remover • **J 8092:** Driver Handle • **J 45124:** Removal Bridge For equivalent regional tools, refer to **Special Tools** .
3	Output Carrier Front Sun Gear **CAUTION:** **Install the gear chamfer side up. Failure to install the gear chamfer side up may result in transmission damage.**
4	Output Carrier Front Sun Gear Rear Thrust Bearing Assembly
5	Output Carrier Rear Sun Gear **CAUTION:** **Install the gear chamfer side up. Failure to install the gear chamfer side up may result in transmission damage.**
6	Output Carrier Rear Sun Gear Bearing Assembly **Tip:** Inspect for damage only. Do not remove. The bearing assembly is not a serviceable component.

OUTPUT CARRIER ASSEMBLY OVERHAUL (6L80)

cardiagn.com

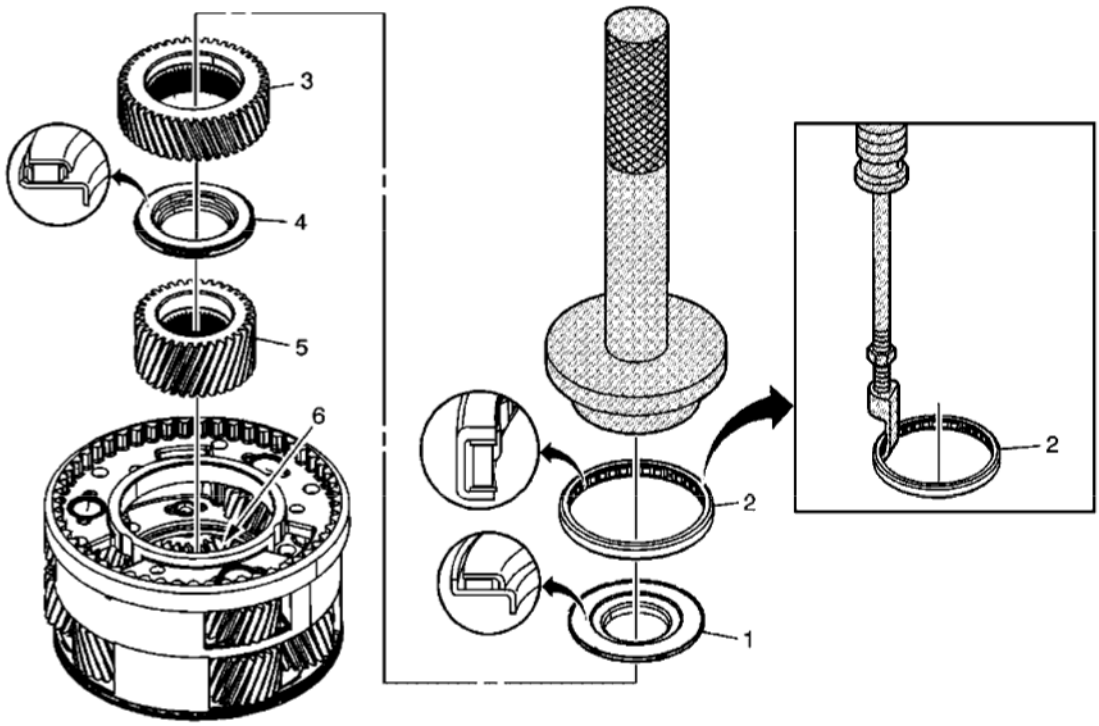

Fig. 22: Output Carrier Assembly (6L80)
Courtesy of GENERAL MOTORS CORP.

Callout	Component Name
1	Output Carrier Front Sun Gear Thrust Bearing Assembly
2	Center Support Roller Bearing **CAUTION:** **Do not reuse the center support roller bearing. Install a NEW center support roller bearing. Reusing an old bearing may result in damage to the output carrier.** **Tip:** The thick side of the bearing shell faces up. **Special Tools** • **DT 47857:** Bearing Installer • **J 6125-B:** Slide Hammer • **J 8092:** Driver Handle • **J 23129:** Universal Seal Remover For equivalent regional tools, refer to **Special Tools** .

cardiagn.com

3	Output Carrier Front Sun Gear **CAUTION:** **Install the gear chamfer side up. Failure to install the gear chamfer side up may result in transmission damage.**
4	Output Carrier Front Sun Gear Rear Thrust Bearing Assembly
5	Output Carrier Rear Sun Gear **CAUTION:** **Install the gear chamfer side up. Failure to install the gear chamfer side up may result in transmission damage.**
6	Output Carrier Rear Sun Gear Bearing Assembly **Tip:** Inspect for damage only. Do not remove. The bearing assembly is not a serviceable component.

OUTPUT CARRIER TO OUTPUT SHAFT ASSEMBLE (6L50)

cardiagn.com

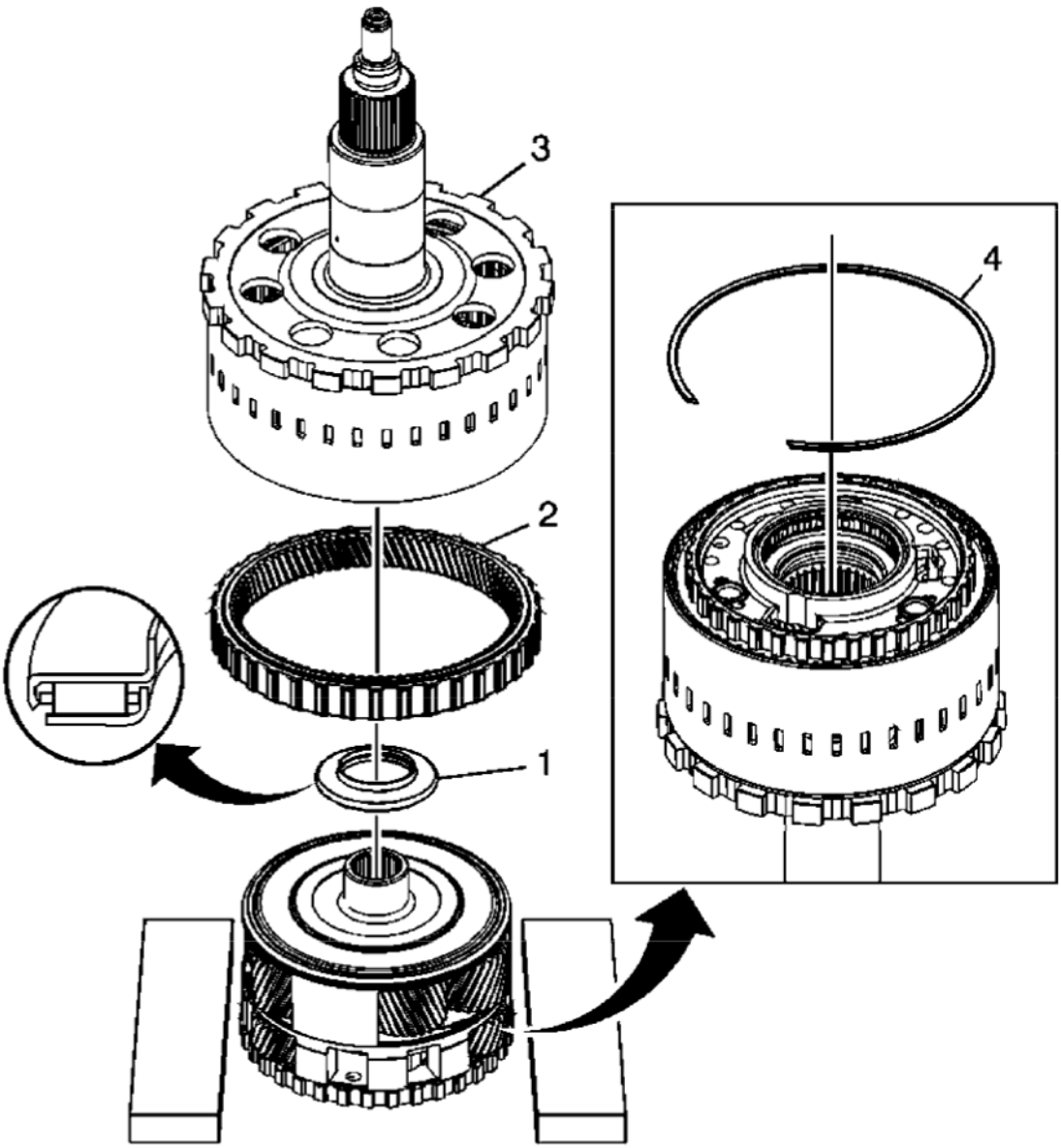

Fig. 23: Output Carrier To Output Shaft (6L50)
Courtesy of GENERAL MOTORS CORP.

Callout	Component Name
1	Output Carrier Thrust Bearing Assembly
2	Output Carrier Internal Front Gear **CAUTION:** **Install the gear flat side down. Failure to install the gear flat side down may result in transmission damage.**

cardiagn.com

	Tip: Use 2 small blocks next to the output carrier assembly in order to keep the internal front gear engaged with the front pinion gears.
3	Output Shaft Assembly
4	Output Carrier Internal Gear Retaining Ring **Tip:** Grasp the output shaft and carrier with both hands to turn over.

OUTPUT CARRIER TO OUTPUT SHAFT ASSEMBLE (6L80/6L90)

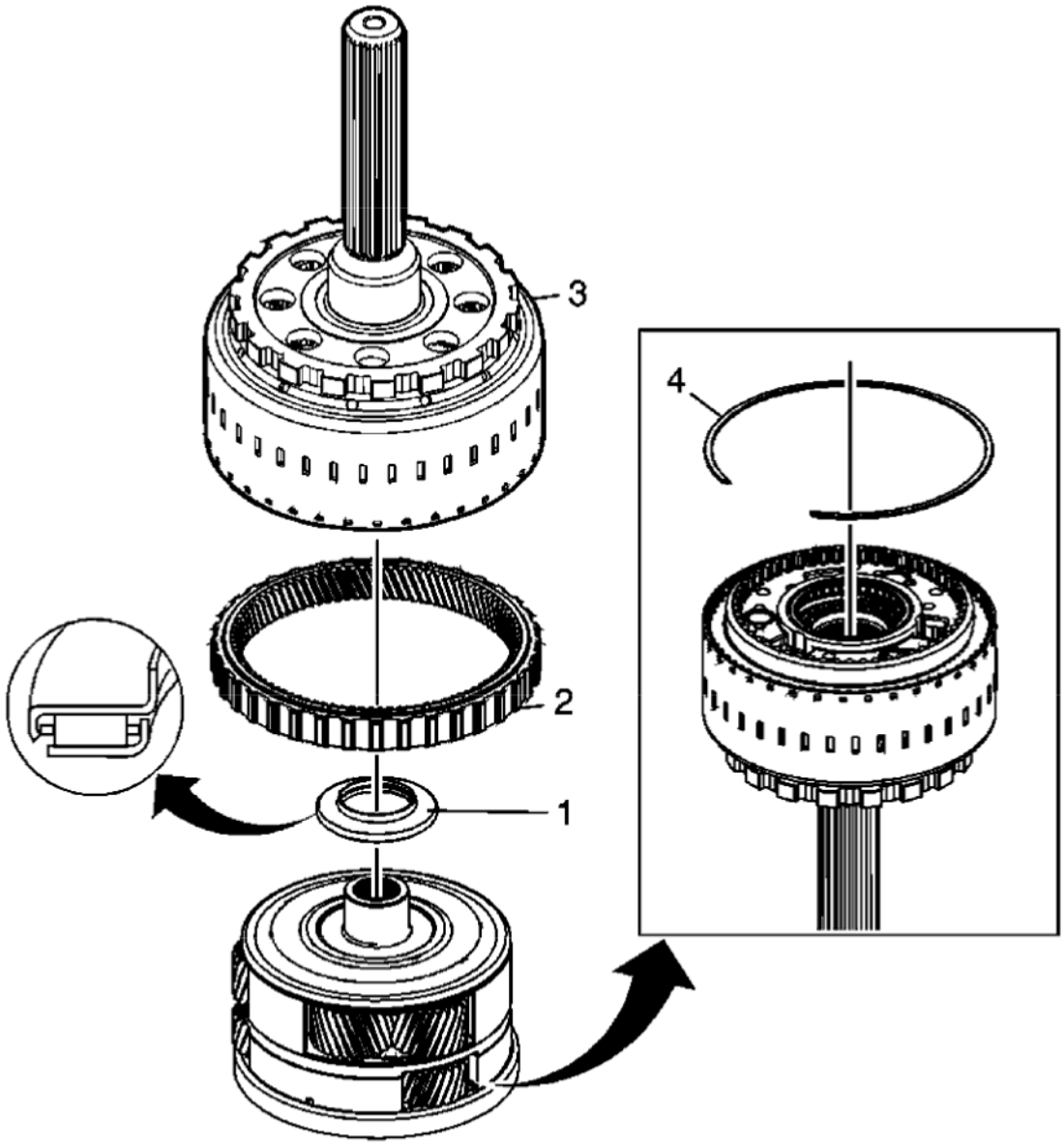

Fig. 24: Output Carrier To Output Shaft (6L80/6L90)
Courtesy of GENERAL MOTORS CORP.

cardiagn.com

Callout	Component Name
1	Output Carrier Thrust Bearing Assembly
2	Output Carrier Internal Front Gear **CAUTION:** **Install the gear flat side down. Failure to install the gear flat side down may result in transmission damage.**
3	Output Shaft Assembly
4	Output Carrier Internal Gear Retaining Ring **Tip:** Grasp the output shaft and carrier with both hands to turn over.

2-6 CLUTCH OVERHAUL (6L50)

2-6 Clutch Plates Removal

cardiagn.com

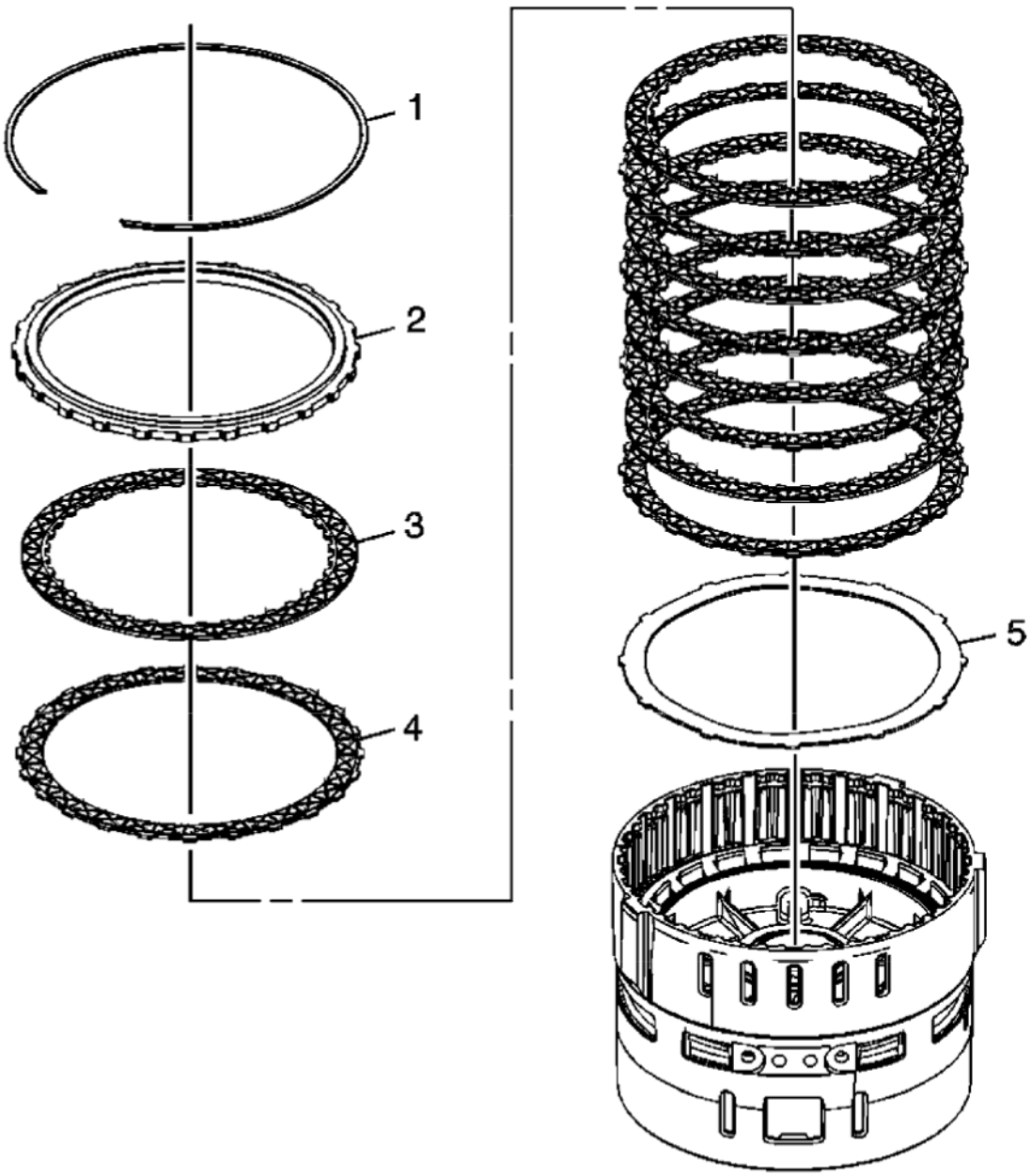

Fig. 25: 2-6 Clutch Plates
Courtesy of GENERAL MOTORS CORP.

Callout	Component Name
1	2-6 Clutch Backing Plate Retaining Ring
2	2-6 Clutch Backing Plate
3	2-6 Clutch Plate Assembly (Qty: 5)
4	2-6 Clutch Plate (Qty: 5)
5	2-6 Clutch (Waved) Plate

cardiagn.com

2-6 Clutch Piston Replacement

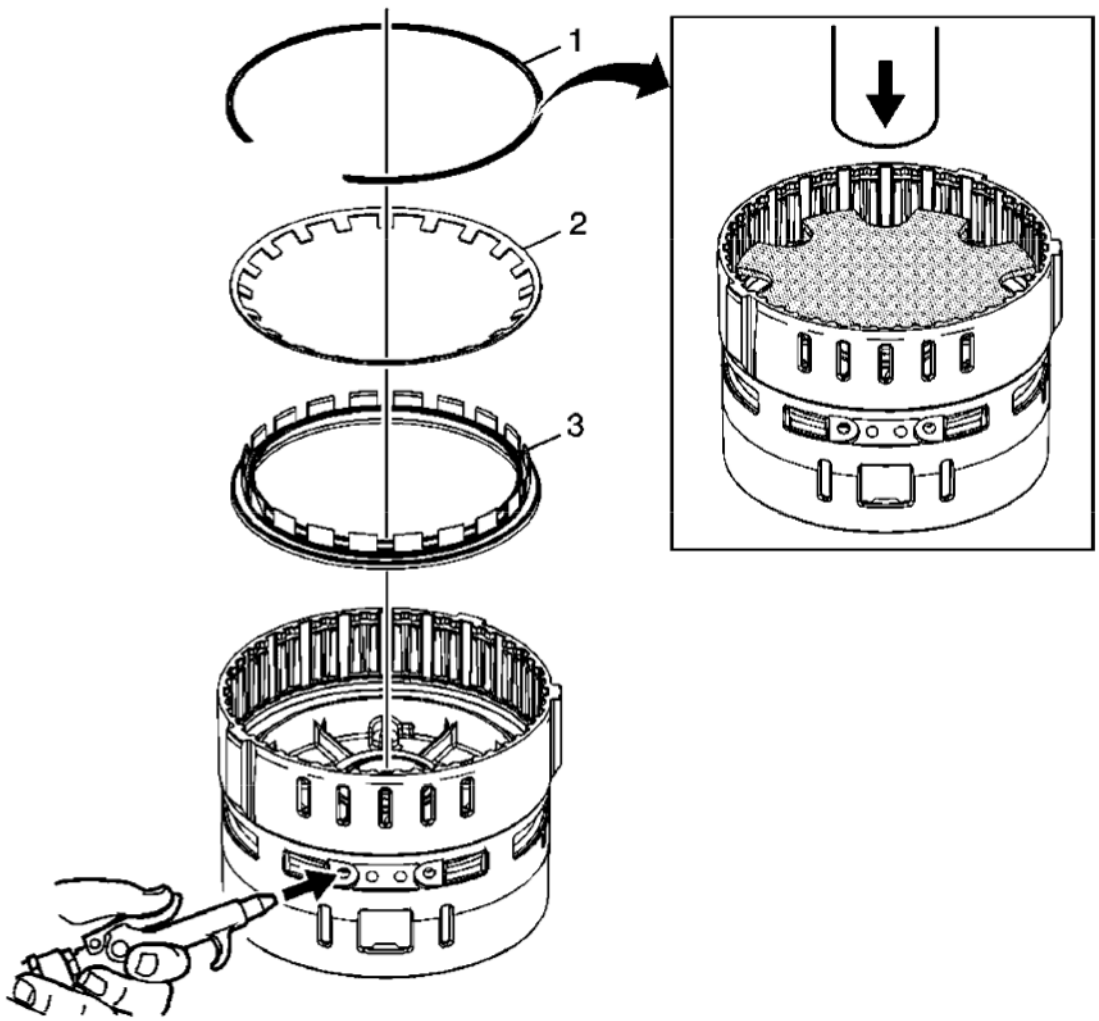

Fig. 26: 2-6 Clutch Piston
Courtesy of GENERAL MOTORS CORP.

Callout	Component Name
1	2-6 Clutch Spring Retaining Ring **Tip:** Ensure the **DT-48065:** spring compressor is centered over the clutch spring. **Special Tool:** **DT-48065:** Clutch Spring Compressor For equivalent regional tools, refer to **Special Tools** .
2	2-6 Clutch Spring **CAUTION:** **Ensure the spring tabs are facing down during installation and that the tabs fit between the teeth on the piston. Failure to do so may cause damage to the clutch**

cardiagn.com

	assembly.
3	2-6 Clutch Piston Assembly **Tip:** It may be necessary to apply air to the apply passage in order to unseat the piston.

2-6 Clutch Plates Installation

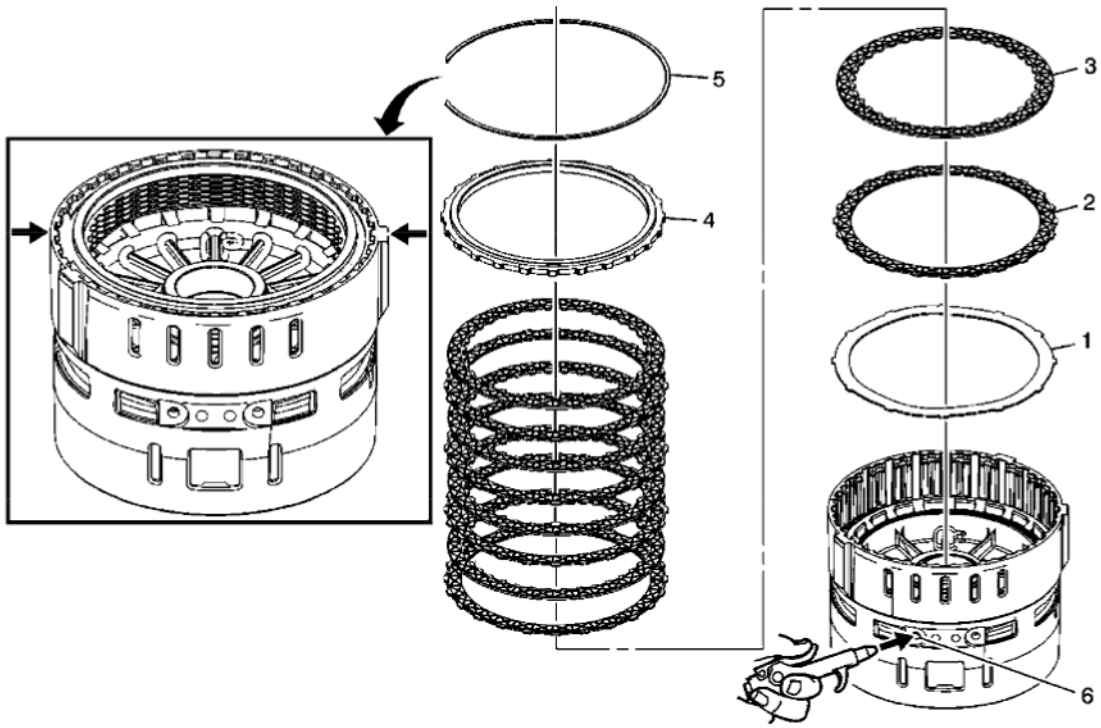

Fig. 27: 2-6 Clutch Plates
Courtesy of GENERAL MOTORS CORP.

Callout	Component Name
1	2-6 Clutch (Waved) Plate
2	2-6 Clutch Plates (Qty: 5) **Tip:** Alternate between steel and fiber clutch plates.
3	2-6 Clutch Plate Assembly (Qty: 5) **Tip:** Alternate between steel and fiber clutch plates.
4	2-6 Clutch Backing Plate
5	2-6 Clutch Backing Plate Retaining Ring **CAUTION:** **When installed, the open end of the snap ring must orient away from the slotted and scalloped areas of the center support assembly. Ideal orientation location should be at the 3 o'clock or 9 o'clock position of the center support, when facing the pan side of the case. Orienting the snap ring opening with either the scalloped or slotted areas of the center support may cause transmission damage.**

cardiagn.com

	Procedure: Be sure to install the retaining ring gap at the 9 o'clock or 3 o'clock position, as indicated by the arrows.
6	2-6 Clutch Apply Passage **Tip:** Apply air to verify proper installation of all 2-6 clutch components.

2-6 CLUTCH OVERHAUL (6L80)

2-6 Clutch Plates Removal

cardiagn.com

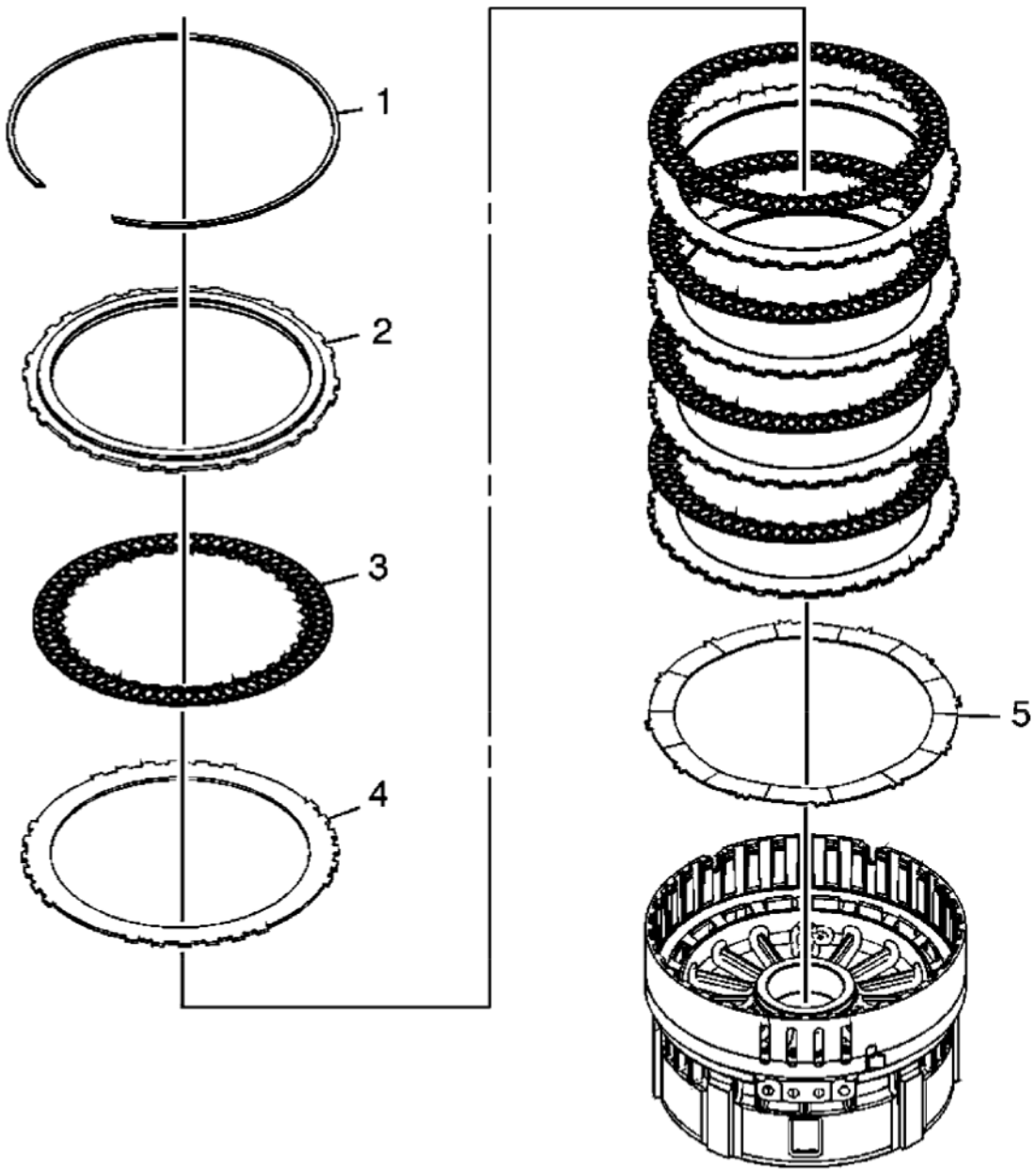

Fig. 28: 2-6 Clutch (6L80)
Courtesy of GENERAL MOTORS CORP.

Callout	Component Name
1	2-6 Clutch Backing Plate Retaining Ring
2	2-6 Clutch Backing Plate
3	2-6 Clutch Plate Assembly (Qty: 5)
4	2-6 Clutch Plate (Qty: 5)
5	2-6 Clutch (Waved) Plate

cardiagn.com

2-6 Clutch Piston Replacement

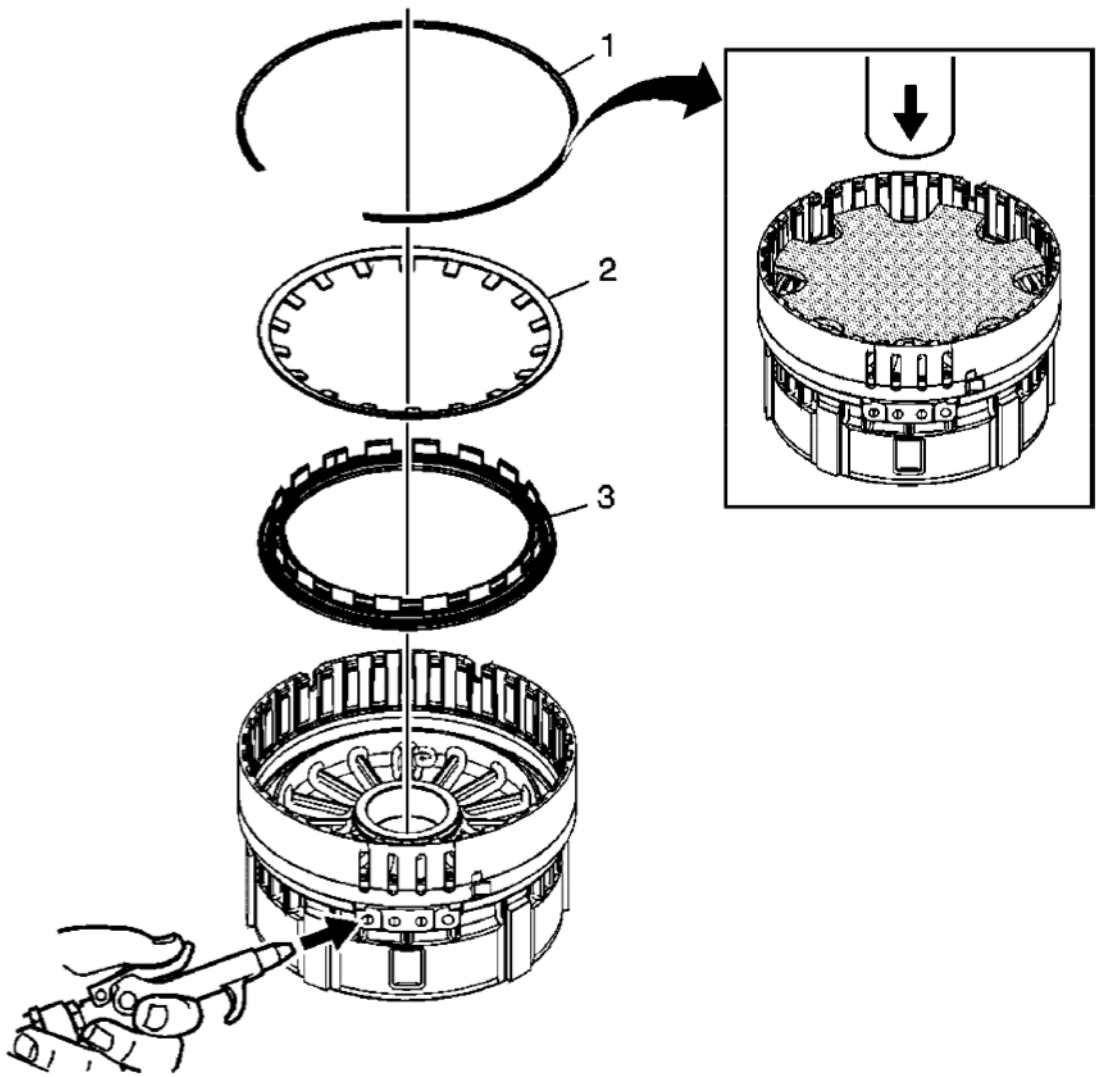

Fig. 29: 2-6 Clutch Piston
Courtesy of GENERAL MOTORS CORP.

Callout	Component Name
1	2-6 Clutch Spring Retaining Ring **Tip:** Ensure the **DT 47761:** spring compressor is centered over the clutch spring. **Special Tool:** **DT 47761:** Clutch Spring Compressor For equivalent regional tools, refer to **Special Tools** .
2	2-6 Clutch Spring **CAUTION:** **Ensure the spring tabs are facing down during installation and that the tabs fit**

cardiagn.com

	between the teeth on the piston. Failure to do so may cause damage to the clutch assembly.
3	2-6 Clutch Piston Assembly **Tip:** It may be necessary to apply air to the apply passage in order to unseat the piston.

2-6 Clutch Plates Installation

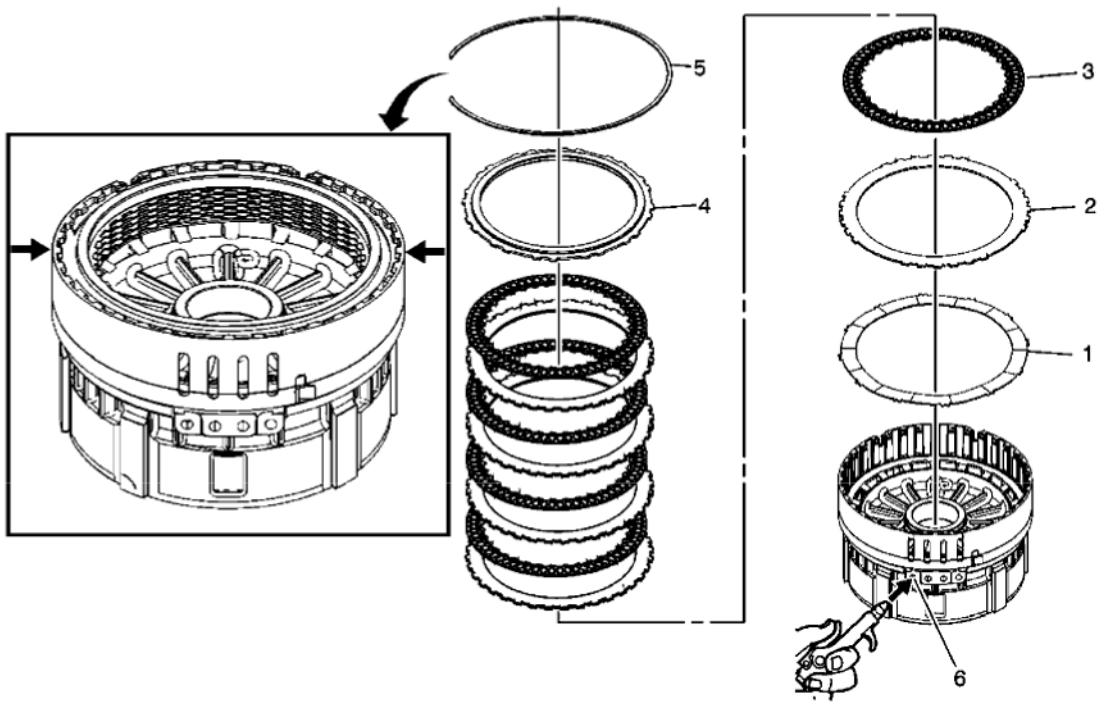

Fig. 30: 2-6 Clutch Plates
Courtesy of GENERAL MOTORS CORP.

Callout	Component Name
1	2-6 Clutch (Waved) Plate
2	2-6 Clutch Plates (Qty: 5) **Tip:** Alternate between steel and fiber clutch plates.
3	2-6 Clutch Plate Assembly (Qty: 5) **Tip:** Alternate between steel and fiber clutch plates.
4	2-6 Clutch Backing Plate
5	2-6 Clutch Backing Plate Retaining Ring **CAUTION:** **When installed, the open end of the snap ring must orient away from the slotted and scalloped areas of the center support assembly. Ideal orientation location should be at the 3 o'clock or 9 o'clock position of the center support, when facing the pan side of the case. Orienting the snap ring opening with either the scalloped or slotted**

cardiagn.com

	areas of the center support may cause transmission damage. **Procedure:** Be sure to install the retaining ring gap at the 9 o'clock or 3 o'clock position, as indicated by the arrows.
6	2-6 Clutch Apply Passage **Tip:** Apply air to verify proper installation of all 2-6 clutch components.

2-6 CLUTCH BACKING PLATE RETAINING RING MEASUREMENT (6L50)

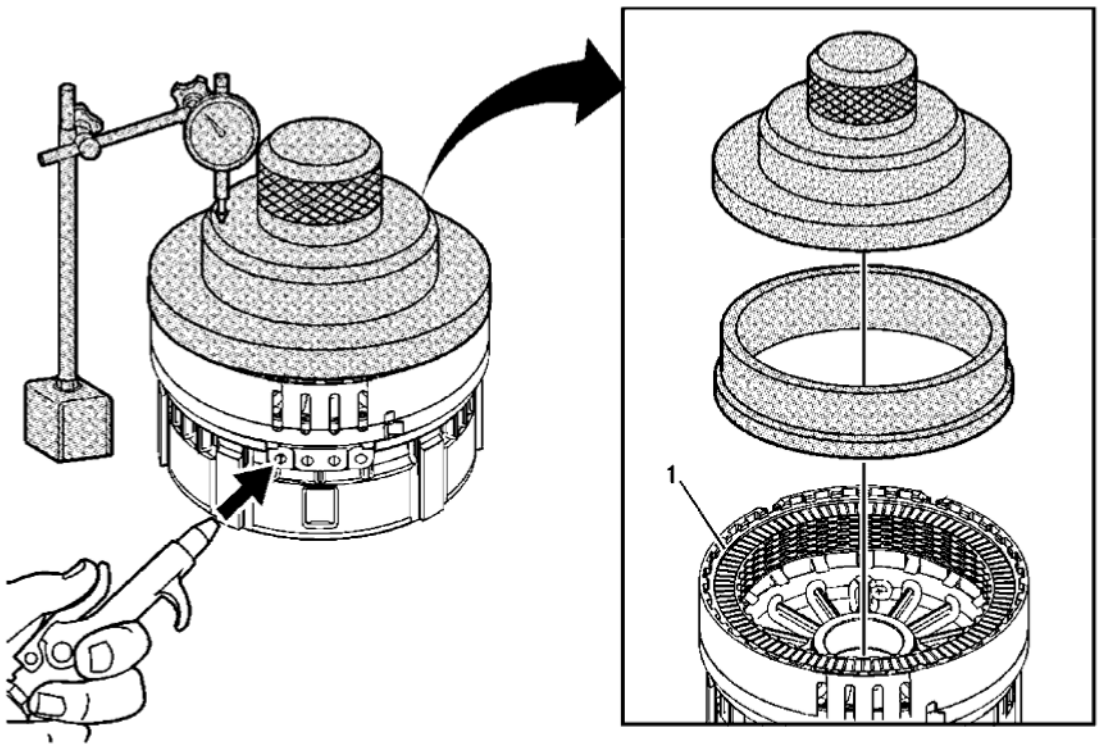

Fig. 31: Measuring 2-6 Clutch Backing Plate Retaining Ring (6L50)
Courtesy of GENERAL MOTORS CORP.

Callout	Component Name
Preliminary Procedures 1. Install **DT 47868-1:** clutch pack travel weight and **DT-47868-4:** travel weight adapter onto the 2-6 clutch backing plate. 2. Attach the **J 8001:** dial indicator set to the **J 26900-13:** magnetic base and zero out the dial indicator on the **DT 47868-1:** clutch pack travel weight. **Special Tools**	

cardiagn.com

- **DT 47868-1:** Clutch Pack Travel Weight
- **DT-47868-4:** Clutch Travel Weight Adapter
- **J 8001:** Dial Indicator Set
- **J 26900-13:** Magnetic Base

For equivalent regional tools, refer to **Special Tools** .

1	2-6 Clutch Apply Passage **Tip:** Apply compressed air to the apply passage hole, at least 3 times and observe the dial indicator measurement each time. This action "fluffs" the clutch plates to ensure an accurate measurement. Refer to **Clutch Backing Plate Retaining Ring Specifications (6L50)** or **Clutch Backing Plate Retaining Ring Specifications (6L80)** .

LOW AND REVERSE CLUTCH OVERHAUL (6L50)

Low and Reverse Clutch Plate Removal

cardiagn.com

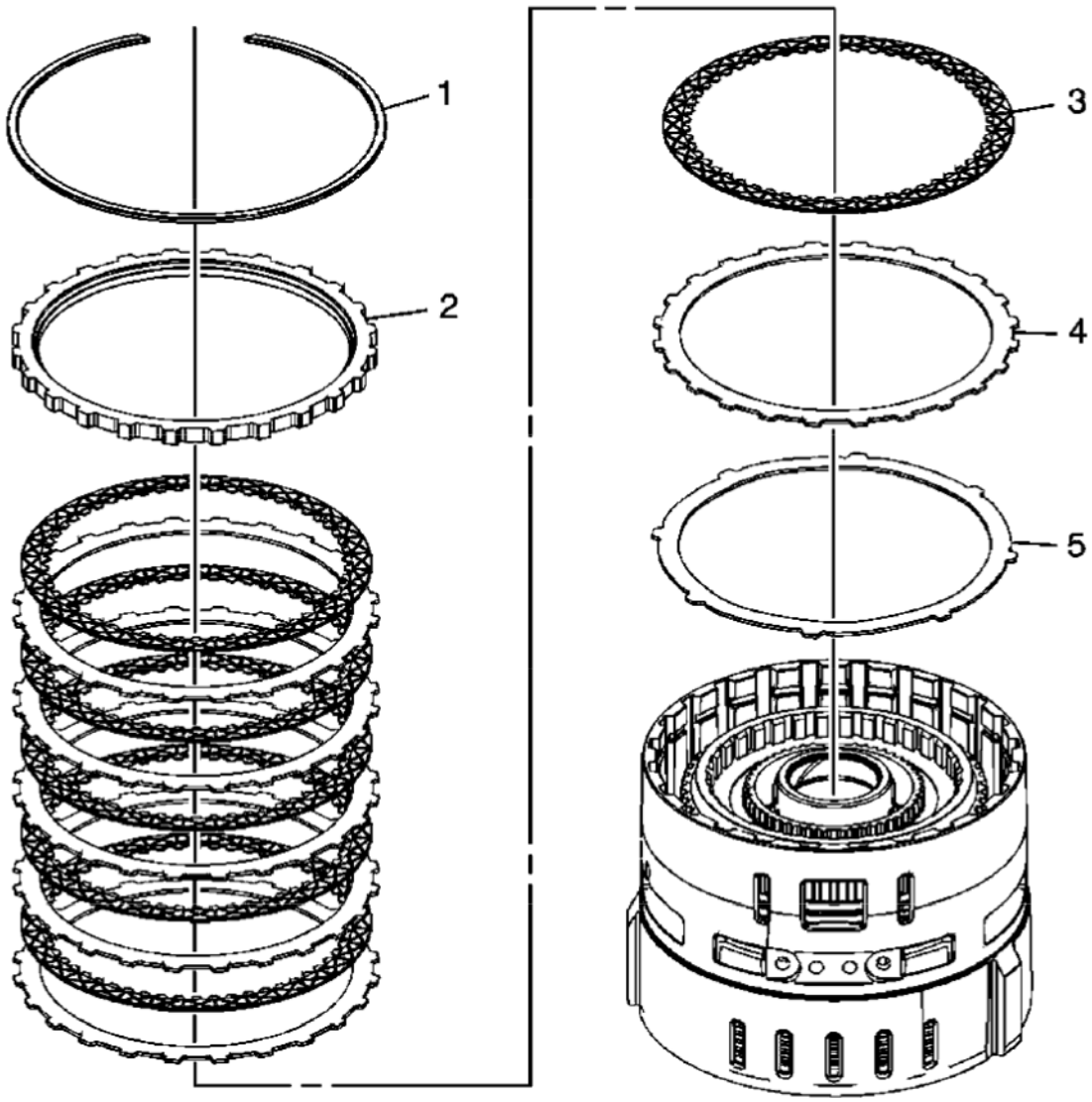

Fig. 32: Low & Reverse Clutch Plate
Courtesy of GENERAL MOTORS CORP.

Callout	Component Name
1	Low and Reverse Clutch Backing Plate Retaining Ring
2	Low and Reverse Clutch Backing Plate
3	Low and Reverse Clutch Plate Assembly (Qty: 6)
4	Low and Reverse Clutch Plate (Qty: 6)
5	Low and Reverse Clutch (Waved) Plate

Low and Reverse Clutch Piston Removal

cardiagn.com

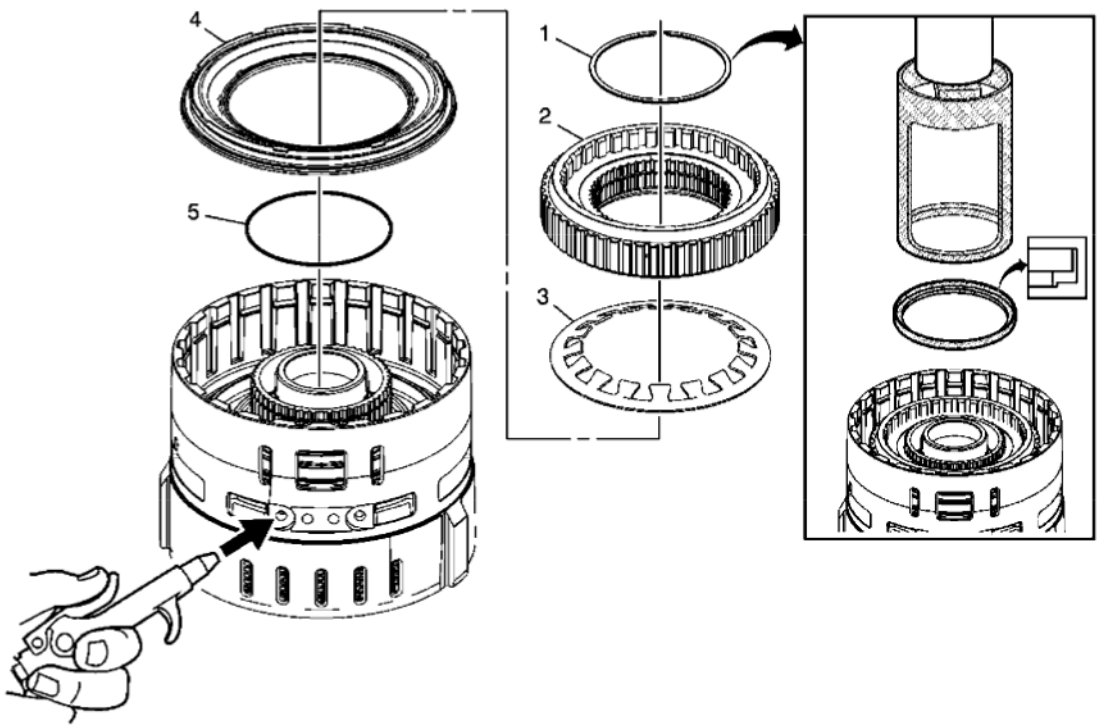

Fig. 33: Low And Reverse Clutch Piston
Courtesy of GENERAL MOTORS CORP.

Callout	Component Name
1	Low and Reverse Clutch Spring Retaining Ring **CAUTION:** **DT-49122 must be used with the DT-48069 in order to prevent damage to the low clutch sprag retainer.** **Special Tool** • **DT-48069:** Low Clutch Spring Compressor • **DT-49122:** Low Clutch Spring Compressor Adapter For equivalent regional tools, refer to **Special Tools** .
2	Low Clutch Sprag Assembly
3	Low and Reverse Clutch Spring
4	Low and Reverse Clutch Piston Assembly **Tip:** It may be necessary to apply air to the apply passage in order to unseat the piston.
5	Low Clutch Sprag Seal

cardiagn.com

	CAUTION: **Refer to Seal Reuse Caution .**

Low and Reverse Clutch Piston Installation

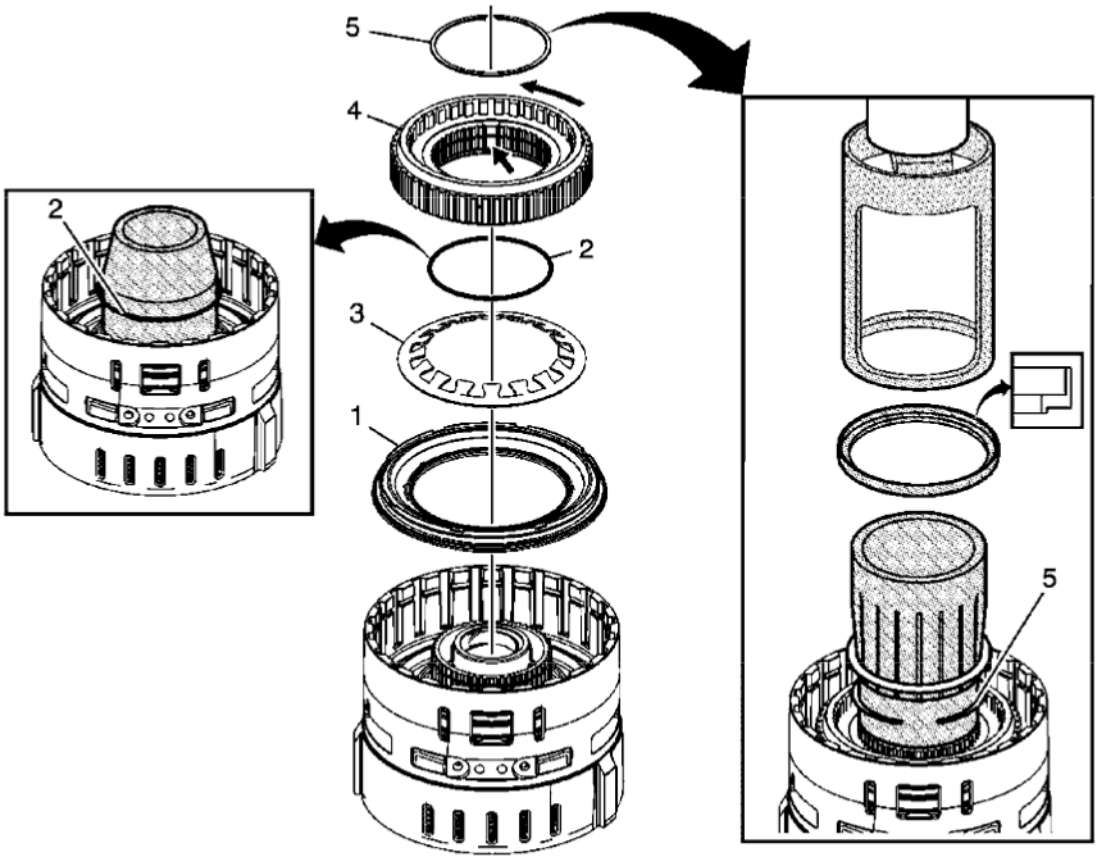

Fig. 34: Low & Reverse Clutch Piston
Courtesy of GENERAL MOTORS CORP.

Callout	Component Name
1	Low and Reverse Clutch Piston Assembly **Tip:** Lubricate the inner and outer sealing surfaces of the piston assembly with automatic transmission fluid (ATF) in order to ease installation into the center support assembly.
2	Low Clutch Sprag Seal **CAUTION:** **Refer to Seal Reuse Caution .** **Tip:** Apply ATF to the **DT-48070:** low clutch sprag seal cone to ease seal installation.

cardiagn.com

	Special Tool: **DT-48070:** Low Clutch Sprag Seal Cone For equivalent regional tools, refer to **Special Tools** .
3	Low and Reverse Clutch Spring **CAUTION:** **Ensure the spring tabs are facing up during installation. Failure to do so may cause damage to the clutch assembly.**
4	Low Clutch Sprag Assembly **Tip:** • Verify that the low clutch sprag is operating correctly. Refer to the illustration for proper freewheel direction. • Ensure the missing splines on the sprag assembly are aligned with the missing splines on the center support hub.
5	Low and Reverse Clutch Spring Retaining Ring **CAUTION:** **DT-49122 must be used with the DT-48069 in order to prevent damage to the low clutch sprag retainer.** **CAUTION:** **The retaining ring gap must be aligned with the 3 missing splines on the center support hub. Failure to do so may cause damage to the clutch assembly.** **Special Tools** • **DT-48068-1:** Low Clutch Sprag Retaining Ring Cone • **DT-48068-2:** Low Clutch Sprag Retaining Ring Pusher • **DT-48069:** Low Clutch Spring Compressor • **DT-49122:** Low Clutch Spring Compressor Adapter For equivalent regional tools, refer to **Special Tools** .

Low and Reverse Clutch Plate Installation

cardiagn.com

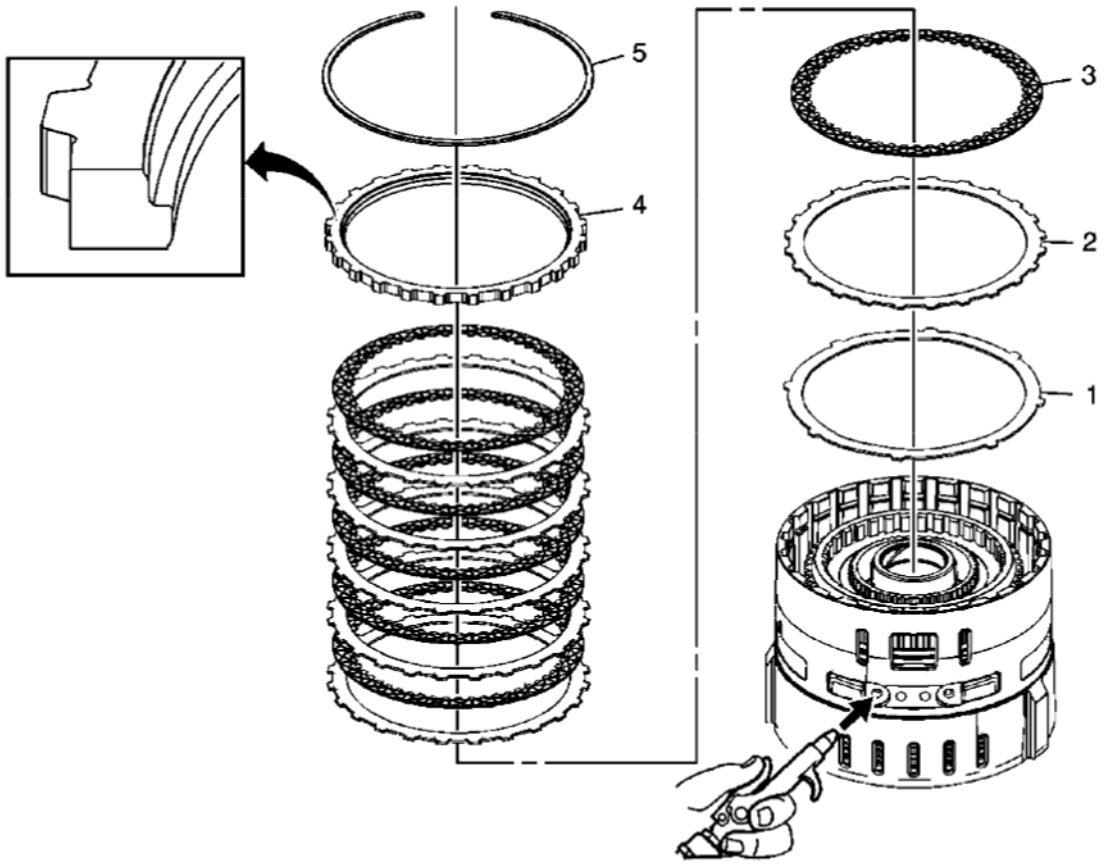

Fig. 35: Low & Reverse Clutch Plate
Courtesy of GENERAL MOTORS CORP.

Callout	Component Name
1	Low and Reverse Clutch (Waved) Plate
2	Low and Reverse Clutch Plate (Qty: 6)
3	Low and Reverse Clutch Plate Assembly (Qty: 6)
4	Low and Reverse Clutch Backing Plate **Tip:** Install the backing plate with the inner step side up.
5	Low and Reverse Clutch Backing Plate Retaining Ring **Tip:** Apply air to verify proper installation of all low and reverse clutch components.

LOW AND REVERSE CLUTCH OVERHAUL (6L80)

Low and Reverse Clutch Plate Removal

cardiagn.com

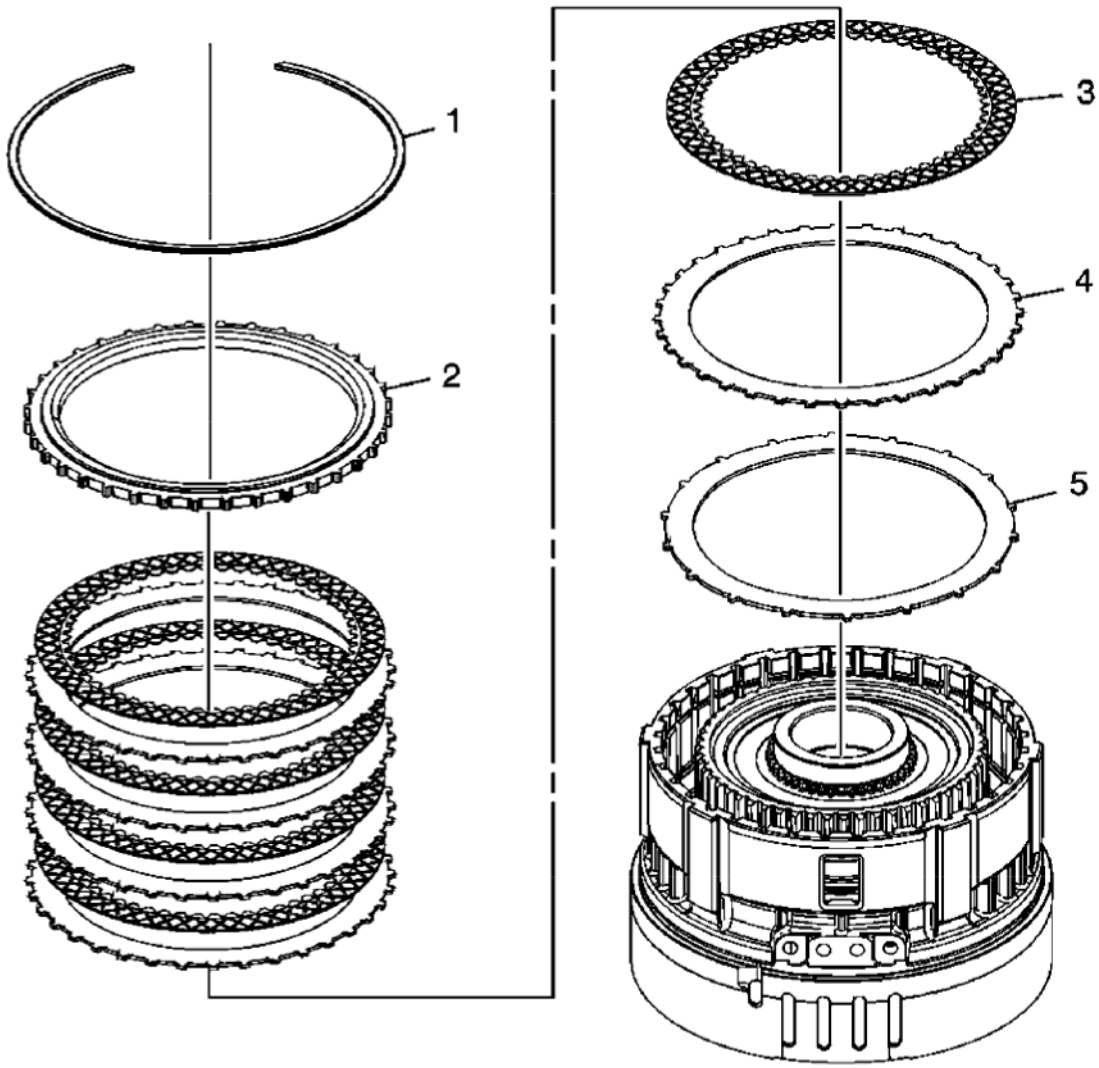

Fig. 36: Removing Low & Reverse Clutch Plate (6L80)
Courtesy of GENERAL MOTORS CORP.

Callout	Component Name
1	Low and Reverse Clutch Backing Plate Retaining Ring
2	Low and Reverse Clutch Backing Plate
3	Low and Reverse Clutch Plate Assembly (Qty: 5)
4	Low and Reverse Clutch Plate (Qty: 5)
5	Low and Reverse Clutch (Waved) Plate

Low and Reverse Clutch Piston Removal

cardiagn.com

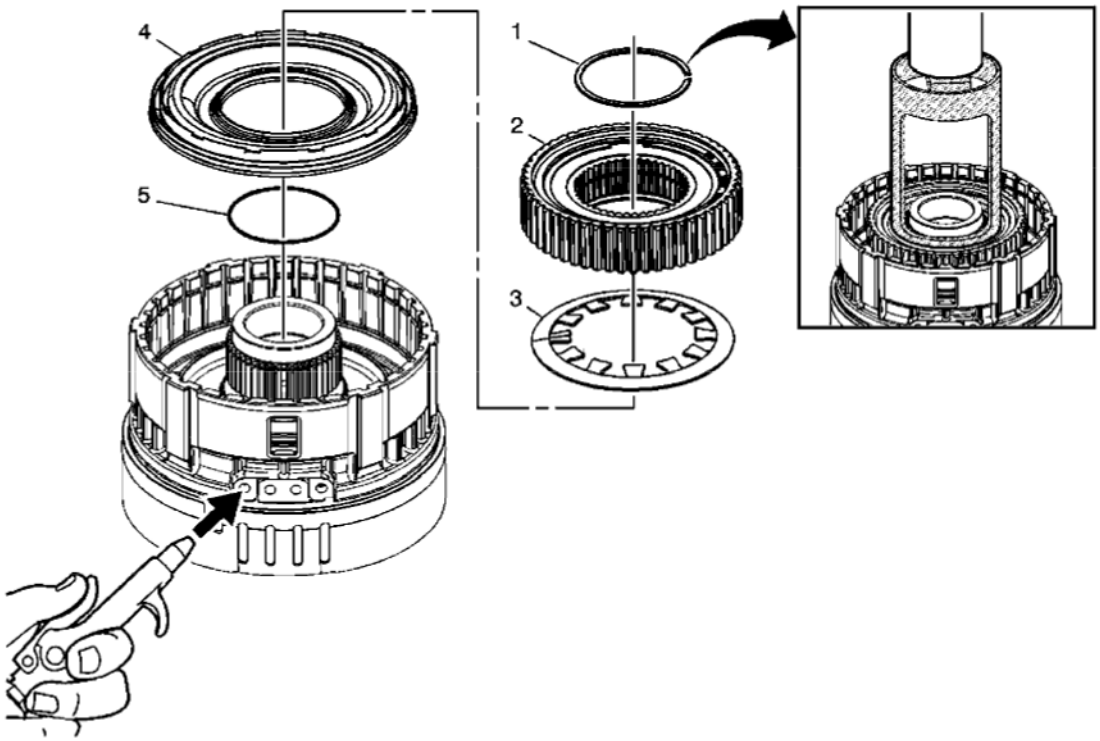

Fig. 37: Low & Reverse Clutch Piston
Courtesy of GENERAL MOTORS CORP.

Callout	Component Name
1	Low and Reverse Clutch Spring Retaining Ring **CAUTION:** **Ensure the DT 47779 contacts the sprag assembly and not the sprag retaining ring. Damage to the sprag may result.** **Special Tool:** **DT 47779:** Clutch Spring Compressor For equivalent regional tools, refer to **Special Tools** .
2	Low Clutch Sprag Assembly
3	Low and Reverse Clutch Spring
4	Low and Reverse Clutch Piston Assembly **Tip:** It may be necessary to apply air to the apply passage in order to unseat the piston.
5	Low Clutch Sprag Seal **CAUTION:** **Refer to Seal Reuse Caution .**

cardiagn.com

Low and Reverse Clutch Piston Installation

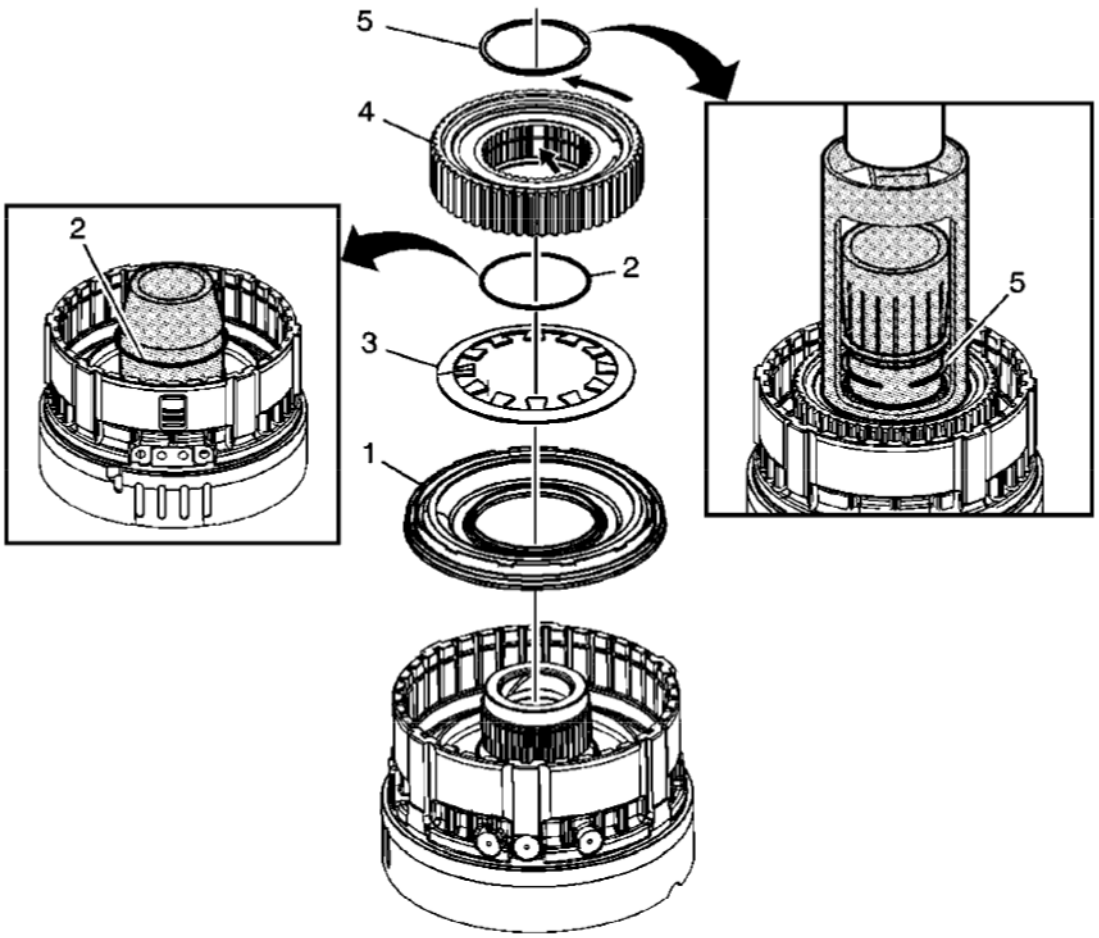

Fig. 38: Low & Reverse Clutch Piston
Courtesy of GENERAL MOTORS CORP.

Callout	Component Name
1	Low and Reverse Clutch Piston Assembly **Tip:** Lubricate the inner and outer sealing surfaces of the piston assembly with automatic transmission fluid (ATF) in order to ease installation into the center support assembly.
2	Low Clutch Sprag Seal **CAUTION:** **Refer to Seal Reuse Caution .** **Tip:** Apply ATF to the **DT 47780:** low clutch sprag seal cone to ease seal installation. **Special Tool:** **DT 47780:** Low Clutch Sprag Seal Cone

cardiagn.com

	For equivalent regional tools, refer to **Special Tools** .
3	Low and Reverse Clutch Spring **CAUTION:** **Ensure the spring tabs are facing up during installation. Failure to do so may cause damage to the clutch assembly.**
4	Low Clutch Sprag Assembly **Tip:** • Verify that the low clutch sprag is operating correctly. Refer to the illustration for proper freewheel direction. • Ensure the missing splines on the sprag assembly are aligned with the missing splines on the center support hub.
5	Low and Reverse Clutch Spring Retaining Ring **CAUTION:** **Ensure the DT 47779 contacts the sprag assembly and not the sprag retaining ring. Damage to the sprag may result.** **CAUTION:** **The retaining ring gap must be aligned with the 3 missing splines on the center support hub. Failure to do so may cause damage to the clutch assembly.** **Special Tools** • **DT 47778-1:** Low Clutch Sprag Retaining Ring Cone • **DT 47778-2:** Low Clutch Sprag Retaining Ring Pusher • **DT 47779:** Clutch Spring Compressor For equivalent regional tools, refer to **Special Tools** .

Low and Reverse Clutch Plate Installation

cardiagn.com

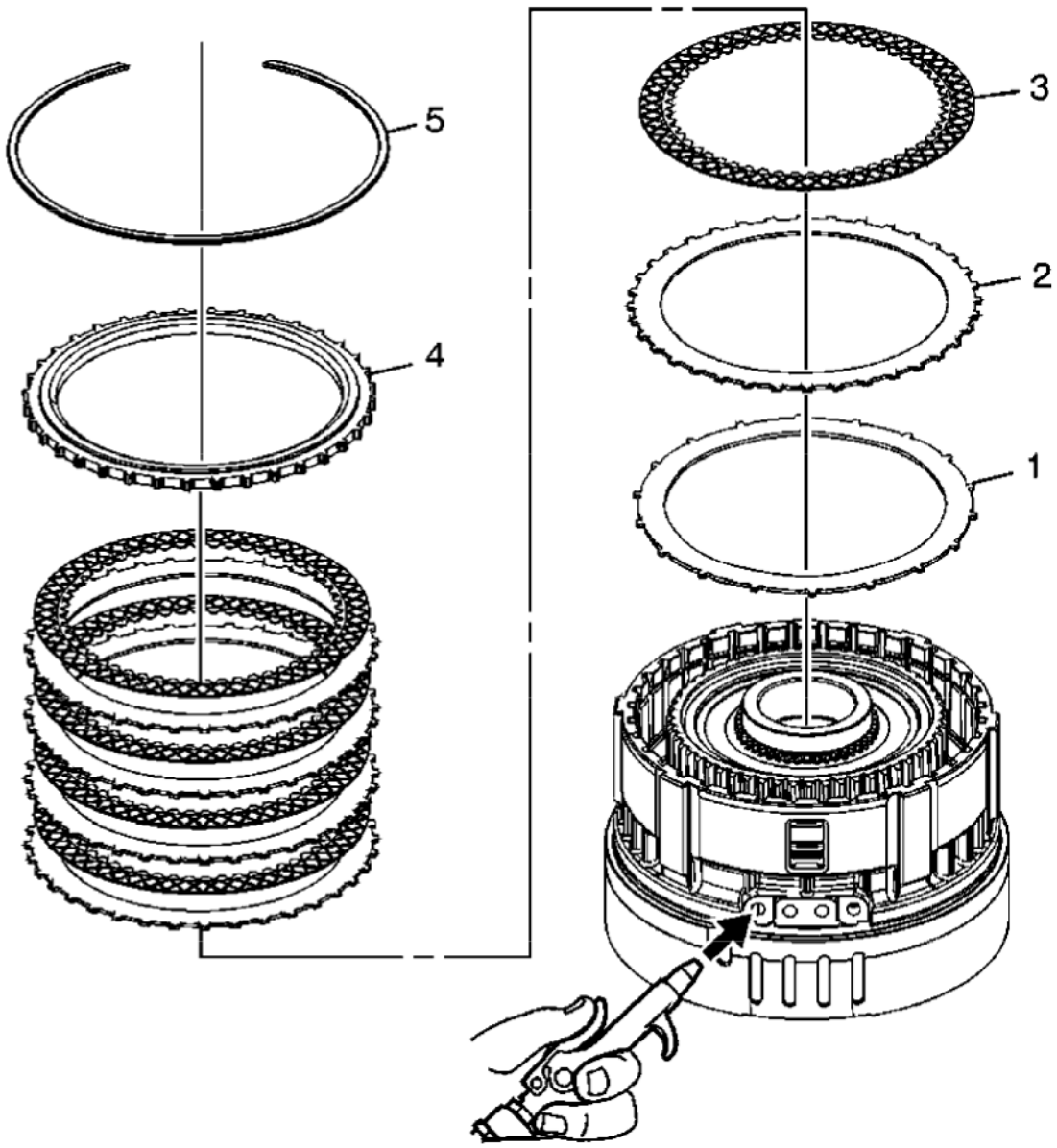

Fig. 39: Low & Reverse Clutch Plate
Courtesy of GENERAL MOTORS CORP.

Callout	Component Name
1	Low and Reverse Clutch (Waved) Plate
2	Low and Reverse Clutch Plate (Qty: 5)
3	Low and Reverse Clutch Plate Assembly (Qty: 5)
4	Low and Reverse Clutch Backing Plate
5	Low and Reverse Clutch Backing Plate Retaining Ring **Tip:** Apply air to verify proper installation of all low and reverse clutch components.

cardiagn.com

LOW AND REVERSE CLUTCH BACKING PLATE RETAINING RING MEASUREMENT

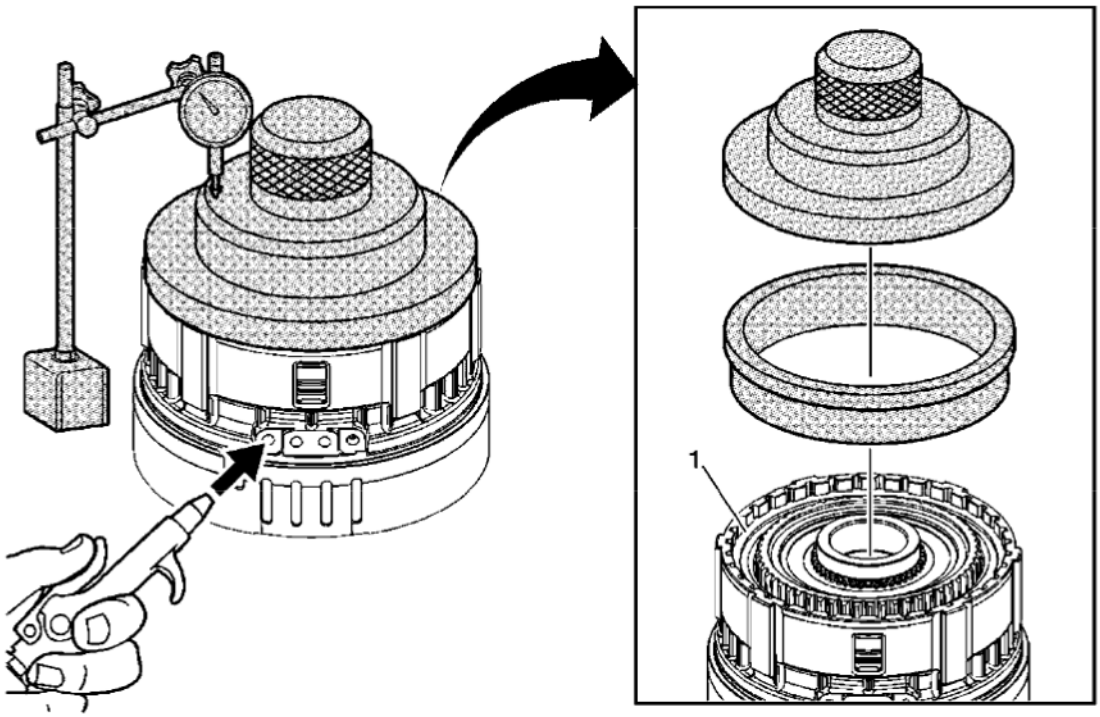

Fig. 40: Low & Reverse Clutch Backing Plate Retaining Ring
Courtesy of GENERAL MOTORS CORP.

Callout	Component Name
Preliminary Procedures 1. Install **DT-47868-1:** pack travel weight and **DT-47868-4:** travel weight adapter onto the low and reverse clutch backing plate. 2. Attach the **J 8001:** dial indicator set to the **J 26900-13:** magnetic base and zero out the dial indicator on the **DT-47868-1:** pack travel weight. **Special Tools** • **DT-47868-1:** Pack Travel Weight • **DT-47868-4:** Clutch Travel Weight Adapter • **J 8001:** Dial Indicator Set • **J 26900-13:** Magnetic Base For equivalent regional tools, refer to **Special Tools** .	
1	Low and Reverse Backing Plate Retaining Ring **Tip:** Apply compressed air to the apply passage hole, at least 3 times and observe the dial indicator measurement each time. This action "fluffs" the clutch plates to ensure an

cardiagn.com

	accurate measurement. Refer to **Clutch Backing Plate Retaining Ring Specifications (6L50)** or **Clutch Backing Plate Retaining Ring Specifications (6L80)** .

4-5-6 CLUTCH DAMPENER OVERHAUL (6L50/80/90)

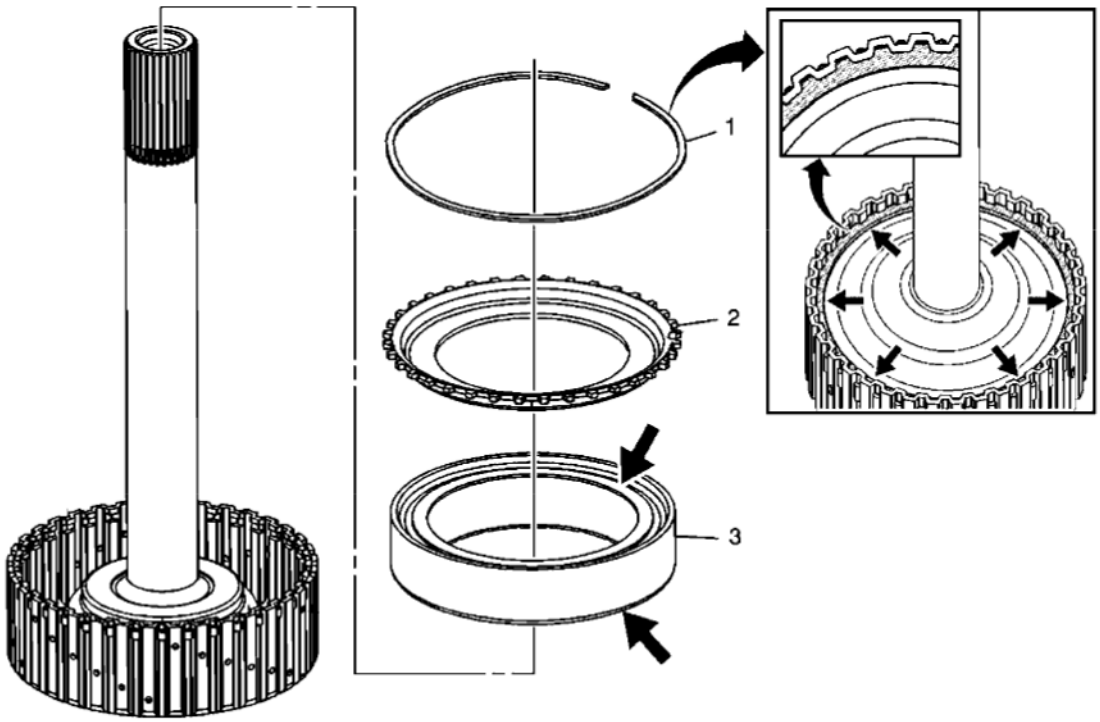

Fig. 41: 4-5-6 Clutch Dampener (6L50/80/90)
Courtesy of GENERAL MOTORS CORP.

Callout	Component Name
1	4-5-6 Clutch Dampener Retaining Ring **CAUTION:** **Ensure the retaining ring is fully seated when installed. Using a screwdriver, fully seat the retaining ring into the groove by pushing on the inside diameter around the whole circumference. If the retaining ring is not fully seated, transmission damage will result.**
2	4-5-6 Clutch Dampener Apply Plate
3	4-5-6 Clutch Dampener **Tip:** Dry and inspect the clutch dampener for the following conditions: • Pitting • Flaking • Delamination

cardiagn.com

	• Wear • Glazing • Cracking

4-5-6 CLUTCH OVERHAUL (6L50)

4-5-6 Clutch Plates Removal

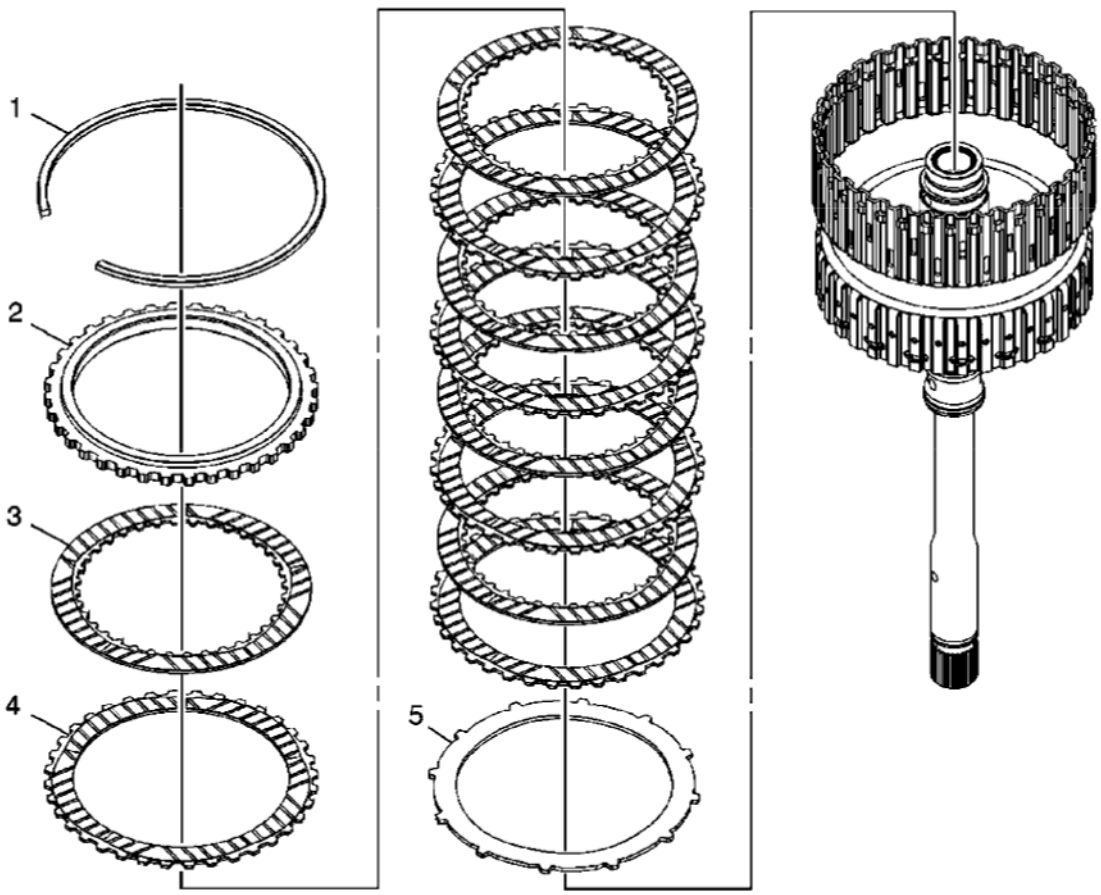

Fig. 42: 4-5-6 Clutch Plates (6L50)
Courtesy of GENERAL MOTORS CORP.

Callout	Component Name
1	4-5-6 Clutch Backing Plate Retaining Ring
2	4-5-6 Clutch Backing Plate
3	4-5-6 Clutch Plate Assembly (Qty: 5)
4	4-5-6 Clutch Plate (Qty: 5)
5	4-5-6 Clutch (Waved) Plate

cardiagn.com

4-5-6 Clutch Piston Removal

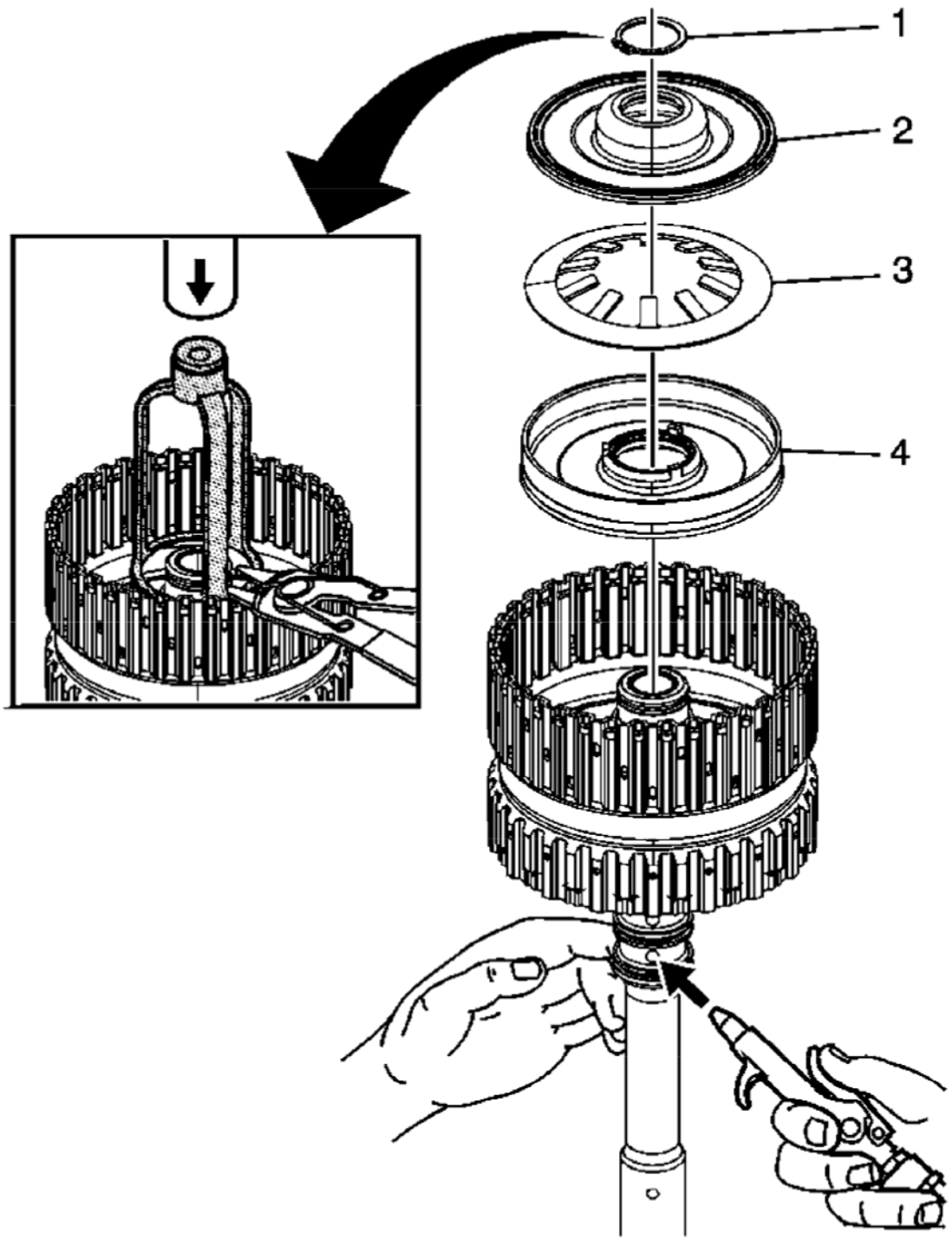

Fig. 43: 4-5-6 Clutch Piston
Courtesy of GENERAL MOTORS CORP.

cardiagn.com

Callout	Component Name
1	4-5-6 Clutch Piston Dam Retaining Ring **CAUTION:** **Use care when compressing the 4-5-6 clutch piston assembly, spring and dam assembly. Compressing the dam assembly too much may damage it.** **CAUTION:** **Refer to Retaining Ring Reuse Caution .** **Special Tool:** **J 43074:** Clutch Spring Compressor For equivalent regional tools, refer to **Special Tools** .
2	4-5-6 Clutch Piston Dam Assembly **Tip:** It may be necessary to apply air pressure to remove the dam and piston.
3	4-5-6 Clutch Spring
4	4-5-6 Clutch Piston Assembly **Tip:** It may be necessary to apply air pressure to remove the piston.

Turbine Shaft Fluid Seal Ring Replacement

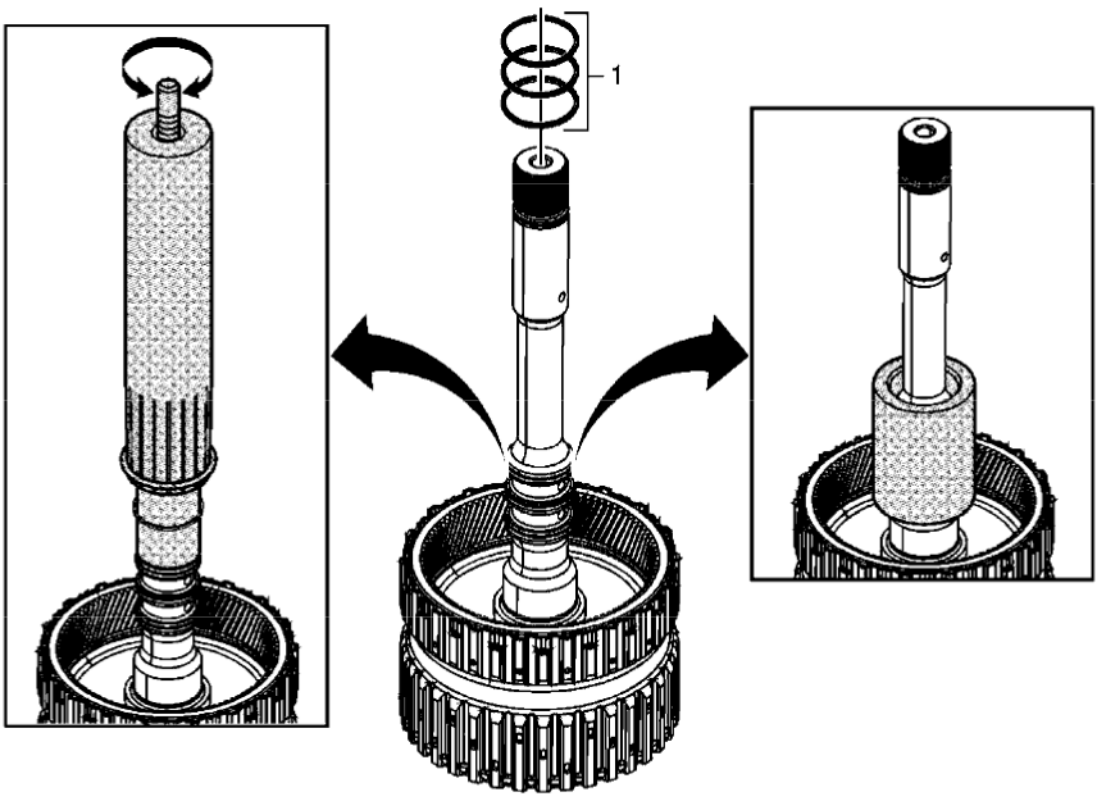

cardiagn.com

Fig. 44: Turbine Shaft Fluid Seal Ring
Courtesy of GENERAL MOTORS CORP.

Callout	Component Name
Preliminary Procedures • Inspect the turbine shaft fluid passages and splines. • Clean any plugged passages.	
1	Turbine Shaft Fluid Seal Ring (Qty: 3) **CAUTION:** **Do not use old seal rings. Install NEW seal rings. Reusing old seal rings may cause internal transmission leaks and transmission damage.** **CAUTION:** **Size the fluid seal rings for at least 5 minutes after installation to obtain proper seal ring size. Failure to do so may cause internal transmission leaks and transmission damage.** **Tip:** Adjust the turn screw on **DT-48066-3:** seal protector and install the bottom seal ring first. **Special Tools** • **DT-48066-1:** Seal Sizer • **DT-48066-2:** Seal Pusher • **DT-48066-3:** Seal Protector For equivalent regional tools, refer to **Special Tools** .

4-5-6 Clutch Piston Installation

cardiagn.com

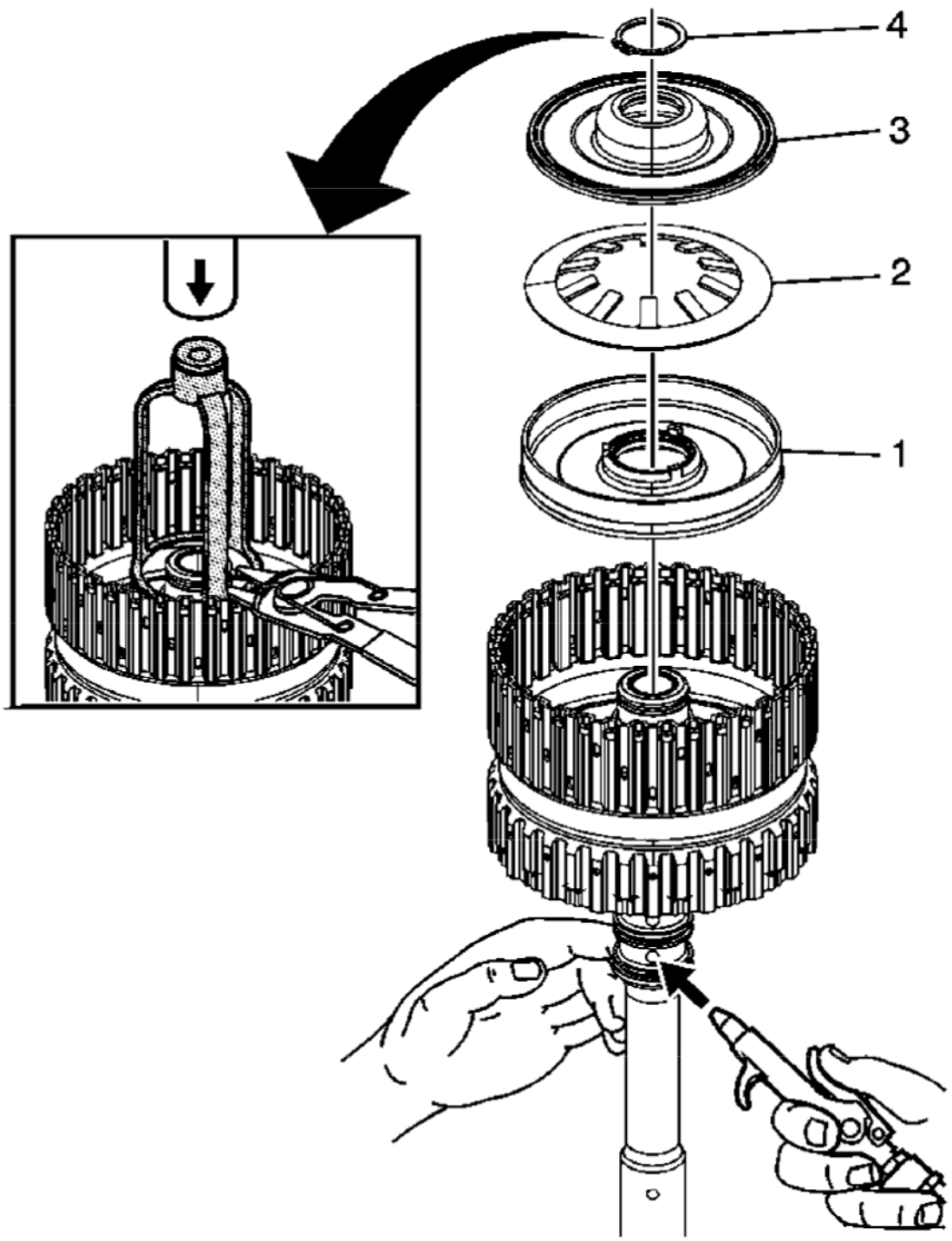

Fig. 45: 4-5-6 Clutch Piston
Courtesy of GENERAL MOTORS CORP.

Callout	Component Name
1	4-5-6 Clutch Piston Assembly

cardiagn.com

2	4-5-6 Clutch Spring **CAUTION:** **Ensure the spring tabs are facing up during installation. Failure to do so may cause damage to the clutch assembly.**
3	4-5-6 Clutch Piston Dam Assembly **Tip:** Lubricate the inner and outer sealing surfaces of the dam assembly with automatic transmission fluid (ATF) in order to ease installation into the piston.
4	4-5-6 Clutch Piston Dam Retaining Ring **CAUTION:** **Use care when compressing the 4-5-6 clutch piston assembly, spring and dam assembly. Compressing the dam assembly too much may damage it.** **CAUTION:** **Refer to Retaining Ring Reuse Caution .** **Tip:** Apply air to verify proper installation of all 4-5-6 clutch components. Piston should apply and release smoothly. **Special Tool:** **J 43074:** Clutch Spring Compressor For equivalent regional tools, refer to **Special Tools** .

4-5-6 Clutch Plates Installation

cardiagn.com

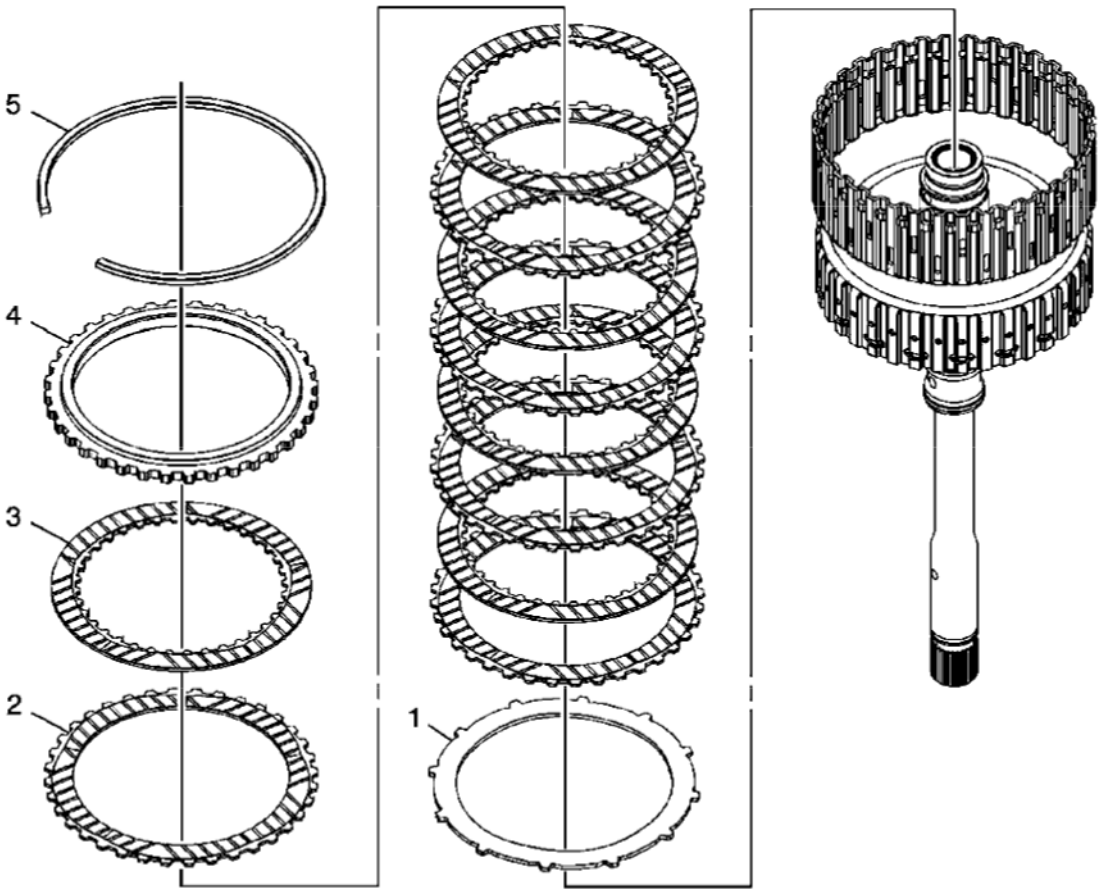

Fig. 46: 4-5-6 Clutch Plates
Courtesy of GENERAL MOTORS CORP.

Callout	Component Name
1	4-5-6 Clutch (Waved) Plate
2	4-5-6 Clutch Plate (Qty: 5)
3	4-5-6 Clutch Plate Assembly (Qty: 5)
4	4-5-6 Clutch Backing Plate
5	4-5-6 Clutch Backing Plate Retaining Ring **Tip:** After the retaining ring is installed, determine clutch piston travel in order to verify if the correct selective retaining ring is being used. Refer to **4-5-6 Clutch Backing Plate Retaining Ring Measurement**.

4-5-6 CLUTCH OVERHAUL (6L80)

4-5-6 Clutch Plates Removal

cardiagn.com

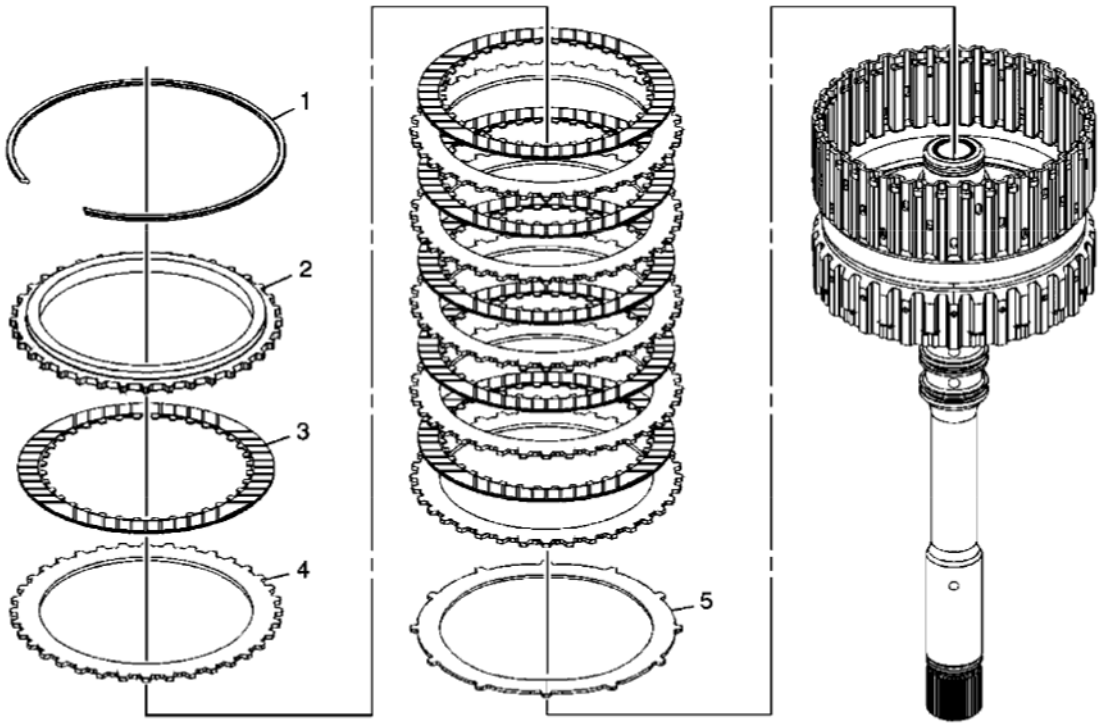

Fig. 47: 4-5-6 Clutch Plates
Courtesy of GENERAL MOTORS CORP.

Callout	Component Name
1	4-5-6 Clutch Backing Plate Retaining Ring
2	4-5-6 Clutch Backing Plate
3	4-5-6 Clutch Plate Assembly (Qty: 6)
4	4-5-6 Clutch Plate (Qty: 6)
5	4-5-6 Clutch (Waved) Plate

4-5-6 Clutch Piston Removal

cardiagn.com

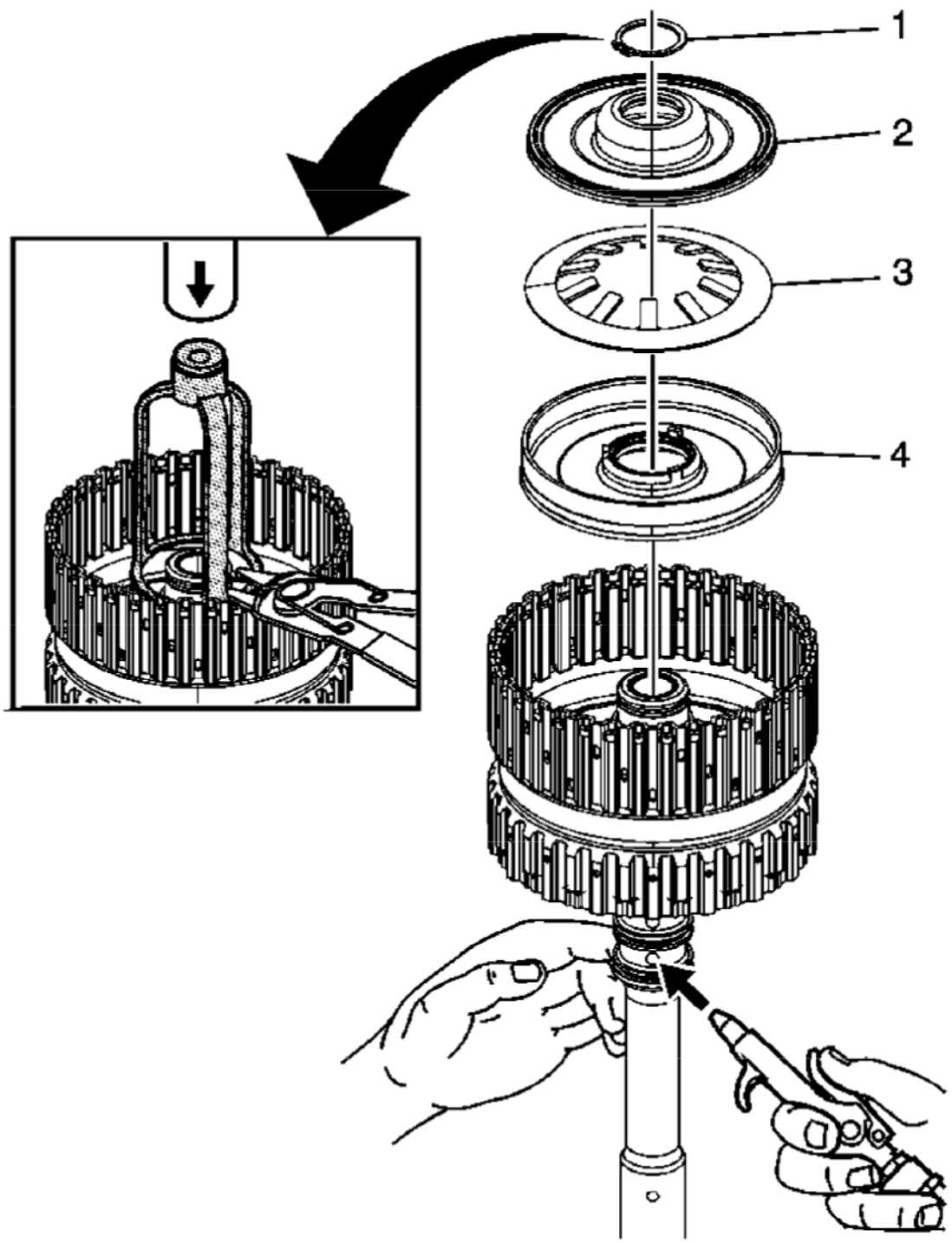

Fig. 48: 4-5-6 Clutch Piston
Courtesy of GENERAL MOTORS CORP.

Callout	Component Name
	4-5-6 Clutch Piston Dam Retaining Ring

cardiagn.com

1	**CAUTION:** **Use care when compressing the 4-5-6 clutch piston assembly, spring and dam assembly. Compressing the dam assembly too much may damage it.** **CAUTION:** **Refer to Retaining Ring Reuse Caution .** **Special Tool:** **J 43074** Clutch Spring Compressor. See **Special Tools** .
2	4-5-6 Clutch Piston Dam Assembly **Tip:** It may be necessary to apply air pressure to remove the dam and piston.
3	4-5-6 Clutch Spring
4	4-5-6 Clutch Piston Assembly **Tip:** It may be necessary to apply air pressure to remove the piston.

Turbine Shaft Fluid Seal Ring Replacement

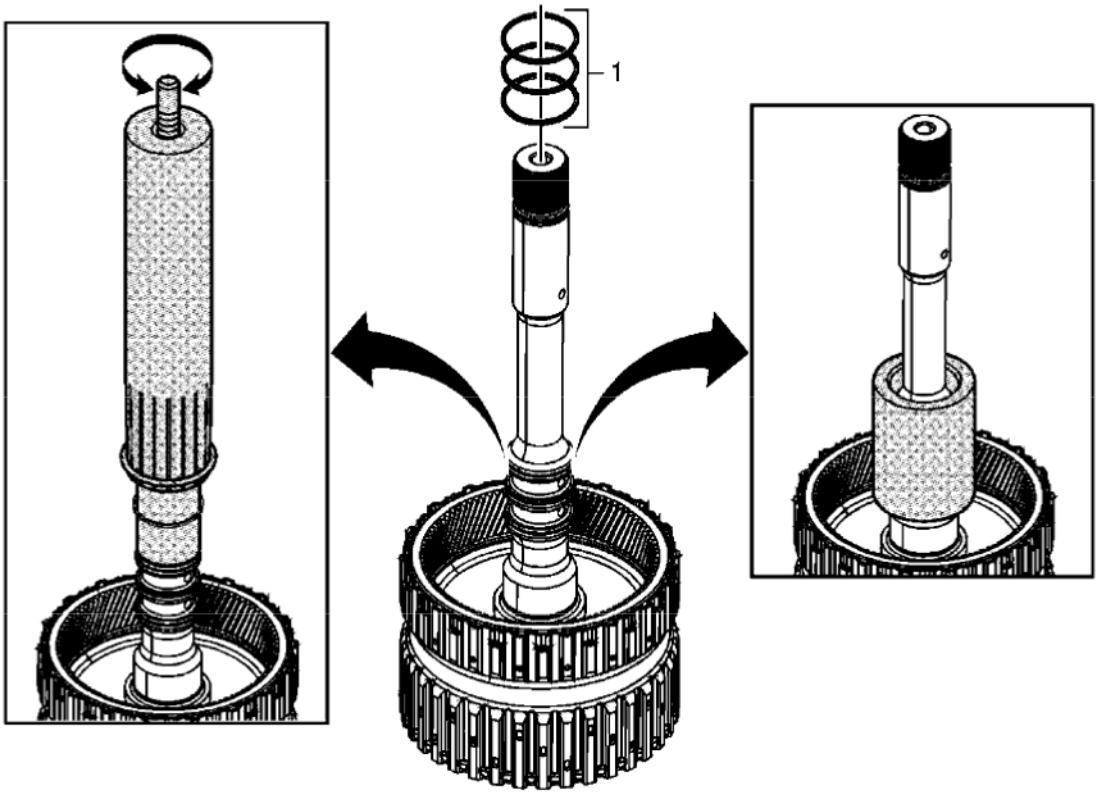

Fig. 49: Turbine Shaft Fluid Seal Ring
Courtesy of GENERAL MOTORS CORP.

Callout	Component Name

cardiagn.com

Preliminary Procedures • Inspect the turbine shaft fluid passages and splines. • Clean any plugged passages.	
1	Turbine Shaft Fluid Seal Ring (Qty: 3) **CAUTION:** **Do not use old seal rings. Install NEW seal rings. Reusing old seal rings may cause internal transmission leaks and transmission damage.** **CAUTION:** **Size the fluid seal rings for at least 5 minutes after installation to obtain proper seal ring size. Failure to do so may cause internal transmission leaks and transmission damage.** **Tip:** Adjust the turn screw on **DT 47768-1** and install the bottom seal ring first. See **Special Tools** . **Special Tools** • **DT 47768-1** Seal Protector. See **Special Tools** . • **DT 47768-2** Seal Pusher. See **Special Tools** . • **DT 47768-3** Seal Sizer. See **Special Tools** .

4-5-6 Clutch Piston Installation

cardiagn.com

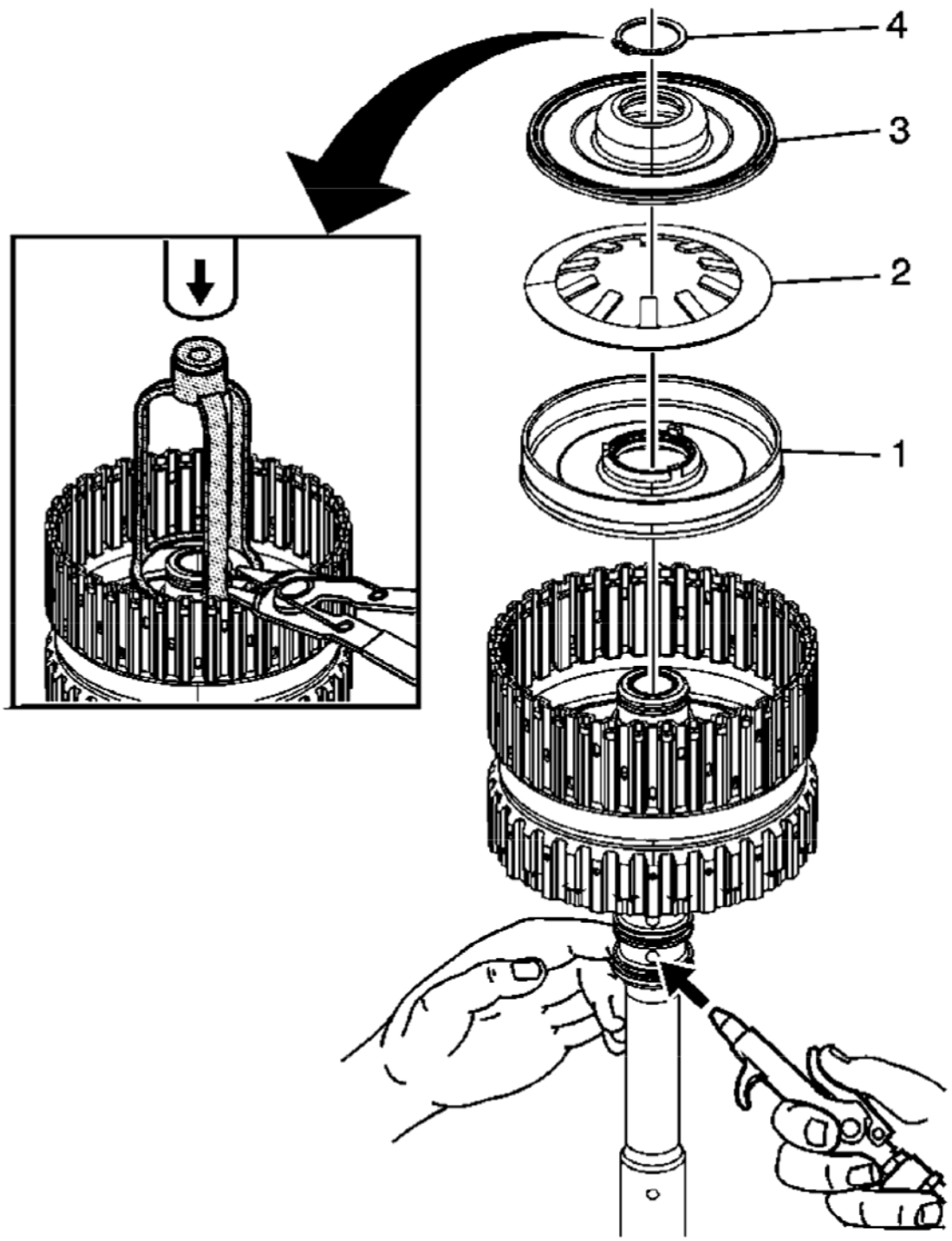

Fig. 50: 4-5-6 Clutch Piston
Courtesy of GENERAL MOTORS CORP.

Callout	Component Name
1	4-5-6 Clutch Piston Assembly

cardiagn.com

2	4-5-6 Clutch Spring **CAUTION:** **Ensure the spring tabs are facing up during installation. Failure to do so may cause damage to the clutch assembly.**
3	4-5-6 Clutch Piston Dam Assembly **Tip:** Lubricate the inner and outer sealing surfaces of the dam assembly with automatic transmission fluid (ATF) in order to ease installation into the piston.
4	4-5-6 Clutch Piston Dam Retaining Ring **CAUTION:** **Use care when compressing the 4-5-6 clutch piston assembly, spring and dam assembly. Compressing the dam assembly too much may damage it.** **CAUTION:** **Refer to Retaining Ring Reuse Caution .** **Tip:** Apply air to verify proper installation of all 4-5-6 clutch components. The piston should apply and release smoothly. **Special Tool:** **J 43074** Clutch Spring Compressor. See **Special Tools** .

4-5-6 Clutch Plates Installation

cardiagn.com

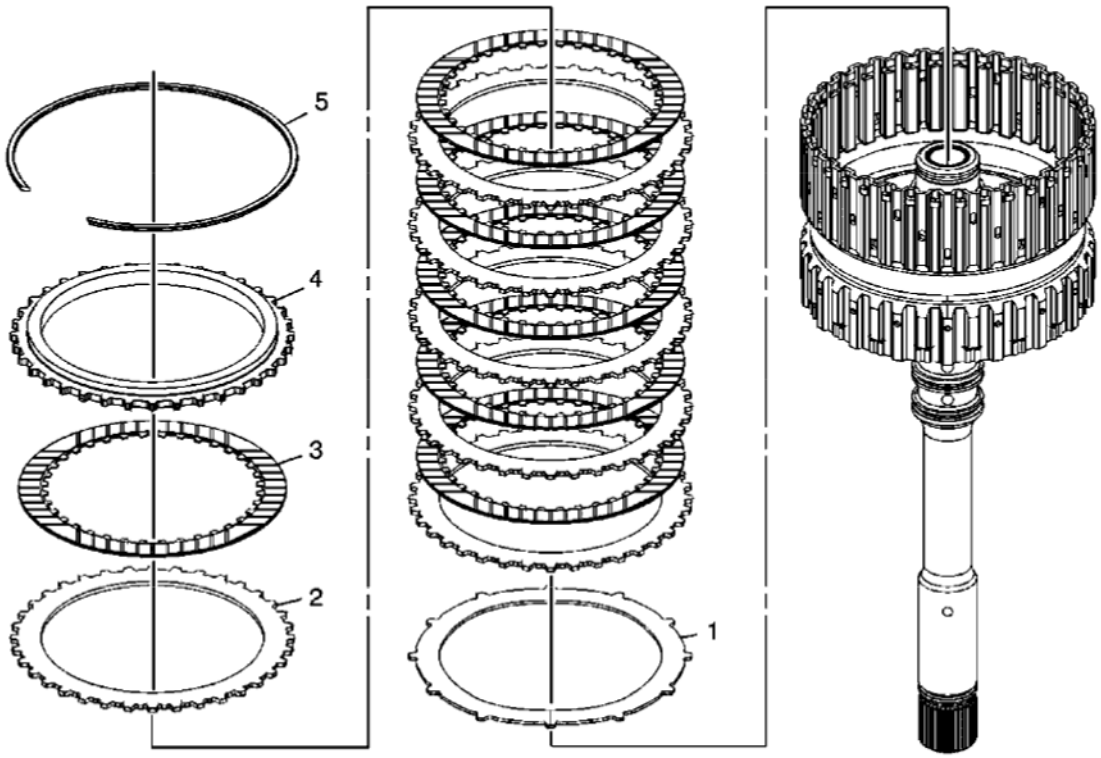

Fig. 51: 4-5-6 Clutch Plates
Courtesy of GENERAL MOTORS CORP.

Callout	Component Name
1	4-5-6 Clutch (Waved) Plate
2	4-5-6 Clutch Plate (Qty: 6)
3	4-5-6 Clutch Plate Assembly (Qty: 6)
4	4-5-6 Clutch Backing Plate
5	4-5-6 Clutch Backing Plate Retaining Ring **Tip:** After the retaining ring is installed, determine clutch piston travel in order to verify if the correct selective retaining ring is being used. Refer to **4-5-6 Clutch Backing Plate Retaining Ring Measurement**.

4-5-6 CLUTCH BACKING PLATE RETAINING RING MEASUREMENT

cardiagn.com

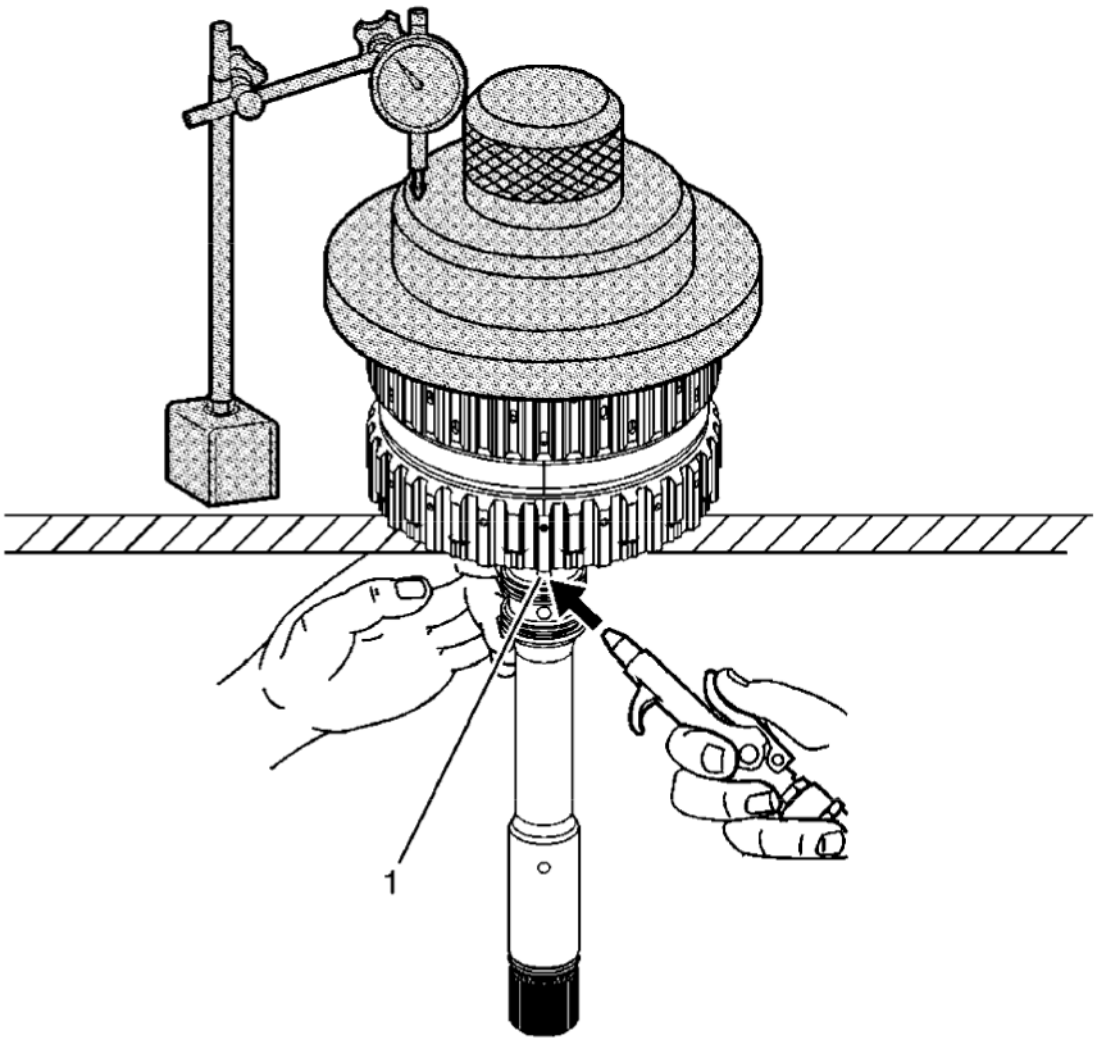

Fig. 52: Measuring 4-5-6 Clutch Backing Plate Retaining Ring
Courtesy of GENERAL MOTORS CORP.

Callout	Component Name

Preliminary Procedures

1. Install the clutch assembly into a hole in the workbench
2. Zero out the dial indicator on the **DT 47868-1:** pack travel weight.

Special Tools

- **DT 47868-1:** Pack Travel Weight
- **J 8001:** Dial Indicator Set
- **J 26900-13:** Magnetic Base

cardiagn.com

For equivalent regional tools, refer to **Special Tools** .	
1	4-5-6 Clutch Apply Passage **Tip:** While using one finger to block the top passage hole on the turbine shaft, apply compressed air to the opposite top passage hole, and observe the dial indicator measurement. Refer to **Clutch Backing Plate Retaining Ring Specifications (6L50)** or **Clutch Backing Plate Retaining Ring Specifications (6L80)** to determine the correct retainer.

1-2-3-4 AND 3-5 REVERSE CLUTCH OVERHAUL (6L50/6L80)

1-2-3-4 and 3-5 Reverse Clutch Plates Removal

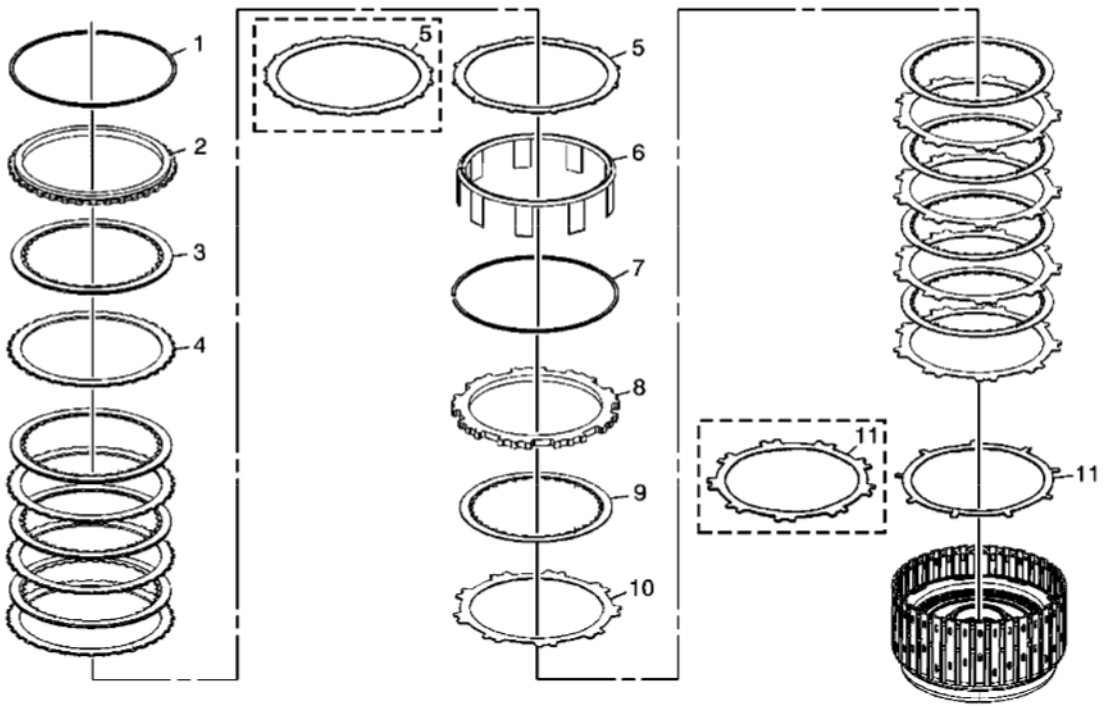

Fig. 53: 1-2-3-4 & 3-5 Reverse Clutch Plates
Courtesy of GENERAL MOTORS CORP.

Callout	Component Name
1	3-5 Reverse Clutch Backing Plate Retaining Ring
2	3-5 Reverse Clutch Backing Plate
3	3-5 Reverse Clutch Plate Assembly (Qty: 4)
4	3-5 Reverse Clutch Plate (Qty: 4)
5	3-5 Reverse Clutch (Waved) Plate
6	3-5 Reverse Clutch Apply Ring
7	1-2-3-4 Clutch Backing Plate Retaining Ring
8	1-2-3-4 Clutch Backing Plate

cardiagn.com

9	1-2-3-4 Clutch Plate Assembly (Qty: 5)
10	1-2-3-4 Clutch Plate (Qty: 5)
11	1-2-3-4 Clutch (Waved) Plate

1-2-3-4 Clutch Piston Removal

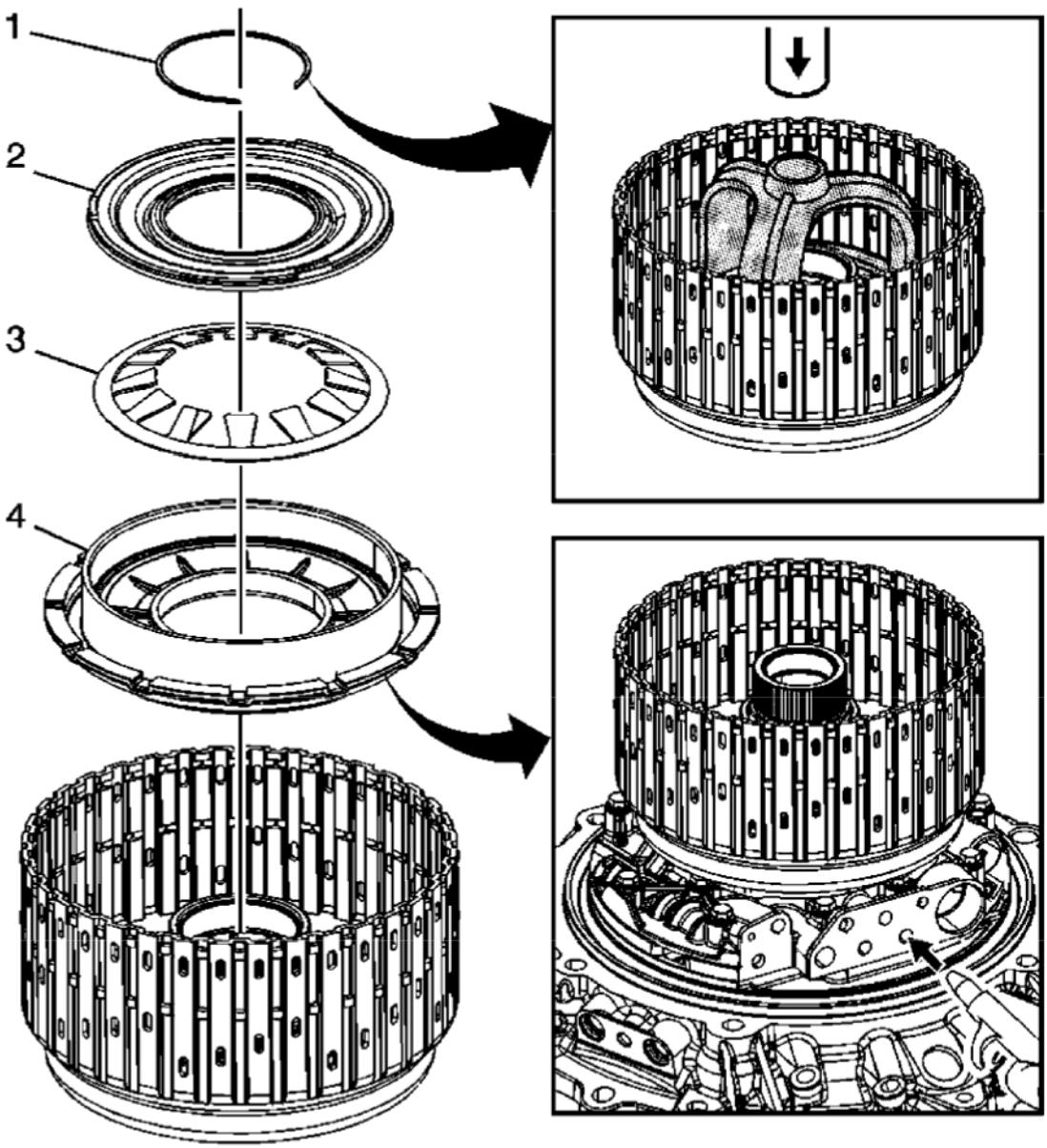

Fig. 54: 1-2-3-4 Clutch Piston
Courtesy of GENERAL MOTORS CORP.

Callout	Component Name
	1-2-3-4 Clutch Piston Dam Retaining Ring.

cardiagn.com

1	**CAUTION:** **Use care when compressing the 1-2-3-4 clutch spring and dam assembly. Compressing the dam assembly too much may damage it.** **CAUTION:** **Refer to Retaining Ring Reuse Caution .** **Special Tool:** **J 38734:** Intermediate Spring Compressor Adapter For equivalent regional tools, refer to **Special Tools** .
2	1-2-3-4 Clutch Piston Dam Assembly
3	1-2-3-4 Clutch Spring
4	1-2-3-4 Clutch Piston **Tip:** • It may be necessary to apply air to the apply passage in order to remove the piston. Install the 1-2-3-4 clutch housing onto the torque converter (with fluid pump) housing assembly in order to apply air. • After air is applied, it may be necessary to turn the housing assembly upside down and carefully tap the housing against a flat surface in order to release the piston.

3-5 Reverse Clutch Piston Removal

cardiagn.com

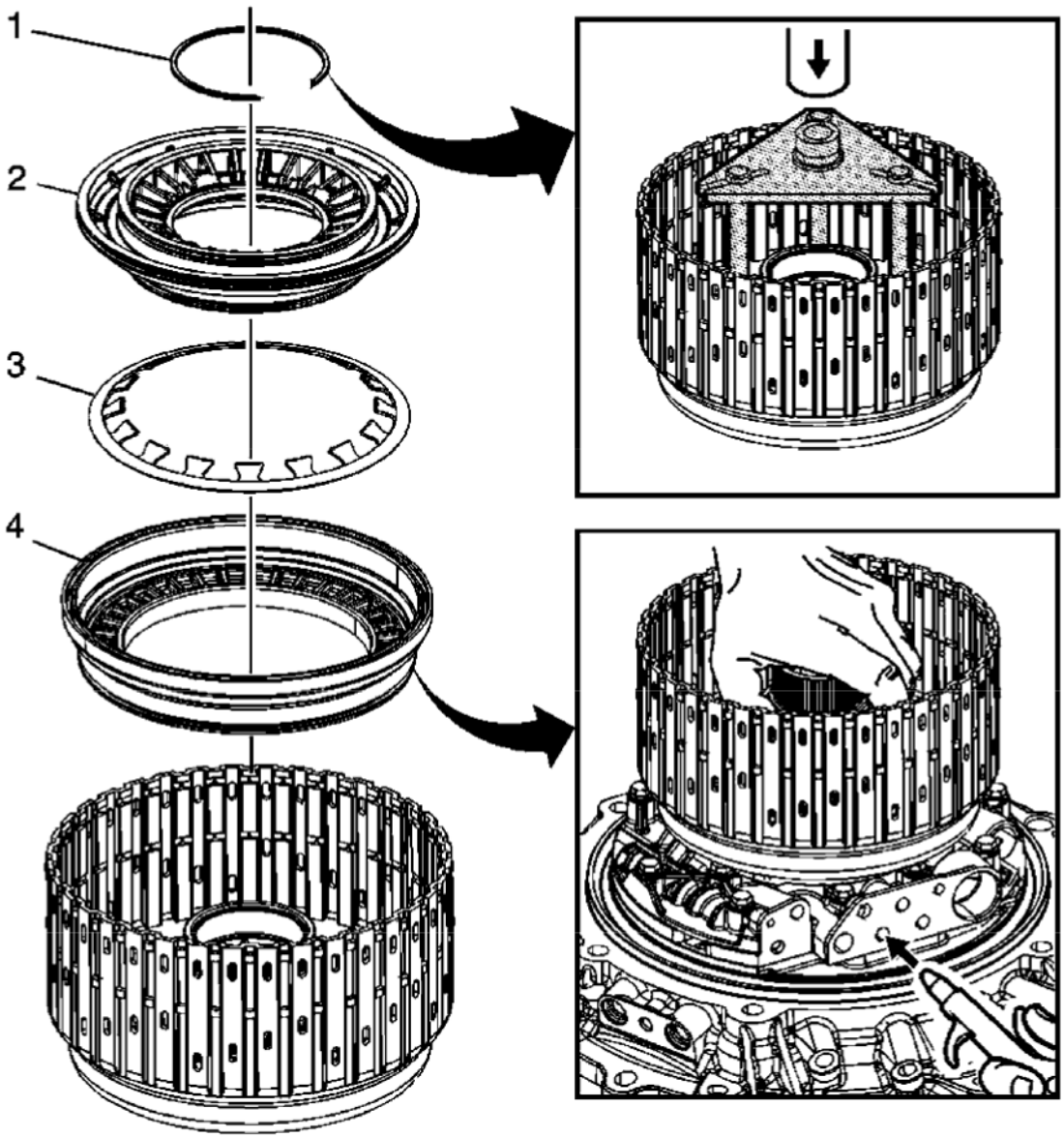

Fig. 55: 3-5 Reverse Clutch Piston
Courtesy of GENERAL MOTORS CORP.

Callout	Component Name
Preliminary Procedure 1. Install the 1-2-3-4 and 3-5 reverse clutch housing assembly onto the torque converter (with fluid pump) housing assembly. 2. Apply hand pressure on the 1-2-3-4 clutch piston housing while applying compressed air to the apply passage in order to unseat the 3-5 reverse clutch piston.	
	1-2-3-4 Clutch Piston Housing Retaining Ring

cardiagn.com

1	**CAUTION:** **Refer to Retaining Ring Reuse Caution .** **Special Tool:** **DT 47867:** Adjustable Clutch Spring Compressor For equivalent regional tools, refer to **Special Tools** .
2	1-2-3-4 Clutch Piston Housing
3	3-5 Reverse Clutch Spring
4	3-5 Reverse Clutch Piston **Tip:** It may be necessary to turn the housing assembly upside down and carefully tap the housing against a flat surface in order to release the piston.

3-5 Reverse Clutch Air Bleed Inspection (6L80/6L90)

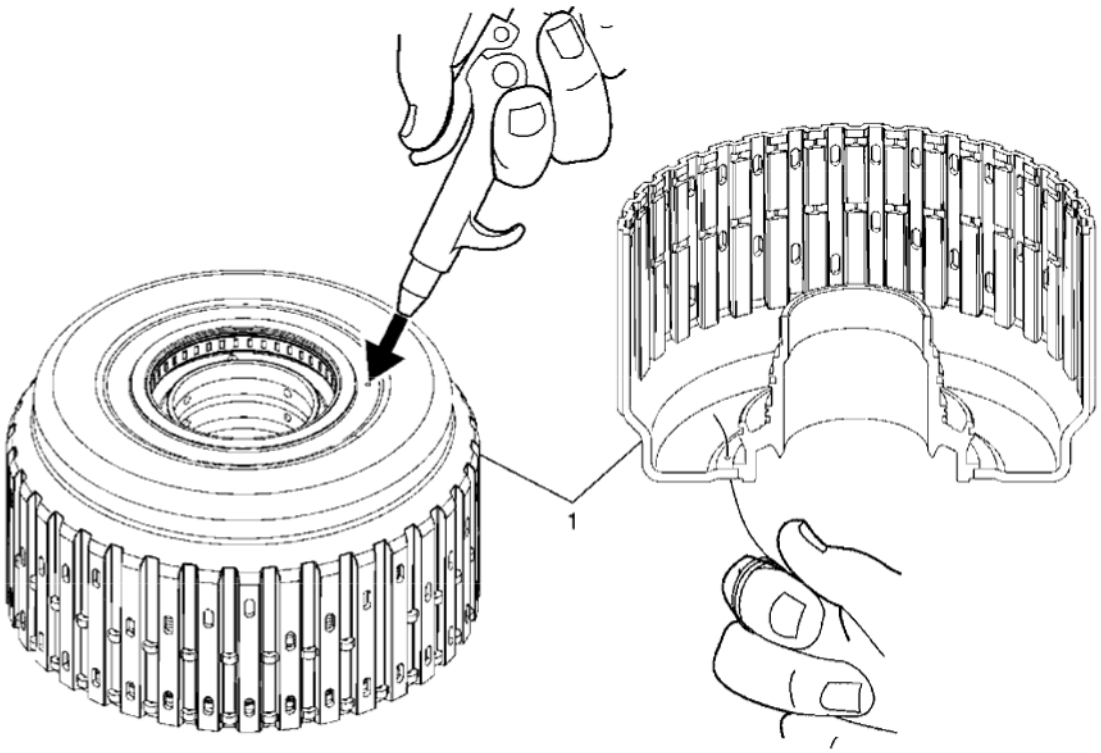

Fig. 56: 3-5 Reverse Clutch Air Bleed (6L80/6L90)
Courtesy of GENERAL MOTORS CORP.

Callout	Component Name
1	1-2-3-4 and 3-5 Reverse Clutch Housing Assembly **Procedure:** Ensure the air bleed passage is clear and free from obstructions by using a fine wire and also compressed air.

cardiagn.com

1-2-3-4 and 3-5 Reverse Clutch Piston Seals Replacement

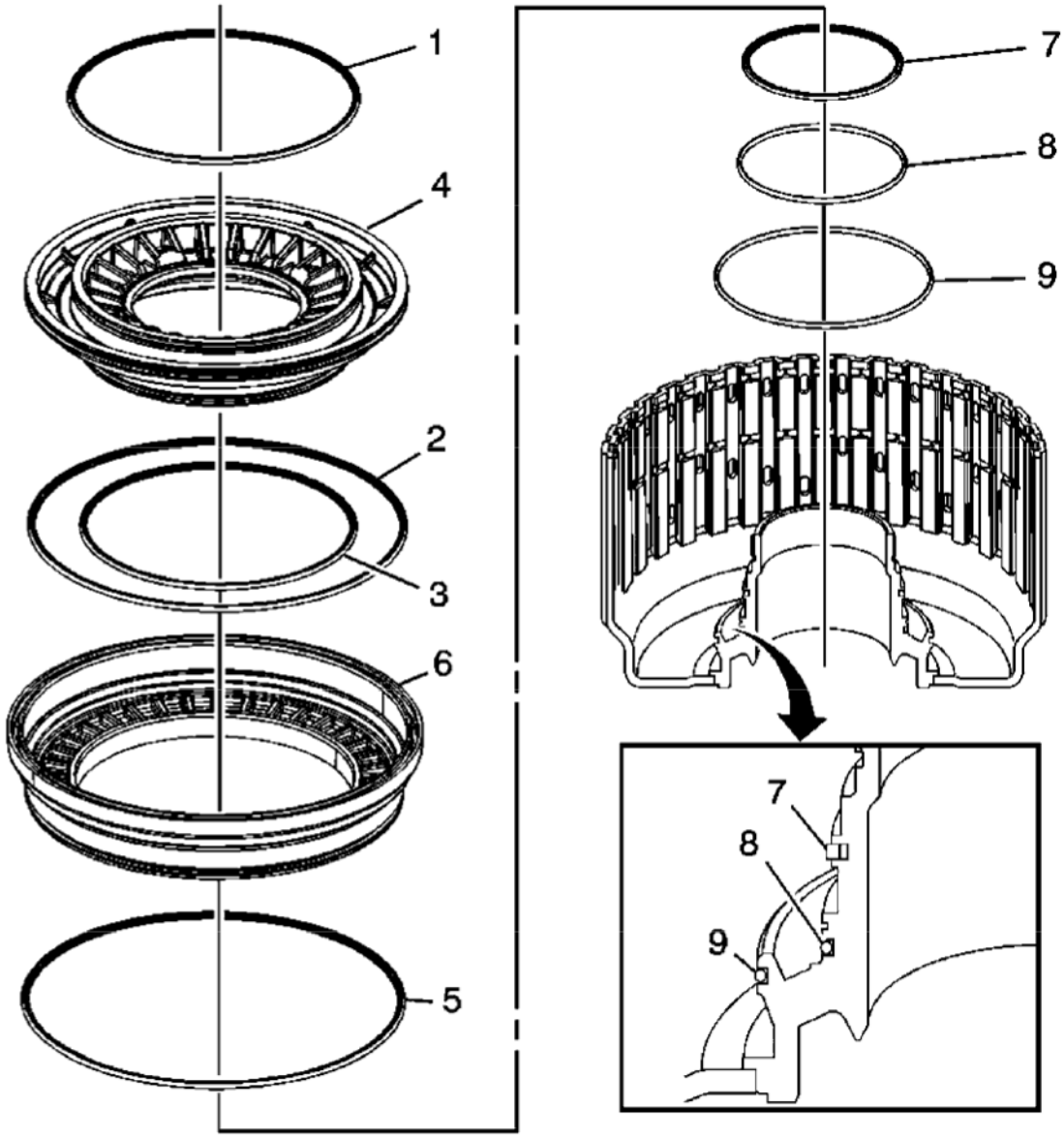

Fig. 57: 1-2-3-4 & 3-5 Reverse Clutch Piston Seals
Courtesy of GENERAL MOTORS CORP.

Callout	Component Name
CAUTION: Refer to Seal Reuse Caution . **Preliminary Procedure:** Lubricate all seals with automatic transmission fluid (ATF) prior to installation.	
1	1-2-3-4 Clutch Piston Seal
2	3-5 Reverse Clutch Piston Dam (O-Ring) Seal

cardiagn.com

3	3-5 Reverse Clutch Piston Inner Seal
4	1-2-3-4 Clutch Piston Housing
5	3-5 Reverse Clutch Piston Outer Seal
6	3-5 Reverse Clutch Piston
7	1-2-3-4 Clutch Piston Inner Seal **CAUTION:** **Do not install a NEW 1-2-3-4 clutch piston inner seal yet. A special tool used to install the 1-2-3-4 clutch piston housing retaining ring may damage the seal if the seal is installed prior to installing the retaining ring. Refer to 3-5 Reverse Clutch Piston Installation.**
8	1-2-3-4 Clutch Piston Housing Seal
9	1-2-3-4 Clutch Piston Housing Seal

3-5 Reverse Clutch Piston Installation

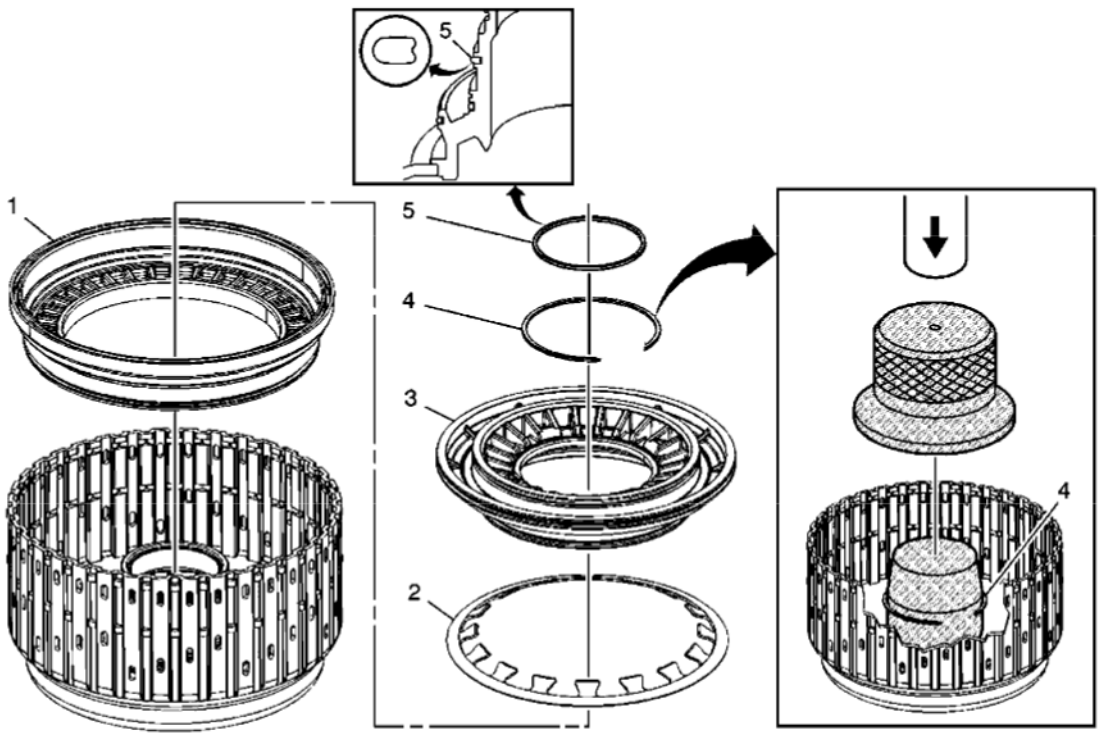

Fig. 58: 3-5 Reverse Clutch Piston
Courtesy of GENERAL MOTORS CORP.

Callout	Component Name
1	3-5 Reverse Clutch Piston
	3-5 Reverse Clutch Spring

cardiagn.com

2	**CAUTION:** **Ensure the clutch spring is centered on the piston with the tabs facing up. Failure to do so may cause damage to the clutch assembly.**
3	1-2-3-4 Clutch Piston Housing
4	1-2-3-4 Clutch Piston Housing Retaining Ring **CAUTION:** **Before using the DT 47782-2, push the retaining ring over the DT 47782-1 by hand so that the ring is positioned below the tapered area of the DT 47782-1. If the ring is positioned above the tapered area when it is being installed, the ring will become lodged between both tools and damage to the tools, retaining ring, and piston housing will result.** **CAUTION:** **Refer to Retaining Ring Reuse Caution .** **CAUTION:** **Push the retaining ring down over the cone until the ring seats firmly in the retaining ring groove. The retaining ring will make a distinctive click sound when it seats. Failure to properly seat the retaining ring may cause damage to the 3-5 reverse clutch assembly.** **Tip:** Use a screwdriver in order to verify the retaining ring is fully seated into the groove. It may appear as though the retaining ring is not fully seated, since the groove is shallow by design. However, this shallow interface is normal. **Special Tools** • **DT 47782-1:** Retaining Ring Cone • **DT 47782-2:** Retaining Ring Installer For equivalent regional tools, refer to **Special Tools** .
5	1-2-3-4 Clutch Piston Inner Seal **CAUTION:** **Install a NEW seal and orientate as shown. Failure to do so may cause internal transmission leaks and damage to the transmission.**

1-2-3-4 Clutch Piston Installation

cardiagn.com

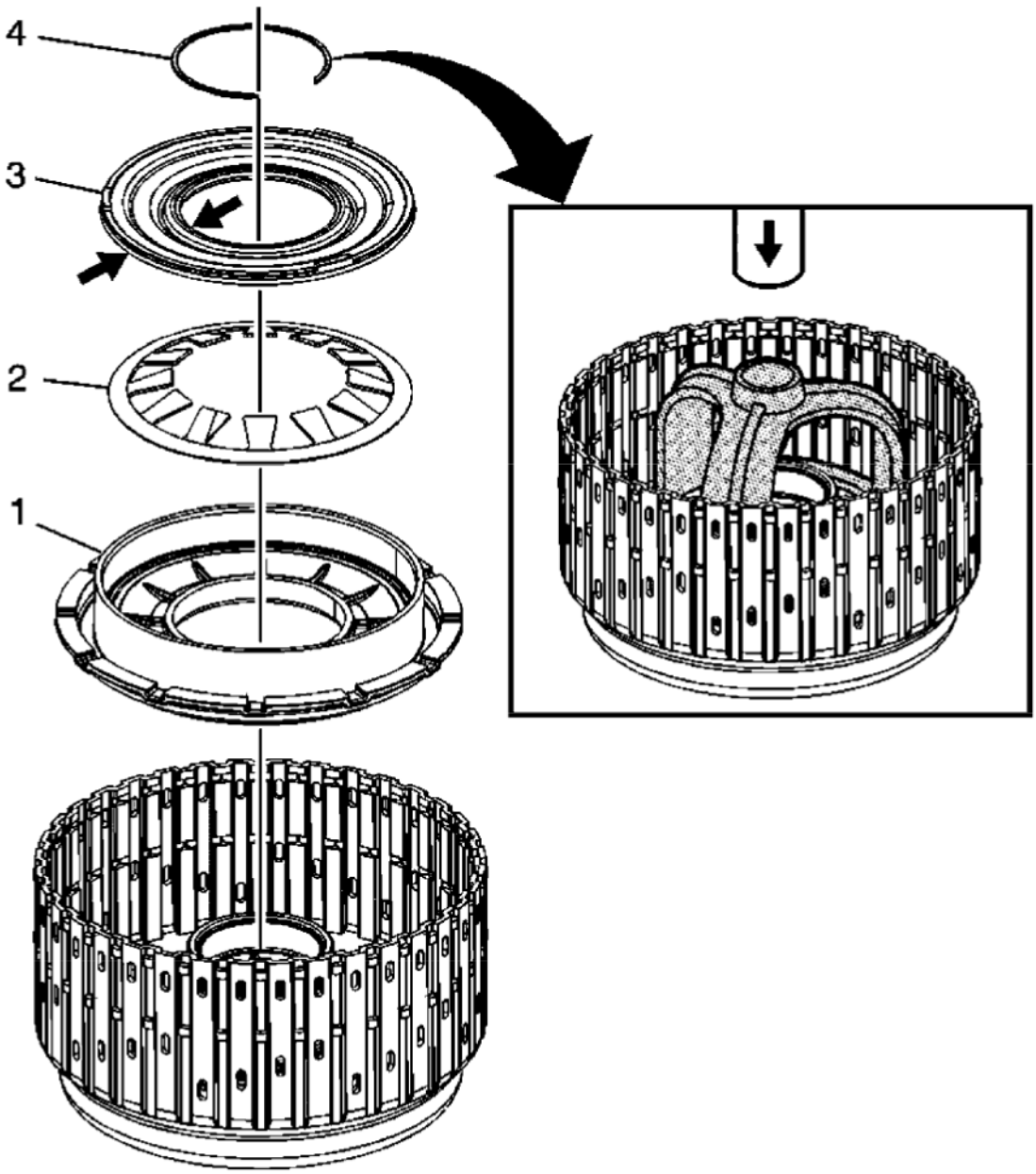

Fig. 59: 1-2-3-4 Clutch Piston
Courtesy of GENERAL MOTORS CORP.

Callout	Component Name
1	1-2-3-4 Clutch Piston
2	1-2-3-4 Clutch Spring **CAUTION:** **Ensure the clutch spring is centered on the piston with the tabs facing up. Failure to do so may cause damage to the clutch assembly.**

cardiagn.com

3	1-2-3-4 Clutch Piston Dam Assembly **Tip:** Lubricate the inner and outer surfaces of the dam assembly with ATF in order to ease installation into the piston. Install the tabs facing up.
4	1-2-3-4 Clutch Piston Dam Retaining Ring **CAUTION:** **Use care when compressing the 1-2-3-4 clutch spring and dam assembly. Compressing the dam assembly too much may damage it.** **CAUTION:** **Refer to Retaining Ring Reuse Caution .** **Special Tool:** **J 38734:** Intermediate Spring Compressor Adapter For equivalent regional tools, refer to **Special Tools** .

1-2-3-4 Clutch Plate Installation

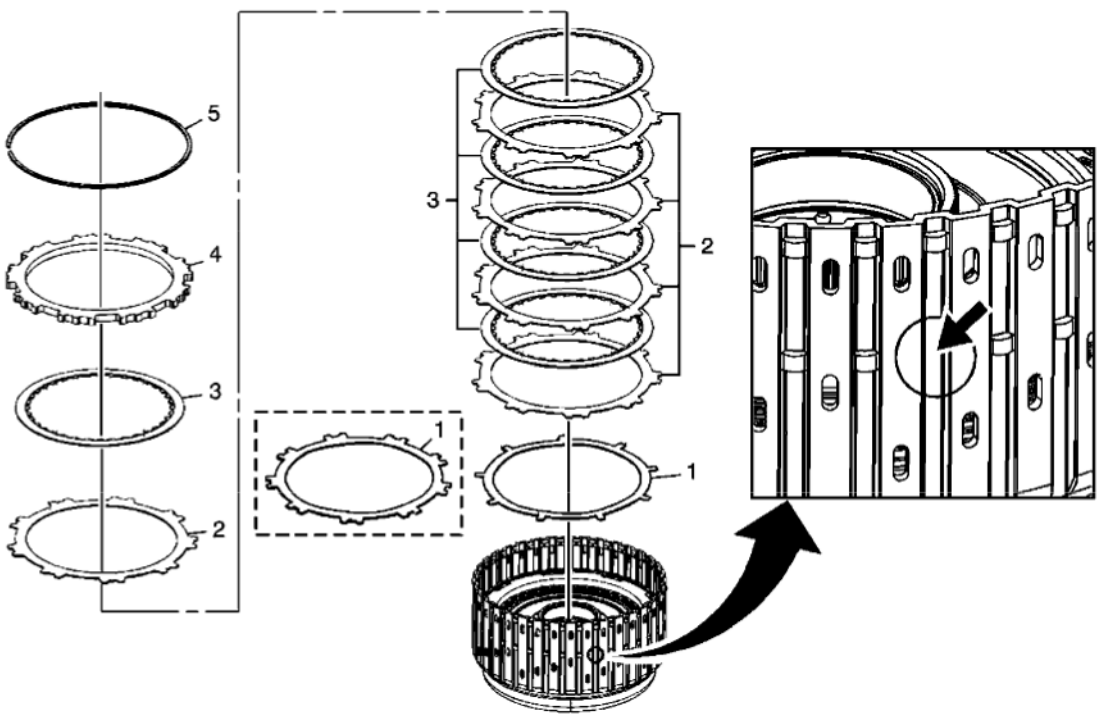

Fig. 60: 1-2-3-4 Clutch Plate
Courtesy of GENERAL MOTORS CORP.

Callout	Component Name
	1-2-3-4 Clutch (Waved) Plate

cardiagn.com

1	**CAUTION:** **To avoid damaging the seal, first place J 46624-1 with the small chamfer end facing up and leave in place for at least 60 seconds.**
2	1-2-3-4 Clutch Plate (Qty: 5) **CAUTION:** **Ensure all clutch plates are centered in the housing. When installing the first steel clutch plate, ensure an opening between the external splines is centered over the missing snap ring groove punch in the housing. Align the external splines of each remaining steel clutch plate with the first steel clutch plate. Failure to do so may cause damage to the clutch assembly.**
3	1-2-3-4 Clutch Plate Assembly (Qty: 5)
4	1-2-3-4 Clutch Backing Plate **CAUTION:** **Align the external splines of the backing plate with the external splines of the steel clutch plates. Failure to do so may cause damage to the clutch assembly.**
5	1-2-3-4 Clutch Backing Plate Retaining Ring **CAUTION:** **Depending on the housing configuration, align the retaining ring gap with the missing snap ring groove punch in the housing or the offset punch in the housing. Failure to do so may cause damage to the clutch assembly.** **Tip:** After the retaining ring is installed, determine clutch piston travel in order to verify if the correct selective retaining ring is being used. Refer to **1-2-3-4 Clutch Backing Plate Retaining Ring Measurement**.

3-5 and Reverse Clutch Plate Installation

cardiagn.com

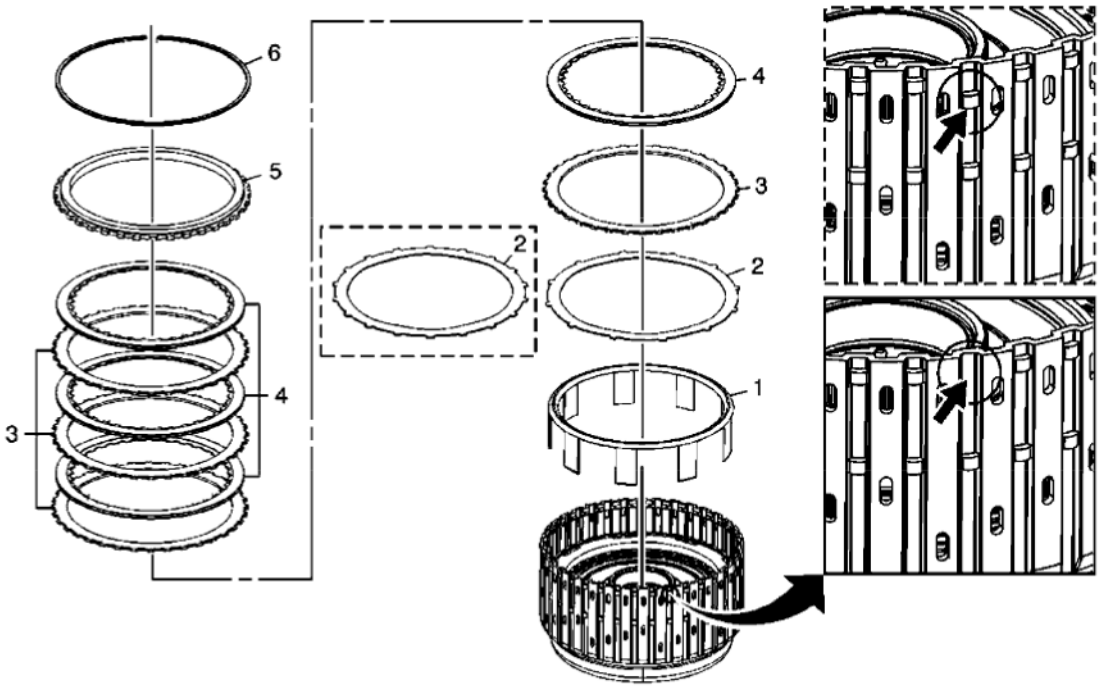

Fig. 61: 3-5 & Reverse Clutch Plate
Courtesy of GENERAL MOTORS CORP.

Callout	Component Name
1	3-5 Reverse Clutch Apply Ring **CAUTION:** **Ensure apply ring legs are positioned into the 3-5 reverse clutch piston. Failure to do so may cause damage to the 3-5 reverse clutch assembly.**
2	3-5 Reverse Clutch (Waved) Plate
3	3-5 Reverse Clutch Plate (Qty: 4)
4	3-5 Reverse Clutch Plate Assembly (Qty: 4)
5	3-5 Reverse Clutch Backing Plate
6	3-5 Reverse Clutch Backing Plate Retaining Ring **CAUTION:** **Depending on the housing configuration, align the retaining ring gap with the missing snap ring groove punch in the housing or the offset punch in the housing. Failure to do so may cause damage to the clutch assembly.** **Tip:** After the retaining ring is installed, determine clutch piston travel in order to verify if the correct selective retaining ring is being used. Refer to **3-5 Reverse Clutch Backing Plate Retaining Ring Measurement (6L50)** or **3-5 Reverse Clutch Backing Plate Retaining Ring Measurement (6L80/6L90)**.

cardiagn.com

1-2-3-4 and 3-5 Reverse Clutch Bearing Assembly Replacement

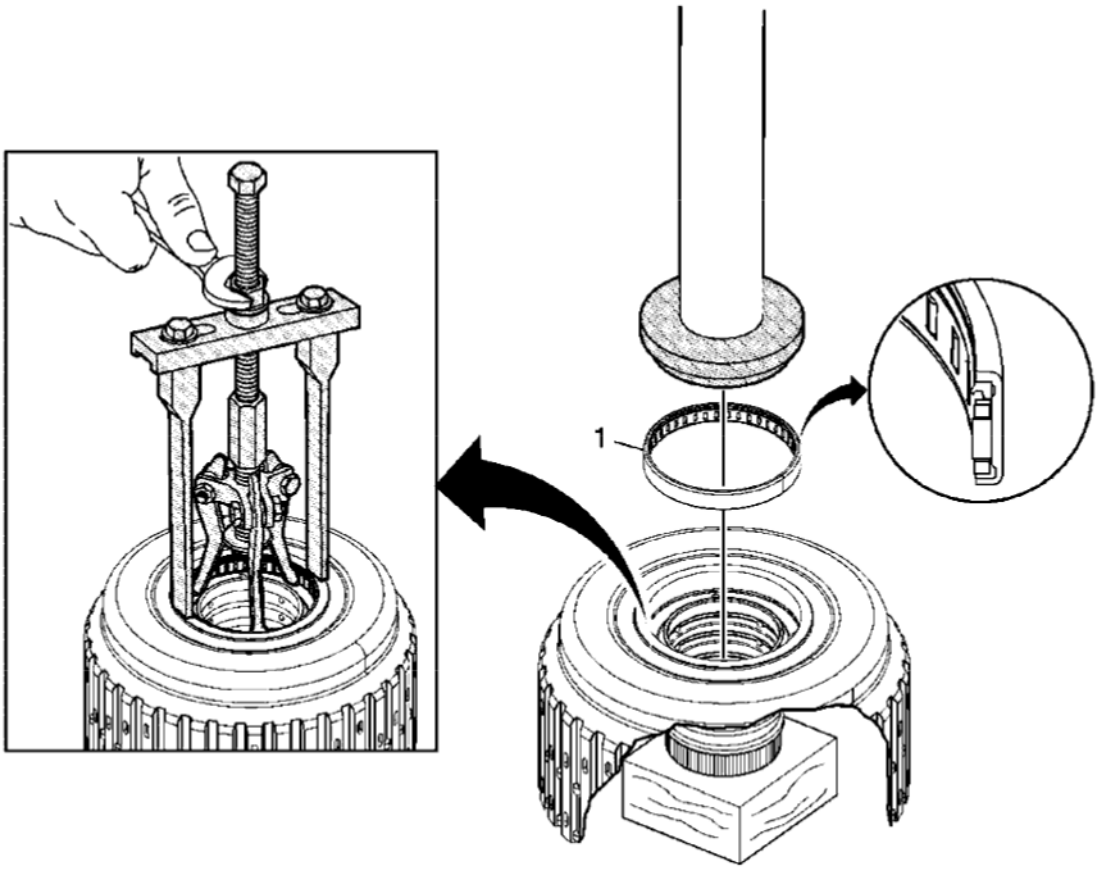

Fig. 62: 1-2-3-4 & 3-5 Reverse Clutch Bearing Assembly
Courtesy of GENERAL MOTORS CORP.

Callout	Component Name
	3-5 Reverse Clutch Bearing **CAUTION:** **Install the NEW bearing assembly with the seal side up. Improper installation of the bearing may cause damage to the transmission.**
1	**CAUTION:** **Do not use a hammer or other striking tool that may cause damage to the bearing and housing. Use care to ensure the bearing is installed slowly and evenly using an arbor press.** **CAUTION:** **Do not reuse the bearing. Install a NEW bearing. Reusing an old bearing may cause damage to the transmission.**

cardiagn.com

	Specification: Install the bearing flush to 0.3 mm below the thrust surface. **Special Tools** • **DT 47865:** Bearing Remover • **DT 47866:** Bearing Installer • **J 45124:** Removal Bridge For equivalent regional tools, refer to **Special Tools** .

1-2-3-4 CLUTCH BACKING PLATE RETAINING RING MEASUREMENT

Fluid Passage Plug Kit Installation

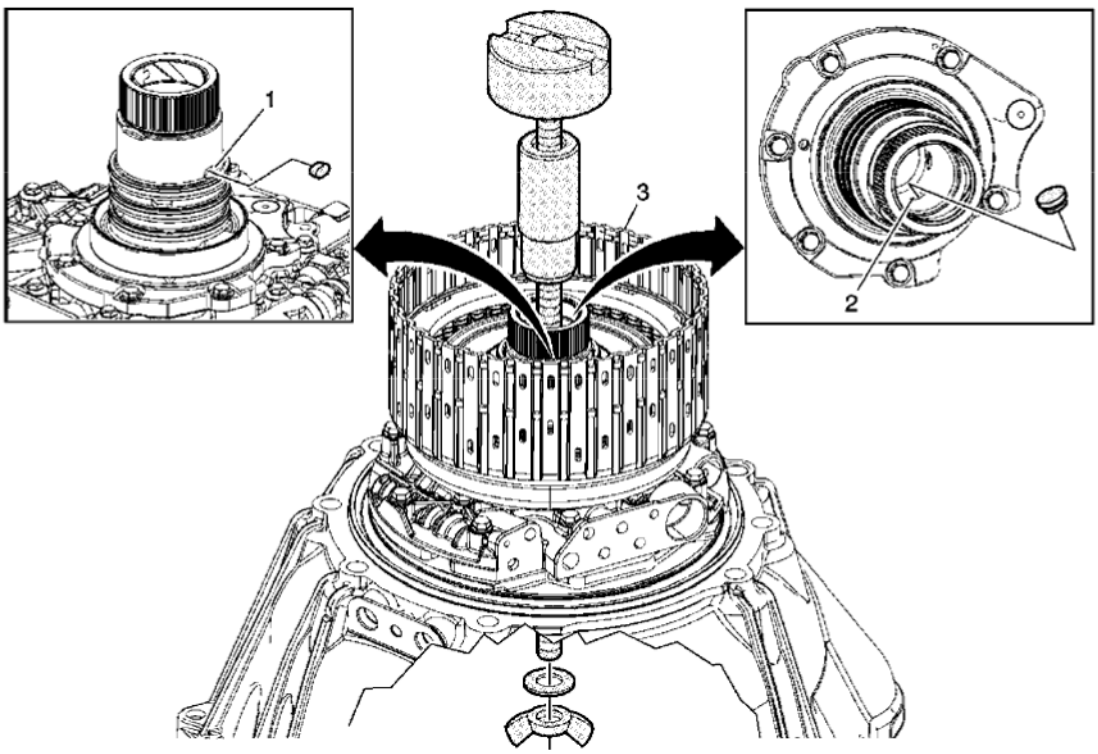

Fig. 63: Fluid Passage Plug Kit
Courtesy of GENERAL MOTORS CORP.

Callout	Component Name
Special Tools: **DT-49291:** Clutch Travel Air Passage Plug Kit	
	Compensator Feed Fluid Passage - Outer **Procedure:**

cardiagn.com

1	Install the tapered oval fluid passage plug DT-49291-4 which is part of **DT-49291:** clutch travel air passage plug kit, into the compensator feed fluid passage hole on the 1-2-3-4 and 3-5 reverse clutch support assembly. **Tip:** The compensator feed fluid passage hole is the top outer hole on the 1-2-3-4 and 3-5 reverse clutch support assembly.
2	Compensator Feed Fluid Passage - Inner **Procedure:** Install the round fluid passage plug DT-49291-5 which is part of **DT-49291:** clutch travel air passage plug kit, into the compensator feed fluid passage hole inside the 1-2-3-4 and 3-5 reverse clutch support assembly. **Tip:** The compensator feed fluid passage hole is the middle inner hole in the 1-2-3-4 and 3-5 reverse clutch support assembly.
3	1-2-3-4 and 3-5 Reverse Clutch Housing Assembly **Procedure** 1. Ensure that the 1-2-3-4 clutch plates, backing plate and retaining ring are installed. 2. Install the 1-2-3-4 and 3-5 reverse clutch housing onto the torque converter (with fluid pump) housing assembly. 3. Install the applicable plug kit sleeve DT-49291-2 (6L80/6L90) or DT-49291-3 (6L45/6L50), cap DT-49291-1, bolt, washer and nut which are all part of **DT-49291:** clutch travel air passage plug kit.

Apply Compressed Air and Measurement

cardiagn.com

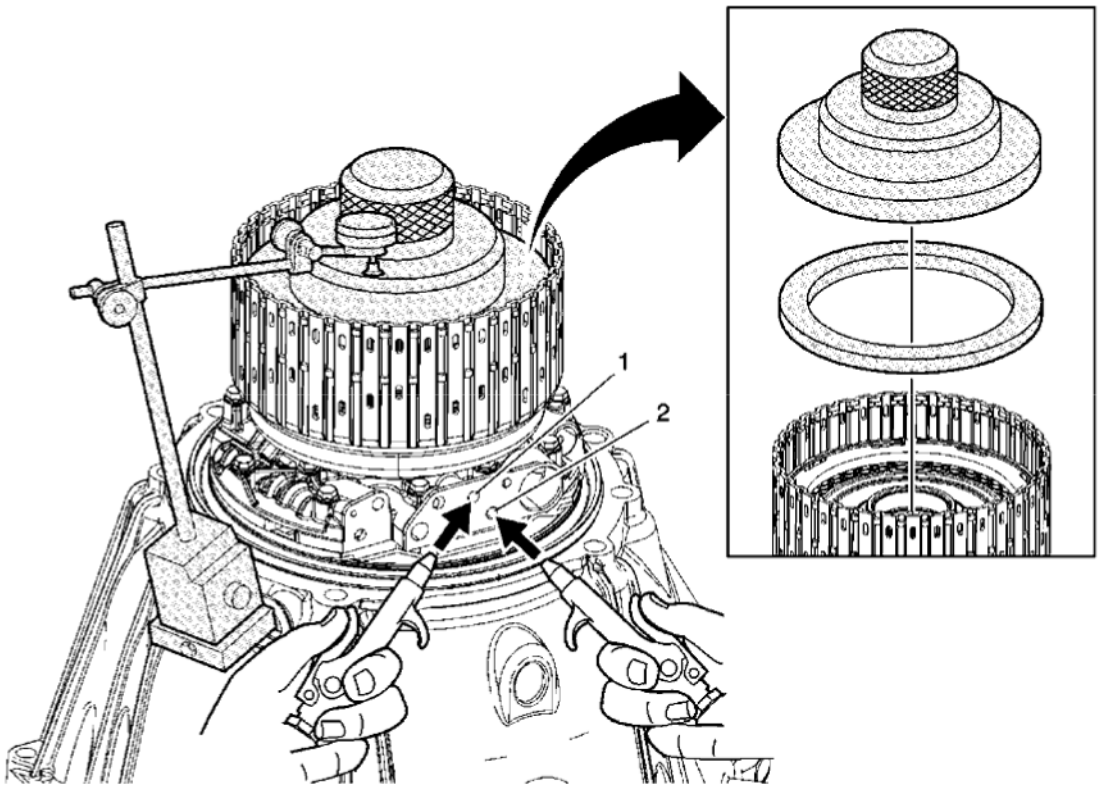

Fig. 64: 1-2-3-4 Clutch Backing Plate Retaining Ring
Courtesy of GENERAL MOTORS CORP.

Callout	Component Name

Preliminary Procedures

1. Install the **DT 47868-2:** base adapter onto the torque converter housing.
2. Install **DT 47868-1:** travel weight and **DT-47868-3:** travel weight adapter onto the 1-2-3-4 clutch backing plate.
3. Install the **J 26900-13:** magnetic base onto **DT 47868-2:** base adapter.
4. Attach the **J 8001:** dial indicator set to the **J 26900-13:** magnetic base.

Special Tools

- **DT 47868-1:** Clutch Pack Travel Weight
- **DT 47868-2:** Magnetic Base Adapter
- **DT-47868-3:** Clutch Travel Weight Adapter
- **J 8001:** Dial Indicator Set
- **J 26900-13:** Magnetic Base

For equivalent regional tools, refer to **Special Tools** .

cardiagn.com

1	Compensator Feed Fluid Passage **Procedure** 1. Apply compressed air to the compensator feed fluid passage. 2. Zero out the dial indicator **J 8001:** dial indicator set.
2	1-2-3-4 Clutch Apply Passage **Procedure:** While Applying compressed air to the compensator feed fluid passage, simultaneously apply compressed air to the 1-2-3-4 clutch apply passage. Do this at least 3 times and observe the dial indicator measurement each time. Refer to **Clutch Backing Plate Retaining Ring Specifications (6L50)** or **Clutch Backing Plate Retaining Ring Specifications (6L80)** .

3-5 REVERSE CLUTCH BACKING PLATE RETAINING RING MEASUREMENT (6L50)

cardiagn.com

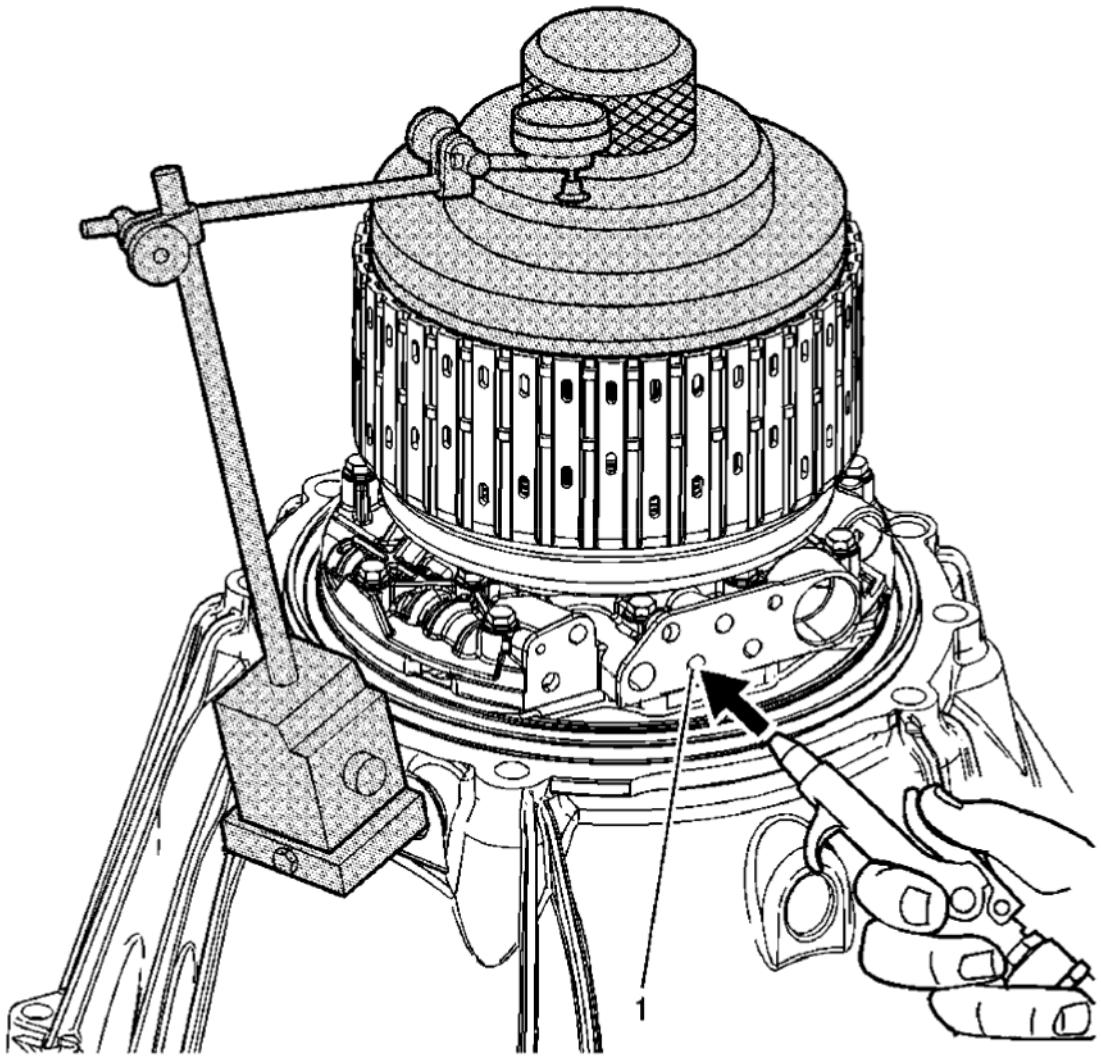

Fig. 65: 3-5 Reverse Clutch Backing Plate Retaining Ring (6L50)
Courtesy of GENERAL MOTORS CORP.

Callout	Component Name

Preliminary Procedures

1. Install the 1-2-3-4 and 3-5 reverse clutch housing with the 1-2-3-4 and 3-5 reverse clutch plates installed, onto the torque converter housing.
2. Install the **DT 47868-2:** magnetic base adapter onto the torque converter housing.
3. Install **DT 47868-1:** clutch pack travel weight and **DT 47868-3:** clutch travel weight adapter (6L50 applications only) onto the 3-5 reverse clutch backing plate.
4. Install the **J 26900-13:** magnetic base onto **DT 47868-2:** magnetic base adapter.
5. Attach the **J 8001:** dial indicator set to the **J 26900-13:** magnetic base and zero out the dial indicator on the **DT 47868-1:** clutch pack travel weight.

cardiagn.com

Special Tools

- **DT 47868-1:** Clutch Pack Travel Weight
- **DT 47868-2:** Magnetic Base Adapter
- **DT 47868-3:** Clutch Travel Weight Adapter (6L50 applications only)
- **J 8001:** Dial Indicator Set
- **J 26900-13:** Magnetic Base

For equivalent regional tools, refer to **Special Tools** .

1	3-5 Reverse Clutch Apply Passage **Tip:** Apply compressed air to the apply passage hole, and observe the dial indicator measurement. Refer to **Clutch Backing Plate Retaining Ring Specifications (6L50)** or **Clutch Backing Plate Retaining Ring Specifications (6L80)** .

3-5 REVERSE CLUTCH BACKING PLATE RETAINING RING MEASUREMENT (6L80/6L90)

cardiagn.com

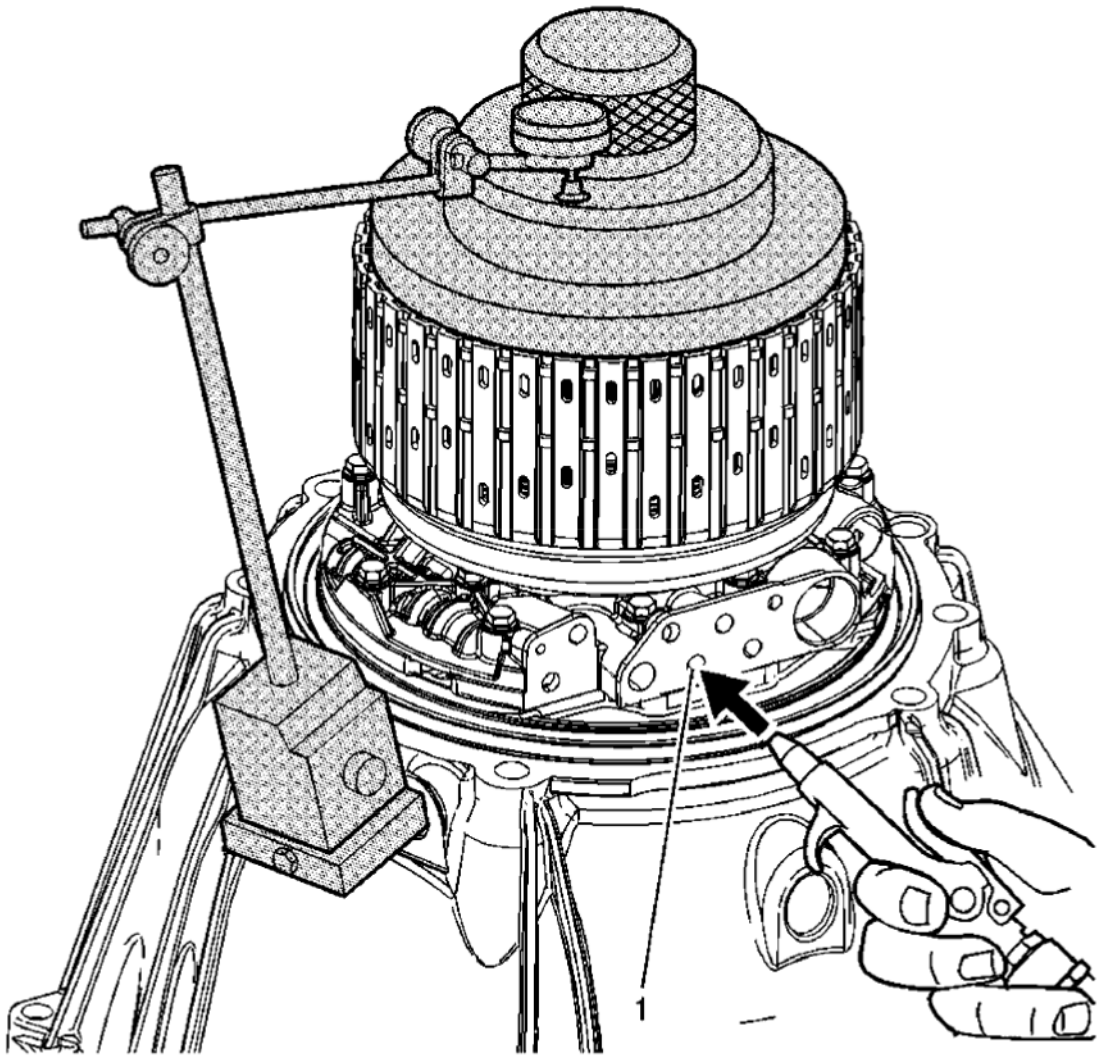

Fig. 66: 3-5 Reverse Clutch Backing Plate Retaining Ring (6L80/6L90)
Courtesy of GENERAL MOTORS CORP.

Callout	Component Name

Preliminary Procedures

1. Install the 1-2-3-4 and 3-5 reverse clutch housing with the 1-2-3-4 and 3-5 reverse clutch plates installed, onto the torque converter housing.
2. Install the **DT 47868-2:** magnetic base adapter onto the torque converter housing.
3. Install **DT 47868-1:** clutch pack travel weight onto the 3-5 reverse clutch backing plate.
4. Install the **J 26900-13:** magnetic base onto **DT 47868-2:** magnetic base adapter.
5. Attach the **J 8001:** dial indicator set to the **J 26900-13:** magnetic base and zero out the dial indicator on the **DT 47868-1:** clutch pack travel weight.

cardiagn.com

Special Tools

- **DT 47868-1:** Clutch Pack Travel Weight
- **DT 47868-2:** Magnetic Base Adapter
- **J 8001:** Dial Indicator Set
- **J 26900-13:** Magnetic Base

For equivalent regional tools, refer to **Special Tools** .

1	3-5 Reverse Clutch Apply Passage **Tip:** Apply compressed air to the apply passage hole, and observe the dial indicator measurement. Refer to **Clutch Backing Plate Retaining Ring Specifications (6L50)** or **Clutch Backing Plate Retaining Ring Specifications (6L80)** .

TORQUE CONVERTER HOUSING WITH FLUID PUMP DISASSEMBLE

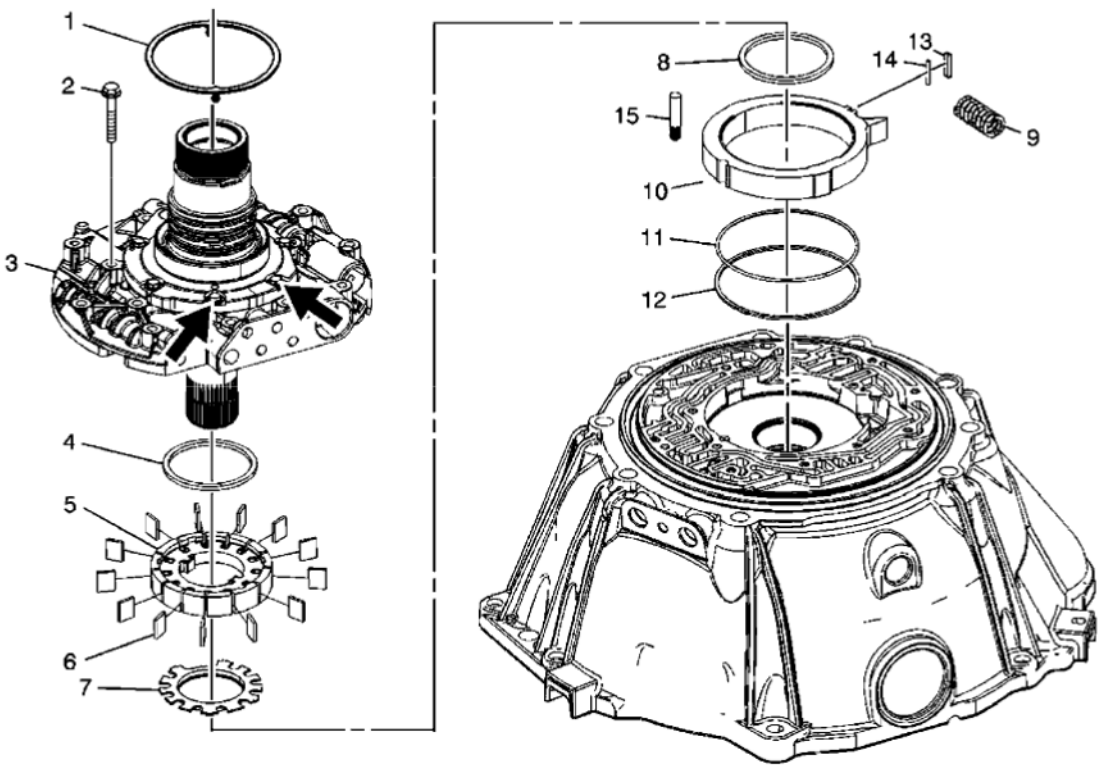

Fig. 67: Torque Converter Housing With Fluid Pump
Courtesy of GENERAL MOTORS CORP.

Callout	Component Name
CAUTION: **Do not loosen or remove the 6 bolts securing the clutch support to the pump cover assembly. These bolts have been installed and torqued only after specific clutch support rotational requirements have**	

cardiagn.com

been met. If the clutch support is not installed properly, damage to the transmission will occur.	
1	1-2-3-4 and 3-5 Reverse Clutch Housing Thrust Washer
2	Bolt M6 x 40 (Qty: 13)
3	Fluid Pump Cover Assembly
4	Fluid Pump Vane Ring
5	Fluid Pump Rotor
6	Fluid Pump Vanes (Qty: 13)
7	Fluid Pump Rotor Guide
8	Fluid Pump Vane Ring
9	Fluid Pump Slide Outer Spring
10	Fluid Pump Slide
11	Fluid Pump Slide (O-Ring) Seal
12	Fluid Pump Slide Fluid Seal Ring
13	Fluid Pump Slide Seal
14	Fluid Pump Slide Seal Support
15	Fluid Pump Slide Pivot Pin

FLUID PUMP COVER CLEANING AND INSPECTION

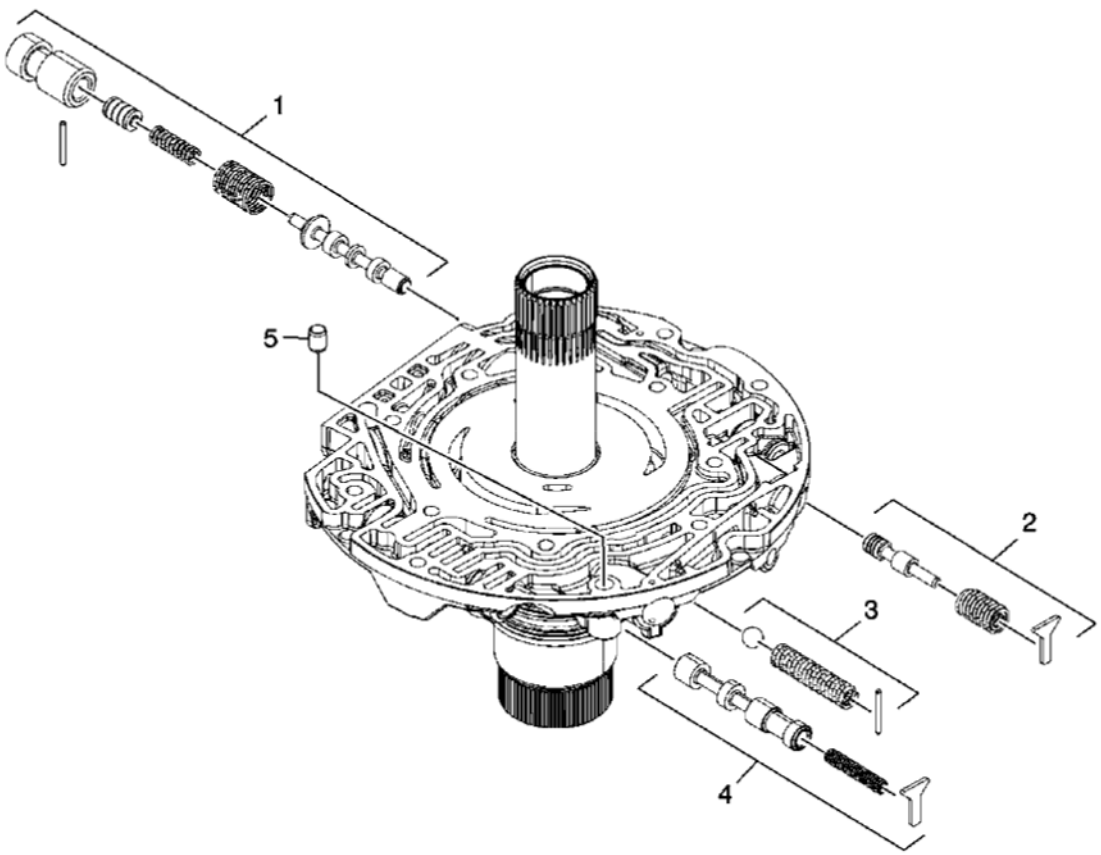

cardiagn.com

Fig. 68: Fluid Pump Cover
Courtesy of GENERAL MOTORS CORP.

Callout	Component Name
WARNING: **Valve springs can be tightly compressed. Use care when removing retainers and plugs. Personal injury could result.** **Preliminary Procedure:** Clean and inspect all components and machined surfaces.	
1	Pressure Regulator Valve Train
2	Converter Feed Limit Valve Train
3	Pressure Relief Ball Valve and Spring
4	TCC Control Valve and Spring
5	A/Trans Fluid Pump Locator Pin

1-2-3-4 AND 3-5 REVERSE CLUTCH FLUID SEAL RING INSTALLATION (6L50)

cardiagn.com

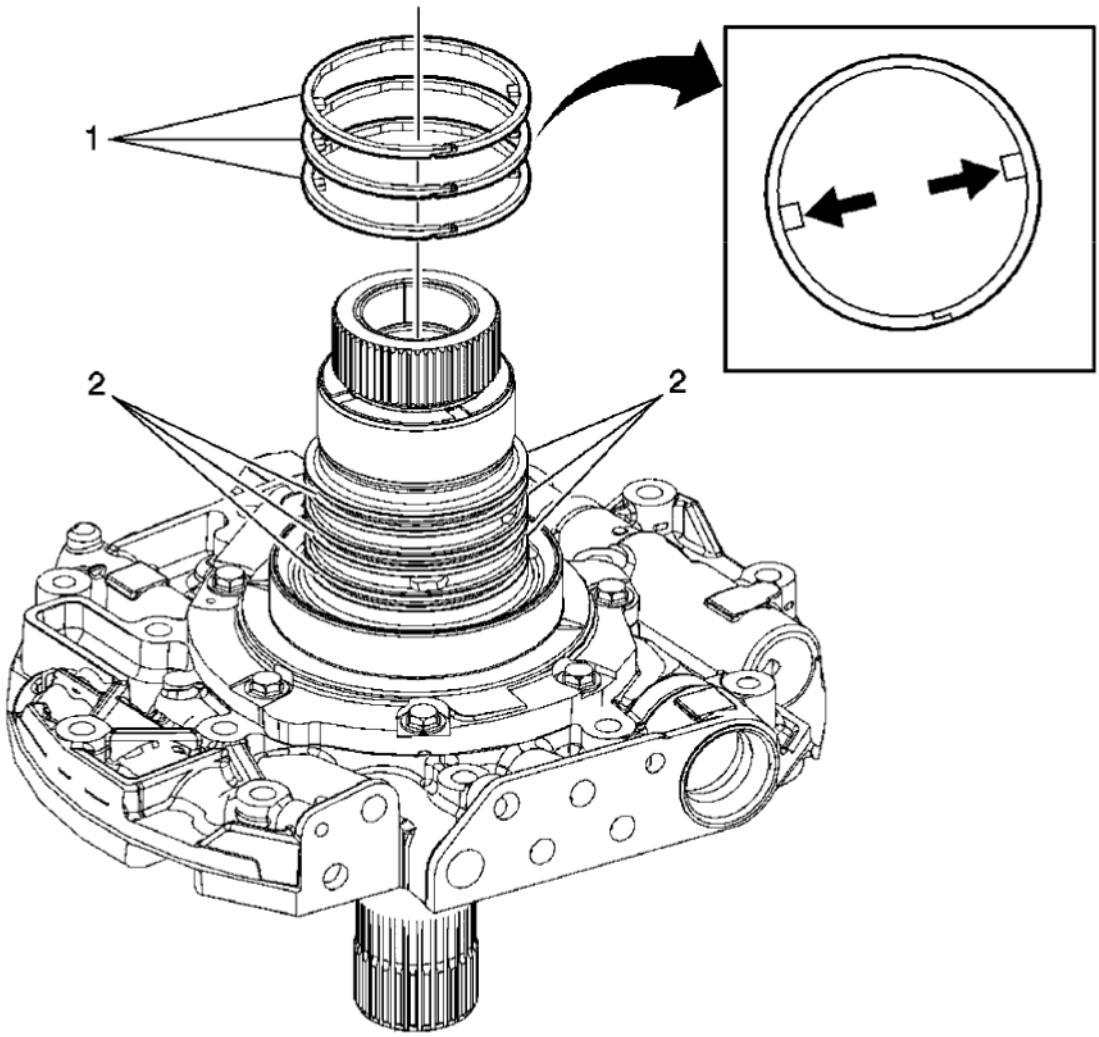

Fig. 69: 1-2-3-4 & 3-5 Reverse Clutch Fluid Seal Rings (6L50)
Courtesy of GENERAL MOTORS CORP.

Callout	Component Name
CAUTION: **Do not use old seal rings. Install NEW seal rings. Reusing old seal rings may cause internal transmission leaks and transmission damage.**	
1	1-2-3-4 and 3-5 Reverse Clutch Fluid Seal Rings (Qty: 3) **Tip:** Ensure anti-rotation tabs on seal rings align with anti-rotation slots.
2	1-2-3-4 and 3-5 Reverse Clutch Fluid Seal Rings Anti-rotation Slots

1-2-3-4 AND 3-5 REVERSE CLUTCH FLUID SEAL RING INSTALLATION (6L80/90)

cardiagn.com

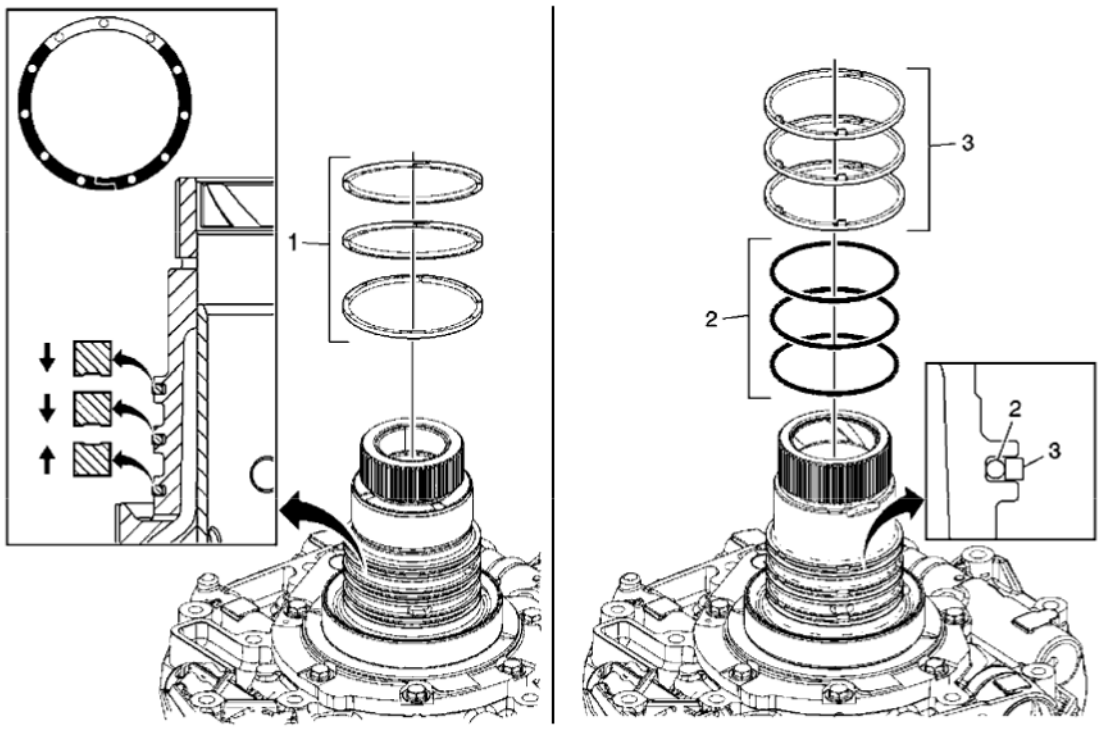

Fig. 70: 1-2-3-4 & 3-5 Reverse Clutch Fluid Seal Ring (6L80/90)
Courtesy of GENERAL MOTORS CORP.

Callout	Component Name
CAUTION: **Do not use old seal rings. Install NEW seal rings. Reusing old seal rings may cause internal transmission leaks and transmission damage.** **NOTE:** **Some models have seal rings with installation identification marks that consist of approximately 11 evenly-spaced injection molding gate trim rings and/or a white stripe printed on one side. This installation orientation must be observed to avoid fluid leakage which may cause shift concerns. Models utilizing an inner O-ring seal have accompanying outer seal rings that contain anti-rotation tabs and can only be installed one way.**	
1	1-2-3-4 and 3-5 Reverse Clutch Fluid Seal Rings (Qty: 3) **Procedure:** Install the first seal ring with the identification marks facing up. Then install the remaining two seal rings with the identification marks facing down.
2	1-2-3-4 and 3-5 Reverse Clutch Fluid Seal Rings (Qty: 3) - Inner O-ring
3	1-2-3-4 and 3-5 Reverse Clutch Fluid Seal Rings (Qty: 3) - Outer

TORQUE CONVERTER HOUSING CLEANING AND INSPECTION

cardiagn.com

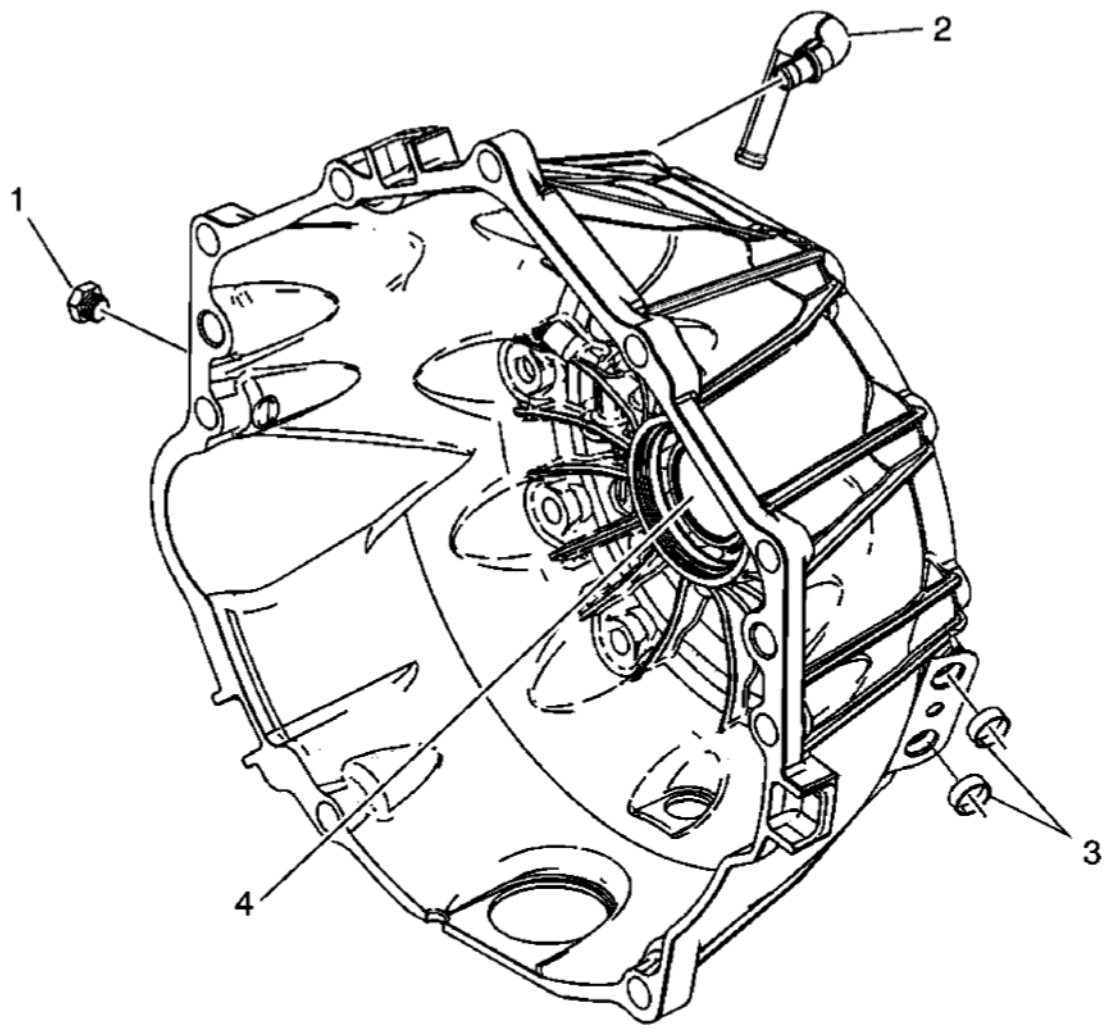

Fig. 71: Torque Converter Housing
Courtesy of GENERAL MOTORS CORP.

Callout	Component Name
Preliminary Procedures 1. Thoroughly clean the torque converter housing assembly, including threads, with clean solvent. 2. Clean sealing surfaces. 3. Inspect all threaded holes. If necessary, repair any thread damage.	
1	Line Pressure Test Hole Plug **CAUTION:** **Use care when tightening the line pressure test hole plug. Do not use a socket extension, which could cause side-loading and potentially crack the transmission case assembly.**

cardiagn.com

	CAUTION: **Refer to Fastener Caution .** **Tighten:** 11 N.m (97 lb in)
2	A/Trans Vent Pipe
3	Trans Fluid Cooler Pipe Fitting Seal **CAUTION:** **Refer to Seal Reuse Caution .** **Tip:** Refer to **Transmission Fluid Cooler Pipe Seal Replacement**.
4	Torque Converter Bushing

TORQUE CONVERTER FLUID SEAL REPLACEMENT

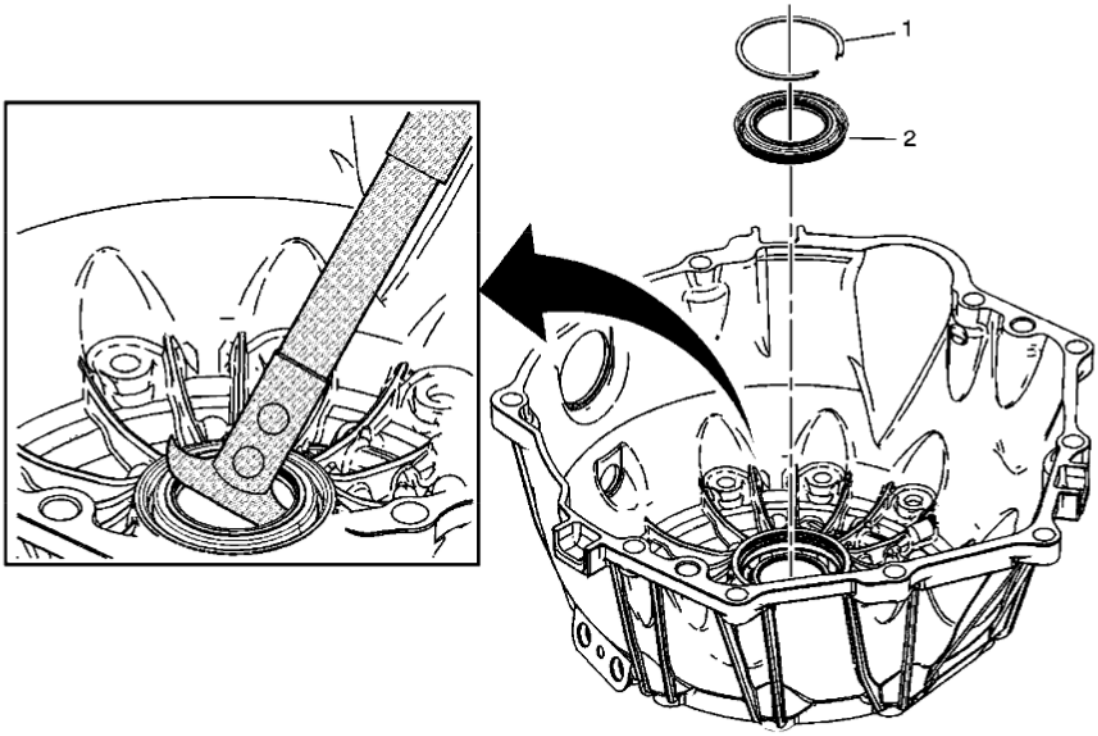

Fig. 72: Torque Converter Fluid Seal
Courtesy of GENERAL MOTORS CORP.

Callout	Component Name
1	Torque Converter Fluid Seal Retaining Ring

cardiagn.com

2	Torque Converter Fluid Seal Assembly **Tip:** The seal can be installed by hand. **Special Tool:** **J 45000:** Seal Remover For equivalent regional tools, refer to **Special Tools** .

TRANSMISSION FLUID COOLER PIPE SEAL REPLACEMENT

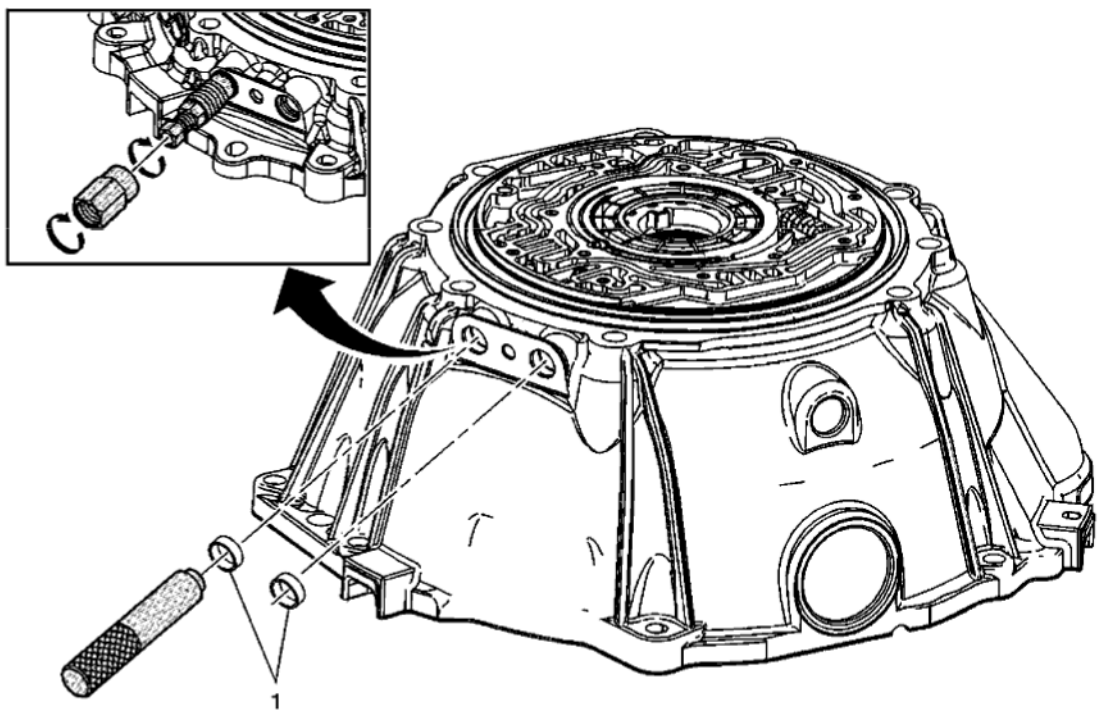

Fig. 73: Transmission Fluid Cooler Pipe Seal
Courtesy of GENERAL MOTORS CORP.

Callout	Component Name
1	Trans Fluid Cooler Pipe Fitting Seals (Qty: 2) **Special Tools** • **DT 47770:** Seal Installer • **J 45201:** Cooler Line Seal Remover For equivalent regional tools, refer to **Special Tools** .

FLUID PUMP SELECTIVE MEASUREMENT

cardiagn.com

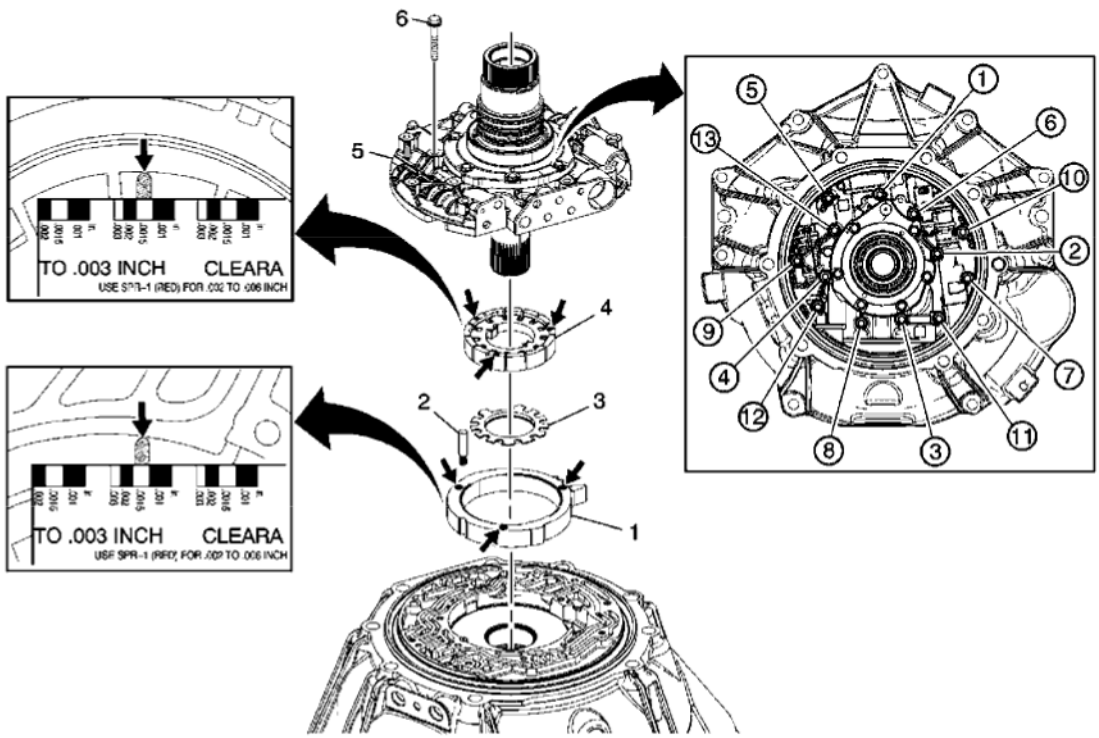

Fig. 74: Fluid Pump
Courtesy of GENERAL MOTORS CORP.

Callout	Component Name
Preliminary Procedures • After cleaning the transmission components, allow to air dry. Do not use cloth or paper towels in order to dry any transmission components. • Clean and inspect all components and machined surfaces.	
1	Fluid Pump Slide **Procedure** 1. Install an existing and/or undamaged pump slide. 2. Place gauging plastic in three locations on the pump slide surface facing the pump cover, up.
2	Fluid Pump Slide Pivot Pin
3	Fluid Pump Rotor Guide **Tip:** Align the rotor guide tabs to the notches on the bottom of the rotor.
4	Fluid Pump Rotor **Procedure**

cardiagn.com

	1. Install an existing and/or undamaged pump rotor. 2. Place gauging plastic in three locations on the pump rotor surface facing the pump cover, up.
5	Fluid Pump Cover Assembly
6	Fluid Pump Cover Bolts M6 x 40 (Qty: 13) **CAUTION:** **Refer to Fastener Caution .** **Procedure** 1. Hand tighten the bolts. 2. Tighten the fluid pump cover bolts in the sequence shown. 3. Remove the pump cover bolts and the pump cover. 4. Using the measuring device provided with the gauging plastic kit, measure the gauging plastic on the rotor and the slide, see inset drawings. Choose the correct selective rotor and or slide, based on the slide and rotor to fluid pump body end play specifications. Refer to **Fluid Pump Selective Specifications** . 5. Remove the gauging plastic and clean the rotor and slide surfaces. **Tighten:** 11 N.m (97 lb in)

TORQUE CONVERTER HOUSING WITH FLUID PUMP ASSEMBLE

cardiagn.com

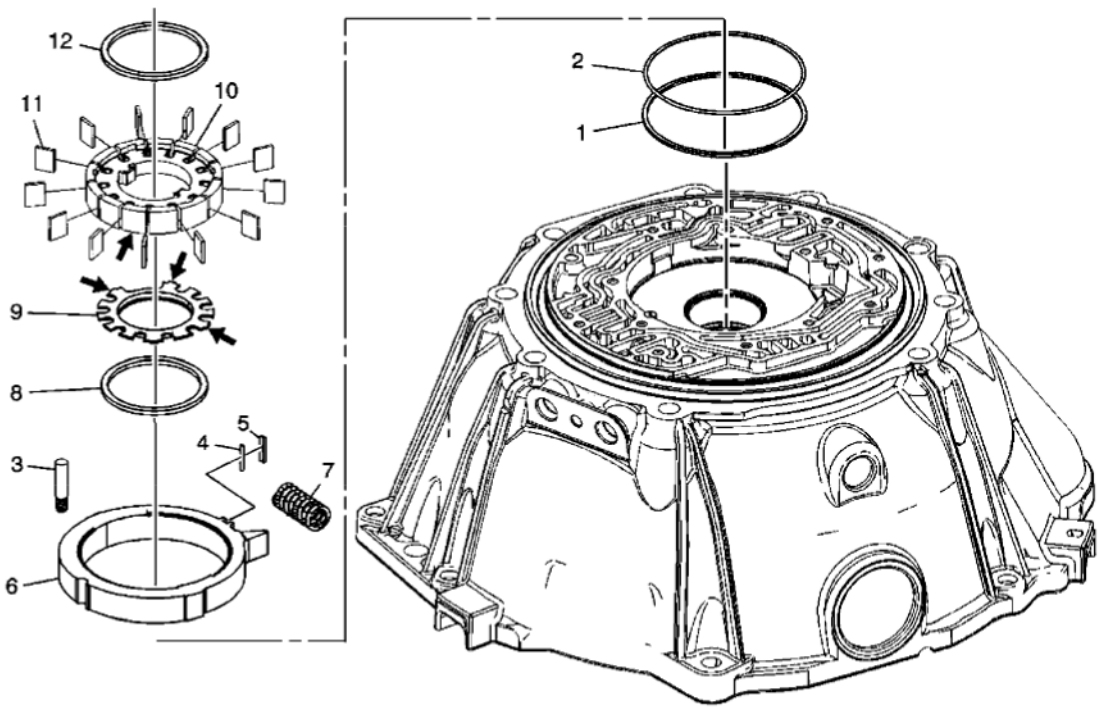

Fig. 75: Torque Converter Housing With Fluid Pump
Courtesy of GENERAL MOTORS CORP.

Callout	Component Name
1	Fluid Pump Slide Fluid Seal Ring
2	Fluid Pump Slide (O-Ring) Seal
3	Fluid Pump Slide Pivot Pin
4	Fluid Pump Slide Seal Support **Tip:** The seal support is circular. The seal is rectangular.
5	Slide Seal
6	Fluid Pump Slide **Tip:** If installing a NEW pump slide into the torque converter housing, ensure to properly select the correct rotor and slide before performing this procedure. Refer to **Fluid Pump Selective Measurement** and **Fluid Pump Selective Specifications** .
7	Fluid Pump Slide Outer Spring
8	Fluid Pump Vane Ring
9	Fluid Pump Rotor Guide **CAUTION:** **Align the rotor guide tabs to the notches on the bottom of the rotor. Failure to do so may cause transmission damage.**
10	Fluid Pump Rotor **Tip:** If installing a NEW pump rotor into the torque converter housing, ensure to properly select the correct rotor and slide before performing this procedure. Refer to

cardiagn.com

	Fluid Pump Selective Measurement and **Fluid Pump Selective Specifications** .
11	Fluid Pump Vanes (Qty: 13)
12	Fluid Pump Vane Ring

FLUID PUMP COVER INSTALLATION

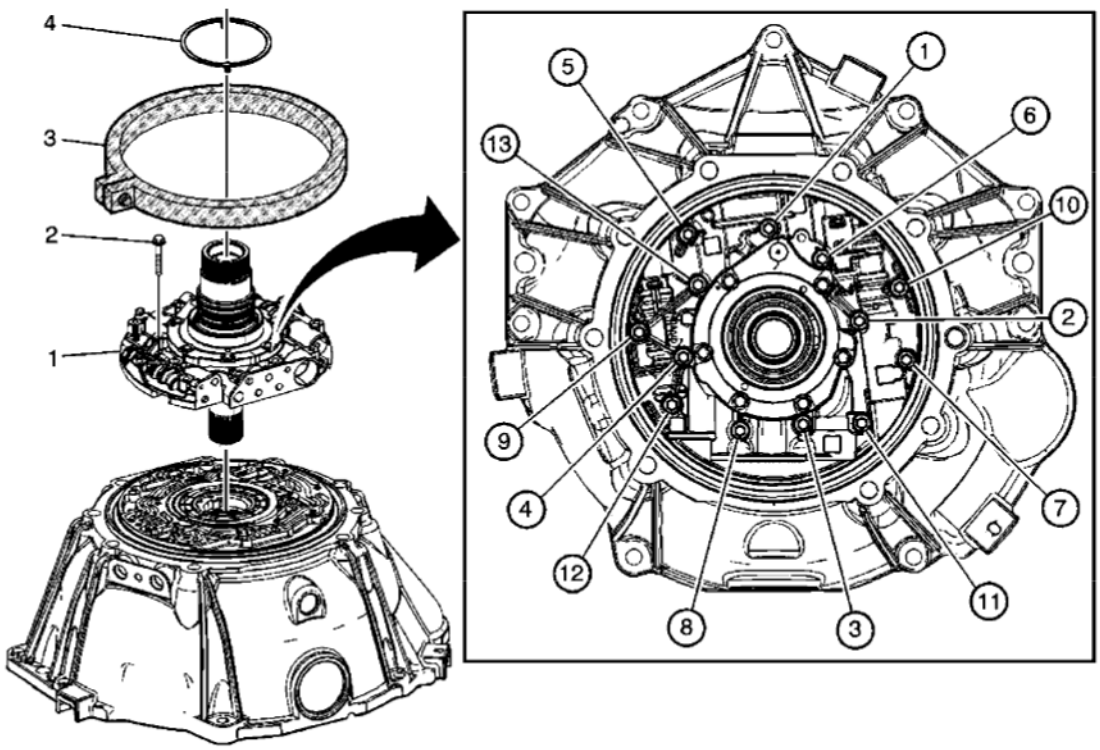

Fig. 76: Fluid Pump Cover
Courtesy of GENERAL MOTORS CORP.

Callout	Component Name
1	Fluid Pump Cover Assembly
2	Fluid Pump Cover Bolts M6 x 40 (Qty: 13) **Tip:** Hand tighten only.
3	Alignment Tool and Bolt **CAUTION:** **Refer to Fastener Caution .** **Procedure** 1. Center the **J 46664** around the fluid pump cover assembly in the 9 o'clock position and tighten the alignment bolt. See **Special Tools** . 2. Tighten the fluid pump cover bolts in the sequence shown.

cardiagn.com

	Tighten: 11 N.m (97 lb in) **Special Tool:** **J 46664:** Pump Cover Alignment Tool For equivalent regional tools, refer to **Special Tools** .
4	NEW 1-2-3-4 and 3-5 Reverse Clutch Housing Thrust Washer

CONTROL VALVE BODY ASSEMBLY DISASSEMBLE

Input and Output Speed Sensor Assembly Removal

cardiagn.com

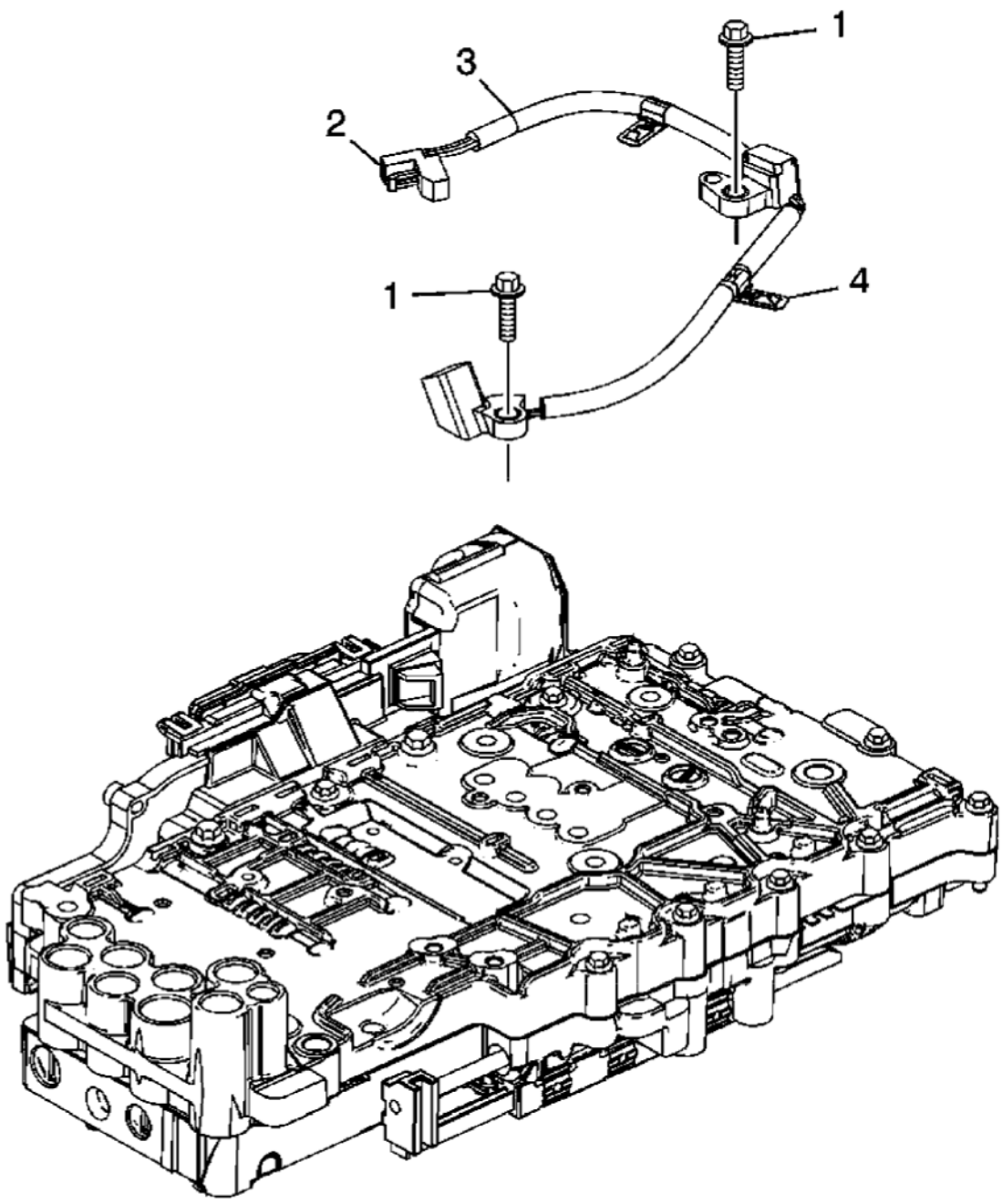

Fig. 77: Input & Output Speed Sensor Assembly
Courtesy of GENERAL MOTORS CORP.

Callout	Component Name
1	Bolt M6 x 20 (Qty: 2)
2	Speed Sensor Electrical Connector **Tip:** Release the connector lock before disconnecting.
3	A/Trans Input and Output Speed Sensor Assembly

cardiagn.com

4	A/Trans Input and Output Speed Sensor Wiring Harness Clip (Qty: 2) **Tip:** Inspect the clips and replace if damaged.

Manual Shaft Detent Assembly and Manual Shift Shaft Position Switch Removal

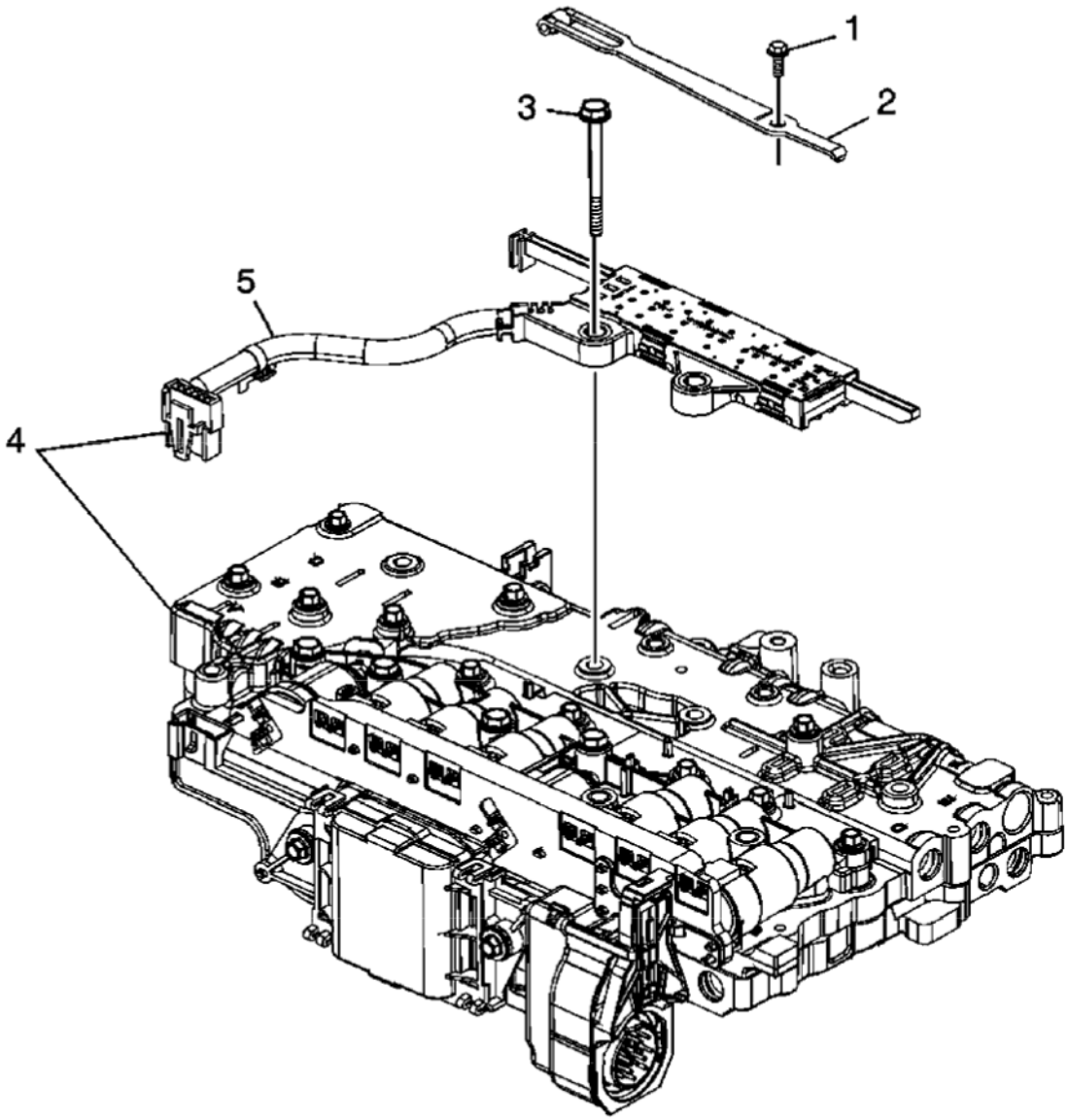

Fig. 78: Manual Shaft Detent Assembly & Manual Shift Shaft Position Switch
Courtesy of GENERAL MOTORS CORP.

Callout	Component Name
1	Bolt M6 x 14.5
2	Manual Shaft Detent Assembly
3	Bolt M5 x 55

cardiagn.com

4	A/Trans Manual Shift Shaft Position Switch Assembly Electrical Connector **Tip:** Release the connector lock before disconnecting.
5	A/Trans Manual Shift Shaft Position Switch Assembly

Control Solenoid Valve Assembly Removal

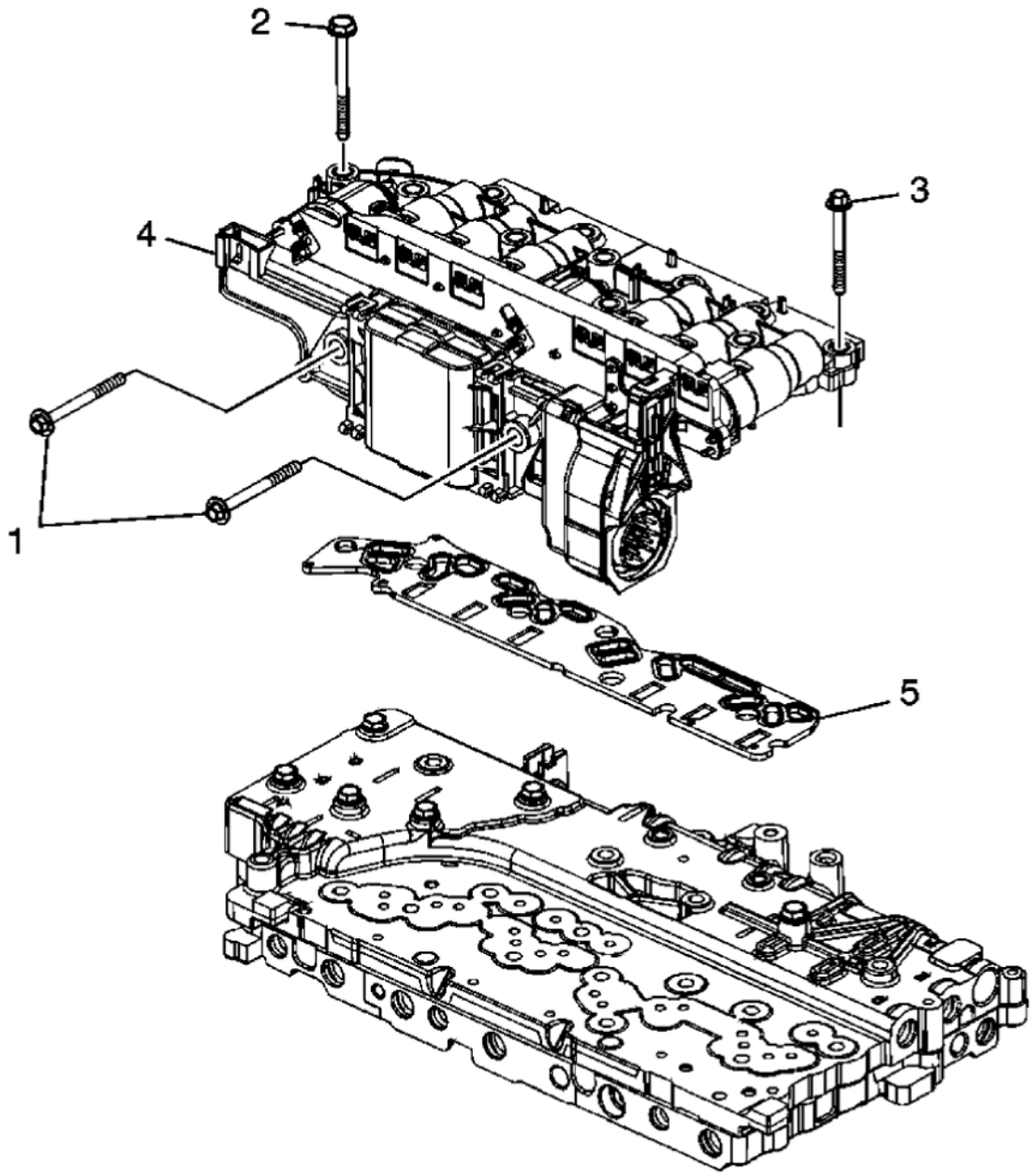

Fig. 79: Control Solenoid Valve Assembly
Courtesy of GENERAL MOTORS CORP.

Callout	Component Name

cardiagn.com

1	Bolt M5 x 53 (Qty: 2)
2	Bolt M5 x 55 (Qty: 4)
3	Bolt M5 x 45 (Qty: 5)
4	Control Solenoid (w/Body and TCM) Valve Assembly **CAUTION:** **Use care when handling the control valve body assembly. If dropped, damage to the control solenoid valve body assembly internal components, including the transmission control module (TCM), may result.**
5	Filter Plate Assembly **CAUTION:** **Use care when removing or installing the filter plate assembly. A broken or missing retaining tab may not adequately secure the filter plate to the control solenoid valve assembly, resulting in possible damage or contamination.** **CAUTION:** **Discard the filter plate. Replace with a NEW filter plate. Reusing an old filter plate may cause damage to the control solenoid valve assembly.**

Upper and Lower Valve Bodies Disassemble

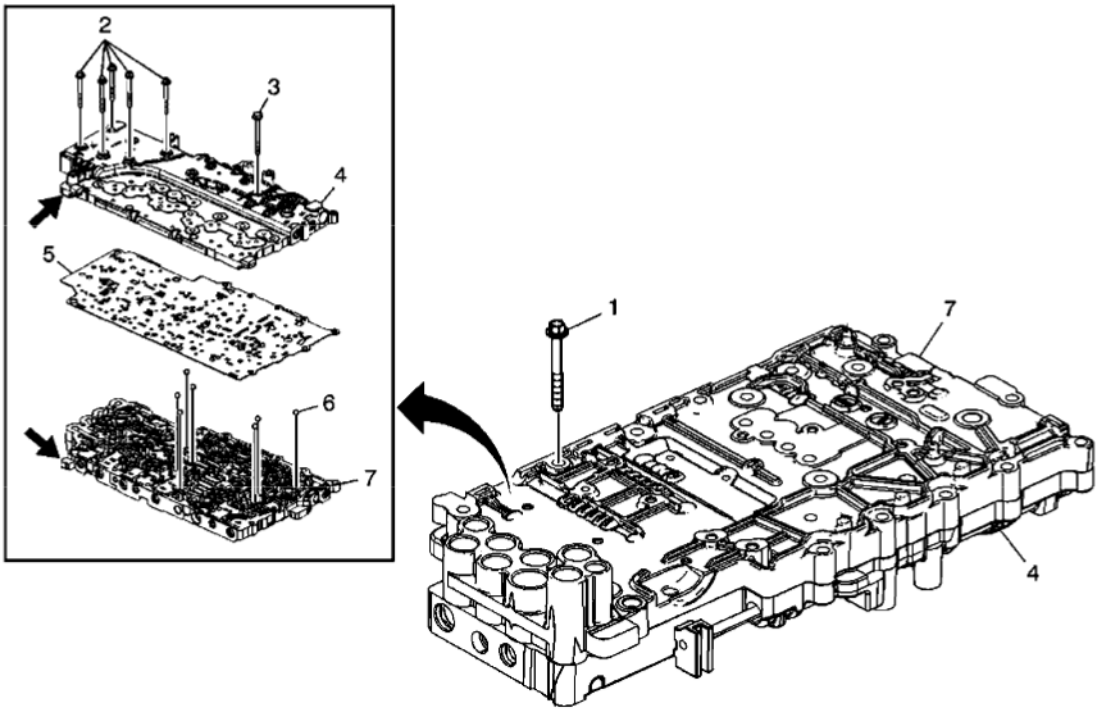

Fig. 80: Upper & Lower Valve Bodies
Courtesy of GENERAL MOTORS CORP.

cardiagn.com

Callout	Component Name
1	Bolt M5 x 36 (Qty: 12)
2	Bolt M5 x 45 (Qty: 5)
3	Bolt M5 x 55
4	Control Valve Lower Body Assembly **Tip:** • Separate the upper and lower valve bodies by carefully prying at the point indicated. • Refer to **Control Valve Lower Body Assembly Cleaning and Inspection**.
5	Control Valve Body Spacer (w/Gasket) Plate Assembly **CAUTION:** **Do not use the old spacer plate. Install a NEW spacer plate. Reusing an old spacer plate may cause internal transmission leaks and transmission damage.**
6	Control Valve Body Ball Check Valve (Qty: 7) **Tip:** Note the position of the ball check valves.
7	Control Valve Upper Body Assembly **Tip:** Refer to **Control Valve Upper Body Assembly Cleaning and Inspection**.

CONTROL VALVE LOWER BODY ASSEMBLY CLEANING AND INSPECTION

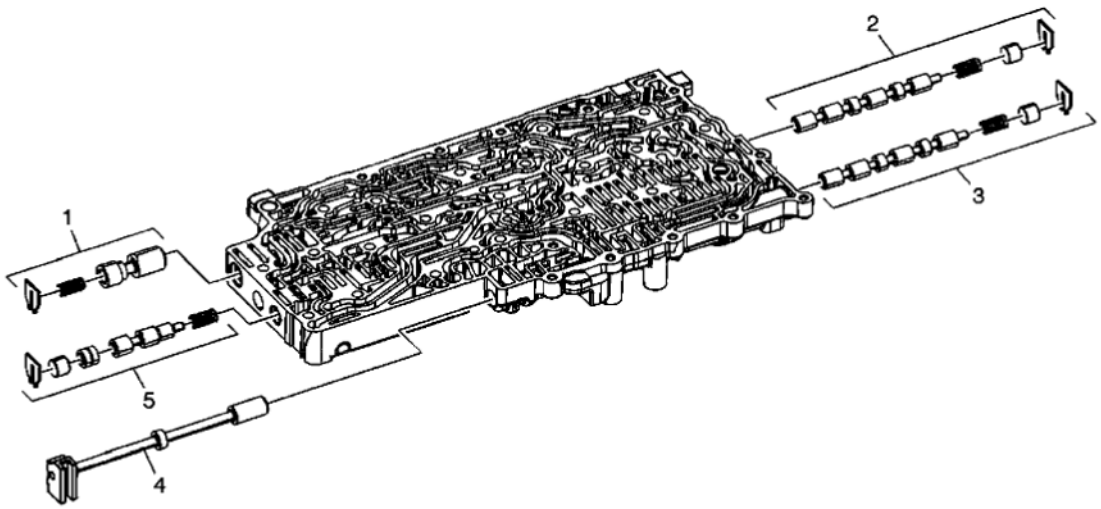

Fig. 81: Control Valve Lower Body Assembly
Courtesy of GENERAL MOTORS CORP.

Callout	Component Name
WARNING: **Valve springs can be tightly compressed. Use care when removing retainers and plugs. Personal injury could result.**	

cardiagn.com

CAUTION:
After cleaning the transmission components, allow to air dry. Do not use cloth or paper towels in order to dry any transmission components. Lint from the towels can cause component failure.

CAUTION:
Do not reuse cleaning solvents. Previously used solvents may deposit sediment which may damage the component.

Preliminary Procedure: Clean and inspect all valve components and the valve body. The control valve lower body is replaceable only as an assembly.

1	Clutch Piston Dam Feed Regulator Valve Train
2	Clutch Select Solenoid Valve 3 Train
3	Clutch Select Solenoid Valve 2 Train
4	Manual Valve
5	TCC Regulator Apply Valve Train

CONTROL VALVE UPPER BODY ASSEMBLY CLEANING AND INSPECTION

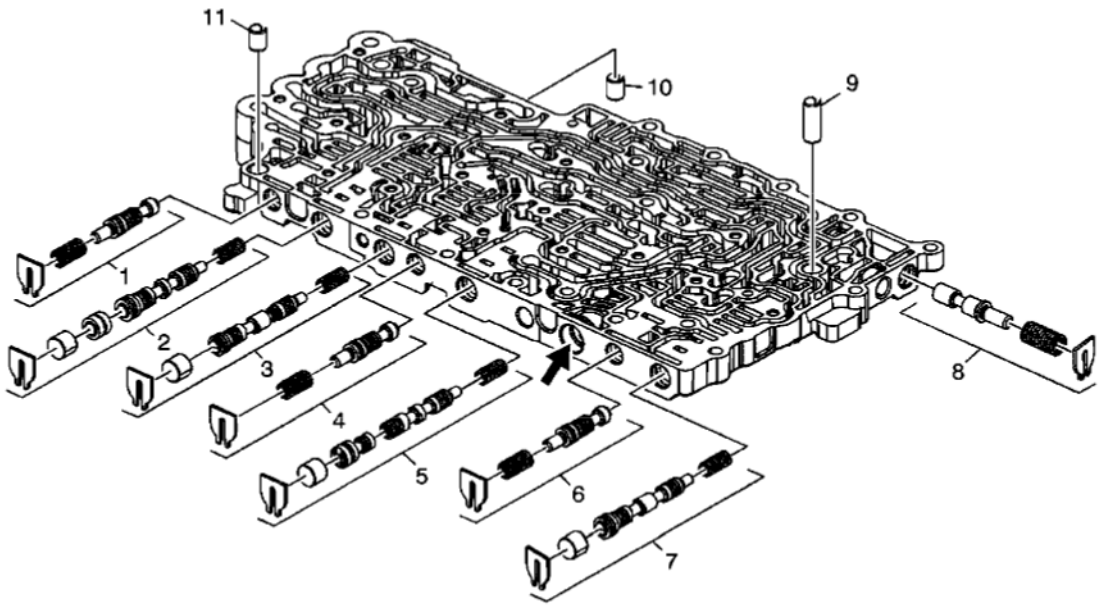

Fig. 82: Control Valve Upper Body Assembly
Courtesy of GENERAL MOTORS CORP.

Callout	Component Name
WARNING: **Valve springs can be tightly compressed. Use care when removing retainers and plugs. Personal injury could result.**	

cardiagn.com

CAUTION:
Do not remove the exhaust backfill pressure relief retainer, spring, or ball valve (refer to arrow in above illustration for location). The retainer is set to a precise depth. Replacement of this retainer could cause internal transmission damage.

CAUTION:
After cleaning the transmission components, allow to air dry. Do not use cloth or paper towels in order to dry any transmission components. Lint from the towels can cause component failure.

CAUTION:
Do not reuse cleaning solvents. Previously used solvents may deposit sediment which may damage the component.

Preliminary Procedure: Clean and inspect all valve components, locating pins, and the valve body. The control valve upper body is replaceable only as an assembly.

1	Clutch Boost Valve Train
2	1-2-3-4 Clutch Regulator Valve Train
3	3-5 Reverse Clutch Regulator Valve Train
4	Clutch Boost Valve Train
5	2-6 Clutch Regulator Valve Train
6	Clutch Boost Valve Train
7	CBR1/4-5-6 Clutch Regulator Valve Train
8	Actuator Feed Limit Valve Train
9	Control Valve Body Locator Pin
10	Control Valve Body Locator Pin
11	Control Valve Body Locator Pin

CONTROL VALVE BODY ASSEMBLY ASSEMBLE

Upper to Lower Control Valve Body Assembly Assemble

cardiagn.com

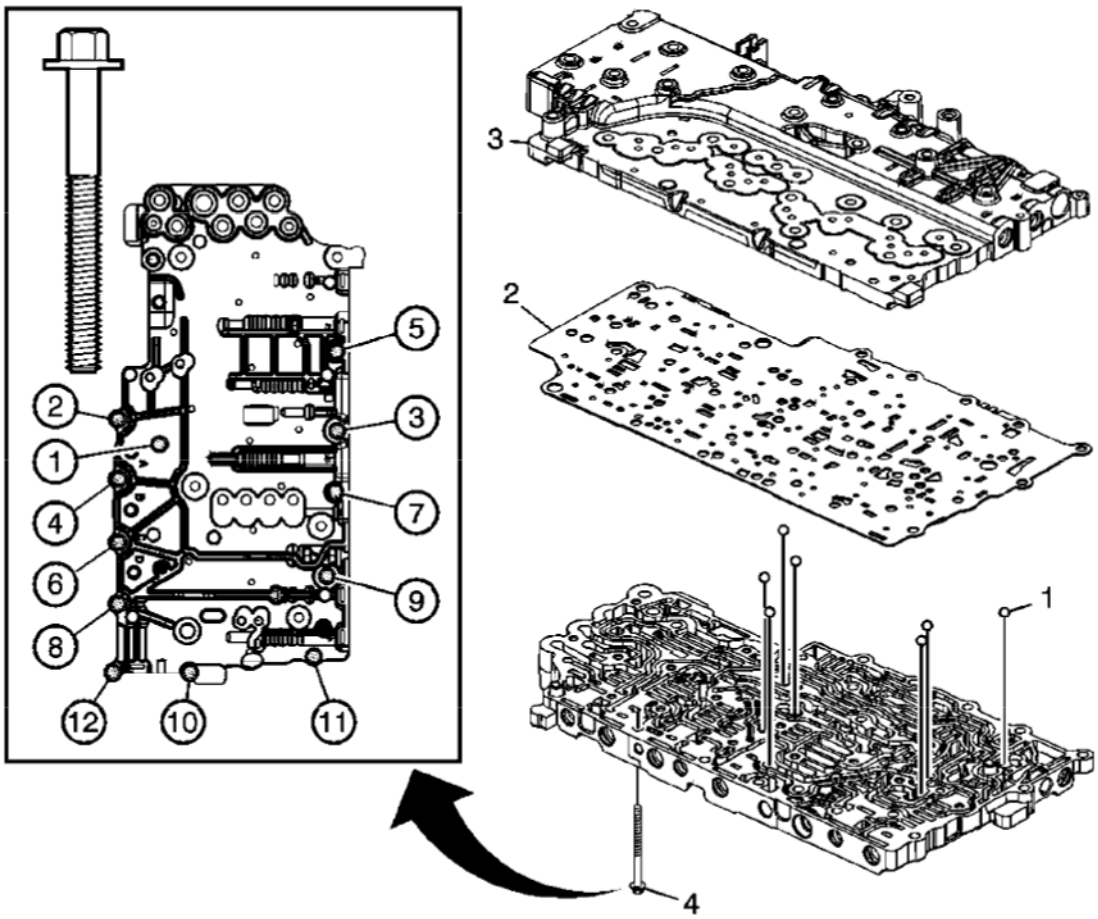

Fig. 83: Upper To Lower Control Valve Body Assembly
Courtesy of GENERAL MOTORS CORP.

Callout	Component Name
1	Control Valve Body Ball Check Valve (Qty: 7) **CAUTION:** **Do not use any type of grease or other material to hold the check ball valves in place during assembly. Grease will cause the valves to not operate properly, resulting in damage to the transmission.** **Tip:** Refer to **Ball Check Valve Locations** .
2	Control Valve Body Spacer (w/Gasket) Plate Assembly **CAUTION:** **Do not use the old spacer plate. Install a NEW spacer plate. Reusing an old spacer plate may cause internal transmission leaks and transmission damage.**
	Control Valve Lower Body Assembly

cardiagn.com

3	**Tip:** Turn the valve body assembly over after installing to upper body.
4	Bolt M5 x 36 (Qty: 12) **CAUTION:** **Refer to Fastener Caution .** **Procedure:** Tighten the bolts in the sequence shown. **Tighten:** 8 N.m (71 lb in).

Filter Plate Installation

cardiagn.com

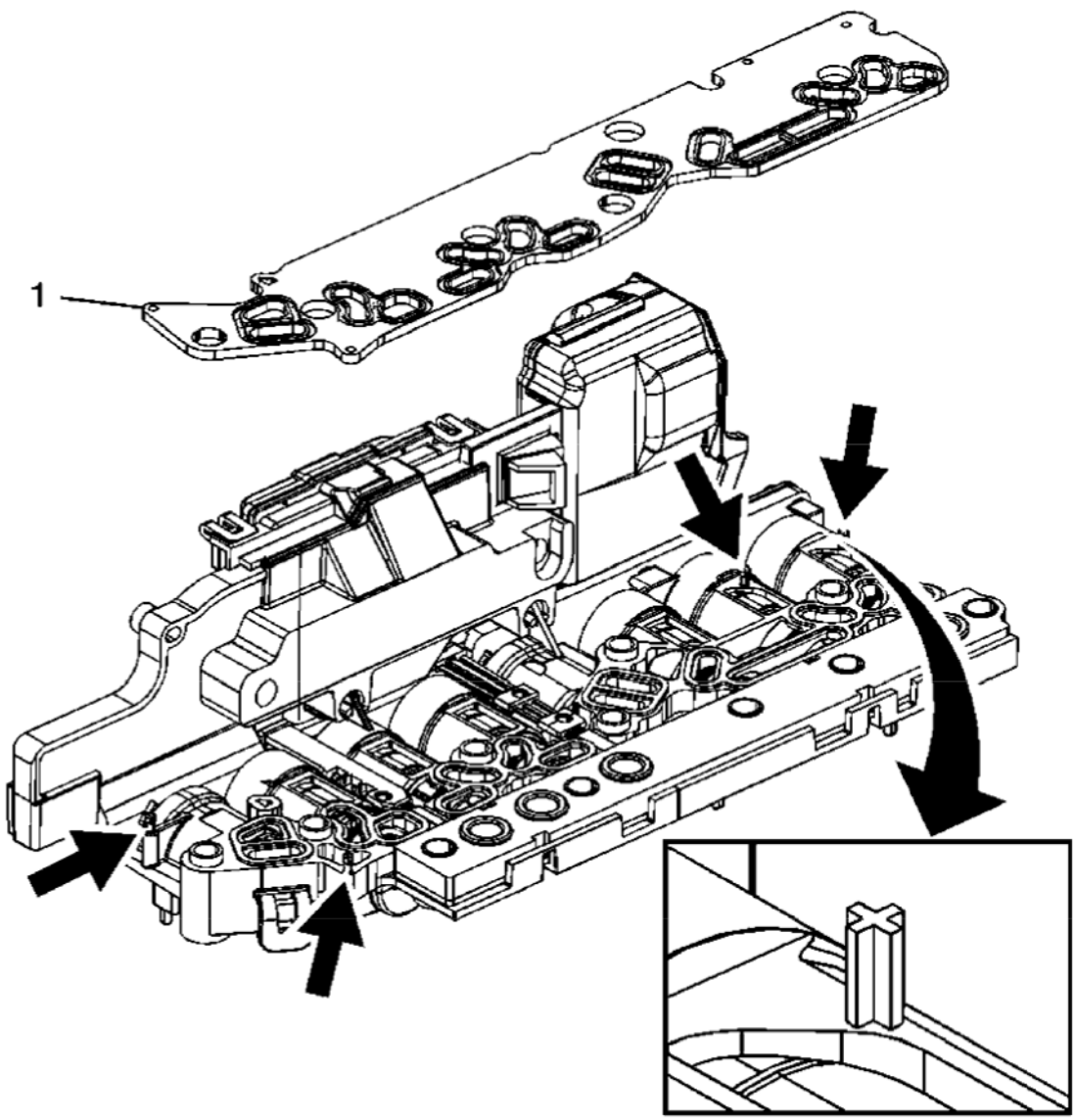

Fig. 84: Filter Plate
Courtesy of GENERAL MOTORS CORP.

Callout	Component Name
1	Filter Plate Assembly **CAUTION:** **Use care when handling the control valve body assembly. If dropped, damage to the control solenoid valve body assembly internal components, including the transmission control module (TCM), may result.** **CAUTION:** **Discard the filter plate. Replace with a NEW filter plate. Reusing an old filter plate**

cardiagn.com

	may cause damage to the control solenoid valve assembly. **Tip:** Use care when removing or installing the filter plate assembly. However, if a retaining tab is broken or missing, do not replace the control solenoid valve assembly. The filter plate assembly can still be adequately aligned.

Control Solenoid Valve Assembly Installation

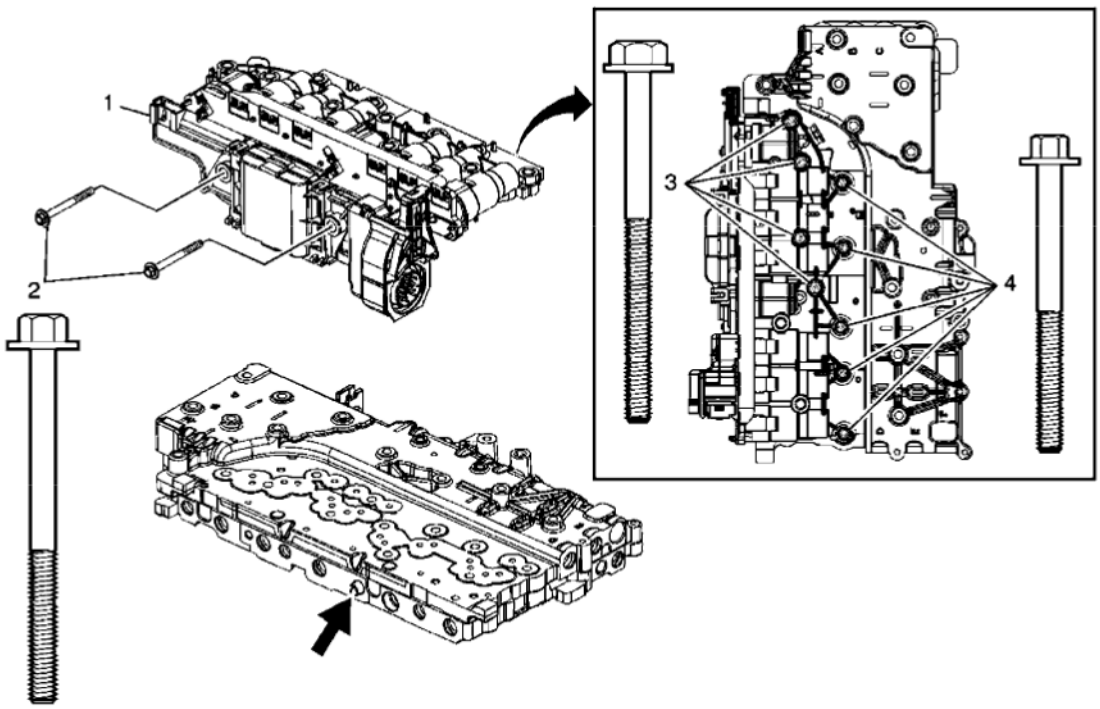

Fig. 85: Control Solenoid Valve Assembly
Courtesy of GENERAL MOTORS CORP.

Callout	Component Name
1	Control Solenoid (w/Body and TCM) Valve Assembly **Tip:** Note the locator pin on the control valve lower body assembly while aligning the control solenoid valve assembly.
2	Bolt M5 x 53 (Qty: 2) **Tip:** Hand tighten only.
3	Bolt M5 x 55 (Qty: 4) **Tip:** Hand tighten only.
4	Bolt M5 x 45 (Qty: 5) **Tip:** Hand tighten only.

Manual Shift Shaft Position Switch Installation

cardiagn.com

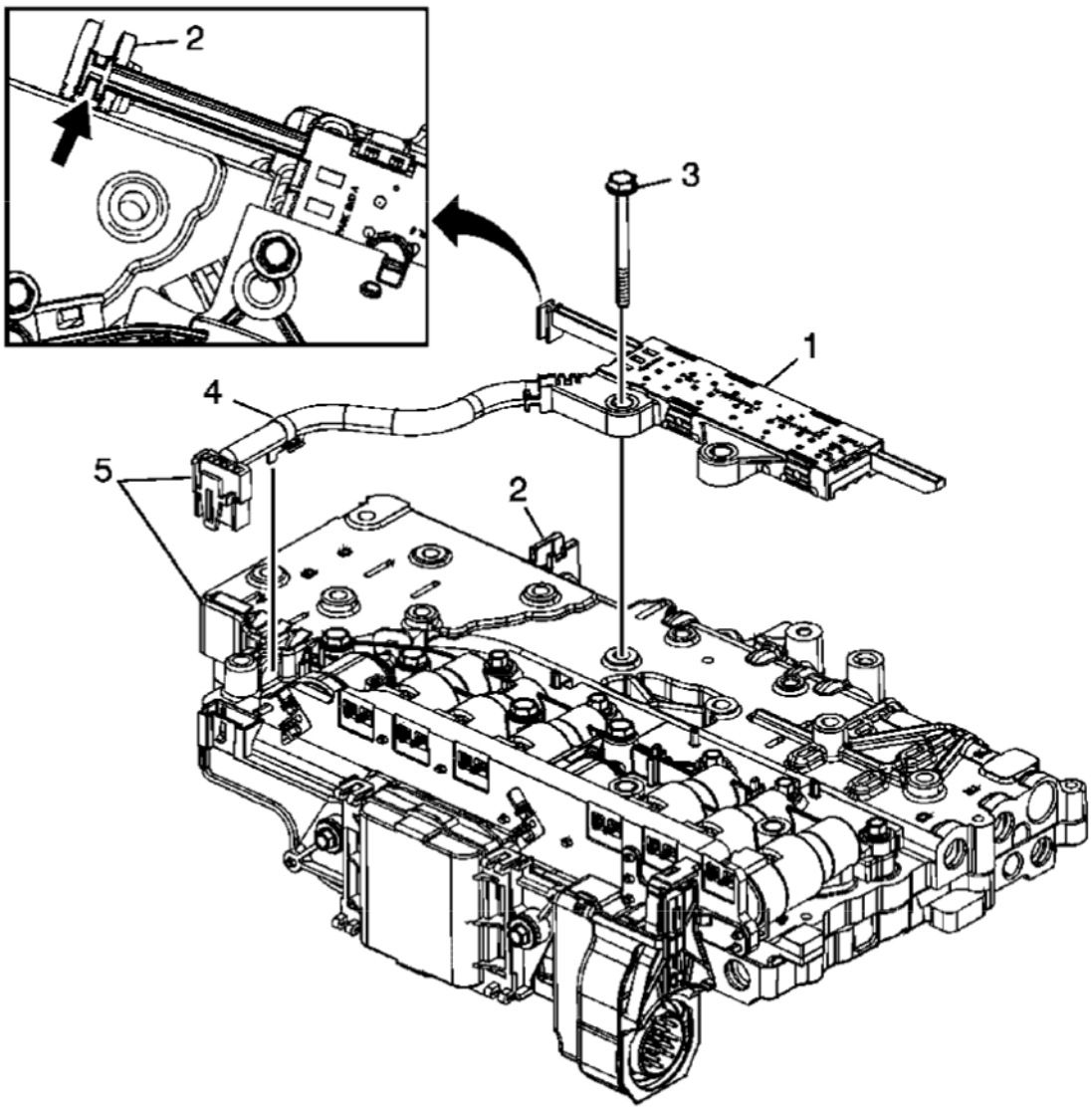

Fig. 86: Manual Shift Shaft Position Switch
Courtesy of GENERAL MOTORS CORP.

Callout	Component Name
1	A/Trans Manual Shift Shaft Position Switch Assembly
2	Manual Valve Link **Tip:** Align the switch activator slide with the manual valve link.
3	Bolt M5 x 55 **Tip:** Hand tighten only.
4	A/Trans Manual Shift Shaft Position Switch Harness Clip **Tip:** The wiring harness clip on the manual shift shaft position switch does not need to be replaced if damaged or missing. The clip functions only as a manufacturing assembly aid to keep the harness clear during an automated bolt installation process. If the clip is damaged, simply remove and discard.

cardiagn.com

5	A/Trans Manual Shift Shaft Position Switch Electrical Connector **Tip:** Connect and lock the manual shift shaft position switch electrical connector to the control solenoid valve assembly.

Valve Body, Control Solenoid Torque Sequence

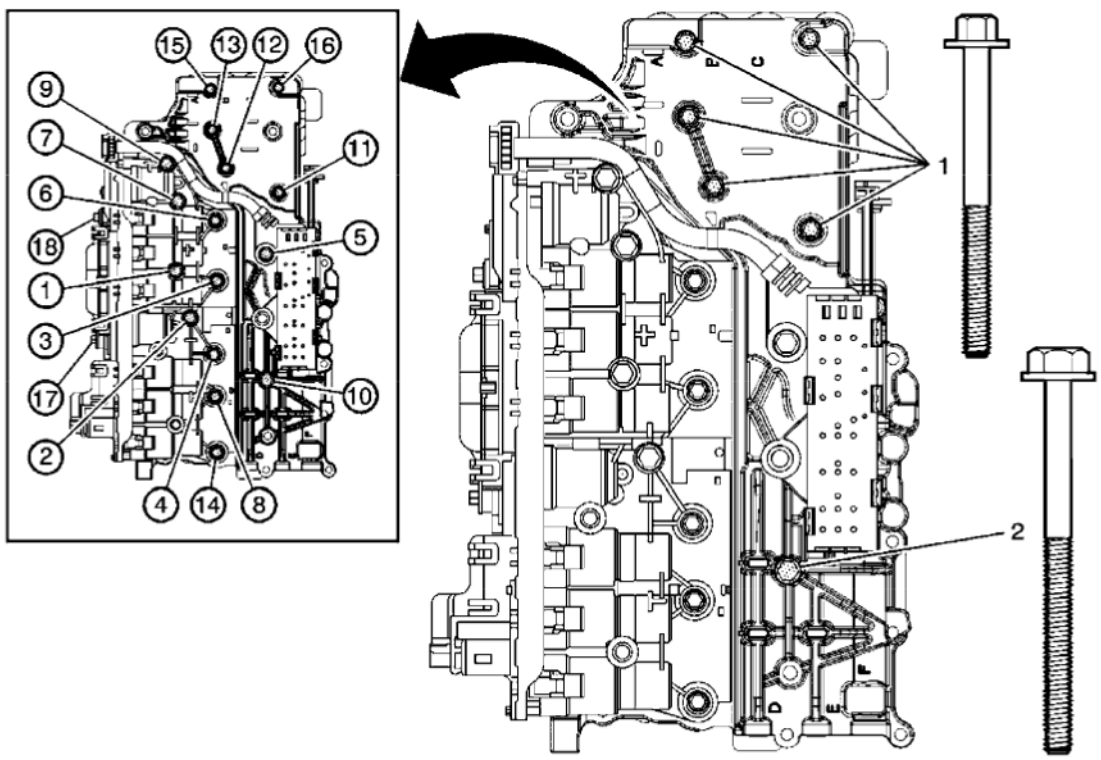

Fig. 87: Valve Body, Control Solenoid Torque Sequence
Courtesy of GENERAL MOTORS CORP.

Callout	Component Name
CAUTION: **Bolt torque sequencing is critical to the proper function of the control solenoid valve assembly. Failure to follow the required sequencing may result in transmission malfunction.** **Preliminary Procedure** 1. Hand tighten the last 6 bolts before final torque sequence. 2. The 2 "heat sink" bolts must be tightened last.	
1	Bolts M5 x 45 (Qty: 5)
	Bolt M5 x 55 **CAUTION:** **Refer to Fastener Caution .**

cardiagn.com

2	**Procedure:** Tighten all 18 bolts in the sequence shown. **Tighten:** 8 N.m (71 lb in).

Control Solenoid Valve Assembly Contact Gap Inspection

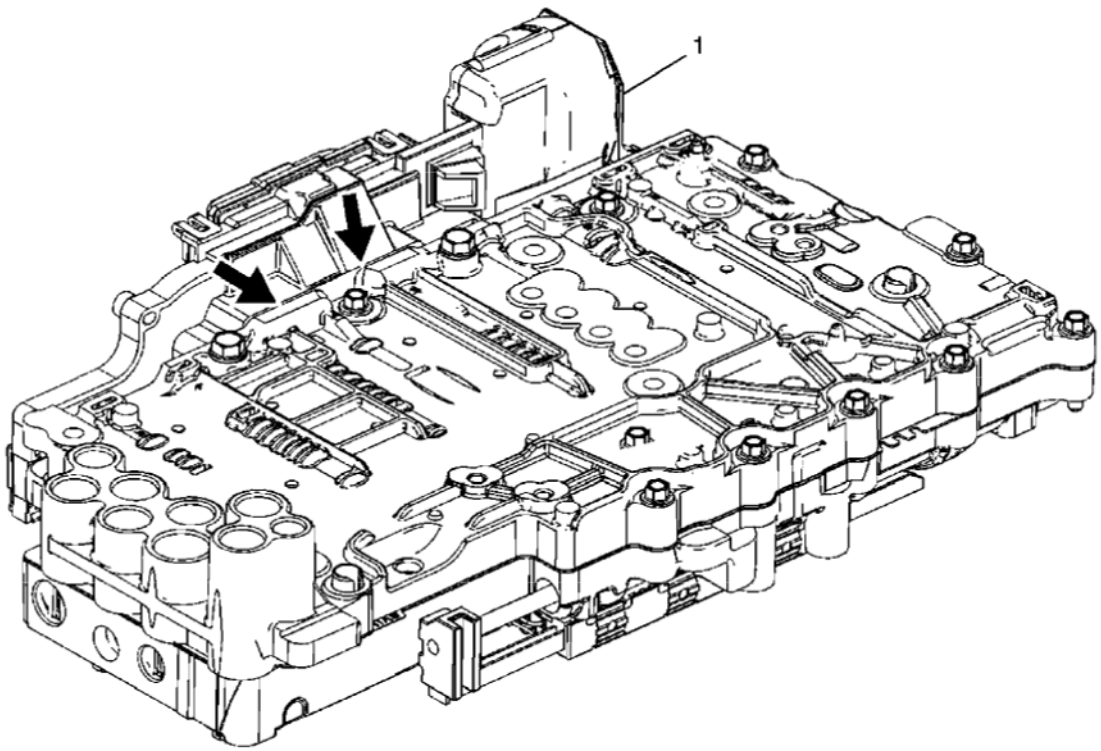

Fig. 88: Control Solenoid Valve Assembly Contact Gap
Courtesy of GENERAL MOTORS CORP.

Callout	Component Name
1	Control Solenoid (w/Body and TCM) Valve Assembly **Tip:** Inspect the contact area between the "heat sink" area of the control solenoid valve assembly and the valve body. There should be no visible gap. If a gap exists, loosen all 18 bolts and retighten in the required sequence.

Input and Output Speed Sensor Assembly Installation

cardiagn.com

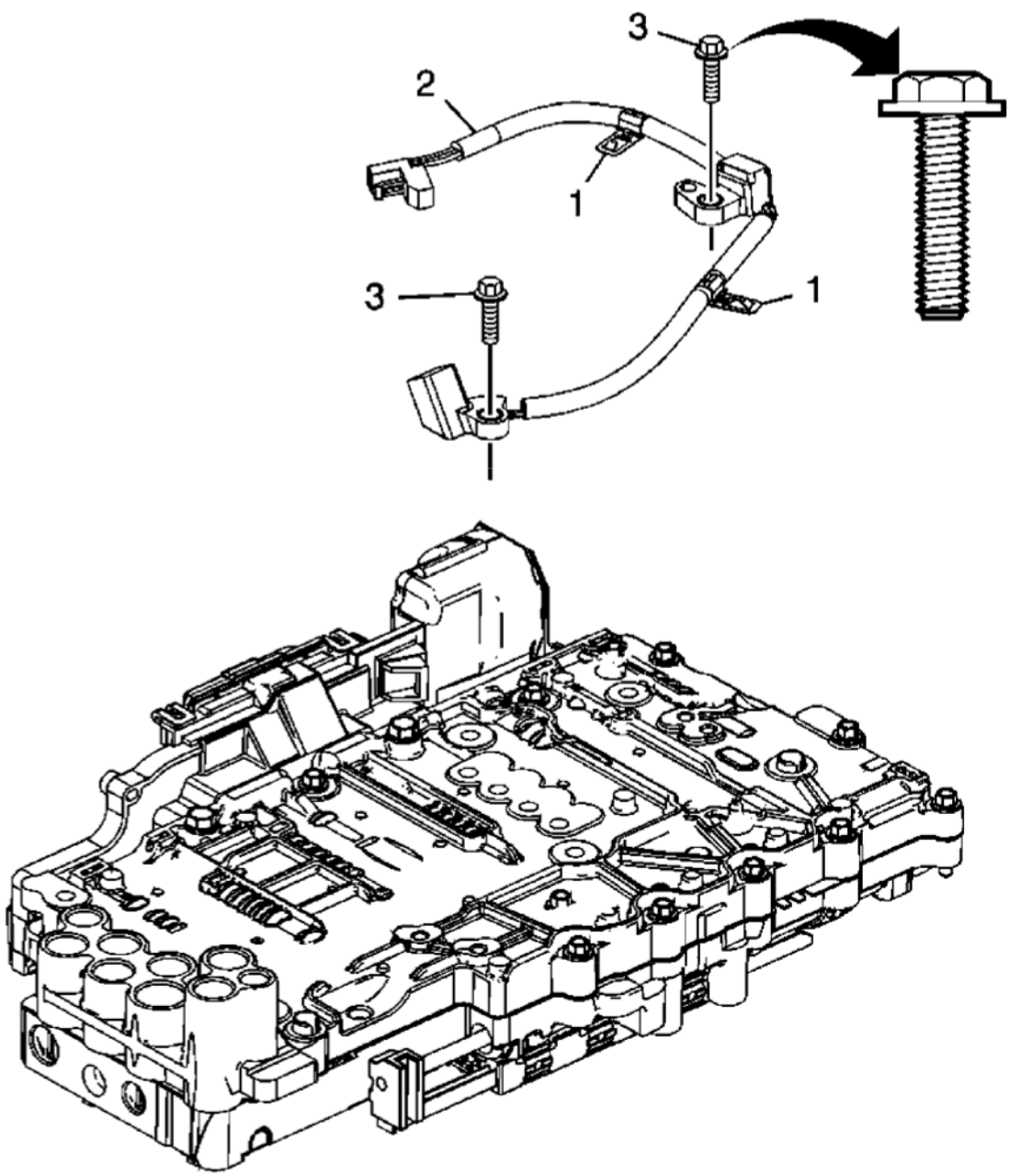

Fig. 89: Input & Output Speed Sensor Assembly
Courtesy of GENERAL MOTORS CORP.

Callout	Component Name
1	A/Trans Input and Output Speed Sensor Wiring Harness Clip (Qty: 2) **Tip:** Inspect the 2 wiring harness clips for damage. Replace if damaged.
2	A/Trans Input and Output Speed Sensor Assembly
	Bolt M6 x 20 (Qty: 2)

cardiagn.com

3	**CAUTION:** **Refer to Fastener Caution .** **Tighten:** 12 N.m (106 lb in)

CENTER SUPPORT, OUTPUT CARRIER AND OUTPUT SHAFT INSTALLATION (6L50)

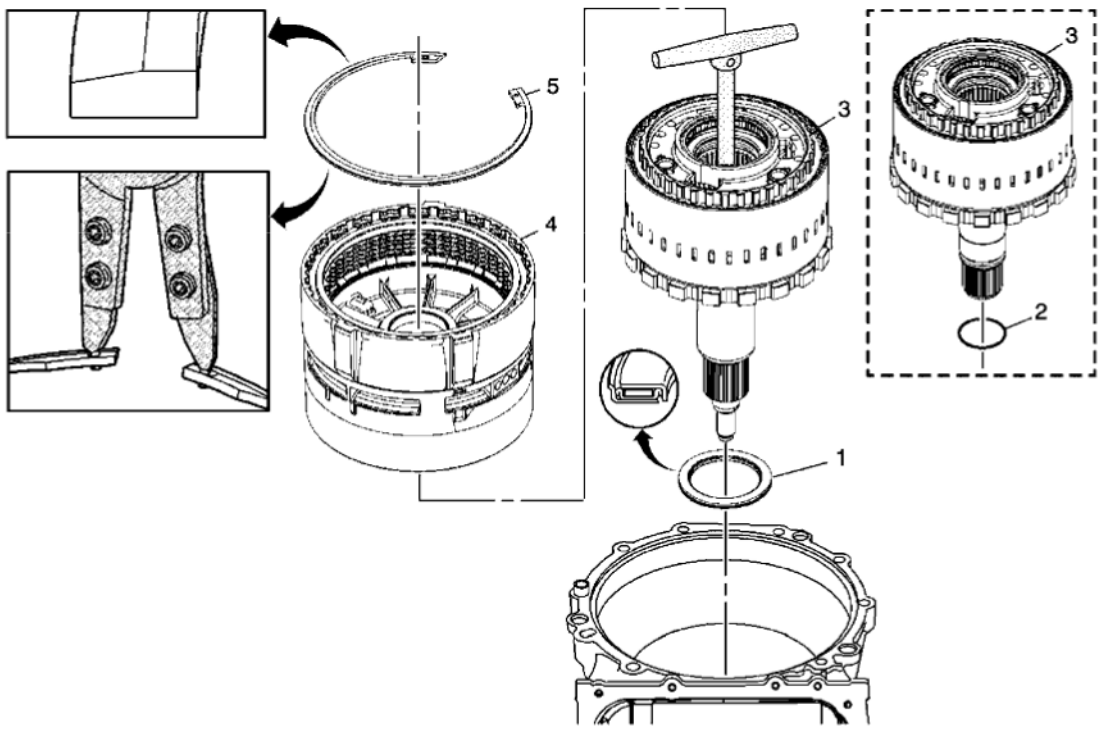

Fig. 90: Center Support, Output Carrier & Output Shaft (6L50)
Courtesy of GENERAL MOTORS CORP.

Callout	Component Name
1	Output Shaft Thrust Bearing Assembly
2	Output Carrier Assembly and Output Shaft Assembly **CAUTION:** **Apply automatic transmission fluid (ATF) to the inside diameter of the output shaft seal before installing the output shaft assembly into the case. Failure to lube the seal may cause the seal to roll during output shaft installation, which will result in transmission damage.** **CAUTION:** **Ensure the DT 47786 is completely threaded into the output shaft assembly. Due to the weight of the assembly, incomplete threading may cause the assembly to break free from the DT 47786, causing component damage.**

cardiagn.com

	Special Tool: **DT 47786:** Output Carrier/Shaft Lifting Tool For equivalent regional tools, refer to **Special Tools** .
3	Center Support Assembly **Tip:** • When the center support assembly is properly installed, the fluid passages should align with the fluid passage seal bores in the case assembly. • It may be necessary to rotate the output shaft by hand in order to fully install the center support assembly.
4	Center Support Retaining Ring **WARNING:** **Use care when removing or installing the retaining ring. Ensure the J 45126 is installed properly onto the retaining ring or bodily injury may occur.** **CAUTION:** **Ensure the retaining ring is installed with the tapered side up, and in the 9 o'clock position from the pan side of the case. Failure to properly install the retaining ring will cause transmission damage.** **Special Tool:** **J 45126:** Snap Ring Pliers For equivalent regional tools, refer to **Special Tools** .

CENTER SUPPORT, OUTPUT CARRIER AND OUTPUT SHAFT INSTALLATION (6L80)

cardiagn.com

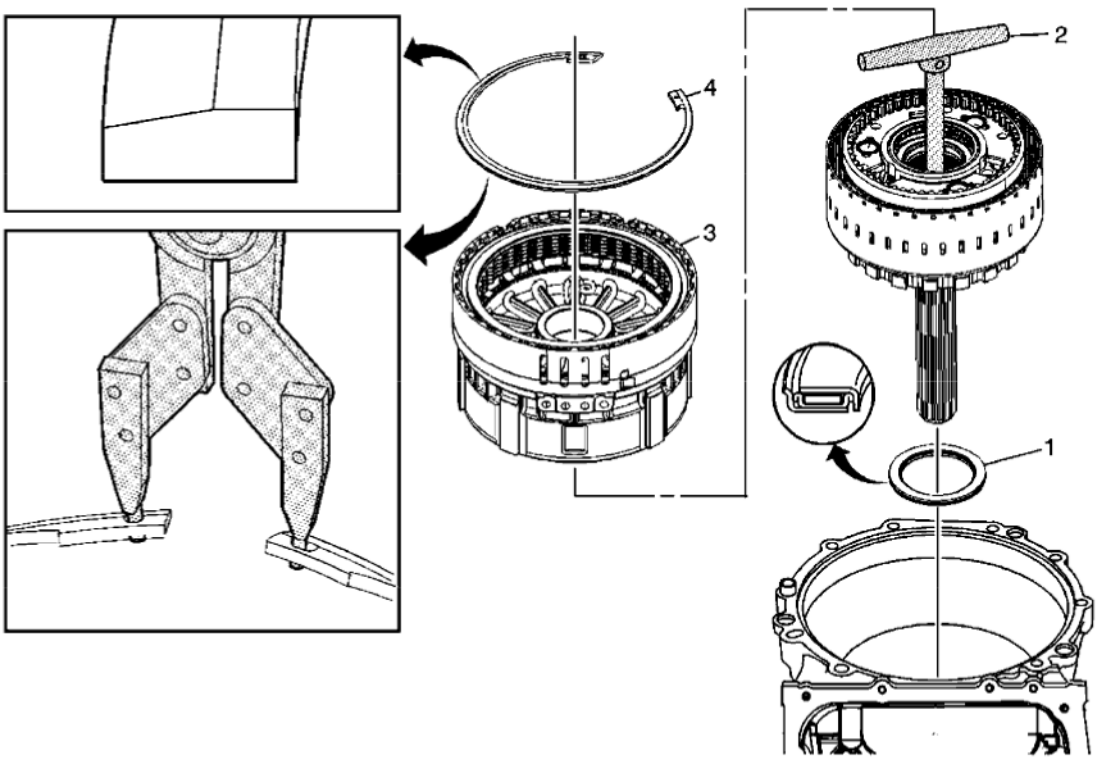

Fig. 91: Center Support, Output Carrier & Output Shaft Component (6L80)
Courtesy of GENERAL MOTORS CORP.

Callout	Component Name
1	Output Shaft Thrust Bearing Assembly
2	Output Carrier Assembly and Output Shaft Assembly **CAUTION:** **Apply automatic transmission fluid (ATF) to the inside diameter of the output shaft seal before installing the output shaft assembly into the case. Failure to lube the seal may cause the seal to roll during output shaft installation, which will result in transmission damage.** **CAUTION:** **Ensure the DT 47786 is completely threaded into the output shaft assembly. Due to the weight of the assembly, incomplete threading may cause the assembly to break free from the DT 47786, causing component damage.** **Special Tool:** **DT 47786:** Output Carrier/Shaft Lifting Tool For equivalent regional tools, refer to **Special Tools** .
	Center Support Assembly **Tip:**

cardiagn.com

3	• When the center support assembly is properly installed, the fluid passages should align with the fluid passage seal bores in the case assembly. • It may be necessary to rotate the output shaft by hand in order to fully install the center support assembly.
4	Center Support Retaining Ring **WARNING:** **Use care when removing or installing the retaining ring. Ensure the J 45126 and DT 47773 are installed properly onto the retaining ring or bodily injury may occur.** **CAUTION:** **Ensure the retaining ring is installed with the tapered side up, and in the 9 o'clock position from the pan side of the case. Failure to properly install the retaining ring will cause transmission damage.** **Special Tools** • **DT 47773:** Snap Ring Pliers Adapter Set • **J 45126:** Snap Ring Pliers For equivalent regional tools, refer to **Special Tools** .

1-2-3-4 AND 3-5 REVERSE CLUTCH ASSEMBLY AND 4-5-6 CLUTCH ASSEMBLY INSTALLATION (6L50/80/90)

cardiagn.com

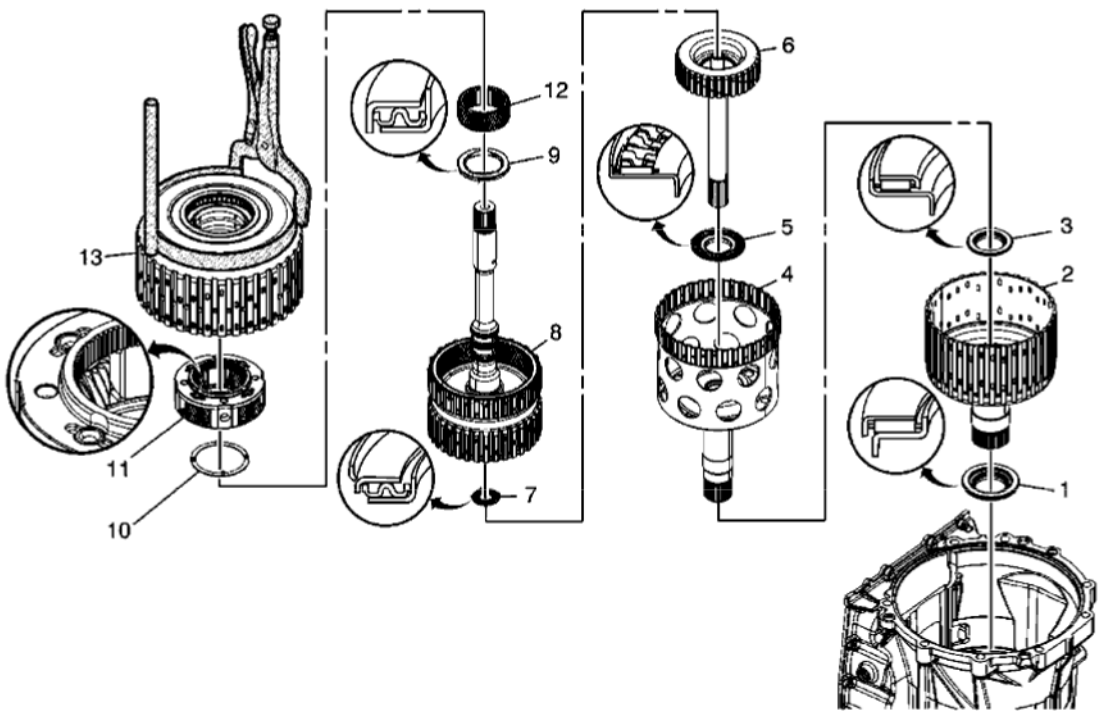

Fig. 92: 1-2-3-4 & 3-5 Reverse Clutch Assembly & 4-5-6 Clutch Assembly (6L50/80/90)
Courtesy of GENERAL MOTORS CORP.

Callout	Component Name
1	2-6 and 3-5 Reverse Clutch Hub Thrust Bearing Assembly
2	2-6 and 3-5 Reverse Clutch (with Output Carrier Outer Sun Gear Shaft) Hub Assembly
3	1-2-3-4 Clutch Hub Thrust Bearing Assembly
4	1-2-3-4 Clutch (with Output Carrier Inner Sun Gear Shaft) Hub Assembly
5	4-5-6 Clutch Hub Thrust Bearing Assembly
6	4-5-6 Clutch (with Output Carrier Shaft and Dampener) Hub Assembly **Tip:** Refer to **4-5-6 Clutch Dampener Overhaul (6L50/80/90)** for complete inspection.
7	Turbine Shaft Thrust Bearing Assembly
8	4-5-6 (with Turbine Shaft) Clutch Assembly
9	Input Sun Gear Thrust Bearing **Tip:** Thrust bearing snaps onto input carrier assembly.
10	Input Sun Gear Thrust Washer
11	Input Carrier Assembly **Tip:** The spline on the input carrier installs up into the 1-2-3-4 and 3-5 reverse clutch housing.
12	Input Sun Gear
	1-2-3-4 and 3-5 Reverse Clutch Assembly **Tip:** Wiggle the **DT 47781:** clutch assembly installer in order to align the 1-2-3-4 and

cardiagn.com

13	3-5 reverse clutch plates with the external splines of the 4-5-6 clutch assembly. To verify that the 1-2-3-4 and 3-5 reverse clutch assembly is fully installed, lift up on the turbine shaft. There should not be any noticeable slack. **Special Tool:** **DT 47781:** C1234 35R Clutch Assembly Installer For equivalent regional tools, refer to **Special Tools** .

TORQUE CONVERTER HOUSING WITH FLUID PUMP INSTALLATION

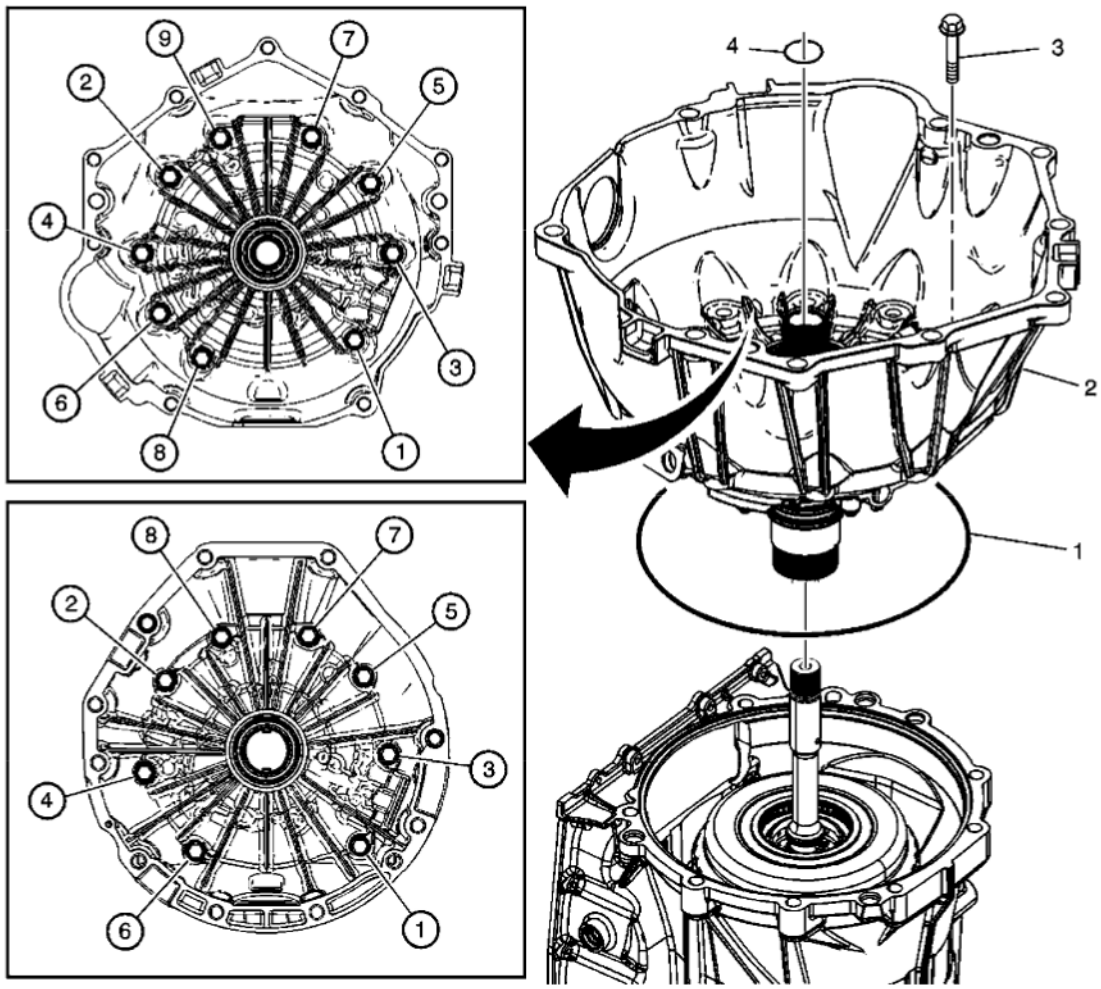

Fig. 93: Torque Converter Housing With Fluid Pump (& Tightening Sequence)
Courtesy of GENERAL MOTORS CORP.

Callout	Component Name
1	NEW Fluid Pump Seal
	Torque Converter (with Fluid Pump) Housing Assembly **CAUTION:**

cardiagn.com

2	**Ensure the turbine shaft (O-ring) seal is not installed prior to installing the torque converter housing assembly. The seal may become cut or damaged during installation of the torque converter housing assembly.**
3	Bolt **CAUTION:** **Refer to Fastener Caution .** **Tip:** • 6L50 Bolt M8 x 1.25 x 50 (Qty: 8) • 6L80 Bolt M10 x 1.5 x 50 (Qty: 9) **Tighten:** • Tighten 6L50 bolts to 31 N.m (23 lb ft) in the sequence shown. • Tighten 6L80 bolts to 72 N.m (53 lb ft) in the sequence shown.
4	NEW Turbine Shaft (O-Ring) Seal

OUTPUT SHAFT SEAL REPLACEMENT (6L50)

cardiagn.com

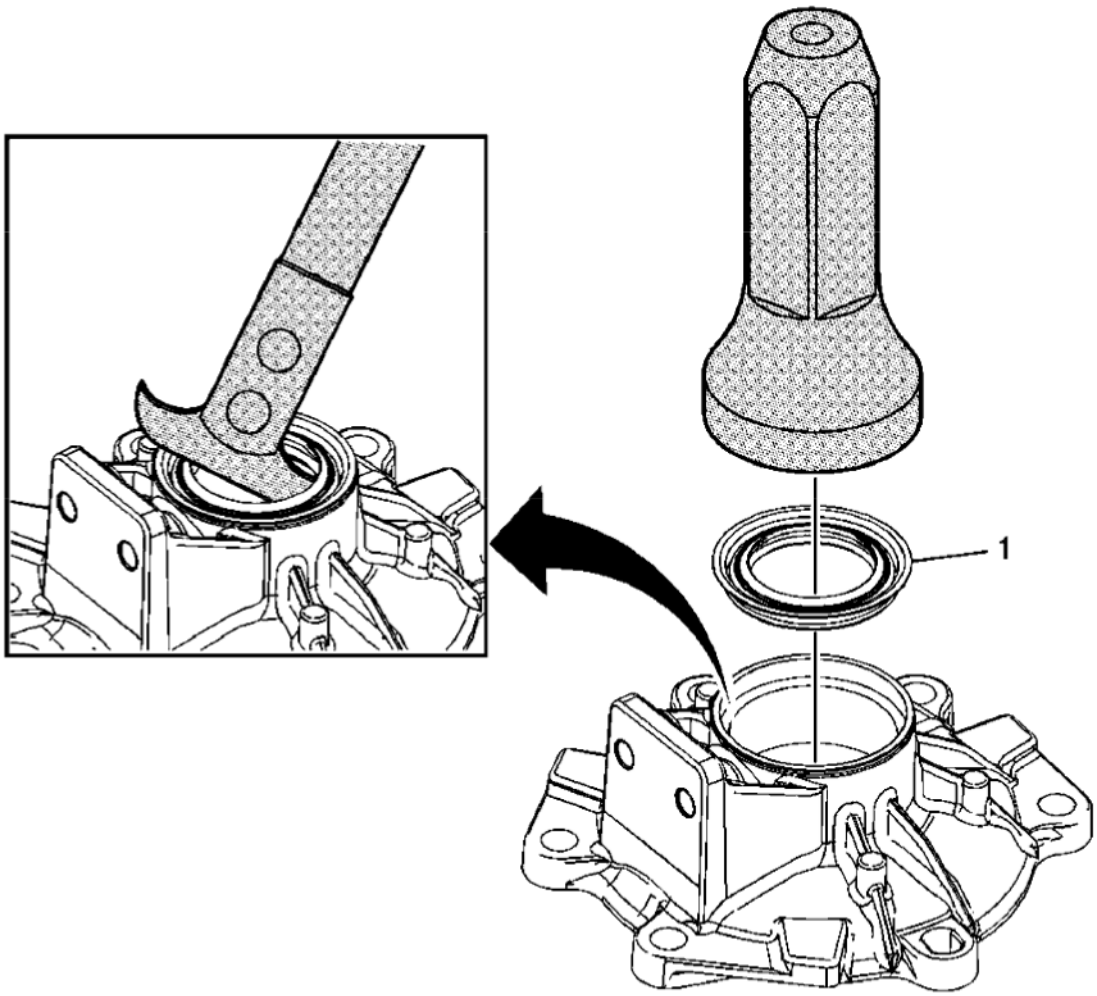

Fig. 94: Output Shaft Seal (6L50)
Courtesy of GENERAL MOTORS CORP.

Callout	Component Name
1	Output Shaft Seal Assembly **Special Tools** • **J 37212:** Front Output Shaft Seal Installer • **J 45000:** Seal Remover For equivalent regional tools, refer to **Special Tools** .

OUTPUT SHAFT SEAL REPLACEMENT (6L80)

cardiagn.com

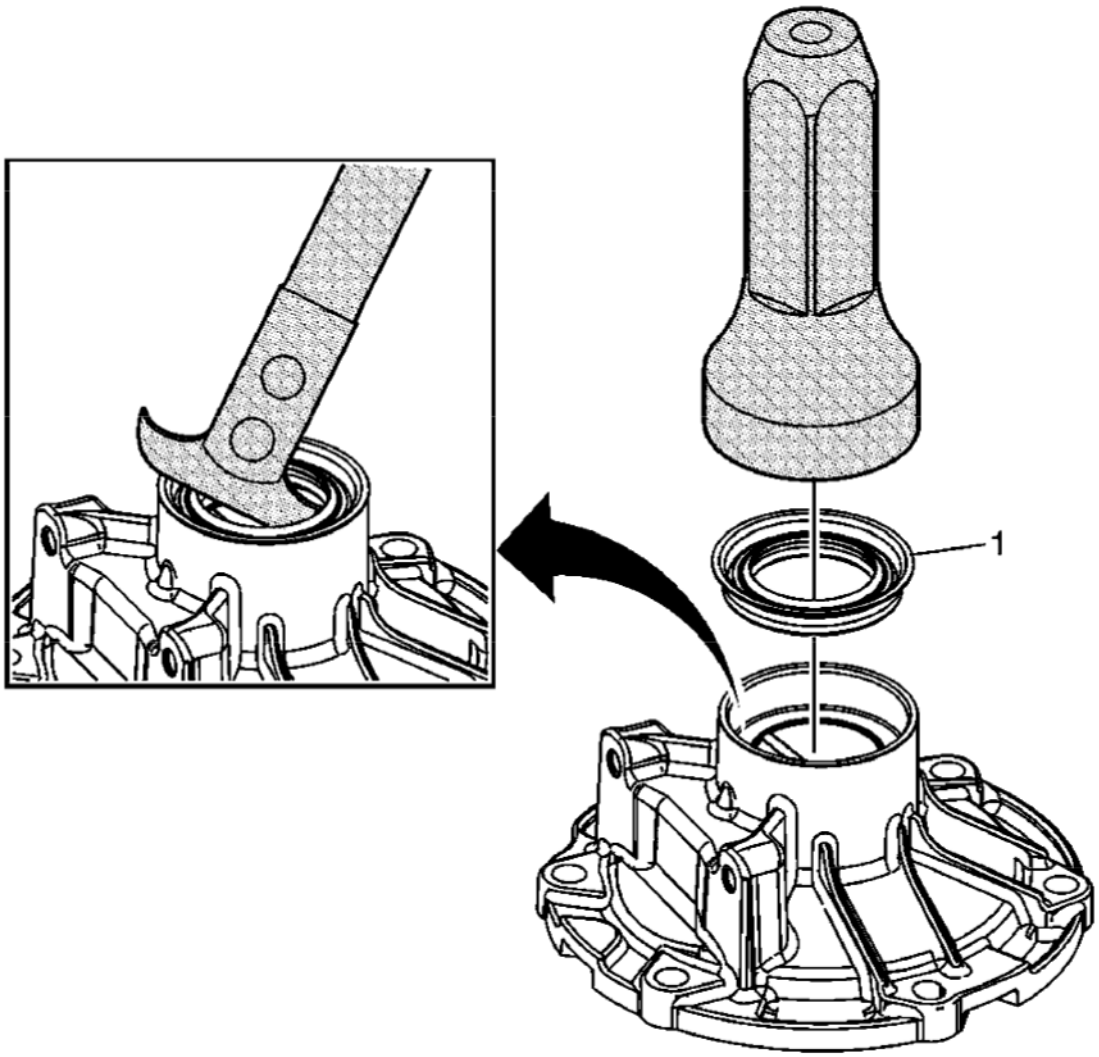

Fig. 95: Output Shaft Seal (6L80)
Courtesy of GENERAL MOTORS CORP.

Callout	Component Name
1	Output Shaft Seal Assembly **Special Tools** • **J 38869:** Rear Extension Seal Installer • **J 45000:** Seal Remover For equivalent regional tools, refer to **Special Tools** .

OUTPUT SHAFT BEARING REPLACEMENT - CASE EXTENSION (6L50)

cardiagn.com

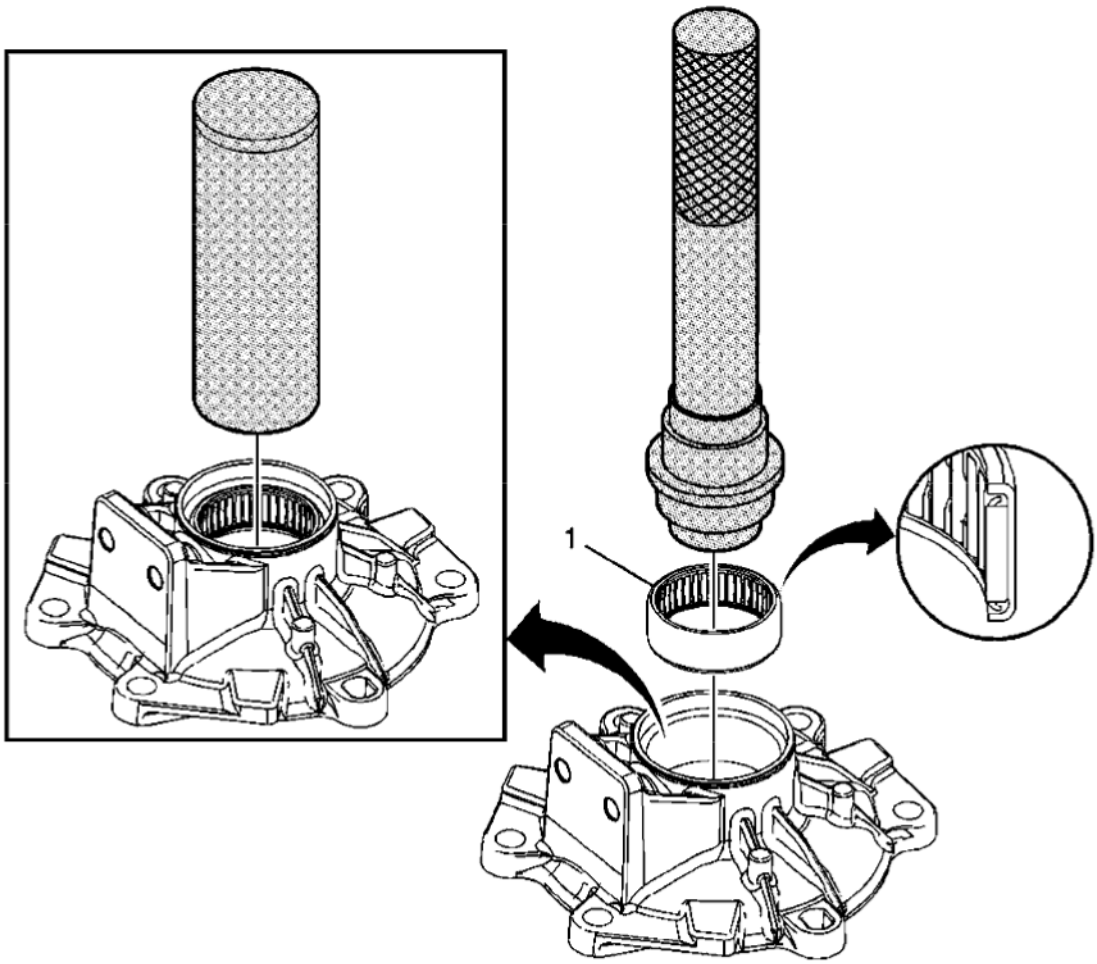

Fig. 96: Output Shaft Bearing - Case Extension (6L50)
Courtesy of GENERAL MOTORS CORP.

Callout	Component Name
1	Output Shaft Bearing Assembly **Tip:** Use **J 35512:** bearing installer to remove the bearing and **DT 48222:** bearing installer and **J 8092:** driver handle to install the bearing. **Special Tools** • **DT 48222:** Bearing Installer • **J 8092:** Driver Handle • **J 35512:** Inner Pinion Bearing Installer For equivalent regional tools, refer to **Special Tools** .

CONTROL VALVE BODY ASSEMBLY INSTALLATION

cardiagn.com

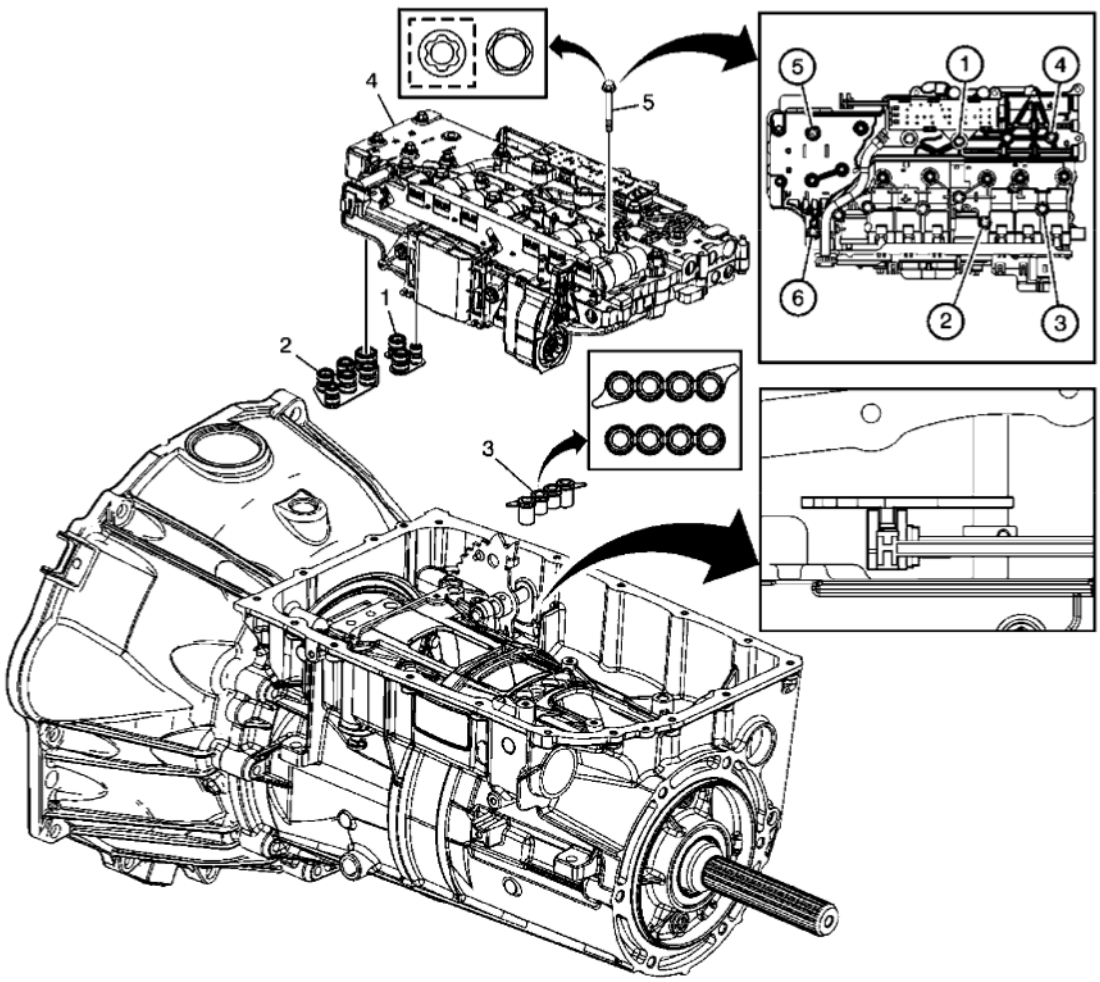

Fig. 97: Control Valve Body Assembly
Courtesy of GENERAL MOTORS CORP.

Callout	Component Name
1	NEW Fluid Pump Seal Assembly
2	NEW Fluid Pump Seal Assembly
3	NEW Center Support Fluid Passage Seal Assembly **Tip:** There are two different designs for the Center Support Fluid Passage Seal. The design for 6L45/50 (MYA/MYB) models utilizes tabs. The design for 6L80/90 (MYC/MYD) models does not have tabs.
4	Control Valve Body Assembly **CAUTION:** **The control valve body assembly needs to be lowered into place vertically, with no lateral movement. Lateral movement can damage the pass through connector pins and/or the oil transfer seals.**

cardiagn.com

	Tip: Align the manual shift shaft position switch activator slide with the detent lever guide pin.
5	Bolts M5 x 73 (Qty: 6) **CAUTION:** **Refer to Fastener Caution .** **Procedure:** Tighten in the sequence shown. **Tighten:** 8 N.m (71 lb in). **Special Tool:** **DT-48285:** Valve Body Torx Plus Socket (if applicable) For equivalent regional tools, refer to **Special Tools** .

AUTOMATIC TRANSMISSION ELECTRICAL CONNECTOR PASSAGE SLEEVE INSTALLATION

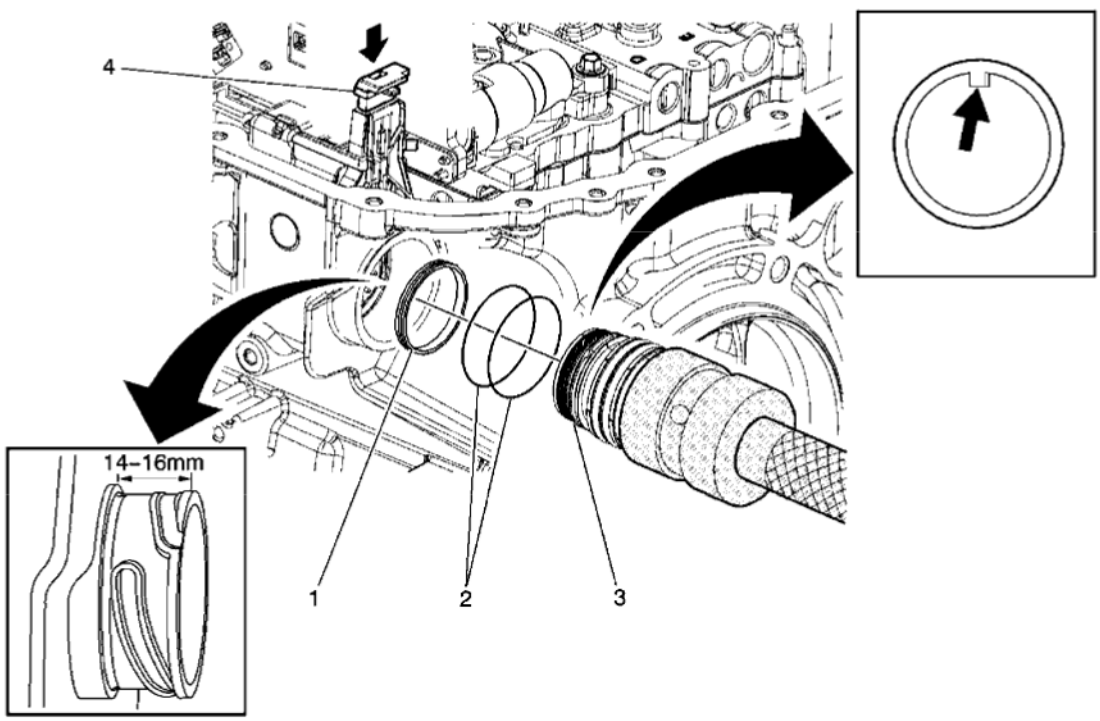

Fig. 98: Automatic Transmission Electrical Connector Passage Sleeve
Courtesy of GENERAL MOTORS CORP.

cardiagn.com

Callout	Component Name
1	NEW Lip Seal
2	NEW O-Ring Seals (Qty: 2)
3	Electrical Connector Passage Sleeve **CAUTION:** **Orientate the alignment tab inside the passage sleeve with the slot in the electrical connector of the control solenoid valve assembly. Push the sleeve straight into the case bore and connector. Do NOT rotate the sleeve at any time. Ensure the sleeve is fully seated into the case. When the sleeve is properly installed, the distance from the case surface to the end of the sleeve should be 14-16 mm. Even though the correct electrical connections may still be maintained, failure to ensure proper installation of the sleeve may result in a fluid leak around the sleeve lip seal and into the sleeve cavity.** **Specification:** 14-16 mm **Special Tools** • **DT 47715:** Electrical Connector Passage Sleeve Remover/Installer • **J 42183:** Driver Handle For equivalent regional tools, refer to **Special Tools** .
4	Electrical Connector Slide Lock **Tip:** Push down on the electrical connector slide lock to ensure proper installation.

FLUID FILTER AND MANUAL SHIFT DETENT ASSEMBLY INSTALLATION

cardiagn.com

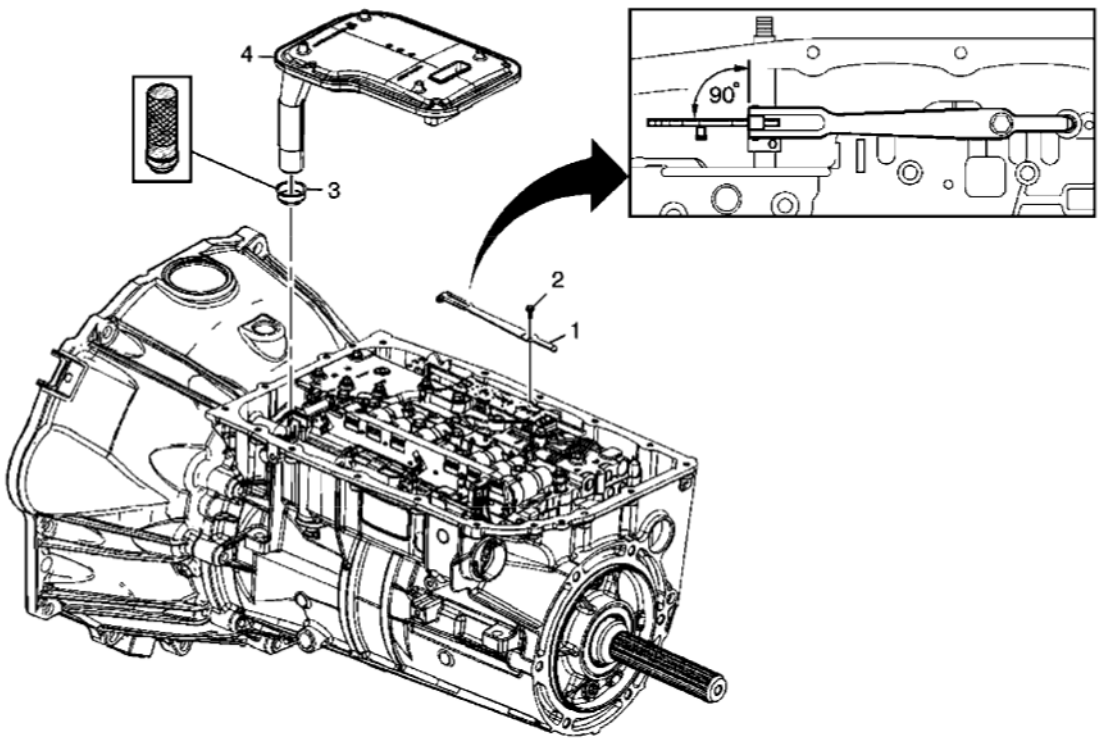

Fig. 99: Fluid Filter & Manual Shift Detent Assembly
Courtesy of GENERAL MOTORS CORP.

Callout	Component Name
1	Manual Shaft Detent Assembly **CAUTION:** **Ensure the manual shaft detent assembly roller is centered over the manual shaft detent lever assembly. Failure to center the roller may cause hard or no shift lever operation.**
2	Bolt M6 x 14.5 **CAUTION:** **Refer to Fastener Caution .** **Tighten:** 12 N.m (106 lb in).
3	NEW Fluid Filter Seal Assembly **Special Tools** • **DT 47848:** Seal Installer • **J 42183:** Driver Handle

cardiagn.com

	For equivalent regional tools, refer to **Special Tools** .
4	NEW Fluid Filter Assembly

TRANSMISSION FLUID PAN INSTALLATION (6L50)

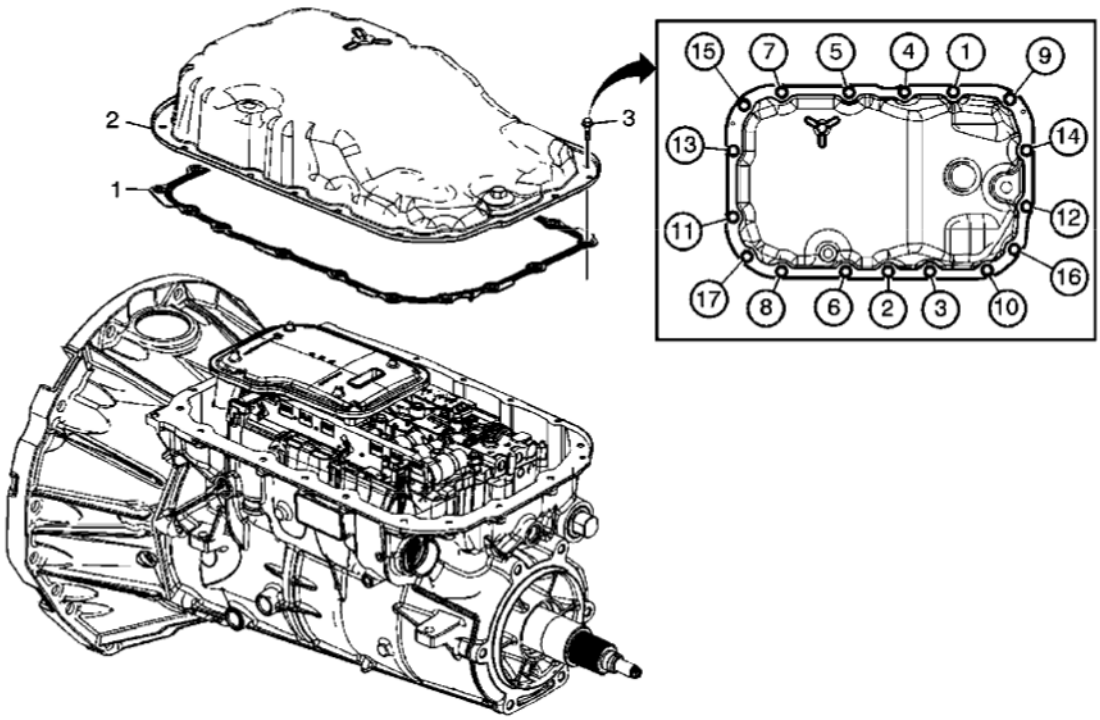

Fig. 100: Transmission Fluid Pan (6L50) (W/Tightening Sequence)
Courtesy of GENERAL MOTORS CORP.

Callout	Component Name
1	Fluid Pan Gasket **Tip:** The fluid pan gasket is reusable. Inspect the gasket to determine if it may be reused. If the gasket is stuck to the case or pan, it should be replaced.
2	Fluid Pan Assembly
3	Fluid Pan Bolts M6 x 20 (Qty: 17) **CAUTION:** **Refer to Fastener Caution .** **Procedure::** Tighten in sequence shown. **Tighten:** 9 N.m (80 lb in)

cardiagn.com

TRANSMISSION FLUID PAN INSTALLATION (6L80)

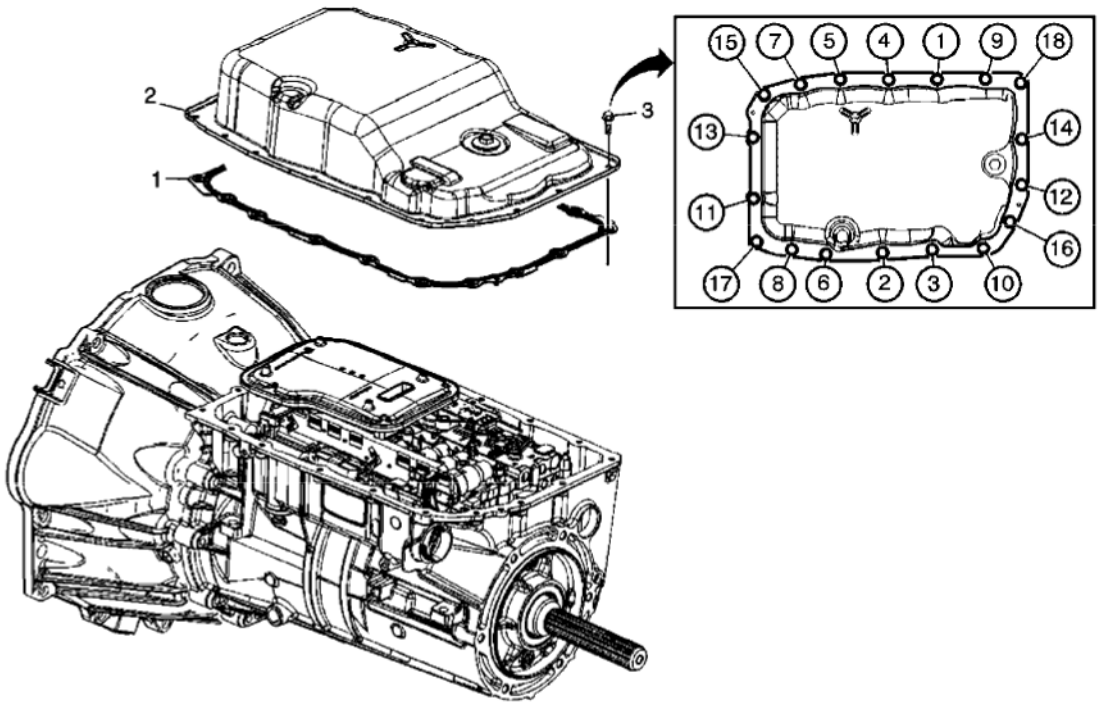

Fig. 101: Transmission Fluid Pan (6L80) (W/Tightening Sequence)
Courtesy of GENERAL MOTORS CORP.

Callout	Component Name
1	Fluid Pan Gasket **Tip:** The fluid pan gasket is reusable. Inspect the gasket to determine if it may be reused. If the gasket is stuck to the case or pan, it should be replaced.
2	Fluid Pan Assembly
3	Fluid Pan Bolts M6 x 20 (Qty: 18) **CAUTION:** **Refer to Fastener Caution .** **Procedure:** Tighten in sequence shown. **Tighten:** 9 N.m (80 lb in)

CASE EXTENSION ASSEMBLY INSTALLATION (6L50)

cardiagn.com

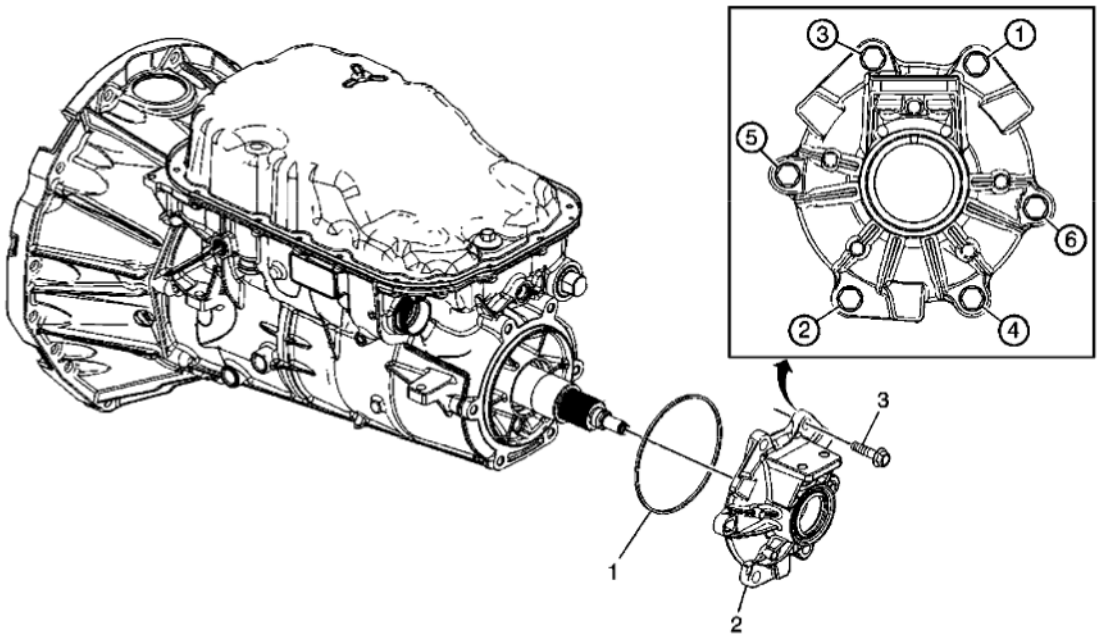

Fig. 102: Case Extension Assembly (6L50) (W/Tightening Sequence)
Courtesy of GENERAL MOTORS CORP.

Callout	Component Name
1	NEW Case Extension Seal
2	Case Extension
3	Bolts M10 x 40 (Qty: 6) **CAUTION:** **Refer to Fastener Caution .** **Procedure::** Tighten in sequence shown. **Tighten:** 55 N.m (41 lb ft)

CASE EXTENSION ASSEMBLY INSTALLATION (6L80)

cardiagn.com

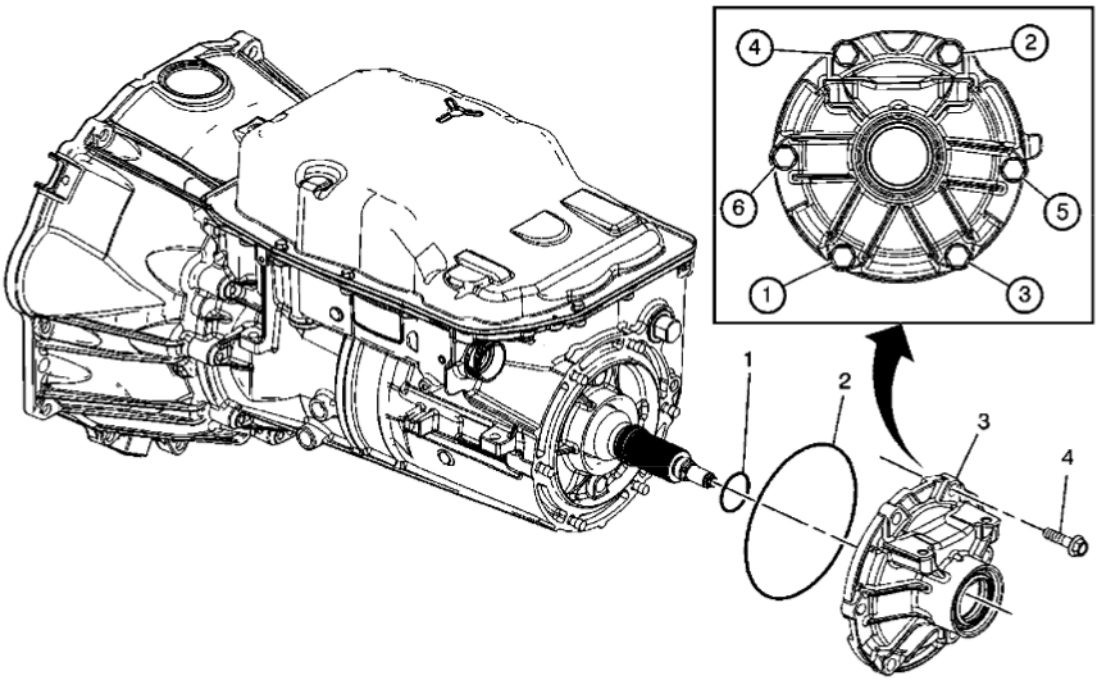

Fig. 103: Case Extension Assembly (6L80) (W/Tightening Sequence)
Courtesy of GENERAL MOTORS CORP.

Callout	Component Name
1	Prop Shaft Trans Flange O-ring Seal
2	NEW Case Extension Seal
3	Case Extension
4	Bolts M10 x 40 (Qty: 6) **CAUTION:** **Refer to Fastener Caution .** **Procedure:** Tighten in sequence shown. **Tighten:** 55 N.m (41 lb ft)

PROPELLER SHAFT TRANSMISSION FLANGE INSTALLATION (6L50)

cardiagn.com

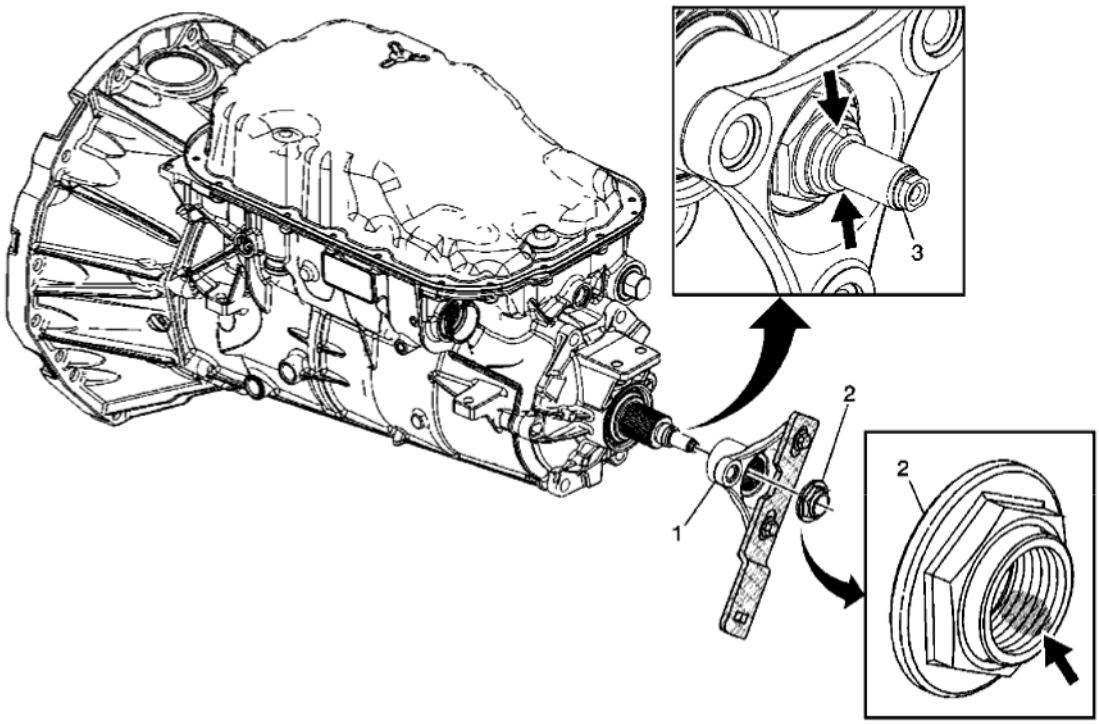

Fig. 104: Propeller Shaft Transmission Flange (6L50)
Courtesy of GENERAL MOTORS CORP.

Callout	Component Name
1	Prop Shaft Trans Flange
2	NEW Front Prop Shaft Flange Nut **CAUTION:** **Refer to Fastener Caution .** **Procedure** 1. The output shaft threads must be thoroughly clean and dry before installing the nut. 2. Apply liquid adhesive across the width of the nut threads, prior to tightening and staking. Refer to **Adhesives, Fluids, Lubricants, and Sealers** . However, if the replacement nut contains a pre-applied adhesive patch, then liquid adhesive is not required. **Tighten:** 55 N.m (41 lb ft) **Special Tools:** **J 45012:** Holding Fixture For equivalent regional tools, refer to **Special Tools** .

cardiagn.com

3	Output Shaft **CAUTION:** **Stake the flange nut onto the output shaft. Use the two staking grooves on the shaft to locate the staking points. Failure to stake the flange nut may result in damage to the transmission.**

PROPELLER SHAFT TRANSMISSION FLANGE INSTALLATION (6L80)

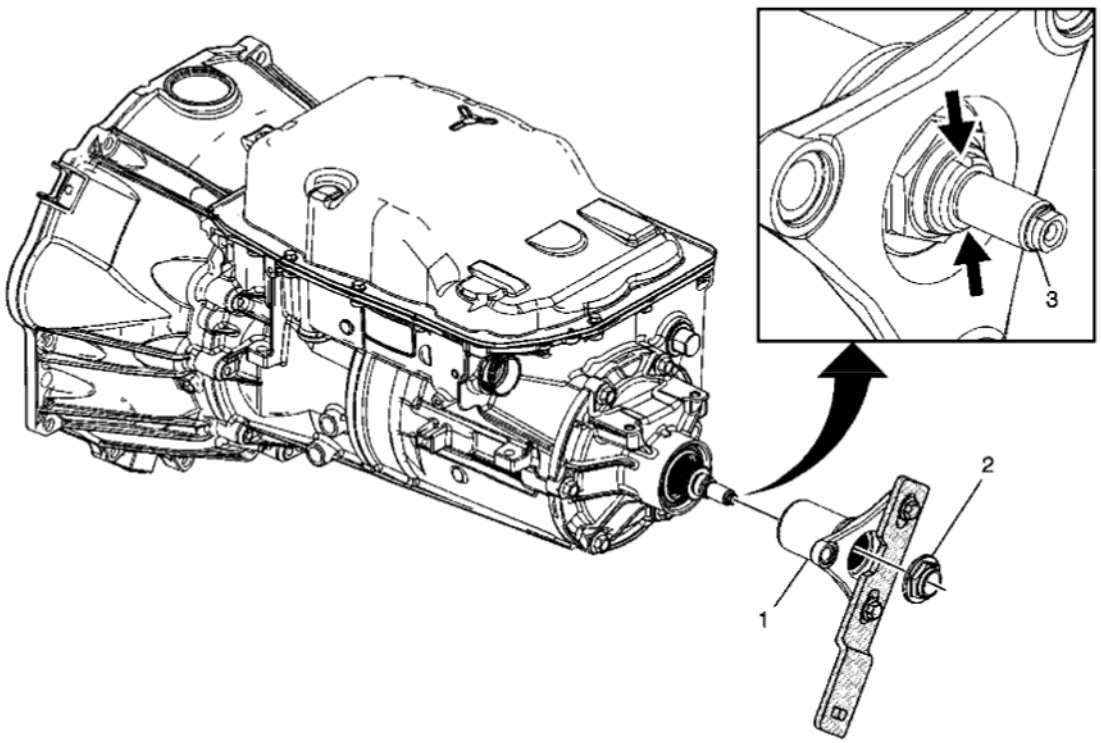

Fig. 105: Propeller Shaft Transmission Flange (6L80)
Courtesy of GENERAL MOTORS CORP.

Callout	Component Name
1	Prop Shaft Trans Flange
2	NEW Front Prop Shaft Flange Nut **CAUTION:** **Refer to Fastener Caution .** **Procedure:** Use liquid adhesive when installing the flange nut, prior to tightening and staking. Refer to **Adhesives, Fluids, Lubricants, and Sealers** .

cardiagn.com

	Tighten: 105 N.m (77 lb ft) **Special Tools:** **J 45012:** Holding Fixture For equivalent regional tools, refer to **Special Tools** .
3	Output Shaft **CAUTION:** **Stake the flange nut onto the output shaft. Use the two staking grooves on the shaft to locate the staking points. Failure to stake the flange nut may result in damage to the transmission.**

TORQUE CONVERTER INSTALLATION AND HOLDING FIXTURE REMOVAL (6L50)

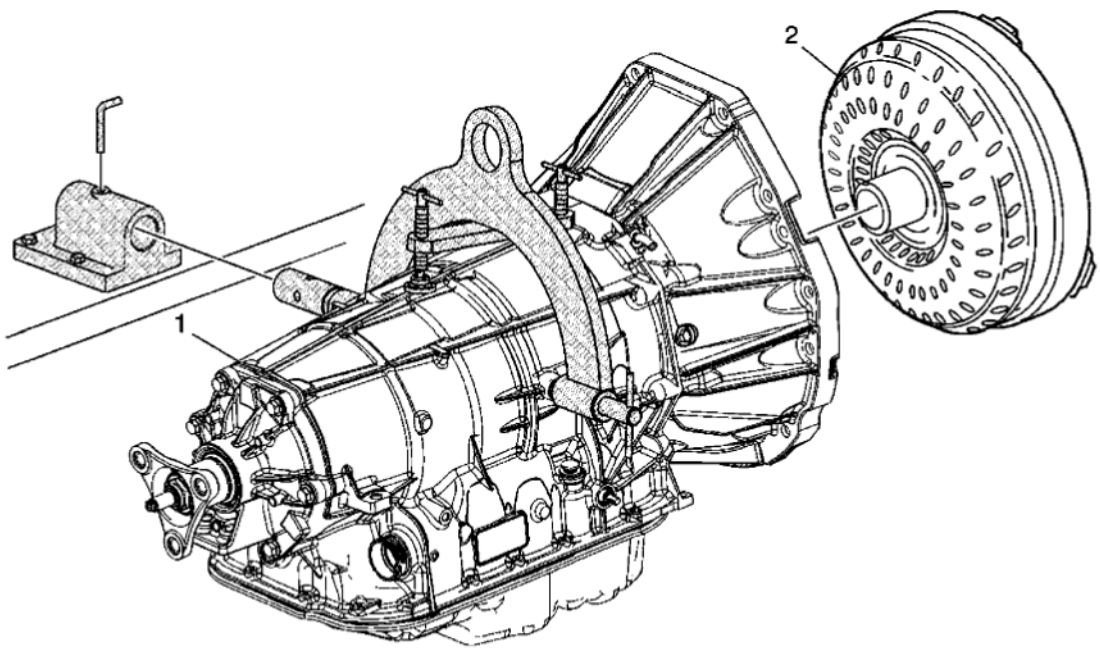

Fig. 106: Torque Converter Installation & Holding Fixture (6L50)
Courtesy of GENERAL MOTORS CORP.

Callout	Procedure
1	Transmission Case Assembly **Tip:** Rotate the transmission so that the fluid pan assembly is down. **Special Tools** • **DT-48989:** Holding Fixture • **J 3289-20:** Holding Fixture Base Assembly

cardiagn.com

	For equivalent regional tools, refer to **Special Tools** .
2	Torque Converter Assembly

TORQUE CONVERTER INSTALLATION AND HOLDING FIXTURE REMOVAL (6L80)

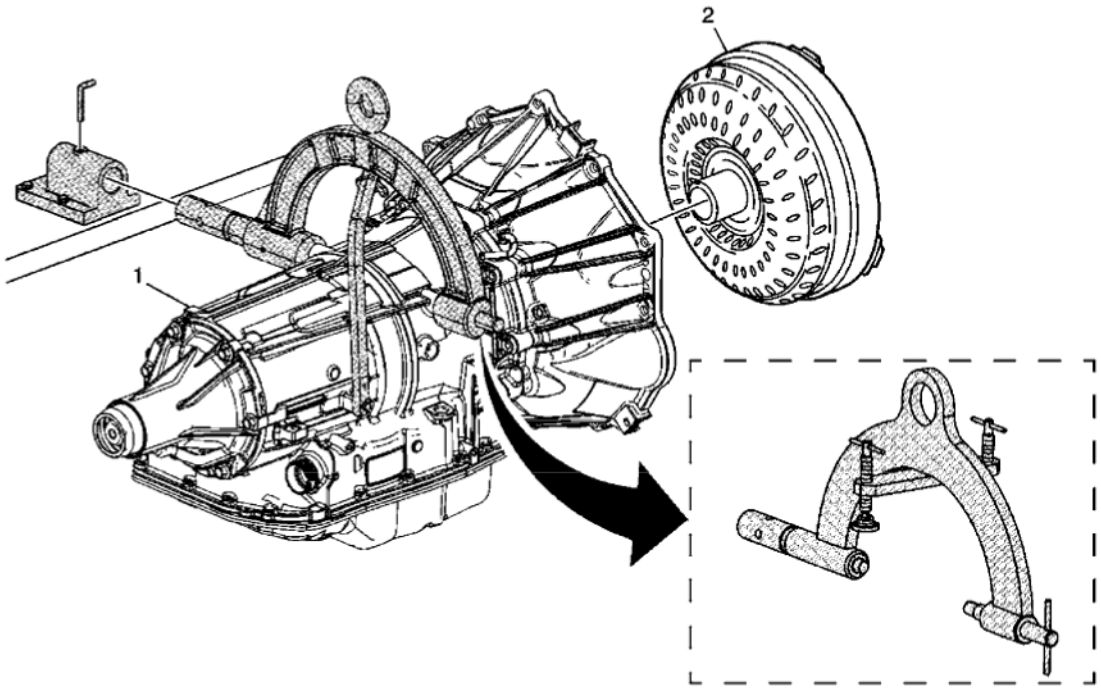

Fig. 107: Torque Converter Installation & Holding Fixture (6L80)
Courtesy of GENERAL MOTORS CORP.

Callout	Procedure
1	Transmission Case Assembly **Tip:** Rotate the transmission so that the fluid pan assembly is down. **Special Tools** • **DT 47605:** Holding Fixture Adapter • **DT 48989:** Holding Fixture • **J 3289-20:** Holding Fixture Base Assembly • **J 8763-B:** Holding Fixture For equivalent regional tools, refer to **Special Tools** .
2	Torque Converter Assembly

cardiagn.com

2010 TRANSMISSION

Automatic Transmission - 6L45/6L50/6L80/6L90 - Camaro

REPAIR INSTRUCTIONS - ON VEHICLE

TRANSMISSION CONTROL LEVER KNOB REPLACEMENT

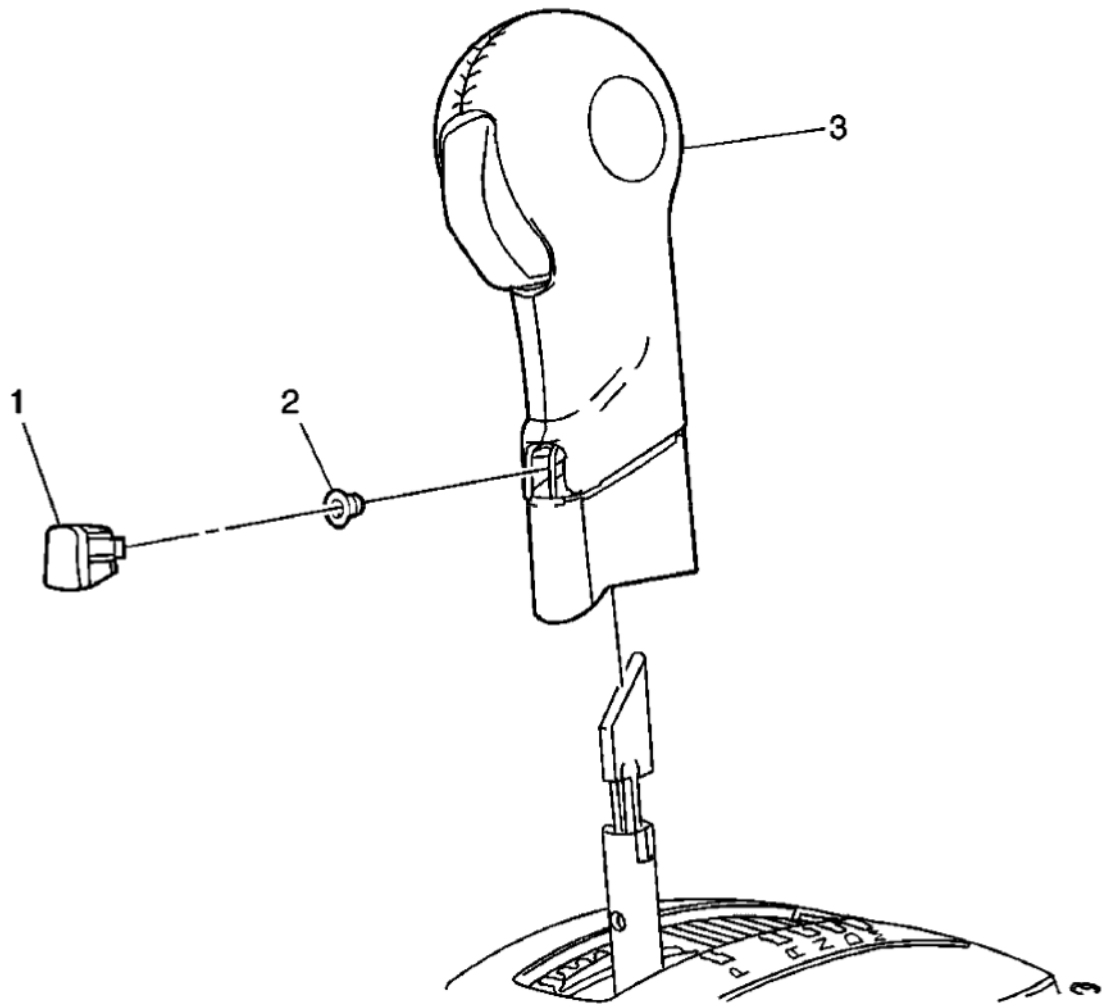

Fig. 1: Transmission Control Lever Knob
Courtesy of GENERAL MOTORS CORP.

Callout	Component Name
1	Transmission Control Lever Knob Cover **Procedure:** Use a flat-bladed plastic trim tool to remove the knob cover.
	Transmission Control Lever Knob Fastener

cardiagn.com

2	**CAUTION:** **Refer to Fastener Caution .** **Tighten:** 3 N.m (27 lb in)
3	Transmission Control Lever Knob **Procedure** 1. Pull up on the transmission control level knob to remove. 2. Transfer components as necessary.

SHIFT CONTROL LINKAGE REPLACEMENT

Removal Procedure

1. Position the shift lever in PARK.
2. Raise and support the vehicle. Refer to **Lifting and Jacking the Vehicle** .

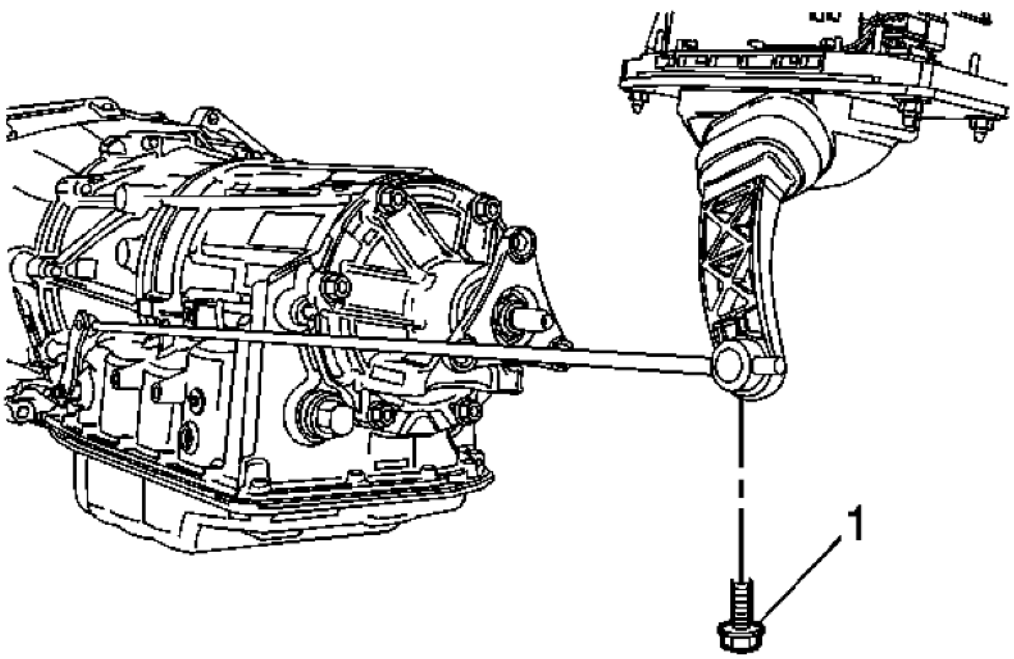

Fig. 2: Shift Control Linkage Rod Bolt
Courtesy of GENERAL MOTORS CORP.

cardiagn.com

3. Remove the bolt (1) from the shift control linkage rod.
4. Disconnect the shift control linkage rod from the shift control assembly.

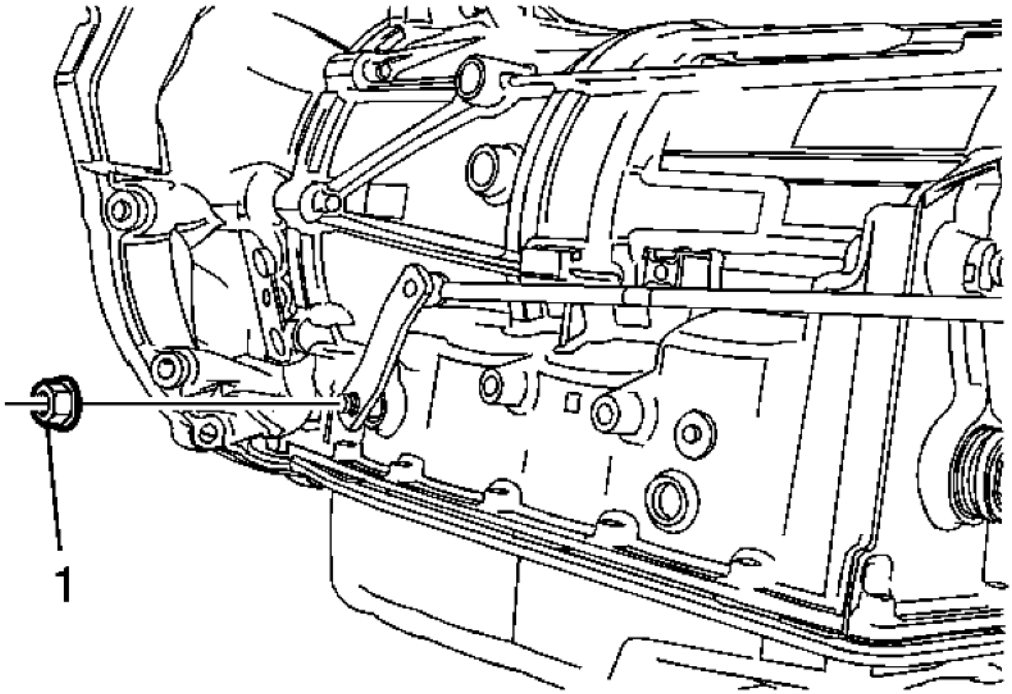

Fig. 3: Manual Shift Shaft Nut
Courtesy of GENERAL MOTORS CORP.

5. Remove the manual shift shaft nut (1).
6. Remove the shift control linkage from the vehicle.

Installation Procedure

cardiagn.com

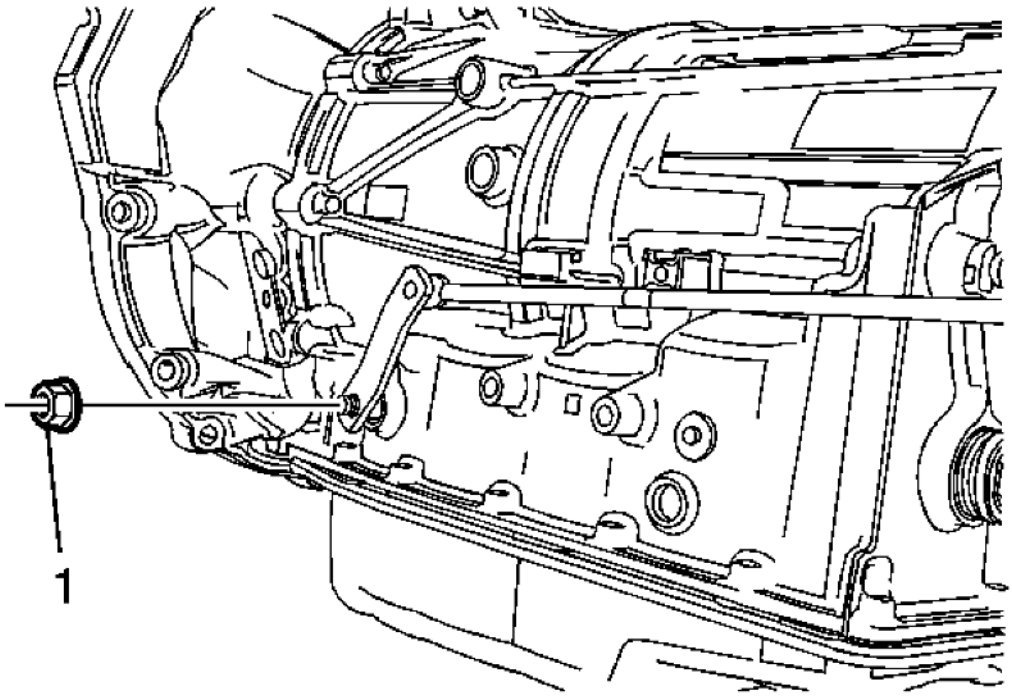

Fig. 4: Manual Shift Shaft Nut
Courtesy of GENERAL MOTORS CORP.

1. Install the shift control linkage to the vehicle.

CAUTION: Refer to Fastener Caution .

2. Install the manual shift shaft nut (1) and tighten to 15 N.m (11 lb ft).

cardiagn.com

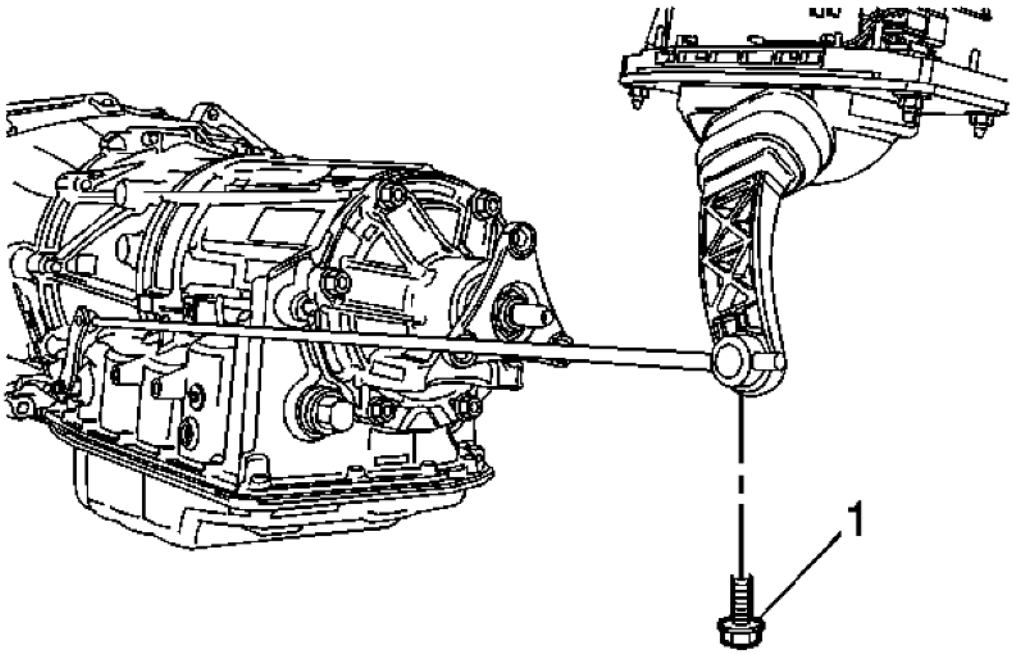

Fig. 5: Shift Control Linkage Rod Bolt
Courtesy of GENERAL MOTORS CORP.

3. Connect the shift control linkage rod to the shift control assembly.
4. Install the bolt (1) to the shift control linkage rod.
5. Adjust the shift control linkage.
6. Lower the vehicle.

SHIFT CONTROL LINKAGE ADJUSTMENT

1. Position the shift lever in PARK.
2. Raise and support the vehicle. Refer to **Lifting and Jacking the Vehicle**

cardiagn.com

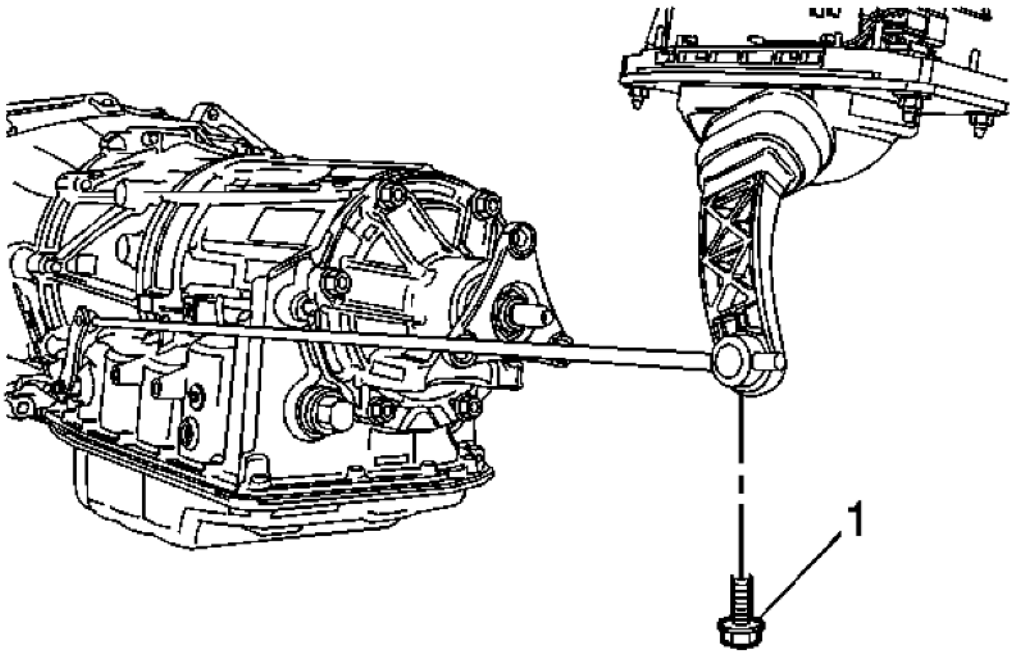

Fig. 6: Shift Control Linkage Rod Bolt
Courtesy of GENERAL MOTORS CORP.

3. Loosen the shift control linkage adjustment bolt (1) to allow the adjuster to slide freely.

CAUTION: Refer to Fastener Caution .

4. Hold the selector lever on transmission against the rear stop to eliminate any play. Tighten the shift control linkage adjustment nut to 9 N.m (80 lb in).
5. Lower the vehicle.
6. Inspect the operation of the starting system with the shift lever in each position. The engine should only crank when the lever is in the PARK or NEUTRAL position.
7. Ensure that the shifter detents align with the gear indicators.
8. Return to the PARK position and check for proper engagement. PARK position should feel solid and not spongy. The shift lever should not be bottomed out on the stop bumper when engaging the PARK position. Readjust and retest if necessary.
9. With the ignition on and the engine not running, ensure a smooth transition from position D to tap mode and back. Ensure that the odometer changes to the gear indicator mode. If the odometer does not change to gear indicator mode, or any binding or rough spots are felt, repeat the linkage adjustment procedure

cardiagn.com

and retest the system.

10. Tighten the shift linkage adjusting bolt to 30 N.m (22 lb ft).

TRANSMISSION CONTROL REPLACEMENT

Removal Procedure

1. Raise and support the vehicle. Refer to **Lifting and Jacking the Vehicle** .

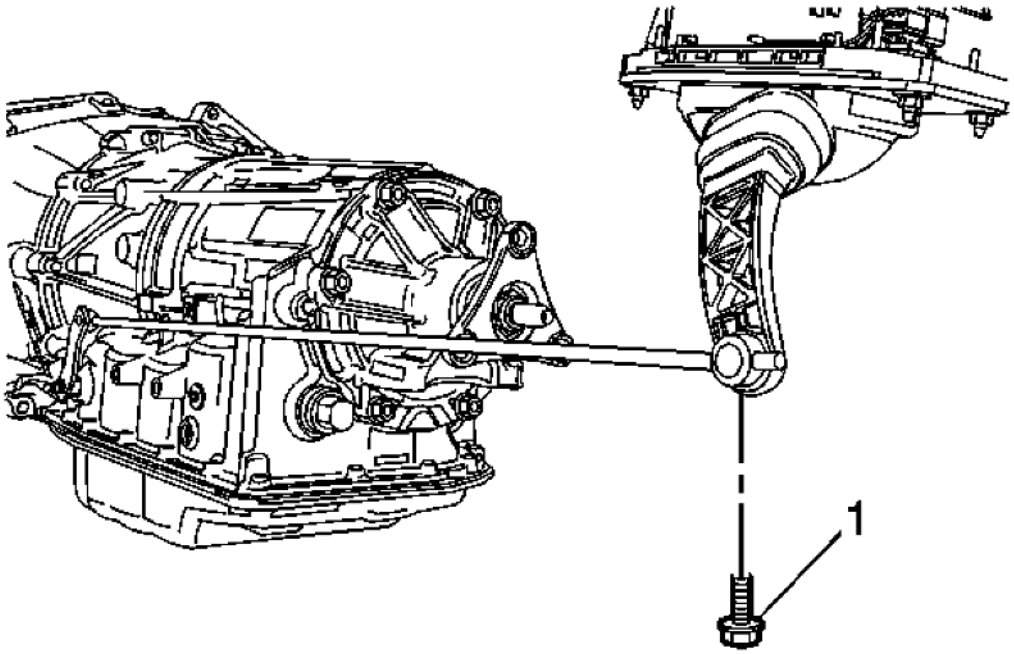

Fig. 7: Shift Control Linkage Rod Bolt
Courtesy of GENERAL MOTORS CORP.

2. Remove the shift control linkage adjustment bolt (1).
3. Disconnect the shift control linkage rod from the shift control assembly.

cardiagn.com

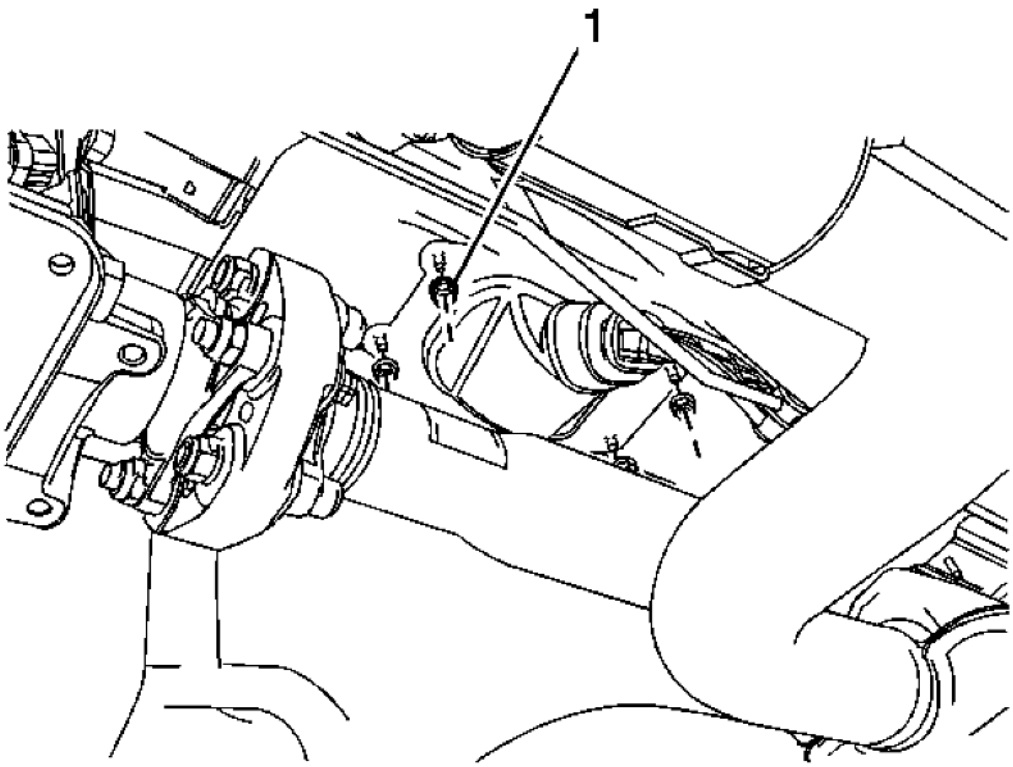

Fig. 8: Shift Control Retaining Nuts
Courtesy of GENERAL MOTORS CORP.

4. Remove the four shift control retaining nuts (1)
5. Lower the vehicle.
6. Remove the front floor console cover. Refer to **Front Floor Console Front Cover Replacement (Without UMQ)** or **Front Floor Console Front Cover Replacement (With UMQ)** .

cardiagn.com

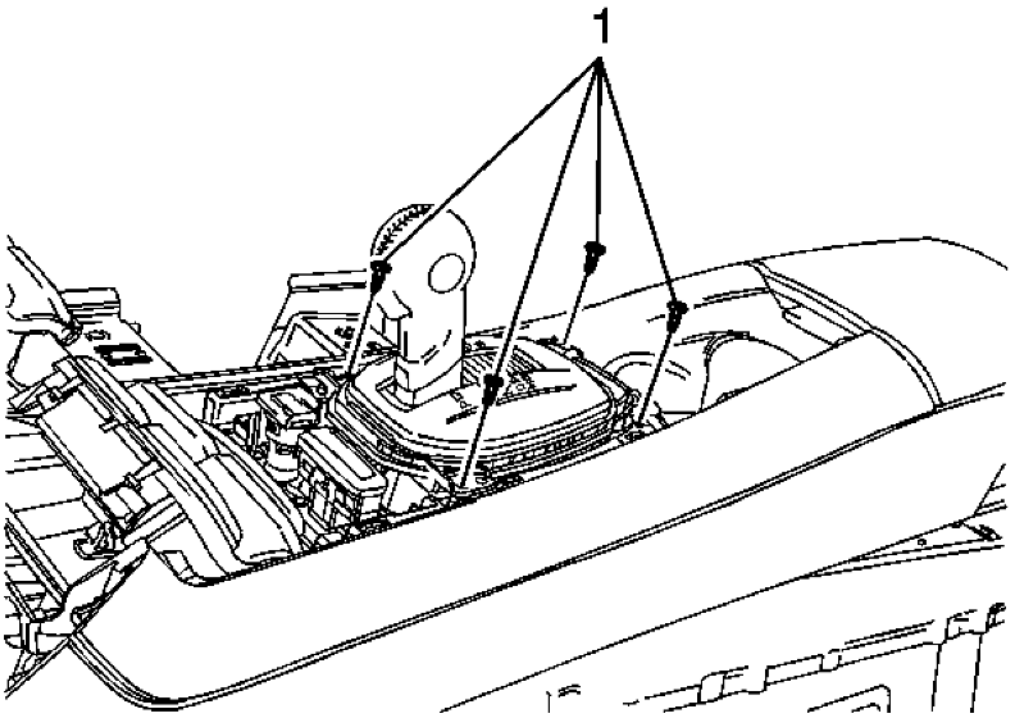

Fig. 9: Retainer Screws
Courtesy of GENERAL MOTORS CORP.

7. Remove the four retainer screws (1).
8. Disconnect the electrical connector from the shift control assembly.
9. Remove the shift control assembly from the tunnel reinforcement.

Installation Procedure

1. Install the shift control assembly to the tunnel reinforcement.

cardiagn.com

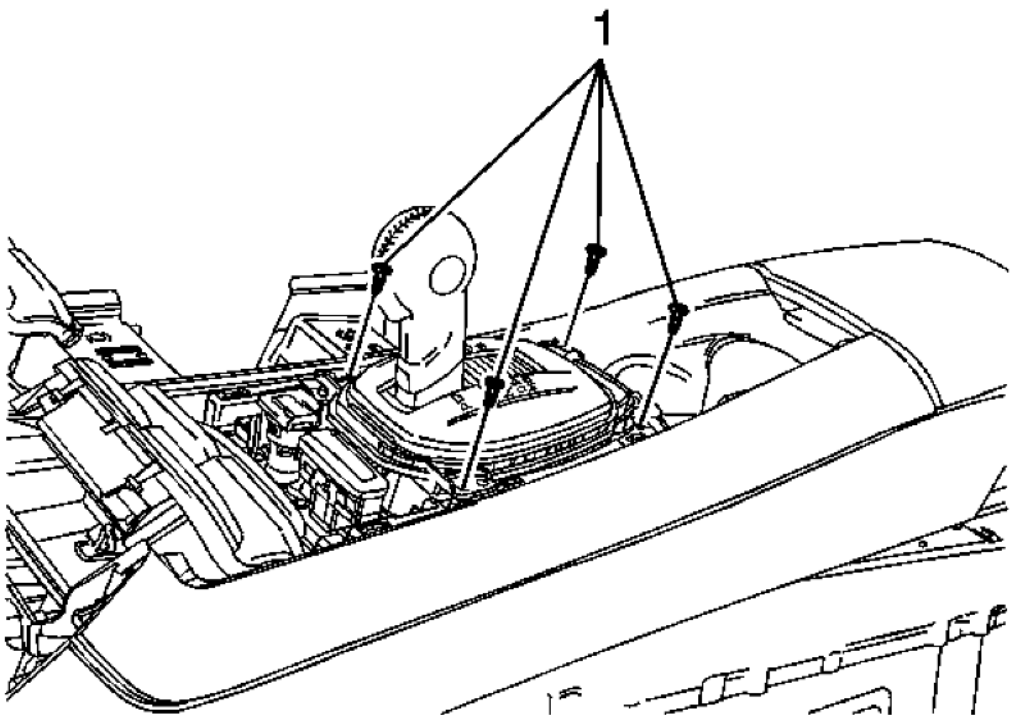

Fig. 10: Retainer Screws
Courtesy of GENERAL MOTORS CORP.

CAUTION: Refer to Fastener Caution .

2. Install the shift control assembly retaining screws (1) and tighten to 30 N.m (22 lb ft).
3. Install the electrical connector to the shift control assembly.
4. Install the front floor console cover. Refer to **Front Floor Console Front Cover Replacement (Without UMQ)** or **Front Floor Console Front Cover Replacement (With UMQ)** .
5. Raise and support the vehicle. Refer to **Lifting and Jacking the Vehicle** .

cardiagn.com

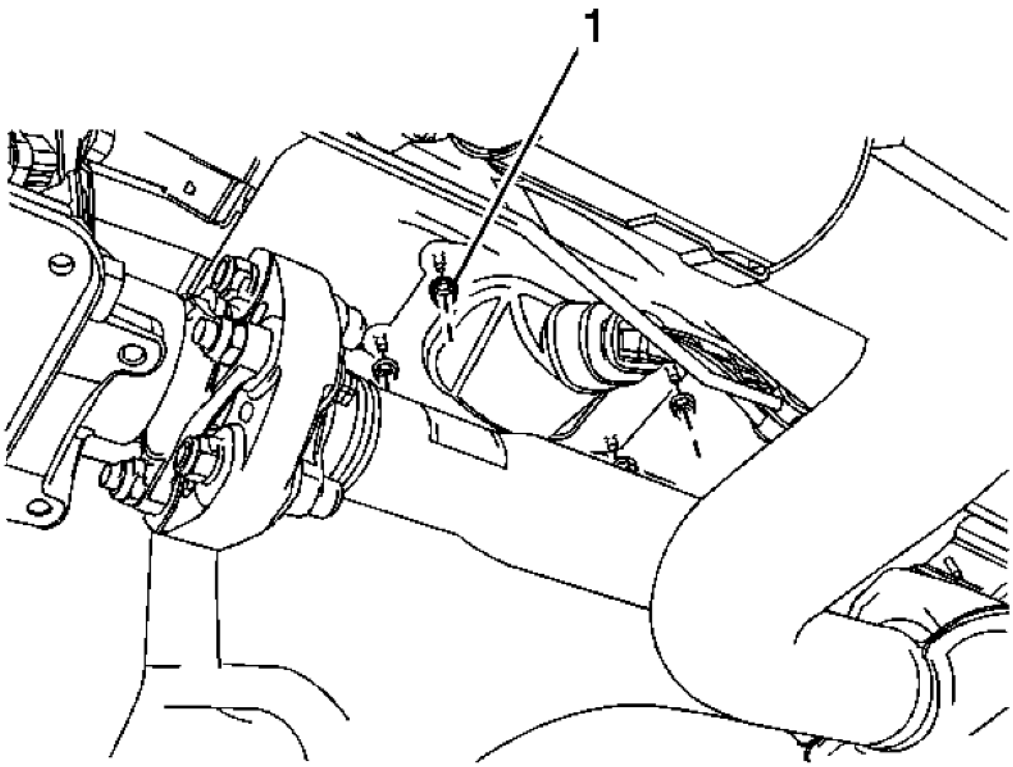

Fig. 11: Shift Control Retaining Nuts
Courtesy of GENERAL MOTORS CORP.

6. Install the shift control assembly retaining nuts (1) and tighten to 30 N.m (22 lb ft).

cardiagn.com

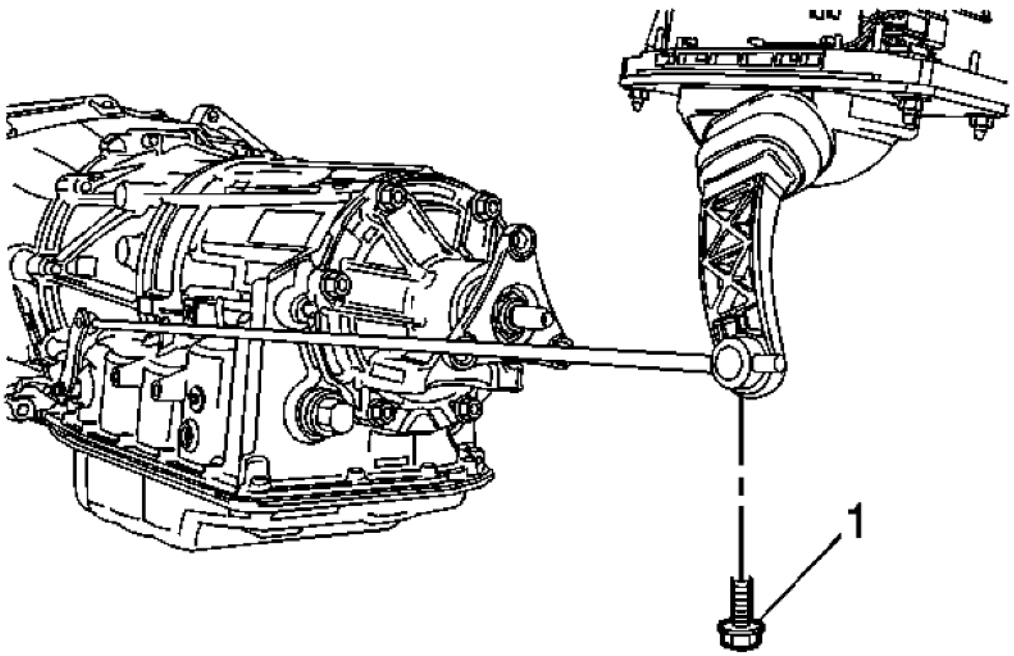

Fig. 12: Shift Control Linkage Rod Bolt
Courtesy of GENERAL MOTORS CORP.

7. Connect the shift control linkage rod to the shift control assembly.
8. Install the shift control linkage adjustment bolt finger tight.
9. Adjust the shift control linkage. Refer to **Shift Control Linkage Adjustment**.
10. Lower the vehicle.

MANUAL SHIFT AUXILIARY POSITION SWITCH REPLACEMENT - STEERING WHEEL

cardiagn.com

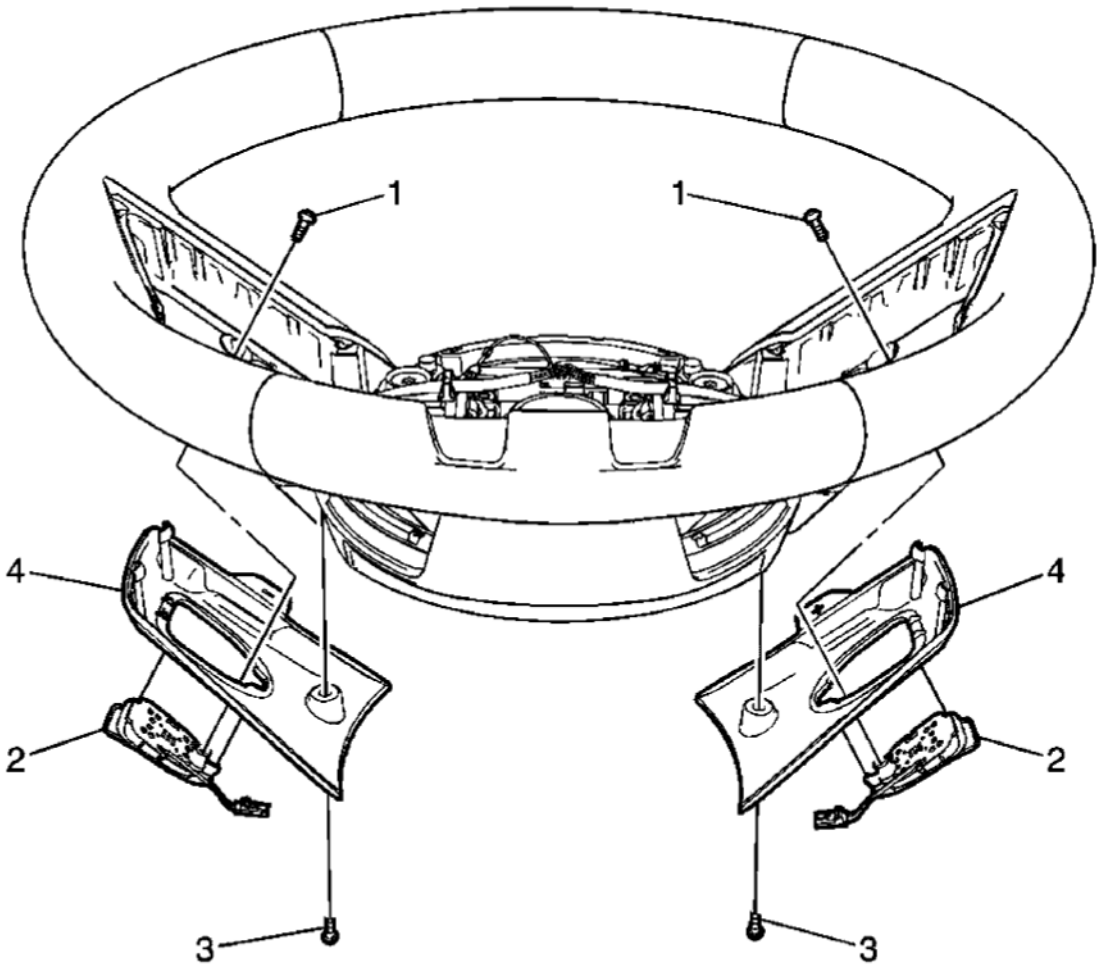

Fig. 13: Manual Shift Auxiliary Position Switch - Steering Wheel
Courtesy of GENERAL MOTORS CORP.

Callout	Component Name
Preliminary Procedures 1. On the left side of the steering wheel, remove the cruise control switch. Refer to **Cruise Control Switch Replacement** . 2. On the right side of the steering wheel, remove the radio and telephone control switch. Refer to **Radio and Telephone Control Switch Replacement** .	
1	Automatic Transmission Manual Shift Auxiliary Position Switch Bolt (Qty: 2) **CAUTION:** **Refer to Fastener Caution .**
	Automatic Transmission Manual Shift Auxiliary Position Switch (Qty: 2) **Procedure**

cardiagn.com

2	1. Disconnect any electrical connectors as necessary. 2. Ensure the switch is properly seated on the steering wheel during installation.
3	Accessory Switch Mounting Plate Bolt (Qty: 2) **Procedure:** Turn the steering wheel in order to access the bolt.
4	Accessory Switch Mounting Plate (Qty: 2) **Procedure:** Release the 2 retainers in order to remove the plate.

TRANSMISSION FLUID COOLER HOSE/PIPE QUICK-CONNECT FITTING DISCONNECTION AND CONNECTION

Removal Procedure

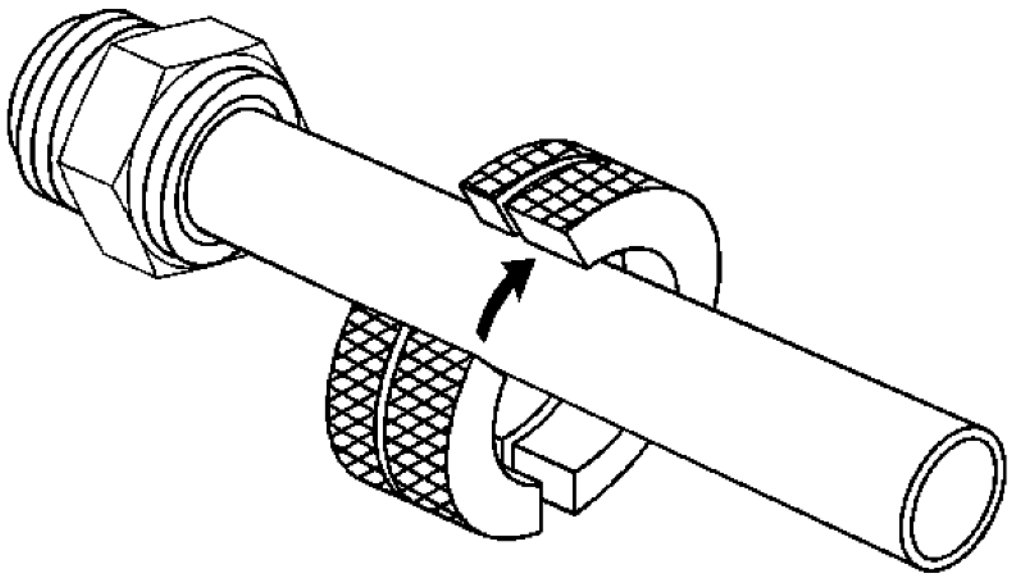

Fig. 14: Installing J 41623-B Onto Transmission Oil Cooler Pipe
Courtesy of GENERAL MOTORS CORP.

1. Install the **J 41623-B** onto the transmission oil cooler (TOC) pipe.

cardiagn.com

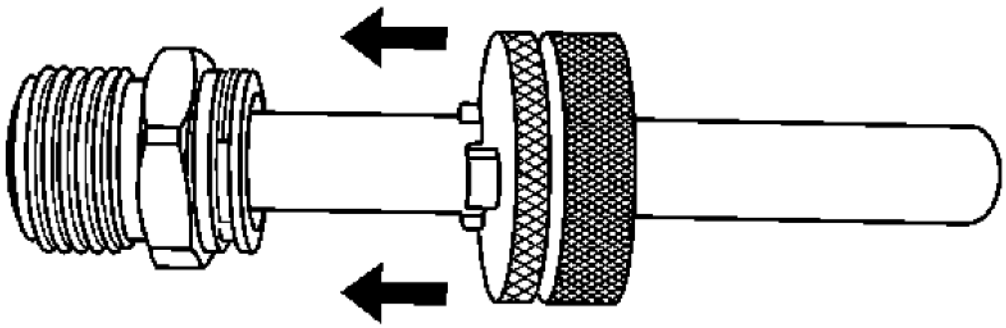

Fig. 15: Sliding J 41623-B Toward TOC Pipe Fitting
Courtesy of GENERAL MOTORS CORP.

2. Slide the **J 41623-B** toward the TOC pipe fitting.

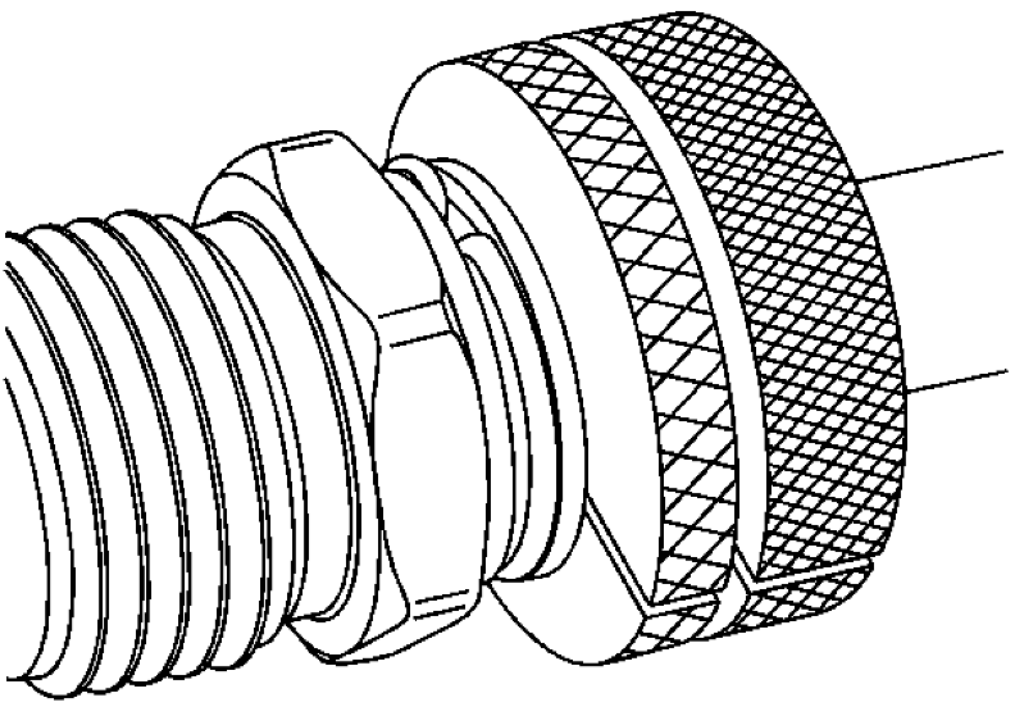

cardiagn.com

Fig. 16: J 41623-B & TOC Pipe Fitting
Courtesy of GENERAL MOTORS CORP.

IMPORTANT: Rotate the J 41623-B to engage the TOC pipe fitting's retainer slots. The J 41623-B should be nearly flush with the fitting.

3. Connect the **J 41623-B** onto the TOC pipe fitting.

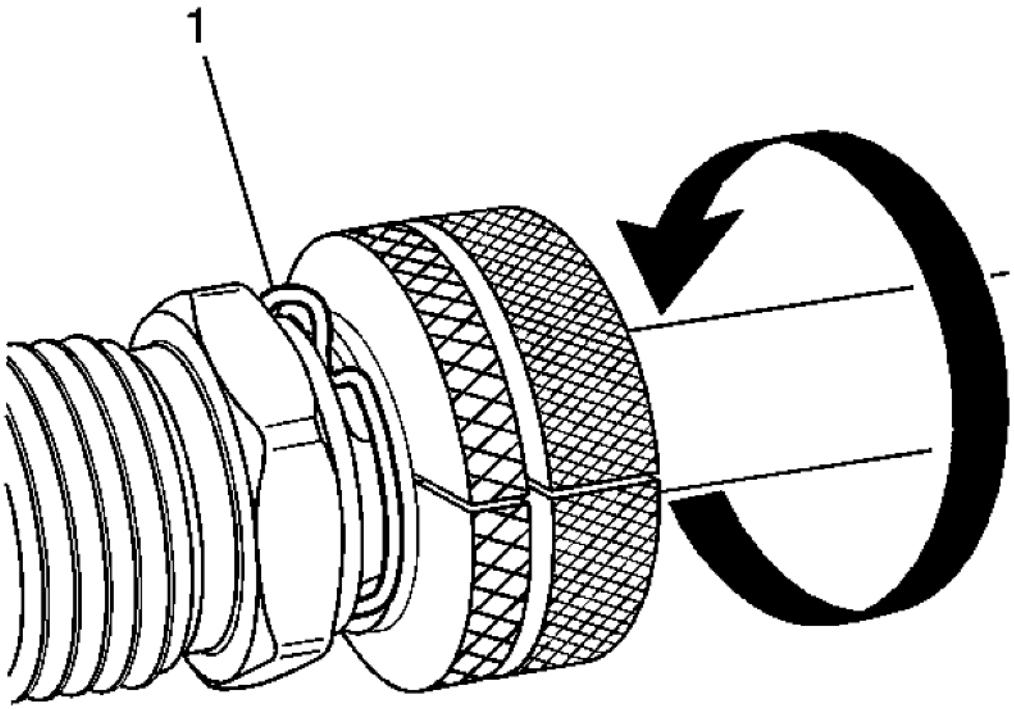

Fig. 17: Identifying Retainer Clip
Courtesy of GENERAL MOTORS CORP.

4. Rotate the **J 41623-B** until the retainer clip (1) rises above the fitting retainer seat.

cardiagn.com

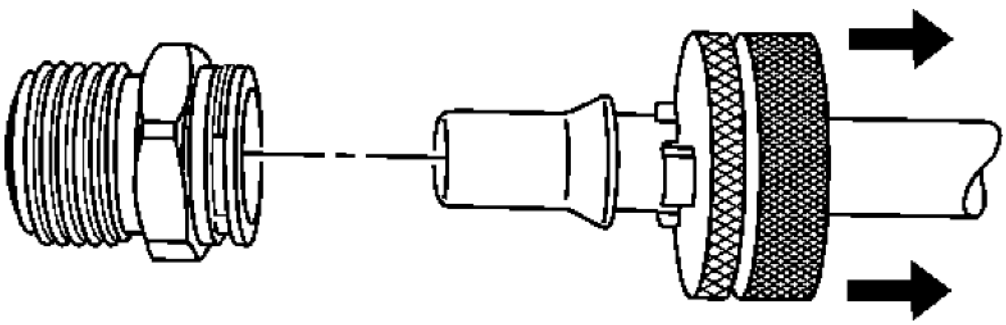

Fig. 18: Disengaging Pipe From TOC Pipe Fitting
Courtesy of GENERAL MOTORS CORP.

5. Pull back on the TOC pipe to disengage the pipe from the TOC pipe fitting.
6. Remove the **J 41623-B** from the TOC pipe.

Installation Procedure

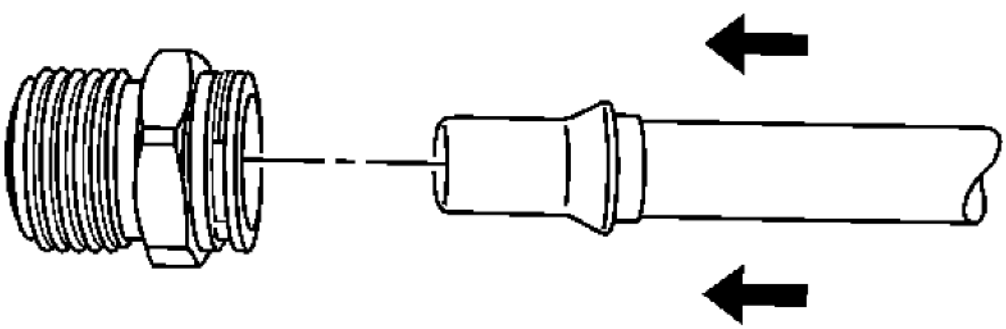

Fig. 19: Installing TOC Pipe Into TOC Pipe Fitting
Courtesy of GENERAL MOTORS CORP.

IMPORTANT: Inspect the TOC pipe fitting and retaining clip for signs of wear or damage. Replace the components if necessary.

1. Install the TOC pipe into the TOC pipe fitting.

cardiagn.com

A distinct snap should be heard or felt when assembling the TOC pipe to the fitting.

2. To ensure the cooler line is properly installed, give the cooler pipe a gentle pull.

TRANSMISSION FLUID COOLER HOSE/PIPE REPLACEMENT

Removal Procedure

1. Raise and support the vehicle. Refer to **Lifting and Jacking the Vehicle** .
2. Remove transmission fluid cooler inlet pipe. Refer to **Transmission Fluid Cooler Inlet Pipe Replacement**.
3. Remove transmission fluid cooler outlet pipe (if equipped). Refer to **Transmission Fluid Cooler Outlet Pipe Replacement**.

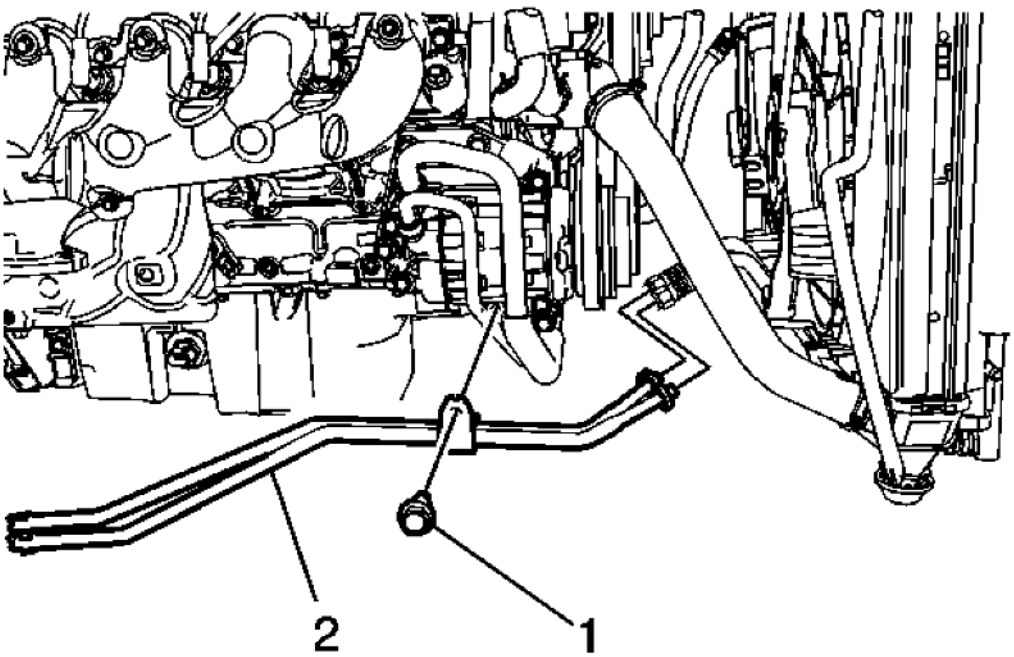

Fig. 20: Transmission Fluid Cooler Hose/Pipe & Bolt At Air Conditioning Bracket
Courtesy of GENERAL MOTORS CORP.

4. Remove transmission fluid cooler hose/pipe bolt (1).
5. Remove transmission fluid cooler hose/pipe (2) from air conditioning bracket.

cardiagn.com

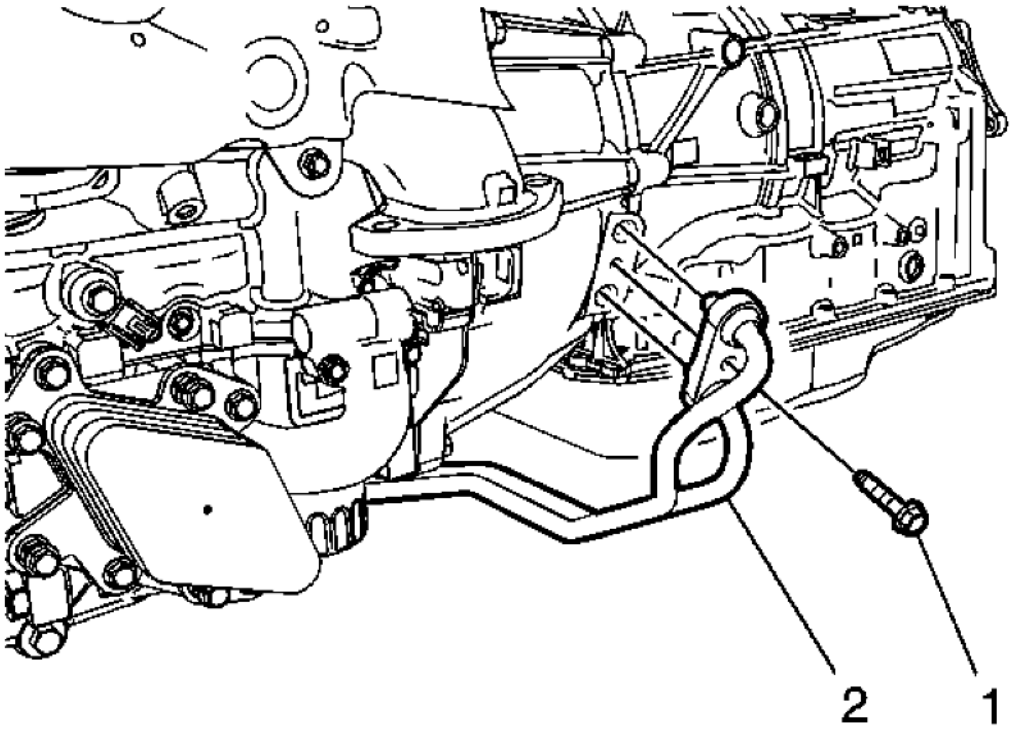

Fig. 21: Transmission Fluid Cooler Hose/Pipe & Bolt At Transmission
Courtesy of GENERAL MOTORS CORP.

6. Remove transmission fluid cooler hose/pipe bolt (1).
7. Remove transmission fluid collar hose/pipe (2) from transmission and discard old seals.

Installation Procedure

cardiagn.com

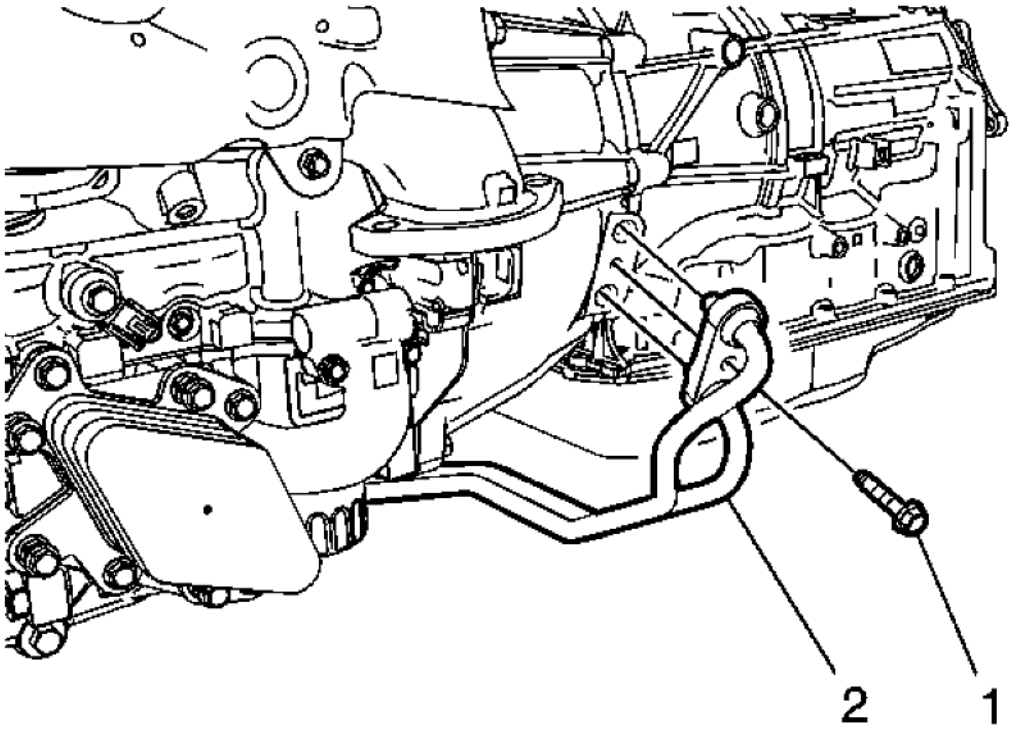

Fig. 22: Transmission Fluid Cooler Hose/Pipe & Bolt At Transmission
Courtesy of GENERAL MOTORS CORP.

1. Install transmission fluid collar hose/pipe (2) to the transmission with new seals.
2. Install transmission fluid cooler hose/pipe bolt (1) and tighten to 22 N.m (16 lb ft).

cardiagn.com

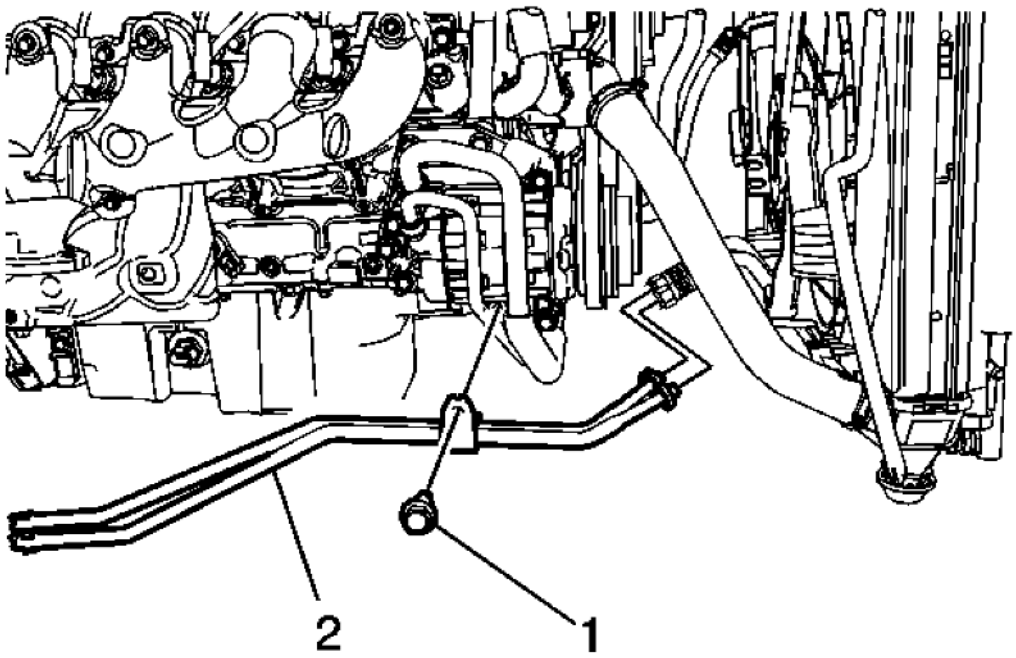

Fig. 23: Transmission Fluid Cooler Hose/Pipe & Bolt At Air Conditioning Bracket
Courtesy of GENERAL MOTORS CORP.

3. Install transmission fluid collar hose/pipe (2) to the air conditioning bracket.
4. Install transmission fluid cooler hose/pipe bolt (1) and tighten to 22 N.m (16 lb ft)
5. Install transmission fluid cooler outlet pipe (if equipped). Refer to **Transmission Fluid Cooler Outlet Pipe Replacement**.
6. Install transmission fluid cooler inlet pipe. Refer to **Transmission Fluid Cooler Inlet Pipe Replacement**.
7. Lower the vehicle.

TRANSMISSION FLUID COOLER INLET PIPE REPLACEMENT

cardiagn.com

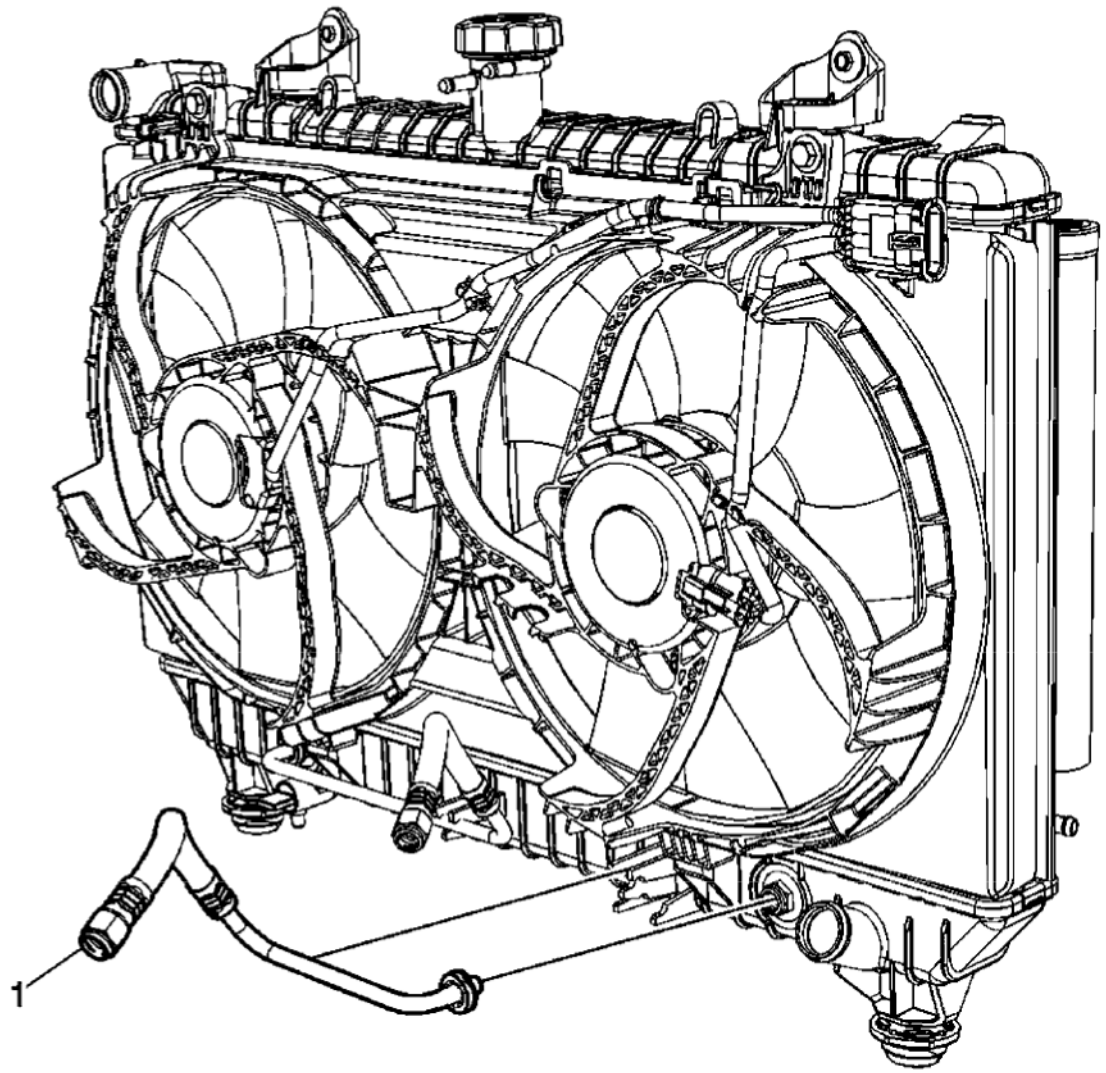

Fig. 24: Transmission Fluid Cooler Inlet Pipe
Courtesy of GENERAL MOTORS CORP.

Callout	Component Name
Preliminary Procedures 1. Raise and support the vehicle. Refer to **Lifting and Jacking the Vehicle** . 2. Remove transmission fluid cooler hose/pipe. Refer to **Transmission Fluid Cooler Hose/Pipe Replacement**.	
1	Transmission Fluid Cooler Inlet Pipe **Procedure:** Disconnect the transmission line from the radiator. Refer to **Transmission Fluid Cooler Hose/Pipe Quick-Connect Fitting Disconnection and Connection**.

TRANSMISSION FLUID COOLER OUTLET PIPE REPLACEMENT

cardiagn.com

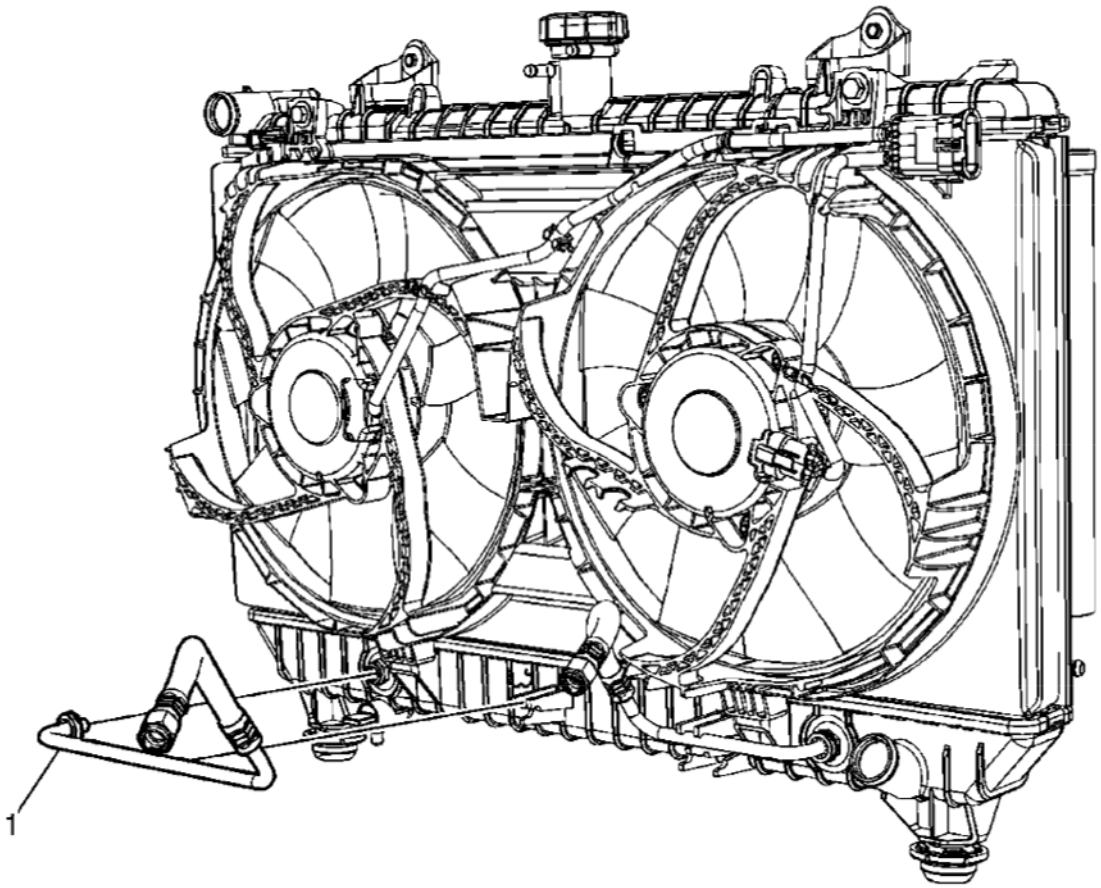

Fig. 25: Transmission Fluid Cooler Outlet Pipe
Courtesy of GENERAL MOTORS CORP.

Callout	Component Name
Preliminary Procedures 1. Raise and support the vehicle. Refer to **Lifting and Jacking the Vehicle** . 2. Remove transmission fluid cooler hose/pipe. Refer to **Transmission Fluid Cooler Hose/Pipe Replacement**.	
1	Transmission Fluid Cooler Outlet Pipe **Procedure:** Disconnect the transmission line from the radiator. Refer to **Transmission Fluid Cooler Hose/Pipe Quick-Connect Fitting Disconnection and Connection**.

AUTOMATIC TRANSMISSION FLUID PRESSURE TEST HOLE PLUG REPLACEMENT

Removal Procedure

1. Raise and support the vehicle. Refer to **Lifting and Jacking the Vehicle**

cardiagn.com

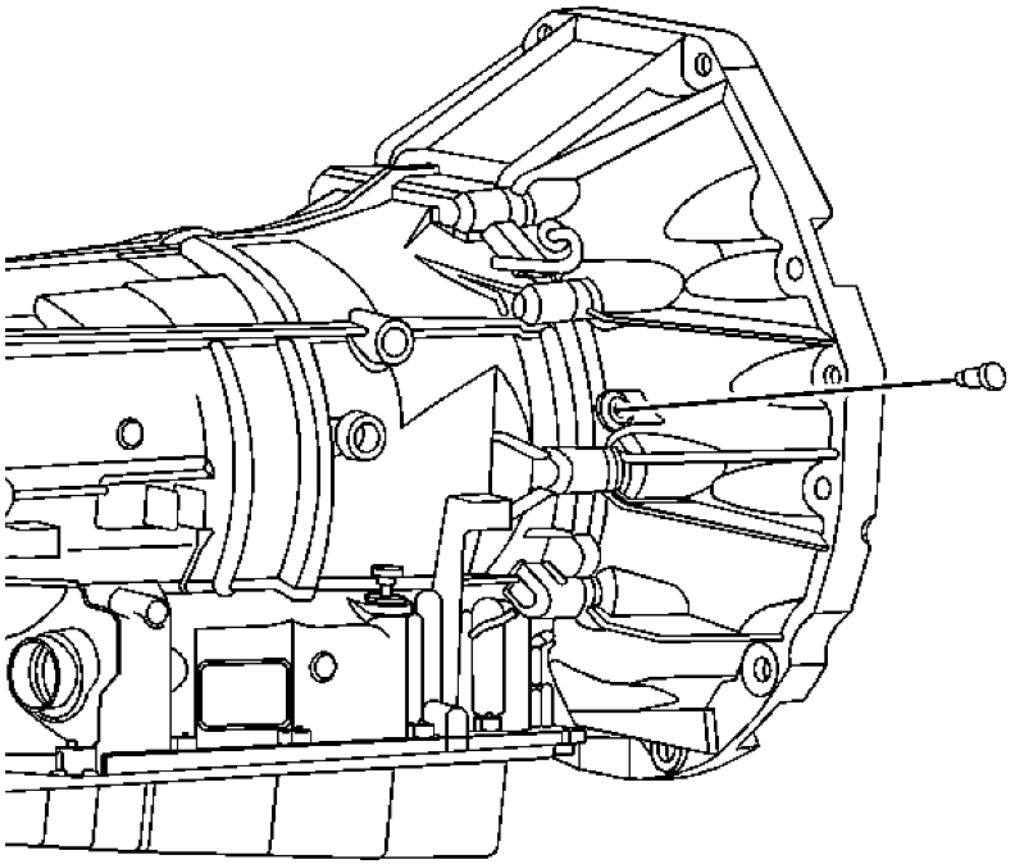

Fig. 26: View Of Oil Pressure Test Plug
Courtesy of GENERAL MOTORS CORP.

2. Clean the surrounding area of the oil pressure test plug.
3. Remove the oil pressure test plug.

Installation Procedure

cardiagn.com

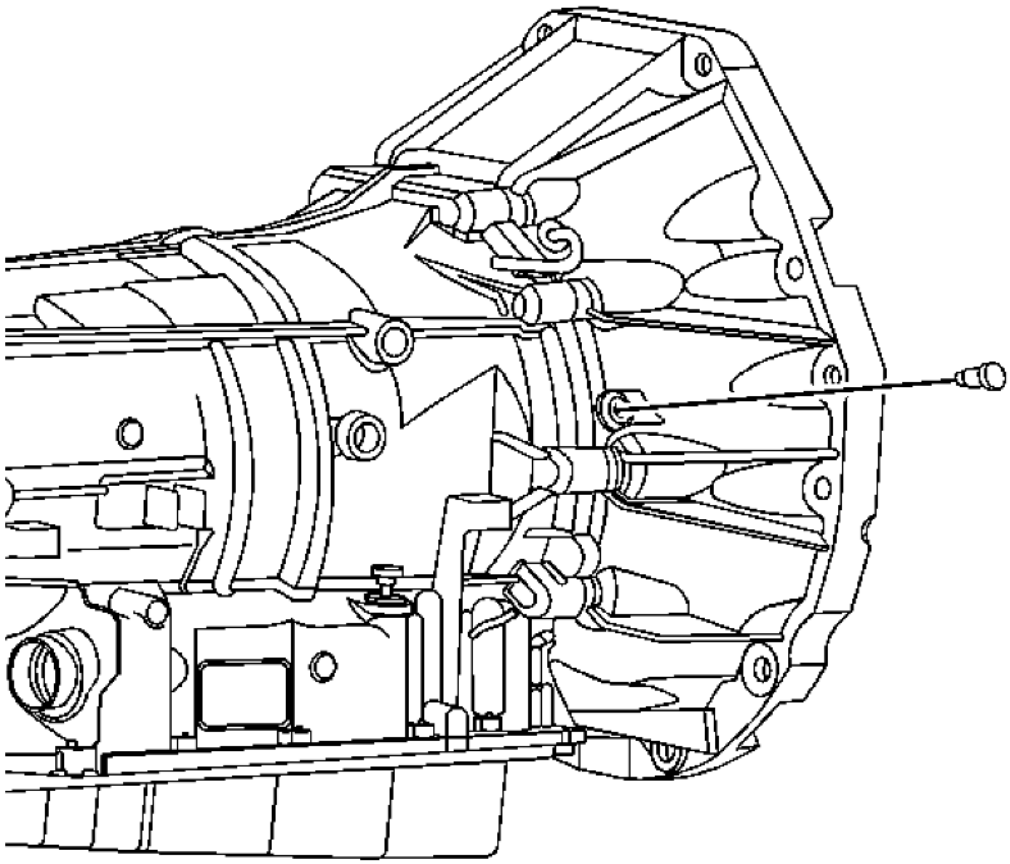

Fig. 27: View Of Oil Pressure Test Plug
Courtesy of GENERAL MOTORS CORP.

CAUTION: Refer to Fastener Caution .

1. Install the oil pressure test plug and tighten to 11 N.m (97 lb in).
2. Check the transmission fluid level (fill if necessary).
3. Lower the vehicle.

AUTOMATIC TRANSMISSION ELECTRICAL CONNECTOR PASSAGE SLEEVE REPLACEMENT

cardiagn.com

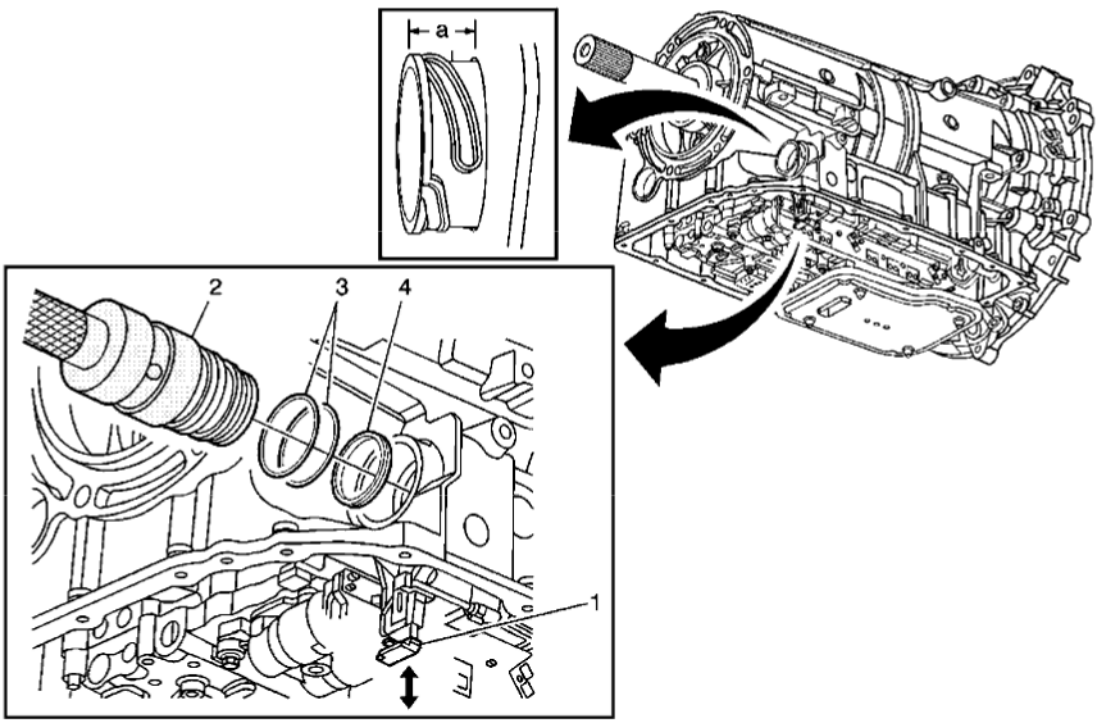

Fig. 28: Automatic Transmission Electrical Connector Passage Sleeve
Courtesy of GENERAL MOTORS CORP.

Callout	Component Name
CAUTION: **Orientate the alignment tab inside the passage sleeve with the slot in the electrical connector of the control solenoid valve assembly. Push the sleeve straight into the case bore and connector. Do NOT rotate the sleeve at any time. Ensure the sleeve is fully seated into the case. When the sleeve is properly installed, the distance from the case surface to the end of the sleeve should be 14-16 mm. Even though the correct electrical connections may still be maintained, failure to ensure proper installation of the sleeve may result in a fluid leak around the sleeve lip seal and into the sleeve cavity.** **Preliminary Procedures** 1. Raise and support the vehicle. Refer to **Lifting and Jacking the Vehicle** 2. Remove the transmission oil pan. Refer to **Automatic Transmission Fluid, Fluid Pan and/or Filter Replacement** 3. Disconnect the vehicle wire harness electrical connector from the transmission electrical connector passage sleeve.	
1	Electrical Connector Slide Lock **Tip:** Pull down on the slide lock to remove the sleeve. Push up on the slide lock after sleeve installation.
	Electrical Connector Passage Sleeve **Tip:**

cardiagn.com

2	• Use the **DT 47715** Electrical Connector Passage Sleeve Remover/Installer and **J 42183** Driver Handle to remove and install the electrical connector passage sleeve. • The distance (a) from the case surface to the end of the sleeve should be 14-16 mm. **Special Tools** • **DT 47715** Electrical Connector Passage Sleeve Remover/Installer. See **Special Tools** . • **J 42183** Driver Handle
3	O-Ring Seal (Qty: 2) **Tip:** Use a NEW O-ring seal.
4	Lip Seal **Tip:** Use a NEW lip seal.

AUTOMATIC TRANSMISSION FLUID, FLUID PAN AND/OR FILTER REPLACEMENT

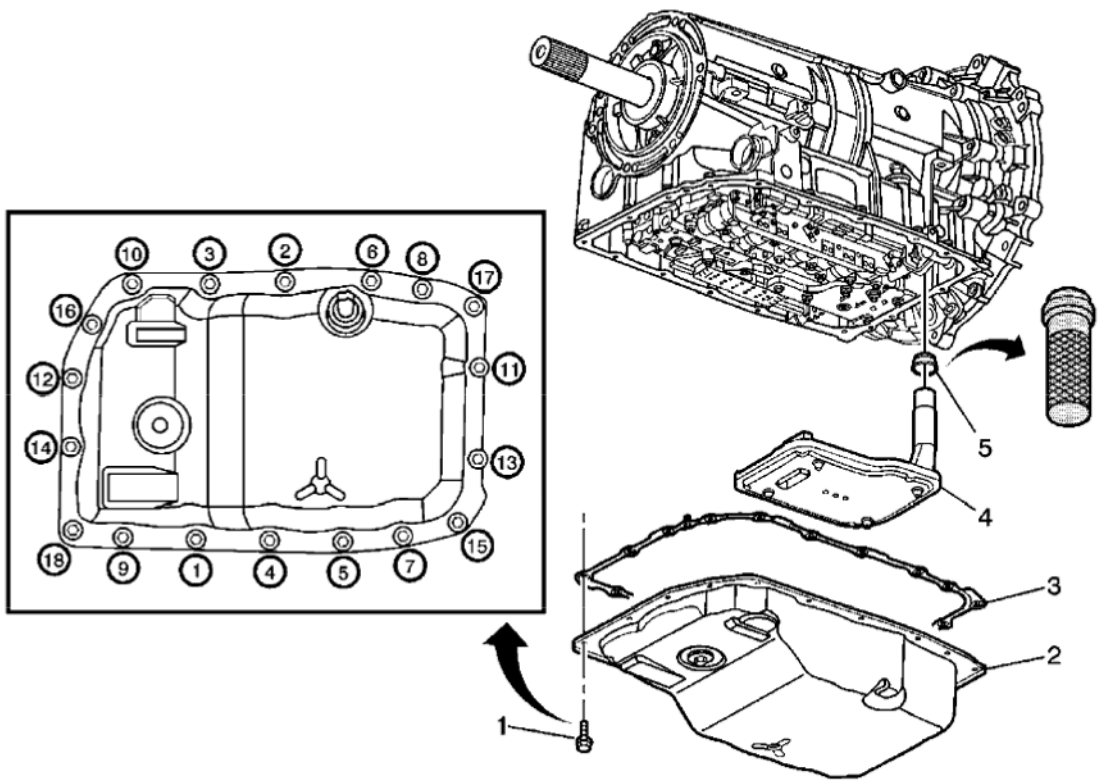

Fig. 29: Automatic Transmission Fluid, Fluid Pan And/Or Filter
Courtesy of GENERAL MOTORS CORP.

Callout	Component Name
Preliminary Procedures	

cardiagn.com

1. Raise and support the vehicle. Refer to **Lifting and Jacking the Vehicle**
2. Place a suitable drain pan under the transmission.

1	Transmission Fluid Pan Bolt (Qty: 18) **CAUTION:** **Refer to Fastener Caution .** **Tip:** Tighten the bolts in the sequence shown and tighten to 9 N.m (80 lb in).
2	Transmission Fluid Pan Assembly **Tip:** • Check the condition of the draining fluid. • Fill the transmission with the proper fluid. • Fill the transmission with the proper amount of transmission fluid.
3	Transmission Fluid Pan Gasket **Tip:** The fluid pan gasket is reusable. Inspect the gasket to determine if it may be reused.
4	Fluid Filter Assembly **Tip:** • Pull the fluid filter assembly straight out. Do not bend or twist the filter neck. • Use a new fluid filter assembly.
5	Fluid Filter Seal Assembly **CAUTION:** **Do not damage the case sealing surface when removing the filter seal assembly.** **Tip:** • Use a screwdriver or snap ring pliers to remove the filter seal. • Use the **DT 47848** and the **J 42183** to install the filter seal. See **Special Tools** . • Use a new fluid filter seal assembly. • Lubricate the filter seal with transmission fluid before installing the filter. **Special Tools** • **DT 47848** Seal Installer. See **Special Tools** . • **J 42183** Driver Handle

TRANSMISSION MOUNT INSPECTION

CAUTION: In order to avoid oil pan damage and possible engine failure, insert a block

cardiagn.com

of wood that spans the width of the oil pan bottom between the oil pan and the jack support.

1. Raise the transmission/transaxle in order to remove the weight from the transmission/transaxle mount and create slight tension in the rubber.
2. Observe the transmission/transaxle mount while raising the transmission/transaxle. Replace the transmission/transaxle mount if the transmission/transaxle mount exhibits any of the following conditions:

NOTE: Black paint on the rubber will crack with time, this does no constitute a failure.

- The hard rubber surface is covered with heat check cracks.
- The rubber is separated from the metal plate of the transmission/transaxle mount.
- The rubber is split through the center of the transmission/transaxle mount.

3. If there is movement between the metal plate of the transmission/transaxle mount and its attaching points, lower the transmission/transaxle on the transmission/transaxle mount. Tighten the bolts or nuts attaching the transmission/transaxle mount to the frame or transmission/transaxle mount bracket.

TRANSMISSION MOUNT REPLACEMENT

Removal Procedure

1. Raise and support the vehicle. Refer to **Lifting and Jacking the Vehicle**

NOTE: The engine mounts must NOT bend or deflect from the vertical position, damage to the mount will occur.

2. Support the transmission with a suitable jack and a block of wood.
3. Remove the transmission mount nuts.
4. Remove the transmission support retaining bolts, then remove the transmission support from the vehicle

cardiagn.com

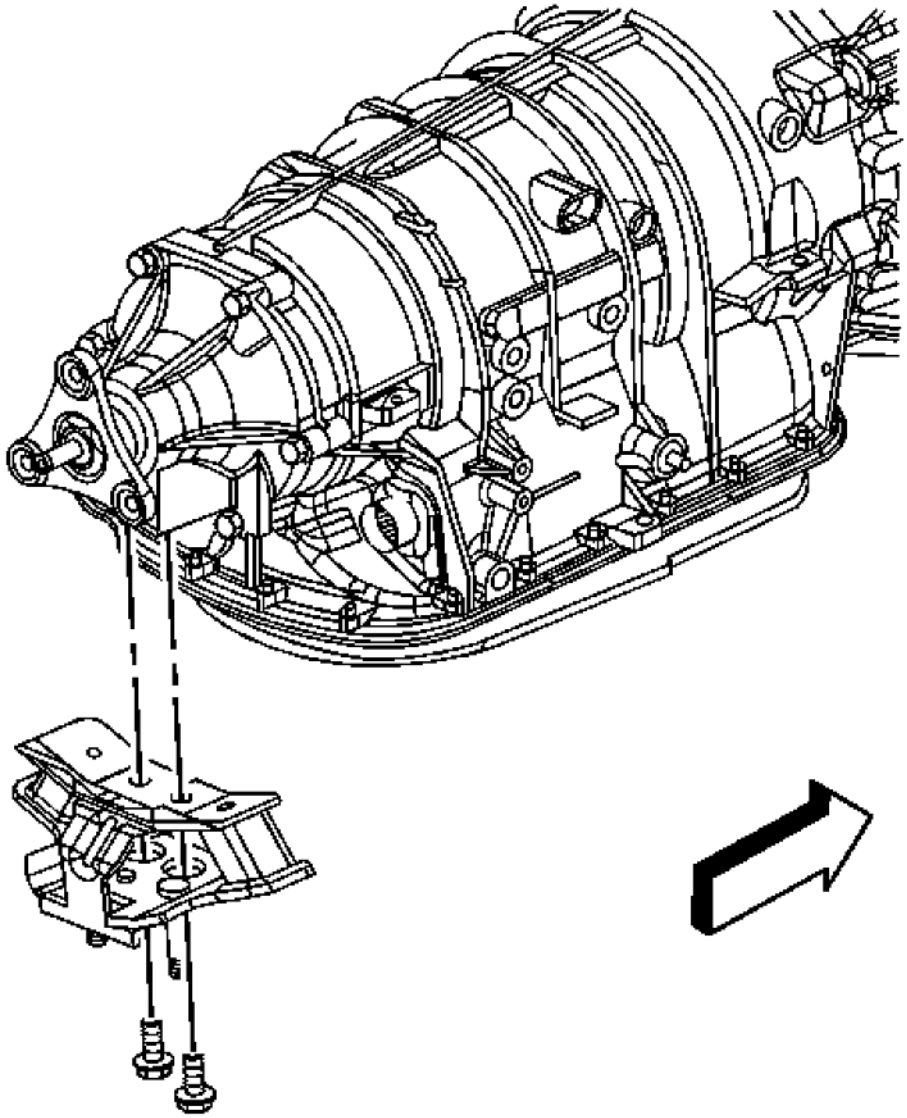

Fig. 30: Identifying Transmission Mount Bolts
Courtesy of GENERAL MOTORS CORP.

5. Remove the transmission mount bolts.
6. Remove the transmission mount from the transmission.

Installation Procedure

cardiagn.com

NOTE: **The engine mounts must NOT bend or deflect from the vertical position, damage to the mount will occur.**

1. Install the transmission mount to the transmission.

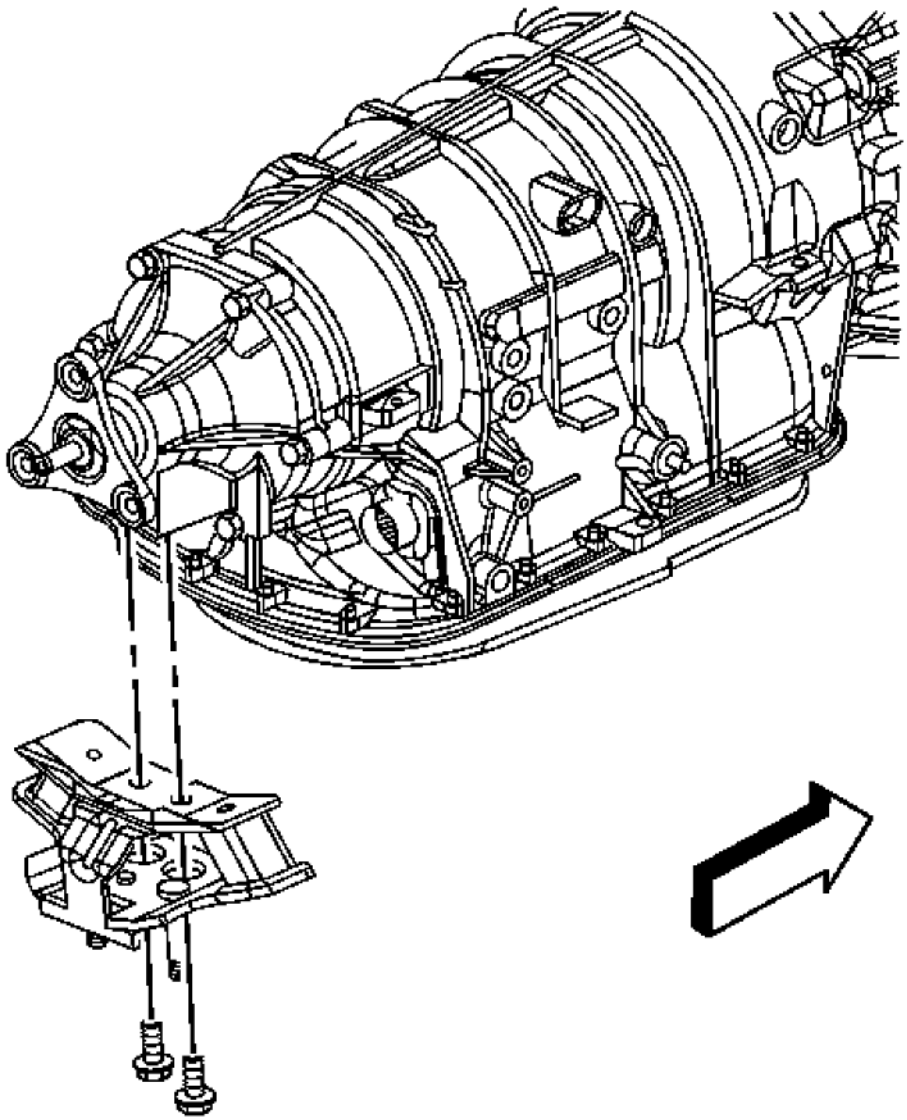

Fig. 31: Identifying Transmission Mount Bolts
Courtesy of GENERAL MOTORS CORP.

cardiagn.com

CAUTION: Refer to Fastener Caution .

2. Install the transmission mount bolts and tighten to 58 N.m (43 lb ft).
3. Install the transmission support.
4. Install the transmission support bolts and tighten to 58 N.m (43 lb ft)
5. Install the transmission mount nuts and tighten to 58 N.m (43 lb ft)
6. Remove the support from under the transmission.
7. Lower the vehicle.

CASE EXTENSION AND GASKET REPLACEMENT

Special Tools

J 45012 Holding Fixture

Removal Procedure

1. Raise and support the vehicle. Refer to **Lifting and Jacking the Vehicle**
2. Remove the exhaust system. Refer to **Exhaust Muffler with Resonator, Exhaust, and Tail Pipe Replacement (H-Pipe)** or **Exhaust Muffler with Resonator, Exhaust, and Tail Pipe Replacement (Vehicle Service)**
3. Remove the propeller shaft. Refer to **Two-Piece Propeller Shaft Replacement**
4. Support the transmission with a suitable jack.
5. Remove the transmission mount assembly. Refer to **Transmission Mount Replacement**

cardiagn.com

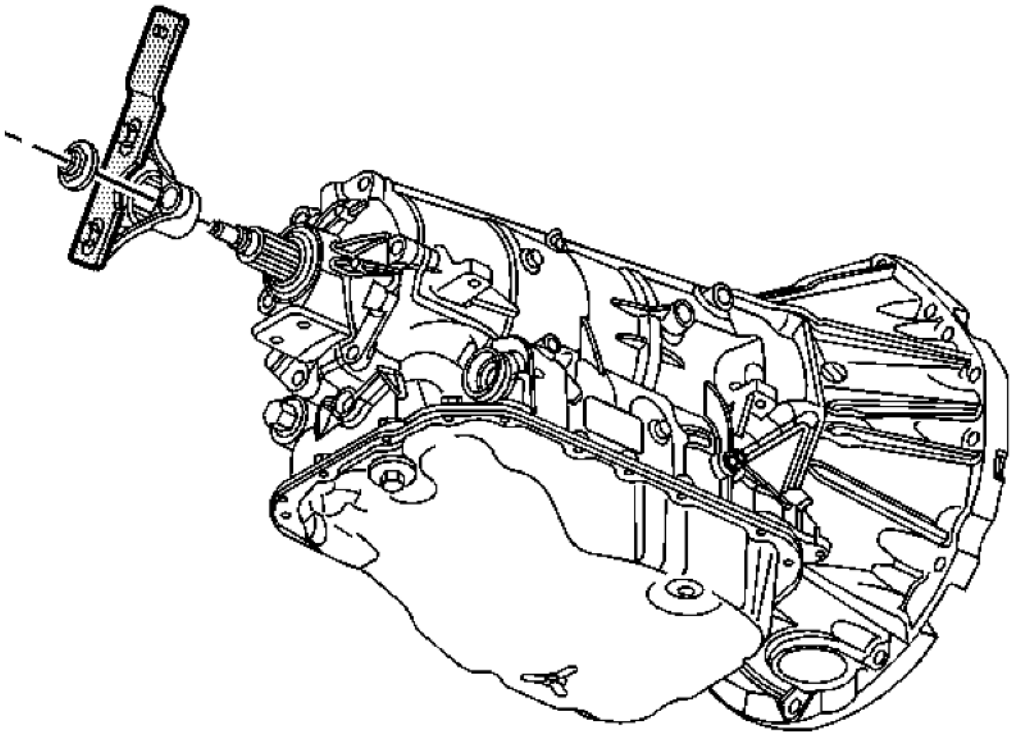

Fig. 32: View Of J 45012
Courtesy of GENERAL MOTORS CORP.

6. Install the propeller shaft flange holding fixture **J 45012** .

CAUTION: Do not reuse the flange nut. Reusing the flange nut may cause damage to the transmission.

7. Remove and discard the propeller shaft flange nut.
8. Remove the propeller shaft flange. Refer to **Propeller Shaft Transmission Flange Removal (6L50)** or **Propeller Shaft Transmission Flange Removal (6L80)**

cardiagn.com

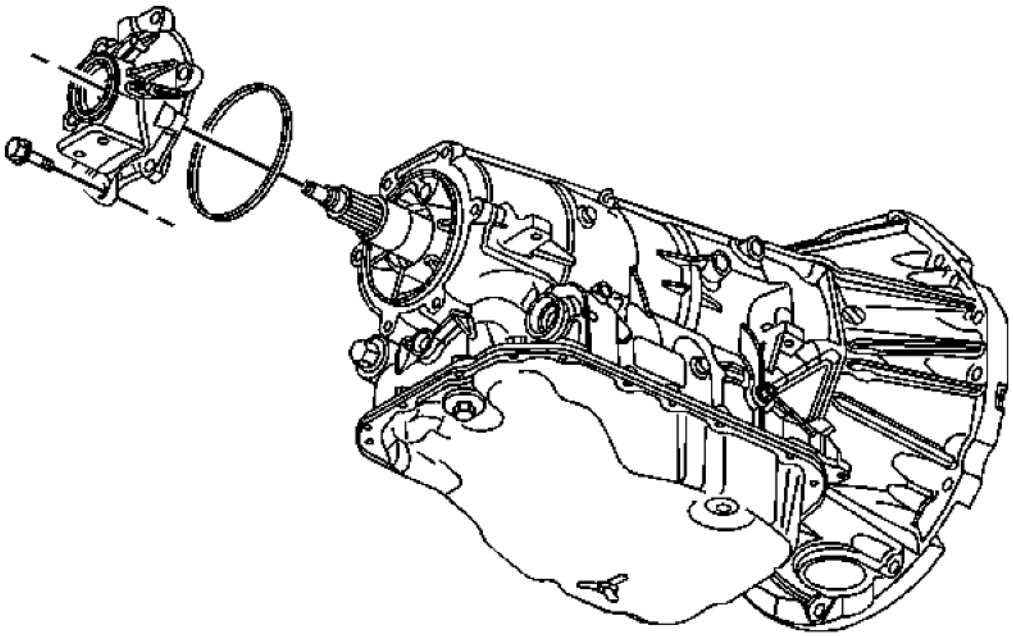

Fig. 33: View Of Case Extension Housing Seal
Courtesy of GENERAL MOTORS CORP.

9. Remove the case extension housing bolts.
10. Remove the case extension housing.
11. Remove the case extension housing seal.

Installation Procedure

cardiagn.com

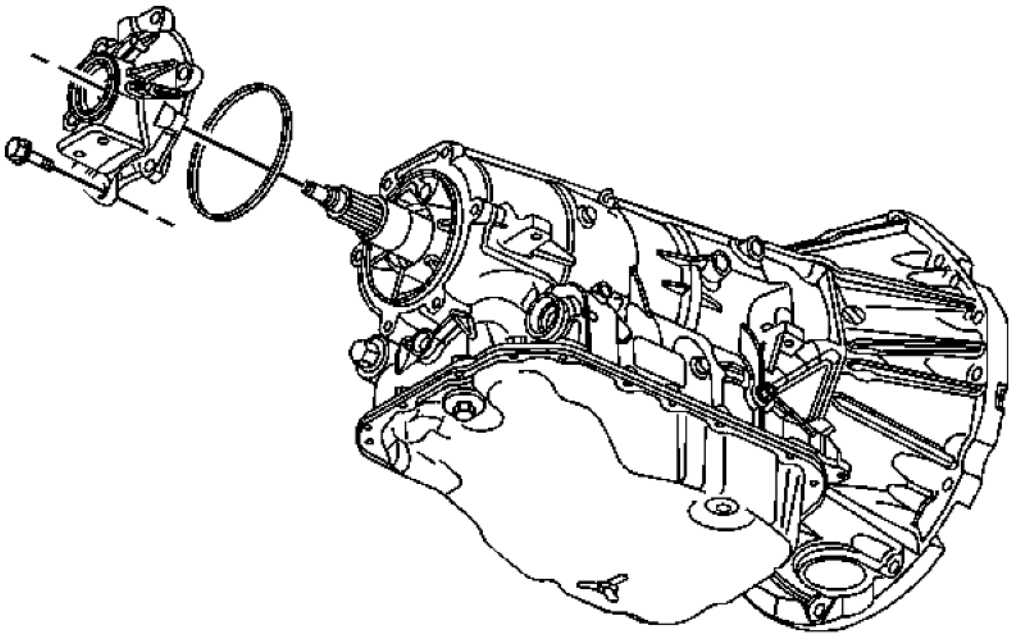

Fig. 34: View Of Case Extension Housing Seal
Courtesy of GENERAL MOTORS CORP.

1. Install the case extension housing seal.
2. Install the case extension housing.
3. Install by hand the case extension housing bolts.

cardiagn.com

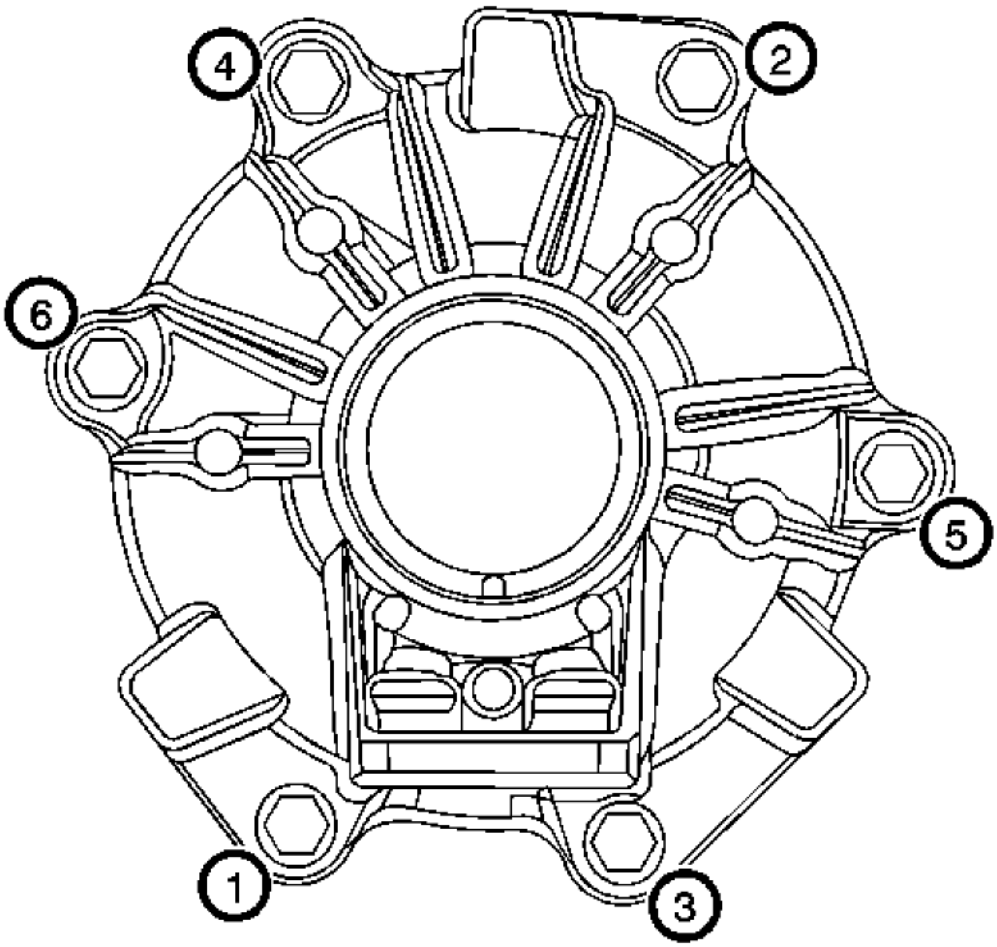

Fig. 35: Identifying Case Extension Housing Bolt Tightening Sequence
Courtesy of GENERAL MOTORS CORP.

CAUTION: Refer to Fastener Caution .

4. Secure the case extension housing bolts in the specified sequence and tighten to 50 N.m (37 lb ft).

cardiagn.com

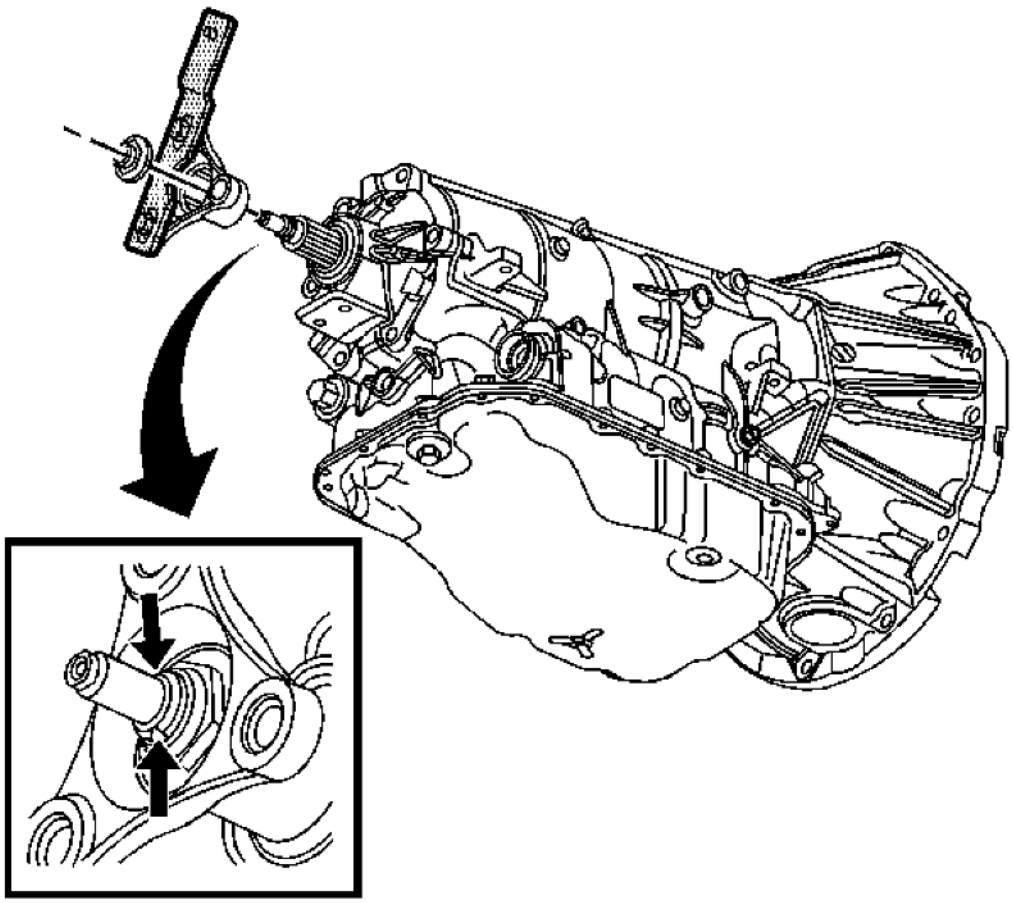

Fig. 36: View Of J 45012
Courtesy of GENERAL MOTORS CORP.

5. Install the prop shaft flange. Refer to **Propeller Shaft Transmission Flange Removal (6L50)** or **Propeller Shaft Transmission Flange Removal (6L80)**

CAUTION: Stake the flange nut onto the output shaft. Use the two staking grooves on the shaft to locate the staking points. Failure to stake the flange nut may result in damage to the transmission.

NOTE: Use a NEW propeller shaft flange nut.

6. Install the NEW propeller shaft flange nut and tighten to 105 N.m (77 lb ft).
7. Remove the propeller shaft flange holding fixture **J 45012** .

cardiagn.com

8. Install the transmission mount assembly. Refer to **Transmission Mount Replacement**
9. Remove the transmission jack.
10. Install the propeller shaft. Refer to **Two-Piece Propeller Shaft Replacement**
11. Install the exhaust system. Refer to **Exhaust Muffler with Resonator, Exhaust, and Tail Pipe Replacement (H-Pipe)** or **Exhaust Muffler with Resonator, Exhaust, and Tail Pipe Replacement (Vehicle Service)**
12. Lower the vehicle.

TRANSMISSION OUTPUT SHAFT SEAL REPLACEMENT

Special Tools

- **J 45012** Holding Fixture
- **J 45000** Seal Remover
- **J 37212** Front Output Shaft Seal Installer. See **Special Tools** .

Removal Procedure

1. Raise and support the vehicle. Refer to **Lifting and Jacking the Vehicle** .
2. Remove the exhaust system. Refer to **Exhaust Muffler with Resonator, Exhaust, and Tail Pipe Replacement (H-Pipe)** or **Exhaust Muffler with Resonator, Exhaust, and Tail Pipe Replacement (Vehicle Service)** .
3. Remove the drive shaft.
4. Remove the propeller shaft. Refer to **Two-Piece Propeller Shaft Replacement** .
5. Support the transmission with a suitable jack.
6. Remove the transmission mount assembly. Refer to **Transmission Mount Replacement**.

cardiagn.com

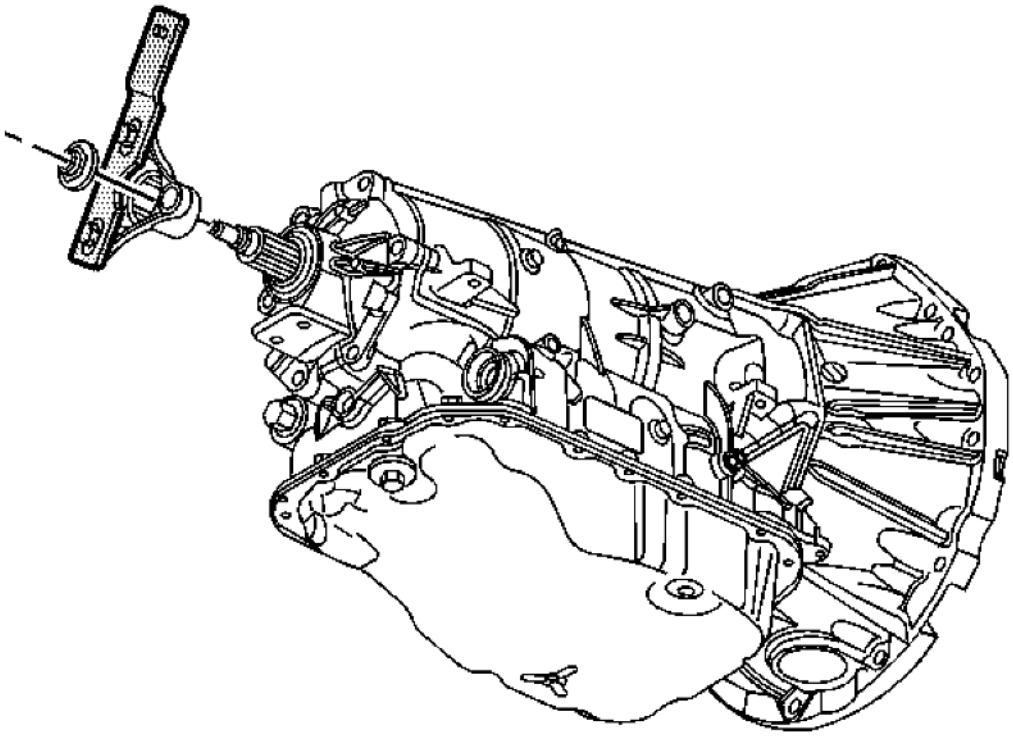

Fig. 37: View Of J 45012
Courtesy of GENERAL MOTORS CORP.

7. Install the propeller shaft flange holding fixture **J 45012** .

CAUTION: Do not reuse the flange nut. Reusing the flange nut may cause damage to the transmission.

8. Remove and discard the propeller shaft flange nut.
9. Remove the propeller shaft flange. Refer to **Propeller Shaft Transmission Flange Removal (6L50)** or **Propeller Shaft Transmission Flange Removal (6L80)** .

cardiagn.com

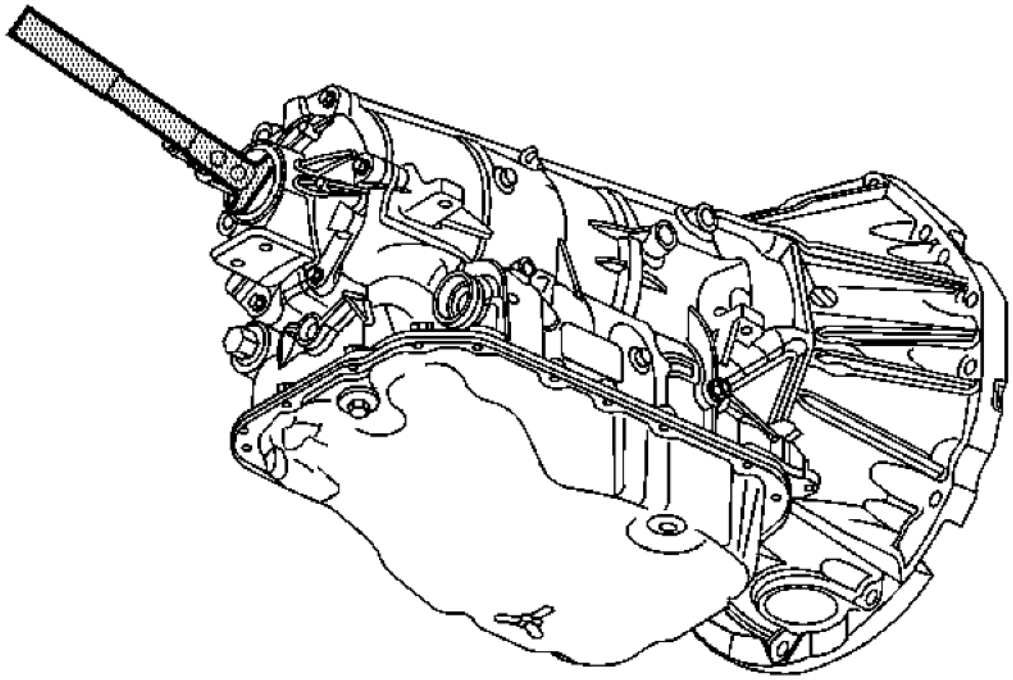

Fig. 38: View Of J 45000
Courtesy of GENERAL MOTORS CORP.

NOTE: Be careful not to scrape or gouge the case extension housing while removing the output shaft seal.

10. Use the **J 45000** to remove the output shaft seal from the case extension housing.

Installation Procedure

cardiagn.com

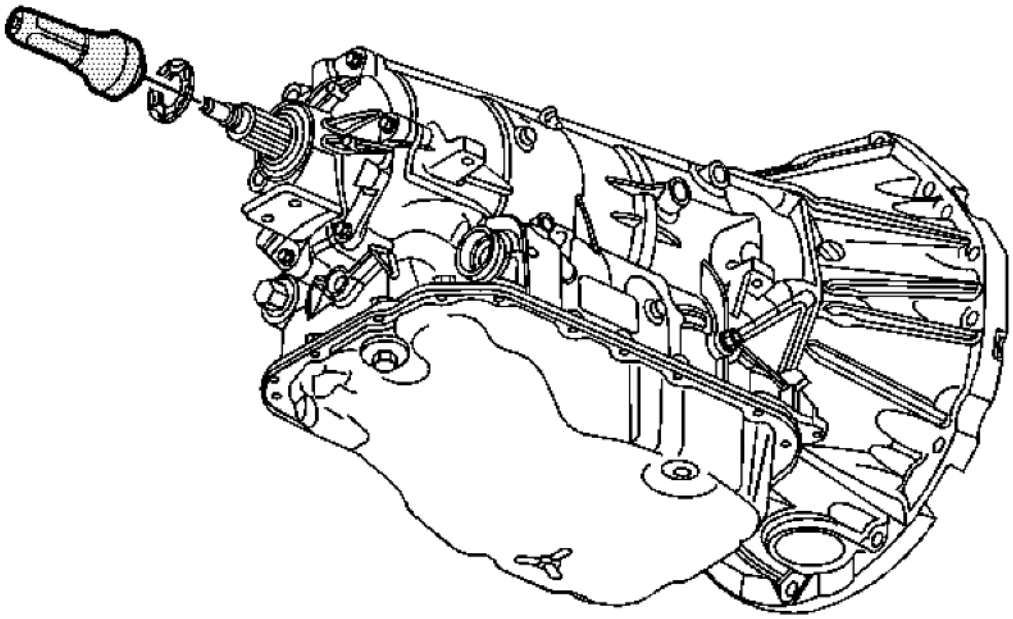

Fig. 39: View Of J 37212
Courtesy of GENERAL MOTORS CORP.

1. Lubricate the new seal with clean transmission fluid.
2. Use the **J 37212** to install the output shaft seal to the case extension housing. See **Special Tools** .

cardiagn.com

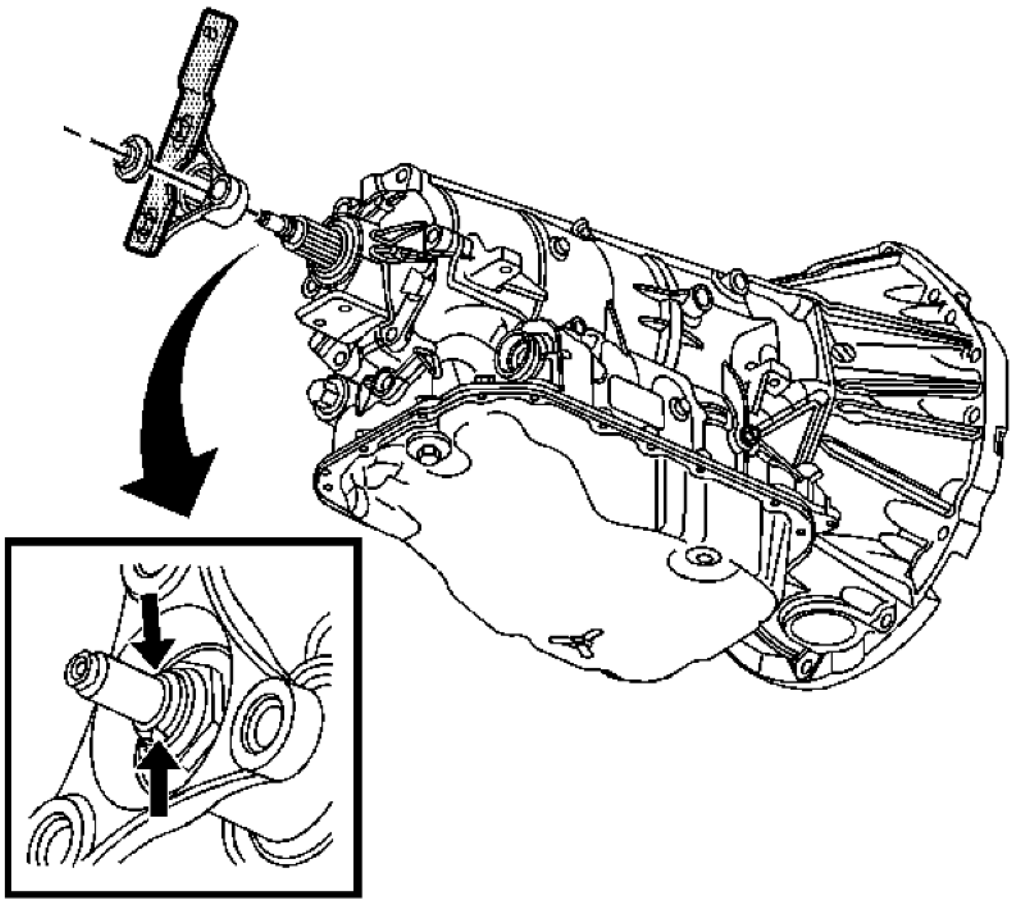

Fig. 40: View Of J 45012
Courtesy of GENERAL MOTORS CORP.

3. Install the prop shaft flange. Refer to **Propeller Shaft Transmission Flange Removal (6L50)** or **Propeller Shaft Transmission Flange Removal (6L80)** .

CAUTION: Stake the flange nut onto the output shaft. Use the two staking grooves on the shaft to locate the staking points. Failure to stake the flange nut may result in damage to the transmission.

CAUTION: Refer to Fastener Caution .

NOTE: Use a NEW propeller shaft flange nut.

cardiagn.com

4. Install the NEW propeller shaft flange nut and tighten to 105 N.m (77 lb ft).
5. Remove the propeller shaft flange holding fixture **J 45012** .
6. Install the transmission mount assembly. Refer to **Transmission Mount Replacement**.
7. Remove the transmission jack.
8. Install the propeller shaft. Refer to **Two-Piece Propeller Shaft Replacement** .
9. Install the exhaust system. Refer to **Exhaust Muffler with Resonator, Exhaust, and Tail Pipe Replacement (H-Pipe)** or **Exhaust Muffler with Resonator, Exhaust, and Tail Pipe Replacement (Vehicle Service)** .
10. Lower the vehicle.

MANUAL SHIFT SHAFT AND SEAL REPLACEMENT

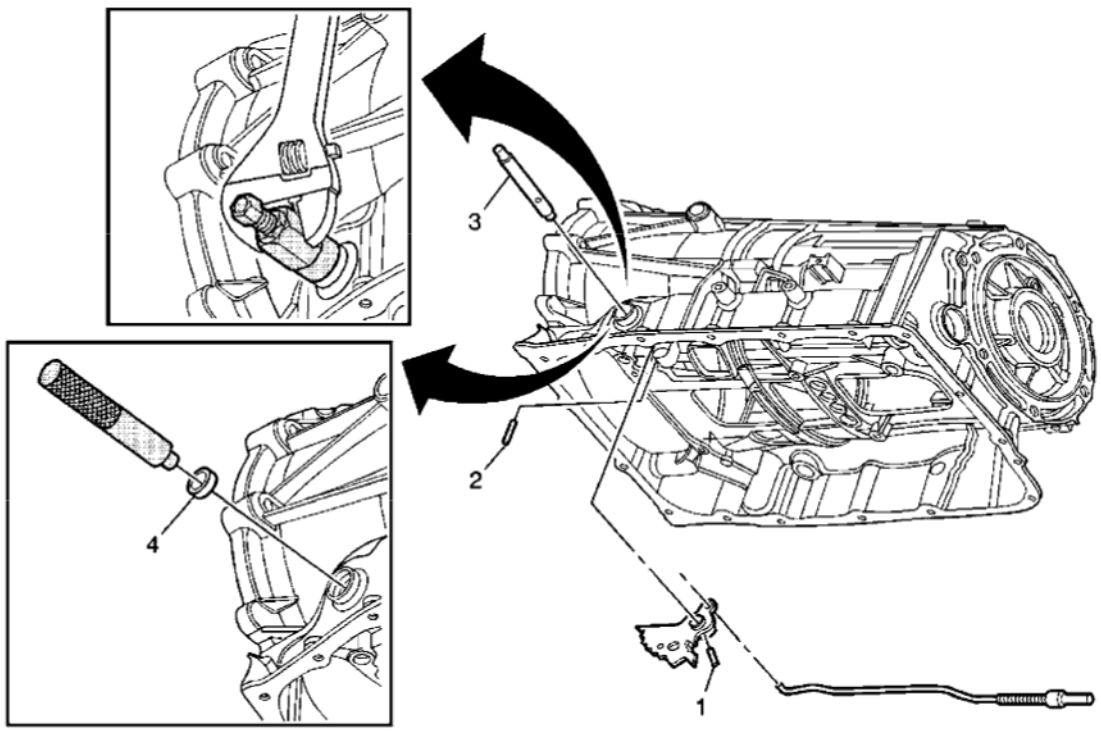

Fig. 41: Manual Shift Shaft & Seal
Courtesy of GENERAL MOTORS CORP.

Callout	Component Name
Preliminary Procedures 1. Raise and support the vehicle. Refer to **Lifting and Jacking the Vehicle** 2. Remove the transmission fluid pan. Refer to **Transmission Fluid Pan Installation (6L50)** or **Transmission Fluid Pan Installation (6L80)** 3. Remove the manual shaft detent assembly roller.	

cardiagn.com

1	Manual Shaft Detent Lever Hub Pin **Procedure** 1. Discard the pin. Replace with a NEW pin. 2. "Walk" the pin out using side cutters.
2	Manual Shift Shaft Pin **Procedure** 1. Discard the pin. Replace with a NEW pin. 2. "Walk" the pin out using side cutters.
3	Manual Shift Shaft
4	Manual Shift Shaft Seal **Procedure** 1. The manual shaft must be removed to replace the manual shaft seal. 2. Use the **J 45201** to remove the seal from the transmission case. See **Special Tools** . 3. Use the **DT 47770** to install the seal into the transmission case. See **Special Tools** . **Special Tools** • **DT 47770** Seal Installer. See **Special Tools** . • **J 45201** Cooler Line Seal Remover. See **Special Tools** .

MANUAL SHIFT SHAFT POSITION SWITCH REPLACEMENT

cardiagn.com

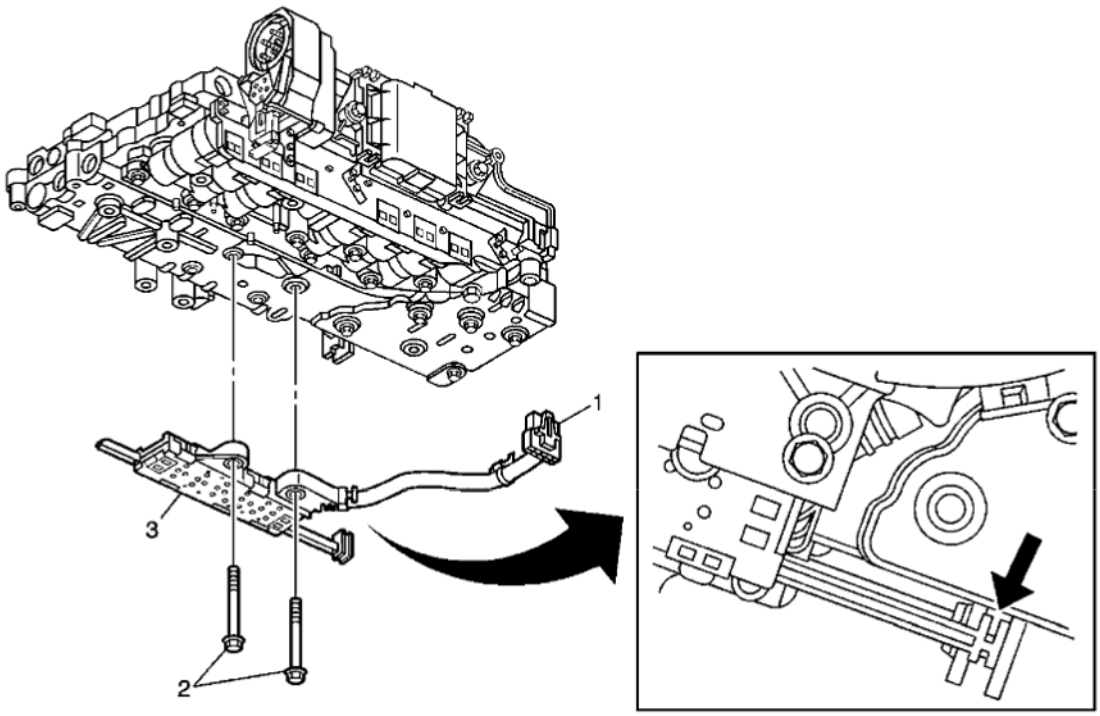

Fig. 42: Manual Shift Shaft Position Switch
Courtesy of GENERAL MOTORS CORP.

Callout	Component Name
Preliminary Procedures 1. Raise and support the vehicle. Refer to **Lifting and Jacking the Vehicle** 2. Remove the transmission fluid pan and filter. Refer to **Automatic Transmission Fluid, Fluid Pan and/or Filter Replacement**	
1	Manual Shift Shaft Position Switch Assembly Electrical Connector **Tip:** • Release the connector lock before disconnecting. Engage the connector lock after connecting. • The wiring harness clip near the connector does not need to be replaced if broken or missing. The clip is used during manufacturing to keep the wire harness clear during an automated bolt installation process. If the clip is damaged, simply remove and discard.
2	Manual Shift Shaft Position Switch Assembly Bolt **CAUTION:** **Refer to Fastener Caution .** **Tighten:** 8 N.m (71 lb in)

cardiagn.com

3	Manual Shift Shaft Position Switch Assembly **Procedure:** Align the switch activator slide with the manual valve link.

CONTROL SOLENOID VALVE AND TRANSMISSION CONTROL MODULE ASSEMBLY REPLACEMENT

Removal Procedure

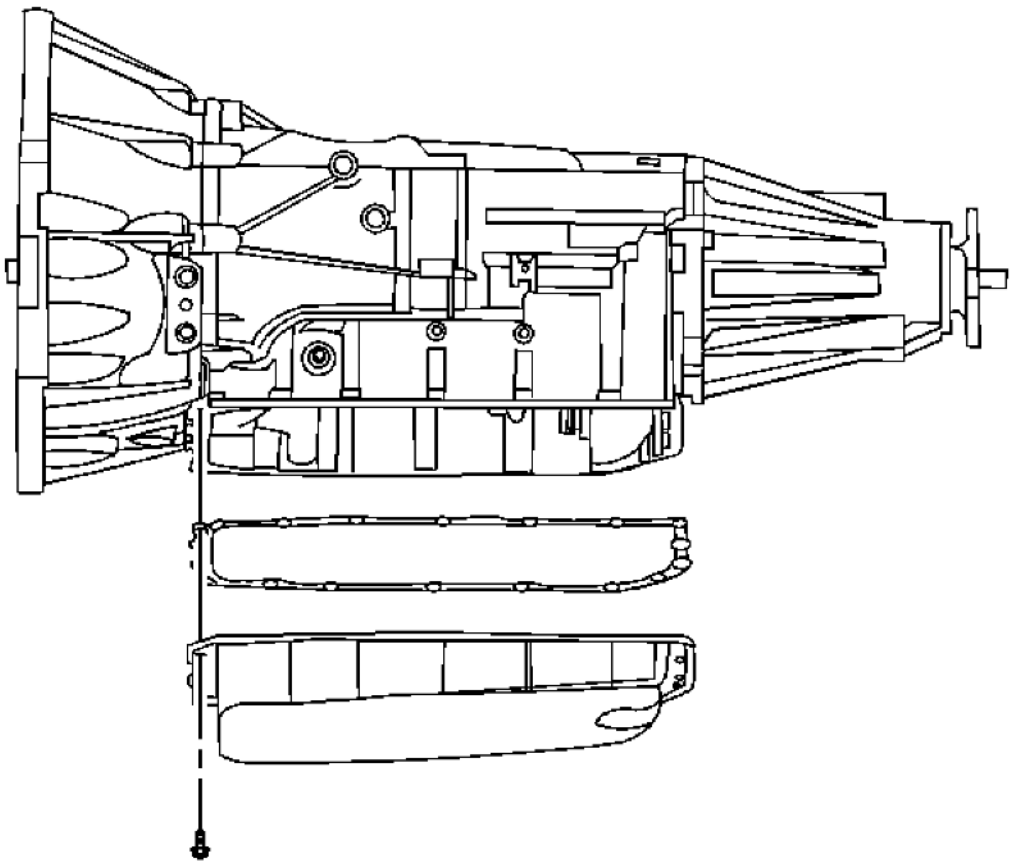

Fig. 43: View Of Transmission Oil Pan & Filter
Courtesy of GENERAL MOTORS CORP.

NOTE: The valve body must be removed from the transmission to replace the control solenoid valve and transmission control module assembly.

1. Remove the transmission oil pan and filter. Refer to **Automatic Transmission Fluid, Fluid Pan and/or**

cardiagn.com

Filter Replacement.

2. Remove the electrical connector passage sleeve. Refer to **Automatic Transmission Electrical Connector Passage Sleeve Replacement**.

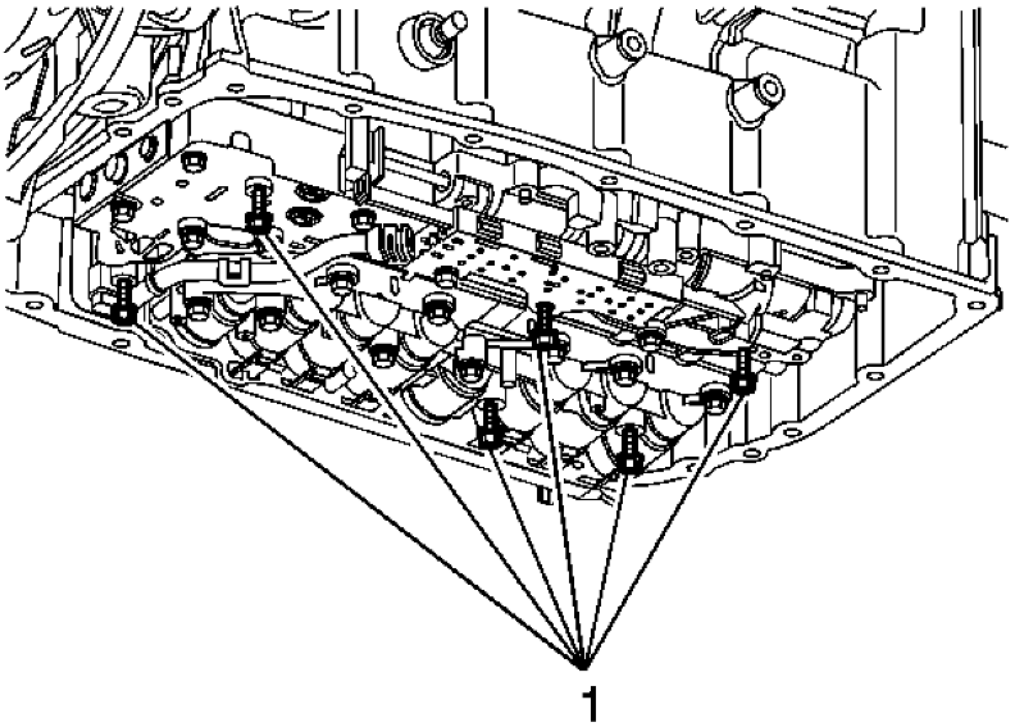

Fig. 44: View Of Valve Body Bolts
Courtesy of GENERAL MOTORS CORP.

3. Remove the valve body bolts (1).

cardiagn.com

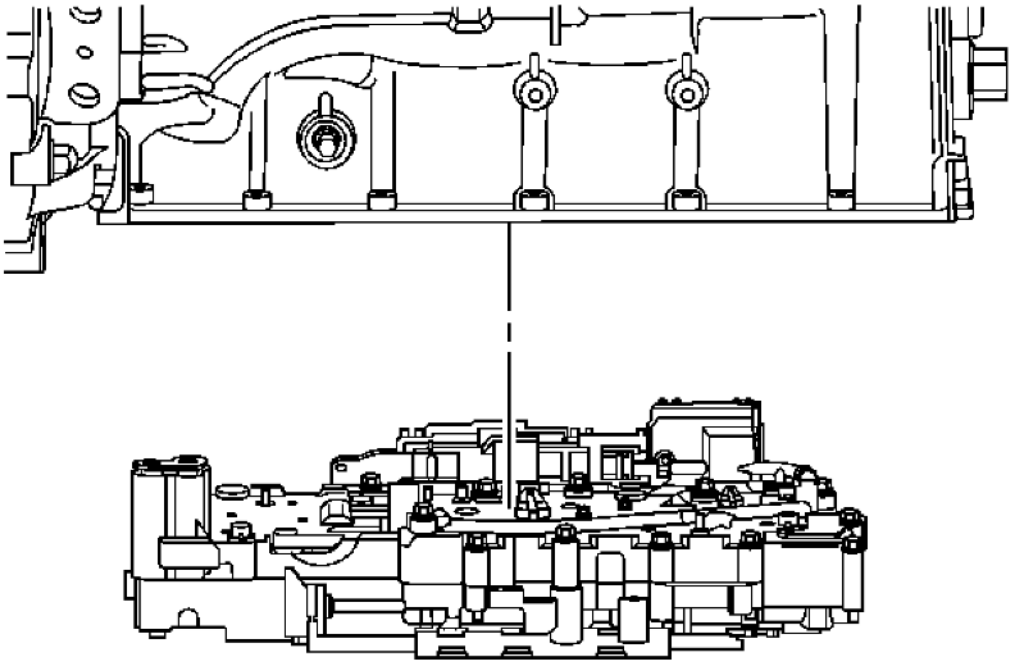

Fig. 45: Valve Body Assembly
Courtesy of GENERAL MOTORS CORP.

4. Remove the upper and lower control valve body assembly.

cardiagn.com

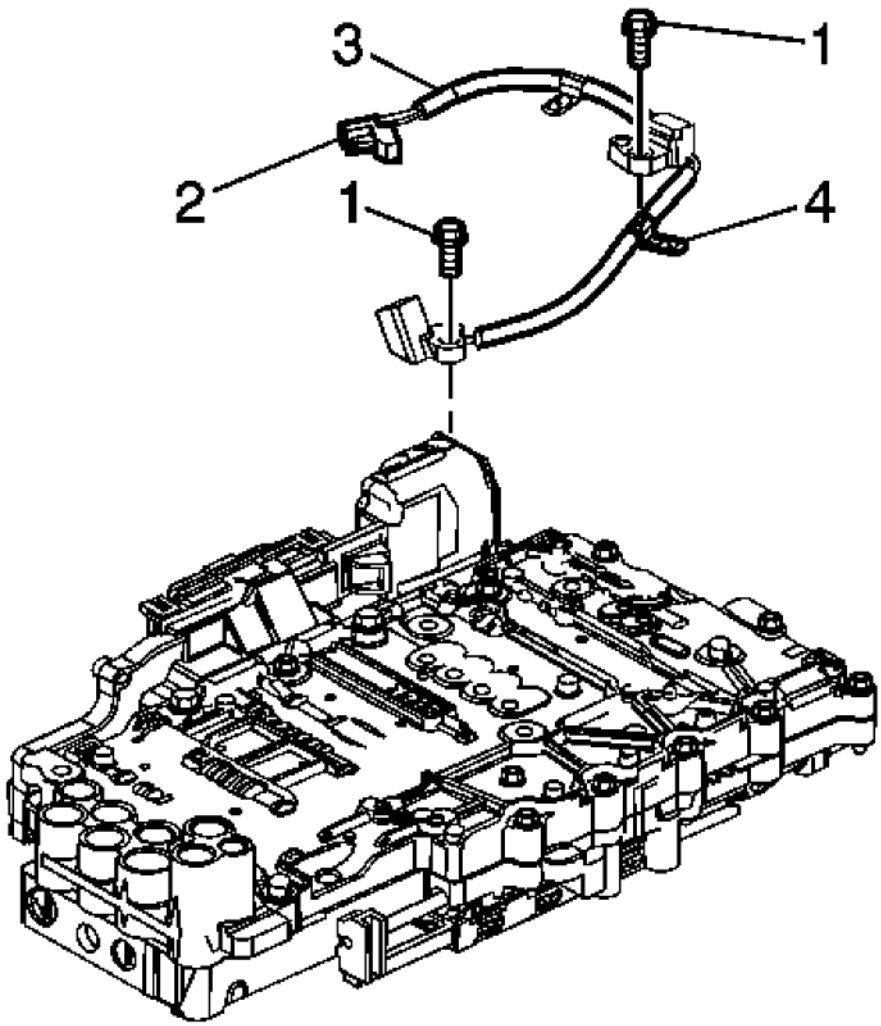

Fig. 46: View Of Speed Sensor Electrical Connector
Courtesy of GENERAL MOTORS CORP.

5. Disconnect the speed sensor electrical connector (2) from the control solenoid valve assembly.
6. Turn the control valve body assembly over.

cardiagn.com

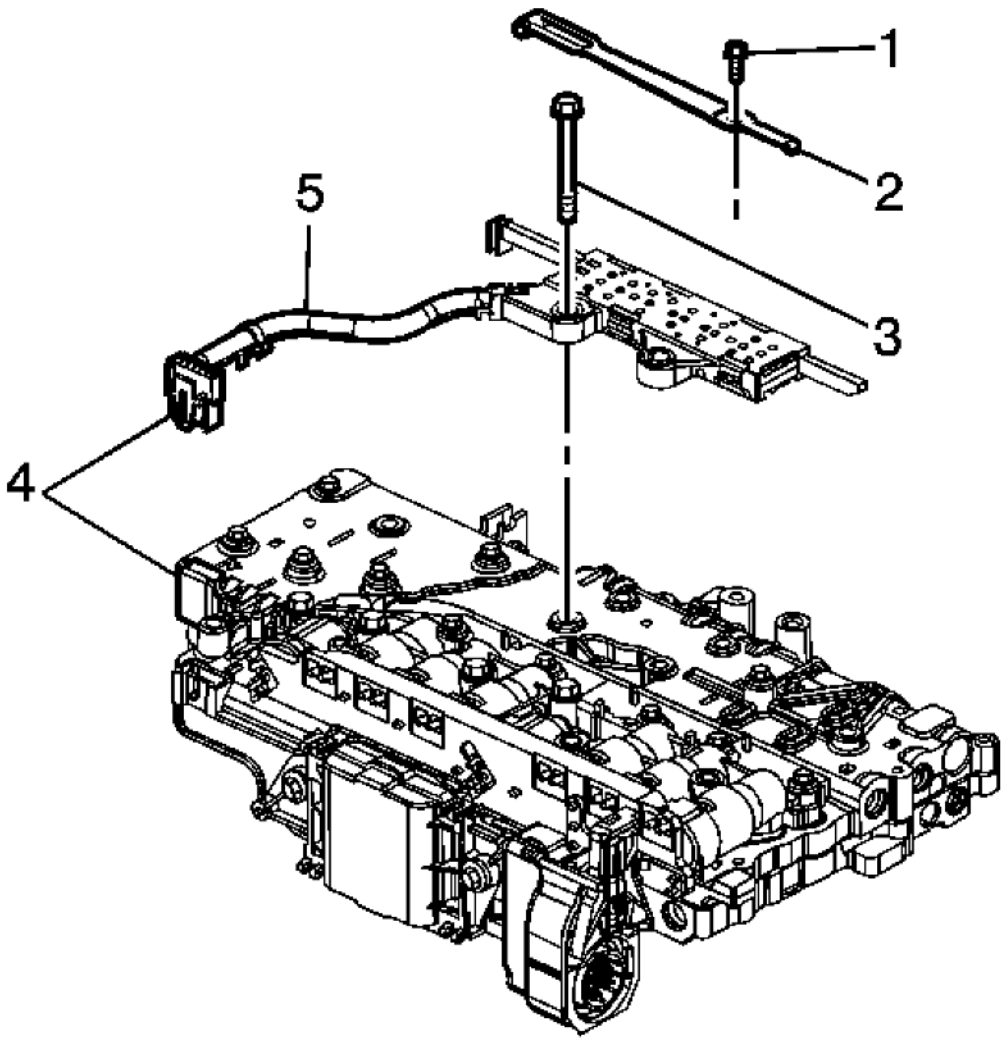

Fig. 47: Manual Shift Shaft Position Switch Connector
Courtesy of GENERAL MOTORS CORP.

NOTE: Release the connector lock before disconnecting.

7. Disconnect the manual shift shaft position switch connector (4) from the control solenoid valve assembly.
8. Remove the bolt (3) and remove the manual shift shaft position switch assembly.

cardiagn.com

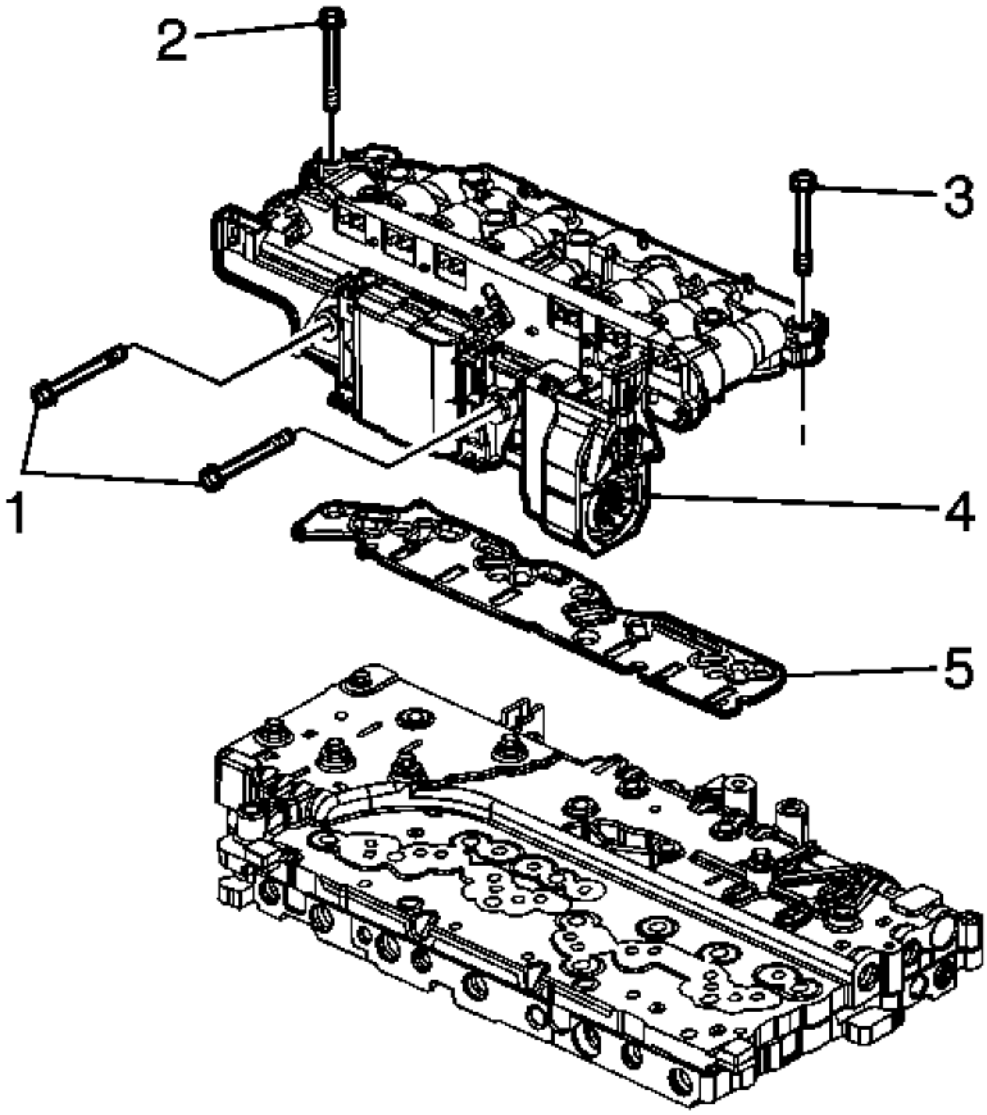

Fig. 48: View Of Control Valve Body Assembly
Courtesy of GENERAL MOTORS CORP.

9. Remove the 2 bolts (1) from the "heat sink" side of the control solenoid valve assembly.

cardiagn.com

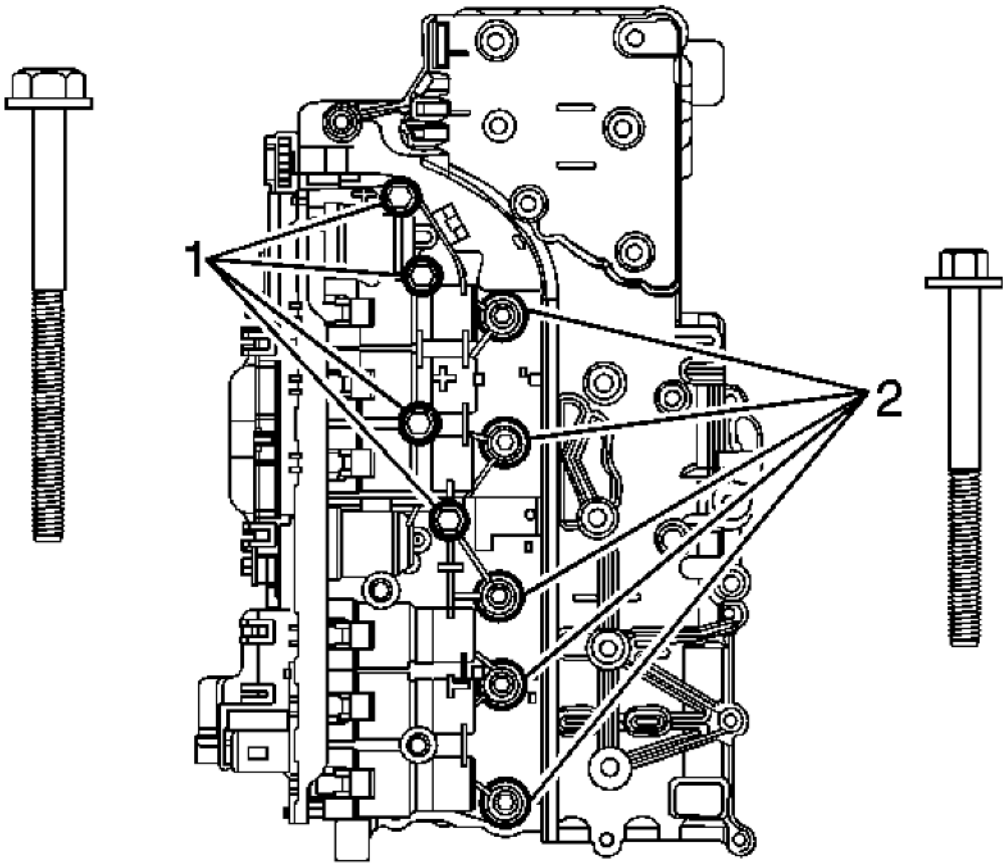

Fig. 49: View Of Bolts
Courtesy of GENERAL MOTORS CORP.

10. Remove the 5 bolts (2) and the 4 bolts (1) securing the control solenoid valve assembly to the control valve body assembly.

cardiagn.com

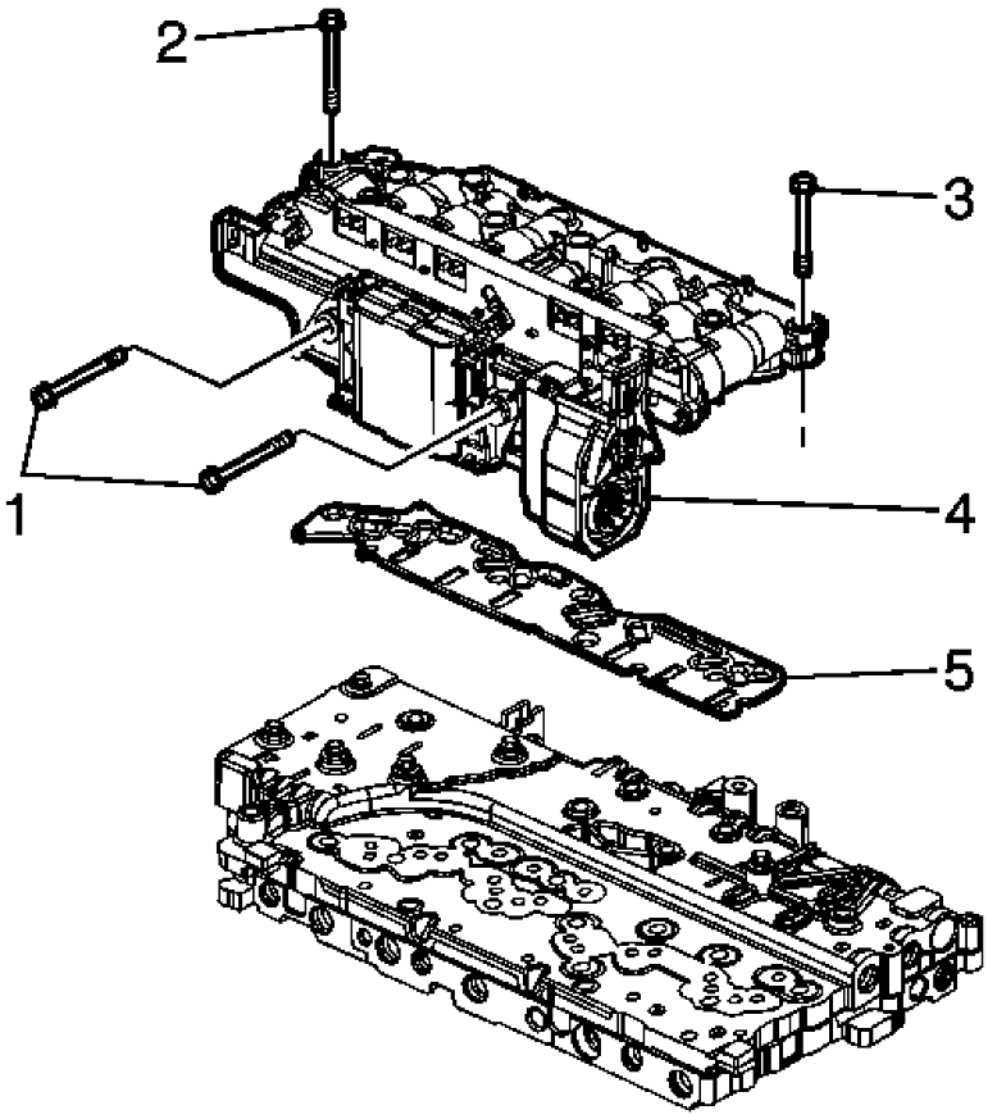

Fig. 50: View Of Control Valve Body Assembly
Courtesy of GENERAL MOTORS CORP.

11. Remove the control valve body assembly.

CAUTION: Use care when removing or installing the filter plate assembly. A broken or missing retaining tab may not adequately secure the filter plate to the control solenoid valve assembly, resulting in possible

cardiagn.com

damage or contamination.

12. Carefully remove and discard the filter plate assembly (5).

Installation Procedure

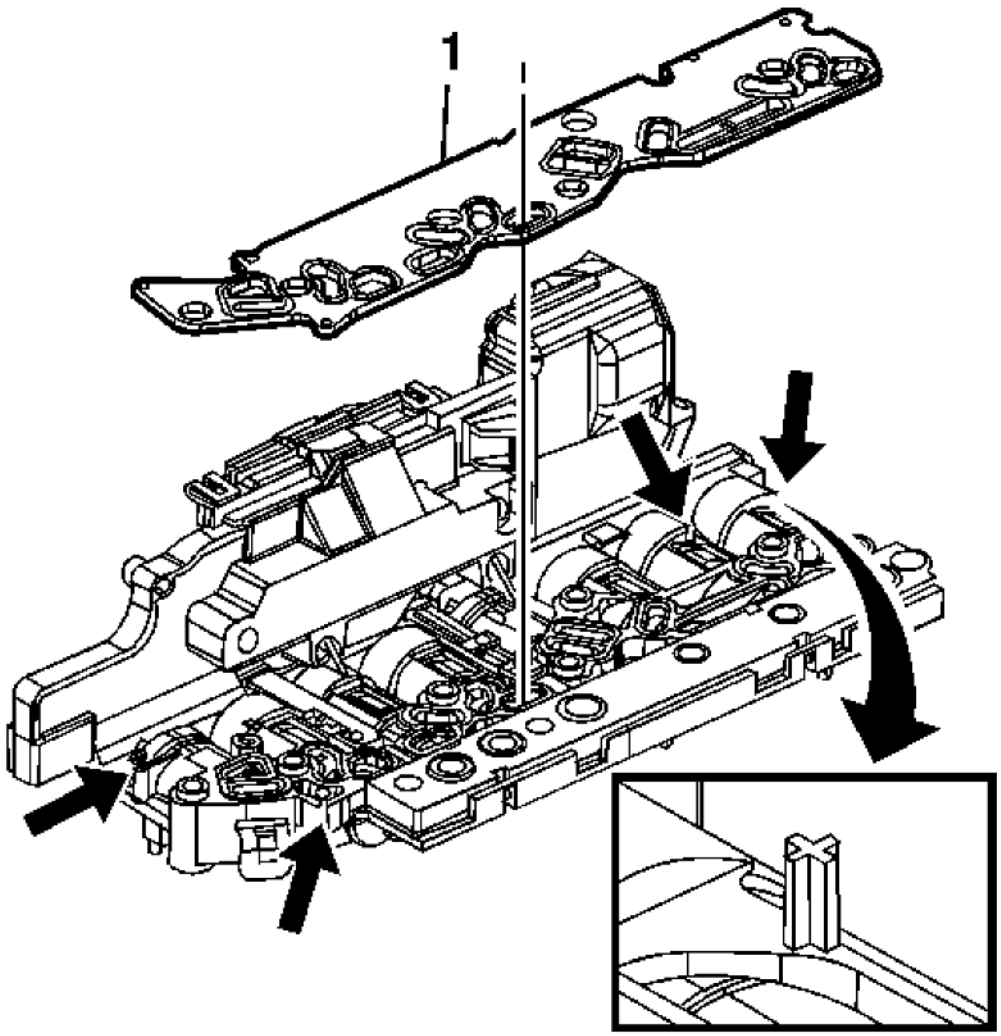

Fig. 51: View Of Filter Plate Assembly
Courtesy of GENERAL MOTORS CORP.

NOTE: Inspect the 4 filter plate retaining tabs on the control solenoid valve

cardiagn.com

assembly. A broken or missing tab may not adequately secure the filter plate to the control solenoid valve assembly.

1. Install a NEW filter plate assembly (1).

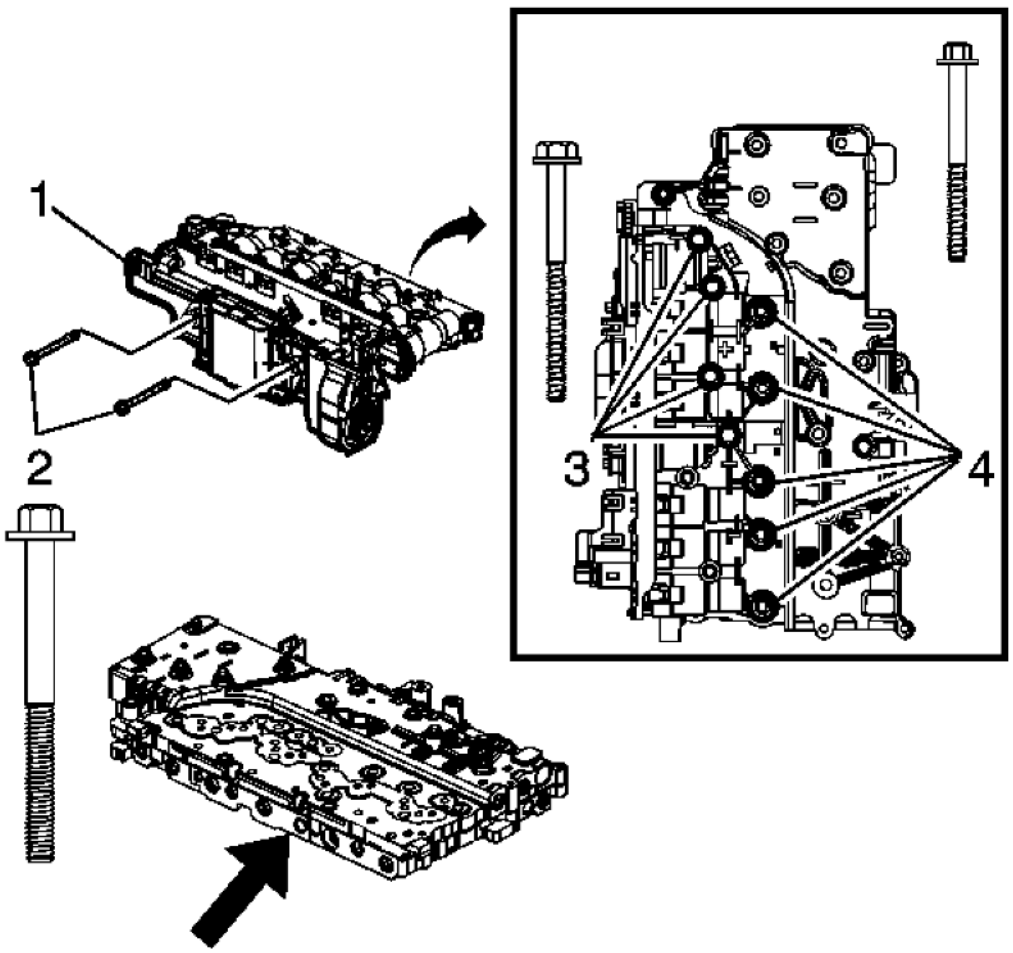

Fig. 52: View Of Control Solenoid Valve Assembly Bolts
Courtesy of GENERAL MOTORS CORP.

NOTE: Note the locator pin on the control valve lower body assembly.

2. Align the control solenoid valve assembly (1) to the control valve lower body assembly.
3. Install the 2 bolts (2), through the "heat sink" side of the control solenoid valve assembly (1). Hand tighten only.

cardiagn.com

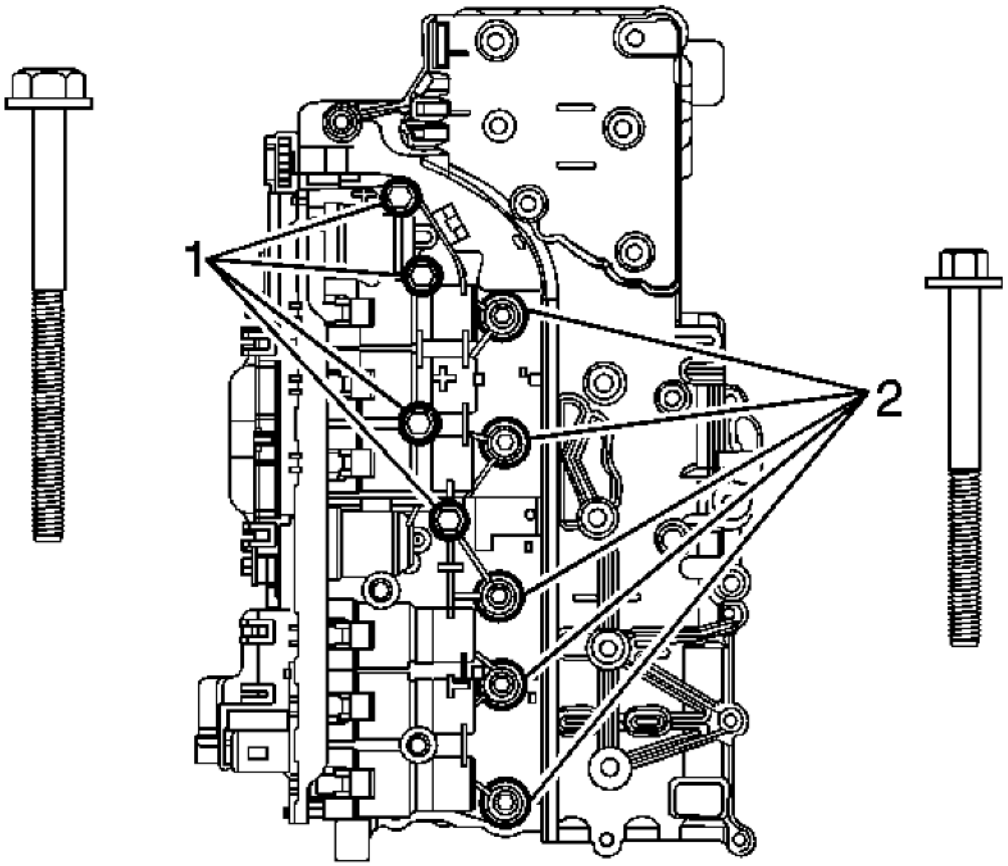

Fig. 53: View Of Bolts
Courtesy of GENERAL MOTORS CORP.

4. Install the 4 bolts (1) and 5 bolts (2) securing the control solenoid valve assembly to the control valve lower body assembly. Hand tighten only.

cardiagn.com

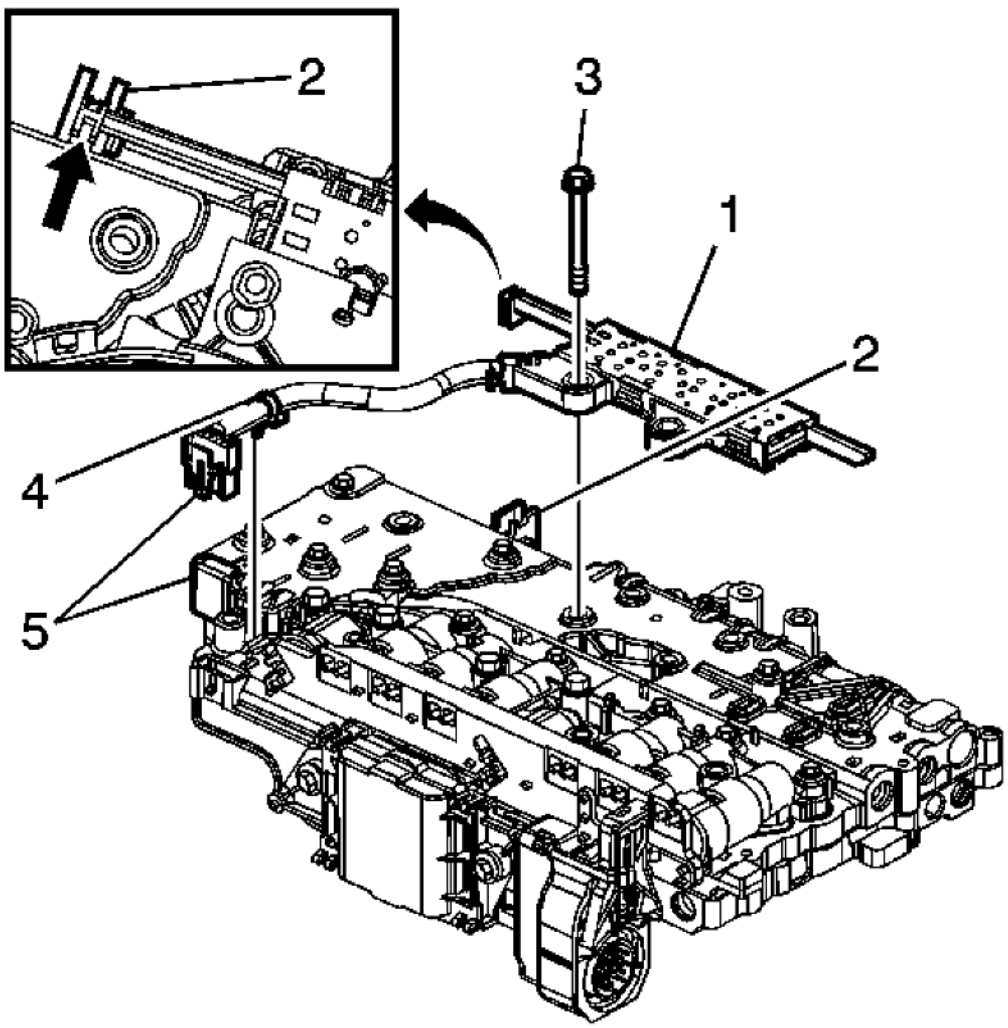

Fig. 54: View Of Manual Shift Shaft Position Switch Assembly
Courtesy of GENERAL MOTORS CORP.

5. Install the manual shift shaft position switch assembly (1). Align the switch activator slide with the manual valve link. Secure with 1 bolt (3). Hand tighten only.

NOTE: **The wiring harness clip (4) on the manual shift shaft position switch does not need to be replaced if damaged or missing. The clip functions only as a manufacturing assembly aid to keep the harness clear during an automated bolt installation process. If the clip is damaged, simply remove and discard.**

cardiagn.com

6. Connect and lock the manual shift shaft position switch electrical connector (5) to the control solenoid valve assembly and attach the wiring harness clip (4).

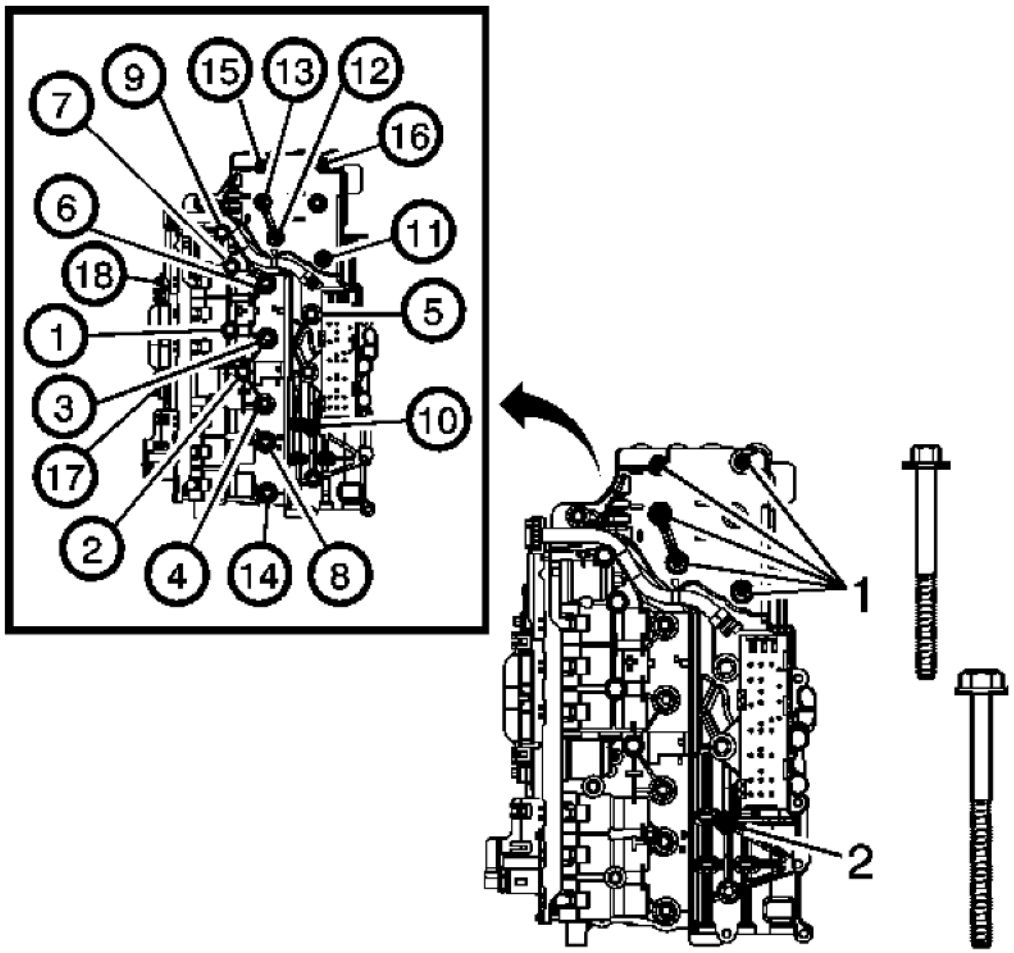

Fig. 55: Bolt Tightening Sequence
Courtesy of GENERAL MOTORS CORP.

7. Install the 5 remaining bolts (1) and 1 remaining bolt (2). Hand tighten only.

cardiagn.com

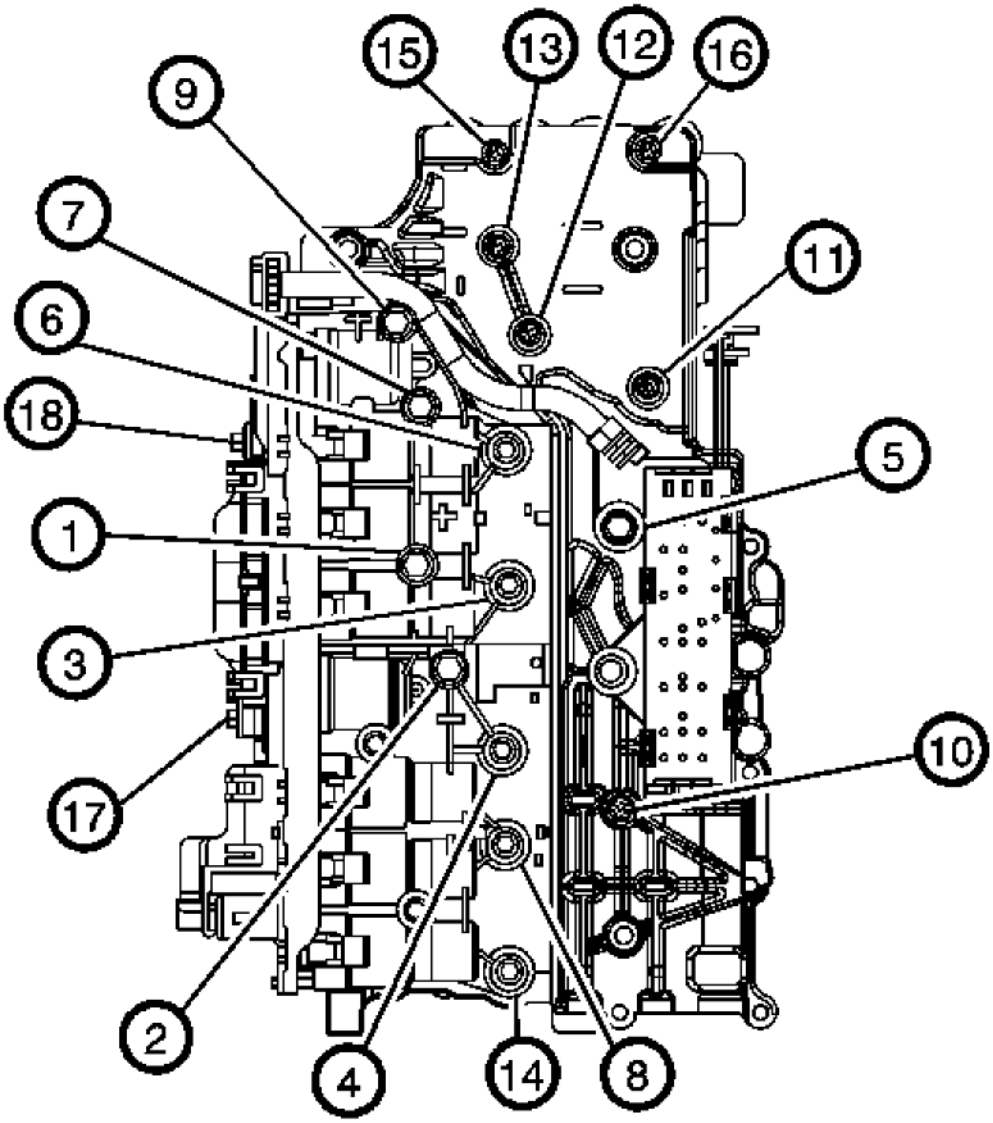

Fig. 56: Identifying Control Solenoid Valve Assembly Bolt Tightening Sequence
Courtesy of GENERAL MOTORS CORP.

CAUTION: Bolt torque sequencing is critical to the proper function of the control solenoid valve assembly. Failure to follow the required sequencing may result in transmission malfunction.

CAUTION: Refer to Fastener Caution .

cardiagn.com

8. Tighten all bolts in the sequence shown. The 2 "heat sink" bolts (17, 18) must be tightened last.

   Tighten bolts to 8 N.m (6 lb ft).

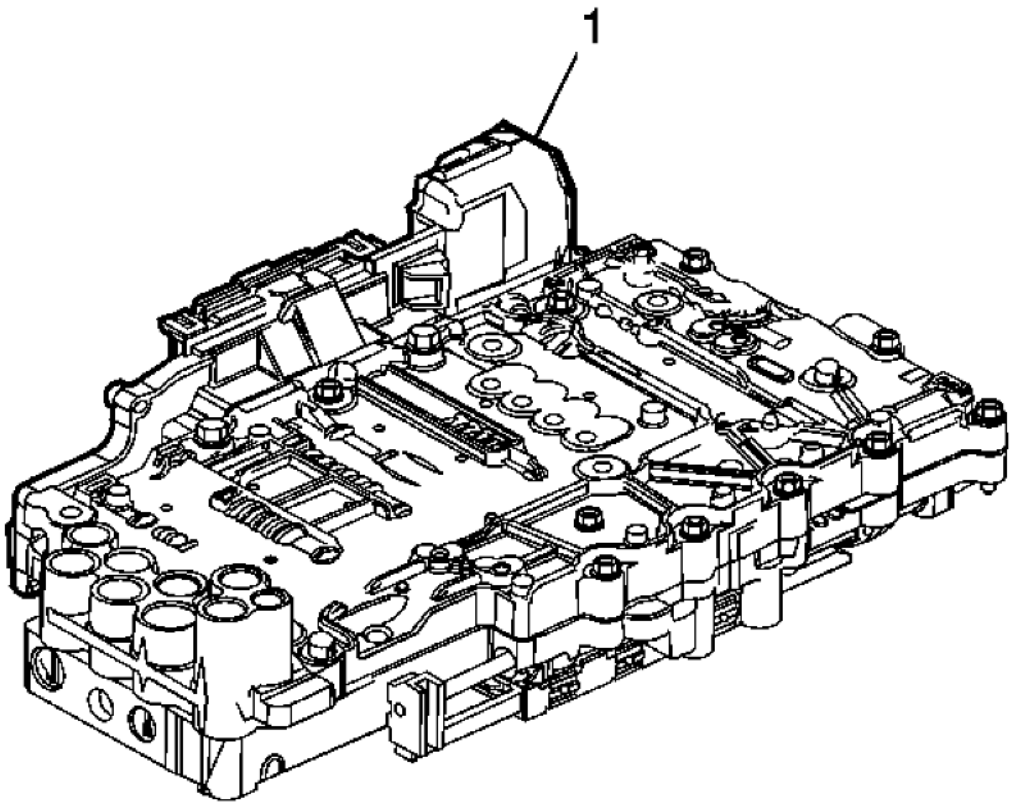

Fig. 57: View Of Control Solenoid Valve Assembly
Courtesy of GENERAL MOTORS CORP.

9. Inspect the contact area between the "heat sink" area of the control solenoid valve assembly (1) and the valve body. There should be no visible gap. If a gap exists, loosen all 18 bolts and retighten in the sequence shown.

cardiagn.com

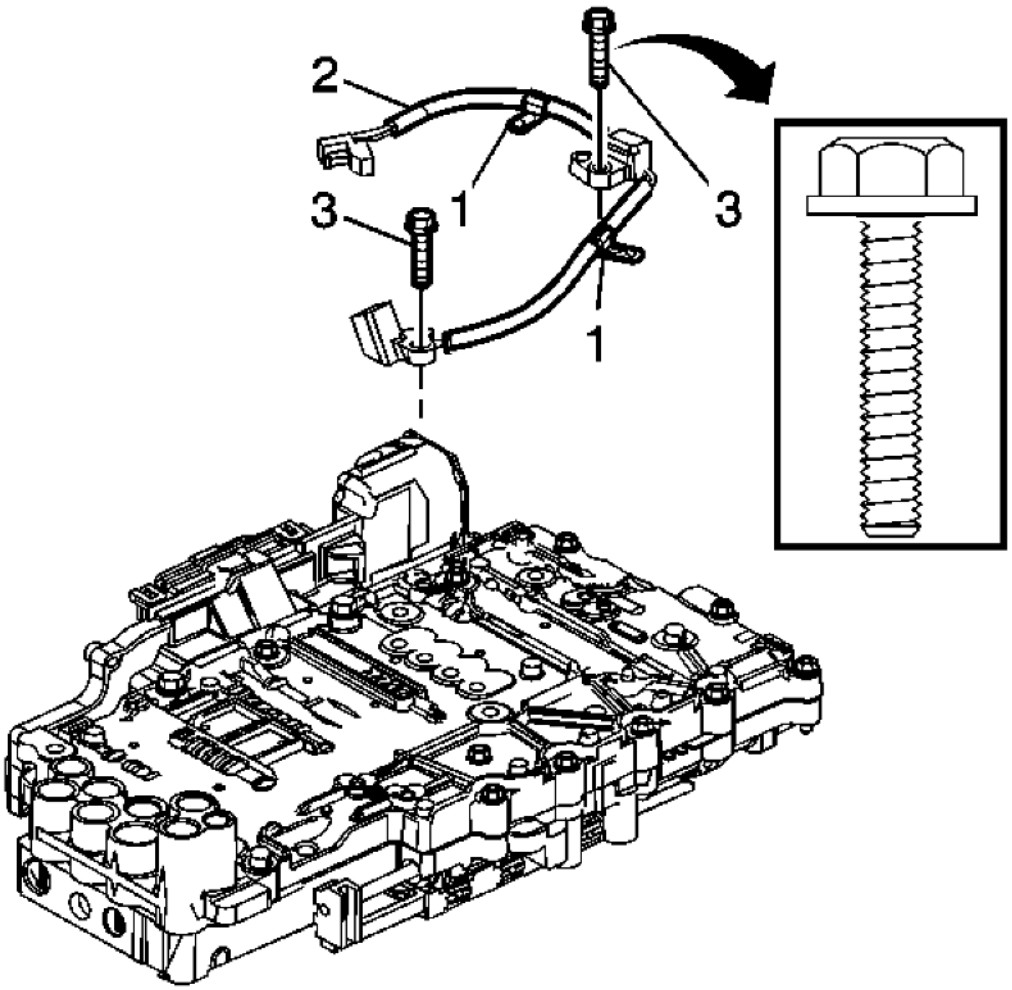

Fig. 58: View Of Output Speed Sensor Wiring Harness
Courtesy of GENERAL MOTORS CORP.

10. Inspect the 2 input and output speed sensor wiring harness clips (1) for damage. Replace if damaged.

cardiagn.com

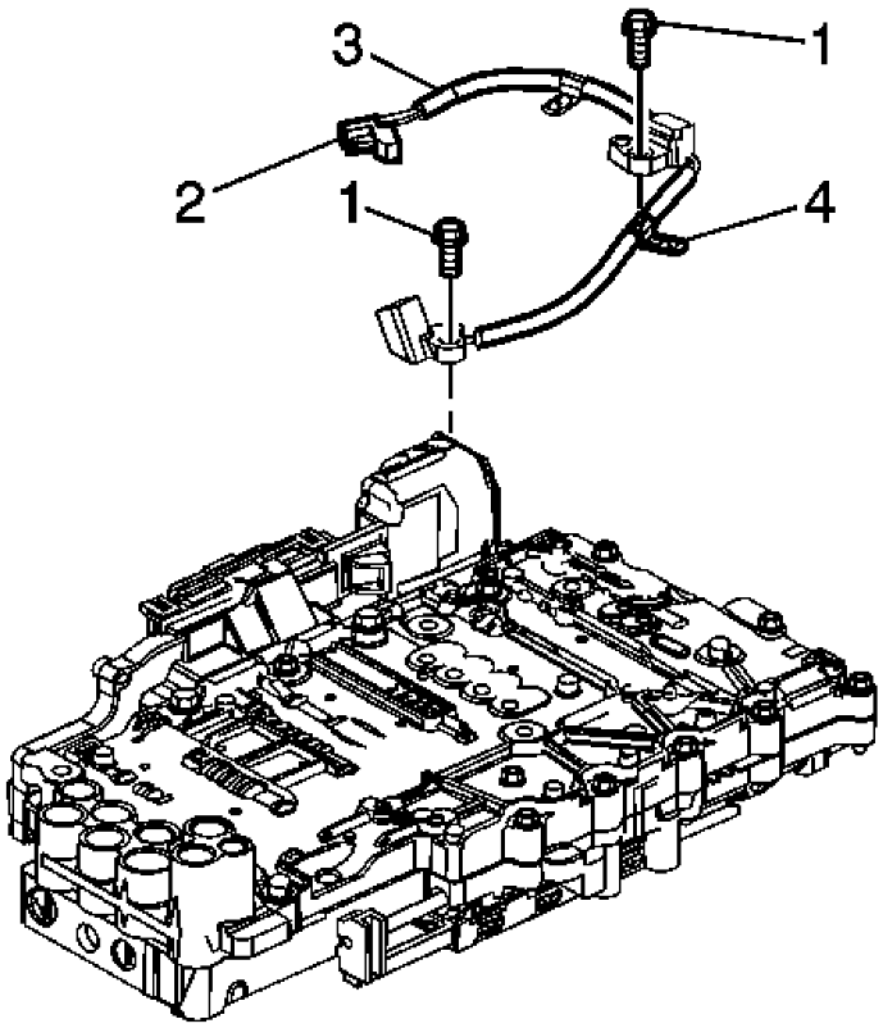

Fig. 59: View Of Speed Sensor Electrical Connector
Courtesy of GENERAL MOTORS CORP.

11. Connect the speed sensor electrical connector (2) to the control solenoid valve assembly.

cardiagn.com

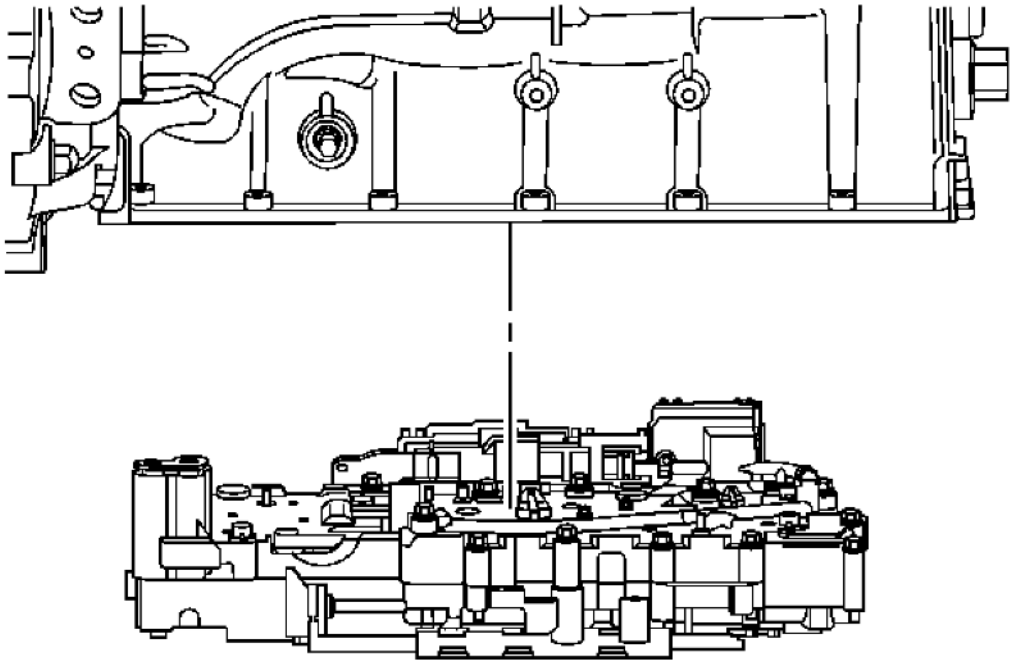

Fig. 60: Valve Body Assembly
Courtesy of GENERAL MOTORS CORP.

12. Install the upper and lower control valve body assembly. Refer to **Control Valve Lower Body and Upper Body Replacement**.
13. Install the electrical connector passage sleeve. Refer to **Automatic Transmission Electrical Connector Passage Sleeve Replacement**.

cardiagn.com

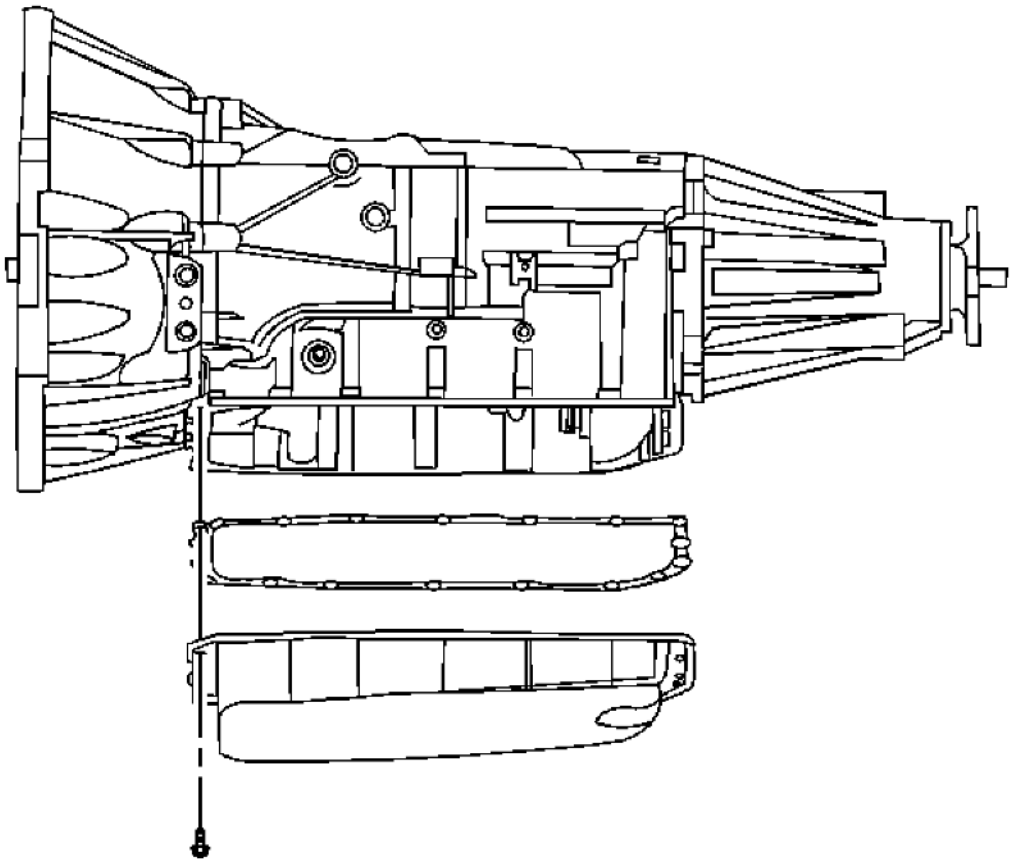

Fig. 61: View Of Transmission Oil Pan & Filter
Courtesy of GENERAL MOTORS CORP.

14. Install the transmission oil pan and filter. Refer to **Automatic Transmission Fluid, Fluid Pan and/or Filter Replacement**.

NOTE: **After an internal transmission repair or internal part replacement, the Service Fast Learn Adapt procedure should be performed. Refer to Service Fast Learn Adapts .**

15. Reset the transmission TAP values. Refer to **Service Fast Learn Adapts** .
16. Reprogram the transmission control module. Refer to **Control Module References** .

CONTROL VALVE LOWER BODY AND UPPER BODY REPLACEMENT

cardiagn.com

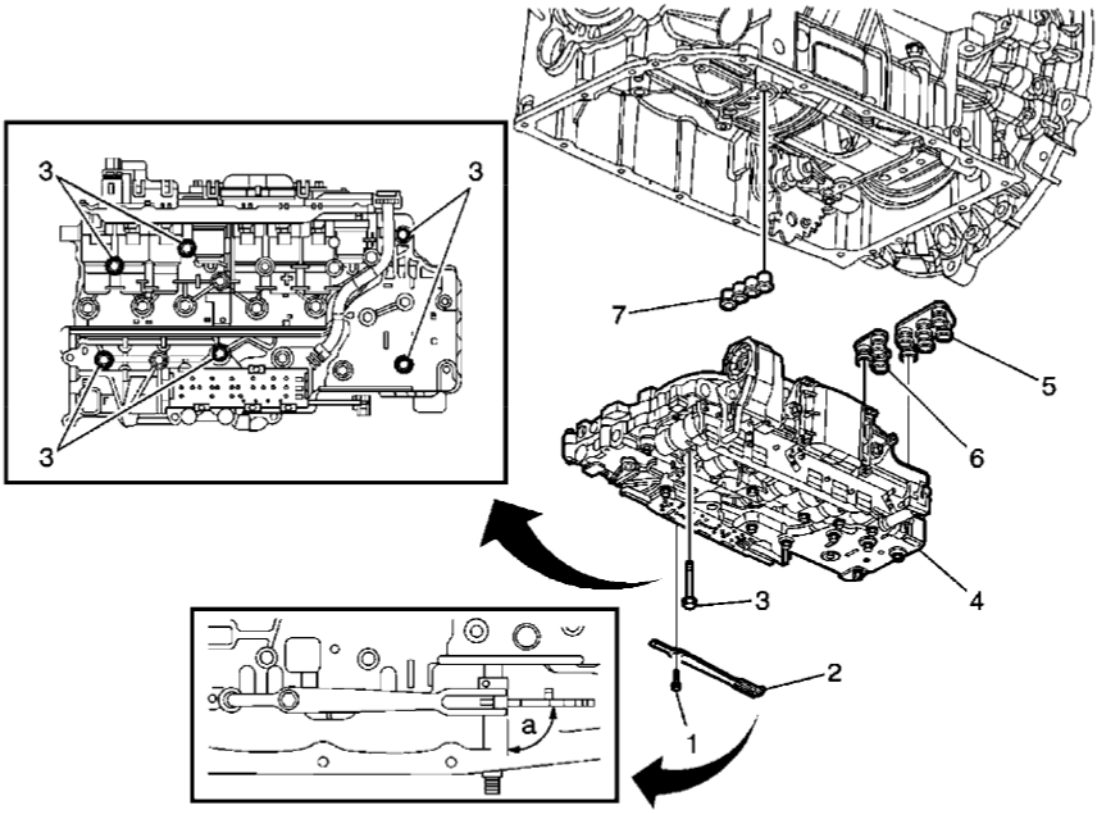

Fig. 62: Control Valve Lower Body & Upper Body
Courtesy of GENERAL MOTORS CORP.

Callout	Component Name
Preliminary Procedures 1. Raise and support the vehicle. Refer to **Lifting and Jacking the Vehicle** . 2. Remove the transmission fluid pan, gasket and filter. Refer to **Automatic Transmission Fluid, Fluid Pan and/or Filter Replacement**. 3. Remove the electrical connector sleeve. Refer to **Automatic Transmission Electrical Connector Passage Sleeve Replacement**.	
1	Manual Shaft Detent Assembly Bolt **CAUTION:** **Refer to Fastener Caution .** **Tighten:** 12 N.m (106 lb in)
2	Manual Shaft Detent Assembly **Tip:** Ensure the manual shaft detent assembly roller is centered (A) over the manual shaft detent lever assembly. Failure to center the roller may cause hard or no shift lever operation.

cardiagn.com

3	Control Valve Assembly Bolt (Qty: 6) **Tip:** Tighten the bolts in the proper order. Refer to **Control Valve Body Assembly Installation** . **Tighten:** 8 N.m (71 lb in)
4	Control Valve Assembly **Tip:** • Do not remove all the bolts in the control valve body assembly. Remove only the bolts indicated. • For control valve body disassembly, refer to **Control Valve Body Assembly Disassemble** . • For control valve body cleaning and inspection, refer to **Control Valve Lower Body Assembly Cleaning and Inspection** . • For ball check valve locations, refer to **Ball Check Valve Locations** . • For control valve body assembly, refer to **Control Valve Body Assembly Assemble** . • Align the manual shift shaft position switch activator slide with the detent lever guide pin during control valve body installation.
5	Fluid Pump Seal Assembly **Tip:** Do not reuse the seal assembly.
6	Fluid Pump Seal Assembly **Tip:** Do not reuse the seal assembly.
7	Center Support Fluid Passage Seal Assembly **Procedure:** It is recommended that transmission adaptive pressure (TAP) information be reset. Resetting the TAP values using a scan tool will erase all learned values in all cells. As a result, the engine control module (ECM), powertrain control module (PCM) or transmission control module (TCM) will need to relearn TAP values. Transmission performance may be affected as new TAP values are learned. Reset the TAP values. Refer to **Service Fast Learn Adapts** . **Tip:** Do not reuse the seal assembly.

INPUT AND OUTPUT SPEED SENSOR REPLACEMENT

cardiagn.com

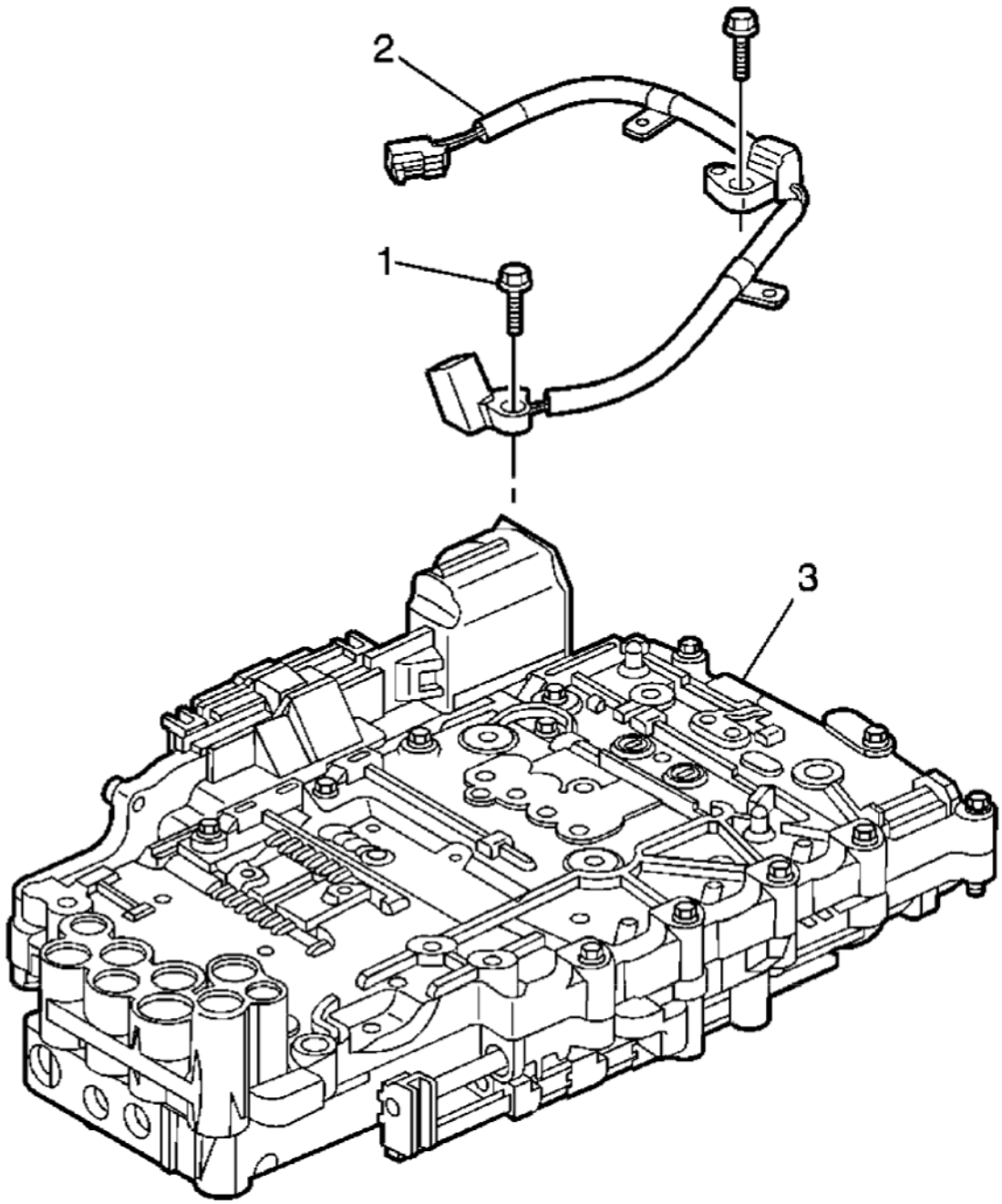

Fig. 63: Input & Output Speed Sensor
Courtesy of GENERAL MOTORS CORP.

Callout	Component Name
Preliminary Procedures	
1. Raise and support the vehicle. Refer to **Lifting and Jacking the Vehicle** .	
2. Remove the transmission fluid pan and filter. Refer to **Automatic Transmission Fluid, Fluid Pan**	

cardiagn.com

and/or Filter Replacement.

3. Remove the upper and lower valve body assembly. Refer to **Control Valve Lower Body and Upper Body Replacement**.
4. Disconnect the speed sensor electrical connector from the control solenoid valve assembly.

1	Input and Output Speed Sensor Assembly Bolt (Qty: 2) **CAUTION:** **Refer to Fastener Caution .** **Tighten:** 12 N.m (106 lb in)
2	Input and Output Speed Sensor Assembly **Procedure** 1. Disconnect the speed sensor wiring harness clips. 2. Inspect the clips for damage. 3. Replace if damaged.
3	Control Valve Body Assembly

TRANSMISSION REPLACEMENT

NOTE: NEW cooler pipe O-rings and torque converter bolts will be required each time the transmission is removed and installed.

Removal Procedure

1. Remove the exhaust system. Refer to **Exhaust Muffler with Resonator, Exhaust, and Tail Pipe Replacement (H-Pipe)** or **Exhaust Muffler with Resonator, Exhaust, and Tail Pipe Replacement (Vehicle Service)** .
2. Remove the catalytic converters. Refer to **Catalytic Converter Replacement - Left Side (LLT)** or **Catalytic Converter Replacement - Left Side (L99/LS3)** and **Catalytic Converter Replacement - Right Side (LLT)** or **Catalytic Converter Replacement - Right Side (L99/LS3)** .
3. Remove the propeller shaft. Refer to **Two-Piece Propeller Shaft Replacement** .
4. Disconnect the shift linkage from the transmission.

cardiagn.com

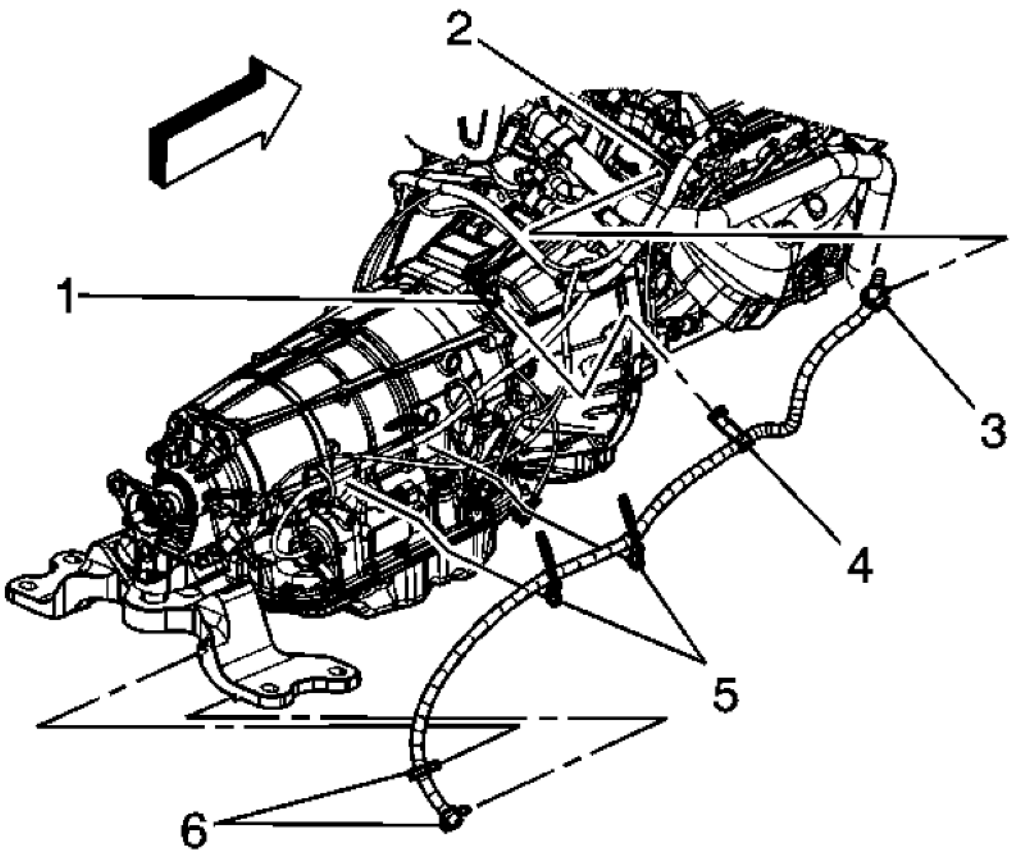

Fig. 64: View Of Vent Hose Assembly
Courtesy of GENERAL MOTORS CORP.

5. Remove the transmission vent hose from the retaining clips (6) on the transmission support.

cardiagn.com

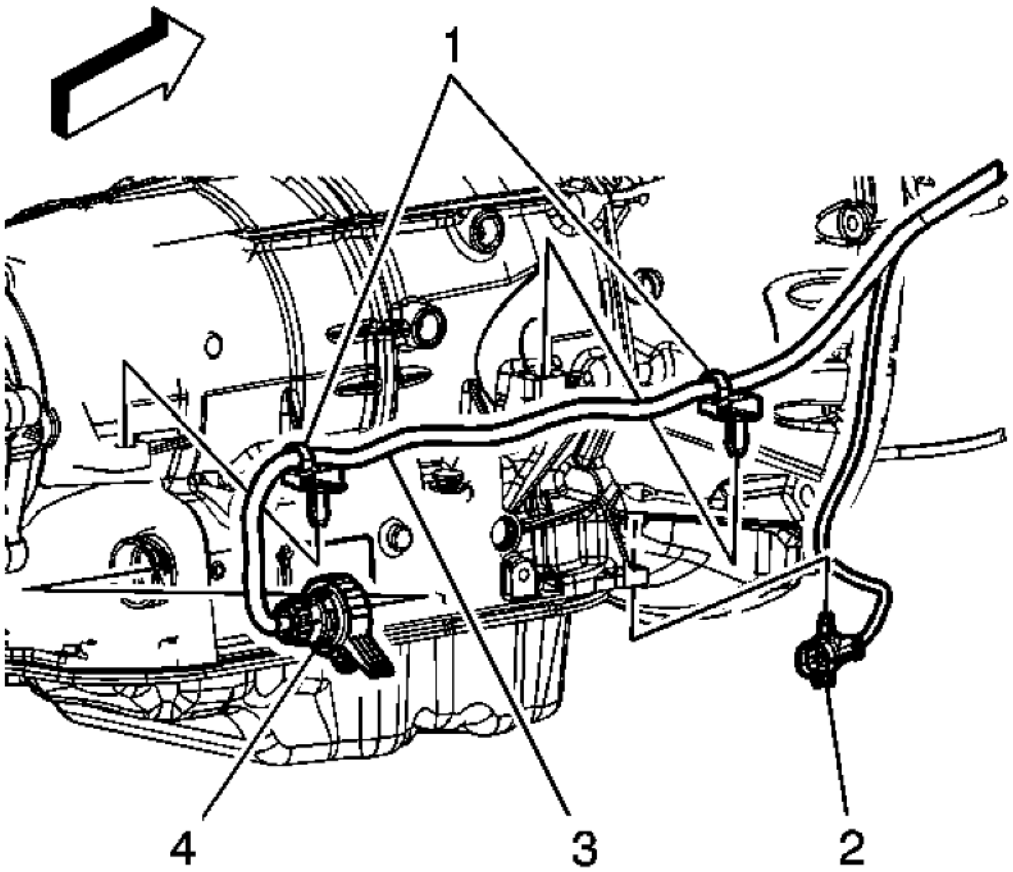

Fig. 65: View Of Oxygen Sensor Wiring Harness Connector, Retainers
Courtesy of GENERAL MOTORS CORP.

6. Disconnect the transmission wiring harness connector (4) from the transmission by releasing the locking mechanism and rotating the latch counterclockwise.
7. Remove the wiring harness retainers (1) from the transmission.
8. Remove the oxygen sensor wiring harness connector (2) from the transmission.
9. Place an oil drain pan under the transmission fluid cooler pipes.

cardiagn.com

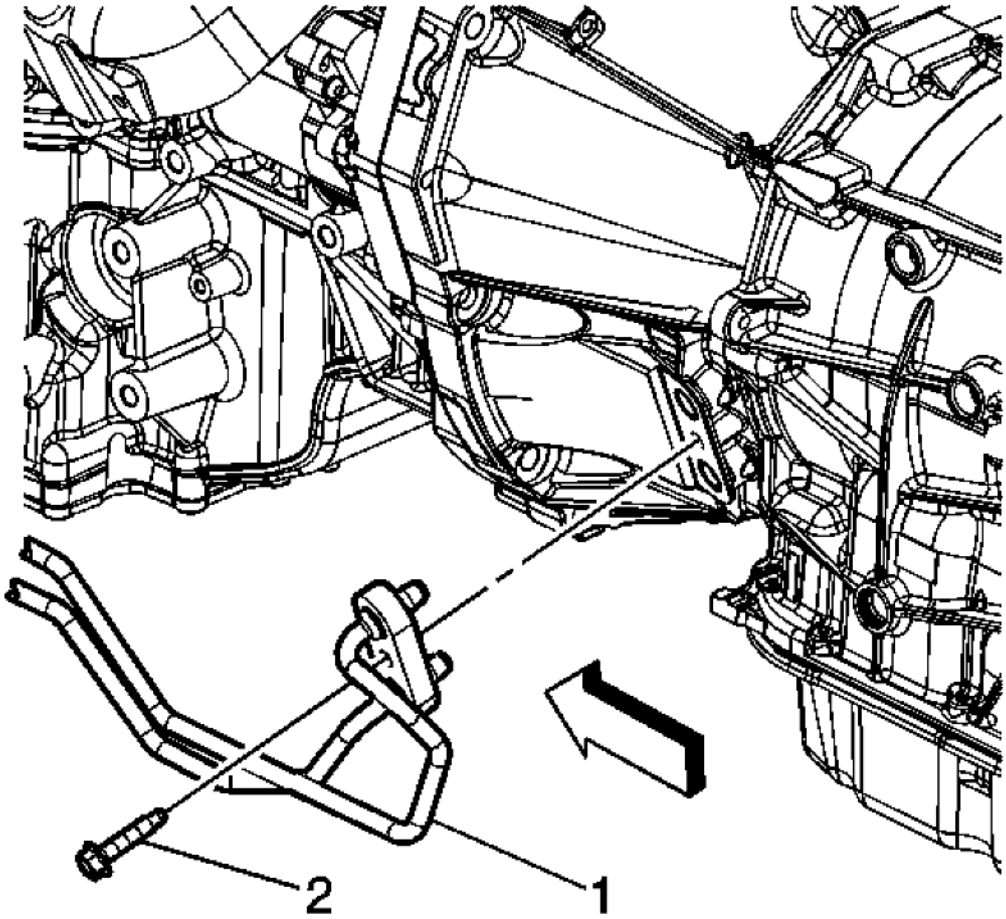

Fig. 66: View of Transmission Fluid Cooler Pipes
Courtesy of GENERAL MOTORS CORP.

10. Remove the transmission fluid cooler pipes (1) from the transmission, and position aside.
11. Remove and discard the O-rings. Do NOT reuse the O-rings.
12. Plug the open outlet ports to prevent fluid loss and contamination.

cardiagn.com

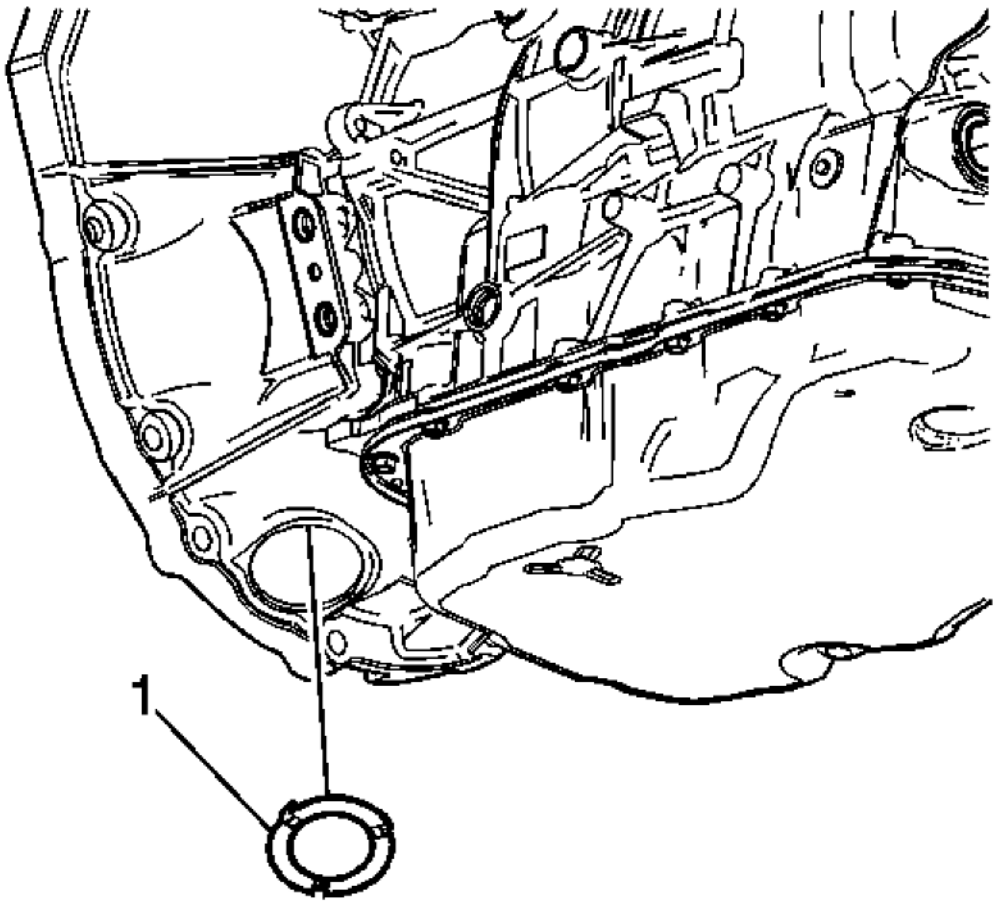

Fig. 67: Identifying Transmission Close Out Plug
Courtesy of GENERAL MOTORS CORP.

13. Remove the transmission close out plug (1).
14. Mark the torque converter to flexplate/flywheel orientation to ensure proper realignment.
15. Remove the starter motor. Refer to **Starter Replacement (LLT)** or **Starter Replacement (LS3/L99)** .
16. Remove the right side transmission torque converter cover.

cardiagn.com

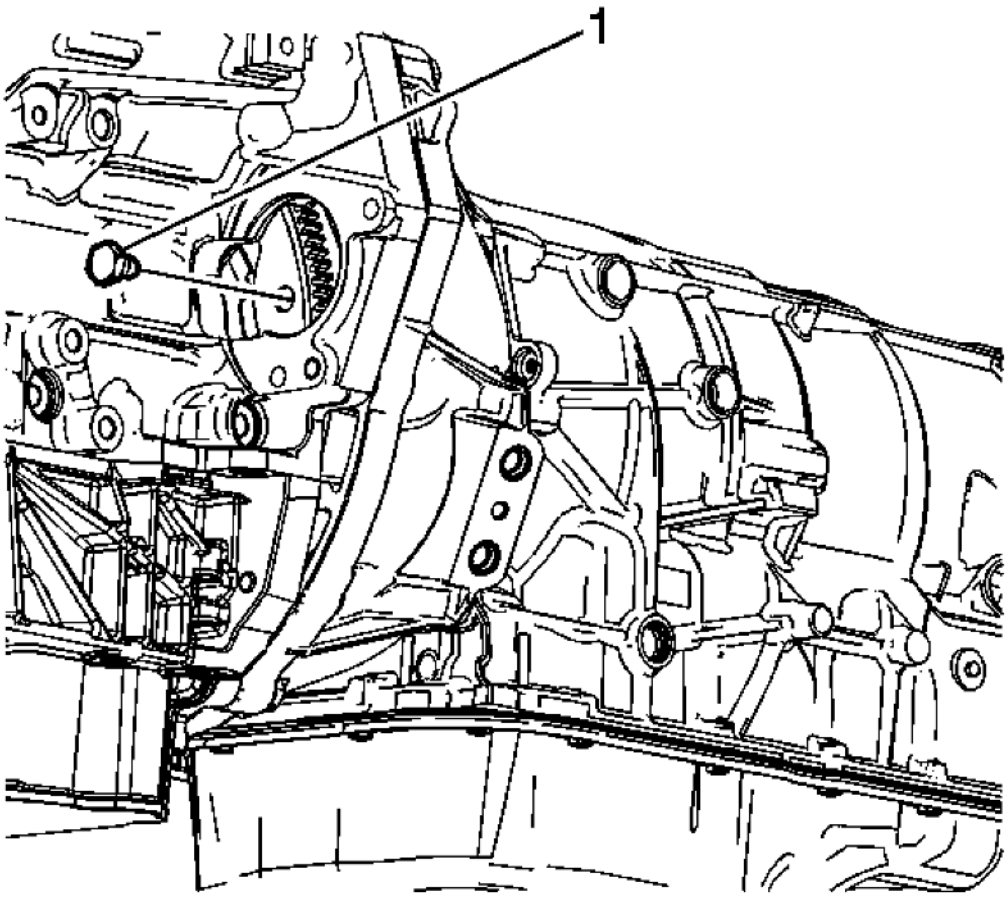

Fig. 68: Identifying Torque Converter Bolts
Courtesy of GENERAL MOTORS CORP.

17. Repeat the following steps for all torque converter bolts (1):
    1. Rotate the harmonic balancer center bolt clockwise ONLY, in order to align the torque converter bolt with the access hole.
    2. Remove and discard the torque converter bolts.
18. Support the transmission with a suitable transmission jack.
19. Remove the transmission support. Refer to **Transmission Mount Replacement**.
20. Slightly lower the transmission to gain access to the upper transmission retaining bolts.

cardiagn.com

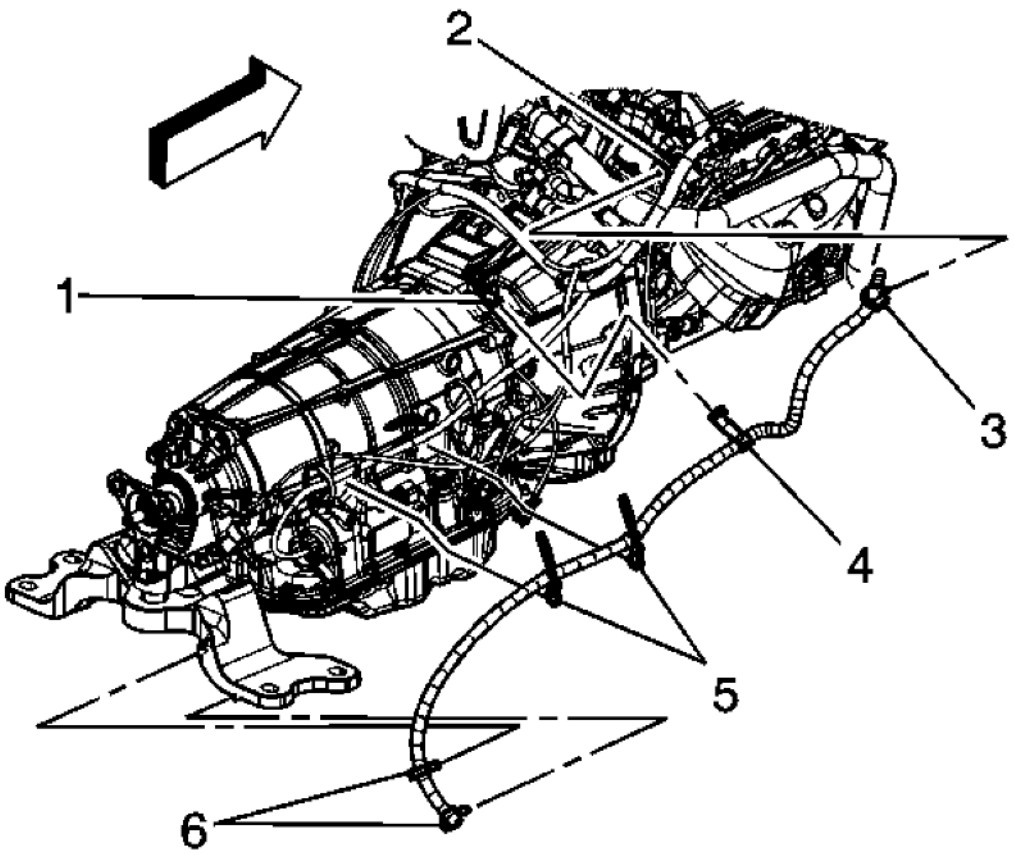

Fig. 69: View Of Vent Hose Assembly
Courtesy of GENERAL MOTORS CORP.

21. Disconnect the transmission vent hose (4) from the transmission vent pipe (1).

cardiagn.com

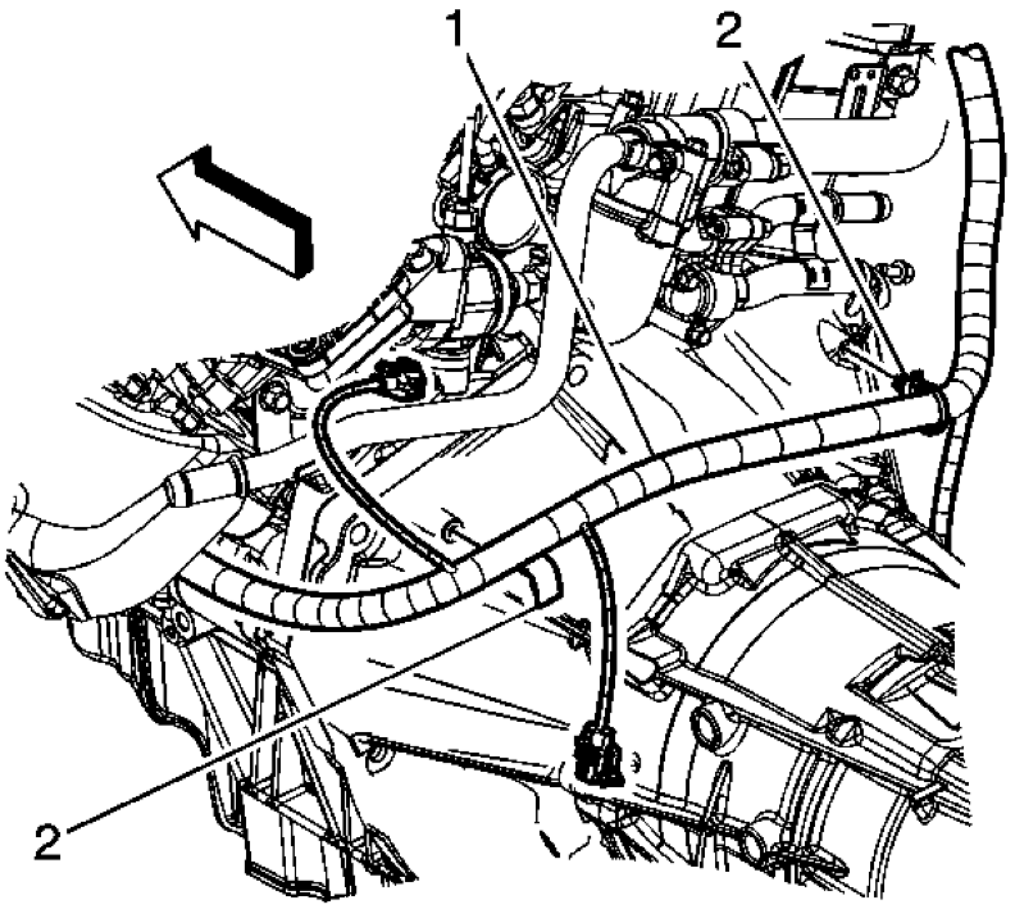

Fig. 70: Wiring Harness Retainers
Courtesy of GENERAL MOTORS CORP.

22. Remove the wiring harness retainers (2) from the transmission.
23. Position the transmission wiring harness (1) and vent tube out of the way.
24. On V6 models, remove the heater inlet and outlet pipe to access the top transmission bolt. Refer to **Heater Inlet And Outlet Pipe Replacement (LLT)** .

cardiagn.com

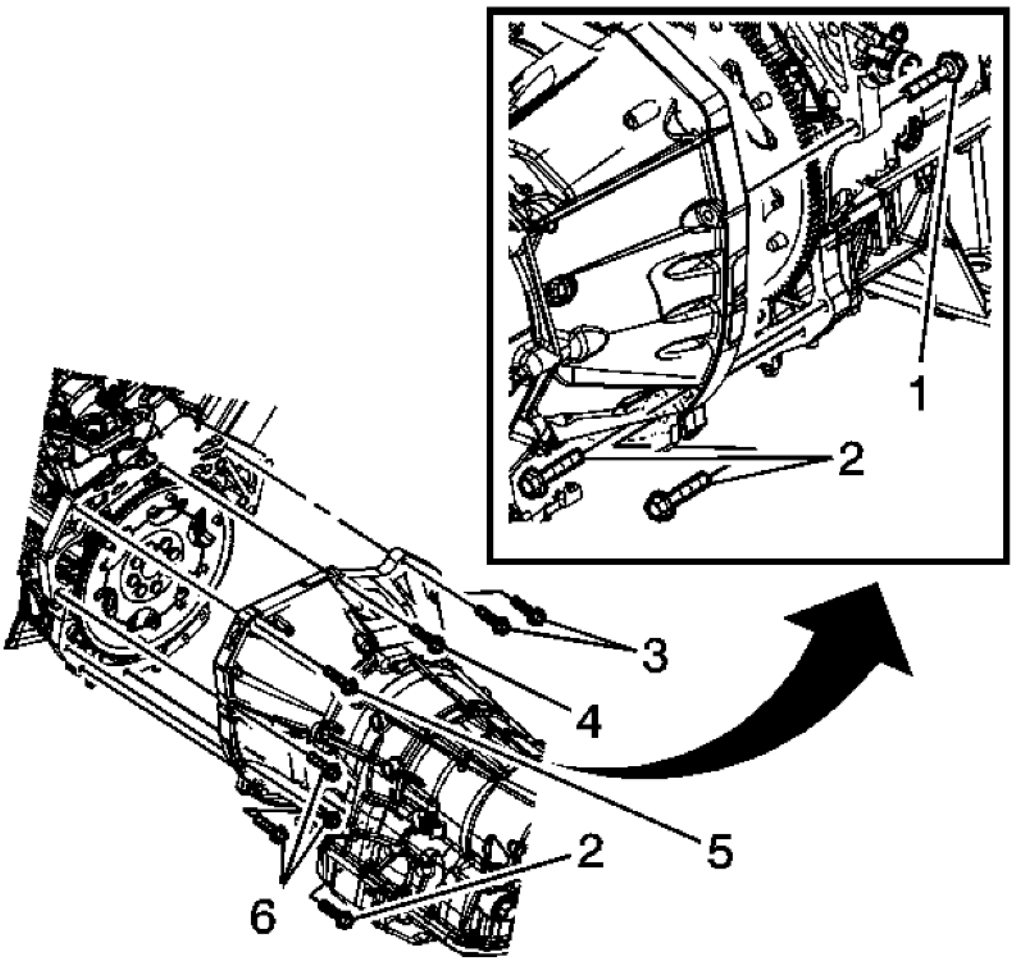

Fig. 71: Transmission Mounting Bolts
Courtesy of GENERAL MOTORS CORP.

25. Remove the transmission mounting bolts (1-6).
26. Remove the remaining two transmission bolts from the transmission.
27. Pull the transmission free from the engine dowels.

NOTE: Ensure clearance is maintained between the transmission and the following:

- **The wiring harness**
- **The vent tube**
- **The cooler pipes**

cardiagn.com

28. Carefully lower the transmission from the vehicle.
29. Flush the transmission oil cooler lines. Refer to **Transmission Fluid Cooler Flushing and Flow Test** .

Installation Procedure

NOTE: Ensure clearance is maintained between the transmission and the following:

- **The wiring harness**
- **The vent tube**
- **The cooler pipes**

1. Using the transmission jack, carefully raise the transmission to the engine.

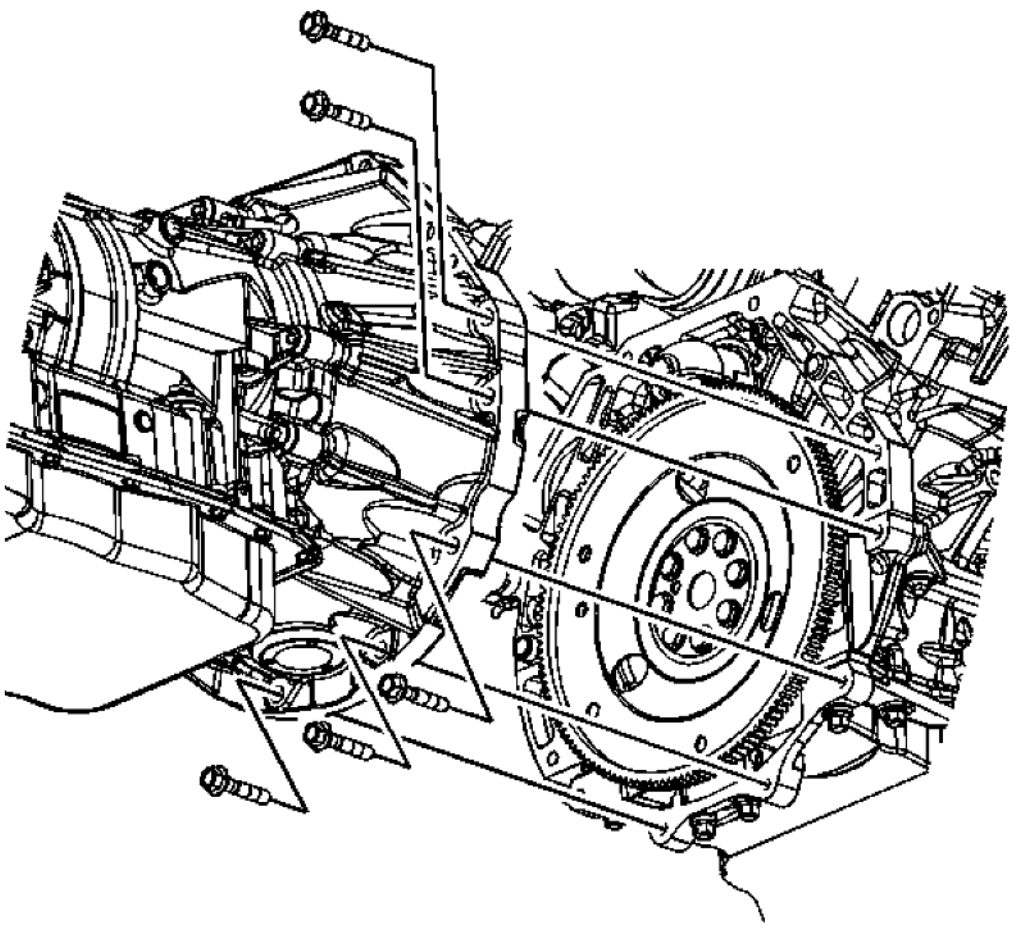

cardiagn.com

Fig. 72: Transmission Mounting Bolts
Courtesy of GENERAL MOTORS CORP.

2. Align the transmission with the engine dowels.

CAUTION: Refer to Fastener Caution .

3. Install the transmission mounting bolts and tighten to 50 N.m (37 lb ft).

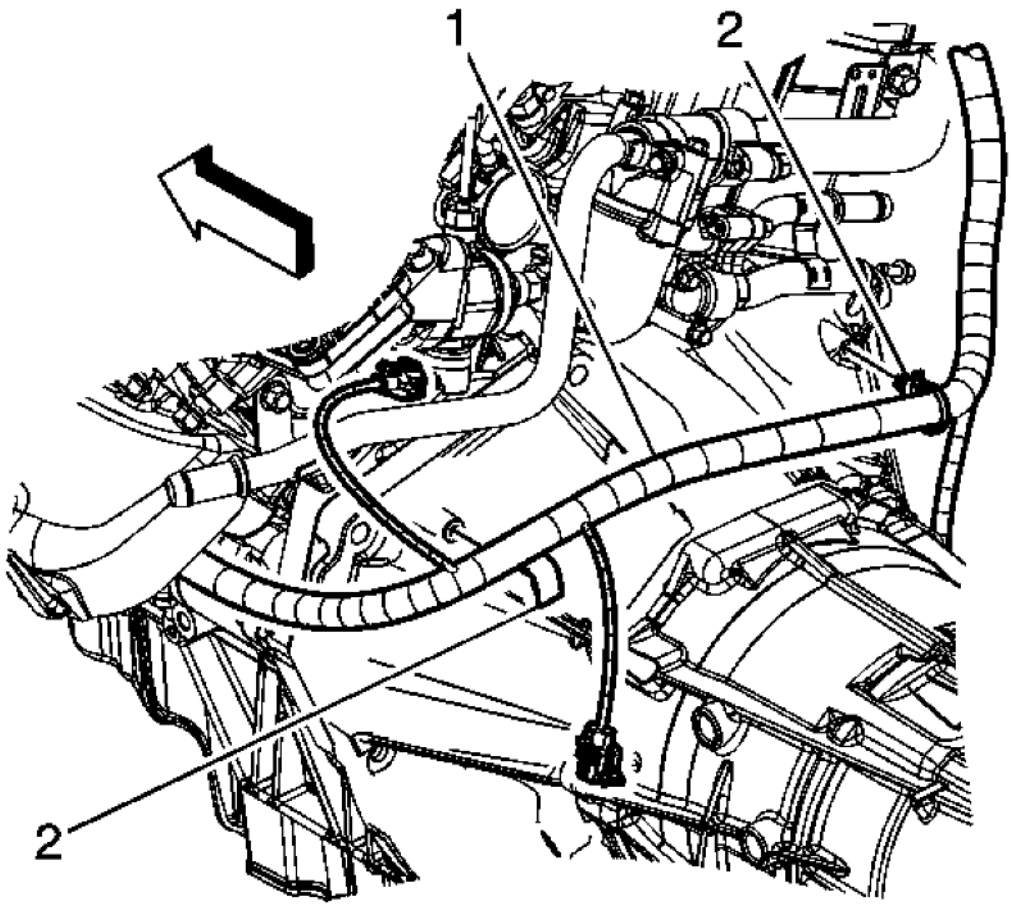

Fig. 73: Wiring Harness Retainers
Courtesy of GENERAL MOTORS CORP.

4. Position the engine wiring harness (1) to the original location.

cardiagn.com

5. Install the wiring harness retainers (2) to the transmission.

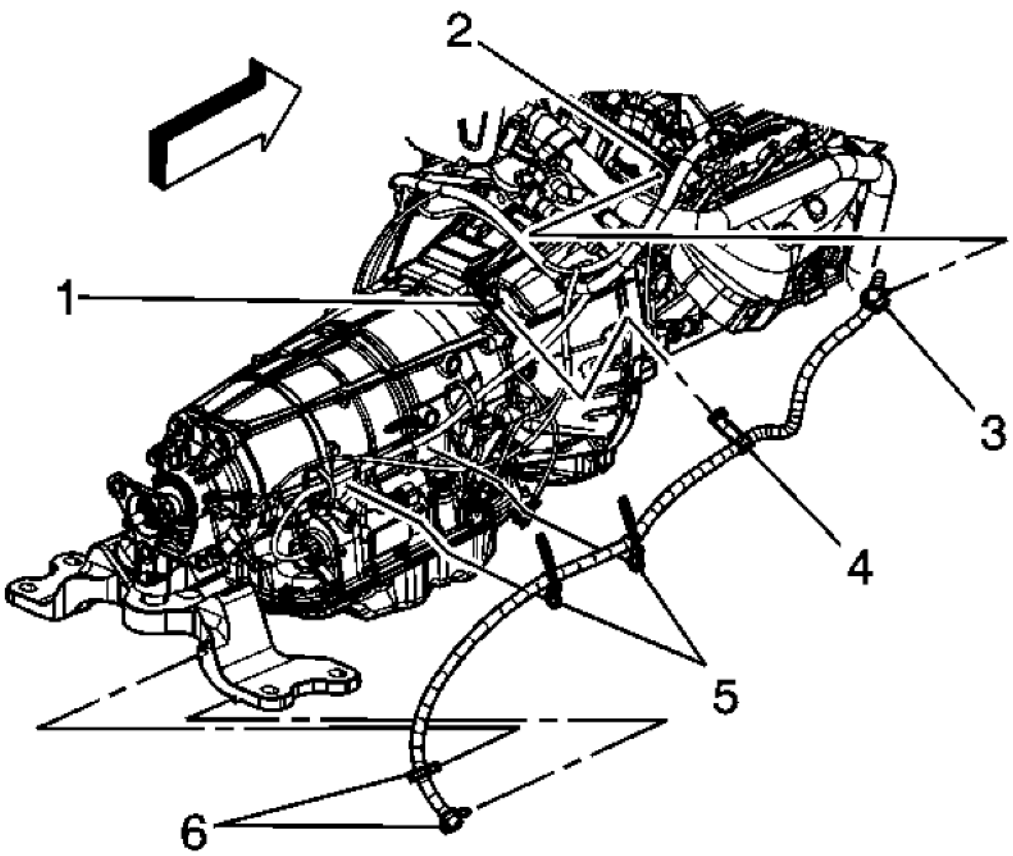

Fig. 74: View Of Vent Hose Assembly
Courtesy of GENERAL MOTORS CORP.

6. Connect the transmission vent hose (4) to the transmission vent pipe (1).
7. Raise the transmission to the installed position.
8. Install the transmission support. Refer to **Transmission Mount Replacement**.
9. Remove the jack from under the transmission.
10. Align the torque converter to flexplate/flywheel orientation marks made during the removal procedure.

cardiagn.com

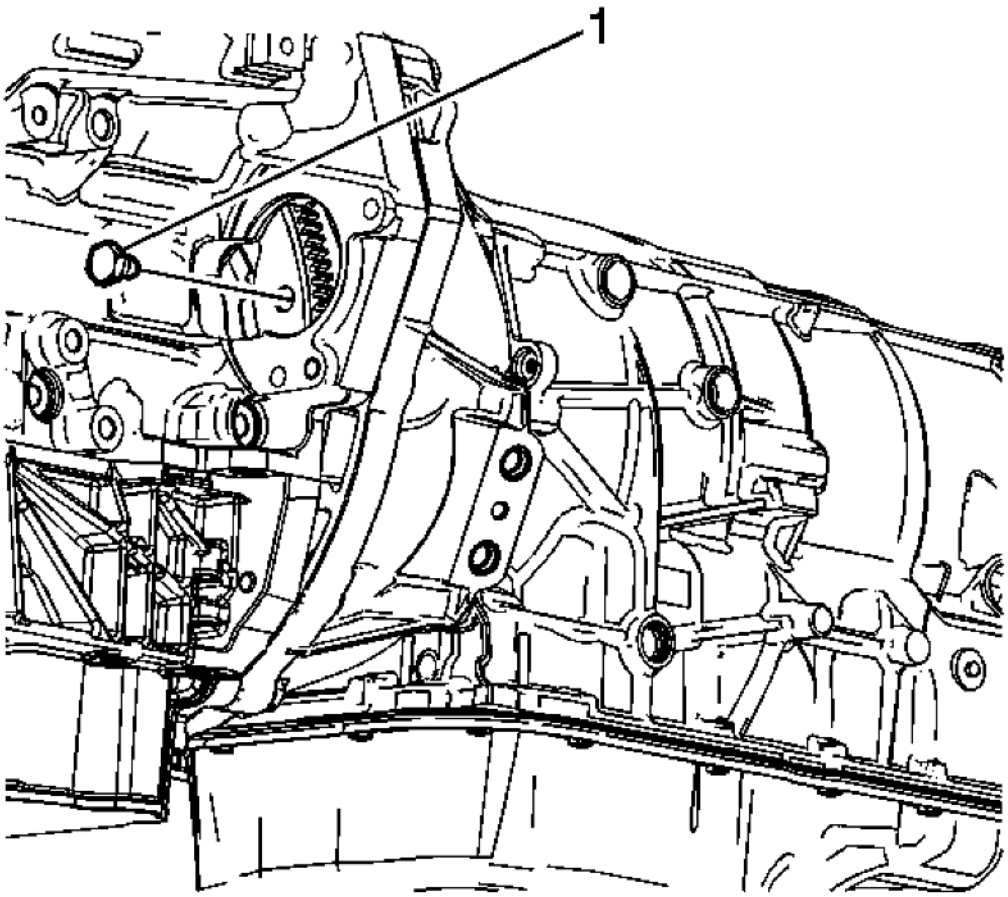

Fig. 75: Identifying Torque Converter Bolts
Courtesy of GENERAL MOTORS CORP.

NOTE: Torque converter bolts are self locking and must be replaced with NEW torque converter bolts every time the bolts are removed.

11. Complete the following steps for all torque converter bolts (1):
    1. Rotate the harmonic balancer center bolt clockwise ONLY, in order to align the torque converter bolt holes in the flexplate/flywheel with the access hole in the engine block.
    2. To aid in alignment of the torque converter to the flexplate/flywheel. Install all NEW torque converter bolts before fully tightening to 65 N.m (48 lb ft).
12. Install the starter motor. Refer to **Starter Replacement (LLT)** or **Starter Replacement (LS3/L99)** .
13. Install the right side transmission torque converter cover.

cardiagn.com

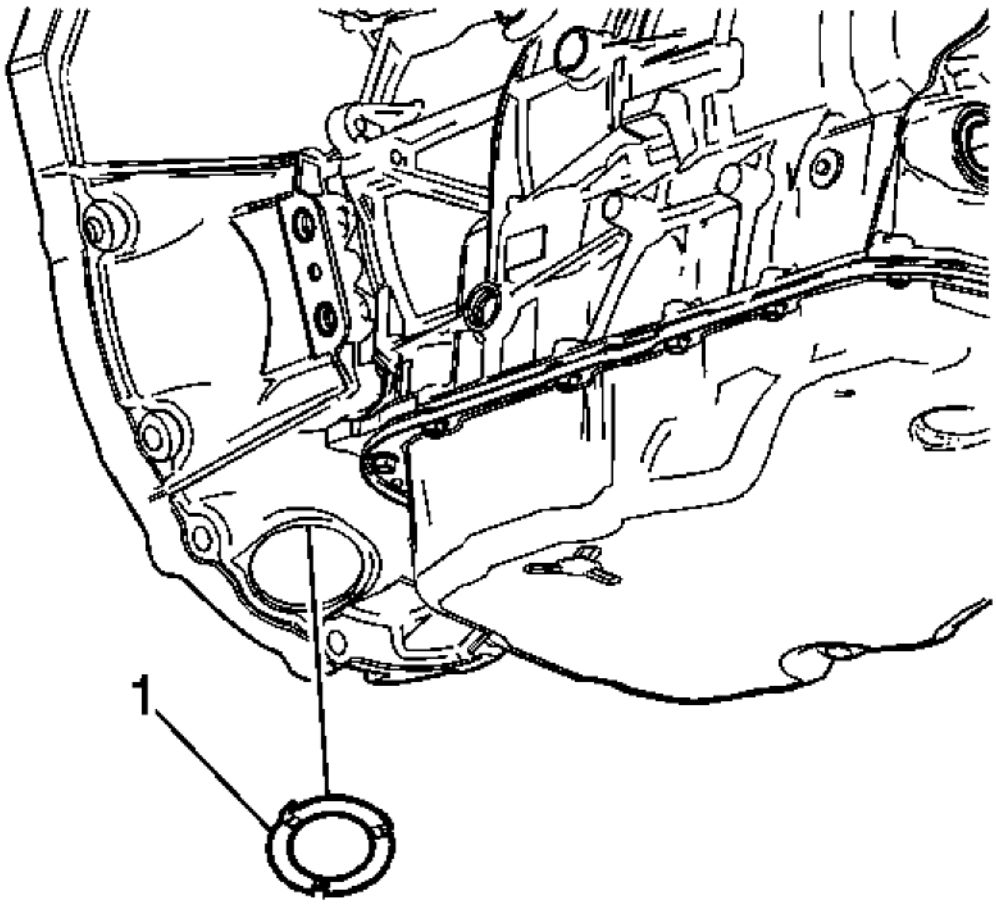

Fig. 76: Identifying Transmission Close Out Plug
Courtesy of GENERAL MOTORS CORP.

14. Install the transmission close out plug (1).

cardiagn.com

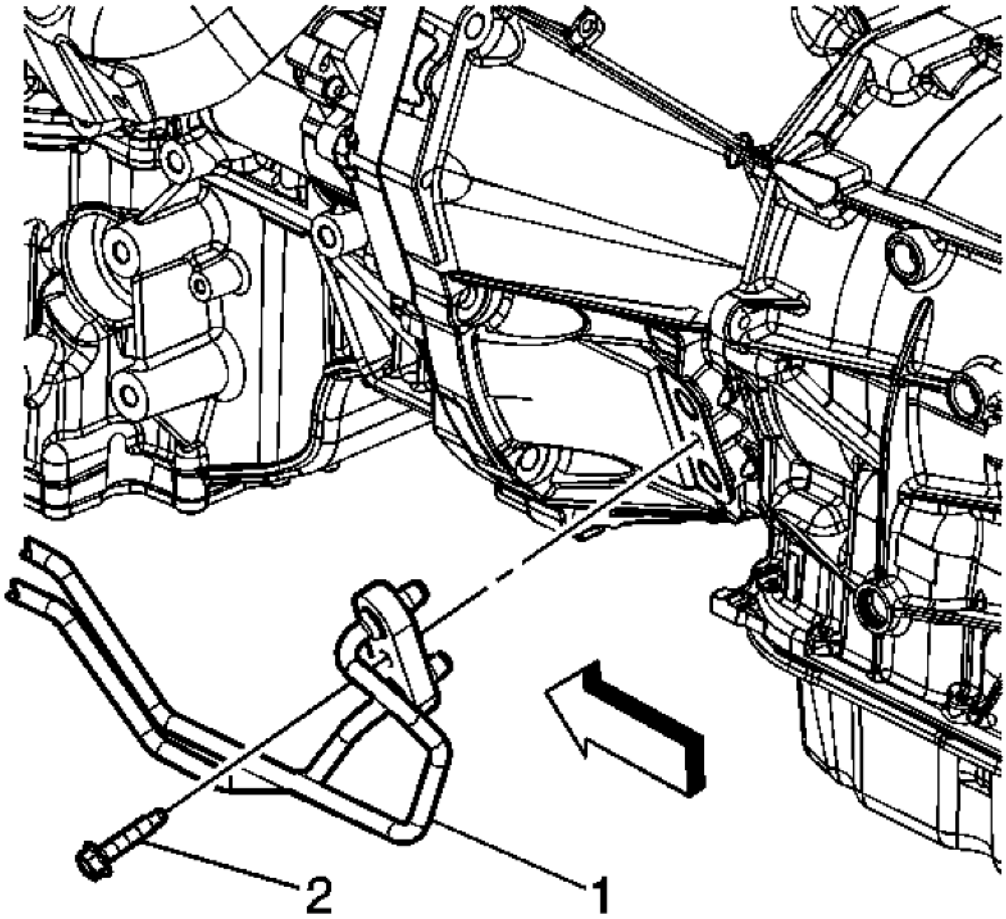

Fig. 77: View of Transmission Fluid Cooler Pipes
Courtesy of GENERAL MOTORS CORP.

15. Place NEW O-rings over the transmission fluid cooler pipes.
16. Install the transmission fluid cooler pipes (1) to the transmission.

cardiagn.com

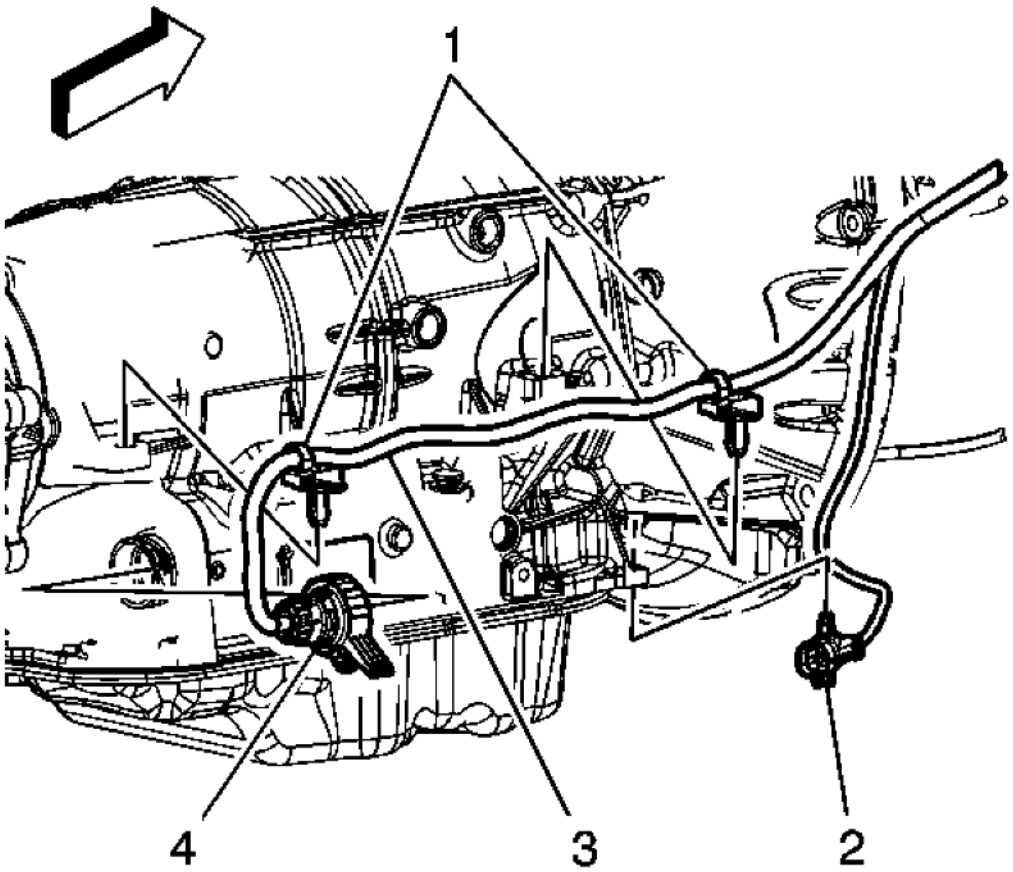

Fig. 78: View Of Oxygen Sensor Wiring Harness Connector, Retainers
Courtesy of GENERAL MOTORS CORP.

17. Install the oxygen sensor wiring harness connector (2) to the transmission.
18. Install the wiring harness retainers (1) to the transmission.
19. Connect the transmission wiring harness connector (5) to the transmission by rotating the locking latch clockwise.

cardiagn.com

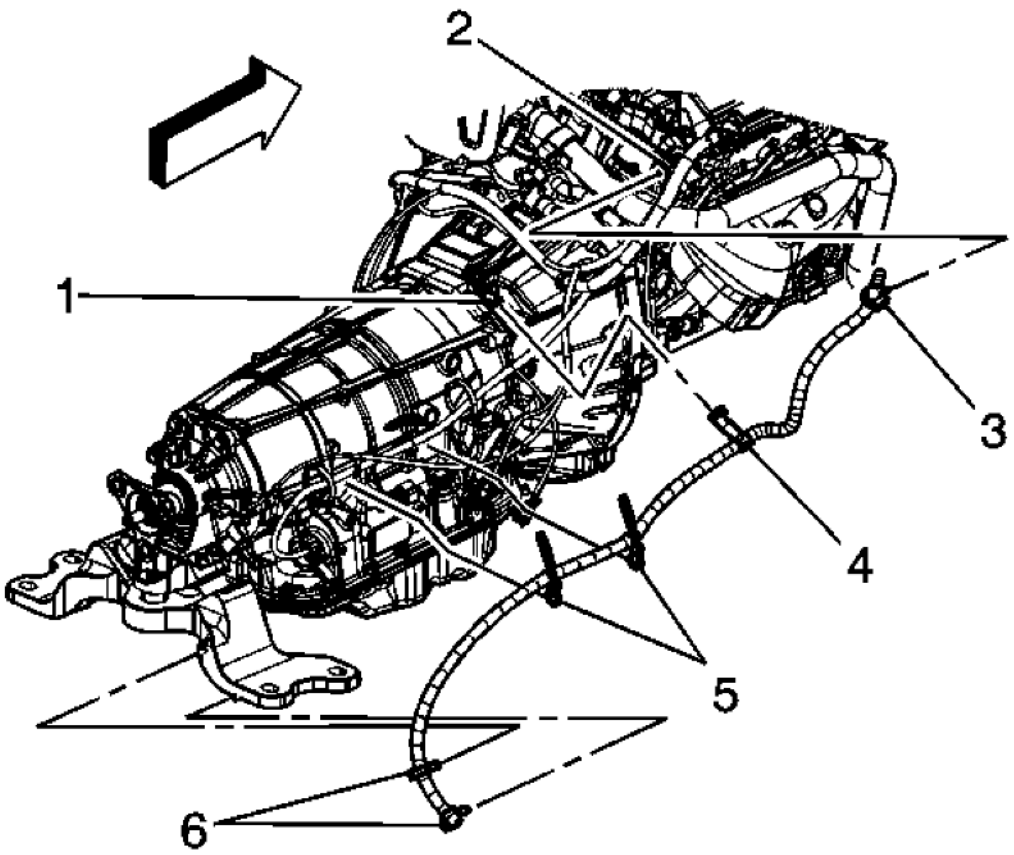

Fig. 79: View Of Vent Hose Assembly
Courtesy of GENERAL MOTORS CORP.

20. Install the transmission vent hose to the retaining clips (6) on the transmission support.
21. On V6 models, install the heater inlet and outlet pipe. Refer to **Heater Inlet And Outlet Pipe Replacement (LLT)** .

cardiagn.com

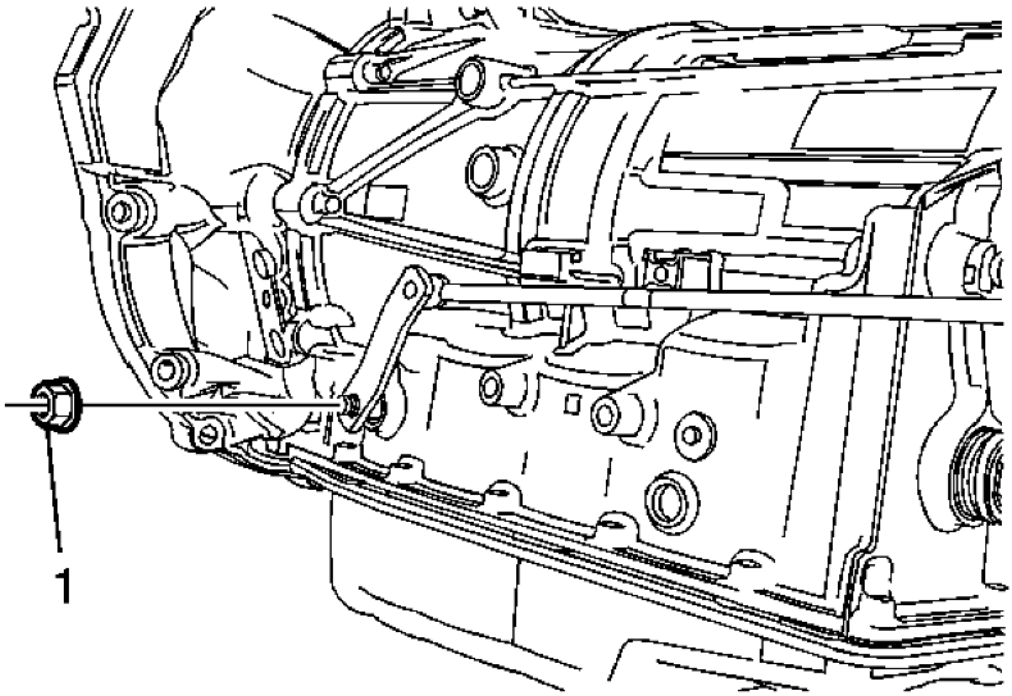

Fig. 80: Manual Shift Shaft Nut
Courtesy of GENERAL MOTORS CORP.

22. Install the shift linkage to the transmission. Refer to **Shift Control Linkage Replacement**.
23. Install the propeller shaft. Refer to **Two-Piece Propeller Shaft Replacement** .
24. Install the catalytic converters. Refer to **Catalytic Converter Replacement - Left Side (LLT)** or **Catalytic Converter Replacement - Left Side (L99/LS3)** and **Catalytic Converter Replacement - Right Side (LLT)** or **Catalytic Converter Replacement - Right Side (L99/LS3)** .
25. Install the exhaust system. Refer to **Exhaust Muffler with Resonator, Exhaust, and Tail Pipe Replacement (H-Pipe)** or **Exhaust Muffler with Resonator, Exhaust, and Tail Pipe Replacement (Vehicle Service)** .
26. Lower the vehicle.
27. Check the transmission fluid level and fill if necessary.
28. Adjust the shift control linkage. Refer to **Shift Control Linkage Adjustment**.

Transmission Final Test and Inspection

Complete the following procedure after the transmission is installed in the vehicle:

1. With the ignition OFF or disconnected, crank the engine several times. Listen for any unusual noises or

cardiagn.com

evidence that any parts are binding.

2. Start the engine and listen for abnormal conditions.
3. While the engine continues to idle, raise and support the vehicle.
4. Inspect for fluid leaks while the engine is idling.
5. Perform a final inspection for the proper fluid level.
6. Lower the vehicle.
7. Calibrate the transmission control module (DTM). Refer to **Control Module References** .

NOTE: **It is recommended that transmission adaptive pressure (TAP) information be reset.**
Resetting the TAP values using a scan tool will erase all learned values in all cells. As a result, The ECM, PCM or TCM will need to relearn TAP values. Transmission performance may be affected as new TAP values are learned.

8. Reset the TAP values. Refer to **Service Fast Learn Adapts** .
9. Road test the vehicle. Refer to **Road Test** .

cardiagn.com

2010 TRANSMISSION

Automatic Transmission - 6L45/6L50/6L80/6L90 - Camaro

SCHEMATIC AND ROUTING DIAGRAMS

AUTOMATIC TRANSMISSION CONTROLS SCHEMATICS

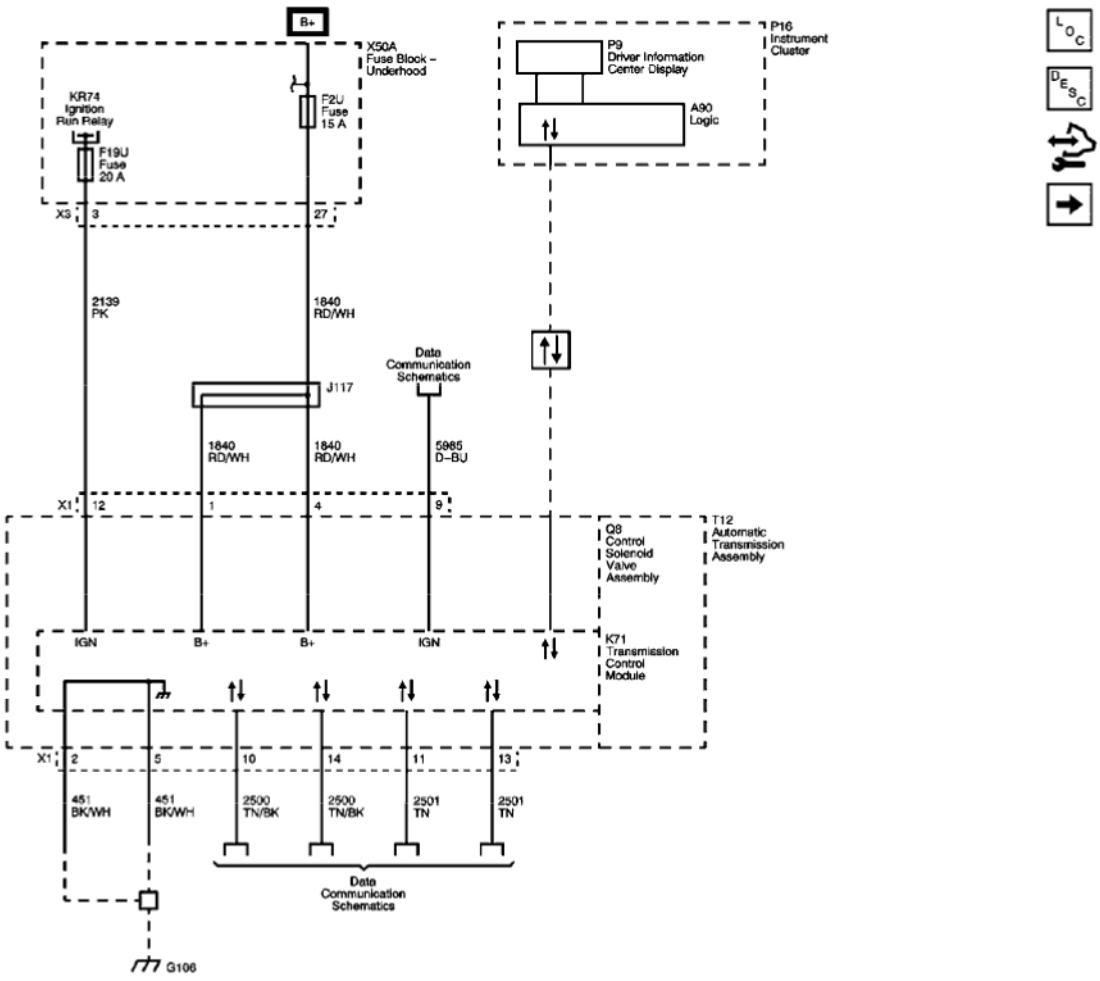

Fig. 1: Module Power, Ground, Data Communication, and MIL
Courtesy of GENERAL MOTORS CORP.

cardiagn.com

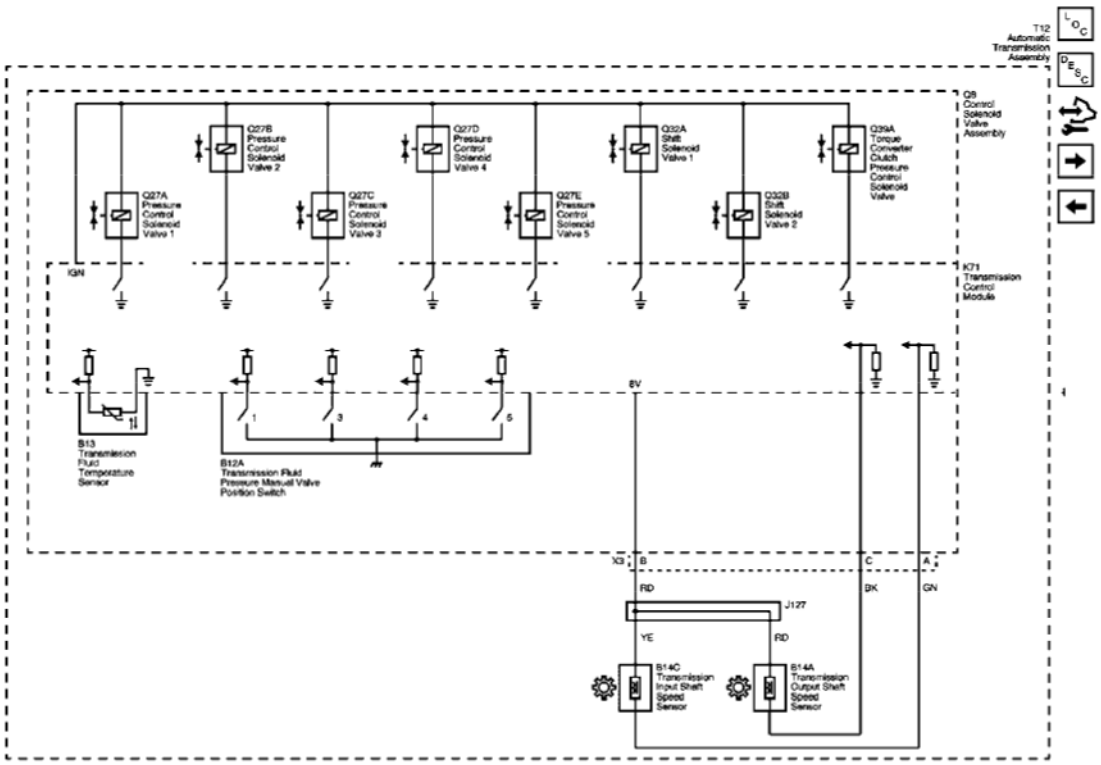

Fig. 2: ISS, OSS, TFP, TFT, Pressure Controls, and Shift Controls
Courtesy of GENERAL MOTORS CORP.

cardiagn.com

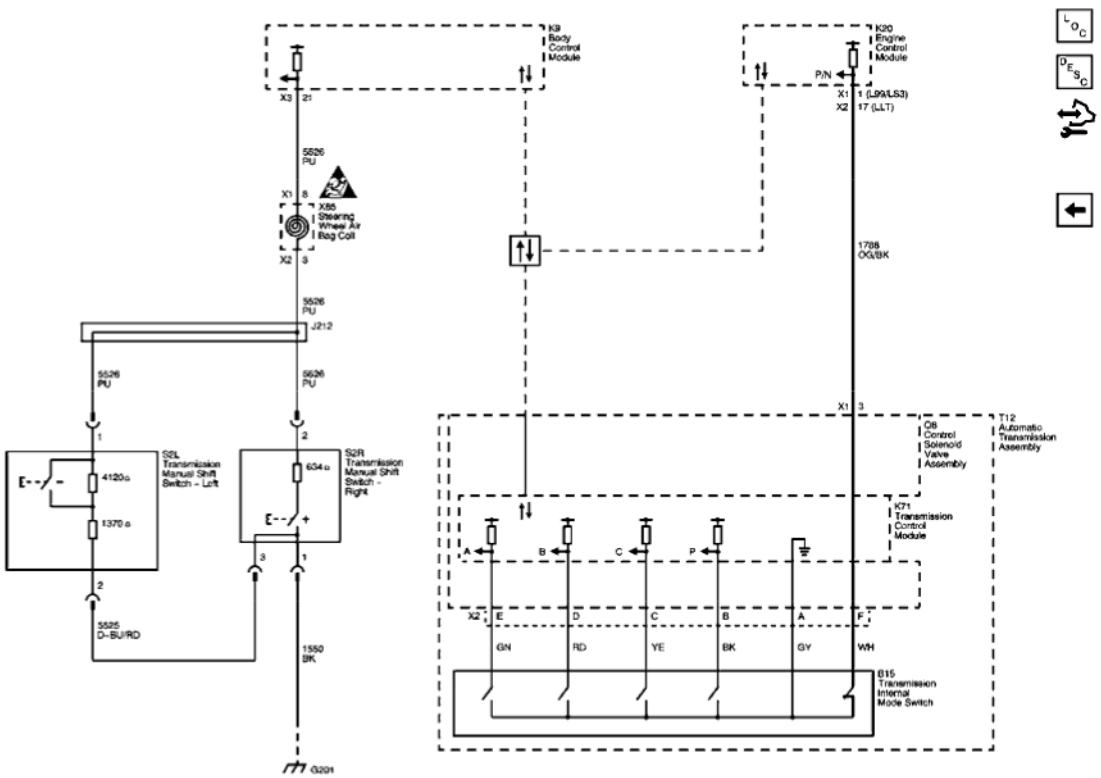

Fig. 3: IMS and Tap Up/Tap Down
Courtesy of GENERAL MOTORS CORP.

cardiagn.com

2010 TRANSMISSION

Shift Lock Control - Camaro

SCHEMATIC AND ROUTING DIAGRAMS

SHIFT LOCK CONTROL SCHEMATICS

cardiagn.com

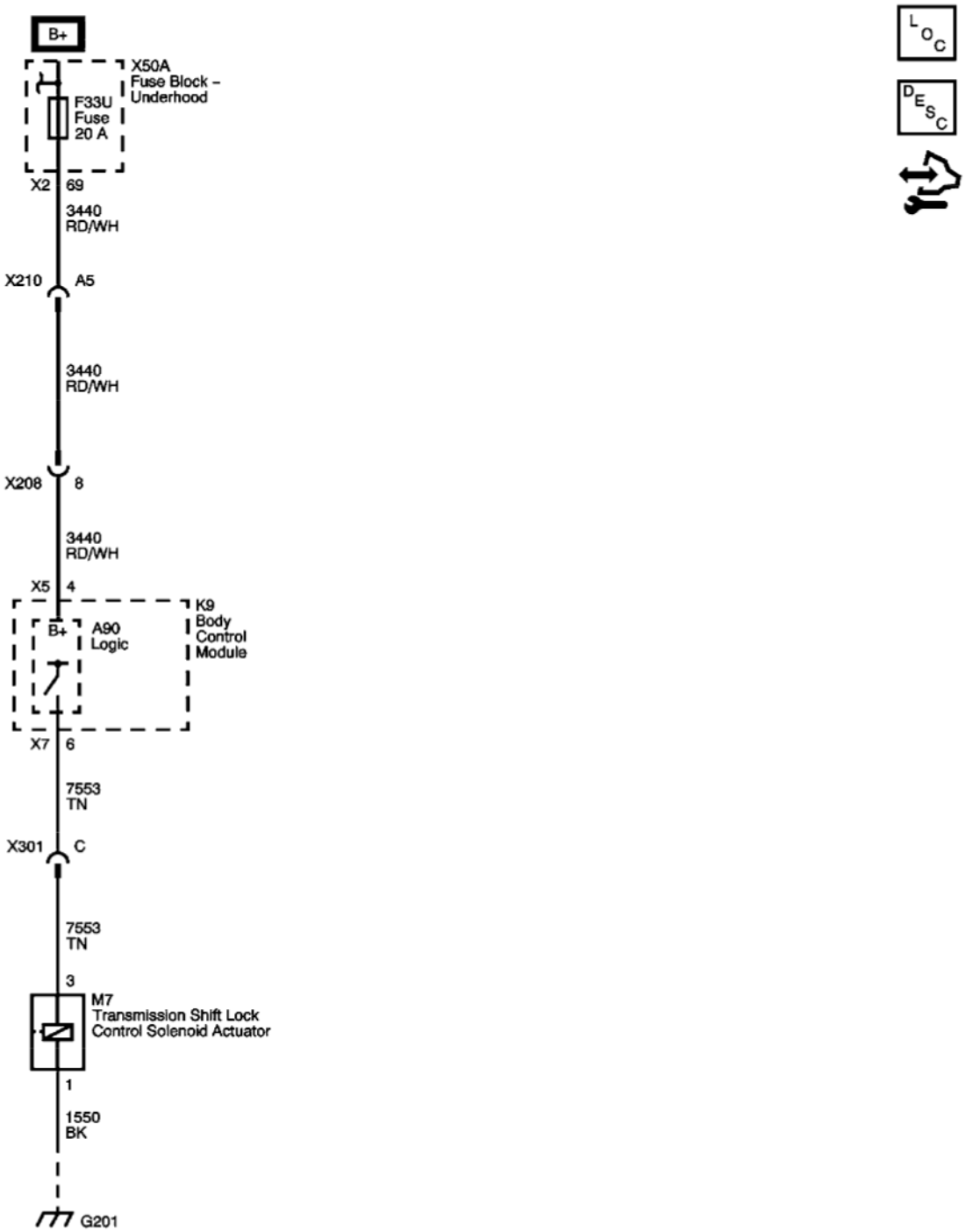

Fig. 1: Shift Lock Control
Courtesy of GENERAL MOTORS CORP.

DIAGNOSTIC INFORMATION AND PROCEDURES

DIAGNOSTIC CODE INDEX

cardiagn.com

DIAGNOSTIC CODE INDEX

DTC	Description
DTC B270A	B270A 01: Park Lock Solenoid Control Circuit Short to Voltage B270A 02: Park Lock Solenoid Control Circuit Short to Ground B270A 04: Park Lock Solenoid Control Circuit Open

DTC B270A

Diagnostic Instructions

- Perform the **Diagnostic System Check - Vehicle** prior to using this diagnostic procedure.
- Review **Strategy Based Diagnosis** for an overview of the diagnostic approach.
- **Diagnostic Procedure Instructions** provides an overview of each diagnostic category.

DTC Descriptors

DTC B270A 01

Park Lock Solenoid Control Circuit Short to Voltage

DTC B270A 02

Park Lock Solenoid Control Circuit Short to Ground

DTC B270A 04

Park Lock Solenoid Control Circuit Open

Diagnostic Fault Information

Circuit	Short to Ground	Open/High Resistance	Short to Voltage	Signal Performance
Control	B270A 02, 1	B270A 04, 1	B270A 01, 2	-
Ground	-	B270A 04, 1	-	-

1. Transmission shft control lever will not move from PARK with the brake pedal pressed.
2. Transmission shft control lever will move from PARK without the brake pedal pressed.

Circuit/System Description

The body control module controls the automatic transmission park lock control solenoid by providing a battery positive voltage to the solenoid. The body control module controls the voltage supply circuit to the automatic transmission park lock control solenoid. The BCM monitors the voltage and current flow of the control circuit.

Conditions for Running the DTC

- The ignition switch is in the ON position.

cardiagn.com

- The brake pedal is pressed.
- The transmission is in the PARK position.
- The DTC runs continuously once the above conditions are met.

Conditions for Setting the DTC

B270A 01

The body control module detects a short to voltage in the automatic transmission park lock control solenoid control circuit for 1 second.

B270A 02

The body control module detects a short to ground in the automatic transmission park lock control solenoid control circuit for 1 second.

B270A 04

The body control module detects an open in the automatic transmission park lock control solenoid control circuit for 1 second.

Action Taken When the DTC Sets

The body control module will not attempt to enable the voltage supply circuit of the automatic transmission park lock control solenoid until the next key cycle.

Conditions for Clearing the DTC

- A current DTC B270A will clear when the malfunction is no longer present and the ignition switch is cycled.
- A history DTC will clear after 100 ignition cycles with no current DTC active during the 100 ignition cycles.

Reference Information

Schematic Reference

Shift Lock Control Schematics

Connector End View Reference

Component Connector End Views

Description and Operation

Automatic Transmission Shift Lock Control Description and Operation

cardiagn.com

Electrical Information Reference

- **Circuit Testing**
- **Connector Repairs**
- **Testing for Intermittent Conditions and Poor Connections**
- **Wiring Repairs**

Scan Tool Reference

Control Module References for scan tool information

Circuit/System Verification

1. Ignition ON, observe the scan tool Brake Pedal Switch parameter while pressing and releasing the brake pedal. The parameter should change from ON to OFF when the brake pedal is depressed.
   - If the parameter does not change, refer to **Stop Lamps Malfunction** .
2. While pressing the brake pedal, the vehicle operator should be able to move the shifter lever out of the park position.

Circuit/System Testing

1. Ignition OFF, disconnect the harness connector at the M7 transmission shift lock control solenoid actuator.
2. Ignition OFF, test for less than 1.0 ohms between the ground circuit terminal 1 and ground.
   - If greater than the specified range, test the ground circuit for an open/high resistance.
3. Install a test lamp between the ground circuit terminal 1 and the control circuit terminal 3.
4. Ignition ON, command the scan tool Shift Lock Solenoid Actuator ON and OFF. The test lamp should turn ON and OFF when changing between the commanded states.
   - If the test lamp is always ON, test the control circuit for short to voltage. If the circuit tests normal, replace the K9 body control module.
   - If the test lamp is always OFF, test the control circuit for short to ground or an open/high resistance. If the circuit tests normal, replace the K9 body control module.
5. If all circuits test normal, test or replace the M7 transmission shift lock control solenoid actuator.

Repair Procedures

Perform the **Diagnostic Repair Verification** after completing the diagnostic procedure.

- **Transmission Control Replacement**
- **Control Module References** for BCM replacement, setup, and programming

SYMPTOMS - AUTOMATIC TRANSMISSION SHIFT LOCK CONTROL

IMPORTANT: The following steps must be completed before using the symptom tables.

cardiagn.com

1. Perform the **Diagnostic System Check - Vehicle** before using the Symptom Tables in order to verify that all of the following are true:
   - There are no DTCs set.
   - The control modules can communicate via the serial data link.
2. Review the system operation in order to familiarize yourself with the system functions. Refer to **Automatic Transmission Shift Lock Control Description and Operation**.

Visual/Physical Inspection

- Inspect for aftermarket devices which could affect the operation of the automatic transmission shift lock control. Refer to **Checking Aftermarket Accessories** .
- Inspect the easily accessible or visible system components for obvious damage or conditions which could cause the symptom.

Intermittent

Faulty electrical connections or wiring may be the cause of intermittent conditions. Refer to **Testing for Intermittent Conditions and Poor Connections**

Symptom List

Refer to a symptom diagnostic procedure in order to diagnose the symptom:

Transmission Control Lever Malfunction

TRANSMISSION CONTROL LEVER MALFUNCTION

Diagnostic Instructions

- Perform the **Diagnostic System Check - Vehicle** prior to using this diagnostic procedure.
- Review **Strategy Based Diagnosis** for an overview of the diagnostic approach.
- **Diagnostic Procedure Instructions** provides an overview of each diagnostic category.

Diagnostic Fault Information

Circuit	Short to Ground	Open/High Resistance	Short to Voltage	Signal Performance
Control	B270A 02, 1	B270A 04, 1	B270A 01, 2	-
Ground	-	B270A 04, 1	-	-

1. Transmission shft control lever will not move from PARK with the brake pedal pressed.
2. Transmission shft control lever will move from PARK without the brake pedal pressed.

Circuit/System Description

The body control module controls the automatic transmission park lock control solenoid by providing a battery

cardiagn.com

positive voltage to the solenoid. The body control module controls the voltage supply circuit to the automatic transmission park lock control solenoid. The BCM monitors the voltage and current flow of the control circuit.

Reference Information

Schematic Reference

Shift Lock Control Schematics

Connector End View Reference

Component Connector End Views

Description and Operation

Automatic Transmission Shift Lock Control Description and Operation

Electrical Information Reference

- **Circuit Testing**
- **Connector Repairs**
- **Testing for Intermittent Conditions and Poor Connections**
- **Wiring Repairs**

Scan Tool Reference

Control Module References for scan tool information

Circuit/System Verification

1. Ignition ON, observe the scan tool Brake Applied Output Signal parameter while pressing and releasing the brake pedal. The parameter should change from ON to OFF when the brake pedal is depressed.
    - If the parameter does not change, refer to **Stop Lamps Malfunction** .
2. While pressing the brake pedal, the vehicle operator should be able to move the shifter lever out of the park position.

Circuit/System Testing

1. Ignition OFF, disconnect the harness connector at the M7 transmission shift lock control solenoid actuator.
2. Ignition OFF, test for less than 1.0 ohms between the ground circuit terminal 1 and ground.
    - If greater than the specified range, test the ground circuit for an open/high resistance.
3. Install a test lamp between the ground circuit terminal 1 and the control circuit terminal 3.
4. Ignition ON, command the scan tool Shift Lock Solenoid Actuator ON and OFF. The test lamp should turn ON and OFF when changing between the commanded states.

cardiagn.com

- If the test lamp is always ON, test the control circuit for short to voltage. If the circuit tests normal, replace the K9 body control module.
- If the test lamp is always OFF, test the control circuit for short to ground or an open/high resistance. If the circuit tests normal, replace the K9 body control module.

5. If all circuits test normal, test or replace the M7 transmission shift lock control solenoid actuator.

Repair Procedures

Perform the **Diagnostic Repair Verification** after completing the diagnostic procedure.

- **Transmission Control Replacement**
- **Control Module References** for BCM replacement, setup, and programming

DESCRIPTION AND OPERATION

AUTOMATIC TRANSMISSION SHIFT LOCK CONTROL DESCRIPTION AND OPERATION

The automatic transmission park lock control system is a safety device that prevents an inadvertent shift out of PARK. The driver must press the brake pedal before moving the park lever out of the PARK position. The system consists of the following components:

- The automatic transmission shift lock control solenoid, is located within the automatic transmission shift lever.
- The body control module, which controls the voltage supply circuit of the park lock control solenoid.
- The engine control module.

The body control module controls the voltage to the automatic transmission shift lock control solenoid. The following conditions must be met before the body control module will supply voltage to the automatic transmission shift lock control solenoid.

- The ignition is in the ON position.
- The engine control module sends an input via serial data to the body control module indicating the transmission is in the PARK position.
- The body control module determines the brake pedal is applied according the brake pedal position.

Since the automatic transmission shift lock control solenoid is permanently grounded, the body control module supplies voltage to the automatic transmission shift lock control solenoid, unlocking the park lever allowing the driver to move the park lever out of the PARK position as the solenoid energizes. When the brake pedal is not applied, the body control module turns the control voltage output of the park lock control solenoid OFF, de-energizing the park lock control solenoid. The de-energized solenoid mechanically locks the park lever in the PARK position.

cardiagn.com

2010 TRANSMISSION

Automatic Transmission - 6L45/6L50/6L80/6L90 - Camaro

SPECIAL TOOLS AND EQUIPMENT

SPECIAL TOOLS

Illustration	Tool Number/Description
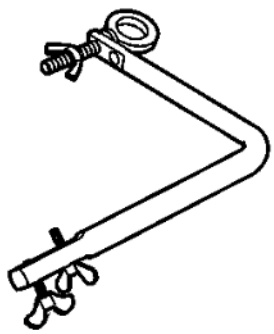	DT 47605 Holding Fixture Adapter
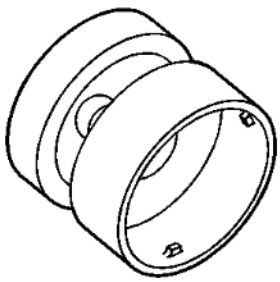	DT 47715 Electrical Connector Passage Sleeve Remover/Installer
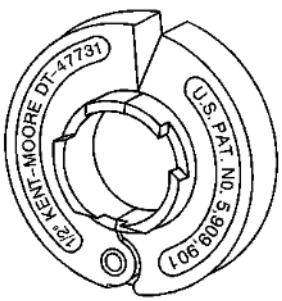	DT 47731 1/2 Inch Quick Connect Release Tool

cardiagn.com

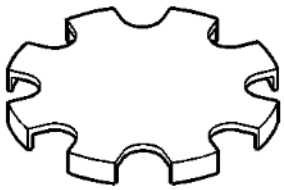	DT 47761 Clutch Spring Compressor
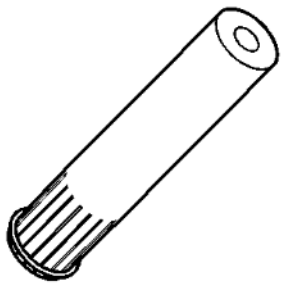	DT 47768-1 Seal Protector
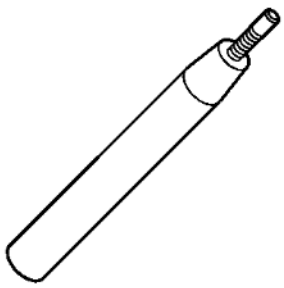	DT 47768-2 Seal Pusher
	DT 47768-3 Seal Sizer

cardiagn.com

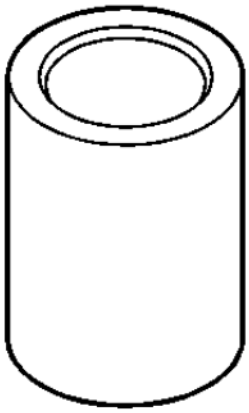	
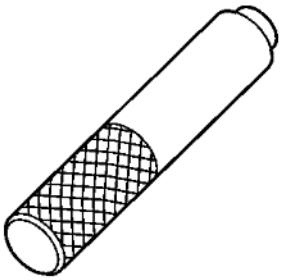	DT 47770 Seal Installer
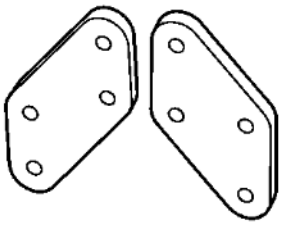	DT 47773 Snap Ring Pliers Adapter Set
	DT 47778-1 Low Clutch Sprag Retaining Ring Cone

cardiagn.com

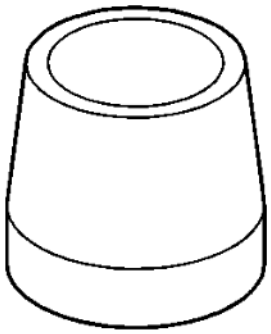	
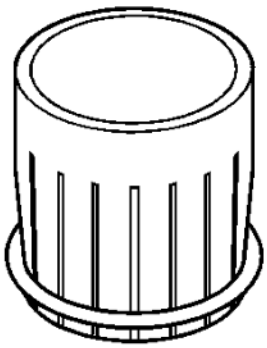	DT 47778-2 Low Clutch Sprag Retaining Ring Pusher
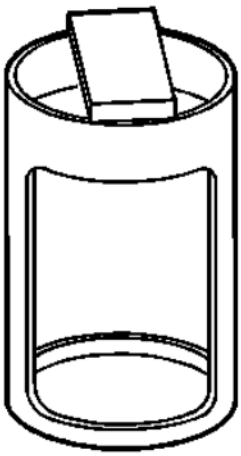	DT 47779 Clutch Spring Compressor

cardiagn.com

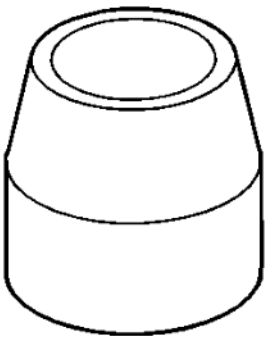	DT 47780 Low Clutch Sprag Seal Cone
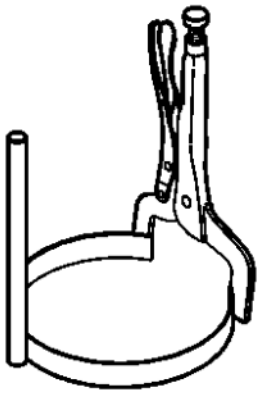	DT 47781 C1234 and 35R Clutch Assembly Installer
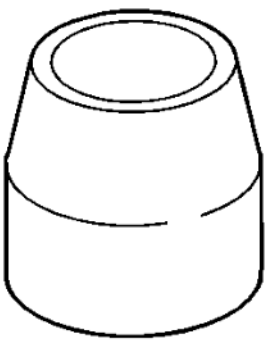	DT 47782-1 Retaining Ring Cone

cardiagn.com

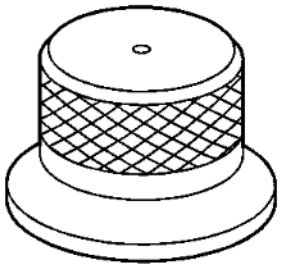	DT 47782-2 Retaining Ring Installer
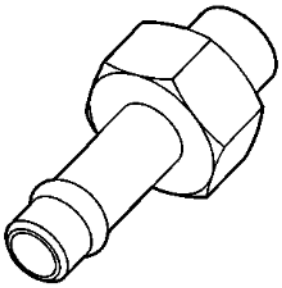	DT 47784 Transmission Fluid Fill Pan Adapter
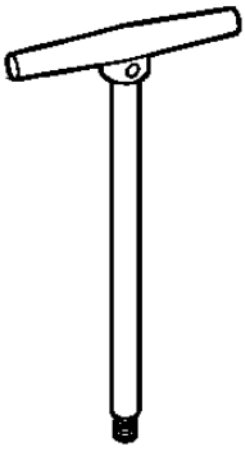	DT 47786 Output Carrier/Shaft Lifting Tool

cardiagn.com

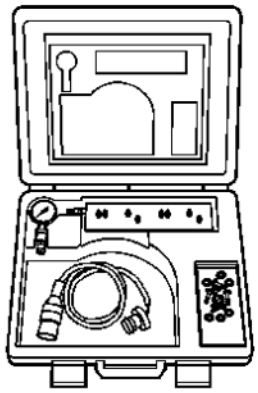	DT 47825 Control Solenoid Test Plate
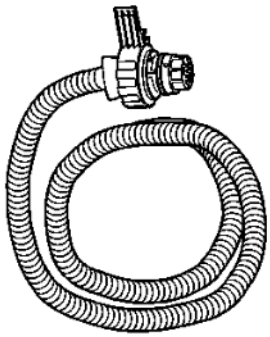	DT 47825-10 Jumper Harness
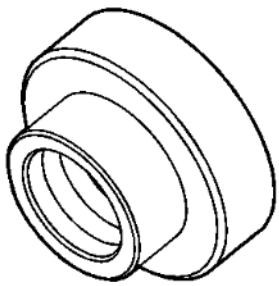	DT 47848 Seal Installer
	DT 47857 Bearing Installer

cardiagn.com

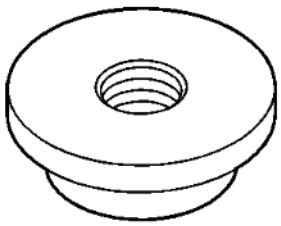	
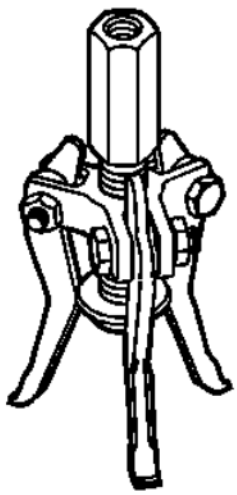	DT 47865 Bearing Remover
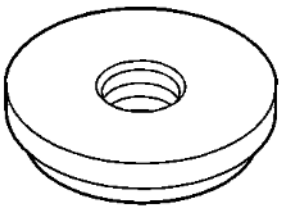	DT 47866 Bearing Installer
	DT 47867 Adjustable Clutch Spring Compressor

cardiagn.com

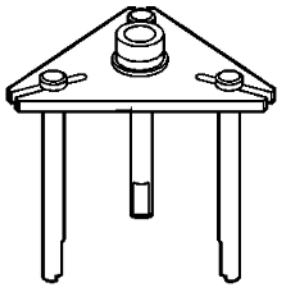	
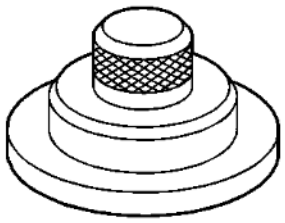	DT 47868-1 Pack Travel Weight
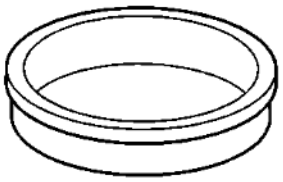	DT 47868-4 Clutch Travel Weight Adapter
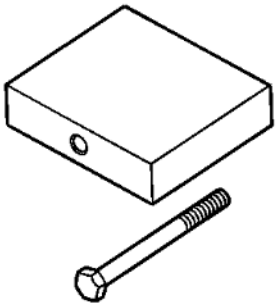	DT 47868-2 Magnetic Base Adapter

cardiagn.com

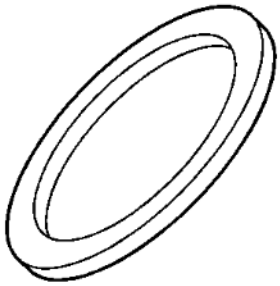	DT-47868-3 Clutch Travel Weight Adapter
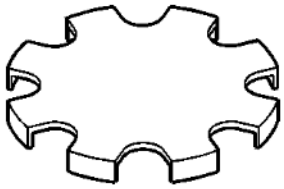	DT 48065 Clutch Spring Compressor
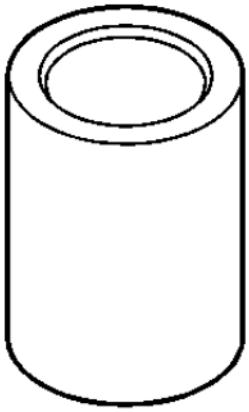	DT 48066-1 Seal Sizer
	DT 48066-2 Seal Pusher

cardiagn.com

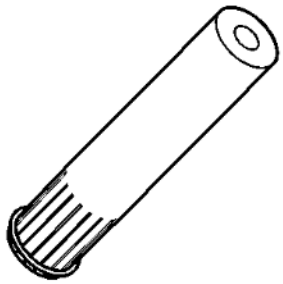	
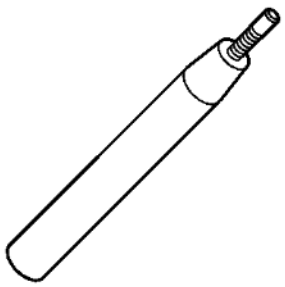	DT 48066-3 Seal Protector
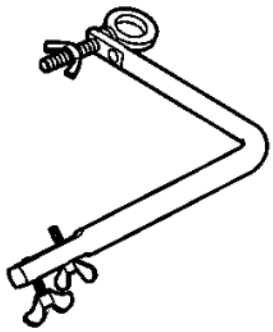	DT 48067 Holding Fixture Adapter
	DT 48068-1 Low Clutch Sprag Retaining Ring Cone

cardiagn.com

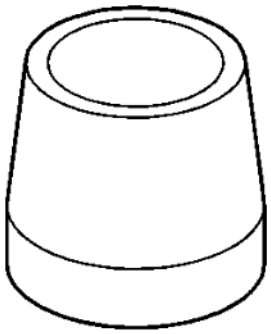	
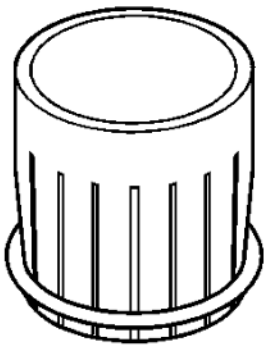	DT 48068-2 Low Clutch Sprag Retaining Ring Pusher
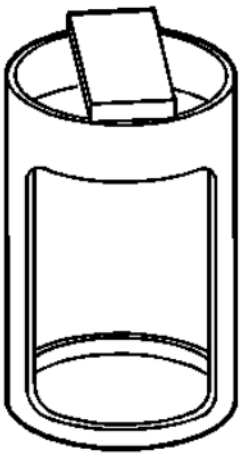	DT 48069 Clutch Spring Compressor

cardiagn.com

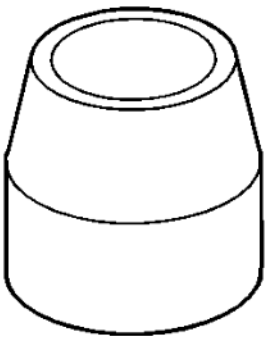	DT 48070 Low Clutch Sprag Seal Cone
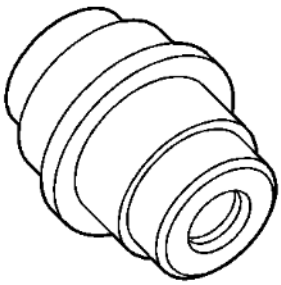	DT 48222 Bearing Installer
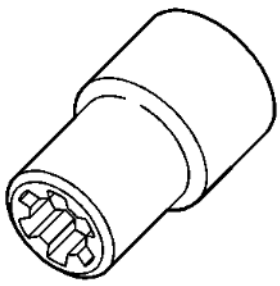	DT 48285 Valve Body Torx Plus Socket
	DT-48989 Holding Fixture

cardiagn.com

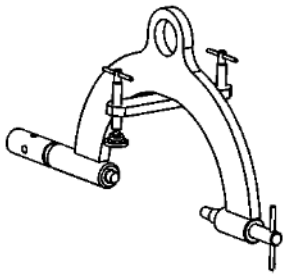	
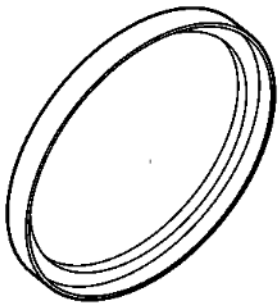	DT-49122 Low Clutch Spring Compressor Adapter
	DT 49291 Clutch Travel Air Passage Plug Kit
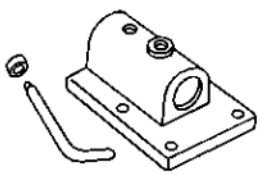	J 3289-20 Holding Fixture Base Assembly

cardiagn.com

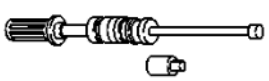	J 6125-B Slide Hammer
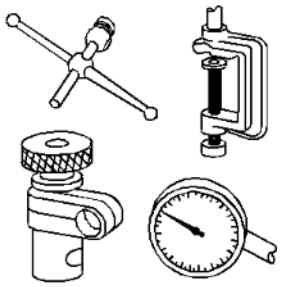	J 8001 Dial Indicator Set
	J 8092 Driver Handle
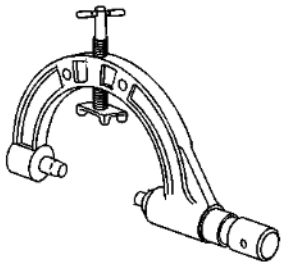	J 8763-B Holding Fixture
	J 21867 Pressure Gauge

cardiagn.com

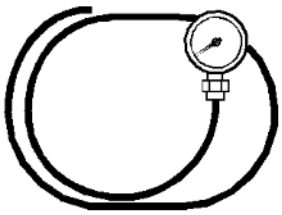	
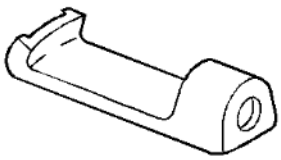	J 23129 Universal Seal Remover
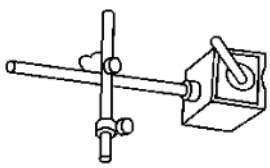	J 26900-13 Magnetic Base
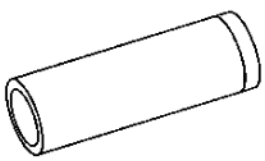	J 35512 Inner Pinion Bearing Installer
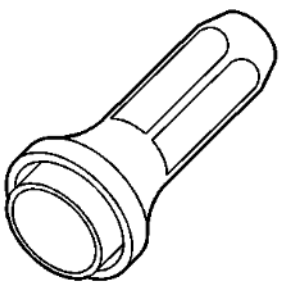	J 37212 Front Output Shaft Seal Installer

cardiagn.com

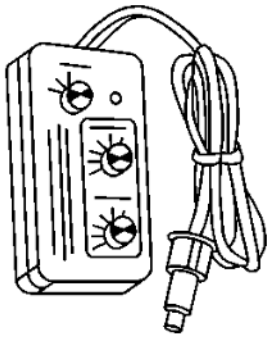	J 38522 Variable Signal Generator
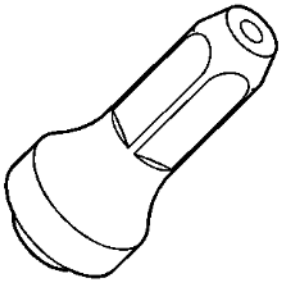	J 38693 Seal Installer
	J 38734 Intermediate Spring Compressor Adapter
	J 38869 Output Shaft Seal Installer

cardiagn.com

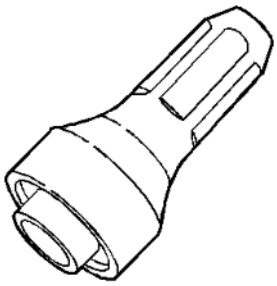	
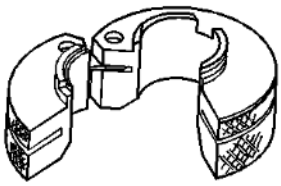	J 41623-B Cooler Quick Connect Tool
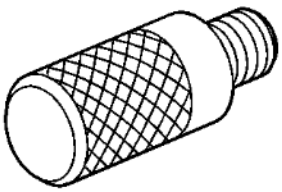	J 42183 Driver Handle
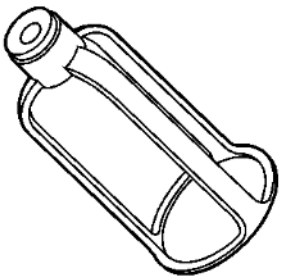	J 43074 Clutch Spring Compressor
	J 45000

cardiagn.com

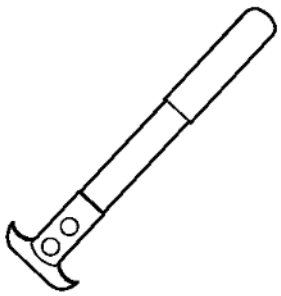	Seal Remover
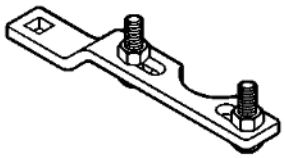	J 45012 Holding Fixture
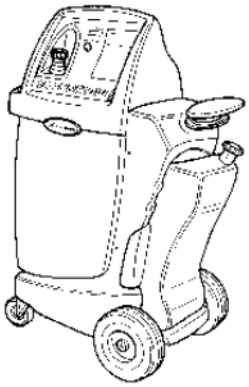	J 45096 Transmission Oil Cooling System Flush and Flow Test Tool
	J 45096-30 Transmission Cooler Flush Adapter

cardiagn.com

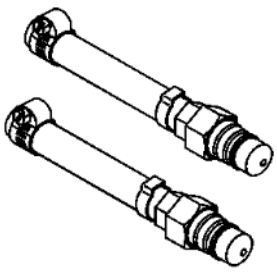	
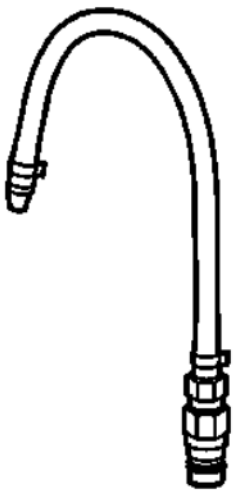	J 45096-40 Transflow Oil Fill Adapter
	J 45124 Remover Bridge

cardiagn.com

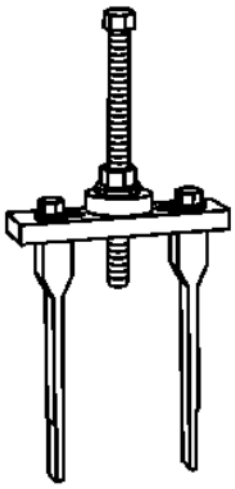	
	J 45126 Snap Ring Pliers
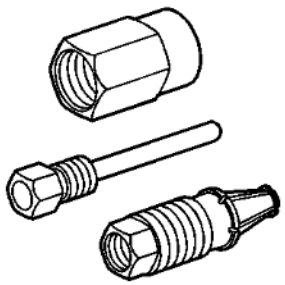	J 45201 Cooler Line Seal Remover
	J 46664

cardiagn.com

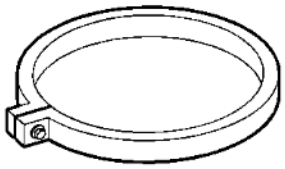	Pump Cover Alignment Tool

cardiagn.com

2010 TRANSMISSION

Automatic Transmission - 6L45/6L50/6L80/6L90 - Camaro

SPECIFICATIONS

FASTENER TIGHTENING SPECIFICATIONS

Application	*Ref No.	Quantity	Size	Specification	
				Metric	English
Auxiliary Transmission Oil Cooler Quick Connect Fittings	-	-	-	25 N.m	18 lb ft
Auxiliary Transmission Oil Cooler Brace to Skid Bar Bolt	-	-	-	25 N.m	18 lb ft
Auxiliary Transmission Oil Cooler Bracket to Body Nuts	-	-	-	8 N.m	71 lb in
Auxiliary Transmission Oil Cooler to Bracket Mounting Bolts	-	-	-	22 N.m	16 lb ft
Case Extension to Case Assembly	16	6	M10x1.5x40	55 N.m	41 lb ft
Control Solenoid Valve Assembly and Control Valve Lower Body Assembly to Control Valve Upper Body Assembly	310	6	M5x0.8x55	8 N.m	71 lb in
Control Solenoid Valve Assembly and Control Valve Lower Body Assembly to Control Valve Upper Body Assembly	309	10	M5x0.8x45	8 N.m	71 lb in
Control Solenoid Valve Heat Sink to Valve Body	312	2	M5x0.8x53	8 N.m	71 lb in
Control Valve Upper Body Assembly to Control Valve Lower Body Assembly	301	12	M5x0.8x36	8 N.m	71 lb in
Control (with Body and Valve) Valve Assembly to Case Assembly	22	6	M5x0.8x73	8 N.m	71 lb in
Fluid Pan Assembly to Case Assembly (6L80)	30	18	M6x1.0x20	9 N.m	80 lb in
Fluid Pan Assembly to Case Assembly (6L50)	30	17	M6x1.0x20	9 N.m	80 lb in
Fluid Pump Cover Assembly to Torque Converter Housing	231	13	M6 1.0x40	11 N.m	97 lb in
Input and Output Speed Sensor Assembly to Control Valve Upper Body Assembly	302	2	M6x1.0x20	12 N.m	106 lb in
Line Pressure Test Hole Plug to Torque Converter Housing	202	1	1/8-27 NPTF	11 N.m	97 lb in

cardiagn.com

Manual Shaft Detent Assembly to Valve Body	23	1	M6x1.0x14.5	12 N.m	106 lb in
Prop Shaft Trans Flange to Output Shaft	39	1	M22x1.5x14	105 N.m	77 lb ft
Shift Control Assembly to Body Nuts	-	4	-	9 N.m	80 lb in
Shift Control Knob Screw	-	1	-	2 N.m	18 lb in
Shift Control Linkage to Manual Shift Shaft Nut (AWD)	-	1	-	20 N.m	15 lb ft
Shift Control Linkage to Manual Shift Shaft Nut (RWD)	-	1	-	15 N.m	11 lb ft
Shift Control Linkage to Shift Control Assembly Nut	-	1	-	9 N.m	80 lb in
Torque Converter Housing Assembly to Case Assembly (6L50)	3	8	M8x1.25x50	31 N.m	23 lb ft
Torque Converter Housing Assembly to Case Assembly (6L80)	3	9	M10x1.5x50	72 N.m	53 lb ft
Torque Converter to Flywheel Bolts	-	3	-	63 N.m	46 lb ft
Trans Oil Level Check Plug to Fluid Pan Assembly	31	1	M12x1.75	25 N.m	18 lb ft
Transmission Oil Cooler Pipe Clip to Oil Pan Nuts	-	-	-	10 N.m	89 lb in
Transmission Oil Cooler Pipe Clip to Torque Tube Bolts	-	-	-	12 N.m	106 lb in
Transmission Oil Cooler Pipes to Transmission Bolt	-	-	-	16 N.m	12 lb ft
Transmission to Engine Block Bolts	-	10	-	50 N.m	37 lb ft
Transmission Support Assembly to Body Bolts	-	4	-	60 N.m	44 lb ft
Transmission Support Assembly to Transmission Bolts - RWD	-	2	-	60 N.m	44 lb ft
Transmission Support Assembly to Transmission Bolts - AWD	-	2	-	110 N.m	81 lb ft
*Reference number refers to the component callout number in Disassembled Views					

TRANSMISSION GENERAL SPECIFICATIONS

Name	6L50	6L80
RPO Codes	MYB	MYC
Production Location	Strasbourg, France Ypsilanti, Michigan (USA)	Ypsilanti, Michigan (USA)
Transmission Drive	Rear Wheel Drive	Rear Wheel Drive
1st Gear Ratio	4.065	4.027
2nd Gear Ratio	2.371	2.364

cardiagn.com

3rd Gear Ratio	1.551	1.532
4th Gear Ratio	1.157	1.152
5th Gear Ratio	0.853	0.852
6th Gear Ratio	0.674	0.667
Reverse	3.200	3.064
Torque Converter Size - Diameter of Torque Converter Turbine	245/258 mm	258/300 mm
Pressure Taps	Line Pressure	Line Pressure
Transmission Fluid Type	Dexron VI	Dexron VI
Transmission Type: 6	Six Forward Gears	Six Forward Gears
Transmission Type: L	Longitude Mount	Longitude Mount
Transmission Type: 50/80	Product Series	Product Series
Position Quadrant	P, R, N, D, M	P, R, N, D, S (some models)
Case Material	Die Cast Aluminum	Die Cast Aluminum
Transmission Net Weight (Approximate)	90 kg (198 lb)	95.1 kg (209.7 lb)
Maximum Trailer Towing Capacity	Refer to applicable owner's manual	Refer to applicable owner's manual

ADHESIVES, FLUIDS, LUBRICANTS, AND SEALERS

Application	Type of Material	GM Part Number	
		United States	Canada
Front Prop Shaft Flange Nut	Adhesive	89021297	10953488

FLUID CAPACITY SPECIFICATIONS

Application	Specification	
	Metric	English
Pan Removal and Filter Replacement - Approximate Capacity (6L50/6L80)	6.3 liters	6.7 quarts
Overhaul - Approximate Capacity (6L50)	9.3 liters	9.8 quarts
Overhaul - Approximate Capacity (6L80)	8.7 liters	9.2 quarts
Complete Trans System - Capacity (6L50)	10.8 liters	11.4 quarts
Complete Trans System - Capacity (6L80)	10.3 liters	10.9 quarts

FLUID PUMP SELECTIVE SPECIFICATIONS

Size Classification	Thickness (mm)	Thickness (in)

NOTE:

- **Rotor and slide must be chosen from the same size classification as the oil pump body.**
- **Allowable rotor and slide to fluid pump body end play is as follows:**

cardiagn.com

Specification:

- **Slide to Fluid Pump Body End Play - 0.020-0.051 mm (0.0008-0.0020 in)**
- **Rotor to Fluid Pump Body End Play - 0.020-0.051 mm (0.0008-0.0020 in)**

The fluid pump assembly has selective rotor and slide components. These components are chosen based on pump body dimensions. Fluid pump rotor and slide components are available in three size classifications (1, 2, 3) with the following tolerances:

Rotor Selection		
1	17.948-17.961	0.7066-0.7071
2	17.961-17.974	0.7071-0.7076
3	17.974-17.987	0.7076-0.7081
Slide Selection		
1	17.948-17.961	0.7066-0.7071
2	17.961-17.974	0.7071-0.7076
3	17.974-17.987	0.7076-0.7081

CLUTCH BACKING PLATE RETAINING RING SPECIFICATIONS (6L50)

3-5 Reverse Clutch

Clutch Pack Travel Specification - 1.20-1.74 mm (0.047-0.069 in)		
Retaining Ring Thickness		O.D. Color
Metric	English	
NOTE: **After measuring clutch pack travel, determine if the measurement is within the specification. If the measurement is not within the specification, measure the thickness of the existing retaining ring, and then choose a thicker or thinner retaining ring that will bring the measurement within specification.**		
2.24-2.34 mm	0.088-0.092 in	Purple - Purple
2.25-2.35 mm	0.089-0.093 in	Light Green - Light Green
2.47-2.57 mm	0.097-0.101 in	Gray - Gray
2.69-2.79 mm	0.106-0.110 in	Yellow - Yellow
2.91-3.01 mm	0.115-0.119 in	Orange - Orange
3.13-3.23 mm	0.123-0.127 in	Light Blue - Light Blue
3.35-3.45 mm	0.132-0.136 in	White - White
3.57-3.67 mm	0.141-0.144 in	Yellow - Purple
3.79-3.89 mm	0.149-0.153 in	Light Blue - Purple

1-2-3-4 Clutch

Clutch Pack Travel Specification - 1.50-1.98 mm (0.059-0.078 in)		
Retaining Ring Thickness		O.D. Color
Metric	English	
NOTE:		

cardiagn.com

After measuring clutch pack travel, determine if the measurement is within the specification. If the measurement is not within the specification, measure the thickness of the existing retaining ring, and then choose a thicker or thinner retaining ring that will bring the measurement within specification.		
2.25-2.35 mm	0.089-0.093 in	Light Green - Light Green
2.47-2.57 mm	0.097-0.101 in	Gray - Gray
2.69-2.79 mm	0.106-0.110 in	Yellow - Yellow
2.91-3.01 mm	0.115-0.119 in	Orange - Orange
3.13-3.23 mm	0.123-0.127 in	Light Blue - Light Blue
3.35-3.45 mm	0.132-0.136 in	White - White
3.57-3.67 mm	0.141-0.144 in	Yellow - Purple
3.79-3.89 mm	0.149-0.153 in	Light Blue - Purple

4-5-6 Clutch

Clutch Pack Travel Specification - 1.17-1.76 mm (0.046-0.069 in)		
Retaining Ring Thickness		**O.D. Color**
Metric	**English**	
NOTE: **After measuring clutch pack travel, determine if the measurement is within the specification. If the measurement is not within the specification, measure the thickness of the existing retaining ring, and then choose a thicker or thinner retaining ring that will bring the measurement within specification.**		
2.24-2.34 mm	0.088-0.092 in	Purple - Purple
2.52-2.62 mm	0.099-0.103 in	Light Green - Light Green
2.80-2.90 mm	0.110-0.114 in	Gray - Gray
3.08-3.18 mm	0.121-0.125 in	Yellow - Yellow
3.36-3.46 mm	0.132-0.136 in	Orange - Orange
3.64-3.74 mm	0.143-0.147 in	Light Blue - Light Blue
3.92-4.02 mm	0.154-0.158 in	White - White
4.20-4.30 mm	0.165-0.169 in	Yellow - Purple

2-6 Clutch

Clutch Pack Travel Specification - 1.20-1.96 mm (0.047-0.077 in)		
Retaining Ring Thickness		**O.D. Color**
Metric	**English**	
NOTE: **After measuring clutch pack travel, determine if the measurement is within the specification. If the measurement is not within the specification, measure the thickness of the existing retaining ring, and then choose a thicker or thinner retaining ring that will bring the measurement within specification.**		
1.64-1.74 mm	0.065-0.069 in	Orange
1.92-2.02 mm	0.076-0.080 in	Yellow Stripe
2.20-2.30 mm	0.087-0.091 in	Light Blue Stripe

cardiagn.com

2.48-2.58 mm	0.098-0.102 in	Purple Stripe
2.76-2.86 mm	0.109-0.113 in	Green

Low/Reverse Clutch

Clutch Pack Travel Specification - 1.65-2.33 mm (0.065-0.092 in)		
Retaining Ring Thickness		O.D. Color
Metric	English	
NOTE: After measuring clutch pack travel, determine if the measurement is within the specification. If the measurement is not within the specification, measure the thickness of the existing retaining ring, and then choose a thicker or thinner retaining ring that will bring the measurement within specification.		
1.98-2.08 mm	0.078-0.082 in	Orange
2.28-2.38 mm	0.090-0.094 in	Yellow Stripe
2.58-2.68 mm	0.102-0.106 in	Light Blue Stripe
2.88-2.98 mm	0.113-0.117 in	Purple Stripe
3.18-3.28 mm	0.125-0.129 in	Green

CLUTCH BACKING PLATE RETAINING RING SPECIFICATIONS (6L80)

3-5 Reverse Clutch

Clutch Pack Travel Specification - 1.21-1.79 mm (0.048-0.070 in)		
Retaining Ring Thickness		O.D. Color
Metric	English	
NOTE: After measuring clutch pack travel, determine if the measurement is within the specification. If the measurement is not within the specification, measure the thickness of the existing retaining ring, and then choose a thicker or thinner retaining ring that will bring the measurement within specification.		
1.61-1.71 mm	0.063-0.067 in	Gray
1.88-1.98 mm	0.074-0.078 in	Light Green
2.15-2.25 mm	0.085-0.089 in	Yellow
2.42-2.52 mm	0.095-0.099 in	None
2.69-2.79 mm	0.106-0.110 in	Purple

1-2-3-4 Clutch

Clutch Pack Travel Specification - 1.53-1.99 mm (0.060-0.078 in)		
Retaining Ring Thickness		O.D. Color
Metric	English	
NOTE: After measuring clutch pack travel, determine if the measurement is within the specification. If the measurement is not within the specification, measure the thickness of the existing retaining ring, and then choose a thicker or thinner retaining ring that will bring the measurement within		

cardiagn.com

specification.		
2.42-2.52 mm	0.095-0.099 in	None
2.69-2.79 mm	0.106-0.110 in	Purple
2.96-3.06 mm	0.117-0.120 in	Light Blue
3.23-3.33 mm	0.127-0.131 in	Orange
3.50-3.60 mm	0.138-0.142 in	White

4-5-6 Clutch

Clutch Pack Travel Specification - 1.28-1.89 mm (0.050-0.074 in)		
Retaining Ring Thickness		O.D. Color
Metric	English	
NOTE: After measuring clutch pack travel, determine if the measurement is within the specification. If the measurement is not within the specification, measure the thickness of the existing retaining ring, and then choose a thicker or thinner retaining ring that will bring the measurement within specification.		
1.60-1.70 mm	0.063-0.067 in	Yellow
2.02-2.12 mm	0.080-0.083 in	None
2.44-2.54 mm	0.096-0.100 in	Purple

Low/Reverse Clutch

Clutch Pack Travel Specification - 1.30-2.07 mm (0.051-0.081 in)		
Retaining Ring Thickness		O.D. Color
Metric	English	
NOTE: After measuring clutch pack travel, determine if the measurement is within the specification. If the measurement is not within the specification, measure the thickness of the existing retaining ring, and then choose a thicker or thinner retaining ring that will bring the measurement within specification.		
1.85-1.95 mm	0.073-0.077 in	Yellow
2.26-2.36 mm	0.089-0.093 in	None
2.67-2.77 mm	0.105-0.109 in	Purple

RANGE REFERENCE

Range Reference Table

Range	Park	Reverse	Neutral	Drive						
				1st Braking	1st	2nd	3rd	4th	5th	6th
1-2-3-4 Clutch	-	-	-	Applied	Applied	Applied	Applied	Applied	-	-
3-5 Reverse	-	Applied	-	-	-	-	Applied	-	Applied	-

cardiagn.com

Clutch										
4-5-6 Clutch	-	-	-	-	-	-	-	Applied	Applied	Applied
2-6 Clutch	-	-	-	-	-	Applied	-	-	-	Applied
Low and Reverse Clutch	Applied*	Applied	Applied*	Applied	-	-	-	-	-	-
Low Clutch Sprag	-	-	-	Holding	Holding	-	-	-	-	-
* = Applied with NO load										

SHIFT SOLENOID VALVE STATE AND GEAR RATIO

Gear	Shift SOL 1	Shift SOL 2	1-2-3-4 CL PC SOL 5 N.L.	2-6 CL PC SOL 4 N.L.	3-5 REV CL PC SOL 2 N.H.	LOW REV 4-5-6 CL PC SOL 3 N.H.	6L45 6L50 Gear Ratio	6L80 6L90 Gear Ratio
Park	ON	ON	OFF	OFF	OFF	ON	-	-
Reverse	ON	OFF	OFF	OFF	ON	ON	3.200	3.064
Neutral	ON	ON	OFF	OFF	OFF	ON	-	-
1st Braking	ON	ON	ON	OFF	OFF	ON	4.065	4.027
1st	OFF	ON	ON	OFF	OFF	OFF	4.065	4.027
2nd	OFF	ON	ON	ON	OFF	OFF	2.371	2.364
3rd	OFF	ON	ON	OFF	ON	OFF	1.551	1.532
4th	OFF	ON	ON	OFF	OFF	ON	1.157	1.152
5th	OFF	ON	OFF	OFF	ON	ON	0.853	0.852
6th	OFF	ON	OFF	ON	OFF	ON	0.674	0.667
For shift solenoids 1 and 2, "ON" = Solenoid Energized (Pressurized) "OFF" = Solenoid De-energized (No Pressure). For pressure control solenoids, "ON" = Pressurized, "OFF" = No Pressure								

TRANSMISSION FLUID PRESSURE SWITCH LOGIC

Gear	TFP Switch States			
	TFP SW1	*TFP SW3	TFP SW4	TFP SW5
Park	High	Low	Low	Low
Reverse	Low	Low	Low	Low
Neutral	High	Low	Low	Low
Drive 1st - Engine Braking	High	High	Low	Low
Drive 1st	High	High	Low	High

cardiagn.com

Drive 2nd	High	Low	Low	High
Drive 3rd	Low	High	Low	High
Drive 4th	High	High	Low	Low
Drive 5th	Low	High	High	Low
Drive 6th	High	High	High	Low
Drive 6th (Possible additional gear state)	High	Low	High	Low

High = 12V (Switch Open or Pressurized)
Low = 0V (Switch Closed or No Pressure)
Note: All TFP switches are normally closed (NC)
*TFP switch 2 does not exist

TRANSMISSION INTERNAL MODE SWITCH LOGIC

Gear Selector Position	Signal A	Signal B	Signal C	Signal P
Park	LOW	HI	HI	LOW
Park/Reverse	LOW	LOW	HI	LOW
Reverse	LOW	LOW	HI	HI
Reverse/Neutral	HI	LOW	HI	HI
Neutral	HI	LOW	HI	LOW
Neutral/Drive 6	HI	LOW	LOW	LOW
Drive 6	HI	LOW	LOW	HI
Drive 6/Drive 4	LOW	LOW	LOW	HI
Drive 4	LOW	LOW	LOW	LOW
Drive 4/Drive 3	LOW	HI	LOW	LOW
Drive 3	LOW	HI	LOW	HI
Drive 3/Drive 2	HI	HI	LOW	HI
Drive 2	HI	HI	LOW	LOW
Open	HI	HI	HI	HI
Invalid	HI	HI	HI	LOW
Invalid	LOW	HI	HI	HI

HI = Ignition voltage
LOW = 0 volts

cardiagn.com

2010 TRANSMISSION

Automatic Transmission - 6L45/6L50/6L80/6L90 - Camaro

SYMPTOMS - AUTOMATIC TRANSMISSION

IMPORTANT: Use the symptom tables only if the following conditions are met:

- **Refer to Diagnostic Starting Point - Vehicle .**
- **There are no DTCs set.**
- **The control modules can communicate via the serial data link.**
- **Review the system operation in order to familiarize yourself with the system functions. Refer to Transmission General Description and Transmission Component and System Description .**

VISUAL/PHYSICAL INSPECTION

Inspect the easily accessible or visible system components for obvious damage or conditions which could cause the symptom.

INTERMITTENT

Faulty electrical connections or wiring may be the cause of intermittent conditions. Refer to **Testing for Intermittent Conditions and Poor Connections** .

SYMPTOM LIST

Refer to a symptom diagnostic procedure from the following list in order to diagnose the symptom:

- Fluid Diagnosis
  - **Transmission Fluid Level and Condition Check**
  - **Fluid Pressure High or Low**
  - **Automatic Transmission Fluid Leaks**
  - **Fluid Leak Diagnosis**
- Noise and Vibration Diagnosis
  - **Whine/Growl Noise That Changes with Vehicle Speed**
  - **Noise in First or Reverse Gear**
  - **Noise in First, Second, Third, Fourth, Fifth, or Reverse Gear**
  - **Noise in First, Second, Sixth, or Reverse Gear**
  - **Noise in Second or Sixth Gear**
  - **Noise During 3-4 or 4-3 Shifts**
  - **Noise in Fourth, Fifth, or Sixth Gear**

cardiagn.com

  - **Vibration**
  - **Vibration in Second, Third, Fourth, Fifth, or Sixth Gear**
  - **Flex Plate/Torque Converter Vibration Test**
  - **Noise and Vibration Analysis**
- Range Performance Diagnosis
  - **No Park or Drive**
  - **No Drive in All Ranges**
  - **No Reverse Gear**
- Shift Quality Feel Diagnosis
  - **Harsh Garage Shift**
  - **Harsh, Soft, Delayed or Slipping First or Reverse Gear**
  - **Harsh, Soft, Delayed or Slipping 1-2-3-4 Shift**
  - **Harsh, Soft, Delayed or Slipping 4-5-6 Shift**
  - **Harsh, Soft, Delayed or Slipping Third, Fifth, or Reverse Gear**
  - **Harsh, Soft, Delayed or Slipping Second or Sixth Gear**
- Shift Pattern
  - **No First Gear**
  - **No First and Reverse Gears**
  - **No First, Second, Third, and Fourth Gear**
  - **No Second and Sixth Gear**
  - **No Fourth, Fifth, and Sixth Gear**
  - **No Third, Fifth, and Reverse Gear**
- Torque Converter Diagnosis
  - **Torque Converter Diagnosis**
  - **No Torque Converter Clutch Apply**
  - **No Torque Converter Clutch Release**
- Symptom Not Found or No Symptom Detected
  - **Transmission Fluid Level and Condition Check**
  - **Road Test**
  - **Line Pressure Check**

CONTROL SOLENOID VALVE AND TRANSMISSION CONTROL MODULE ASSEMBLY INSPECTION

During transmission manufacturing and assembly, small pieces of material may become dislodged. This may also happen after the transmission has been in operation for a period of time. Because the transmission control solenoid valve assembly is continually immersed in transmission oil, material particles or slivers of metallic debris may become deposited on the control solenoid valve assembly. Often this material is very small and can be hard to see. For this reason, it is important that the control solenoid valve assembly be thoroughly inspected.

cardiagn.com

A thorough inspection of the control solenoid valve assembly should include the following:

- Clean inspection area - Like all transmission service work, cleanliness is very important. Be sure the area where you are inspecting is free of dust and dirt. Have non-glossy white or lightly colored paper down on the inspection surface. This will enhance the lighting and help to see particles that have come from the control solenoid valve assembly.
- Lighting - Good lighting is necessary for a thorough inspection. If shop lighting is limited, use natural light. A second source of lighting, such as a penlight, is helpful for close examination. A magnifying glass can also be helpful to see into difficult places.
- Cleaning - Clean shop air may be used for spot cleaning as long as the debris can be removed with out it becoming lodged somewhere else. It is best to rinse or flush particles away with GM Brake Parts Cleaner. Do not use a cloth rag to wipe the control solenoid valve assembly, as it could leave lint behind.

CONTROL SOLENOID VALVE ASSEMBLY HOUSING AND FILTER PLATE

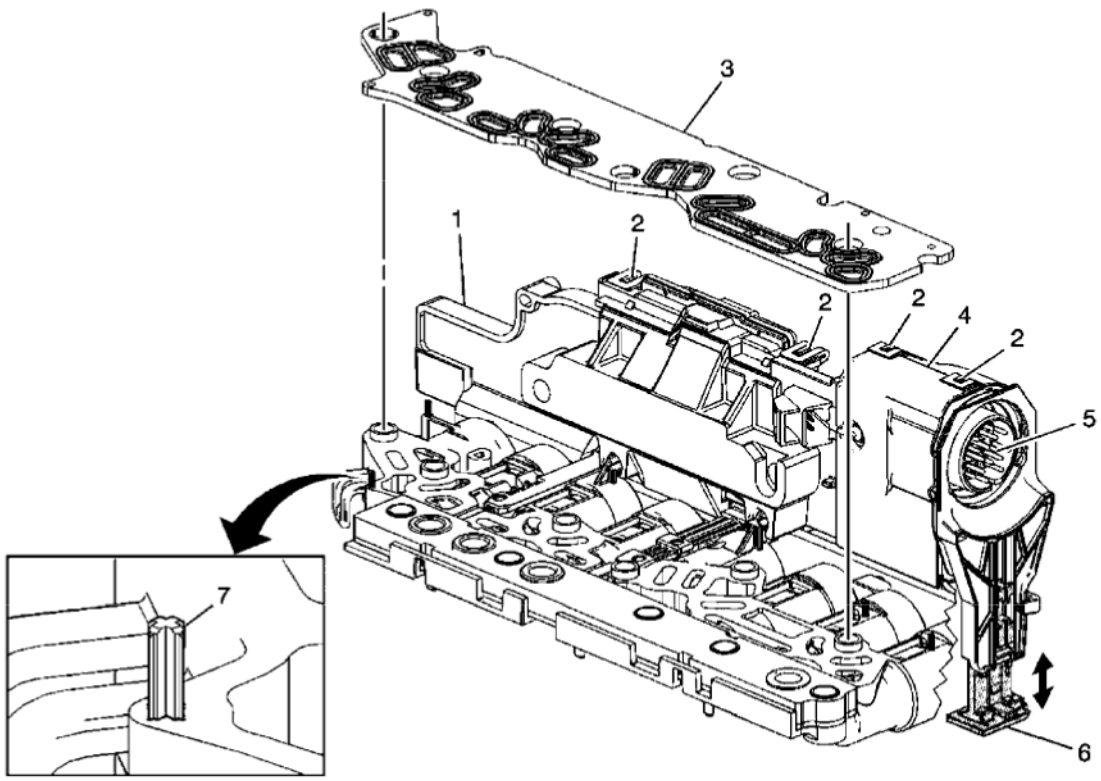

Fig. 1: View Of Control Solenoid (W/Body & TCM), Valve Assembly Housing & Filter Plate
Courtesy of GENERAL MOTORS CORP.

NOTE: At the end of the inspection process where debris is found, it is required the transmission fluid and filter be replaced. Any time the control solenoid valve assembly has been removed, it is mandatory the filter plate assembly (3) be replaced.

cardiagn.com

1. Inspect the control solenoid valve assembly housing (1) for damage, cracks, or parting seam (4) separation. Inspect all housing lock tabs (2). Any defect will need to be evaluated for critical operation. Ensure all screws along the control solenoid valve assembly housing are present. Remove and closely examine the filter plate assembly (3) for sediment or debris attached to the screen. If sediment or debris is found on the filter screen, be sure to inspect the solenoid supply or control ports that correspond to location of the debris on the filter plate screen. Inspect the filter plate gasket for proper sealing. If poor sealing is found, be sure to inspect the affected solenoid fluid port entrance and exit for sediment or debris deposits. Thoroughly flush the solenoid cavity with GM Brake Parts Cleaner and replace the filter plate assembly (3). It is not necessary to remove all clutch plate soot from the entire surface of the control solenoid valve assembly housing. Inspect the control solenoid valve assembly filter plate retaining tabs (7). Broken or missing tabs do not require the control solenoid valve assembly be replaced. The filter plate can still be adequately aligned using the bolt hole sleeves. Early design control solenoid valve assembly use four filter plate retaining tabs (7).
2. Examine the 16-way connector (5) cavity for material that could make contact between the electrical pins. Also, look for bent or loose connector pins and ensure the connector lock (6) is functioning and is in good condition.

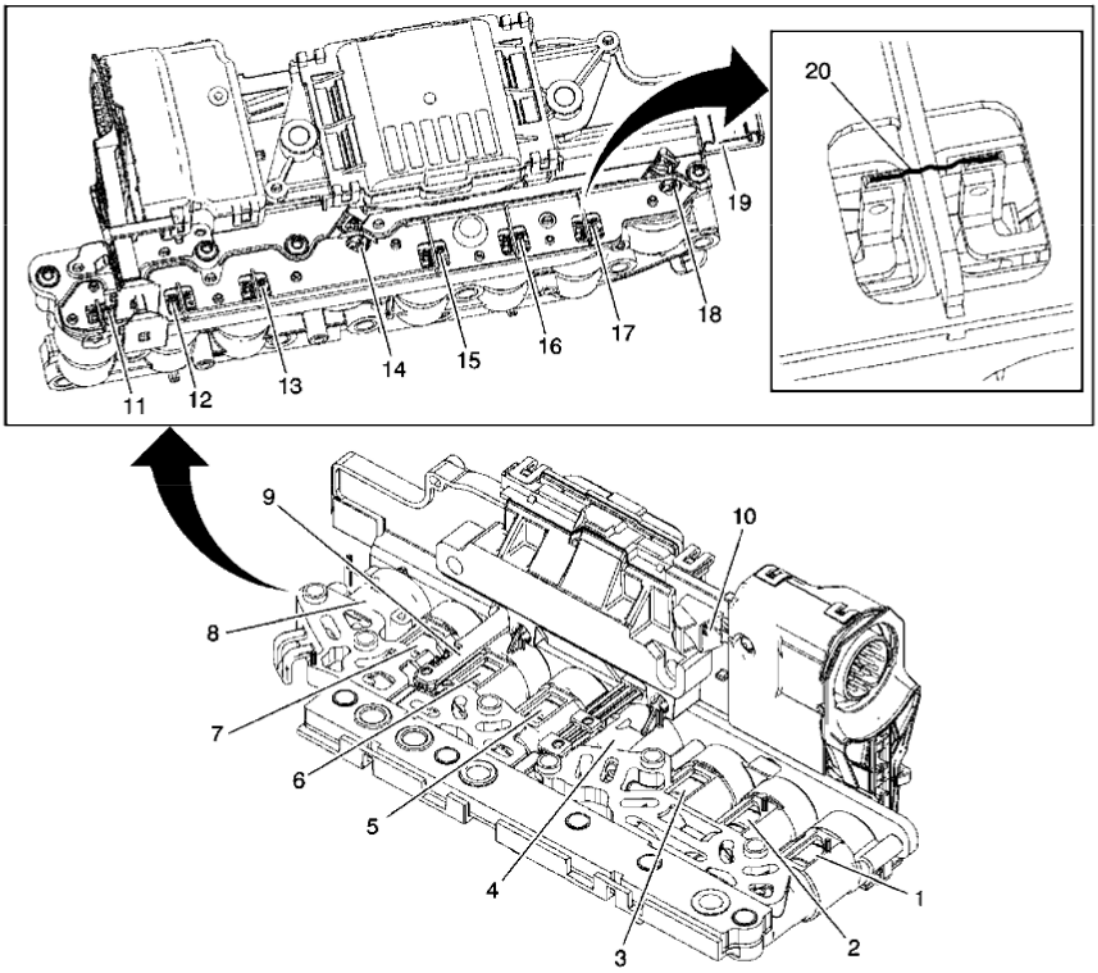

Fig. 2: Control Solenoid Valve Assembly Inspection - Solenoids, Sensors & Contacts

cardiagn.com

Courtesy of GENERAL MOTORS CORP.

Callout	Component Name
1	Pressure Control Solenoid 3 (PCS3)
2	Pressure Control Solenoid 4 (PCS4)
3	Pressure Control Solenoid 2 (PCS2)
4	Shift Solenoid 2 (SS2)
5	Torque Converter Clutch (TCC) Solenoid
6	Pressure Control Solenoid 5 (PCS5)
7	Pressure Control Solenoid 1 (PCS1)
8	Shift Solenoid 1 (SS1)
9	Transmission Fluid Temperature (TFT) Sensor
10	Input Speed Sensor/Output Speed Sensor (ISS/OSS) Connector
11	Pressure Control Solenoid 3 (PCS3) Contact Lead
12	Pressure Control Solenoid 4 (PCS4) Contact Lead
13	Pressure Control Solenoid 2 (PCS2) Contact Lead
14	Shift Solenoid 2 (SS2) Contact Lead
15	Torque Converter Clutch (TCC) Solenoid Contact Lead
16	Pressure Control Solenoid 5 (PCS5) Contact Lead
17	Pressure Control Solenoid 1 (PCS1) Contact Lead
18	Shift Solenoid 1 (SS1) Contact Lead
19	Internal Mode Switch (IMS) Connector
20	Metallic Slivers, Debris or Sediment

1. With the filter plate removed, the control solenoid valve assemblies (1-8) can be inspected. Closely examine the solenoid electrical contact lead solder connections (11-18). Look for material that could make contact between the electrical leads. This is where material particles, metallic slivers, debris or sediment (20) can collect. Carefully inspect all sixteen solenoid electrical contact leads (11-18) for build up of material that could form an electrical short. Inspect the solenoid contact leads (11-18) for terminal separation or weak solder joints. Thoroughly flush away all debris with GM Brake Parts Cleaner.
2. Inspect the transmission fluid temperature (TFT) sensor (9), the input speed sensor/output speed sensor (ISS/OSS) connector (10), and the internal mode switch (IMS) connector (19). Look inside the connector cavities for material that could make contact between the electrical pins. Also look for bent or loose electrical pins. If the TFT sensor (9) is heavily coated with clutch soot, rinse with GM Brake Parts Cleaner.
3. Check the resistance of the solenoids at room temperature and verify with the following table. If the resistance is not within the expected range, carefully inspect the solenoid contact leads.

Solenoid Resistance

Solenoid Name	Illustration Number of Solenoid Lead	Expected Resistance (Ohms)
Pressure Control Solenoid 3 (PCS3)	11	4.5-5.5 ohms

cardiagn.com

Pressure Control Solenoid 4 (PCS4)	12	4.5-5.5 ohms
Pressure Control Solenoid 2 (PCS2)	13	4.5-5.5 ohms
Shift Solenoid 2 (SS2)	14	23.5-24.5 ohms
Torque Converter Clutch (TCC) Solenoid	15	4.5-5.5 ohms
Pressure Control Solenoid 5 (PCS5)	16	4.5-5.5 ohms
Pressure Control Solenoid 1 (PCS1)	17	4.5-5.5 ohms
Shift Solenoid 1 (SS1)	18	23.5-24.5 ohms

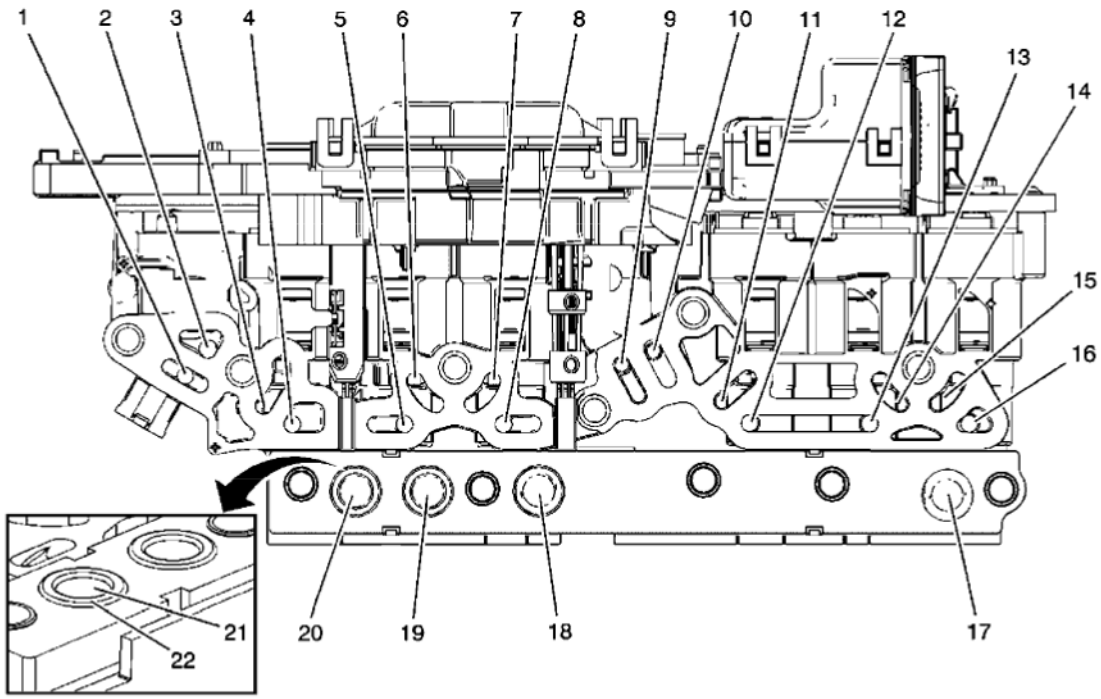

Fig. 3: Control Solenoid Valve Assembly Supply & Control Fluid Inspection
Courtesy of GENERAL MOTORS CORP.

Callout	Component Name
1	Shift Solenoid 1 Supply Port
2	Shift Solenoid 1 Control Port
3	Line Pressure Control Solenoid 1 Control Port
4	Line Pressure Control Solenoid 1 Supply Port
5	Pressure Control Solenoid 5 Supply Port
6	Pressure Control Solenoid 5 Control Port

cardiagn.com

7	TCC Pressure Control Solenoid Control Port
8	TCC Pressure Control Solenoid Supply Port
9	Shift Solenoid 2 Supply Port
10	Shift Solenoid 2 Control Port
11	Pressure Control Solenoid 2 Control Port
12	Pressure Control Solenoid 2 Supply Port
13	Pressure Control Solenoid 4 Supply Port
14	Pressure Control Solenoid 4 Control Port
15	Pressure Control Solenoid 3 Control Port
16	Pressure Control Solenoid 3 Supply Port
17	Transmission Fluid Pressure (TFP) Switch 5
18	Transmission Fluid Pressure (TFP) Switch 3
19	Transmission Fluid Pressure (TFP) Switch 1
20	Transmission Fluid Pressure (TFP) Switch 4
21	TFP Switch Membrane
22	TFP Switch Gasket

1. With the filter plate removed, the control solenoid valve fluid supply and control ports (1-16) can be inspected. Solenoid openings are identified in the illustration. Inspect the following supply and control opening for material particles, metallic slivers, debris, or sediment. Look into solenoid fluid supply openings 1, 4, 5, 8, 9, 12, 13, and 16. Look inside the solenoid fluid control ports 2, 3, 6, 7, 10, 11, 14 and 15. If sediment or debris is found in any one of these port openings, look for holes or tears in the filter plate screen. The filter plate gasket may be leaking caused by a torn gasket, poor sealing, or a deformed plate. As necessary, thoroughly flush away all debris in the supply and control fluid ports with GM Brake Parts Cleaner.
2. Inspect the four transmission fluid pressure (TFP) switches (17-20) for trapped debris or sediment. Any sediment or debris found under a switch membrane requires the control solenoid valve assembly to be replaced. Check all TFP switch membranes (21) for cracks, cuts or pin holes. Ensure all TFP switch gaskets (22) are secure and are not deformed, torn, or improperly seated. As necessary, thoroughly rinse debris and sediment from the top of the switches. It is not necessary to remove the clutch plate soot from the entire surface of the control solenoid valve assembly housing.

CONTROL SOLENOID VALVE AND TRANSMISSION CONTROL MODULE ASSEMBLY INPUT SHAFT SPEED/OUTPUT SHAFT SPEED INPUT TEST

Special Tools

- **DT-47825-10:** Jumper Harness
- **J 35616:** GM-Approved Terminal Test Kit
- **J 38522:** Variable Signal Generator

cardiagn.com

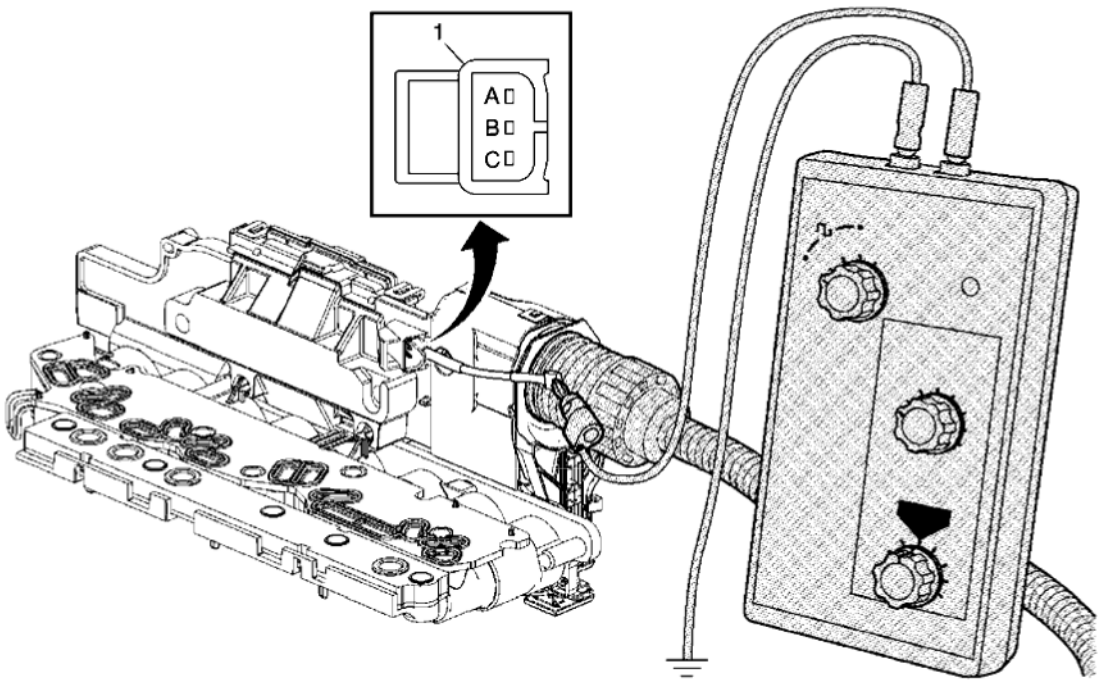

Fig. 4: View Of Special Tools
Courtesy of GENERAL MOTORS CORP.

The purpose of this test is to provide a simulated input/output speed sensor (ISS/OSS) signal to the control solenoid valve assembly ISS/OSS input circuits.

Transmission Input Speed Sensor

1. Ignition OFF, connect the **DT-47825-10:** jumper harness between the vehicle wire harness electrical connector, and the control solenoid valve assembly electrical connector.
2. Disconnect the ISS/OSS wiring harness connector X3 (1) from the control solenoid valve assembly.
3. Ignition ON, test for 8.3-9.3 volts between the ISS/OSS voltage circuit terminal B on the control solenoid valve assembly and ground at the transmission case.
    - If not within the specified range, replace the control solenoid valve assembly. Refer to **Control Solenoid Valve and Transmission Control Module Assembly Replacement** .
4. Using the **J 35616:** terminal test kit, connect the **J 38522:** variable signal generator red lead to the ISS signal circuit terminal A on the TCM.
5. Connect the black lead from the **J 38522:** variable signal generator to ground at the transmission case.
6. Set the **J 38522:** variable signal generator to 5 volts, the frequency to 300, and the percent duty cycle to 50 or the normal position.
7. Ignition ON, verify with a scan tool the Transmission ISS parameter is between 760-785 RPM.
    - If not within the specified range, replace the control solenoid valve assembly. Refer to **Control Solenoid Valve and Transmission Control Module Assembly Replacement** .

cardiagn.com

Transmission Output Speed Sensor

1. Ignition OFF, connect the **DT-47825-10:** jumper harness between the vehicle wire harness electrical connector, and the control solenoid valve assembly electrical connector.
2. Disconnect the ISS/OSS wiring harness connector X3 (1) from the control solenoid valve assembly.
3. Ignition ON, test for 8.3-9.3 volts between the ISS/OSS voltage circuit terminal B on the control solenoid valve assembly and ground at the transmission case.
    - If not within the specified range, replace the control solenoid valve assembly. Refer to **Control Solenoid Valve and Transmission Control Module Assembly Replacement** .
4. Using the **J 35616:** terminal test kit, connect the **J 38522:** variable signal generator red lead to the OSS signal circuit terminal C on the TCM.
5. Connect the black lead from the **J 38522:** variable signal generator to ground at the transmission case.
6. Set the **J 38522:** variable signal generator to 5 volts, the frequency to 300, and the percent duty cycle to 50 or the normal position.
7. Ignition ON, verify with a scan tool the Transmission OSS parameter is between 495-505 RPM.
    - If not within the specified range, replace the control solenoid valve assembly. Refer to **Control Solenoid Valve and Transmission Control Module Assembly Replacement** .

CONTROL SOLENOID VALVE AND TRANSMISSION CONTROL MODULE ASSEMBLY SOLENOID PERFORMANCE TEST

SPECIAL TOOLS

DT-47825 Control Solenoid Test Plate. See **Special Tools** .

The purpose of this procedure is to test the operation of the control solenoid valve assembly for a stuck open or stuck closed solenoid. The **DT-47825** bolts to the mounting surface of the control solenoid valve assembly. See **Special Tools** . Pressurized air is routed into the aluminum test block, through the control solenoid valve assembly, and back to the gauge on the test block.

A pressure gauge is used to measure the pressurized air through the solenoid control ports. When a solenoid is commanded ON with the scan tool, pressurized air flows through the solenoid control port and displays on the pressure gauge. When the solenoid is commanded OFF with the scan tool, there is no pressurized air flow through the solenoid control port to the pressure gauge. The recommended shop air pressure for this test is 620.5-690.4 Kpa (90-100 psi).

cardiagn.com

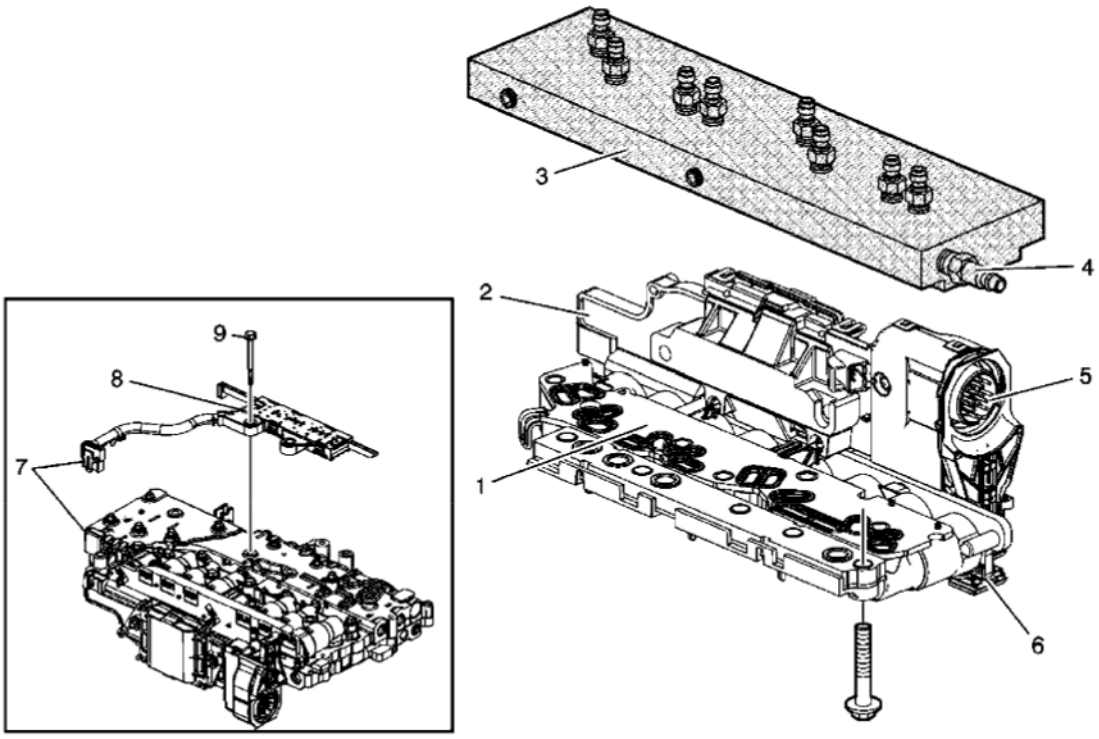

Fig. 5: View Of Control Solenoid (W/Body & TCM) Valve Assembly With Control Solenoid Test Plate
Courtesy of GENERAL MOTORS CORP.

Callout	Component Name
1	Filter Plate Assembly
2	Control Solenoid Valve Assembly
3	DT-47825 Control Solenoid Test Plate
4	Air Connection Port
5	Transmission 16-Way Pass-Through Connector
6	Electrical Connector Slide Lock
7	A/Trans Manual Shift Shaft Position Switch Assembly Electrical Connector
8	A/Trans Manual Shift Shaft Position Switch Assembly
9	Bolt M6 x 14.5

NOTE: To avoid solenoid overheating and possible internal damage, do not continuously operate the solenoid for more than 2 minutes at a time.

The TCM will normally cycle some of the transmission solenoids ON and OFF to keep the solenoid passages clean and clear. This is a normal function and may cause the valves to cycle open and closed quickly when the TCM is powered up. This can make the pressure gauge needle flicker or move from high and low as the valves open and close, allowing air to exit the ports where the pressure gauge is not connected.

cardiagn.com

WARNING: Use of eye goggles is necessary to prevent personal injury.

WARNING: To avoid transmission fluid contact with exposed skin, use shop towels to cover the test plate parts in order to prevent fluid from being released into the air, as any remaining transmission fluid in the control solenoid valve assembly will be forced out, and bodily injury may occur.

It is necessary to drain the control solenoid valve assembly of all remaining transmission fluid before attaching the test plate. Use caution when attaching air to the test plate, as any residual transmission fluid in the control solenoid valve assembly will be forced out. Use shop towels to cover the test plate ports in order to prevent fluid from being released into the air.

Preliminary Procedures

1. Raise and support the vehicle. Refer to **Lifting and Jacking the Vehicle** .
2. Remove the transmission fluid pan and filter. Refer to **Automatic Transmission Fluid, Fluid Pan and/or Filter Replacement** .
3. Remove the transmission electrical connector. Refer to **Automatic Transmission Electrical Connector Passage Sleeve Replacement** .
4. Remove the control solenoid valve assembly from the transmission. Refer to **Control Valve Lower Body and Upper Body Replacement** .
5. Ensure that the manual shift shaft position switch is disconnected and removed before performing the test. Failure to disconnect the switch will cause inaccurate test results and possible misdiagnosis.

cardiagn.com

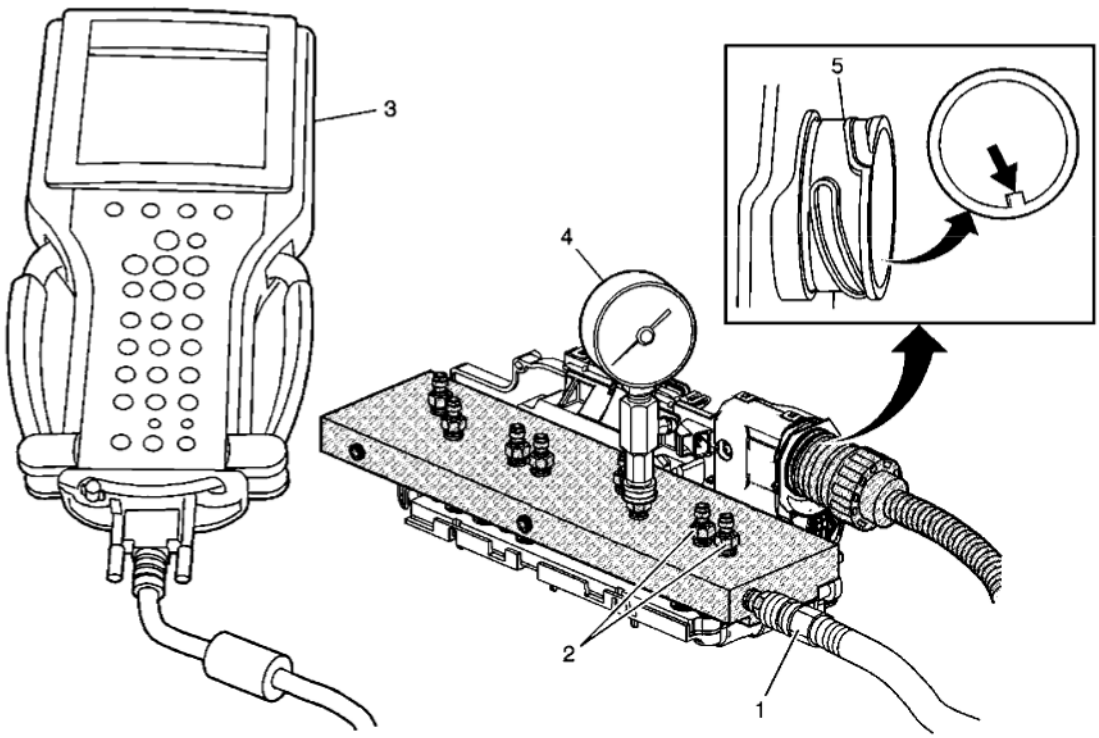

Fig. 6: Identifying Solenoid Testing
Courtesy of GENERAL MOTORS CORP.

Callout	Component Name
1	Regulated Air Supply
2	Test Ports
3	Scan Tool
4	Test Pressure Gauge
5	Electrical Connector Sleeve

CAUTION: The TCM connector sleeve allows the test tool harness to be correctly orientated for electrical operation of the TCM. Do not connect the test harness to the TCM without using the connector sleeve. Failure to use the sleeve could allow the test harness to be incorrectly positioned which will result in permanent TCM damage.

1. Align and install the electrical connector sleeve to the control solenoid valve assembly and secure with the connector slide lock.
2. If necessary, clean each side of the filter plate assembly and install the filter plate assembly back on the control solenoid valve assembly. Clean the mounting surface of the **DT-47825** . See **Special Tools** .
3. Bolt the **DT-47825** to the control solenoid valve assembly mounting surface. See **Special Tools** . Use the bolts and washers supplied with the tool to attach the test block. Tighten the bolts to 5 N.m (44 lb in).
4. Connect the test harness supplied with the **DT-47825** to the vehicle harness and to the TCM. See **Special**

cardiagn.com

Tools . Engage the connector locks.

5. Connect shop air to the **DT-47825** air inlet. See **Special Tools** . Do not exceed the recommended air pressure of 620.5-689.4 Kpa (90-100 psi).
6. Connect the test pressure gauge to the test port for the solenoid to be tested.
7. With the ignition ON and the scan tool communicating with the vehicle, command the solenoid to be tested ON and OFF. Watch the air pressure gauge for a change as you command the solenoid. Refer to Control Solenoid Valve Assembly Solenoid Performance Test Plate to Component Identification for correct solenoid function and test plate port connections for the solenoid being tested.
8. The solenoid should allow air pressure to flow when commanded ON and prevent air pressure flow when commanded OFF. The test results are read on the pressure gauge.
9. Command the solenoid valve ON and OFF several times to determine the condition of the solenoid in question. Release the test air pressure from the pressure gauge between solenoid tests.

Control Solenoid Valve Assembly Solenoid Performance Test Plate to Component Identification

Solenoid	Test Plate Port	Commanded State	
		ON	OFF
PC Solenoid 2	C	Full pressure to gauge	No pressure to gauge
PC Solenoid 3	A	Full pressure to gauge	No pressure to gauge
PC Solenoid 4	B	Full pressure to gauge	No pressure to gauge
PC Solenoid 5	F	Full pressure to gauge	No pressure to gauge
Shift Solenoid 1	H	Full pressure to gauge	No pressure to gauge
Shift Solenoid 2	D	Full pressure to gauge	No pressure to gauge
TCC PC Solenoid	E	Full pressure to gauge	No pressure to gauge
Line PC Solenoid	G	Command to highest setting, full pressure to gauge	Command to lowest setting, below 620.5 Kpa (90 psi) to gauge

SERVICE FAST LEARN ADAPTS

Service Fast Learn Adapts is a procedure for 6-speed automatic transmissions in which a series of tests are run to allow the transmission control module (TCM) to learn individual clutch characteristics. Once the clutch data is learned, Service Fast Learn Adapts translates it into the adaptive data cells, which the TCM uses for clutch control during shifts. The scan tool provides initiation of the Service Fast Learn Adapts procedure. This procedure is to be used following transmission repair.

The Service Fast Learn Adapts procedure must be performed when one of the following repairs have been made to the vehicle. Failure to perform the procedure after one of the following repairs may result in poor transmission performance, as well as transmission DTCs being set:

- Transmission internal service/overhaul
- Valve body repair or replacement
- Control solenoid valve assembly replacement
- TCM software/calibration update

cardiagn.com

- Any service in response to a shift quality concern

NOTE: Ensure the following conditions are met before performing the Service Fast Learn Adapts procedure:

- **Drive wheels are blocked**
- **Parking brake is applied**
- **Service brake is applied**
- **Zero percent throttle and no external engine RPM control**
- **Transmission fluid temperature (TFT) is between 70-115°C (158-239°F)**
- **Transmission gear selector has been cycled from Park to Reverse 3 times in order to purge air from the reverse clutches.**

NOTE: If at any time during the procedure, required conditions are not met, Service Fast Learn Adapts may abort and the process may need to be started again from the beginning. If this occurs, the transmission will be left in a neutral state until the controller is shut down, key OFF and remove the scan tool and wait for more than 30 seconds prior to re-try procedure. If the procedure repeatedly fails, a limit that engineering set is being exceeded and there is possibly a transmission hardware issue.

1. Use the scan tool to perform the Service Fast Learn Adapts procedure. As the procedure is being performed, the scan tool data display will provide operator instructions. Follow the scan tool instructions as required.
2. Once the procedure is complete, shut OFF the engine and power down the TCM. You will lose communication to the scan tool.

   Ensure you exit back to the main screen in the scan tool, shut the scan tool OFF, and unplug it from the DLC or the controller will not shut down leaving the vehicle in a neutral state.

   NOTE: When the Service Fast Learn Adapts procedure is completed, the transmission will remain in a neutral state until the controller shuts down. If after 1-2 minutes of sitting, with the key OFF and scan tool removed, the vehicle remains in a neutral state, disconnect the battery and wait 5-10 minutes and then hook the battery back up. Reverse and drive should return.

3. Restart the engine. This will complete the Service Fast Learn Adapts procedure.

TROUBLESHOOTING

If the Service Fast Learn Adapts will not run and the above stated conditions have been met, ensure the following:

- TFT is between 70-115°C (158-239°F).

cardiagn.com

- Brakes and brake switch are functioning properly.
- No active DTCs.
- Closed throttle and engine RPM increases above 1500 RPM while at entrance of the test.
- Park/Neutral position switch is properly adjusted and functioning.
- Line pressure control is able to provide 1000 kPa and is within specifications.
- Vehicle is not moving, or vibrating excessively.
- Clutches are properly assembled.

TRANSMISSION FLUID LEVEL AND CONDITION CHECK

This procedure checks both the transmission fluid level, as well as the condition of the fluid itself. Since the transmission on this vehicle is not equipped with a fill tube and dipstick, a tube in the bottom pan is used to set the fluid level.

CAUTION: The transmission fluid level must be checked when the transmission fluid temperature (TFT) is between 30-50°C (86-122°F). If the TFT is not within this range, operate the vehicle or allow the fluid to cool as required. Setting the fluid level with a TFT outside this range will result in either an under or over-filled transmission. TFT>50°C=under-filled, TFT<30°C=over-filled. An under-filled transmission will cause premature component wear or damage. An over-filled transmission will cause fluid to discharge out the vent tube, fluid foaming, or pump cavitation.

1. Observe the TFT using the driver information center (DIC) or a scan tool.
2. Start and idle the engine.
3. Depress the brake pedal and move the shift lever through each gear range. Pause for at least 3 seconds in each range. Move the shift lever back to PARK. Ensure the engine RPM is low (500-800 RPM).
4. Allow the engine to idle for at least 1 minute.
5. Raise the vehicle on a hoist. The vehicle must be level, with the engine running and the shift lever in the PARK range.

cardiagn.com

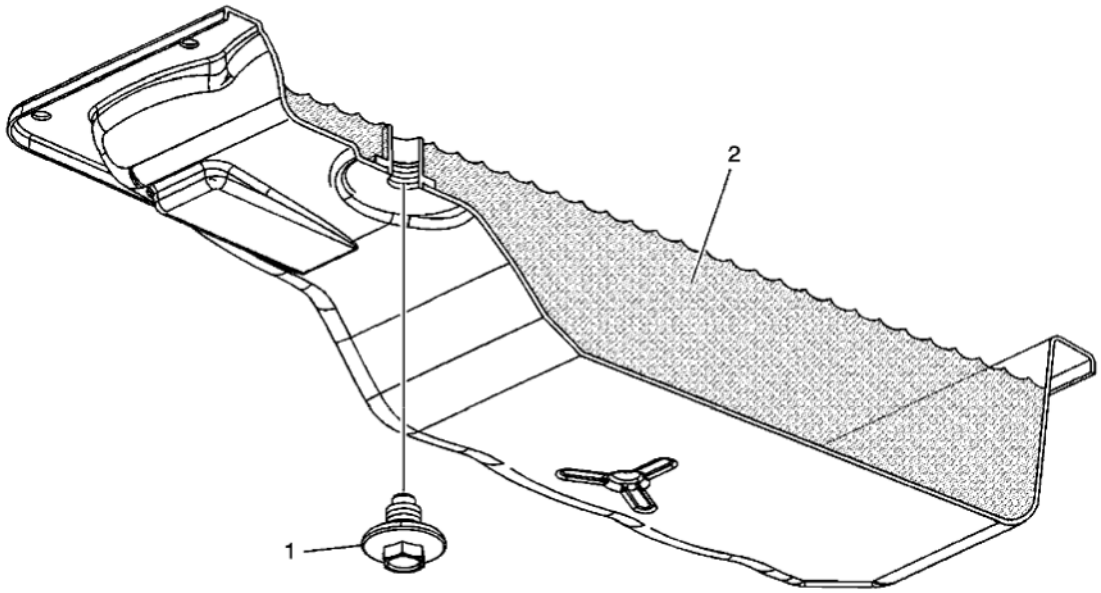

Fig. 7: Locating Transmission Oil Level Check Plug
Courtesy of GENERAL MOTORS CORP.

CAUTION: THE ENGINE MUST BE RUNNING when the trans oil level check plug is removed or excessive fluid loss will occur, resulting in an under-filled condition. An under-filled transmission will cause premature component wear or damage.

NOTE: Continue to monitor the TFT. If the TFT is not within the specified values, reinstall the trans oil level check plug and repeat the previous steps.

6. Remove the trans oil level check plug (1) from the transmission fluid pan. Allow any fluid (2) to drain.
   - If the fluid is flowing as a steady stream, wait until the fluid begins to drip.
   - If no fluid comes out, add fluid until fluid drips out. Refer to **Transmission Fluid Fill Procedure** .
7. Inspect the fluid color. The fluid should be red or dark brown.
   - If the fluid color is very dark or black and has a burnt odor, inspect the fluid and inside of the bottom pan for excessive metal particles or other debris. A small amount of "friction" material in the bottom pan is a "normal" condition. If large pieces and/or metal particles are noted in the fluid or bottom pan, flush the oil cooler and cooler lines and overhaul the transmission. If there are no signs of transmission internal damage noted, replace the fluid filter assembly, repair the oil cooler, and flush the cooler lines.
   - Fluid that is cloudy or milky or appears to be contaminated with water indicates engine coolant or water contamination. Refer to **Engine Coolant/Water in Transmission** .

CAUTION: Refer to Fastener Caution .

cardiagn.com

8. Replace the trans oil level check plug and tighten to 25 N.m (18 lb ft).
9. Inspect for external leaks. Refer to **Fluid Leak Diagnosis**.
10. Reset the oil life monitor only if the fluid was changed.

TRANSMISSION FLUID FILL PROCEDURE

Special Tools

- **DT 47784:** Transmission Fluid Fill Pan Adapter
- **J 45096:** Transmission Oil Cooling System Flush and Flow Test Tool
- **J 45096-30:** Transmission Cooler Flush Adapters
- **J 45096-40:** Transflow Oil Fill Adapter

For equivalent regional tools, refer to **Special Tools** .

CAUTION: Check the transmission fluid level immediately after adding fluid and before vehicle operation. Do not overfill the transmission. An overfilled transmission may result in foaming or fluid to be expelled out the vent tube when the vehicle is operated. Overfilling will result in possible damage to the transmission.

Check the transmission fluid level, refer to **Transmission Fluid Level and Condition Check**.

Fill Tube Plug Method

cardiagn.com

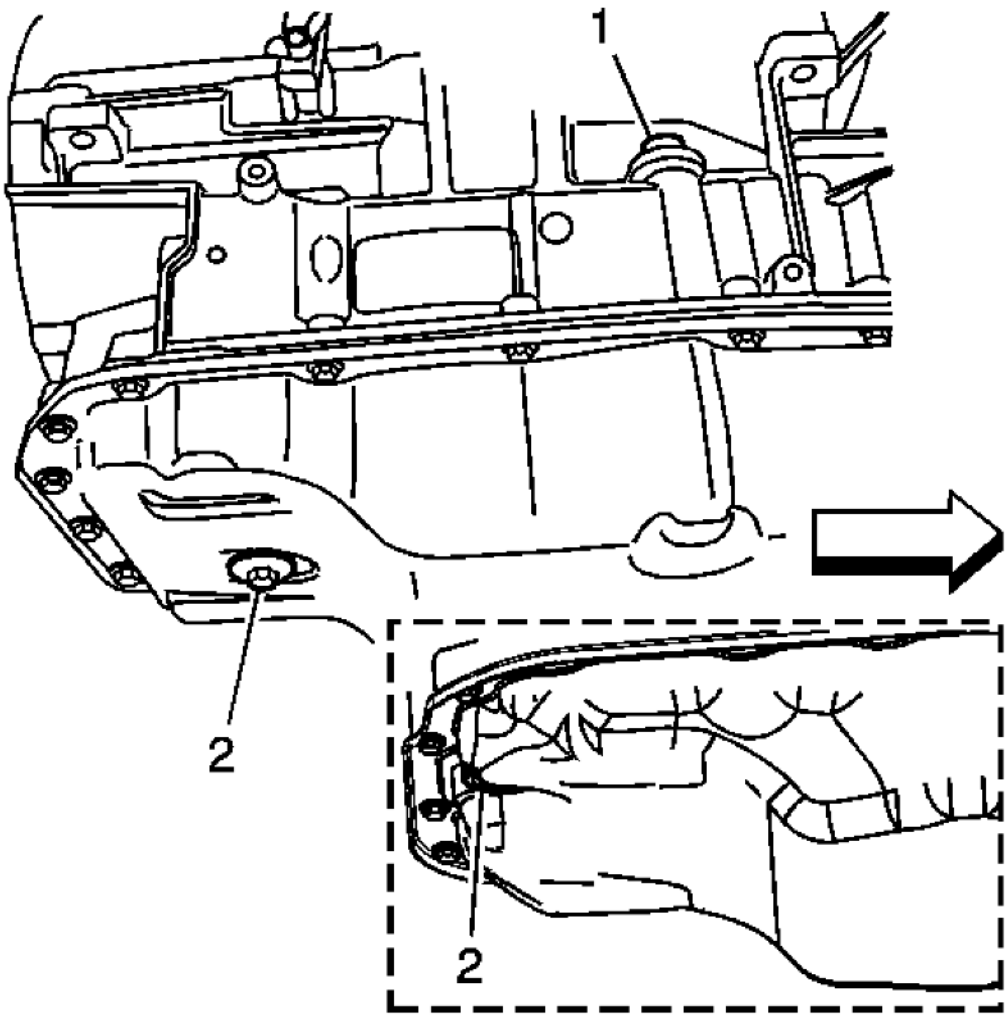

Fig. 8: Identifying Fluid Fill Tube Plug
Courtesy of GENERAL MOTORS CORP.

CAUTION: Use Dexron VI transmission fluid only. Failure to use the proper fluid may result in transmission internal damage.

1. Perform this procedure for vehicles with transmissions that are not equipped with a fill tube and dipstick. Based on accessibility, transmission fluid may be added through the fluid fill tube plug assembly (1) hole or through the oil level check plug (2) hole in the bottom of the transmission fluid pan.

CAUTION: Before removing the transmission fluid fill tube plug assembly,

cardiagn.com

thoroughly clean around the plug to prevent dirt or contaminants from entering the transmission during plug removal. Use compressed air to dislodge any caked dirt that may be stuck on and around the plug area. Use a mirror to confirm the area is free of dirt before removing the plug. Failure to clean around the plug may result in transmission contamination.

2. Clean around the fluid fill tube plug (1).

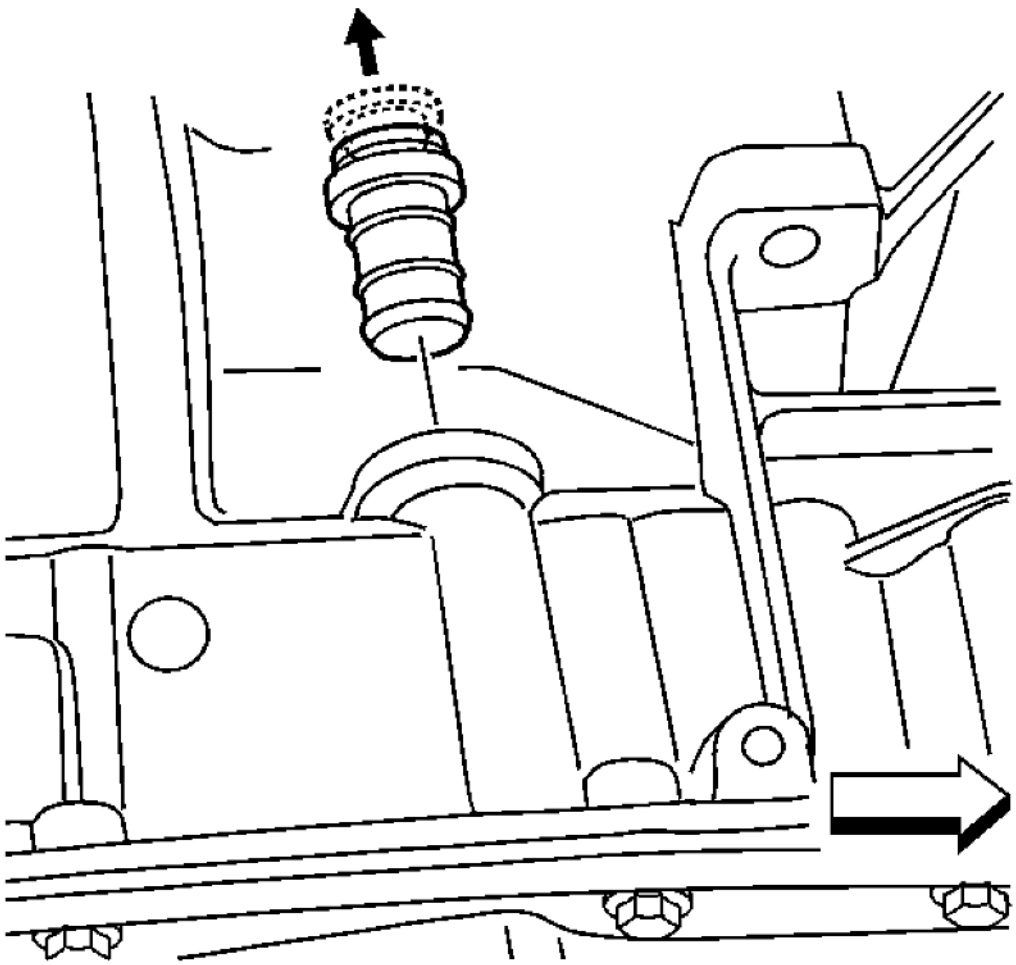

Fig. 9: Unlocking Fill Tube Plug
Courtesy of GENERAL MOTORS CORP.

NOTE: **It may be necessary to use a long pair of 90 degree needle nose pliers to**

cardiagn.com

lift the plunger and remove the plug assembly.

3. Unlock the fill tube plug by lifting the plunger. Once the plunger is lifted, remove the entire plug assembly.
4. Determine the approximate amount of fluid needed to fill the transmission, based on the repair performed. Refer to **Fluid Capacity Specifications** . To avoid an under-fill condition, slightly overfill the transmission, and then allow the extra fluid to drain out through the oil level check plug during the transmission fluid level and condition check procedure.

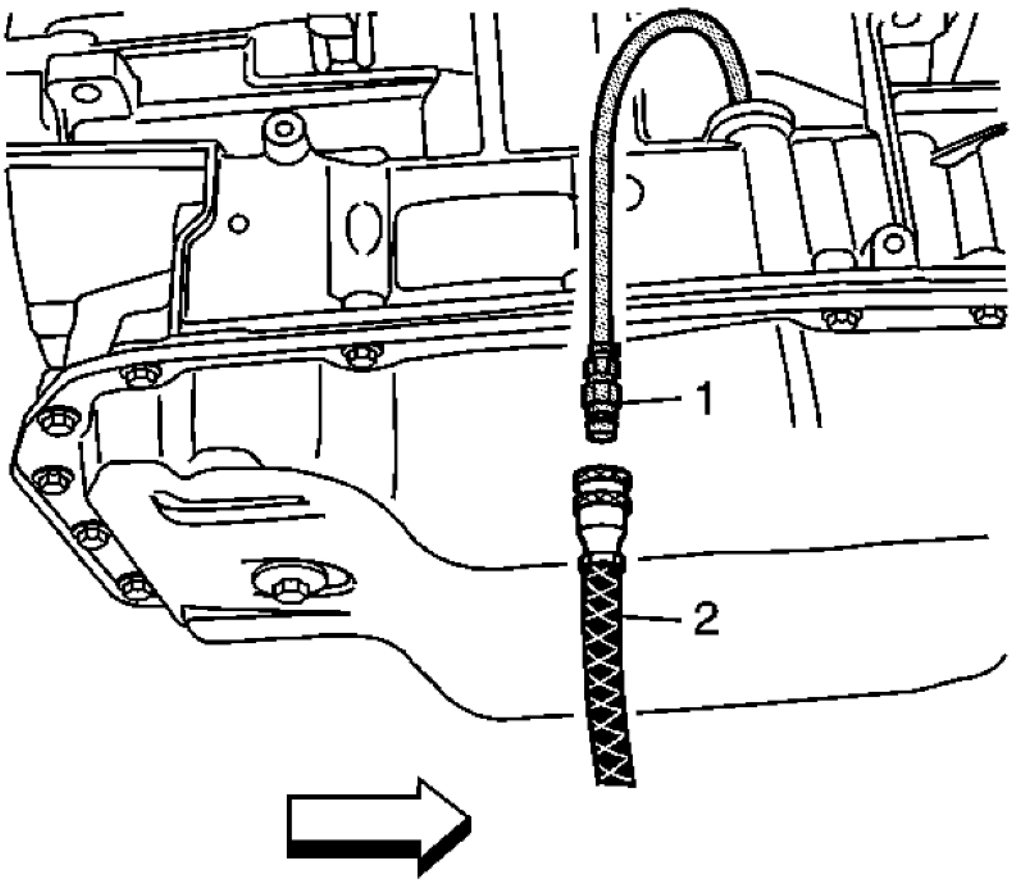

Fig. 10: View Of J 45096-40 & J 45096
Courtesy of GENERAL MOTORS CORP.

NOTE: **The J 45096: flush and flow test tool is being utilized as a convenient method to pump the fluid into the bottom pan. A suitable hand pump may also be used instead. When using the J 45096: flush and flow test tool,**

cardiagn.com

monitor the display panel to determine the amount of fluid being pumped from the tool supply tank into the transmission.

5. Using the **J 45096-40:** transflow oil fill adapter (1) and the **J 45096:** flush and flow test tool (2), or a suitable hand pump, add transmission fluid through the fill tube plug opening. Refer to **Transmission Fluid Cooler Flushing and Flow Test** for complete **J 45096:** flush and flow test tool operating instructions. Use the FLOW position on the main function switch to pump the fluid.

   CAUTION: Check the transmission fluid level immediately after adding fluid and before vehicle operation. Do not overfill the transmission. An overfilled transmission may result in foaming or fluid to be expelled out the vent tube when the vehicle is operated. Overfilling will result in possible damage to the transmission.

6. Check the fluid level. Refer to **Transmission Fluid Level and Condition Check**.

Check Plug Method

cardiagn.com

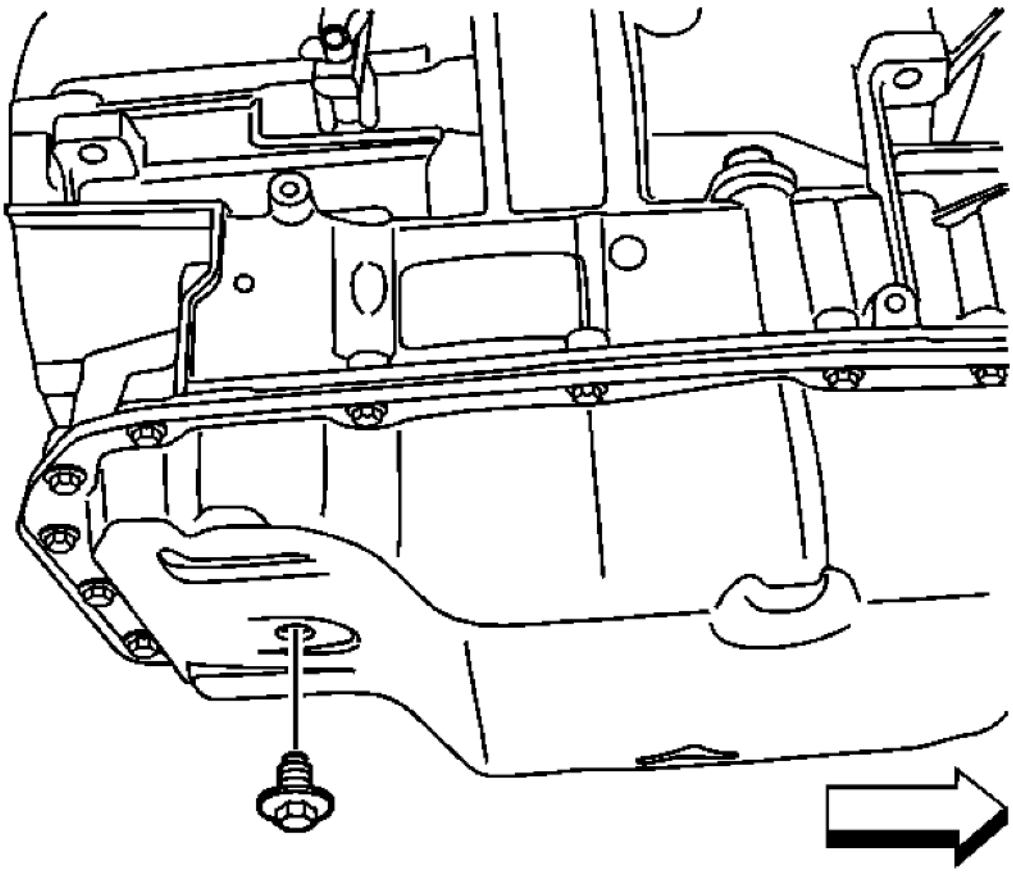

Fig. 11: Identifying Oil Level Check Plug
Courtesy of GENERAL MOTORS CORP.

NOTE: When the oil level check plug is removed with the engine OFF, transmission fluid may drain from the hole.

1. Remove the oil level check plug.

cardiagn.com

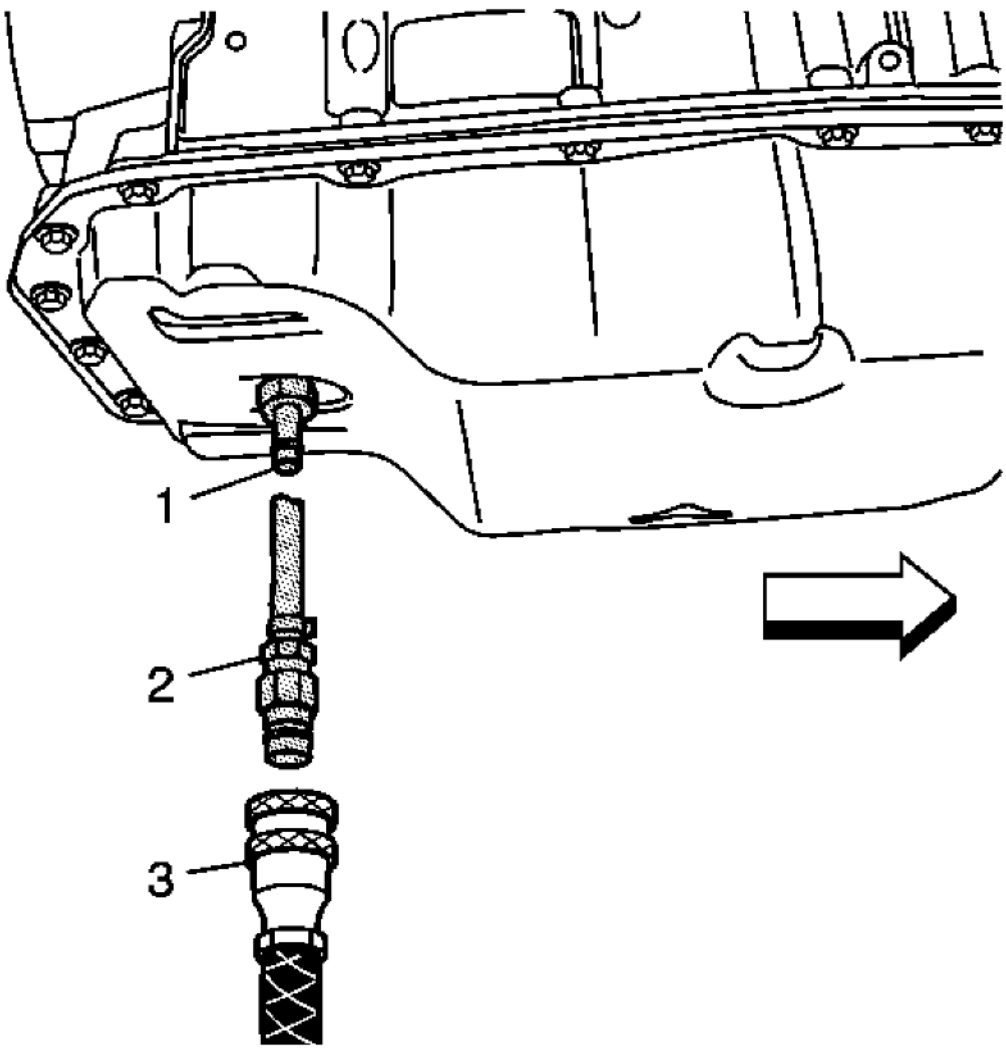

Fig. 12: Identifying DT 47784, J 45096-30 & J 45096
Courtesy of GENERAL MOTORS CORP.

2. Install the **DT 47784:** fluid fill pan adapter (1) and, if necessary, one adapter from the **J 45096-30:** cooler flush adapters (2).
3. Determine the approximate amount of fluid needed to fill the transmission, based on the repair performed. Refer to **Fluid Capacity Specifications** . To avoid an under-fill condition, slightly overfill the transmission, and then allow the extra fluid to drain out through the oil level check plug during the tranmission fluid level and condition check procedure.

NOTE: The J 45096: flush and flow test tool is being utilized as a convenient

cardiagn.com

method to pump the fluid into the bottom pan. A suitable hand pump may also be used instead. When using the J 45096: flush and flow test tool, monitor the display panel to determine the amount of fluid being pumped from the tool supply tank into the transmission.

4. Using the **DT 47784:** fluid fill pan adapter (1), **J 45096-30:** cooler flush adapters (2), and the **J 45096:** flush and flow test tool (3), add transmission fluid through the check plug hole. Refer to **Transmission Fluid Cooler Flushing and Flow Test** for complete J 45096 operating instructions. Use the FLOW position on the main function switch to pump the fluid.

NOTE: Failure to start the engine and move the shift lever through the gear ranges before removing the DT 47784: fluid fill pan adapter and J 45096-30: cooler flush adapters from the bottom pan will result in an excess amount of fluid draining from the check plug hole. This may lead to an under-fill condition.

5. Start the engine and move the shift lever through each gear range. Pause for at least 3 seconds in each gear range.

CAUTION: Check the transmission fluid level immediately after adding fluid and before vehicle operation. Do not overfill the transmission. An overfilled transmission may result in foaming or fluid to be expelled out the vent tube when the vehicle is operated. Overfilling will result in possible damage to the transmission.

6. With the engine still running, remove the **DT 47784:** fluid fill pan adapter (1), (2), and **J 45096:** flush and flow test tool (3) and then check the fluid level. Refer to **Transmission Fluid Level and Condition Check**.

LINE PRESSURE CHECK

cardiagn.com

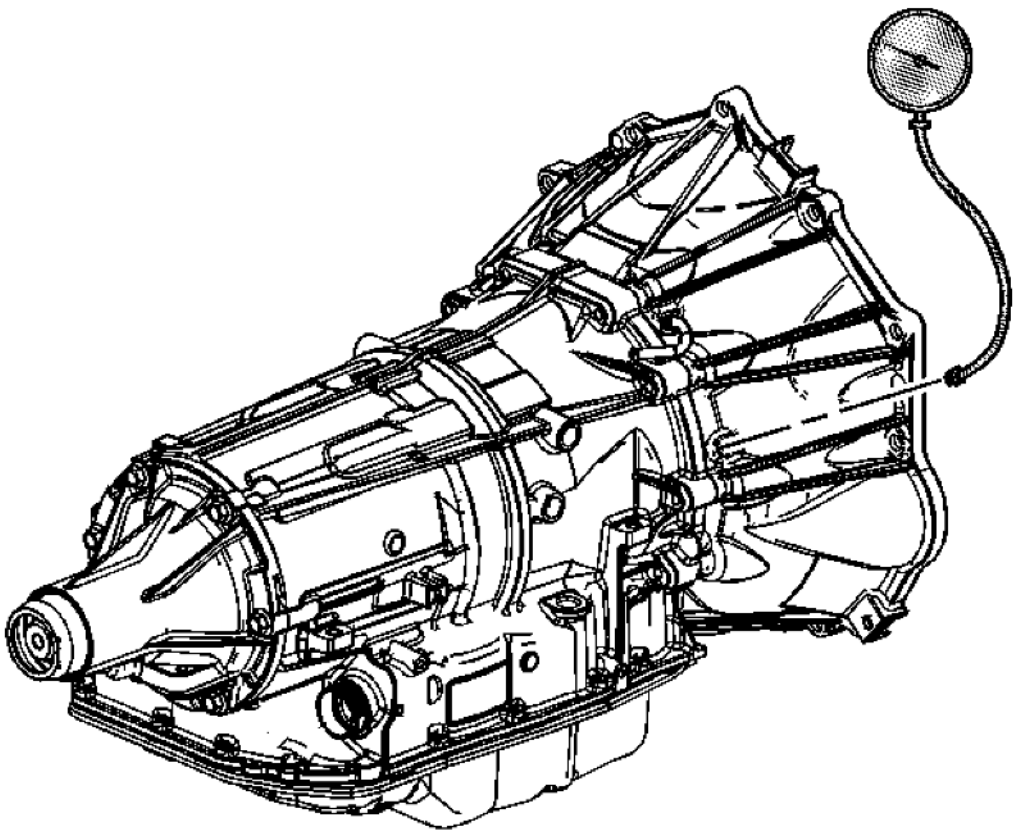

Fig. 13: View Of Transmission & Pressure Gage
Courtesy of GENERAL MOTORS CORP.

SPECIAL TOOLS

J 21867: Pressure Gauge

For equivalent regional tools, refer to **Special Tools** .

WARNING: Keep the brakes applied at all times in order to prevent unexpected vehicle motion. Personal injury may result if the vehicle moves unexpectedly.

1. Install a scan tool.
2. Start the engine.
3. Inspect the transmission for the proper fluid level. Refer to **Transmission Fluid Level and Condition Check**.

cardiagn.com

4. Use the scan tool to inspect for any active or stored diagnostic trouble codes.
5. Inspect the manual linkage at the transmission for proper function.
6. Turn the engine OFF.

NOTE: You may need to remove or disconnect components in order to gain access to the transmission line pressure test hole plug.

7. Remove the line pressure test hole plug.
8. Install the **J 21867:** pressure gauge.
9. Access the Scan Tool Transmission Output Controls for the Line PC Solenoid.
10. Start the engine.

NOTE: In order to achieve accurate line pressure readings, the following procedure should be performed at least three times.
The values displayed on the scan tool screen will not match the actual pressures indicated on the pressure gauge.
Control the Line PC Solenoid in PARK or NEUTRAL with the engine speed at approximately 1500 RPM and the TFT between 35-55°C (95-131°F). This protects the clutches from extreme high or low line pressures and ensures a consistent pump capacity.

11. Use the scan tool to increase and decrease line pressure, allowing the pressure to stabilize between increments.
12. Compare the pressure readings on the gauge with the table below.
13. If the pressure readings on the gauge are erratic, or increment by more than what is indicated in the table below, refer to **Fluid Pressure High or Low**.
14. Turn the engine OFF.
15. Remove the **J 21867:** pressure gauge.

CAUTION: Refer to Fastener Caution .

16. Install the line pressure test hole plug. Tighten the pressure plug to 11 N.m (97 lb in).

Line Pressure

Scan tool Line PC Solenoid Commanded State (KPa)	Approximate line pressure shown on pressure gauge @ 1500 RPM	
	Kpa	PSI
None	310-550	45-80
200	655-900	95-130
400	1100-1310	160-190
600	1520-1725	220-250
800	1860-2070	270-300

cardiagn.com

1000	1860-2070	270-300
1200	1860-2070	270-300
1400	1860-2070	270-300
1600	1860-2070	270-300
1800	1860-2070	270-300
2000	1860-2070	270-300

ROAD TEST

NOTE: The Road Test Procedure should be performed only as part of the Symptom Diagnosis. Refer to Symptoms - Automatic Transmission.

The following test provides a method of evaluating the condition of the automatic transmission. The test is structured so that most driving conditions would be achieved. The test is divided into the following parts:

- Electrical Function Check
- Upshift Control and Torque Converter Clutch (TCC) Apply
- Part Throttle Step-In Downshifts
- Manual Downshifts
- Coasting Downshifts
- Manual Gear Range Selection
  - REVERSE
  - Driver Shift Control

NOTE: Complete the test in the sequence given. Incomplete testing cannot guarantee an accurate evaluation.

Before the road test, ensure the following:

- The engine is performing properly.
- Transmission fluid level is correct. Refer to **Transmission Fluid Level and Condition Check**.
- Tire pressure is correct.

During the road test:

- Perform the test only when traffic conditions permit.
- Operate the vehicle in a controlled, safe manner.
- Observe all traffic regulations.
- View the scan tool data while conducting this test.

Take along qualified help in order to operate the vehicle safely.

cardiagn.com

- Observe any unusual sounds or smells.

After the road test, check the following:

- Inspect for proper transmission fluid level. Refer to **Transmission Fluid Level and Condition Check**.
- Inspect for any diagnostic trouble codes (DTCs) that may have set during the testing. Refer to the applicable DTC.
- Monitor the scan tool data for any abnormal readings or data.
- Inspect for fluid leaks. Refer to **Fluid Leak Diagnosis**.

ELECTRICAL FUNCTION CHECK

Perform this procedure first in order to ensure the electronic transmission components are functioning properly. If these components are not checked, a simple electrical condition could be misdiagnosed.

1. Connect the scan tool.
2. Ensure the gear selector is in PARK and set the parking brake.
3. Start the engine.
4. Verify that the following scan tool data can be obtained and is functioning properly.

   Refer to **Control Module References** for typical data values. Data that is questionable may indicate a concern.

   - Engine Speed
   - Transmission ISS
   - Transmission OSS
   - Vehicle Speed
   - IMS
   - Commanded Gear
   - Gear Ratio
   - Line PC Sol. Pressure Cmd.
   - Brake Switch
   - ECT, Engine Data List
   - Trans. Fluid Temp.
   - TCM Temperature
   - Calc. Throttle Position
   - Ignition Voltage
   - TFP Switch 1
   - TFP Switch 3
   - TFP Switch 4
   - TFP Switch 5

cardiagn.com

- PC Sol. 2 Pressure Cmd.
- PC Sol. 3 Pressure Cmd.
- PC Sol. 4 Pressure Cmd.
- PC Sol. 5 Pressure Cmd.
- Shift Solenoid 1
- Shift Solenoid 2
- TCC PC Sol. Duty Cycle
- TCC Slip Speed

5. Check the garage shifts.
    1. Apply the brake pedal and ensure the parking brake is set.
    2. Move the gear selector through the following ranges:
        1. PARK to REVERSE
        2. REVERSE to NEUTRAL
        3. NEUTRAL to DRIVE
        4. DRIVE to REVERSE
        5. REVERSE to DRIVE
    3. Pause 2 to 3 seconds in each gear position.
    4. Verify the gear engagements are immediate (less than 2 seconds to complete if trans fluid temperature is above 20°C) and not harsh. Note that these shifts may be almost imperceptible in some applications. Using the scan tool to monitor Transmission ISS achieving 0 rpm can be used to check delay in these cases.

NOTE: Harsh engagement may be caused by any of the following conditions:

- **High engine idle speed-Compare engine idle speed to desired idle speed.**
- **Incorrect line pressure-Investigate Line PC Sol. Pressure Cmd. kPa (psi), also perform Line Pressure Check.**
- **A default condition caused by certain DTCs that result in maximum line pressure to prevent clutch slippage.**
- **Incomplete adapting or incorrect adapting-Repeat maneuver multiple times to see if shift quality improves. If it does not, refer to the service procedures for Harsh Garage Shift and for Harsh, Soft, Delayed or Slipping First or Reverse Gear.**

NOTE: Delayed engagement may be caused by any of the following conditions:

- **Low idle speed-Compare engine idle speed to desired idle speed.**
- **Low fluid level**
- **Incorrect line pressure-Investigate Line PC Sol. Pressure Cmd. kPa (psi), also perform Line Pressure Check.**

cardiagn.com

- **Cold transmission fluid temperature (TFT)-Use the scan tool to determine TFT.**
- **Selector linkage-Inspect and adjust as necessary.**
- **Incomplete adapting or incorrect adapting-Repeat maneuver multiple times to see if delay improves. If it does not, refer to the service procedures for Harsh, Soft, Delayed or Slipping First or Reverse Gear.**

6. Monitor transmission range on the scan tool, transmission data list.
    1. Apply the brake pedal and ensure the parking brake is set.
    2. Move the gear selector through all ranges.
    3. Pause 2 to 3 seconds in each range.
    4. Return gear selector to PARK.
    5. Verify that all selector positions match the scan tool display.
7. Check throttle position input.
    1. Apply the brake pedal and ensure the parking brake is set.
    2. Ensure the gear selector is in PARK.
    3. Monitor the scan tool Calc. Throttle Position while increasing and decreasing engine speed with the throttle pedal. The scan tool Calc. Throttle Position percentage should increase and decrease with engine speed.

If any of the above checks do not perform properly, record the result for reference after completion of the road test.

UPSHIFT CONTROL AND TORQUE CONVERTER CLUTCH (TCC) APPLY

The TCM calculates the upshift points based primarily on 2 inputs: throttle position and vehicle speed. When the TCM determines that conditions are met for a shift to occur, the TCM commands the shift by varying current to the appropriate PC solenoids to control oncoming and offgoing clutch pressures.

Perform the following steps:

1. Monitor the following scan tool parameters:
    - Calc. Throttle Position
    - Vehicle Speed
    - Engine Speed
    - Transmission ISS
    - Transmission OSS
    - Commanded Gear
    - TCC PC Sol. Pressure Cmd.
    - TCC Slip Speed
    - TFP Switch 1

cardiagn.com

- TFP Switch 3
- TFP Switch 4
- TFP Switch 5
- PC Sol. 2 Pressure Cmd.
- PC Sol. 3 Pressure Cmd.
- PC Sol. 4 Pressure Cmd.
- PC Sol. 5 Pressure Cmd.
- Shift Solenoid 1 and 2

2. Place the gear selector in the DRIVE position.
3. Accelerate the vehicle using a steady throttle position between 15 and 20 percent. Hold the throttle steady.
4. As the transmission upshifts, there should be a noticeable shift feel or engine speed change within 1 to 2 seconds of the commanded gear change. The PC solenoid pressure command should chang to "YES" for the oncoming clutch and the PC solenoid pressure command should change to "NO" for the offgoing clutch.
5. Note any harsh, soft or delayed shifts or slipping. Note any noise or vibration.
6. The TCC feel may not be noticeable. In many applications the TCC will apply after the 1-2 shift and TCC events will not be easily detected using engine speed.

NOTE: **This transmission is equipped with an electronically controlled capacity clutch (ECCC), which allows operation of the clutch without fully locking to the torque converter cover. The clutch maintains a small amount of slippage, approximately 20 RPM, in 2nd, 3rd, 4th, 5th, and 6th gears, depending on the vehicle application. ECCC was developed to reduce the possibility of noise, vibration or chuggle caused by TCC apply. Full lockup is available at highway speeds on some applications.**

7. Monitor TCC PC solenoid pressure command while driving and check TCC slip speed when the pressure command indicates that the TCC is commanded to apply:

   When the TCC applies, slip speed should be controlled to below 100 RPM when the transmission is not shifting and the throttle is held steady. If the TCC slip exceeds this value for more than 6 seconds after the TCC PC Sol. Pressure Command indicates that the TCC is commanded on:

   - Check for DTCs.
   - Refer to **Torque Converter Diagnosis**.

PART THROTTLE STEP-IN DOWNSHIFTS

1. Place the gear selector in the DRIVE position.
2. Accelerate the vehicle at light throttle (5-15 percent) until 3rd gear is just achieved.
3. Quickly increase throttle angle until commanded gear indicates that a downshift to 2nd gear is commanded.

cardiagn.com

4. Verify that the transmission downshifts within 2 seconds of the throttle movement.
5. Repeat steps 2 to 4 at higher speed to achieve 4th gear and then step in to command a 4th gear to 3rd gear downshift.
6. Repeat steps 2 to 4 at higher speed to achieve 5th gear and then step in to command a 5th to 4th gear downshift.
7. Repeat steps 2 to 4 at higher speed to achieve 6th gear and then step in to command a 6th gear to 5th gear downshift.
8. Note any harsh, soft or delayed shifts or slipping. Note any noise or vibration.

MANUAL DOWNSHIFTS

Manual downshift testing is not required since all vehicles equipped with the 6L45/50/80/90 are also equipped with some form of Driver Shift Control(DSC). The TCM will automatically override DSC downshifts to protect the transmission from damage.

Coasting Downshifts

1. Place the gear selector in the DRIVE position.
2. Accelerate the vehicle to 6th gear with the TCC applied.
3. Release the throttle and apply the brakes
4. Verify that the downshifts occur as commanded by monitoring gear ratio, which should change after commanded gear changes.

MANUAL GEAR RANGE SELECTION

This application does not utilize manual forward gear ranges.

Reverse

Perform the following test using a 10-15 percent throttle position.

1. With the vehicle stopped, move the gear selector to REVERSE.
2. Slowly accelerate the vehicle.
3. Verify that there is no noticeable slip, noise or vibration.

Driver Shift Control (DSC)

Refer to the owner's manual for specific instructions on the type of DSC available in this application. Utilize the DSC to ensure that the transmission responds appropriately to driver's commands. The TCM will upshift automatically when maximum engine speed is achieved and will protect from any downshift which may cause excessive engine RPMs.

TORQUE CONVERTER DIAGNOSIS

TORQUE CONVERTER STATOR

cardiagn.com

The torque converter stator roller clutch can have 2 different malfunctions.

- The stator assembly freewheels in both directions.
- The stator assembly remains locked up in both directions.

POOR ACCELERATION AT LOW SPEED - STATOR ROLLER CLUTCH FREEWHEELS AT ALL TIMES

If the stator is freewheeling at all times, the vehicle tends to have poor acceleration from a standstill and at speeds below 48-55 km/h (30-34 mph). At speeds above 48-55 km/h (30-34 mph), the vehicle may act normally.

For poor acceleration at low speeds, you should first determine that the exhaust system is not blocked, and the transmission is in First gear when starting out. If the engine freely accelerates to high RPM in NEUTRAL, you can assume that the engine and the exhaust system are normal. Check for poor performance in DRIVE and REVERSE to help determine if the stator is freewheeling at all times.

POOR ACCELERATION AT HIGH SPEED - STATOR ROLLER CLUTCH IS LOCKED UP AT ALL TIMES

If the stator is locked up at all times, performance is normal when accelerating from a standstill. Engine RPM and vehicle speed are limited or restricted at speeds above 48-55 km/h (30-34 mph). Visual examination of the converter may reveal a blue color from overheating.

TORQUE CONVERTER BEARING NOISE

NOTE: Do not confuse this noise with pump whine noise, which is usually noticeable in all gear ranges. Pump whine will vary with line pressure.

Torque converter whine is noticed when the vehicle is stopped and the transmission is in DRIVE or REVERSE. This noise will increase as you increase the engine RPM. The noise will stop when the vehicle is moving or when you apply the torque converter clutch, because there is no slip speed across the bearings.

Perform a stall test to verify that the noise is actually coming from the torque converter:

1. Place your foot on the brake.
2. Put the gear selector in DRIVE.

CAUTION: You may damage the transmission if you depress the accelerator for more than 6 seconds.

3. Depress the accelerator to approximately 1,200 RPM for no more than six seconds.

A torque converter noise will increase under this load.

TORQUE CONVERTER CLUTCH

cardiagn.com

The torque converter clutch (TCC) is applied by fluid pressure, which is controlled by a TCC pressure control (PC) solenoid. This solenoid is part of the control solenoid valve assembly, which is located inside the automatic transmission assembly. The solenoid is controlled through a combination of computer controlled switches and sensors. Electronically controlled capacity clutch (ECCC) is controlled slip across the TCC.

TORQUE CONVERTER CLUTCH SHUDDER

The key to diagnosing torque converter clutch (TCC) shudder is to note when it happens and under what conditions. TCC shudder should only occur during the apply, release, or ECCC conditions of the converter clutch. Shudder should never occur after the TCC is fully locked (approximately 0 RPM slip).

IF SHUDDER OCCURS DURING TCC APPLY, RELEASE, AND ECCC

If the shudder occurs while the TCC is applying, the problem can be within the transmission or the torque converter. Something is causing one of the following conditions to occur:

- The clutch is not engaging completely.
- The clutch is not releasing completely.
- The clutch is releasing and applying rapidly and continuously.

One of the following conditions may be causing the TCC Shudder to occur:

- Leaking turbine shaft/TCC seals
- A restricted release orifice
- A distorted clutch or converter cover due to long flexplate to converter bolts
- Defective friction material on the TCC plate

IF SHUDDER OCCURS AFTER TCC HAS LOCKED

Engine problems may go unnoticed under light throttle and load, but they become noticeable after the TCC has locked when going up a hill or accelerating.

Refer to **Symptoms - Engine Controls** 2.8L, 3.0L, 3.2L, 3.6L or **Symptoms - Engine Controls** 4.8L, 5.3L, 6.0L, 6.2L, 7.0L in order to avoid misdiagnosis of TCC shudder and the unnecessary disassembly of a transmission or the unnecessary replacement of a torque converter.

TORQUE CONVERTER VIBRATION TEST

NOTE: The Noise and Vibration Analysis procedure should be performed prior to performing this test.

ISOLATING VIBRATION

NOTE: Some engine/transmission combinations cannot be balanced in this manner due to restricted access or limited clearances between the torque converter

cardiagn.com

bolts and the engine.

To isolate and correct a flexplate or torque converter vibration:

1. With the engine at idle speed and the transmission in PARK or NEUTRAL, observe the vibration.
2. Turn the engine OFF.
3. Raise and suitably support the vehicle. Refer to **Lifting and Jacking the Vehicle** .
4. Remove the torque converter access cover and the bolts (if equipped).
5. Mark the relationship of the torque converter to the flexplate.
6. Rotate the torque converter to inspect for defects or missing balance weights.
7. Index the converter according to "Indexing Torque Converter" procedure located within this procedure.
8. If the vibration remains, it is most likely caused by the engine.
9. Refer to "Torque Converter Replacement Guide" located within this procedure.

INDEXING TORQUE CONVERTER

To determine and correct a torque converter vibration, the following procedure may have to be performed several times to achieve the best possible torque converter to flexplate balance.

1. Remove the torque converter bolts.
2. Rotate the torque converter one bolt position from the original marked position.

cardiagn.com

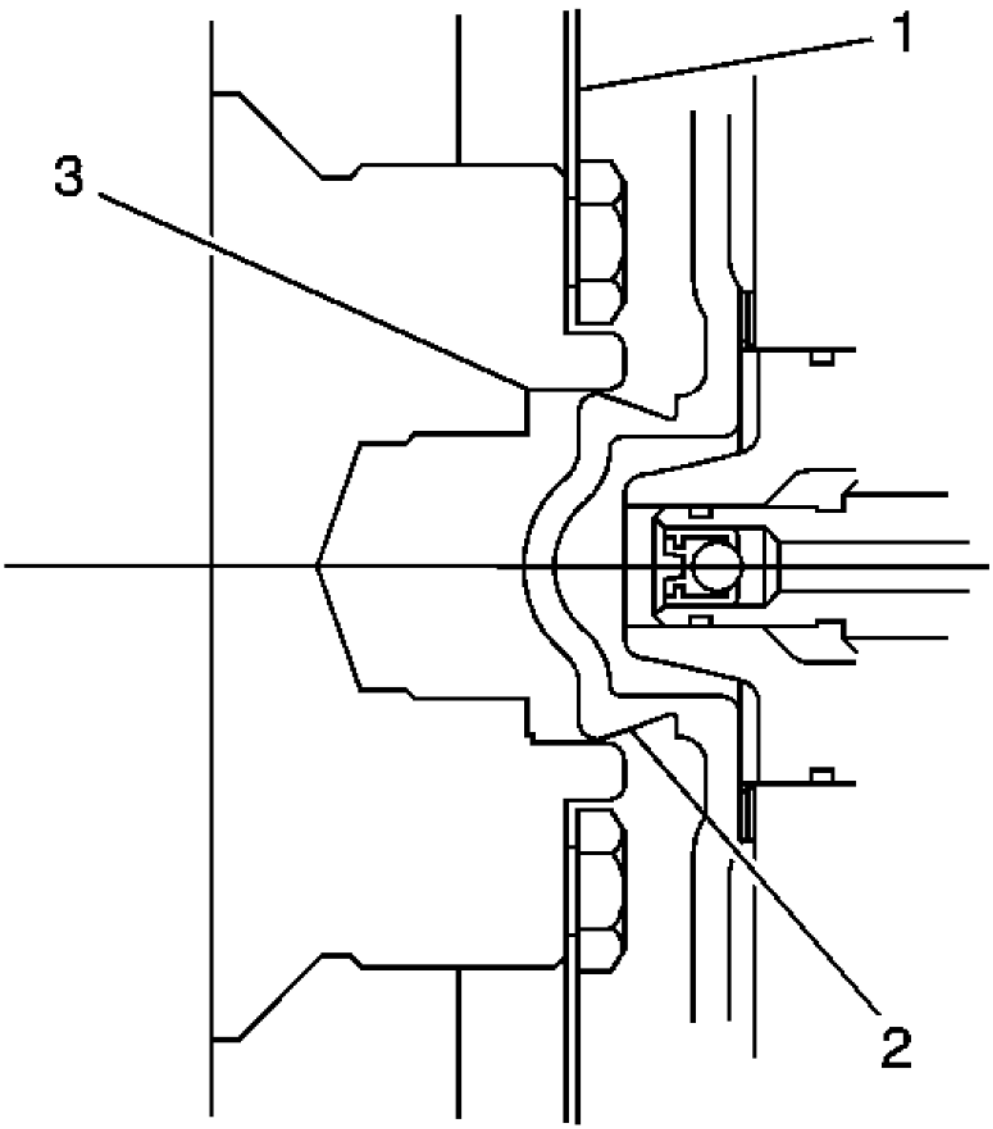

Fig. 14: View Of Torque Converter Hub In Engine Crankshaft
Courtesy of GENERAL MOTORS CORP.

CAUTION: When installing the torque converter to the flexplate, make sure to use specified bolts. DO NOT use longer bolts. Using longer bolts will result in deformation of the torque converter cover and cause internal damage.

cardiagn.com

CAUTION: Refer to Fastener Caution .

3. Align the torque converter pilot (2) in the engine crankshaft (3). Install the torque converter to flexplate bolts, and tighten according to **Fastener Tightening Specifications** .
4. Lower the vehicle.
5. With the engine at idle speed and the transmission in PARK or NEUTRAL, observe the vibration.

   Repeat this procedure until the best possible balance is obtained.

6. Install the torque converter access cover and bolts (if equipped) and tighten according to **Fastener Tightening Specifications** .

Torque Converter Replacement Guide

Condition	Action
• Transmission Fluid Oxidized/Discolored • Clutch Fiber Material	Do not replace the torque converter. Refer to **Transmission Fluid Level and Condition Check**.
Transmission Fluid Contaminated with Metal Particles	**NOTE:** **Do not replace the torque converter for clutch system or gearset component damage. Fine metallic debris or clutch plate material that is suspended in the fluid will not cause damage to the internal torque converter components nor any internal transmission components.**
Harsh Gear Shifts	Do not replace the torque converter. Refer to **Symptoms - Automatic Transmission**.
Noise-Whine	• Refer to **Symptoms - Automatic Transmission**. • Do not replace the torque converter if noise is present in Neutral/Park. Refer to **Symptoms - Engine Mechanical** 2.8L, 3.0L, 3.2L, 3.6L or **Symptoms - Engine Mechanical** 4.8L, 5.3L, 6.0L, 6.2L, 7.0L.
Vibration-Out of Balance	Refer to Torque Converter Vibration Test in this procedure.
No Drive/Slips in Drive	Do not replace the torque converter until completing all engine and transmission diagnostics.
Idle Surge/Rough Idle	Do not replace the torque converter. Refer to **Symptoms - Engine Controls** 2.8L, 3.0L, 3.2L, 3.6L or **Symptoms - Engine Controls** 4.8L, 5.3L, 6.0L, 6.2L, 7.0L.
TCC Apply/Release Shudder	Do not replace the torque converter. Refer to Torque Converter Clutch Shudder in this procedure.
TCC Chuggle	Do not replace the torque converter. Refer to **Symptoms - Engine Controls** 2.8L, 3.0L, 3.2L, 3.6L or **Symptoms - Engine Controls** 4.8L, 5.3L, 6.0L, 6.2L, 7.0L.
DTC P0741-TCC Stuck OFF/High Slip-Intermittent Only	Do not replace the torque converter. Refer to **DTC P0741 or P0742** diagnostic table.

cardiagn.com

DTC P0741-TCC Stuck OFF/High Slip	Do not replace the torque converter. Refer to **DTC P0741 or P0742** diagnostic table.
DTC P0742-TCC Stuck ON	Do not replace the torque converter. Refer to **DTC P0741 or P0742** diagnostic table.
Transmission Fluid Contaminated with Sludge/Metal Particles as a result of: • Engine Coolant/Oil • Pump damage • Drive sprocket support damage • Turbine/stator shaft damage • Internal converter damage with no damage found in the transmission	Replace the torque converter.
Poor Acceleration above 48 km/h (30 mph) - Good Launch	Do not replace the torque converter until completing all engine and transmission diagnostics. • Refer to Torque Converter Stator in this procedure. • Refer to **Symptoms - Engine Controls** 2.8L, 3.0L, 3.2L, 3.6L or **Symptoms - Engine Controls** 4.8L, 5.3L, 6.0L, 6.2L, 7.0L.
Poor Launch - Good Acceleration above 48 km/h (30 mph)	Do not replace the torque converter until completing all engine and transmission diagnostics. • Refer to Torque Converter Stator in this procedure. • Refer to **Symptoms - Engine Controls** 2.8L, 3.0L, 3.2L, 3.6L or **Symptoms - Engine Controls** 4.8L, 5.3L, 6.0L, 6.2L, 7.0L.
Stripped Converter Bolt Holes	• Replace the torque converter. • Inspect flexplate and refer to **Lower Engine Noise, Regardless of Engine Speed** 2.8L, 3.0L, 3.2L, 3.6L or **Lower Engine Noise, Regardless of Engine Speed** 4.8L, 5.3L, 6.0L, 6.2L, 7.0L.
Torque Converter Pilot Damaged	Replace the torque converter.
Torque Converter Hub surface is damaged - scored, raised/transferred metal.	Replace the torque converter.
External Leaks in the weld areas - hub, lug or closure weld.	Replace the torque converter.
Broken/Cracked Flexplate	Replace the torque converter.
Torque Converter Discolored/Overheated	Replace the torque converter.

cardiagn.com

FLEX PLATE/TORQUE CONVERTER VIBRATION TEST

ISOLATING VIBRATION

CAUTION: Some engine/transaxle combinations cannot be balanced in this manner due to restricted access or limited clearances between the torque converter bolts and the engine. Ensure that the bolts do not bottom out in the lug nuts or the torque converter cover which could dent and cause internal damage.

To isolate and correct a flywheel or torque converter vibration, separate the torque converter from the flywheel to determine if vibration is in the engine or transmission.

1. With the engine at idle speed and the transmission in PARK or NEUTRAL, observe the vibration.
2. Turn the engine OFF.
3. Raise and suitably support the vehicle. Refer to **Lifting and Jacking the Vehicle** .
4. Remove the transmission converter cover bolts and the cover.
5. Mark the relationship of the converter to the flywheel.
6. Remove the bolts attaching the converter to the flywheel.
7. Slide the torque converter away from the flywheel.
8. Rotate the flywheel and torque converter to inspect for defects or missing balance weights.
9. Lower the vehicle.
10. With the engine at idle speed and the transmission in PARK or NEUTRAL, observe the vibration. Refer to **Diagnostic System Check - Vehicle** .
11. Turn the engine OFF.

INDEXING TORQUE CONVERTER

To determine and correct a torque converter vibration, the following procedure may have to be performed several times to achieve the best possible torque converter to flywheel balance.

1. Raise and suitably support the vehicle. Refer to **Lifting and Jacking the Vehicle** .
2. Rotate the torque converter one bolt position.

cardiagn.com

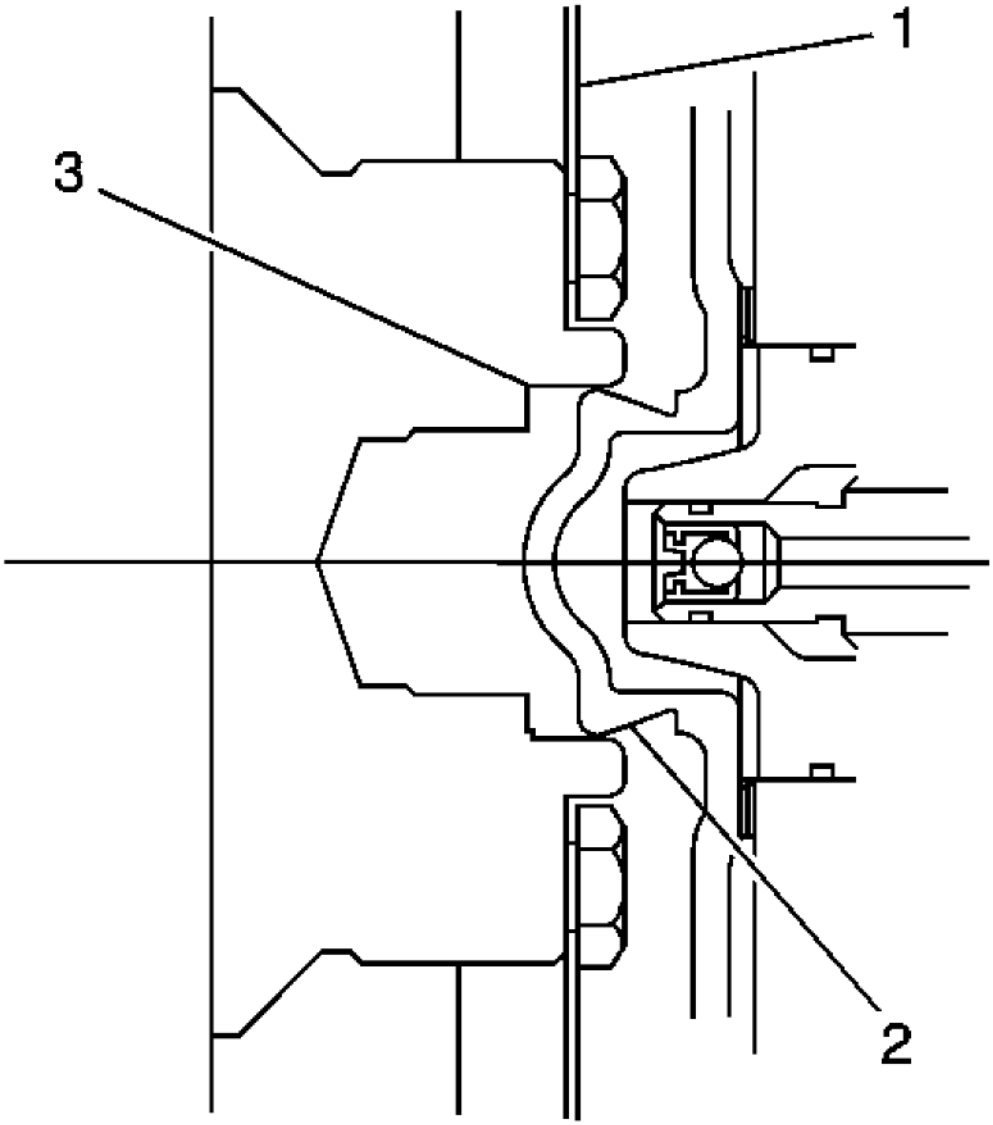

Fig. 15: View Of Torque Converter Hub In Engine Crankshaft
Courtesy of GENERAL MOTORS CORP.

3. Align the torque converter hub (2) in the engine crankshaft (3) and install the torque converter to flywheel bolts.
4. Lower the vehicle.
5. With the engine at idle speed and the transmission in PARK or NEUTRAL, observe the vibration. Refer to **Noise and Vibration Analysis**.

cardiagn.com

Repeat this procedure until you obtain the best possible balance.

6. Install the transmission converter cover bolts and the cover.

BUSHING AND MATING SHAFT INSPECTION

NOTE: Proper bushing and corresponding mating shaft inspection should be performed before replacing the bushing, shaft, and in some cases, the component which houses the bushing. Thoroughly clean and dry the bushing and shaft surfaces before inspecting for damage.

Any of the following bushing conditions require replacement of the bushing and/or housing:

- Discoloration due to heat distress
- Misalignment or displacement of bushing as a result of spinning in housing
- Medium to heavy scoring that can be easily detected with fingernail. Light scoring is a normal condition.
- Debris embedded into the bushing lining material
- Obvious damage, including excessive and uneven wear
- Excessive polishing. Minor polishing of the bushing is an indication of normal wear and does not require replacement.

Any of the following conditions require replacement of the bushing's mating shaft:

- Discoloration due to heat distress
- Rough surface finish that can be easily detected with finger
- Obvious shaft abnormalities, including warping or uneven surfaces
- Obvious damage or cracking

VIBRATION

Checks	Causes
Lug bolts for the Torque Converter (1)	Inspect for loose torque converter (1) lug bolts.
Input Sun Gear Thrust Washer (55)	Inspect for wear or damage.
Turbine Shaft Thrust Bearing Assembly (57)	Inspect for wear or damage.
2-6 and 3-5-R Clutch Hub Thrust Bearing Assembly (65)	Inspect the bearing for wear or damage.
Output Carrier Assembly (68)	• Inspect the carrier assembly for damaged pinion gears, thrush washers, pins, and rollers. • Inspect for a worn or damaged center support roller bearing assembly (485). • Inspect for damaged thrust bearings (486, 488).

cardiagn.com

	• Inspect the carrier assembly for damaged output carrier rear sun gear thrust bearing (captured).
Output Carrier Thrust Bearing Assembly (69)	Inspect the bearing for wear or damage.
Output Shaft Thrust Bearing Assembly (71)	Inspect the bearing for wear or damage.
1-2-3-4 Clutch Hub Thrust Bearing Assembly (63)	Inspect the bearing for wear or damage.
Turbine Shaft Thrust Bearing Assembly (57)	Inspect the bearing for wear or damage.

NOISE AND VIBRATION ANALYSIS

A noise or vibration that is noticeable when the vehicle is in motion MAY NOT be the result of the transmission.

If noise or vibration is noticeable in PARK and NEUTRAL with the engine at idle, but is less noticeable as RPM increases, the cause may be from poor engine performance.

- Vibration may also be caused by a small amount of water inside the converter.
- Inspect the tires for the following conditions:
  - Uneven wear
  - Imbalance
  - Mixed sizes
  - Mixed radial and bias ply
- Inspect the suspension components for the following conditions:
  - Alignment wear or damage
  - Loose fasteners
  - Driveline damage or wear
- Inspect the engine and transmission mounts for damage and loose bolts.
- Inspect the transmission case mounting holes for the following conditions:
  - Missing bolts, nuts, and studs
  - Stripped threads
  - Cracks
- Inspect the flywheel for the following conditions:
  - Missing or loose bolts
  - Cracks
  - Imbalance
- Inspect the torque converter for the following conditions:
  - Missing or loose bolts or lugs
  - Missing or loose balance weights

cardiagn.com

- Imbalance caused by heat distortion or fluid contamination

WHINE/GROWL NOISE THAT CHANGES WITH VEHICLE SPEED

Checks	Causes
2-6 and 3-5-R Clutch Hub Thrust Bearing Assembly (65)	Inspect the bearing for wear or damage.
Output Carrier Assembly (68)	• Inspect the carrier assembly for damaged pinion gears, thrust washers, pins, and rollers. • Inspect for a damaged center support roller bearing assembly (485). • Inspect for damaged thrust bearings (486, 488). • Inspect for damaged sun gears (487, 489). • Inspect the carrier assembly for damaged output carrier rear sun gear thrust bearing (captured). • Inspect for damaged or stripped splines on the output carrier assembly.
Output Carrier Thrust Bearing Assembly (69)	Inspect the bearing for wear or damage.
Output Shaft Assembly (70)	• Inspect for damaged internal gears (495, 497). • Inspect the output carrier bushing (498) for damage or wear.
Output Shaft Thrust Bearing Assembly (71)	Inspect the bearing for wear or damage.
Input Sun Gear Thrust Washer (55)	Inspect the washer for wear or damage.
Input Sun Gear Thrust Bearing (54)	Inspect the bearing for wear or damage.
Input Sun Gear (53)	Inspect for spline wear or damage.
Input Carrier Assembly (52)	Inspect the carrier assembly for damaged pinion gears, thrust washers, pins, and rollers.
1-2-3-4 Clutch Hub Thrust Bearing Assembly (63)	Inspect the bearing for wear or damage.
2-6 and 3-5-R Clutch (with Output Carrier Outer Sun Gear Shaft) Hub Assembly (64)	Inspect the output carrier inner sun gear shaft bushings (60 and 62) for damage or wear.
Turbine Shaft Thrust Bearing Assembly (57)	Inspect the bearing for wear or damage.
Fluid Filter Assembly (26)	• Inspect for damaged or restricted fluid filter assembly (26) • Inspect for damaged fluid filter seal assembly (25) or improper sealing interface (leaks, fluid aeration).
Automatic Transmission Fluid Pump Seal (5)	Inspect for worn or damaged seal.

NOISE IN FIRST OR REVERSE GEAR

cardiagn.com

Checks	Causes
Center Support with 2-6 Low and Reverse Clutch Assembly (67)	• Inspect for damaged or worn low and reverse clutch plates (463-465). • Inspect for damaged low and reverse clutch backing plate (462). Inspect for worn splines on backing plate. • Inspect for damaged low and reverse clutch backing plate retaining ring (461). • Inspect for damaged low and reverse clutch piston assembly (470), spring (469), spring retaining ring (466), and center support assembly (459). • Inspect for damaged low clutch sprag assembly (467). Holding the sprag assembly with the retaining ring facing up, and the inner race of the sprag assembly fixed, the outer race should freewheel counterclockwise. • Inspect for cut, worn, or damaged low clutch sprag seal (468).
Output Carrier Assembly (68)	Inspect for damaged or stripped splines on the output carrier assembly.

NOISE IN FIRST, SECOND, THIRD, FOURTH, FIFTH, OR REVERSE GEAR

Checks	Causes
Input Carrier Assembly (52)	Inspect thrust washers, pinion gears, and pins for wear or damage.
Input Sun Gear (53)	Inspect for damaged sun gear.
1-2-3-4 and 3-5-R Clutch Assembly (51)	Inspect for worn or damaged clutch bearing (428).

NOISE IN FIRST, SECOND, SIXTH, OR REVERSE GEAR

Checks	Causes
Center Support with 2-6 Low and Reverse Clutch Assembly (67)	Inspect for worn or damaged output carrier outer sun gear shaft front and rear bushings (458 and 460).
Output Carrier Assembly (68)	Inspect for a worn or damaged center support roller bearing assembly (485).

NOISE IN SECOND OR SIXTH GEAR

Checks	Causes
Center Support with 2-6 Low and Reverse Clutch Assembly (67)	• Inspect for damaged or worn output carrier outer sun gear shaft front bushing (458). • Inspect for damaged or worn output carrier outer sun gear shaft rear bushing (460). • Inspect for damaged 2-6 clutch backing plate (451). Inspect

cardiagn.com

	for worn splines on backing plate. • Inspect for damaged 2-6 clutch backing plate retaining ring (450). • Inspect for damaged 2-6 clutch piston assembly (457), spring (456), retaining ring (455), and center support assembly (459).

NOISE DURING 3-4 OR 4-3 SHIFTS

Checks	Causes
4-5-6 Clutch (with Output Carrier Shaft and Dampener) Hub Assembly (58)	• Inspect hub assembly (475), dampener (476), and apply plate (477) for wear or damage. • Inspect for damaged or worn 4-5-6 clutch backing plate (432).

NOISE IN FOURTH, FIFTH, OR SIXTH GEAR

Checks	Causes
Input Sun Gear Thrust Washer (55)	Inspect for wear or damage.
Turbine Shaft Thrust Bearing Assembly (57)	Inspect for wear or damage.
4-5-6 Clutch (with Output Carrier Shaft and Dampener) Hub Assembly (58)	• Inspect for damaged or worn 4-5-6 clutch backing plate (432). • Inspect for improper selective 4-5-6 clutch backing plate retaining ring (431).

CLUTCH PLATE DIAGNOSIS

COMPOSITION PLATES

Dry the plates and inspect the plates for the following conditions:

- Pitting
- Flaking
- Delamination-splitting or separation of bonded clutch material
- Wear
- Glazing
- Cracking
- Charring
- Chips or metal particles embedded in the lining

Replace a composition plate which shows any of these conditions.

cardiagn.com

STEEL PLATES

Wipe the plates dry and check the plates for heat discoloration. If the surfaces are smooth, even if color smear is indicated, you can reuse the plate. If the plate is discolored with heat spots or if the surface is scuffed, replace the plate.

CAUSES OF BURNED CLUTCH PLATES

The following conditions can result in a burned clutch plate:

- Incorrect usage of clutch or apply plates
- Engine coolant or water in the transmission fluid
- A cracked clutch piston
- Damaged or missing seals
- Low line pressure
- Valve body conditions
  - The valve body face is not flat.
  - Porosity is between channels.
  - The valve bushing clips are improperly installed.
  - The checkballs are misplaced.
- The Teflon® seal rings are worn or damaged.

ENGINE COOLANT/WATER IN TRANSMISSION

CAUTION: The antifreeze or water will deteriorate the seals, gaskets and the glue that bonds the clutch material to the pressure plate. Both conditions may cause permanent damage to the transmission.

If antifreeze or water has entered the transmission, perform the following:

1. Disassemble the transmission.
2. Replace all of the rubber type seals. The coolant will attack the seal material which will cause leakage.
3. Replace the composition-faced clutch plate assemblies. The facing material may separate from the steel center portion.
4. Replace all of the nylon parts - washers.
5. Replace the torque converter.
6. Thoroughly clean and rebuild the transmission, using new gaskets and oil filter.
7. Flush the cooler lines after the transmission cooler has been properly repaired or replaced.

FLUID LEAK DIAGNOSIS

GENERAL METHOD

cardiagn.com

1. Verify that the leak is transmission fluid.

CAUTION: Do not clean using brake cleaner or other reactive solvents as these solvents can damage rubber gaskets, seals and bushings.

2. Thoroughly clean the suspected leak area using a rag.

NOTE: Do not idle vehicle, this will not actuate transmission systems, and do not drive the vehicle on the freeway as this will splatter oil inhibiting leak diagnosis.

3. Operate the vehicle for 15-20 minutes under city driving conditions until normal operating temperatures are reached.
4. Park the vehicle over clean paper or cardboard.
5. Shut OFF the engine.
6. Look for fluid spots on the paper.
7. Make the necessary repairs.

POWDER METHOD

CAUTION: Do not clean using brake cleaner or other reactive solvents as these solvents can damage rubber gaskets, seals and bushings.

1. Thoroughly clean the suspected leak area using a rag.
2. Apply an aerosol type powder, such as foot powder, to the suspected leak area.

NOTE: Do not idle vehicle, this will not actuate transmission systems, and do not drive the vehicle on the freeway as this will splatter oil inhibiting leak diagnosis.

3. Operate the vehicle for 15-20 minutes under city driving conditions until normal operating temperatures are reached.
4. Shut OFF the engine.
5. Inspect the suspected leak area.
6. Trace the leak path through the powder in order to find the source of the leak.
7. Make the necessary repairs.

DYE AND BLACK LIGHT METHOD

A fluid dye and black light kit is available from various tool manufacturers.

1. Follow the manufacturer's instructions in order to determine the amount of dye to use.

cardiagn.com

2. Detect the leak with the black light.
3. Make the necessary repairs.

FIND THE CAUSE OF THE LEAK

Pinpoint the leak and trace the leak back to the source. You must determine the cause of the leak in order to repair the leak properly. For example, if you replace a gasket, but the sealing flange is bent, the new gasket will not repair the leak. You must also repair the bent flange. Before you attempt to repair a leak, check for the following conditions, and make repairs as necessary:

Gaskets

- Fluid level/pressure is too high
- Plugged vent or drain-back holes
- Improperly tightened fasteners
- Dirty or damaged threads
- Warped flanges or sealing surface
- Scratches, burrs, or other damage to the sealing surface
- Damaged or worn gasket
- Cracking or porosity of the component
- Improper sealant used, where applicable
- Incorrect gasket

Seals

- Fluid level/pressure is too high
- Plugged vent or drain-back holes
- Damaged seal bore
- Damaged or worn seal
- Improper installation
- Cracks in component
- Manual or output shaft surface is scratched, nicked, or damaged
- Loose or worn bearing causing excess seal wear

POSSIBLE POINTS OF FLUID LEAKS

Transmission Oil Pan

- Incorrectly tightened oil pan bolts
- Improperly installed or damaged oil pan gasket
- Damaged oil pan or mounting face
- Incorrect oil pan gasket

cardiagn.com

Case Leak

- Damaged vehicle speed sensor seal
- Damaged manual shaft seal
- Loose or damaged oil cooler connector fittings
- Worn or damaged propeller shaft oil seal
- Loose line pressure pipe plug
- Porous casting warped torque converter housing

Leak at the Torque Converter End

- Converter leak in the weld area
- Converter seal lip cut. Check the converter hub for damage
- Converter seal bushing moved forward and damaged
- Converter seal garter spring missing from the seal
- Porous casting of the transmission case or the oil pump

Leak at the Vent Pipe

- Overfilled system
- Water or coolant in the fluid; The fluid will appear milky
- Transmission case porous
- Incorrect fluid level indicator
- Plugged vent
- Drain-back holes plugged
- Mispositioned oil pump to case gasket, if equipped

cardiagn.com

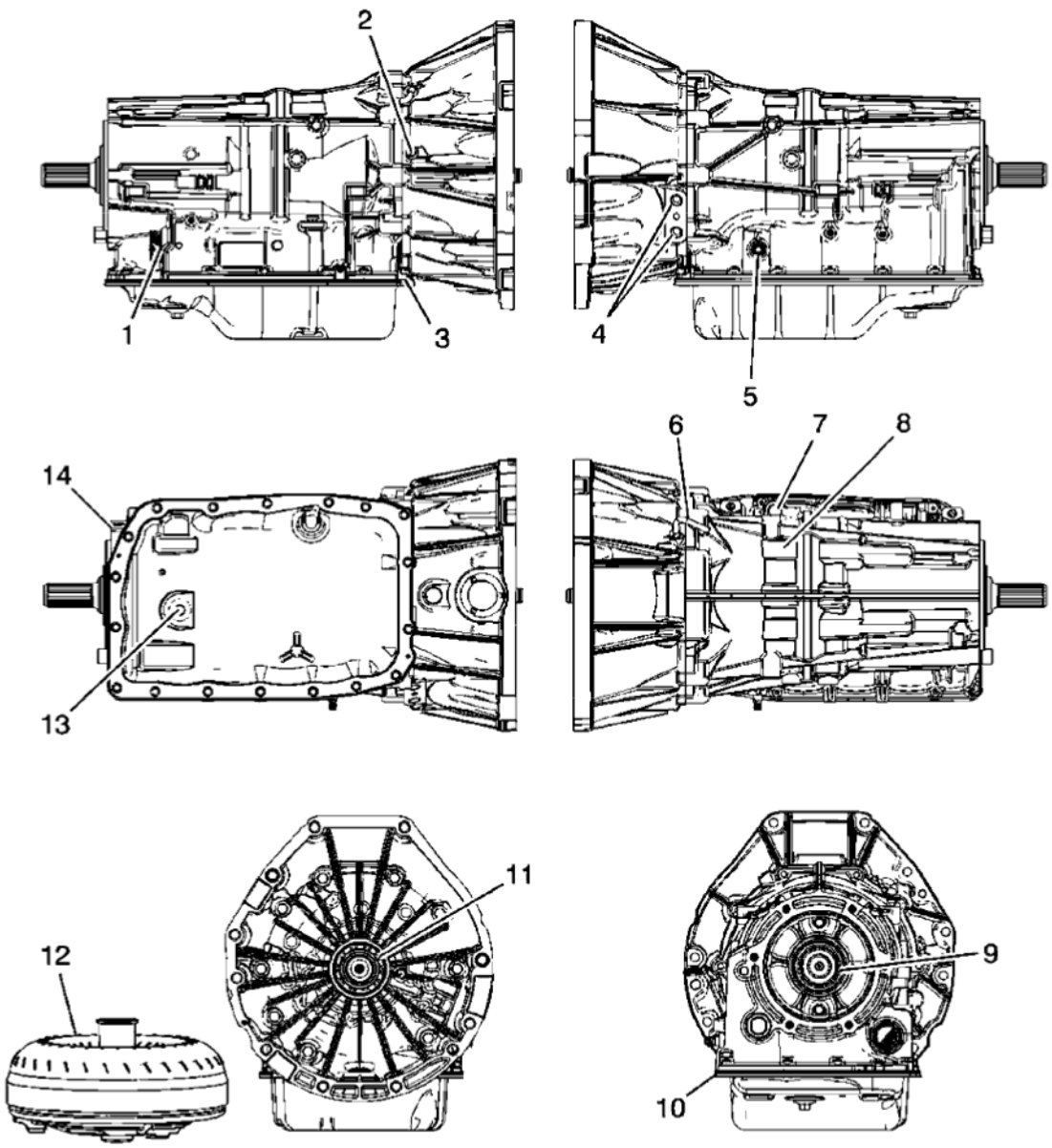

Fig. 16: Leak Inspection Points
Courtesy of GENERAL MOTORS CORP.

Callout	Component Name
1	Automatic Transmission Electrical Connector Passage Sleeve
2	Line Pressure Test Hole Plug
3	Converter Housing to Case Joint
4	Trans Fluid Cooler Pipe Fitting Seals
5	Manual Shift Shaft Seal
6	Automatic Transmission Vent Pipe
7	Fluid Fill Tube Plug Assembly

cardiagn.com

8	Transmission Case Assembly
9	Output Shaft Seal Assembly
10	A/Trans Fluid Pan Gasket
11	Torque Converter Fluid Seal Assembly
12	Torque Converter Assembly
13	Trans Oil Level Check Plug
14	Case Extension to Case Joint

CASE POROSITY REPAIR

Some external leaks are caused by case porosity in non-pressurized areas. You can usually repair these leaks with the transmission in the vehicle.

1. Thoroughly clean the area to be repaired with a cleaning solvent. Air dry the area.

   WARNING: Epoxy adhesive may cause skin irritations and eye damage. Read and follow all information on the container label as provided by the manufacturer.

2. Using instructions from the manufacturer, mix a sufficient amount of an epoxy to make the repair.
3. While the transmission case is still hot, apply the epoxy. You can use a clean, dry soldering acid brush to clean the area and also to apply the epoxy cement. Make certain that the area to be repaired is fully covered.
4. Allow the epoxy cement to cure for three hours before starting the engine.
5. Repeat the fluid leak diagnosis procedures.

TRANSMISSION FLUID COOLER FLUSHING AND FLOW TEST

GM studies indicate that plugged or restricted transmission oil coolers and pipes cause insufficient transmission lubrication and elevated operating temperatures which can lead to premature transmission failure. Many repeat repair cases could have been prevented by following published procedures for transmission oil cooler flushing and flow checking. This procedure includes flow checking and flushing the auxiliary transmission oil cooler, if equipped.

NOTE: Use the J 45096: flush and flow test tool or equivalent to flush and flow test the transmission oil cooler and the oil cooler pipes after the transaxle is removed for repairs.

Only GM Goodwrench DEXRON®VI automatic transmission fluid should be used when doing a repair on a GM transmission.

Time allowance for performing the cooler flow checking and flushing procedure has been included in the appropriate labor time guide operations since the 1987 model year. The service procedure steps for oil cooler flushing and flow testing are as follows:

cardiagn.com

COOLER FLOW CHECK AND FLUSHING STEPS

1. Machine Set-up
2. Determine Minimum Flow Rate
3. Back Flush
4. Forward Flush
5. Flow Test
6. Code Recording Procedure
7. Clean-up

Special Tools

- **J 45096:** Transmission Oil Cooling System Flush and Flow Test Tool
- **J 45096-30:** Transmission Cooler Flush Adapter
- Shop air supply with water/oil filters, regulator and pressure gauge - minimum 90 psi
- Eye protection
- Rubber gloves

For equivalent regional tools, refer to **Special Tools** .

MACHINE SET-UP

cardiagn.com

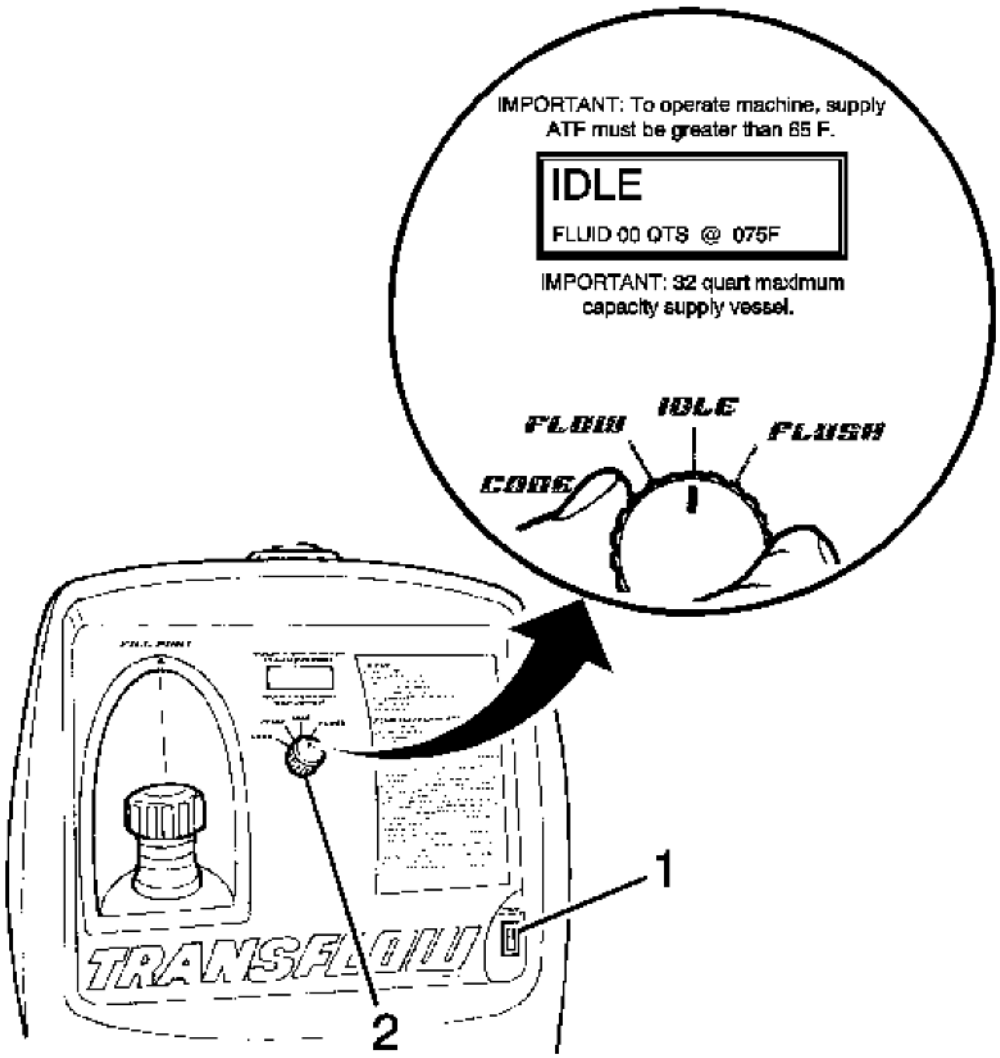

Fig. 17: View Of Main Power Switch & Main Function Switch
Courtesy of GENERAL MOTORS CORP.

1. Verify that the main power switch (1) is in the OFF position.
2. Place the main function switch (2) in the IDLE position.

cardiagn.com

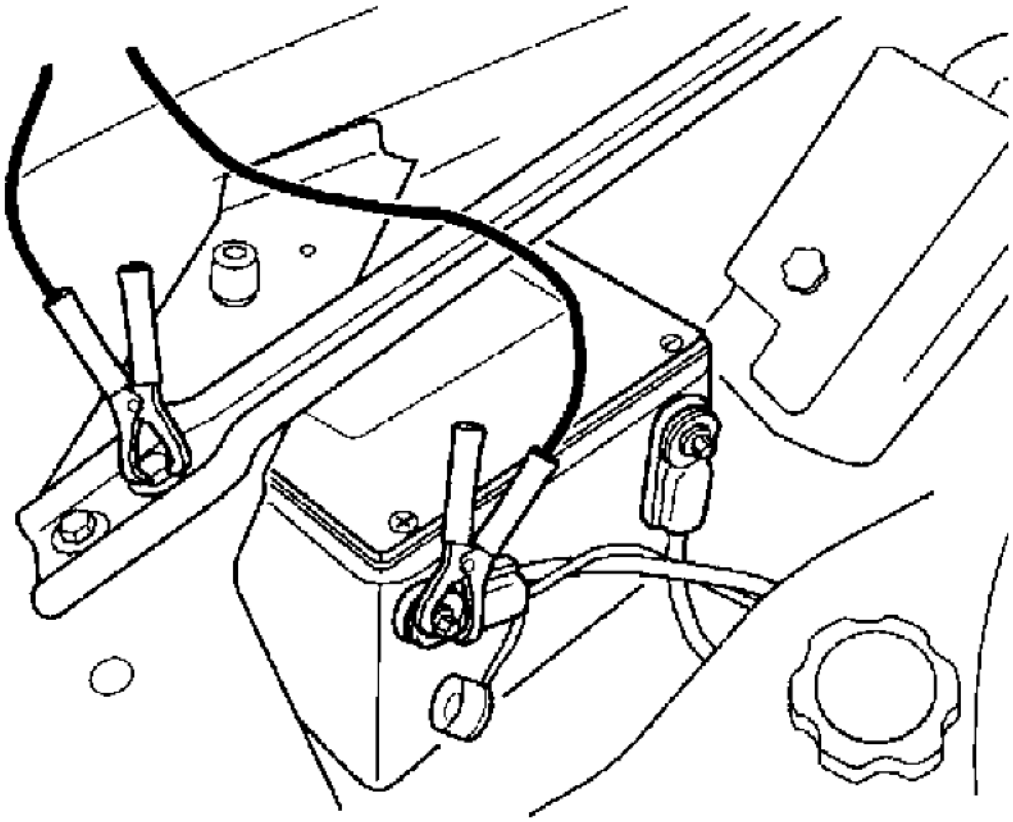

Fig. 18: Connecting To 12V DC Power Source
Courtesy of GENERAL MOTORS CORP.

3. Connect **J 45096:** flush and flow test tool to the vehicle 12V DC power source by connecting the red battery clip to the positive, +, battery post on the vehicle and connect the negative lead to a known good chassis ground.
4. Turn the main power switch to the ON position.

cardiagn.com

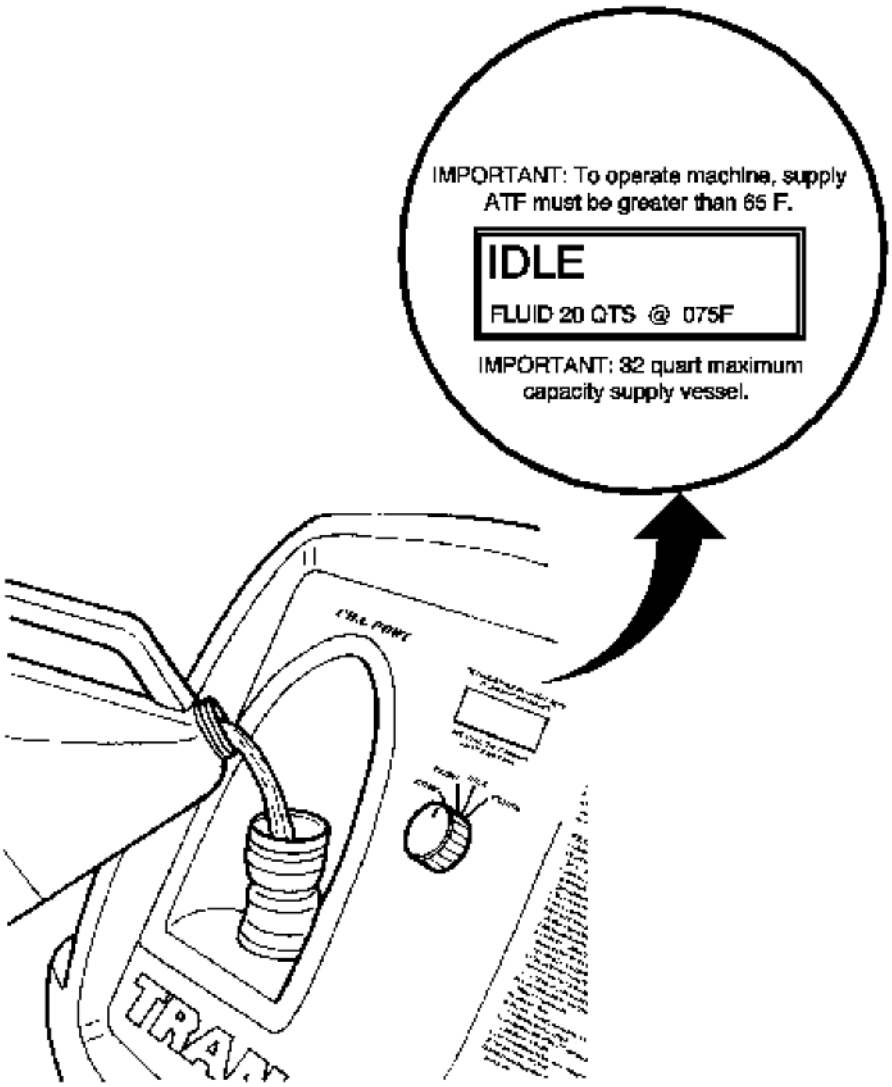

Fig. 19: Filling Supply Tank With Transmission Fluid
Courtesy of GENERAL MOTORS CORP.

CAUTION: Do not overfill the supply vessel. Damage to the unit may result. To verify the fluid level, view the LCD screen display while filling the unit, to ensure the fluid level does not exceed 30 L (32 qt).

5. Fill the supply tank with Dexron®VI through the fill port.
6. Reinstall and tighten the fill cap.

cardiagn.com

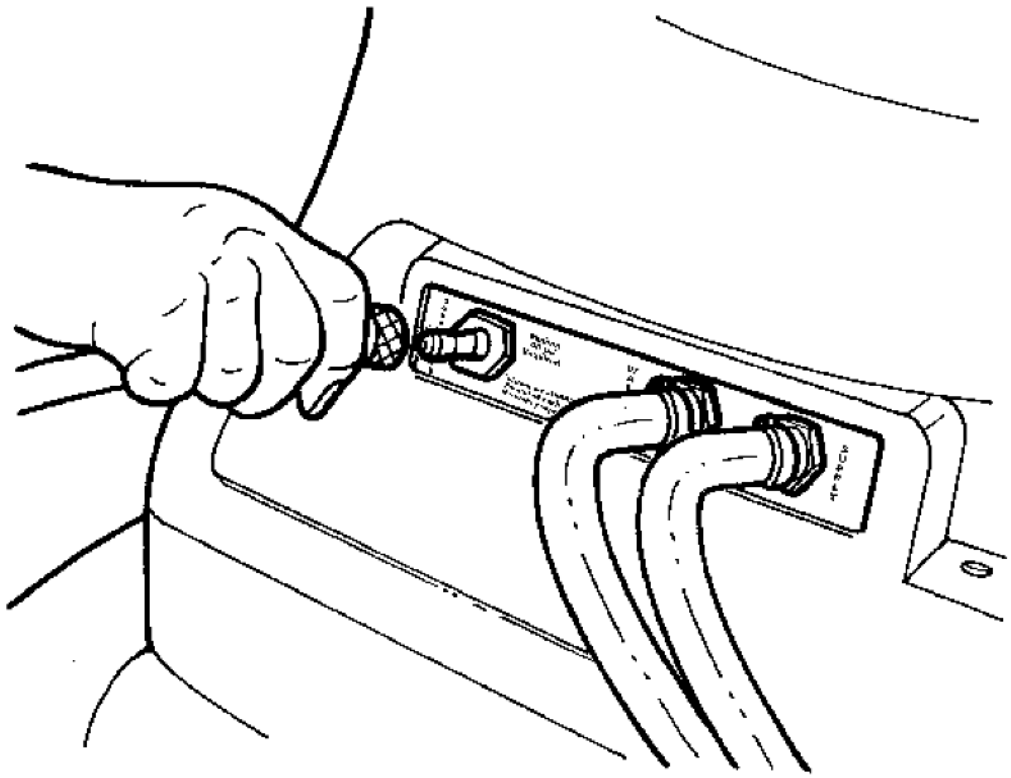

Fig. 20: Applying Shop Air Supply Hose To Quick-Disconnect
Courtesy of GENERAL MOTORS CORP.

7. Connect a shop air supply hose to the quick-disconnect on the rear panel marked SUPPLY AIR.

DETERMINE MINIMUM FLOW RATE

cardiagn.com

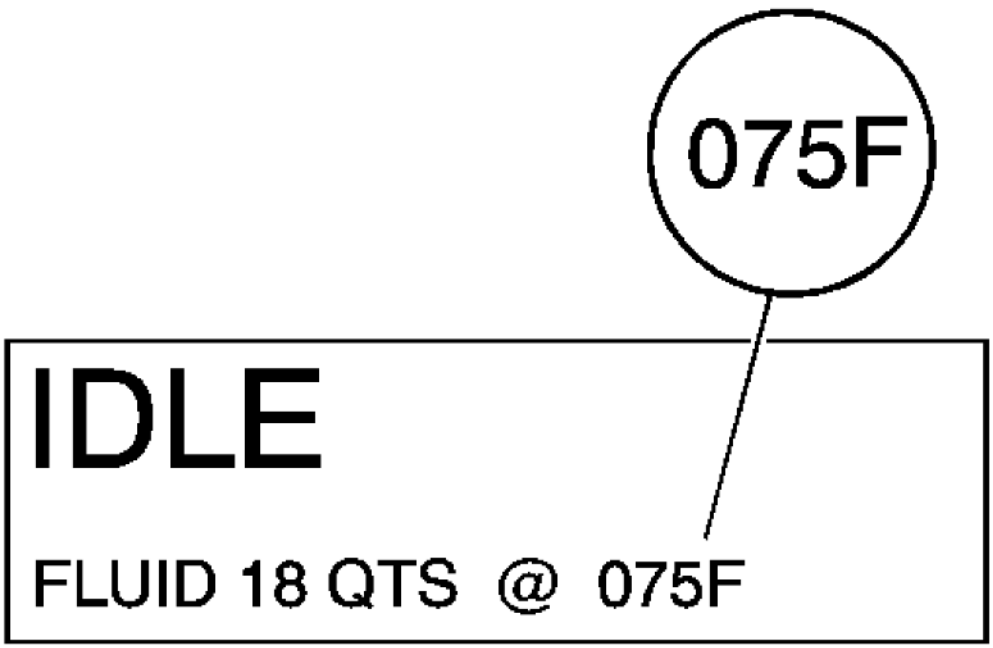

Fig. 21: Identifying Machine Display Of Automatic Transmission Fluid Temperature
Courtesy of GENERAL MOTORS CORP.

1. From the machine display, identify the temperature of the automatic transmission fluid that is stored in the supply vessel of **J 45096:** flush and flow test tool.

cardiagn.com

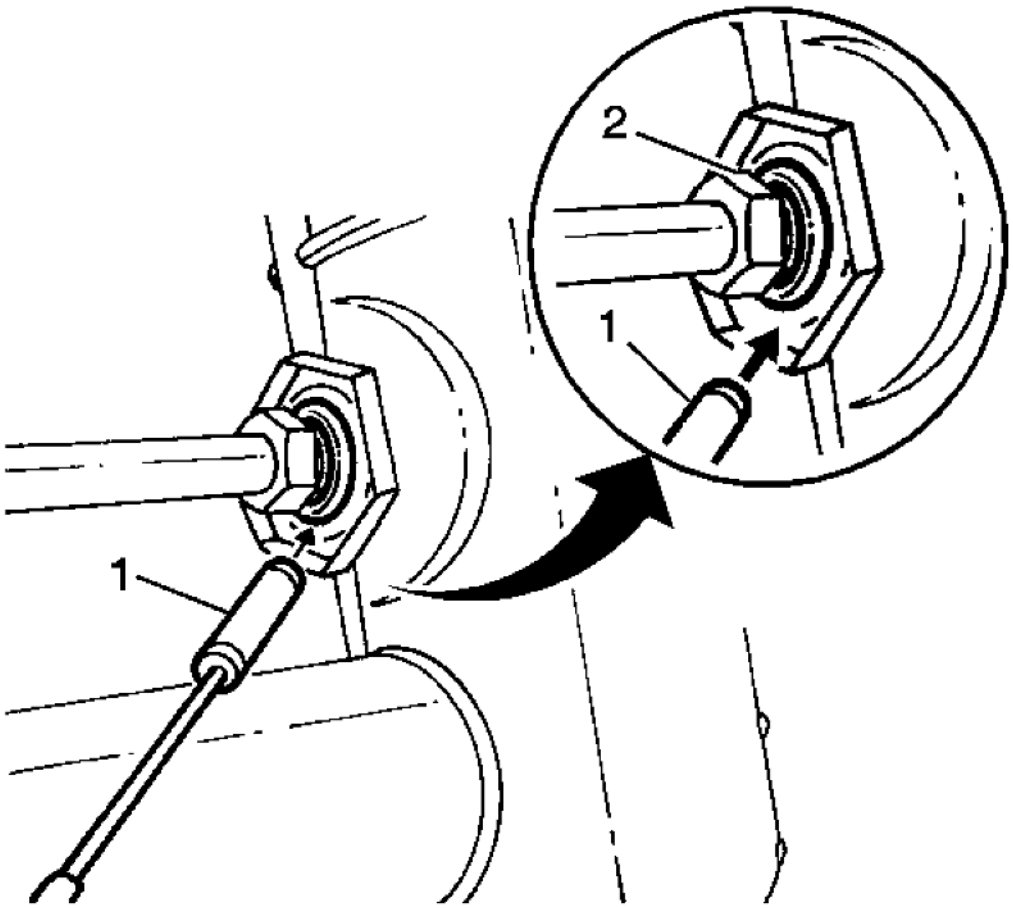

Fig. 22: Identifying Transmission Oil Cooler Metal Composition
Courtesy of GENERAL MOTORS CORP.

2. Determine whether the transmission oil cooler is steel or aluminum by using a magnet (1) at the cooler flange (2) at the radiator.
3. Refer to the table below. Using the temperature from step 1, locate on either the Steel MINIMUM Flow Rate table or the Aluminum MINIMUM Flow Rate table the minimum flow rate in gallons per minutes (GPM). Record the minimum flow rate in GPMs and the supply fluid temperature for further reference.

Example:

- Fluid temperature: 75°F
- Cooler type: Steel

The MINIMUM flow rate for this example would be 0.8 GPM.

cardiagn.com

4. Inspect transmission oil cooler lines for damage or kinks that could cause restricted oil flow. Repair as needed and refer to the appropriate GM service manual procedures.

Minimum Flow Rate in Gallons Per Minute (gpm)

Temperature Range	Steel	Aluminum
65 - 66°F	0.6 gpm	0.5 gpm
67 - 70°F	0.7 gpm	0.6 gpm
71 - 75°F	0.8 gpm	0.7 gpm
76 - 80°F	0.9 gpm	0.8 gpm
81 - 84°F	1.0 gpm	0.9 gpm
85 - 89°F	1.1 gpm	1.0 gpm
90 - 94°F	1.2 gpm	1.1 gpm
95 - 98°F	1.3 gpm	1.2 gpm
99 - 103°F	1.4 gpm	1.3 gpm
104 - 108°F	1.5 gpm	1.4 gpm
109 - 112°F	1.6 gpm	1.5 gpm
113 - 117°F	1.7 gpm	1.6 gpm
118 - 120°F	1.8 gpm	1.7 gpm

BACK FLUSH PROCEDURE

cardiagn.com

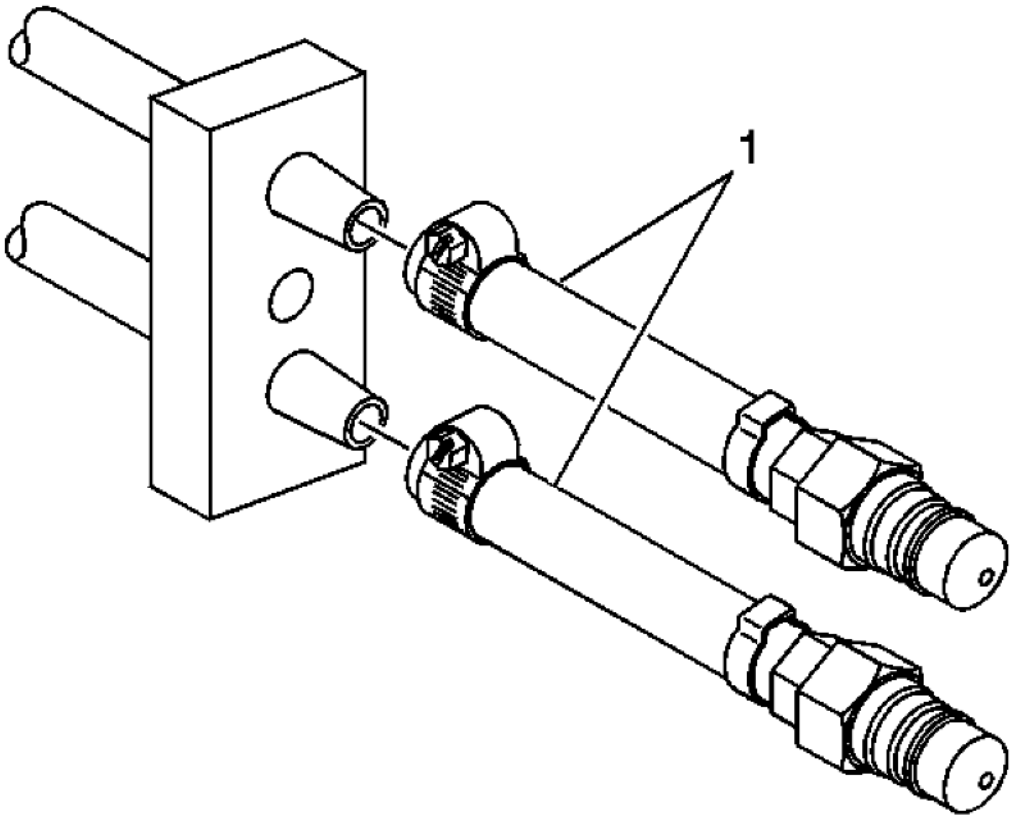

Fig. 23: Identifying Transmission Oil Cooler Supply & Return Lines
Courtesy of GENERAL MOTORS CORP.

1. Connect the **J 45096-30:** cooler flush adapter (1) to the vehicle transmission oil cooler supply and return lines at the transmission.

cardiagn.com

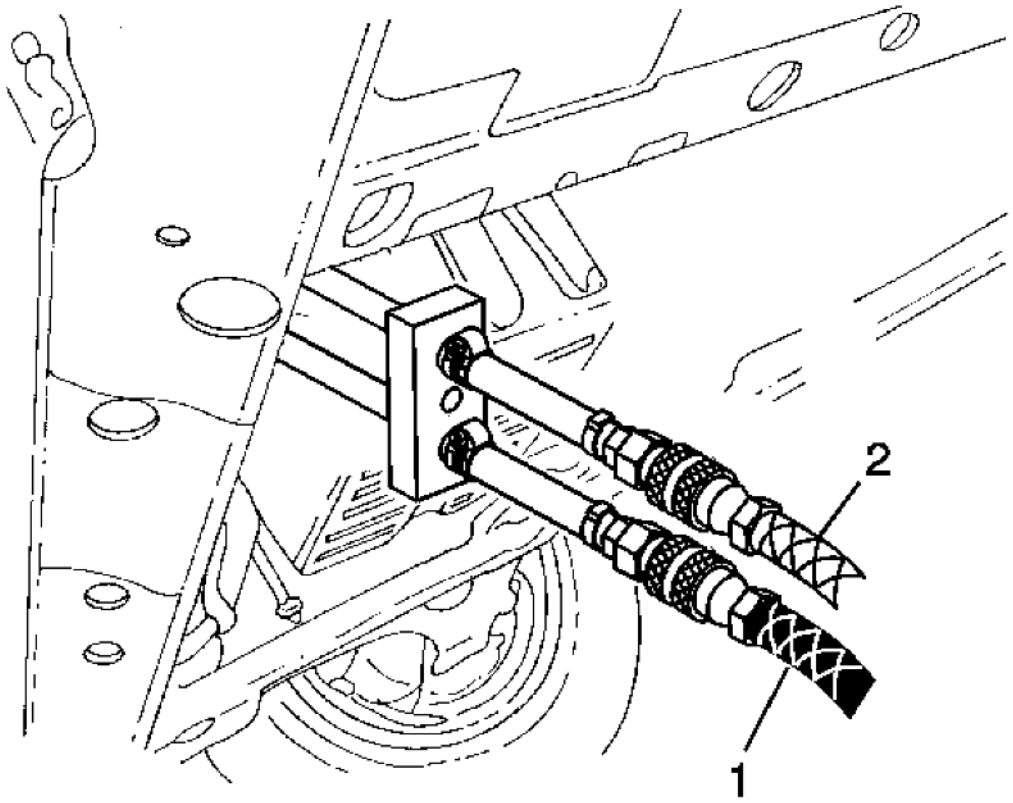

Fig. 24: Identifying Black Supply Hose & Clear Waste Hose
Courtesy of GENERAL MOTORS CORP.

2. Connect the black supply hose (1) to the return line, top connector of the transmission, and the clear waste hose (2) to the feed line, bottom connector of the transmission, to the vehicle cooler lines. This is the reverse flow - backflush direction.

cardiagn.com

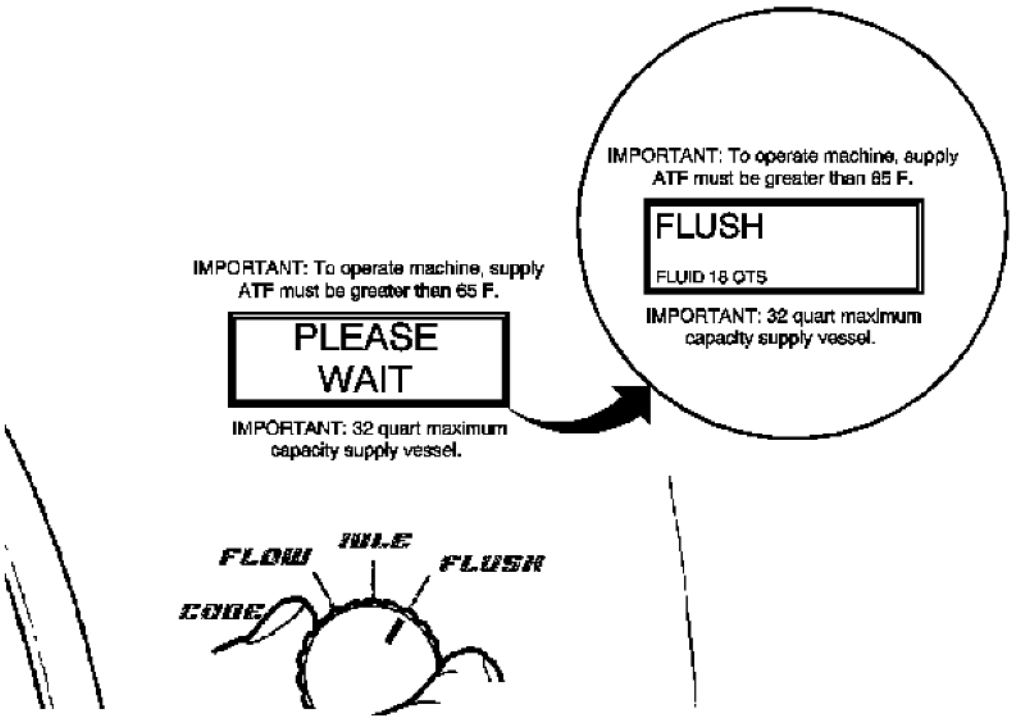

Fig. 25: Setting Main Function Switch To FLUSH Position
Courtesy of GENERAL MOTORS CORP.

3. Turn the main function switch to the FLUSH position. Allow the machine to operate for 30 seconds.

cardiagn.com

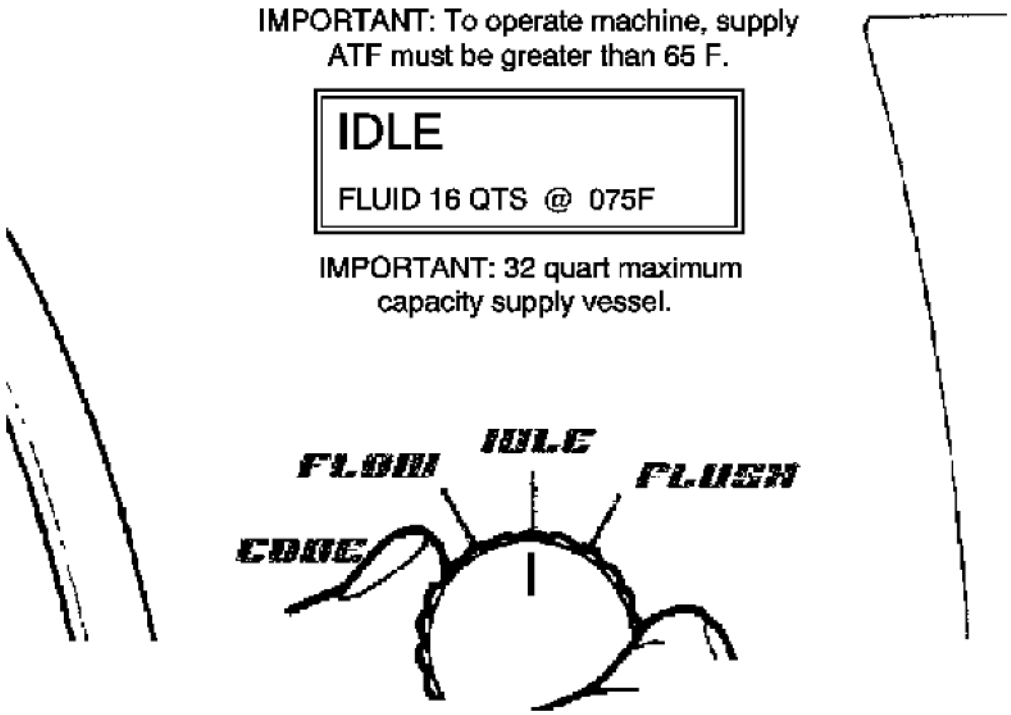

Fig. 26: Setting Main Function Switch To IDLE Position
Courtesy of GENERAL MOTORS CORP.

4. Turn the main function switch to the IDLE position and allow the supply vessel pressure to dissipate.

FORWARD FLUSH

cardiagn.com

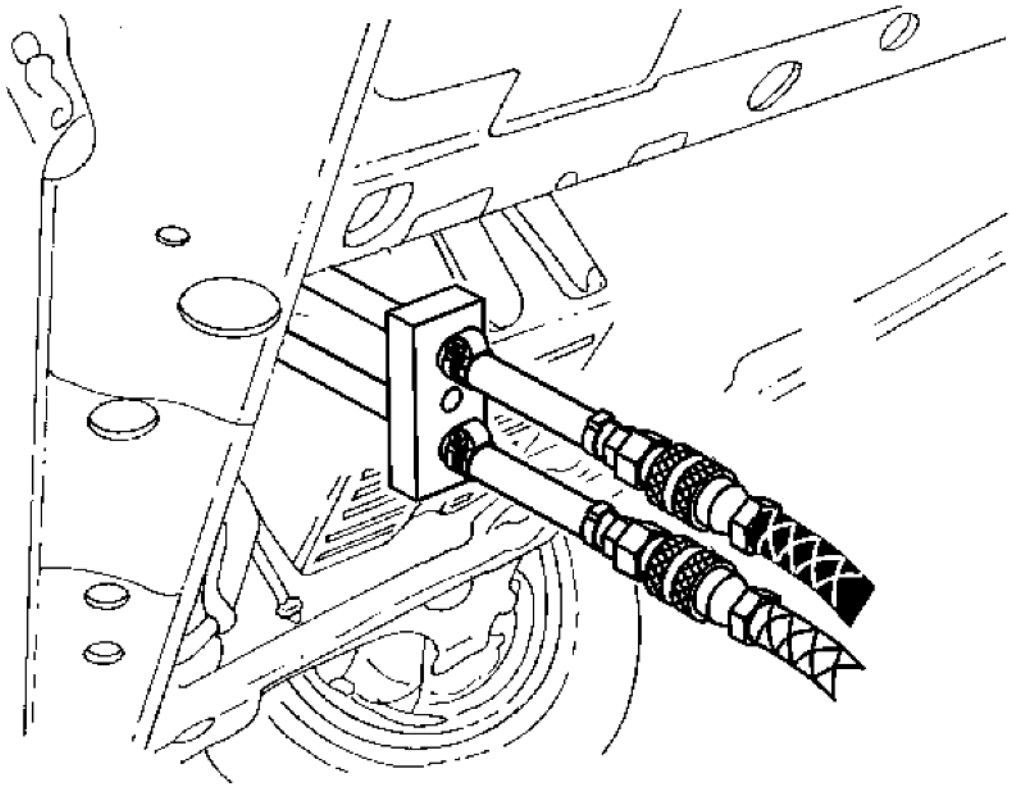

Fig. 27: Black Supply Hose & Clear Waste Hose
Courtesy of GENERAL MOTORS CORP.

1. Disconnect the supply and waste hoses from the vehicle cooler lines. Reverse the supply and waste hoses to provide a normal flow direction.

cardiagn.com

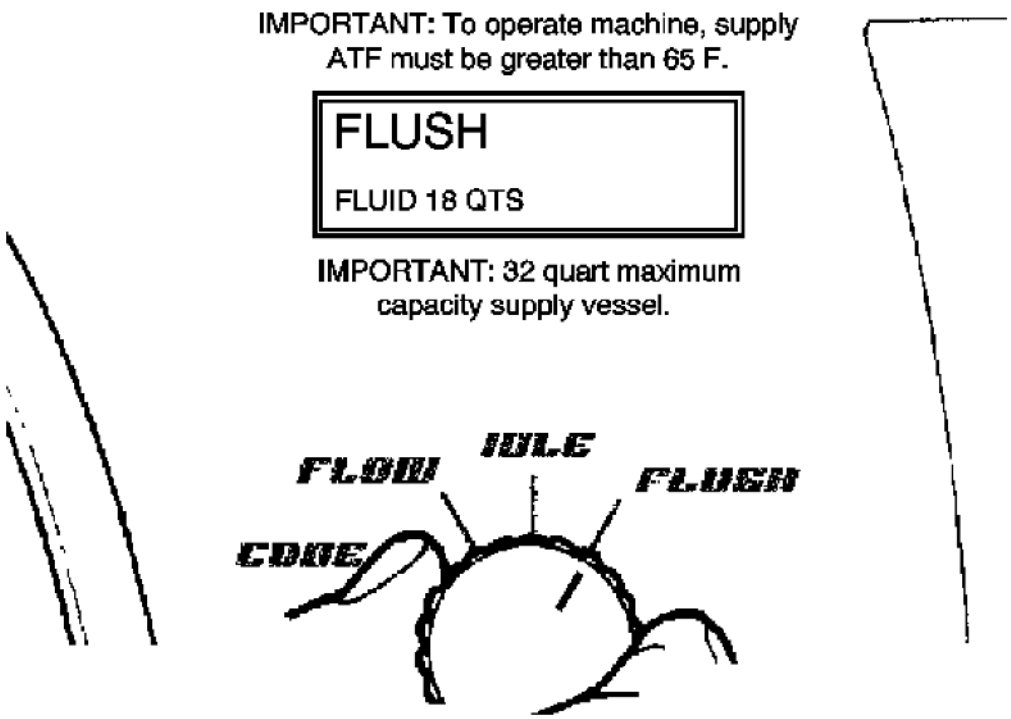

Fig. 28: Setting Main Function Switch To FLUSH Position
Courtesy of GENERAL MOTORS CORP.

2. Turn the main function switch to the FLUSH position and allow machine to operate for 30 seconds.

FLOW TEST

cardiagn.com

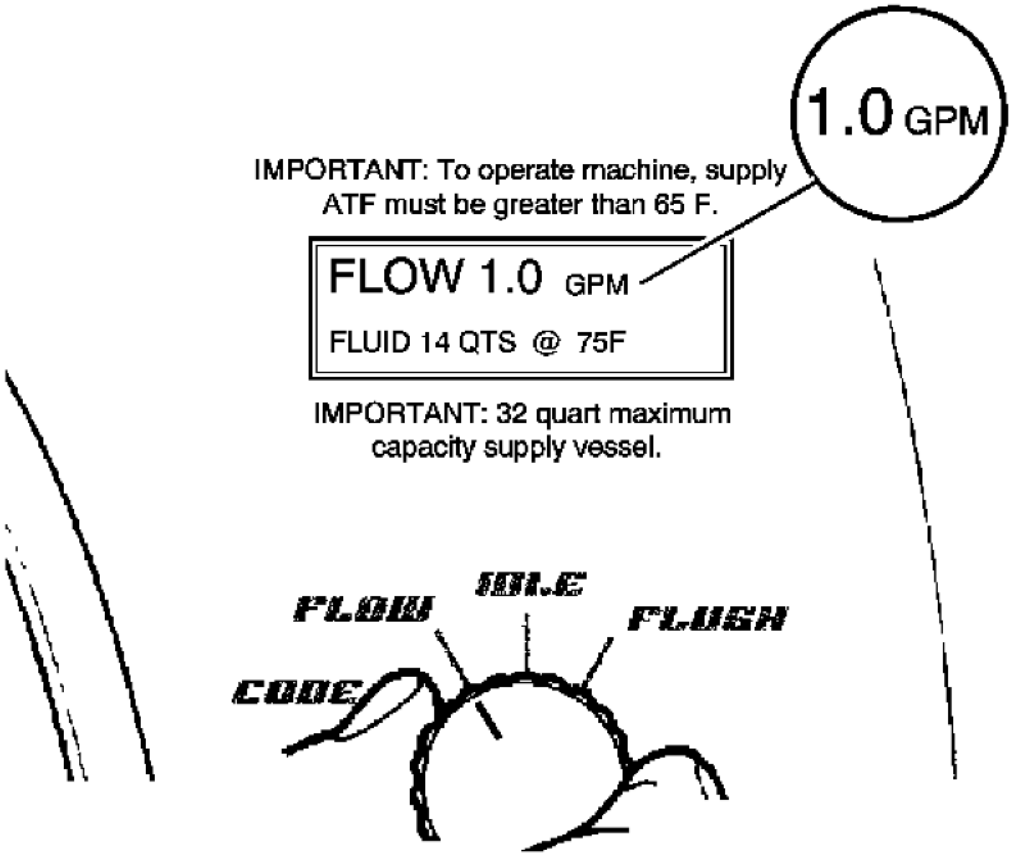

Fig. 29: Setting Main Function Switch To FLOW Position
Courtesy of GENERAL MOTORS CORP.

NOTE: If the flow rate is less than 0.5 gpm, the LCD displays an error message. Refer to the Troubleshooting section of the operation manual.

1. Turn the main function switch to the FLOW position and allow the oil to flow for 15 seconds. Observe and note the flow rate; this is the TESTED flow rate.
2. Compare the TESTED flow rate to the MINIMUM flow rate information previously recorded.
   - If the TESTED flow rate is equal to or greater than the MINIMUM flow rate recorded, the oil cooling system is functioning properly. Perform Code Recording Procedure.
   - If the TESTED flow rate is less than the MINIMUM flow rate previously recorded, repeat the back flush and forward flush procedures.
3. If the TESTED flow rate is less than the MINIMUM flow rate after the second test, perform Code Recording Procedure.

cardiagn.com

1. Replace the transmission oil cooler.
2. Reconnect supply and waste hoses to the cooler lines in the normal flow direction. Perform Flow Test.
3. Perform Code Recording Procedure.

CODE RECORDING PROCEDURE

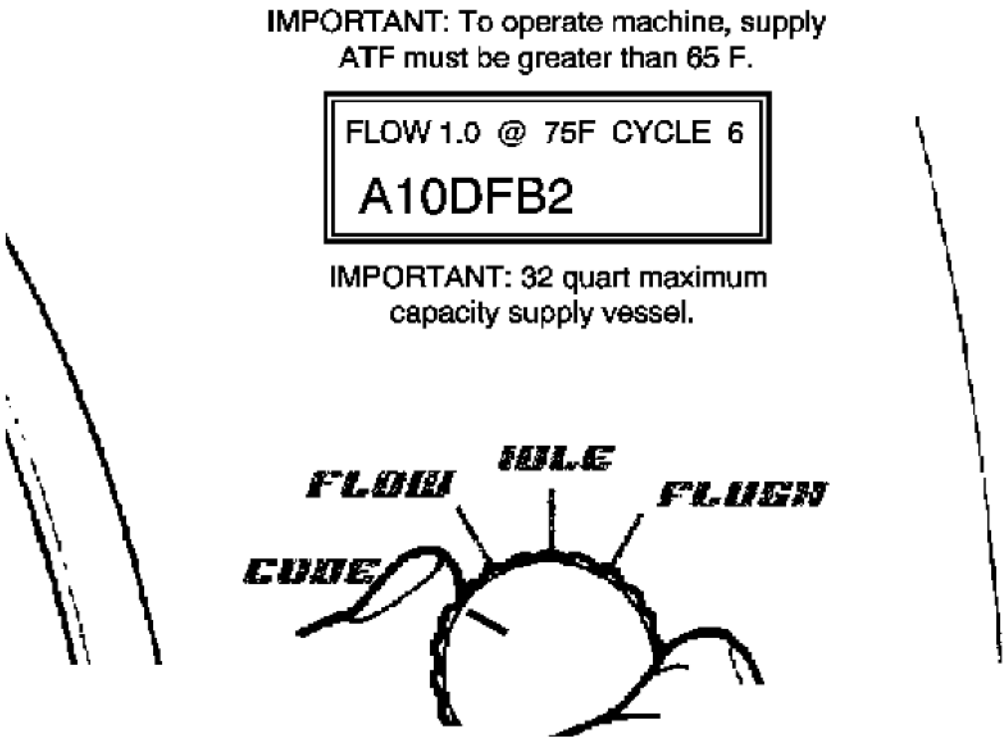

Fig. 30: Setting Main Function Switch To CODE Position
Courtesy of GENERAL MOTORS CORP.

1. Turn the main function switch to the CODE position.

NOTE:

- **If power is interrupted prior to the recording of the seven-character code, the code will be lost and the flow rate test will need to be repeated.**
- **The flow test must run for a minimum of 8-10 seconds and be above 0.5 GPM for a code to be generated.**

cardiagn.com

2. Record TESTED flow rate, temperature, cycle and seven-character flow code information on repair order.

CLEAN-UP

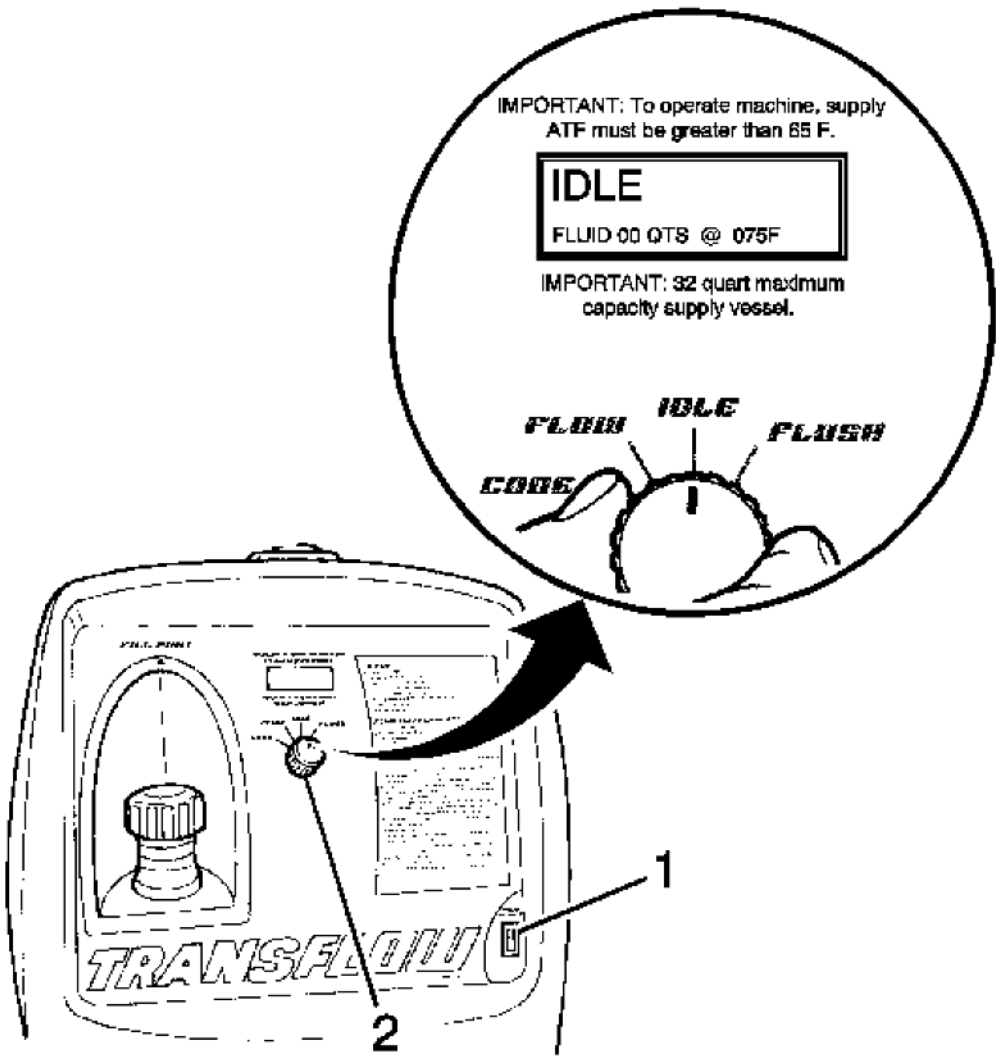

Fig. 31: View Of Main Power Switch & Main Function Switch
Courtesy of GENERAL MOTORS CORP.

1. Turn the main function switch (2) to the IDLE position and allow the supply vessel pressure to dissipate.
2. Turn the main power switch (1) to the OFF position.

cardiagn.com

NOTE: **A small amount of water may drain from the bottom of the unit when the air supply is disconnected. This is a normal operation of the built-in water separator.**

3. Disconnect the supply and waste hoses and the 12-volt power source from the vehicle.

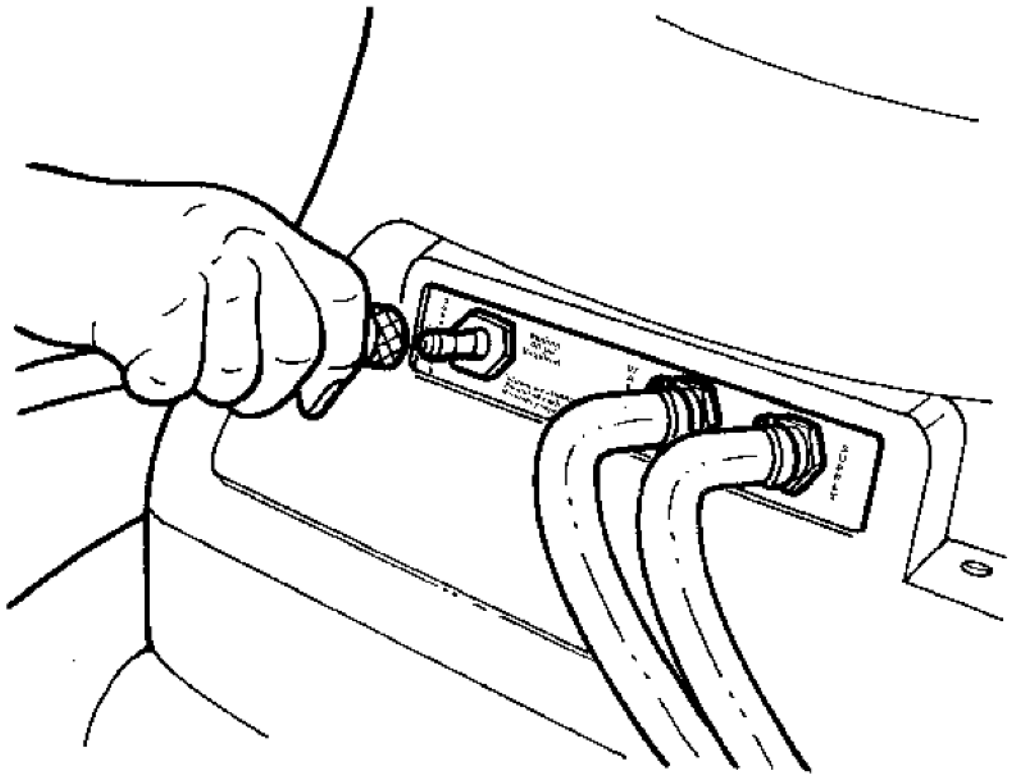

Fig. 32: Applying Shop Air Supply Hose To Quick-Disconnect
Courtesy of GENERAL MOTORS CORP.

4. Disconnect the air supply hose from **J 45096:** flush and flow test tool.
5. Dispose of the waste ATF in accordance with all applicable federal, state, and local requirements.

AUTOMATIC TRANSMISSION FLUID LEAKS

Checks	Causes
Torque Converter (1)	Inspect for damage, cracks at the lug, hub and seal welds.
	• Verify leak is ATF and not oil from rear of engine.

cardiagn.com

Torque Converter Housing (203)	• Inspect for housing porosity or damage. • Inspect for worn or damaged torque converter seal (201). • Inspect for loose line pressure plug. • Inspect cooler line attachment for loose bolt, worn or damaged seal, or leak at line to boss joint. • Inspect vent pipe attachment to housing and hose. • Verify torque of housing to case bolts.
Automatic Transmission Fluid Pump Seal (5)	Inspect for cut, wear, or damage.
Case Assembly	• Inspect for porosity or damage. • Inspect manual shaft seal. • Inspect control wiring input sleeve seals. • Inspect rear case plugs (12) (4WD/AWD only, 4WD may also be cast over).
Extension Assembly	• Verify oil is from transmission and not transfer case assembly (4WD/AWD). • Inspect extension seal assembly (inner seal behind boot - 2WD only). • Inspect extension to case seal (2WD only).
Pan Assembly	• Inspect the pan assembly for damage. • Inspect gasket for damage or wear. • Inspect case and pan for damage and flatness at gasket interface area.

SHIFT INDICATOR INDICATES WRONG GEAR SELECTION

Checks	Causes
Shift Cable	• Inspect for damage. • Verify proper attachment to shifter. • Verify cable is locked into shifter bracket. • Verify cable is properly attached to the transmission. • Verify that the cable is locked into the transmission bracket.
Manual Shaft	• Verify shift lever is properly attached to the manual shaft. • Verify manual shaft is not twisted or damaged.
Manual Shift Detent Lever with Shaft Position Switch Assembly, IMS	Verify proper operation. Refer to **Transmission Internal Mode Switch Logic** .

NO PARK OR DRIVE

cardiagn.com

Checks	Causes
Output Shaft Assembly (70)	Inspect for a broken or damaged output shaft. Inspect for worn splines.
Case Assembly	• Inspect for broken or damaged case. • Inspect for broken or bent park pawl actuator. • Inspect for broken or missing park pawl actuator guide pin or manual shaft pin. • Inspect for broken, loose or misaligned park pawl guide. • Inspect for binding or broken park pawl or actuator assembly.
Manual Shift Detent Lever Assembly (511)	Inspect for broken or disengaged manual valve detent.

HARSH GARAGE SHIFT

Checks	Causes
Engine	Elevated engine RPM - Verify correct engine operating rpm per application.
A/Trans Fluid Pump Cover Assembly (219)	• Inspect for damaged, stuck, sticky pressure regulator valve (233) and springs (234 and 235). • Inspect for damaged, stuck, sticky isolator valve (236) and sleeve (237).
Control Solenoid (w/Body and TCM) Valve Assembly (314)	• Incorrect or inadequate adapt activity - Perform **Service Fast Learn Adapts** procedure. • Incorrect TCM temperature reporting - Monitor TCM temperature using Tech 2. • Line pressure control solenoid incorrect pressure.
1-2-3-4 and 3-5-R Clutch Assembly (51)	• Inspect for damaged 1-2-3-4 clutch piston (414), piston housing (417), spring (413), and dam assembly (412). • Inspect for cut, worn, or damaged 1-2-3-4 clutch piston seal (416), inner seal (423), and housing seals (424 and 425). • Inspect for improper selective 1-2-3-4 clutch backing plate retaining ring (429). • Inspect for damaged 3-5-R clutch piston (421), apply ring (405), and spring (420). • Inspect for cut, worn, or damaged 3-5-R clutch piston dam O-ring seal (418), inner seal (419), and outer seal (422). • Inspect for improper selective 3-5-R clutch backing plate retaining ring (400).

NO DRIVE IN ALL RANGES

cardiagn.com

Checks	Causes
A/Trans Fluid Pan Assembly (29)	Verify proper fluid level and condition, inspect transmission assembly for leaks.
Torque Converter (with Fluid Pump) Housing Assembly (2)	Inspect for damaged or scored pump housing (203), cover (219), rotor (217), slide (212), and vanes (216).
Fluid Filter Assembly (26)	• Inspect for damaged or restricted fluid filter assembly (26). • Inspect for damaged fluid filter seal assembly (25) or improper sealing interface, leaks, and fluid aeration.
Automatic Transmission Fluid Pump Seal (5)	Inspect for worn or damaged seal.
A/Trans Cooling/Lubrication System	Inspect transmission oil cooler (radiator) and cooler line seals for restrictions, damage, kinks, or leaks.
Torque Converter Assembly (1)	Inspect for overheating (blued), ballooning, leaks, or other damage.
1-2-3-4 and 3-5-R Clutch Assembly (51)	• Inspect clutch pack retaining rings (400 and 429) for proper installation. • Inspect housing and clutch pistons and seals for damage or leaks.
Control Valve Lower Body Assembly (351)	Inspect for stuck, sticky or damaged clutch select valve (352).
Manual Valve (354)	Inspect the manual valve detent lever assembly (505) and connection to the manual valve (354).
A/Trans Manual Shift Shaft Position Switch Assembly (308)	Inspect the switch assembly (308) and connection to the manual valve (354).
A/Trans Manual Shift Shaft Position Switch Assembly (308)	Inspect PRNDL commands to and from vehicle using Tech 2.
Control Solenoid (w/Body and TCM) Valve Assembly (314)	Inspect PRNDL commands to and from vehicle using Tech 2.
A/Trans Fluid Pump (Transfer) Seal Assembly (19)	Inspect for damage or leaks.
Output Shaft Assembly (499)	Inspect for spline wear or damage.
Output Carrier Assembly (490)	• Inspect the carrier assembly for damaged pinion gears, thrust washers, pins, and rollers. • Inspect for damaged thrust bearings (486 and 488). • Inspect for damaged sun gears (487 and 489). • Inspect the carrier assembly for damaged output carrier rear sun gear thrust bearing (captured).
Low Clutch Sprag Assembly (467)	Inspect for excessive wear or damage.
Input Carrier Assembly (52)	Inspect carrier assembly for damaged pinion gears, thrust washers, pins, and rollers.
Input Sun Gear (53)	Inspect for spline wear or damage.

NO FIRST GEAR

cardiagn.com

Checks	Causes
A/Trans Fluid Pan Assembly (29)	Verify proper fluid level and condition, inspect transmission assembly for leaks.
Center (with 2-6 Low and Reverse Clutch) Support Assembly (67)	• Inspect for damaged low clutch sprag assembly (467). Holding the sprag assembly with the retaining ring facing up, and the inner race of the sprag assembly fixed, the outer race should freewheel counterclockwise. • Inspect for damaged low and reverse clutch piston assembly (470), spring (469), spring retaining ring (466), and center support assembly (459). • Inspect for damaged or worn low and reverse clutch plates (463-465). • Inspect for damaged low and reverse clutch backing plate retaining ring (461). • Inspect for cut, worn, or damaged low clutch sprag seal (468).
Control Valve Upper Body Assembly (304)	• Inspect for sticking, damaged, or worn 1st/Rev and 4-5-6 clutch regulator valve (327) and spring (326). • Inspect for sticking, damaged, or worn #2 ball check valve. • Inspect for sticking, damaged, or worn #3 ball check valve.
Control Valve Lower Body Assembly (307)	• Inspect for sticking, damaged, or worn clutch select valve 2 (352) and spring (353). • Inspect for sticking, damaged, or worn clutch select valve 3 (352) and spring (353).
Center Support Fluid Passage Seal Assembly (20)	• Inspect for worn, cut, or damaged seals. • Inspect for proper seal (20) size (6L45/50E MYA/MYB) vs (6L80/90E MYC/MYD).

NO FIRST AND REVERSE GEARS

Checks	Causes
A/Trans Fluid Pan Assembly (29)	Verify proper fluid level and condition, inspect transmission assembly for leaks.
Control Valve Upper Body Assembly (304)	Inspect for sticking, damaged, or worn 1st/rev and 4-5-6 clutch regulator valve (327) and spring (326).
Control Valve Lower Body Assembly (307)	Inspect for sticking, damaged, or worn clutch select valve 3 (352) and spring (353).
Control Valve Lower Body Assembly (307)	Inspect for sticking, damaged, or worn clutch select valve 2 (352) and spring (353).
Control Valve Upper Body Assembly (304)	Inspect for sticking, damaged, or worn #2 ball check valve
	• Inspect for damaged low and reverse clutch piston assembly (470), spring (469), spring retaining ring (466), and center

cardiagn.com

Center (with 2-6 Low and Reverse Clutch) Support Assembly (67)	support assembly (459). • Inspect for damaged or worn low and reverse clutch plates (463-465). • Inspect for damage low and reverse clutch backing plate retaining ring (461). • Inspect for damaged low clutch sprag assembly (467). Holding the sprag assembly with the retaining ring facing up, and the inner race of the sprag assembly fixed, the outer race should freewheel counterclockwise. • Inspect for cut, worn, or damaged low clutch sprag seal (468).
Center Support Fluid Passage Seal Assembly (20)	• Inspect for worn, cut, or damaged seals. • Inspect for proper seal (20) size (6L45/50E MYA/MYB) vs (6L80/90E MYC/MYD).

HARSH, SOFT, DELAYED OR SLIPPING FIRST OR REVERSE GEAR

Checks	Causes
A/Trans Fluid Pan Assembly (29)	Verify proper fluid level and condition, inspect transmission assembly for leaks.
Control Valve Upper Body Assembly (304)	• Inspect for sticking, damaged, or worn 1-R/4-5-6 clutch regulator valve (327) and spring (326). • Inspect for damaged or sticking #2 ball check valve.
Control Valve Lower Body Assembly (307)	Inspect for sticking, damaged, or worn clutch select valve 3 (352) and spring (353).
Control Valve Lower Body Assembly (307)	Inspect for sticking, damaged, or worn clutch select valve 2 (352) and spring (353).
Center (with 2-6 Low and Reverse Clutch) Support Assembly (67)	• Inspect for damaged low and reverse clutch piston assembly (470), spring (469), spring retaining ring (466), and center support assembly (459). • Inspect for damaged or worn low and reverse clutch plates (463 and 465). • Inspect for damaged low and reverse clutch backing plate retaining ring (461). • Inspect for damaged low clutch sprag assembly (467). Holding the sprag assembly with the retaining ring facing up, and the inner race of the sprag assembly fixed, the outer race should freewheel counterclockwise. • Inspect for cut, worn, or damaged low clutch sprag seal (468).
Control Solenoid (w/Body and TCM) Valve Assembly (314)	• Pressure control solenoid 3 commanded/failed HIGH (off) or leaking - Perform solenoid valve assembly function test. Refer to **Control Solenoid Valve and Transmission Control Module Assembly Solenoid Performance Test**.

cardiagn.com

	• Incorrect or inadequate adapt activity - Perform **Service Fast Learn Adapts** procedure.
A/Trans Fluid Pump Cover Assembly (219)	• Inspect for damaged, stuck, sticky pressure regulator valve (233) and spring (234 and 235). • Inspect for damaged, stuck, sticky isolator valve (236) and sleeve (237).
Center Support Fluid Passage Seal Assembly (20).	• Inspect for worn, cut, or damaged seals. • Inspect for proper seal (20) size (6L45/50E MYA/MYB) vs (6L80.90E MYC/MYD).

NO FIRST, SECOND, THIRD, AND FOURTH GEAR

Checks	Causes
A/Trans Fluid Pan Assembly (29)	Verify proper fluid level and condition, inspect transmission assembly for leaks.
Control Valve Upper Body Assembly (304)	Inspect for sticking, damaged, or worn 1-2-3-4 clutch regulator valve (337) and spring (326).
Control Solenoid (w/Body and TCM) Valve Assembly (314)	• Inspect for contamination or debris. • Pressure control solenoid 5 commanded/failed LOW (off) or leaking - Perform solenoid valve assembly function test. Refer to **Control Solenoid Valve and Transmission Control Module Assembly Solenoid Performance Test**.
1-2-3-4 and 3-5-R Clutch Assembly (51)	• Inspect clutch pack retaining ring (429) for proper installation. If the retaining ring is out of the groove the following parts must be replaced: 1-2-3-4 and 3-5-R clutch housing (427), 1-2-3-4 and 3-5-R clutch bearing assembly (428) and the 1-2-3-4 clutch backing plate retaining ring. • Inspect for damaged 1-2-3-4 clutch piston (414), piston housing (417), spring (413), and dam assembly (412). • Inspect for cut, worn, or damaged 1-2-3-4 clutch piston seal (416), inner seal (423), and housing seals (424 and 425). • Inspect for improper selective 1-2-3-4 clutch backing plate retaining ring (429).
Fluid Filter Assembly (26)	• Inspect for damaged or restricted fluid filter assembly (26). • Inspect for damaged fluid filter seal assembly (25) or improper sealing interface, leaks, and fluid aeration.
Torque Converter (with Fluid Pump) Housing Assembly (2)	Inspect for damaged or scored pump housing (203), cover (219), rotor (217), slide (212) and vanes (216).
Torque Converter (with Fluid Pump) Housing Assembly (2)	Inspect for damaged or leaking 1-2-3-4 and 3-5-R clutch fluid seal rings (230).
Center (w/2-6 Low and Reverse Clutch) Support Assembly (67)	Inspect for worn or damaged low clutch sprag assembly (467).

cardiagn.com

A/Trans Fluid Pump (Transfer) Seal Assembly (19)	Inspect for damage or leaks.
1-2-3-4 Clutch (with Output Carrier Inner Sun Gear Shaft) Hub Assembly (61)	Inspect for damaged splines on the hub assembly.

HARSH, SOFT, DELAYED OR SLIPPING 1-2-3-4 SHIFT

Checks	Causes
A/Trans Fluid Pan Assembly (29)	Verify proper fluid level and condition, inspect transmission assembly for leaks.
Control Valve Upper Body Assembly (304)	• Inspect for sticking, damaged, or worn 1-2-3-4 clutch regulator valve (337) and spring (326). • Inspect for damaged or stuck #1 ball check valve.
Control Solenoid (w/Body and TCM) Valve Assembly (314)	• Inspect for contamination or debris. • Pressure control solenoid 5 commanded/failed LOW (off) or leaking - Perform solenoid valve assembly function test. Refer to **Control Solenoid Valve and Transmission Control Module Assembly Solenoid Performance Test**. • Incorrect or inadequate adapt activity - Perform **Service Fast Learn Adapts** procedure. • Line pressure control solenoid incorrect pressure.
1-2-3-4 and 3-5-R Clutch Assembly (51)	• Inspect for damaged 1-2-3-4 clutch piston (414), piston housing (417), spring (413), and dam assembly (412). • Inspect for cut, worn, or damaged 1-2-3-4 clutch piston seal (416), inner seal (423), and housing seals (424 and 425). • Inspect for improper selective 1-2-3-4 clutch backing plate retaining ring (429). • Inspect for damaged 3-5-R clutch piston (421), apply ring (405), and spring (420). • Inspect for cut, worn, or damaged 3-5-R clutch piston dam O-ring seal (418), inner seal (419), and outer seal (422). • Inspect for improper selective 3-5-R clutch backing plate retaining ring (400).
Torque Converter (with Fluid Pump) Housing Assembly (2)	Inspect for damaged or leaking 1-2-3-4 and 3-5-R clutch fluid seal rings (230).
A/Trans Fluid Pump Cover Assembly (219)	• Inspect for damaged, stuck, sticky pressure regulator valve (233) and springs (234 and 235). • Inspect for damaged, stuck, sticky isolator valve (236) and sleeve (237).
Torque Converter (with Fluid Pump) Housing Assembly (2)	Inspect for damaged or scored pump housing (203), cover (219), rotor (217), slide (212) and vanes (216).

cardiagn.com

Fluid Filter Assembly (26)	• Inspect for damaged or restricted fluid filter assembly (26). • Inspect for damaged fluid filter seal assembly (25) or improper sealing interface, leaks, and fluid aeration.
A/Trans Fluid Pump (Transfer) Seal Assembly (19)	Inspect for damage or leaks.

NO SECOND AND SIXTH GEAR

Checks	Causes
A/Trans Fluid Pan Assembly (29)	Verify proper fluid level and condition, inspect transmission assembly for leaks.
Control Valve Upper Body Assembly (304)	Inspect for sticking, damaged, or worn 2-6 clutch regulator valve (334) and spring (326).
Control Solenoid (w/Body and TCM) Valve Assembly (314)	Pressure control solenoid 4 commanded/failed LOW (off) or leaking - Perform solenoid valve assembly function test. Refer to **Control Solenoid Valve and Transmission Control Module Assembly Solenoid Performance Test**.
Center (with 2-6 Low and Reverse Clutch) Support Assembly (67)	• Inspect for proper installation of the 2-6 clutch return spring retaining ring (455). • Inspect for damaged 2-6 clutch piston assembly (457), spring (456), retaining ring (455), and center support housing (459). • Inspect for worn or damaged 2-6 clutch plates (451-453).
Center Support Fluid Passage Seal Assembly (20)	• Inspect for worn, cut, or damaged seals. • Inspect for proper seal (20) size (6L45/50E MYA/MYB) vs (6L80/90E MYC/MYD).

HARSH, SOFT, DELAYED OR SLIPPING SECOND OR SIXTH GEAR

Checks	Causes
A/Trans Fluid Pan Assembly (29)	Verify proper fluid level and condition, inspect transmission assembly for leaks.
Control Valve Upper Body Assembly (304)	• Inspect for sticking, damaged or worn 2-6 clutch regulator valve (334) and spring (326). • Inspect for damaged or sticking #6 ball check valve.
Control Solenoid (w/Body and TCM) Valve Assembly (314)	• Pressure Control Solenoid 4 commanded/failed LOW (off) or leaking - Perform solenoid valve assembly function test. Refer to **Control Solenoid Valve and Transmission Control Module Assembly Solenoid Performance Test**. • Incorrect or inadequate adapt activity - Perform **Service Fast Learn Adapts** procedure.
Center (with 2-6 Low and Reverse Clutch) Support Assembly (67)	• Inspect for proper installation of the 2-6 clutch return spring

cardiagn.com

	retaining ring (455). • Inspect for damaged 2-6 clutch piston assembly (457), spring (456), retaining ring (455), and center support assembly (459). • Inspect for worn or damaged 2-6 clutch plates (451-453).
A/Trans Fluid Pump Cover Assembly (219)	• Inspect for damaged, stuck, sticky pressure regulator valve (233) and springs (234 and 235). • Inspect for damaged, stuck, sticky isolator valve (236) and sleeve (237).
Center Support Fluid Passage Seal Assembly (20)	• Inspect for worn, cut, or damaged seals. • Inspect for proper seal (20) size (6L45/50E MYA/MYB) vs (6L80/90E MYC/MYD).

VIBRATION IN SECOND, THIRD, FOURTH, FIFTH, OR SIXTH GEAR

Checks	Causes
4-5-6 Clutch (with Output Carrier Shaft and Dampener) Hub Assembly (58)	Inspect hub assembly (475), dampener (476), and apply plate (477) for wear or damage.

NO THIRD, FIFTH, AND REVERSE GEAR

Checks	Causes
A/Trans Fluid Pan Assembly (29)	Verify proper fluid level and condition, inspect transmission assembly for leaks.
Control Valve Upper Body Assembly (304)	• Inspect for sticking, damaged, or worn 3-5-R regulator valve (336) and valve spring (326). • Inspect for damaged or stuck #7 ball check valve.
Control Valve Lower Body Assembly (307)	Inspect for worn, damaged, or sticking clutch select solenoid valve 3 (352) and valve spring (353).
1-2-3-4 and 3-5-R Clutch Assembly (51)	• Inspect for proper installation of 3-5-R clutch backing plate retaining ring (400). • Inspect for worn, damaged, or leaking clutch bearing seal assembly (428). • Inspect for damaged or worn 3-5-R clutch plates (401-404). • Inspect for damaged 3-5-R clutch piston (421), apply ring (405), and spring (420). • Inspect for cut, worn, or damaged 3-5-R clutch piston dam O-ring seal (418), inner seal (419), and outer seal (422). • Inspect for improper selective 3-5-R clutch backing plate retaining ring (400).

cardiagn.com

Control Solenoid (w/Body and TCM) Valve Assembly (314)	Pressure control solenoid 2 commanded/failed HIGH (off) or leaking - Perform solenoid valve assembly function test. Refer to **Control Solenoid Valve and Transmission Control Module Assembly Solenoid Performance Test**.
A/Trans Fluid Pump (Transfer) Seal Assembly (19)	Inspect for damage or leaks.

HARSH, SOFT, DELAYED OR SLIPPING THIRD, FIFTH, OR REVERSE GEAR

Checks	Causes
A/Trans Fluid Pan Assembly (29)	Verify proper fluid level and condition, inspect transmission assembly for leaks.
Control Valve Upper Body Assembly (304)	• Inspect for sticking, damaged, or worn 3-5-R regulator valve (336) and valve spring (326). • Inspect for damaged or stuck #7 ball check valve.
Control Valve Lower Body Assembly (307)	Inspect for worn, damaged, or sticking clutch select solenoid valve 3 (352) and valve spring (353).
Control Solenoid (w/Body and TCM) Valve Assembly (314)	• Pressure control solenoid 2 commanded/failed HIGH (off) or leaking - Perform solenoid valve assembly function test. Refer to **Control Solenoid Valve and Transmission Control Module Assembly Solenoid Performance Test**. • Incorrect or inadequate adapt activity - Perform **Service Fast Learn Adapts** procedure.
1-2-3-4 and 3-5-R Clutch Assembly (51)	• Inspect for proper installation of 3-5-R clutch backing plate retaining ring (400). • Inspect for worn, damaged, or leaking clutch bearing seal assembly (428). • Inspect for damaged or worn 3-5-R clutch plates (401-404). • Inspect for damaged 3-5-R clutch piston (421), apply ring (405), and spring (420). • Inspect for cut, worn, or damaged 3-5-R clutch piston dam O-ring seal (418), inner seal (419), and outer seal (422). • Inspect for improper selective 3-5-R clutch backing plate retaining ring (400).
A/Trans Fluid Pump Cover Assembly (219)	• Inspect for damaged, stuck, sticky pressure regulator valve (233) and springs (234 and 235). • Inspect for damaged, stuck, sticky isolator valve (236) and sleeve (237).
A/Trans Fluid Pump (Transfer) Seal Assembly (19)	Inspect for damage or leaks.

NO FOURTH, FIFTH, AND SIXTH GEAR

cardiagn.com

Checks	Causes
A/Trans Fluid Pan Assembly (29)	Verify proper fluid level and condition, inspect transmission assembly for leaks.
Control Valve Upper Body Assembly (304)	Inspect for sticking, damaged, or worn R-1/4-5-6 clutch regulator valve (327) and spring (326).
4-5-6 (with Turbine Shaft) Clutch Assembly (56)	• Inspect for cut, worn, or damaged turbine shaft fluid seal rings (442). • Inspect for damaged piston (439), piston dam (437), dam retaining ring (436), and clutch spring (438). • Inspect for worn or damaged 4-5-6 clutch plates (432-435). • Inspect for damaged or leaking clutch housing (441). • Inspect for improper selective 4-5-6 clutch backing plate retaining ring (431). • Inspect for damaged or distorted turbine shaft.
A/Trans Fluid Pump Seal Assembly (18)	Inspect for cut, leaking, or damaged seal.
4-5-6 Clutch (with Output Carrier Shaft and Dampener) Hub Assembly (58)	• Inspect the shaft for damage or wear. • Inspect the hub assembly (475), dampener (476), and apply plate (477) for wear or damage.
A/Trans Cooling/Lubrication System	Inspect transmission oil cooler (radiator) and cooler lines/seals for restrictions, damage, kinks or leaks.
Control Solenoid (w/Body and TCM) Valve Assembly (314)	Pressure control solenoid 3 commanded/failed HIGH (off) or leaking - Perform solenoid valve assembly function test. Refer to **Control Solenoid Valve and Transmission Control Module Assembly Solenoid Performance Test**.
Torque Converter (with Fluid Pump) Housing Assembly (2)	• Inspect for damaged or scored pump housing (203), cover (219), rotor (217), slide (212), and vanes (216). • Inspect for damaged or porous pump cover assembly (219). Inspect pump surfaces for flatness. • Inspect for excessive fluid pump rotor (217) clearance or damage. Ensure proper selective rotor is being utilized.
Output Shaft Assembly (70)	Inspect for damaged or stripped splines on the output shaft.

HARSH, SOFT, DELAYED OR SLIPPING 4-5-6 SHIFT

Checks	Causes
A/Trans Fluid Pan Assembly (29)	Verify proper fluid level and condition, inspect transmission assembly for leaks.
Control Valve Upper Body Assembly (304)	• Inspect for sticking, damaged, or worn 1-R/4-5-6 clutch regulator valve (327) and spring (326). • Inspect for damaged or sticking #3 and #4 ball check valves.
Control Valve Lower Body	Inspect for worn, damaged, or sticking clutch select solenoid valve

cardiagn.com

Assembly (307)	2 (352) and valve spring (353).
Control Solenoid (w/Body and TCM) Valve Assembly (314)	• Pressure Control Solenoid 3 commanded/failed HIGH (off) or leaking - Perform solenoid valve assembly function test. Refer to **Control Solenoid Valve and Transmission Control Module Assembly Solenoid Performance Test**. • Incorrect or inadequate adapt activity - Perform **Service Fast Learn Adapts** procedure.
4-5-6 (with Turbine Shaft) Clutch Assembly (56)	• Inspect for cut, worn, or damaged turbine shaft fluid seal rings (442). • Inspect for damaged piston (439), piston dam (437), dam retaining ring (436), and clutch spring (438). • Inspect for damaged or worn 4-5-6 clutch plates (432-435). • Inspect for damage or leaking clutch housing (441). • Inspect for improper selective 4-5-6 clutch backing plate retaining ring (431). • Inspect for damaged or distorted turbine shaft.
A/Trans Fluid Pump Seal Assembly (18)	Inspect for cut, leaking, or damaged seal.
4-5-6 Clutch (with Output Carrier Shaft and Dampener) Hub Assembly (58)	• Inspect shaft for damage or wear. • Inspect hub assembly (475), dampener (476), and apply plate (477) for wear or damage.
A/Trans Fluid Pump Cover Assembly (219)	• Inspect for damaged, stuck, sticky pressure regulator valve (233) and springs (234 and 235). • Inspect for damaged, stuck, sticky isolator valve (236) and sleeve (237).

NO TORQUE CONVERTER CLUTCH APPLY

Checks	Causes
Torque Converter Assembly (1)	Diagnose torque converter for possible internal damage. Refer to **Torque Converter Diagnosis**.
Fluid Pump Cover Assembly (219)	• Inspect for worn, damaged, or sticking converter feed limit valve (220) and spring (221). • Inspect for worn, damaged, or sticking TCC control valve (227) and spring (226). • Inspect for damaged stator shaft.
Control Valve Lower Body Assembly (307)	Inspect for worn, damaged, or sticking torque converter clutch (TCC) regulator apply valve (355). Refer to **Control Solenoid Valve and Transmission Control Module Assembly Inspection**.
4-5-6 (with Turbine Shaft) Clutch Assembly (56)	• Inspect for damaged turbine shaft. • Inspect for damaged turbine shaft O-ring seal.

cardiagn.com

Torque Converter (with Fluid Pump) Housing Assembly (2)	Inspect for leaking or damaged torque converter fluid seal assembly (201), torque converter bushing (206), turbine shaft o-ring seal (443) and torque converter (with fluid pump) housing assembly (2).

NO TORQUE CONVERTER CLUTCH RELEASE

Checks	Causes
Torque Converter Assembly (1)	Diagnose torque converter for possible internal damage. Refer to **Torque Converter Diagnosis**.
Fluid Pump Cover Assembly (219)	• Inspect for worn, damaged, or sticking converter feed limit valve (220) and spring (221). • Inspect for worn, damaged, or sticking torque converter clutch (TCC) control valve (227) and spring (226).
Control Valve Lower Body Assembly (307)	Inspect for worn, damaged, or sticking TCC regulator apply valve (355).

HARSH TORQUE CONVERTER CLUTCH APPLY, OR INOPERATIVE OR NO ELECTRONICALLY CONTROLLED CAPACITY CLUTCH CONTROL

Checks	Causes
Torque Converter Assembly (1)	• Inspect for leaking or damaged torque converter clutch hub seal. • Diagnose torque converter assembly for possible internal damage. Refer to **Torque Converter Diagnosis**.

NO REVERSE GEAR

Checks	Causes
A//Trans Fluid Pan Assembly (29)	Verify proper fluid level and condition, inspect transmission assembly for leaks.
Control Valve Upper Body Assembly (304)	• Inspect for sticking, damaged, or worn 3-5-R regulator valve (336) and valve spring (326). • Inspect for damaged or missing #5 ball check valve.
Control Valve Lower Body Assembly (307)	Inspect for worn, damaged, or sticking clutch select solenoid valve 3 (352) and valve spring (353).
1-2-3-4 and 3-5-R Clutch Assembly (51)	• Inspect for proper installation of 3-5-R clutch backing plate retaining ring (400). • Inspect for worn, damaged, or leaking clutch bearing seal assembly (428). • Inspect for damaged or worn 3-5-R clutch plates (401-404). • Inspect for damaged 3-5-R clutch piston (421), apply ring

cardiagn.com

	(405), and spring (420). • Inspect for cut, worn, or damaged 3-5-R clutch piston dam O-ring seal (418), inner seal (419), and outer seal (422). • Inspect for improper selective 3-5-R clutch backing plate retaining ring (400).
Torque Converter (with Fluid Pump) Housing Assembly (2)	• Inspect for worn or damaged 1-2-3-4 and 3-5-R clutch fluid seal rings (230). • Inspect for damaged or scored pump housing (203), cover (219), rotor (217), slide (212), and vanes (216). • Inspect for damaged or porous pump cover assembly (219). Inspect pump surfaces for flatness. • Inspect for excessive fluid pump rotor (217) clearance or damage. Ensure proper selective rotor is being utilized.
Center Support Fluid Passage Seal Assembly (20), A/Trans Fluid Pump Seal Assemblies (18 and 19)	• Inspect for worn, cut, or damaged seals. • Inspect for proper seal (20) size (6L45/50E MYA/MYB) vs (6L80/90E MYC/MYD).
Center (w/2-6 Low and Reverse Clutch) Support Assembly (67)	• Inspect for damaged or leaking low and reverse clutch piston assembly (470). • Inspect for damaged or worn low and reverse clutch plates (462-465). • Inspect for damaged low clutch sprag assembly (467). Holding the sprag assembly with the retaining ring facing up, and the inner race of the sprag assembly fixed, the outer race should freewheel counterclockwise.
2-6 and 3-5-R Clutch (with Output Carrier Outer Sun Gear Shaft) Hub Assembly (64)	Inspect for damaged or distorted shaft on hub assembly.
Output Shaft Assembly (70)	Inspect for damaged or stripped splines on the output shaft.

FLUID PRESSURE HIGH OR LOW

Checks	Causes
Torque Converter Housing with Fluid Pump Assembly (2)	• Inspect for worn, sticking, or damaged pressure regulator valve (233). • Inspect for worn, sticking, or damaged pressure regulator valve outer spring (234). • Inspect for worn, sticking, or damaged pressure regulator valve inner spring (235). • Inspect for worn, sticking, or damaged isolator valve (236) and sleeve (237). • Inspect for worn, sticking, or damaged pressure relief ball valve (225).

cardiagn.com

	• Inspect for worn, sticking, or damaged pressure relief ball valve spring (224). • Inspect for damaged or porous pump cover assembly (219). Inspect for pump surfaces not flat. • Inspect for excessive fluid pump rotor (217) clearance or damage. Ensure proper selective rotor is being utilized. • Inspect for damaged fluid pump slide (212). Ensure proper selective slide is being utilized. • Inspect for worn, sticking, or damaged fluid pump slide outer spring (211). • Inspect for worn or damaged fluid pump slide seal (213), seal support (214), pivot pin (215), fluid seal ring (209), and O-ring seal (210). • Inspect for worn or damaged fluid pump vane rings (207) and rotor guide (208).
Control Valve Upper Body Assembly (321)	• Inspect for worn, sticking, or damaged actuator feed limit valve (325) and spring (324). • Inspect for worn, sticking, or damaged clutch boost valve (329) and spring (330).
Control Valve (w/Body and TCM) Valve Assembly	Inspect for leaking or damaged filter plate assembly seals (16). Verify VBS operation in not stuck high or low.
Fluid Filter Assembly (26)	• Inspect for damaged or restricted fluid filter assembly (26). • Inspect for damaged fluid filter seal assembly (25).

cardiagn.com

- Inspect for aftermarket parts.
- Inspect the clutch pedal for binding, over-center spring in use or operation.

Intermittent

Test the vehicle under the same conditions that the customer reported in order to verify the system is operating properly.

Symptom List

NOTE: Due to the variety of clutch options, there may be components in the mechanical diagnostic tables that are not on a particular vehicle.

Refer to a symptom diagnostic procedure from the following list in order to diagnose the symptom:

- **Clutch Drag Hard Shifting**
- **Clutch Slipping**
- **Clutch Grabbing**
- **Clutch Rattle**
- **Clutch Noisy**
- **Clutch Pedal Spongy, Low Pedal Effort, Hesitates on Return**
- **Clutch Pedal Hard to Push**
- **Clutch Frequent Adjustments**
- **Clutch Vibration**
- **Clutch - No Load**

CLUTCH DRAG HARD SHIFTING

Cause	Action
DEFINITION: The clutch does not disengage completely to allow smooth shift operations. It may cause gear clashing while the vehicle is not moving, at idle, and shifting out of neutral, or hard shifting in and out of gears while driving the vehicle. Review the **Symptoms - Clutch** and perform the necessary inspections.	
Pedal blocked from full travel	1. Inspect for obstacles that will prevent the pedal from going to the floor. 2. Clear any obstacles from under the pedal area, such as floor mats or interior panels.
Too much travel between pedal and clutch master cylinder	1. Inspect the pedal for worn bushings. 2. Replace the pedal bushings if worn. Refer to **Clutch Pedal Replacement**.
Clutch pedal mounting loose	1. Inspect the clutch pedal mounting bracket for loose or missing fasteners.

cardiagn.com

	2. Replace or repair the fasteners. Refer to **Clutch Pedal Replacement**.
Linkage at pedal worn or damaged	1. Inspect the linkage at the pedal for excessive wear. 2. Repair or replace the linkage as required. Refer to **Clutch Pedal Replacement**.
Clutch master cylinder seized or binding	1. Inspect the master cylinder for the piston being able to move freely and full range of travel. 2. Repair or replace the clutch master cylinder as required. Refer to **Clutch Master Cylinder Replacement**.
Air in the clutch hydraulic system	Bleed the clutch hydraulic system. Refer to **Hydraulic Clutch System Bleeding**.
Clutch actuator cylinder seized or binding	1. Inspect the clutch actuator piston for moving freely. 2. Replace the clutch actuator cylinder if the piston is binding. Refer to **Clutch Concentric Actuator Cylinder Replacement (Aisin)** or **Clutch Concentric Actuator Cylinder Replacement (Tremec)**.
Clutch master cylinder leaking internally	1. Inspect for proper pedal reserve. 1. Let up halfway on pedal. 2. Apply the pedal a few times. 3. Inspect to ensure there is still the proper pedal reserve. 2. Replace the clutch master cylinder if it will not hold pedal reserve. Refer to **Clutch Master Cylinder Replacement**.
Damaged clutch assembly components	1. Remove the clutch assembly. 2. Inspect the following clutch assembly components for damage: • Damaged clutch disc hub splines • Bent clutch disc • Bent drive straps • Broken or warped pressure plate 3. Replace the clutch assembly if any of the above damage is found. Refer to **Clutch Assembly Replacement**.
Excessive side loading on the release bearing	1. Inspect the following clutch system components:

cardiagn.com

	• Worn or damaged pilot bearing • Excessive flywheel runout • Excessive engine to transmission misalignment 2. Repair or replace any faulty components.
Faulty pilot bearing	Replace the pilot bearing. Refer to **Clutch Pilot Bearing Replacement**.
Transmission input shaft splines worn or damaged	Replace the transmission input shaft. Refer to **Transmission Disassemble** .
Tight or contaminated clutch disc splines	1. Clean the clutch disc and input shaft splines. 2. If the clutch disc will not clean, replace the clutch assembly. Refer to **Clutch Assembly Replacement**.
Flywheel housing, engine block to clutch housing, or transmission front case excessively misaligned	1. Inspect the clutch housing or the transmission front case for being faulty. 2. Replace the clutch housing if it is faulty. Refer to **Transmission Replacement** . 3. Replace the transmission front case half. Refer to **Transmission Disassemble** .
Grease or oil contamination on the clutch discs facing	1. Repair the oil leak. 2. Repair the grease leak. 3. Clean the clutch disc facing and the other clutch assembly components. 4. Replace the clutch assembly if it will not clean. Refer to **Clutch Assembly Replacement**.

CLUTCH SLIPPING

Cause	Action
DEFINITION: The clutch does not engage completely after the pedal is released, after shifting gears, or the clutch slips during maximum engine loads, such as climbing hills or high vehicle speeds. Clutch slipping is identified by increase in engine RPM without increase in vehicle speed. Review the **Symptoms - Clutch** and perform the necessary inspections.	
Incorrect clutch pedal height, not allowing the clutch master cylinder to return	Adjust the clutch pedal position switch. Refer to **Clutch Pedal Position Sensor Replacement**.
The clutch pedal return spring is broken or missing	Replace the clutch pedal return spring, if equipped. Refer to **Clutch Pedal Replacement**.
The clutch pedal is binding or sticking	1. Clear away any items that may be contacting the pedal. 2. Inspect the pedal bushings for ease of movement.

cardiagn.com

	3. Replace the clutch pedal if it is faulty. Refer to **Clutch Pedal Replacement**.
Clutch master cylinder binding or seized	Replace the clutch master cylinder. Refer to **Clutch Master Cylinder Replacement**.
Clutch actuator cylinder binding or seized	Replace the clutch actuator cylinder. Refer to **Clutch Concentric Actuator Cylinder Replacement (Aisin)** or **Clutch Concentric Actuator Cylinder Replacement (Tremec)**.
Kinked or damaged clutch hydraulic hose	1. Inspect for the correct routing of the clutch hydraulic hose. 2. Route the hose properly. 3. Inspect for loose or faulty engine mounts that may allow the hydraulic hose to be kinked or pinched. 4. Repair or replace faulty engine mounts. Refer to **Engine Mount Replacement - Left Side** and **Engine Mount Replacement - Right Side** . 5. Repair or replace the clutch hydraulic hose if it is damaged. Refer to **Hydraulic Clutch Hose/Pipe Replacement**.
Grease or oil contamination of the clutch disc	1. Repair the source of the oil leak. 2. Repair the source of the grease leak. 3. Clean the contamination from the clutch components. 4. If contaminates cannot be removed, replace the clutch assembly. Refer to **Clutch Assembly Replacement**.
Worn or damaged flywheel	Replace the engine flywheel. Refer to **Engine Flywheel Replacement** .
Worn clutch disc facing	Replace the clutch assembly. Refer to **Clutch Assembly Replacement**.
Burnt or glazed clutch discs	Replace the clutch assembly. Refer to **Clutch Assembly Replacement**.
Input shaft splines worn	Replace the input shaft. Refer to **Transmission Disassemble** .
Improper resurfacing of the flywheel	Replace the flywheel if it has been improperly resurfaced, allowing contact of the clutch disc hub or insufficient clamping load of the pressure plate. Refer to **Engine Flywheel Replacement** .

CLUTCH GRABBING

cardiagn.com

Cause	Action
DEFINITION: The clutch grabs, or chatters, or the clutch is unable to release without the vehicle jerking. An abrupt engagement of the clutch. Review the **Symptoms - Clutch** and perform the necessary inspections.	
Grease or oil contamination on the clutch facings	1. Repair the cause of the oil leak or grease contamination. 2. Clean the clutch facings. 3. Replace the clutch components if they will not clean. Refer to **Clutch Assembly Replacement**.
Loose or faulty engine mounts	1. Inspect the engine mounts for being loose or faulty. 2. Repair or replace the engine mounts as required. Refer to **Engine Mount Replacement - Left Side** and **Engine Mount Replacement - Right Side** .
Clutch pedal sticking	1. Inspect the clutch pedal for correct operation. 2. Replace the clutch pedal if it is faulty. Refer to **Clutch Pedal Replacement**.
Clutch actuator binding	1. Inspect the clutch actuator for the piston seals binding or sticking on the hub. 2. Replace the clutch actuator if it is binding. Refer to **Clutch Concentric Actuator Cylinder Replacement (Aisin)** or **Clutch Concentric Actuator Cylinder Replacement (Tremec)**.
Clutch master cylinder binding	1. Inspect the clutch master cylinder for the piston binding or sticking in the cylinder. 2. Replace the master cylinder if it is faulty. Refer to **Clutch Master Cylinder Replacement**.
Warped Clutch Cover	1. Inspect the clutch cover for distortion caused by improperly tightening the clutch cover bolts. 2. Replace the clutch cover if it is distorted. Refer to **Clutch Assembly Replacement**.
Improper clutch installation	1. Inspect the pressure plate for distortion caused by improperly tightening the pressure plate bolts. 2. Inspect the clutch disc for a bent hub caused by forcing the installation of the transmission. 3. Inspect for the correct clutch disc.

cardiagn.com

	4. Inspect the clutch disc for being installed backwards. 5. Replace the clutch assembly if it is damaged or the wrong components were installed. Refer to **Clutch Assembly Replacement**.
Clutch disc binding on the input shaft	1. Inspect the input shaft for rust dirt or debris. 2. Clean and lubricate the input shaft. 3. Inspect the clutch disc for a bent hub. 4. Replace the clutch assembly if the clutch disc is faulty. Refer to **Clutch Assembly Replacement**. 5. Inspect the input shaft for excessive wear on the splines, causing the clutch disc to bind. 6. Replace the transmission input shaft if it is worn. Refer to **Transmission Disassemble** .
Clutch pressure plate damaged	1. Inspect the pressure plate for bent drive straps caused by improper vehicle use. 2. Replace the clutch assembly if the clutch pressure plate is damaged. Inform the customer. Refer to **Clutch Assembly Replacement**.
Flywheel improperly machined	1. Inspect the flywheel for being machined, and causing interference with the clutch disc. 2. Replace the flywheel if it has been machined. Refer to **Engine Flywheel Replacement** .
Flywheel uneven	1. Inspect the flywheel surface for being warped or uneven. 2. Replace the flywheel if it is faulty. Refer to **Engine Flywheel Replacement** .

CLUTCH RATTLE

Cause	Action
DEFINITION: A rattle noise coming from the clutch components with the clutch disengaged or engaged. Review the **Symptoms - Clutch** and perform the necessary inspections.	
Idle rattle clutch engaged	Replace the clutch disc, due to faulty damper springs. Refer to **Clutch Assembly Replacement**.
Clutch is improperly installed	Remove the clutch and install it correctly. Refer to **Clutch Assembly Replacement**.
Clutch disc damper worn or damaged	1. Inspect the clutch disc for a broken or worn damper. 2. Replace the clutch assembly. Refer to **Clutch**

cardiagn.com

	Assembly Replacement.
Clutch disc splines and input shaft splines worn	1. Inspect the clutch disc hub to input shaft splines for excessive clearance. 2. Replace the clutch assembly if the clutch splines are worn. Refer to **Clutch Assembly Replacement**. 3. Replace the input shaft. Refer to **Transmission Disassemble** .

CLUTCH NOISY

Cause	Action
DEFINITION: A growl or whine noise is coming from the clutch when engaged or disengaged. Review the **Symptoms - Clutch** and perform the necessary inspections.	
Pilot bearing is worn or damaged	Replace the pilot bearing. Refer to **Clutch Pilot Bearing Replacement**.
Release bearing damaged or worn	Replace the release bearing. Refer to **Clutch Concentric Actuator Cylinder Replacement (Aisin)** or **Clutch Concentric Actuator Cylinder Replacement (Tremec)**.

CLUTCH PEDAL SPONGY, LOW PEDAL EFFORT, HESITATES ON RETURN

Cause	Action
DEFINITION: The clutch pedal may feel spongy, or it requires very little effort to operate. The clutch pedal may temporarily hang up at the bottom of travel. Review **Symptoms - Clutch** and perform the necessary inspections.	
Air in the hydraulic system	Bleed the clutch hydraulic system. Refer to **Hydraulic Clutch System Bleeding**.
Contaminated hydraulic fluid	1. Inspect the clutch hydraulic fluid for contamination of water. 2. Inspect the reservoir cap for being faulty if water is present. 3. Inspect the clutch hydraulic fluid for dirt or debris. 4. Flush and bleed the clutch hydraulic system if the above conditions are found. Refer to **Hydraulic Clutch System Bleeding**.
Master cylinder fluid level low	1. Inspect for leakage in the clutch master cylinder, hose connections, and the clutch actuator. 2. Repair or replace any faulty components.
Incomplete pedal return	1. Inspect the pedal for full return.

cardiagn.com

	2. Clear any obstacles that may interfere with the pedal operation. 3. Replace the clutch pedal return spring, if equipped. Refer to **Clutch Pedal Replacement**. 4. Adjust the clutch pedal position switch. Refer to **Clutch Pedal Position Sensor Replacement**.
Clutch incorrectly installed	Remove the clutch and install it correctly. Refer to **Clutch Assembly Replacement**.
Clutch mounting bolts loose or broken	1. Remove the broken bolts. 2. Replace the broken or loose bolts, and tighten. Refer to **Clutch Assembly Replacement**.
Release bearing worn or damaged	Replace the release bearing. Refer to **Clutch Concentric Actuator Cylinder Replacement (Aisin)** or **Clutch Concentric Actuator Cylinder Replacement (Tremec)**.

CLUTCH PEDAL HARD TO PUSH

Cause	Action
DEFINITION: The clutch pedal requires high effort to operate. Review the **Symptoms - Clutch** and perform the necessary inspections.	
Incorrect hydraulic fluid	1. Inspect for the correct fluid in the master cylinder. Refer to **Adhesives, Fluids, Lubricants, and Sealers**. 2. Flush the hydraulic system and fill with the correct fluid.
Contaminated hydraulic fluid	1. Inspect the hydraulic fluid for water. 2. Inspect the hydraulic fluid for dirt or debris. 3. Flush the hydraulic system and fill with the correct fluid. Refer to **Adhesives, Fluids, Lubricants, and Sealers**.
Clutch pedal binding	1. Inspect the pedal for binding. 2. Repair or replace the pedal. Refer to **Clutch Pedal Replacement**.
Clutch pedal spring worn	Replace the clutch pedal spring. Refer to **Clutch Pedal Replacement**.
Kinked or damaged clutch hydraulic pipe	1. Inspect for a kinked or damaged hydraulic hose. 2. Repair or replace the clutch hydraulic hose. Refer to **Hydraulic Clutch Hose/Pipe**

cardiagn.com

	Replacement.
Clutch disc worn too thin	Replace the clutch assembly. Refer to **Clutch Assembly Replacement**.
Clutch adjusts prematurely	Replace the clutch kit. Refer to **Clutch Assembly Replacement**.

CLUTCH FREQUENT ADJUSTMENTS

Cause	Action
DEFINITION: The self-adjusting clutch is constantly adjusting. Review the **Symptoms - Clutch** and perform the necessary inspections.	
Excessive clutch slippage	Refer to **Clutch Slipping**.
Clutch wearing excessively	• Review the vehicle application. • Review the driver practices.

CLUTCH VIBRATION

Cause	Action
DEFINITION: Vibration from the clutch components during disengagement or engagement. Review the **Symptoms - Clutch** and perform the necessary inspections.	
Excessive driveline torsional activity	Review the Vibration Analysis Driveline.
Clutch incorrectly installed	Remove the clutch and install it correctly. Refer to **Clutch Assembly Replacement**.
Pilot bearing worn or damaged	1. Replace the pilot bearing. Refer to **Clutch Pilot Bearing Replacement**. 2. Inspect the input shaft pilot bearing journal for wear or damage. 3. Replace the input shaft if it is damaged or worn. Refer to **Transmission Disassemble** .
Transmission input splines worn or damaged	1. Inspect the clutch disc to input splines for wear or damage. 2. Replace the input shaft if the splines are excessively worn. Refer to **Transmission Disassemble** .
Clutch disc facings damaged	Replace the clutch assembly. Refer to **Clutch Assembly Replacement**.
Flywheel housing to clutch housing excessively misaligned	Replace the faulty clutch housing or transmission front case. Refer to **Transmission Disassemble** .
Clutch out of balance	Replace the clutch assembly. Refer to **Clutch Assembly Replacement**.

CLUTCH - NO LOAD

cardiagn.com

Cause	Action
DEFINITION: Regardless of ambient temperature and vehicle on/off operational status, the clutch pedal effort is zero/light in both up-stroke and down-stroke and the clutch will not disengage. Review **Symptoms - Clutch** and perform the necessary inspections.	
Internal damage to the clutch master cylinder and the hydraulic system	1. Inspect for fluid leaks. 2. Replace the clutch hydraulic system. Refer to **Clutch Master Cylinder Replacement** and **Hydraulic Clutch Hose/Pipe Replacement**. 3. Replace the clutch master cylinder and the clutch actuator cylinder (CSC). Refer to **Clutch Master Cylinder Replacement** and **Clutch Concentric Actuator Cylinder Replacement (Aisin)** or **Clutch Concentric Actuator Cylinder Replacement (Tremec)**. 4. Re-bleed the clutch hydraulic system. Refer to **Hydraulic Clutch System Bleeding**.

REPAIR INSTRUCTIONS

CLUTCH PEDAL REPLACEMENT

Removal Procedure

1. Disconnect the clutch pedal position sensor electrical connector.

cardiagn.com

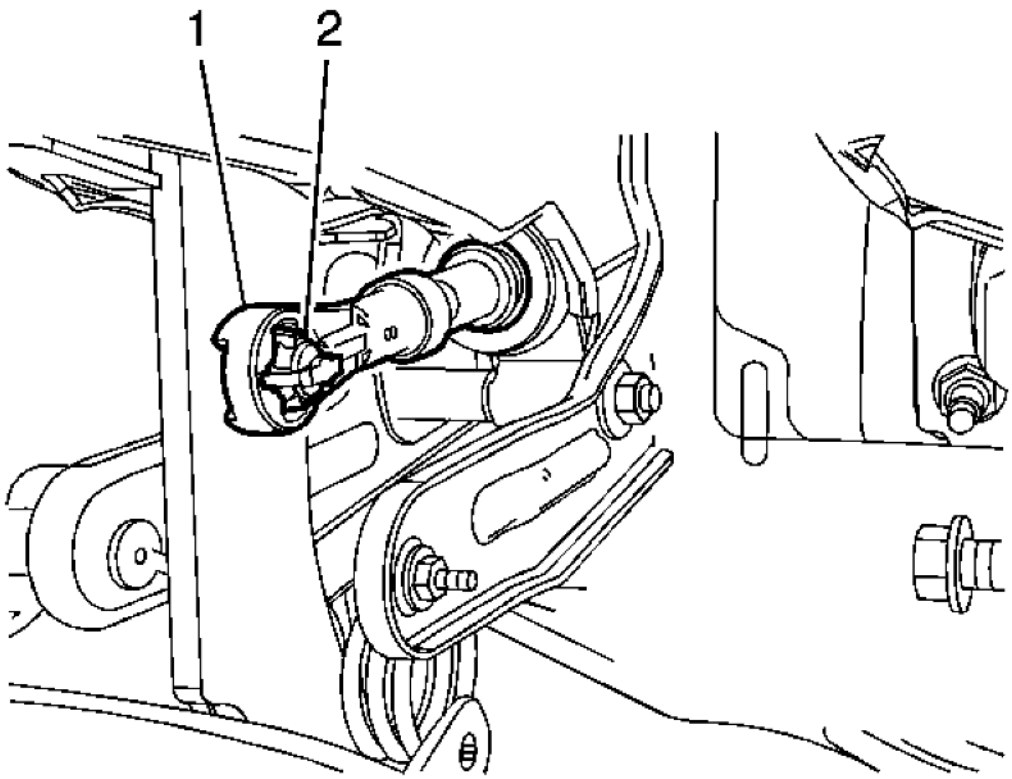

Fig. 1: Clutch Master Cylinder Push Rod & Clutch Pedal Pin
Courtesy of GENERAL MOTORS CORP.

2. Disconnect the clutch master cylinder push rod (1) from the clutch pedal pin (2).

cardiagn.com

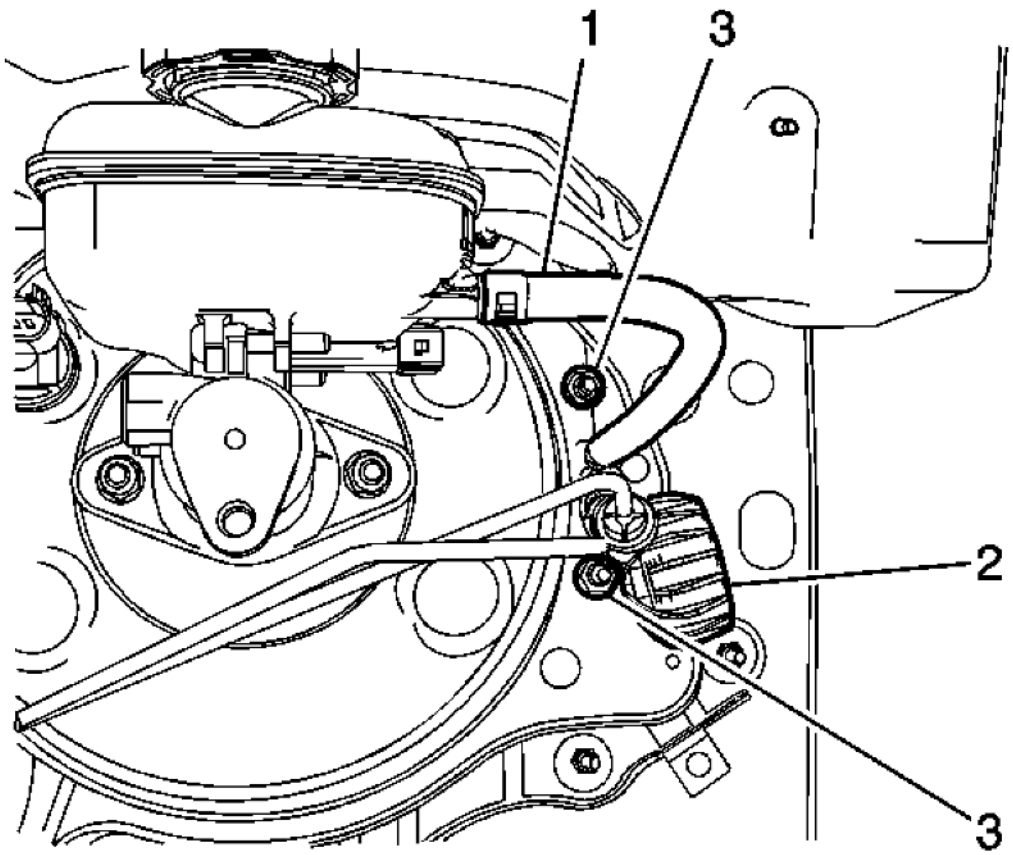

Fig. 2: Clutch Fluid Reservoir, Actuator Pipe Assembly & Pedal Fasteners
Courtesy of GENERAL MOTORS CORP.

3. Remove the clutch fluid reservoir (1) hose from the clutch pedal assembly, then plug hose.

IMPORTANT: Cap the line to prevent fluid from entering the vehicle, place shop towels over the carpeting to prevent damage.

4. Disconnect the clutch actuator pipe assembly (2) from the clutch pedal assembly.
5. Remove the clutch pedal fasteners (3) from the cowl.

cardiagn.com

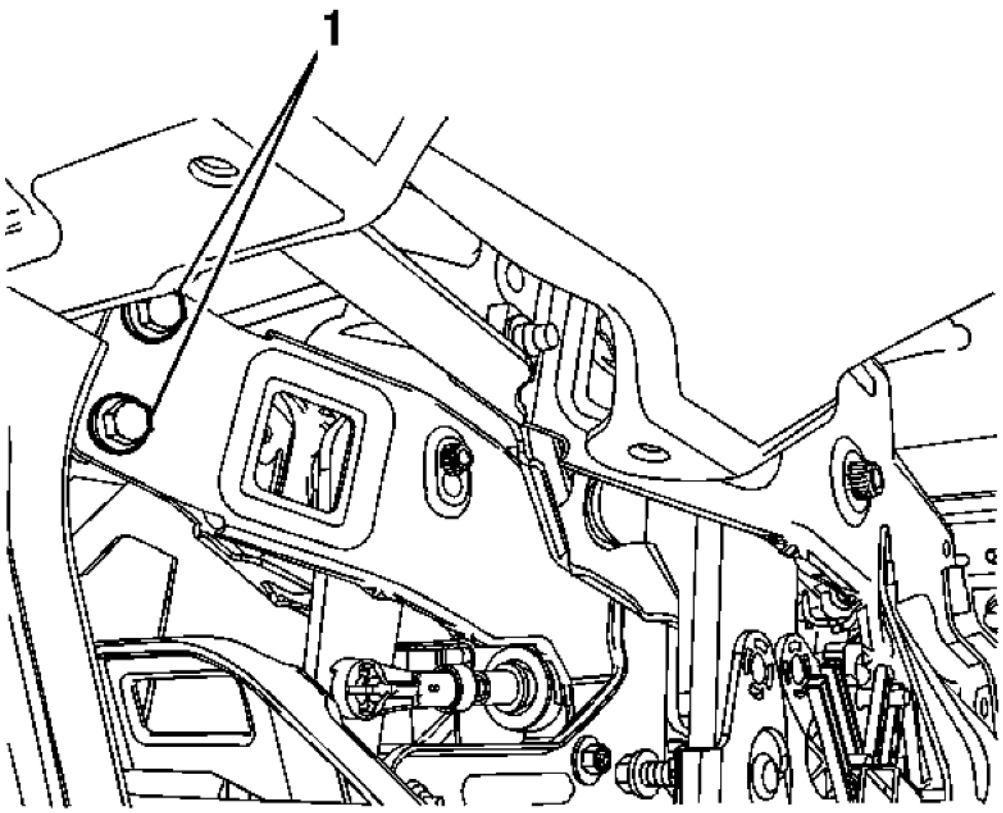

Fig. 3: I/P Clutch Pedal Fasteners
Courtesy of GENERAL MOTORS CORP.

6. Remove the two clutch pedal fasteners (1) from the I/P.
7. Remove the clutch pedal assembly from the vehicle.
8. If replacing the pedal, transfer components as necessary.

Installation Procedure

1. Install the clutch pedal assembly into the vehicle.

cardiagn.com

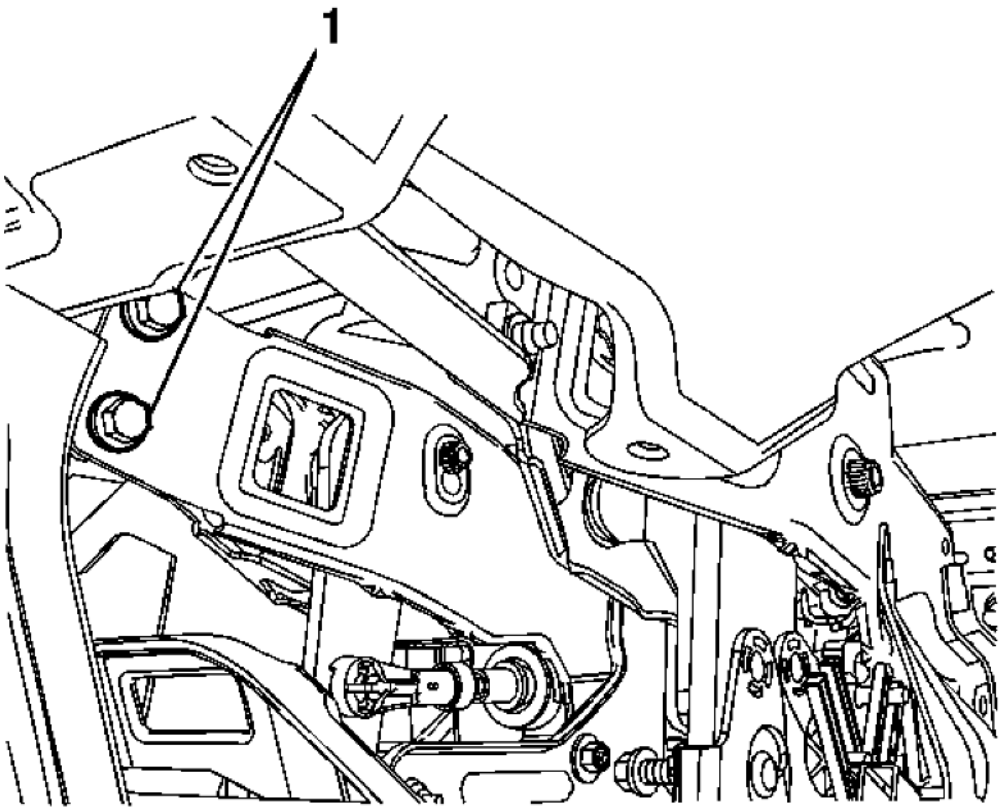

Fig. 4: I/P Clutch Pedal Fasteners
Courtesy of GENERAL MOTORS CORP.

CAUTION: Refer to Fastener Caution .

2. Install the fasteners (1) securing the clutch pedal assembly to the I/P and tighten to 20 N.m (15 lb ft).

cardiagn.com

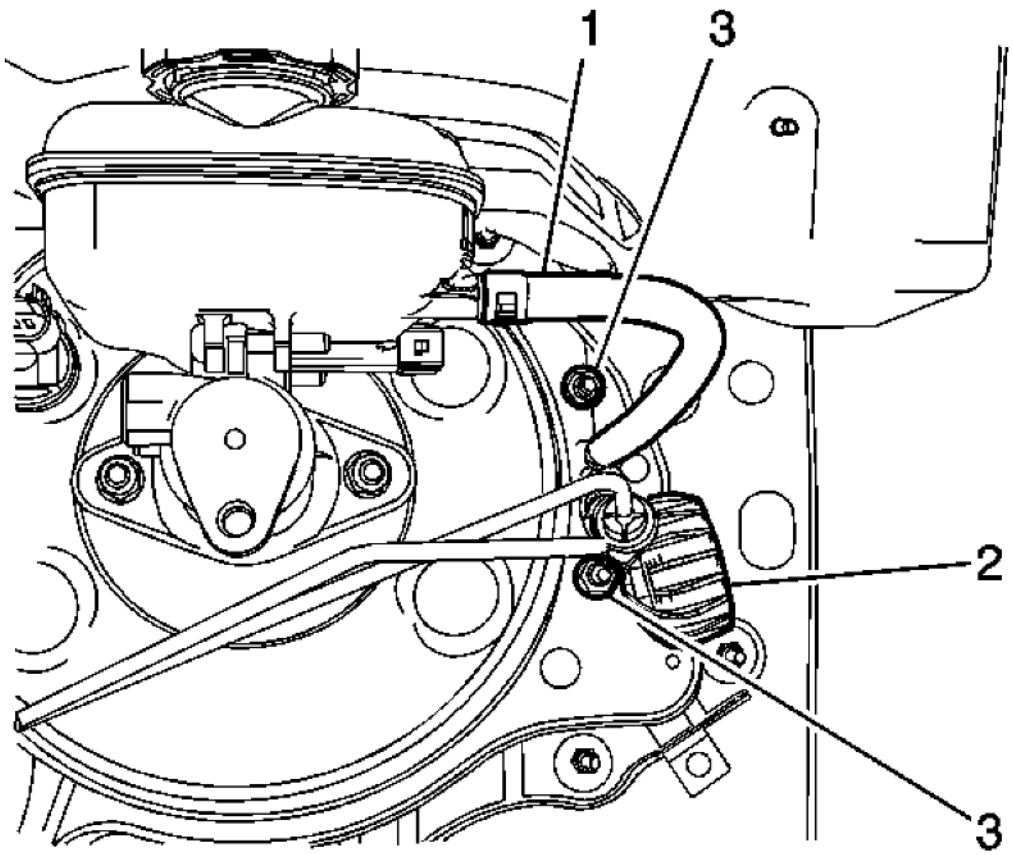

Fig. 5: Clutch Fluid Reservoir, Actuator Pipe Assembly & Pedal Fasteners
Courtesy of GENERAL MOTORS CORP.

3. Install the fasteners (3) securing the clutch pedal assembly to the cowl and tighten to 9 N.m (80 lb in).
4. Connect the clutch pedal position sensor electrical connector.

cardiagn.com

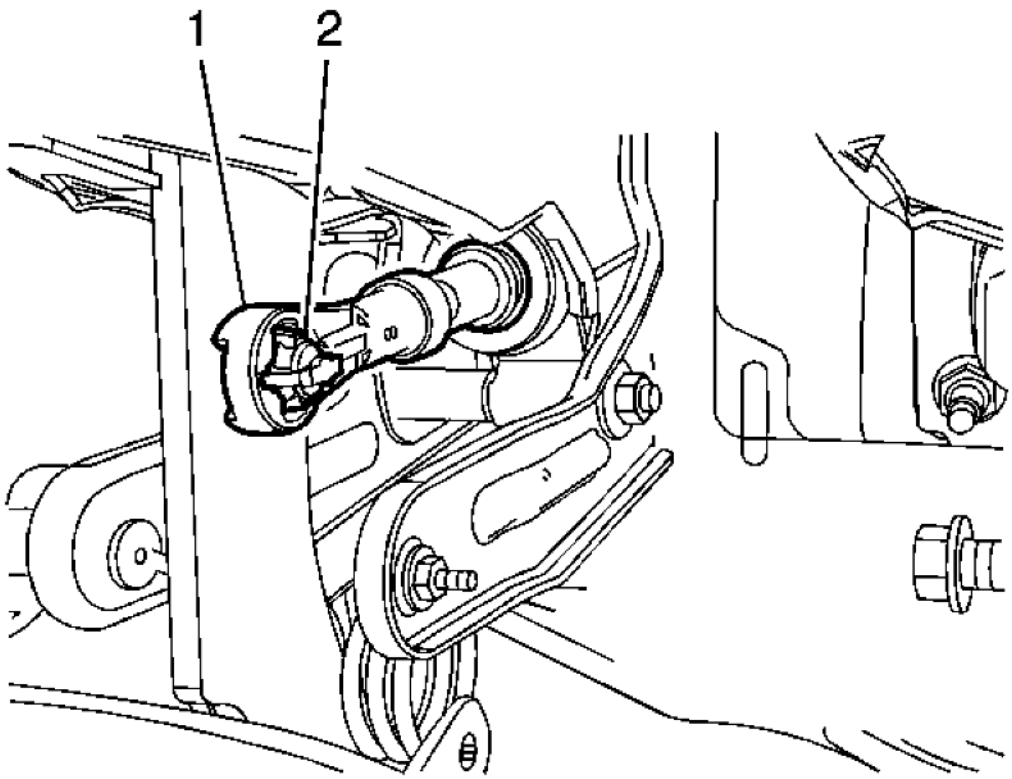

Fig. 6: Clutch Master Cylinder Push Rod & Clutch Pedal Pin
Courtesy of GENERAL MOTORS CORP.

5. Connect the clutch master cylinder push rod (1) to the clutch pedal pin (2).

cardiagn.com

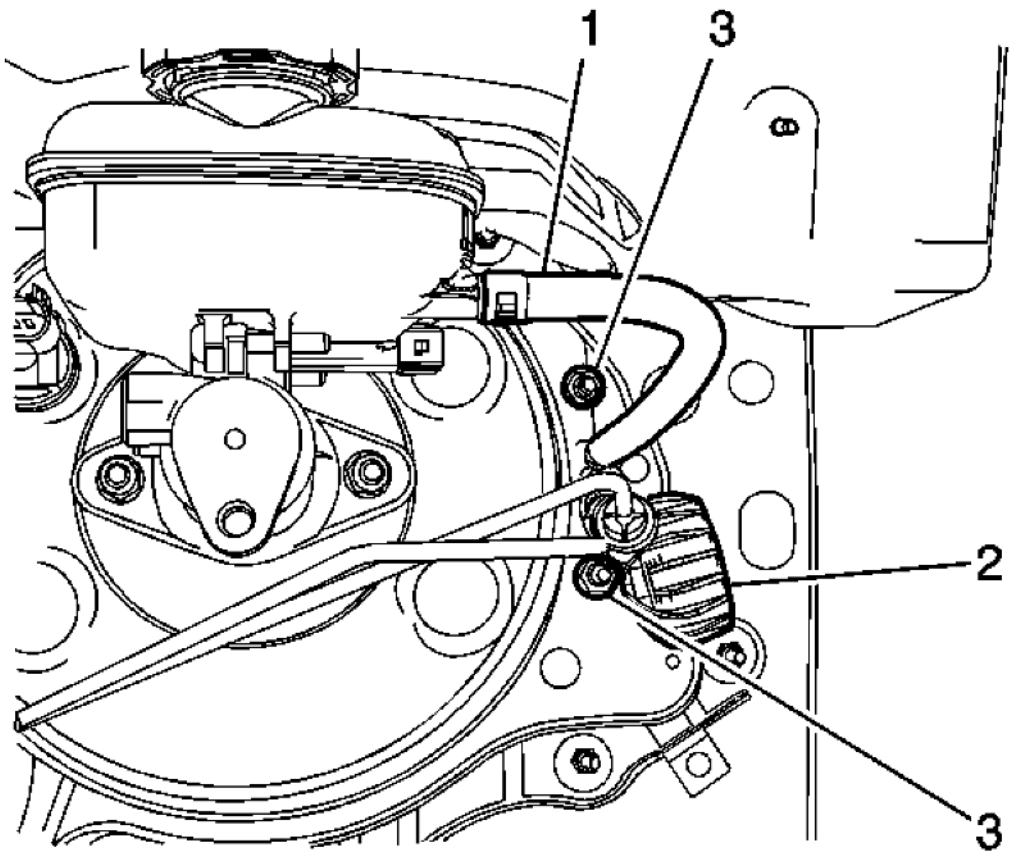

Fig. 7: Clutch Fluid Reservoir, Actuator Pipe Assembly & Pedal Fasteners
Courtesy of GENERAL MOTORS CORP.

6. Connect the clutch actuator pipe assembly (2) to the clutch pedal assembly.
7. Connect the clutch fluid reservoir hose (1) to the clutch pedal assembly.
8. Check for proper clutch pedal movement and operation.
9. Bleed the clutch system, Refer to **Hydraulic Clutch System Bleeding**

WARNING: Replacement or reprogramming of the ECM, or replacement of the clutch pedal position sensor (CPPS) or clutch pedal requires that a CPPS learn procedure be performed. Failure to perform the CPPS learn procedure may result in personal injury or damage to the vehicle or its components if the vehicle is in gear and the starter motor is accidentally engaged.

10. Perform the clutch pedal position sensor learn procedure. For the V-6 engine refer to **Clutch Pedal**

cardiagn.com

Position Sensor Learn or **Clutch Pedal Position Sensor Learn** for the V-8 engine.

CLUTCH PEDAL RETURN SPRING REPLACEMENT

Removal Procedure

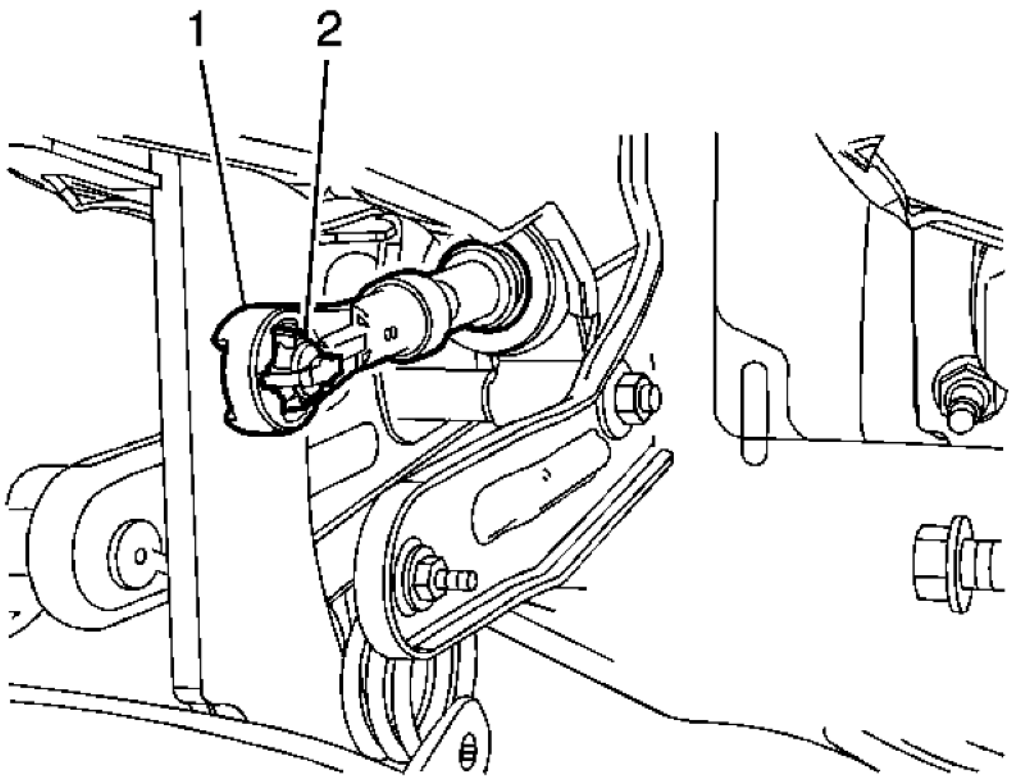

Fig. 8: Clutch Master Cylinder Push Rod & Clutch Pedal Pin
Courtesy of GENERAL MOTORS CORP.

1. Disconnect the clutch master cylinder push rod (1) from the clutch pedal pin (2).

cardiagn.com

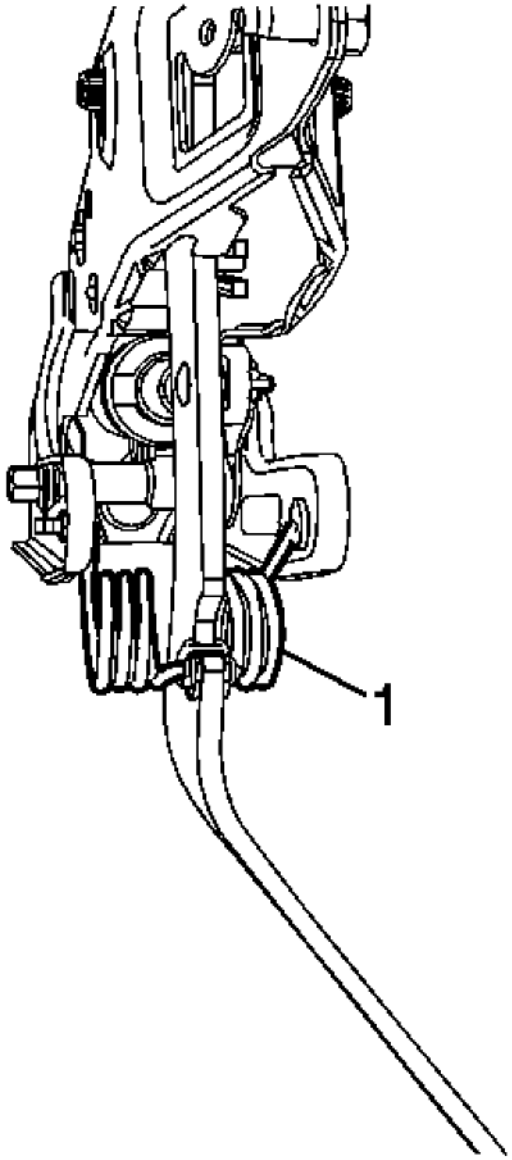

Fig. 9: Clutch Pedal Return Spring
Courtesy of GENERAL MOTORS CORP.

2. Remove the clutch pedal return spring (1) from the clutch pedal assembly as follows:
    1. Remove the center of the spring from the center spring bushing.
    2. Remove the outer ears of the spring from the outer spring bushings.

cardiagn.com

3. Remove the clutch pedal return spring bushings from the clutch pedal assembly.

Installation Procedure

1. Install the clutch pedal return spring bushings to the clutch pedal assembly.

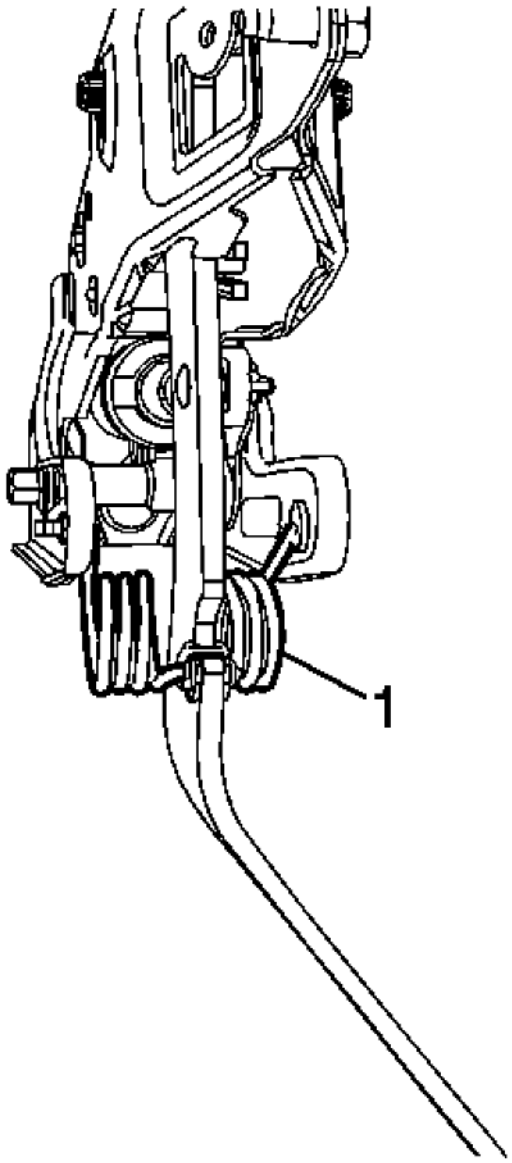

Fig. 10: Clutch Pedal Return Spring

cardiagn.com

Courtesy of GENERAL MOTORS CORP.

NOTE: Correct spring orientation is critical for proper clutch pedal operation.

2. Install the clutch pedal return spring (1) to the clutch pedal assembly as follows:
    1. Insert the outer ears of the spring into the outer spring bushings.
    2. While holding the clutch pedal fully depressed to the floor place the center of the spring into the center spring bushing.
3. Move the clutch pedal through the full range of motion to check for proper clutch pedal spring operation.

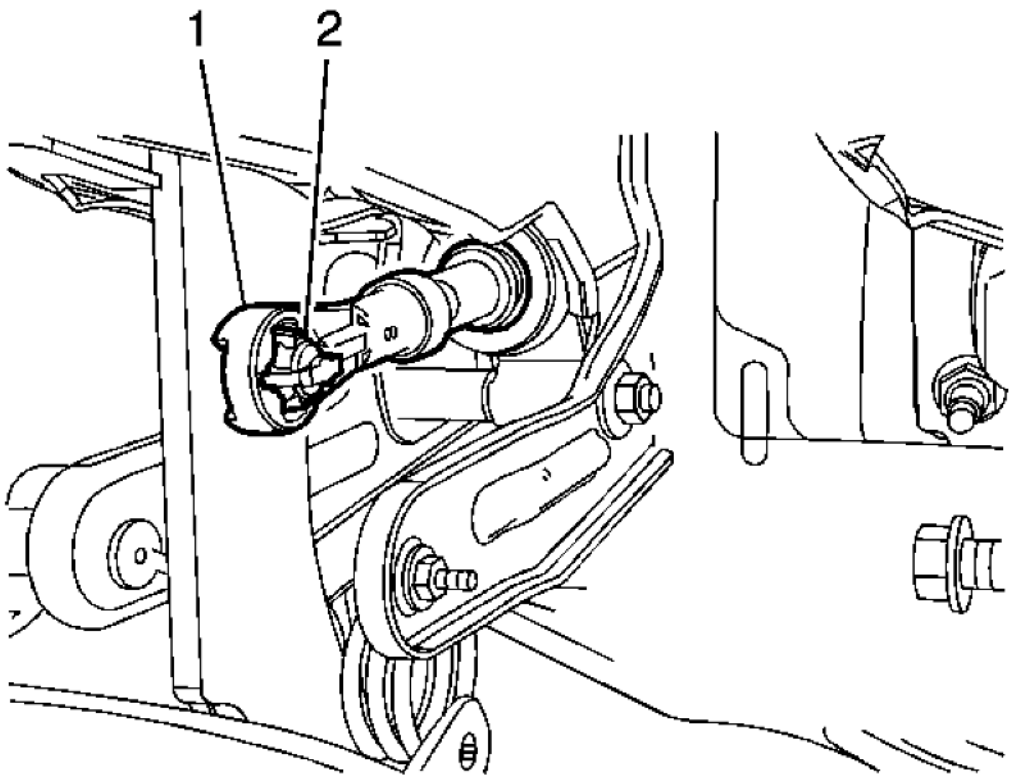

Fig. 11: Clutch Master Cylinder Push Rod & Clutch Pedal Pin
Courtesy of GENERAL MOTORS CORP.

4. Connect the clutch master cylinder push rod (1) to the clutch pedal pin (2).

CLUTCH MASTER CYLINDER REPLACEMENT

Removal Procedure

cardiagn.com

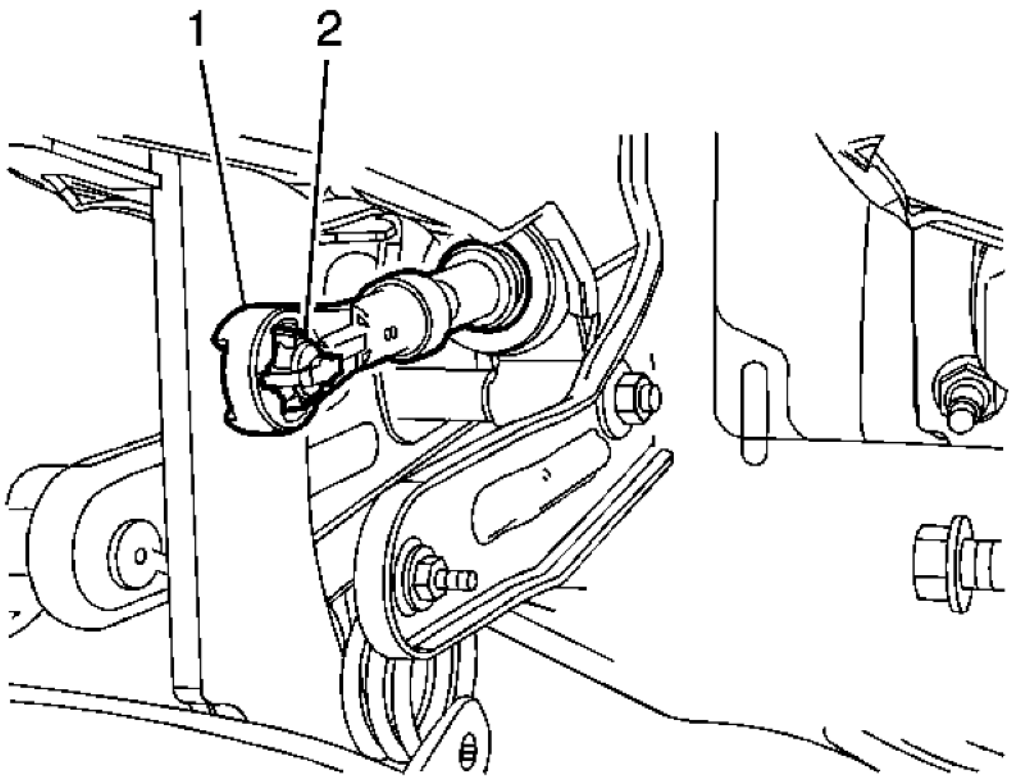

Fig. 12: Clutch Master Cylinder Push Rod & Clutch Pedal Pin
Courtesy of GENERAL MOTORS CORP.

1. Disconnect the clutch master cylinder push rod (1) from the clutch pedal pin (2).

cardiagn.com

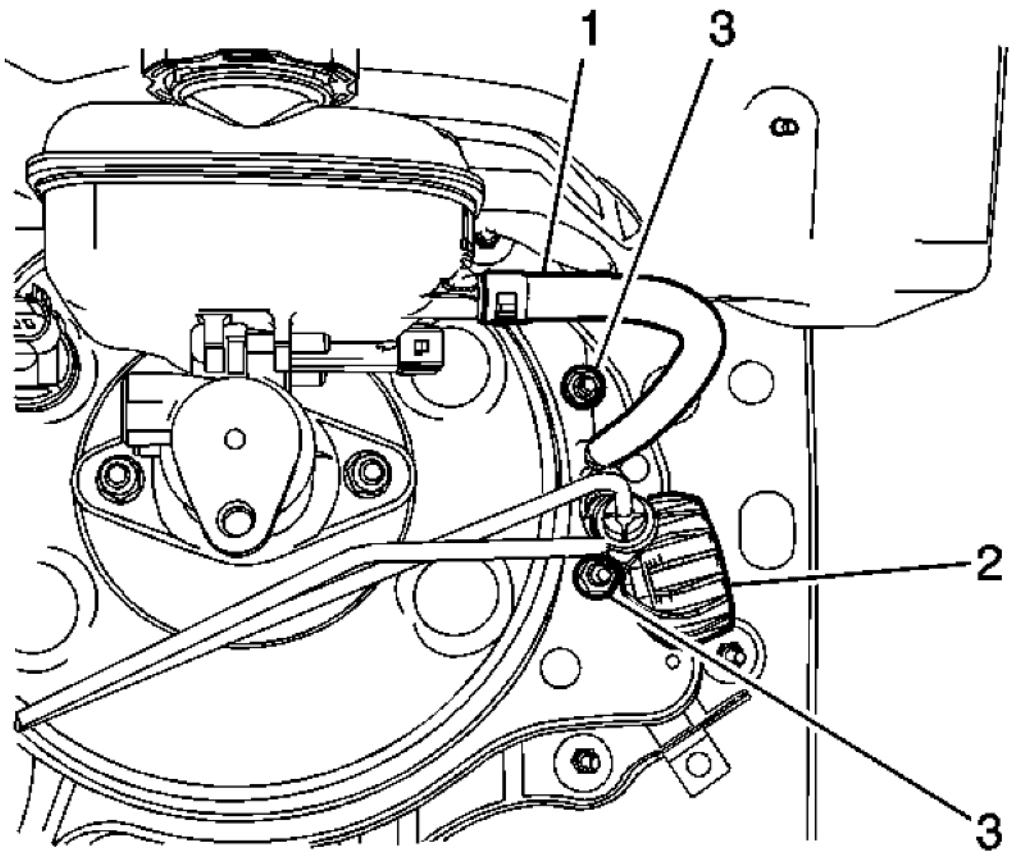

Fig. 13: Clutch Fluid Reservoir, Actuator Pipe Assembly & Pedal Fasteners
Courtesy of GENERAL MOTORS CORP.

2. Remove the clutch fluid reservoir (1) hose from the clutch pedal assembly, then plug hose.
3. Disconnect the clutch actuator pipe assembly (2) from the clutch pedal assembly.

cardiagn.com

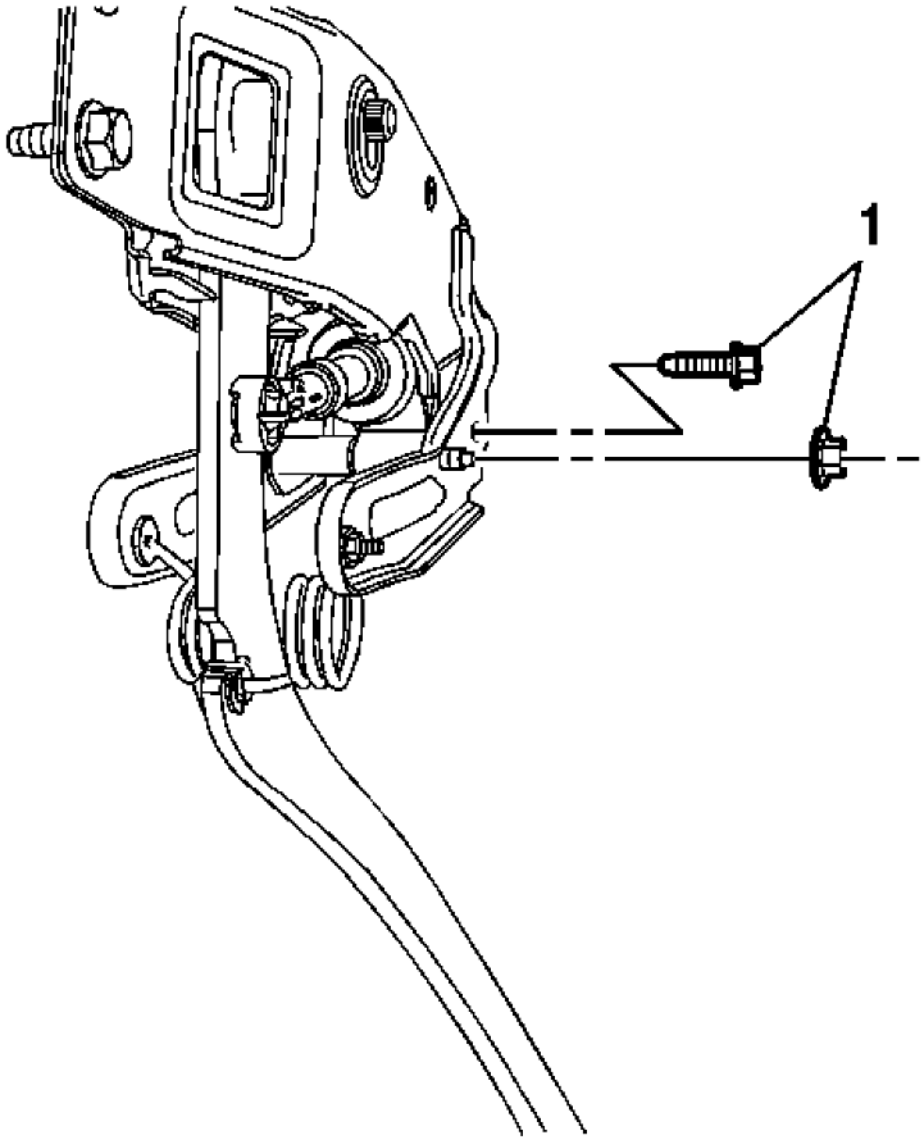

Fig. 14: Clutch Master Cylinder Fasteners (Right Side)
Courtesy of GENERAL MOTORS CORP.

4. Remove the two clutch master cylinder fasteners (1) from the right side of the clutch pedal assembly.

cardiagn.com

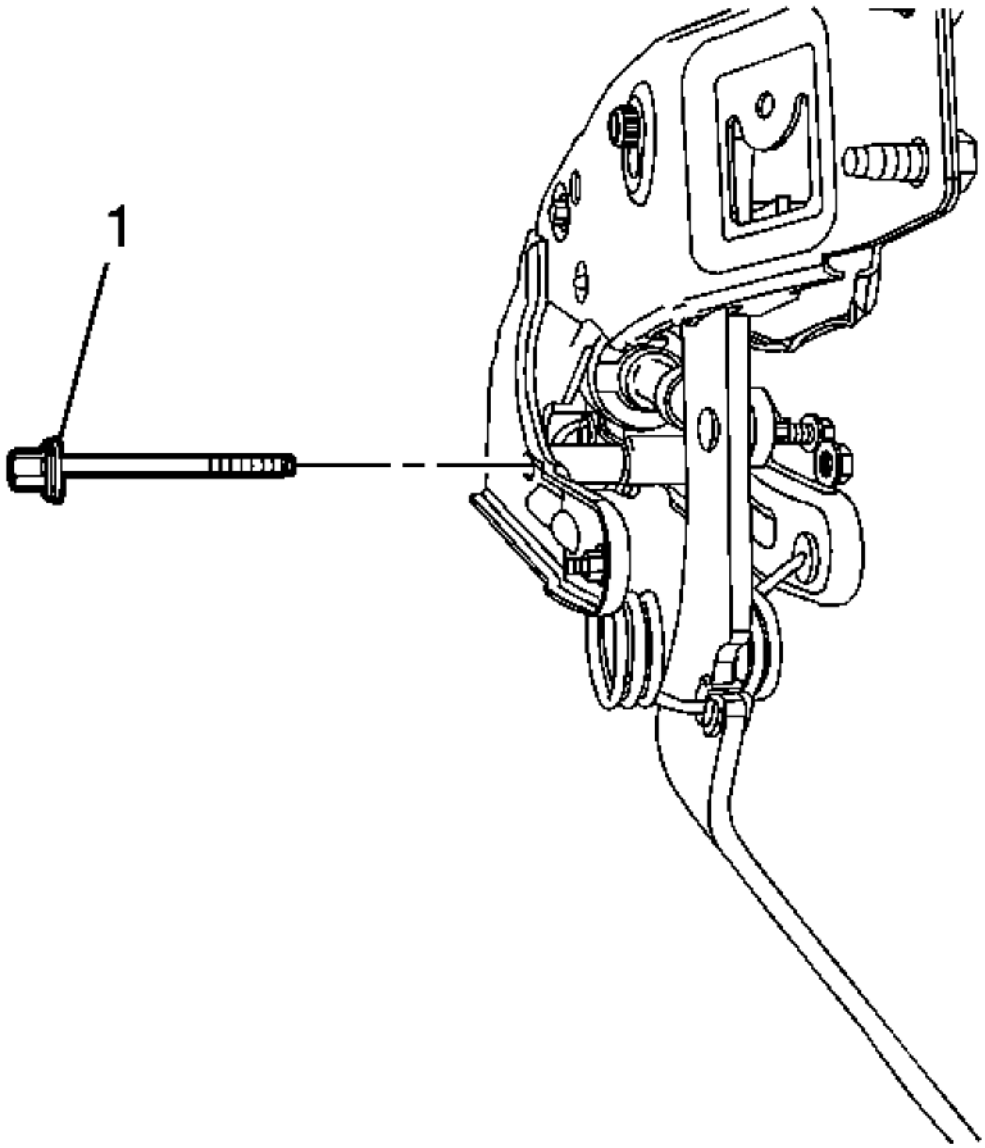

Fig. 15: Clutch Master Cylinder Fasteners (Left Side)
Courtesy of GENERAL MOTORS CORP.

5. Remove the two clutch master cylinder fastener (1) from the left side of the clutch pedal assembly.

cardiagn.com

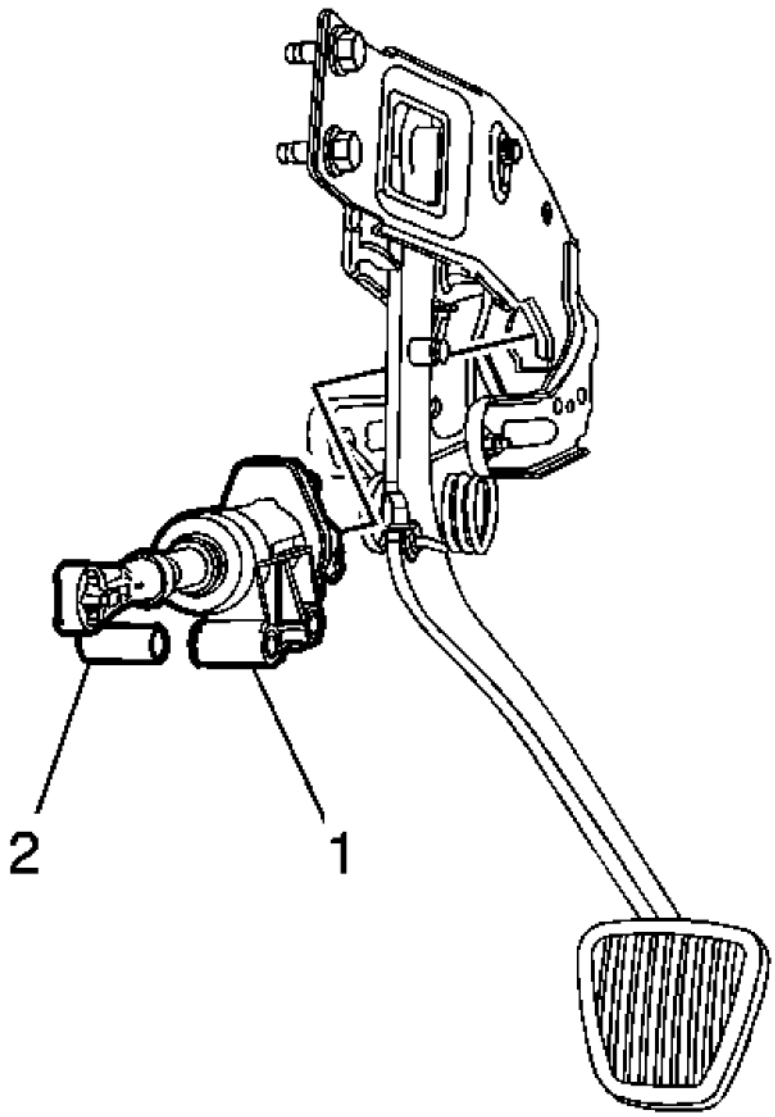

Fig. 16: Clutch Master Cylinder & Spacer
Courtesy of GENERAL MOTORS CORP.

6. Remove the clutch master cylinder (1) and the spacer (2) from the clutch pedal assembly.

Installation Procedure

cardiagn.com

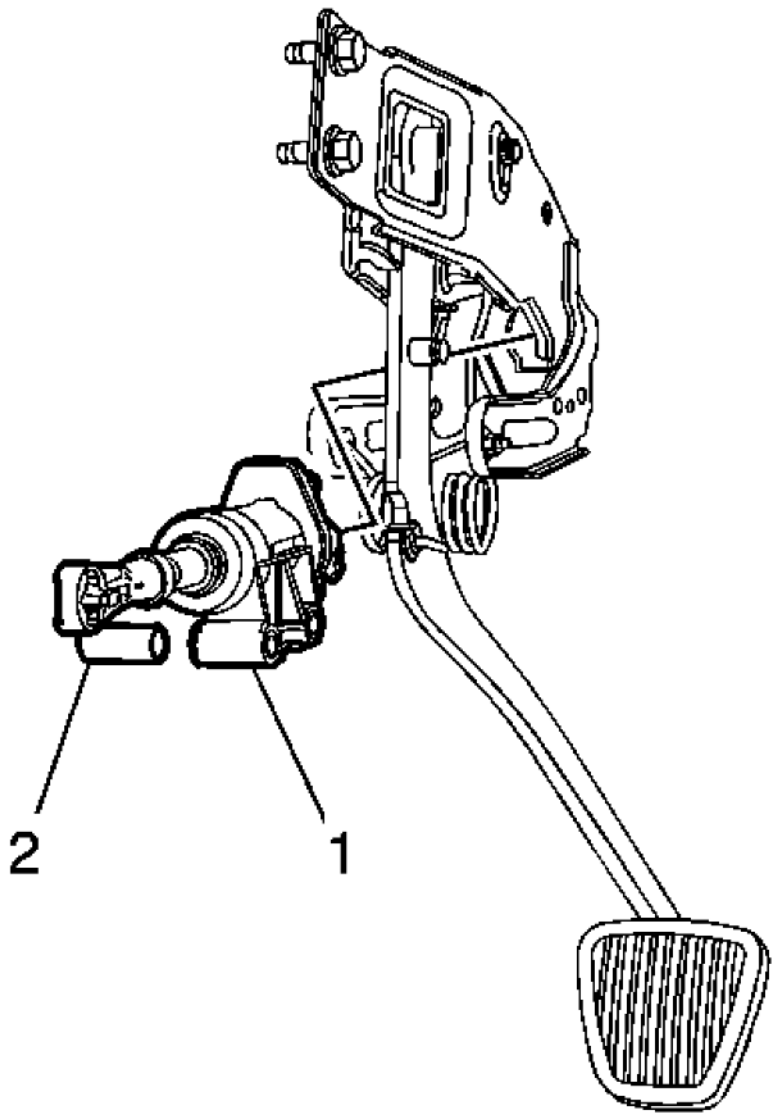

Fig. 17: Clutch Master Cylinder & Spacer
Courtesy of GENERAL MOTORS CORP.

1. Install the clutch master cylinder (1) and the spacer (2) to the clutch pedal assembly.

cardiagn.com

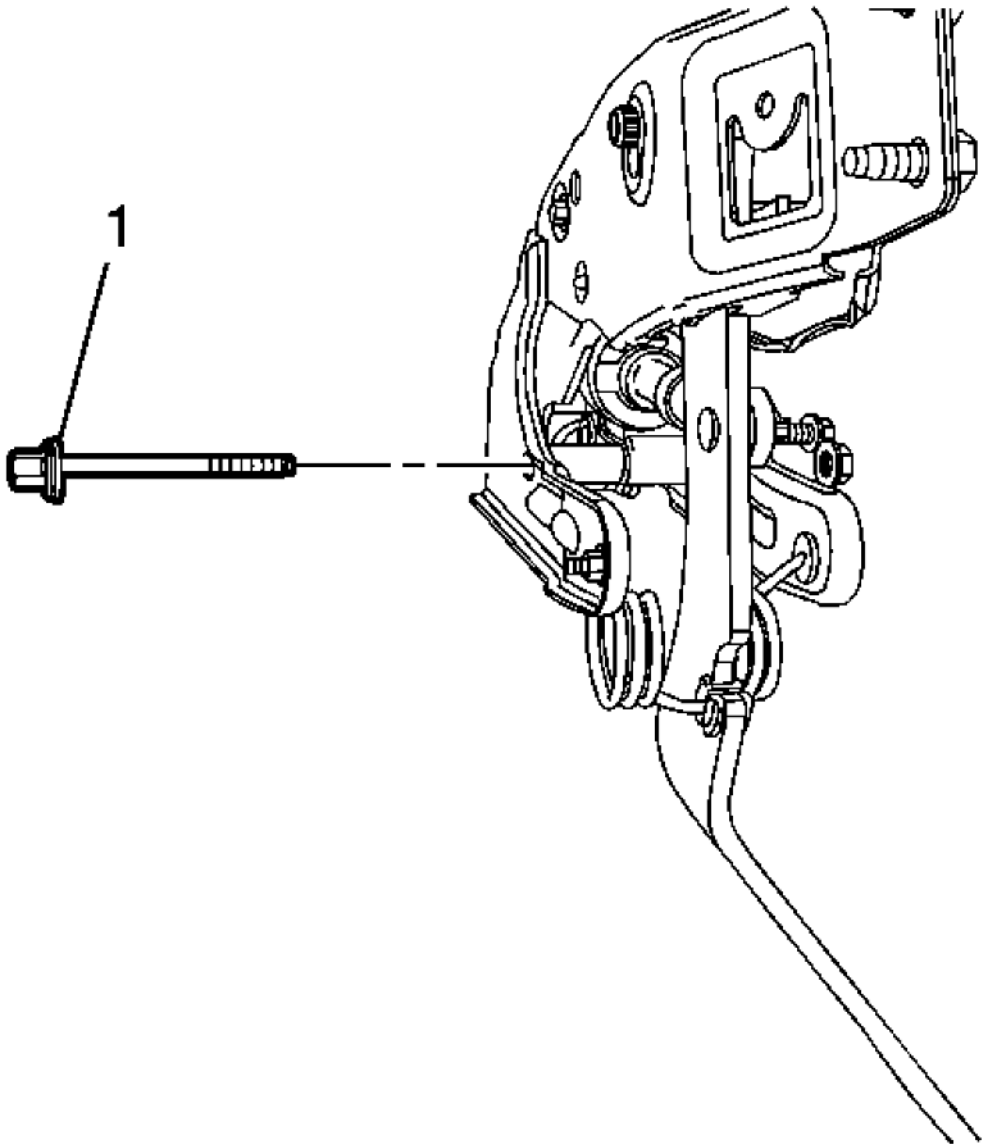

Fig. 18: Clutch Master Cylinder Fasteners (Left Side)
Courtesy of GENERAL MOTORS CORP.

CAUTION: Refer to Fastener Caution .

2. Install the two clutch master cylinder fastener (1) to the left side of the clutch pedal assembly and tighten

cardiagn.com

to 20 N.m (15 lb ft).

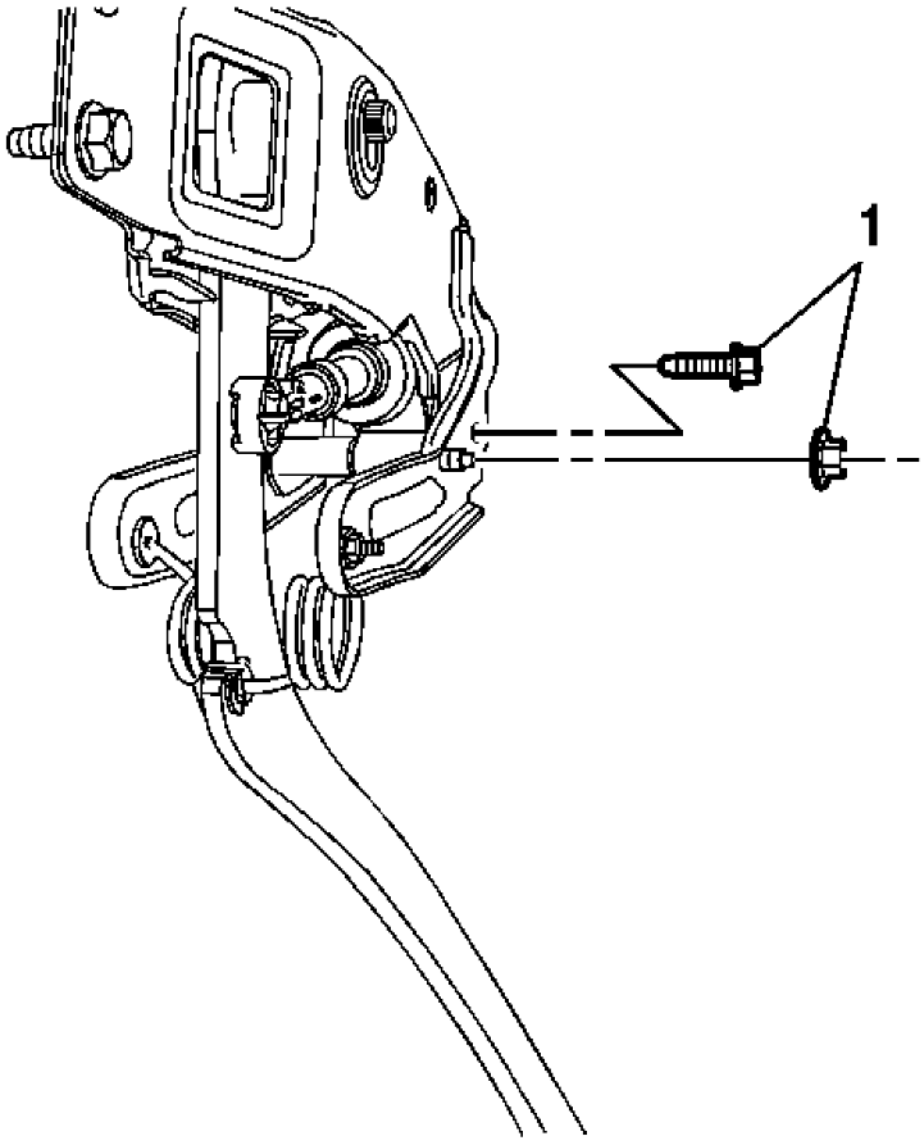

Fig. 19: Clutch Master Cylinder Fasteners (Right Side)
Courtesy of GENERAL MOTORS CORP.

3. Install the two clutch master cylinder fasteners (1) to the right side of the clutch pedal assembly and tighten to 20 N.m (15 lb ft).

cardiagn.com

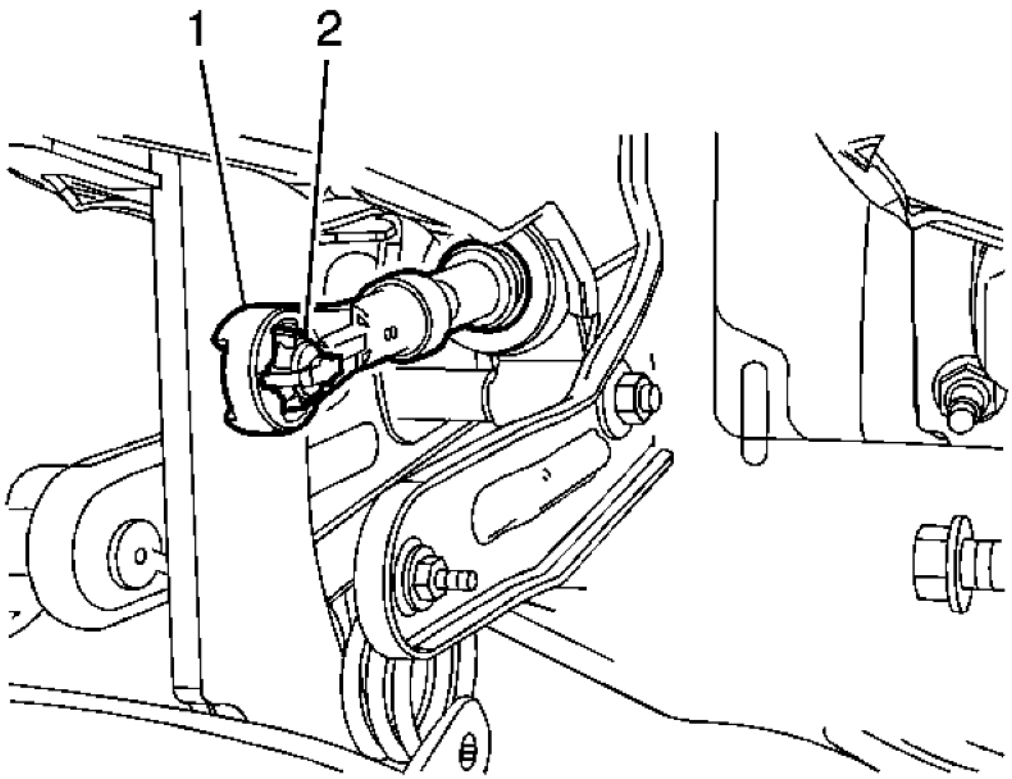

Fig. 20: Clutch Master Cylinder Push Rod & Clutch Pedal Pin
Courtesy of GENERAL MOTORS CORP.

4. Connect the clutch master cylinder push rod (1) to the clutch pedal pin (2).

cardiagn.com

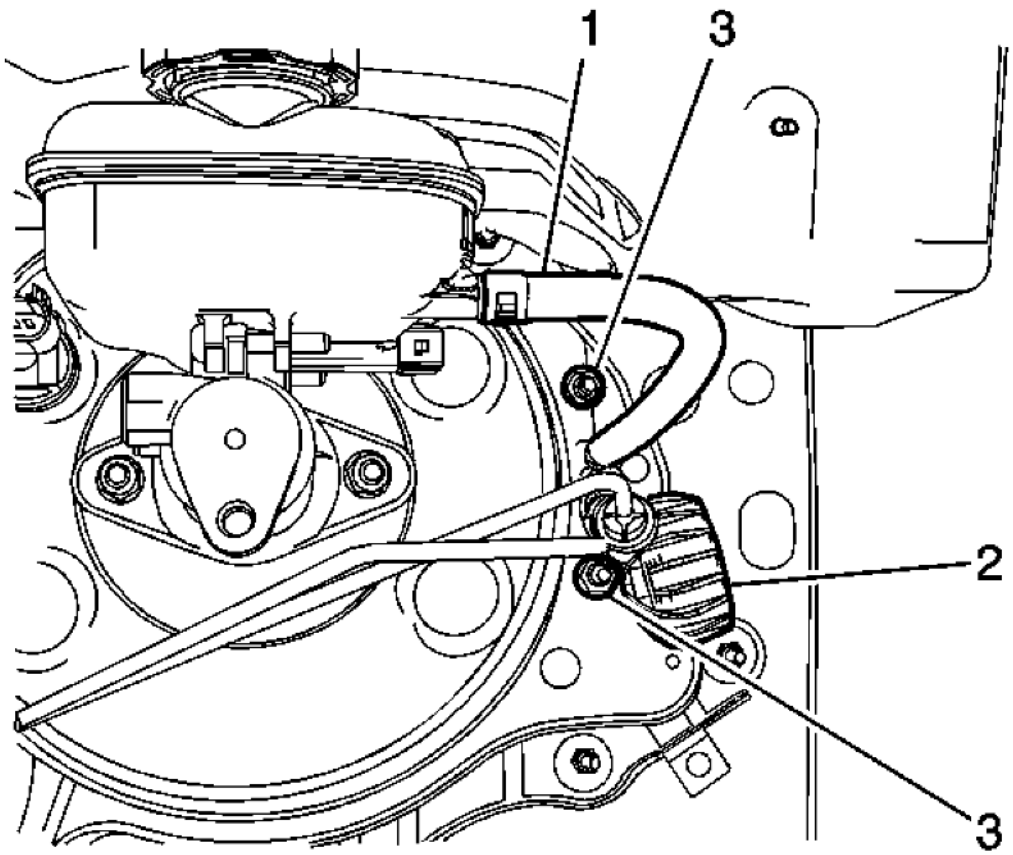

Fig. 21: Clutch Fluid Reservoir, Actuator Pipe Assembly & Pedal Fasteners
Courtesy of GENERAL MOTORS CORP.

5. Connect the clutch actuator pipe assembly (2) to the clutch pedal assembly.
6. Connect the clutch fluid reservoir hose (1) to the clutch pedal assembly.
7. Check for proper clutch pedal movement and operation.
8. Bleed the hydraulic clutch system. Refer to **Hydraulic Clutch System Bleeding**.

HYDRAULIC CLUTCH HOSE/PIPE REPLACEMENT

Removal Procedure

CAUTION: Refer to Brake Fluid Effects on Paint and Electrical Components Caution .

cardiagn.com

1. Remove the clutch hydraulic hose retaining clip from the clutch master cylinder.

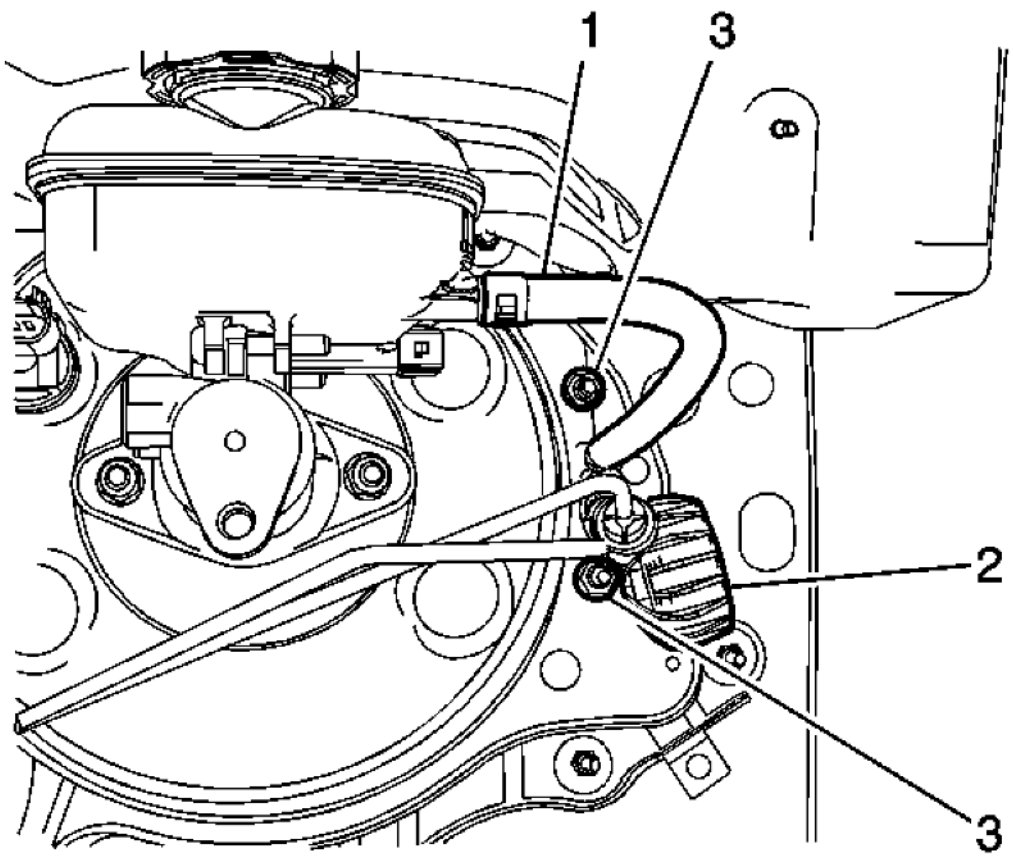

Fig. 22: Clutch Fluid Reservoir, Actuator Pipe Assembly & Pedal Fasteners
Courtesy of GENERAL MOTORS CORP.

NOTE: Install a cap or plug to the exposed hose and clutch master cylinder fittings in order to prevent fluid loss and contamination.

2. Disconnect the clutch hydraulic hose (2) from the clutch master cylinder.
3. Raise and support the vehicle.

cardiagn.com

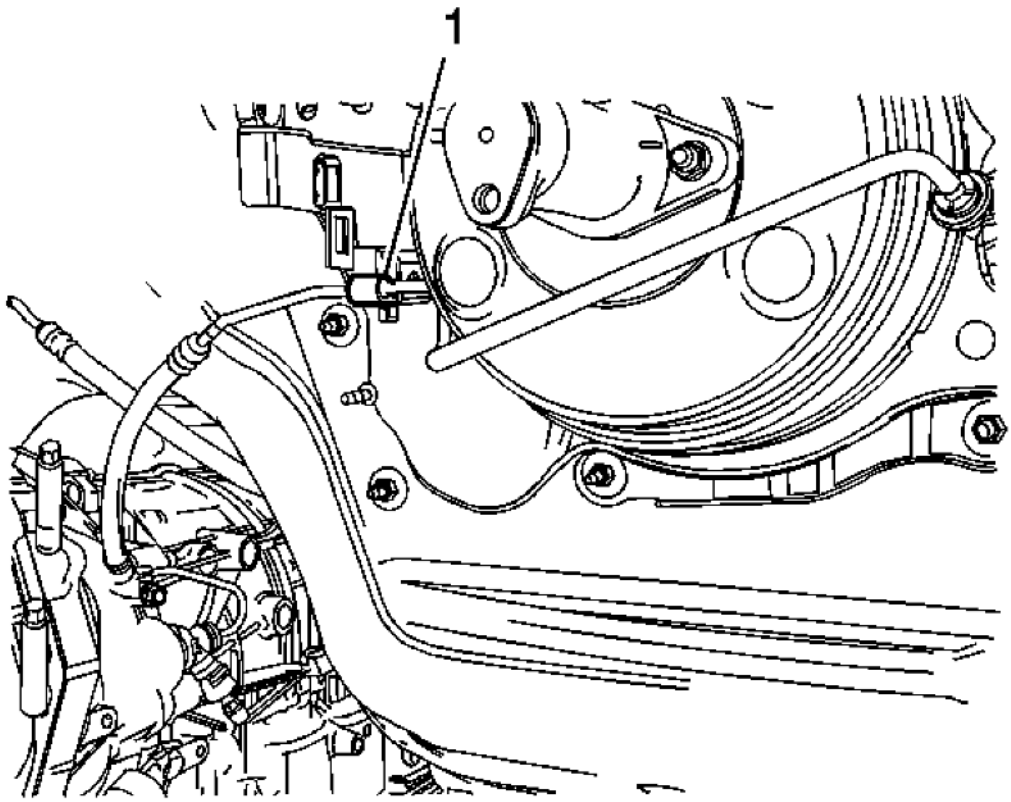

Fig. 23: Clutch Hydraulic Hose Retaining Clip
Courtesy of GENERAL MOTORS CORP.

4. Remove the clutch hydraulic hose retaining clip (1) from the cowl.
5. Remove the clutch hydraulic hose retainer from the transmission.
6. Remove the clutch hydraulic hose retainer clip.
7. Disconnect the clutch hydraulic hose from the clutch slave cylinder. It is not necessary to plug the lower hose end or slave cylinder fitting as they are equipped with check valves. Only minimal fluid loss may be experienced.
8. Remove the clutch hydraulic hose from the vehicle.

Installation Procedure

1. Install the clutch hydraulic hose to the vehicle.

cardiagn.com

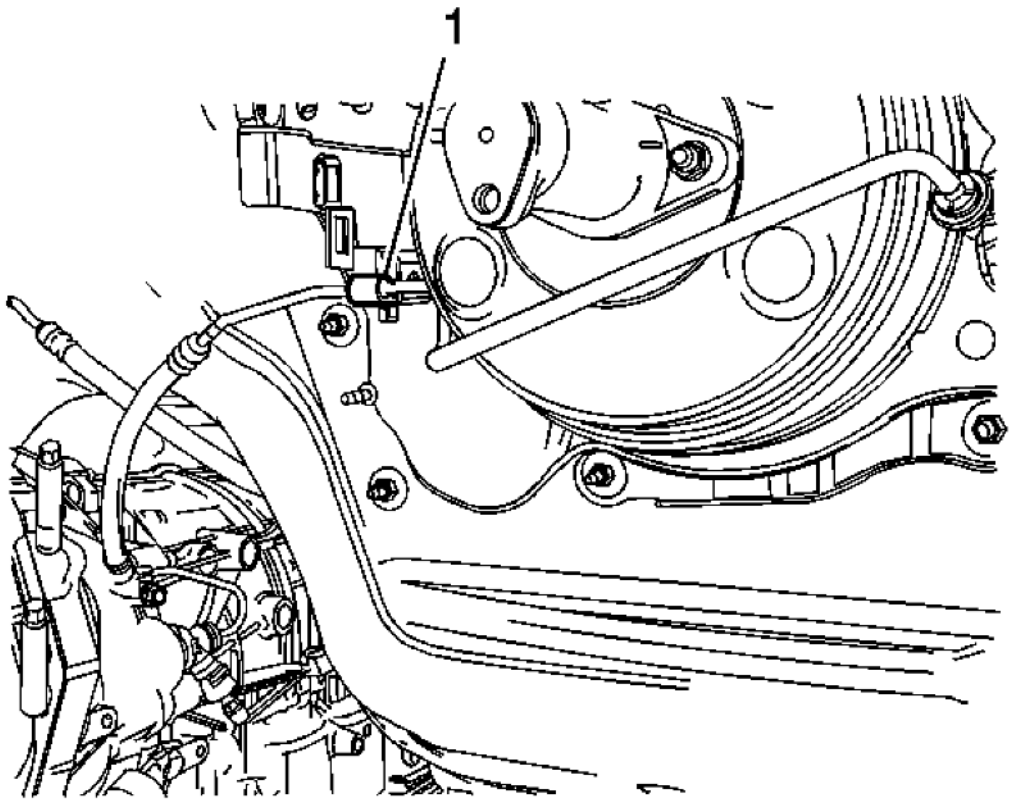

Fig. 24: Clutch Hydraulic Hose Retaining Clip
Courtesy of GENERAL MOTORS CORP.

2. Install the clutch hydraulic retainer clip to the cowl (1).
3. Install the clutch hydraulic hose retaining clip to the clutch slave cylinder.

NOTE: Ensure the clutch hydraulic hose is routed in an upward direction above the clutch slave cylinder with no sharp bends, kinks, or downward loops. Ensure the clutch hydraulic hose does not come in contact with any sharp or potentially hot surfaces.

4. Align the clutch hydraulic hose locating tab with the notch in the slave cylinder hose fitting.
5. Push the clutch hydraulic hose into the clutch slave cylinder until a "click" is heard.
6. Install the hose retainer to the transmission and tighten to 20 N.m (15 lb ft).
7. Tug gently on the clutch hydraulic hose to ensure proper retention to the clutch slave cylinder.
8. Lower the vehicle.

cardiagn.com

9. Install the clutch hydraulic hose retaining clip to the clutch master cylinder.
10. Connect the clutch hydraulic hose to the clutch master cylinder.
11. Push the clutch hydraulic hose into the clutch master cylinder until a "click" is heard.
12. Tug gently on the clutch hydraulic hose to ensure proper retention to the clutch master cylinder.
13. Bleed the clutch hydraulic system. Refer to **Hydraulic Clutch System Bleeding**.

HYDRAULIC CLUTCH SYSTEM BLEEDING

Special Tools

- **J-35555** Metal Mityvac
- **J 43485** Power Steering Bleeder Adapter

1. Verify that all the lines and fittings are dry and secure.
2. Clean the dirt and grease from the reservoir cap in order to ensure that no foreign substances enter the system.
3. Remove the reservoir cap.
4. Fill the reservoir to the proper level with the required fluid.

   Some manual transmission equipped vehicles have a combined brake and clutch fluid reservoir.

5. Attach the **J 43485** to the **J-35555** , or equivalent.

NOTE: **Brake fluid will deteriorate the rubber on the J 43485 . Use a clean shop cloth to wipe away the fluid after each use.**

6. Place and hold the adapter on the reservoir filler neck to ensure a tight fit. In some cases, the adapter will fit into the reservoir opening.
7. Apply a vacuum of 51-68 kPa (15-20 hg) and remove the adapter.
8. Refill the reservoir to the proper level.
9. Repeat steps 6 and 7.
10. If needed, refill the reservoir and continue to pull a vacuum until no more bubbles can be seen in the reservoir or until the fluid level no longer drops.

WARNING: **The vehicle will move if started in gear before the Actuator Cylinder is refilled and operational. Start the vehicle the first time in neutral to help prevent personal injury from vehicle movement and see if the transmission will shift easily into gear.**

11. Pump the clutch pedal until firm (to refill actuator cylinder).
12. Add additional fluid if needed.
13. Test drive the vehicle to ensure proper operation.

cardiagn.com

CLUTCH PEDAL POSITION SENSOR REPLACEMENT

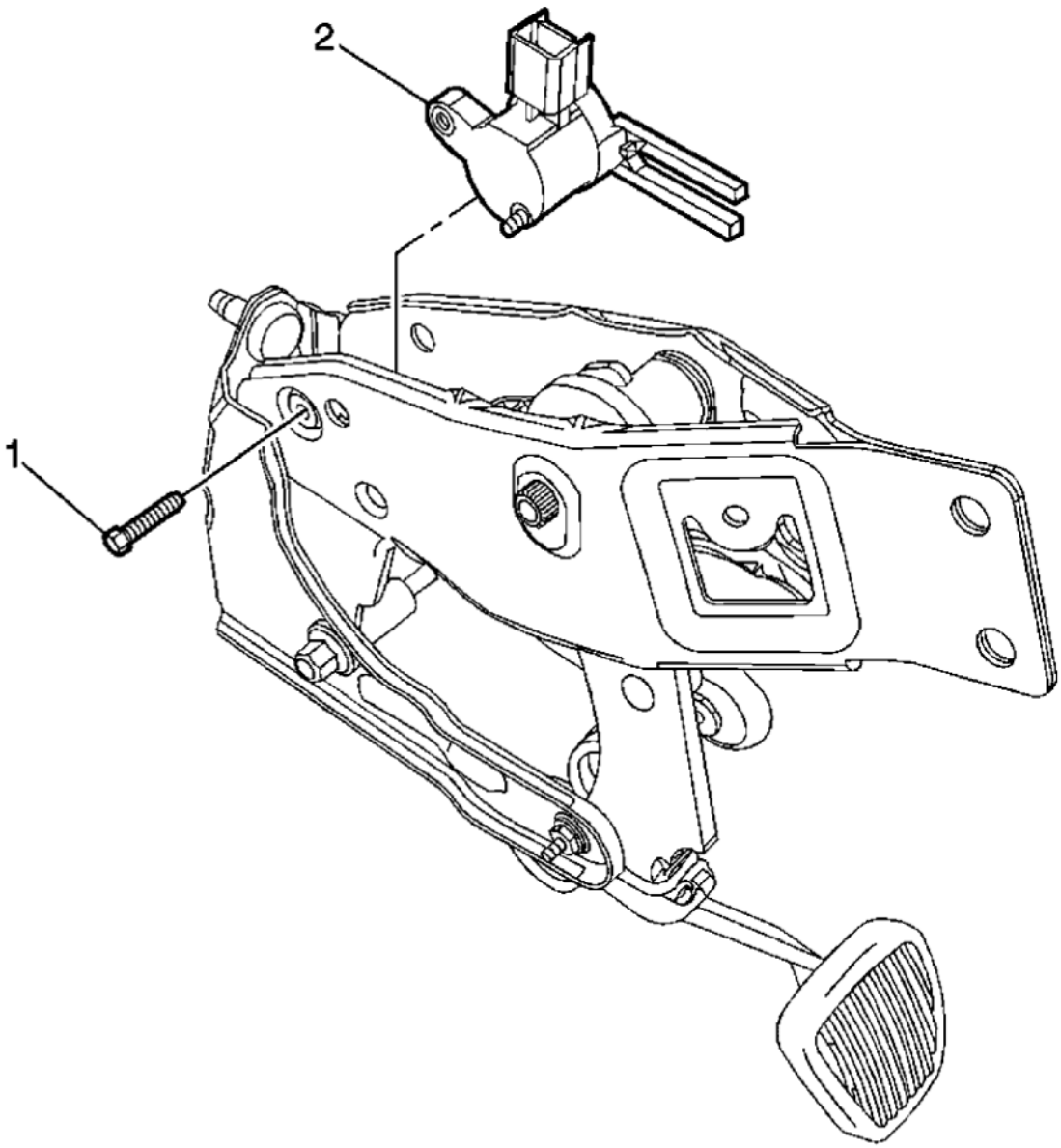

Fig. 25: Clutch Pedal Position Sensor
Courtesy of GENERAL MOTORS CORP.

Callout	Component Name
Preliminary Procedure: Remove the clutch pedal assembly from the vehicle. Refer to **Clutch Pedal Replacement**	
1	Clutch Pedal Position Sensor Bolt **CAUTION:**

cardiagn.com

	Refer to Fastener Caution . **Tighten:** 2.5 N.m (22 lb in)
2	Clutch Pedal Position Sensor **Procedure:** Perform the clutch pedal position sensor learn procedure. For the V6 engine refer to **Clutch Pedal Position Sensor Learn** or **Clutch Pedal Position Sensor Learn** for the V8 engine.

CLUTCH PILOT BEARING REPLACEMENT

Special Tools

- **J 43276** Clutch Pilot Bearing Remover
- **J 38836** Pilot Bushing Installer/Clutch. See **Special Tools**.

Removal Procedure

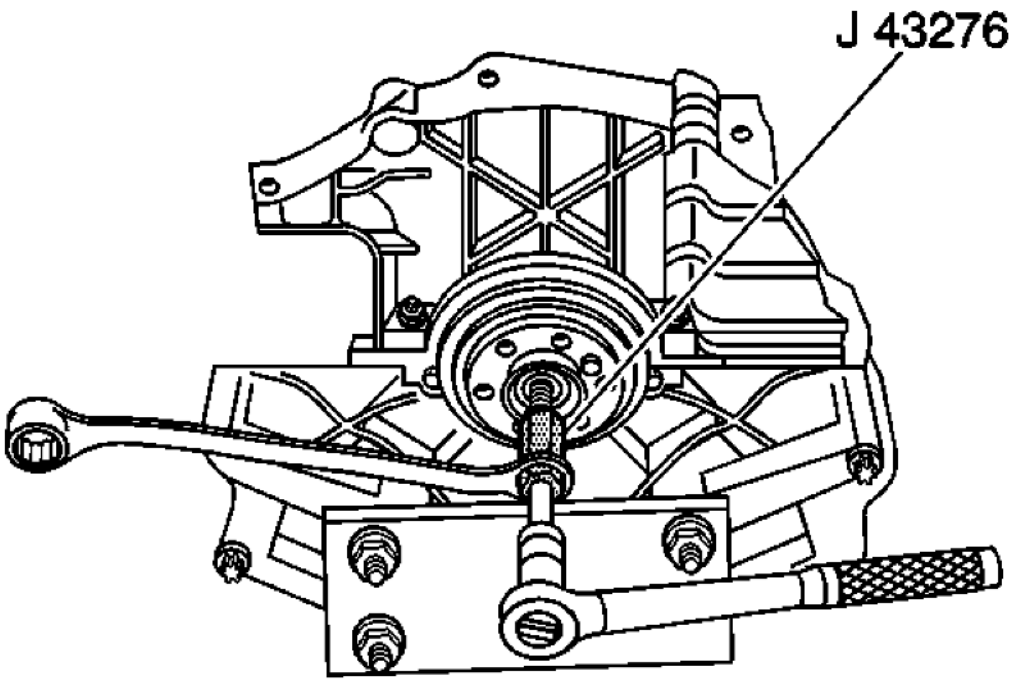

Fig. 26: Removing Clutch Pilot Bearing
Courtesy of GENERAL MOTORS CORP.

1. Remove the clutch. Refer to **Clutch Assembly Replacement**.

cardiagn.com

NOTE: **When using the J 43276 , always secure the J 43276-1 tool body using a wrench. Do not allow the J 43276-1 tool to rotate. Failing to do so causes damage to the J 43276-1 tool body.**

2. Remove the clutch bearing using the **J 43276** .
    1. Install the J 43276-1 into the clutch pilot bearing.
    2. Using a wrench, secure the J 43276-1.
    3. Insert the J 43276-2 into the J 43276-1.
    4. Rotate the J 43276-2 clockwise into the J 43276-1 until the clutch pilot bearing is completely removed from the crankshaft.
    5. Rotate the J 43276-2 counterclockwise to remove the J 43276-2 from the J 43276-1.
    6. Remove the J 43276-1 from the tool body.

Installation Procedure

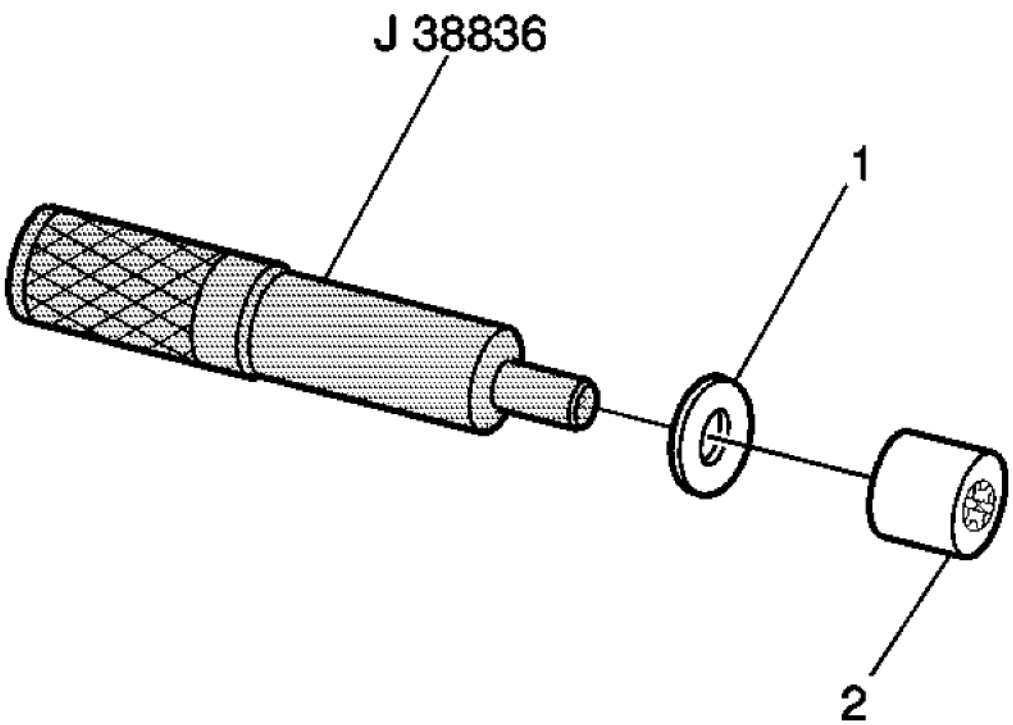

Fig. 27: View Of J 38836, Washer & Pilot Bearing (without RPO HP2)
Courtesy of GENERAL MOTORS CORP.

1. Install a 5/8 inch washer (1) onto the **J 38836** or equivalent. See **Special Tools**. The washer serves as a

cardiagn.com

stop against the crankshaft face and will assist in installing the bearing to the proper depth.

2. Install the new pilot bearing (2) onto the tool.

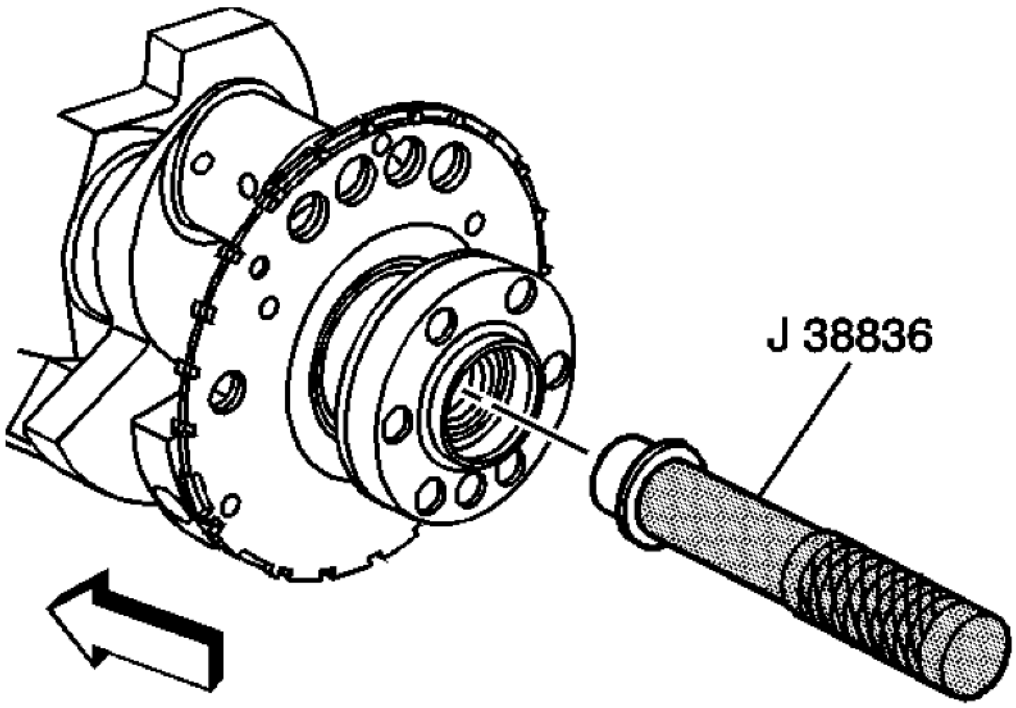

Fig. 28: Installing Pilot Bearing
Courtesy of GENERAL MOTORS CORP.

3. Install a new pilot bearing into the crankshaft using the **J 38836** . See **Special Tools**.
4. Inspect the clutch pilot bearing for proper installation. A properly installed clutch pilot bearing will be installed until flush to the rear of the crankshaft.
5. Install the clutch. Refer to **Clutch Assembly Replacement**.

CLUTCH ASSEMBLY REPLACEMENT

Removal Procedure

cardiagn.com

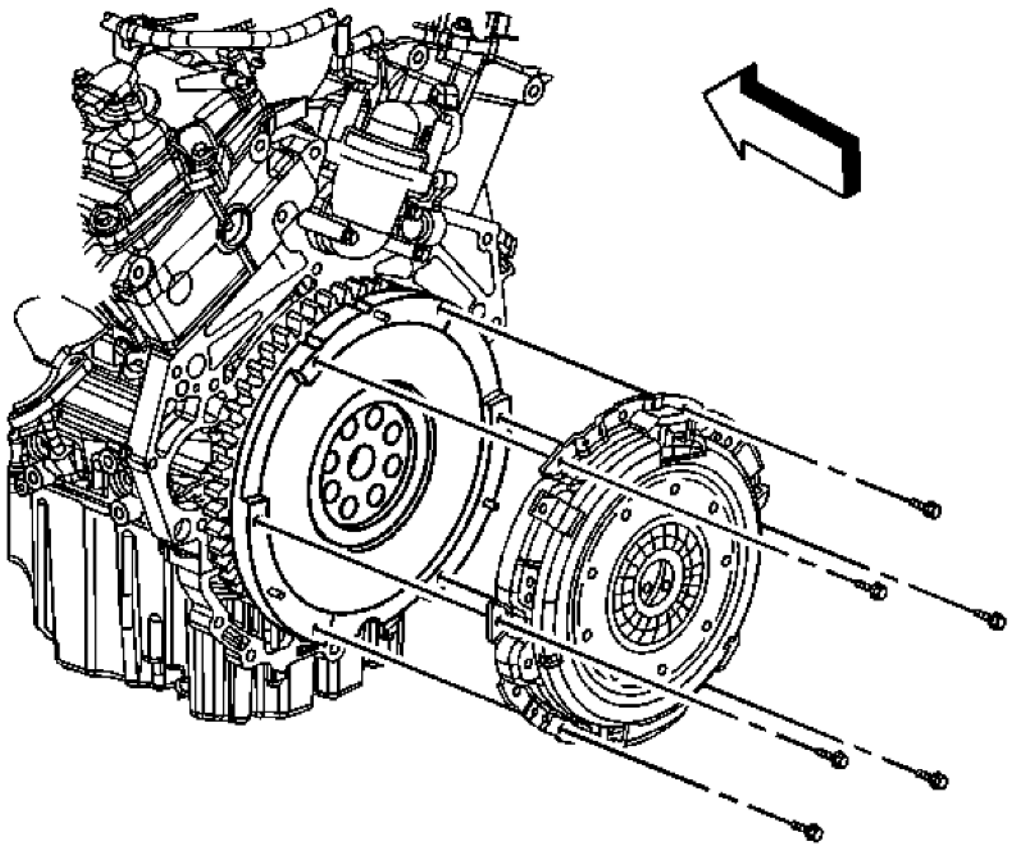

Fig. 29: Removing & Installing Clutch Pressure Plate Bolts
Courtesy of GENERAL MOTORS CORP.

1. Remove the manual transmission. Refer to **Transmission Replacement** or**Transmission Replacement**
2. Remove and discard the clutch pressure plate bolts.
3. Remove the clutch pressure plate and driven disc from the dowel pins on the flywheel.

Installation Procedure

NOTE: When the clutch driven plate requires replacement, the engine flywheel must also be replaced along with the clutch pressure plate as an assembly.

cardiagn.com

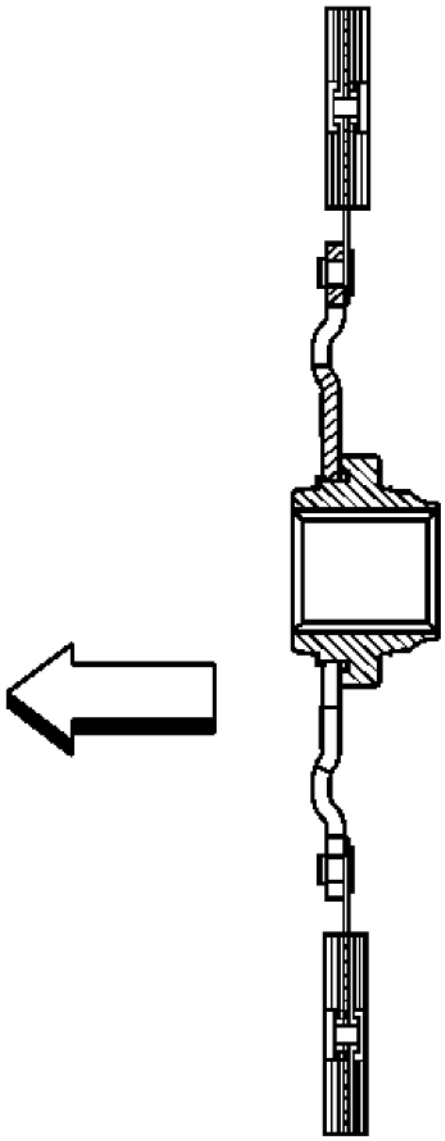

Fig. 30: Identifying Driven Plate & Front Of Vehicle (Arrow)
Courtesy of GENERAL MOTORS CORP.

1. The splined portion of the driven plate protrudes out of the plate more on one side than the other. The side that protrudes out more is the transmission side. The arrow in the graphic indicates the front of the vehicle, or flywheel side of the driven plate.

cardiagn.com

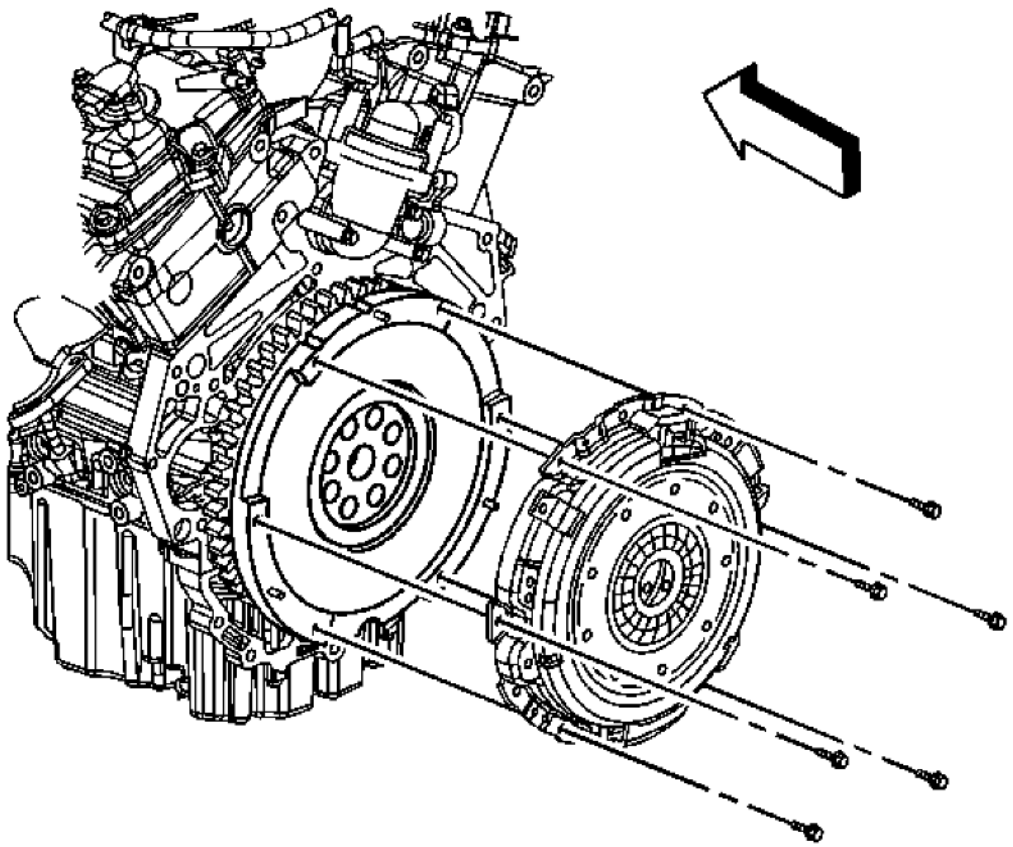

Fig. 31: Removing & Installing Clutch Pressure Plate Bolts
Courtesy of GENERAL MOTORS CORP.

2. Install the clutch pressure plate and driven plate to the dowel pins on the flywheel.
3. **Tip:** Use NEW clutch pressure plate bolts in order to maintain proper torque. Apply red Loctite 242 to the threads to make certain the bolts do not come loose.

   Install the NEW clutch pressure plate bolts finger tight.

cardiagn.com

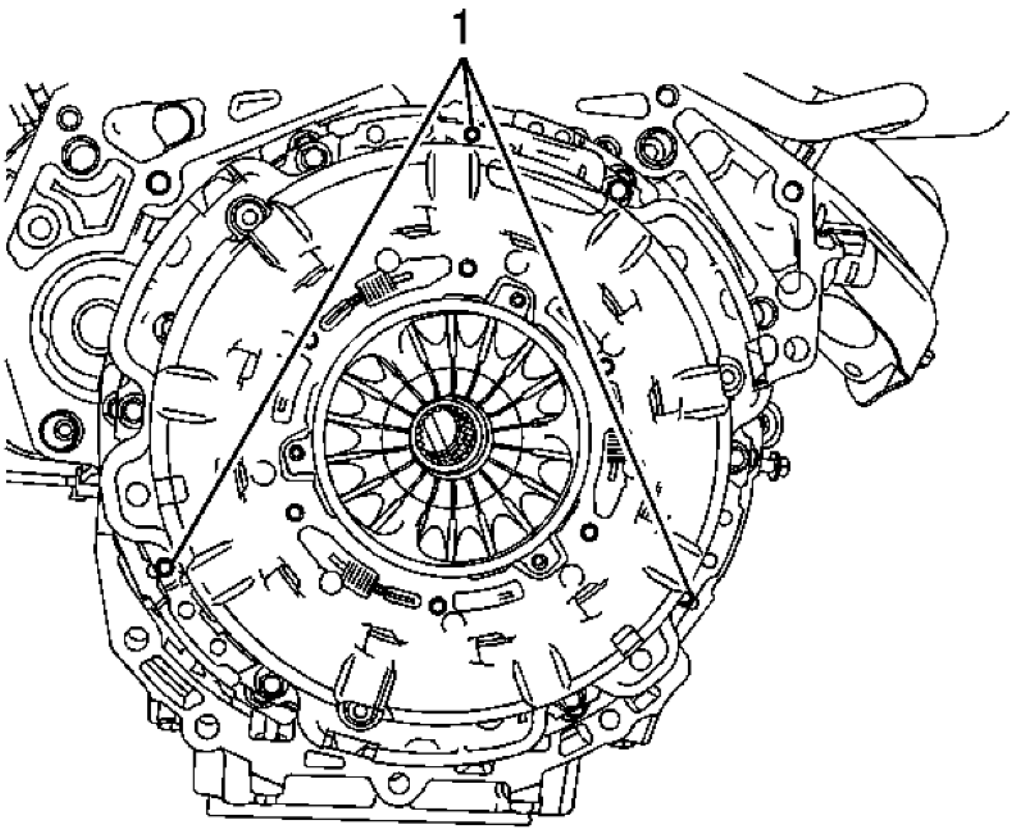

Fig. 32: Dowel Pins
Courtesy of GENERAL MOTORS CORP.

4. Ensure all three dowel pins (1) are visibly seated through the clutch cover dowel pin alignment holes as shown.
5. On V6 models, use **DT-50194:** Clutch Disc Alignment Tool or a commercially available universal clutch alignment tool to align the clutch driven plate to the clutch pilot bearing.

   On V8 models, use **DT-49267:** Clutch Disc Alignment Tool or a commercially available universal clutch alignment tool to align the clutch driven plate to the clutch pilot bearing.

cardiagn.com

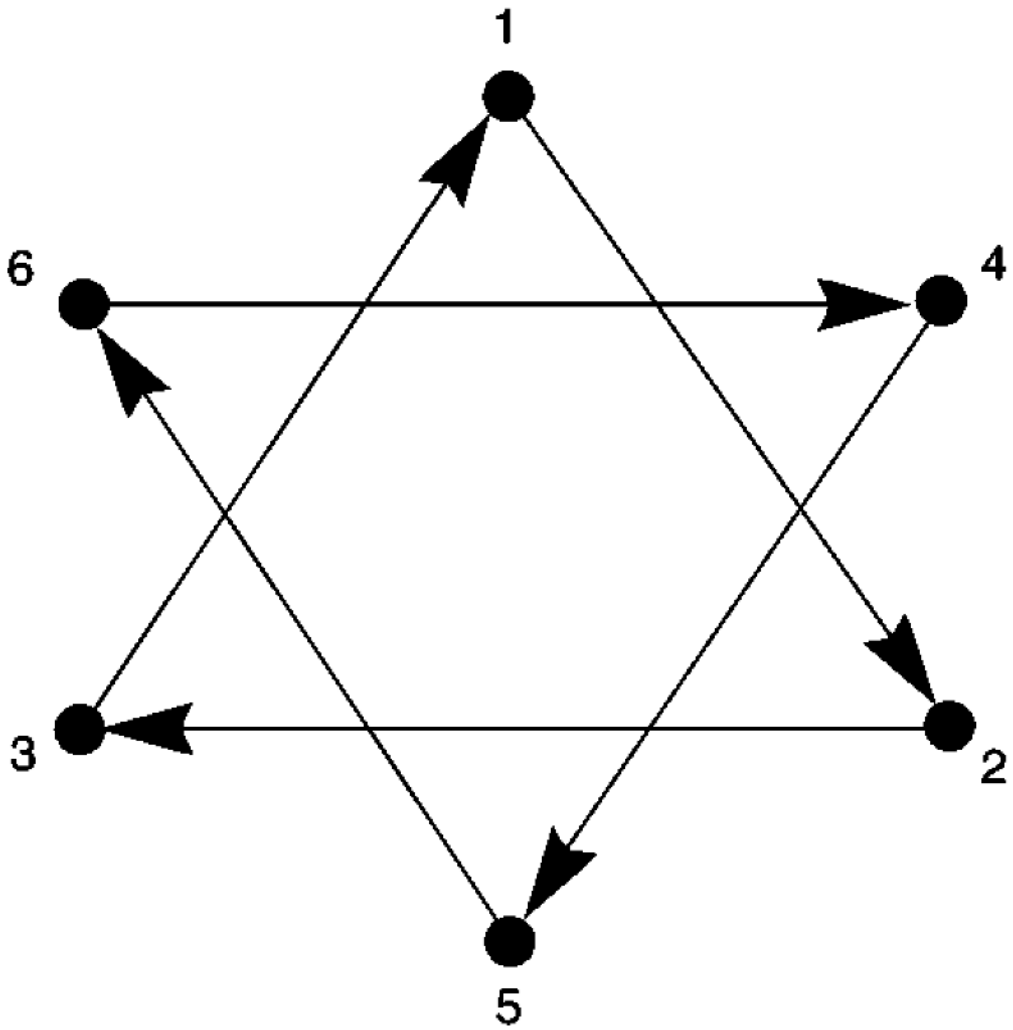

Fig. 33: Clutch Pressure Plate Bolts Tightening Sequence (4.8L, 5.3L, and 6.0L Engines)
Courtesy of GENERAL MOTORS CORP.

CAUTION: Refer to Fastener Caution .

6. Tighten the clutch pressure plate bolts in the sequence shown, starting with the number one and following in numerical order.
    1. Tighten all the clutch pressure plate bolts in sequence and evenly to 15 N.m (11 lb ft).
    2. Tighten all the clutch pressure plate bolts in sequence and evenly to 30 N.m (22 lb ft).

cardiagn.com

3. Loosen bolts (1, 2, 3) 180 degrees. Re-torque bolts (1, 2, 3) in sequence and evenly 30 N.m (22 lb ft) plus 20 degrees.
4. Loosen bolts (4, 5, 6) 180 degrees. Re-torque bolts (4, 5, 6) in sequence and evenly 30 N.m (22 lb ft) plus 20 degrees.

7. Install the manual transmission. Refer to **Transmission Replacement** or **Transmission Replacement**

CLUTCH CONCENTRIC ACTUATOR CYLINDER REPLACEMENT (AISIN)

Removal Procedure

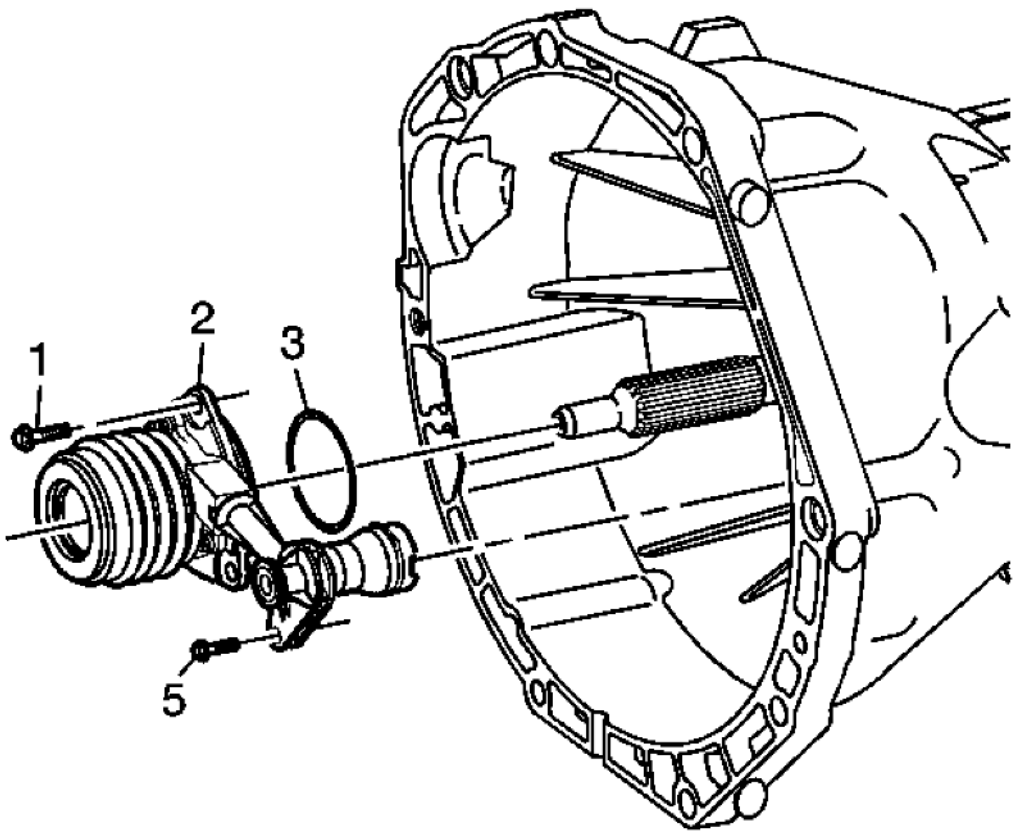

Fig. 34: Removing/Installing CSC Assembly
Courtesy of GENERAL MOTORS CORP.

1. Remove the transmission. Refer to **Transmission Replacement**
2. Remove the concentric actuator cylinder quick connect bolt (5).
3. Remove the 3 concentric actuator cylinder bolts (1).

cardiagn.com

4. Remove the concentric actuator cylinder (2).
5. Remove the O-ring (3).

Installation Procedure

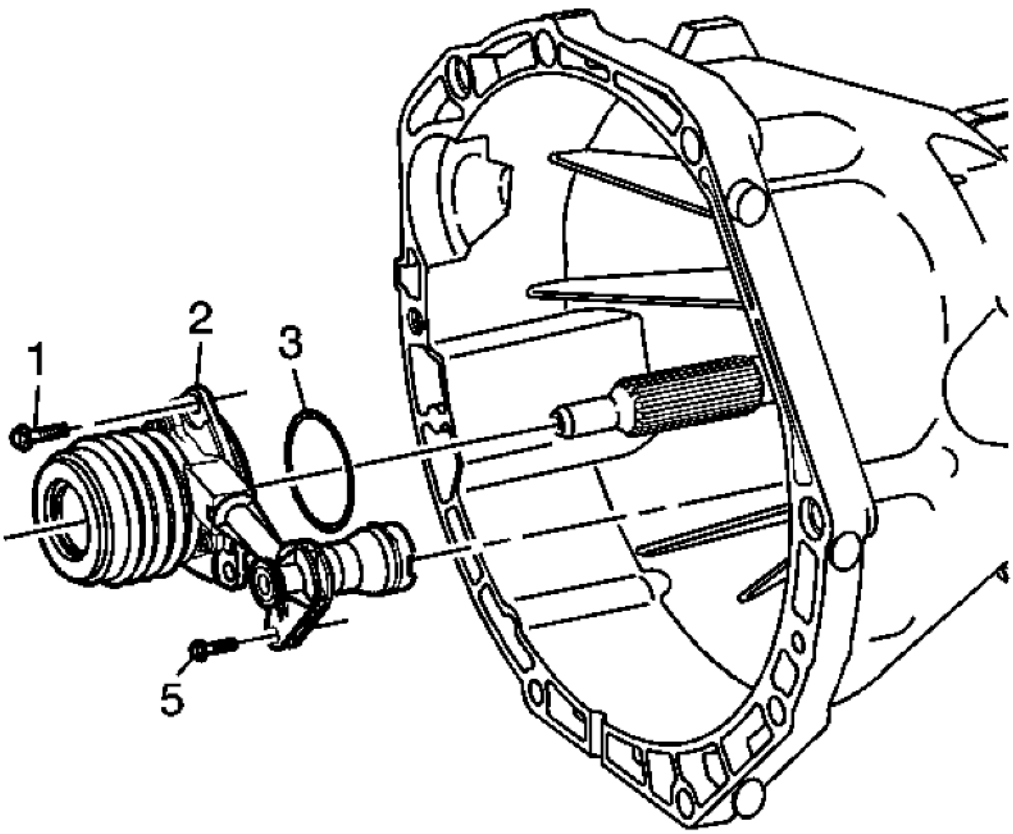

Fig. 35: Removing/Installing CSC Assembly
Courtesy of GENERAL MOTORS CORP.

1. Install the O-ring (3).
2. Install the concentric actuator cylinder (2).

CAUTION: Refer to Fastener Caution .

3. Install the 3 concentric actuator cylinder bolts (1) and the quick connect bolt (5).
   - Tighten the 3 concentric actuator cylinder bolts to 20 N.m (15 lb ft).

cardiagn.com

- Tighten the quick connect bolt to 10 N.m (89 lb in).

4. Install the transmission. Refer to **Transmission Replacement**

CLUTCH CONCENTRIC ACTUATOR CYLINDER REPLACEMENT (TREMEC)

Removal Procedure

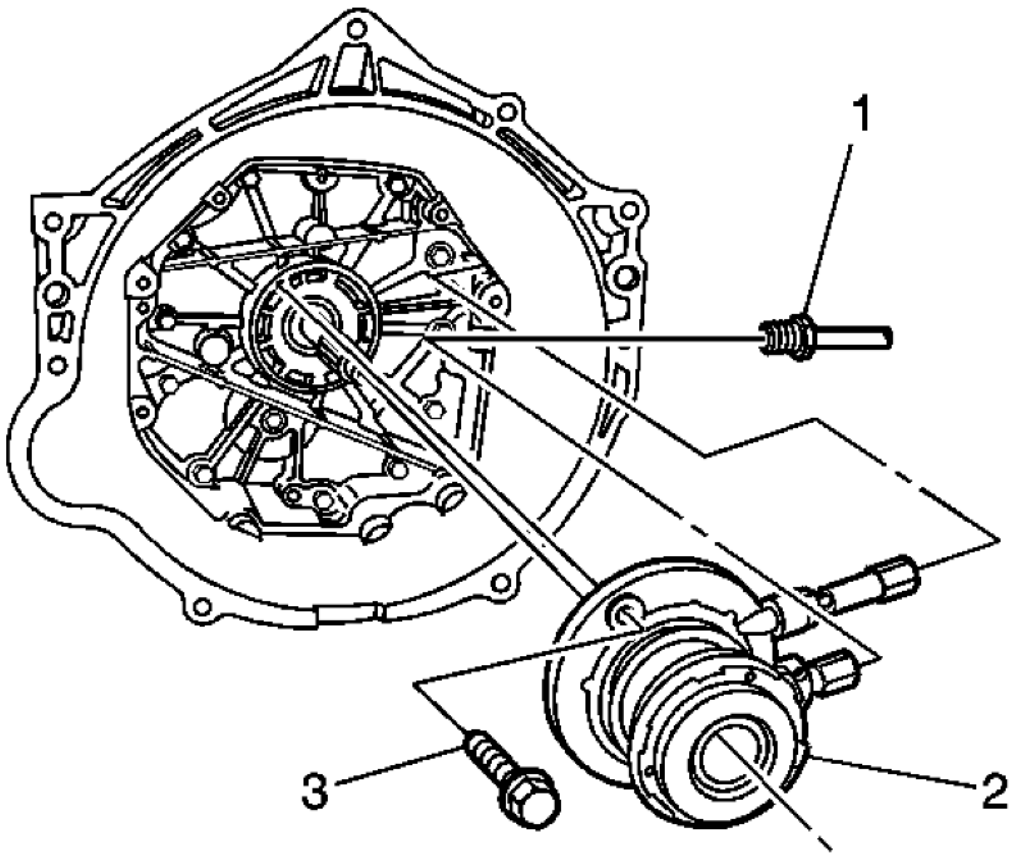

Fig. 36: View Of Pipe Fitting & Clutch Slave Cylinder Bolts
Courtesy of GENERAL MOTORS CORP.

1. Remove the manual transmission from the vehicle. Refer to **Transmission Replacement** .
2. Disconnect the pipe fitting (1) from the clutch slave cylinder.
3. Remove the clutch slave cylinder bolts (3).

Installation Procedure

cardiagn.com

CAUTION: Refer to Fastener Caution .

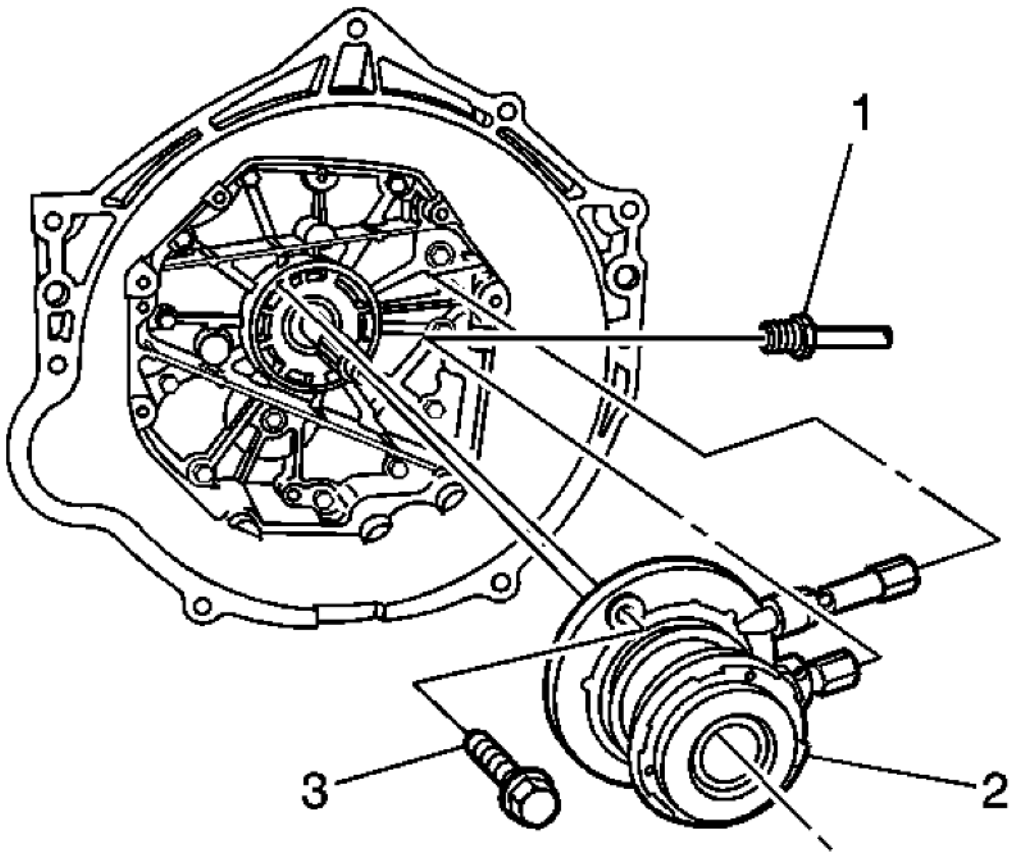

Fig. 37: View Of Pipe Fitting & Clutch Slave Cylinder Bolts
Courtesy of GENERAL MOTORS CORP.

1. Install the clutch slave cylinder and bolts (3).

   Tighten: Tighten the clutch actuator cylinder bolts (3) to 10 N.m (115 lb in).

2. Connect the pipe fitting (1) to the clutch slave cylinder.

   Tighten: Tighten the pipe fitting (1) to 13 N.m (88 lb in).

3. Install the manual transmission to the vehicle. Refer to **Transmission Replacement** .

cardiagn.com

DESCRIPTION AND OPERATION

CLUTCH SYSTEM DESCRIPTION AND OPERATION

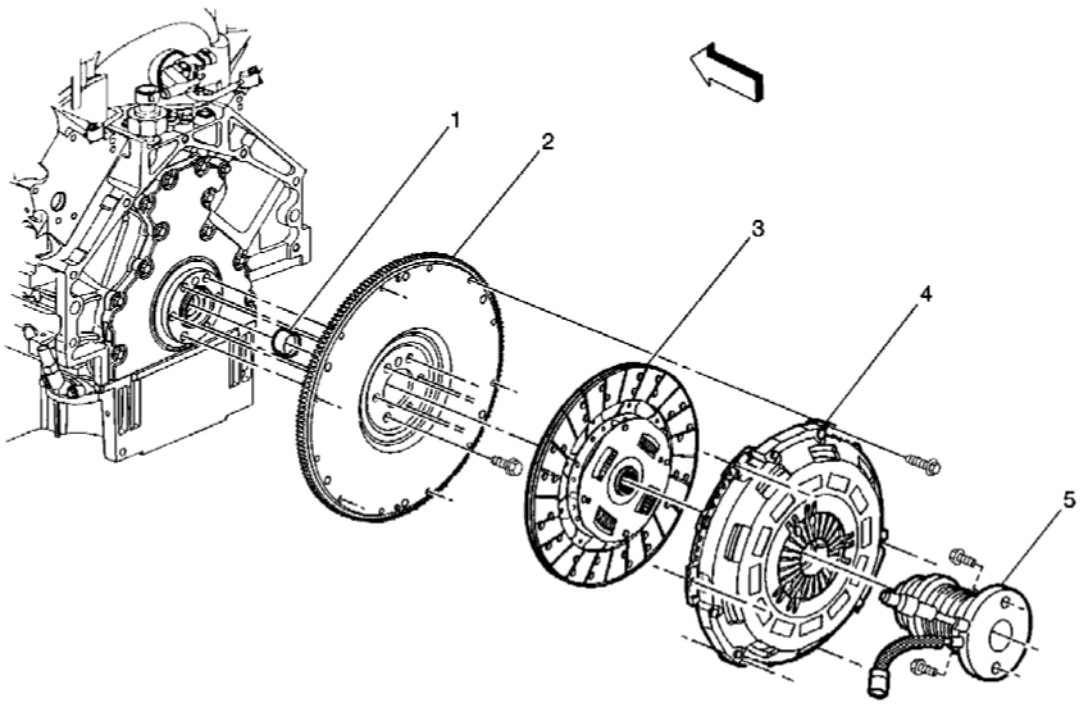

Fig. 38: Exploded View Of Clutch System
Courtesy of GENERAL MOTORS CORP.

Callout	Component Name
1	Clutch Pilot Bearing
2	Engine Flywheel
3	Clutch Driven Plate
4	Clutch Pressure Plate
5	Clutch Actuator Cylinder

The following components are the main parts of the clutch system:

- The driving members - attached to the engine and turning with the engine
- The driven member - attached to the driveline and transmission and turning with the driveline and transmission
- The operating members - including the spring, the clutch hydraulic system, and the clutch pedal linkages, required to apply and release the pressure, which holds the driving and driven members in contact with each other

cardiagn.com

Clutch Driving Members

The clutch driving members consist of 2 flat surfaced iron plates, machined to a smooth finish. 1 of these surfaces is the rear face of the engine flywheel and the other is a comparatively heavy flat ring, with 1 side machined, known as the clutch pressure plate.

Clutch Driven Members

The driven member, clutch disc, has a splined hub that freely slides lengthwise along the splines of the input shaft, which also drives the shaft through these same splines. Suitable friction facings are attached to each side of the plate by rivets.

In order to make the clutch engagement as smooth as possible and eliminate chatter, the steel segments driving the splined hub are slightly waved, which causes the contact pressure on the facings to rise gradually as the waved springs flatten out.

Clutch Operating Members

The driving member and the driven member are held in contact by spring pressure. This pressure is exerted by a 1-piece conical or diaphragm spring.

A diaphragm spring is a conical piece of spring steel that has been specially stamped to give it greater flexibility. The diaphragm is positioned between the cover and the pressure plate so that the diaphragm spring is nearly flat when the clutch is in the engaged position. The action of this type of spring is similar to that of an ordinary oil can.

The pressure of the inner rim of the spring on the pressure plate decreases as the flat position is passed. The inner rim of the diaphragm bears on the pressure plate and is pivoted on a ring on the outer edge of the pressure plate. The application of a pulling load on the inner section of the pressure plate will cause the inner rim to move away from the flywheel and allow the pressure plate to move away from the clutch disc, thereby releasing or disengaging the clutch. When the pressure is released from the inner section, the OIL CAN action of the diaphragm causes the inner section to move in, and the movement of the inner rim forces the pressure plate against the clutch disc, thus engaging the clutch.

The clutch release bearing is moved by the actuator assembly to move the release levers which move the pressure plate to the rear, thus separating the clutch disc from the flywheel when the clutch pedal is depressed by the driver. As the clutch disc wears, the diaphragm spring fingers move forward forcing the release bearing to move. This movement forces the actuator cylinder piston to move forward in its bore, consuming hydraulic fluid from the master cylinder reservoir, thereby providing the SELF-ADJUSTING feature of the hydraulic clutch linkage system.

Hydraulic Clutch Description

The clutch hydraulic system consists of a master cylinder and an actuator cylinder. When pressure is applied to the clutch pedal, pedal depressed, the pushrod contacts the plunger and pushes it down the bore of the master cylinder. In the first 0.8 mm (0.031 in) of movement, the compensation port seal closes the port to the fluid reservoir tank, and as the plunger continues to move down the bore of the cylinder, the fluid is forced through the outlet line to the actuator cylinder mounted to the driveline support assembly. As fluid is pushed down the

cardiagn.com

pipe from the master cylinder, this in turn forces the piston in the actuator cylinder outward. As the actuator cylinder piston moves forward, it forces the release bearing to disengage the clutch pressure plate from the clutch disc. On the return stroke, pedal released, the plunger moves back as a result of the return pressure of the clutch. Fluid returns to the master cylinder and the final movement of the plunger opens the port to the fluid reservoir, allowing an unrestricted flow of fluid between system and reservoir. Some systems may have a clutch pedal over-center spring. The clutch pedal over-center spring provides load at the top of stroke and reduces clutch effort at the bottom of stroke. This reduces driver fatigue during stop and go traffic.

SPECIAL TOOLS AND EQUIPMENT

SPECIAL TOOLS

Illustration	Tool Number / Description
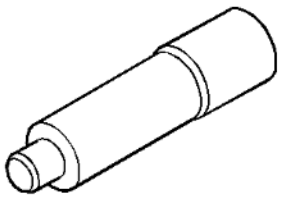	J 38836 Bushing Installer and Clutch Arbor
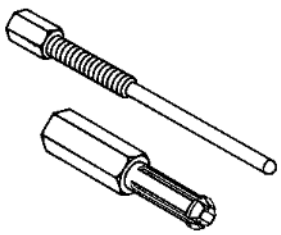	J 43276 Clutch Pilot Bearing Remover
	DT 49267 Dual Clutch Alignment Tool

cardiagn.com

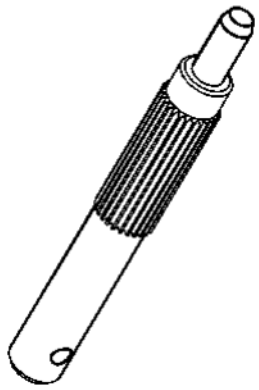

cardiagn.com

2010 TRANSMISSION

Manual Transmission - Tremec 6-Speed - Camaro

SPECIFICATIONS

FASTENER TIGHTENING SPECIFICATIONS

Application	Specification	
	Metric	English
Backup Lamp Switch	27 N.m	20 lb ft
Backup Lamp Switch Bracket Bolt	9 N.m	80 lb in
Clutch Housing Assembly to Transmission Case Bolts	48 N.m	36 lb ft
Clutch Housing Pump Plug	27 N.m	20 lb ft
Concentric Slave Cylinder Bolt	12 N.m	106 lb in
Coolant Temperature Sensor	39 N.m	29 lb ft
Cooler Line Return Fitting	18 N.m	13 lb ft
Cover Plate Bolts	20 N.m	15 lb ft
Extension Housing Plug	27 N.m	20 lb ft
Extension Housing to Transmission Case Bolts	48 N.m	36 lb ft
Gear Select/Skip Shift Solenoid	40 N.m	30 lb ft
Neutral Return Cam Spring Retaining Bolt	25 N.m	18 lb ft
Propshaft Transmission Yoke Nut	136 N.m	100 lb ft
Pump Outlet Cooler Fitting	17 N.m	13 lb ft
Reverse Idler Shaft Bracket Bolts	25 N.m	18 lb ft
Reverse Lockout Assembly Bolt	18 N.m	13 lb ft
Reverse Lockout Solenoid	40 N.m	30 lb ft
Shift Control Adapter Plate Bolt	18 N.m	13 lb ft
Shift Control Adapter Plate Nut	12 N.m	106 lb in
Shift Detent Assembly	40 N.m	30 lb ft
Shift Guide Plate Bolts	22 N.m	16 lb ft
Shift Lever Guide Bolts	27 N.m	20 lb ft
Shift Shaft Detent Plug	24 N.m	18 lb ft
Transmission Bolt	48 N.m	35 lb ft
Transmission Case Drain Plug	27 N.m	20 lb ft
Transmission Case Fill Plug	27 N.m	20 lb ft
Transmission Fluid Pump Outlet Pipe Fitting	18 N.m	13 lb ft
Transmission Fluid Temperature Sensor/Drain Plug	18 N.m	13 lb ft
Transmission Mount to Transmission Case Bolts	60 N.m	44 lb ft
Vehicle Speed Sensor (VSS) Bolt	11 N.m	96 lb in

ADHESIVES, FLUIDS, LUBRICANTS, AND SEALERS

cardiagn.com

Application	Type Of Material	GM Part Number	
		United States	Canada
Clutch Housing Assembly Plug	Sealant	12346004	10953480
Cover Plate	Sealant	12345739	10953472
Extension Housing Bolts	Sealant	12346004	10953480
Reverse Idler Shaft Bracket Bolts	Threadlock	12345382	10953489
Reverse Lamp Switch	Sealant	12346004	10953480
Shift Lever Guide Bolts	Sealant	12346004	10953480
Temperature Switch	Sealant	12346004	10953480
Transmission Case Drain Plug	Sealant	12346004	10953480
Transmission Case to Clutch Housing Mating Surface	Sealant	12345739	10953472
Transmission Fluid	Lubricant	88861800	88861801

LUBRICATION SPECIFICATIONS

Application	Specification	
	Metric	English
Manual Transmission Fluid GM P/N 88861800 (Canadian P/N 88861801)	3.45 liters	3.65 quarts
When filled, fluid level should be at the bottom of the fluid check plug hole.		

SHIM SIZE SPECIFICATIONS

Application	Specification	
	Metric	English
Countershaft Shim Preload	0.0-0.05 mm	0.0-0.002 in
Input Shaft/Mainshaft Shim Preload	0.0-0.05 mm	0.0-0.002 in

SCHEMATIC AND ROUTING DIAGRAMS

MANUAL TRANSMISSION SCHEMATICS

cardiagn.com

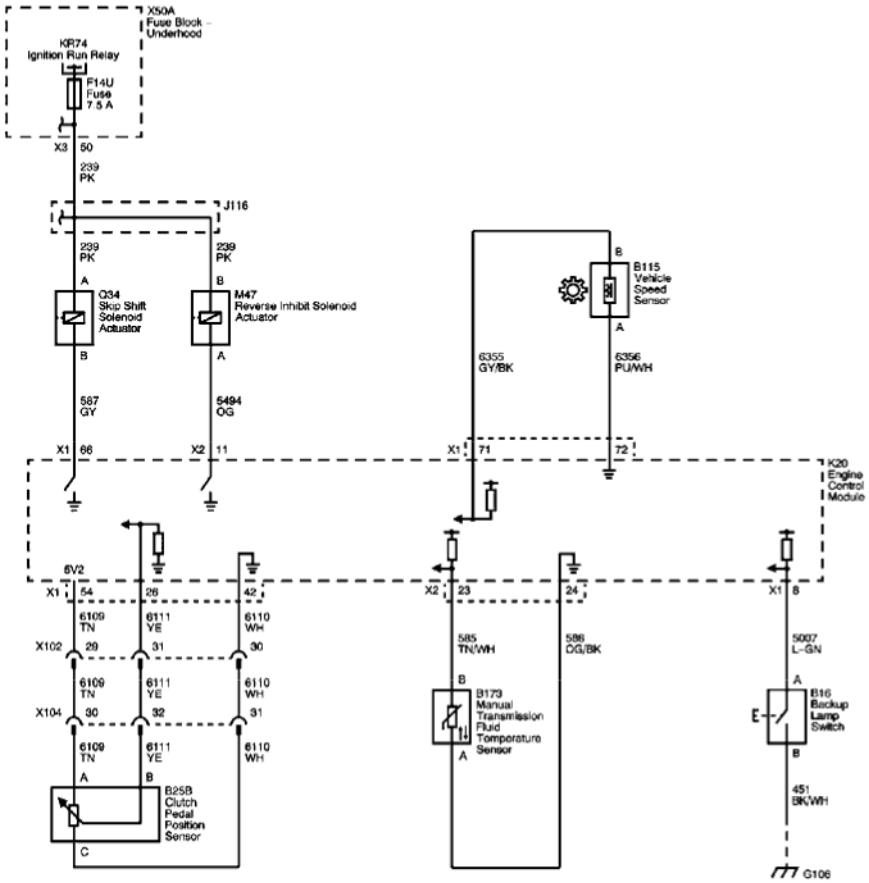

Fig. 1: Manual Transmission
Courtesy of GENERAL MOTORS CORP.

VISUAL IDENTIFICATION

DISASSEMBLED VIEWS

cardiagn.com

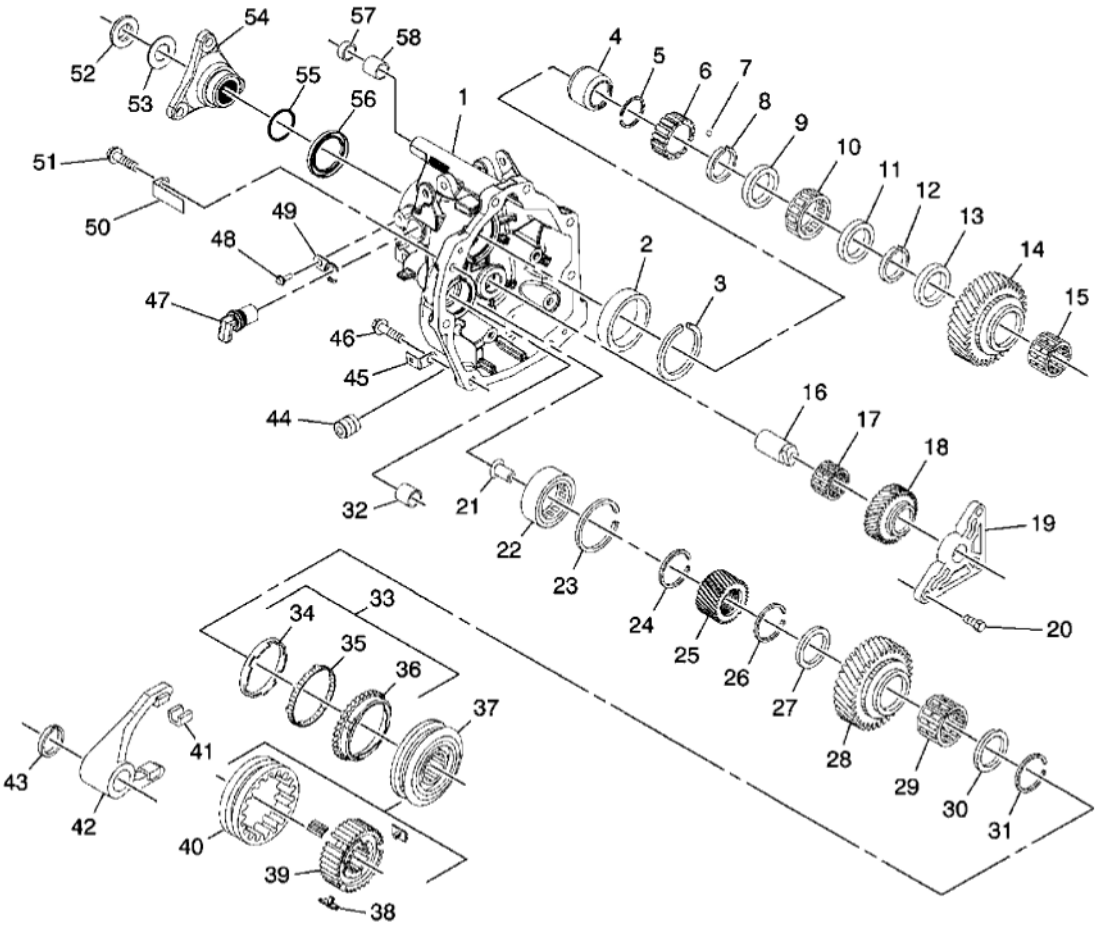

Fig. 2: Transmission Extension Assembly
Courtesy of GENERAL MOTORS CORP.

Callout	Component Name
1	Transmission Extension Assembly
2	Mainshaft Bearing Race
3	Mainshaft Rear Bearing Race Retainer Ring
4	Extension Housing Mainshaft Bearing Race
5	Vehicle Speed Sensor Reluctor Wheel Retaining Ring
6	Vehicle Speed Sensor Reluctor Wheel
7	Vehicle Speed Sensor Reluctor Wheel Locking Ball
8	Mainshaft Rear Bearing Retainer Ring
9	Mainshaft Rear Bearing Spacer
10	Mainshaft Rear Bearing
11	Mainshaft Rear Bearing Spacer
12	Synchronizer Retainer Ring
13	Reverse Gear Thrust Washer

cardiagn.com

14	Mainshaft Reverse Speed Gear
15	Reverse Gear Bearing
16	Reverse Idler Gear Shaft
17	Reverse Idler Gear Needle Bearing
18	Reverse Idler Gear
19	Reverse Idler Bracket
20	Reverse Idler Bracket Bolt
21	Transmission Lubrication Funnel
22	Counter Gear Rear Bearing Assembly
23	Counter Gear Rear Bearing Retaining Ring
24	Reverse Counter Drive Gear Retaining Ring
25	Reverse Counter Drive Gear
26	5th Gear Retaining Ring
27	5th Gear Bearing Assembly Spacer
28	5th Speed Drive Gear
29	5th Gear Bearing Assembly
30	5th Gear Spacer
31	5th and 6th Gear Synchronizer Hub Retaining Ring
32	Reverse Rail Bushing
33	5th Gear Blocking Ring Assembly
34	5th Speed Gear Inner Cone
35	5th Speed Gear Friction Cone
36	5th Gear Synchronizer Blocking Ring
37	5th/6th Synchronizer Assembly
38	5th/6th and Reverse Synchronizer Insert
39	5th/6th Synchronizer Hub
40	5th/6th Synchronizer Sleeve
41	Shift Fork Pad
42	5th/6th Shift Fork
43	5th Gear Shift Fork Retaining Ring
44	Transmission Oil Drain Plug
45	Retaining Bracket
46	Transmission Extension Assembly Bolt
47	Vehicle Speed Sensor
48	Vehicle Speed Sensor Bolt
49	Vehicle Speed Sensor Retainer
50	Retaining Bracket
51	Transmission Extension Assembly Bolt
52	Propshaft Transmission Yoke Nut
53	Propshaft Transmission Yoke Washer
54	Propshaft Transmission Yoke

cardiagn.com

	Propshaft O-ring
56	Output Shaft Seal
57	Shift Rail Seal
58	Shift Rail Bearing

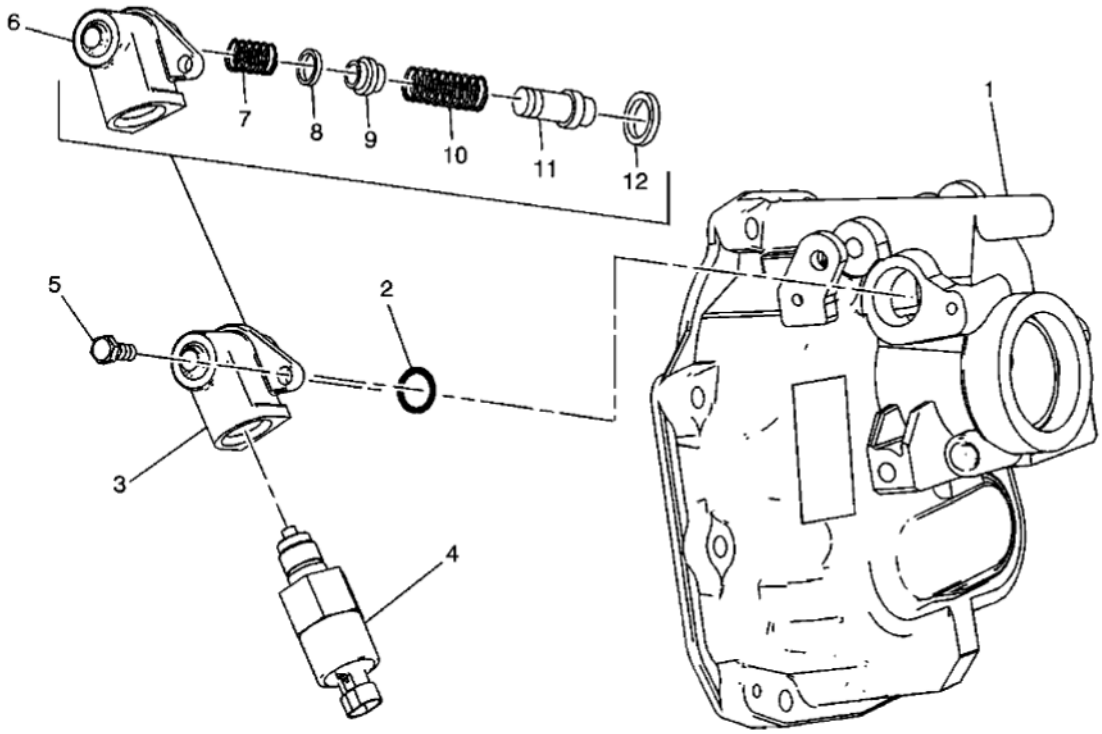

Fig. 3: Reverse Lockout
Courtesy of GENERAL MOTORS CORP.

Callout	Component Name
1	Extension Housing
2	O-ring
3	Reverse Lockout Assembly
4	Reverse Lockout Solenoid
5	Reverse Lockout Solenoid Mounting Bolt
6	Reverse Lockout Body
7	Reverse Lockout Inner Spring
8	Snap Ring
9	Reverse Lockout Collar
10	Reverse Lockout Outer Spring
11	Reverse Lockout Plunger
12	Snap Ring

cardiagn.com

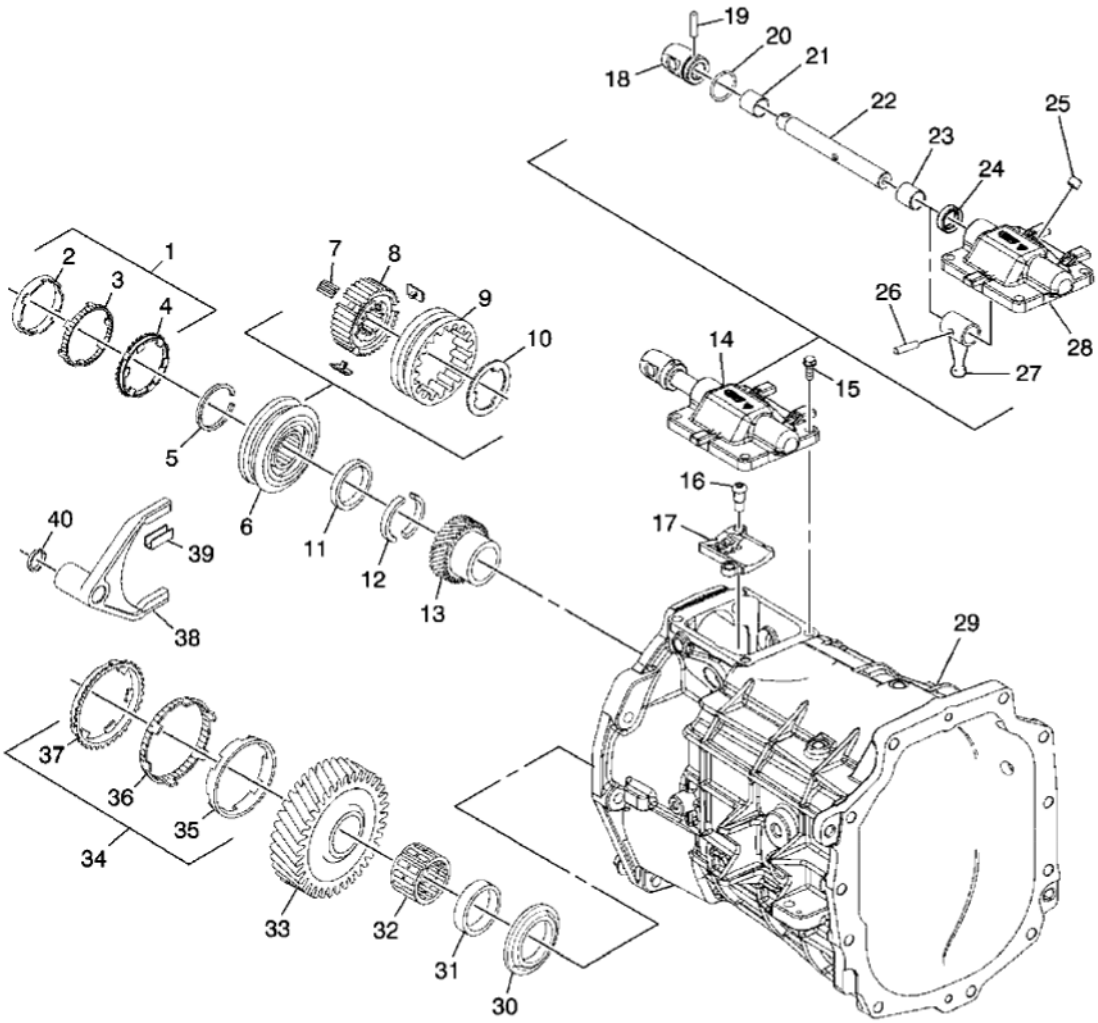

Fig. 4: Transmission Case (1 of 2)
Courtesy of GENERAL MOTORS CORP.

Callout	Component Name
1	Reverse Gear Blocking Ring Assembly
2	Reverse Gear Inner Cone
3	Reverse Gear Outer Cone
4	Reverse Gear Blocker Ring
5	Reverse Synchronizer Retaining Ring
6	Reverse Synchronizer Assembly
7	Reverse Synchronizer Insert
8	Reverse Synchronizer Hub
9	Reverse Synchronizer Sleeve
10	Reverse Synchronizer Key Retainer
11	Reverse Gear Thrust Washer Locking Ring

cardiagn.com

12	Reverse Synchronizer Two Piece Washer
13	5th Speed Driven Gear
14	Shift Control Shaft Cover Assembly
15	Shift Control Shaft Cover Bolt
16	Guide Plate Bolt
17	Guide Plate
18	Shift Lever Rod Universal Joint Assembly
19	Shift Lever Pin
20	Select Lever Swivel Rod Retainer
21	Shift Control Shaft Bushing
22	Shift Control Lever Shaft
23	Shift Control Shaft Bushing
24	Shift Control Seal
25	Shift Control Shaft Cover Bolt
26	Shift Control Lever Shaft Pin
27	Shift Control Lever
28	Shift Control Shaft Cover
29	Transmission Case
30	Spacer
31	6th Speed Drive Gear Bearing Spacer
32	6th Speed Drive Gear Needle Bearing
33	6th Speed Drive Gear
34	6th Gear Blocking Ring Assembly
35	6th Speed Drive Gear Inner Cone
36	6th Speed Drive Gear Outer Cone
37	6th Speed Drive Gear Synchronizer Blocking Ring
38	Reverse Shift Fork
39	Reverse Shift Fork Pad
40	Reverse Shift Fork Retainer Ring

cardiagn.com

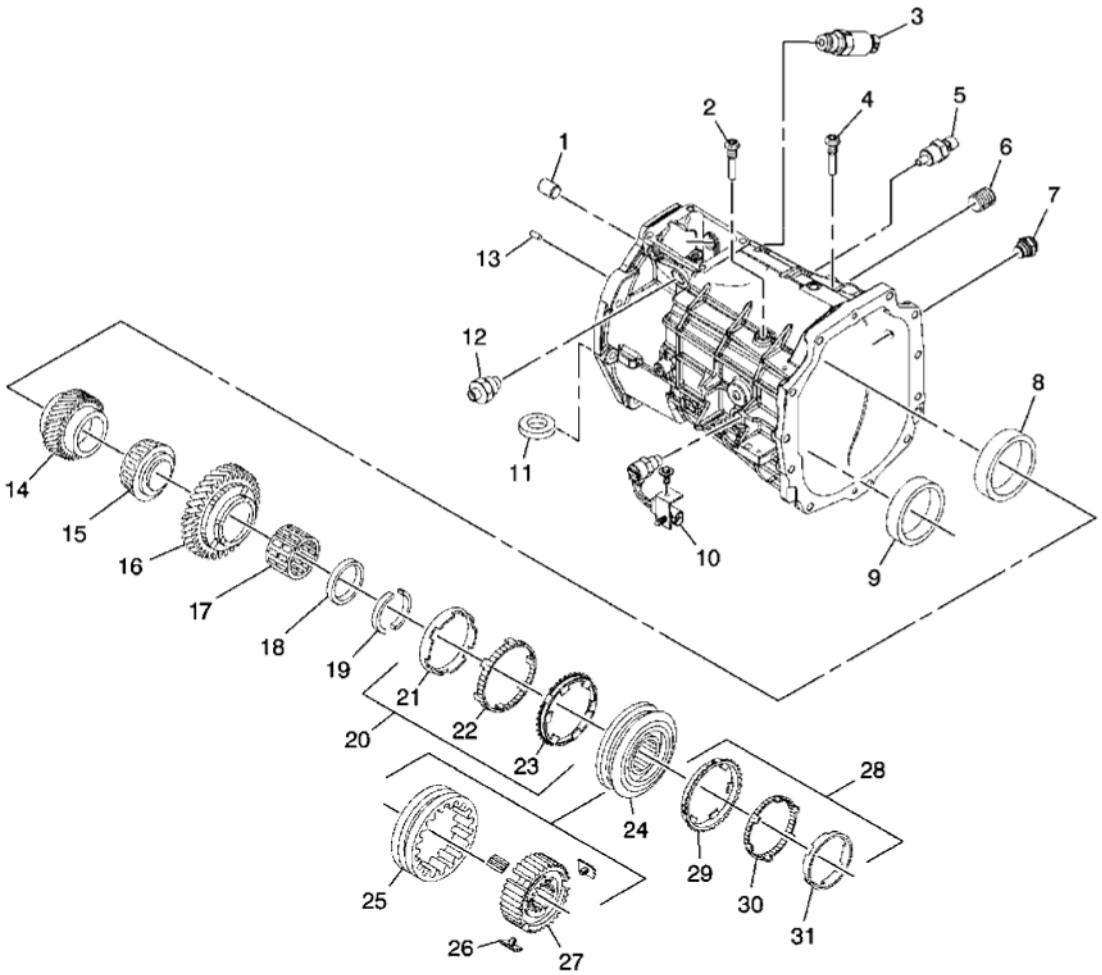

Fig. 5: Transmission Case (2 of 2)
Courtesy of GENERAL MOTORS CORP.

Callout	Component Name
1	1st/2nd and 3rd/4th Shift Shaft Bearing
2	5th/6th Lever Guide Bolt
3	Skip Shift Solenoid
4	Interlock Guide Bolt
5	Coolant Temperature Sensor
6	Oil Fill Plug
7	Cooler Line Return Fitting
8	Mainshaft Center Bearing Race
9	Countershaft Bearing Race
10	Backup Lamp Switch Assembly
11	Magnet
12	Shift Detent Assembly

cardiagn.com

13	Case Rear Extension Pin
14	6th Speed Driven Gear
15	Mainshaft Center Bearing
16	1st Speed Drive Gear
17	1st Speed Drive Gear Needle Bearing
18	1st Speed Drive Gear Locking Ring
19	1st Speed Gear Two Piece Washer
20	1st Gear Blocking Ring Assembly
21	1st Speed Drive Gear Inner Cone
22	1st Speed Drive Gear Outer Cone
23	1st Gear Synchronizer Blocking Ring
24	1st/2nd Synchronizer Assembly
25	1st/2nd Synchronizer Sleeve
26	1st/2nd Synchronizer Insert
27	1st/2nd Synchronizer Hub
28	2nd Gear Blocking Ring Assembly
29	2nd Gear Synchronizer Blocking Ring
30	2nd Speed Drive Gear Outer Cone
31	2nd Speed Drive Gear Inner Cone

cardiagn.com

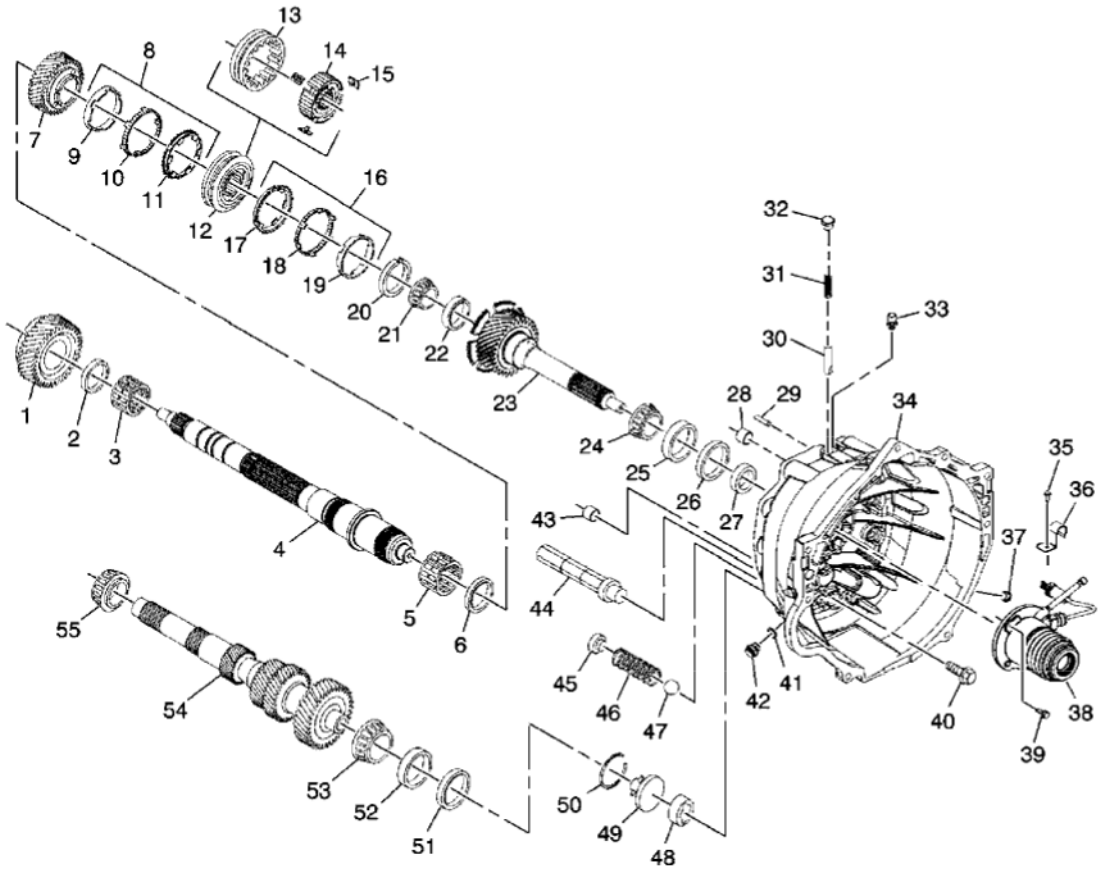

Fig. 6: Clutch Housing Assembly & Gears
Courtesy of GENERAL MOTORS CORP.

Callout	Component Name
1	2nd Speed Drive Gear
2	2nd Speed Drive Gear Bearing Spacer
3	2nd Speed Drive Gear Needle Bearing
4	Mainshaft
5	3rd Speed Drive Gear Bearing
6	3rd Speed Drive Gear Spacer
7	3rd Speed Drive Gear
8	3rd Gear Blocking Ring Assembly
9	3rd Speed Drive Gear Inner Cone
10	3rd Speed Drive Gear Friction Cone
11	3rd Speed Drive Gear Synchronizer Blocking Ring
12	3rd/4th Synchronizer Assembly
13	3rd/4th Synchronizer Sleeve
14	3rd/4th Synchronizer Hub
15	3rd/4th Synchronizer Insert

cardiagn.com

16	4th Gear Blocking Ring Assembly
17	4th Speed Drive Gear Blocking Ring
18	4th Speed Drive Gear Outer Cone
19	4th Speed Drive Gear Inner Cone
20	3rd/4th Synchronizer Retaining Ring
21	Mainshaft Small Tapered Bearing
22	Input Shaft Bearing Race
23	Input Shaft
24	Input Shaft Bearing
25	Input Shaft Bearing Race
26	Input Shaft Bearing Shim
27	Input Shaft Seal
28	1st/2nd Shift Shaft Bearing
29	Transmission Case Locating Pin
30	Shift Shaft Detent Roller
31	Shift Shaft Detent Spring
32	Shift Shaft Detent Plug
33	Vent Assembly
34	Clutch Housing Assembly
35	Retainer Bolt
36	Retainer
37	Transmission Fluid Pump Outlet Pipe Fitting
38	Slave Cylinder
39	Slave Cylinder Bolt
40	Clutch Housing Assembly to Transmission Case Bolt
41	Pump Outlet Cooler Fitting O-ring
42	Pump Outlet Cooler Fitting
43	3rd/4th Shift Shaft Bushing
44	Oil Filter Assembly
45	Transmission Fluid Pump Spring Retaining Plug
46	Transmission Fluid Pump Spring
47	Transmission Fluid Pump Check Ball
48	Oil Pump
49	Oil Pump Cover
50	Oil Pump Cover Retainer Ring
51	Countershaft Bearing Adjust Shim
52	Countershaft Bearing Race
53	Countershaft Front Bearing
54	Counter Gear Shaft
55	Countershaft Rear Bearing

cardiagn.com

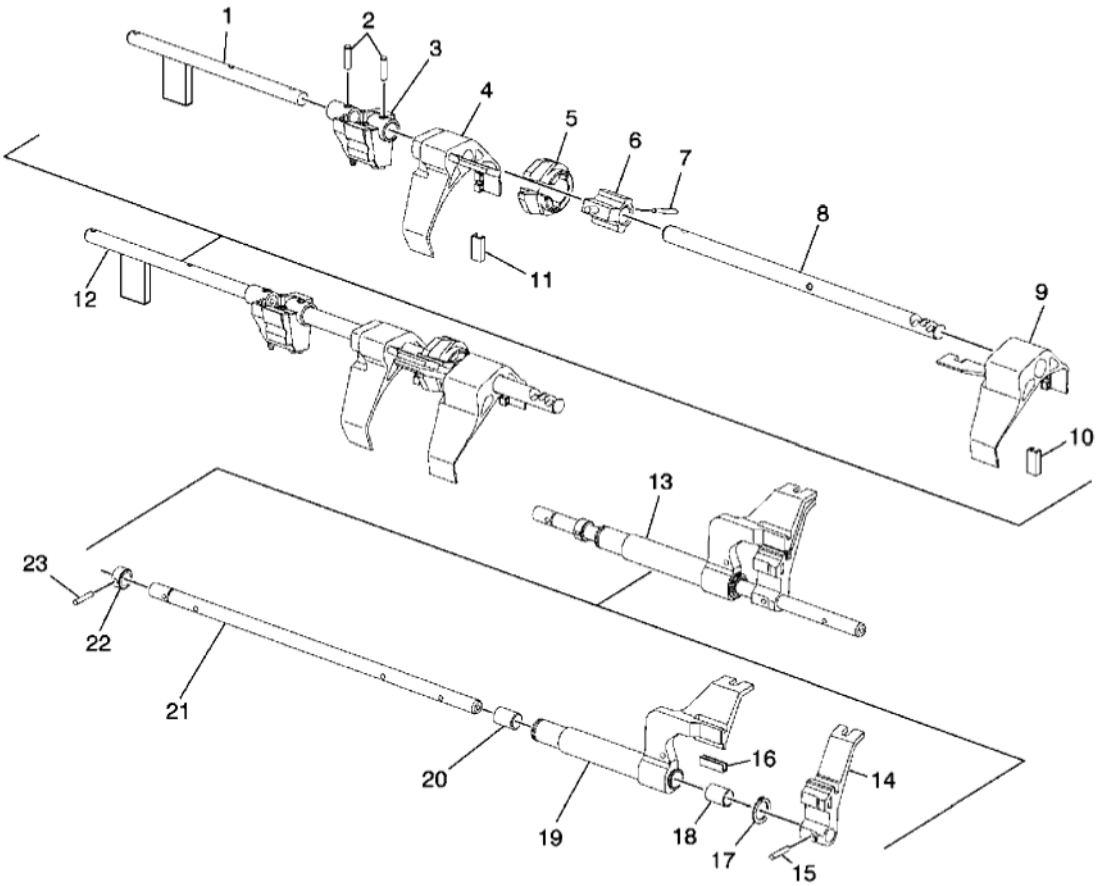

Fig. 7: Shift Shafts
Courtesy of GENERAL MOTORS CORP.

Callout	Component Name
1	Offset Shift Lever Shaft
2	Control Select Arm Pin
3	Control Select Arm
4	3rd/4th Shift Fork Assembly
5	Gear Select Interlock Plate
6	Select Control Lever Assembly
7	Select Control Lever Assembly Pin
8	1st/2nd/3rd/4th Shift Shaft
9	1st/2nd Shift Fork Assembly
10	1st/2nd Shift Fork Insert
11	3rd/4th Shift Fork Insert
12	1st/2nd/3rd/4th Shift Rail Assembly
13	5th, 6th, and Reverse Shift Rail Assembly
14	Reverse Shift Lever

cardiagn.com

15	Reverse Shift Lever Pin
16	5th and Reverse Shift Fork Insert
17	5th/6th Shift Lever Retaining Ring
18	Shift Shaft Bushing
19	5th/6th Shift Lever Assembly
20	Shift Shaft Bushing
21	5th, 6th, and Reverse Shift Shaft
22	Transmission Reverse Shift Lever Collar
23	Reverse Shift Collar Pin

DIAGNOSTIC INFORMATION AND PROCEDURES

DIAGNOSTIC CODE INDEX

DIAGNOSTIC CODE INDEX

DTC	Description
DTC P0502 or P0503	P0502: Vehicle Speed Sensor (VSS) Circuit Low Voltage P0503: Vehicle Speed Sensor (VSS) Circuit Intermittent
DTC P0712 or P0713	P0712: Transmission Fluid Temperature (TFT) Sensor Circuit Low Voltage P0713: Transmission Fluid Temperature (TFT) Sensor Circuit High Voltage
DTC P0801	P0801: Reverse Lockout Solenoid Control Circuit
DTC P0806	P0806: Clutch Pedal Position (CPP) Sensor Circuit Performance
DTC P0807 or P0808	P0807: Clutch Pedal Position (CPP) Sensor Circuit Low Voltage P0808: Clutch Pedal Position (CPP) Sensor Circuit High Voltage
DTC P080A	P080A: Clutch Pedal Position (CPP) Not Learned
DTC P080C or P080D	P080C: Skip Shift Solenoid Control Circuit Low Voltage P080D: Skip Shift Solenoid Control Circuit High Voltage

DTC P0502 OR P0503

Diagnostic Instructions

- Perform the **Diagnostic System Check - Vehicle** prior to using this diagnostic procedure.
- Review **Strategy Based Diagnosis** for an overview of the diagnostic approach.
- **Diagnostic Procedure Instructions** provides an overview of each diagnostic category.

DTC Descriptors

DTC P0502

Vehicle Speed Sensor (VSS) Circuit Low Voltage

cardiagn.com

DTC P0503

Vehicle Speed Sensor (VSS) Circuit Intermittent

Diagnostic Fault Information

Circuit	Short to Ground	Open/High Resistance	Short to Voltage	Signal Performance
VSS Low Signal	-	P0502, P0503	-	-
VSS High Signal	P0502, P0503	P0502, P0503	P0502, P0503	-

Circuit/System Description

The vehicle speed information is provided to the engine control module (ECM) by the vehicle speed sensor (VSS). The VSS is a permanent magnet generator that is mounted to the transmission and produces a pulsing voltage. The AC voltage amplitude and frequency increases with vehicle speed. The ECM converts the pulsing voltage into km/h (mph). The ECM supplies the VSS signal to the following components:

- The instrument panel for speedometer and odometer operation
- The cruise control module

Conditions for Running the DTC

P0502

- DTC P0120, P0220 or P0503 are not set.
- The TP sensor angle is more than 3.5 percent.
- The engine is running.
- The system voltage is 8-18 V.
- TFT is more than -40°C (-40°F).
- The engine speed is 1,500-6,500 RPM.
- Vehicle speed is less than 200 km/h (124 mph).
- Engine torque is 68-8192 N.m (50-6,042 lb ft).

P0503

- The system voltage is 8-18 V.
- The engine speed is 500-7,500 RPM.
- Transmission output speed change is less than 146 RPM for 2 seconds.

Conditions for Setting the DTC

P0502

The transmission output speed is 58 RPM or less for 5 seconds.

cardiagn.com

P0503

The transmission output speed drops 351 RPMs in less than 3 seconds.

Action Taken When the DTC Sets

P0502 and P0503 are Type B DTCs.

Conditions for Clearing the DTC

P0502 and P0503 are Type B DTCs.

Reference Information

Schematic Reference

Manual Transmission Schematics

Connector End View Reference

Component Connector End Views

Description and Operation

Manual Transmission Description and Operation

Electrical Information Reference

- **Circuit Testing**
- **Connector Repairs**
- **Testing for Intermittent Conditions and Poor Connections**
- **Wiring Repairs**

DTC Type Reference

Powertrain Diagnostic Trouble Code (DTC) Type Definitions

Scan Tool Reference

Engine Control Module Scan Tool Information (LS3, L99) or **Engine Control Module Scan Tool Information (w/LLT)**

Special Tools

J 35616: GM-Approved Terminal Test Kit

For equivalent regional tools, refer to **Special Tools**.

cardiagn.com

Circuit/System Verification

1. Raise and support the drive wheels.

CAUTION: Support the lower control arms in the normal horizontal position in order to avoid damage to the drive axles. Do not operate the vehicle in gear with the wheels hanging down at full travel.

2. Support the lower control arms so that the drive axles are in a horizontal position.
3. Start and idle the engine.
4. Place the transmission in second gear and release the clutch pedal.
5. Monitor VSS parameter on the scan tool. The VSS parameter should increase as the drive wheel speed increases.
6. Operate the vehicle within the conditions for running the DTC. You may also operate the vehicle within the conditions that are captured in the Freeze Frame/Failure Records List.

Circuit/System Testing

1. Disconnect the ECM harness connector X1.
2. Measure for 1,300-1,500 ohms at 25°C (77°F) between the VSS high signal circuit terminal 71 and the VSS low signal circuit terminal 72.
   - If the value is greater than 1,500 ohms test the VSS high signal circuit and the VSS low signal circuit for an open/high resistance. If the circuits/connections test normal, replace the vehicle speed sensor.
   - If the value is less than 1,300 ohms test the VSS high signal and the VSS low signal circuits for a shorted together condition. If the circuits/connections test normal, replace the vehicle speed sensor.
3. Measure for more than 10 ohms between the VSS high signal circuit terminal 71 and ground.
   - If the value is less than the specified range, repair the short to ground.
4. Measure for more than 10 ohms between the VSS low signal circuit terminal 72 and ground.
   - If the value is less than the specified range, repair the short to ground.
5. Reconnect the ECM connector. Disconnect the VSS connector.
6. Ignition ON, test the VSS high signal circuit terminal B for a short to voltage.
   - If all circuits/connections test normal, test or replace the VSS.

Repair Procedures

Perform the **Diagnostic Repair Verification** after completing the repair.

- **Vehicle Speed Sensor Replacement**
- **Engine Control Module Replacement**
- **Engine Control Module Programming and Setup (LS3, L99)** or **Engine Control Module Programming and Setup (LLT)**

cardiagn.com

DTC P0712 OR P0713

Diagnostic Instructions

- Perform the **Diagnostic System Check - Vehicle** prior to using this diagnostic procedure.
- Review **Strategy Based Diagnosis** for an overview of the diagnostic approach.
- **Diagnostic Procedure Instructions** provides an overview of each diagnostic category.

DTC Descriptors

DTC P0712

Transmission Fluid Temperature (TFT) Sensor Circuit Low Voltage

DTC P0713

Transmission Fluid Temperature (TFT) Sensor Circuit High Voltage

Diagnostic Fault Information

Circuit	Short to Ground	Open/High Resistance	Short to Voltage	Signal Performance
TFT Sensor Signal	P0712	P0713	P0713[1]	-
Low Reference	-	P0713	P0713[1]	-
[1] Internal ECM damage may occur if the circuit is shorted to B+.				

Circuit/System Description

The transmission fluid temperature (TFT) sensor is a variable resistor that measures the temperature of the transmission fluid. The engine control module (ECM) supplies 5 V to the TFT signal circuit and supplies a ground to the low reference circuit.

The following table illustrates the difference between temperature, resistance, and voltage:

TFT	TFT Resistance	TFT Signal Voltage
Cold	High	High
Warm	Low	Low

Conditions for Running the DTC

P0712

- The engine speed is above 1,000 RPM for 7 seconds.
- This DTC runs continuously when the above condition is met.

cardiagn.com

P0713

- The engine speed is above 1,000 RPM for 7 seconds.
- This DTC runs continuously when the above condition is met.

Conditions for Setting the DTC

P0712

The TFT is greater than 145°C (299°F) for more than 5 seconds.

P0713

The TFT is less than -35°C (-31°F) for more than 5 seconds.

Action Taken When the DTC Sets

DTC P0712 and P0713 are Type C DTCs.

Conditions for Clearing the MIL/DTC

DTC P0712 and P0713 are Type C DTCs.

Reference Information

Schematic Reference

Manual Transmission Schematics

Connector End View Reference

Component Connector End Views

Description and Operation

Manual Transmission Description and Operation

Electrical Information Reference

- **Circuit Testing**
- **Connector Repairs**
- **Testing for Intermittent Conditions and Poor Connections**
- **Wiring Repairs**

DTC Type Reference

Powertrain Diagnostic Trouble Code (DTC) Type Definitions

cardiagn.com

Scan Tool Reference

Engine Control Module Scan Tool Information (LS3, L99) or **Engine Control Module Scan Tool Information (w/LLT)**

Circuit/System Verification

1. Engine running, DTC P0712 or P0713 should not set.
2. If the vehicle passes the Circuit/System Verification Test, then operate the vehicle within the conditions for running the DTC. You may also operate the vehicle within the conditions that are captured in the Freeze Frame/Failure Records List.

Circuit/System Testing

1. Ignition OFF, disconnect the harness connector at the TFT sensor.
2. Ignition OFF, test for less than 5 ohms between the low reference circuit terminal A and ground.
    - If greater than 5 ohms, test the low reference circuit for a short to voltage or an open/high resistance. If the circuit tests normal, replace the ECM.
3. Ignition ON, using a scan tool verify that the TFT sensor parameter is at -40°C (-40°F).
    - If greater than -40°C (-40°F), test the signal circuit terminal B for a short to ground. If the circuit tests normal, replace the ECM.

NOTE: If the signal circuit of the TFT sensor is shorted to voltage the TFT sensor may be damaged.

4. Install a 3 A fused jumper wire between the signal circuit terminal B and the low reference circuit terminal A. Verify the TFT sensor parameter is greater than 128°C (262°F).
    - If less than 128°C (262°F), test the signal circuit of the TFT sensor for a short to voltage or an open/high resistance. If the circuit test normal, replace the ECM.
5. If all circuits test normal, test or replace the TFT sensor.

Repair Procedures

Perform the **Diagnostic Repair Verification** after completing the diagnostic procedure.

- **Transmission Fluid Temperature Sensor Replacement**
- **Engine Control Module Replacement**
- **Engine Control Module Programming and Setup (LS3, L99)** or **Engine Control Module Programming and Setup (LLT)**

DTC P0801

Diagnostic Instructions

- Perform the **Diagnostic System Check - Vehicle** prior to using this diagnostic procedure.

cardiagn.com

- Review **Strategy Based Diagnosis** for an overview of the diagnostic approach.
- **Diagnostic Procedure Instructions** provides an overview of each diagnostic category.

DTC Descriptor

DTC P0801

Reverse Lockout Solenoid Control Circuit

Diagnostic Fault Information

Circuit	Short to Ground	Open/High Resistance	Short to Voltage	Signal Performance
B+ Circuit to Reverse Lockout Solenoid	P0801	P0801	-	-
Reverse Lockout Solenoid Control Circuit	P0801	P0801	P0801	-

Typical Scan Tool Data

Reverse Inhibit Solenoid

Circuit	Short to Ground	Open/High Resistance	Short to Voltage
Operating Conditions: Engine Running. **Parameter Normal Range:** ON or OFF.			
Reverse Inhibit Solenoid Command	OFF	OFF	OFF

Circuit/System Description

Battery voltage (B+) is supplied directly to the reverse lockout solenoid. The engine control module (ECM) controls the reverses lockout solenoid by grounding the control circuit via an internal switch called a low side driver. The low side driver has a fault line which monitors the control circuit. When the ECM commands the reverse lockout solenoid ON, the voltage on the control circuit should be low, near 0 V. When the ECM commands the control circuit to the reverse lockout solenoid OFF, the voltage should be high, near battery voltage.

Conditions for Running the DTC

- The engine is running.
- The vehicle speed is less than 3 km/h (2 mph).

Conditions for Setting the DTC

- The ECM detects that the commanded state of the driver and the actual state of the control circuit does not match.
- The condition exists for 2 seconds.

cardiagn.com

Action Taken When the DTC Sets

P0801 is a Type C DTC.

Conditions for Clearing the MIL/DTC

P0801 is a Type C DTC.

Diagnostic Aids

- The battery must be fully charged and pass a battery test. Refer to **Battery Inspection/Test** .
- The reverse lockout solenoid is referred to as the reverse inhibit solenoid on the scan tool.

Reference Information

Schematic Reference

Manual Transmission Schematics

Connector End View Reference

Component Connector End Views

Description and Operation

Manual Transmission Description and Operation

Electrical Information Reference

- **Circuit Testing**
- **Connector Repairs**
- **Testing for Intermittent Conditions and Poor Connections**
- **Wiring Repairs**

DTC Type Reference

Powertrain Diagnostic Trouble Code (DTC) Type Definitions

Scan Tool Reference

Engine Control Module Scan Tool Information (LS3, L99) or **Engine Control Module Scan Tool Information (w/LLT)**

Circuit/System Verification

1. Ignition ON, command the reverse lockout solenoid ON and OFF, with a scan tool, while observing the following reverse lockout circuit status parameters.

cardiagn.com

- Reverse lockout solenoid control Ckt. Short Gnd Test Status
- Reverse lockout solenoid control Ckt. Open Test Status
- Reverse lockout solenoid control Ckt. Short Volts Test Status
  - Each parameter should toggle between OK and Not Run or Not Run and OK.

2. Operate the vehicle within the Conditions for Running the DTC, to verify the DTC does not reset. You may also operate the vehicle within the conditions that you observed from the Freeze Frame/Failure Records data.

Circuit/System Testing

NOTE: You must perform the Circuit/System Verification first.

1. Disconnect the reverse lockout solenoid harness connector.
2. Ignition ON, verify that a test lamp illuminates between the B+ circuit terminal B and ground.
   - If the test lamp does not illuminate, test the B+ circuit for a short to ground or an open/high resistance. If the circuit tests normal and the circuit fuse is open, replace the reverse lockout solenoid.
3. Verify that a test lamp does not illuminate between the B+ circuit terminal B and the control circuit terminal A.
   - If the test lamp illuminates, test the control circuit for a short to ground. If the circuit tests normal, replace the ECM.
4. Remove the test lamp.
5. Command the reverse lockout solenoid ON with a scan tool. Verify with a scan tool that the reverse lockout solenoid Ckt. Short Volts Test Status parameter is OK.
   - If not the specified value, test the control circuit for a short to voltage. If the circuit tests normal, replace the ECM.
6. Install a 3 A fused jumper wire between the reverse lockout control circuit terminal A and the B+ circuit terminal B. Command the reverse lockout solenoid ON with a scan tool. Verify with a scan tool that the affected reverse lockout solenoid Ckt. Short Volts Test Status parameter is displaying Fault.
   - If not the specified value, test the control circuit for an open/high resistance. If the circuit tests normal, replace the ECM.
7. If all the circuits test normal, test or replace the reverse lockout assembly.

Repair Procedures

- **Reverse Lockout Solenoid Replacement**
- **Engine Control Module Programming and Setup (LS3, L99)** or **Engine Control Module Programming and Setup (LLT)**
- **Engine Control Module Replacement**

Repair Verification

1. Install any components or connectors that have been removed or replaced during diagnosis.

cardiagn.com

2. Perform any adjustment, programming, or setup procedures that are required when a component or module is removed or replaced.
3. Clear the DTCs.
4. Turn OFF the ignition for 60 seconds.
5. Engine running, command the reverse lockout solenoid ON and OFF with a scan tool, while observing the reverse inhibit circuit status parameters. The circuit status parameters should change from OK to Not Run or Not Run to OK.
    - If another DTC is present, refer to **Diagnostic Trouble Code (DTC) List - Vehicle** and perform the appropriate diagnostic procedure.

DTC P0806

Diagnostic Instructions

- Perform the **Diagnostic System Check - Vehicle** prior to using this diagnostic procedure.
- Review **Strategy Based Diagnosis** for an overview of the diagnostic approach.
- **Diagnostic Procedure Instructions** provides an overview of each diagnostic category.

DTC Descriptor

DTC P0806

Clutch Pedal Position (CPP) Sensor Circuit Performance

Diagnostic Fault Information

Circuit	Short to Ground	Open/High Resistance	Short to Voltage	Signal Performance
CPP Sensor Signal	P0807	P0807	P0808	P0806
CPP Sensor 5 V Reference	P0651, P0807	P0807	P0651, P0808	-
CPP Sensor Low Reference	-	P0808	P0808	-

Typical Scan Tool Information

CPP Sensor Voltage

Circuit	Short to Ground	Open	Short to Voltage
Operating Conditions: Ignition ON. **CPP Sensor Voltage Parameter Normal Range:** 0 V with clutch pedal applied to 5 V when clutch pedal is released.			
CPP Sensor 5 V Reference	0 V	0 V	5 V
CPP Sensor Signal	0 V	0 V	5 V
CPP Sensor Low Reference	-	5 V	-

cardiagn.com

CPP Sensor Percentage

Circuit	Short to Ground	Open	Short to Voltage
Operating Conditions: Ignition ON. **CPP Sensor Percent Parameter Normal Range:** 0% with clutch pedal released to 100% when clutch pedal is applied.			
CPP Sensor 5 V Reference	100%	100%	0-100%
CPP Sensor Signal	100%	100%	100%
CPP Sensor Low Reference	-	0%	-

Circuit/System Description

The clutch pedal position (CPP) sensor is a three wire sensor, connected to a 5 V reference circuit, a low reference circuit, and a signal circuit. The engine control module (ECM) supplies 5 V to the CPP sensor, and also provides a sensor ground path on the low reference circuit. The CPP sensor sends a voltage signal to the ECM on the signal circuit. The voltage on the signal circuit will vary from a voltage less than or equal to 5 V when the clutch pedal is released, to a voltage less than or equal to 1.5 V when the clutch pedal is applied.

Conditions for Running the DTC

DTCs P0335, P0336, P0502, P0503, P0607, P0808, or P080A are not set.

Conditions for Setting the DTC

The CPP sensor is stuck in range.

Action Taken When the DTC Sets

P0806 is a Type A DTC.

Conditions for Clearing the MIL/DTC

P0806 is a Type A DTC.

Reference Information

Schematic Reference

Manual Transmission Schematics

Connector End View Reference

Component Connector End Views

Description and Operation

Manual Transmission Description and Operation

cardiagn.com

Electrical Information Reference

- **Circuit Testing**
- **Connector Repairs**
- **Testing for Intermittent Conditions and Poor Connections**
- **Wiring Repairs**

DTC Type Reference

Powertrain Diagnostic Trouble Code (DTC) Type Definitions

Scan Tool Reference

Engine Control Module Scan Tool Information (LS3, L99) or **Engine Control Module Scan Tool Information (w/LLT)**

Circuit/System Verification

1. Ignition ON, observe the scan tool CPP sensor percent parameter. The percentage should vary from 0 percent when the clutch pedal is released, to 100 percent when the clutch pedal is in the apply position.
2. Perform the CPP learn procedure. Refer to **Clutch Pedal Position Sensor Learn**.
3. Operate the vehicle within the conditions for running the DTC to verify the DTC does not reset. You may also operate the vehicle within the conditions that you observed from the Freeze Frame/Failure Records data.

Circuit/System Testing

1. Ignition OFF, disconnect the harness connector of the CPP sensor.
2. Ignition ON, observe the scan tool CPP sensor voltage parameter for 0.1 V.
    - If less than the specified value, replace the CPP sensor.
    - If greater than the specified value, replace the ECM.

Component Testing

1. Ignition OFF, disconnect the harness connector of the CPP sensor.
2. Measure the resistance between the signal terminal B and the low reference terminal A of the CPP sensor. Sweep the CPP sensor through the entire range. The resistance should vary low to high and high to low without any spikes or dropouts.
    - If the resistance is erratic with spikes or dropouts, replace the CPP sensor.

Repair Procedures

Perform the **Diagnostic Repair Verification** after completing the diagnostic procedure.

cardiagn.com

- **Clutch Pedal Position Sensor Replacement**
- **Engine Control Module Replacement**
- **Engine Control Module Programming and Setup (LS3, L99)** or **Engine Control Module Programming and Setup (LLT)**

DTC P0807 OR P0808

Diagnostic Instructions

- Perform the **Diagnostic System Check - Vehicle** prior to using this diagnostic procedure.
- Review **Strategy Based Diagnosis** for an overview of the diagnostic approach.
- **Diagnostic Procedure Instructions** provides an overview of each diagnostic category.

DTC Descriptors

DTC P0807

Clutch Pedal Position (CPP) Sensor Circuit Low Voltage

DTC P0808

Clutch Pedal Position (CPP) Sensor Circuit High Voltage

Diagnostic Fault Information

Circuit	Short to Ground	Open/High Resistance	Short to Voltage	Signal Performance
CPP Sensor Signal	P0807	P0807	P0808	P0806
CPP Sensor 5 V Reference	P0651, P0807	P0807	P0651, P0808	-
CPP Sensor Low Reference	-	P0808	P0808	-

Typical Scan Tool Information

CPP Sensor Voltage

Circuit	Short to Ground	Open	Short to Voltage
Operating Conditions: Ignition ON. **CPP Sensor Voltage Parameter Normal Range:** 0 V with clutch pedal applied to 5 V when clutch pedal is released.			
CPP Sensor 5 V Reference	0 V	0 V	5 V
CPP Sensor Signal	0 V	0 V	5 V
CPP Sensor Low Reference	-	5 V	-

CPP Sensor Percentage

cardiagn.com

Circuit	Short to Ground	Open	Short to Voltage
Operating Conditions: Ignition ON. **CPP Sensor Percentage Parameter Normal Range:** 0% with clutch pedal released to 100% when clutch pedal is applied.			
CPP Sensor 5 V Reference	100%	100%	0-100%
CPP Sensor Signal	100%	100%	100%
CPP Sensor Low Reference	-	0%	-

Circuit/System Description

The clutch pedal position (CPP) is a three wire sensor, connected to a 5 V reference circuit, a low reference circuit, and a signal circuit. The engine control module (ECM) supplies 5 V to the CPP sensor, and also provides a sensor ground path on the low reference circuit. The CPP sensor sends a voltage signal to the ECM on the signal circuit. The voltage on the signal circuit will vary from a voltage less than or equal to 5 V when the clutch pedal is released to a voltage less than or equal to 1.5 V when the clutch pedal is applied.

Conditions for Running the DTC

P0807 and P0808

- DTCs P0641 or P0651 are not set.
- The system voltage is more than 9 V.
- The ignition is in the RUN position.

Conditions for Setting the DTC

P0807

The CPP sensor voltage is less than 0.1 V for more than 1 second.

P0808

The CPP sensor voltage is more than 5.2 V for more than 1 second.

Action Taken When the DTC Sets

P0807 and P0808 are Type A DTCs.

Conditions for Clearing the MIL/DTC

P0807 and P0808 are Type A DTCs.

Reference Information

Schematic Reference

cardiagn.com

Manual Transmission Schematics

Connector End View Reference

Component Connector End Views

Description and Operation

Manual Transmission Description and Operation

Electrical Information Reference

- **Circuit Testing**
- **Connector Repairs**
- **Testing for Intermittent Conditions and Poor Connections**
- **Wiring Repairs**

DTC Type Reference

Powertrain Diagnostic Trouble Code (DTC) Type Definitions

Scan Tool Reference

Engine Control Module Scan Tool Information (LS3, L99) or **Engine Control Module Scan Tool Information (w/LLT)**

Circuit/System Verification

1. If DTC P0641 or P0651 is set, refer to **Diagnostic Trouble Code (DTC) List - Vehicle** .
2. Ignition ON, observe the scan tool CPP sensor percent parameter. The percentage should vary from 0 percent when the clutch pedal is released, to 100 percent when the clutch pedal is in the apply position.
3. Perform the CPP learn procedure. Refer to **Clutch Pedal Position Sensor Learn**.
4. Operate the vehicle within the conditions for running the DTC to verify the DTC does not reset. You may also operate the vehicle within the conditions that you observed from the Freeze Frame/Failure Records data.

Circuit/System Testing

1. Ignition OFF, disconnect the harness connector of the CPP sensor.
2. Ignition OFF, test for less than 1 ohms between the low reference circuit terminal A and the negative post of the battery.
    - If greater than the specified value, test the low reference circuit for an open/high resistance. If the circuit tests normal, replace the ECM.
3. Ignition ON, test for 4.8-5.2 V between the 5 V reference circuit terminal C and ground.
    - If less than the specified range, test the 5 V reference circuit for a short to ground or an open/high

cardiagn.com

resistance. If the circuit tests normal, replace the ECM.
    - If greater than the specified range, test the 5 V reference circuit for a short to voltage. If the circuit tests normal, replace the ECM.
4. Ignition ON, verify that the scan tool CPP sensor parameter is less than 0.1 V.
    - If greater than the specified value, test the signal circuit for a short to voltage. If the circuit tests normal, replace the ECM.
5. Install a 3 A fused jumper wire between the signal circuit terminal B and the 5 V reference circuit terminal C. Verify that the scan tool CPP sensor parameter is between 4.8-5.2 V.
    - If less than the specified range, test the signal circuit for a short to ground or an open/high resistance. If the circuit tests normal, replace the ECM.
6. If all circuits test normal, test or replace the CPP sensor.

Component Testing

1. Ignition OFF, disconnect the harness connector of the CPP sensor.
2. Measure the resistance between the signal terminal B and the low reference terminal A of the CPP sensor. Sweep the CPP sensor through the entire range. The resistance should vary low to high and high to low without any spikes or dropouts.
    - If the resistance is erratic with spikes or dropouts, replace the CPP sensor.

Repair Procedures

Perform the **Diagnostic Repair Verification** after completing the diagnostic procedure.

- **Clutch Pedal Position Sensor Replacement**
- **Engine Control Module Replacement**
- **Engine Control Module Programming and Setup (LS3, L99)** or **Engine Control Module Programming and Setup (LLT)**

DTC P080A

Diagnostic Instructions

- Perform the **Diagnostic System Check - Vehicle** prior to using this diagnostic procedure.
- Review **Strategy Based Diagnosis** for an overview of the diagnostic approach.
- **Diagnostic Procedure Instructions** provides an overview of each diagnostic category.

DTC Descriptor

DTC P080A

Clutch Pedal Position (CPP) Not Learned

Circuit/System Description

cardiagn.com

The clutch pedal position (CPP) is a three wire sensor, connected to a 5 V reference circuit, a low reference circuit, and a signal circuit. The engine control module (ECM) supplies 5 V to the CPP sensor, and also provides a sensor ground path on the low reference circuit. The CPP sensor sends a voltage signal to the ECM on the signal circuit. The voltage on the signal circuit will vary from a voltage less than or equal to 5 V when the clutch pedal is released to a voltage less than or equal to 1.5 V when the clutch pedal is applied.

Conditions for Running the DTC

Clutch pedal fully applied.

Conditions for Setting the DTC

Clutch pedal position not learned.

Action Taken When the DTC Sets

P080A is a Type B DTC.

Conditions for Clearing the MIL/DTC

P080A is a Type B DTC.

Reference Information

Schematic Reference

Manual Transmission Schematics

Connector End View Reference

Component Connector End Views

Description and Operation

Manual Transmission Description and Operation

Electrical Information Reference

- **Circuit Testing**
- **Connector Repairs**
- **Testing for Intermittent Conditions and Poor Connections**
- **Wiring Repairs**

DTC Type Reference

Powertrain Diagnostic Trouble Code (DTC) Type Definitions

cardiagn.com

Scan Tool Reference

Engine Control Module Scan Tool Information (LS3, L99) or **Engine Control Module Scan Tool Information (w/LLT)**

Circuit/System Verification

Perform the clutch pedal position sensor learn procedure. Refer to **Clutch Pedal Position Sensor Learn**.

Repair Procedures

Perform the **Diagnostic Repair Verification** after completing the diagnostic procedure.

- **Clutch Pedal Position Sensor Learn**
- **Engine Control Module Replacement**
- **Engine Control Module Programming and Setup (LS3, L99)** or **Engine Control Module Programming and Setup (LLT)**

DTC P080C OR P080D

Diagnostic Instructions

- Perform the **Diagnostic System Check - Vehicle** prior to using this diagnostic procedure.
- Review **Strategy Based Diagnosis** for an overview of the diagnostic approach.
- **Diagnostic Procedure Instructions** provides an overview of each diagnostic category.

DTC Descriptor

DTC P080C

Skip Shift Solenoid Control Circuit Low Voltage

DTC P080D

Skip Shift Solenoid Control Circuit High Voltage

Diagnostic Fault Information

Circuit	Short to Ground	Open/High Resistance	Short to Voltage	Signal Performance
B+ Circuit to Skip Shift Solenoid	P080C	P080C	-	-
Skip Shift Solenoid Control Circuit	P080C	P080C	P080D	-

Typical Scan Tool Data

Skip Shift Solenoid

cardiagn.com

Circuit	Short to Ground	Open/High Resistance	Short to Voltage
Operating Conditions: Engine Running. **Parameter Normal Range:** ON or OFF.			
Skip Shift Solenoid Command	OFF	OFF	OFF

Circuit/System Description

Ignition voltage is supplied directly to the skip shift solenoid. The engine control module (ECM) controls the skip shift solenoid by grounding the control circuit via an internal switch called a low side driver. The low side driver has a fault line which monitors the control circuit. When the ECM commands the skip shift solenoid ON, the voltage on the control circuit should be low, near 0 V. When the ECM commands the control circuit to the skip shift solenoid OFF, the voltage should be high, near battery voltage.

Conditions for Running the DTC

The engine is running.

Conditions for Setting the DTC

- The ECM detects that the commanded state of the driver and the actual state of the control circuit does not match.
- The condition exists for 5 seconds.

Action Taken When the DTC Sets

P080C or P080D are Type B DTCs.

Conditions for Clearing the MIL/DTC

P080C or P080D are Type B DTCs.

Diagnostic Aids

The battery must be fully charged and pass a battery test. Refer to **Battery Inspection/Test** .

Reference Information

Schematic Reference

Manual Transmission Schematics

Connector End View Reference

Component Connector End Views

Description and Operation

cardiagn.com

Manual Transmission Description and Operation

Electrical Information Reference

- Circuit Testing
- Connector Repairs
- Testing for Intermittent Conditions and Poor Connections
- Wiring Repairs

DTC Type Reference

Powertrain Diagnostic Trouble Code (DTC) Type Definitions

Scan Tool Reference

Engine Control Module Scan Tool Information (LS3, L99) or Engine Control Module Scan Tool Information (w/LLT)

Circuit/System Verification

1. Ignition ON, command the skip shift solenoid ON and OFF, with a scan tool, while observing the following skip shift circuit status parameters.
   - Skip shift solenoid control Ckt. Short Gnd Test Status
   - Skip shift solenoid control Ckt. Open Test Status
   - Skip shift solenoid control Ckt. Short Volts Test Status
   - Each parameter should toggle between OK and Not Run or Not Run and OK.
2. Operate the vehicle within the Conditions for Running the DTC, to verify the DTC does not reset. You may also operate the vehicle within the conditions that you observed from the Freeze Frame/Failure Records data.

Circuit/System Testing

NOTE: You must perform the Circuit/System Verification first.

1. Disconnect the skip shift solenoid harness connector.
2. Ignition ON, verify that a test lamp illuminates between the voltage circuit terminal B and ground.
   - If the test lamp does not illuminate, test the voltage circuit for a short to ground or an open/high resistance. If the circuit tests normal and the circuit fuse is open, replace the skip shift solenoid.
3. Verify that a test lamp does not illuminate between the voltage circuit terminal B and the control circuit terminal A.
   - If the test lamp illuminates, test the control circuit for a short to ground. If the circuit tests normal, replace the ECM.
4. Remove the test lamp.
5. Command the skip shift solenoid ON with a scan tool. Verify with a scan tool that the skip shift solenoid

cardiagn.com

Ckt. Short Volts Test Status parameter is OK.

- If not the specified value, test the control circuit for a short to voltage. If the circuit tests normal, replace the ECM.

6. Install a 3 A fused jumper wire between the skip shift control circuit terminal A and the voltage circuit terminal B. Command the skip shift solenoid ON with a scan tool. Verify with a scan tool that the affected skip shift solenoid Ckt. Short Volts Test Status parameter is displaying Fault.
   - If not the specified value, test the control circuit for an open/high resistance. If the circuit tests normal, replace the ECM.
7. If all the circuits test normal, replace the skip shift assembly.

Repair Procedures

- **Gear Select/Skip Shift Solenoid Replacement**
- **Engine Control Module Programming and Setup (LS3, L99)** or **Engine Control Module Programming and Setup (LLT)**
- **Engine Control Module Replacement**

Repair Verification

1. Install any components or connectors that have been removed or replaced during diagnosis.
2. Perform any adjustment, programming, or setup procedures that are required when a component or module is removed or replaced.
3. Clear the DTCs.
4. Turn OFF the ignition for 60 seconds.
5. Engine running, command skip shift solenoid ON and OFF with a scan tool, while observing the skip shift circuit status parameters. The circuit status parameters should change from OK to Not Run or Not Run to OK.
   - If another DTC is present, refer to **Diagnostic Trouble Code (DTC) List - Vehicle** and perform the appropriate diagnostic procedure.

CLUTCH PEDAL POSITION SENSOR LEARN

IMPORTANT: The clutch pedal position (CPP) sensor learn procedure is required when the following service procedures have been performed regardless of whether DTC P080A is set:

- **An engine control module (ECM) replacement**
- **A CPP sensor replacement**
- **Any repairs which affect the CPP sensor relationship**

1. Install a scan tool.
2. Monitor the ECM for DTCs with a scan tool. If other DTCs are set, except DTC P080A, refer to **Diagnostic Trouble Code (DTC) List - Vehicle** for the applicable DTC that set.

cardiagn.com

3. With a scan tool, select Clutch Pedal Position Learn under Module Setup in Manual Transmission, and perform the following instructions displayed on the scan tool screen.

IMPORTANT: The CPP sensor learn procedure cannot be performed more than once per ignition cycle. The clutch pedal needs to be fully depressed and held steady throughout this procedure in order to perform a correct learning.

4. The scan tool will display under CPP Learn Status: Not Learned, In Process, Complete, Fail - Low Volt, Fail - High Volt, or Fail Moving. The scan tool will display under CPP Learn Status Complete if the process was successful.
5. If the scan tool indicates that DTC P080A ran and passed this ignition the CPP sensor learn procedure is complete. If the scan tool indicates DTC P080A failed or did not run this ignition, refer to **DTC P080A**. If any other DTC is set, refer to **Diagnostic Trouble Code (DTC) List - Vehicle** for the applicable DTC.
6. Turn OFF the ignition for 30 seconds after the learn procedure has successfully completed in order to store the CPP sensor variation values in ECM history.

SYMPTOMS - MANUAL TRANSMISSION

Strategy Based Diagnostics

Review the system operations in order to familiarize yourself with the system functions. Refer to **Manual Transmission Description and Operation**.

Visual/Physical Inspection

- Inspect the easily accessible or visible system components for obvious damage or conditions which could cause the symptom.
- Inspect the manual transmission for the correct fluid level.
- Inspect the manual transmission for fluid leaks.
- Inspect the manual transmission for broken or loose transmission mounts.

Intermittent

Test the vehicle under the same conditions that the customer reported in order to verify the system is operating properly.

Symptom List

Refer to a symptom diagnostic procedure from the following list in order to diagnose the symptom:

- **Transmission Shifts Hard**
- **Transmission Gear Clash When Shifting Gears**
- **Transmission Noisy**
- **Transmission Jumps Out of Gear**
- **Transmission Does Not Shift into One Gear**

cardiagn.com

- **Transmission Locked in One Gear**
- **Transmission Clunk on Acceleration or Deceleration**
- **Transmission Fluid Leak Diagnosis**

TRANSMISSION SHIFTS HARD

Diagnostic Aids

An intermittent hard shift may be caused after installation of a new clutch actuator. With a new clutch actuator, the annular seal may not be in the forward position and not allow full clutch release. With a self adjusting clutch, the clutch may be between adjustments and not allow full clutch release. This might be felt by a low clutch pedal load. After several applications, the clutch may adjust properly to give the proper pedal feel.

Test Description

The numbers below refer to the step numbers on the diagnostic table.

3: A static shift test is performed by shifting into all of the gear positions with the engine not operating. While performing the test, one should note how the shift lever movement is felt. Also while shifting from one gear to the other, feel for binding in the shift rails. You should be able to feel the detent plungers operating when coming out of a gear and when going into a gear.

5: A dynamic shift test is performed by shifting into one of the gear positions with the engine operating. Test for the correct mesh of the synchronizers and for the clutch releasing correctly. When shifting into a gear, and shifting out of a gear, you should feel the shift detent plungers operating, and the synchronizers sleeve moving freely.

6: The transmission uses a transmission fluid that allows proper synchronizer operation. The incorrect fluid may cause hard shifting from varnish build up, or from not enough lubrication for proper synchronizer operation. Only use the proper transmission fluid.

Step	Action	Yes	No
DEFINITION: The transmission does not shift smoothly or without difficulty from one gear to the other.			
1	Did you review the **Symptoms - Manual Transmission** operations and perform the necessary inspections?	Go to **Step 2**	Go to **Symptoms - Manual Transmission**
2	Inspect the clutch system for proper operation. Refer to **Clutch System Description and Operation** . Did you find or repair the condition?	Go to **Step 11**	Go to **Step 3**
3	1. Perform a static shift test on the transmission. 2. Test for the following conditions: • Blockage preventing full shift lever movement • Excessive movement in the shift lever • Binding in the shift lever • Detent plungers or shift rails binding		

cardiagn.com

	• Shift linkage binding • Shift linkage proper adjustment Are you able to shift into all gears?	Go to **Step 7**	Go to **Step 4**
4	Remove the shift control shift closeout boot and foam isolator. Refer to **Transmission Control Lever Knob Replacement** . Inspect for the following: • Loose mounting • Foreign debris • Interference to foam isolator Did you find and repair the condition?	Go to **Step 11**	Go to **Step 5**
5	1. Perform a dynamic shift test on the transmission. 2. Test for the following conditions: • Detent plungers or shift rails binding • Synchronizer sleeve binding • Gear clash into only one gear • Gear clash into all gears Did the transmission shift hard into all gears?	Go to **Step 6**	Go to **Step 10**
6	Inspect the transmission for the correct fluid level and the correct type of transmission fluid. Refer to **Transmission Fluid Replacement** and **Lubrication Specifications**. Is the transmission at the correct level and proper fluid being used?	Go to **Step 8**	Go to **Step 7**
7	Drain and fill the transmission with the correct type fluid. Refer to **Transmission Fluid Replacement**. Did you find and repair the condition?	Go to **Step 11**	Go to **Step 8**
8	1. Remove the transmission. Refer to **Transmission Replacement**. 2. Inspect the clutch pressure plate and/or clutch driven plate. Is the clutch pressure plate and/or clutch driven plate worn or faulty?	Go to **Step 9**	Go to **Step 10**
9	Replace the clutch assembly. Refer to **Clutch Assembly Replacement** . Did you find and repair the condition?	Go to **Step 11**	Go to **Step 10**
	1. Disassemble the transmission. Refer to		

cardiagn.com

10	**Transmission Disassemble**. 2. Inspect the transmission for the following faulty components in the gear that is hard to shift or clashing: • Excessive synchronizers blocking ring to gear clearance • Synchronizer hub external splines worn or damaged • Excessive axial clearance in the speed gear • Mainshaft to speed gear bearing or journal worn • Shift rail and the internal shift control lever components for wear or damage 3. Replace worn or damaged components as necessary. Did you find and repair the condition?	Go to **Step 10**	Go to Diagnostic Aids
11	Operate the system in order to verify the repair. Did you correct the condition?	System OK	Go to **Step 1**

TRANSMISSION GEAR CLASH WHEN SHIFTING GEARS

Diagnostic Aids

Gear clashing may be caused by shifting at too high of an engine RPM or by rushing the shift. If gear clashing is occurring in more than one gear, the clutch may not be releasing properly for proper synchronizer operation.

Test Description

The numbers below refer to the step numbers on the diagnostic table.

2: This step tests for the proper release of the clutch. If the clutch reserve is not correct, the mainshaft gears may be turning, causing the gear to clash.

5: This step inspects for the proper transmission fluid. The proper fluid is required for the correct lubrication of the synchronizers.

7: A static shift test is performed by shifting into all of the gear positions with the engine not operating. While performing the test, you should note how the shift lever movement feels. Also, while shifting from one gear to another, feel for binding in the shift rails. You should be able to feel the detent plungers operating when coming out of a gear and going into a gear. Excessive play in the gear shift lever may prevent the shift forks from fully engaging the synchronizer.

10: A dynamic shift test is performed by shifting into all of the gear positions with the engine operating. Test for the correct mesh of the synchronizers and for the clutch releasing correctly. Move the shift lever and feel for the synchronizer sleeve to just release from the gear then let up on the clutch pedal. Press the clutch pedal and move the shift lever to engage that gear again. If the transmission shifts back into the gear without clashing, the clutch is releasing correctly and the synchronizer is operating. If clashing

cardiagn.com

occurs, test another gear. If all gears clash, the clutch is not releasing correctly.

Step	Action	Yes	No
DEFINITION: Noise from the transmission when shifting gears. A grinding or grating sound when the synchronizer sleeve is engaging with the selector teeth on the speed gear. A suspected internal transmission condition if the noise is only happens in one gear.			
1	Did you review the **Symptoms - Manual Transmission** and perform the necessary inspections?	Go to **Step 2**	Go to **Symptoms - Manual Transmission**
2	With the engine operating, does the transmission shift from neutral to any gear without the vehicle lurching or gear clashing?	Go to **Step 5**	Go to **Step 3**
3	Inspect for proper clutch operation. Refer to **Clutch System Description and Operation** . Does the clutch operate properly?	Go to **Step 5**	Go to **Step 4**
4	Repair the clutch system. Refer to **Symptoms - Clutch** . Did you find and repair the condition?	Go to **Step 11**	Go to **Step 5**
5	Inspect for the correct transmission fluid level and for the correct fluid. Refer to **Transmission Fluid Replacement**. Is the transmission fluid level correct and at the correct level?	Go to **Step 7**	Go to **Step 6**
6	Fill the transmission to the correct level or change the fluid if it is the incorrect type. Does the transmission still have gear clash?	Go to **Step 7**	Go to **Step 11**
7	1. Perform a static shift test on the transmission. 2. Test for the following conditions: • Blockage preventing full shift lever movement • Excessive movement in the shift lever • Binding in the shift lever • Detent plungers or shift rails binding • Shift linkage binding • Shift linkage proper adjustment Did the transmission shift smoothly into the gear that is clashing?	Go to **Step 9**	Go to **Step 8**
8	1. Remove the shift lever. 2. Inspect for damaged or worn components. Refer to **Shift Control Assembly Replacement** . Did you find and repair the condition?	Go to **Step 11**	Go to **Step 9**

cardiagn.com

9	1. Perform a dynamic shift test on the transmission. 2. Test for the following conditions: • Detent plungers or shift rails binding • Synchronizer sleeve binding • Gear clashing in more than the suspected gear Is the transmission hard to shift into all gears?	Go to **Transmission Shifts Hard**	Go to **Step 10**
10	1. Disassemble the transmission. Refer to **Transmission Disassemble**. 2. Inspect the following transmission components for the suspect gear that is clashing: • Excessive synchronizer blocking ring to gear clearance • Synchronizer sleeve to hub lash or rock excessive • Excessive axial clearance in the speed gear • Mainshaft to speed gear bearing or journal worn • Shift fork worn or damaged • Internal shift control worn or damaged • Mainshaft bearing worn or damaged • Input gear bearing or pilot bearing worn Did you find and repair the condition?	Go to **Step 11**	Go to Diagnostic Aids
11	Operate the system and verify the repair. Did you correct the condition?	System OK	Go to **Step 1**

TRANSMISSION NOISY

Diagnostic Aids

If the transmission is in neutral with the engine operating, and a whirling noise - a neutral gear rattle is heard outside the vehicle, the sound is a normal condition.

Test Description

The numbers below refer to the step numbers on the diagnostic table.

5: This step inspects for the correct transmission fluid level. If the transmission fluid level is excessively low, damage may have occurred to the transmission components.

7: This step inspects for the correct type of transmission fluid. If the incorrect fluid was used, there may

cardiagn.com

have been an overheating condition. Overheating may cause damage to the transmission components.

9: This step inspects for noise coming into the driver compartment. Improper sealing of the shift tower may be allowing normal transmission noise to be heard by the driver.

13: This step tests to determine if clutch components are making the noise. Press the clutch pedal slowly and listen for the change in noise. If the noise changes while pressing the pedal, it may be a faulty clutch component. If the noise does not change until the clutch is completely disengaged, the transmission component is faulty.

Step	Action	Yes	No
DEFINITION: The transmission is making a noise. The noise may be a whine or a growl caused by faulty bearings or gears. The noise may also be caused from a faulty component causing a vibration noise.			
1	Did you review the **Symptoms - Manual Transmission** operations and perform the necessary inspections?	Go to **Step 2**	Go to **Symptoms - Manual Transmission**
2	Is the noise present while in neutral, with the engine operating?	Go to Diagnostic Aids	Go to **Step 3**
3	Is the noise present in all gears?	Go to **Step 5**	Go to **Step 4**
4	Is the noise present in just one gear?	Go to **Step 15**	Go to **Step 5**
5	Inspect the transmission fluid level. Is the fluid level correct?	Go to **Step 7**	Go to **Step 6**
6	Add transmission fluid. Refer to **Transmission Fluid Replacement**. Did you find and repair the condition?	Go to **Step 16**	Go to **Step 7**
7	Inspect the transmission for the correct fluid type. Refer to **Lubrication Specifications**. Is the transmission fluid the correct type?	Go to **Step 9**	Go to **Step 8**
8	Drain and fill the transmission with the correct type of fluid. Refer to **Transmission Fluid Replacement**. Did you find and repair the condition?	Go to **Step 16**	Go to **Step 9**
9	Inspect the shift tower boot. Is the closeout boot loose or damaged?	Go to **Step 10**	Go to **Step 11**
10	Position and tighten the shift tower boot to specifications. Refer to **Transmission Control Lever Knob Replacement** . Did you find and repair the condition?	Go to **Step 16**	Go to **Step 11**
11	Inspect for loose transmission mounting bolts. Are there any loose transmission mounting bolts?	Go to **Step 12**	Go to **Step 15**
12	Replace and tighten the transmission mounting bolts. Refer to **Fastener Tightening Specifications**. Is the noise still present?	Go to **Step 13**	Go to **Step 16**
13	With the engine operating, press the clutch pedal. Is the noise still present?	Go to **Step 14**	Go to **Step 15**
	1. Remove the clutch. Refer to **Clutch Assembly**		

cardiagn.com

14	**Replacement** . 2. Inspect the following components for being the cause of the noise: • The release bearing • The pilot bearing • The dual mass flywheel, if equipped • The pressure plate • The clutch disc • The input shaft bearing • The engine crankshaft end play Did you find and repair the condition?	Go to **Step 16**	Go to **Step 15**
15	1. Remove the transmission. Refer to **Transmission Replacement**. 2. Disassemble the transmission. Refer to one of the following: **Transmission Disassemble**. Use the information in the Cleaning and Inspection section to determine if any of the transmission components are faulty. Did you find and repair the condition?	Go to **Step 16**	-
16	Operate the system in order to verify the repair. Did you correct the condition?	System OK	Go to **Step 1**

TRANSMISSION JUMPS OUT OF GEAR

Diagnostic Aids

If the transmission jumps out of gear during deceleration, inspect the components that may allow for the gears or shafts to tip. If the gears or shafts tip, the synchronizer sleeve can disengage from the selector teeth on the speed gear. If the transmission jumps out of gear during acceleration, inspect the components that may not allow full engagement of the synchronizer sleeve to the selector teeth on the speed gear. Insufficient engagement of the selector teeth under torque may cause the transmission to jump out of gear.

Test Description

The numbers below refer to the step numbers on the diagnostic table.

2: A static shift test is performed by shifting into all gear positions with the engine not operating. While performing the test, slowly move the shift lever. Feel for proper movement of the shift lever and transmission internal shift components.

5: A dynamic shift test is performed by shifting into all gear positions with the engine operating. Test for the correct mesh of the synchronizers sleeve and the speed gear selector teeth. Move the shift lever, and feel for the synchronizer sleeve to release from the gear, then let up on the clutch pedal. Depress the

cardiagn.com

clutch pedal and move the shift lever to engage the gear again, to ensure full travel of the shift components.

6: This step inspects for worn or damaged transmission or engine mounts. Loose mounts may cause a shock on the transmission allowing for gear disengagement.

7: This step inspects for the misalignment of the engine to transmission. Misalignment may put a bind on the input shaft, allowing for the input shaft or the mainshaft to tip.

9: This step inspects the pilot bearing and the pilot bearing journal on the input shaft. A worn pilot bearing or input shaft may allow the input shaft to tip, causing gear disengagement.

Step	Action	Yes	No
DEFINITION: Gear disengagement occurs during acceleration or deceleration.			
1	Did you review the **Symptoms - Manual Transmission** operations and perform the necessary inspections?	Go to **Step 2**	Go to **Symptoms - Manual Transmission**
2	1. Perform a static shift test. 2. Test for the following conditions: • Blockage preventing full shift lever movement • Excessive movement in the shift lever • Detent plungers engaging in the shift rails • Synchronizer pressure pieces on the synchronizer sleeves • Shift linkage binding • Shift linkage proper adjustment Did the transmission shift completely into all gears?	Go to **Step 5**	Go to **Step 3**
3	1. Remove the shift control shift closeout boot and foam isolator. Refer to **Transmission Control Lever Knob Replacement** . 2. Inspect for the following: • Loose mounting • Foreign debris • Interference to foam isolator Did you find and repair the condition?	Go to **Step 10**	Go to **Step 4**
4	1. Perform a dynamic shift test on the transmission. 2. Test for the following conditions: • Synchronizer sleeve engagement to the speed gear selector teeth • Detent plungers engaging in the shift rails		

cardiagn.com

	Did the transmission shift completely into all gears?	Go to **Step 5**	Go to **Step 8**
5	Inspect the engine and/or transmission mounts. Refer to **Transmission Mount Inspection** and **Engine Mount Inspection** . Did you find and repair the condition?	Go to **Step 10**	Go to **Step 6**
6	Inspect the clutch housing for loose bolts or misalignment. Are there any loose bolts or misalignment?	Go to **Step 9**	Go to **Step 8**
7	Tighten any loose housing bolts and/or align the housing. Refer to **Clutch Assembly Replacement** . Did you find and repair the condition?	Go to **Step 10**	Go to **Step 8**
8	1. Remove the transmission. Refer to **Transmission Replacement**. 2. Remove the clutch assembly. Refer to **Clutch Assembly Replacement** . 3. Inspect the pilot bearing for being faulty. 4. Inspect the input shaft for excessive wear at the pilot bearing. Did you find and repair the condition?	Go to **Step 10**	Go to **Step 9**
9	1. Disassemble the transmission. Refer to **Transmission Disassemble**. 2. Inspect the following components for wear or damage: • The shift rails • The detent plungers and springs • The shift forks • The synchronizer sleeve and speed gear selector teeth • The mainshaft to input shaft bearing and journals • The speed gear bearings and journals • The speed gear axial clearance • The mainshaft center and rear bearings • The shift guide plate Did you find and repair the condition?	Go to **Step 10**	Go to Diagnostic Aids
10	Operate the system in order to verify the repair. Did you correct the condition?	System OK	Go to **Step 1**

TRANSMISSION DOES NOT SHIFT INTO ONE GEAR

Diagnostic Aids

cardiagn.com

If the transmission shifts into gear and then jumps out of gear, refer to **Transmission Jumps Out of Gear**. If it is an intermittent condition, other driveline components may be faulty.

Test Description

The numbers below refer to the step numbers on the diagnostic table.

2: This test is to confirm that the clutch is not slipping. During certain conditions, the clutch may slip and feel as though the transmission is not in gear.

3: A static shift test is performed by shifting into all gears with the engine not operating. While performing the test, you should note how the shift lever movement feels. Also feel for the shift rails moving freely, the detent plungers operating when coming out of a gear and going into the next gear, and for the synchronizer sleeve movement.

6: A dynamic shift test is performed by shifting into all gears with the engine operating. Test for the correct mesh of the synchronizers sleeve and the speed gear selector teeth. Move the shift lever and feel for the synchronizer sleeve to just release from the gear, then let up on the clutch pedal. Press the clutch pedal and move the shift lever to engage that gear again, to ensure full travel of the shift components.

Step	Action	Yes	No
DEFINITION: The shift lever will not move into a particular gear position, or when in a gear position, power is not delivered through the transmission.			
1	Did you review the **Symptoms - Manual Transmission** and perform the necessary inspections?	Go to **Step 2**	Go to **Symptoms - Manual Transmission**
2	Inspect the clutch system for slipping. Refer to **Clutch Slipping** . Is the clutch operating properly?	Go to **Step 2**	Go to **Clutch Assembly Replacement**
3	1. Perform a static shift test on the transmission. 2. Test for the following conditions: • Blockage preventing full shift lever movement • Excessive movement in the shift lever • Binding in the shift lever • Detent plungers or shift rails binding • Synchronizer sleeve moving on the hub and pressure pieces • Shift linkage binding • Shift linkage proper adjustment Were you able to shift into the gear position with the concern?	Go to **Step 5**	Go to **Step 4**
	1. Remove the shift control shift closeout boot and foam isolator. Refer to **Transmission Control Lever Knob Replacement** .		

cardiagn.com

4	2. Inspect for the following: • Loose mounting • Foreign debris • Interference to foam isolator Did you find and repair the condition?	Go to **Step 8**	Go to **Step 5**
5	1. Perform a dynamic shift test on the transmission. 2. Test for the following conditions: • Detent plungers or shift rails binding • Synchronizer sleeve binding • Synchronizer sleeve engaging on the speed gear selector teeth Were you able to shift into the gear position with the concern?	Go to **Step 7**	Go to **Step 6**
6	1. Remove the transmission. Refer to **Transmission Replacement**. 2. Disassemble the transmission. Refer to **Transmission Disassemble**. 3. Inspect the following transmission internal components for wear or damage: • The shift forks • The internal shift control lever Did you find and repair the condition?	Go to **Step 8**	Go to **Step 7**
7	1. Remove the transmission. Refer to **Transmission Replacement**. 2. Disassemble the transmission. Refer to **Transmission Disassemble**. 3. Inspect the following transmission internal components for wear or damage: • The synchronizer sleeve selector teeth • The speed gear selector teeth • The speed gear axial clearance for being excessive • The speed gear to mainshaft bearings and journals • The countershaft for being broken • The mainshaft for being broken • The countershaft gear for being stripped		

cardiagn.com

	• The mainshaft gear for being stripped Did you find and repair the condition?	Go to **Step 8**	Go to Diagnostic Aids
8	Operate the system in order to verify the repair. Did you correct the condition?	System OK	Go to **Step 1**

TRANSMISSION LOCKED IN ONE GEAR

Test Description

The numbers below refer to the step numbers on the diagnostic table.

2: This step is to ensure the use of the proper transmission fluid. The transmission fluid is used to ensure proper synchronizer operation, and for sufficient lubrication. Improper fluid may cause the synchronizers to stick or cause overheating of the transmission components.

4: A static shift test is performed by shifting into all gears with the engine not operating. By confirming that the transmission can be shifted into all positions, ensures that the shift lever is not excessively worn or damaged.

6: A dynamic shift test is performed by shifting into all of the gear positions with the engine operating. Test to ensure that the internal shift components are properly functioning.

Step	Action	Yes	No
DEFINITION: The transmission cannot be shifted out of a gear or the vehicle will not move because the transmission is locked.			
1	Did you review the **Symptoms - Manual Transmission** and perform the necessary inspections?	Go to **Step 2**	Go to **Symptoms - Manual Transmission**
2	Inspect for the correct type of transmission fluid. Refer to **Lubrication Specifications**. Is the correct type of transmission fluid being used?	Go to **Step 6**	Go to **Step 5**
3	Drain and fill the transmission with the correct type of fluid. Refer to **Transmission Fluid Replacement**. Did you find and repair the condition?	Go to **Step 9**	Go to **Step 6**
4	1. Perform a static shift test on the transmission. 2. Test for the shift lever moving to all positions. Were you able to shift into all positions?	Go to **Step 6**	Go to **Step 5**
5	1. Remove the shift lever. Refer to **Shift Control Assembly Replacement** . 2. Inspect for worn or faulty components. Did you find and repair the conditions?	Go to **Step 9**	Go to **Step 6**
	1. Perform a dynamic shift test on the transmission.		

cardiagn.com

6	2. Test for being able to shift in and out of the gear with the concern. Were you able to shift the transmission correctly?	Go to **Step 7**	Go to **Step 8**
7	1. Remove the transmission. Refer to **Transmission Replacement**. 2. Inspect the clutch system for the clutch not releasing properly. Refer to **Clutch System Description and Operation** . Did you find and repair the condition?	Go to **Step 9**	Go to **Step 8**
8	1. Disassemble the transmission. Refer to **Transmission Disassemble**. 2. Inspect the following transmission internal components for wear or damage: • The shift rail • The internal shift control lever • The synchronizer components for being broken or faulty • The speed gears for being seized to the mainshaft • The shift turret rail Did you find and repair the conditions?	Go to **Step 9**	Go to Diagnostic Aids
9	Operate the system in order to verify the repair. Did you correct the condition?	System OK	Go to **Step 1**

TRANSMISSION CLUNK ON ACCELERATION OR DECELERATION

Diagnostic Aids

All manual transmissions have gear play that might cause a clunk. If the transmission is suspected of causing the clunk, compare it with a similar vehicle. An internal clunk in the transmission is usually caused by wear between two components, or from improper assembly, which would also cause other symptoms.

Test Description

The number below refers to the step number on the diagnostic table.

5: This step inspects the driveline components that may be the cause of the clunk noise. The noise may resonate to the transmission.

Step	Action	Yes	No
DEFINITION: A clunk is heard and/or felt on acceleration or deceleration.			

cardiagn.com

1	Did you review the **Symptoms - Manual Transmission** and perform the necessary inspections?	Go to **Step 2**	Go to **Symptoms - Manual Transmission**
2	Inspect the engine mounts for being loose or damaged. Refer to **Engine Mount Inspection** . Did you find and repair the condition?	Go to **Step 7**	Go to **Step 3**
3	Inspect the transmission mounts for being loose or damaged. Refer to **Transmission Mount Inspection**. Did you find and repair the condition?	Go to **Step 7**	Go to **Step 4**
4	Inspect the transmission to engine fasteners for being loose or missing. Refer to **Fastener Tightening Specifications**. Did you find and repair the condition?	Go to **Step 7**	Go to **Step 5**
5	Inspect the driveline for causing the clunk. Refer to **Diagnostic Starting Point - Vehicle** . Did you find and repair the condition?	Go to **Step 7**	Go to **Step 6**
6	1. Remove the transmission. Refer to **Transmission Replacement**. 2. Disassemble the transmission. Refer to **Transmission Disassemble**. 3. Inspect the following transmission components that maybe causing the clunk: • Faulty mainshaft bearings • Faulty counter gear shaft bearings • Worn speed gear teeth • Worn counter gear shaft gear teeth • Worn synchronizer sleeve to hub • Worn thrust washers and thrust surfaces on the speed gears or mainshaft Did you find and repair the condition?	Go to **Step 7**	Go to Diagnostic Aids
7	Operate the system in order to verify the repair. Did you correct the condition?	System OK	Go to **Step 1**

TRANSMISSION FLUID LEAK DIAGNOSIS

Diagnostic Aids

Using the incorrect type of transmission fluid may affect the sealing ability of the seals. Ensure the use of the correct type of transmission fluid. The incorrect type of sealer may not be compatible with the transmission fluid or may not have the correct characteristics for sealing the affected components. Ensure the use of the correct type of sealers. Refer to **Adhesives, Fluids, Lubricants, and Sealers**.

Test Description

cardiagn.com

The number below refers to the step number on the diagnostic table.

5: Use an approved method to clean the transmission to ensure the leak location is correctly identified. If using a powder method or dye method, ensure the products are compatible with the transmission fluid.

Step	Action	Yes	No
DEFINITION: Visible sign of the transmission fluid leaking from the transmission.			
1	Did you review the **Symptoms - Manual Transmission** and perform the necessary inspections?	Go to **Step 2**	Go to **Symptoms - Manual Transmission**
2	1. Inspect for the transmission fluid level higher than the recommended level. Refer to **Transmission Fluid Replacement**. 2. Adjust the transmission level if incorrect. Was the transmission fluid level too high?	Go to **Step 19**	Go to **Step 3**
3	Inspect the transmission vent for a blockage. Is the transmission vent blocked?	Go to **Step 4**	Go to **Step 5**
4	Repair or replace the transmission vent. Did you find and repair the condition?	Go to **Step 19**	Go to **Step 5**
5	Verify the location of the leak. 1. Clean the transmission assembly. 2. Operate the vehicle for 24 km (15 mi), or until normal operating temperatures are reached. 3. Visual inspect or use the powder method or dye and black light method to locate the leak. Is the leak occurring at the drain or fill plug?	Go to **Step 6**	Go to **Step 7**
6	Replace the drain or fill plug. Refer to **Transmission Fluid Replacement**. Did you find and repair the condition?	Go to **Step 19**	Go to Diagnostic Aids
7	Is the leak at the transmission output shaft seal?	Go to **Step 8**	Go to **Step 9**
8	Remove the output shaft seal and inspect for the following. Refer to **Main Shaft Rear Seal Replacement**. • Damaged or worn seal • Damaged seal bore • Improper installation • Cracks in the component • Propeller shaft yoke sealing surface is scratched, nicked, damaged, or worn		

cardiagn.com

	• Loose or worn bearing causing excessive seal wear • Yoke flange nut loose Did you find and repair the condition?	Go to **Step 19**	Go to Diagnostic Aids
9	Is the leak at the front of the transmission?	Go to **Step 10**	Go to **Step 12**
10	1. Inspect for the leak at the input shaft seal. 2. Inspect for the following if the input shaft seal is leaking: • Damaged or worn seal • Damaged seal bore • Improper installation • Cracks in the component • Input shaft sealing surface is scratched, nicked, damaged or worn • Loose or worn bearing causing excessive seal wear 3. Replace the input shaft seal if leaking. Refer to **Main Shaft Rear Seal Replacement**. Did you find and repair the condition?	Go to **Step 19**	Go to **Step 11**
11	1. Inspect the case for cracks or porosity. 2. Replace the transmission front case half if it is faulty. Refer to **Transmission Disassemble**. Did you find and repair the condition?	Go to **Step 19**	Go to Diagnostic Aids
12	Is the leak at the backup light switch?	Go to **Step 13**	Go to **Step 15**
13	1. Remove the backup light switch. Refer to **Backup Lamp Switch Replacement**. 2. Inspect for the following: • Cross threaded or damaged threads • Insufficient sealant • Leaking switch, sensor or solenoid • Improper installation Did you find and repair the condition?	Go to **Step 19**	Go to **Step 1**
	1. Remove the shift shaft detent sleeve. Refer to the applicable procedure: • **Transmission Disassemble**		

cardiagn.com

14	• **Transmission Assemble** 2. Inspect for the following: • Cross threaded or damaged threads • Insufficient sealant • Cracked sleeve or case • Improper installation Did you find and repair the condition?	Go to **Step 19**	Go to **Step 1**
15	Is the leak at the sealing flanges of the transmission case?	Go to **Step 16**	Go to **Step 17**
16	1. Remove the transmission. Refer to **Transmission Replacement**. 2. Disassemble the transmission. Refer to **Transmission Disassemble**. 3. Inspect the sealing surfaces. Refer to the applicable procedure: • **Transmission Case and Clutch Housing Cleaning and Inspection** • **Extension Cleaning and Inspection** Did you find and repair the condition?	Go to **Step 19**	Go to **Step 17**
17	Is the leak coming from a crack or porosity in the transmission case?	Go to **Step 18**	Go to Diagnostic Aids
18	1. Remove the transmission. Refer to **Transmission Replacement**. 2. Disassemble the transmission. Refer to **Transmission Disassemble**. 3. Replace the faulty case. Refer to **Transmission Assemble** Did you find and repair the condition?	Go to **Step 19**	Go to Diagnostic Aids
19	Operate the system in order to verify the repair. Did you correct the condition?	System OK	Go to **Step 1**

REPAIR INSTRUCTIONS - ON VEHICLE

TRANSMISSION FLUID LEVEL INSPECTION

cardiagn.com

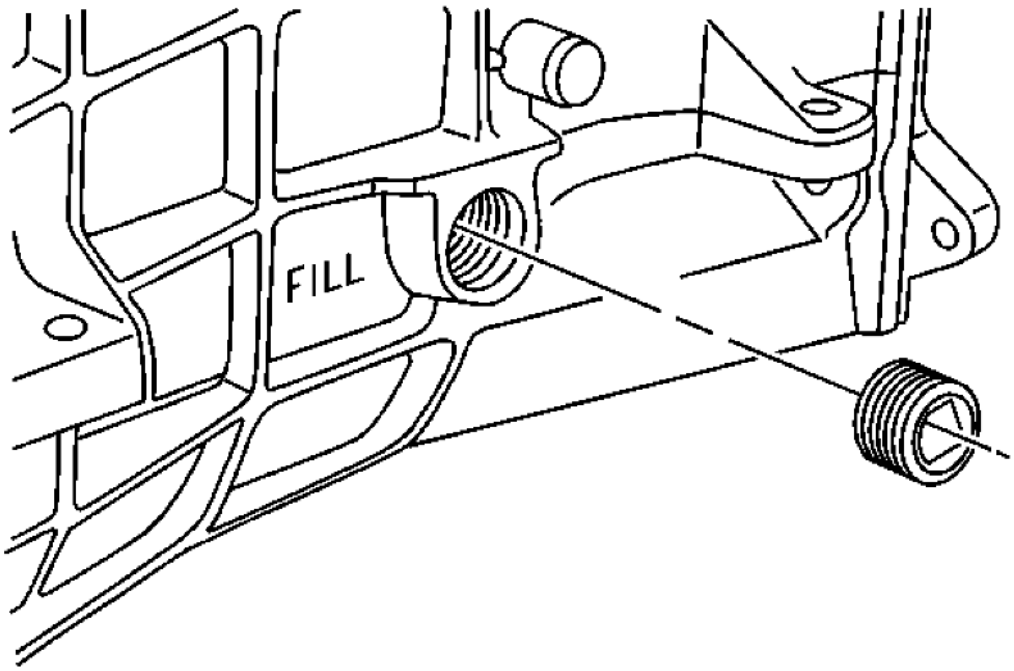

Fig. 8: Transmission Fill Plug
Courtesy of GENERAL MOTORS CORP.

1. Raise and suitably support the vehicle. Refer to **Lifting and Jacking the Vehicle**
2. Clean any dirt from around the fill plug.
3. Remove the transmission fill plug from the transmission.

cardiagn.com

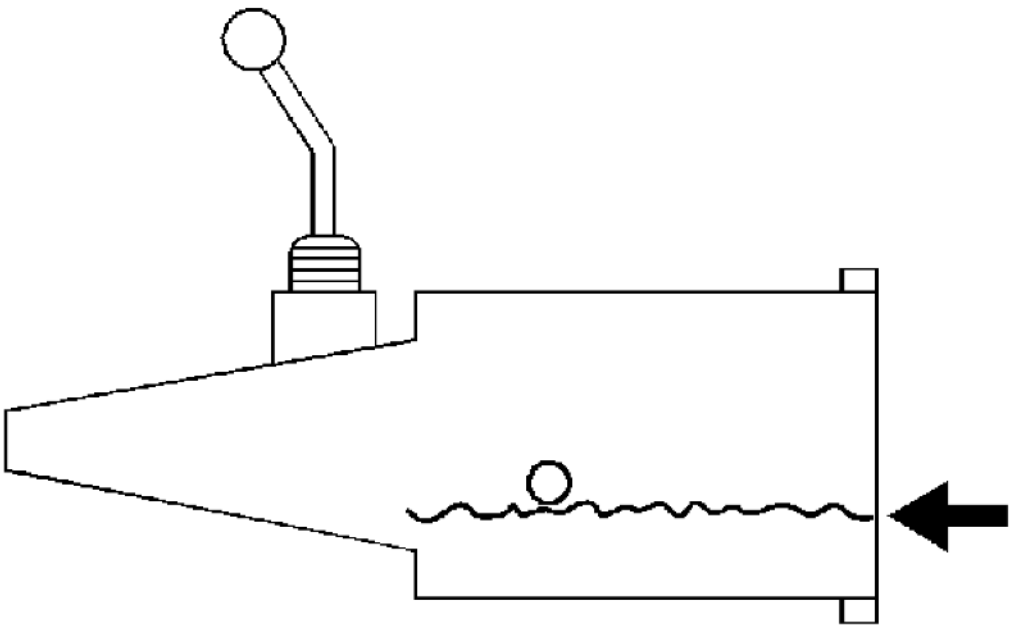

Fig. 9: Transmission Fluid Level
Courtesy of GENERAL MOTORS CORP.

4. Check that the transmission fluid level is even with the bottom of the fill plug hole.
5. Add transmission fluid, if necessary.

cardiagn.com

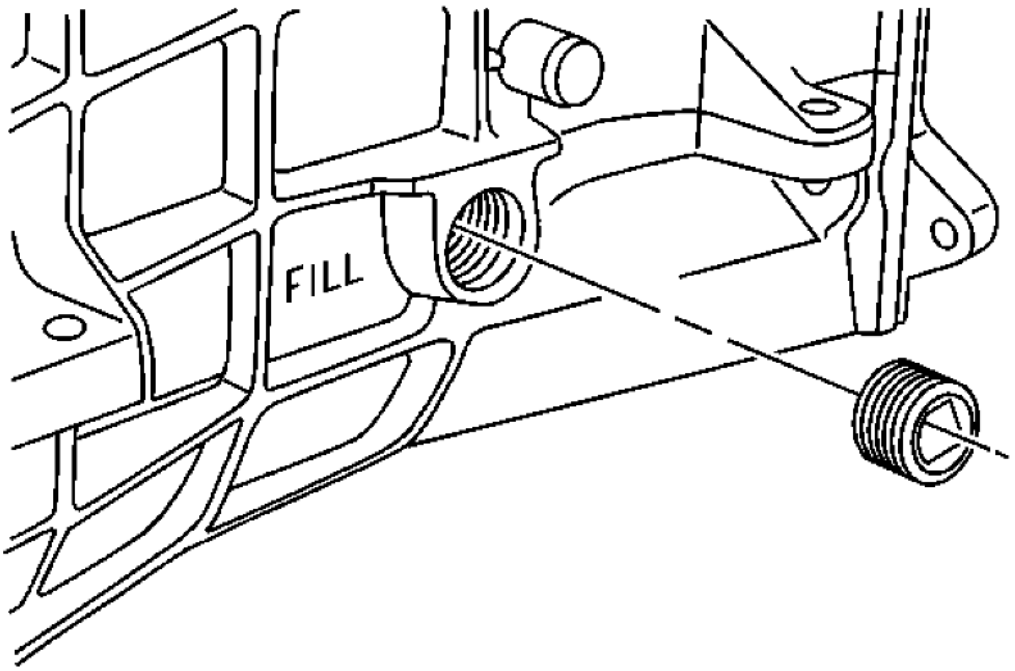

Fig. 10: Transmission Fill Plug
Courtesy of GENERAL MOTORS CORP.

CAUTION: Refer to Fastener Caution .

6. Install the transmission fill plug to the transmission and tighten the fill plug to 18 N.m (13 lb ft).
7. Lower the vehicle.

TRANSMISSION MOUNT INSPECTION

CAUTION: In order to avoid oil pan damage and possible engine failure, insert a block of wood that spans the width of the oil pan bottom between the oil pan and the jack support.

1. Raise and support the vehicle. Refer to **Lifting and Jacking the Vehicle**

NOTE: Before replacing any transmission mount due to suspected fluid loss, verify that the source of the fluid is the transmission mount, not the engine, transmission or accessories.

cardiagn.com

2. Raise the transmission in order to remove the weight from the transmission mount and create slight tension in the rubber.
3. Observe the transmission mount while raising the transmission. Replace the transmission mount if the transmission mount exhibits any of the following conditions:
   - The hard rubber surface is covered with heat check cracks.
   - The rubber is separated from the metal plate of the transmission mount.
   - The rubber is split through the center of the transmission mount.
4. If there is movement between the metal plate of the transmission mount and its attaching points, lower the transmission on the transmission mount. Tighten the bolts or nuts attaching the transmission mount to the frame or transmission mount bracket.
5. Lower the vehicle.

TRANSMISSION REAR MOUNT REPLACEMENT

Removal Procedure

1. Raise and support the vehicle. Refer to **Lifting and Jacking the Vehicle**

   NOTE: The engine mounts must NOT bend or deflect from the vertical position, damage to the mount will occur.

2. Support the transmission with a suitable jack and a block of wood.

cardiagn.com

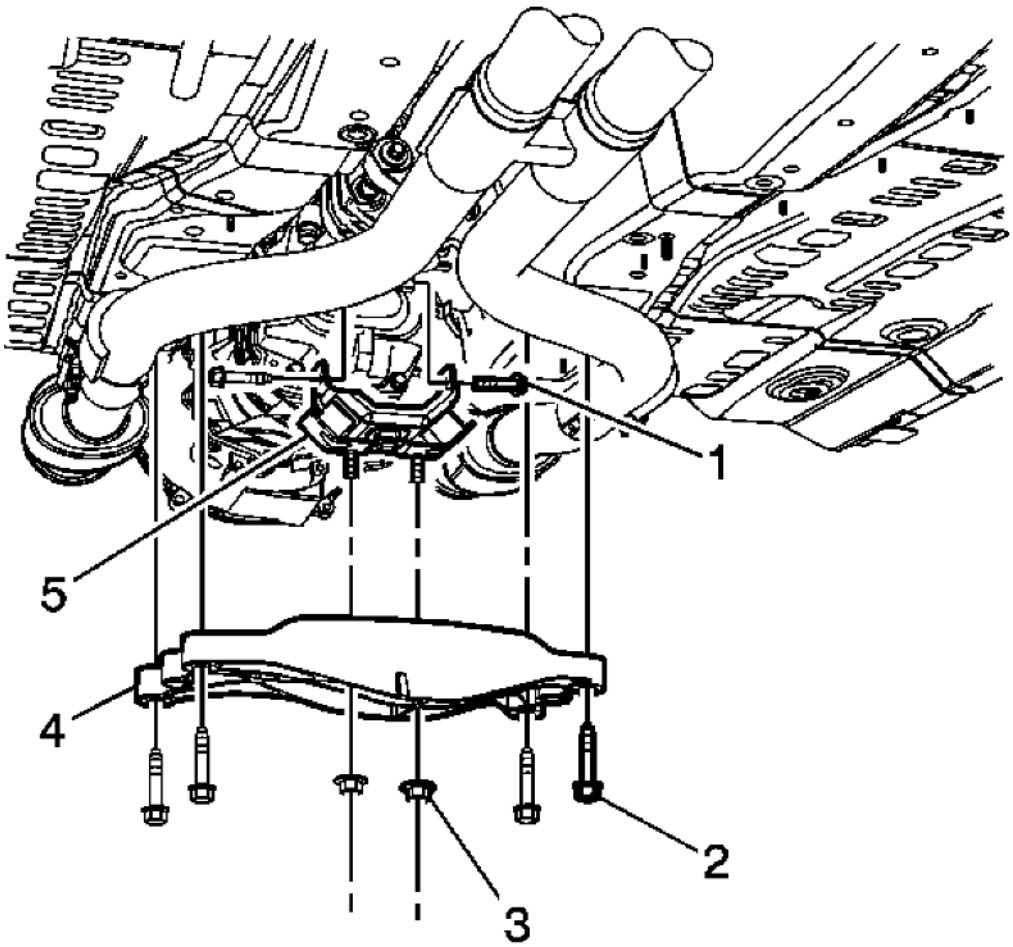

Fig. 11: Transmission Rear Mount Components
Courtesy of GENERAL MOTORS CORP.

3. Remove the two transmission mount nuts (3).
4. Remove the four transmission support retaining bolts (2), then remove the transmission support (4) from the vehicle
5. Remove the two transmission mount bolts (1).
6. Remove the transmission mount (5) from the transmission.

Installation Procedure

cardiagn.com

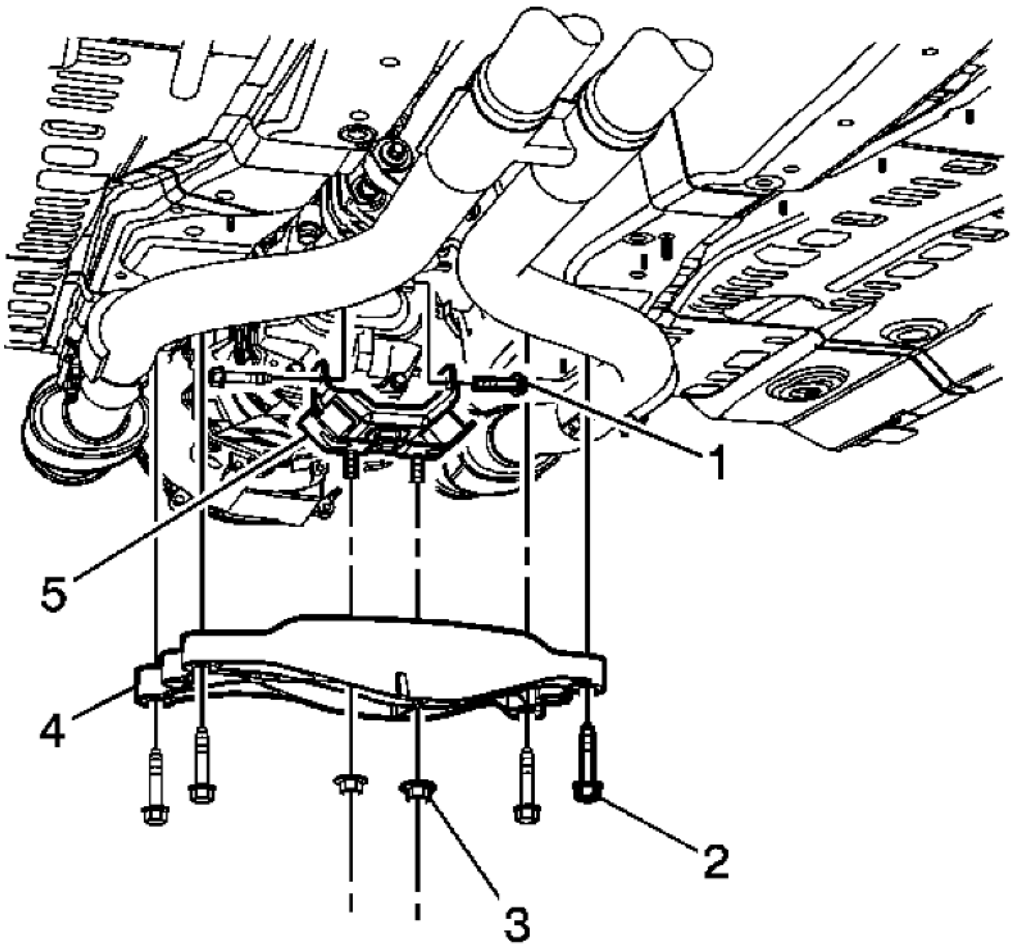

Fig. 12: Transmission Rear Mount Components
Courtesy of GENERAL MOTORS CORP.

NOTE: The engine mounts must NOT bend or deflect from the vertical position, damage to the mount will occur.

1. Install the transmission mount (5) to the transmission.

CAUTION: Refer to Fastener Caution .

2. Install the two transmission mount bolts (1) and tighten to 58 N.m (43 lb ft).
3. Install the transmission support (4).

cardiagn.com

4. Install the four transmission support bolts (2) and tighten to 58 N.m (43 lb ft)
5. Install the transmission mount nuts (3) and tighten to 58 N.m (43 lb ft)
6. Remove the support from under the transmission.
7. Lower the vehicle.

SHIFT CONTROL ASSEMBLY REPLACEMENT

Removal Procedure

1. Remove the front floor console front cover. Refer to **Front Floor Console Front Cover Replacement (Without UMQ)** or **Front Floor Console Front Cover Replacement (With UMQ)**
2. Remove the transmission control lever knob. Refer to **Transmission Control Lever Knob Replacement**
3. Remove the exhaust system. Refer to **Exhaust Muffler with Resonator, Exhaust, and Tail Pipe Replacement (H-Pipe)** or **Exhaust Muffler with Resonator, Exhaust, and Tail Pipe Replacement (Vehicle Service)**
4. Disconnect the propeller shaft from the transmission and position out of the way. Refer to **Two-Piece Propeller Shaft Replacement**
5. Support the transmission with a suitable jack.
6. Remove the transmission support.
7. Lower the rear of the transmission in order to gain access to the top of the transmission.

cardiagn.com

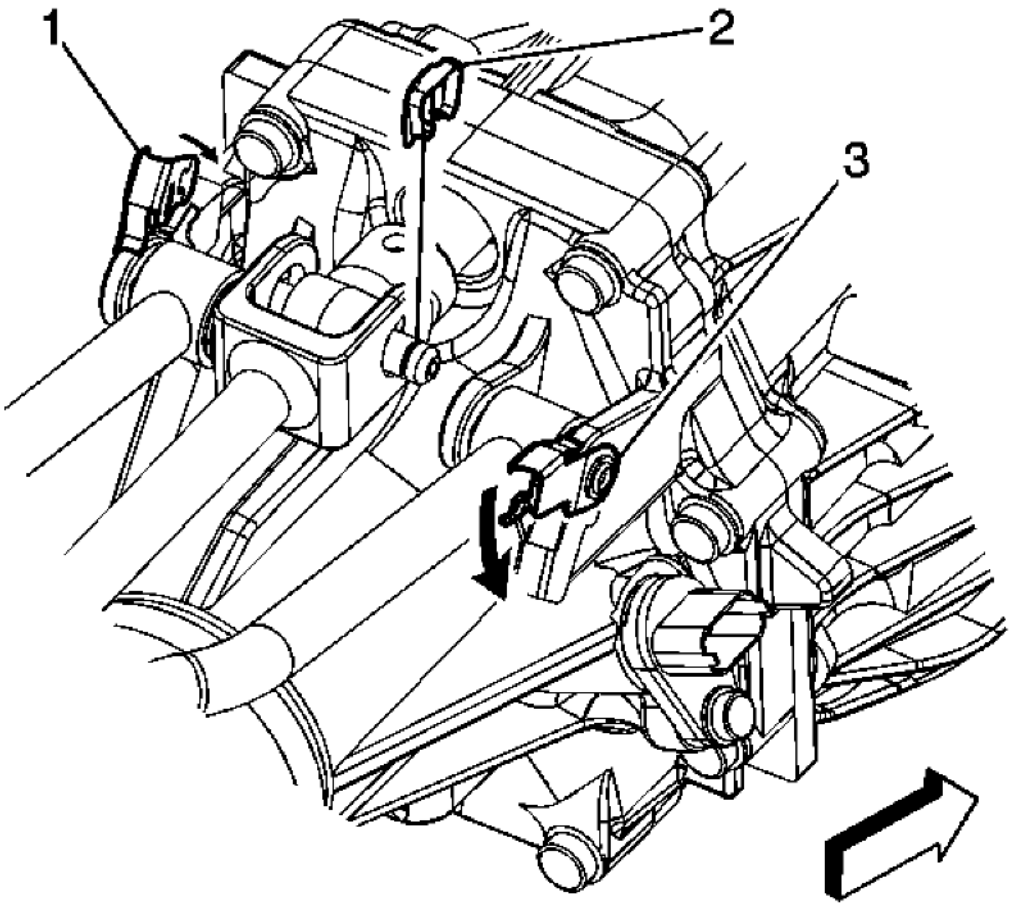

Fig. 13: Identifying Shift Control Rod Pins & Retainers
Courtesy of GENERAL MOTORS CORP.

8. Using a flat-blade tool, release the left and right side shift control rod pin retainers (1,3).
9. Using a flat-blade tool, release the center shift control rod pin retainer (2).

cardiagn.com

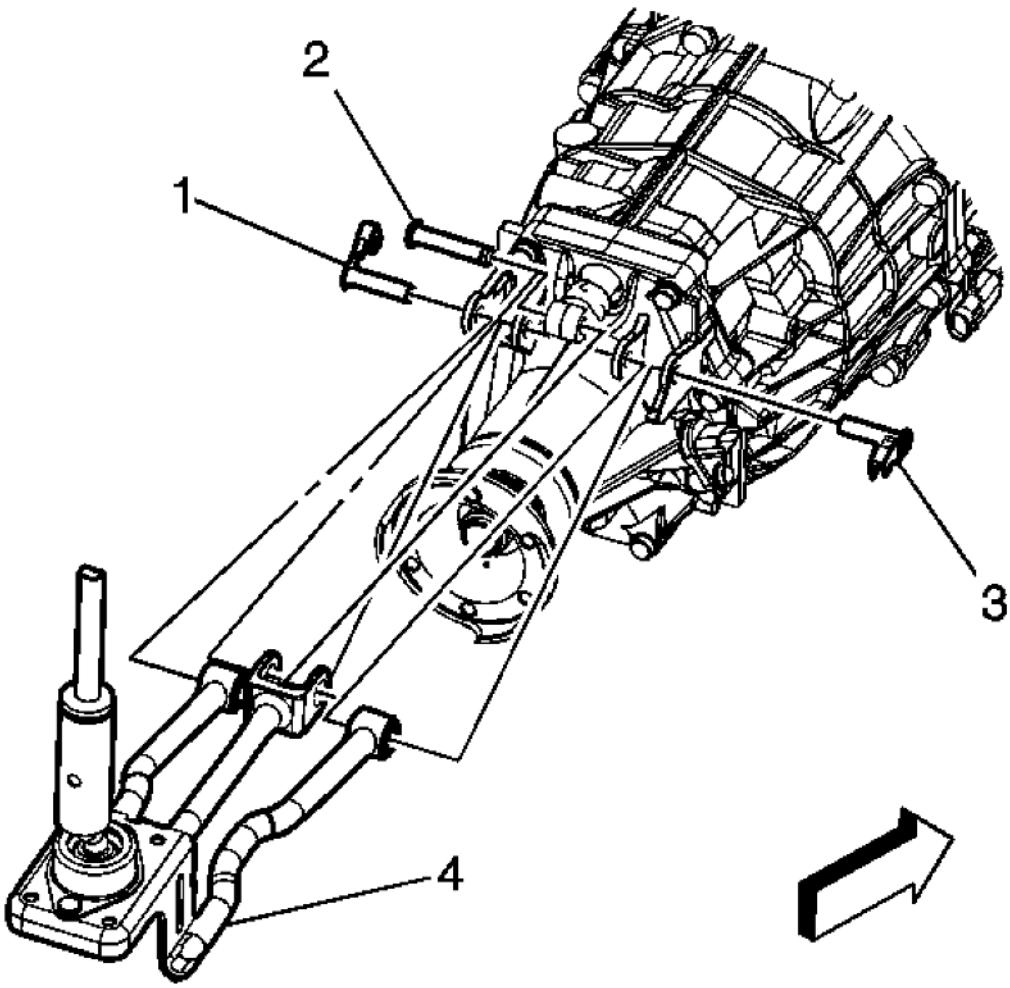

Fig. 14: Identifying Shift Control Rod Pins
Courtesy of GENERAL MOTORS CORP.

10. Remove the left and right side shift control rod pins (1, 3).
11. Remove the center shift control rod pin (2).
12. Remove the shift control mounting nuts.
13. Remove the manual transmission control assembly from the vehicle.

Installation Procedure

1. Position the manual transmission control assembly into the vehicle.

cardiagn.com

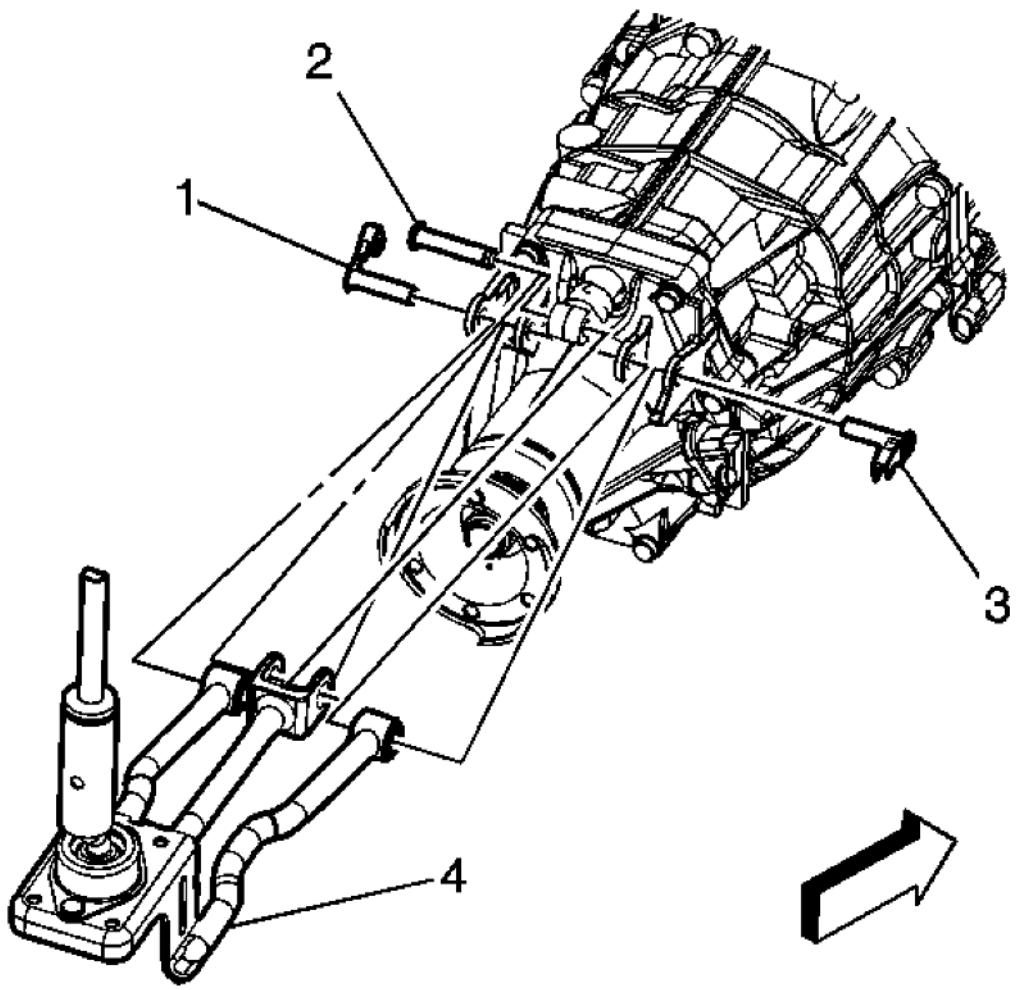

Fig. 15: Identifying Shift Control Rod Pins
Courtesy of GENERAL MOTORS CORP.

2. Install the center shift control rod pin (2).
3. Install the left and right side shift control rod pins (1,3).

cardiagn.com

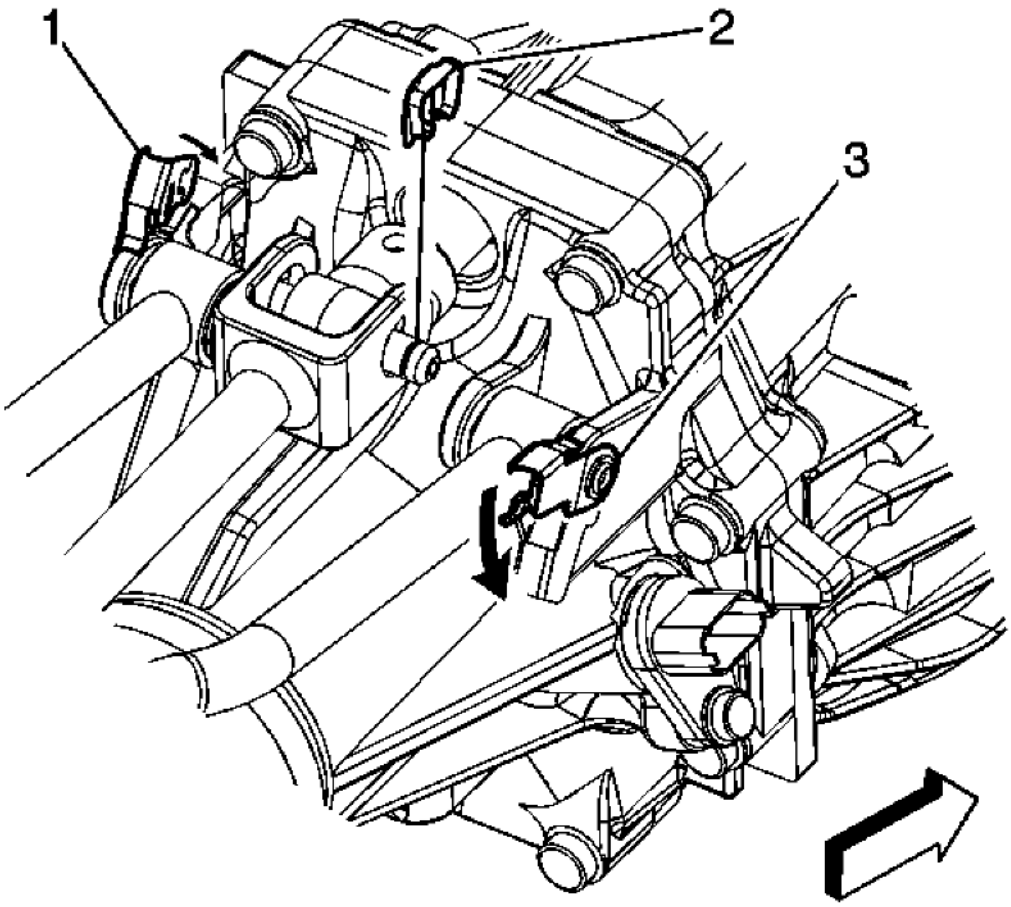

Fig. 16: Identifying Shift Control Rod Pins & Retainers
Courtesy of GENERAL MOTORS CORP.

4. Install the center shift control rod pin retainer (2).
5. Rotate the left and right side shift control rod pins (1,2) in order to lock the retainers into place on the transmission.
6. Install the shift control mounting nuts.
7. Raise the transmission.
8. Install the transmission support. Refer to **Transmission Mount Replacement**
9. Remove the jack supporting the transmission.
10. Install the propeller shaft. Refer to **Two-Piece Propeller Shaft Replacement**
11. Install the exhaust system. Refer to **Exhaust Muffler with Resonator, Exhaust, and Tail Pipe Replacement (H-Pipe)** or **Exhaust Muffler with Resonator, Exhaust, and Tail Pipe Replacement (Vehicle Service)**

cardiagn.com

12. Lower the vehicle.
13. Install the front floor console front cover. Refer to **Front Floor Console Front Cover Replacement (Without UMQ)** or **Front Floor Console Front Cover Replacement (With UMQ)**
14. Install the transmission control lever knob. Refer to **Transmission Control Lever Knob Replacement**

TRANSMISSION CONTROL LEVER KNOB REPLACEMENT

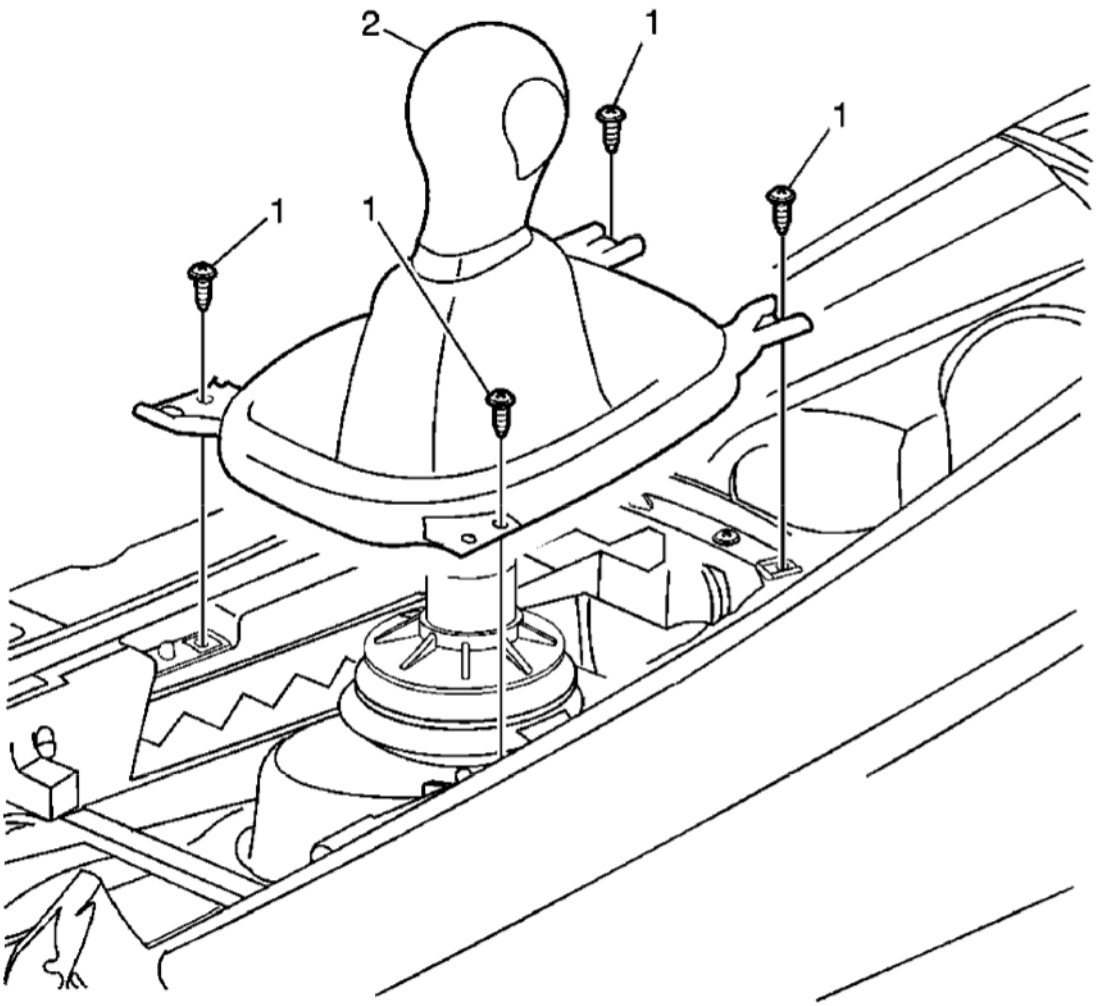

Fig. 17: Transmission Control Lever Knob
Courtesy of GENERAL MOTORS CORP.

Callout	Component Name
Preliminary Procedure: Remove the front floor console front cover. Refer to **Front Floor Console Front Cover Replacement (Without UMQ)** or **Front Floor Console Front Cover Replacement (With UMQ)** .	
1	Transmission Control Lever Knob Assembly Fastener (Qty: 4)
	Manual Transmission Control Lever Knob Assembly

cardiagn.com

2	**Procedure:** First remove the 4 fasteners securing the manual transmission control lever knob assembly to the front floor console. **Tip:** Firmly pull upward until knob is released from control assembly. **Tighten:** 9 N.m (80 lb in)

MAIN SHAFT REAR SEAL REPLACEMENT

Special Tools

- **J 6125-1B** Slide Hammer
- **J 23129** Universal Seal Remover
- **J 29873** Injector Nozzle Socket 30 mm. See **Special Tools**.
- **J 44765** Seal Installer
- **J 45012** Holding Fixture
- **J 45019** Flange and Pinion Gauge Remover

Removal Procedure

cardiagn.com

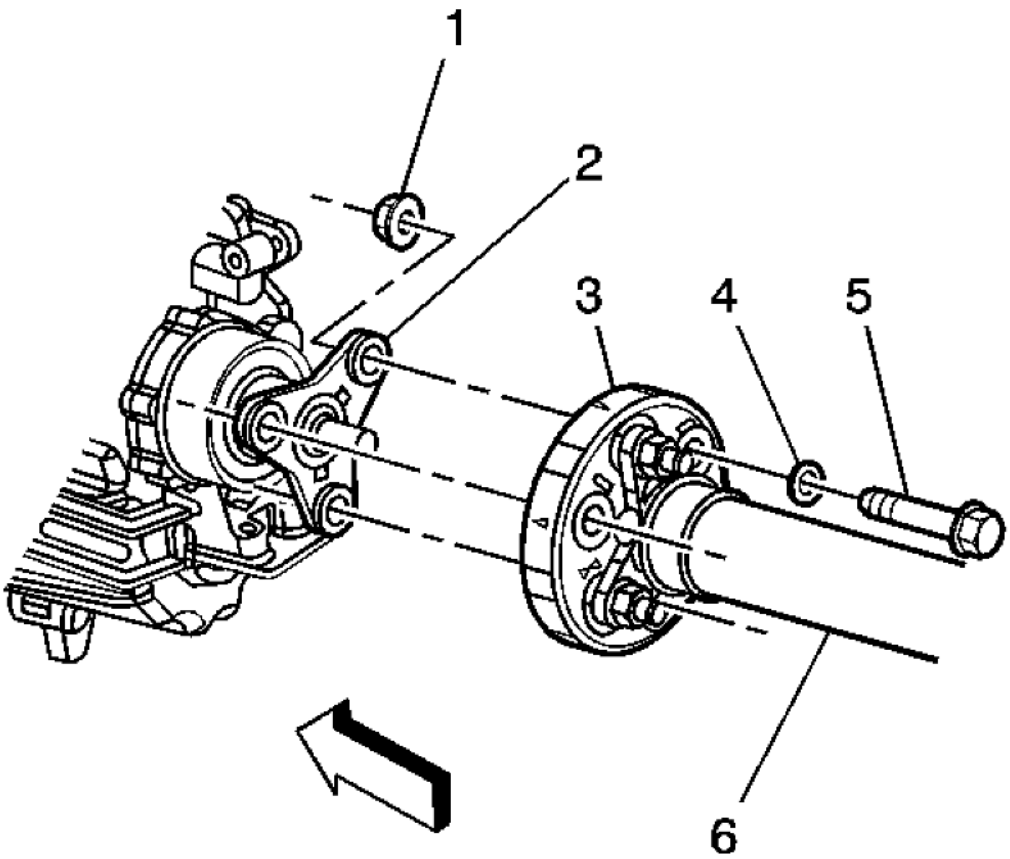

Fig. 18: Identifying Propeller Shaft Components
Courtesy of GENERAL MOTORS CORP.

1. Place the transmission in neutral.
2. Raise and support the vehicle. Refer to **Lifting and Jacking the Vehicle**
3. Remove the propeller shaft (6). Refer to **Two-Piece Propeller Shaft Replacement**

cardiagn.com

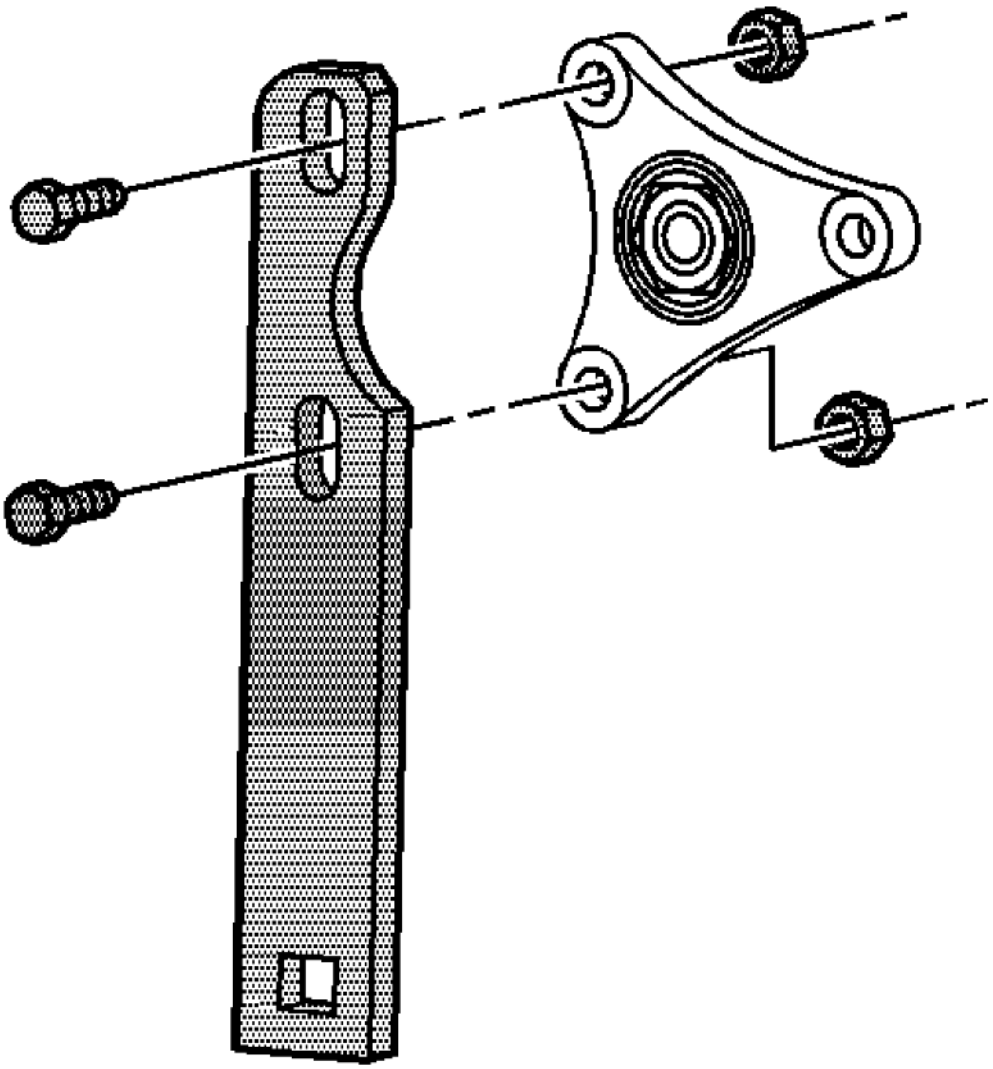

Fig. 19: View Of Flange Tool
Courtesy of GENERAL MOTORS CORP.

4. Install the **J 45012** to the drive flange.
5. While holding the **J 45012** , remove the flange nut using the **J 29873** . See **Special Tools**.
6. Remove the **J 45012** .

cardiagn.com

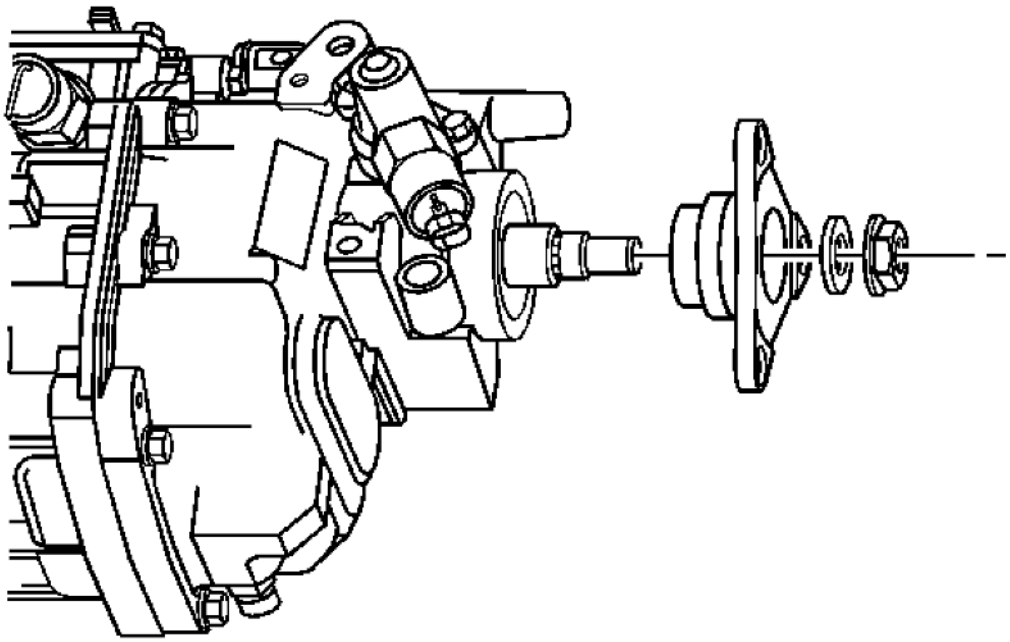

Fig. 20: Drive Flange & Thrust Washer
Courtesy of GENERAL MOTORS CORP.

7. Remove the drive flange thrust washer.
8. Remove the drive flange using the **J 45019** .

cardiagn.com

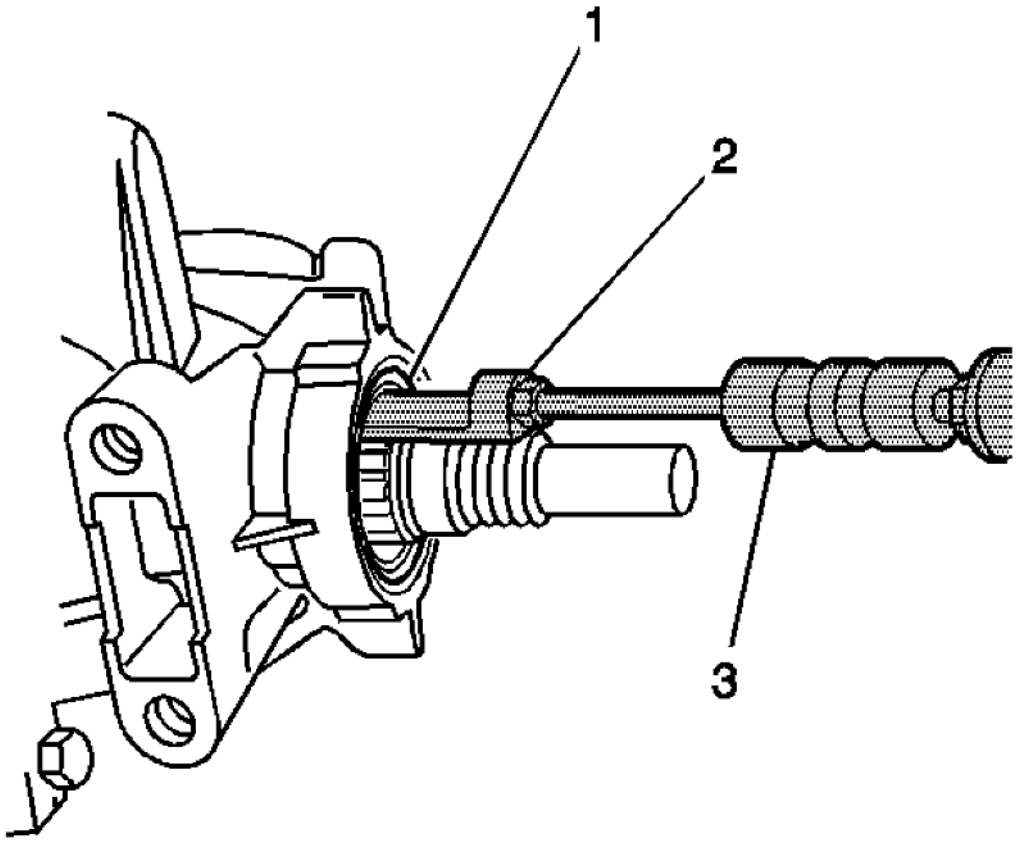

Fig. 21: Removing Transmission Case Extension Seal
Courtesy of GENERAL MOTORS CORP.

9. Use the **J 6125-1B** and **J 23129** to remove the transmission case extension seal (1).

Installation Procedure

cardiagn.com

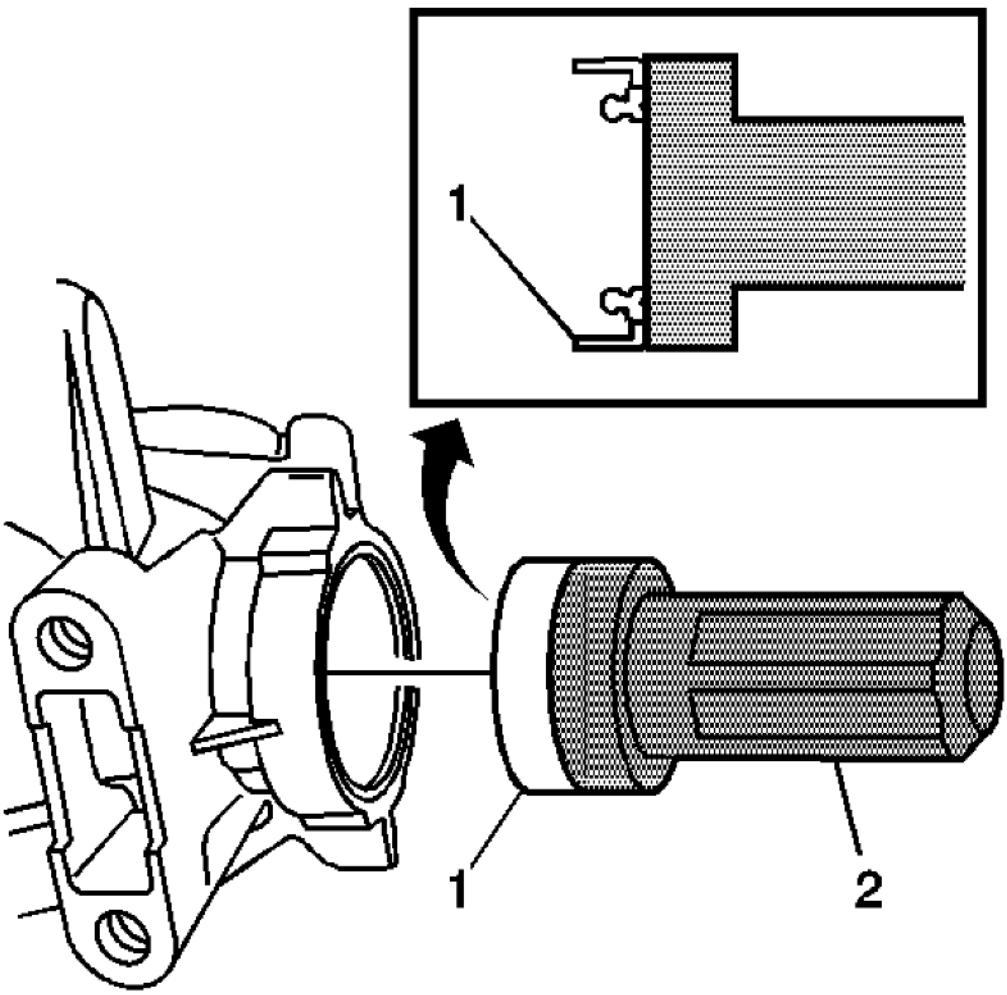

Fig. 22: Installing Transmission Case Extension Seal
Courtesy of GENERAL MOTORS CORP.

NOTE: Install the seal onto the tool before installing into the case to prevent damage to the seal.

1. Using **J 44765** install the new transmission case extension seal (1).

cardiagn.com

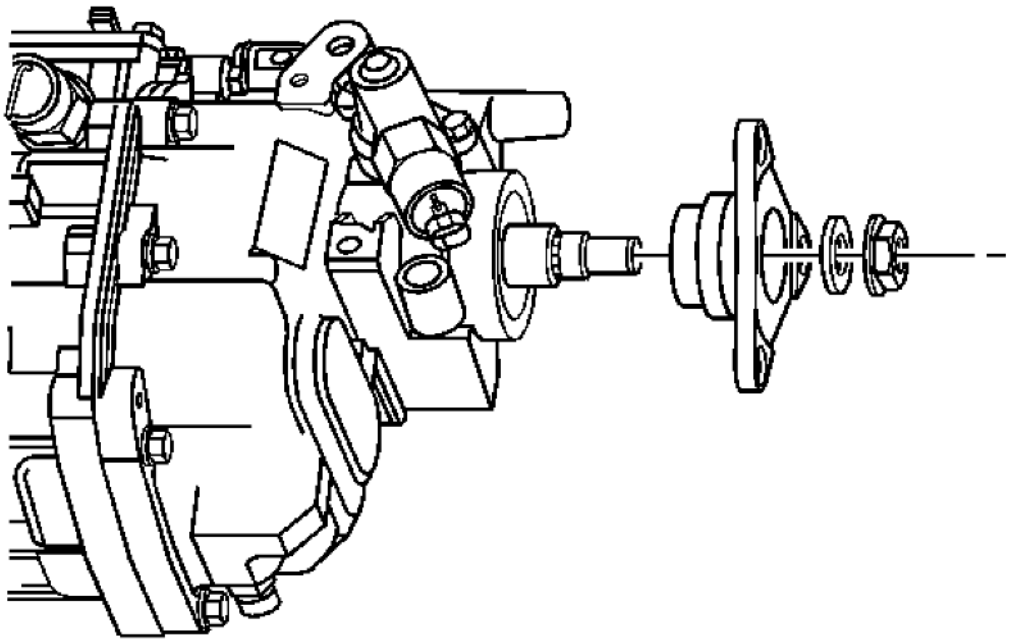

Fig. 23: Drive Flange & Thrust Washer
Courtesy of GENERAL MOTORS CORP.

2. Install the drive flange to the transmission output shaft.
3. Install a NEW drive flange thrust washer.

cardiagn.com

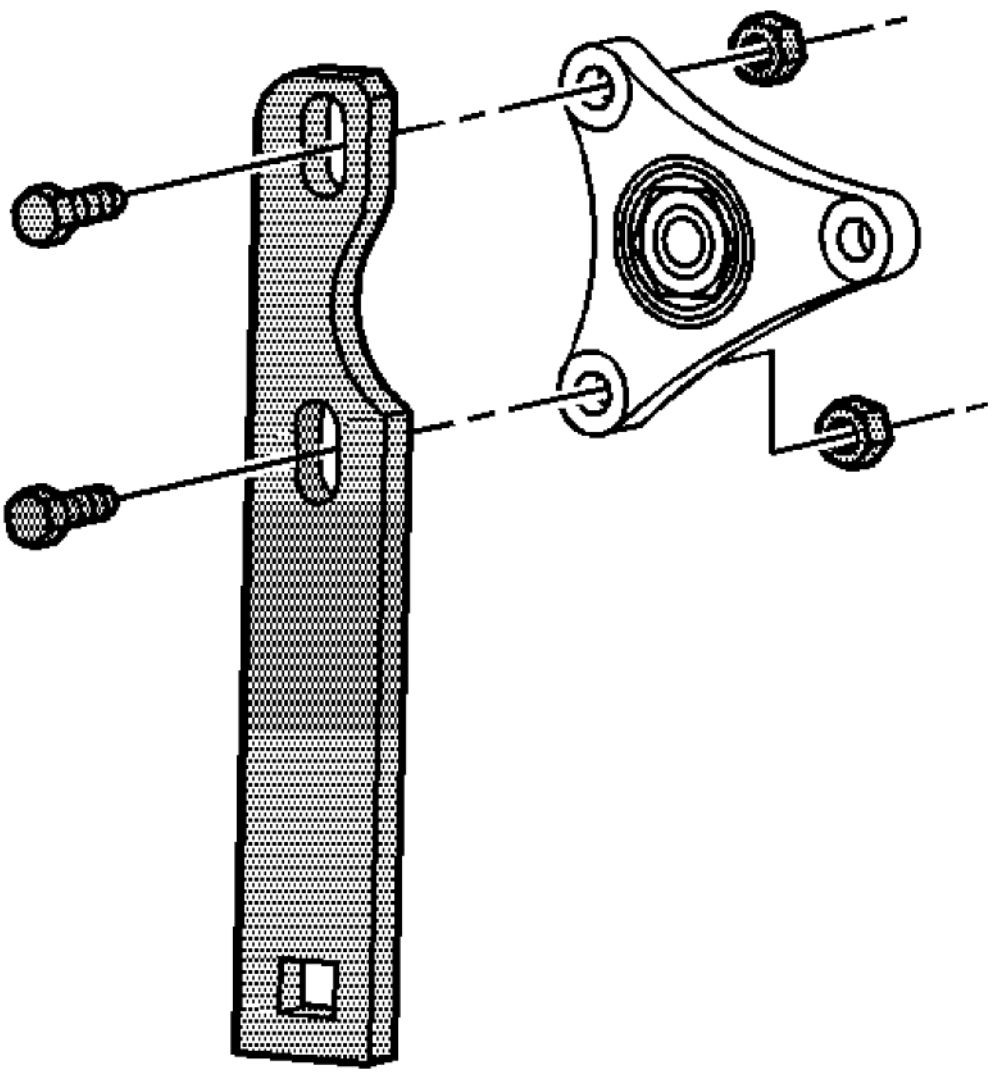

Fig. 24: View Of Flange Tool
Courtesy of GENERAL MOTORS CORP.

4. Install the **J 45012** to the drive flange.

CAUTION: Refer to Fastener Caution .

5. While holding **J 45012** , install a NEW drive flange nut using **J 29873** . See **Special Tools**.

cardiagn.com

Tighten the drive flange nut to 57 N.m (42 lb ft).

6. Remove the **J 45012** from the drive flange.

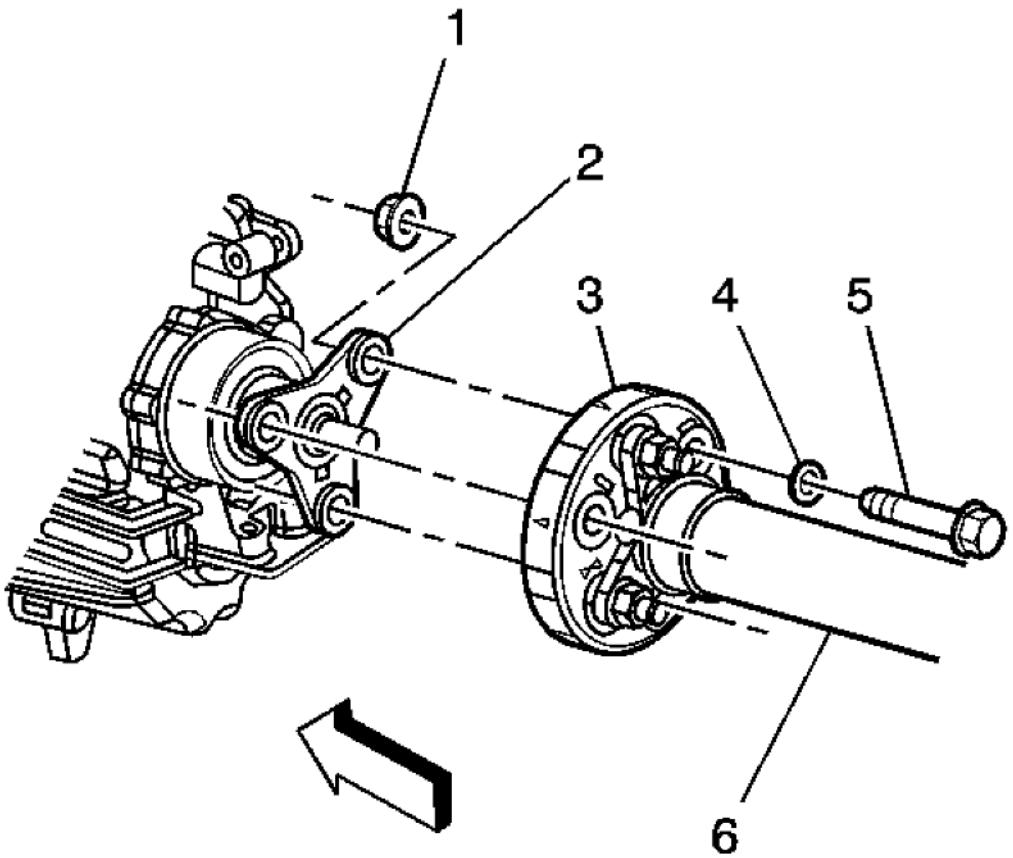

Fig. 25: Identifying Propeller Shaft Components
Courtesy of GENERAL MOTORS CORP.

7. Install the propeller shaft (6). Refer to **Two-Piece Propeller Shaft Replacement**
8. Lower the vehicle.

BACKUP LAMP SWITCH REPLACEMENT

Removal Procedure

cardiagn.com

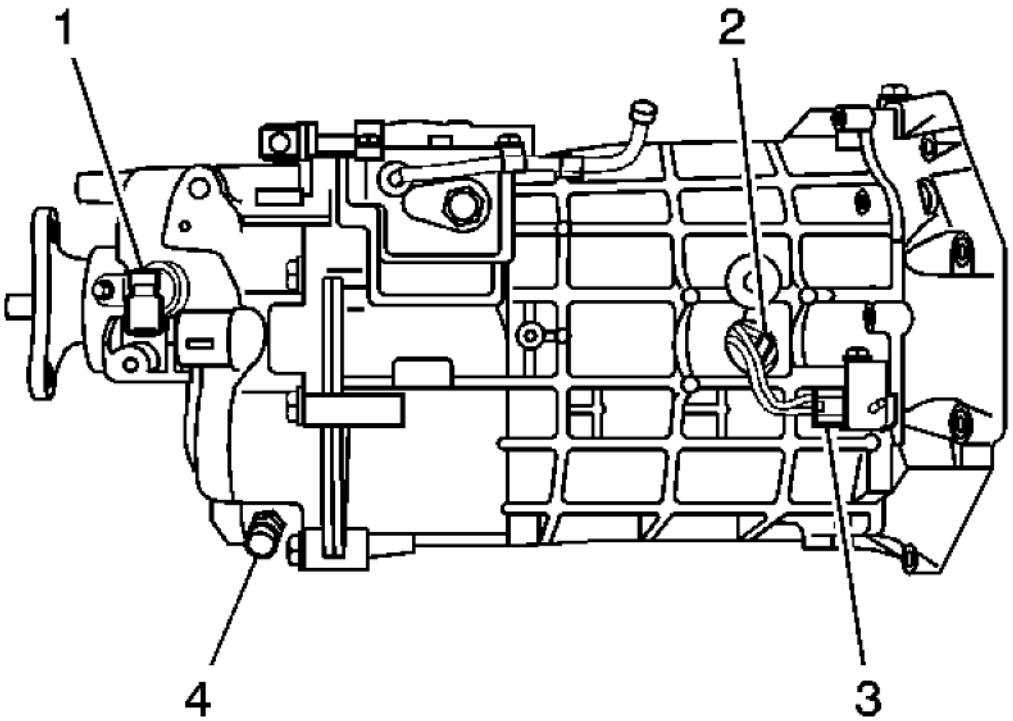

Fig. 26: Backup Lamp Switch & Electrical Connector & Vehicle Speed Sensor
Courtesy of GENERAL MOTORS CORP.

1. Raise and suitably support the vehicle. Refer to **Lifting and Jacking the Vehicle**
2. Disconnect the backup lamp switch electrical connector (3).
3. Remove the backup lamp switch wire harness from the bracket.
4. Using a Snap-On™VSM5222 22 mm angle head open end wrench, or equivalent, remove the backup lamp switch (2).

Installation Procedure

cardiagn.com

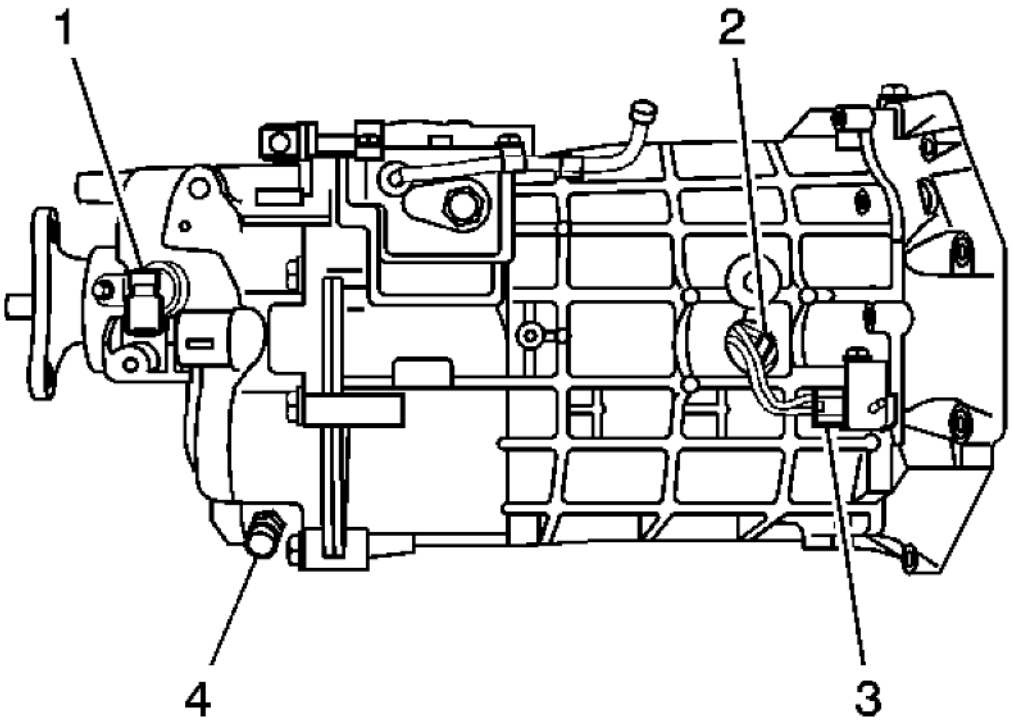

Fig. 27: Backup Lamp Switch & Electrical Connector & Vehicle Speed Sensor
Courtesy of GENERAL MOTORS CORP.

1. Apply pipe sealant with Teflon® to the threads of the backup lamp switch. Use GM P/N 1052080 or equivalent.

CAUTION: Refer to Fastener Caution .

2. Install the backup lamp switch (2) and tighten the switch to 27 N.m (20 lb ft).
3. Install the backup lamp switch wire harness to the bracket.
4. Connect the backup lamp switch electrical connector (3).
5. Lower the vehicle.

TRANSMISSION FLUID TEMPERATURE SENSOR REPLACEMENT

Removal Procedure

cardiagn.com

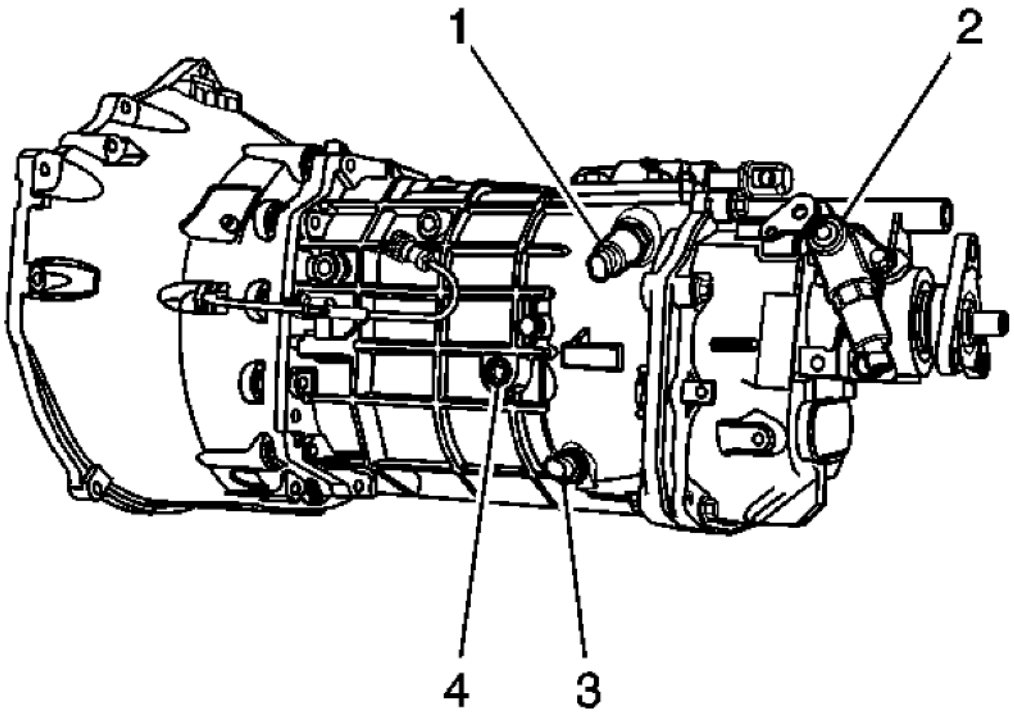

Fig. 28: TFT Sensor, Reverse Lockout Solenoid & Transmission Fluid Fill PLug
Courtesy of GENERAL MOTORS CORP.

1. Raise and suitably support the vehicle. Refer to **Lifting and Jacking the Vehicle**
2. Disconnect the transmission fluid temperature (TFT) sensor electrical connector.
3. Clean away all dirt and debris from the TFT sensor.
4. Place a suitable drain pan under the transmission.
5. Remove the TFT sensor (3).

Installation Procedure

cardiagn.com

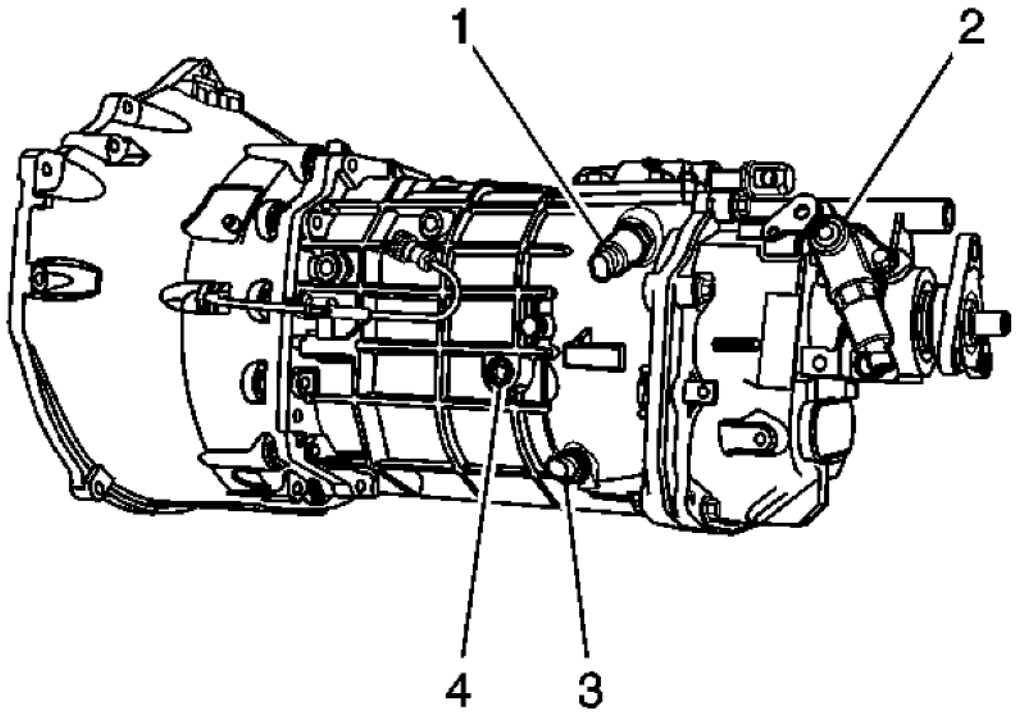

Fig. 29: TFT Sensor, Reverse Lockout Solenoid & Transmission Fluid Fill PLug
Courtesy of GENERAL MOTORS CORP.

CAUTION: Refer to Fastener Caution .

1. Install the TFT sensor (3) and tighten the sensor to 18 N.m (13 lb ft).
2. Connect the TFT sensor electrical connector.
3. Fill the transmission to the proper level.
4. Remove the drain pan.
5. Lower the vehicle.

VEHICLE SPEED SENSOR REPLACEMENT

Removal Procedure

cardiagn.com

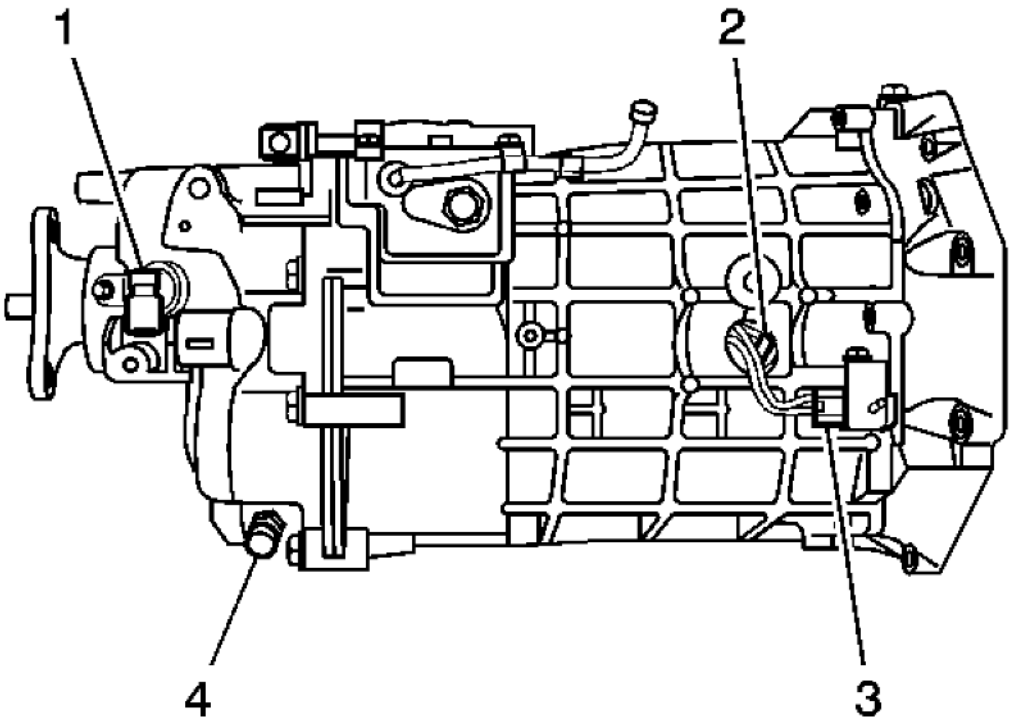

Fig. 30: Backup Lamp Switch & Electrical Connector & Vehicle Speed Sensor
Courtesy of GENERAL MOTORS CORP.

1. Raise and suitably support the vehicle. Refer to **Lifting and Jacking the Vehicle**
2. Disconnect the vehicle speed sensor electrical connector.
3. Remove the attaching bolt and the vehicle speed sensor.
4. Remove the vehicle speed sensor (1).

Installation Procedure

cardiagn.com

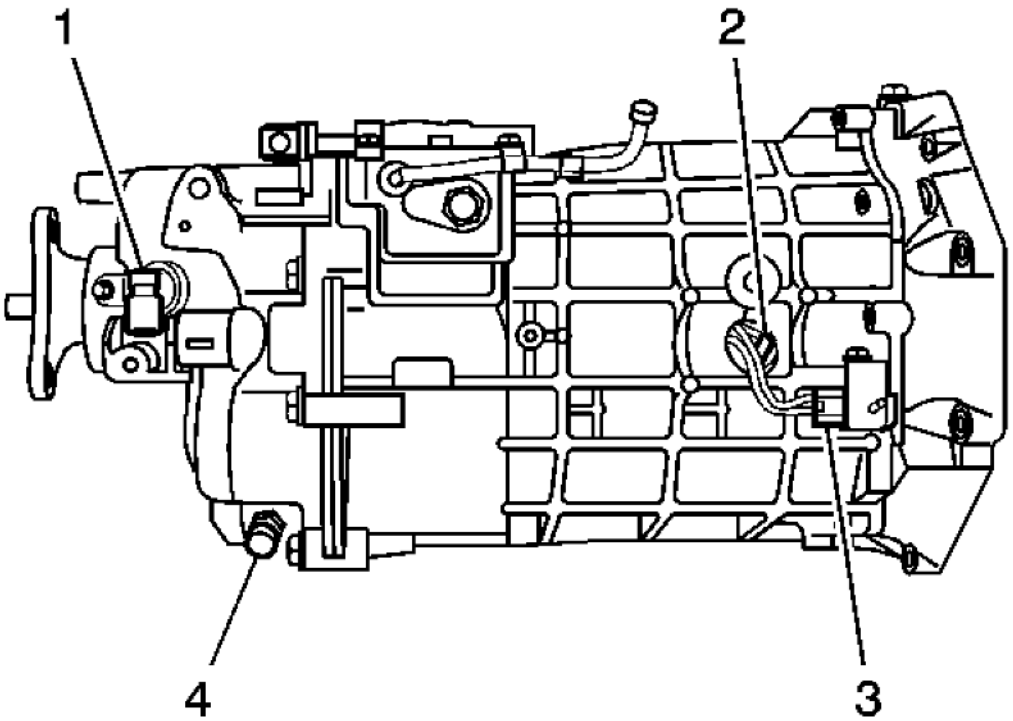

Fig. 31: Backup Lamp Switch & Electrical Connector & Vehicle Speed Sensor
Courtesy of GENERAL MOTORS CORP.

1. Install the vehicle speed sensor (1).

CAUTION: Refer to Fastener Caution .

2. Install the vehicle speed sensor bolt and tighten to 10 N.m (89 lb in).
3. Connect the vehicle speed sensor electrical connector.
4. Lower the vehicle.

REVERSE LOCKOUT SOLENOID REPLACEMENT

Special Tools

J 41099 Skip Shift Sensor Remover/Installer. See **Special Tools**.

Removal Procedure

cardiagn.com

1. Raise and suitably support the vehicle. Refer to **Lifting and Jacking the Vehicle**
2. Remove the exhaust system. Refer to **Exhaust Muffler with Resonator, Exhaust, and Tail Pipe Replacement (H-Pipe)** or **Exhaust Muffler with Resonator, Exhaust, and Tail Pipe Replacement (Vehicle Service)**
3. Support the transmission with a suitable jack.
4. Remove the transmission mount. Refer to **Transmission Rear Mount Replacement**
5. Disconnect the reverse lockout solenoid electrical connector.

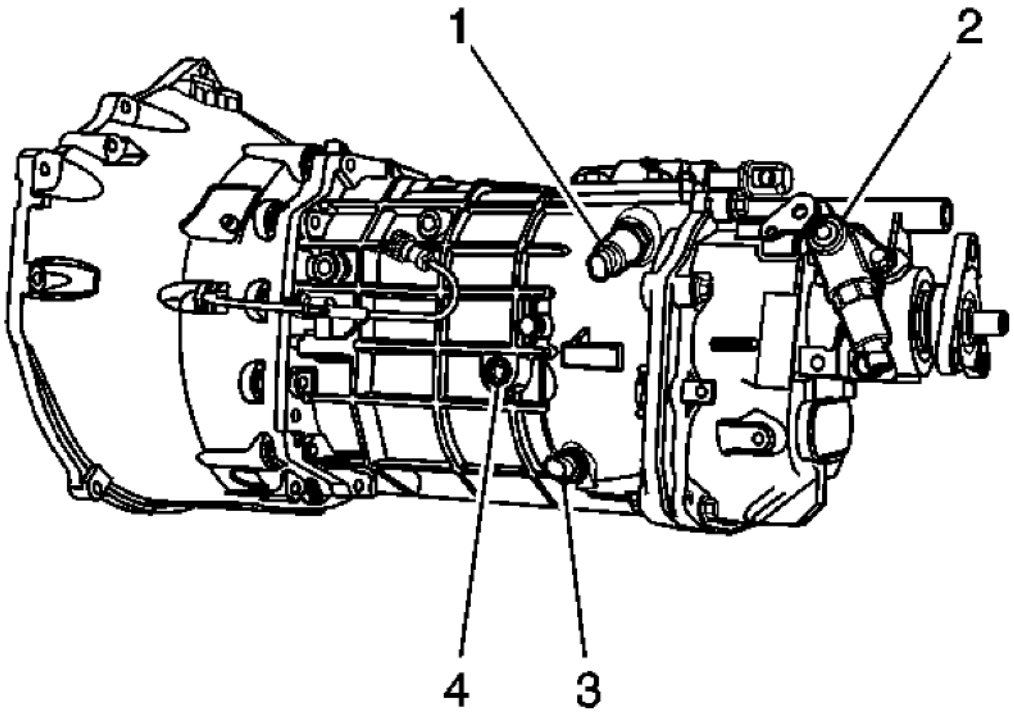

Fig. 32: TFT Sensor, Reverse Lockout Solenoid & Transmission Fluid Fill PLug
Courtesy of GENERAL MOTORS CORP.

6. Using the **J 41099** , remove the reverse lockout solenoid (2). See **Special Tools**.
7. Remove the bolt and the reverse lockout assembly, if necessary.

Installation Procedure

cardiagn.com

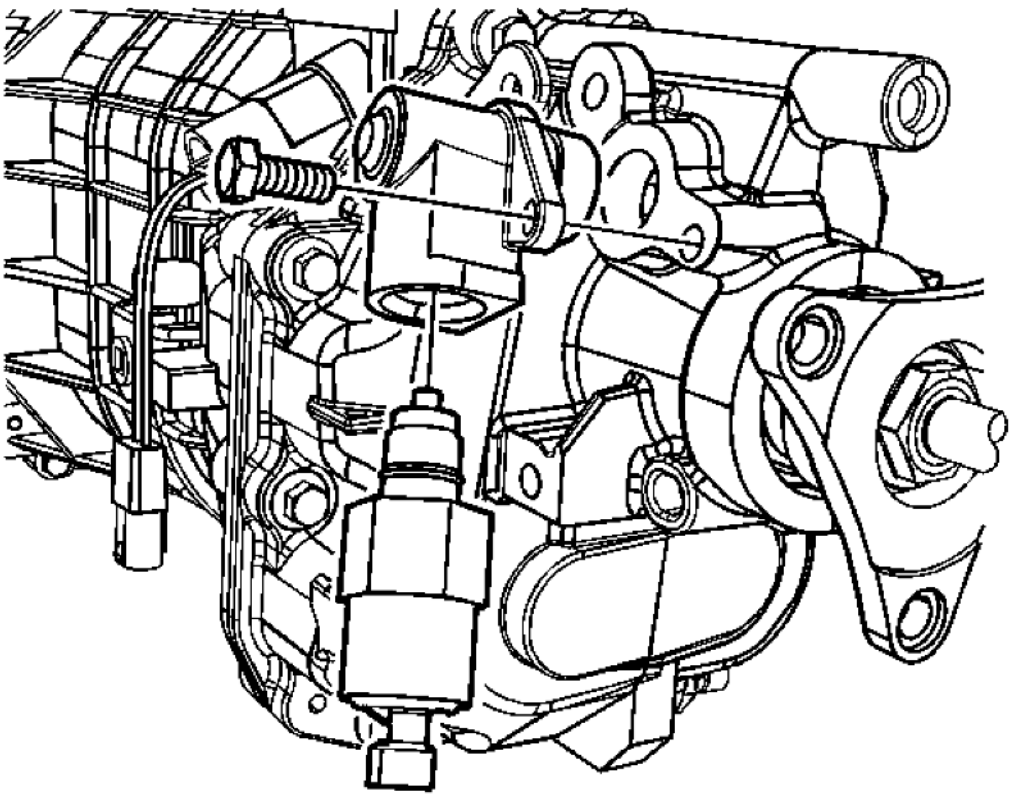

Fig. 33: Reverse Lockout Assembly
Courtesy of GENERAL MOTORS CORP.

1. If removed, inspect the reverse lockout assembly O-ring. Replace the reverse lockout assembly O-ring if necessary.

CAUTION: Refer to Fastener Caution .

2. Install the reverse lockout assembly and bolt and tighten to 18 N.m (13 lb ft).
3. Install the reverse lockout solenoid using the **J 41099** . See **Special Tools**. Inspect and replace the O-ring if necessary.

   Tighten the reverse lockout solenoid to 40 N.m (30 lb ft).

4. Connect the reverse lockout solenoid electrical connector.
5. Install the transmission mount. Refer to **Transmission Rear Mount Replacement**

cardiagn.com

6. Remove the transmission jack.
7. Install the exhaust system. Refer to **Exhaust Muffler with Resonator, Exhaust, and Tail Pipe Replacement (H-Pipe)** or **Exhaust Muffler with Resonator, Exhaust, and Tail Pipe Replacement (Vehicle Service)**
8. Lower the vehicle.

GEAR SELECT/SKIP SHIFT SOLENOID REPLACEMENT

Removal Procedure

1. Raise and suitably support the vehicle. Refer to **Lifting and Jacking the Vehicle**
2. Remove the exhaust system. Refer to **Exhaust Muffler with Resonator, Exhaust, and Tail Pipe Replacement (H-Pipe)** or **Exhaust Muffler with Resonator, Exhaust, and Tail Pipe Replacement (Vehicle Service)**
3. Remove the propeller shaft. Refer to **Two-Piece Propeller Shaft Replacement**
4. Support the transmission with a suitable jack.
5. Remove the transmission support retaining fasteners from the vehicle body.
6. Slightly lower the transmission to gain access to the solenoid.
7. Disconnect the solenoid electrical connector.

cardiagn.com

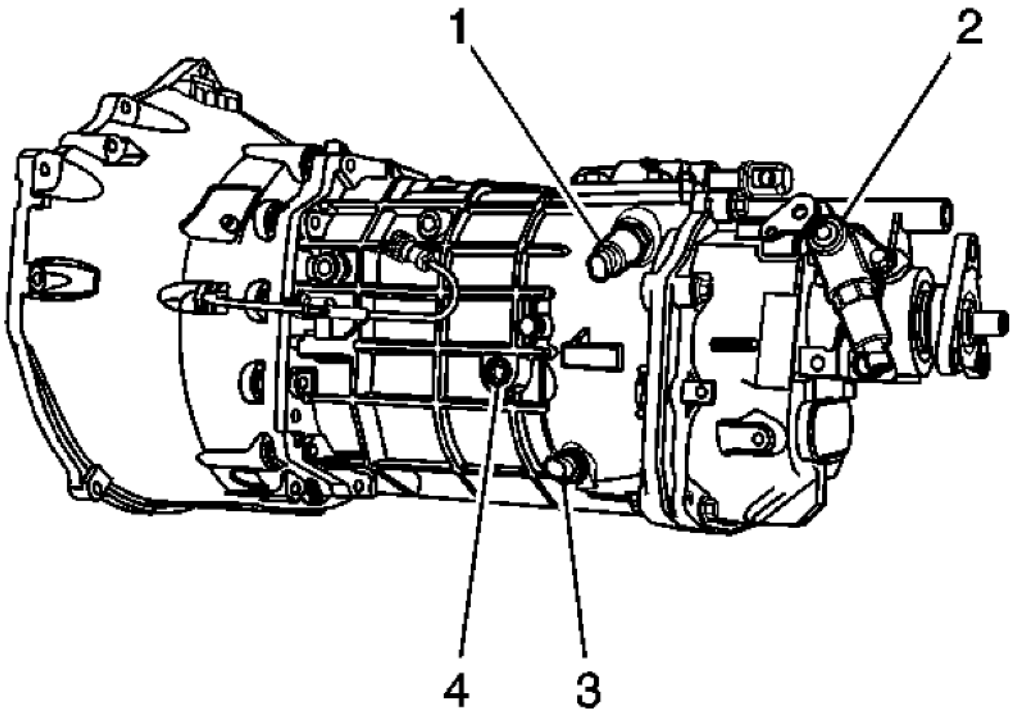

Fig. 34: TFT Sensor, Reverse Lockout Solenoid & Transmission Fluid Fill PLug
Courtesy of GENERAL MOTORS CORP.

8. Remove the solenoid (1) from the transmission.

Installation Procedure

cardiagn.com

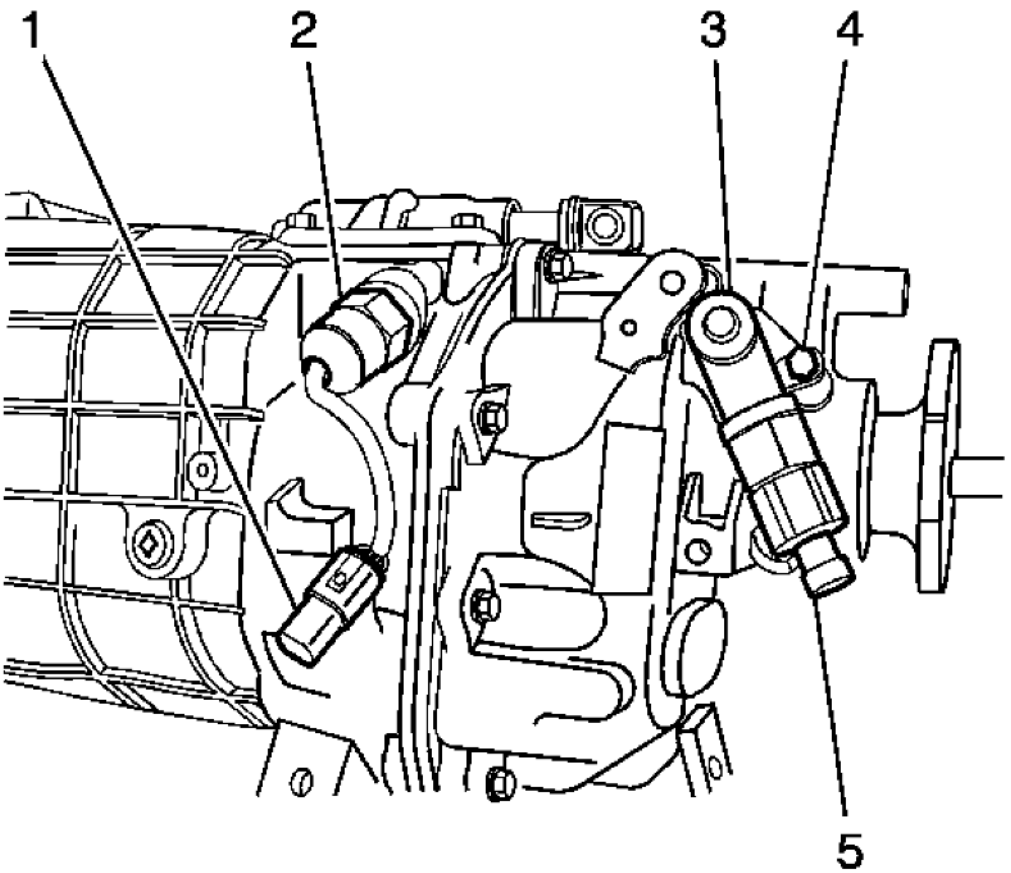

Fig. 35: Reverse Lockout Solenoid
Courtesy of GENERAL MOTORS CORP.

1. If removed, inspect the solenoid O-ring. Replace the O-ring if necessary.

CAUTION: Refer to Fastener Caution

2. Install the solenoid and tighten the solenoid to 40 N.m (30 lb ft).
3. Connect the solenoid electrical connector.
4. Install the transmission support to body retaining bolts. Refer to **Transmission Mount Replacement**
5. Remove the transmission jack.
6. Install the propeller shaft. Refer to **Two-Piece Propeller Shaft Replacement**
7. Install the exhaust system.

cardiagn.com

8. Lower the vehicle.

TRANSMISSION FLUID REPLACEMENT

Draining Procedure

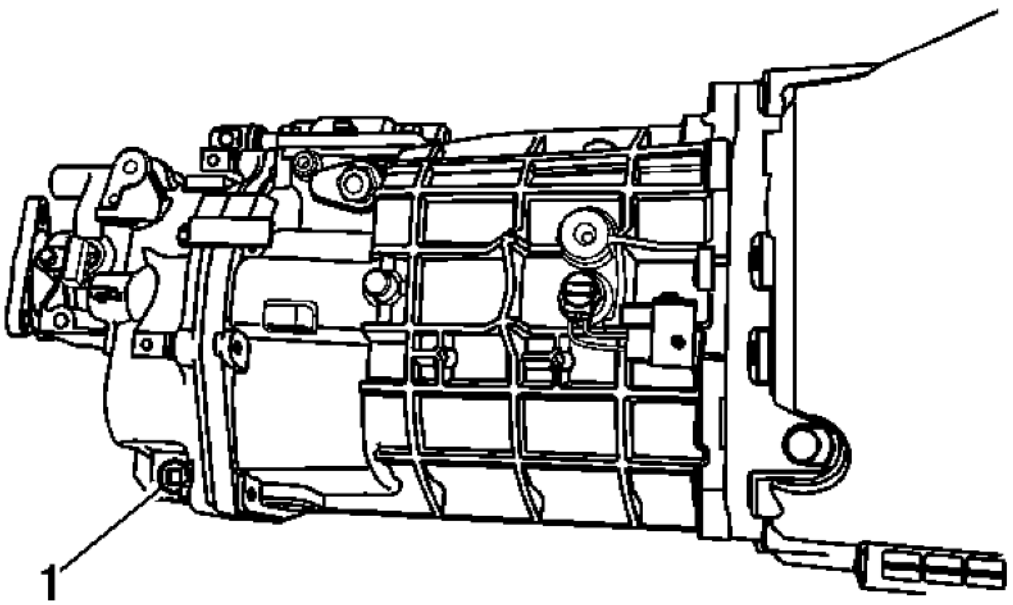

Fig. 36: Transmission Drain Plug Area
Courtesy of GENERAL MOTORS CORP.

1. Raise and suitably support the vehicle. Refer to **Lifting and Jacking the Vehicle**
2. Clean away all dirt and debris from the transmission drain plug area (1).
3. Place a suitable drain pan under the transmission.
4. Remove the drain plug (1).
5. Allow the system to drain.

CAUTION: Refer to Fastener Caution .

6. Install the transmission drain plug (1) and tighten to 18 N.m (13 lb ft).

Filling Procedure

cardiagn.com

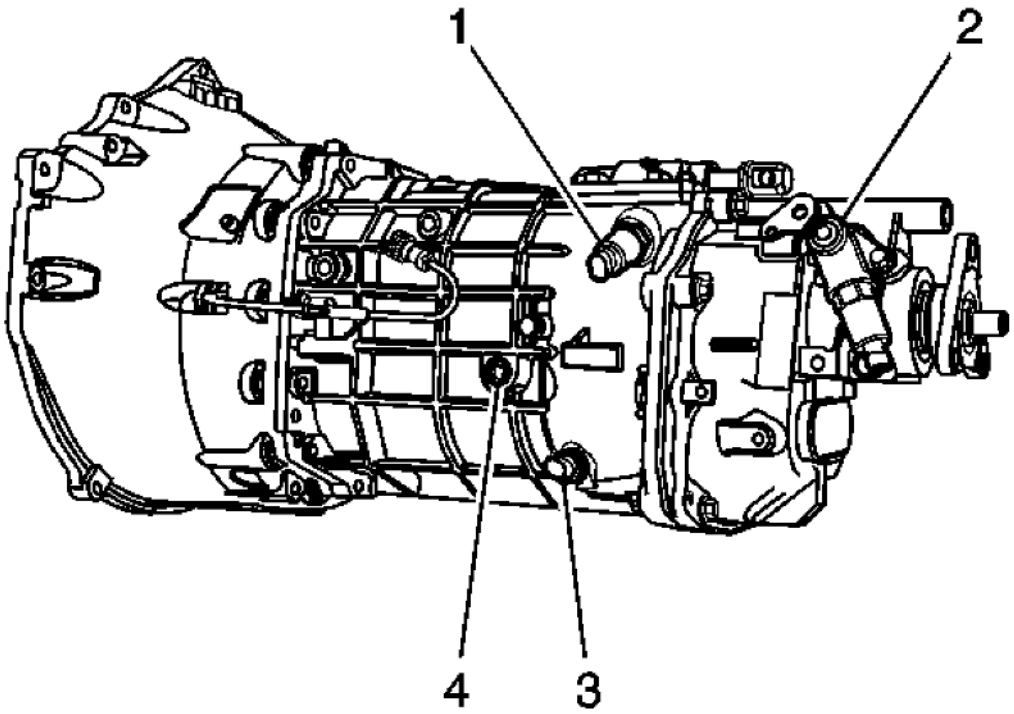

Fig. 37: TFT Sensor, Reverse Lockout Solenoid & Transmission Fluid Fill PLug
Courtesy of GENERAL MOTORS CORP.

1. Clean away all dirt and debris from the transmission fluid fill plug area.
2. Remove the transmission fluid fill plug (4).
3. Fill the transmission with the recommended transmission fluid, until even with the bottom of the fill plug hole.
4. Install the transmission fluid fill plug and tighten to 18 N.m (13 lb ft).
5. Remove the drain pan.
6. Lower the vehicle.

TRANSMISSION REPLACEMENT

Removal Procedure

1. Raise and support the vehicle. Refer to **Lifting and Jacking the Vehicle** .
2. Remove the exhaust system. Refer to **Exhaust Muffler with Resonator, Exhaust, and Tail Pipe Replacement (H-Pipe)** or **Exhaust Muffler with Resonator, Exhaust, and Tail Pipe Replacement (Vehicle Service)** .

cardiagn.com

3. Remove both front catalytic converters. Refer to **Catalytic Converter Replacement - Left Side (LLT)** or **Catalytic Converter Replacement - Left Side (L99/LS3)** and **Catalytic Converter Replacement - Right Side (LLT)** or **Catalytic Converter Replacement - Right Side (L99/LS3)** .
4. Remove the propeller shaft from the vehicle. Refer to **Two-Piece Propeller Shaft Replacement** .
5. Support the transmission with a suitable jack.
6. Remove the transmission support. Refer to **Transmission Mount Replacement** .
7. Lower the transmission assembly to gain access to the top of the transmission.
8. Disconnect the shift control assembly from the transmission. Refer to **Shift Control Assembly Replacement** .
9. Disconnect the following electrical connectors:
    - Transmission fluid temperature (TFT) sensor
    - Backup lamp switch
    - Vehicle speed sensor (VSS)
    - Reverse lockout solenoid
    - Gear select/skip shift solenoid
10. Disconnect the clutch hydraulic hose.

cardiagn.com

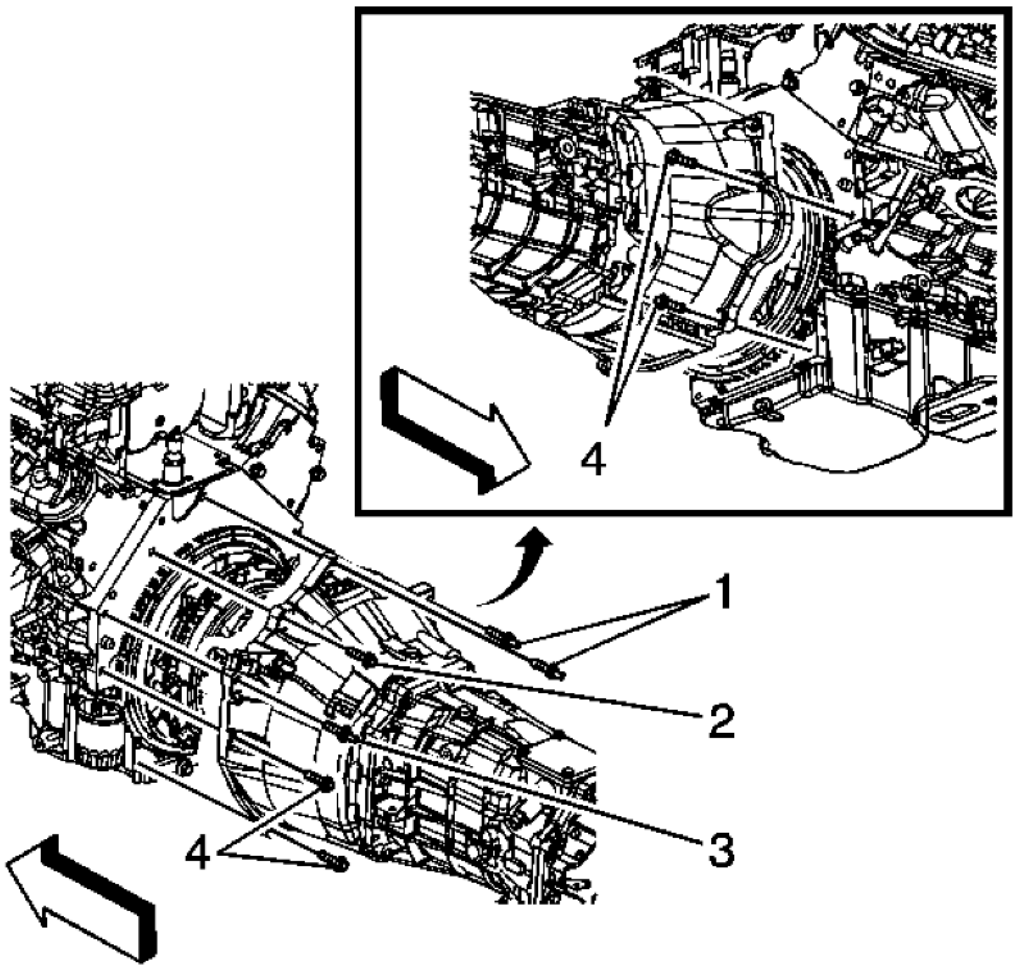

Fig. 38: Identifying Transmission Clutch Housing To Engine Bolts & Studs
Courtesy of GENERAL MOTORS CORP.

11. Remove the transmission clutch housing to engine fasteners (1, 4).
12. Remove the transmission from the vehicle.

Installation Procedure

1. Install the transmission to the vehicle.

cardiagn.com

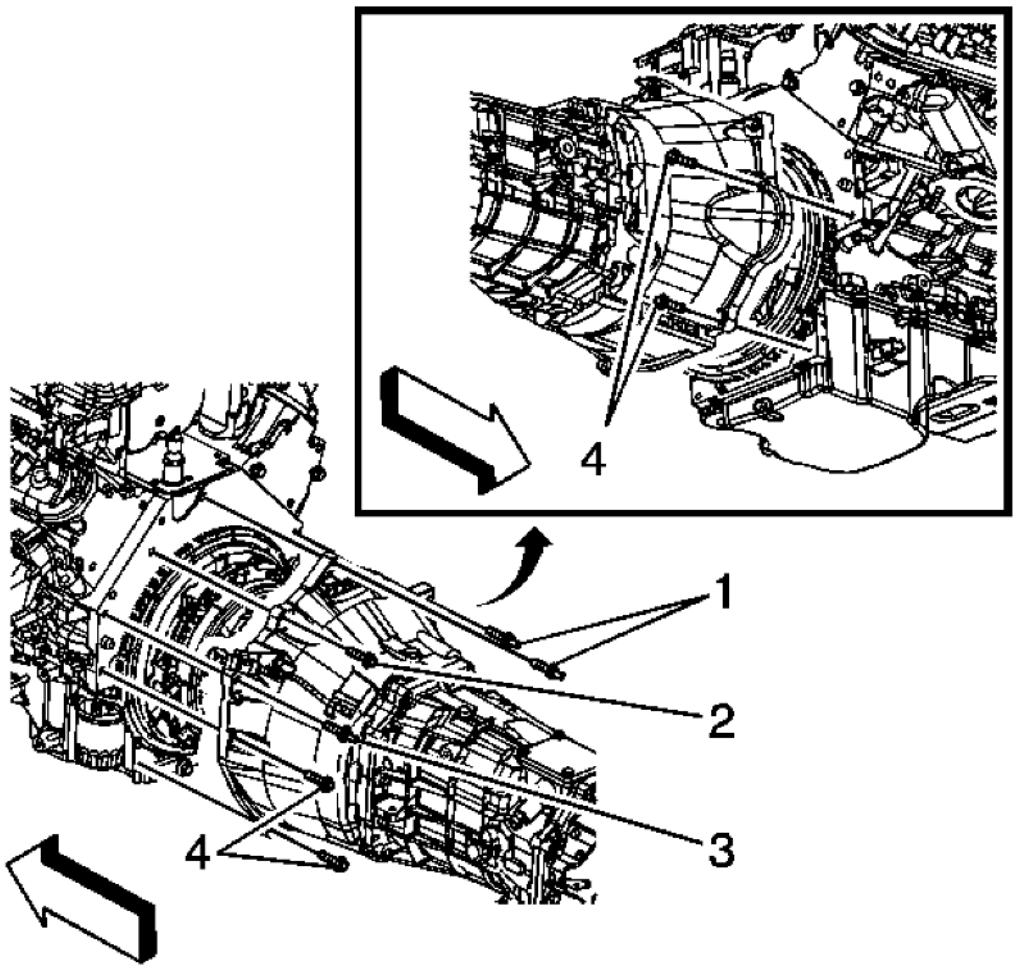

Fig. 39: Identifying Transmission Clutch Housing To Engine Bolts & Studs
Courtesy of GENERAL MOTORS CORP.

CAUTION: Refer to Fastener Caution .

2. Install the transmission clutch housing to engine bolts and studs (1, 4) and tighten to 50 N.m (37 lb ft).
3. Connect the clutch hydraulic hose to the transmission.
4. Raise the transmission back into place.
5. Connect the shift control assembly to the transmission. Refer to **Shift Control Assembly Replacement** .
6. Connect the following electrical connectors:
    - TFT sensor

cardiagn.com

- Backup lamp switch
- Vehicle Speed Sensor
- Reverse lockout solenoid
- Gear select/skip shift solenoid

CAUTION: Care should be taken when raising the transmission so that the shifter boot does not get damaged.

7. Raise the transmission assembly.
8. Install the transmission support. Refer to **Transmission Mount Replacement** .
9. Remove the transmission jack.
10. Install the propeller shaft. Refer to **Two-Piece Propeller Shaft Replacement** .
11. Check the transmission fluid and fill as necessary.
12. Install both front catalytic converters. Refer to **Catalytic Converter Replacement - Left Side (LLT)** or **Catalytic Converter Replacement - Left Side (L99/LS3)** and **Catalytic Converter Replacement - Right Side (LLT)** or **Catalytic Converter Replacement - Right Side (L99/LS3)** .
13. Install the exhaust system. Refer to **Exhaust Muffler with Resonator, Exhaust, and Tail Pipe Replacement (H-Pipe)** or **Exhaust Muffler with Resonator, Exhaust, and Tail Pipe Replacement (Vehicle Service)** .
14. Lower the vehicle.

REPAIR INSTRUCTIONS - OFF VEHICLE

TRANSMISSION DISASSEMBLE

Special Tools

- **DT 47678:** Transmission Holding Flange
- **DT 47678-10:** Transmission Holding Flange Adapter
- **DT 49139:** Hub Remover Tool
- **DT 49293:** Gear Select/Skip Shift Solenoid Socket
- **J 6125-1B:** Slider Hammer
- **J 8433:** Universal Bridge Puller
- **J 3289-20:** Holding Fixture
- **J 22888-20A:** Puller
- **J 23907:** Slide Hammer
- **J 36017:** Valve Seal Remover
- **J 38416-B:** Harmonic Balancer Remover
- **J 39431:** 5th/6th Driven Gear Puller
- **J 39431-3:** 5th Gear Puller Adapter Bolts

cardiagn.com

- **J 41816:** Crankshaft Balancer Remover
- **J 44873-3:** Mounting Bolts
- **J 45012:** Holding Fixture

For equivalent regional tools, refer to **Special Tools**.

Extension Housing Removal

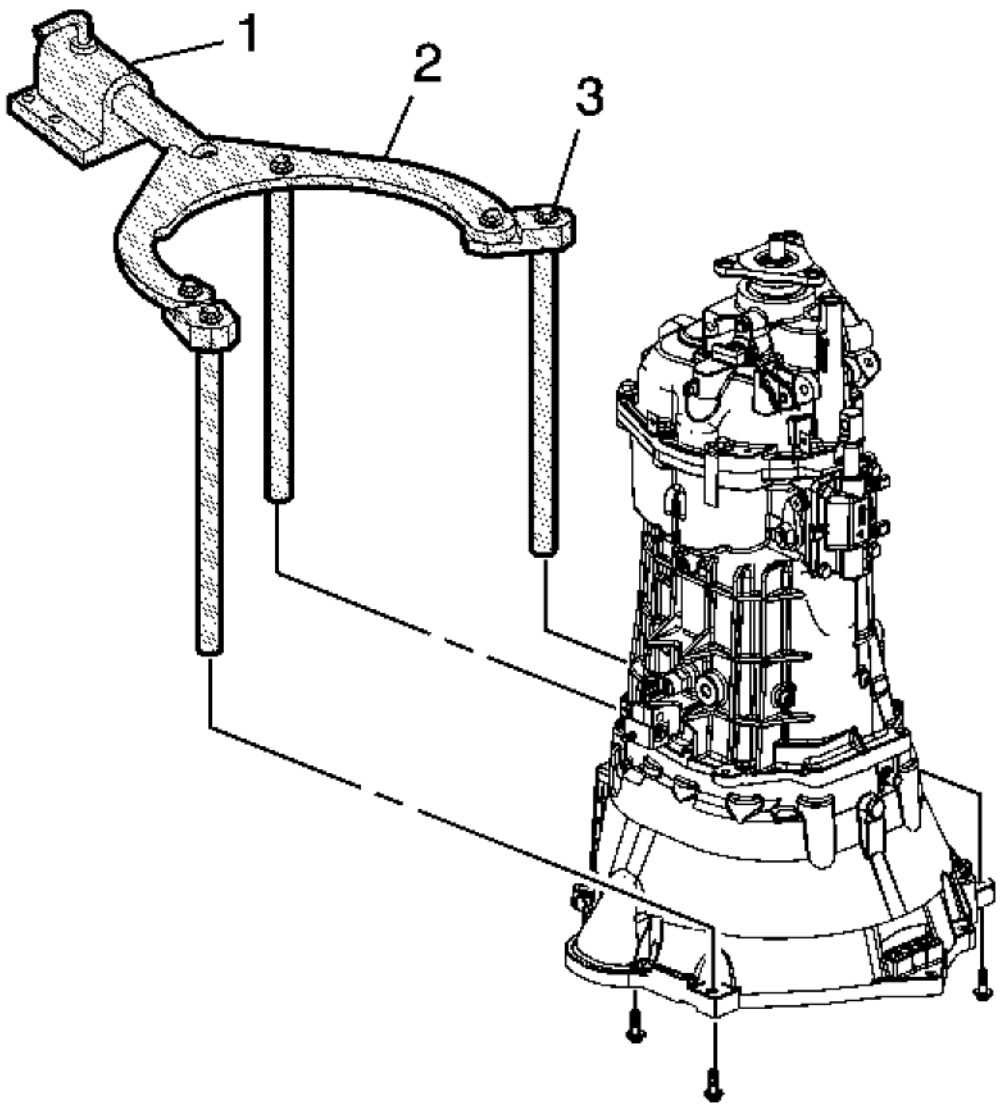

cardiagn.com

Fig. 40: Transmission Holding Fixture Components
Courtesy of GENERAL MOTORS CORP.

1. Install the **DT 47678:** flange (2) and the **DT 47678-10:** flange adapter (3).
2. Mount the transmission on a workbench using the **J 3289-20:** holding fixture (1).
3. Rotate the transmission into a horizontal position.
4. Remove the transmission drain plug and drain the transmission fluid.
5. Shift the transmission into NEUTRAL (N).

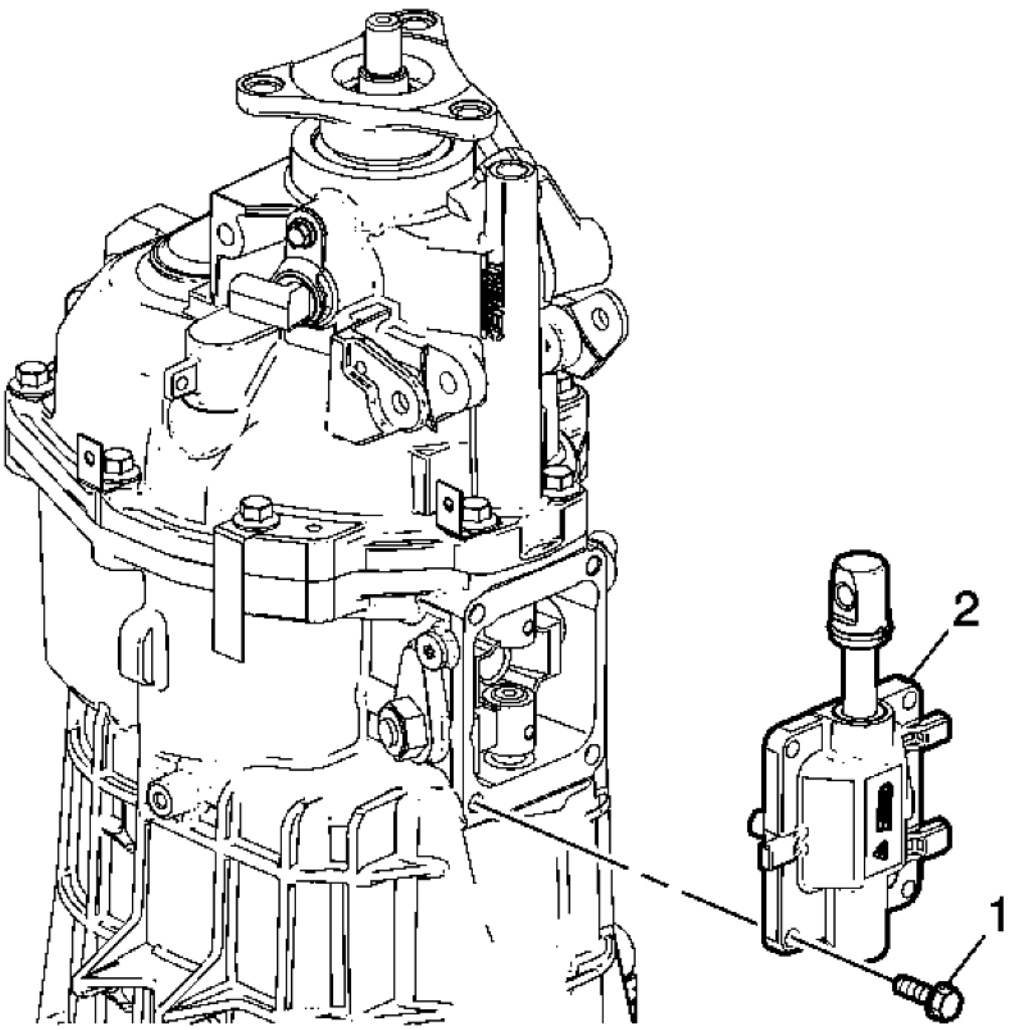

Fig. 41: Shift Control Cover & Bolts
Courtesy of GENERAL MOTORS CORP.

cardiagn.com

6. Remove the shift control cover bolts (1).
7. Remove the shift control cover (2).

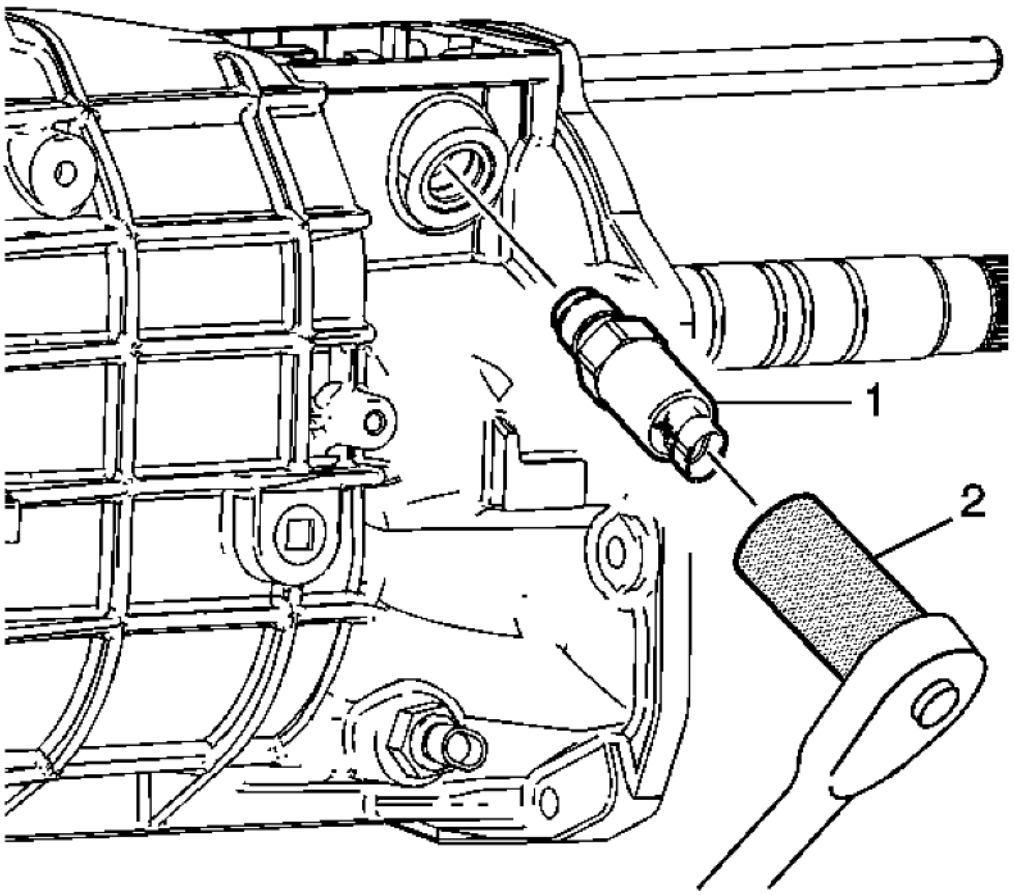

Fig. 42: Removing/Installing Gear Select/Skip Shift Solenoid
Courtesy of GENERAL MOTORS CORP.

8. Remove the gear select/skip shift solenoid (1) using **DT 49293:** socket (2).

cardiagn.com

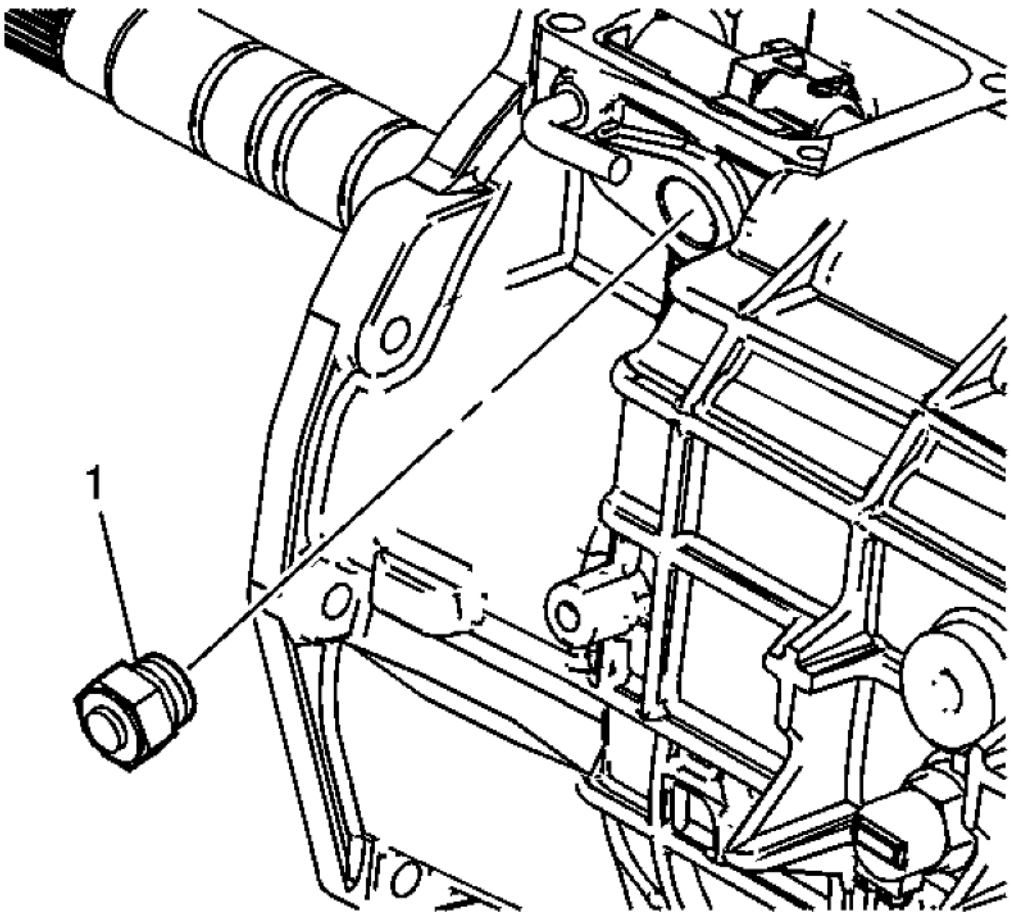

Fig. 43: Identifying Shift Detent Assembly
Courtesy of GENERAL MOTORS CORP.

9. Remove the shift detent assembly (1).

cardiagn.com

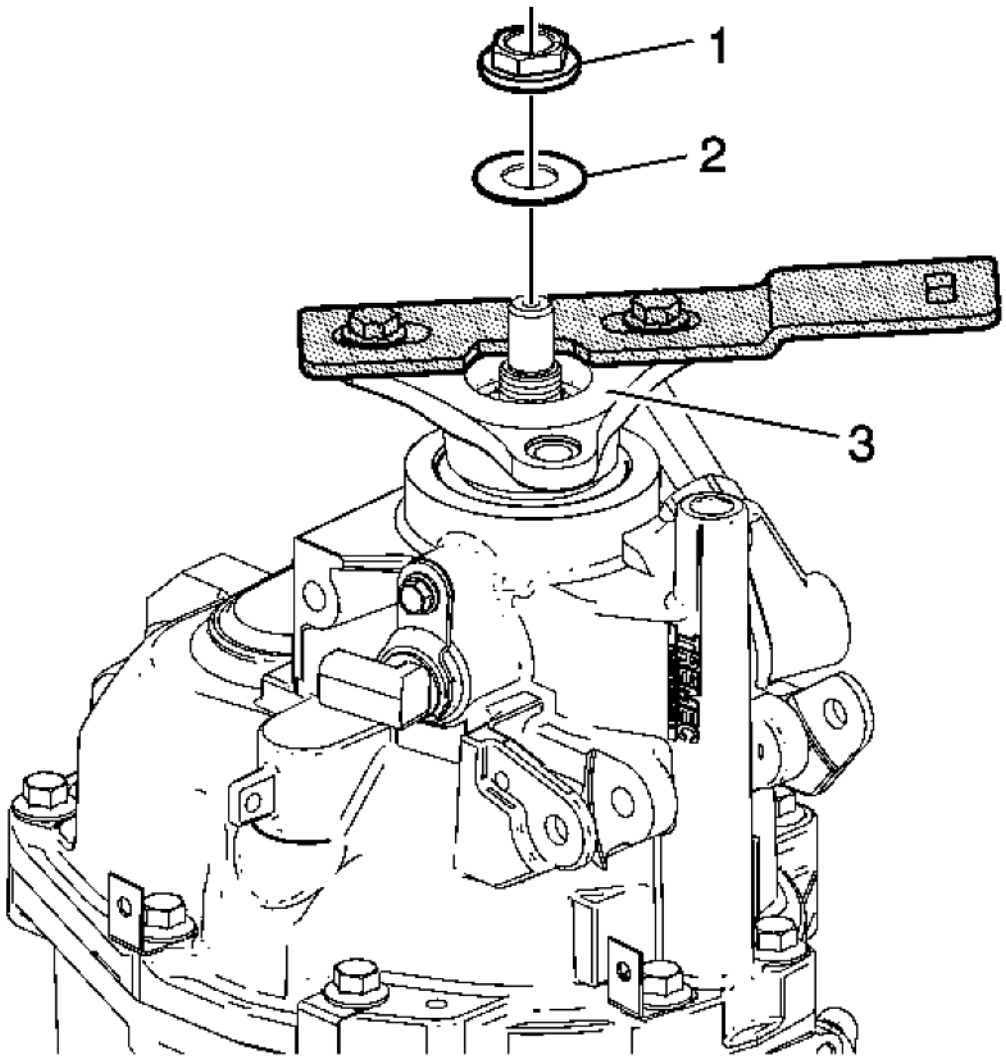

Fig. 44: Propshaft Transmission Yoke, Nut & Washer
Courtesy of GENERAL MOTORS CORP.

10. Install the **J 45012:** holder with the mounting bolts to the propshaft transmission yoke (3).
11. Using a socket wrench, remove the propshaft transmission yoke nut (1).
12. Remove the propshaft transmission yoke washer (2).

cardiagn.com

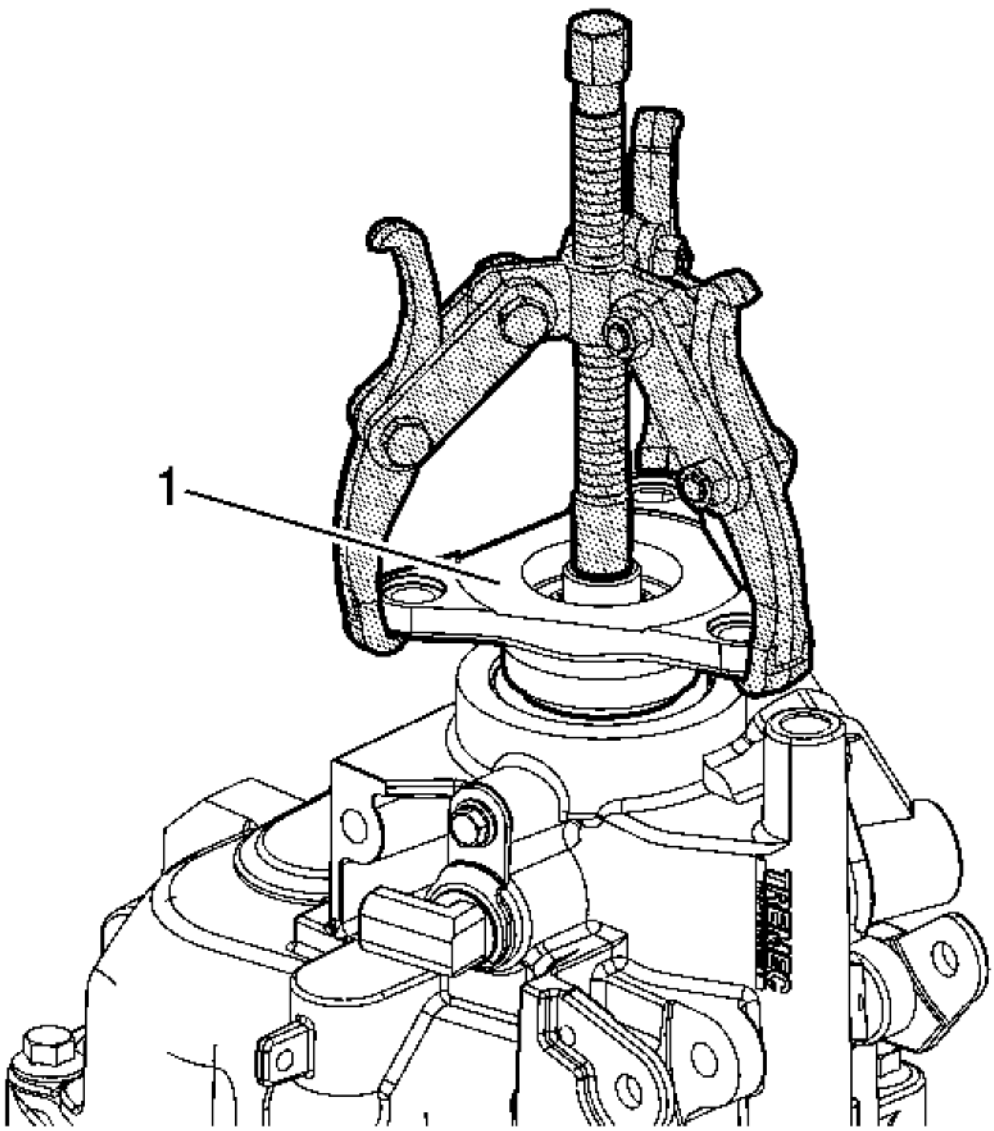

Fig. 45: Removing Propshaft Transmission Yoke
Courtesy of GENERAL MOTORS CORP.

13. Using **J 41816:** 3 jaw puller, remove the propshaft transmission yoke (1).

cardiagn.com

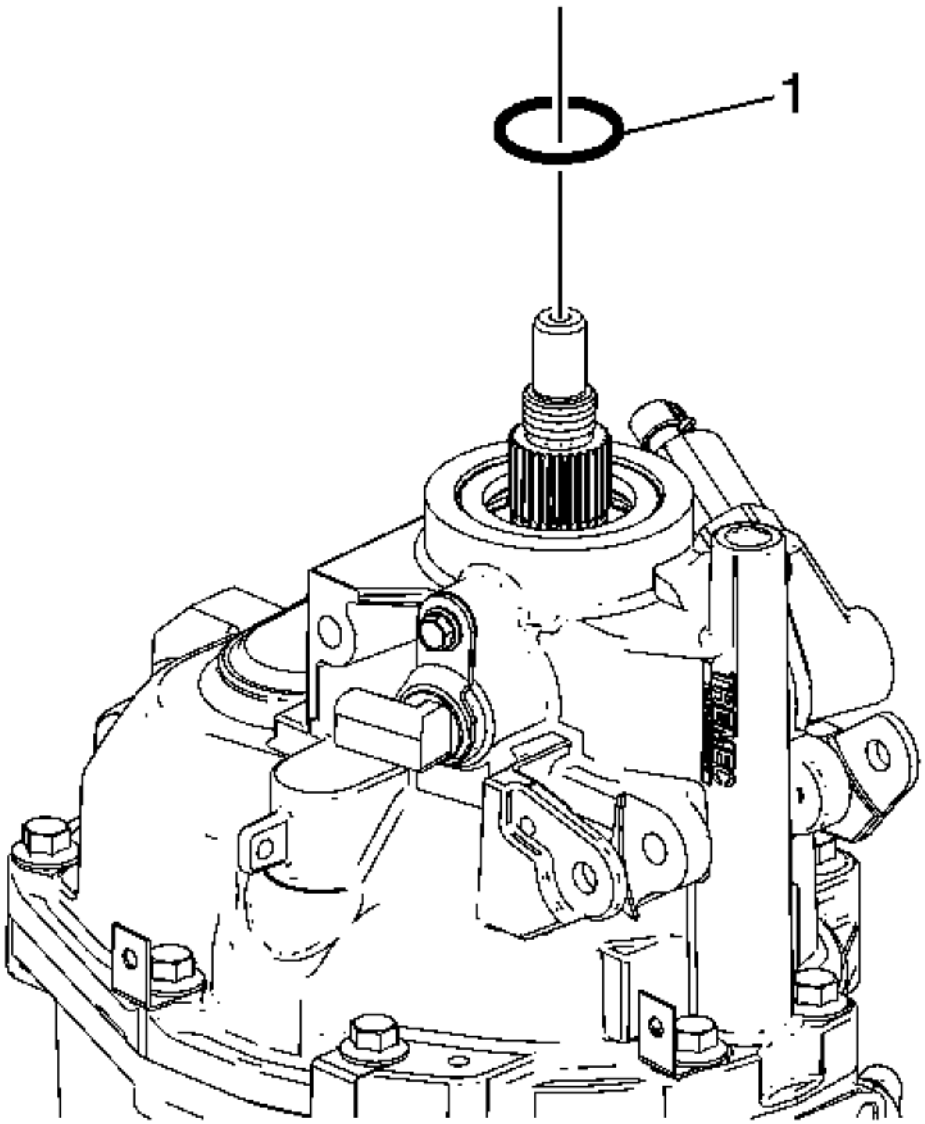

Fig. 46: Propshaft Transmission Yoke O-Ring
Courtesy of GENERAL MOTORS CORP.

14. Remove the O-ring (1) from propshaft or propshaft transmission yoke.

cardiagn.com

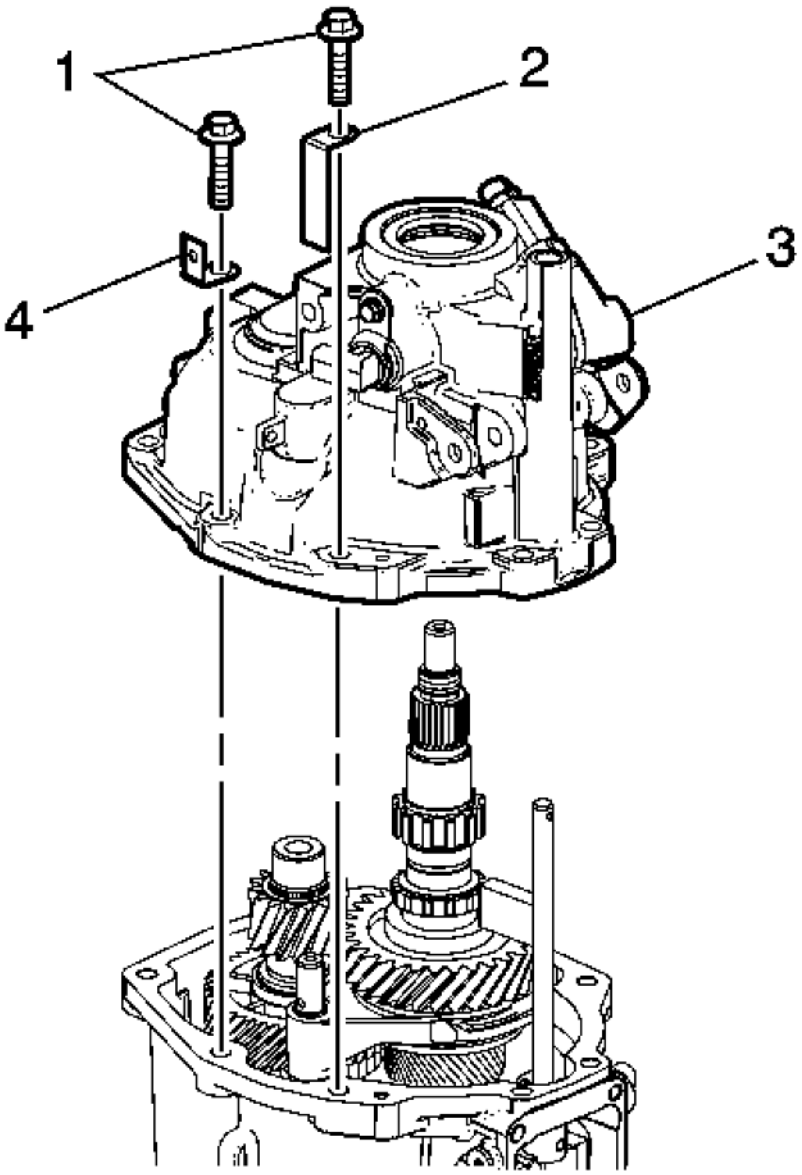

Fig. 47: Rear Extension Housing, Bolts, & Retainers
Courtesy of GENERAL MOTORS CORP.

15. Remove the rear extension housing bolts (1), retainers (2, 4) and the rear extension housing (3).

Reverse Speed Gear Removal

cardiagn.com

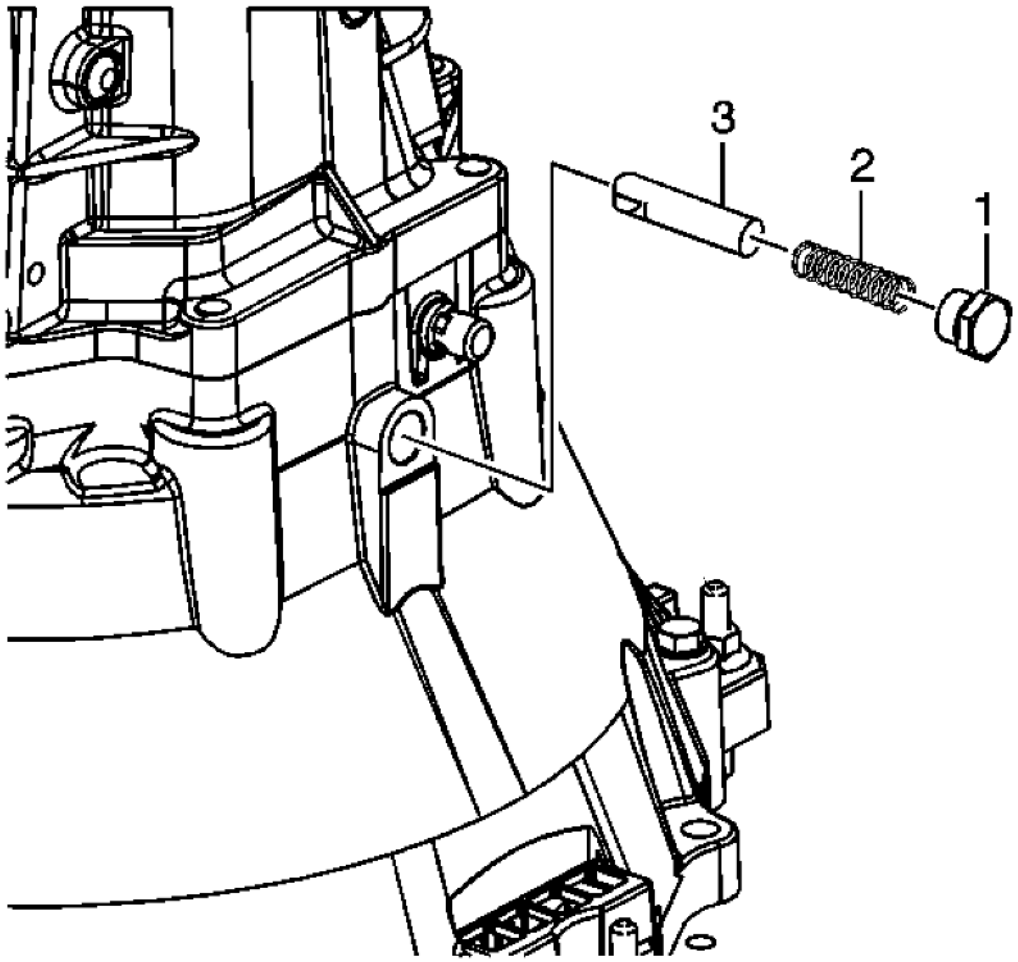

Fig. 48: Identifying Plug, Spring & Shift Detent Roller
Courtesy of GENERAL MOTORS CORP.

1. Remove the plug (1), spring (2), and shift detent roller (3).

cardiagn.com

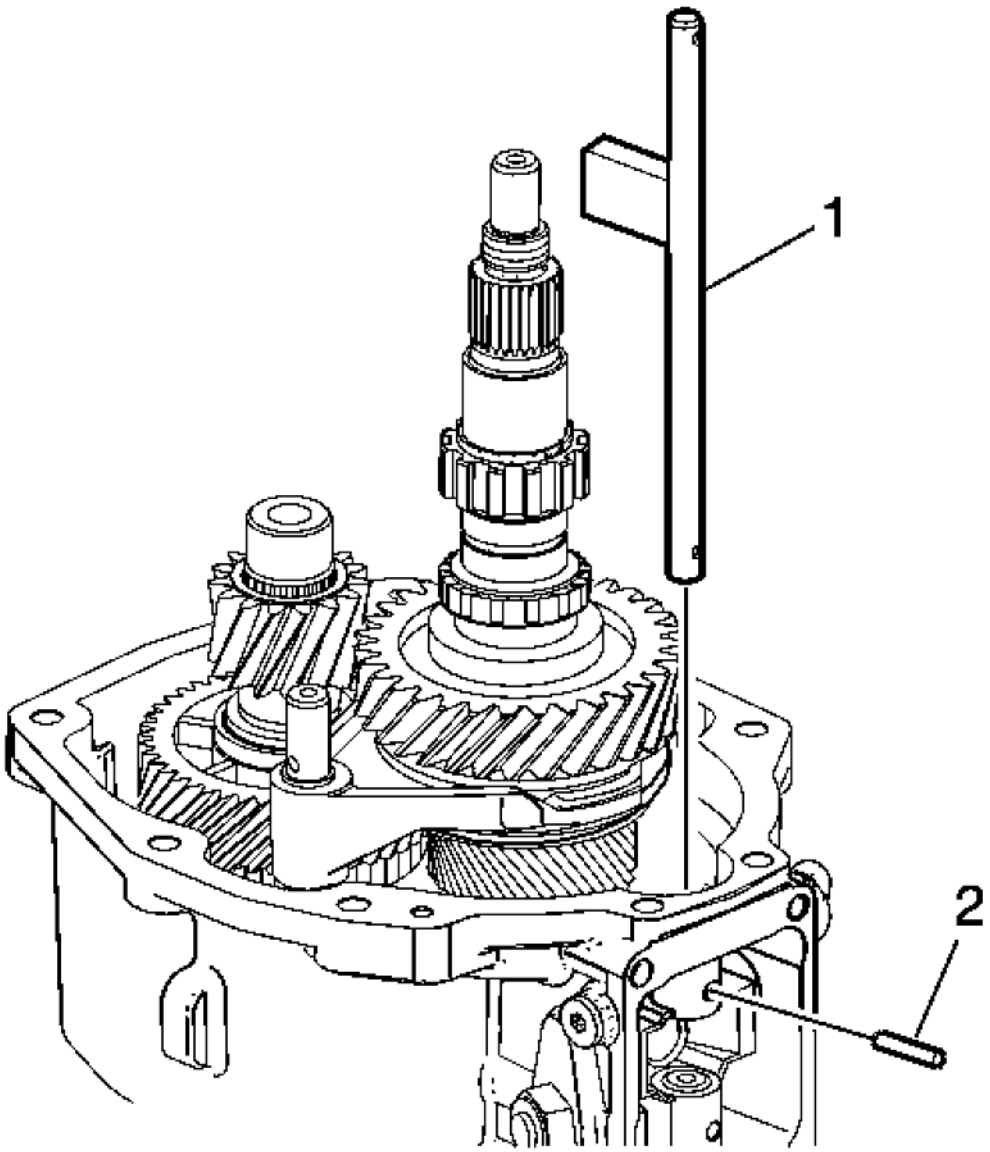

Fig. 49: Offset Shift Lever & Shift Guide Rollpin
Courtesy of GENERAL MOTORS CORP.

2. Remove the shift guide rollpin (2). Drive into the housing and remove with guide.
3. Remove the offset shift lever (1).

cardiagn.com

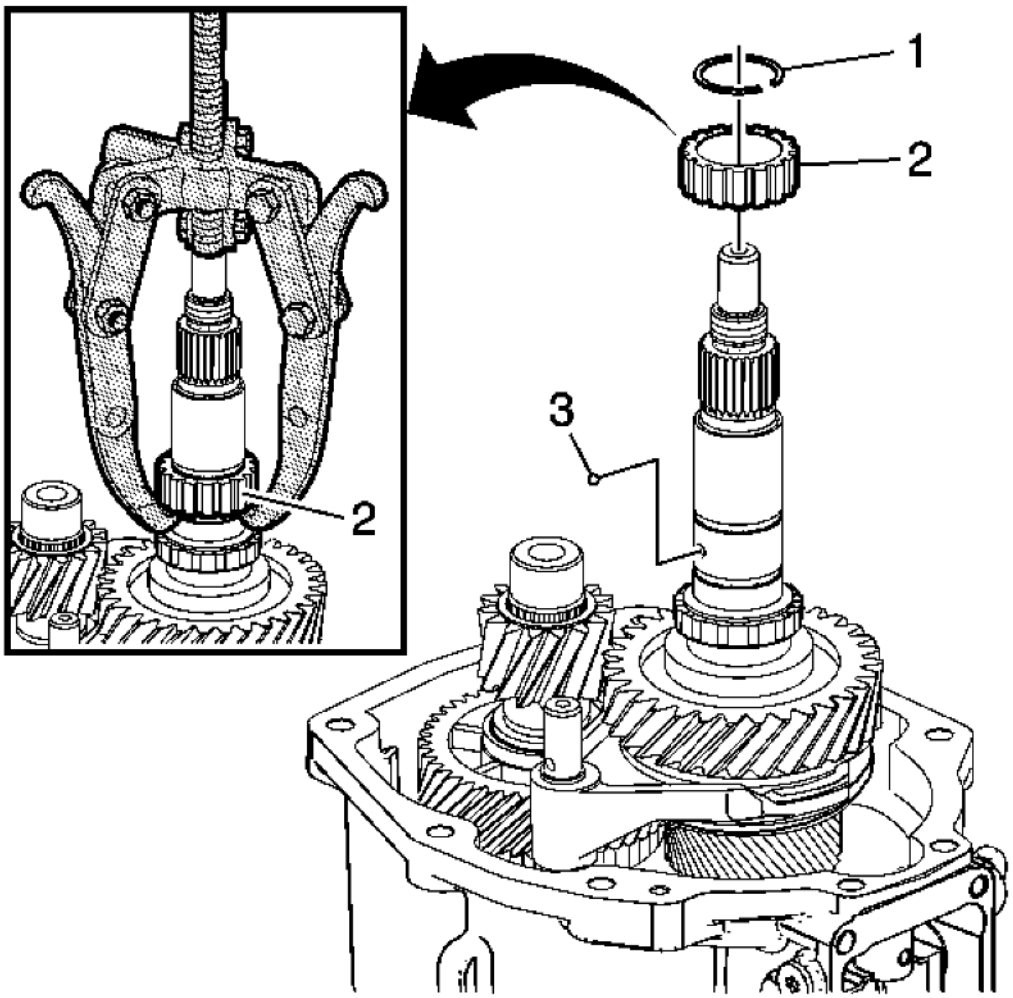

Fig. 50: Retaining Ring, Speed Sensor Rotor & Locking Ball
Courtesy of GENERAL MOTORS CORP.

4. Remove the retaining ring (1).
5. Using **J 38416-B:** 3 jaw puller, remove the speed sensor rotor (2).
6. Remove the locking ball (3).

cardiagn.com

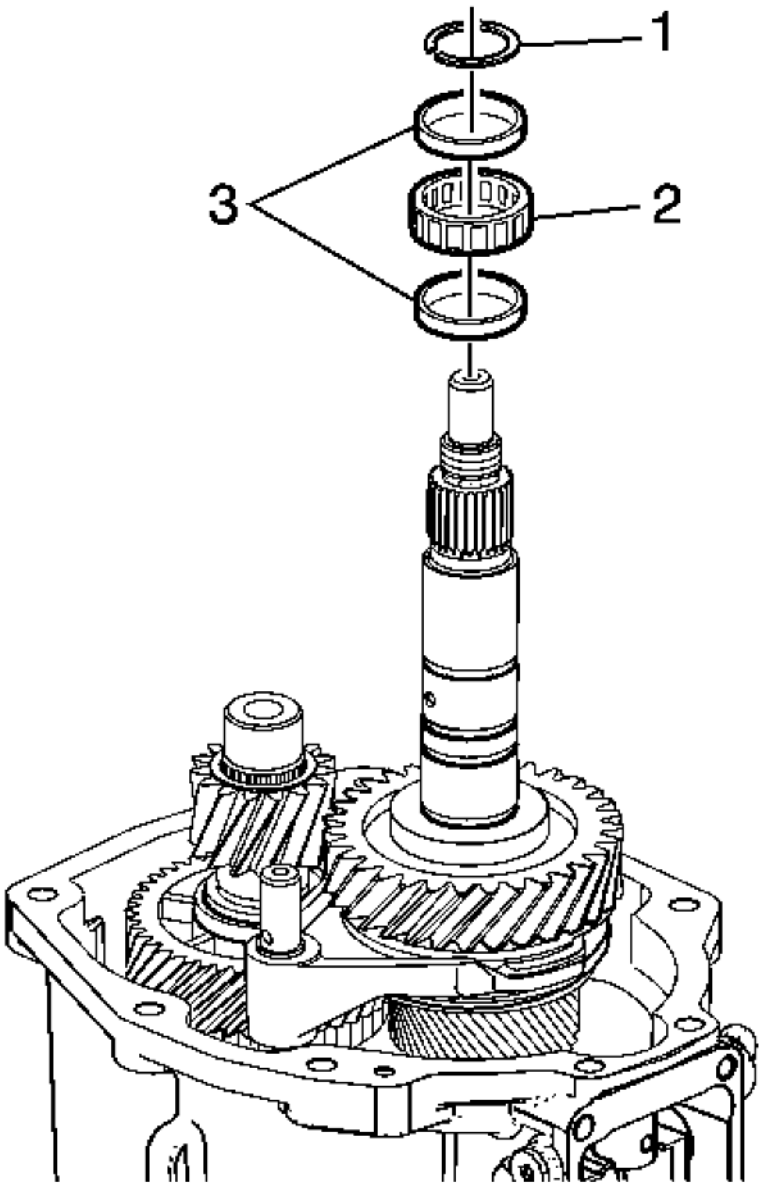

Fig. 51: Rear Bearing Retainer Ring, Spacers & Mainshaft Rear Roller Bearing
Courtesy of GENERAL MOTORS CORP.

7. Remove the rear bearing retainer ring (1).
8. Remove the spacer (3).
9. Remove the mainshaft rear roller bearing (2).

cardiagn.com

10. Remove the spacer (3).

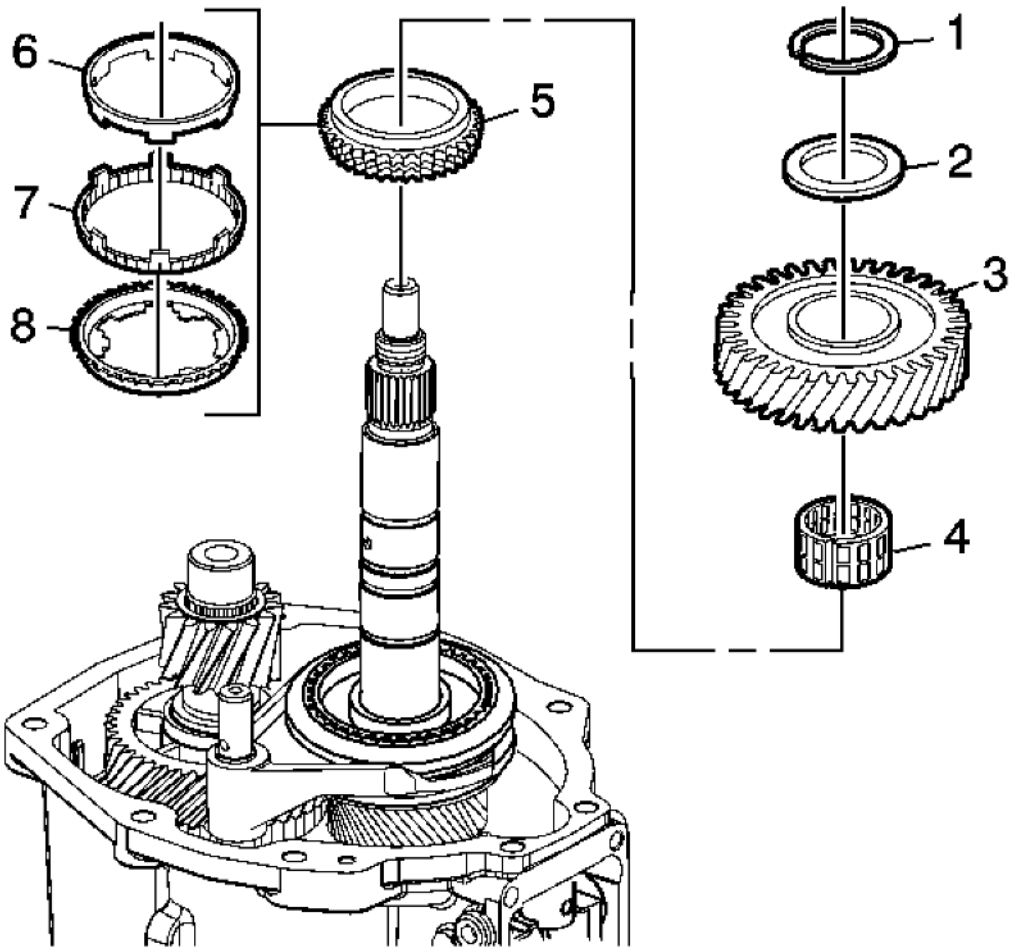

Fig. 52: Reverse Gear Components
Courtesy of GENERAL MOTORS CORP.

11. Remove the retainer ring (1).
12. Remove the reverse gear thrust washer (2).
13. Remove the reverse gear (3).
14. Remove the reverse gear caged needle bearing (4).
15. Remove the reverse gear blocking ring assembly (5), which includes the following components:
    1. Reverse drive gear inner cone (6)
    2. Reverse drive gear outer cone (7)

cardiagn.com

3. Reverse gear blocking ring (8)

Reverse Shift Fork Removal

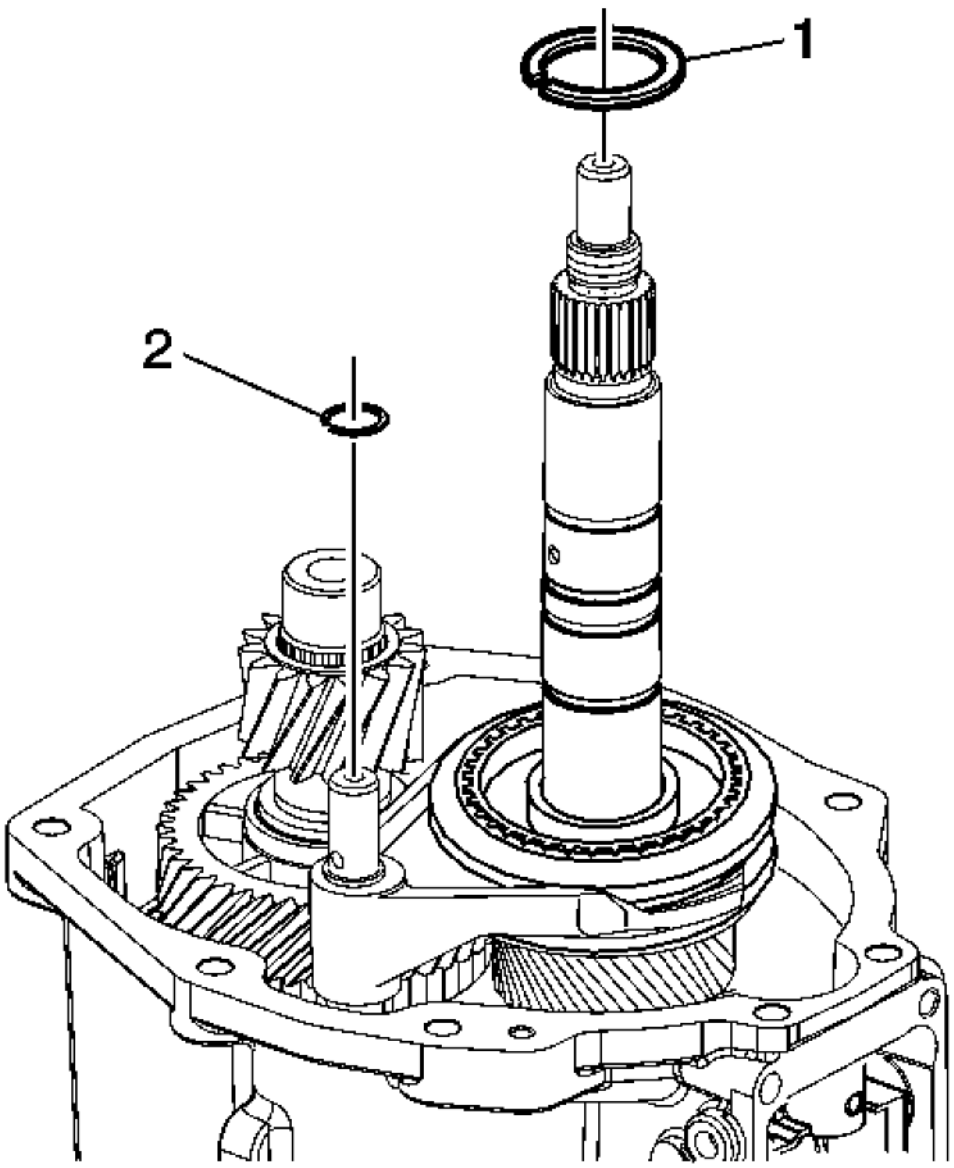

Fig. 53: Reverse Synchronizer & Reverse Shift Fork Retainer Rings
Courtesy of GENERAL MOTORS CORP.

cardiagn.com

1. Remove the reverse synchronizer retainer ring (1).
2. Remove and discard the reverse shift fork retainer ring (2).

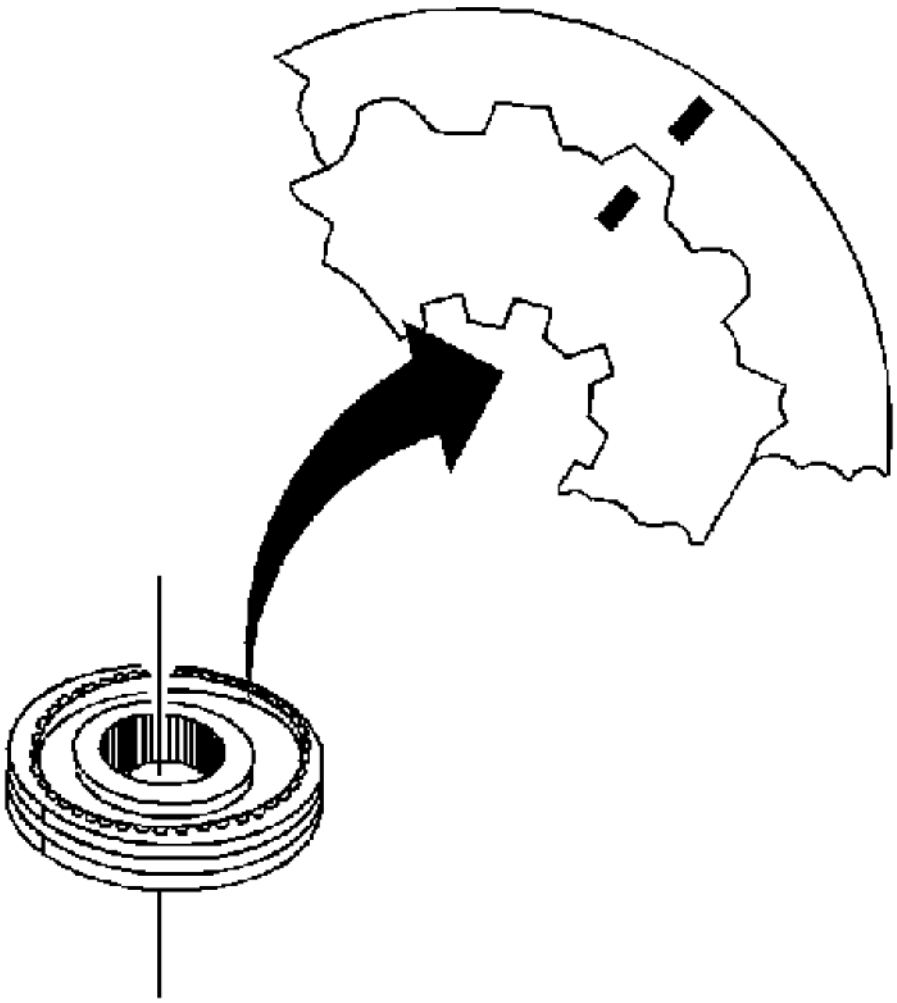

Fig. 54: View Of Alignment Marks On Synchronizer Hub & Synchronizer Sleeve
Courtesy of GENERAL MOTORS CORP.

3. Scribe a mark on the synchronizer hub and on the sleeve. This will help you to reinstall the parts in the same position.

cardiagn.com

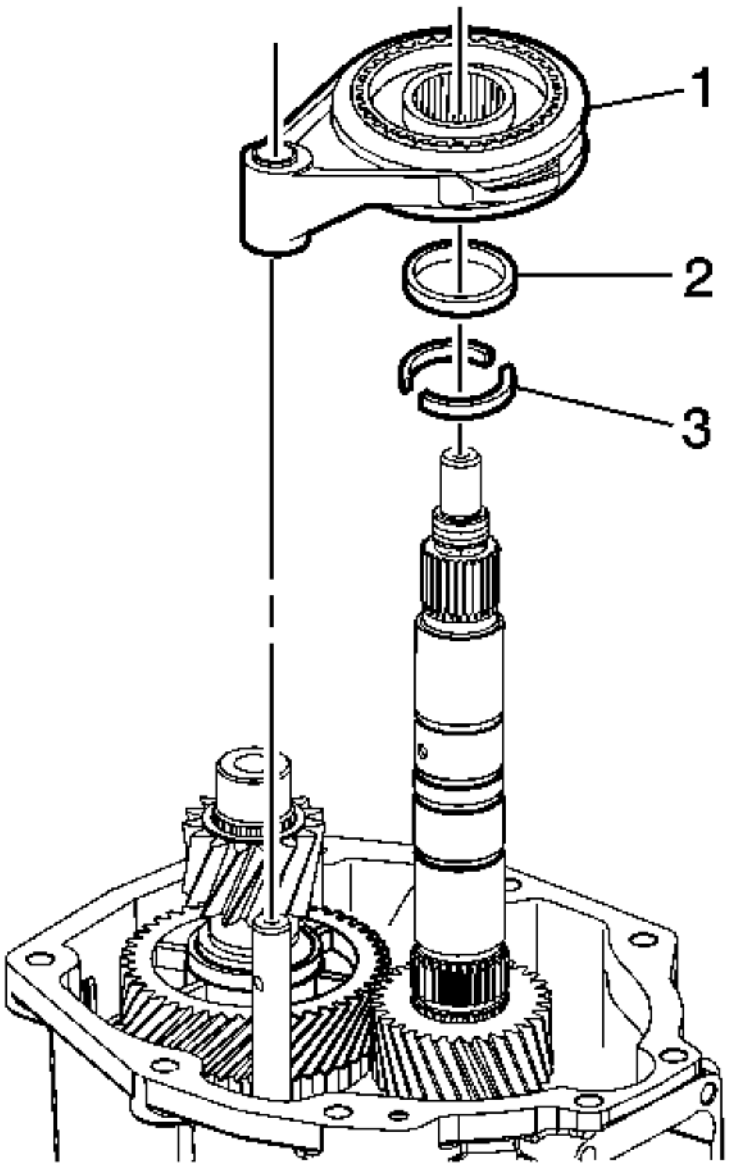

Fig. 55: Reverse Shift Fork Components
Courtesy of GENERAL MOTORS CORP.

4. Remove the reverse shift fork and synchronizer (1) and inserts.
5. Pry to remove the reverse synchronizer hub.
6. Remove the locking ring (2).

cardiagn.com

7. Remove the two piece thrust washer (3).

Countershaft Gear Removal

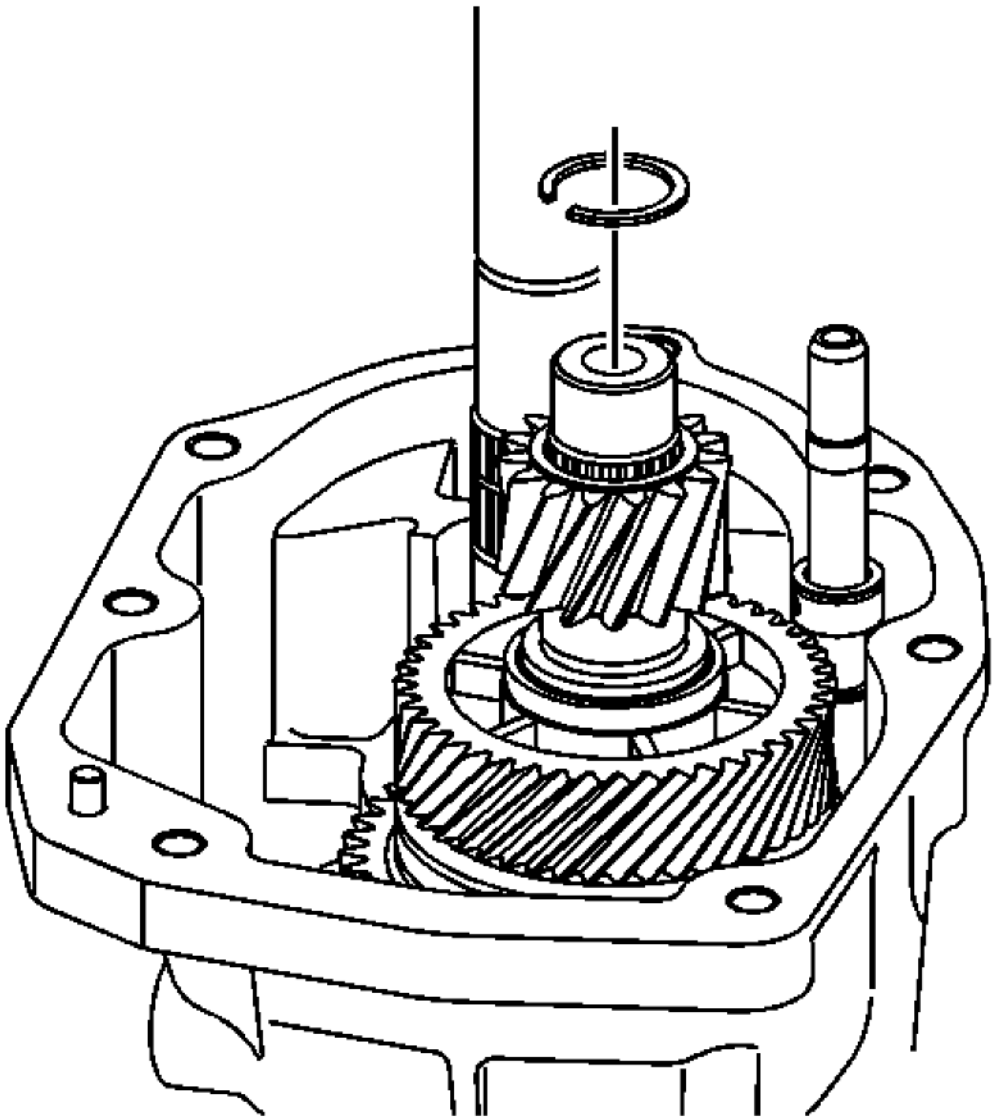

Fig. 56: Counter Shaft Retainer Ring
Courtesy of GENERAL MOTORS CORP.

1. Remove the reverse counter shaft retainer ring.

cardiagn.com

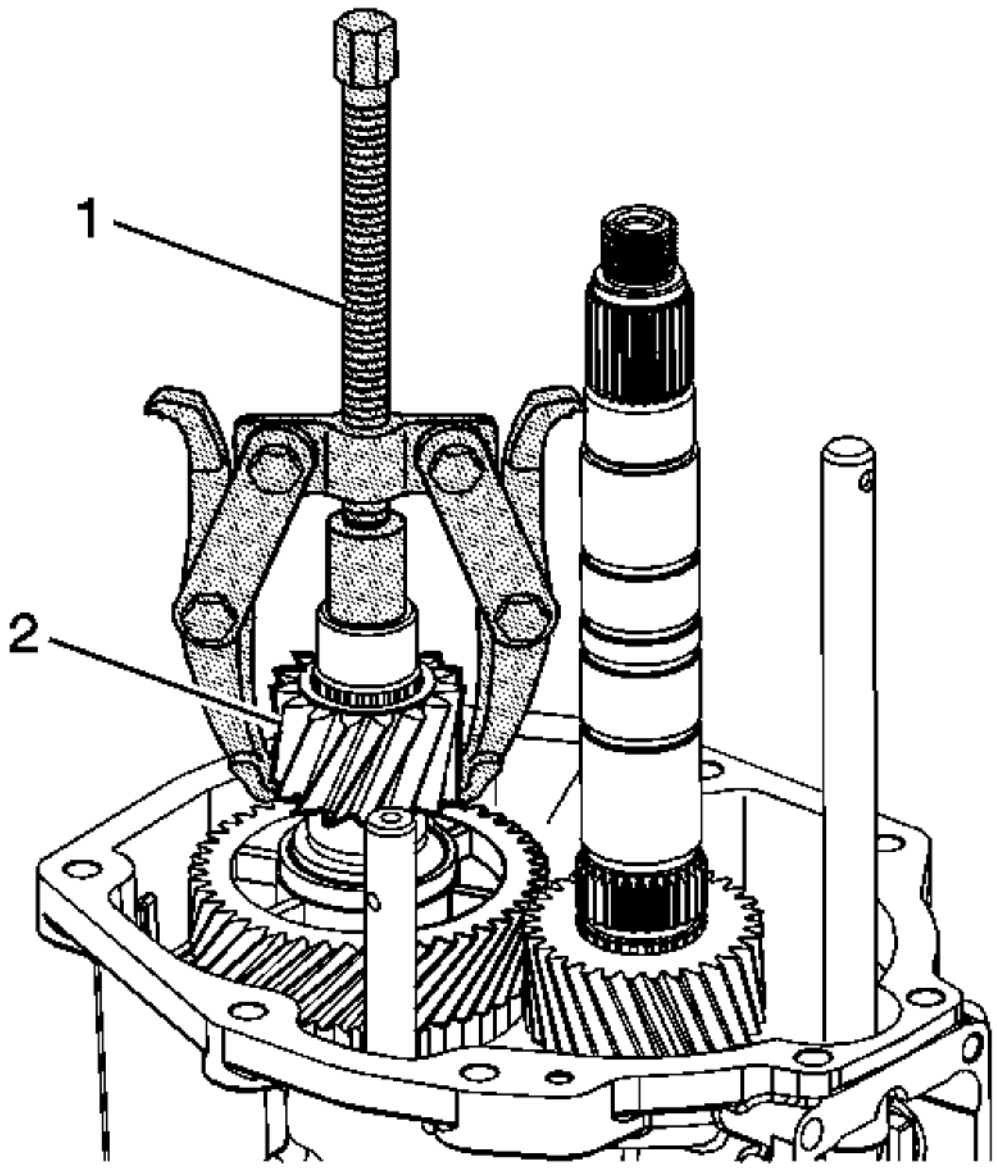

Fig. 57: Removing Countershaft Gear
Courtesy of GENERAL MOTORS CORP.

2. Remove the reverse countershaft gear (2) using **J 22888-20A:** puller (1).

cardiagn.com

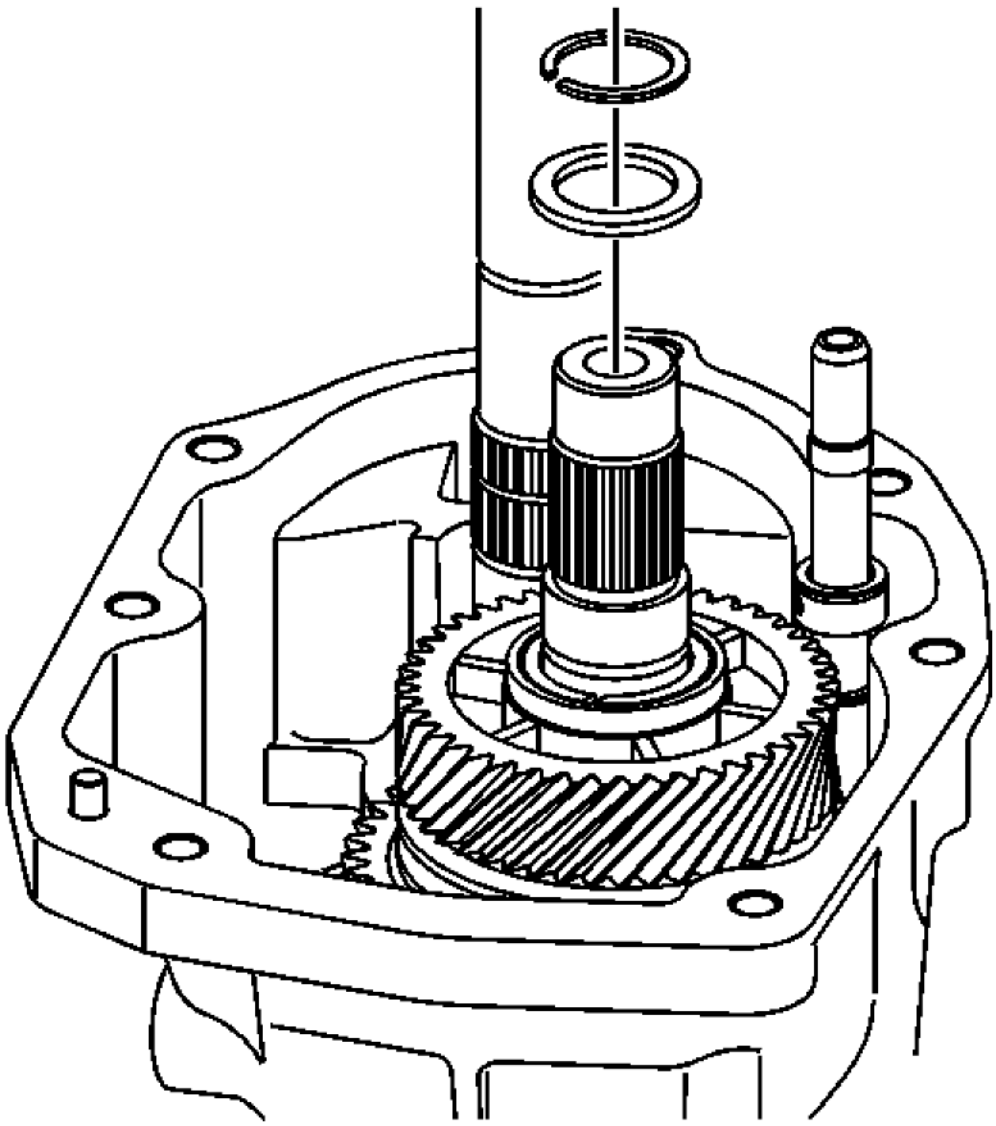

Fig. 58: View Of Countershaft Retainer & Spacer
Courtesy of GENERAL MOTORS CORP.

3. Remove the 5th gear countershaft retainer and spacer.

cardiagn.com

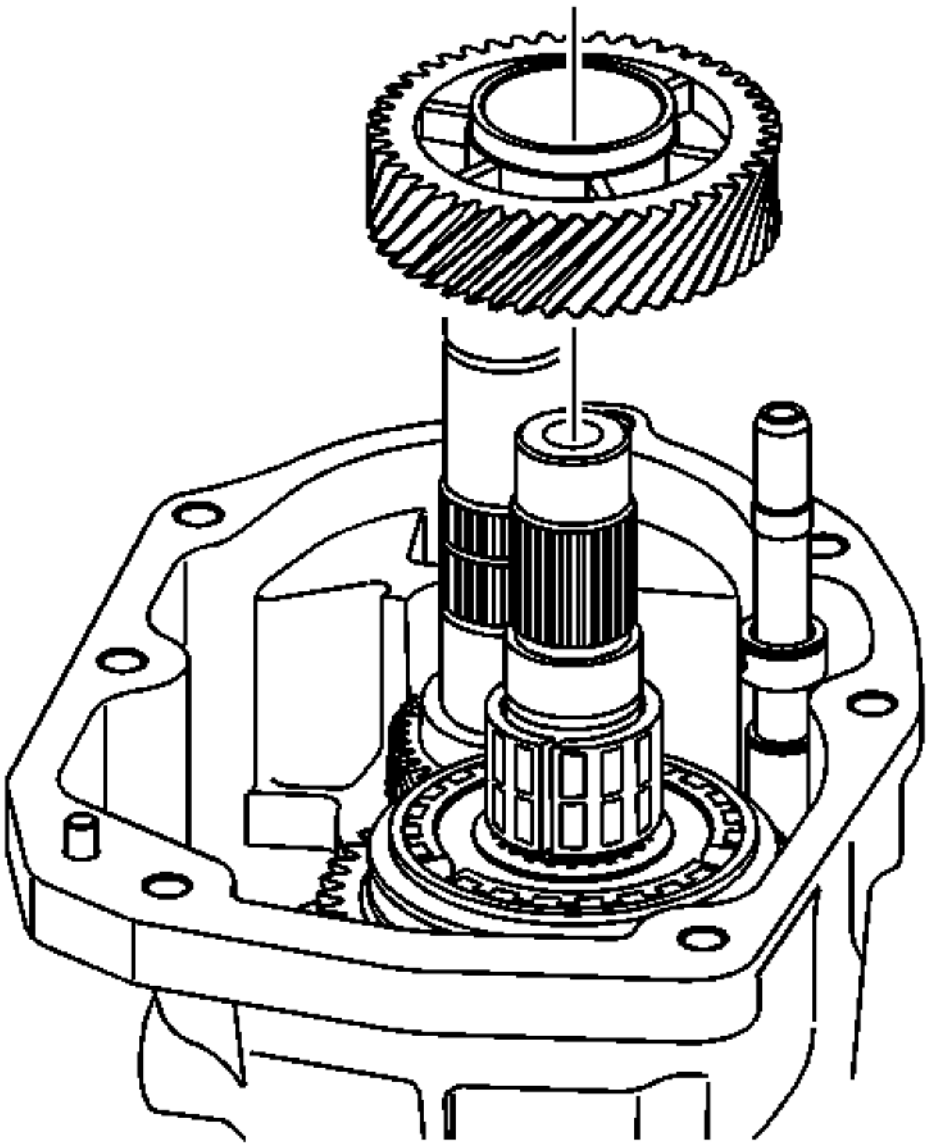

Fig. 59: View Of Gear & Countershaft
Courtesy of GENERAL MOTORS CORP.

4. Remove the 5th gear from the countershaft.

cardiagn.com

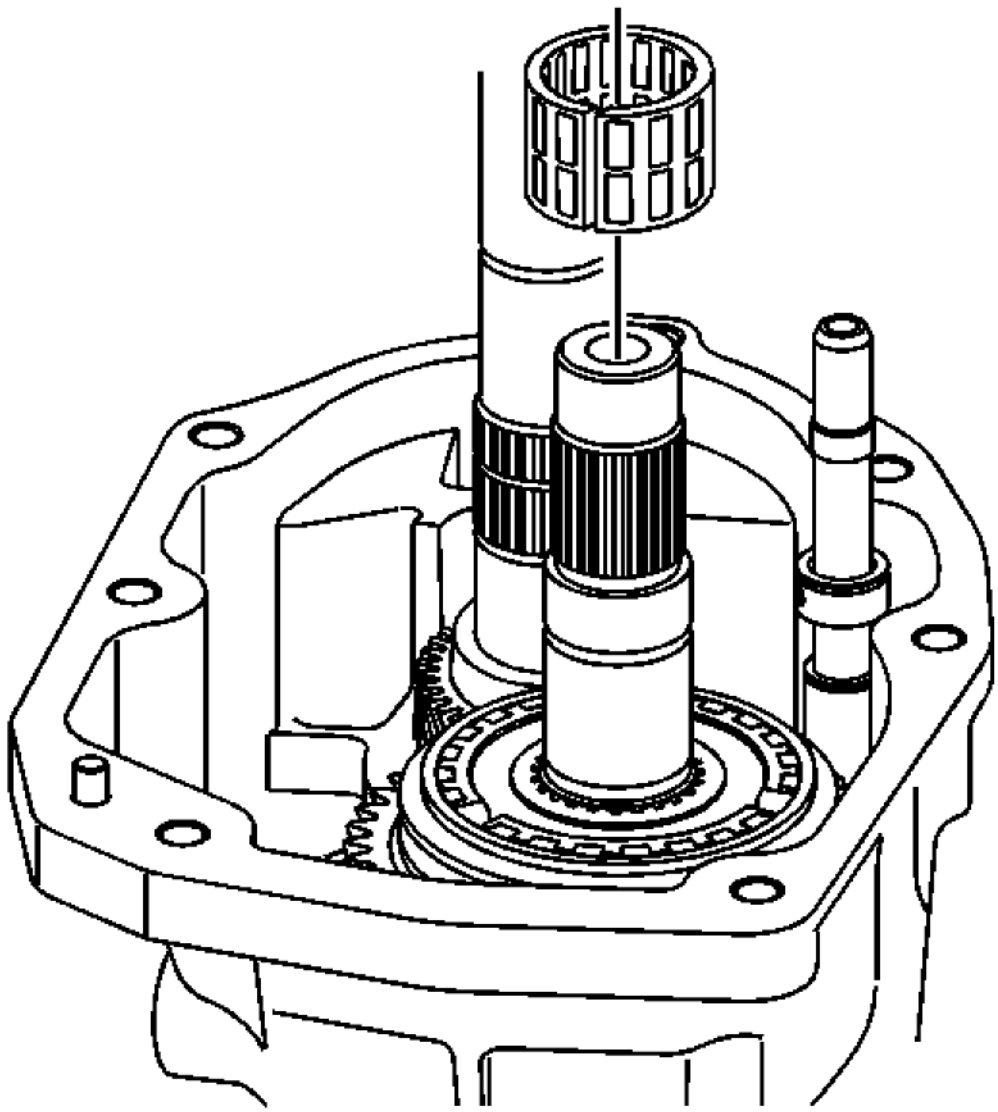

Fig. 60: View of Needle Bearing & Countershaft
Courtesy of GENERAL MOTORS CORP.

5. Remove the 5th gear needle bearing from the countershaft.

cardiagn.com

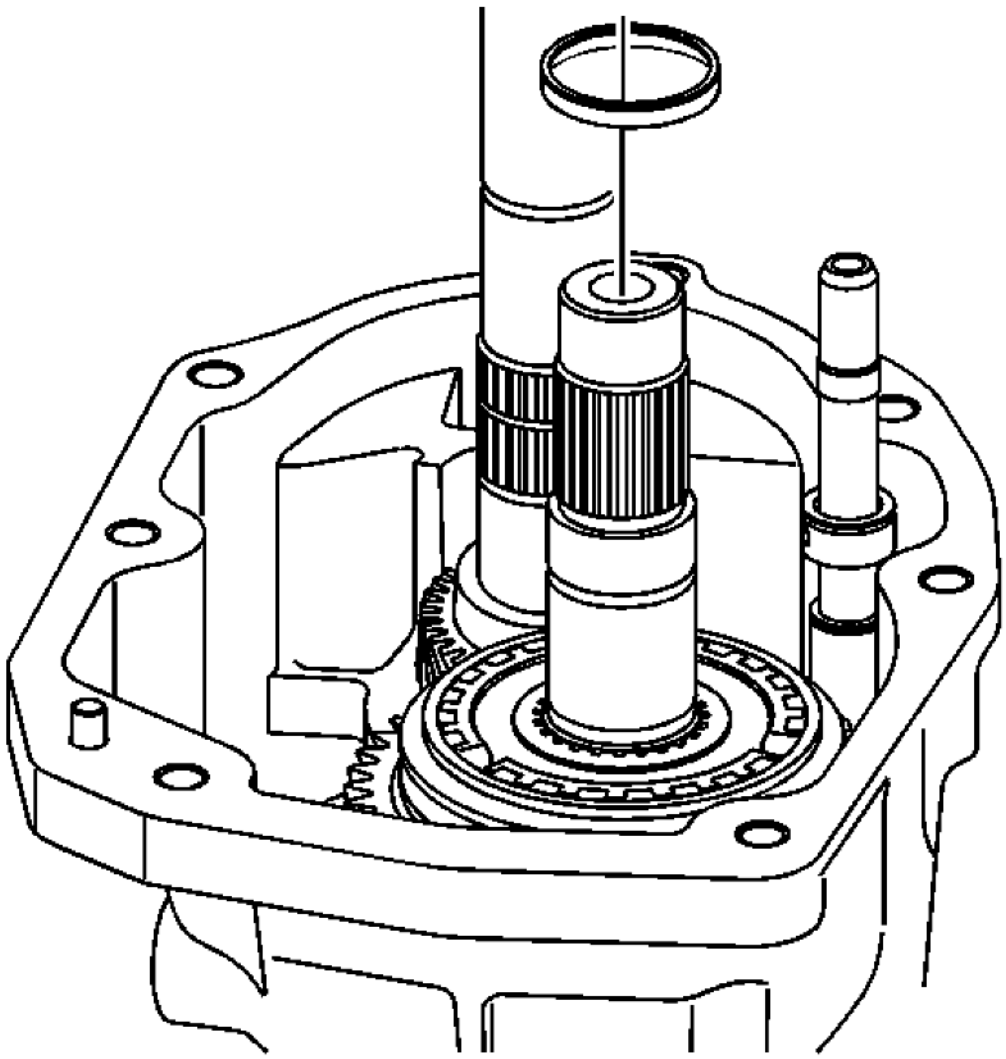

Fig. 61: View of Spacer & Countershaft
Courtesy of GENERAL MOTORS CORP.

6. Remove the 5th gear spacer from the countershaft.

cardiagn.com

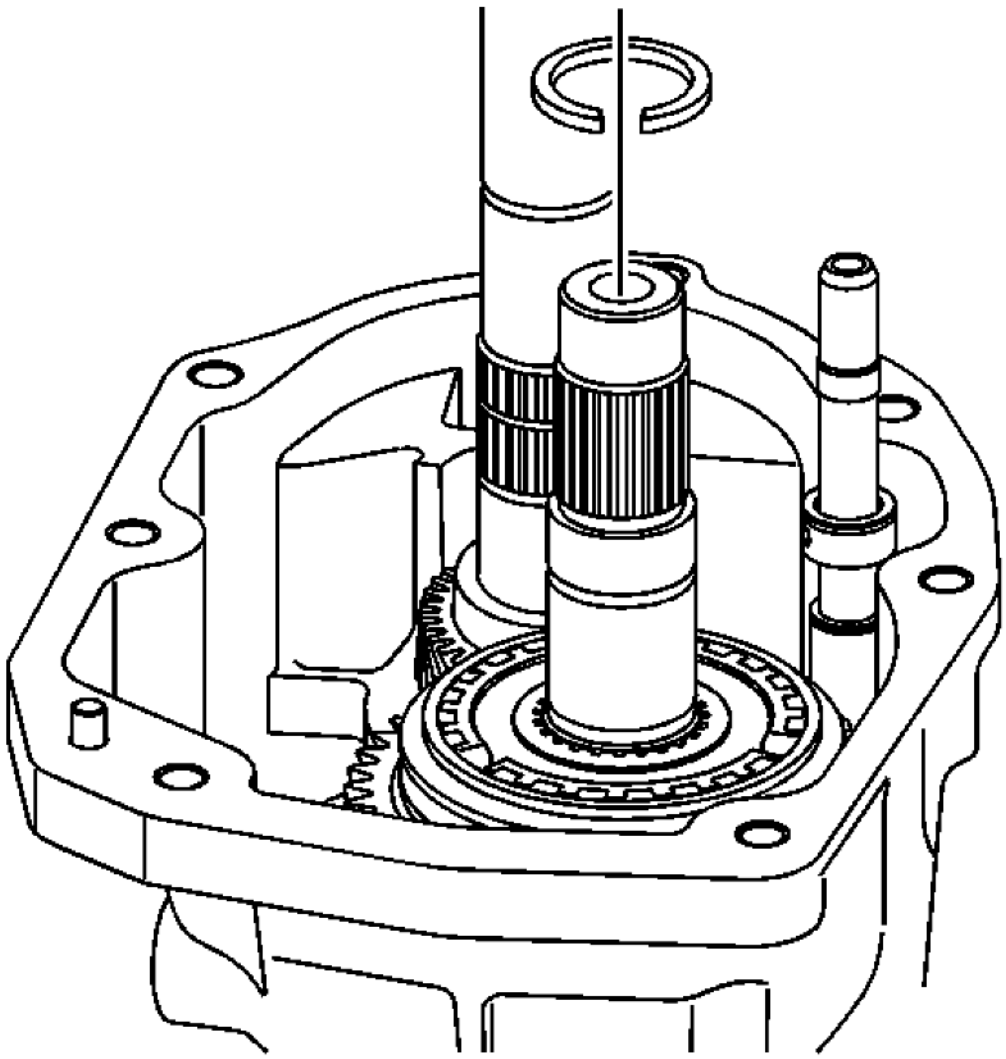

Fig. 62: 5th & 6th Gear Synchronizer Hub Retainer Ring
Courtesy of GENERAL MOTORS CORP.

7. Remove the 5th and 6th gear synchronizer hub retainer ring from the countershaft.

cardiagn.com

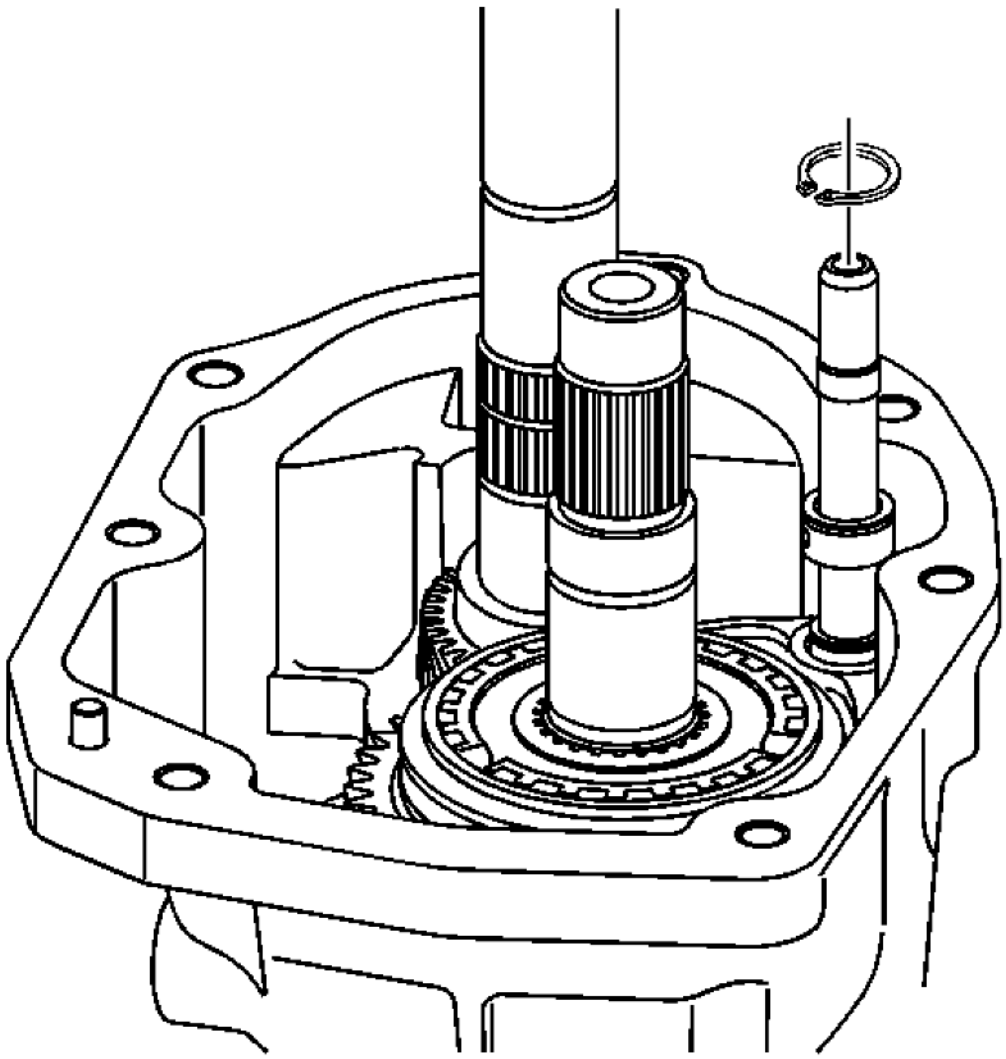

Fig. 63: View Of 5th/6th Speed Shift Fork Retainer Ring
Courtesy of GENERAL MOTORS CORP.

8. Remove the 5th/6th speed shift fork retainer ring.

5th/6th Speed Driven Gear Removal

cardiagn.com

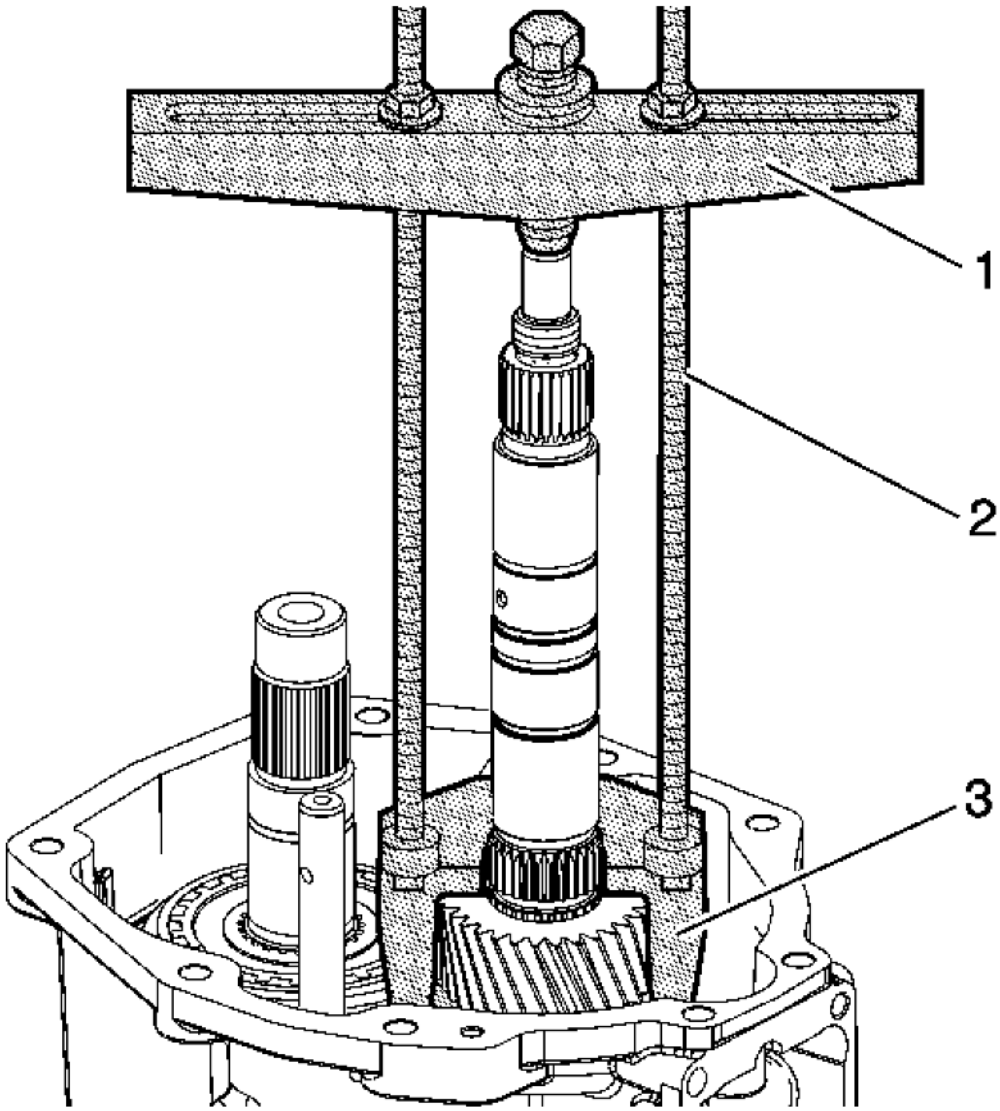

Fig. 64: Removing 5th/6th Speed Driven Gear
Courtesy of GENERAL MOTORS CORP.

1. Using the **J 8433:** puller (1), **J 39431:** gear remover (3), and the **J 39431-3:** adapter bolts (2), remove the 5th/6th speed driven gear.

cardiagn.com

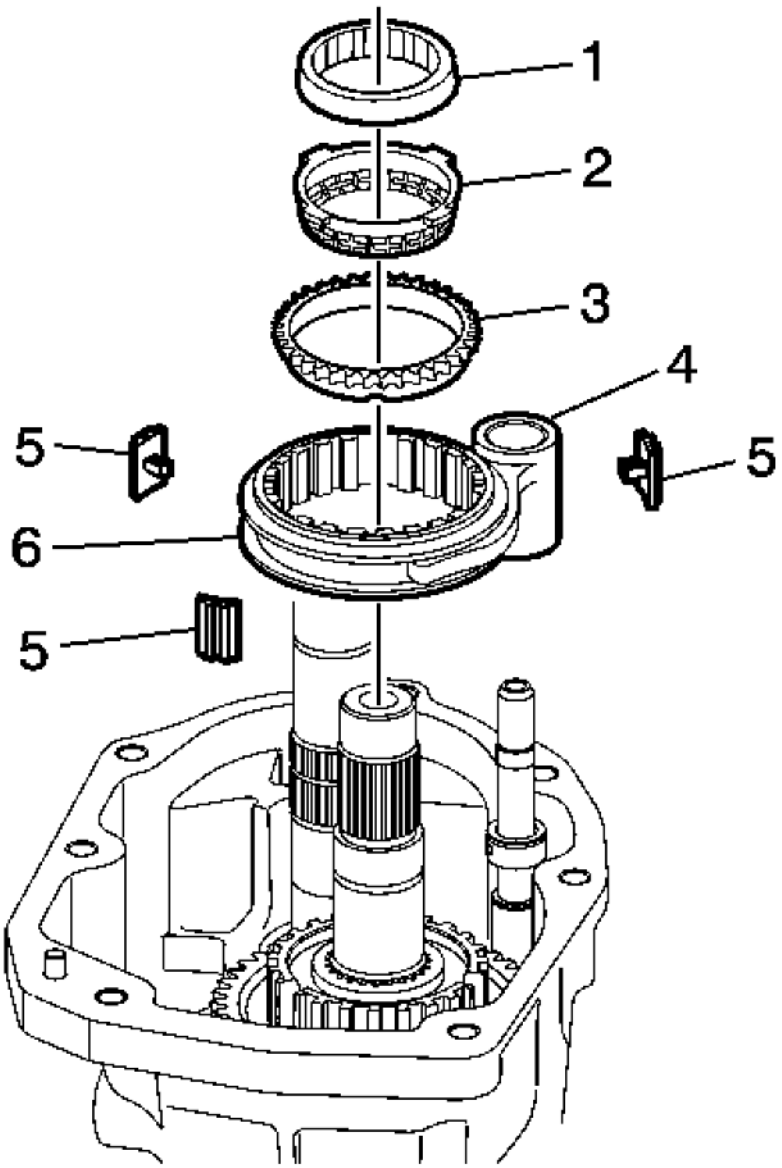

Fig. 65: 5th/6th Synchronizer Components
Courtesy of GENERAL MOTORS CORP.

2. Remove the following 5th/6th synchronizer components:
    1. The speed drive gear inner cone (1)
    2. The speed drive gear friction cone (2)

cardiagn.com

3. The speed drive gear synchronizer blocking ring (3)
4. The 5th/6th shift fork (4) with the synchronizer sleeve (6)
5. The synchronizer inserts (5)

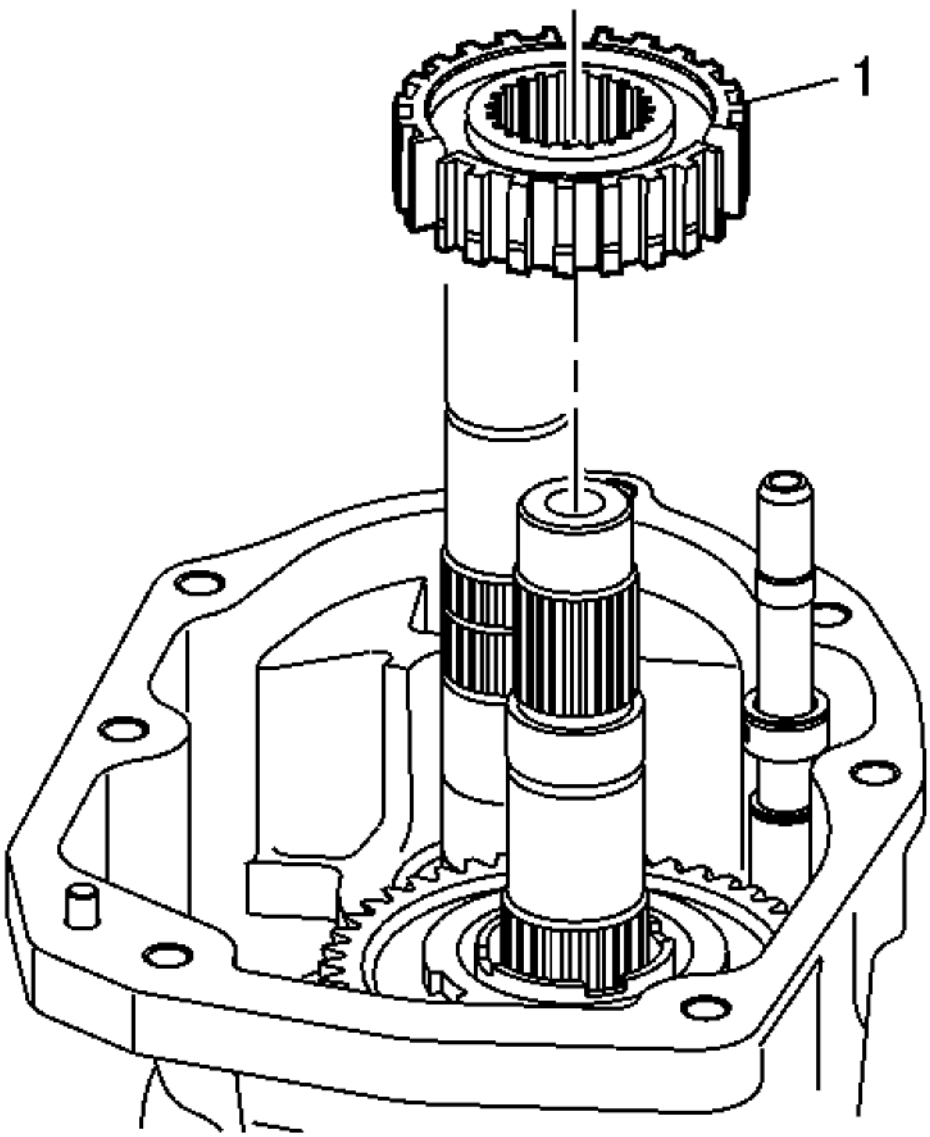

Fig. 66: Synchronizer Hub Assembly
Courtesy of GENERAL MOTORS CORP.

cardiagn.com

3. Remove the synchronizer hub assembly (1).

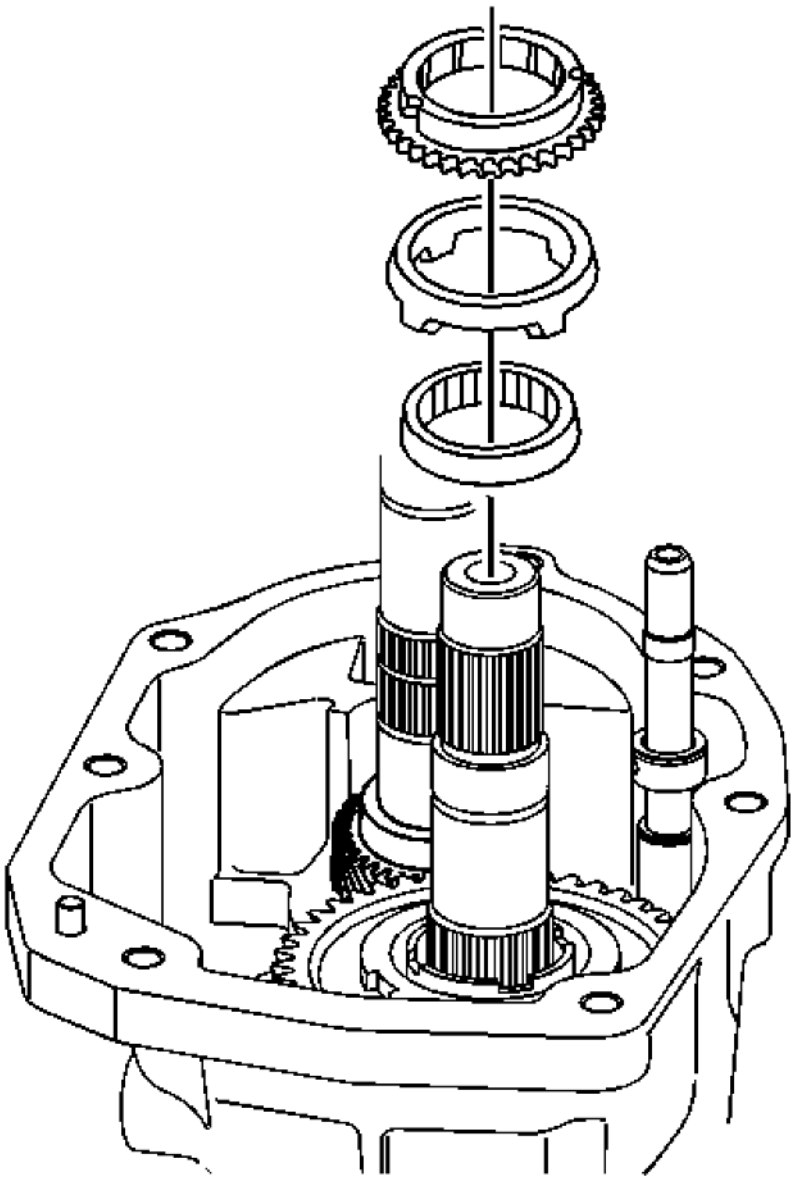

Fig. 67: 6th Speed Drive Gear Components
Courtesy of GENERAL MOTORS CORP.

4. Remove the following components:

cardiagn.com

1. The 6th speed drive gear synchronizer blocking ring
2. The 6th speed drive gear friction cone
3. The 6th speed drive gear inner cone

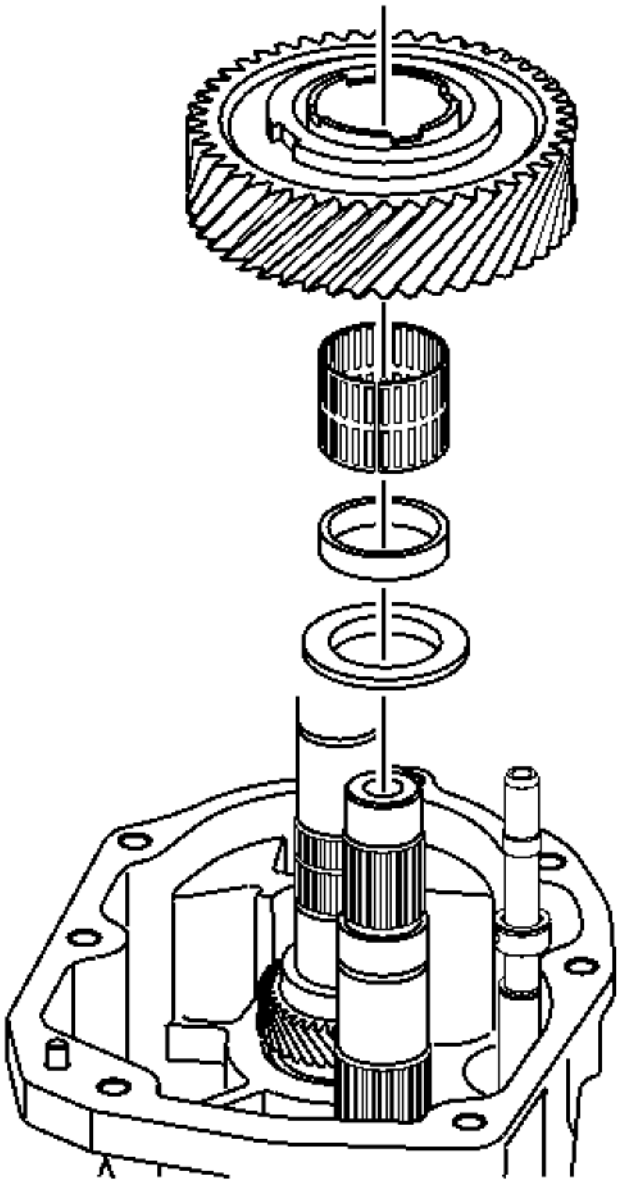

Fig. 68: View Of 6th Driven Gear, Caged Needle Bearing, And Spacers
Courtesy of GENERAL MOTORS CORP.

cardiagn.com

5. Remove the 6th driven gear, caged needle bearing, and 2 spacers from the countershaft.

Transmission Case Removal

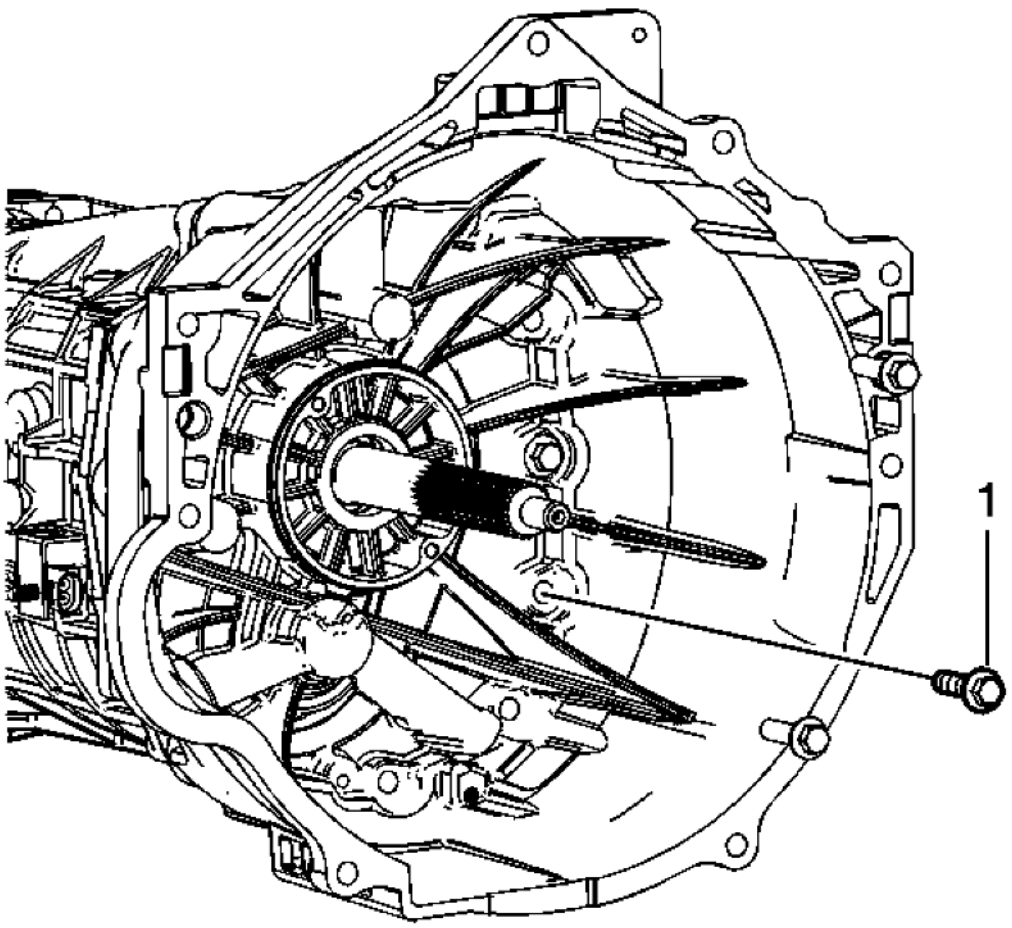

Fig. 69: Identifying Clutch Housing To Transmission Case Bolts
Courtesy of GENERAL MOTORS CORP.

1. Remove the clutch concentric actuator cylinder. Refer to **Clutch Concentric Actuator Cylinder Replacement (Aisin)** or **Clutch Concentric Actuator Cylinder Replacement (Tremec)** .
2. Remove 9 of the 11 clutch housing to transmission case bolts (1).
3. Rotate the transmission into the vertical position.

cardiagn.com

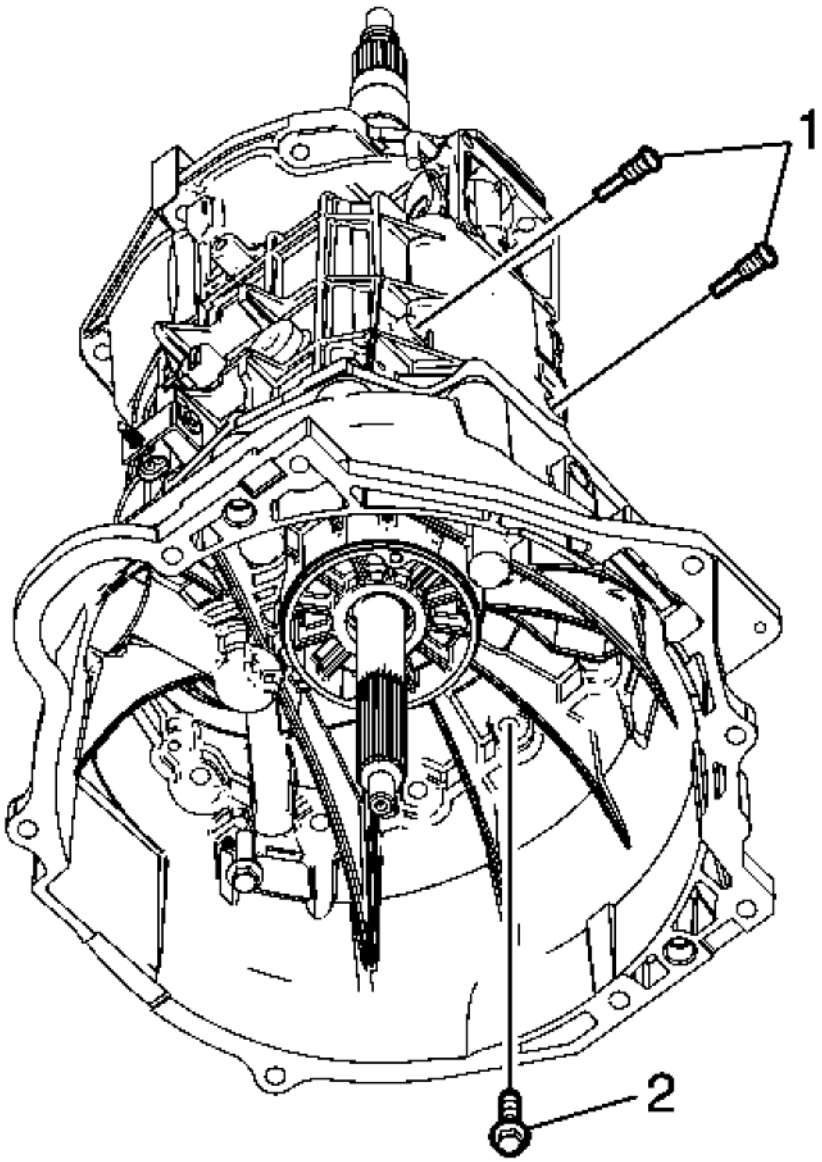

Fig. 70: Clutch Housing To Transmission Case Bolts & Shift Lever Guide Bolts
Courtesy of GENERAL MOTORS CORP.

4. Remove the last 2 clutch housing to transmission case bolts (2).
5. Remove the shift lever guide bolts (1).

cardiagn.com

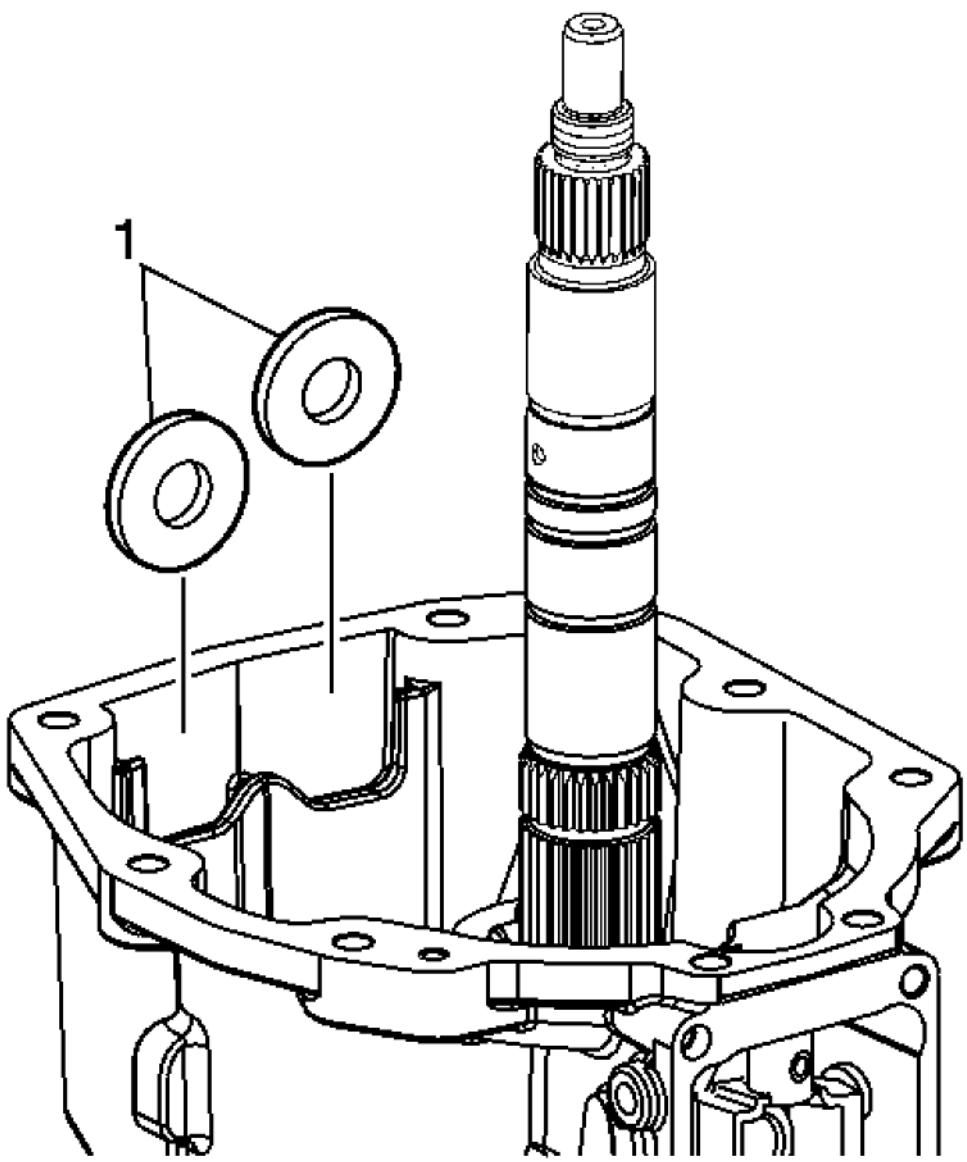

Fig. 71: Transmission Case Magnets
Courtesy of GENERAL MOTORS CORP.

6. Remove the magnets (1) from the transmission case.

cardiagn.com

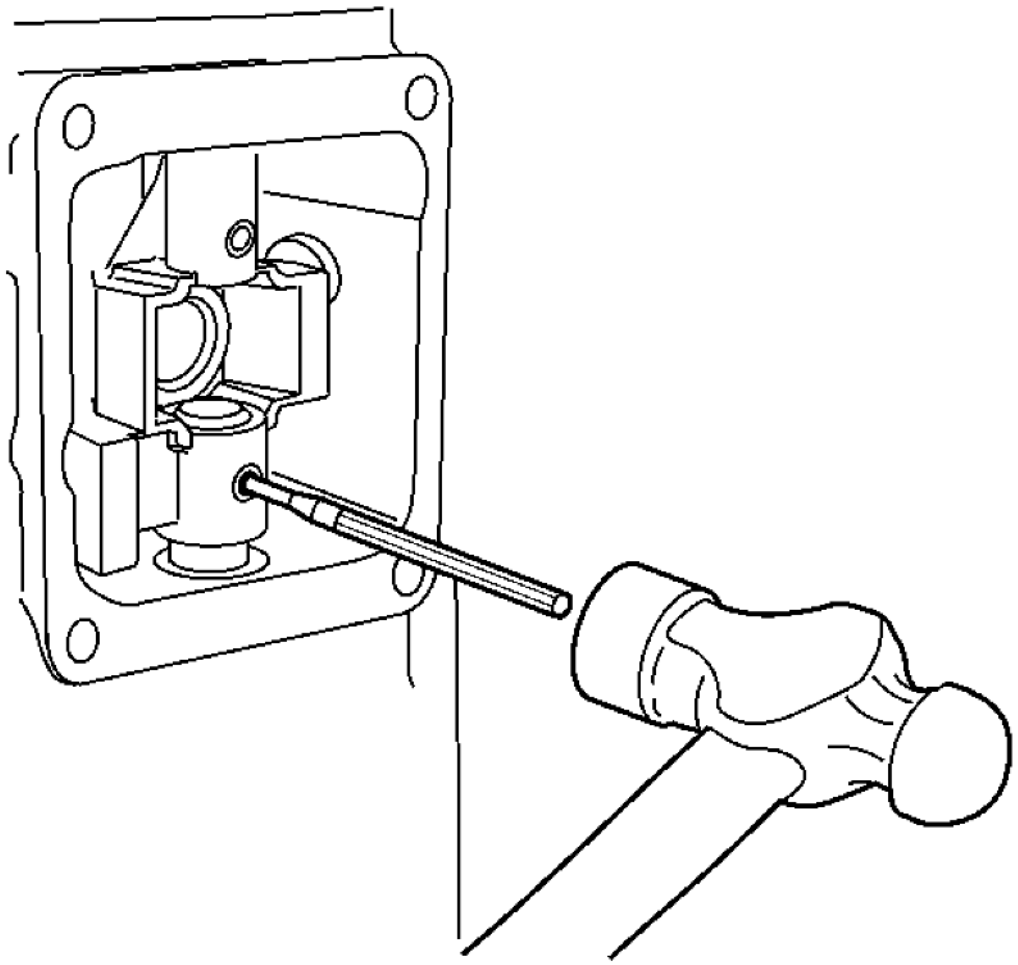

Fig. 72: Driving In Select Control Lever Assembly Pin
Courtesy of GENERAL MOTORS CORP.

7. Drive in the select control lever assembly pin.

cardiagn.com

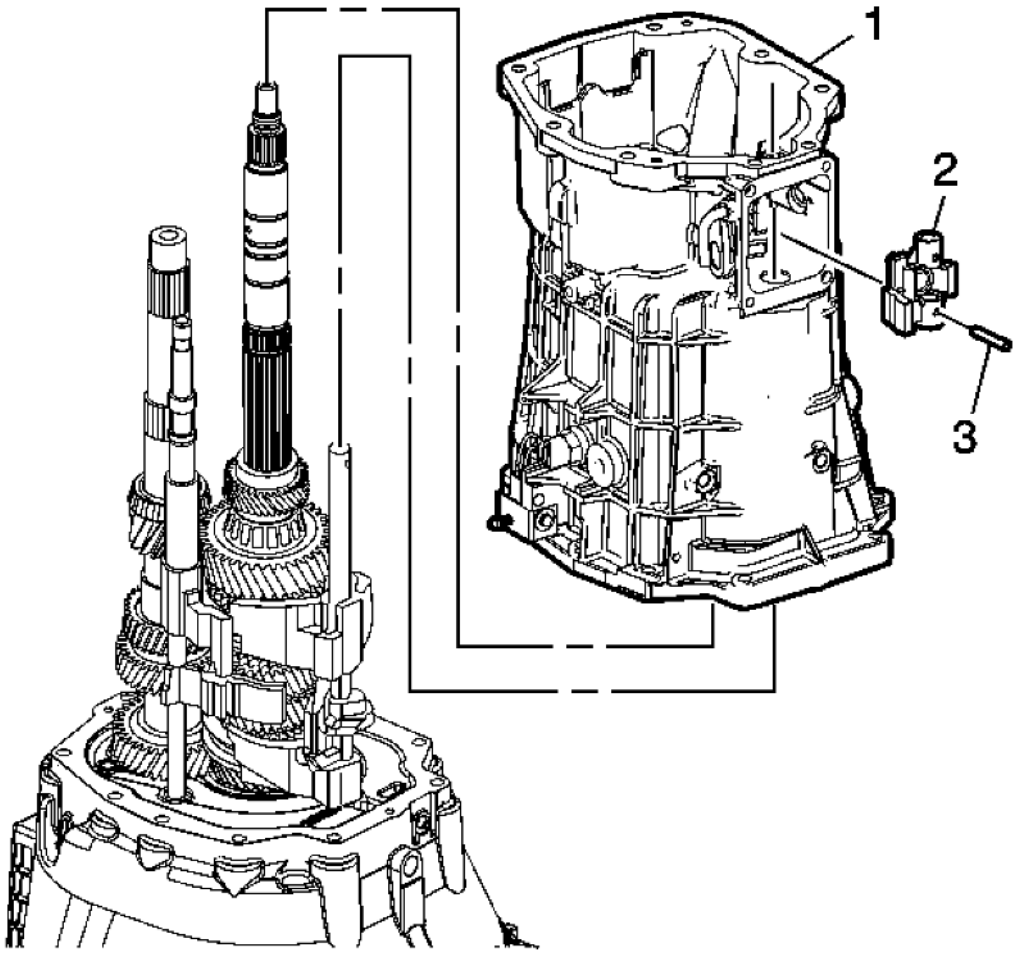

Fig. 73: Transmission Case & Select Control Lever Assembly
Courtesy of GENERAL MOTORS CORP.

8. Remove the transmission case (1) and the select control lever assembly (2) together as follows:
    1. Slide the transmission case up and off of the gear clusters and the shift shaft components.
    2. Hold the select control lever assembly against the guide plate in order to prevent the release of the detent ball and the spring.
    3. Remove the select control lever assembly (2) from the transmission case.

Oil Filter Removal

cardiagn.com

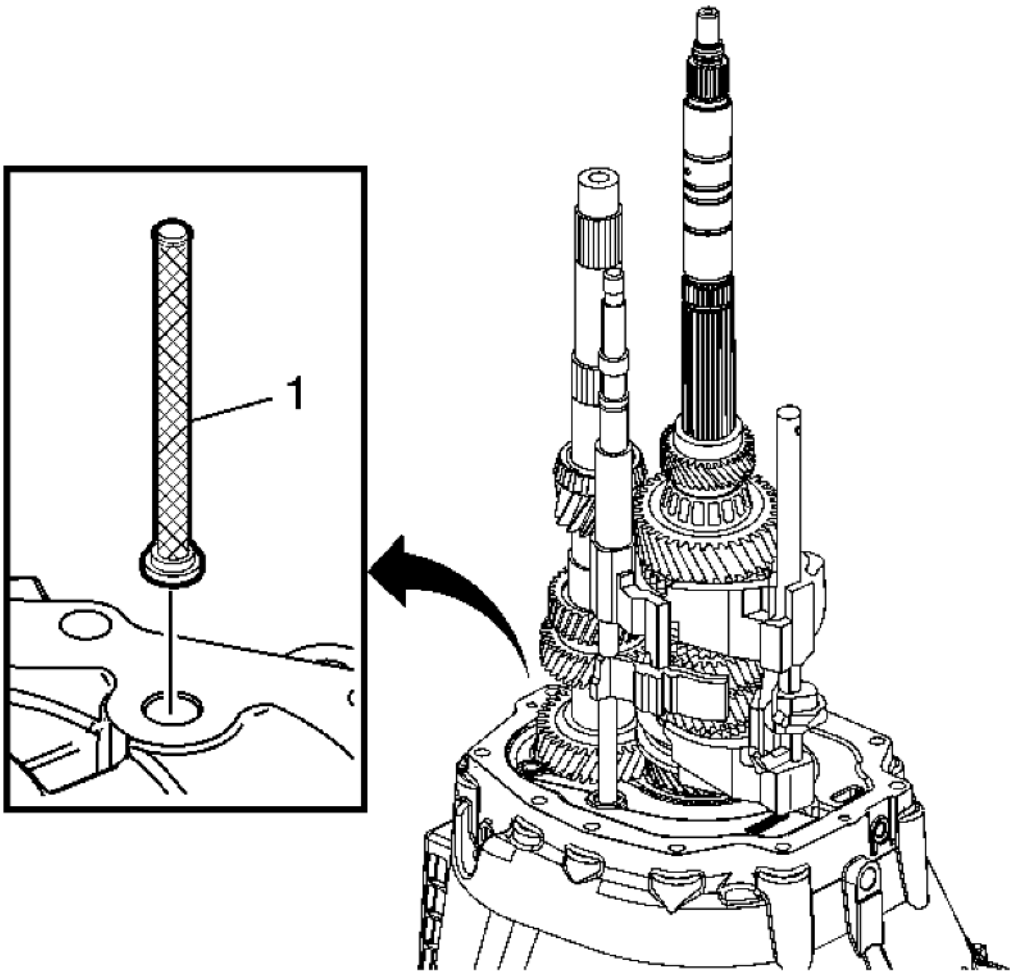

Fig. 74: Oil Filter
Courtesy of GENERAL MOTORS CORP.

Remove the oil filter (1).

Shift Shaft Assemblies and Gear Cluster Removal

cardiagn.com

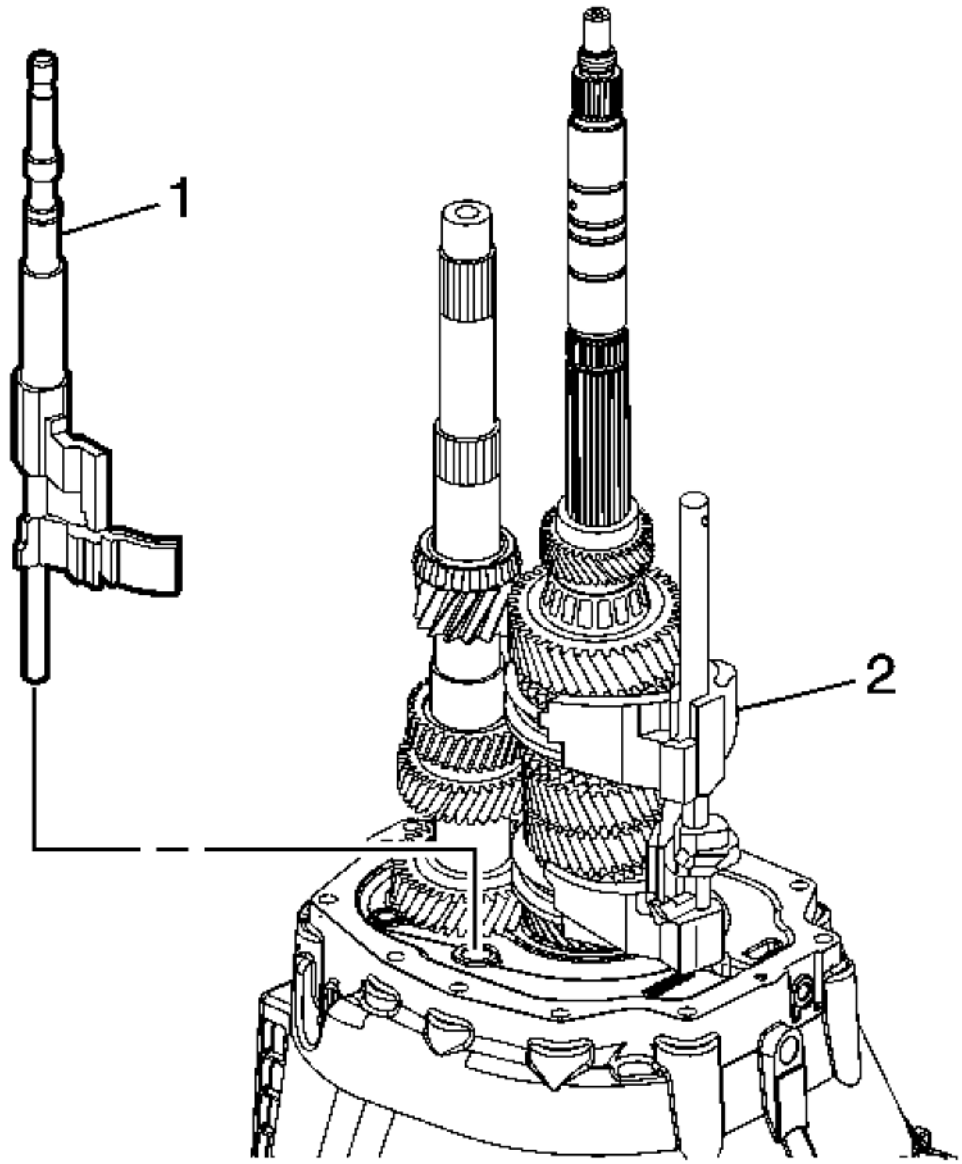

Fig. 75: 3rd/4th Shift Fork & 5th/6th & Reverse Shift Shaft Assemblies
Courtesy of GENERAL MOTORS CORP.

1. Pull up on the 3rd/4th shift fork assembly (2) and rotate the 5th/6th and the reverse shift shaft levers off the shift interlock plate.
2. Remove the 5th/6th and the reverse shift shaft assembly (1).

cardiagn.com

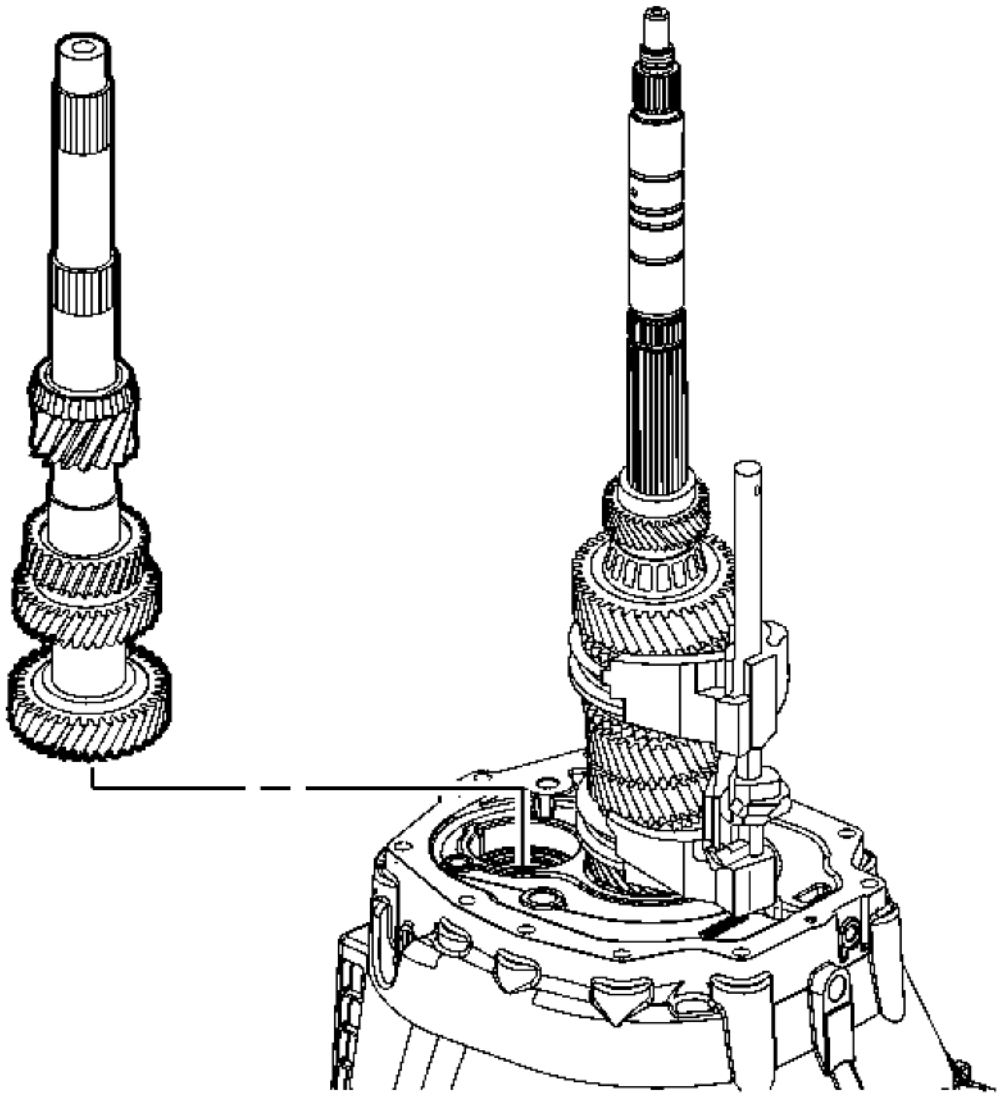

Fig. 76: Countershaft
Courtesy of GENERAL MOTORS CORP.

3. Remove the countershaft. Lift up the mainshaft enough in order to remove the countershaft.

cardiagn.com

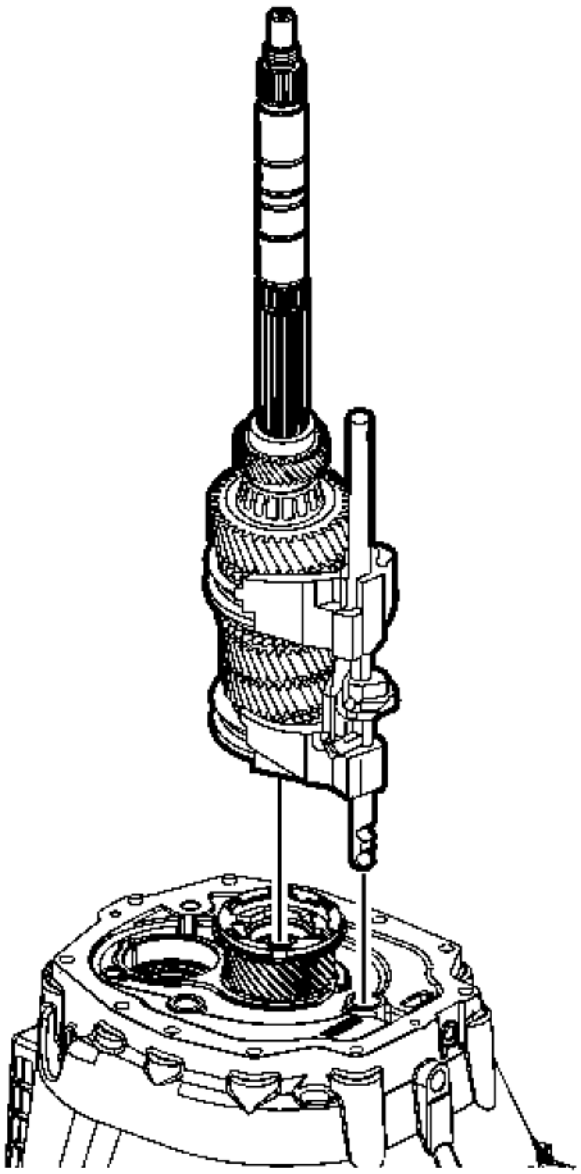

Fig. 77: Mainshaft & Shift Shaft Components
Courtesy of GENERAL MOTORS CORP.

4. Remove the mainshaft and the shift shaft components as an assembly.
5. Remove the shift shaft assembly from the mainshaft.

cardiagn.com

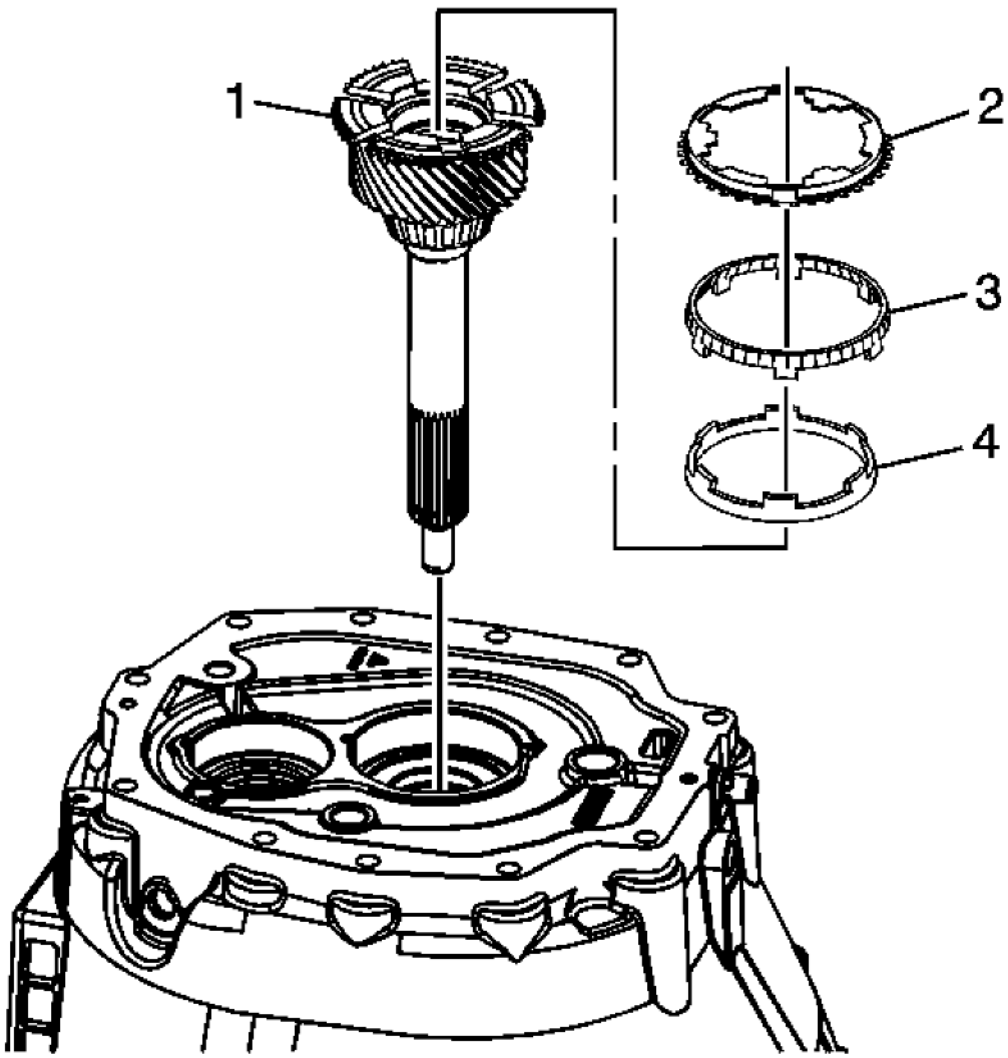

Fig. 78: Identifying 4th Gear Blocking Ring Assembly Components
Courtesy of GENERAL MOTORS CORP.

6. Remove the 4th gear blocking ring assembly, which includes the following components:
    1. 4th speed drive gear blocking ring (2)
    2. 4th speed drive gear outer cone (3)
    3. 4th speed drive gear inner cone (4)
7. Remove the input shaft (1).

MAIN SHAFT AND INPUT SHAFT DISASSEMBLE

cardiagn.com

Special Tools

- **J 22912-B:** Rear Pinion and Axle Bearing Remover Split Plate
- **J 36513:** Split Plate
- **J 39442:** Press Adapter
- **J 39473:** Mainshaft Bearing Installer
- **J 39594:** Bearing Race Remover
- **J 45124:** Removal Bridge

For equivalent regional tools, refer to **Special Tools**.

Mainshaft

cardiagn.com

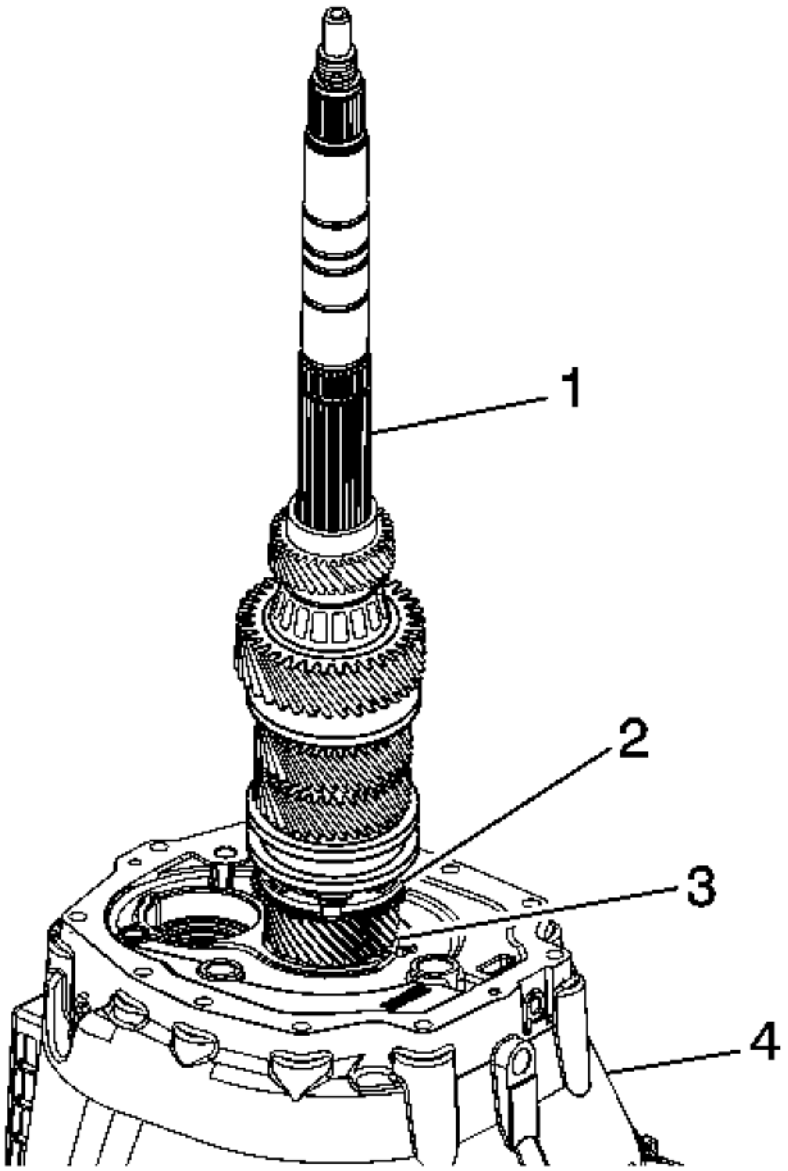

Fig. 79: Mainshaft Components
Courtesy of GENERAL MOTORS CORP.

NOTE: **Measure the 4th speed gear synchronizer wear gap before disassembling the mainshaft.**

cardiagn.com

1. Install the input shaft (3) in the clutch housing (4).
2. Install the mainshaft (1) on the input shaft (3).
3. Using a feeler gauge measure the gap (2) between the 4th speed gear blocking ring and the 4th speed gear.
4. Replace the 4th speed gear friction cone and blocking ring when the gap is less than 1.27 mm (0.050 in).

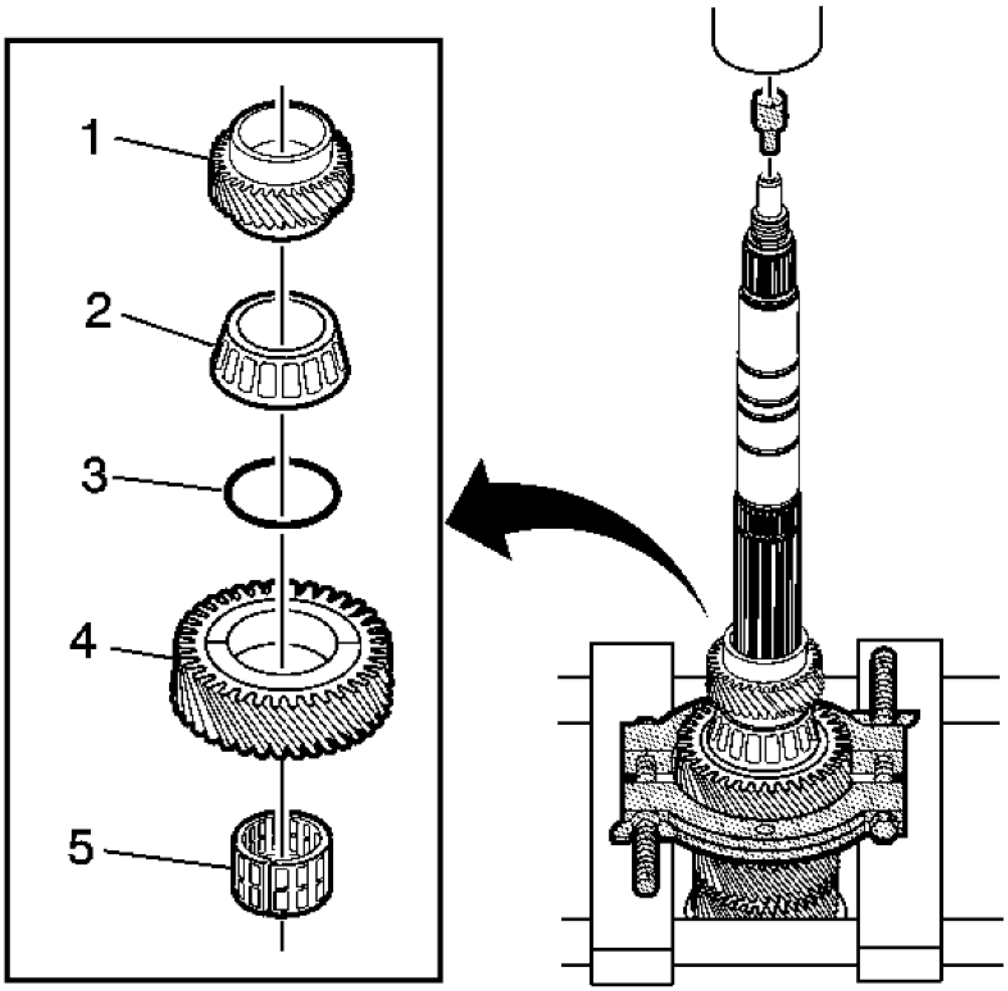

Fig. 80: Mainshaft Components
Courtesy of GENERAL MOTORS CORP.

CAUTION: Do not overtighten the J 36513 split plate past the gear teeth or damage to gear may occur.

cardiagn.com

5. Using the **J 36513:** plate, close the split plate only enough to support the gear teeth, and the **J 39442:** adapter, remove the following parts in order:
    1. The 6th speed driven gear (1)
    2. The mainshaft center bearing (2)
    3. If an O-ring is present on the mainshaft, remove and discard the O-ring (3). The O-ring was used for manufacturing purposes only.
    4. The 1st speed drive gear (4)
    5. The 1st speed drive gear needle bearing (5)

cardiagn.com

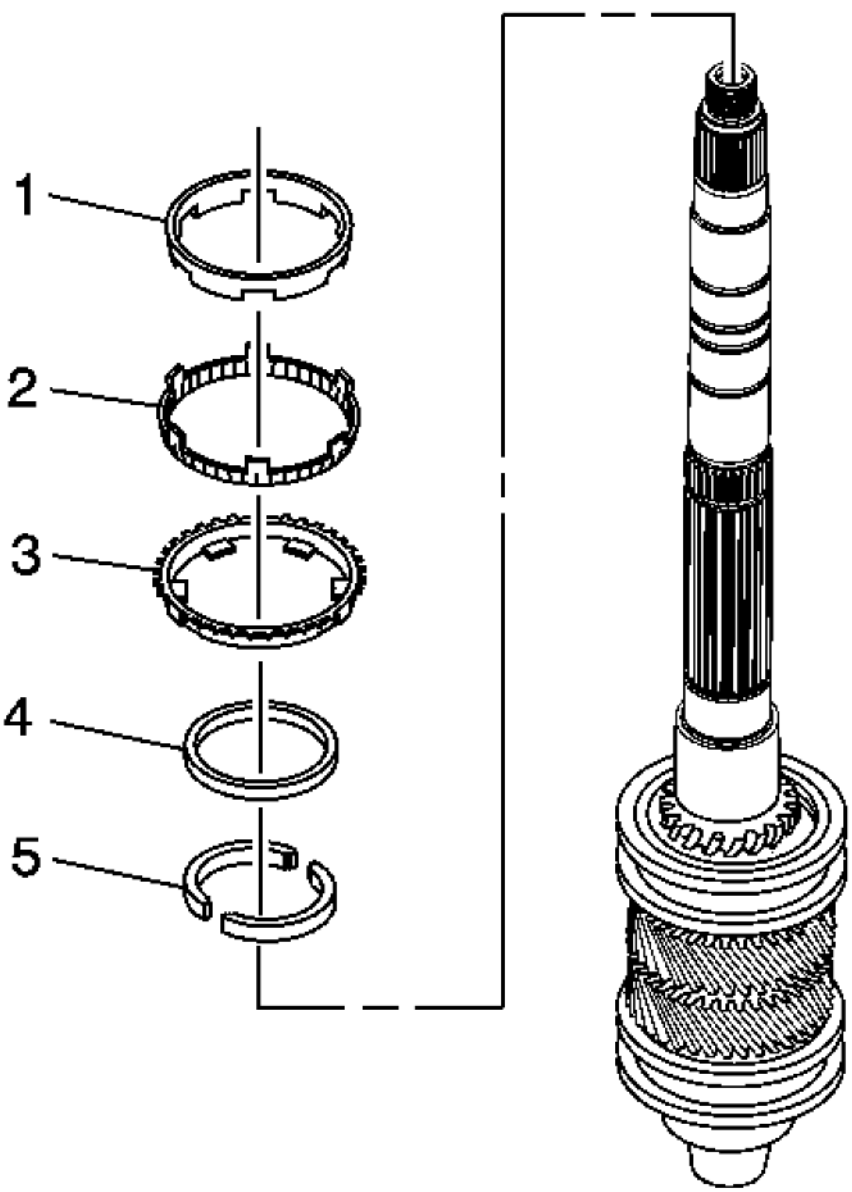

Fig. 81: Identifying 1st Speed Gear Components
Courtesy of GENERAL MOTORS CORP.

6. Remove the following parts in order:
    1. The 1st speed gear inner cone (1)
    2. The 1st speed gear outer cone (2)

cardiagn.com

3. The 1st speed gear synchronizer blocking ring (3)
4. The 1st speed gear locking ring (4)
5. The 1st speed gear two piece washer (5)

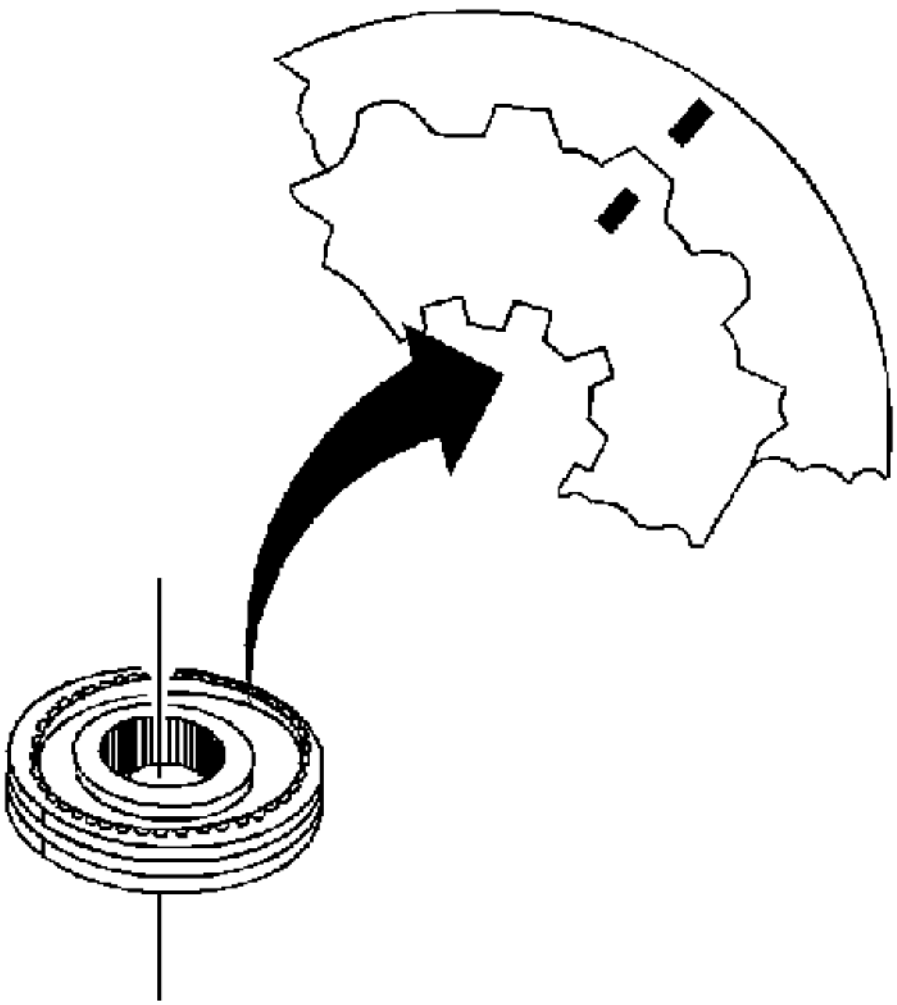

Fig. 82: View Of Alignment Marks On Synchronizer Hub & Synchronizer Sleeve
Courtesy of GENERAL MOTORS CORP.

NOTE: **The synchronizer hubs and sliding sleeves are a selected assembly. Keep these parts together as originally assembled.**

cardiagn.com

7. Scribe a mark on the synchronizer hub and on the sleeve. This will help you to reinstall the parts in the same position.

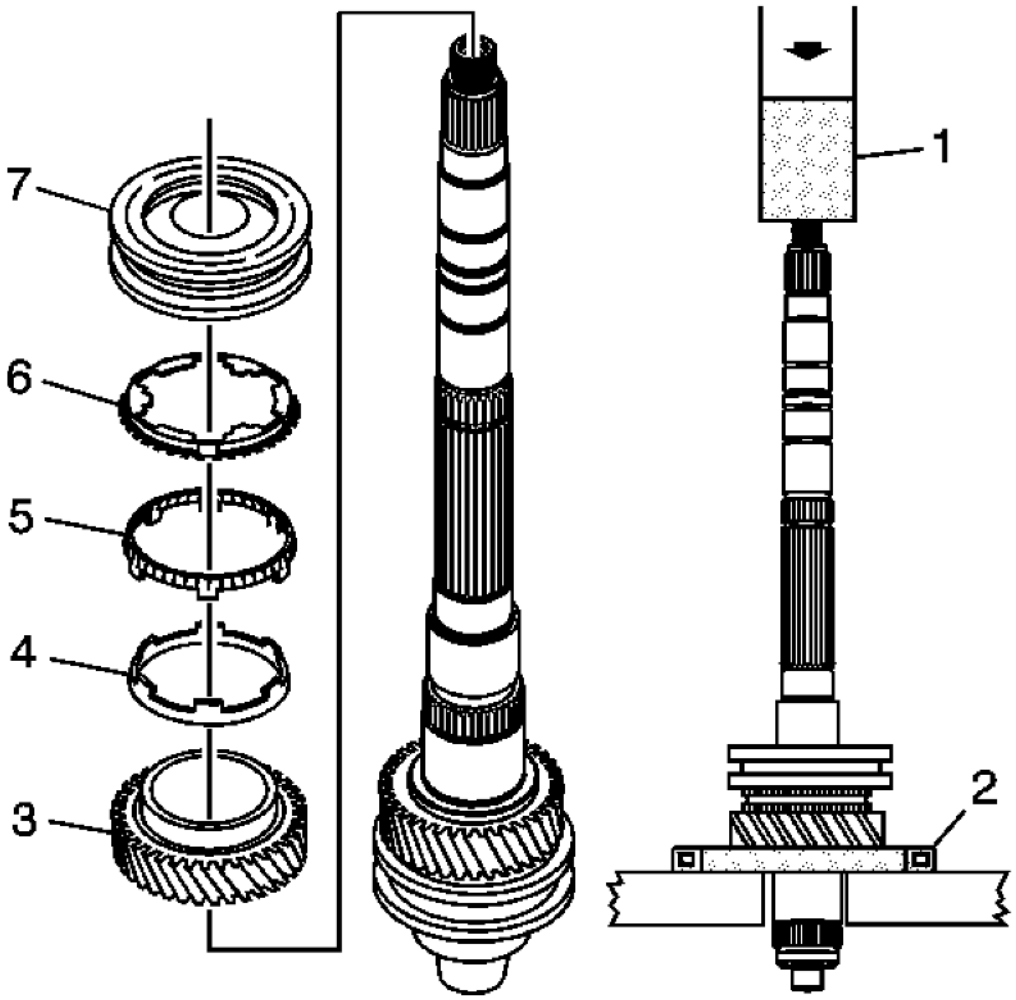

Fig. 83: Identifying 2nd Speed Gear Components
Courtesy of GENERAL MOTORS CORP.

8. Use the **J 36513:** plate (2) in an inverted position, **J 39442:** adapter (1), and a hydraulic press to remove the following components:
   - The 2nd speed drive gear (3)
   - The 2nd speed gear inner cone (4) will press off with the 2nd speed gear
   - The 2nd speed gear outer cone (5)

cardiagn.com

- The 2nd gear synchronizer blocking ring (6)
- 1st/2nd synchronizer hub (7)

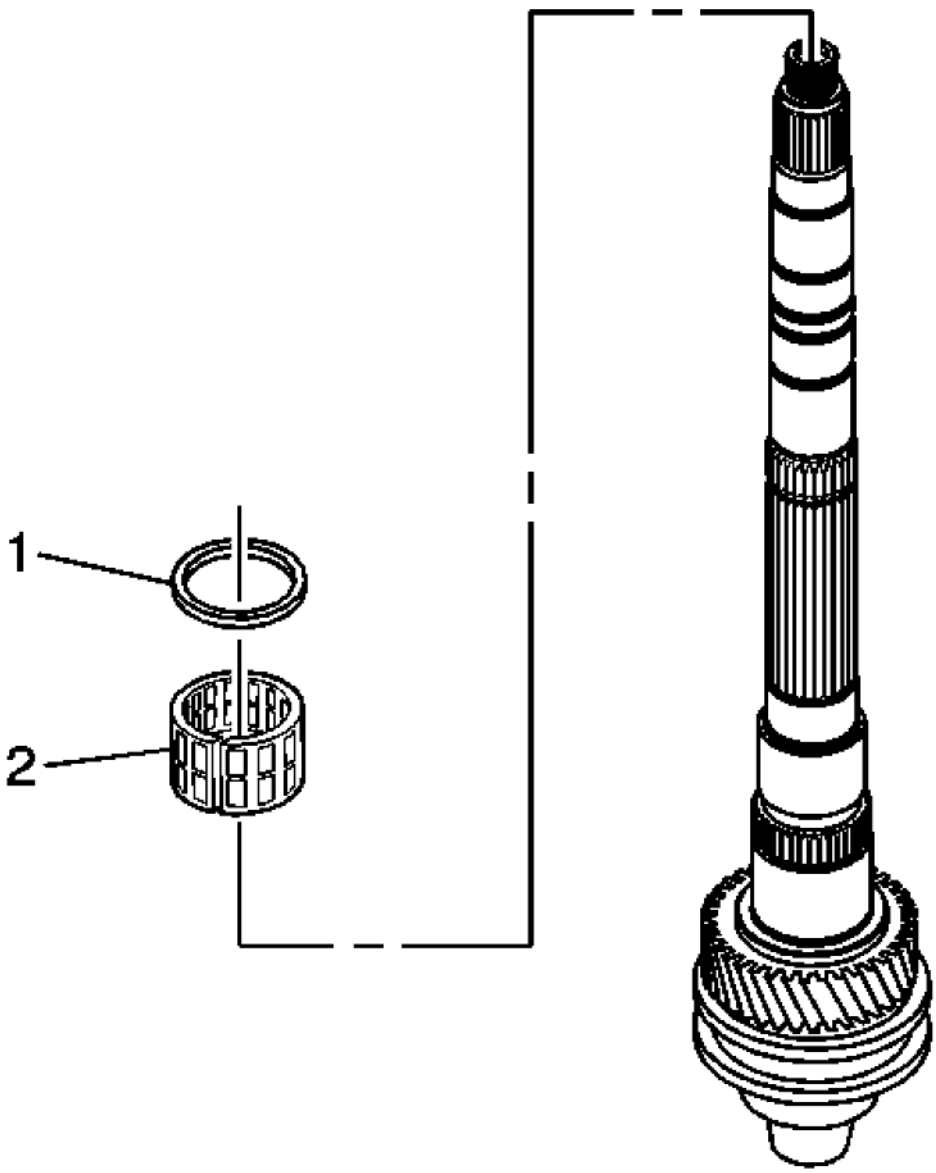

Fig. 84: View Of 2nd Speed Gear Spacer & Caged Needle Bearing
Courtesy of GENERAL MOTORS CORP.

cardiagn.com

9. Remove the 2nd speed gear spacer (1) and caged needle bearing (2).

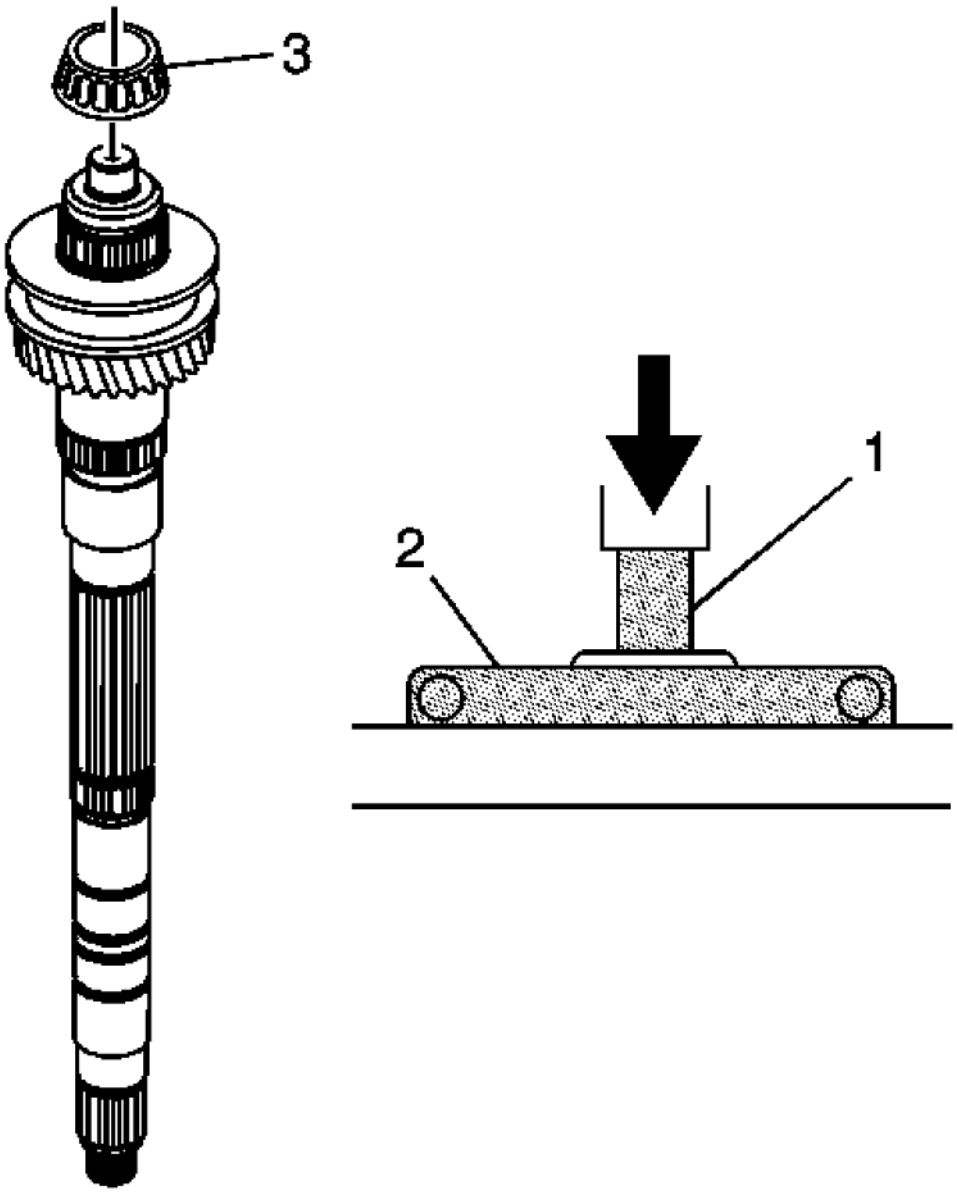

Fig. 85: Identifying Mainshaft Small Tapered Bearing
Courtesy of GENERAL MOTORS CORP.

10. Remove the mainshaft small tapered bearing (3). Use the **J 39442:** adapter (1), the **J 39443:** plate (2), and

cardiagn.com

a hydraulic press.

11. Discard the small tapered bearing.

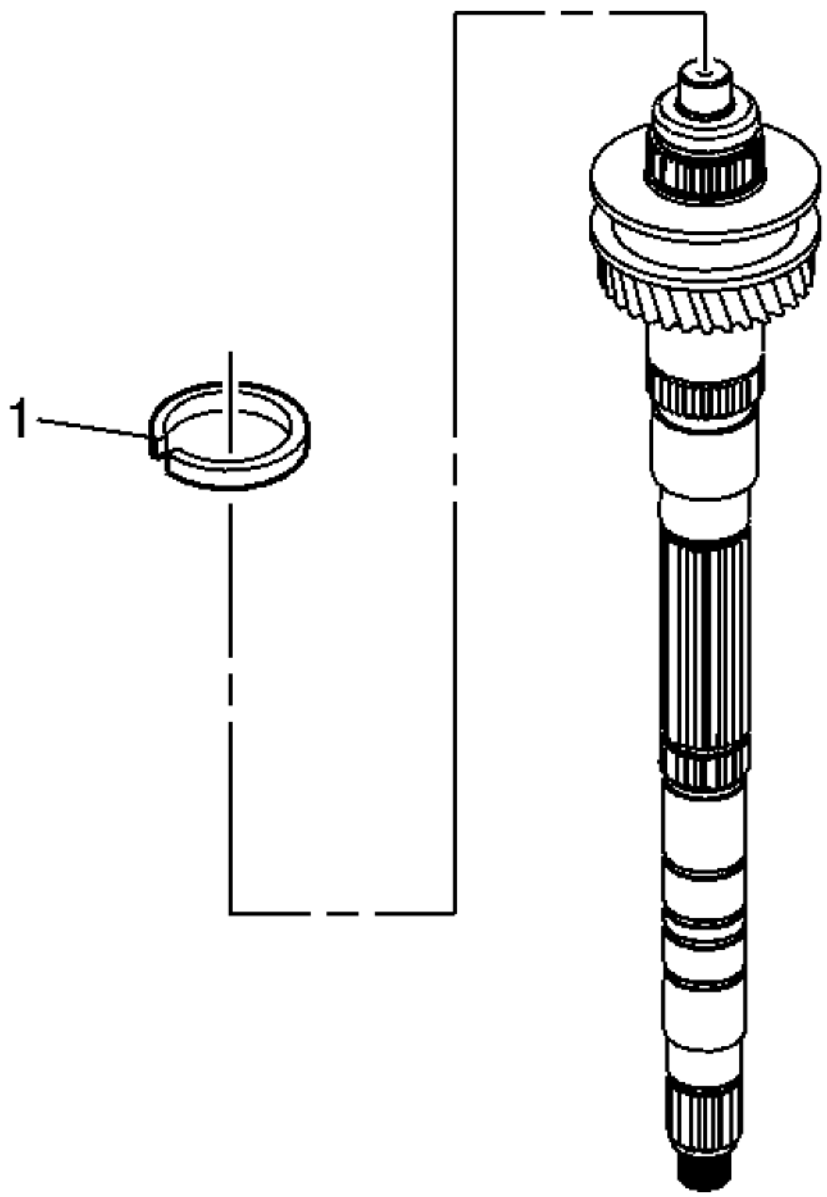

Fig. 86: Identifying Retainer Ring
Courtesy of GENERAL MOTORS CORP.

cardiagn.com

12. Remove the retainer (1).

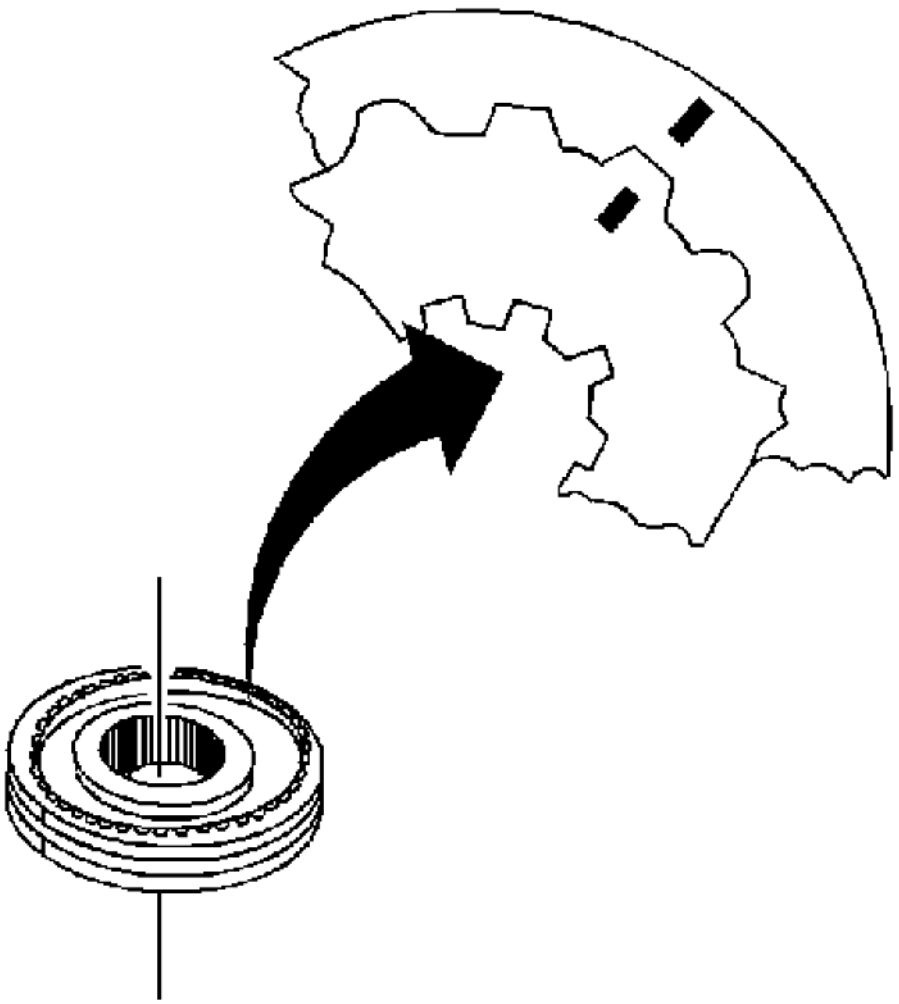

Fig. 87: View Of Alignment Marks On Synchronizer Hub & Synchronizer Sleeve
Courtesy of GENERAL MOTORS CORP.

NOTE: The synchronizer hubs and sliding sleeves are a selected assembly. Keep these parts together as originally assembled.

13. Scribe a mark on the synchronizer hub and on the sleeve. This will help you to reinstall the parts in the same position.

cardiagn.com

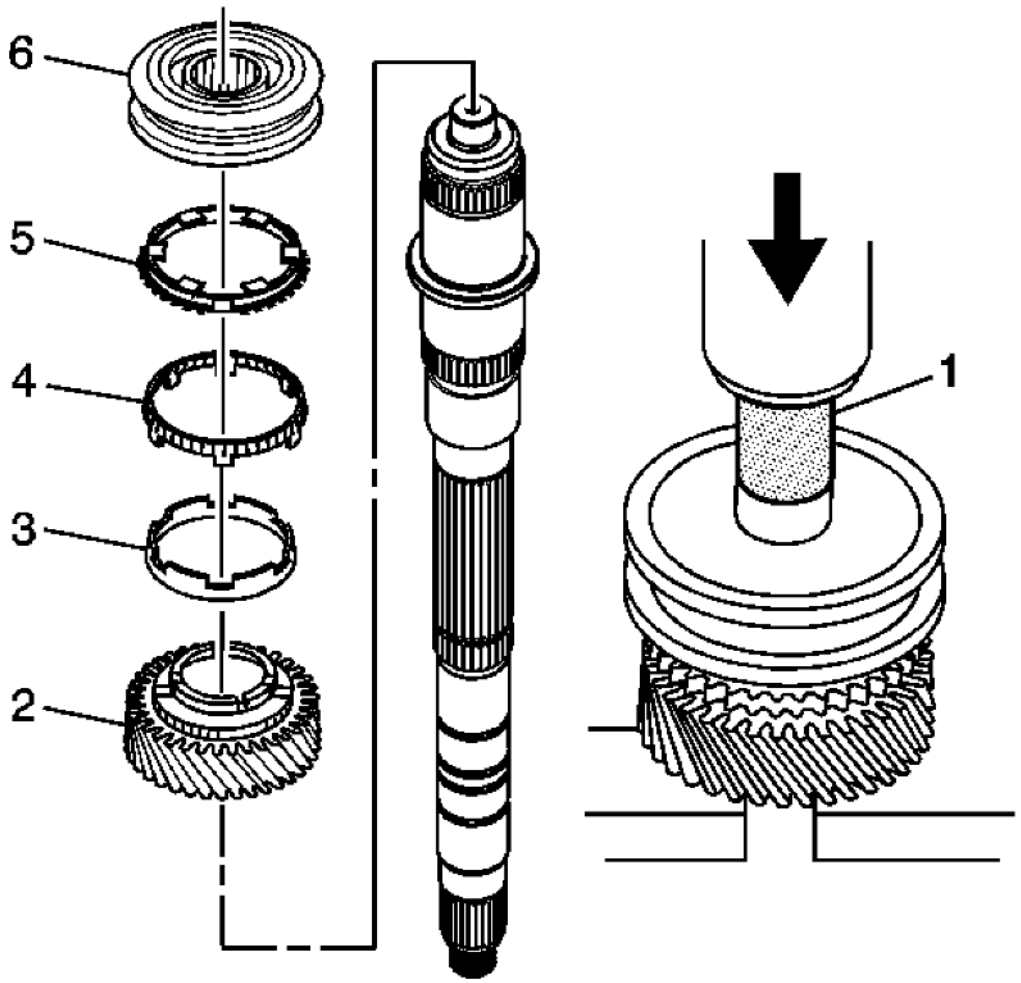

Fig. 88: Identifying 3rd Speed Gear Components
Courtesy of GENERAL MOTORS CORP.

14. Use the **J 39473:** installer (1), V-blocks, and a hydraulic press to remove the following components:
    - The 3rd/4th speed synchronizer assembly (6)
    - The 3rd speed gear blocking ring (5)
    - The 3rd speed gear outer cone (4)
    - The 3rd speed gear inner cone (3)
    - The 3rd speed gear (2)

cardiagn.com

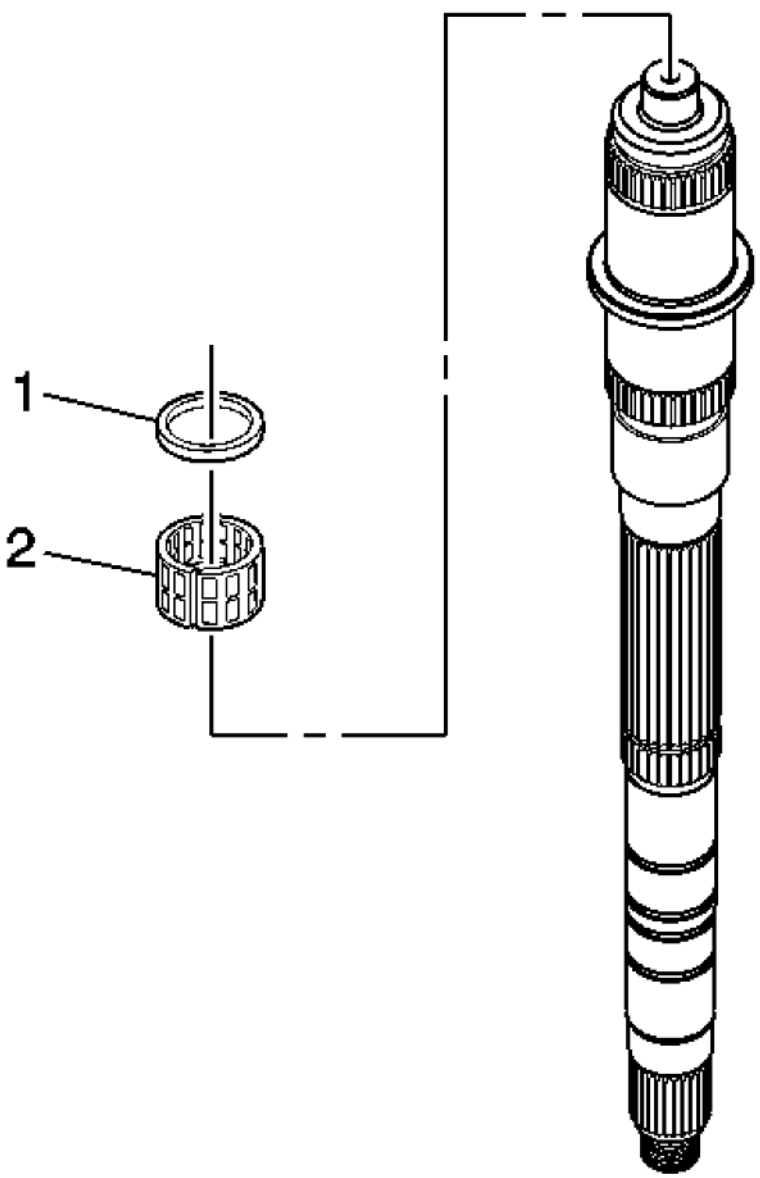

Fig. 89: Identifying 3rd Speed Drive Gear Spacer & Caged Needle Bearing
Courtesy of GENERAL MOTORS CORP.

15. Remove the 3rd speed drive gear spacer (1).
16. Remove the 3rd speed gear caged needle bearing (2).

Input Shaft

cardiagn.com

NOTE: **Do not replace the tapered bearing or the bearing race unless inspection shows that the bearing or the race are damaged.**

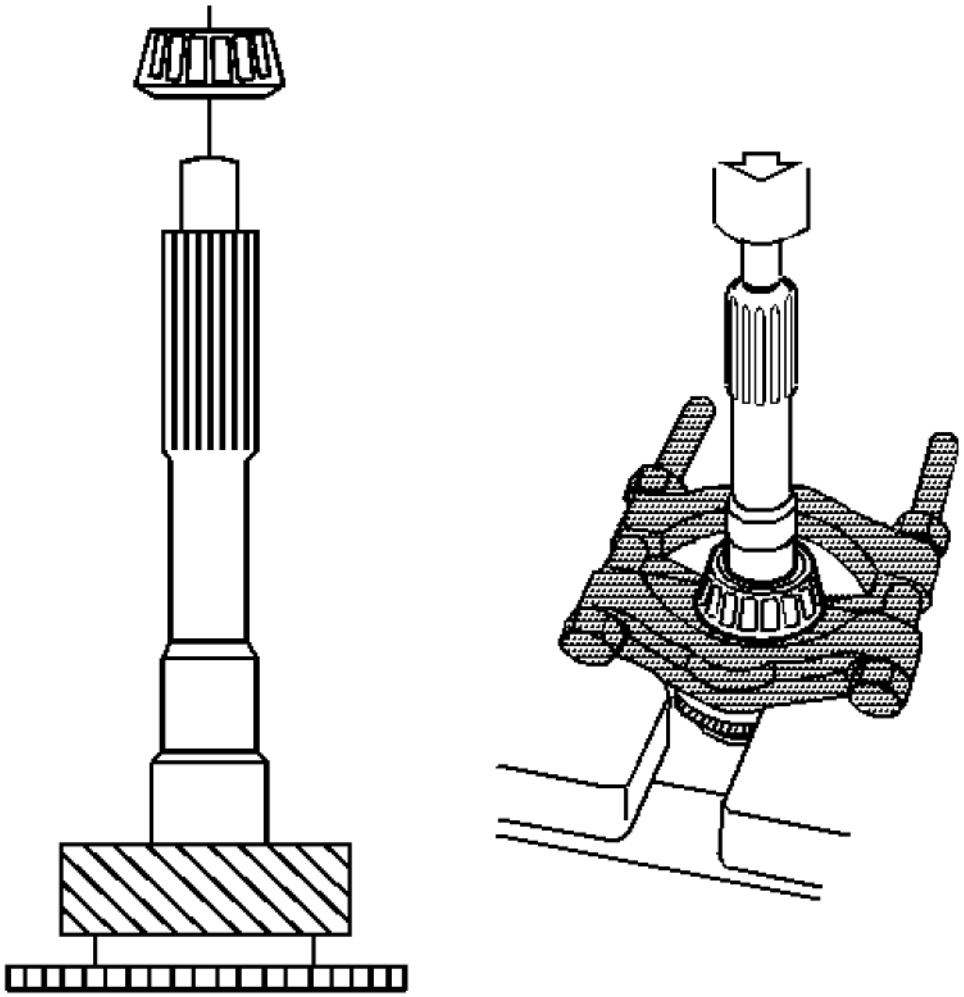

Fig. 90: Removing Tapered Bearing From Input Shaft
Courtesy of GENERAL MOTORS CORP.

1. Remove the tapered bearing from the input shaft, using the **J 22912-B:** bearing remover and a hydraulic press.

cardiagn.com

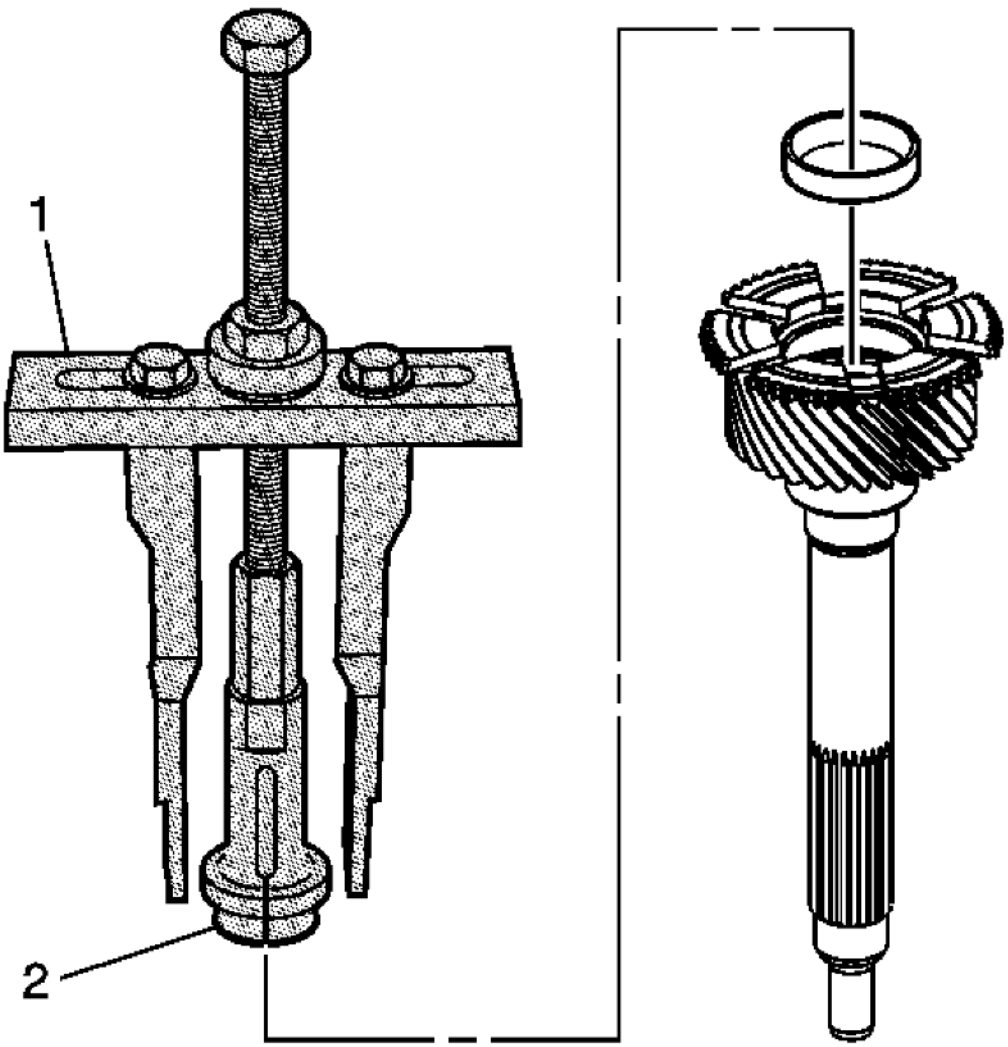

Fig. 91: Removing Bearing Race From Input Shaft
Courtesy of GENERAL MOTORS CORP.

2. Remove the bearing race from the input shaft, using the **J 45124:** bridge (1) and the **J 39594:** race remover (2).

COUNTER GEAR SHAFT DISASSEMBLE

Special Tools

- **J 22912-B:** Rear Pinion and Axle Bearing Remover/Split Plate

cardiagn.com

- **J 39473:** Mainshaft Bearing Installer
- **J 39547:** Press Adapter

For equivalent regional tools, refer to **Special Tools**.

NOTE: Do not replace tapered bearings unless inspection shows bearing damage.

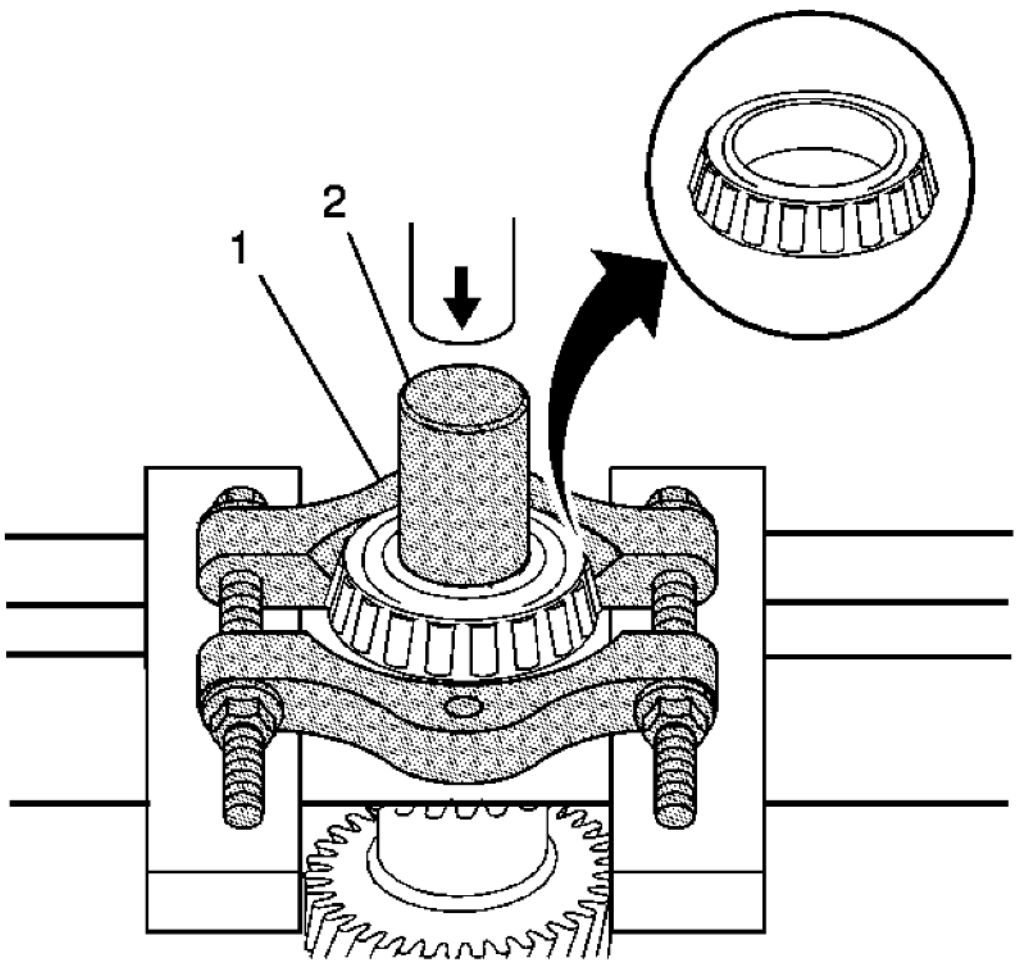

Fig. 92: Removing Countershaft Front Bearing
Courtesy of GENERAL MOTORS CORP.

1. Remove the countershaft front bearing, using the **J 22912-B:** remover (1) with the **J 39473:** installer (2) and a hydraulic press.
2. Discard the countershaft front bearing.

cardiagn.com

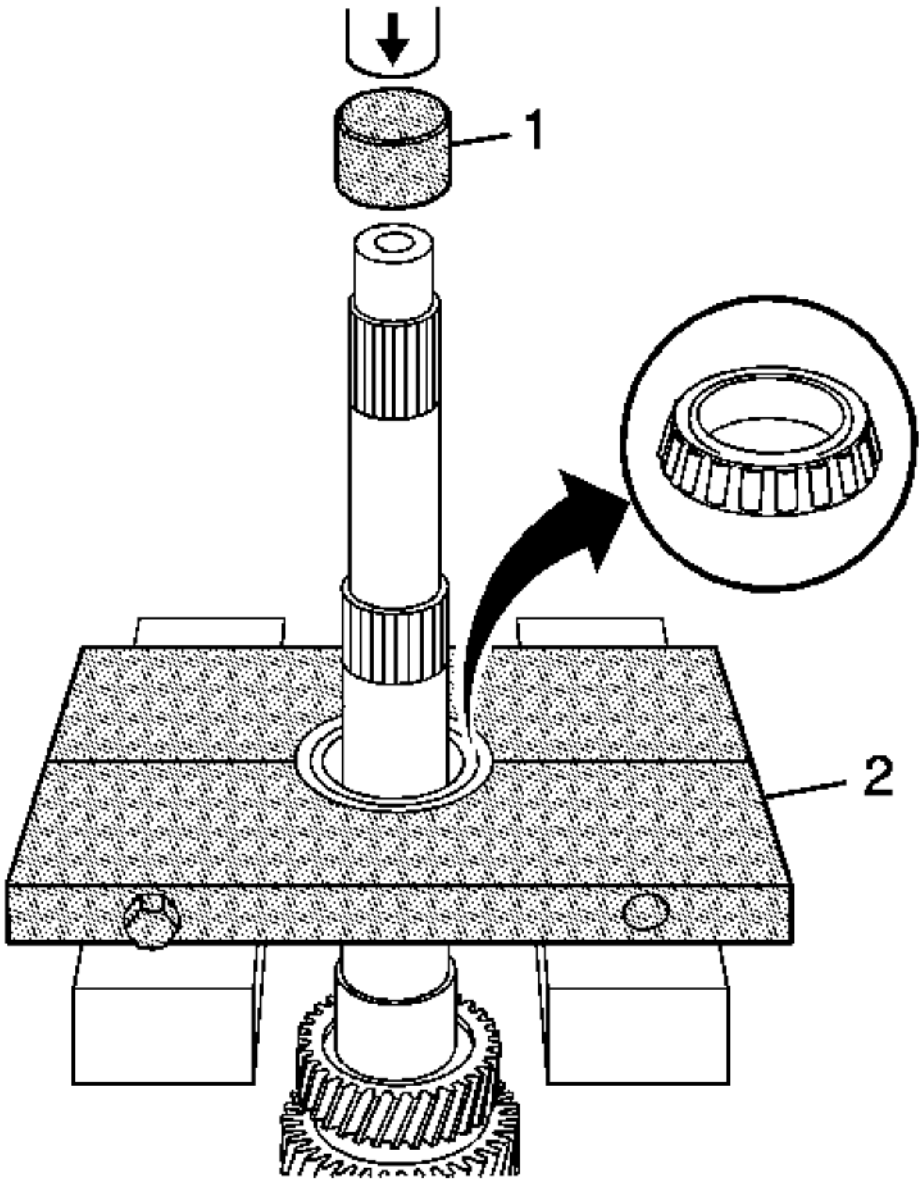

Fig. 93: Removing Countershaft Rear Bearing
Courtesy of GENERAL MOTORS CORP.

3. Remove the countershaft rear bearing, using the **J 22912-B:** split plate (2), the **J 39547:** adapter (1) and a hydraulic press.
4. Discard the countershaft rear bearing.

cardiagn.com

SYNCHRONIZERS DISASSEMBLE

1st/2nd, 3rd/4th, 5th/6th Synchronizers

IMPORTANT: Synchronizer components are not interchangeable. Keep all the synchronizer components separate. The synchronizer hubs and the sliding sleeves are a selected assembly. Keep the hubs and the sliding sleeves together as originally assembled.

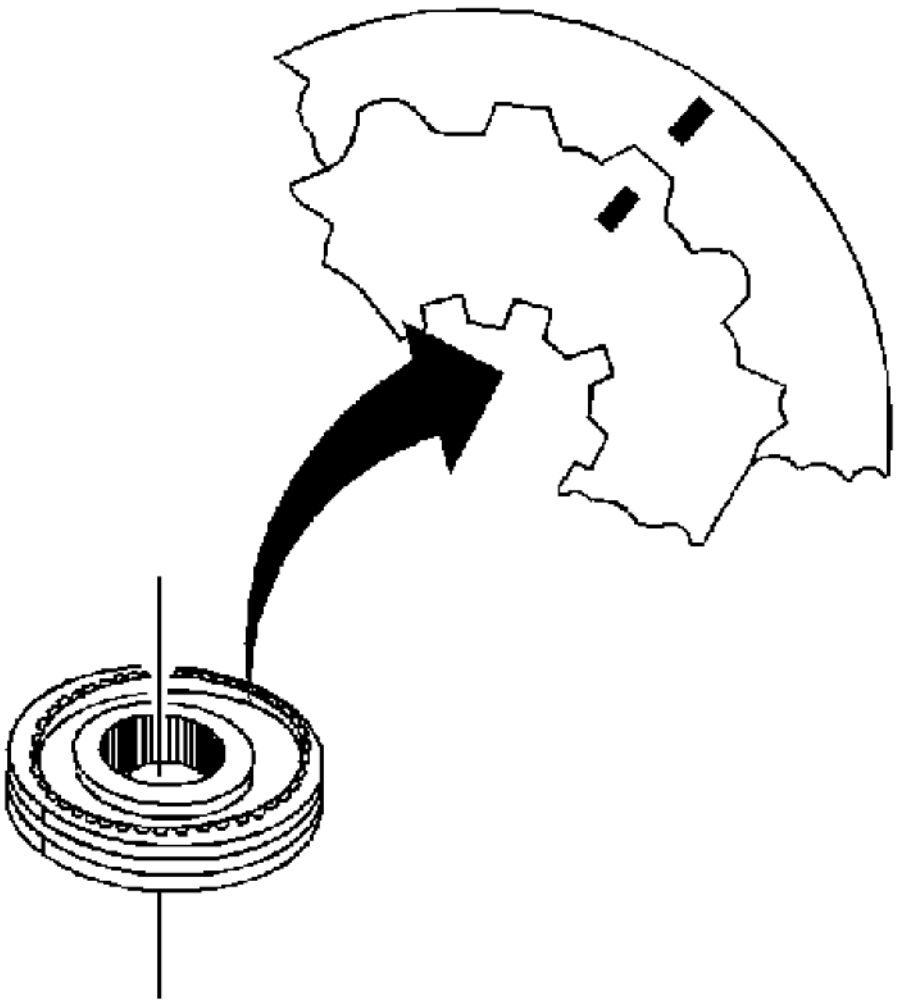

Fig. 94: View Of Alignment Marks On Synchronizer Hub & Synchronizer Sleeve
Courtesy of GENERAL MOTORS CORP.

cardiagn.com

1. Scribe a mark on the synchronizer hub and on the sleeve. This will help you to reinstall the parts in the same position.

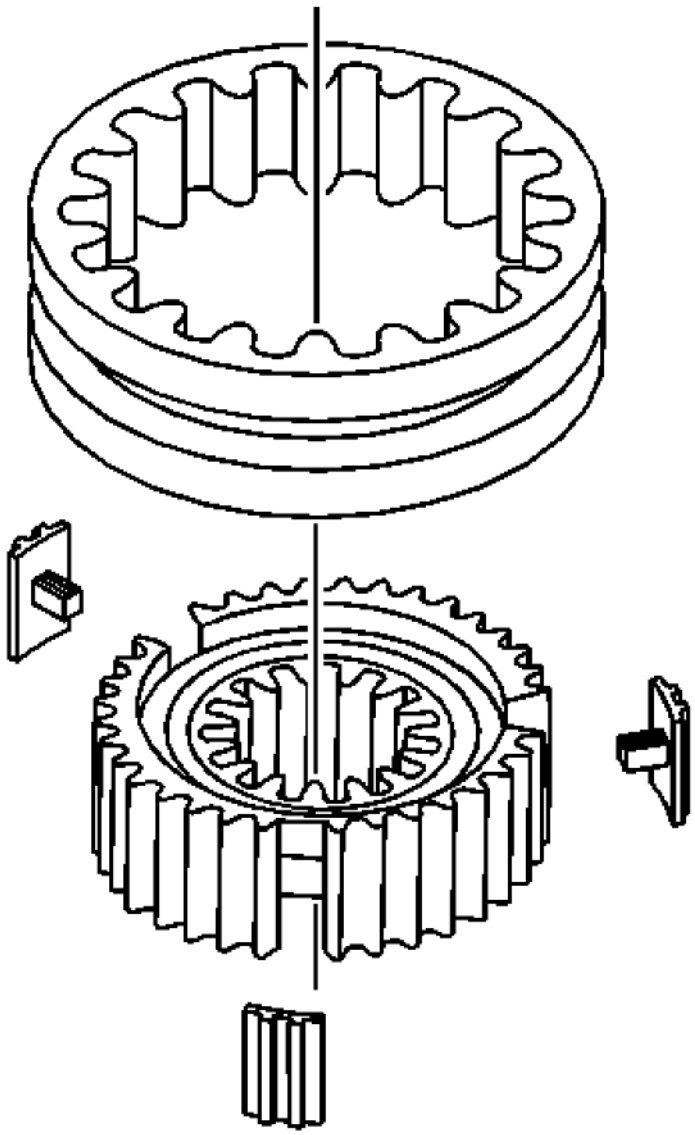

Fig. 95: Identifying Synchronizer Inserts
Courtesy of GENERAL MOTORS CORP.

2. Remove the synchronizer inserts from the hub.

cardiagn.com

Reverse Synchronizer

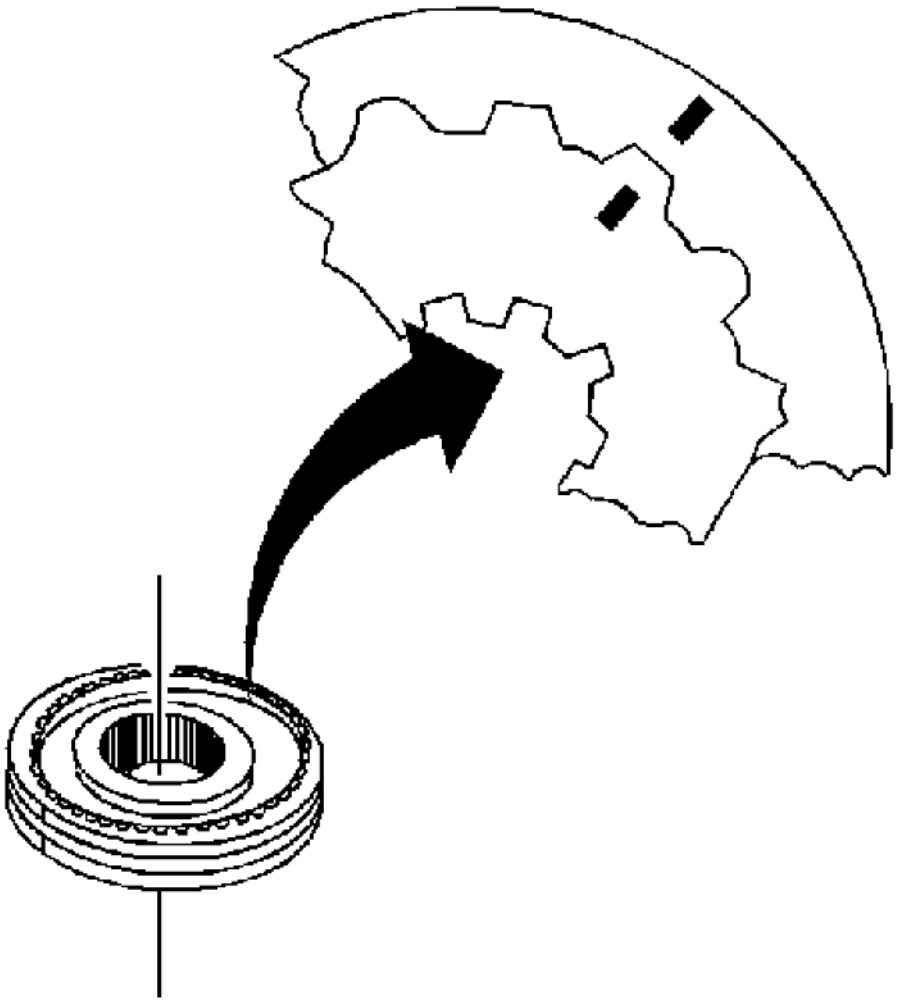

Fig. 96: View Of Alignment Marks On Synchronizer Hub & Synchronizer Sleeve
Courtesy of GENERAL MOTORS CORP.

1. Scribe a mark on the synchronizer hub and on the sleeve. This will help you to reinstall the parts in the same position.

cardiagn.com

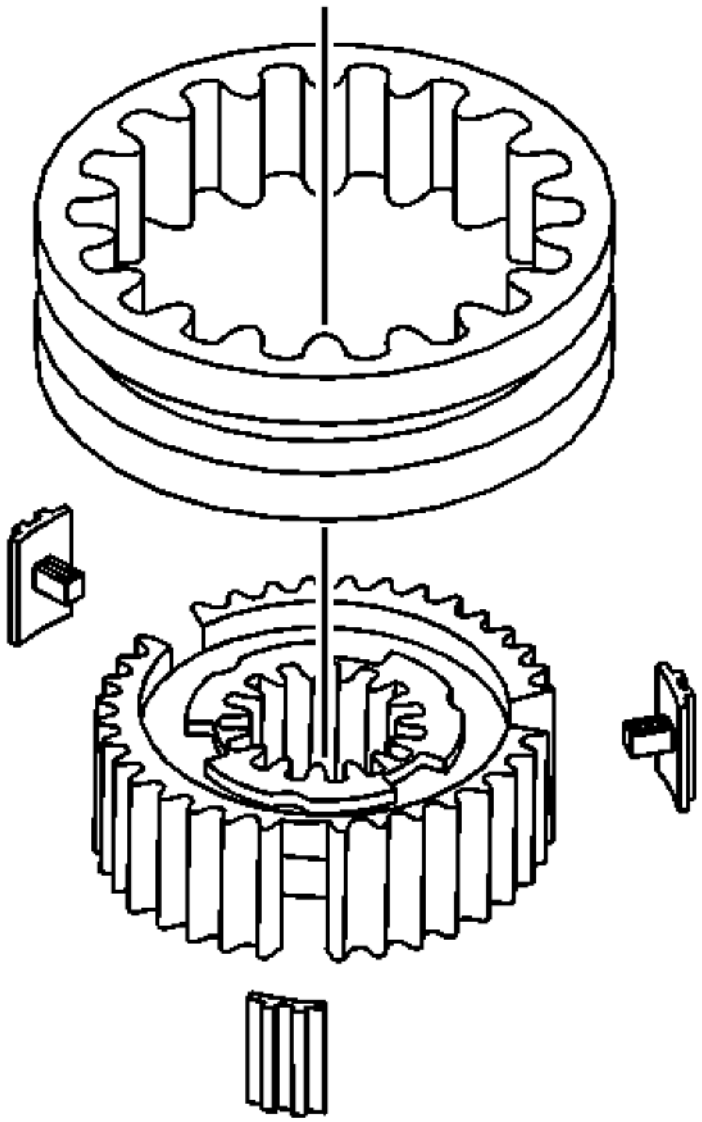

Fig. 97: Synchronizer Sleeve & Hub
Courtesy of GENERAL MOTORS CORP.

2. Remove the synchronizer sleeve from the hub. Press against the inner hub.
3. Turn the hub over. The inserts will slide out from the hub.

cardiagn.com

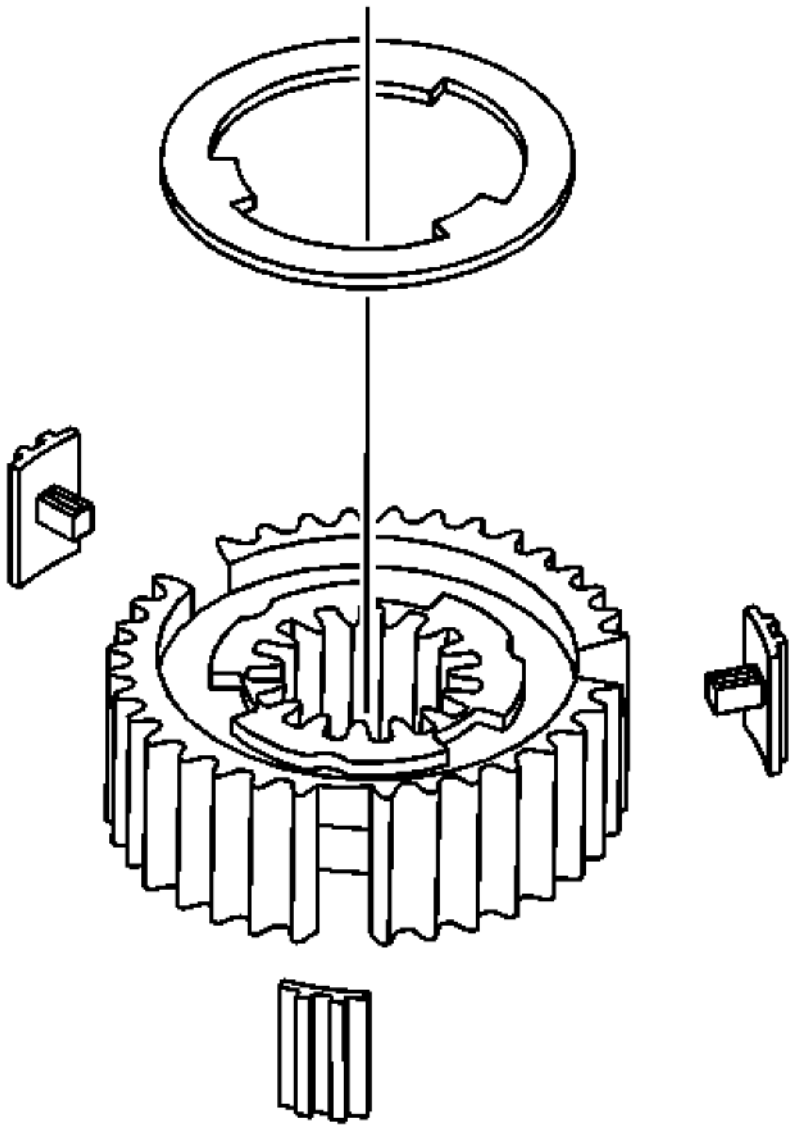

Fig. 98: View Of Synchronizer Key Retainer
Courtesy of GENERAL MOTORS CORP.

4. Using a small-blade screwdriver, remove the synchronizer key retainer, and discard.

SYNCHRONIZERS CLEANING AND INSPECTION

1. Clean all the synchronizer parts in a suitable solvent. Air dry all the synchronizer parts.

cardiagn.com

2. Inspect the synchronizer parts for the following conditions:
   - Burrs
   - Cracks
   - Hicks
   - Chamfer for excessive wear
   - Free movement of the clutching sleeves on their hubs
   - Worn or damaged clutch teeth
   - Distorted springs
3. Replace synchronizer parts that are worn or damaged.

   Replace a burred or nicked part that cannot be reconditioned by hand. Use a soft stone or a crocus cloth.

cardiagn.com

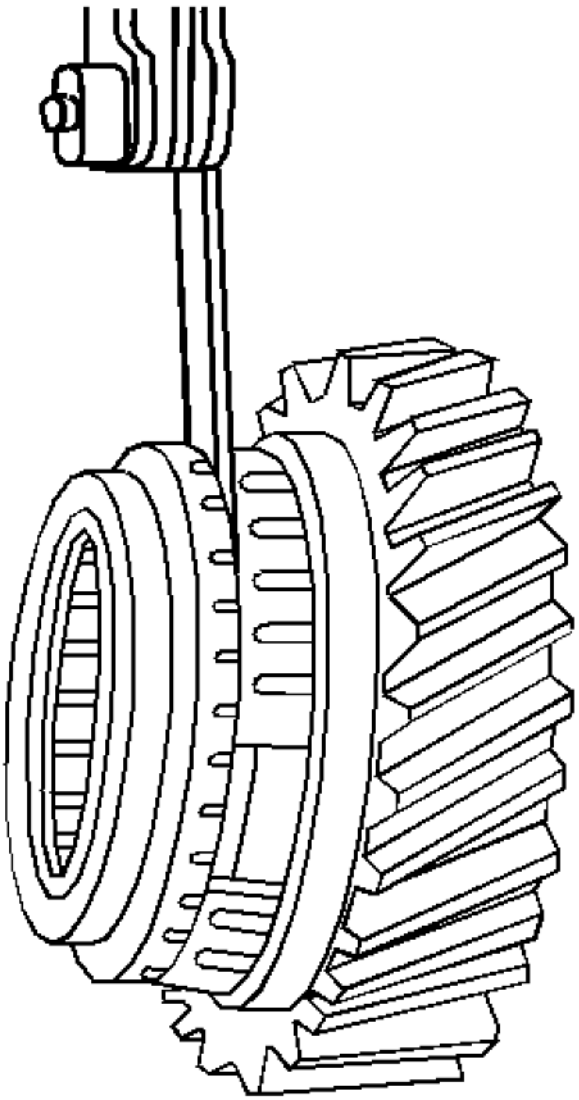

Fig. 99: Measuring Gap Between Blocking Ring & Speed Gear
Courtesy of GENERAL MOTORS CORP.

NOTE: Measure the gap without the wave washer in between the blocking ring and the reverse gear.

4. Measure the gap between the vertical faces of the blocking ring teeth and the speed gear as follows:
    1. Assemble the correct blocking ring with the correct speed gear.

cardiagn.com

2. The blocking ring must be fully seated on the gear.
3. Use a feeler gauge to measure the forward gear gap.
4. Use a feeler gauge to measure the reverse gear gap.

   The nominal gap is 1.27-2.16 mm (0.050-0.085 in) for the 1st and 2nd gear.

   The nominal gap is 1.27-2.03 mm (0.050-0.080 in) for the 3rd, 4th, 5th and 6th gear.

   Replace the friction cones and blocker rings when the gap is less than specified.

SYNCHRONIZERS ASSEMBLE

1st/2nd Synchronizer

cardiagn.com

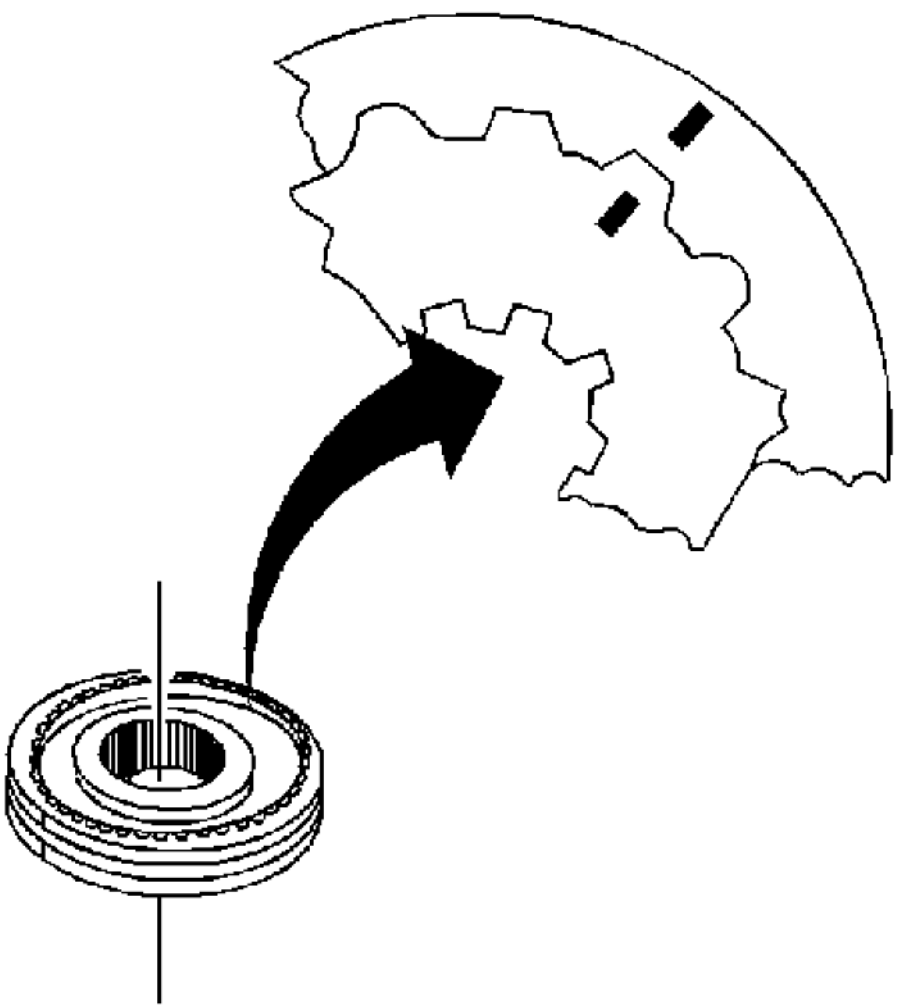

Fig. 100: View Of Alignment Marks On Synchronizer Hub & Synchronizer Sleeve
Courtesy of GENERAL MOTORS CORP.

1. Check the synchronizer assembly scribe marks for correct positions.

cardiagn.com

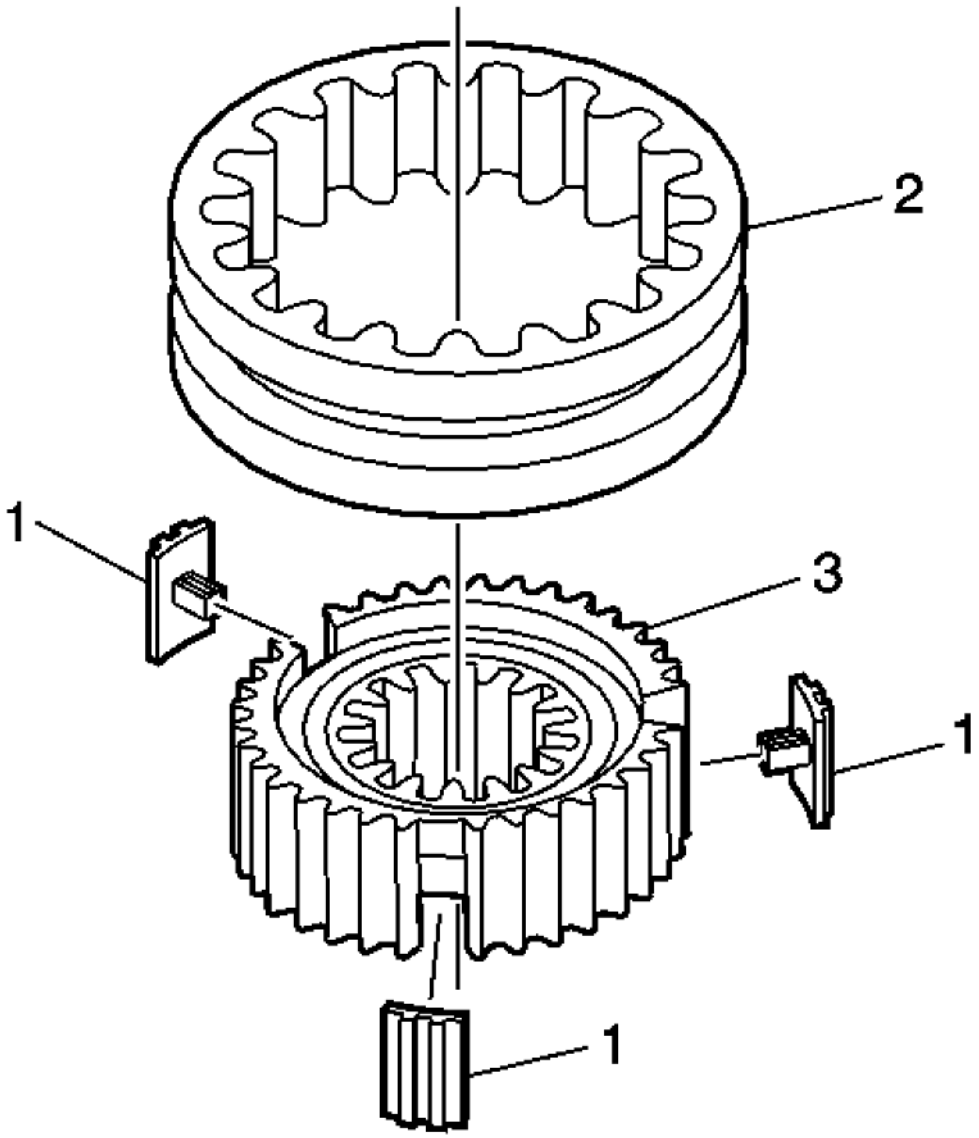

Fig. 101: Assembling 1st/2nd Synchronizer
Courtesy of GENERAL MOTORS CORP.

2. Install the synchronizer sleeve (2) to the hub (3) (align the insert openings in the hub with the cuts in the synchronizer sleeve).
3. Install the inserts (1) with the slots facing the hub.

cardiagn.com

3rd/4th, 5th/6th Synchronizers

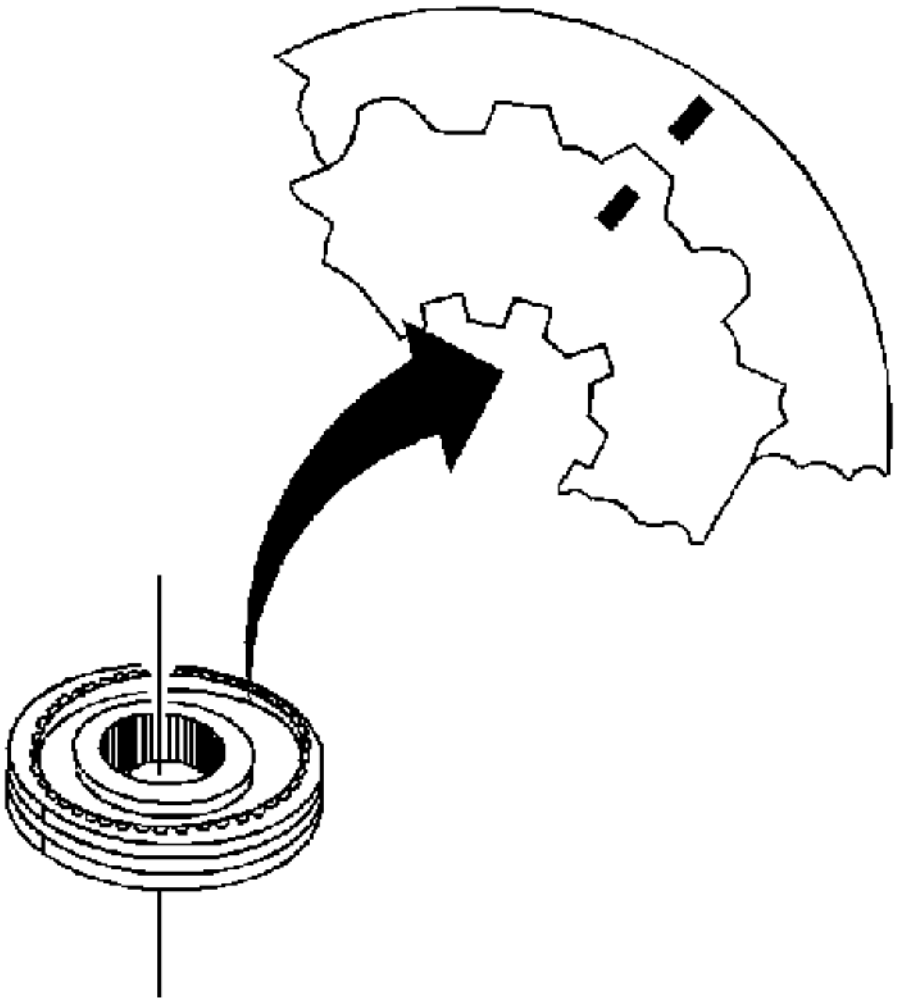

Fig. 102: View Of Alignment Marks On Synchronizer Hub & Synchronizer Sleeve
Courtesy of GENERAL MOTORS CORP.

1. Check the synchronizer assembly scribe marks for correct positions.

cardiagn.com

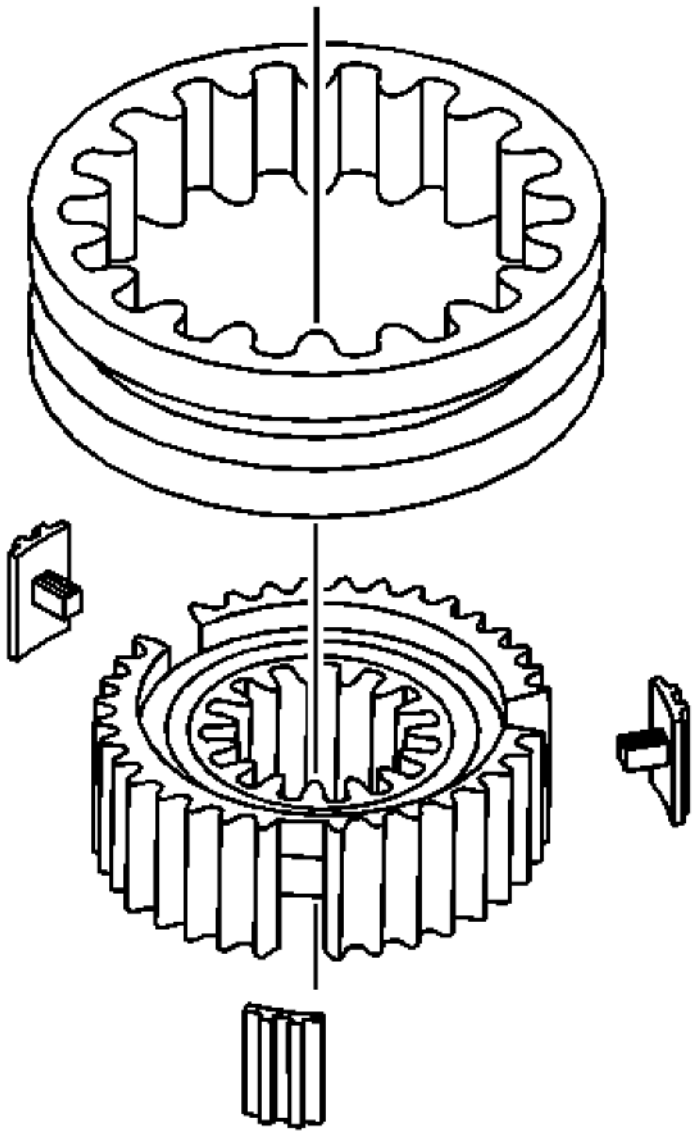

Fig. 103: Identifying Synchronizer Inserts
Courtesy of GENERAL MOTORS CORP.

2. Install the synchronizer sleeve to the hub (align the insert openings in the hub with the cuts in the synchronizer sleeve).
3. Install the inserts with the slots facing the hub.

Reverse Synchronizer

cardiagn.com

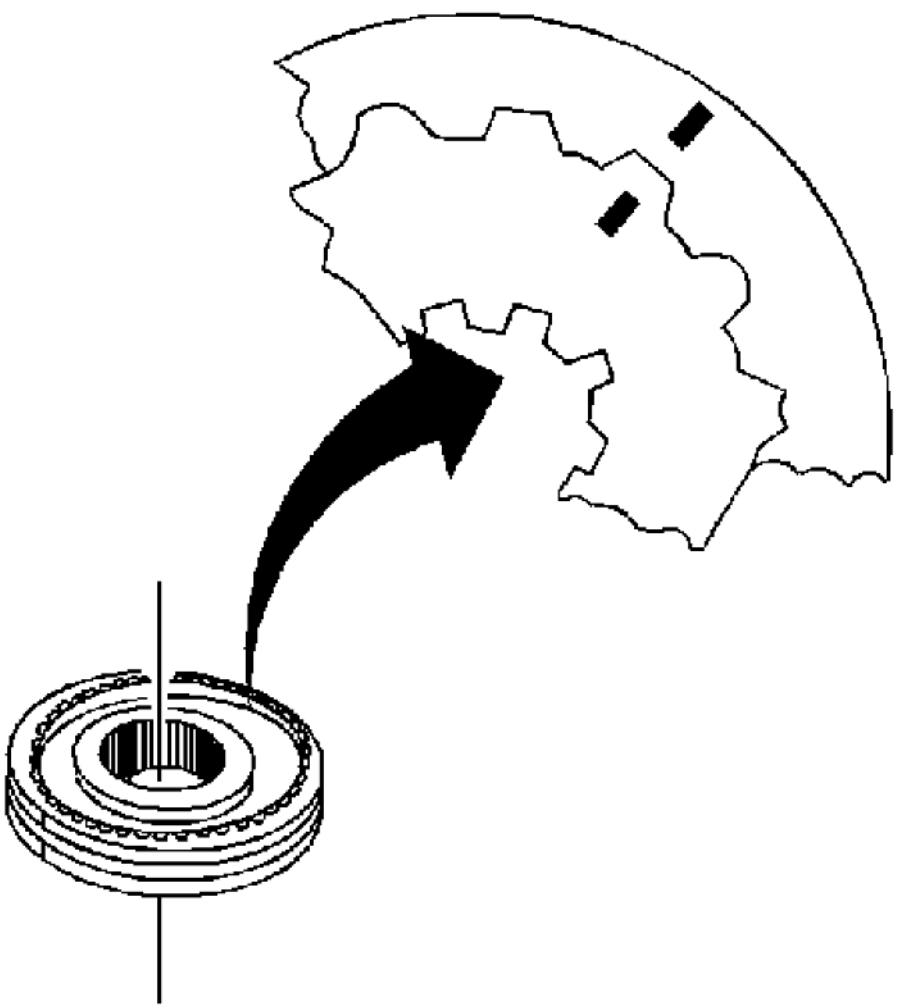

Fig. 104: View Of Alignment Marks On Synchronizer Hub & Synchronizer Sleeve
Courtesy of GENERAL MOTORS CORP.

1. Check the synchronizer assembly scribe marks for correct positions.

cardiagn.com

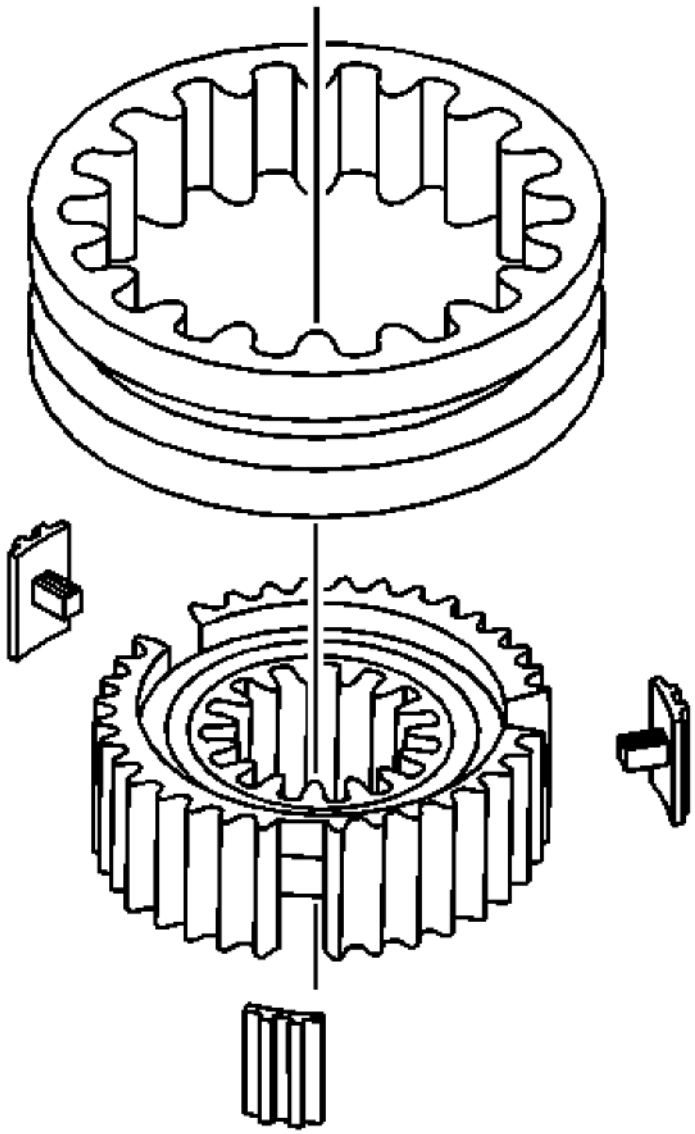

Fig. 105: Identifying Synchronizer Inserts
Courtesy of GENERAL MOTORS CORP.

2. Install the synchronizer sleeve to the hub (align the insert openings in the hub with the cuts in the synchronizer sleeve).
3. Install the inserts with the slots facing the hub.

cardiagn.com

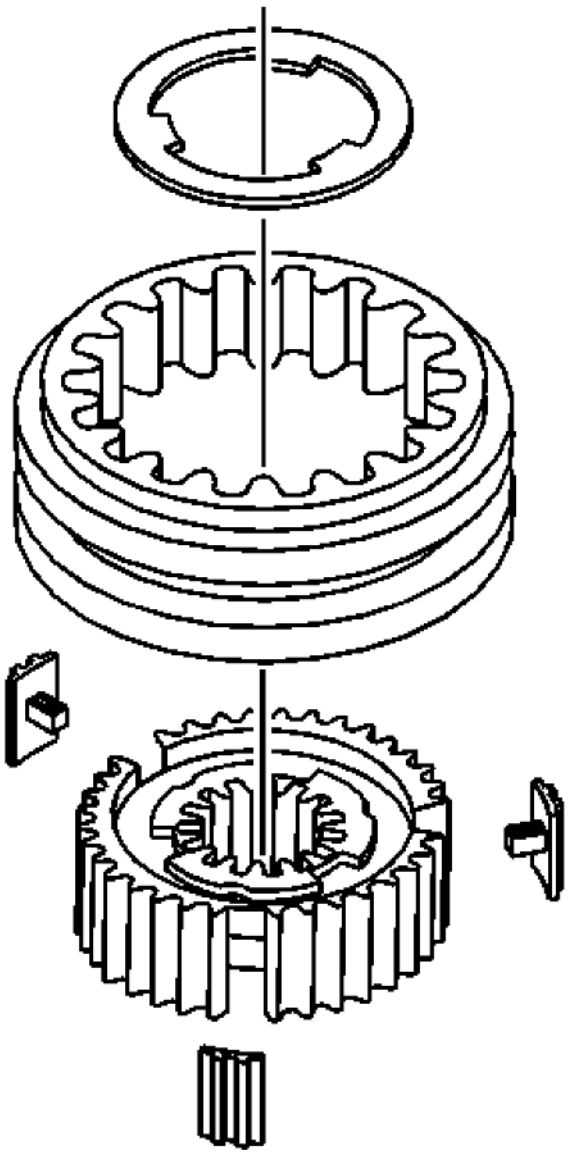

Fig. 106: Synchronizer Insert Retainer & Key Retainer Tangs
Courtesy of GENERAL MOTORS CORP.

4. Install a new synchronizer insert retainer with the key retainer tangs over the synchronizer inserts.

SHIFT SHAFT AND FORK ASSEMBLIES DISASSEMBLE

cardiagn.com

Special Tools

- **J 23907:** Slide Hammer
- **J 39439-2:** Bushing Remover

For equivalent regional tools, refer to **Special Tools**.

1st/2nd, 3rd/4th Shift Rail Assembly

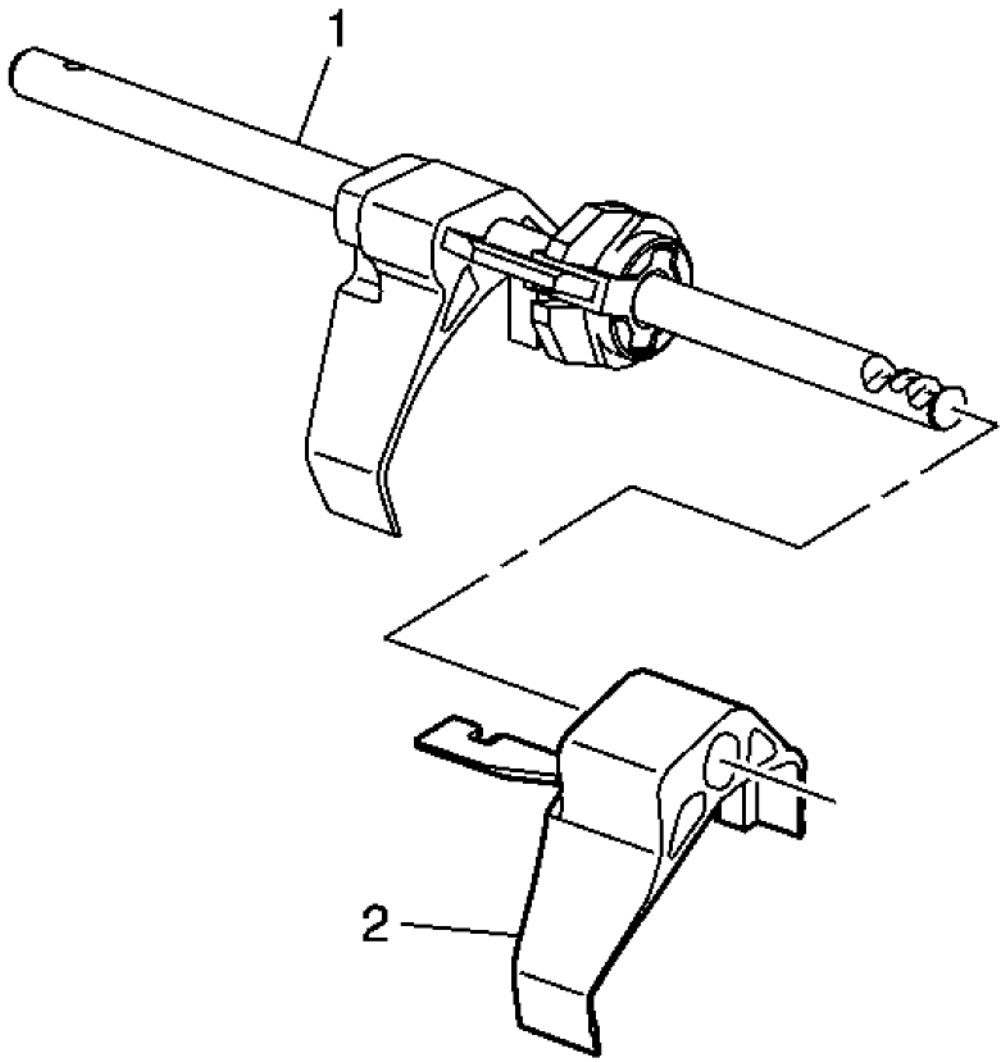

Fig. 107: 1st/2nd Shift Fork & Shift Shaft

cardiagn.com

Courtesy of GENERAL MOTORS CORP.

1. Remove the 1st/2nd shift fork (2) from the shift shaft (1).

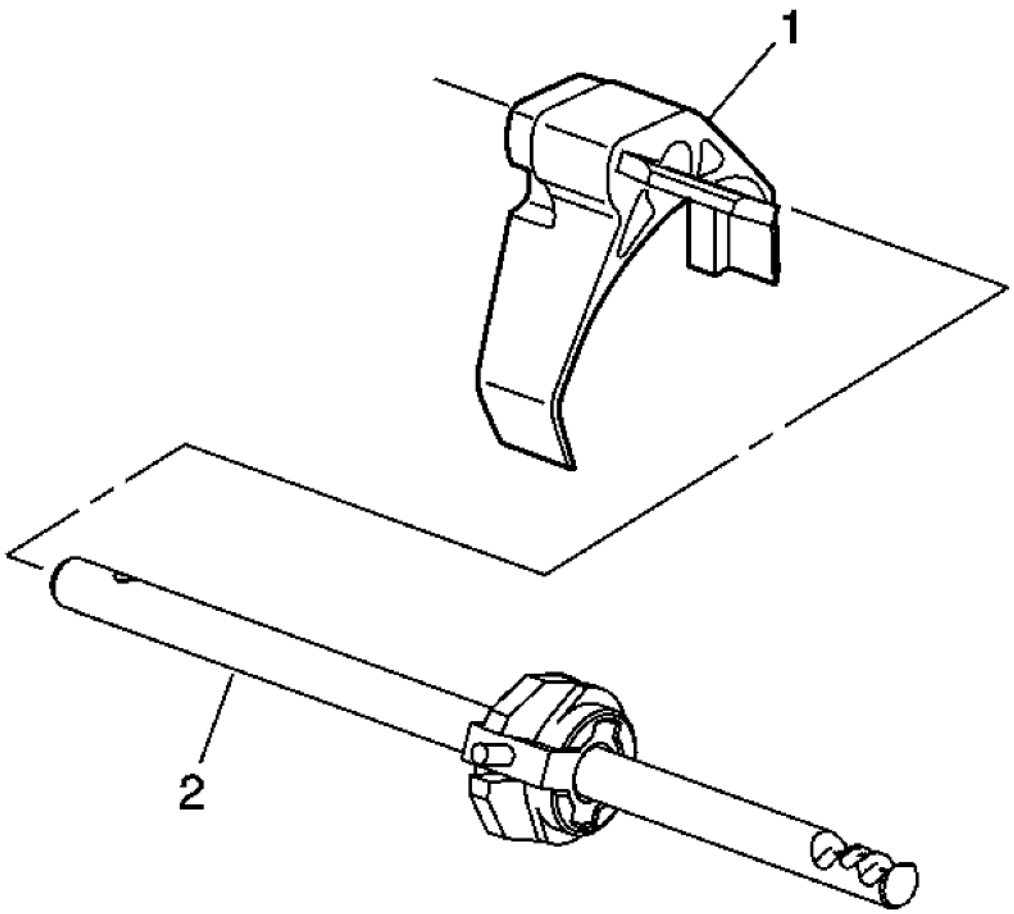

Fig. 108: 3rd/4th Shift Fork & Shift Shaft
Courtesy of GENERAL MOTORS CORP.

2. Remove the 3rd/4th shift fork (1) from the shift shaft (2).

cardiagn.com

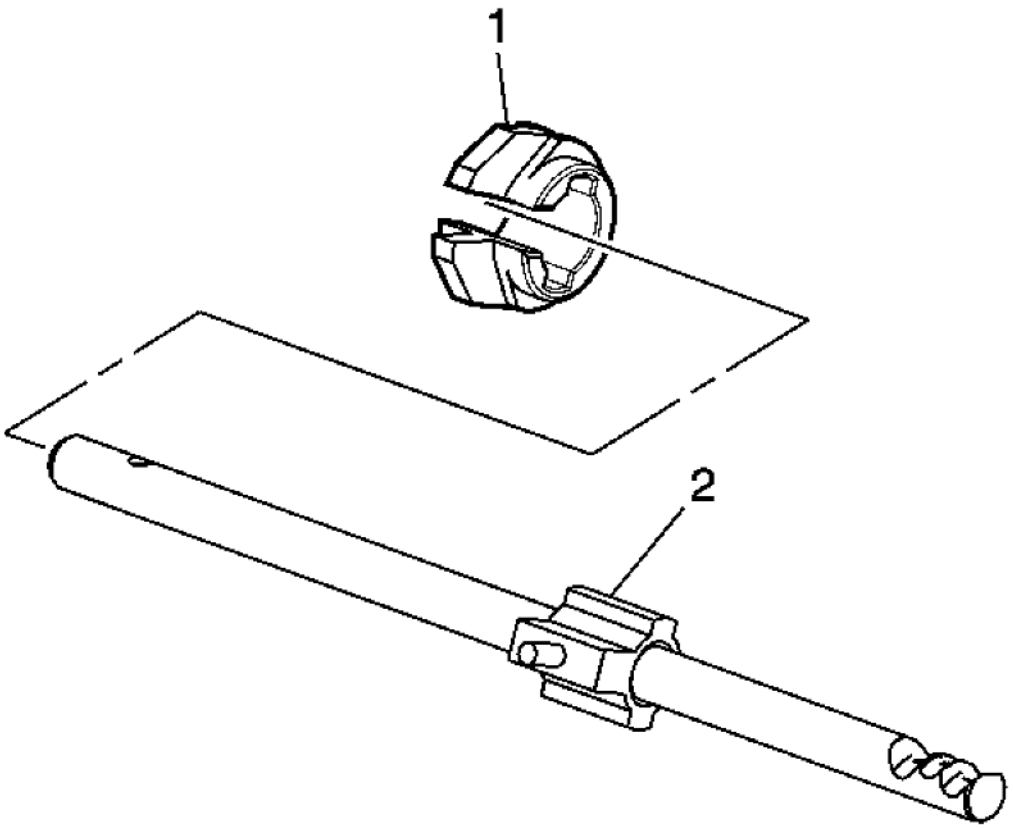

Fig. 109: Interlock Plate & Selector Pin
Courtesy of GENERAL MOTORS CORP.

3. Remove the interlock plate (1) from the selector pin (2).

cardiagn.com

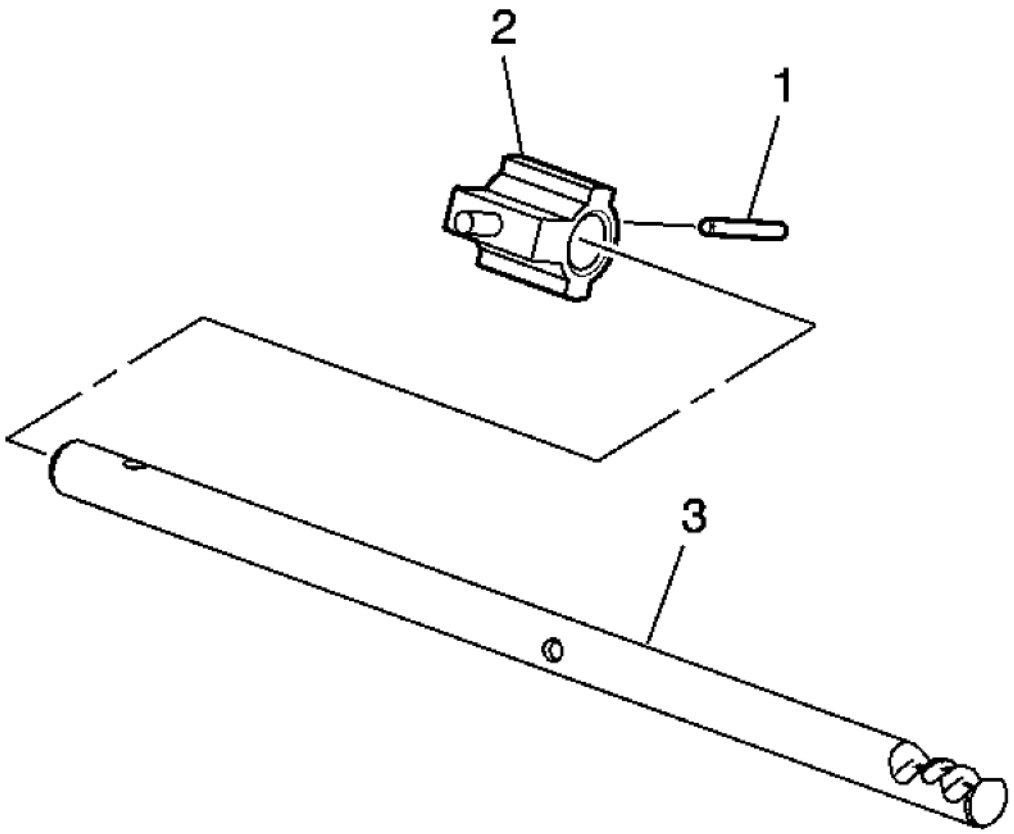

Fig. 110: Selector Roll Pin, Selector Pin & Shift Shaft
Courtesy of GENERAL MOTORS CORP.

4. Remove the selector roll pin (1).
5. Remove the selector pin (2) from the shift shaft (3).

5th/6th, Reverse Shift Rail Assembly

cardiagn.com

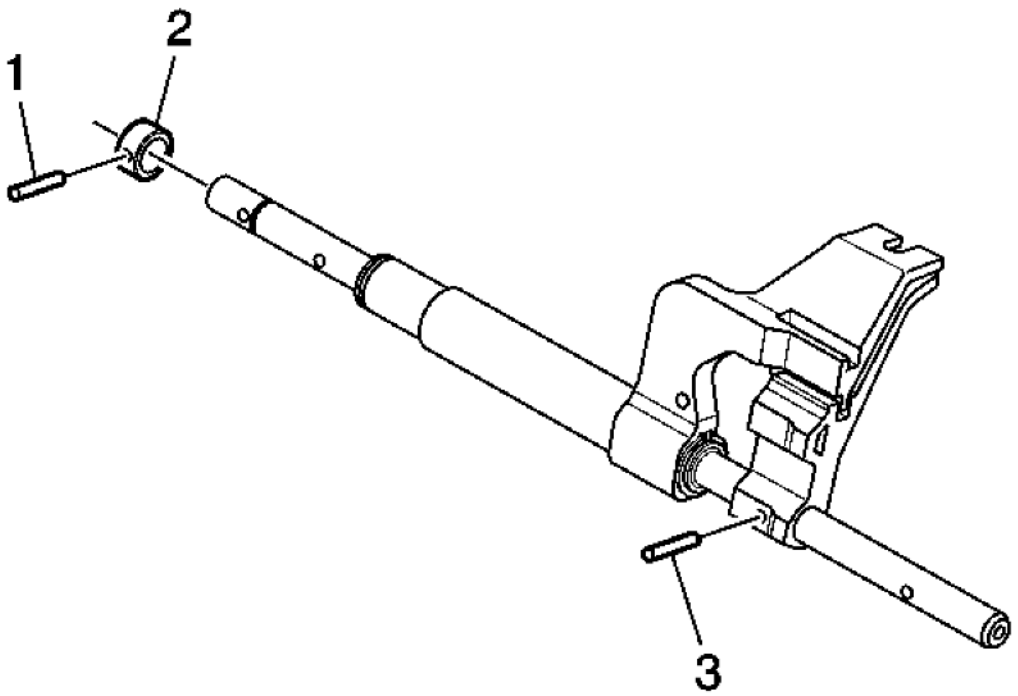

Fig. 111: Reverse Shift Collar Pin, Lever Collar & Lever Pin
Courtesy of GENERAL MOTORS CORP.

1. Remove the reverse shift collar pin (1).
2. Remove the reverse shift lever collar (2).
3. Remove the reverse shift lever pin (3).

cardiagn.com

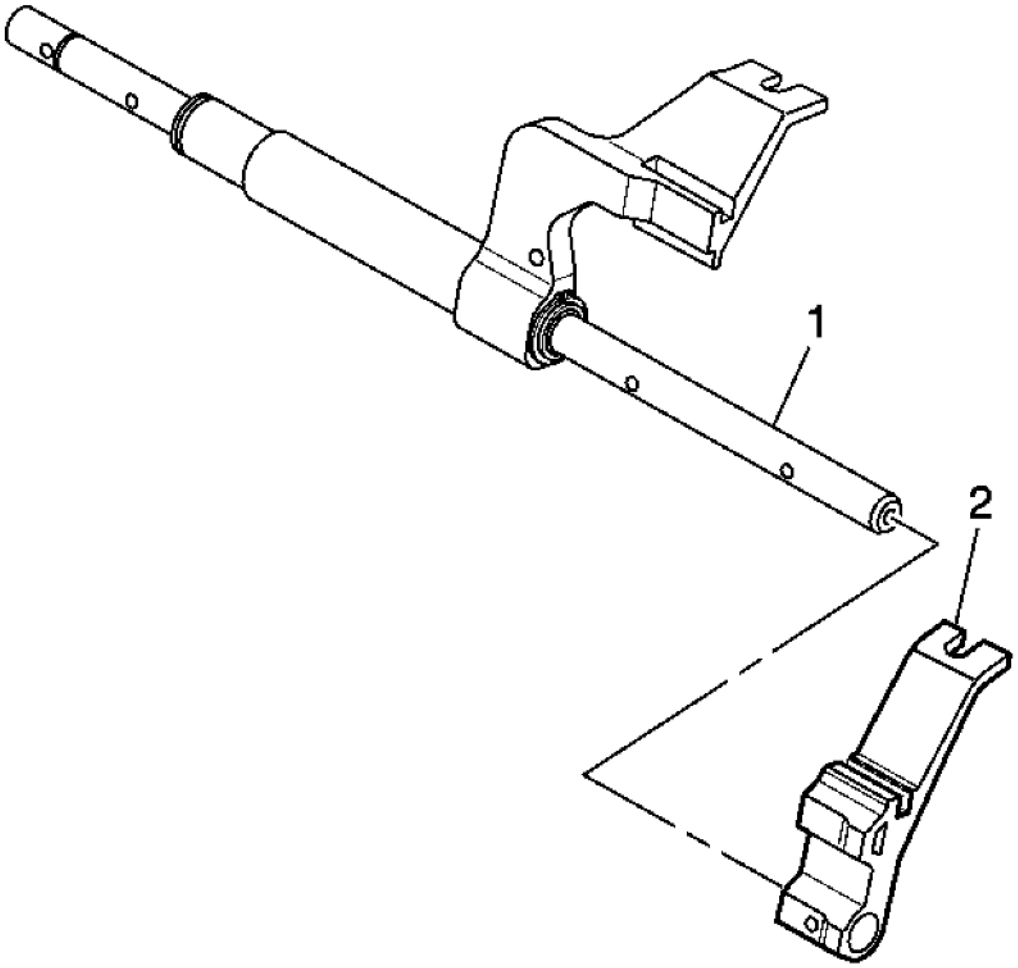

Fig. 112: Reverse Shift Lever & Shift Shaft
Courtesy of GENERAL MOTORS CORP.

4. Remove the reverse shift lever (2) from the shift shaft (1).

cardiagn.com

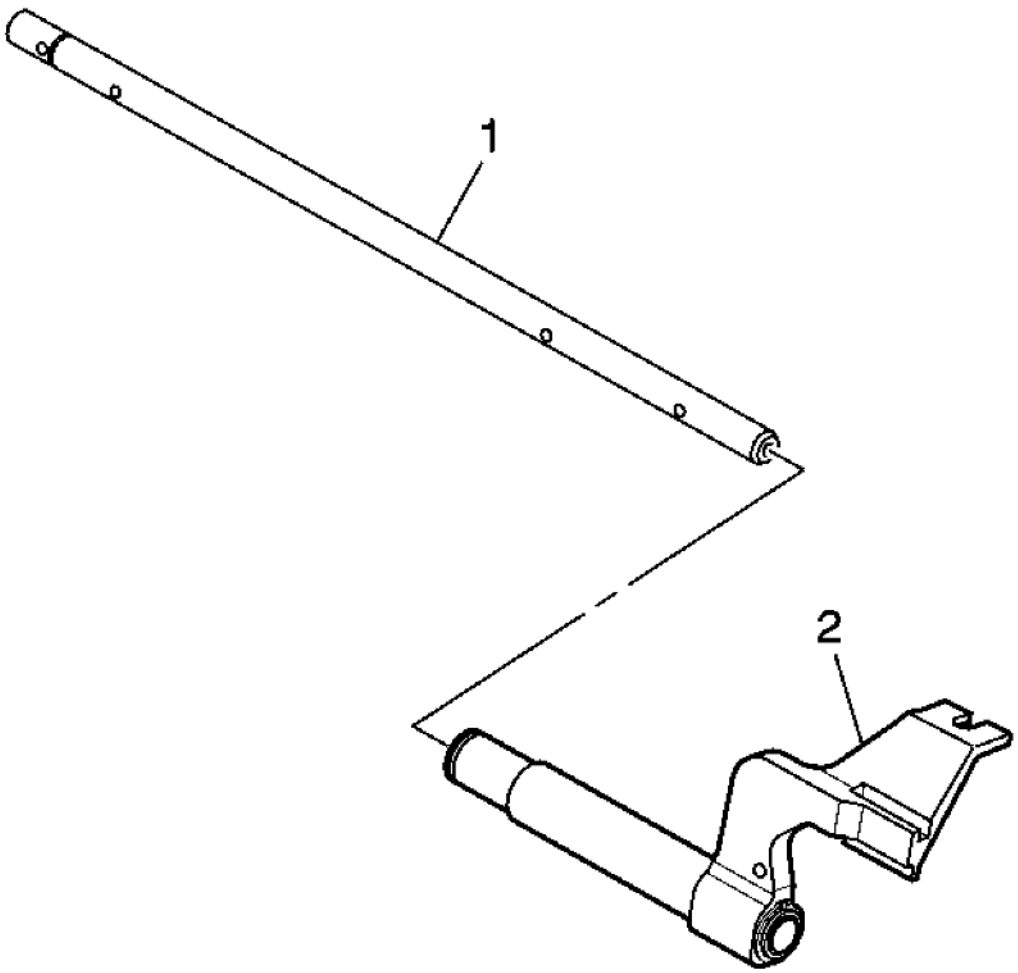

Fig. 113: View Of 5th/6th Shift Lever & Shift Shaft
Courtesy of GENERAL MOTORS CORP.

5. Remove the 5th/6th shift lever (2) from the shift shaft (1).

cardiagn.com

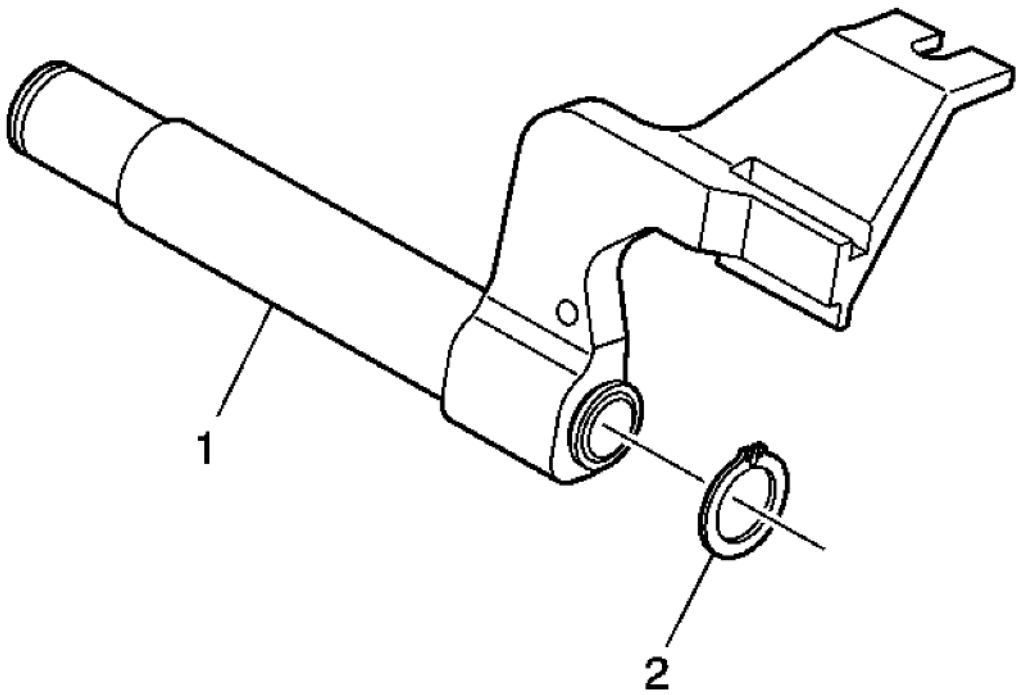

Fig. 114: View Of Retainer Ring & 5th/6th Shift Lever
Courtesy of GENERAL MOTORS CORP.

6. Remove the snap ring (2) from the 5th/6th shift lever (1).

cardiagn.com

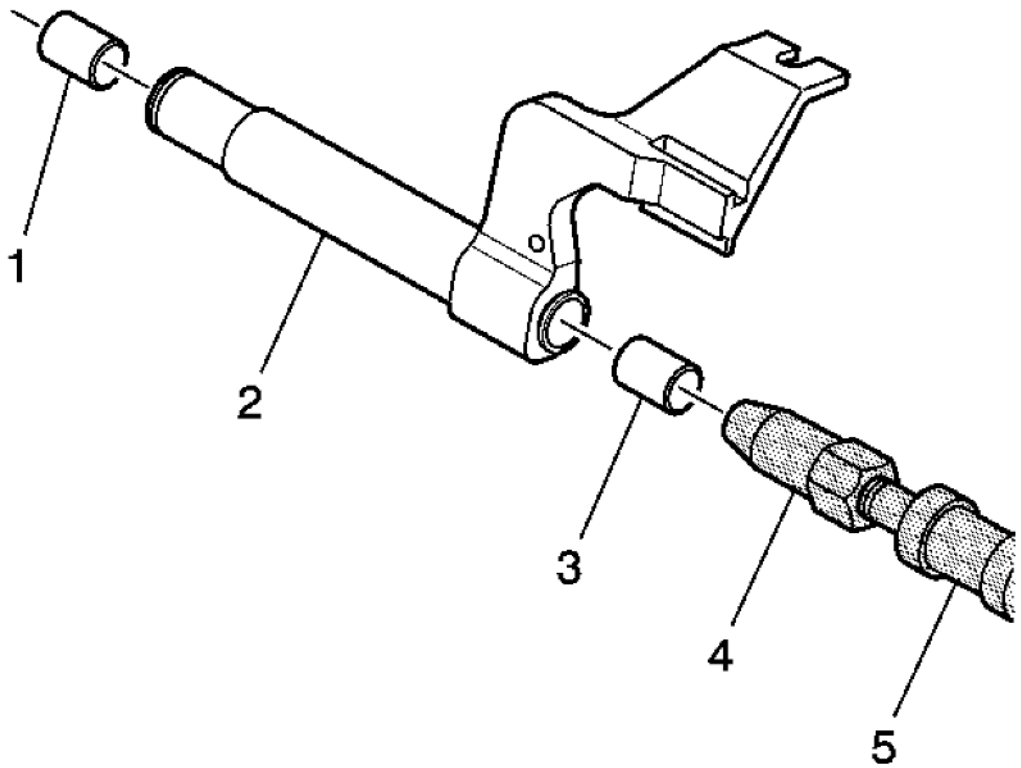

Fig. 115: Removing 5th/6th Shift Shaft Bushings
Courtesy of GENERAL MOTORS CORP.

NOTE: Do not replace the bushings unless inspection shows bushing damage.

7. Remove the shift shaft bushings (1, 3) from the 5th/6th and reverse shift lever (2) using the **J 23907:** slide hammer (5) and the **J 39439-2:** remover (4).

SHIFT SHAFT AND FORK ASSEMBLIES CLEANING AND INSPECTION

cardiagn.com

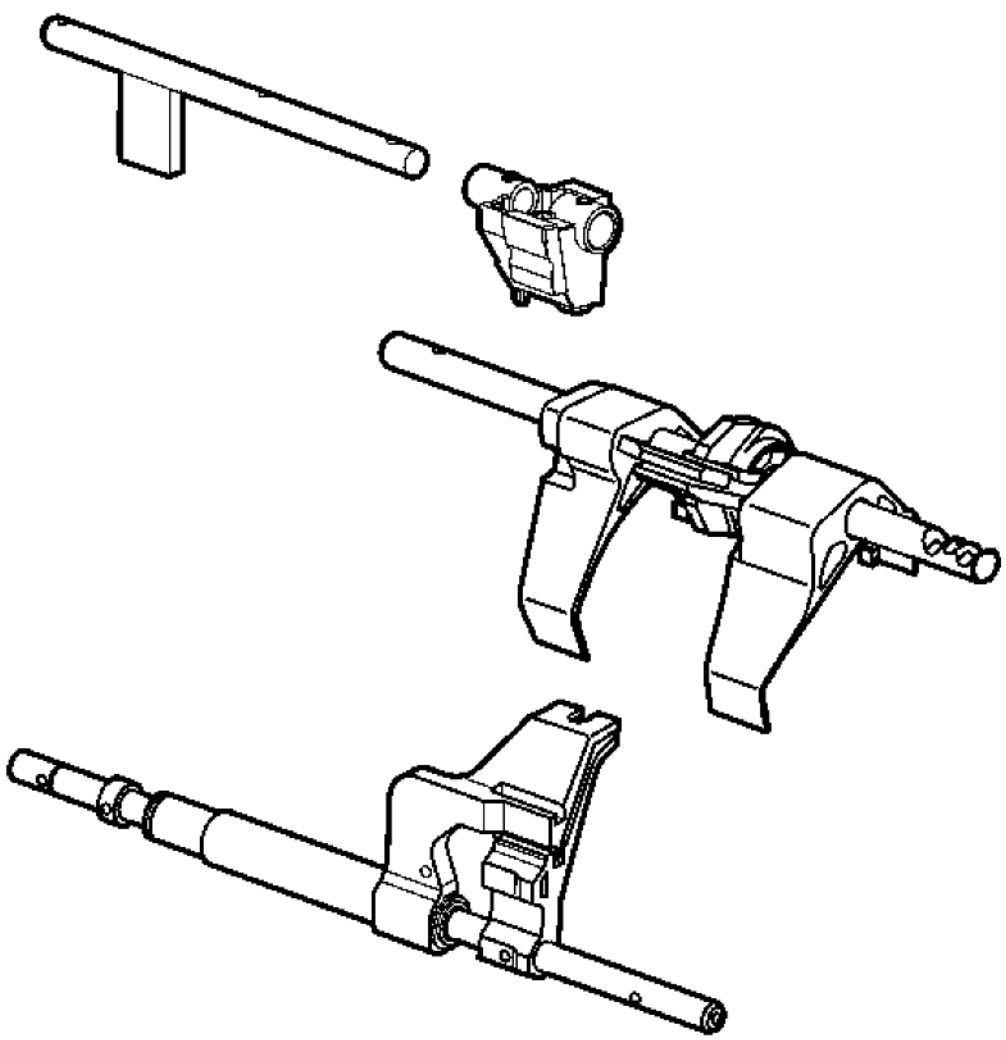

Fig. 116: Shift Shaft & Fork Assembly Parts
Courtesy of GENERAL MOTORS CORP.

WARNING: Wear safety glasses to avoid injury when using compressed air or any cleaning solvent. Bodily injury may occur if fumes are inhaled or if skin is exposed to chemicals.

1. Clean the shift shaft and fork assembly parts with a suitable solvent. Air dry all the parts.

cardiagn.com

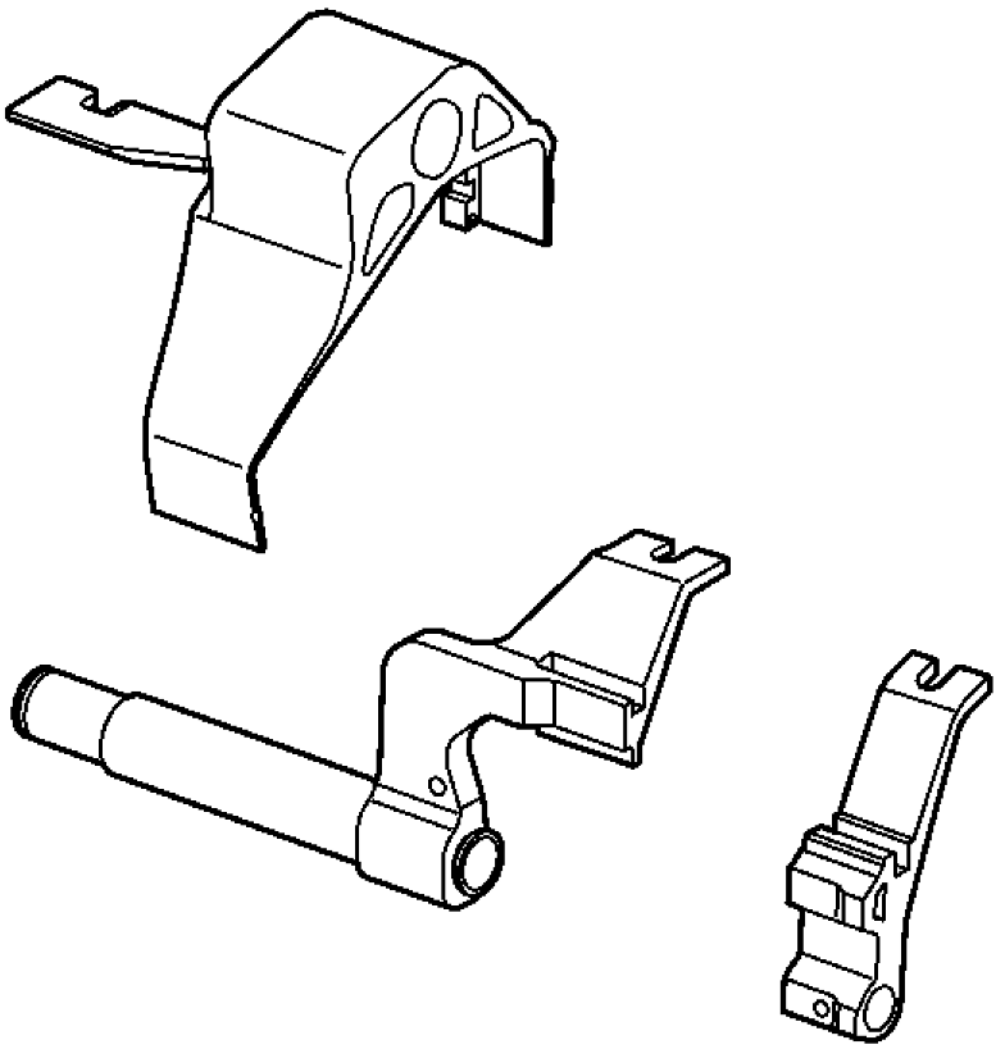

Fig. 117: Shift Forks, Levers & Shift Links
Courtesy of GENERAL MOTORS CORP.

2. Inspect the shift forks, shift levers, and the shift links for excessive wear, fractures or distortion.

cardiagn.com

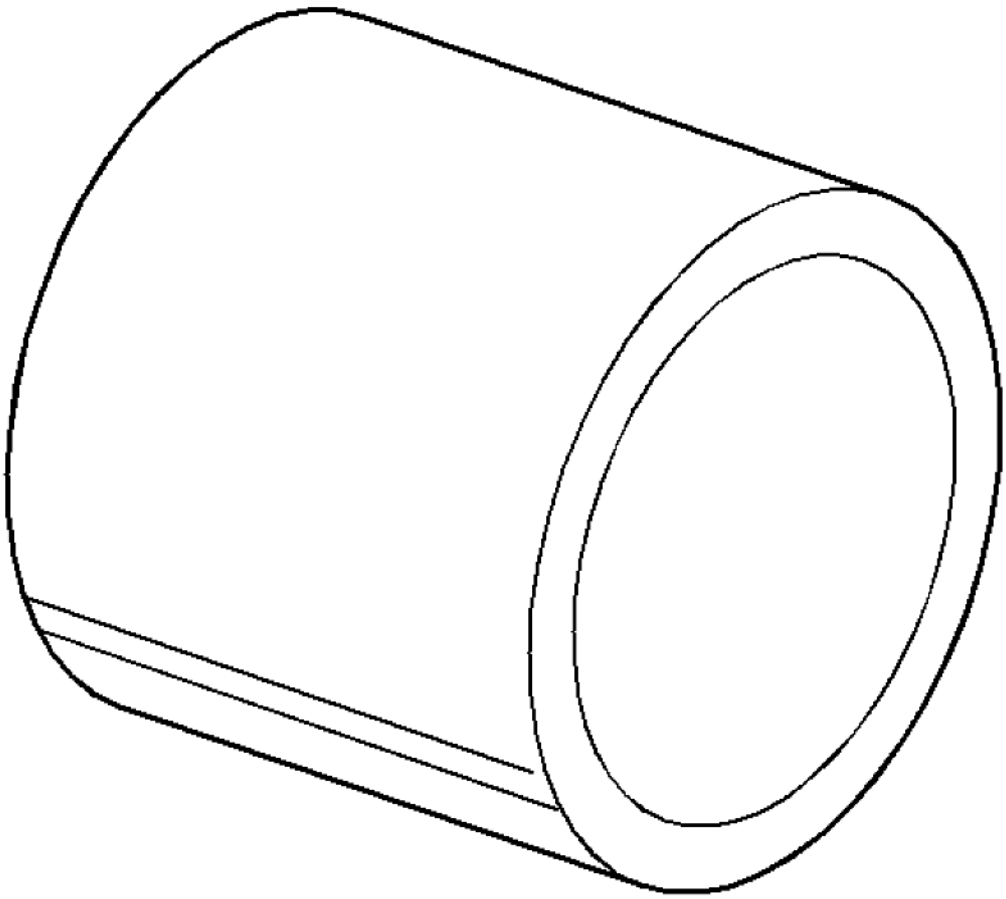

Fig. 118: View Of Shift Shaft Lever Bushing
Courtesy of GENERAL MOTORS CORP.

3. Inspect the shift shaft lever bushings for excessive wear.

cardiagn.com

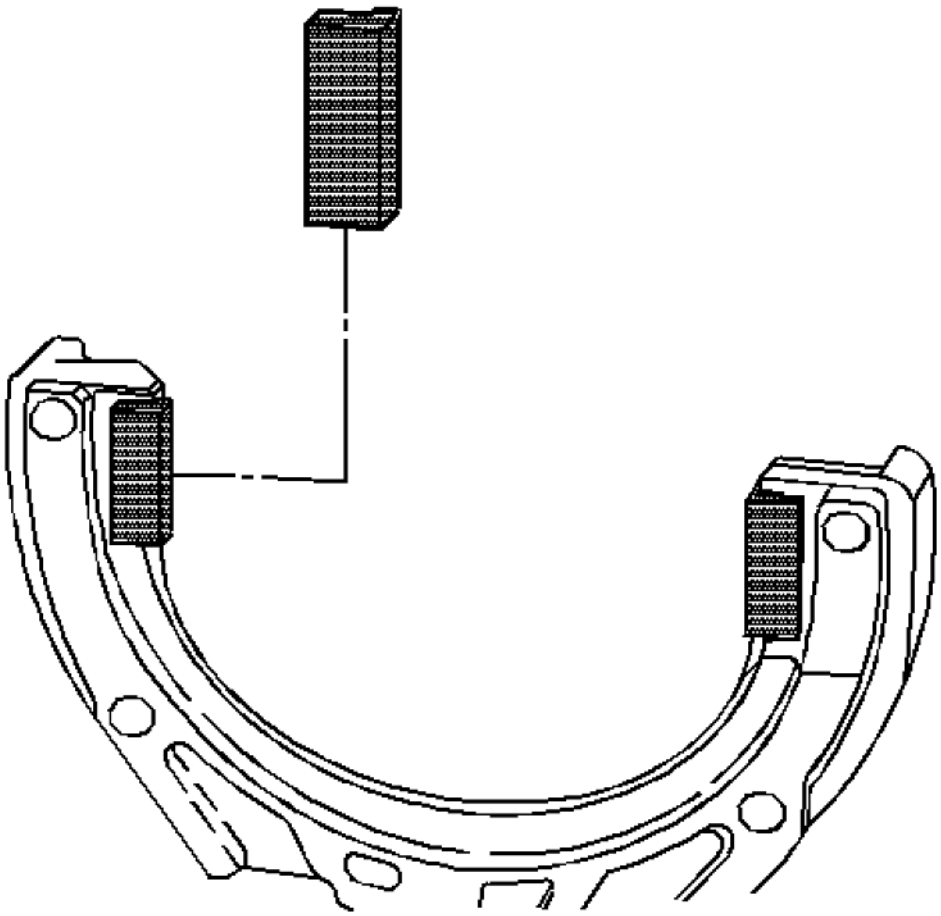

Fig. 119: Shift Fork Nylon Inserts
Courtesy of GENERAL MOTORS CORP.

4. Inspect the shift fork nylon inserts for wear.
5. Replace parts that are fractured, excessively worn, or distorted.
6. Replace an excessively worn or burred shift shaft.

SHIFT SHAFT AND FORK ASSEMBLIES ASSEMBLE

Special Tools

- **J 36850:** Transjel Lubricant
- **J 39437:** Bushing Installer

cardiagn.com

For equivalent regional tools, refer to **Special Tools**.

1st/2nd, 3rd/4th Shift Rail Assembly

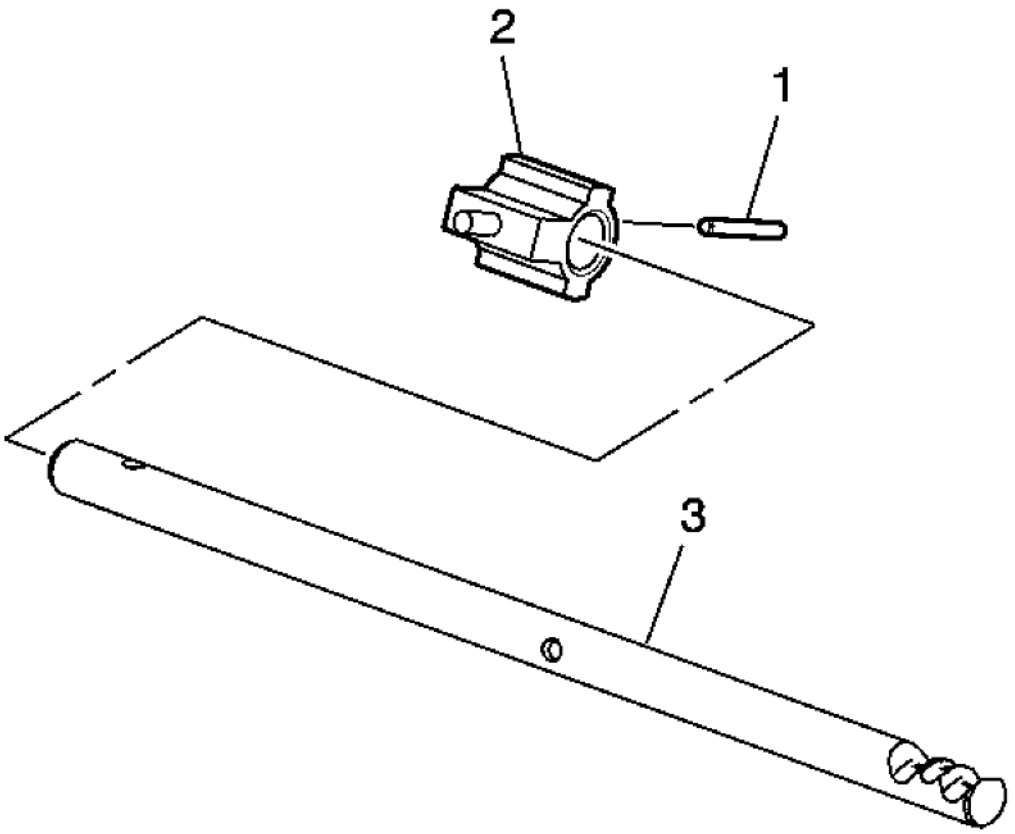

Fig. 120: Selector Roll Pin, Selector Pin & Shift Shaft
Courtesy of GENERAL MOTORS CORP.

1. Install the selector pin (2) on the shift shaft (3).
2. Align the roll pin hole on the selector pin with the roll pin hole on the shift shaft.
3. Install the roll pin (1) through the selector pin (2) and the shift shaft (3).

cardiagn.com

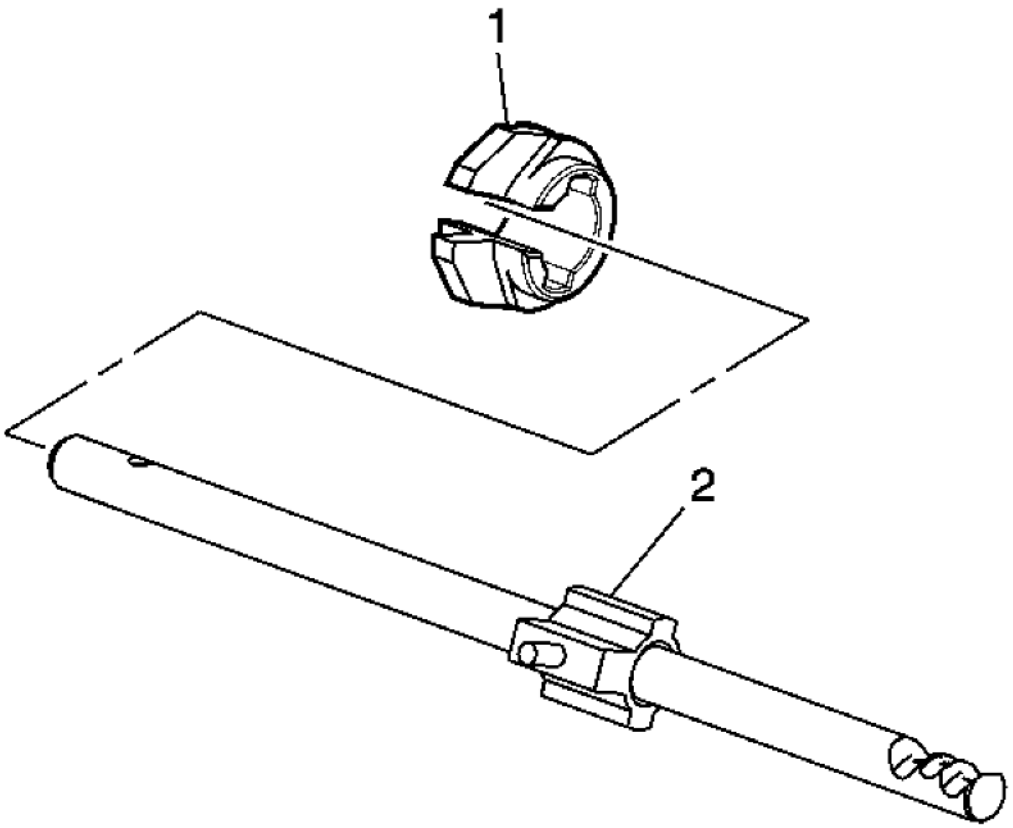

Fig. 121: Interlock Plate & Selector Pin
Courtesy of GENERAL MOTORS CORP.

NOTE: **The interlock plate fits loosely on the shift shaft and selector pin assembly. Use the J 36850: transjel lubricant to hold the neutral return cam pin in place.**

4. Install the interlock plate (1) on the selector pin (2).

cardiagn.com

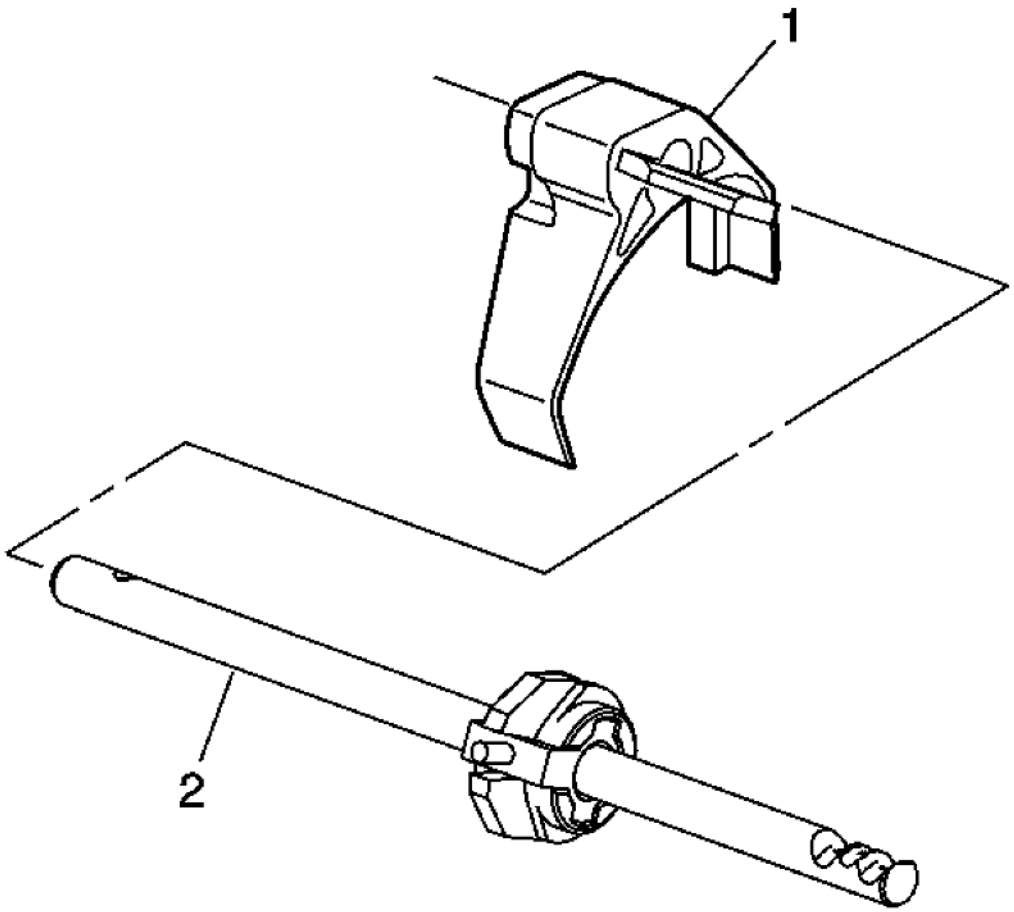

Fig. 122: 3rd/4th Shift Fork & Shift Shaft
Courtesy of GENERAL MOTORS CORP.

5. Install the 3rd/4th shift fork (1) on the shift shaft (2).

cardiagn.com

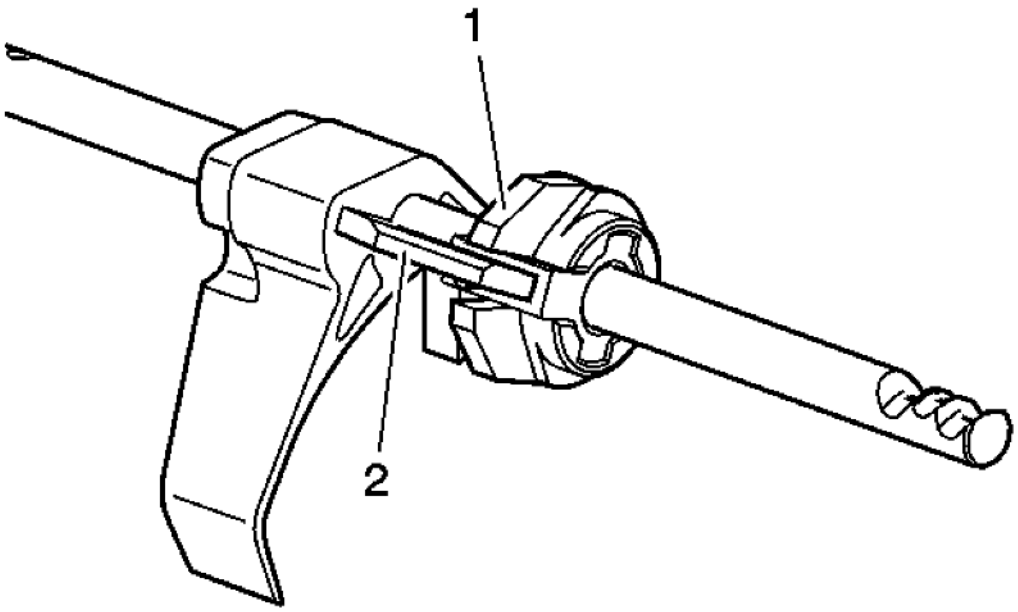

Fig. 123: Aligning Notch On Shift Link With Shift Interlock Plate
Courtesy of GENERAL MOTORS CORP.

6. Align the notch on the shift link (2) with the shift interlock plate (1).

cardiagn.com

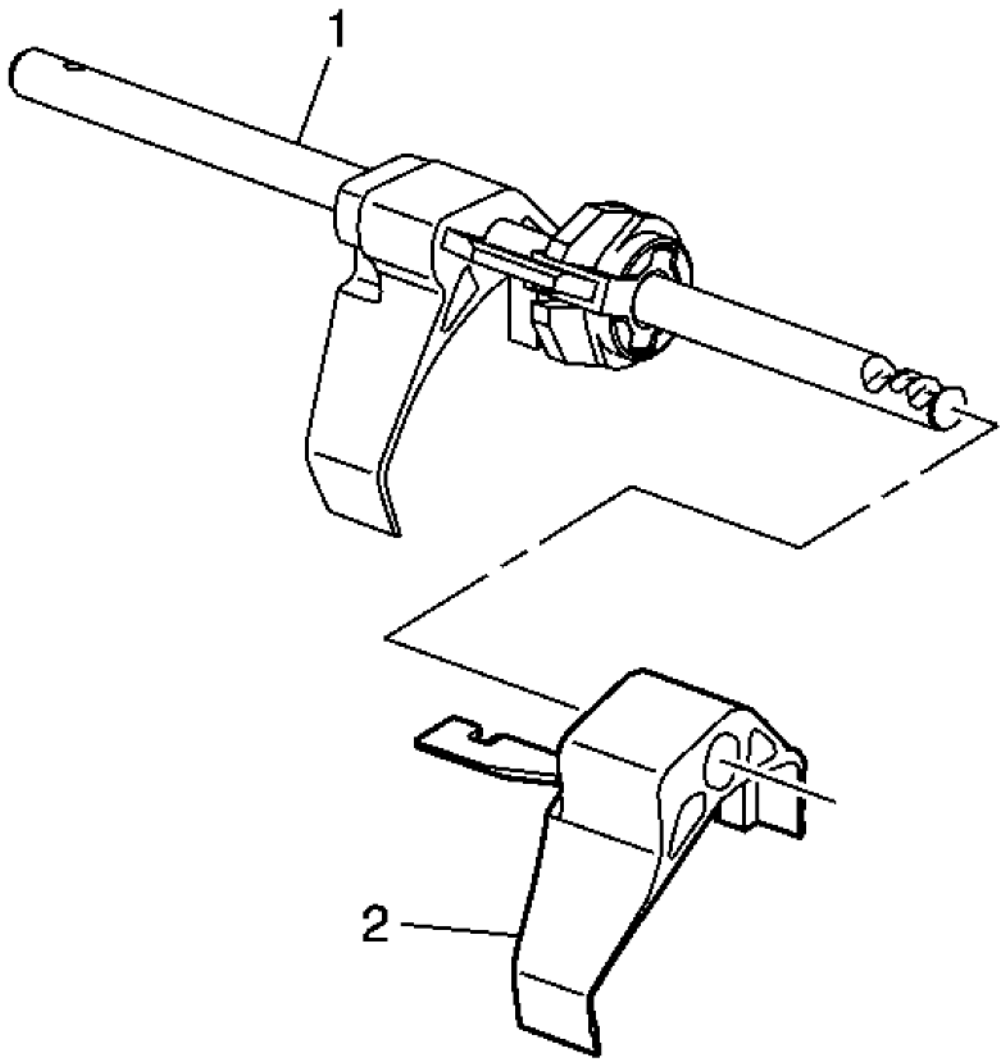

Fig. 124: 1st/2nd Shift Fork & Shift Shaft
Courtesy of GENERAL MOTORS CORP.

7. Install the 1st/2nd shift fork (2) on the shift shaft (1).

cardiagn.com

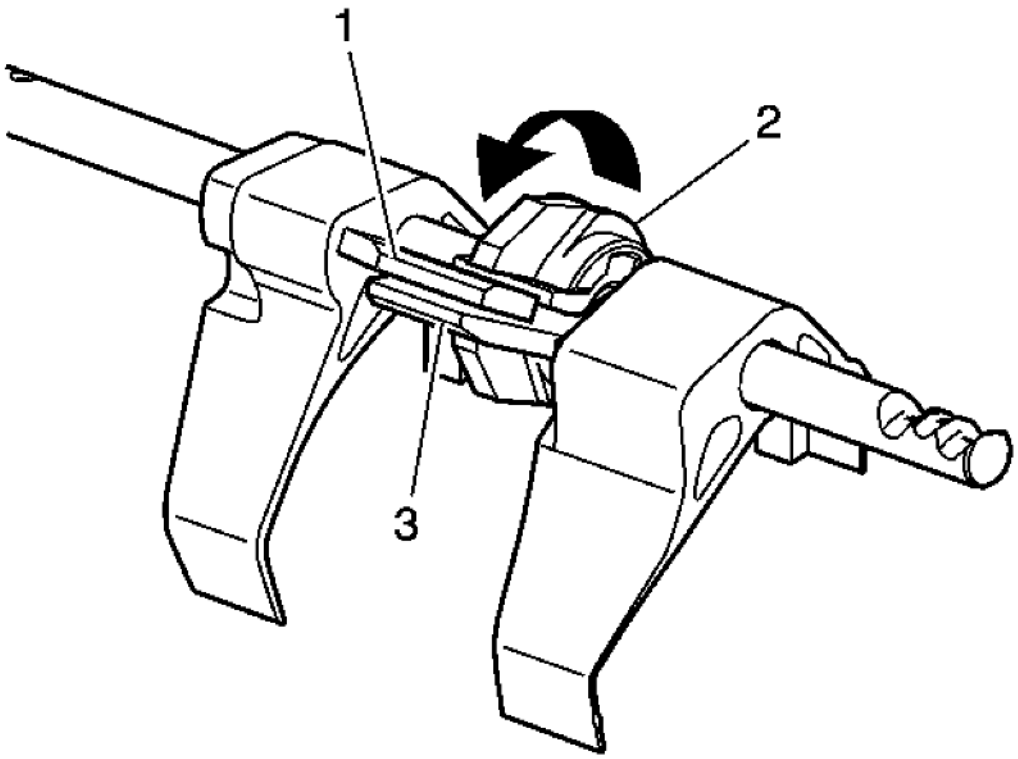

Fig. 125: Installing 1st/2nd Shift Shaft Link
Courtesy of GENERAL MOTORS CORP.

8. Install the 1st/2nd shift shaft link (3) beneath the 3rd/4th shift shaft link (1) on the interlock plate and the selector roll pin assembly (2).

5th/6th, Reverse Shift Rail Assembly

cardiagn.com

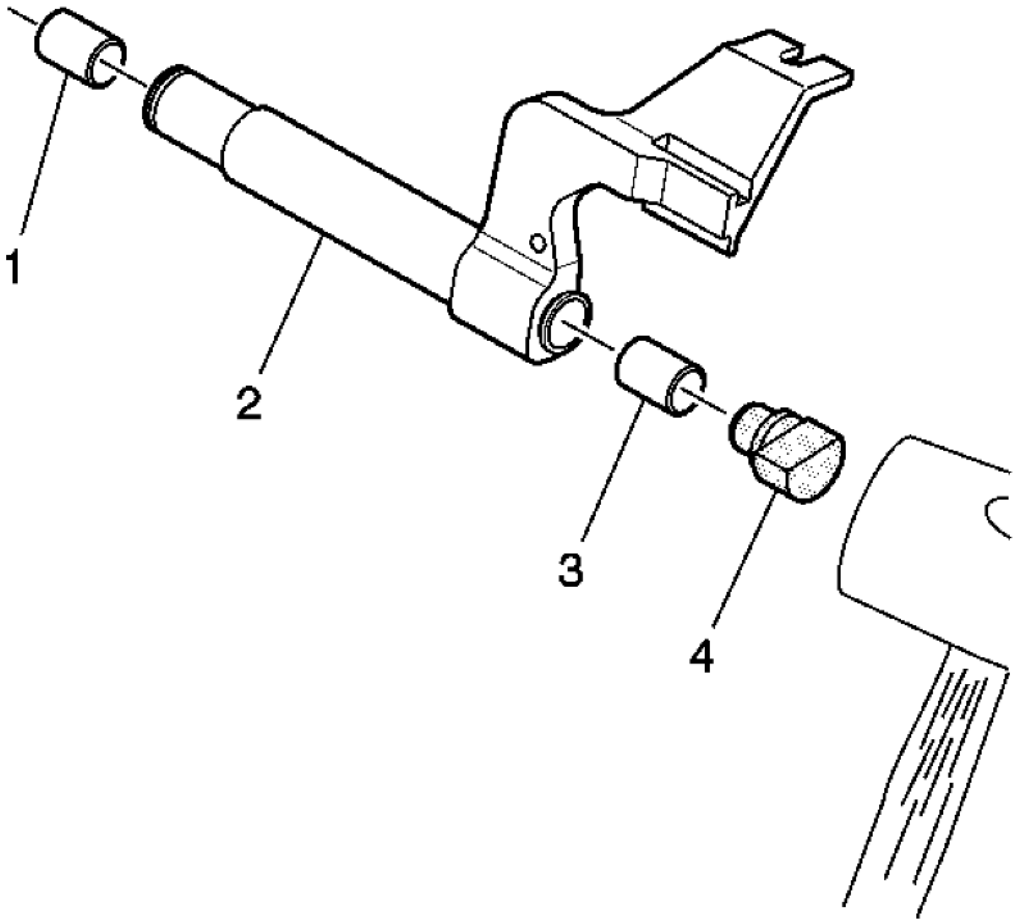

Fig. 126: Installing 5th/6th Shift Shaft Lever Bushings
Courtesy of GENERAL MOTORS CORP.

1. Install the 5th/6th shift shaft lever bushings (1) and (3) in the 5th/6th shift lever (2) using the **J 39437:** bushing installer (4) and a hammer.

cardiagn.com

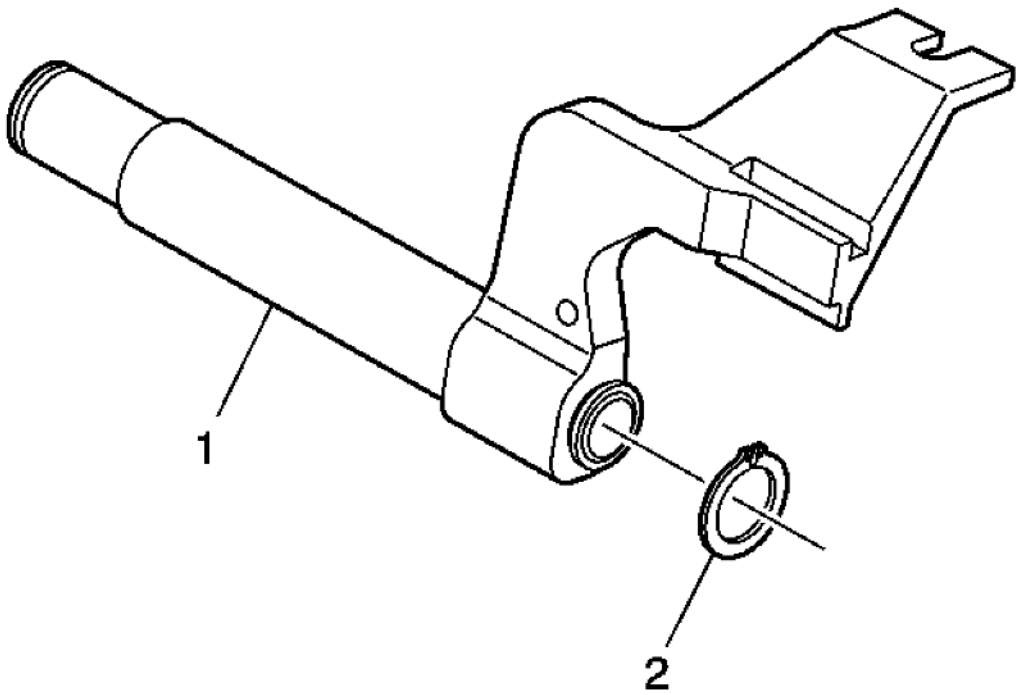

Fig. 127: View Of Retainer Ring & 5th/6th Shift Lever
Courtesy of GENERAL MOTORS CORP.

2. Install the retainer ring (2) on the 5th/6th shift lever (1).

cardiagn.com

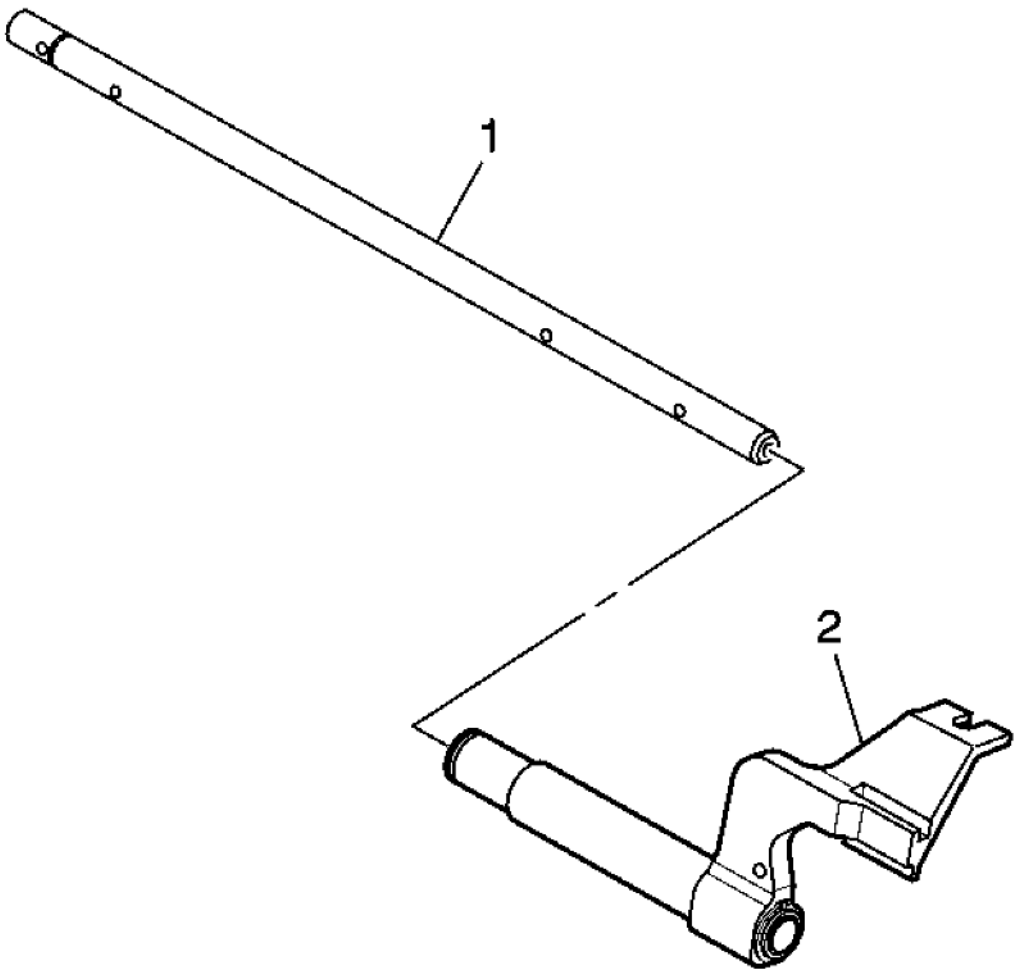

Fig. 128: View Of 5th/6th Shift Lever & Shift Shaft
Courtesy of GENERAL MOTORS CORP.

3. Install the 5th/6th shift lever (2) on the shift shaft (1).

cardiagn.com

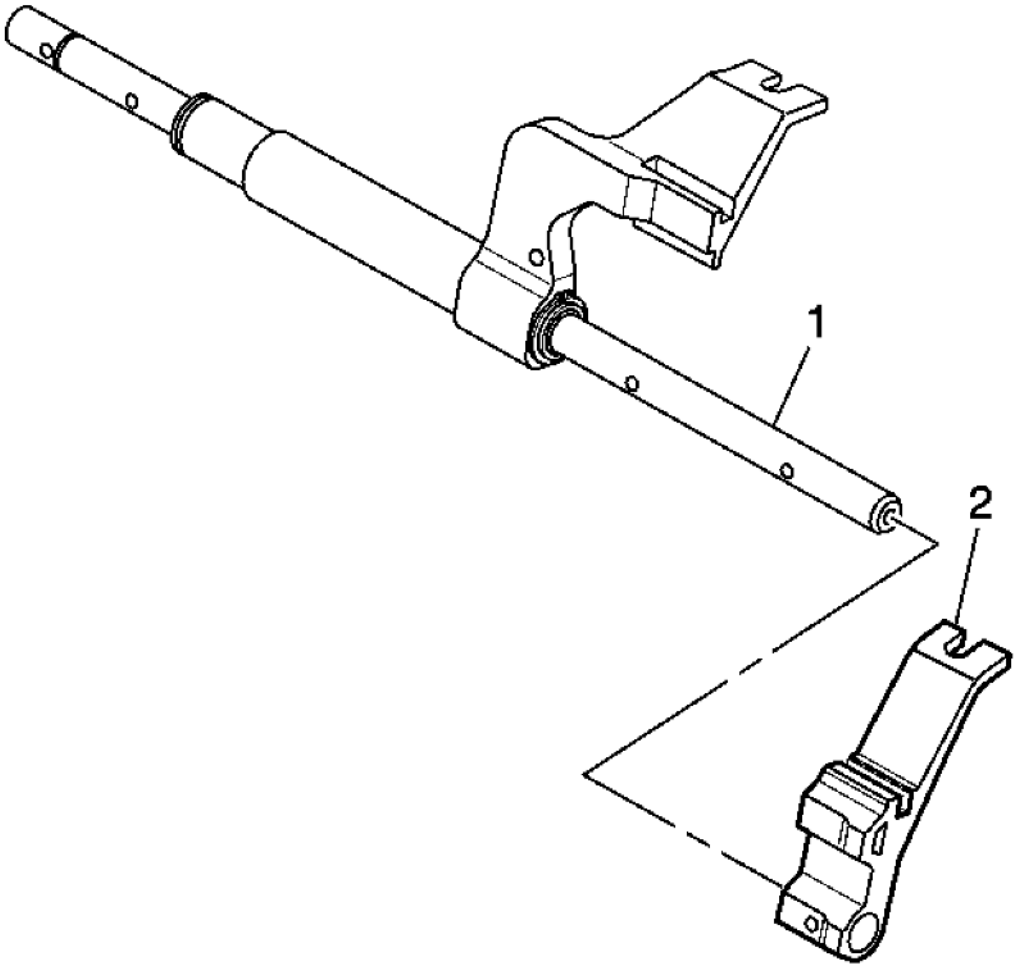

Fig. 129: Reverse Shift Lever & Shift Shaft
Courtesy of GENERAL MOTORS CORP.

4. Install the reverse shift lever (2) on the shift shaft (1).

cardiagn.com

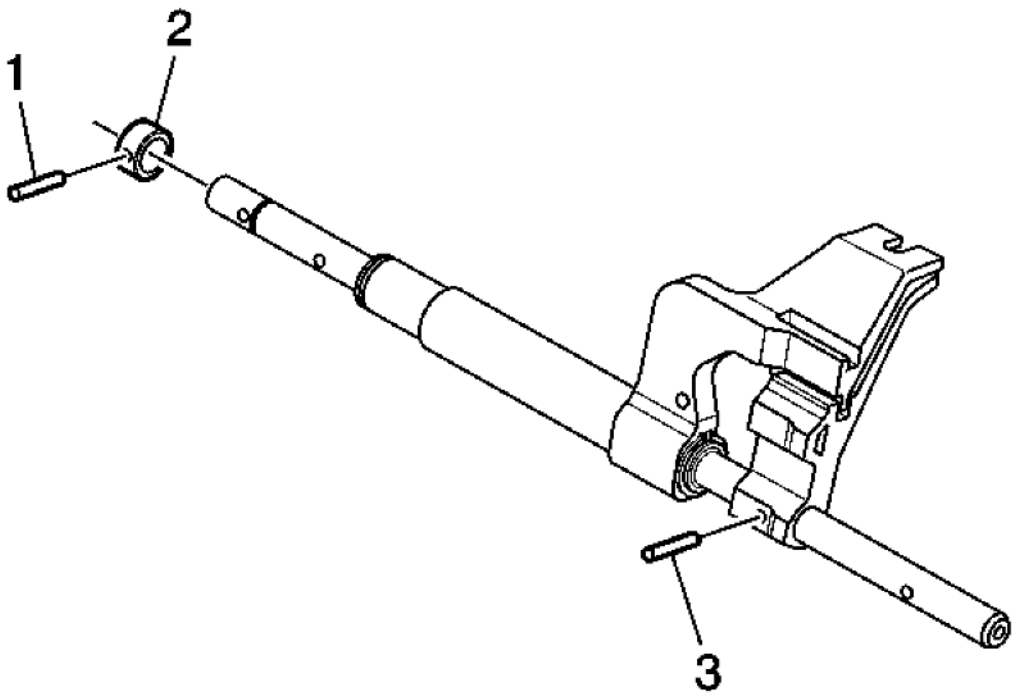

Fig. 130: Reverse Shift Collar Pin, Lever Collar & Lever Pin
Courtesy of GENERAL MOTORS CORP.

5. Install the reverse lever roll pin (3).
6. Install the reverse collar (2).
7. Install the reverse collar roll pin (1).

TRANSMISSION CASE AND CLUTCH HOUSING DISASSEMBLE

Special Tools

- **DT 49216:** Bushing Remover
- **J 8092:** Drive Handle
- **J 36190:** Driver Handle
- **J 39439-2:** Bushing Remover
- **J 39790-A:** Mainshaft Bearing Race Remover
- **J 44384:** Shift Fork Bearing Installer
- **J 45124:** Removal Bridge

cardiagn.com

For equivalent regional tools, refer to **Special Tools**.

Guide Plate Removal

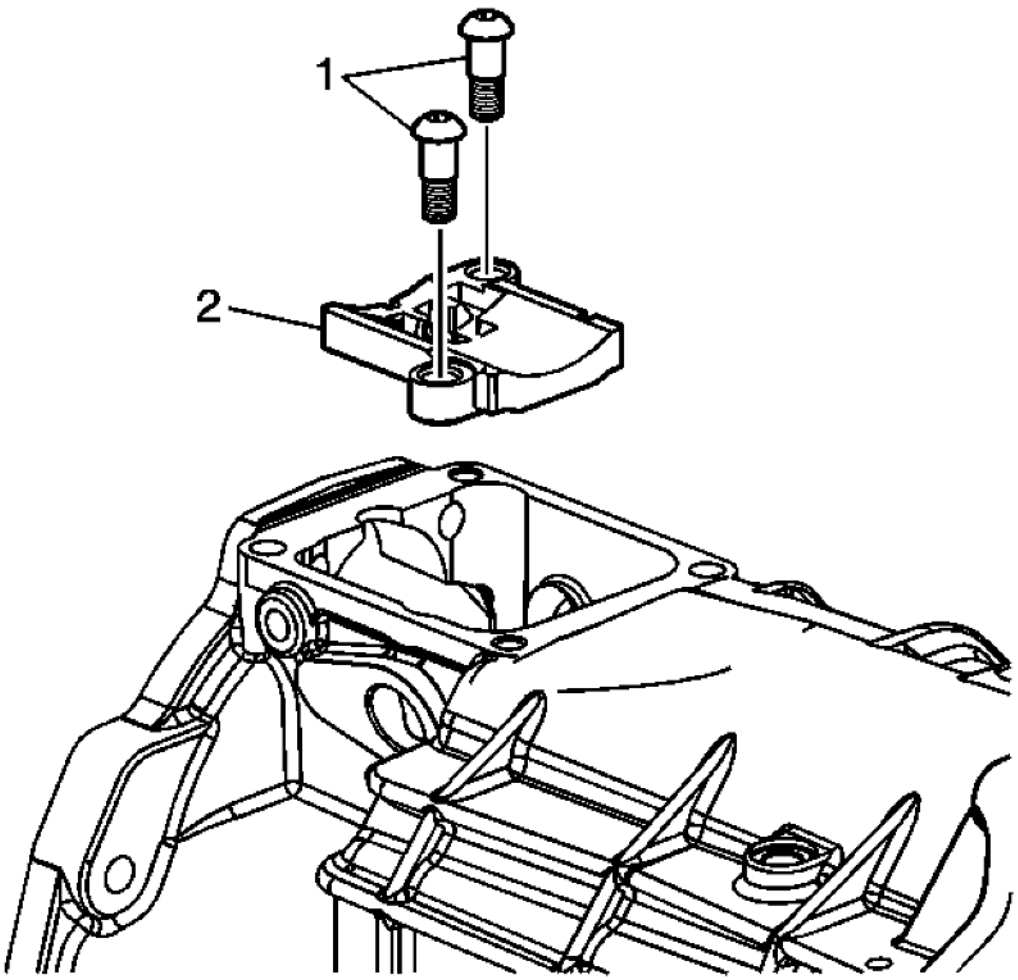

Fig. 131: Identifying Detent Guide Plate & Attaching Bolts
Courtesy of GENERAL MOTORS CORP.

1. Remove the detent guide plate attaching bolts (1).
2. Remove the detent guide plate (2).

Transmission Case

cardiagn.com

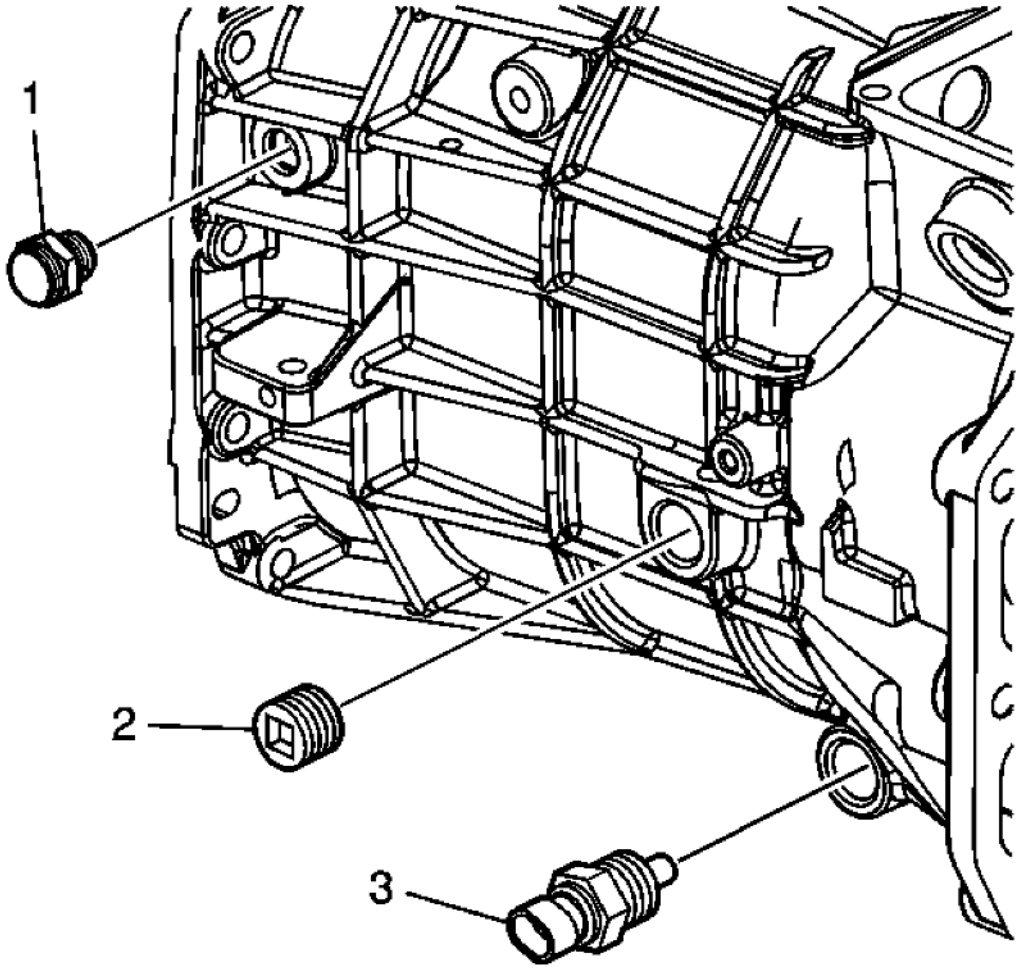

Fig. 132: Identifying Cooler Line Return Fitting, Fill Plug & Coolant Temperature Sensor
Courtesy of GENERAL MOTORS CORP.

1. Remove the cooler line return fitting (1).
2. Remove the transmission case fill plug (2).
3. Remove the coolant temperature sensor (3).

cardiagn.com

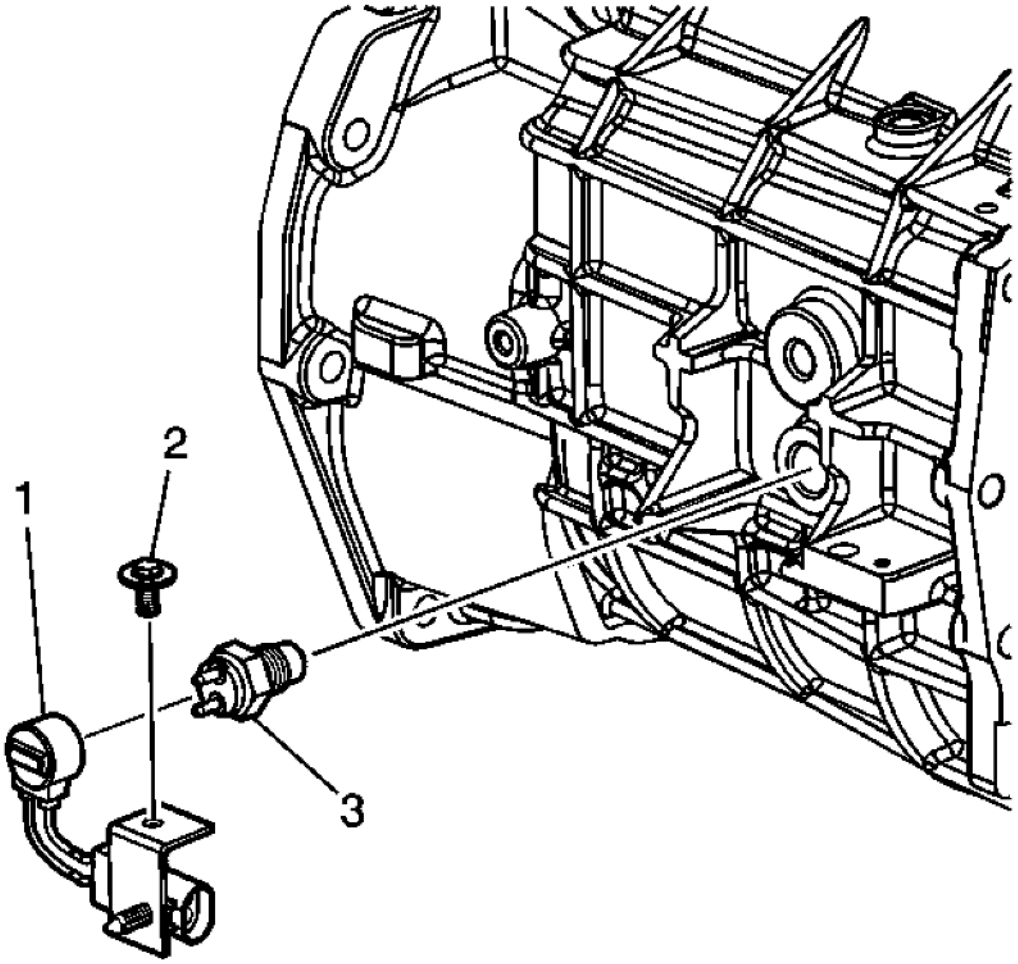

Fig. 133: Identifying Backup Lamp Switch Components
Courtesy of GENERAL MOTORS CORP.

4. Remove the backup lamp switch connector harness bolt (2).
5. Remove the backup lamp switch connector harness (1).
6. Remove the backup lamp switch (3).

cardiagn.com

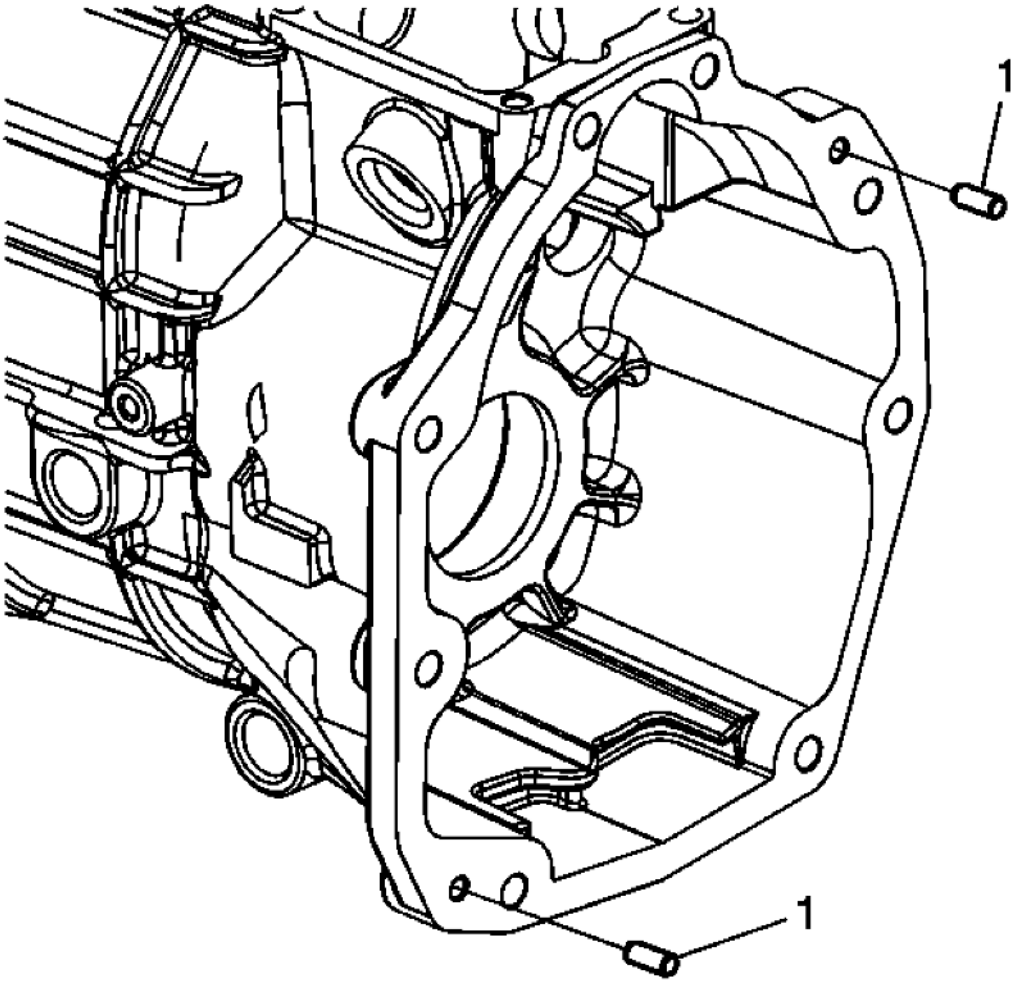

Fig. 134: Locating Dowel Pins
Courtesy of GENERAL MOTORS CORP.

7. Remove the dowel pins (1).

cardiagn.com

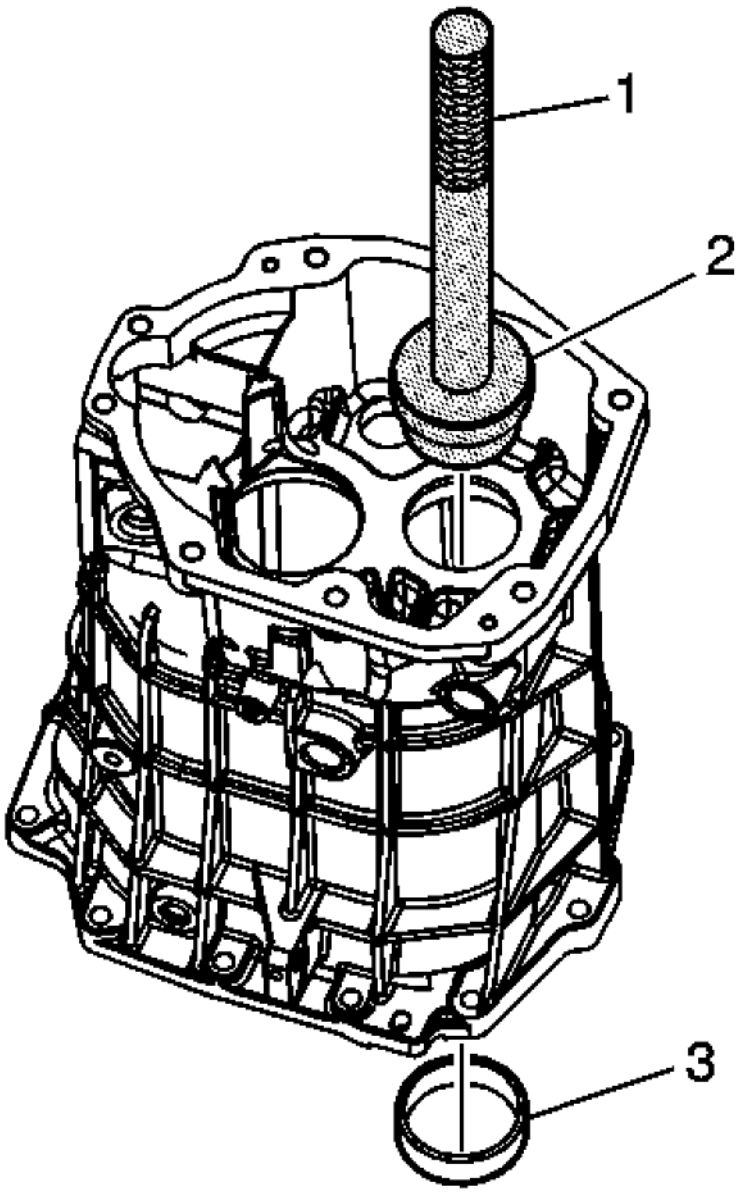

Fig. 135: Removing Countershaft Bearing Race
Courtesy of GENERAL MOTORS CORP.

NOTE: **Do not replace the bearing race unless inspection shows bearing race damage.**

cardiagn.com

8. Remove the countershaft bearing race (3), using the **J 8092:** drive handle (1) and the **J 39790-A:** race remover (2).

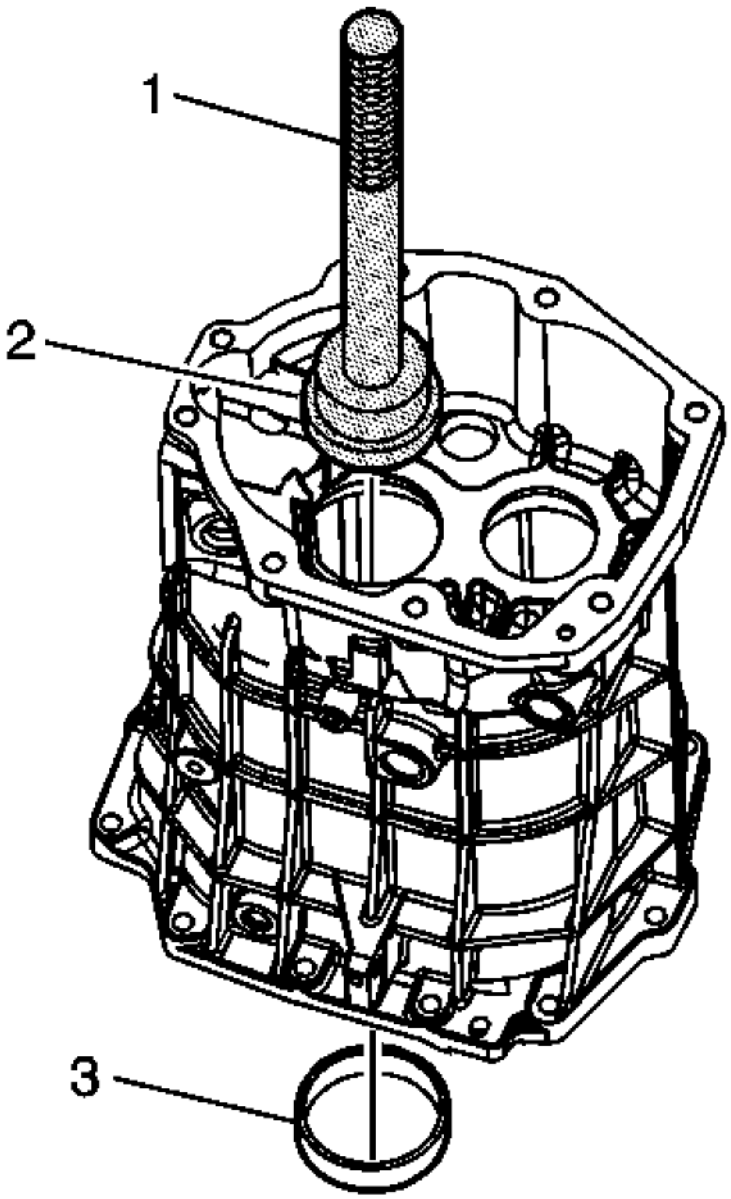

Fig. 136: Removing Mainshaft Bearing Race
Courtesy of GENERAL MOTORS CORP.

cardiagn.com

NOTE: Do not replace the bearing race unless inspection shows bearing race damage.

9. Remove the mainshaft bearing race (3), using the **J 8092:** drive handle (1) and the **J 39790-A:** race remover (2).

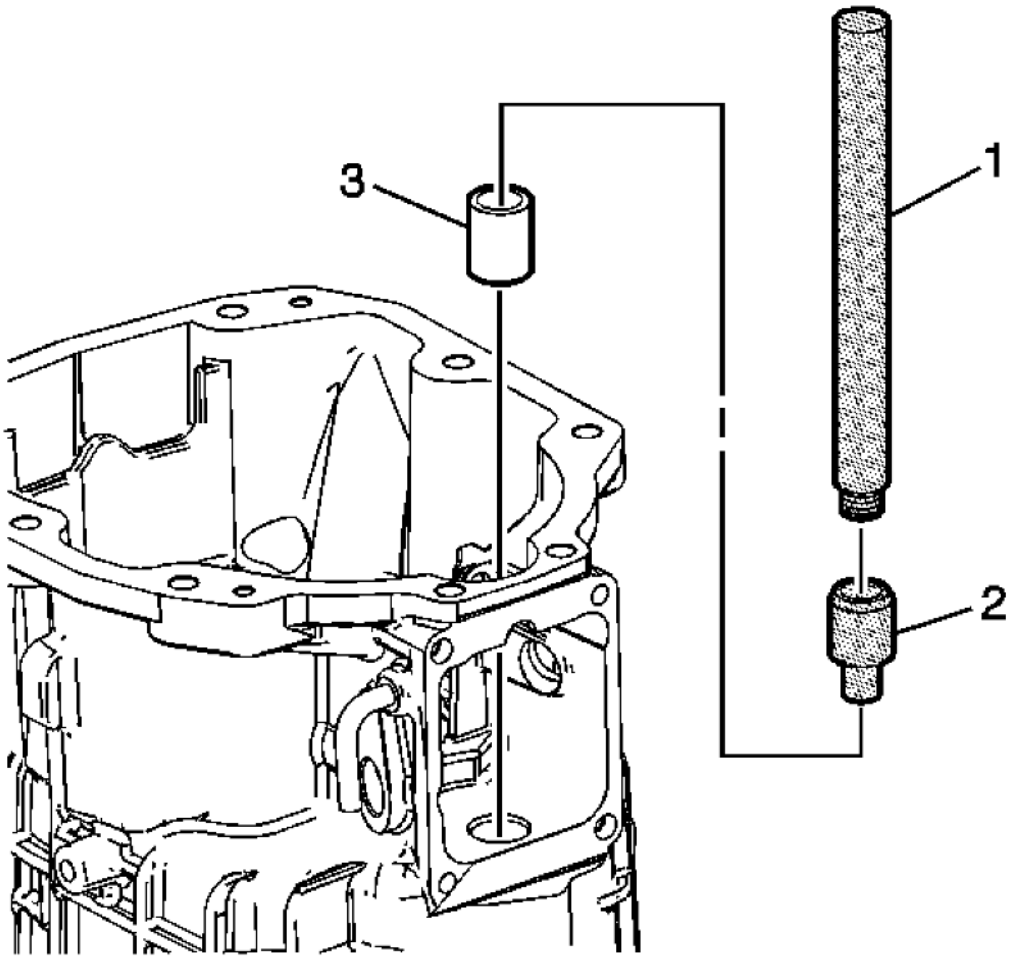

Fig. 137: Removing Ist/2nd & 3rd/4th Shift Shaft Bearing
Courtesy of GENERAL MOTORS CORP.

10. Remove the Ist/2nd and the 3rd/4th shift shaft bearing (3), using the **J 36190:** driver handle (1) and the **J 44384:** remover (2).

Clutch Housing

cardiagn.com

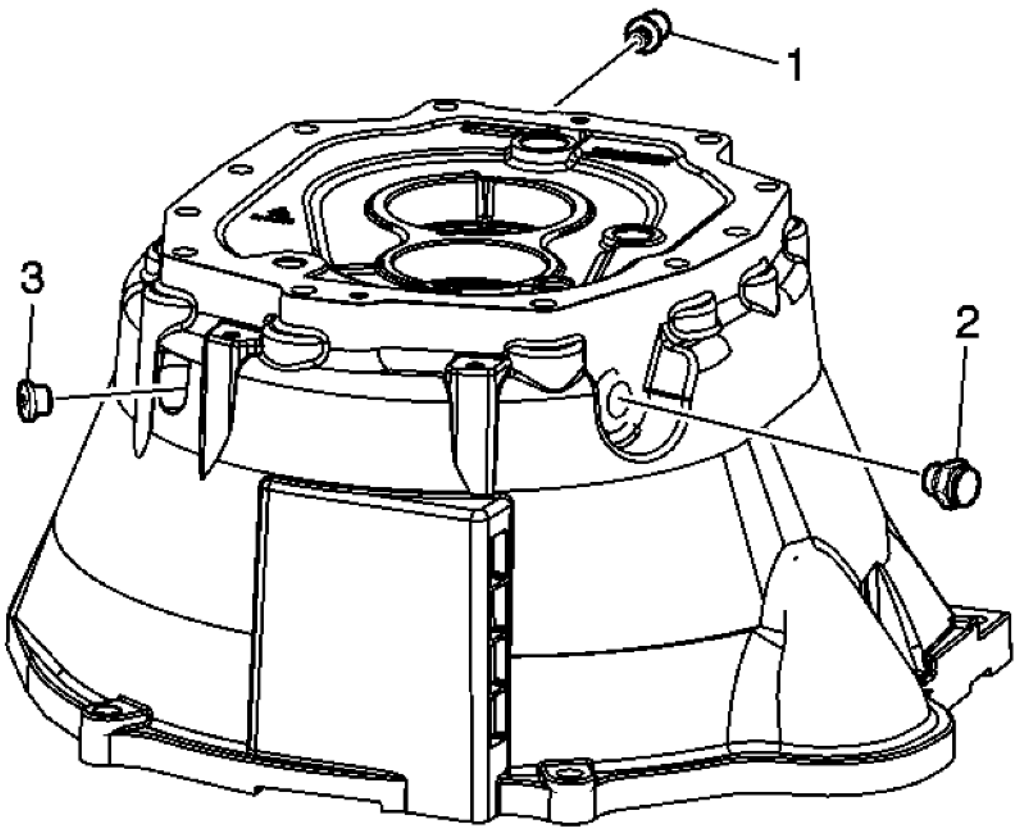

Fig. 138: Identifying Vent Assembly, Pump Outlet Cooler Fitting With O-Ring & Transmission Fluid Pump Outlet Pipe Fitting
Courtesy of GENERAL MOTORS CORP.

1. Remove the vent assembly (1).
2. Remove the pump outlet cooler fitting with o-ring (2).
3. Remove the transmission fluid pump outlet pipe fitting (3).

cardiagn.com

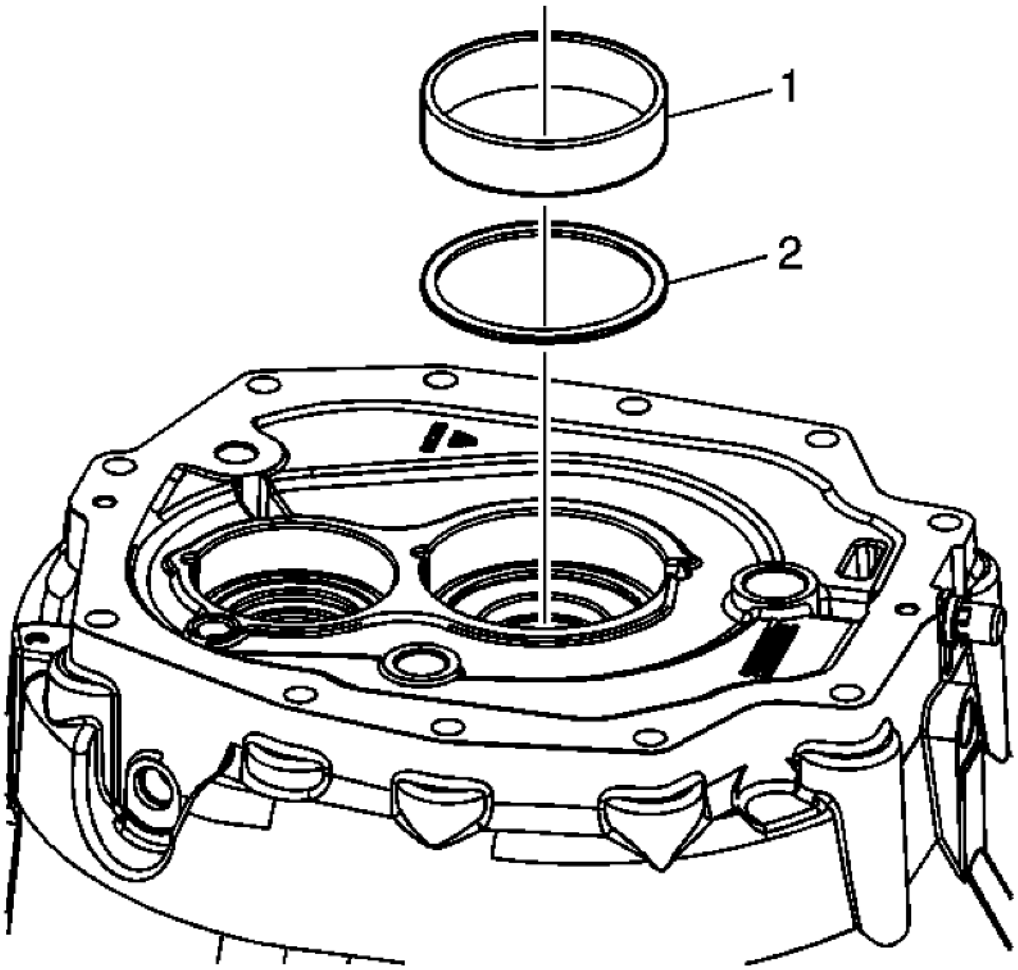

Fig. 139: Identifying Input Shaft Bearing Race & Shim
Courtesy of GENERAL MOTORS CORP.

NOTE: There may be one or more shims.

4. Remove the input shaft bearing race (1) and one or more shims (2).

cardiagn.com

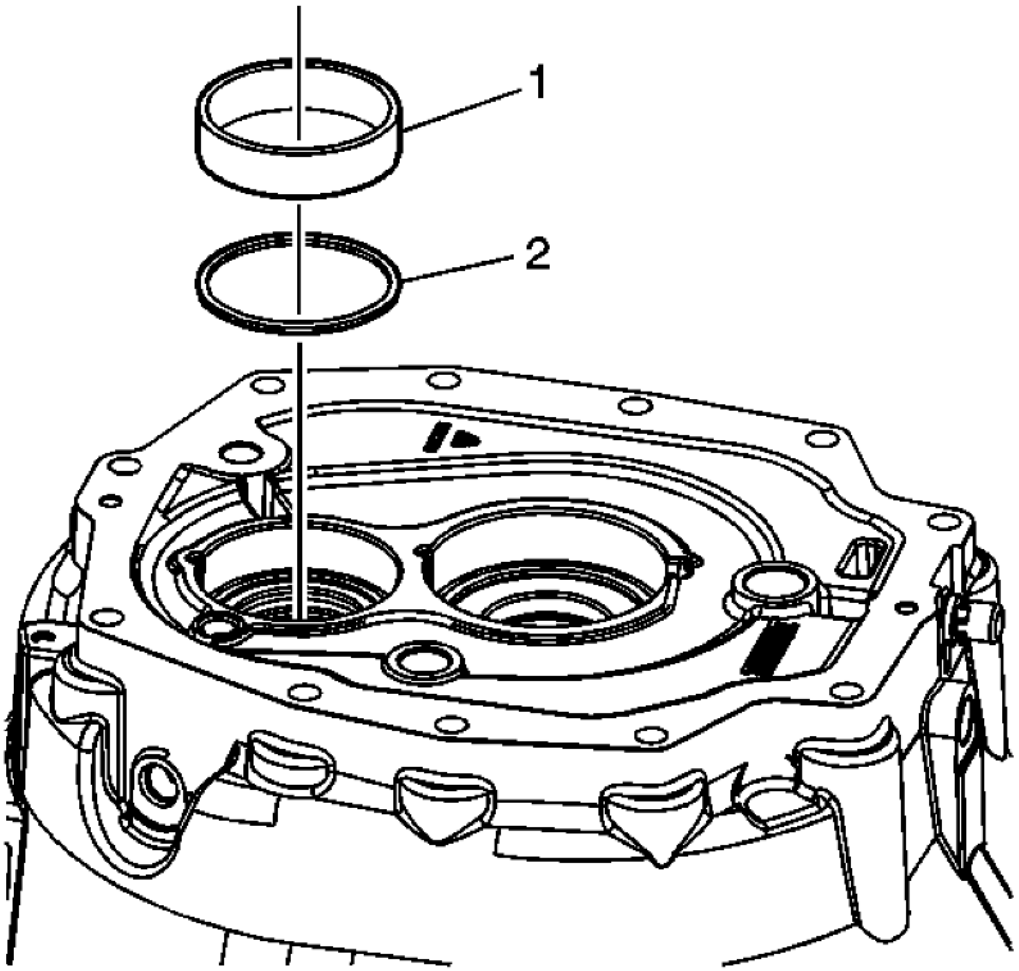

Fig. 140: Identifying Countershaft Bearing Race & Shim
Courtesy of GENERAL MOTORS CORP.

5. Remove the countershaft bearing race (1) and one or more the shims (2).

cardiagn.com

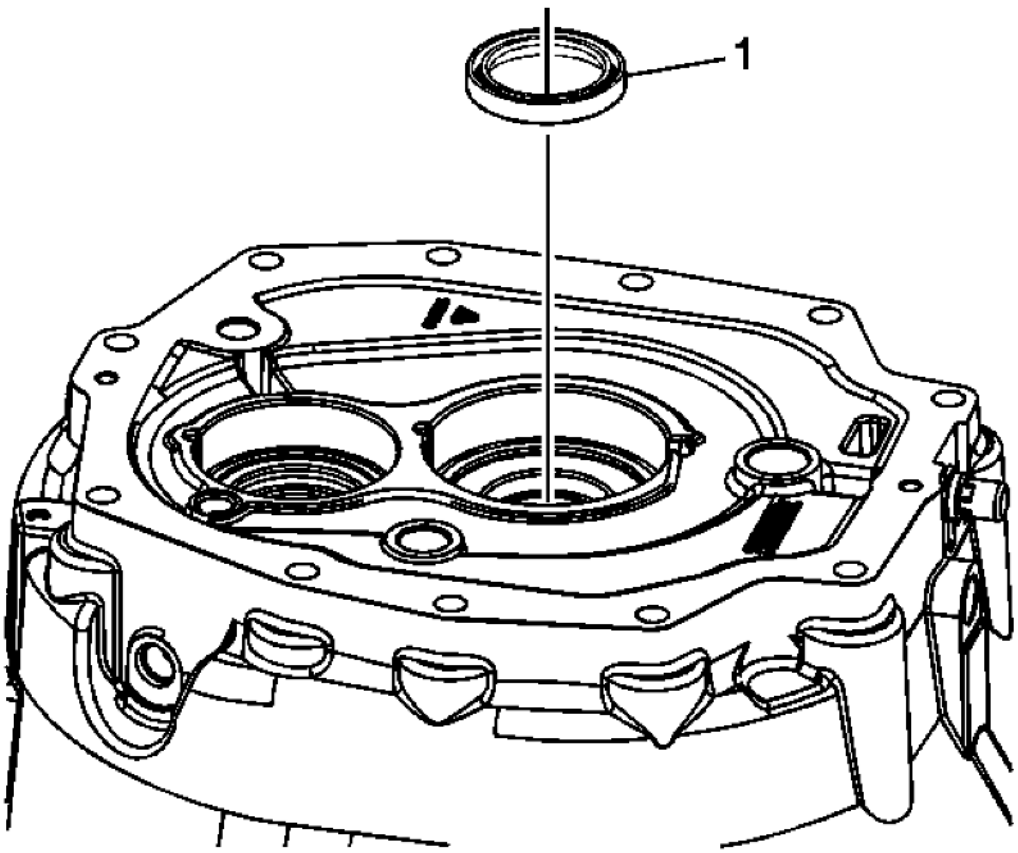

Fig. 141: Identifying Input Shaft Seal
Courtesy of GENERAL MOTORS CORP.

6. Remove and discard the input shaft seal (1).

cardiagn.com

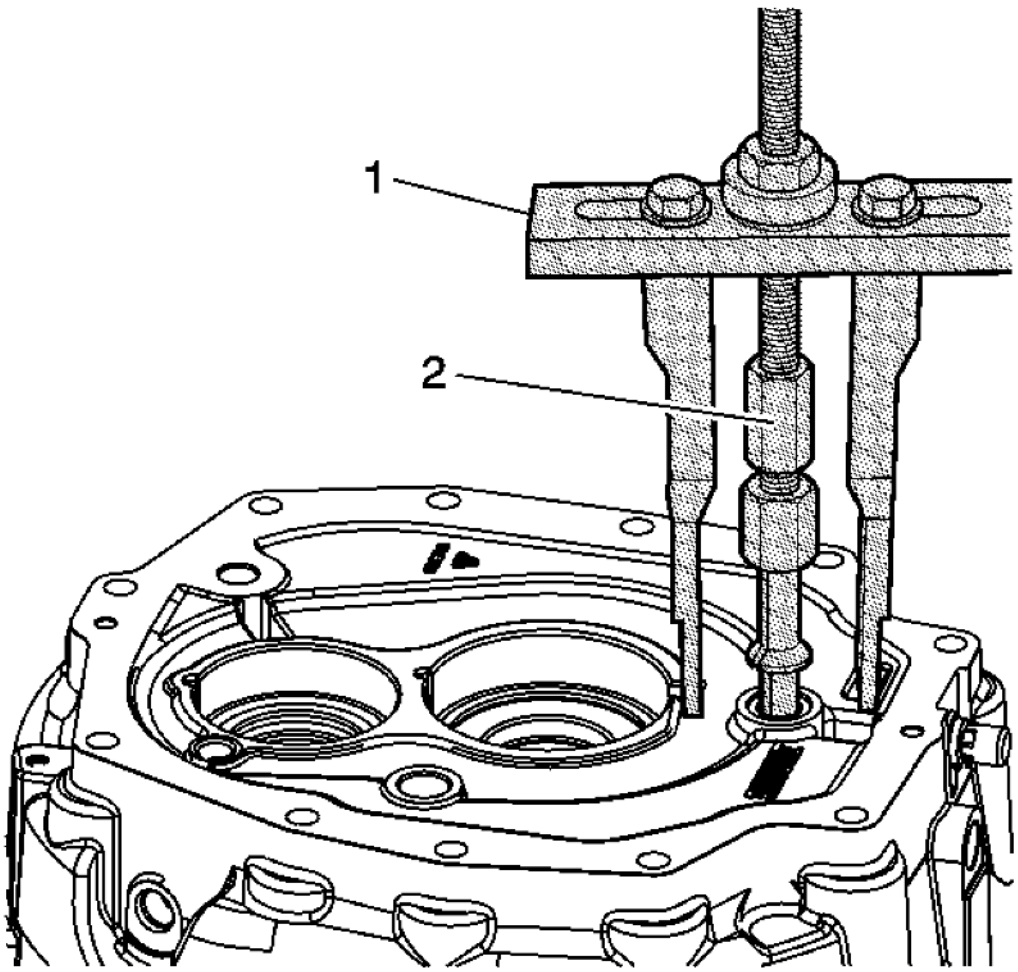

Fig. 142: Removing 1st/2nd Shift Shaft Bearing
Courtesy of GENERAL MOTORS CORP.

7. Remove the 1st/2nd shift shaft bearing, using the **J 45124:** removal bridge (1) with the **DT 49216:** bushing remover (2) and a wrench.

cardiagn.com

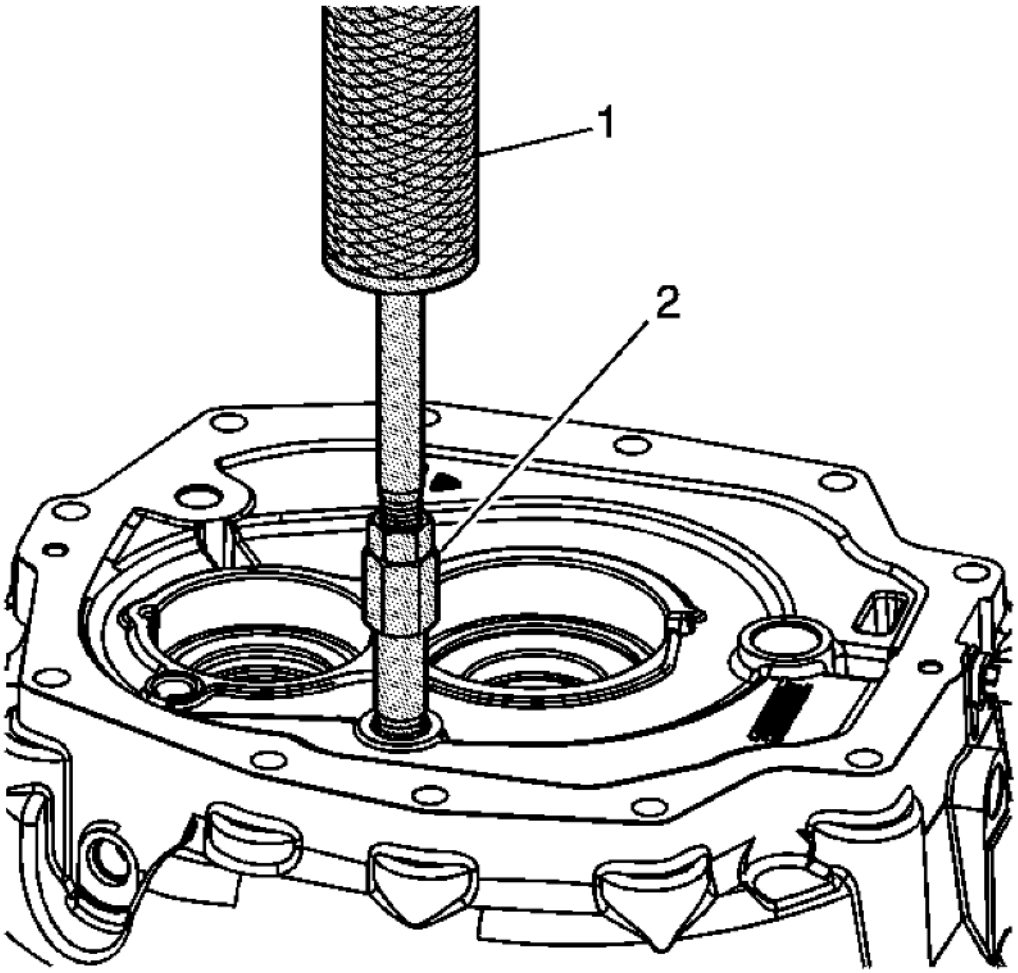

Fig. 143: Removing 3rd/4th Shift Shaft Bushing
Courtesy of GENERAL MOTORS CORP.

8. Remove the 3rd/4th shift shaft bushing, using the **J 23907-1:** slide hammer (1) with the **J 39439-2:** bushing remover (2).

cardiagn.com

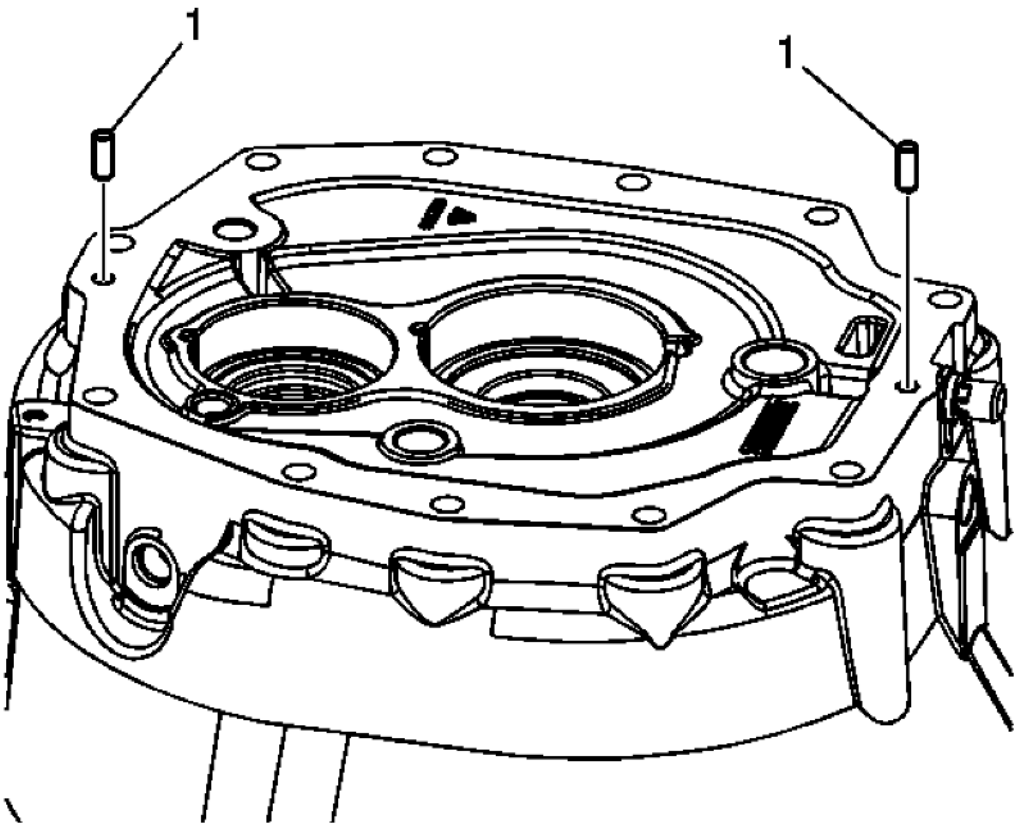

Fig. 144: Identifying Dowel Pins
Courtesy of GENERAL MOTORS CORP.

9. Remove the dowel pins (1).

cardiagn.com

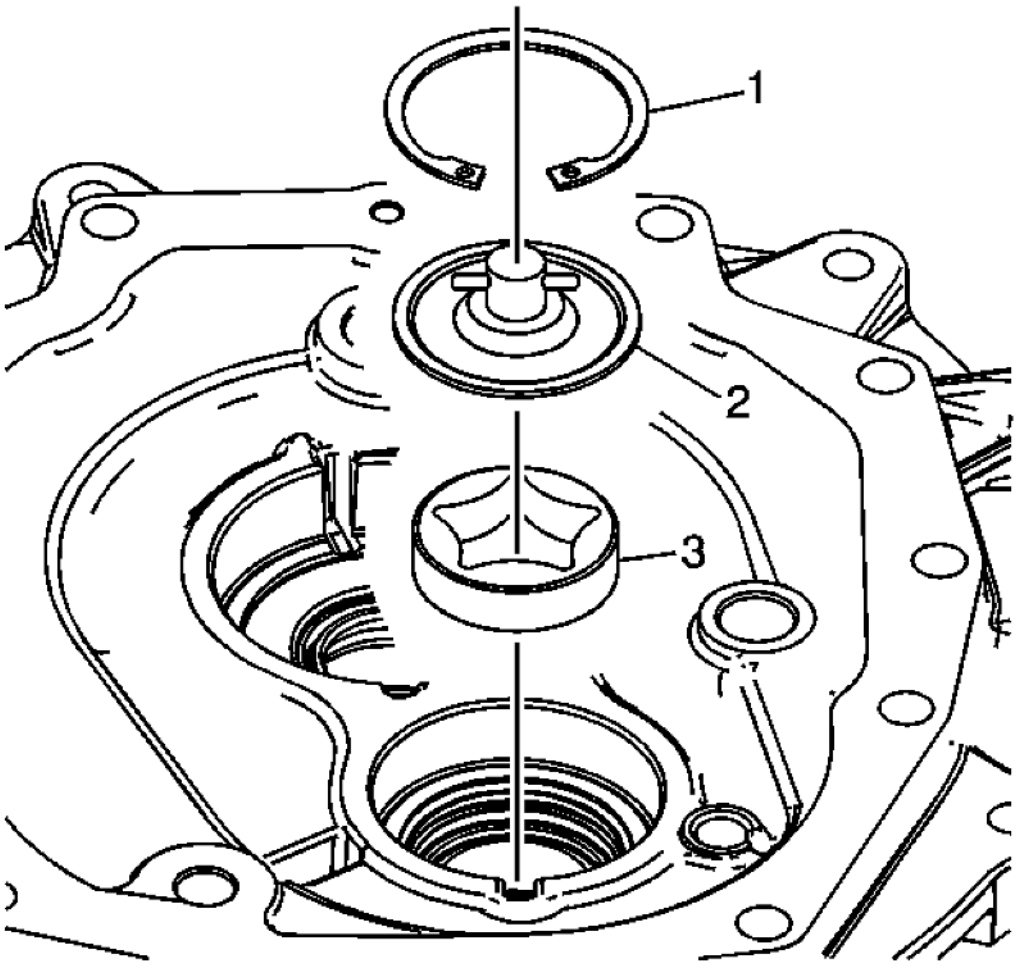

Fig. 145: Identifying Oil Pump & Oil Pump Cover Assembly
Courtesy of GENERAL MOTORS CORP.

10. Remove the retainer ring (1).
11. Remove the oil pump cover assembly (2).
12. Remove the oil pump (3).

cardiagn.com

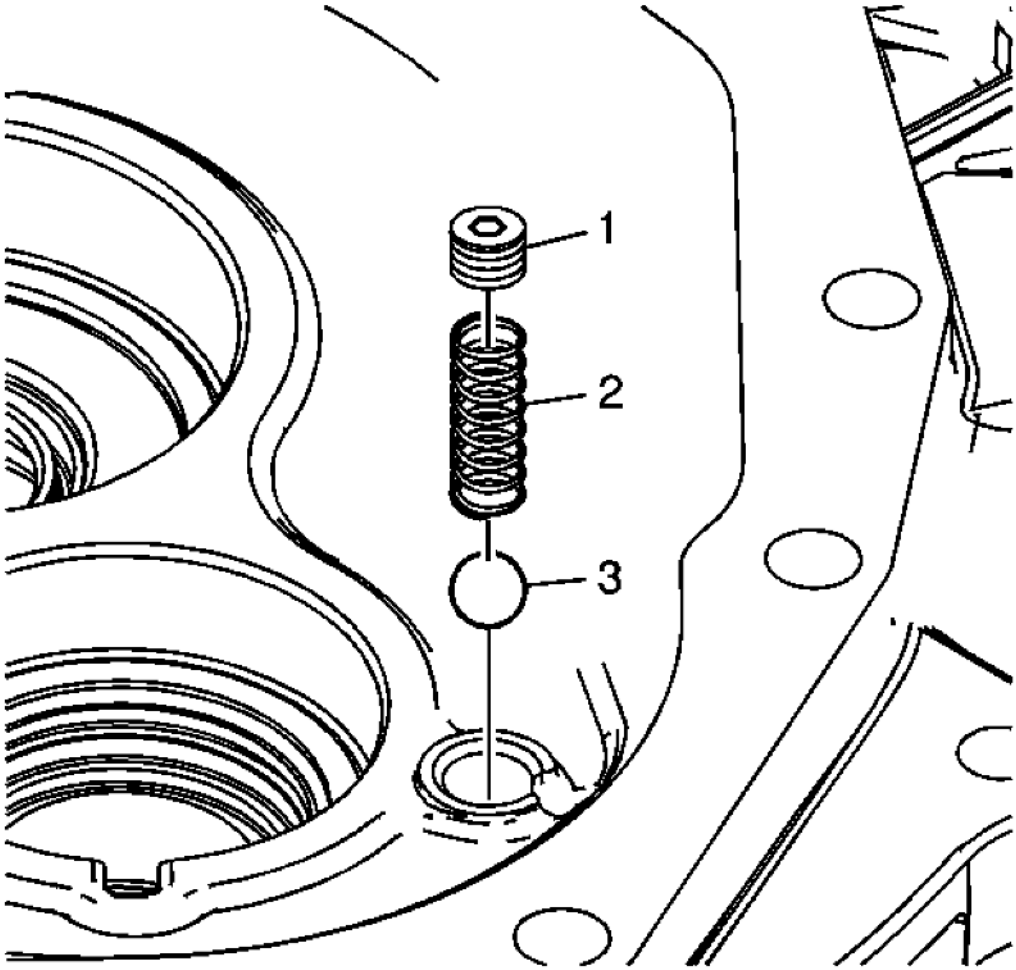

Fig. 146: Identifying Transmission Fluid Pump Spring Retaining Plug, Spring & Check Ball
Courtesy of GENERAL MOTORS CORP.

13. Remove the transmission fluid pump spring retaining plug (1).
14. Remove the transmission fluid pump spring (2).
15. Remove the transmission fluid pump check ball (3).

TRANSMISSION CASE AND CLUTCH HOUSING CLEANING AND INSPECTION

Transmission Case

cardiagn.com

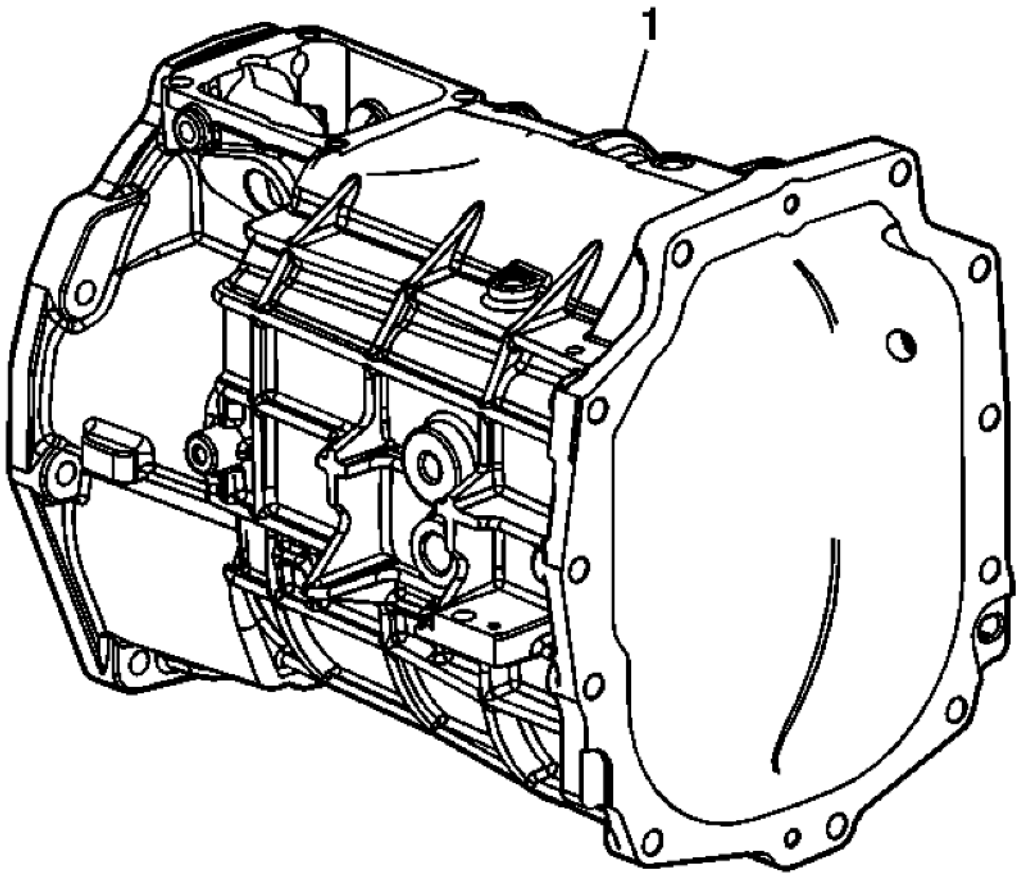

Fig. 147: Identifying Transmission Case
Courtesy of GENERAL MOTORS CORP.

WARNING: Wear safety glasses to avoid injury when using compressed air or any cleaning solvent. Bodily injury may occur if fumes are inhaled or if skin is exposed to chemicals.

1. Clean the transmission case (1) in a suitable solvent. Air dry the transmission case.
2. Clean all sealant material from retainer bolt threads.
3. Inspect the transmission case for the following conditions:
   - Cracks
   - Scratches
   - Damaged threads
   - Burrs

cardiagn.com

- Nicked mounting surfaces
- Damaged sealing surfaces
- Damaged front or rear bearing bores

4. Inspect the machined mating surfaces for flatness with a straight edge.
5. Inspect the bearing races and bores for wear, scratches or grooves.
6. Inspect the bushing for excessive wear.
7. Use a fine mill file to dress minor scratches or burrs.
8. If scratches, or grooves or scoring cannot be removed by hand with a soft stone or crocus cloth, replace the component.
9. Clean up damaged threads with the correct size tap.
10. Replace a cracked housing.
11. Replace worn bushings.

Clutch Housing Assembly

cardiagn.com

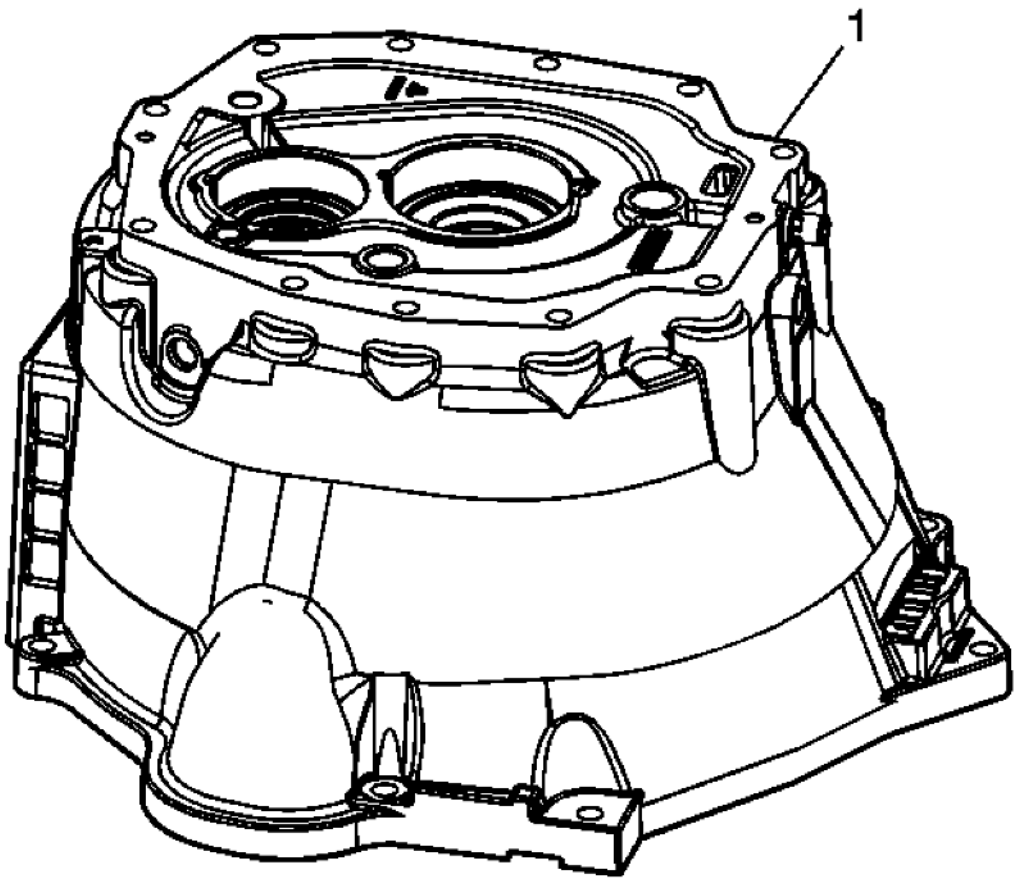

Fig. 148: Identifying Clutch Housing Assembly
Courtesy of GENERAL MOTORS CORP.

WARNING: Wear safety glasses to avoid injury when using compressed air or any cleaning solvent. Bodily injury may occur if fumes are inhaled or if skin is exposed to chemicals.

1. Clean the clutch housing (1) parts with a suitable solvent. Air dry all the parts.
2. Inspect the clutch housing parts for the following conditions:
   - Cracks

     Replace the clutch housing part if cracks are found.

   - Scratches
   - Burrs

cardiagn.com

- Nicked mounting surfaces
- Damaged sealing surfaces
- Damaged front or rear bearing bores

3. Inspect the machined mating surfaces for flatness. Check the mating surfaces with a straight edge.
4. Inspect the bearing races and bores for wear, scratches or grooves.
5. Inspect the bushing for excessive wear. Replace worn bushings.
6. Use a fine mill file to dress minor scratches or burrs.
7. If scratches, or grooves or scoring cannot be removed by hand with a soft stone or crocus cloth, replace the component.

TRANSMISSION CASE AND CLUTCH HOUSING ASSEMBLE

Special Tools

- **J 8092:** Universal Driver Handle
- **J 23907-1:** Slide Hammer
- **J 36017:** Valve Seal Remover
- **J 36190:** Universal Driver Handle
- **J 39433:** Input Shaft Seal Installer
- **J 39435:** Bearing Race Installer
- **J 39439-3:** Bushing Installer
- **J 39439-1:** Shift Rail Bushing Removal/Installer
- **J 39442:** Mainshaft and Countershaft Press Adapter
- **J 42464:** Shift Shaft Seal lnstaller
- **J 44384:** Bearing Installer

For equivalent regional tools, refer to **Special Tools**.

Transmission Case

cardiagn.com

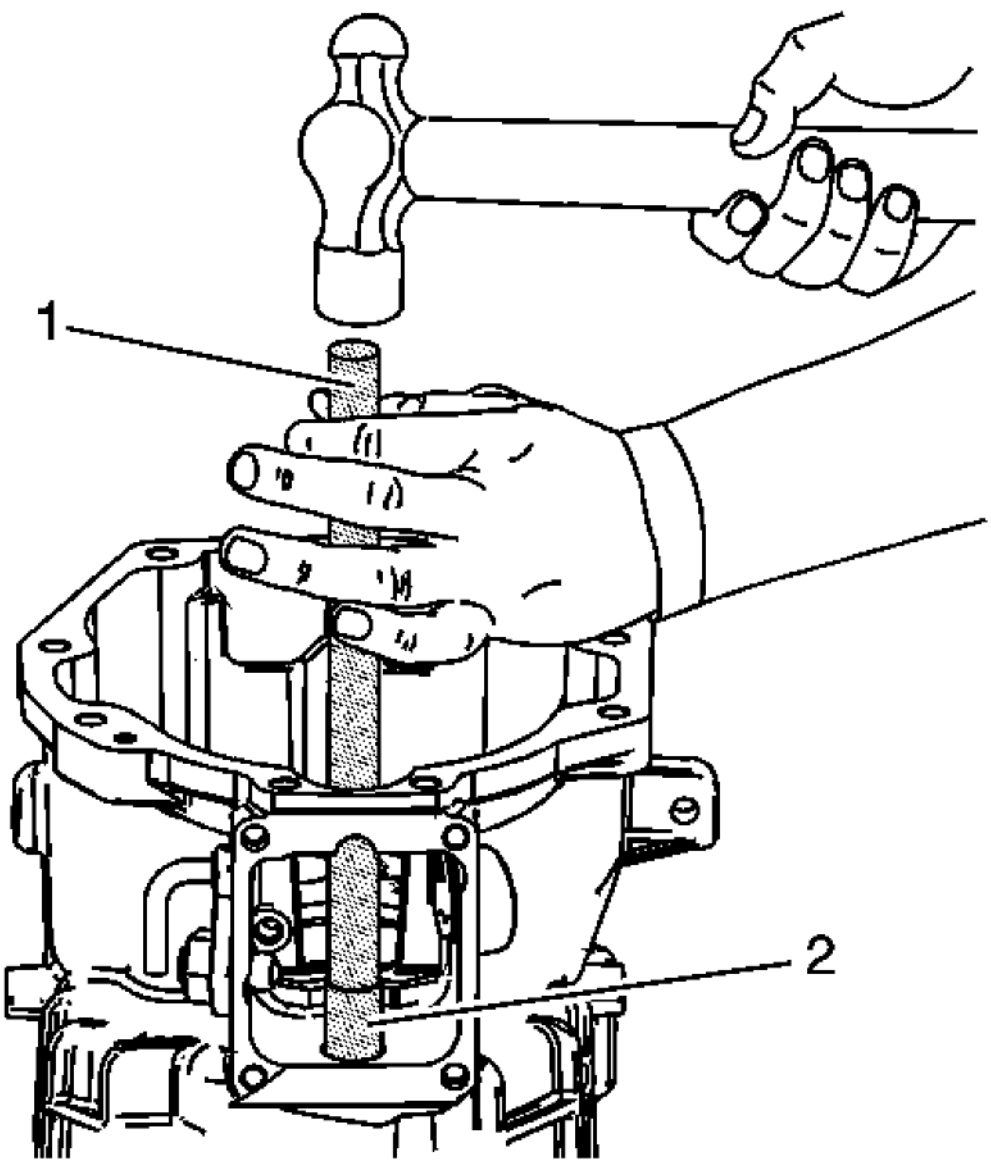

Fig. 149: Installing 1st/2nd & 3rd/4th Shift Shaft Bearing
Courtesy of GENERAL MOTORS CORP.

NOTE: **The end of the bearing that has numbers stamped on it must face the J 44384: bearing installer, so that the numbers are visible when the bearing is installed.**

cardiagn.com

1. Install the 1st/2nd and the 3rd/4th shift shaft bearing. Use the **J 36190:** driver handle (1) and the **J 44384:** bearing installer (2).

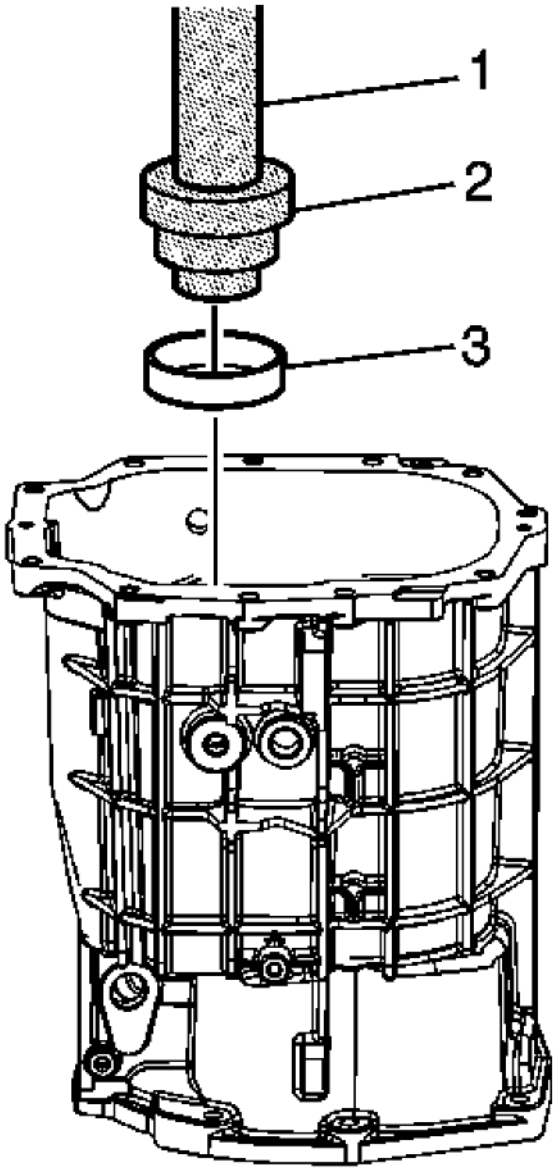

Fig. 150: Installing Mainshaft Bearing Race
Courtesy of GENERAL MOTORS CORP.

cardiagn.com

NOTE: Bearings and Races are replaced as sets.

2. Install the mainshaft bearing race (3), using the **J 8092:** driver handle (1) and the **J 39435:** installer (2).

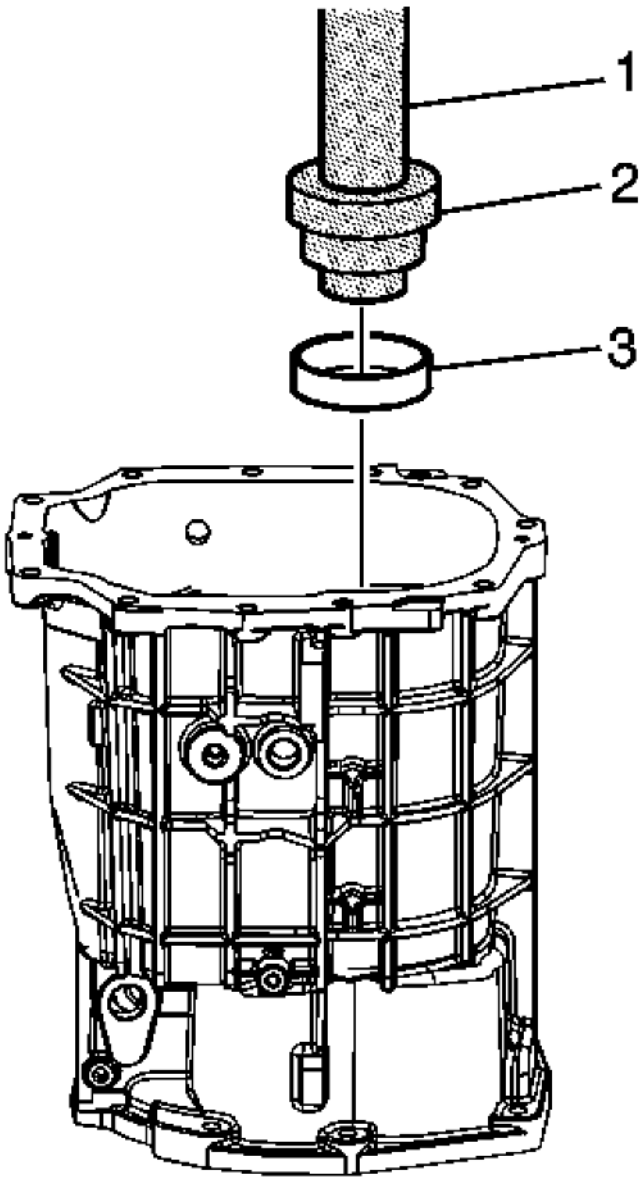

Fig. 151: Installing Countershaft Bearing Race
Courtesy of GENERAL MOTORS CORP.

cardiagn.com

3. Install the countershaft bearing race (3), using the **J 8092:** driver handle (1) and the **J 39435:** installer (2).

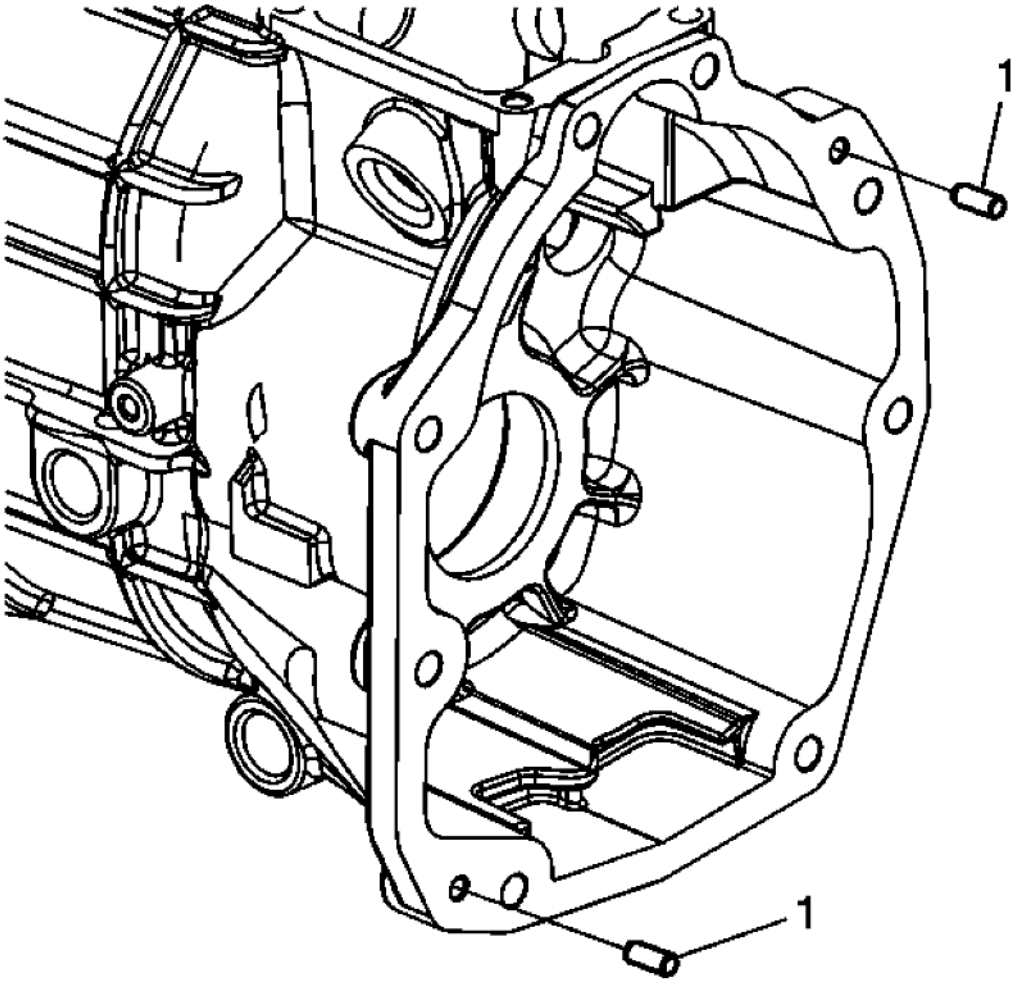

Fig. 152: Locating Dowel Pins
Courtesy of GENERAL MOTORS CORP.

4. Install the dowel pins (1).

cardiagn.com

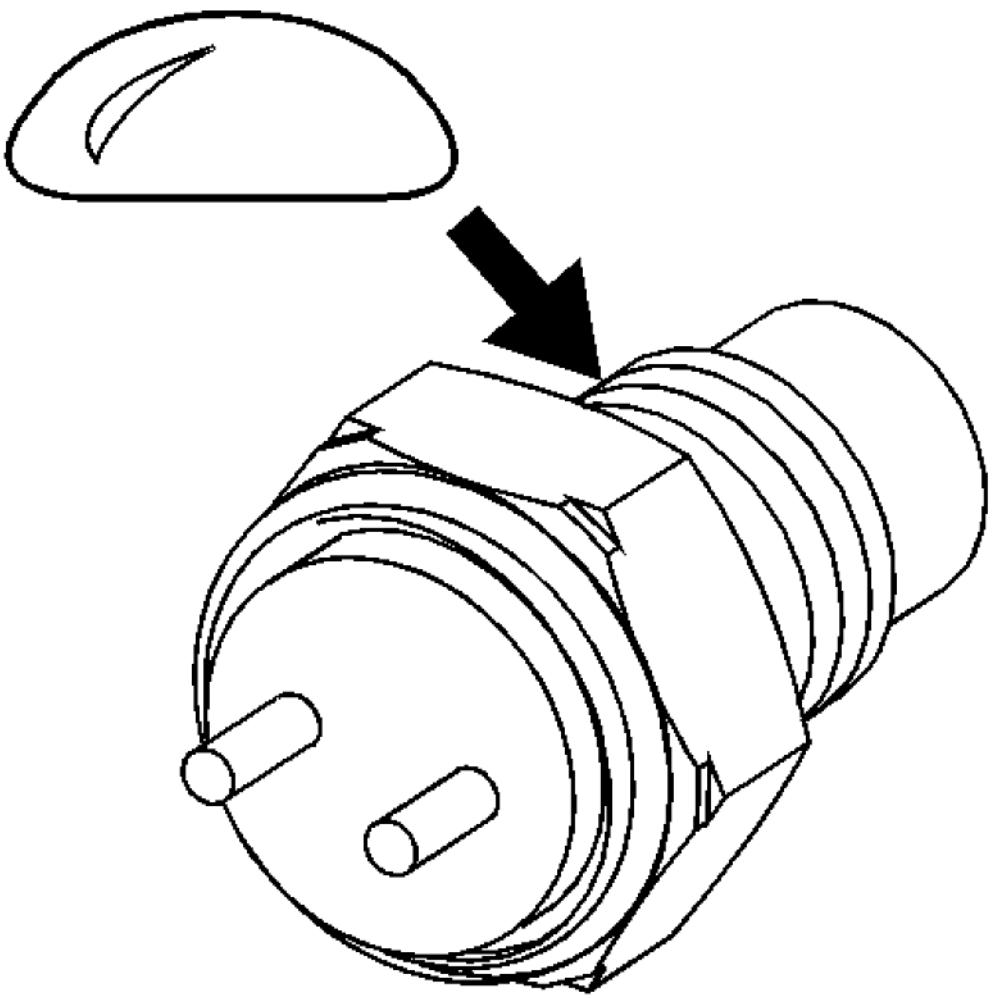

Fig. 153: Applying Sealant To Threads Of Backup Lamp Switch
Courtesy of GENERAL MOTORS CORP.

5. Apply sealant GM P/N 12346004 (Canadian P/N 10953480) or equivalent to the threads of the backup lamp switch.

cardiagn.com

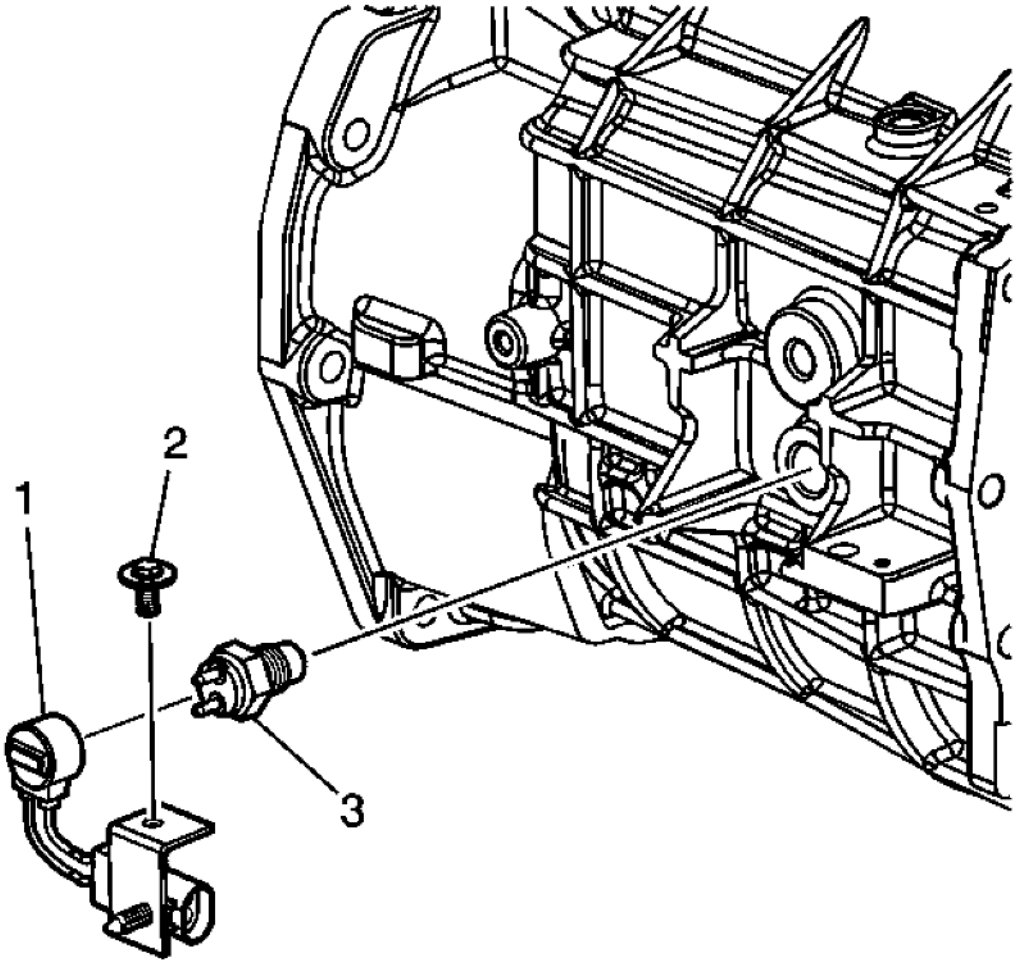

Fig. 154: Identifying Backup Lamp Switch Components
Courtesy of GENERAL MOTORS CORP.

CAUTION: Refer to Fastener Caution .

6. Install the backup lamp switch (3) and tighten to 27 N.m (20 lb ft).
7. Connect the backup lamp switch connector harness (1) to the backup lamp switch.
8. Install the backup switch bracket and bolt with washer (2). Tighten the bracket bolt to 9 N.m (80 lb in).

cardiagn.com

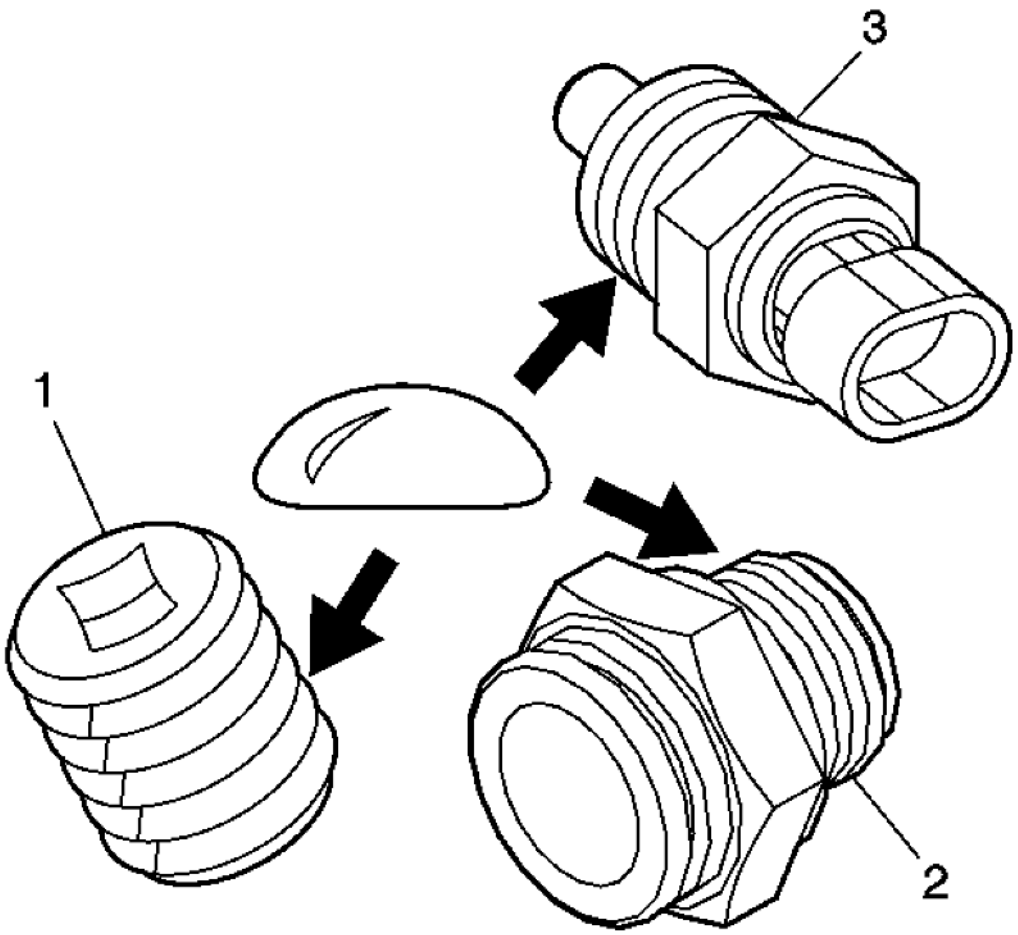

Fig. 155: Applying Sealant To Threads Of Transmission Case Fill Plug, Temperature Sensor & Cooler Line Return Fitting
Courtesy of GENERAL MOTORS CORP.

9. Apply sealant GM P/N 12346004 (Canadian P/N 10953480) or equivalent to the threads of the transmission case fill plug (1), the temperature sensor (3) and the cooler line return fitting (2).

cardiagn.com

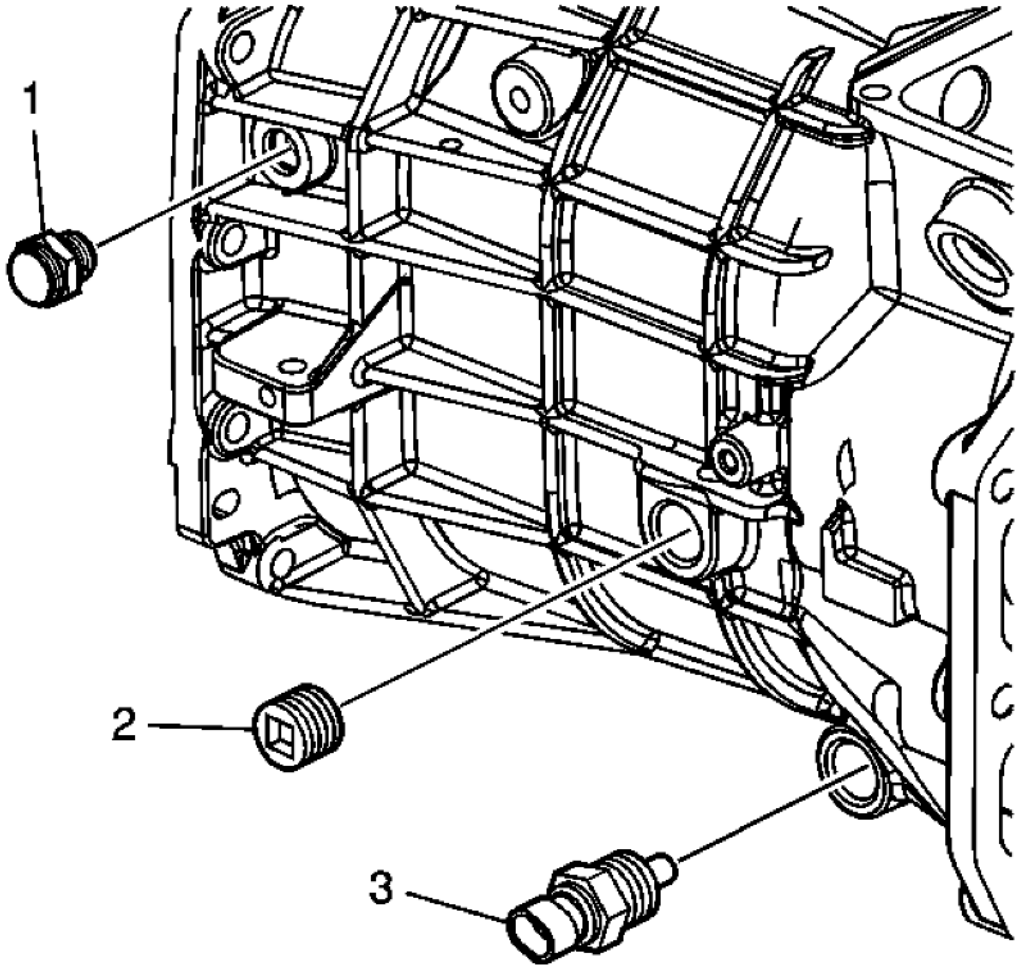

Fig. 156: Identifying Cooler Line Return Fitting, Fill Plug & Coolant Temperature Sensor
Courtesy of GENERAL MOTORS CORP.

10. Install the transmission case cooler line return fitting (1) and tighten to 18 N.m (13 lb ft).
11. Install the transmission case fill plug (2) and tighten to 27 N.m (20 lb ft).
12. Install the coolant temperature sensor (3) and tighten to 39 N.m (29 lb ft).

cardiagn.com

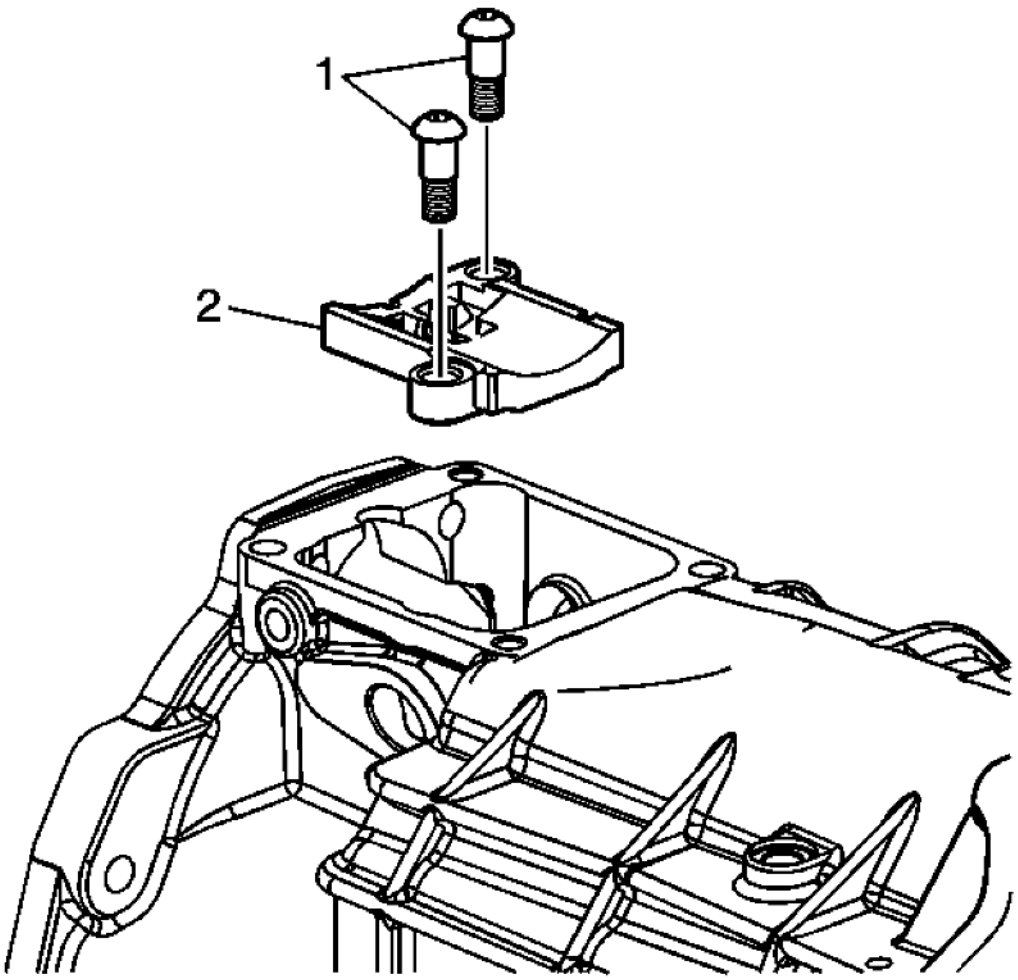

Fig. 157: Identifying Detent Guide Plate & Attaching Bolts
Courtesy of GENERAL MOTORS CORP.

CAUTION: The H-pattern on the guide plate must face the extension housing. If the guide plate is installed incorrectly, then damage will occur.

13. Install the guide plate (2) and the guide plate bolts (1) and tighten to 22 N.m (16 lb ft).

Clutch Housing Assembly

cardiagn.com

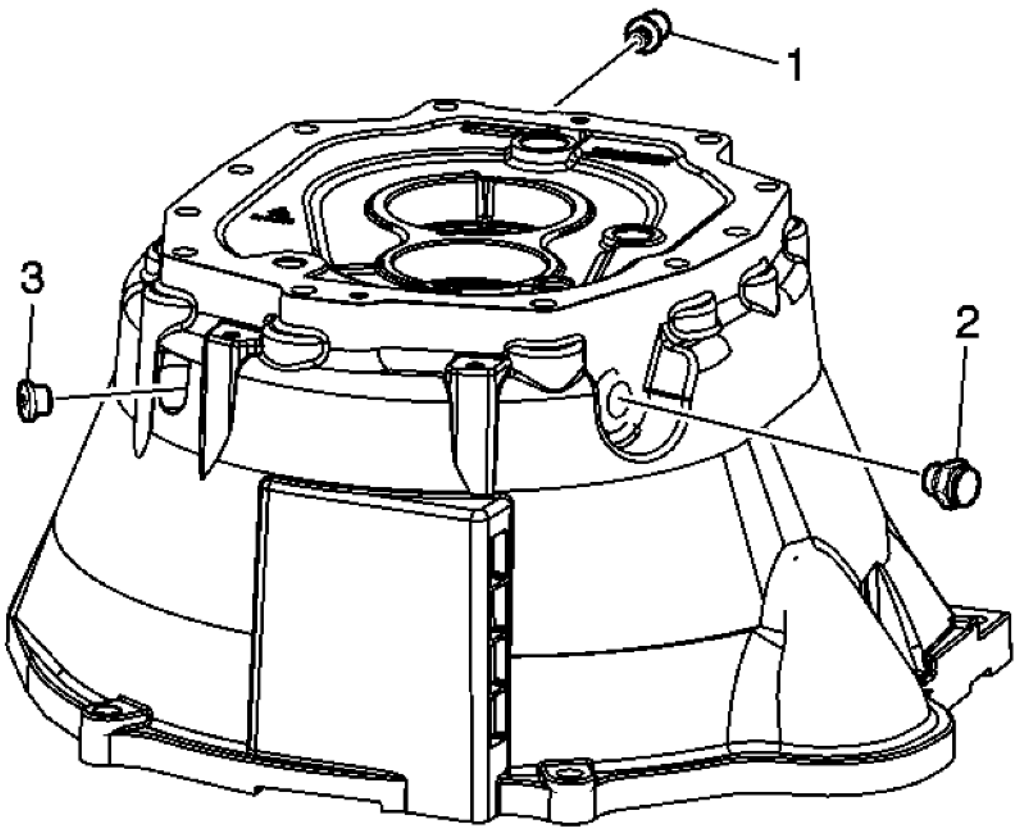

Fig. 158: Identifying Vent Assembly, Pump Outlet Cooler Fitting With O-Ring & Transmission Fluid Pump Outlet Pipe Fitting
Courtesy of GENERAL MOTORS CORP.

1. Install the transmission fluid pump outlet pipe fitting (3) and tighten to 27 N.m (20 lb ft).
2. Install the pump outlet cooler fitting (2), and tighten to 18 N.m (13 lb ft).
3. Install the vent assembly (1).

cardiagn.com

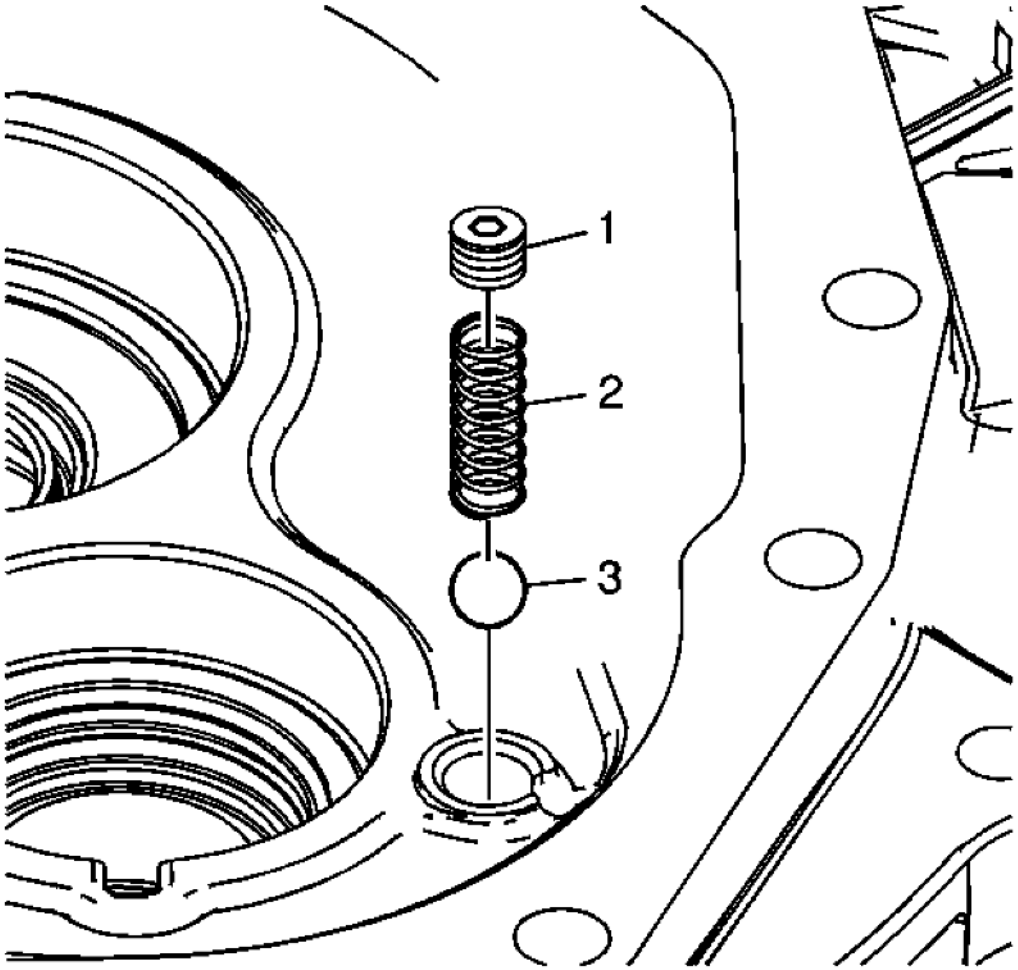

Fig. 159: Identifying Transmission Fluid Pump Spring Retaining Plug, Spring & Check Ball
Courtesy of GENERAL MOTORS CORP.

4. Install the transmission fluid pump check ball (3).
5. Install the transmission fluid pump spring (2).
6. Install the transmission fluid pump spring retaining plug (1). Tighten the plug to 27 N.m (20 lb ft).

cardiagn.com

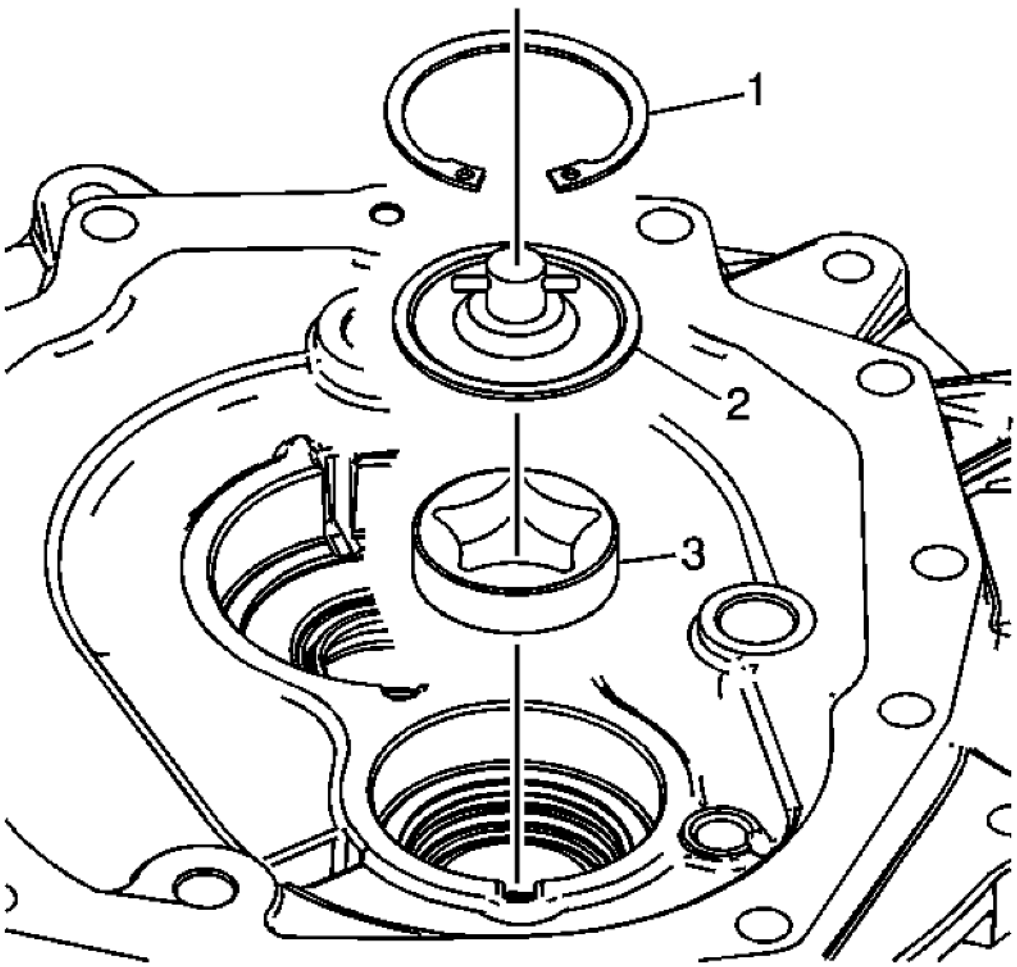

Fig. 160: Identifying Oil Pump & Oil Pump Cover Assembly
Courtesy of GENERAL MOTORS CORP.

7. Install the oil pump (3).
8. Install the oil pump cover assembly (2).
9. Install the retainer ring (1).

cardiagn.com

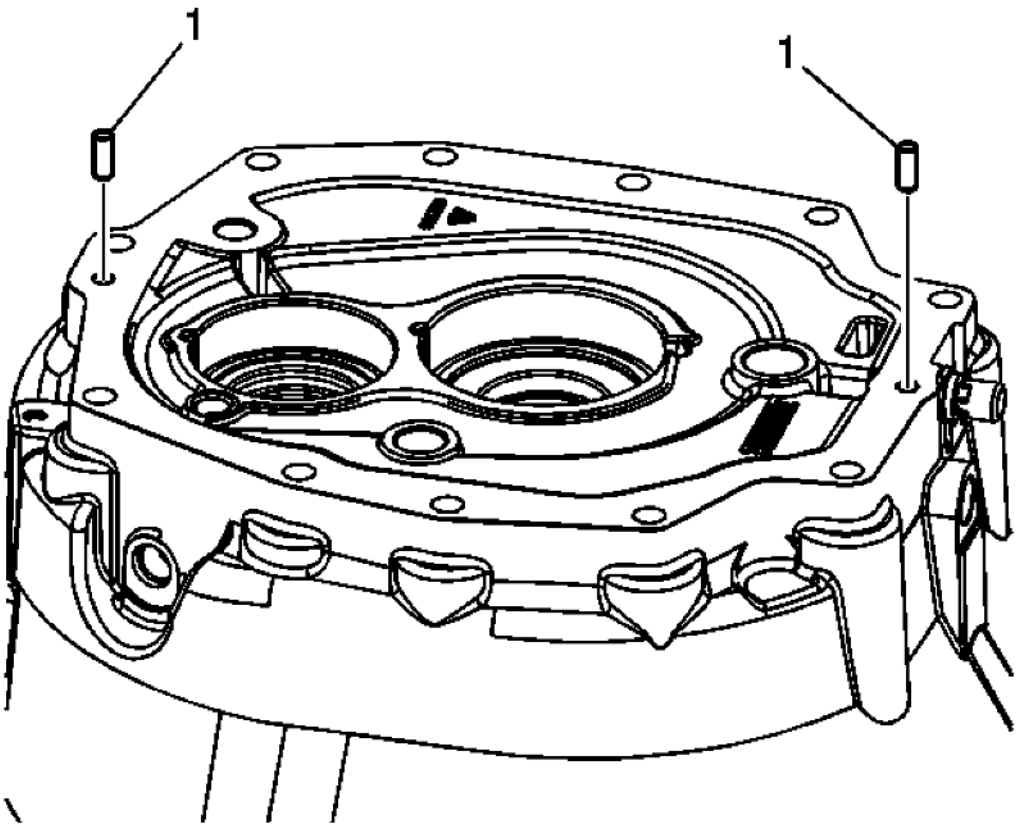

Fig. 161: Identifying Dowel Pins
Courtesy of GENERAL MOTORS CORP.

10. Install the dowel pins (1).

cardiagn.com

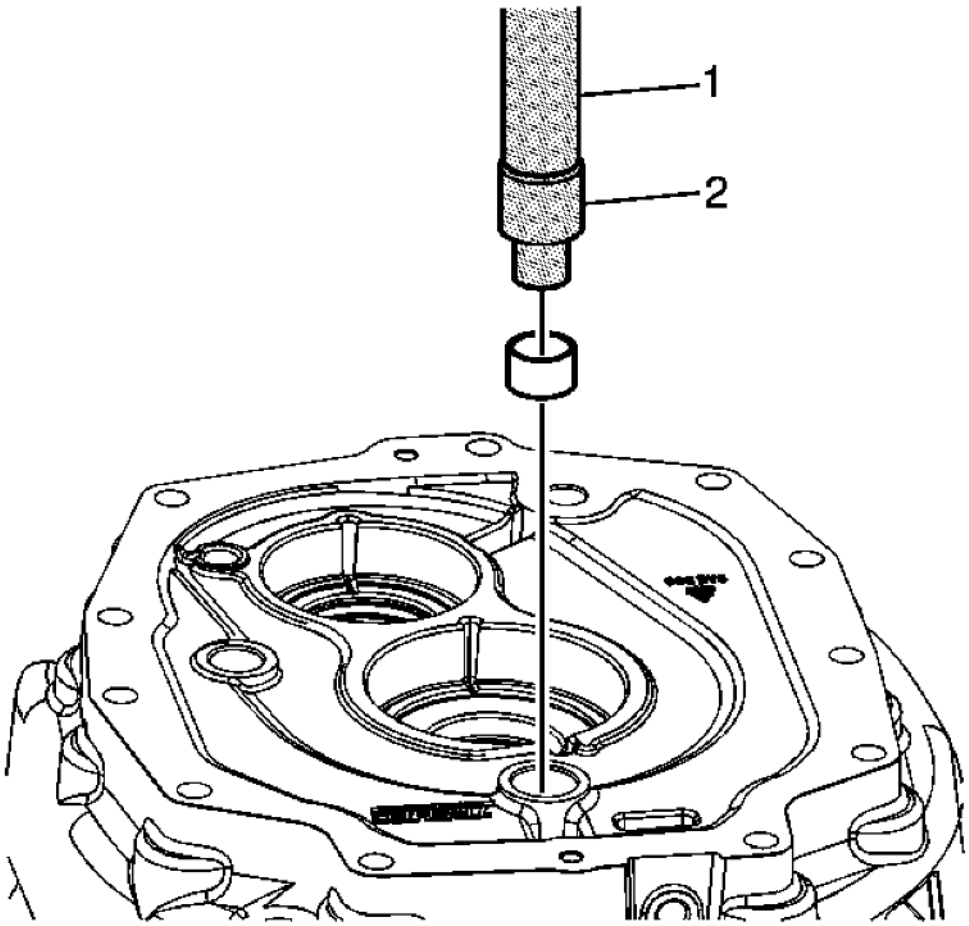

Fig. 162: Installing 1st/2nd Speed Shift Shaft Bearing
Courtesy of GENERAL MOTORS CORP.

CAUTION: If the 1st/2nd speed shift shaft bearing is installed incorrectly it will interfere with the inner shift rail seal causing a leak.

11. Install the 1st/2nd speed shift shaft bearing flush with the clutch housing, using the **J 36190:** driver handle (1) with the **J 44384:** bearing installer (2).

cardiagn.com

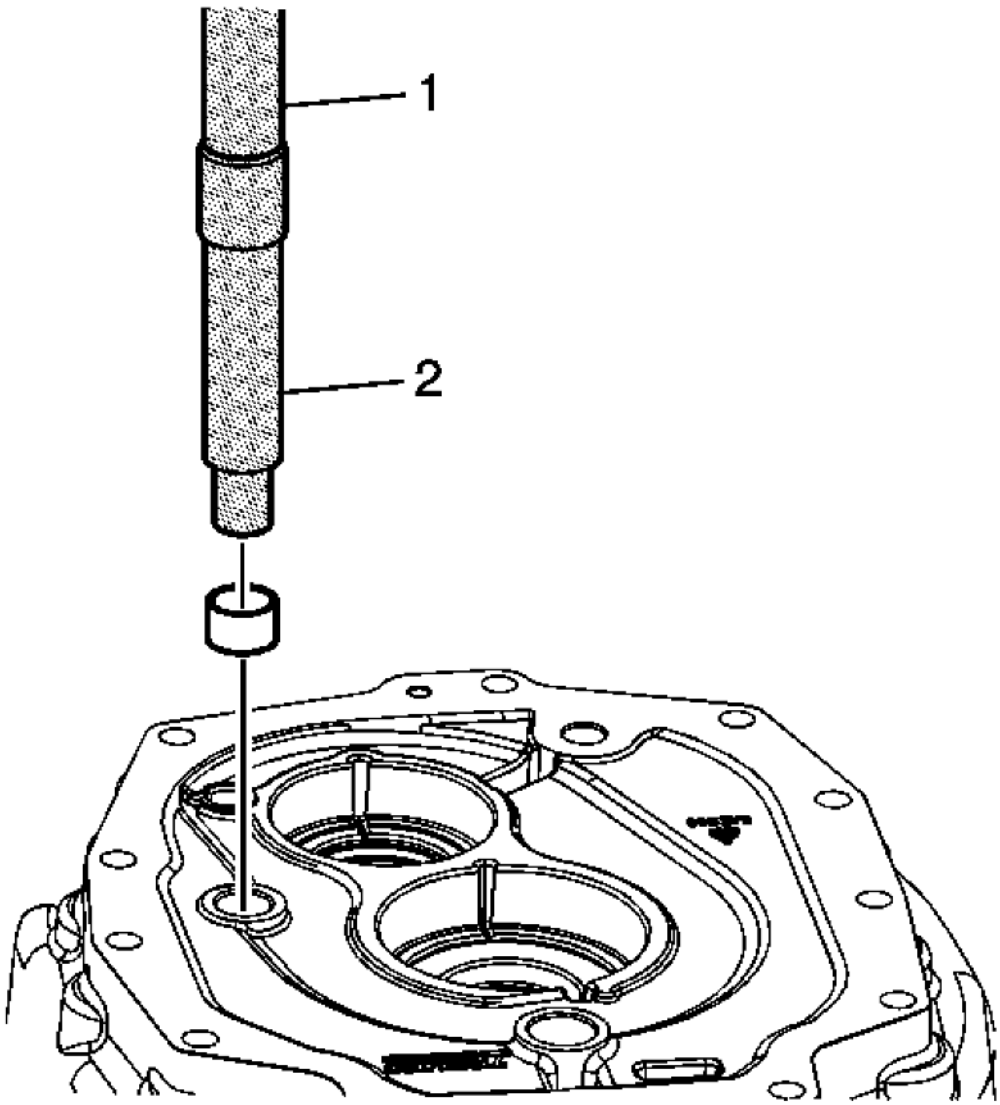

Fig. 163: Installing 3rd/4th Speed Shift Shaft Bushing
Courtesy of GENERAL MOTORS CORP.

12. Install the 3rd/4th speed shift shaft bushing flush with the clutch housing, using the **J 36190:** driver handle (1) with the **J 39439-1:** bushing removal/installer (2).

cardiagn.com

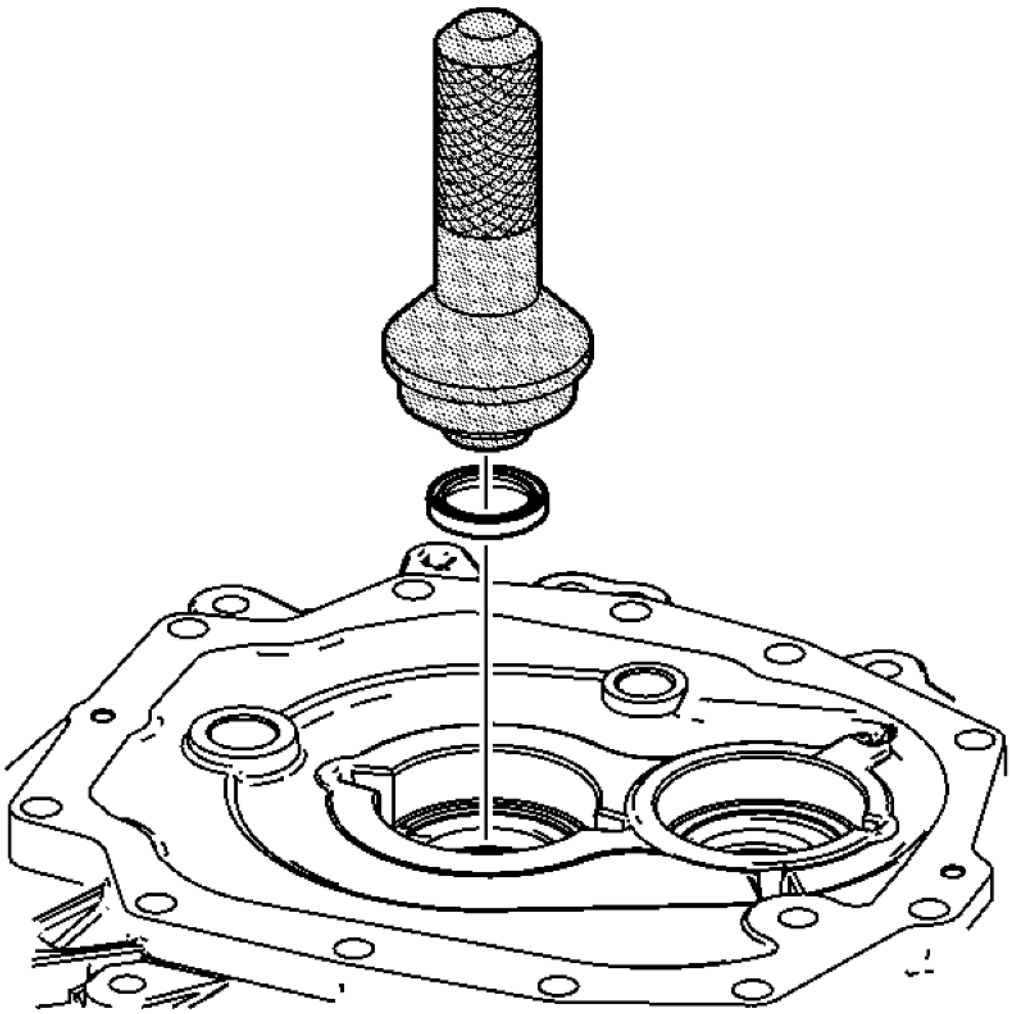

Fig. 164: Installing Input Shaft Seal
Courtesy of GENERAL MOTORS CORP.

13. Install the input shaft seal, using the **J 39433:** input installer.

cardiagn.com

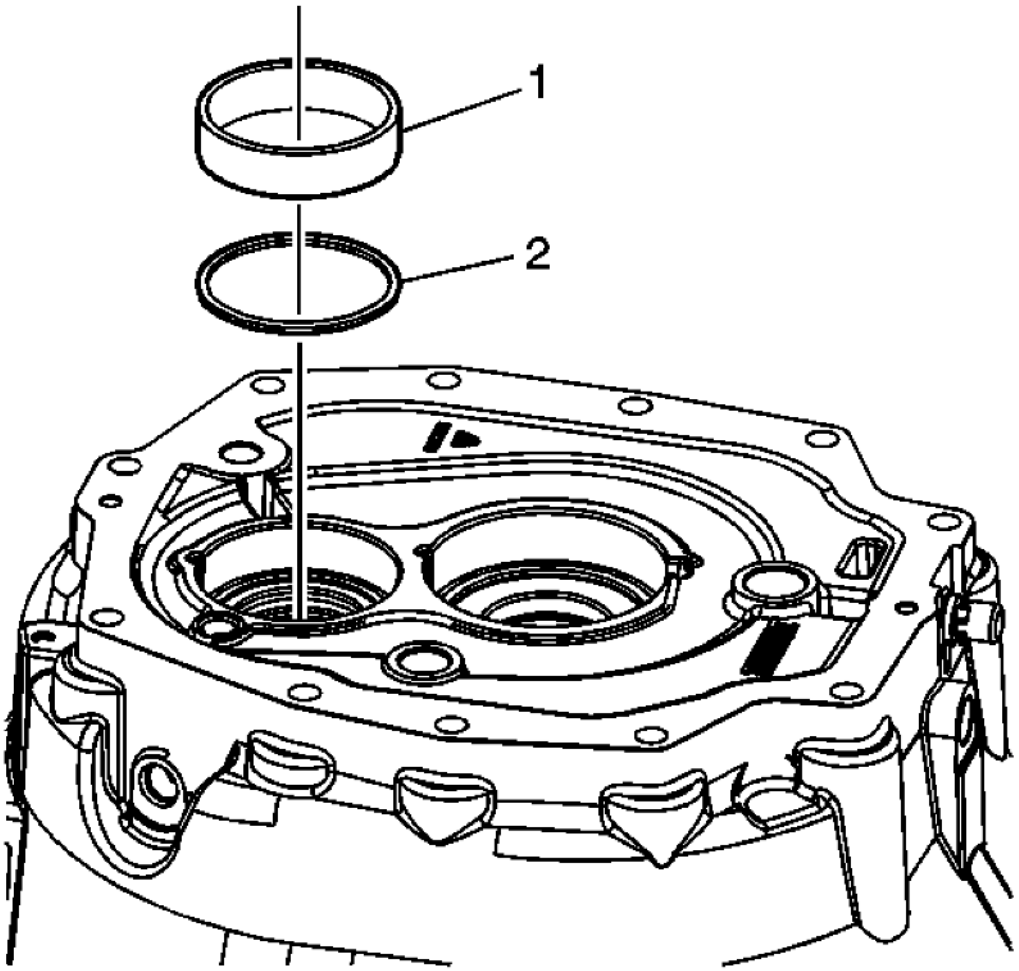

Fig. 165: Identifying Countershaft Bearing Race & Shim
Courtesy of GENERAL MOTORS CORP.

NOTE: One or more shims may be used.

14. Install one or more countershaft bearing shims (2) and the bearing race (1). Refer to Input Shaft, Mainshaft and Countershaft in **Shimming Procedures**.

cardiagn.com

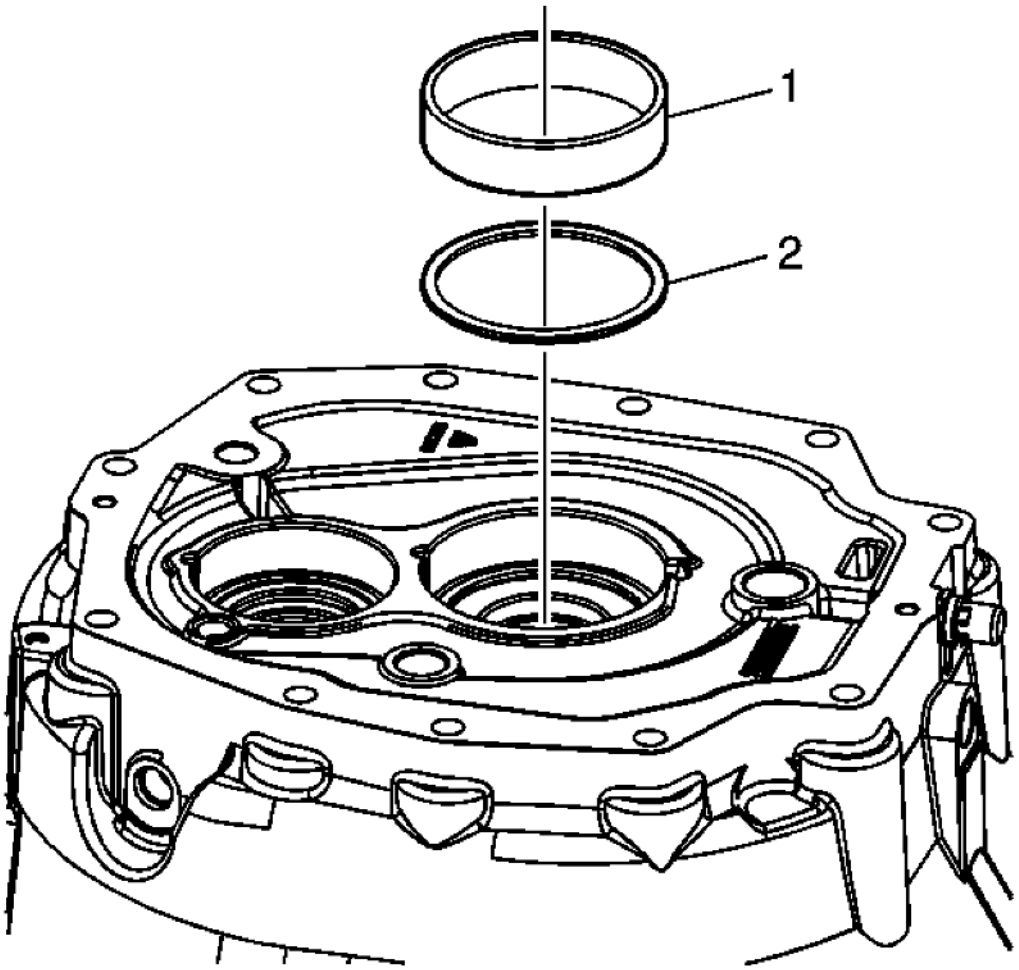

Fig. 166: Identifying Input Shaft Bearing Race & Shim
Courtesy of GENERAL MOTORS CORP.

15. Install one or more input shaft bearing shims 2) and the bearing race (1). Refer to Input Shaft, Mainshaft and Countershaft in **Shimming Procedures**.

SHIFT CONTROL SHAFT COVER ASSEMBLY DISASSEMBLE

cardiagn.com

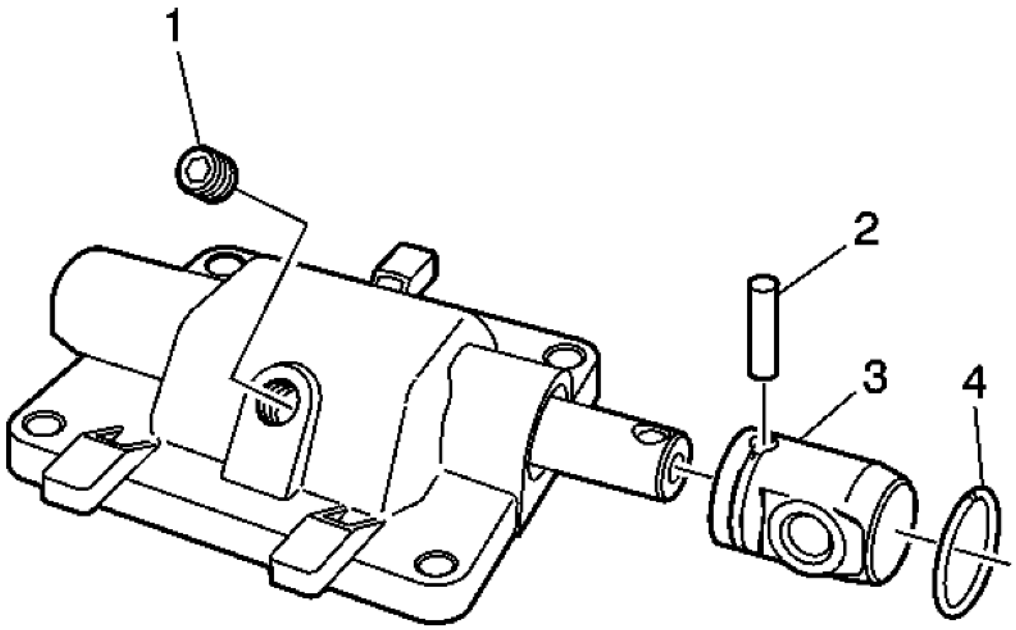

Fig. 167: Shift Control Shaft Components
Courtesy of GENERAL MOTORS CORP.

1. Remove the manual transmission selector lever rod swivel retainer (4).
2. Remove the manual transmission shift lever pin (2).
3. Remove the manual transmission shift lever rod universal joint assembly (3).
4. Remove the shift control shaft cover set screw (1).

cardiagn.com

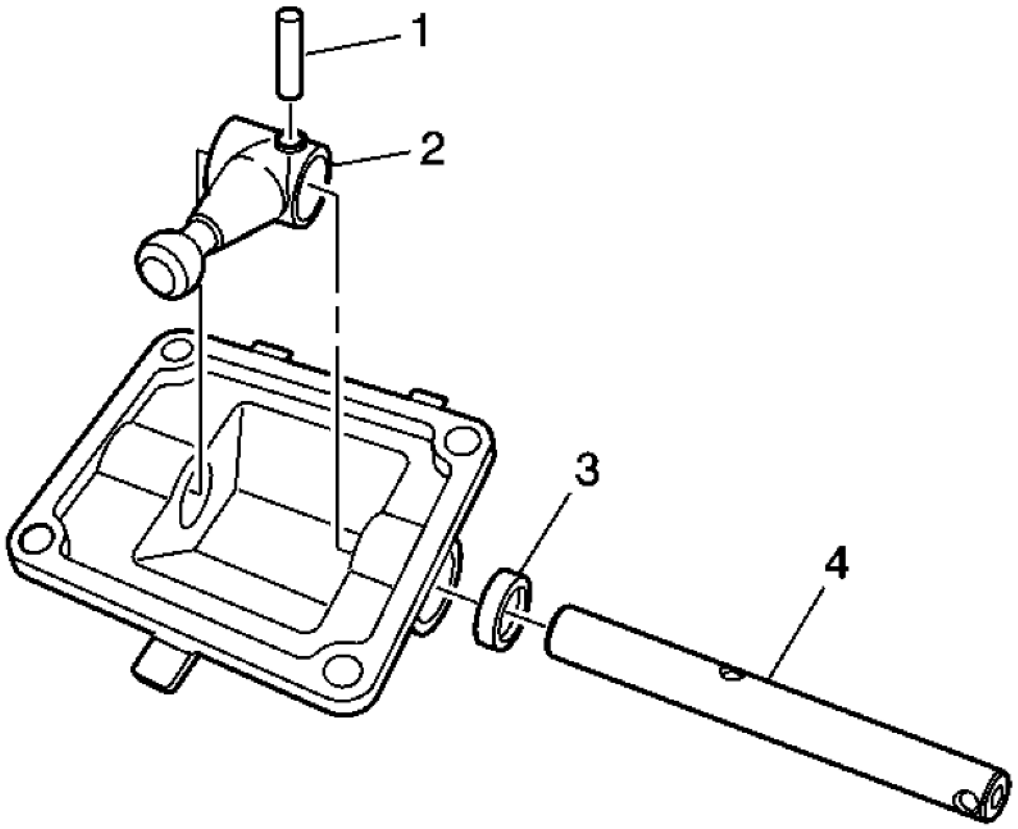

Fig. 168: Shift Control Shaft Cover Components
Courtesy of GENERAL MOTORS CORP.

5. Remove the shift control lever shaft pin (1).
6. Remove the shift control lever (2) and the shift control lever shaft (4).
7. Remove the shift control shaft cover seal (3).

SHIFT CONTROL SHAFT COVER ASSEMBLY ASSEMBLE

cardiagn.com

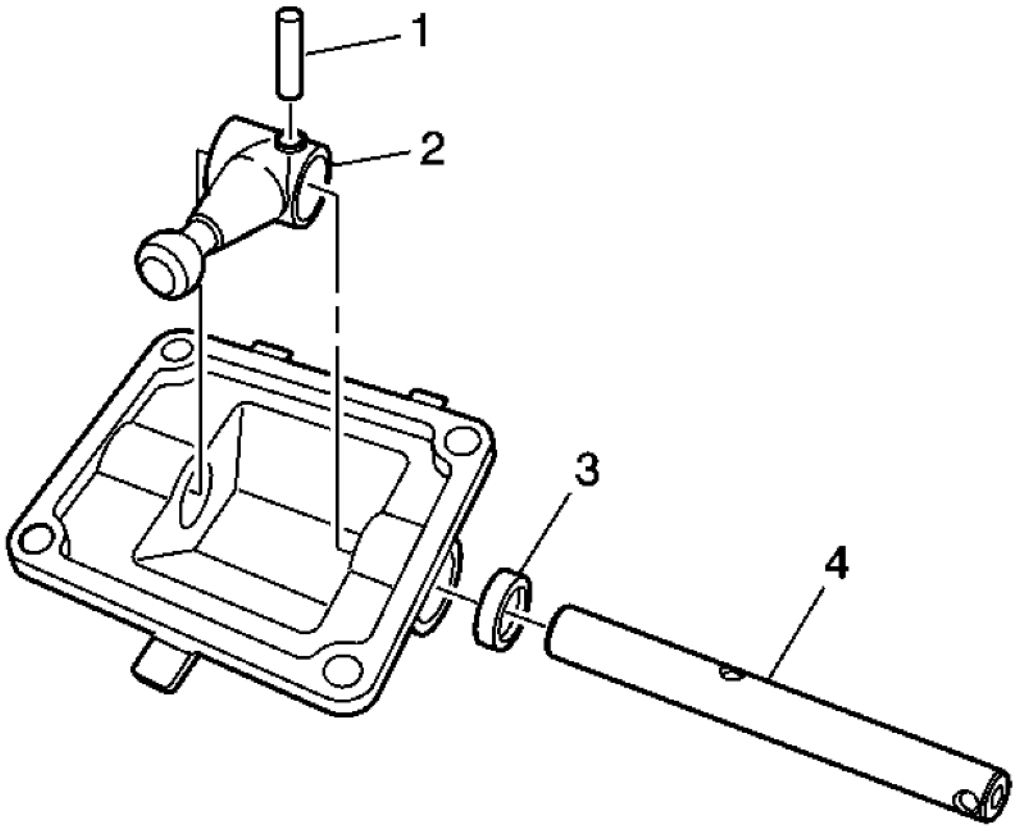

Fig. 169: Shift Control Shaft Cover Components
Courtesy of GENERAL MOTORS CORP.

1. Install the shift control shaft cover seal (3).
2. Install the shift control lever (2) and the shift control lever shaft (4).
3. Install the shift control lever shaft pin (1).

cardiagn.com

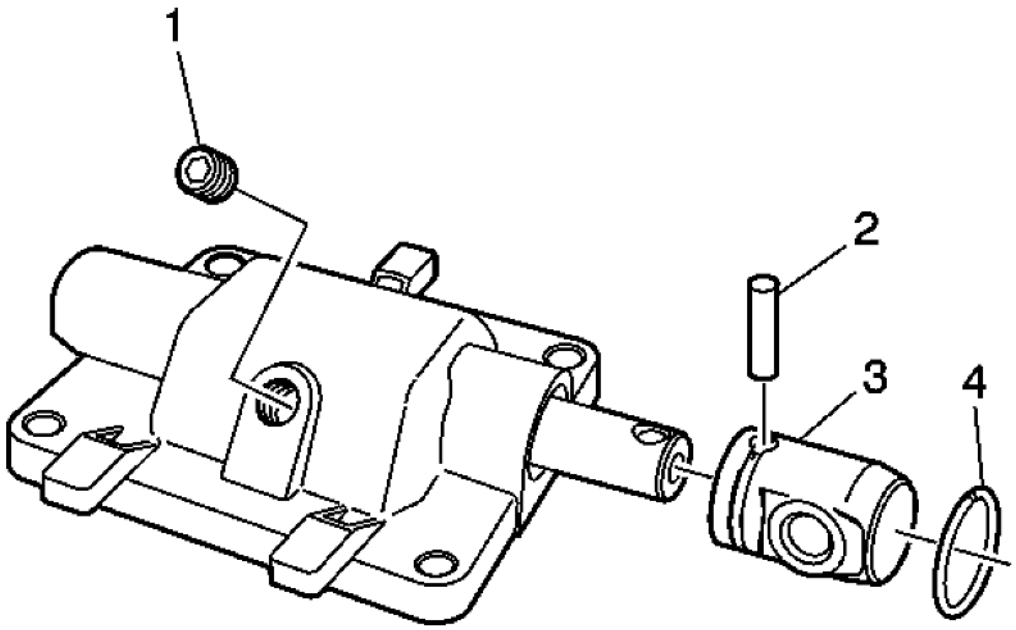

Fig. 170: Shift Control Shaft Components
Courtesy of GENERAL MOTORS CORP.

4. Install the shift control shaft cover set screw (1).
5. Install the manual transmission shift lever rod universal joint assembly (3).
6. Install the manual transmission shift lever pin (2).
7. Install the manual transmission selector lever rod swivel retainer (4).

EXTENSION DISASSEMBLE

Special Tools

- **DT 49216:** Shift Rail Bearing Remover
- **J 23907:** Slide Hammer with Bearing Adapter
- **J 26941:** Bearing Race Remover
- **J 29369-2:** Bushing and Bearing Remover - 2-3 in
- **J 36190:** Universal Driver Handle
- **J 39431:** Fifth/Sixth Driven Gear Puller
- **J 39439-1:** Bushing Installer
- **J 39439-2:** Shift Rail Bushing Remover

cardiagn.com

- **J 39439-3:** Bushing Installer
- **J 45124:** Removal Bridge
- **J 45124-9:** Puller Leg

For equivalent regional tools, refer to **Special Tools**.

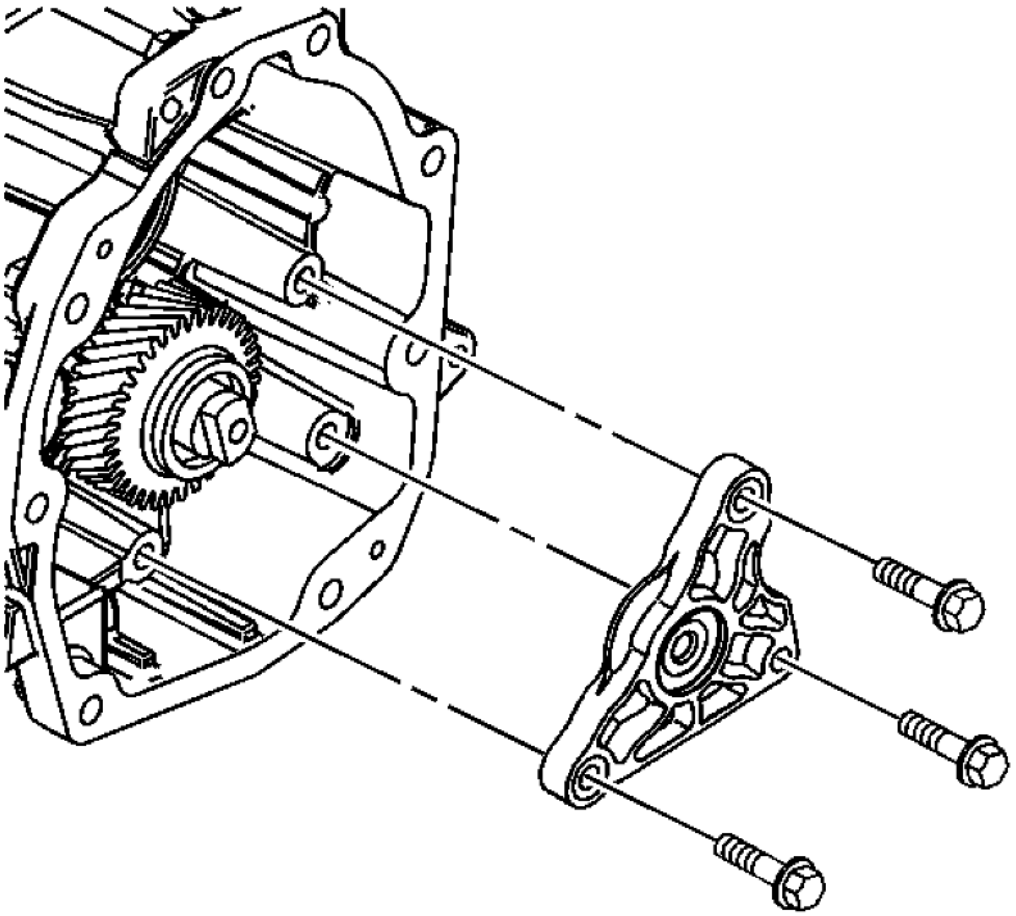

Fig. 171: View Of Reverse Idler Shaft Bracket & Bolts
Courtesy of GENERAL MOTORS CORP.

1. Remove the reverse idler shaft bracket bolts and bracket.

cardiagn.com

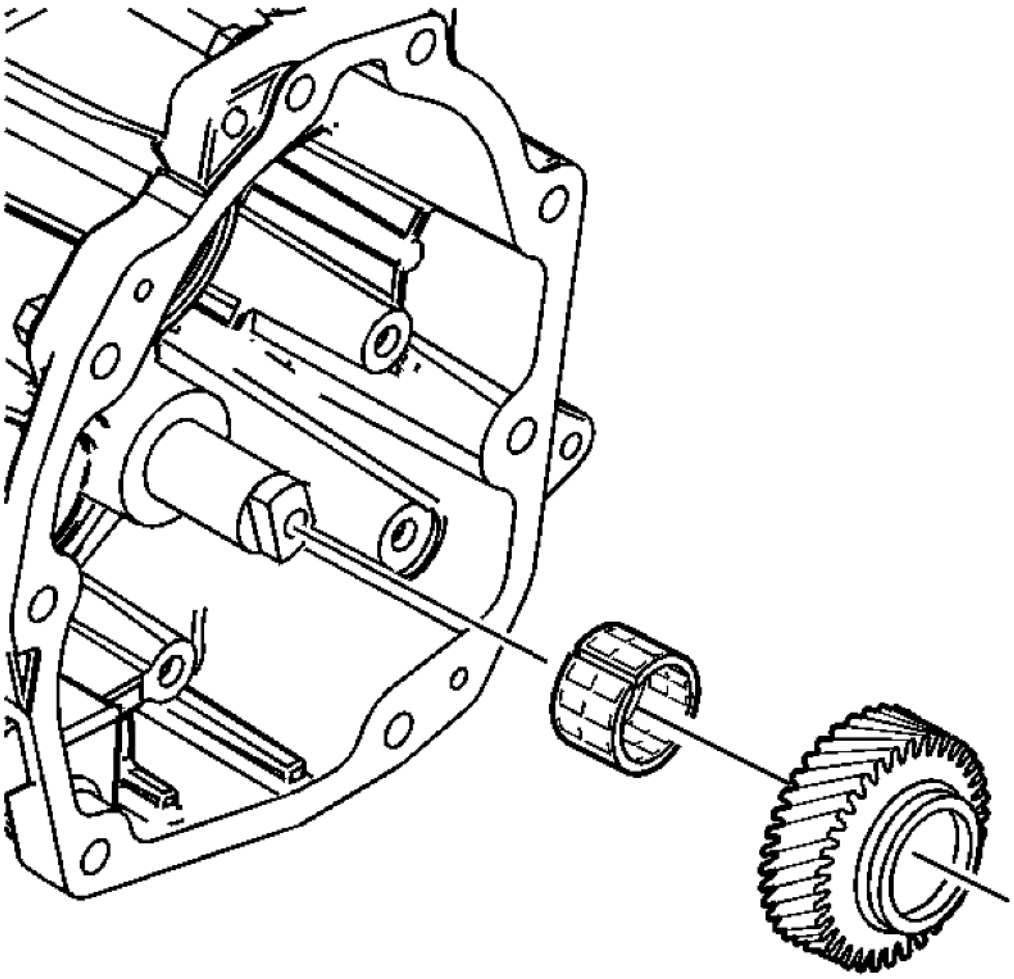

Fig. 172: View Of Reverse Idler Gear & Roller Bearing
Courtesy of GENERAL MOTORS CORP.

2. Remove the reverse idler gear and the roller bearing.

cardiagn.com

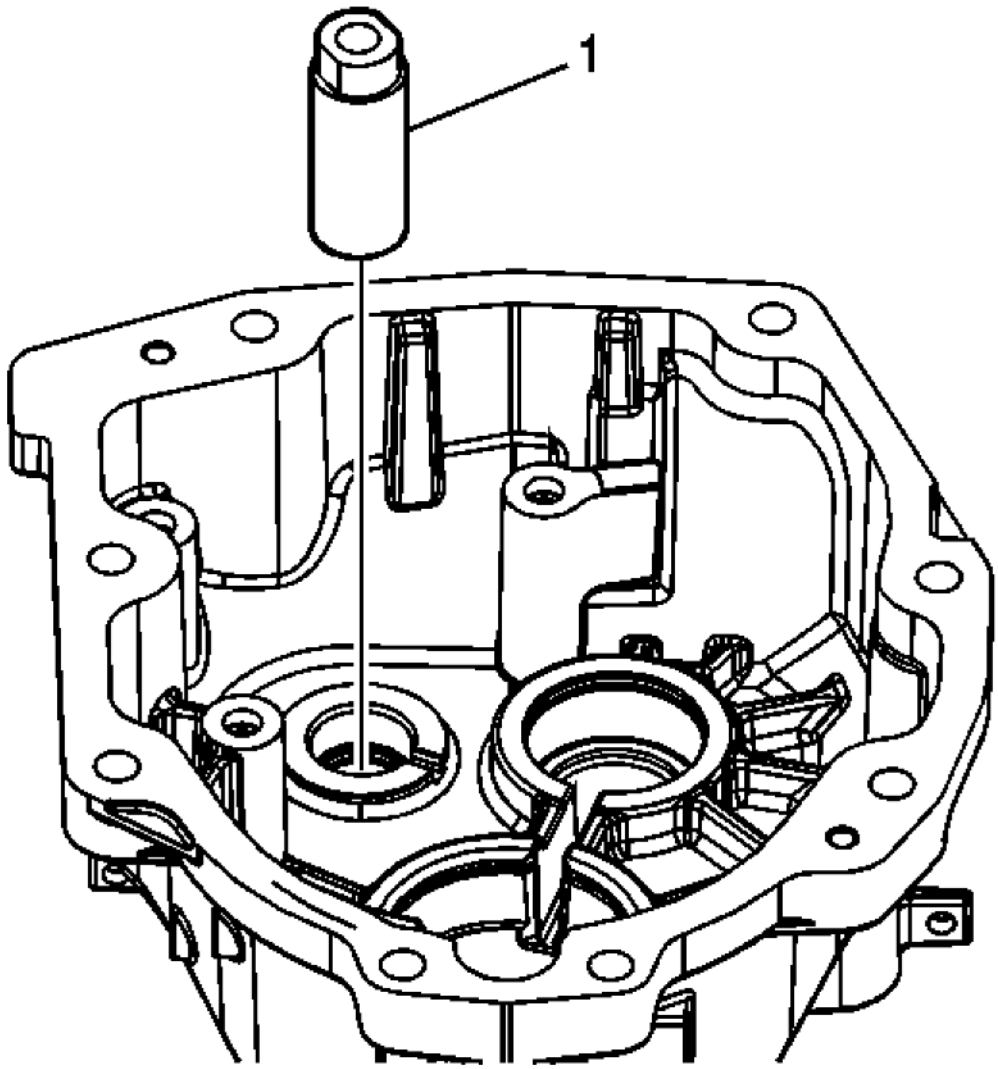

Fig. 173: Identifying Reverse Idler Gear Shaft
Courtesy of GENERAL MOTORS CORP.

3. Remove the reverse idler gear shaft (1).

cardiagn.com

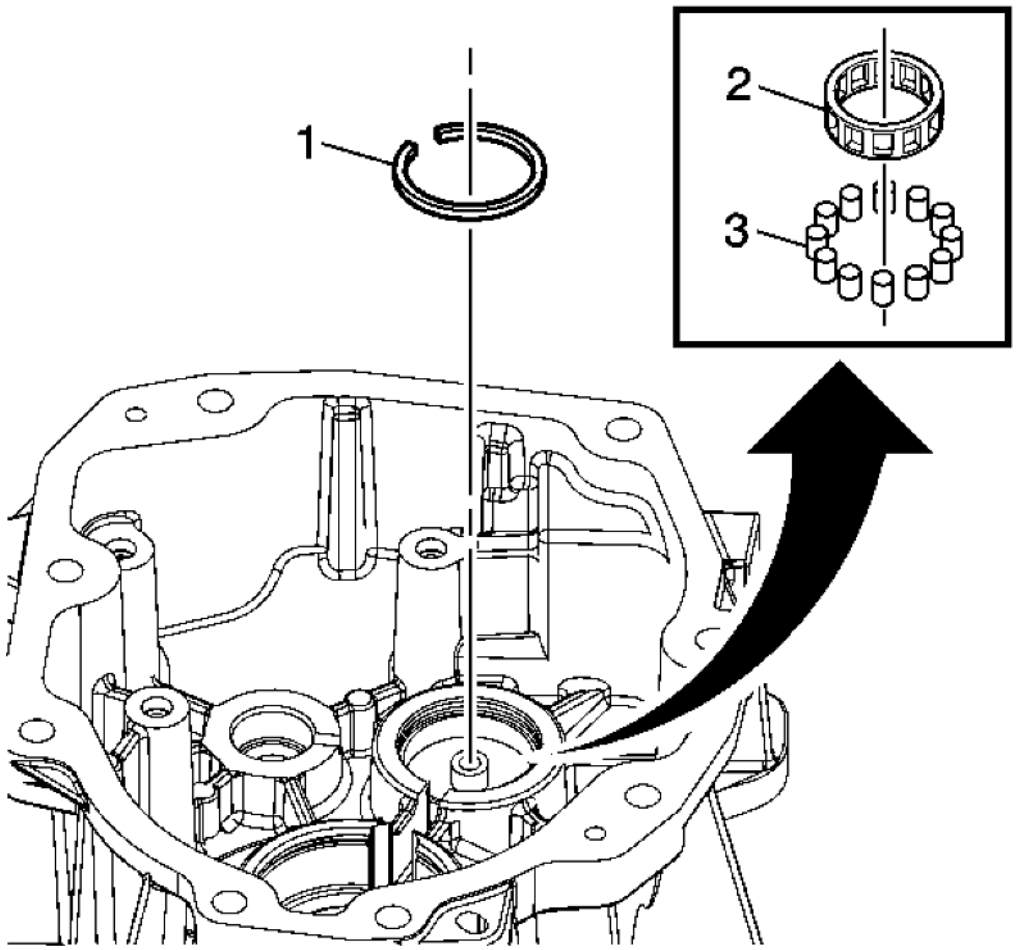

Fig. 174: View Of Countershaft Rear Bearing Retainer
Courtesy of GENERAL MOTORS CORP.

4. Remove the countershaft rear bearing retainer (1).

NOTE: **The plastic roller bearing cage (2) and bearings are part of the countershaft bearing assembly. Always use a new countershaft bearing assembly.**

5. Cut away the plastic roller bearing cage (2) from the countershaft bearing assembly.
6. Remove the bearings (3). Discard the cage and bearings.

cardiagn.com

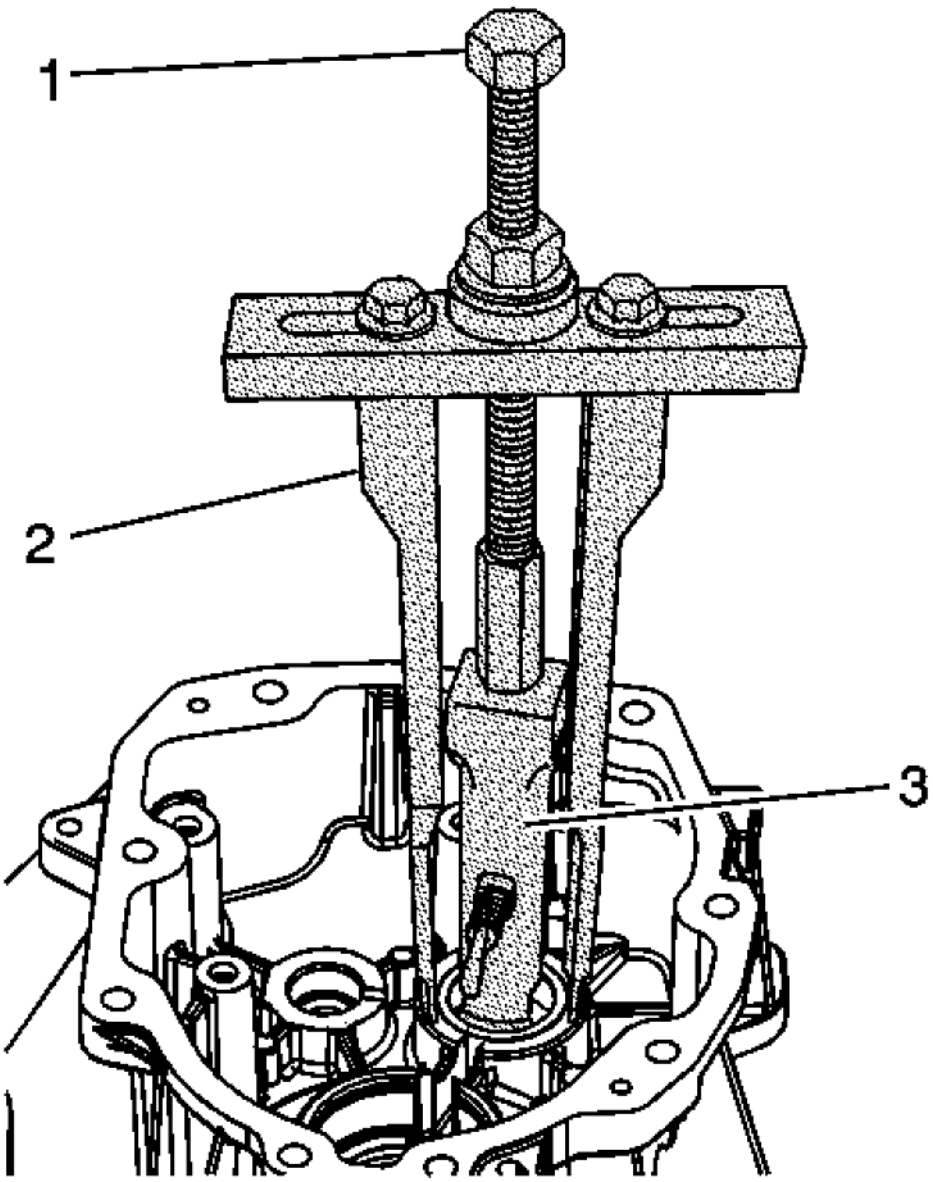

Fig. 175: Removing Race
Courtesy of GENERAL MOTORS CORP.

7. Install **J 45124-1:** removal bridge (1), **J 45124-9:** puller leg (2), and **J 29369-2:** remover (3) in the race from the countershaft bearing assembly in the extension housing.
8. Remove the race.

cardiagn.com

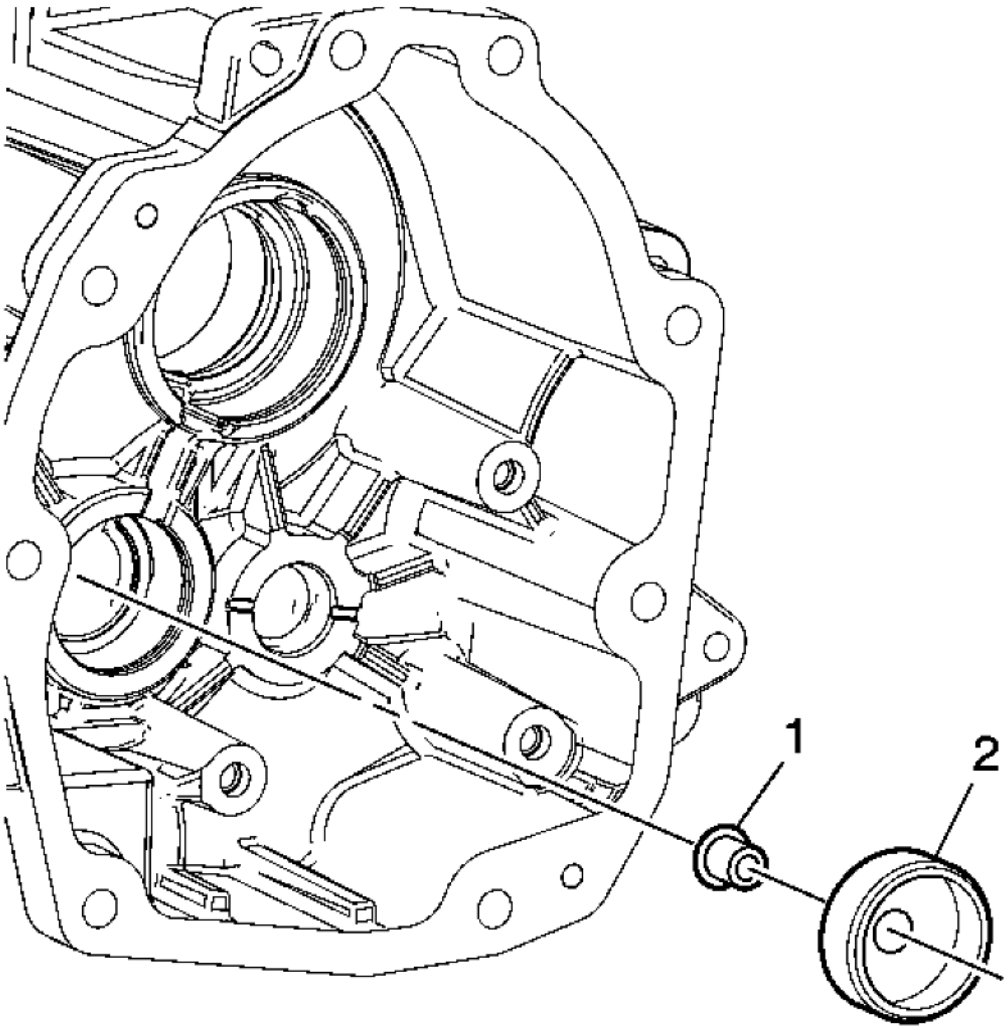

Fig. 176: View Of Oil Funnel & Bearing Race
Courtesy of GENERAL MOTORS CORP.

NOTE: The bearing race is part of the countershaft bearing assembly. Always use a new countershaft bearing assembly.

9. Remove the oil funnel (1) from the bearing race (2). Discard the bearing race.

cardiagn.com

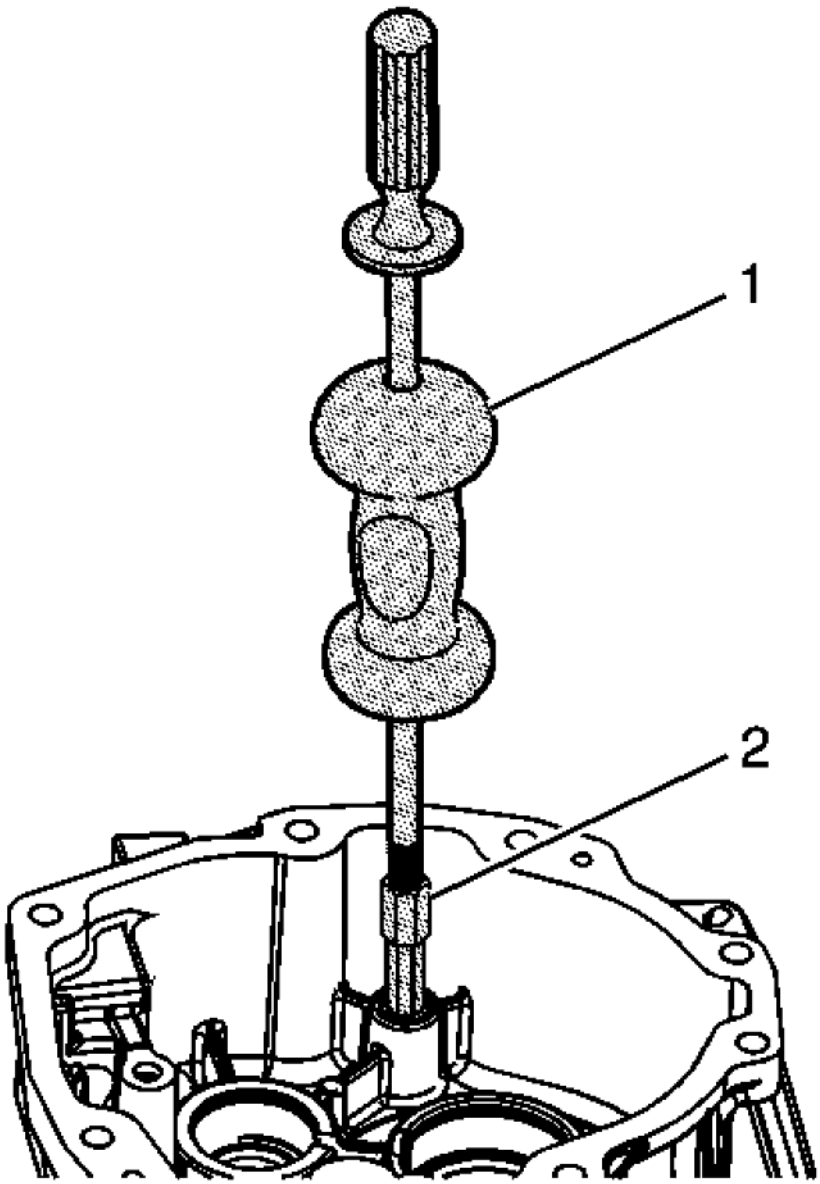

Fig. 177: Removing Bushing
Courtesy of GENERAL MOTORS CORP.

10. Using **J 39439-2:** remover (2) and **J 23907:** slide hammer (1), remove the bushing.

cardiagn.com

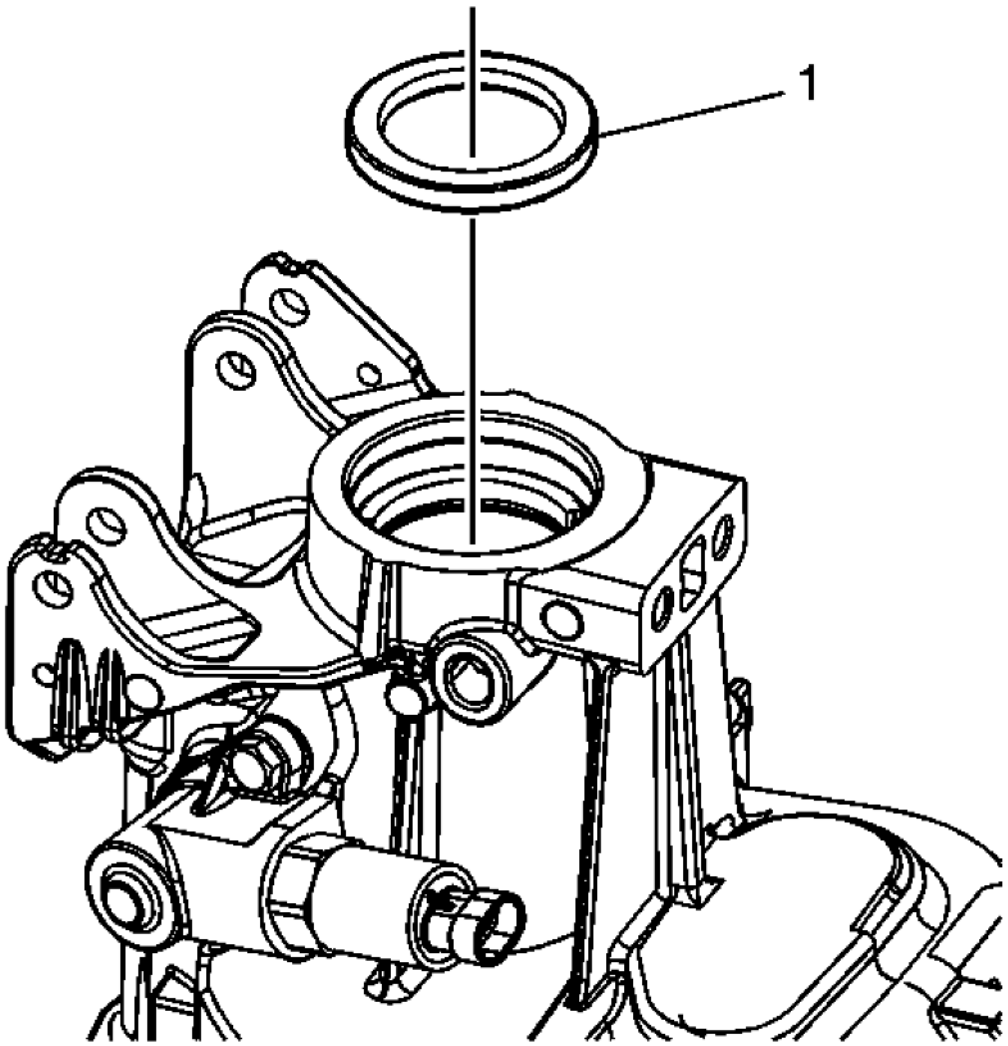

Fig. 178: Identifying Output Shaft Seal
Courtesy of GENERAL MOTORS CORP.

11. Remove the output shaft seal (1).

    Pry out the seal with a suitable tool.

cardiagn.com

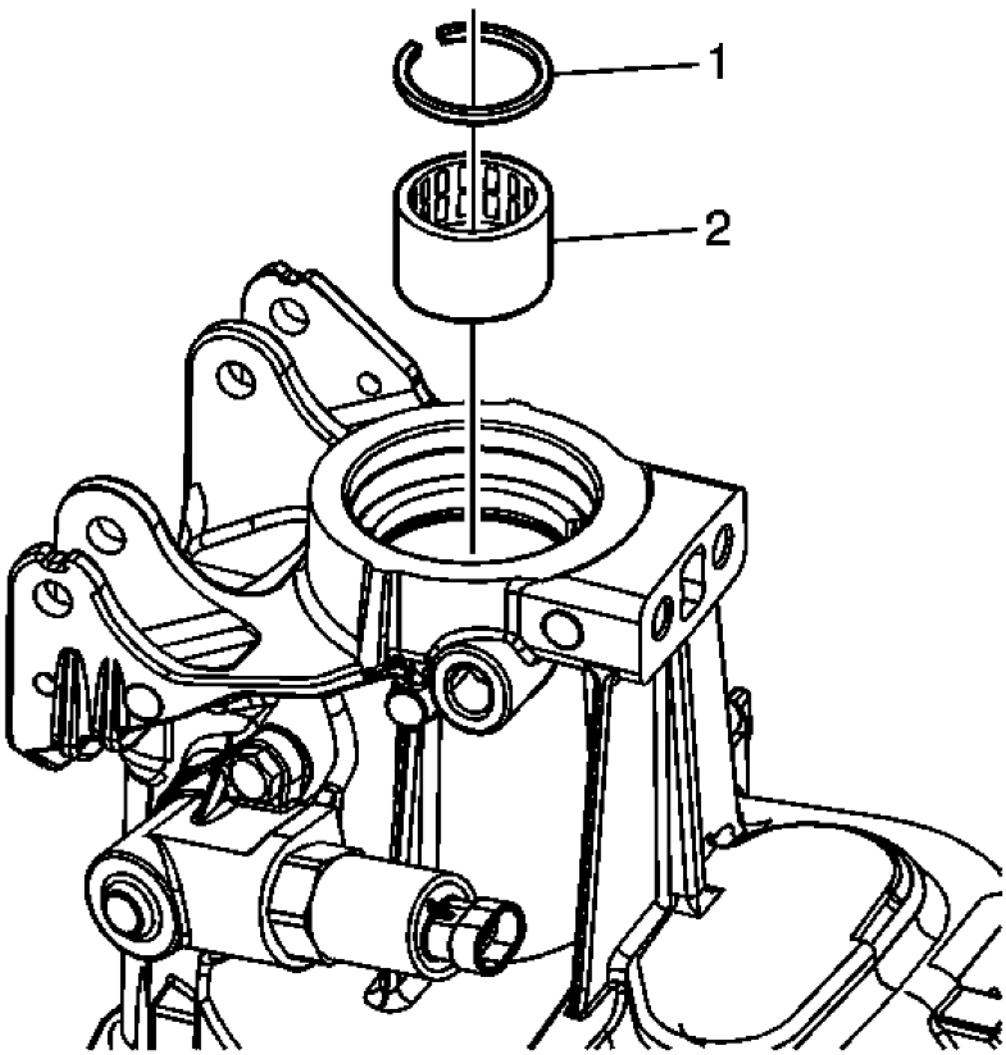

Fig. 179: Identifying Roller Bearing & Snap Ring
Courtesy of GENERAL MOTORS CORP.

12. Remove the snap ring (1) and the roller bearing (2).

cardiagn.com

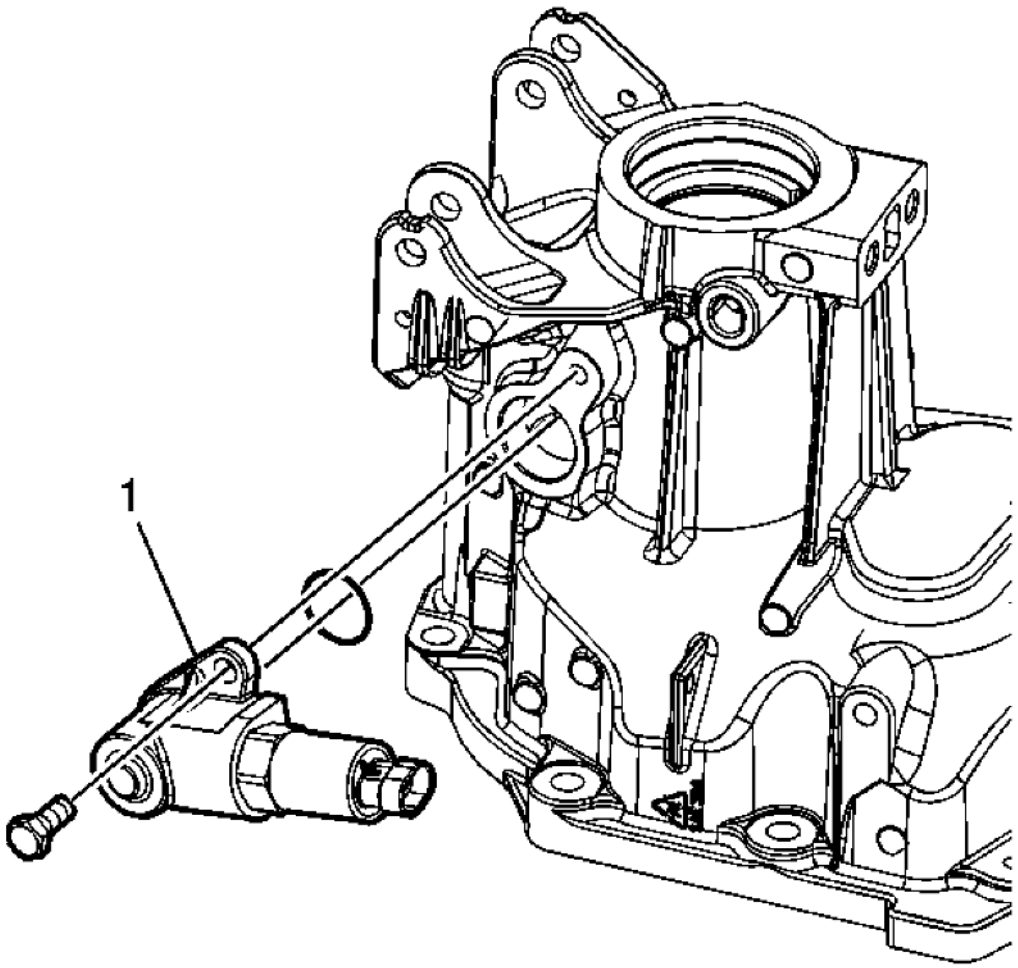

Fig. 180: Identifying Reverse Lockout Assembly
Courtesy of GENERAL MOTORS CORP.

13. Remove the mounting bolt, the reverse lockout assembly (1) and the O-ring.

cardiagn.com

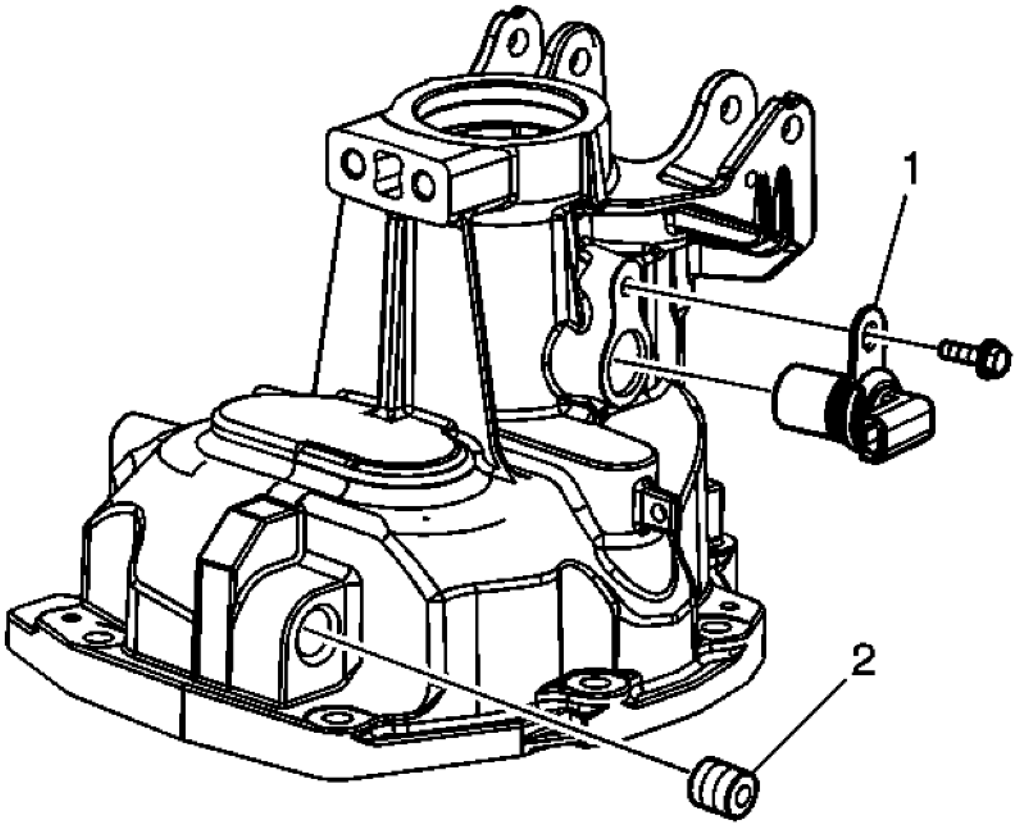

Fig. 181: Identifying Transmission Case Drain Plug & Vehicle Speed Sensor
Courtesy of GENERAL MOTORS CORP.

14. Remove the bolt and the vehicle speed sensor (1).
15. Remove the plug (2).

cardiagn.com

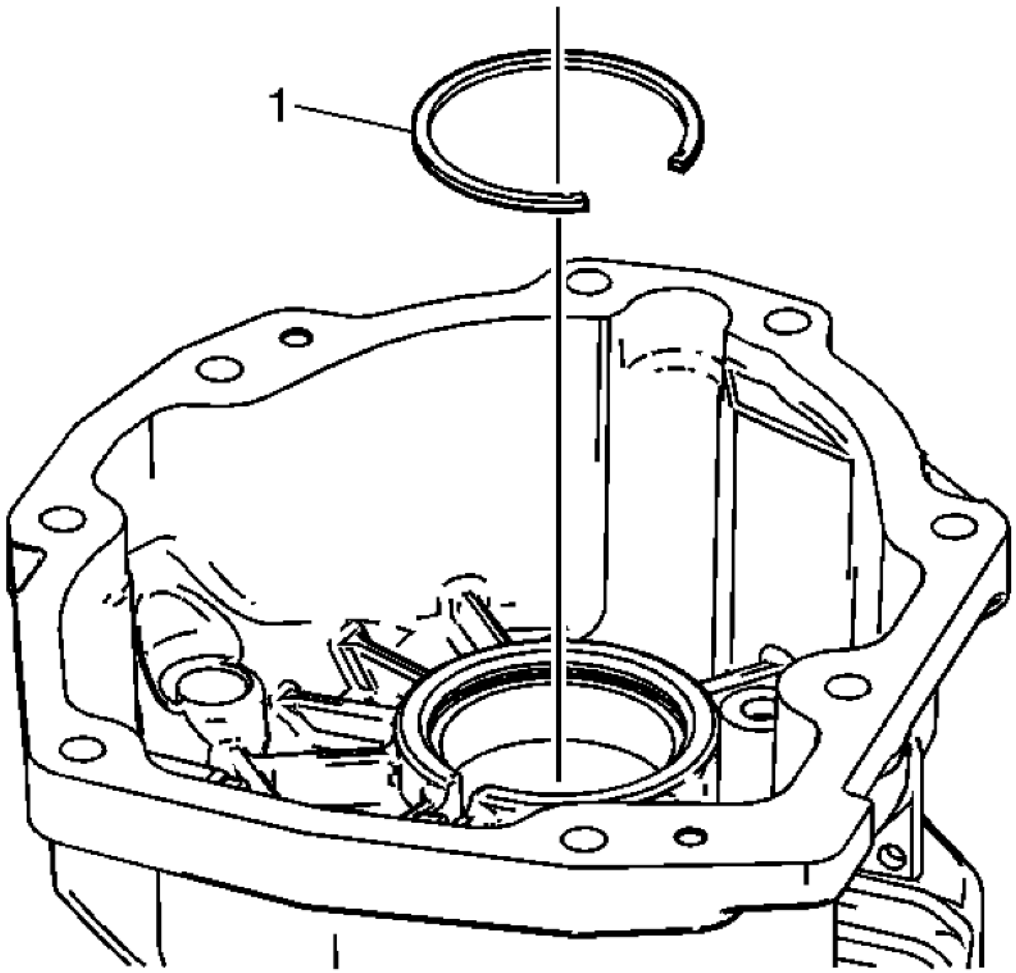

Fig. 182: Identifying Mainshaft Bearing Race Retainer Ring
Courtesy of GENERAL MOTORS CORP.

16. Remove the mainshaft bearing race retainer ring (1).

cardiagn.com

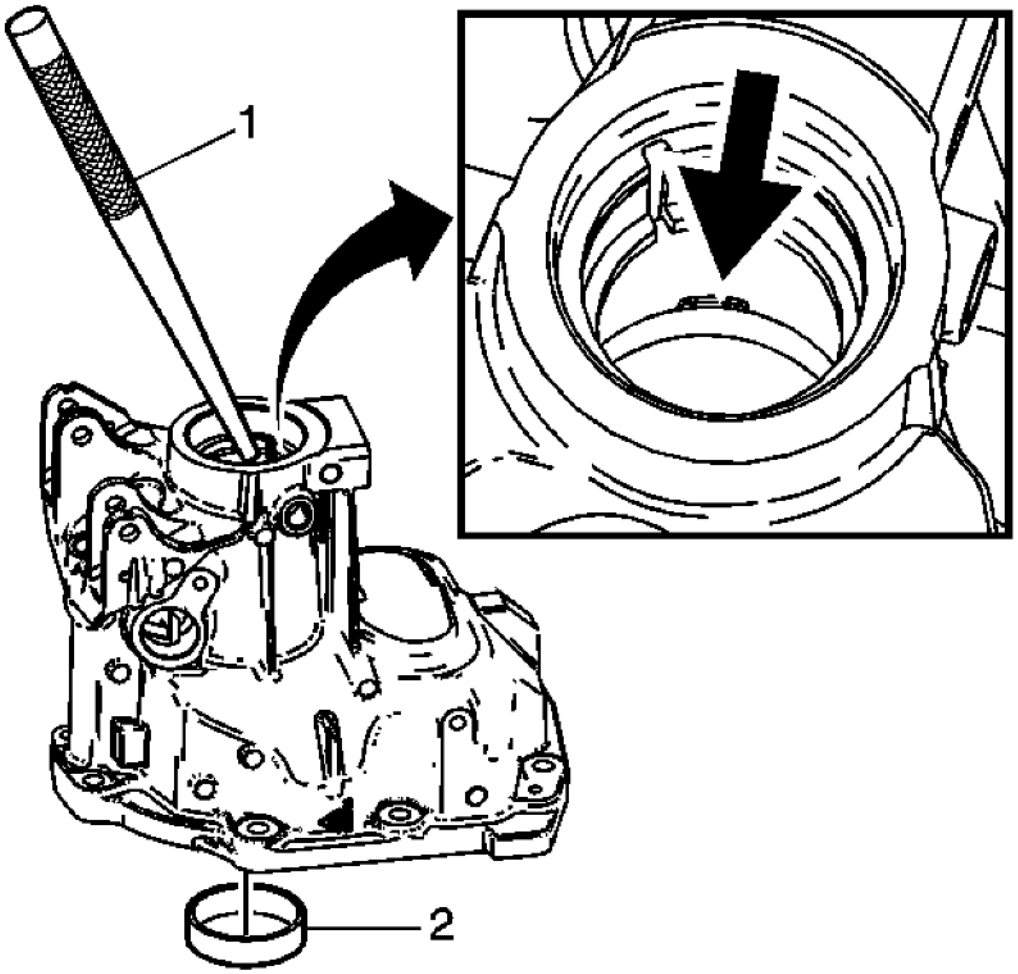

Fig. 183: Removing Mainshaft Bearing Race
Courtesy of GENERAL MOTORS CORP.

NOTE: Do not replace the bearing race unless inspection shows bearing race damage.

17. Place the extension housing on a flat work surface. Locate the oil clearance gap between the housing and the main shaft bearing race.
18. Insert a brass drift (1) through the mainshaft opening of the extension housing, into the oil clearance gap. Using a mallet, tap down on the drift to remove the mainshaft bearing race (2).

cardiagn.com

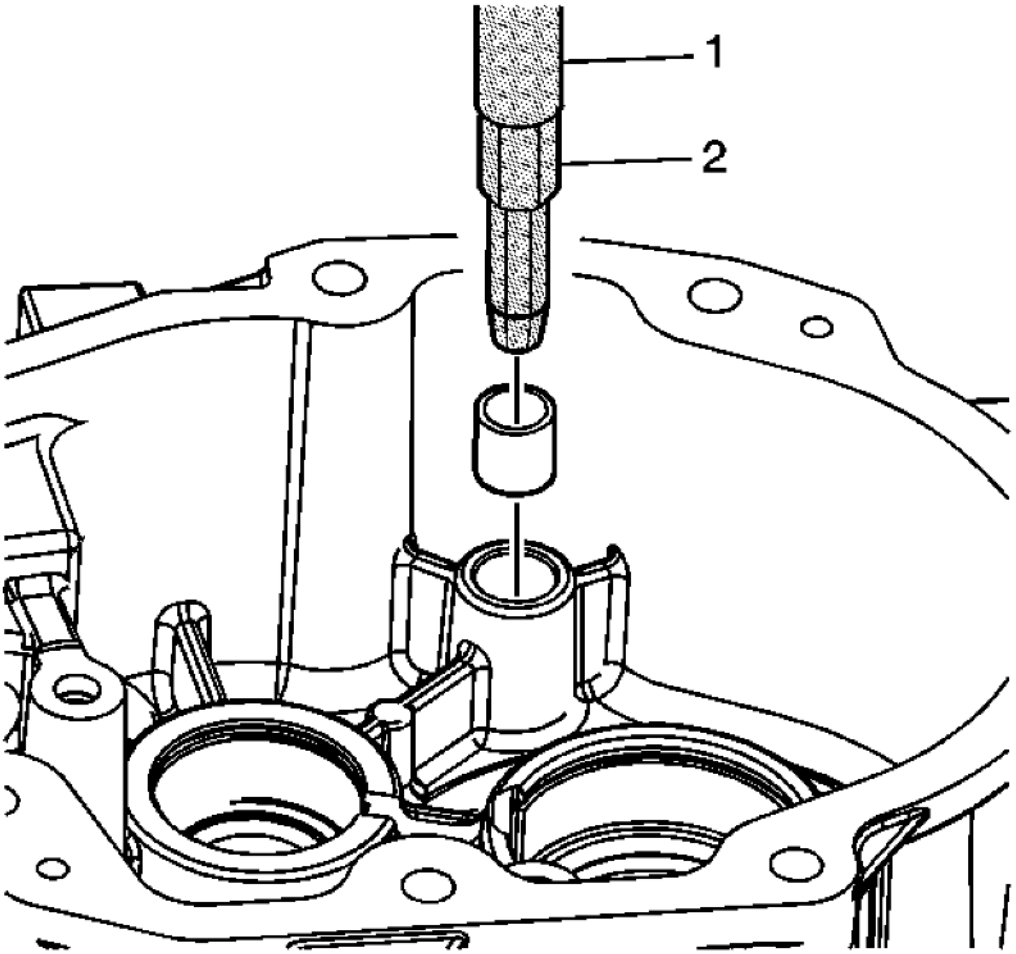

Fig. 184: Removing Reverse Rail Bushing
Courtesy of GENERAL MOTORS CORP.

19. Remove the reverse rail bushing using the **J 36190:** handle (1) and **J 39439-2:** installer (2).

cardiagn.com

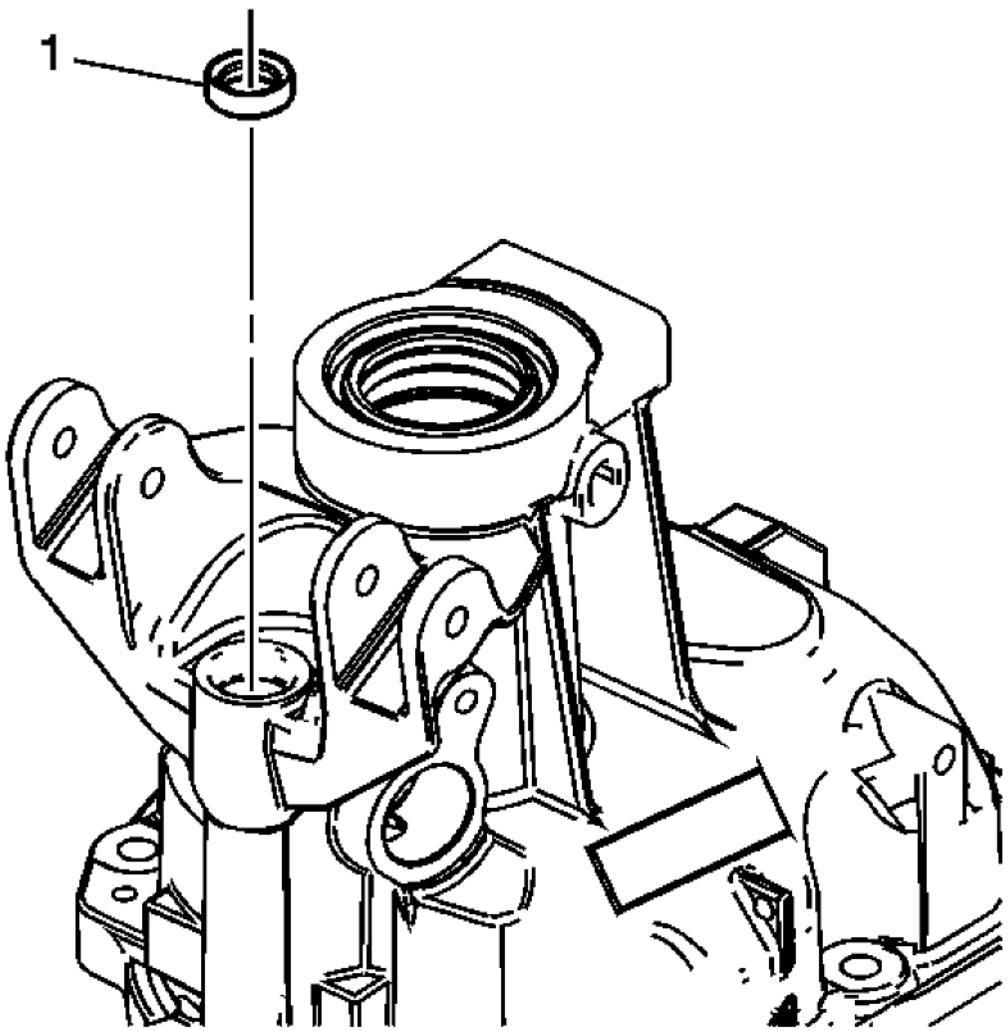

Fig. 185: Identifying Rear Housing Shift Rail Seal
Courtesy of GENERAL MOTORS CORP.

20. Remove the rear housing shift rail seal (1).

cardiagn.com

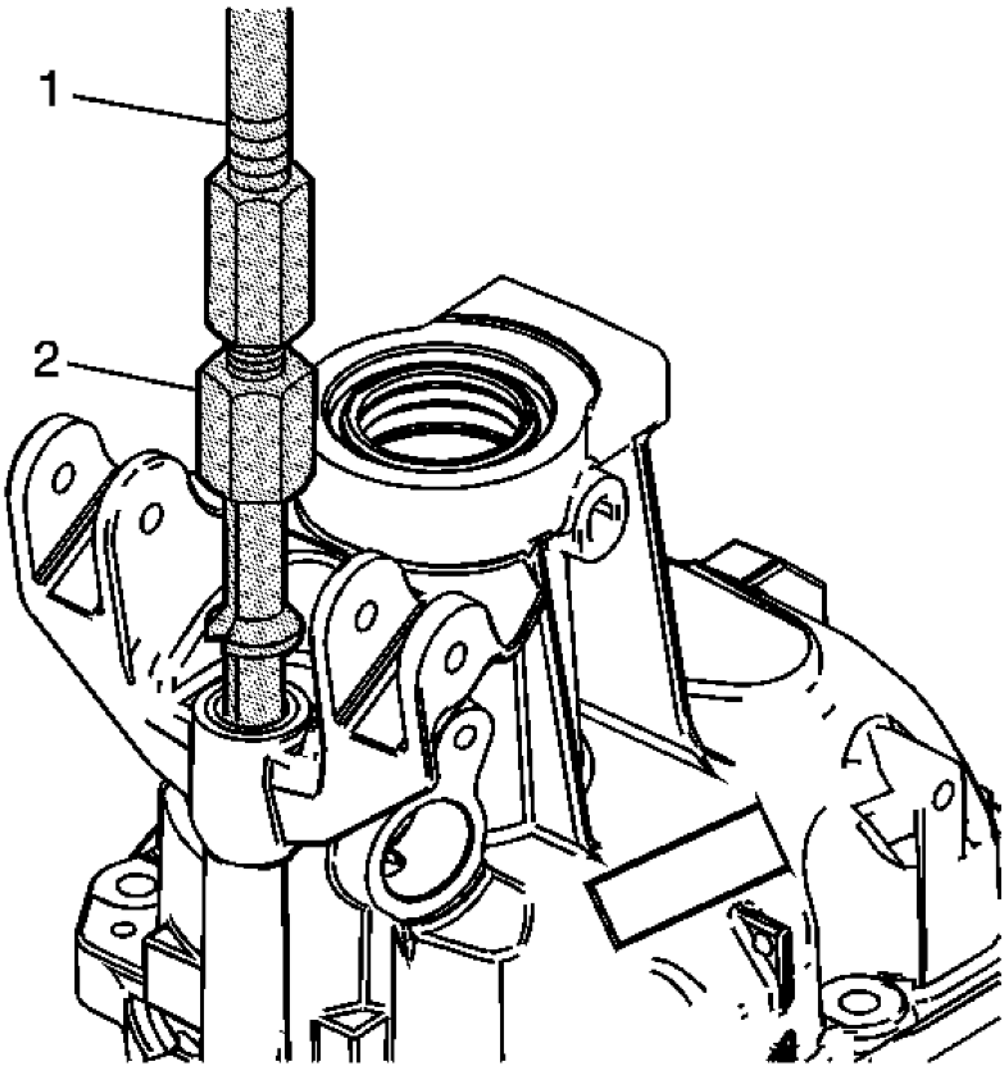

Fig. 186: Removing Shift Rail Bearing
Courtesy of GENERAL MOTORS CORP.

21. Remove the shift rail bearing using the **J 23907:** slide hammer (1) and **DT 49216:** remover (2).

EXTENSION CLEANING AND INSPECTION

cardiagn.com

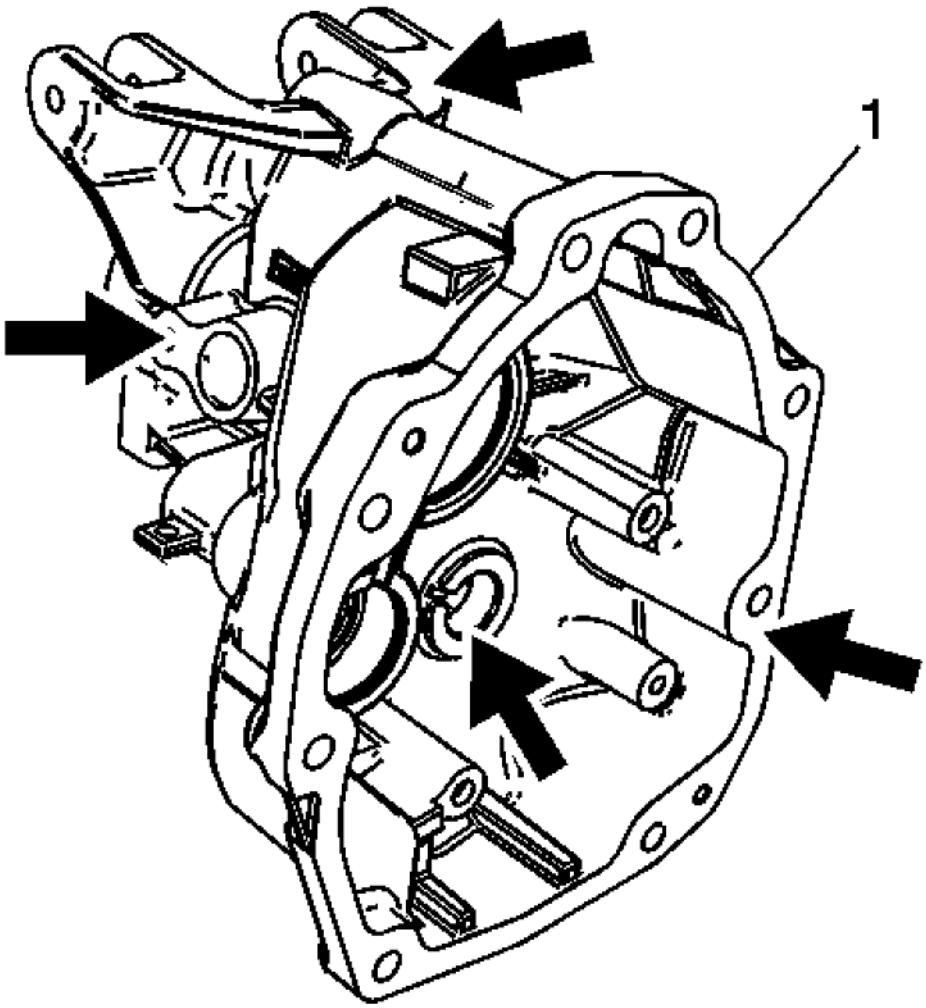

Fig. 187: Identifying Extension Housing
Courtesy of GENERAL MOTORS CORP.

WARNING: Refer to Safety Glasses and Compressed Air Warning .

1. Clean the rear extension housing (1) in a suitable solvent. Air dry the housing.
2. Inspect the extension housing for the following:
   - Cracks
   - Scratches

cardiagn.com

- Damaged threads
- Burrs
- Nicked mounting surfaces
- Damaged sealing surfaces
- Damaged front or rear bearing bores

3. Replace a cracked housing.
4. Clean up damaged threads with the correct size thread tap.
5. Inspect the machined mating surfaces for flatness. Check the mating surfaces with a straight edge.
6. Use a fine mill file to dress minor scratches or burrs.

EXTENSION ASSEMBLE

Special Tools

- **DT 48074:** Input and Output Shaft Seal Installer
- **DT 48802:** Bearing Installer
- **J 8092:** Drive Handle
- **J 21426:** Outer Output Shaft Seal Installer
- **J 36190:** Universal Driver Handle
- **J 39437:** Bushing Installer
- **J 39439-3:** Rear Case Bushing Installer
- **J 39546:** Bearing Race Installer
- **J 44384:** Shifter Fork Bearing Installer

For equivalent regional tools, refer to **Special Tools**.

cardiagn.com

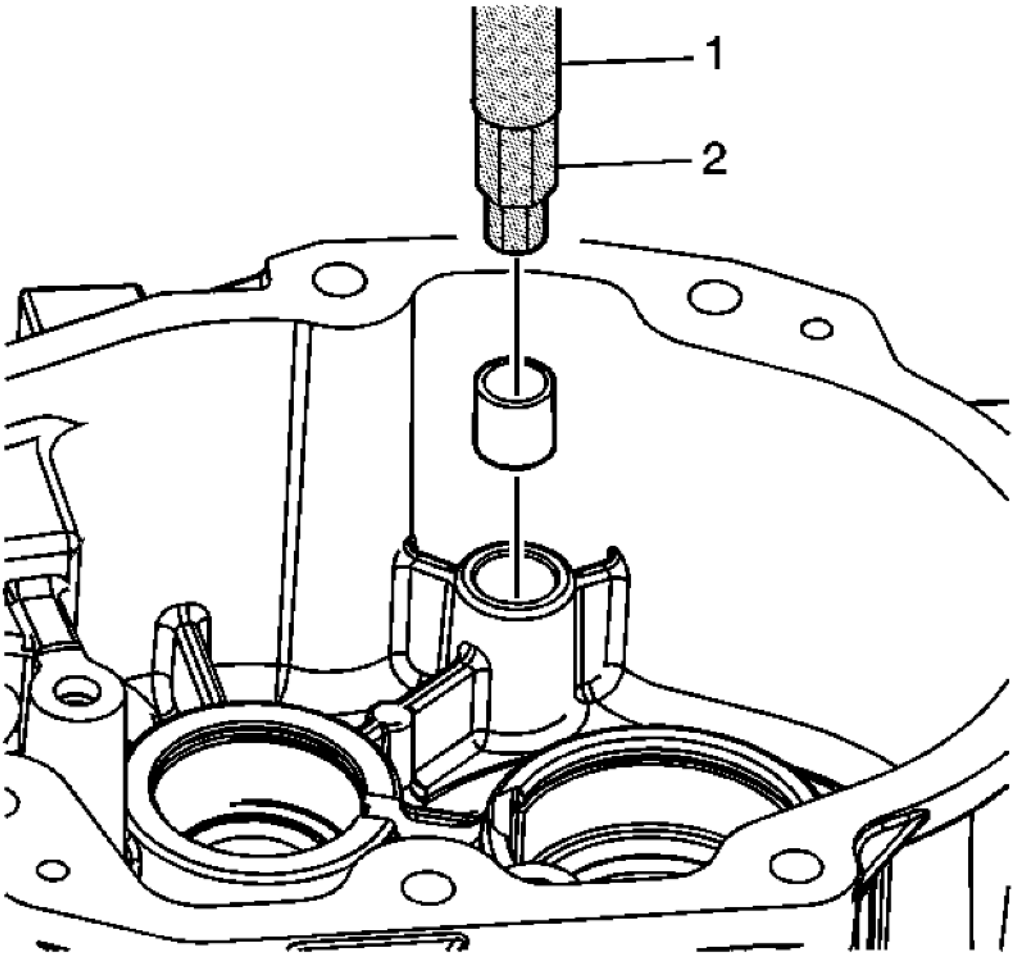

Fig. 188: Installing Reverse Rail Bushing
Courtesy of GENERAL MOTORS CORP.

1. Using **J 36190:** handle (1) and **J 39439-3:** installer (2), install the reverse rail bushing.

cardiagn.com

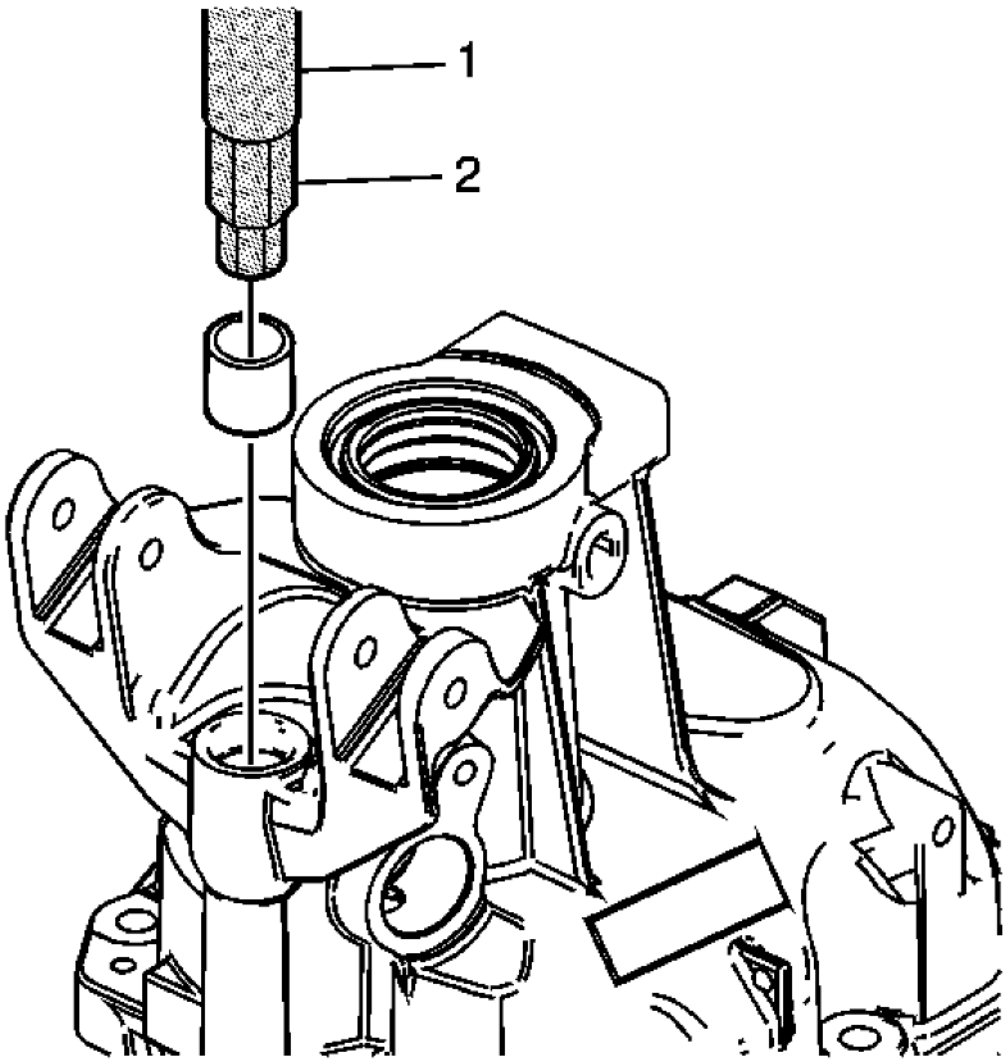

Fig. 189: Installing Shift Rail Bearing
Courtesy of GENERAL MOTORS CORP.

2. Install the shift rail bearing using the **J 36190:** handle (1) and the **J 44384:** installer (2).

cardiagn.com

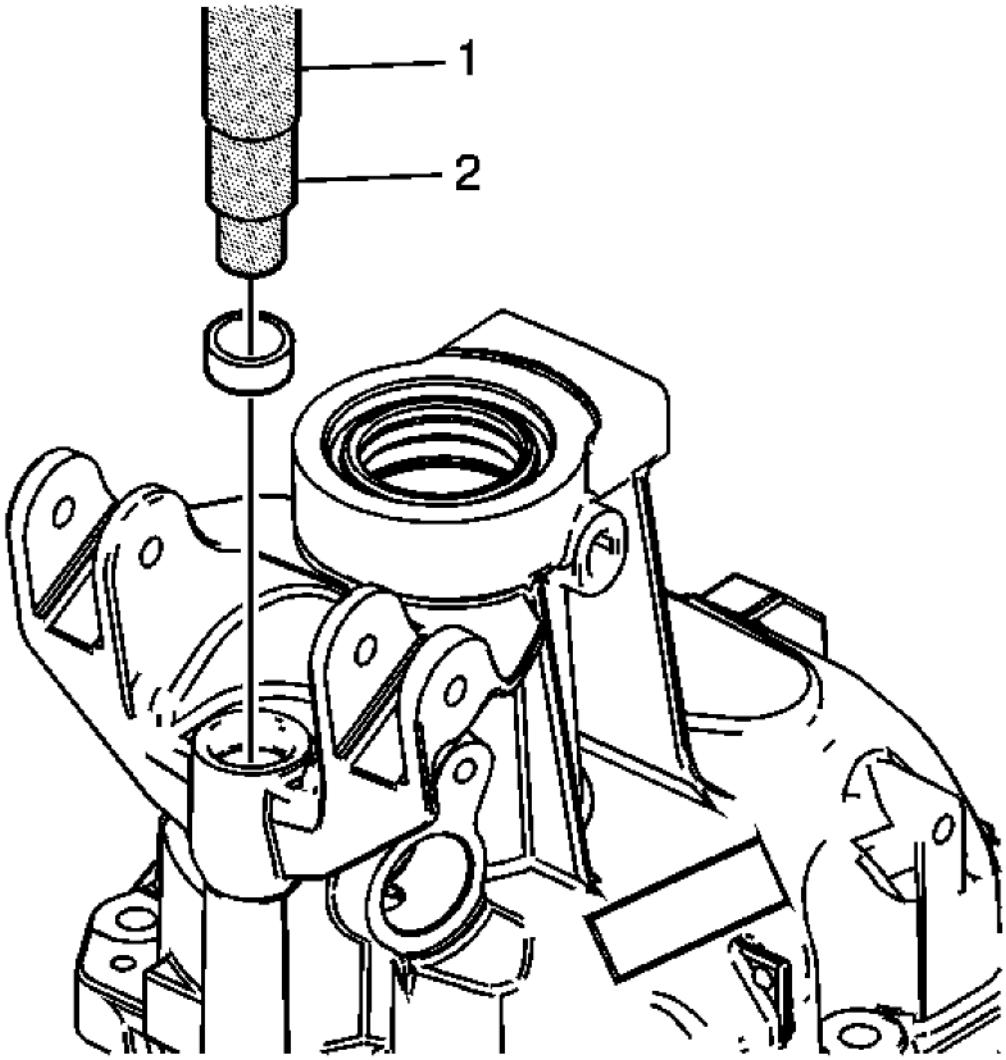

Fig. 190: Installing Seal
Courtesy of GENERAL MOTORS CORP.

3. Install the seal using the **J 36190:** handle (1) and **J 44384:** installer (2).

cardiagn.com

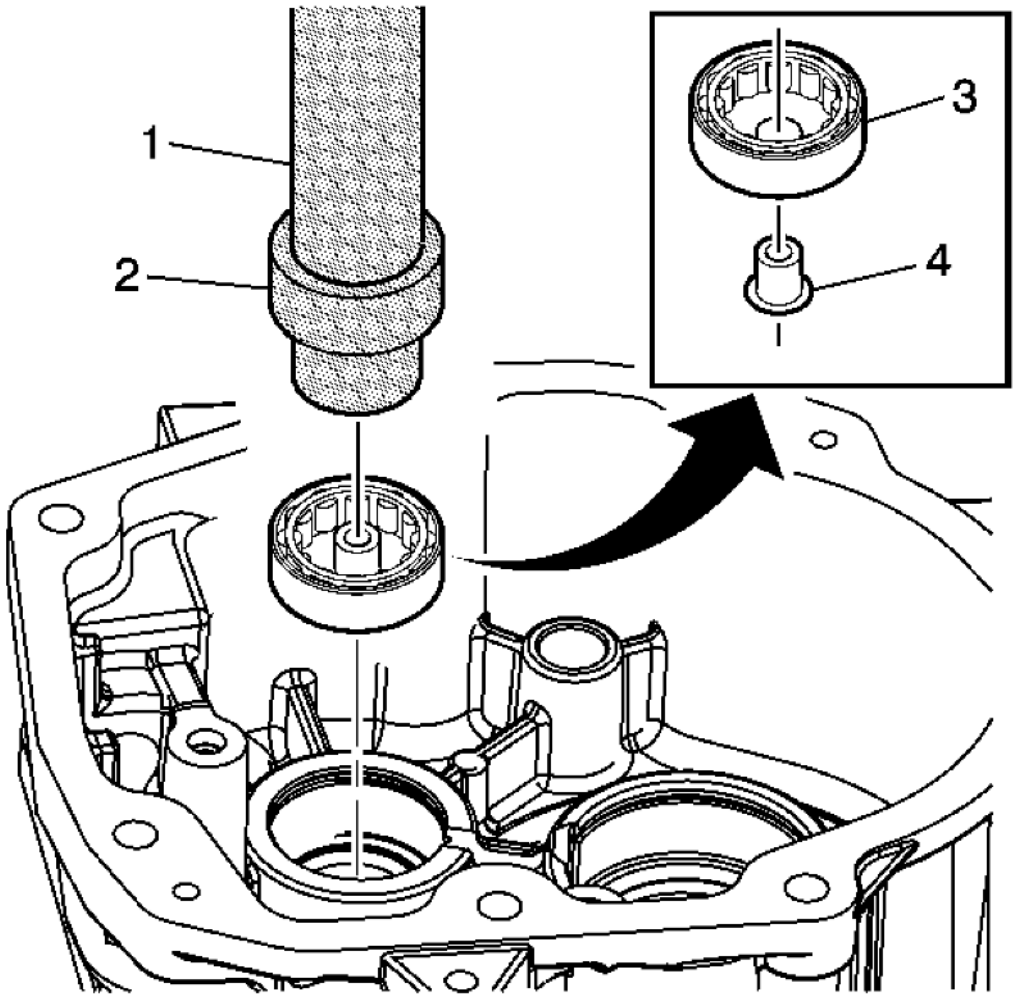

Fig. 191: Installing Countershaft Bearing
Courtesy of GENERAL MOTORS CORP.

4. Snap the oil funnel into a NEW extension housing countershaft bearing assembly.
5. Using the **J 36190:** handle (1) and **DT 48802:** installer (2), install the countershaft bearing.

cardiagn.com

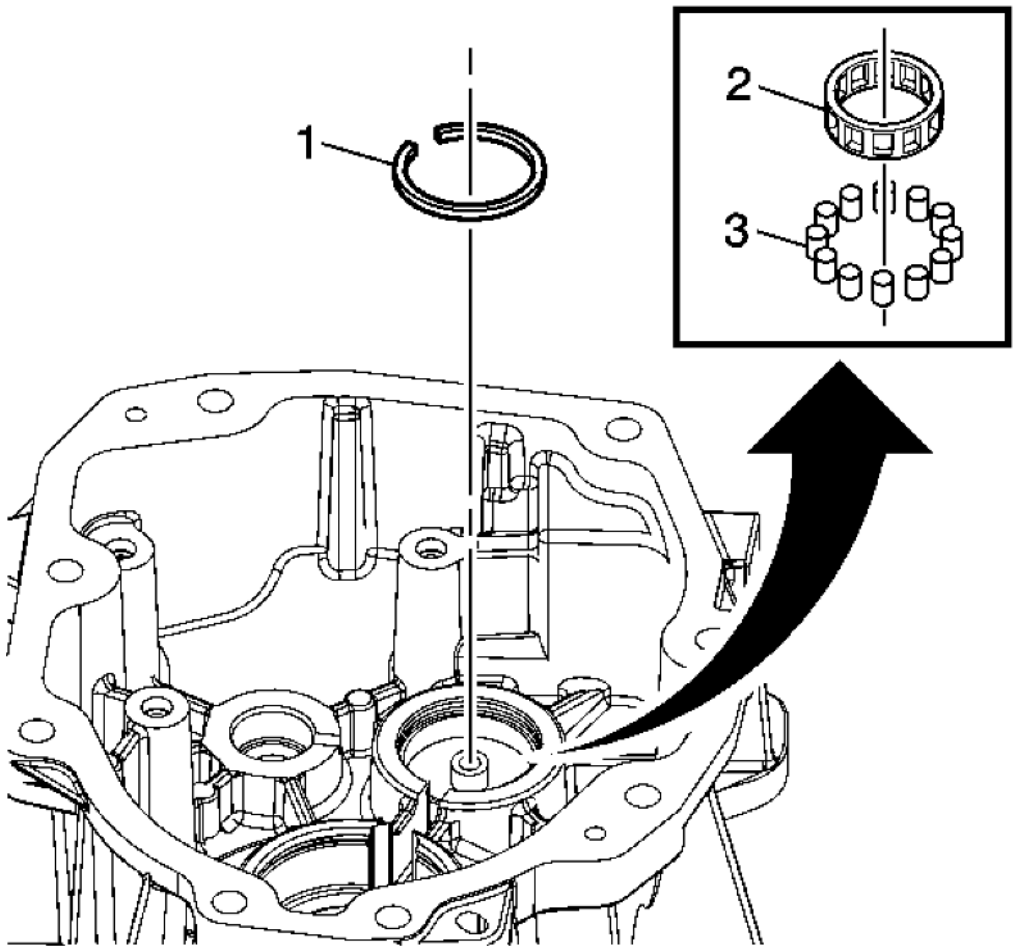

Fig. 192: View Of Countershaft Rear Bearing Retainer
Courtesy of GENERAL MOTORS CORP.

NOTE: The plastic roller bearing cage (2) and bearings (3) are part of the countershaft bearing assembly.

6. Install the countershaft rear bearing retainer (1).

cardiagn.com

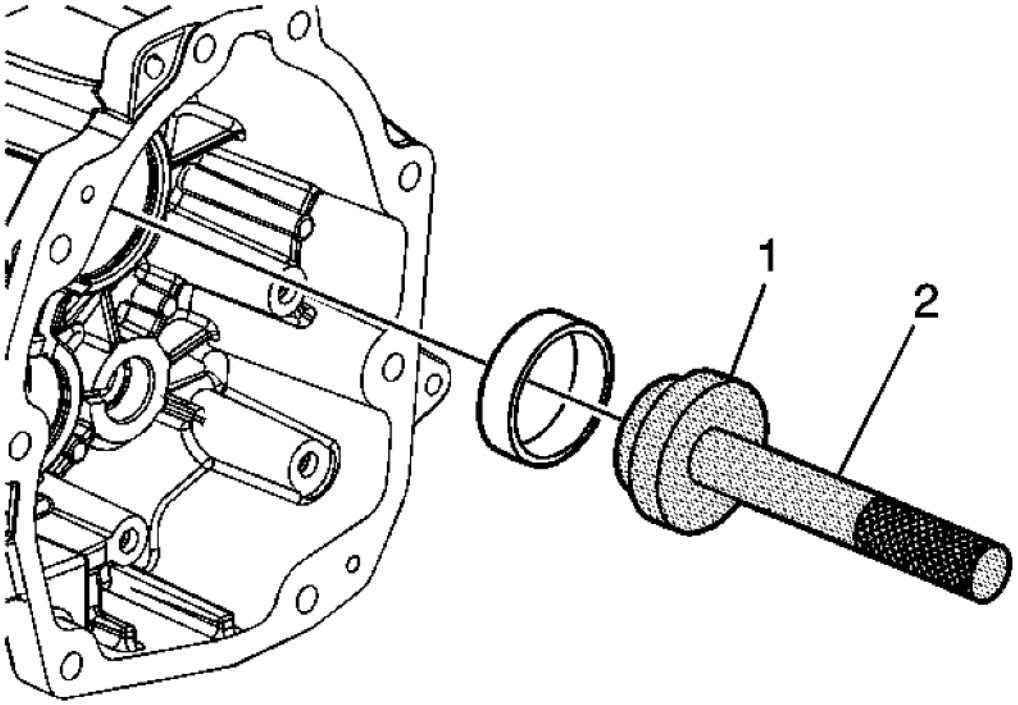

Fig. 193: Installing Mainshaft Bearing Race
Courtesy of GENERAL MOTORS CORP.

7. Install the mainshaft bearing race, using the **J 39546:** installer (1) and the **J 8092:** drive handle (2).

cardiagn.com

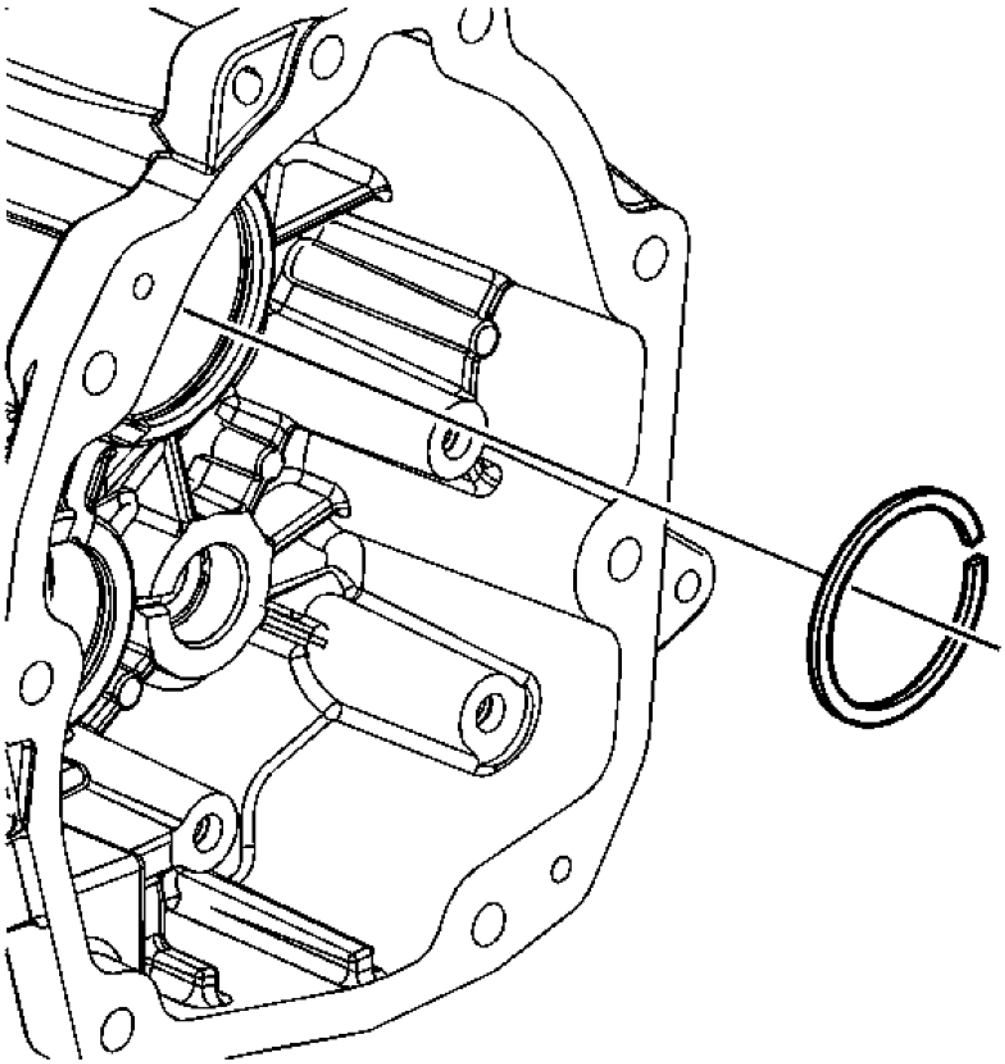

Fig. 194: View Of Mainshaft Bearing Race Retainer Ring
Courtesy of GENERAL MOTORS CORP.

8. Install the mainshaft bearing race retainer ring.

cardiagn.com

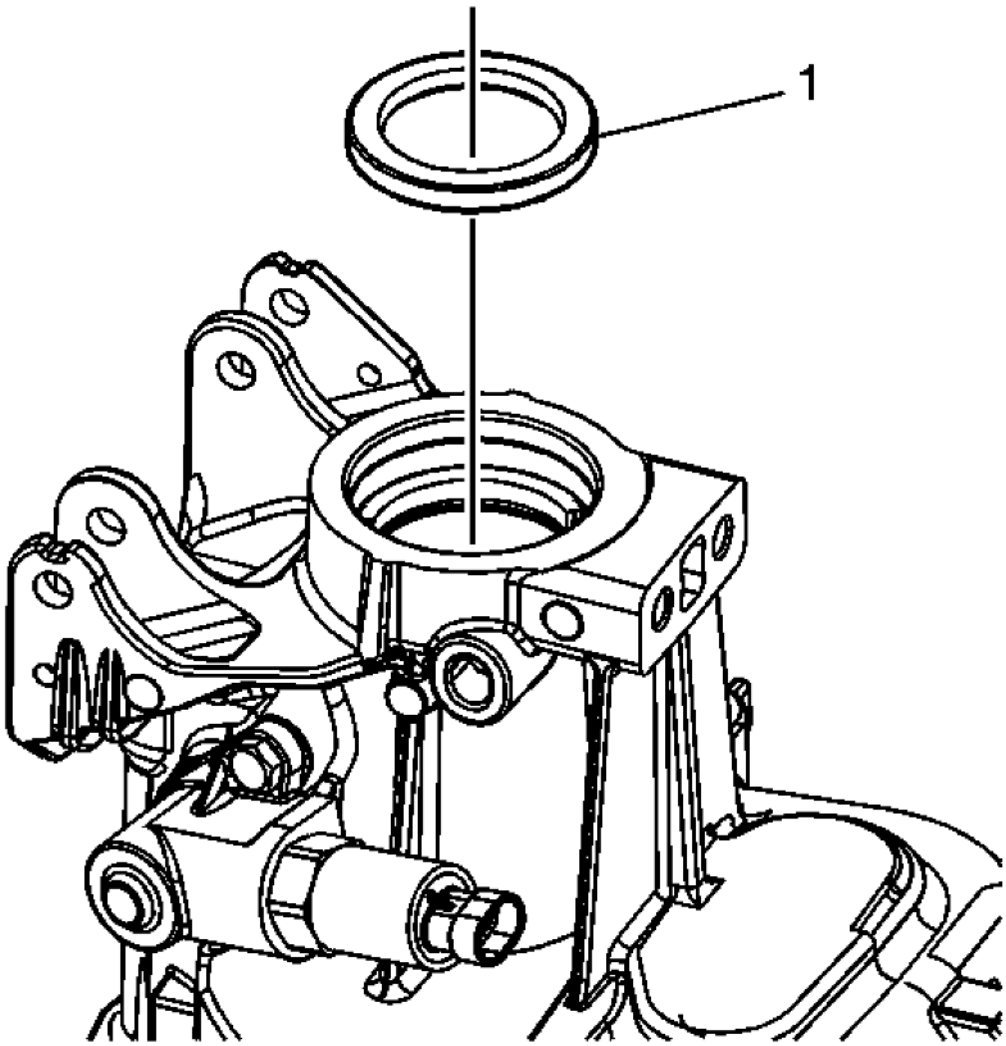

Fig. 195: Identifying Output Shaft Seal
Courtesy of GENERAL MOTORS CORP.

9. Install the NEW output shaft seal (1) using the **J 8092:** drive handle and the **DT 48074:** input/output Shaft installer.

cardiagn.com

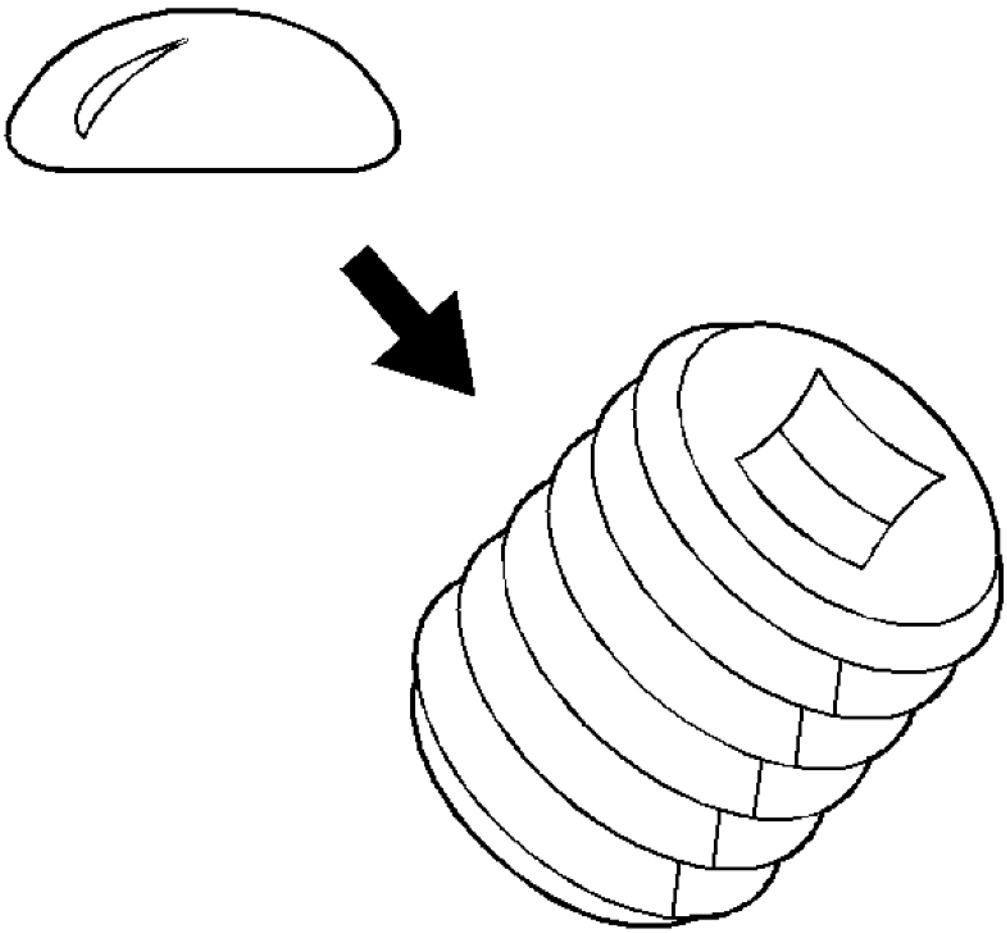

Fig. 196: Applying Sealant To Plug Threads
Courtesy of GENERAL MOTORS CORP.

10. Apply sealer GM P/N 12346004 (Canadian P/N 10953480) or equivalent to the transmission case drain plug.

cardiagn.com

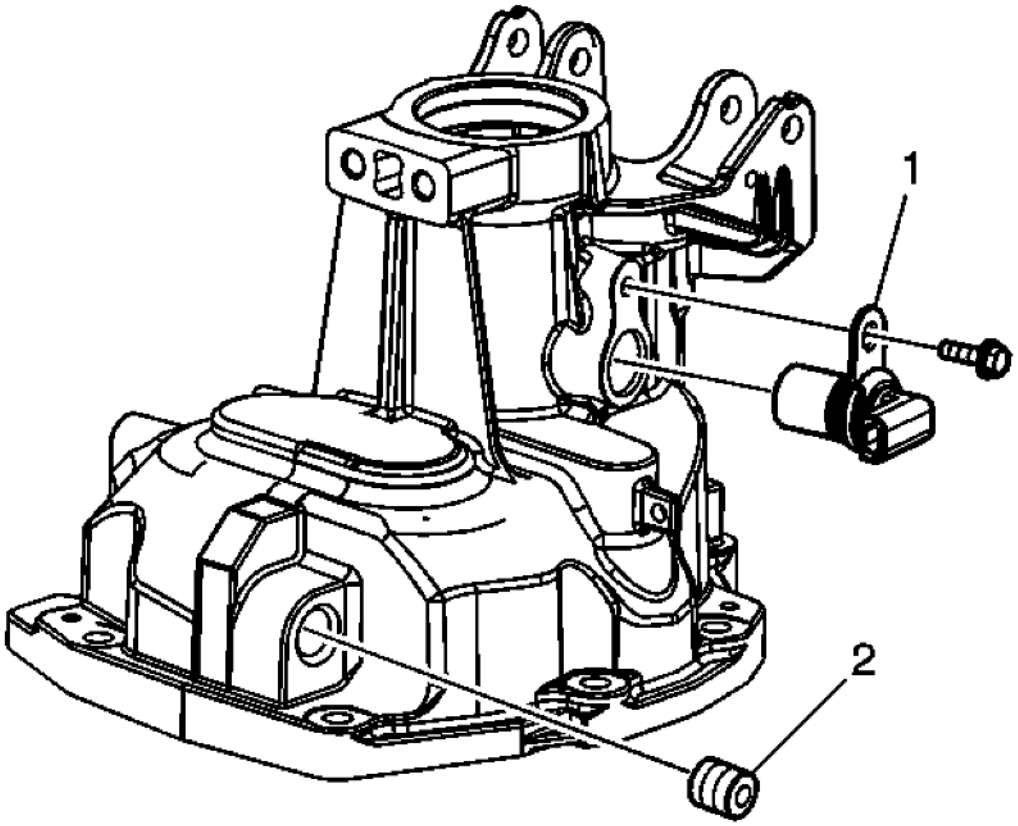

Fig. 197: Identifying Transmission Case Drain Plug & Vehicle Speed Sensor
Courtesy of GENERAL MOTORS CORP.

CAUTION: Refer to Fastener Caution .

11. Install the transmission case drain plug (2) and tighten to 27 N.m (20 Ib ft).
12. Install the vehicle speed sensor (1).
13. Install the vehicle speed sensor bolt and tighten to 11 N.m (96 Ib in).

cardiagn.com

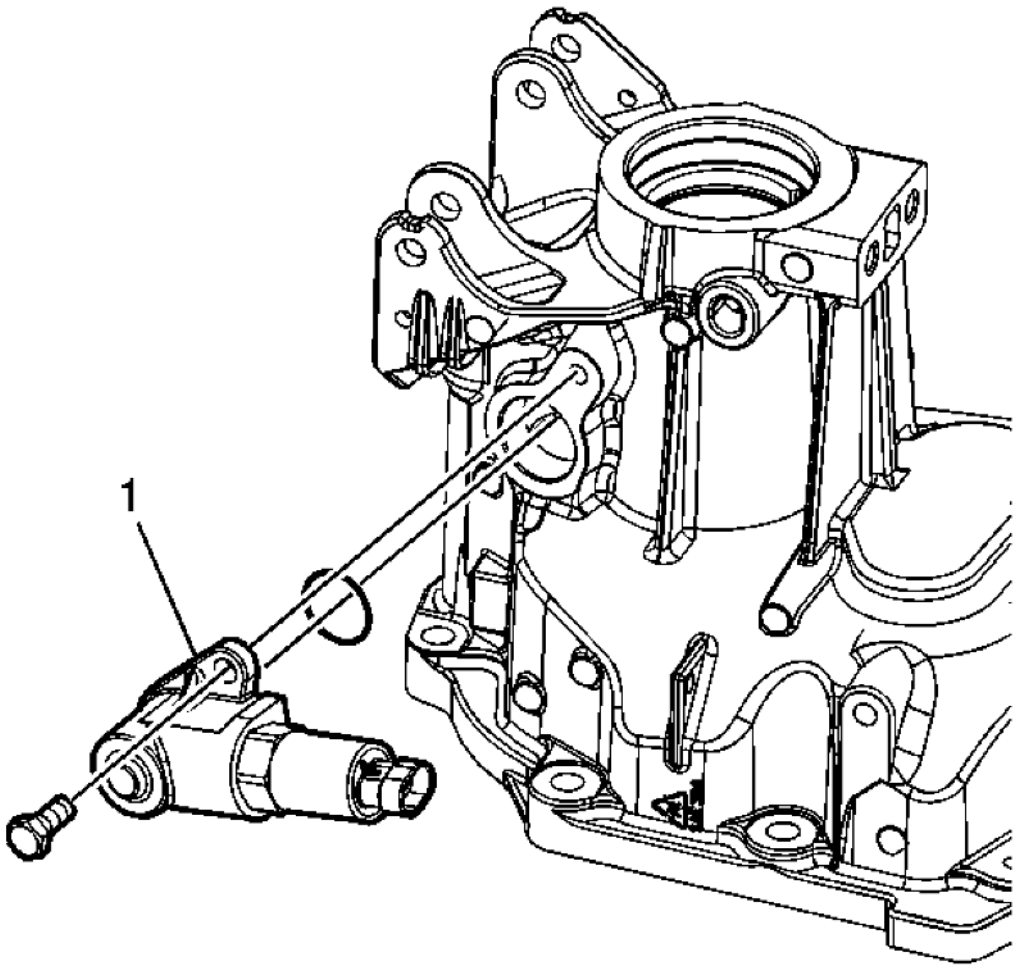

Fig. 198: Identifying Reverse Lockout Assembly
Courtesy of GENERAL MOTORS CORP.

14. Install a NEW O-ring onto the reverse lockout assembly (1).
15. Install the reverse lockout assembly into the extension housing.
16. Install the reverse lockout assembly bolt and tighten to 18 N.m (13 lb ft).

cardiagn.com

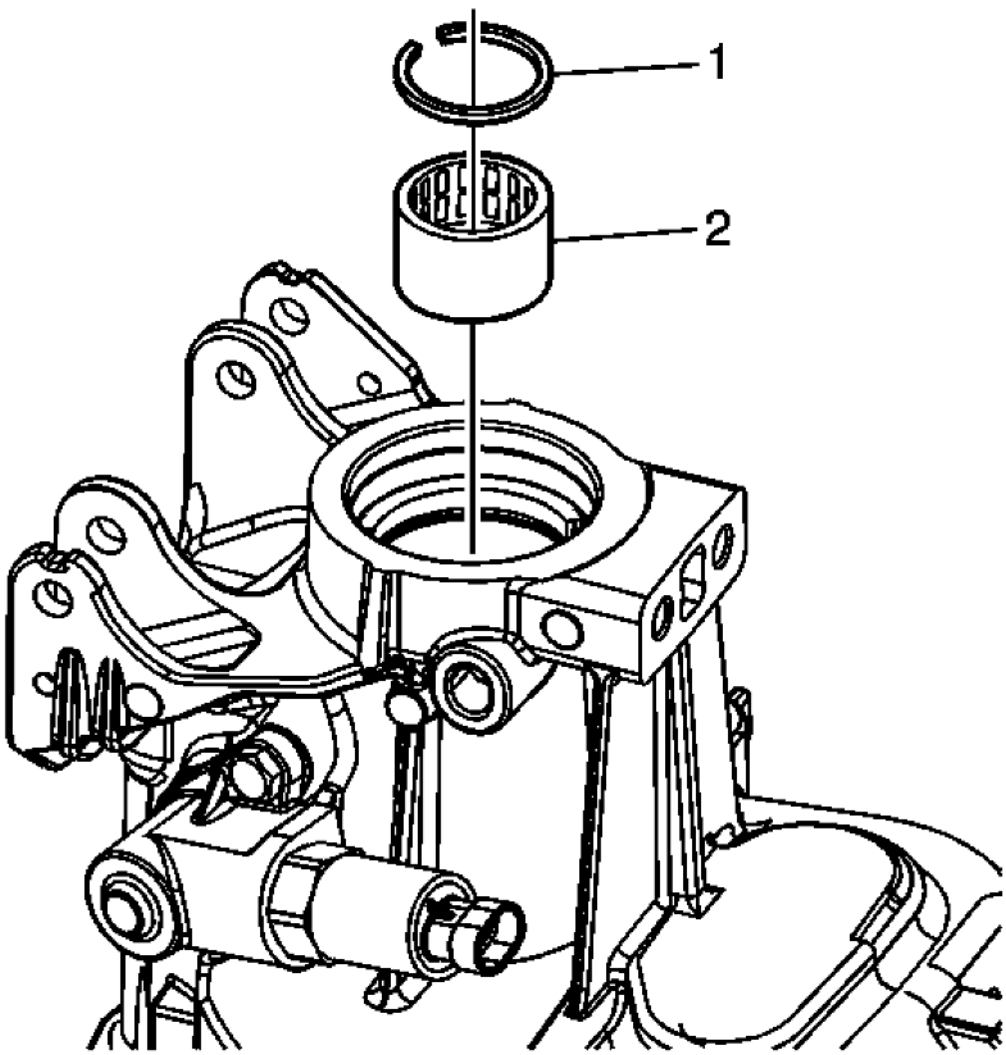

Fig. 199: Identifying Roller Bearing & Snap Ring
Courtesy of GENERAL MOTORS CORP.

17. Install the roller bearing (2).
18. Install the snap ring (1).

cardiagn.com

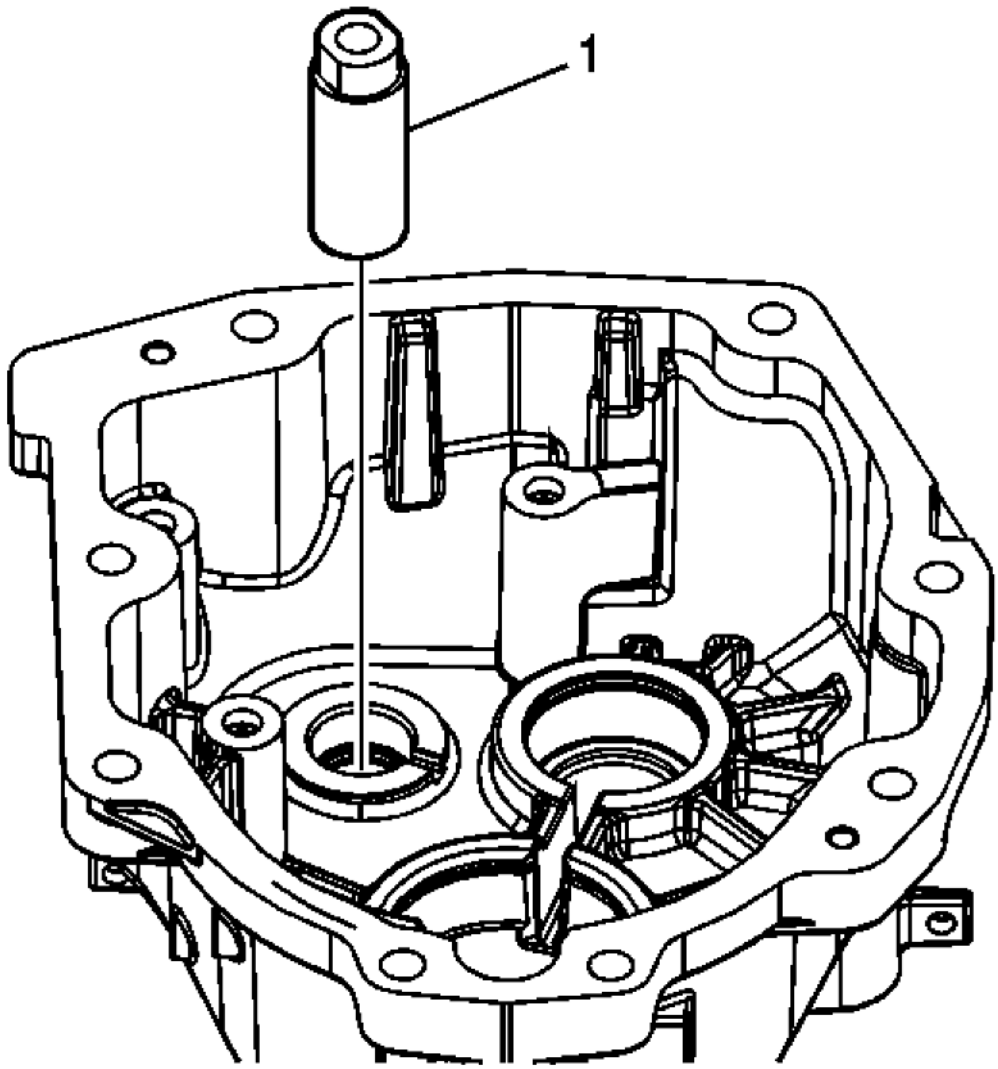

Fig. 200: Identifying Reverse Idler Gear Shaft
Courtesy of GENERAL MOTORS CORP.

19. Install the reverse idler gear shaft (1).

cardiagn.com

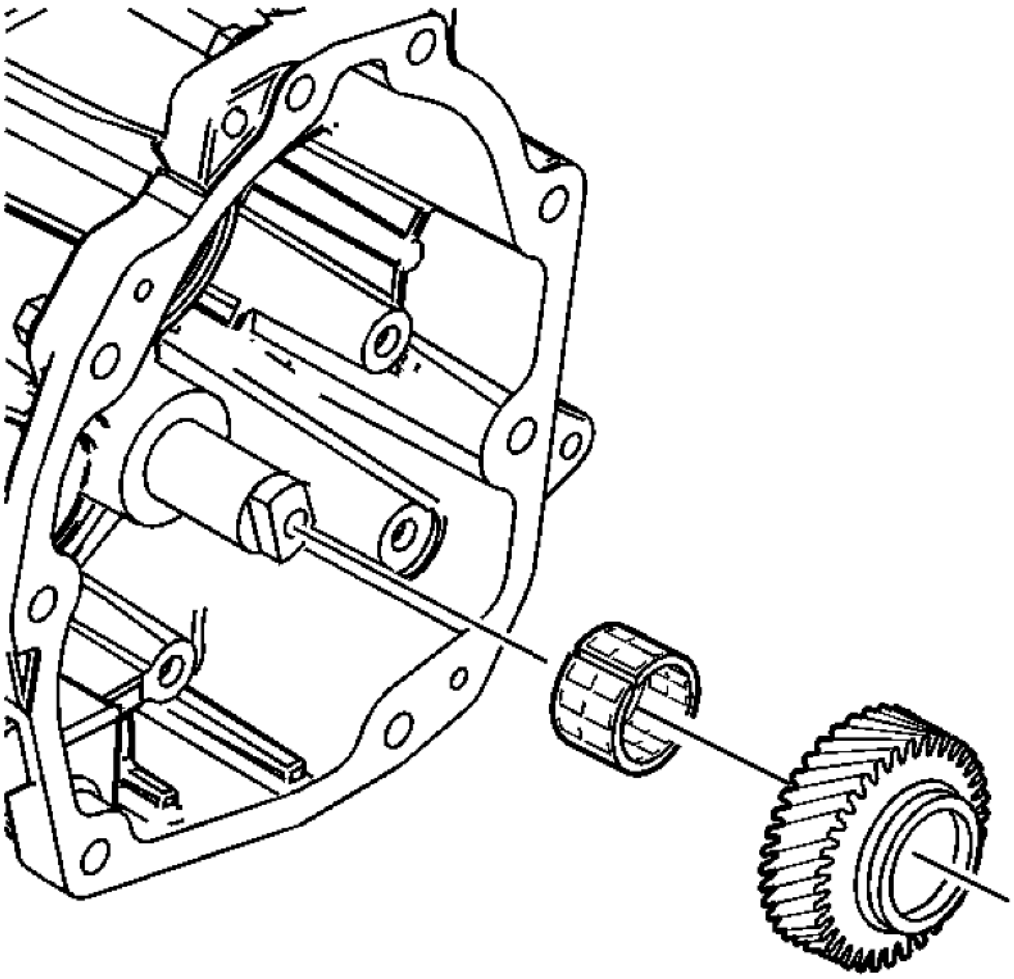

Fig. 201: View Of Reverse Idler Gear & Roller Bearing
Courtesy of GENERAL MOTORS CORP.

20. Install the roller bearing and reverse idler gear.

cardiagn.com

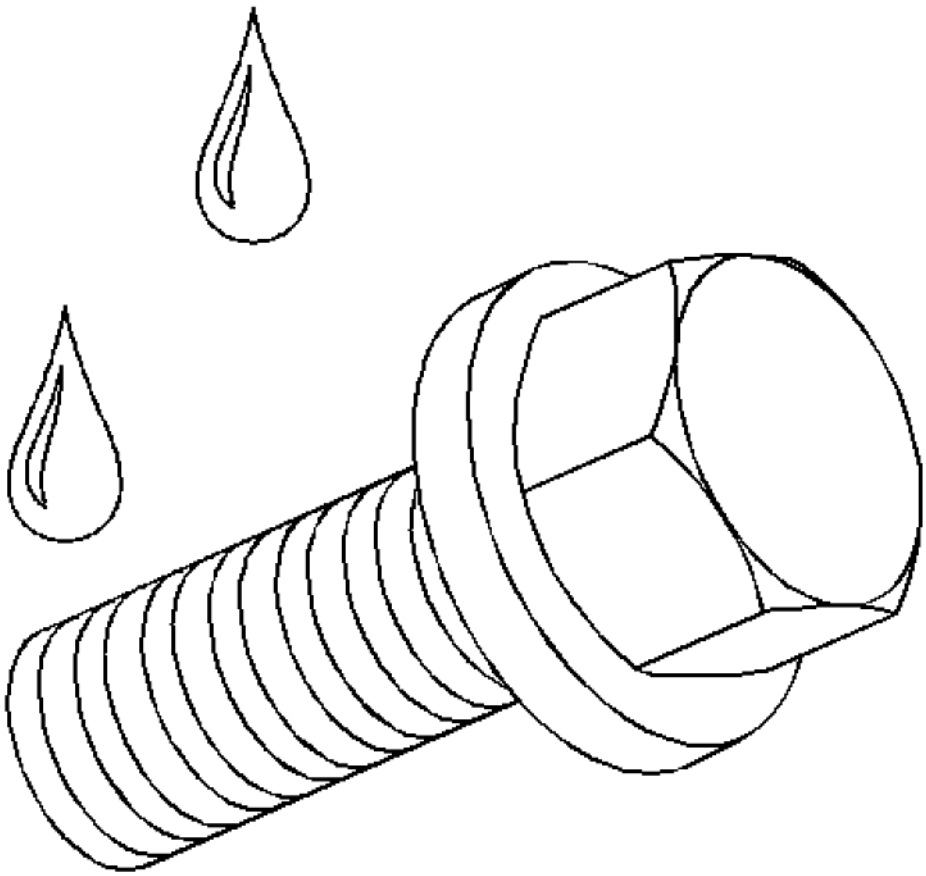

Fig. 202: Applying Thread Sealer To Bolt Threads
Courtesy of GENERAL MOTORS CORP.

21. Apply GM P/N 12345382, (Canadian P/N 10953489) or equivalent to the reverse idler shaft bracket bolt threads.

cardiagn.com

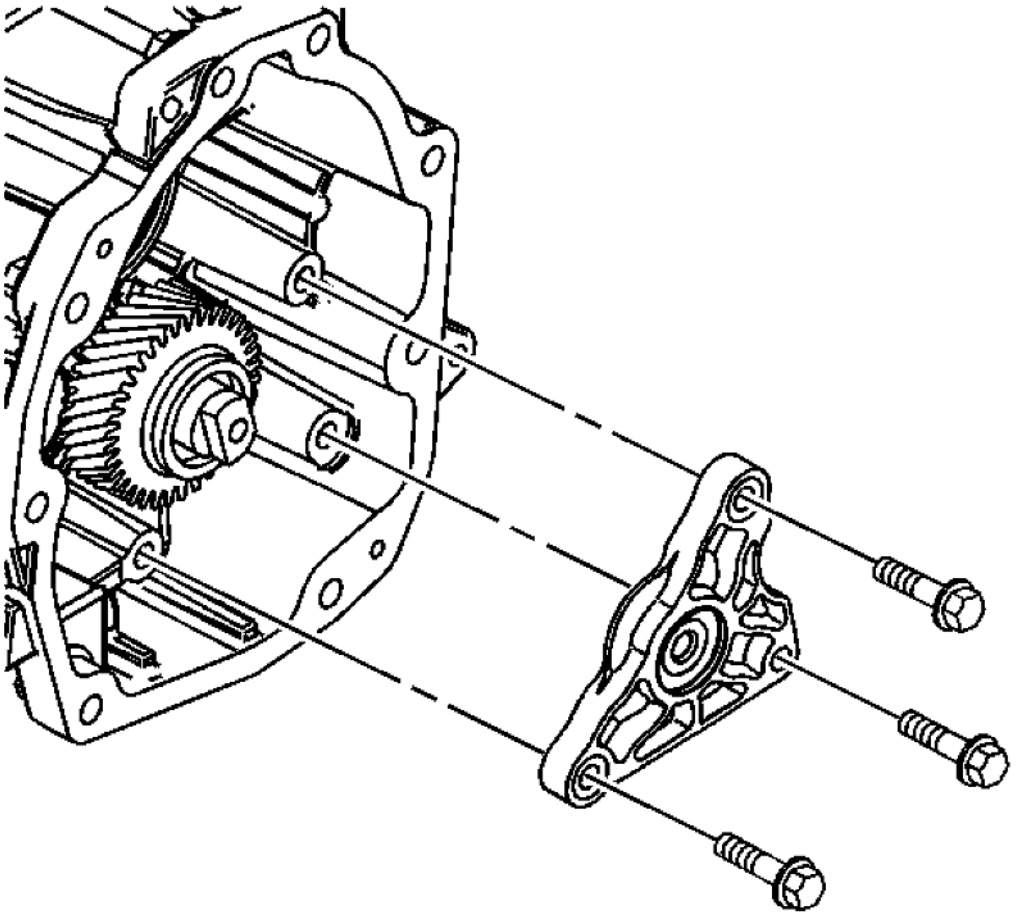

Fig. 203: View Of Reverse Idler Shaft Bracket & Bolts
Courtesy of GENERAL MOTORS CORP.

22. Install the reverse idler shaft bracket and bolts. Tighten the bolts to 25 N.m (18 lb ft).

BEARINGS AND SPACERS CLEANING AND INSPECTION

cardiagn.com

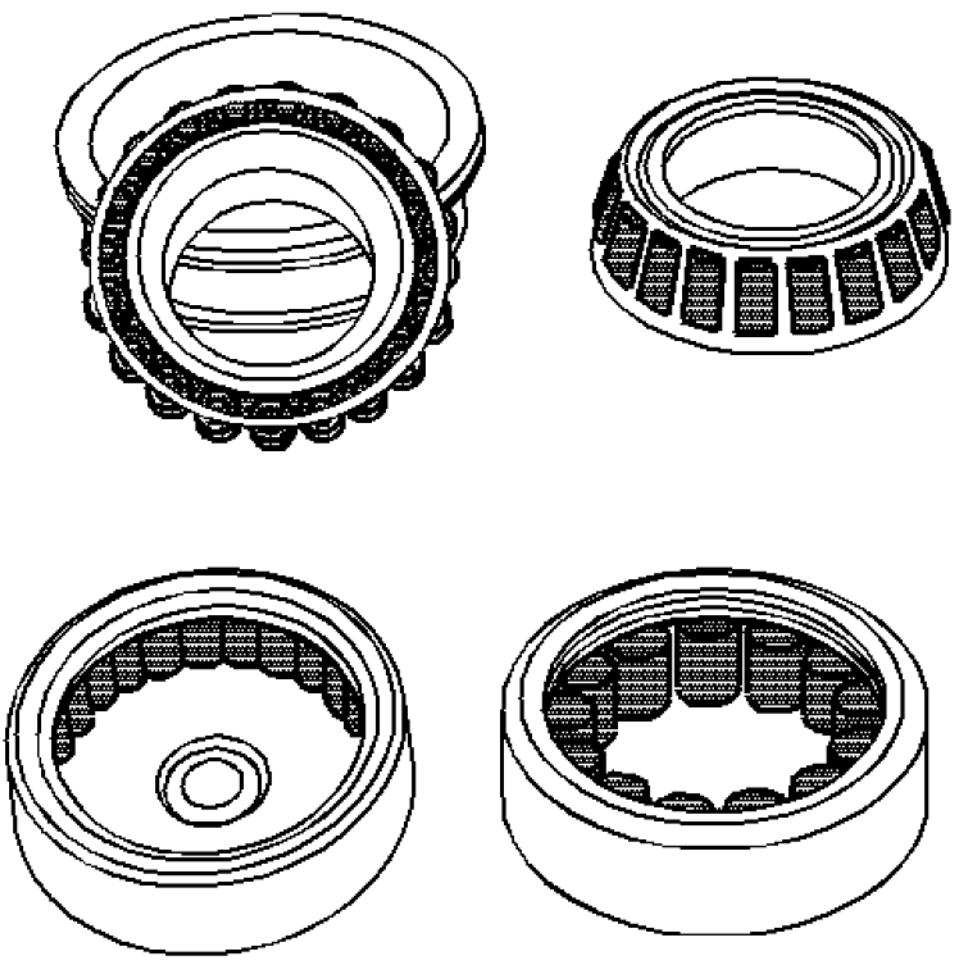

Fig. 204: View Of Bearings & Spacers
Courtesy of GENERAL MOTORS CORP.

WARNING: Wear safety glasses to avoid injury when using compressed air or any cleaning solvent. Bodily injury may occur if fumes are inhaled or if skin is exposed to chemicals.

CAUTION: Do not allow the bearings to spin. Turn them slowly by hand. Spinning the bearings may damage the race and the rollers.

1. Clean all the bearing parts in a suitable solvent. Air dry all the parts.

cardiagn.com

2. Lubricate the bearings. Refer to **Lubrication Specifications** for the proper transmission lubricant.
3. Inspect the bearings and journals for roughness and unusual wear or damage.
4. Inspect the mainshaft bearing journals for wear.
5. Inspect the mainshaft speed gear bearings for wear.
6. Inspect the main drive gear pilot bearing rollers for wear.
7. Replace parts which show signs of excessive wear.
8. Do not file surfaces which have been hardened and precision ground.
9. Replace worn or damaged bearings.
10. Replace mated bearing parts when only one part is damaged.

GEARS CLEANING AND INSPECTION

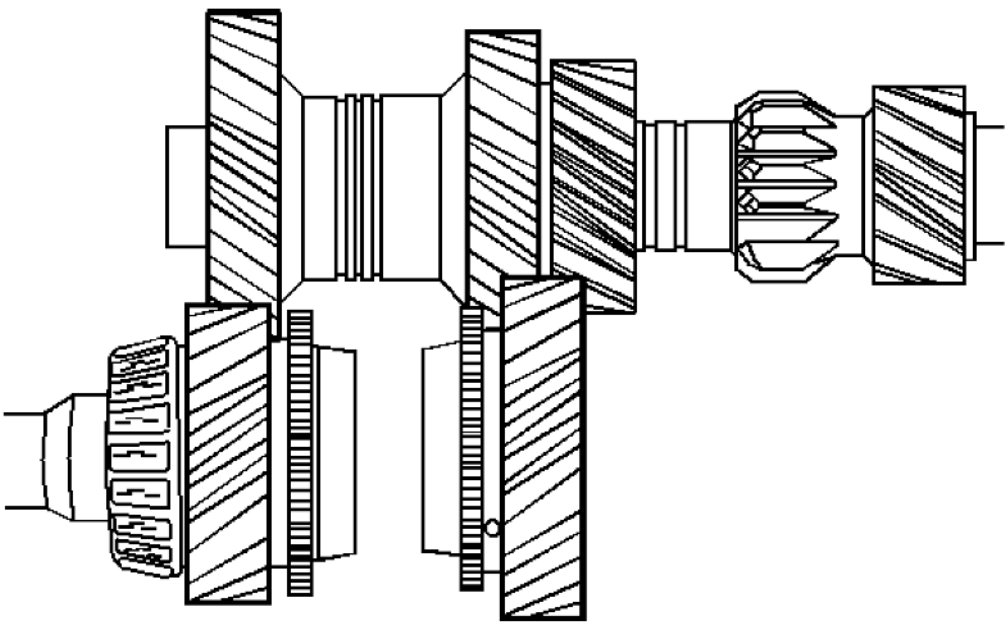

Fig. 205: View Of Gears
Courtesy of GENERAL MOTORS CORP.

WARNING: Wear safety glasses to avoid injury when using compressed air or any cleaning solvent. Bodily injury may occur if fumes are inhaled or if skin is exposed to chemicals.

1. Clean all the parts in a suitable solvent. Air dry all the parts.

cardiagn.com

2. Inspect the gear tooth surfaces on all the gear sets for the following conditions:
    - Cracks
    - Pitting
    - Nicks
    - Chipped gear teeth
    - High spots - small shiny spots on the gear teeth mating surfaces
3. Inspect for damaged splines on the input shaft, mainshaft, and the countershaft extension.
4. Remove nicks and burrs with a soft stone or a crocus cloth.
5. Replace a burred or nicked part that cannot be reconditioned by hand.
6. Replace gears and gear assemblies that are worn or damaged.

COUNTER GEAR SHAFT ASSEMBLE

Special Tools

J 38205-1: Press Tube

For equivalent regional tools, refer to **Special Tools**.

cardiagn.com

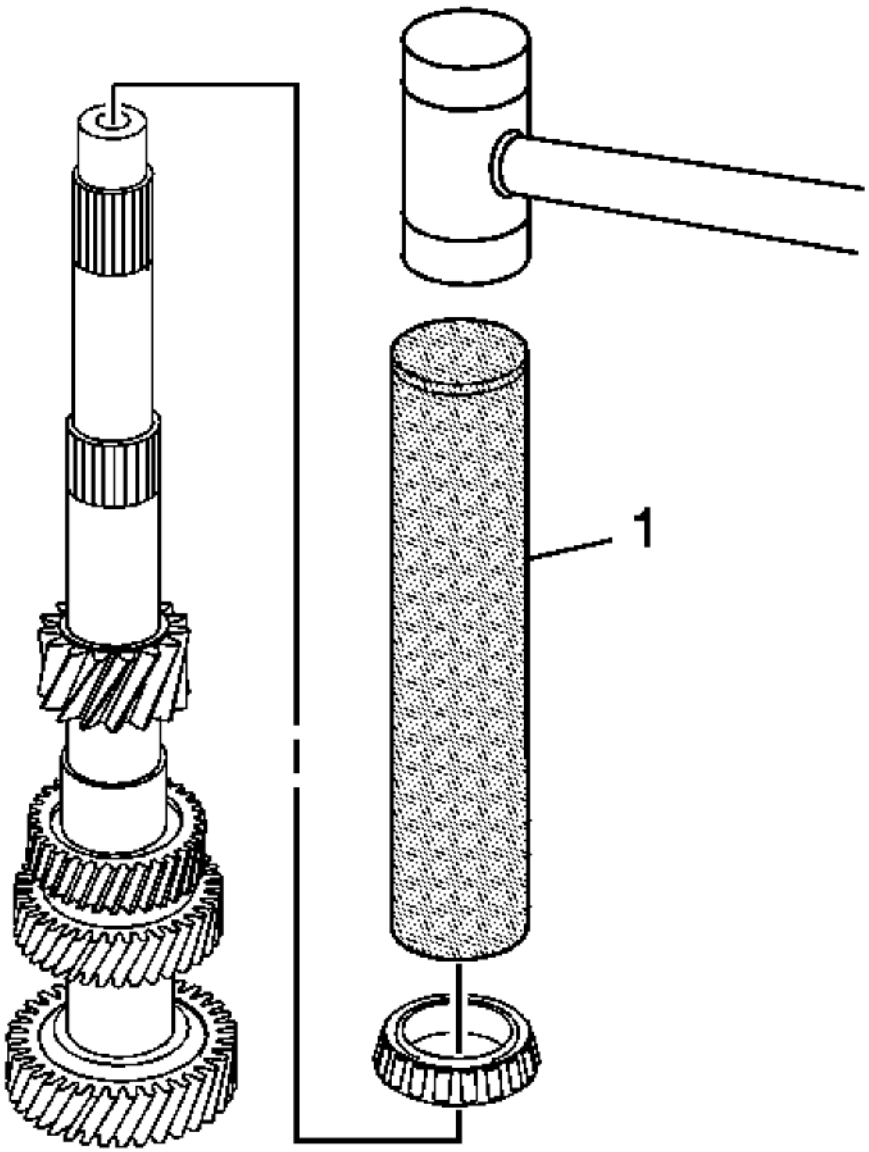

Fig. 206: Installing Countershaft Rear Bearing
Courtesy of GENERAL MOTORS CORP.

1. Install a NEW countershaft rear bearing, using the **J 38205-1:** press tube (1) and a rubber mallet.

cardiagn.com

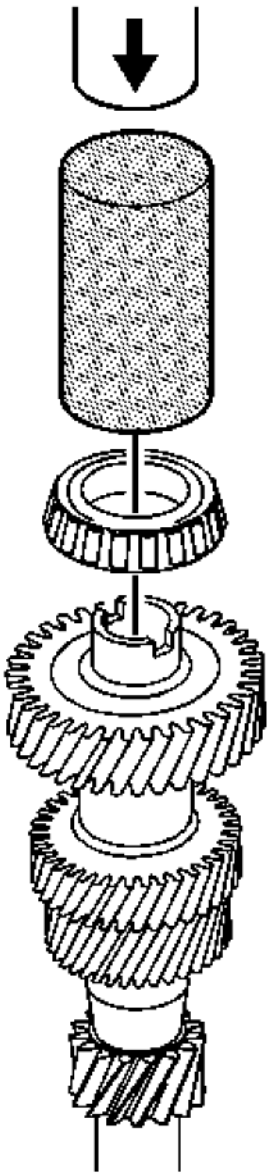

Fig. 207: Installing Countershaft Front Bearing
Courtesy of GENERAL MOTORS CORP.

2. Install a NEW countershaft front bearing, using the **J 38205-1:** press tube and a hydraulic press.

MAIN SHAFT AND INPUT SHAFT ASSEMBLE

cardiagn.com

Special Tools

- **J 28537-17:** Bearing Race Installer
- **J 36183:** Press Tube
- **J 36184:** Press Tube Adapter
- **J 39371:** 1st/2nd Synchronizer Installer
- **J 39441:** 5th/6th Driven Gear Installer
- **J 39441-10:** Installer Adapter
- **J 39441-20:** 5th Gear Installer Adapter
- **J 39473:** Mainshaft Bearing Installers.
- **J 44735:** Installation Tube

For equivalent regional tools, refer to **Special Tools**

Mainshaft

cardiagn.com

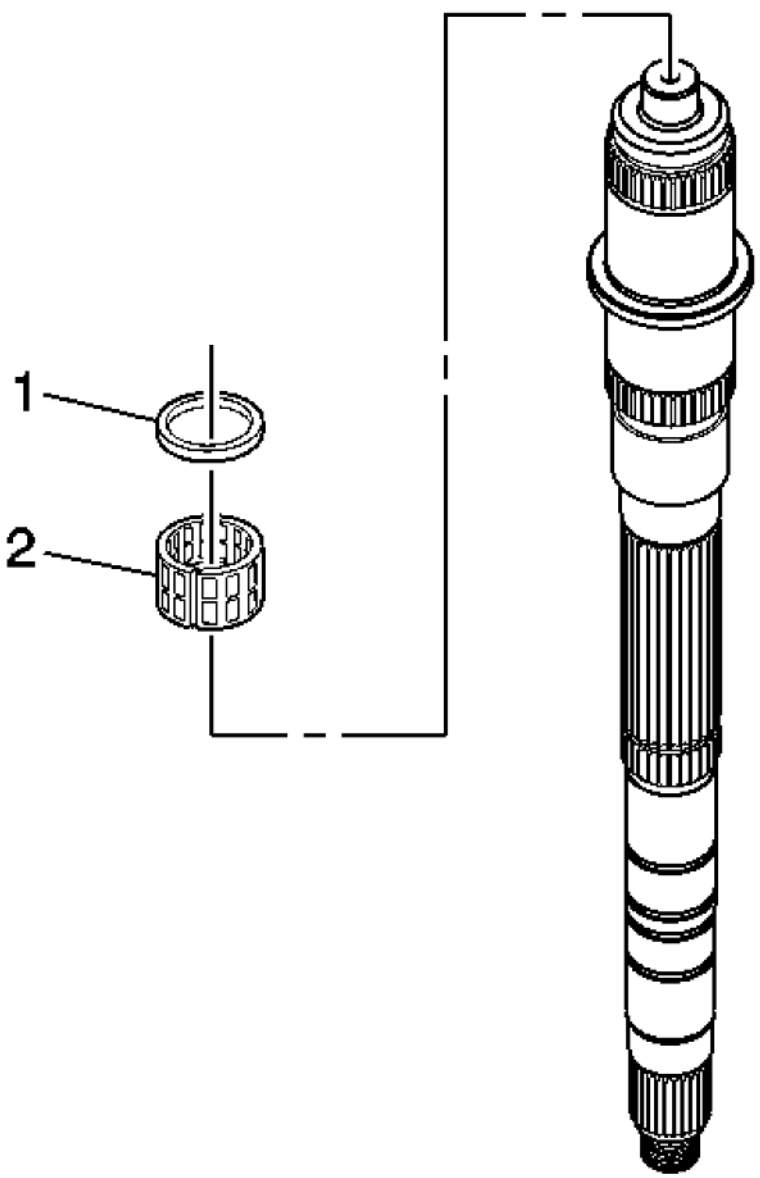

Fig. 208: Identifying 3rd Speed Drive Gear Spacer & Caged Needle Bearing
Courtesy of GENERAL MOTORS CORP.

1. Install the 3rd speed gear caged needle bearing (2) and the spacer (1).
2. Install the 3rd speed drive gear spacer.

cardiagn.com

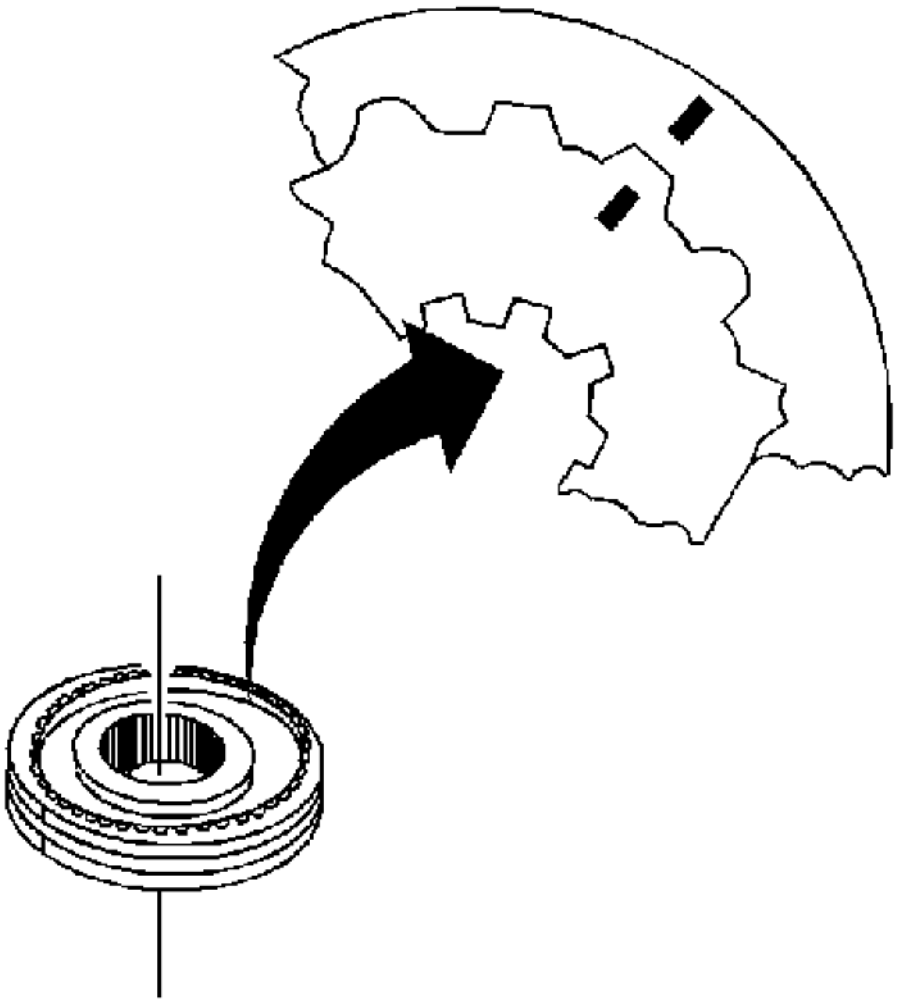

Fig. 209: View Of Alignment Marks On Synchronizer Hub & Synchronizer Sleeve
Courtesy of GENERAL MOTORS CORP.

3. Check the 3rd/4th speed gear synchronizer assembly scribe marks for correct positions.

cardiagn.com

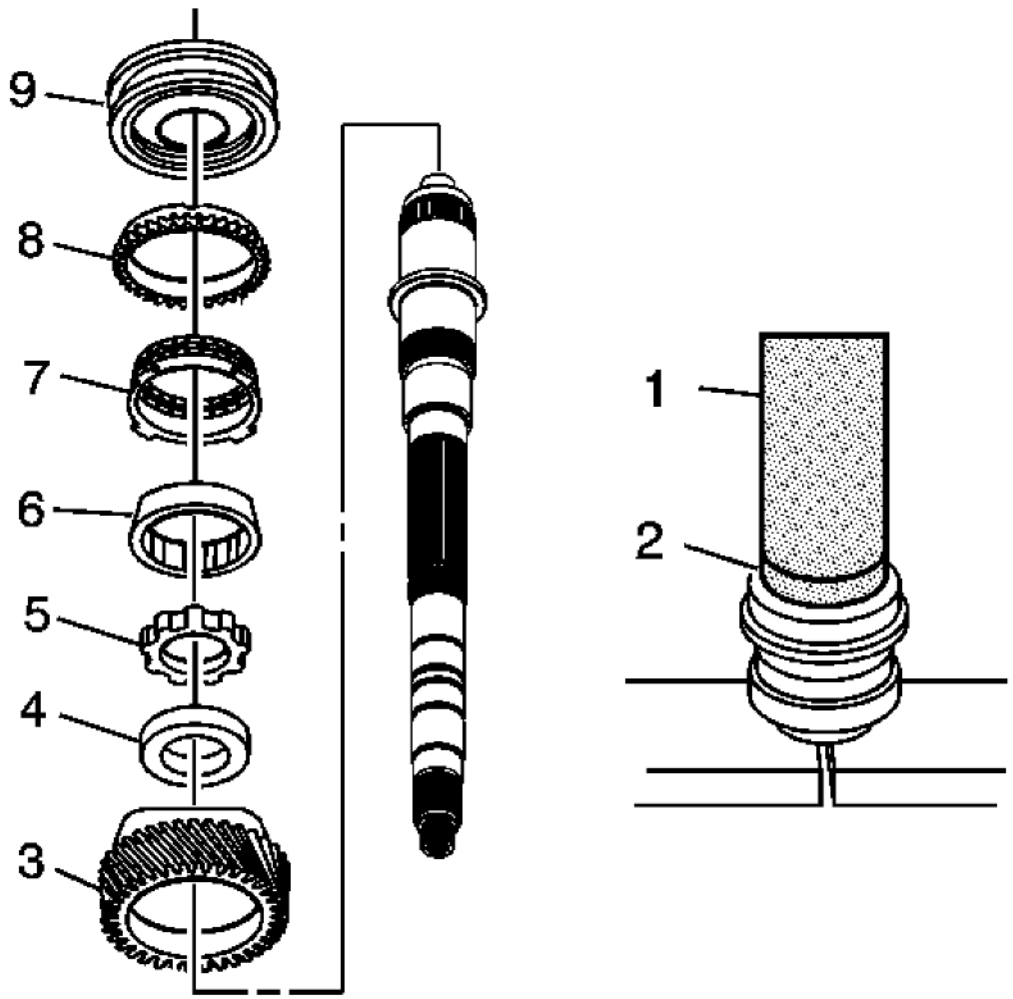

Fig. 210: View Of 3rd/4th Synchronizer Assembly
Courtesy of GENERAL MOTORS CORP.

4. Install the 3rd/4th synchronizer assembly as follows:
    1. Start the press operation.
    2. STOP pressing before the keys engage the blocking ring slots.
    3. Lift and rotate the 3rd speed gear in order to engage the keys with the blocking ring.
    4. Continue pressing until the synchronizer is seated.
5. Install the following parts in order:
    1. The 3rd speed gear (3)
    2. The spacer (4)

cardiagn.com

3. The thrust washer (5)
4. The 3rd speed gear inner cone (6)
5. The 3rd speed gear friction cone (7)
6. The 3rd speed gear blocking ring (8)
7. The 3rd/4th speed gear synchronizer assembly (9). The groove on the sleeve faces the 3rd speed gear.

cardiagn.com

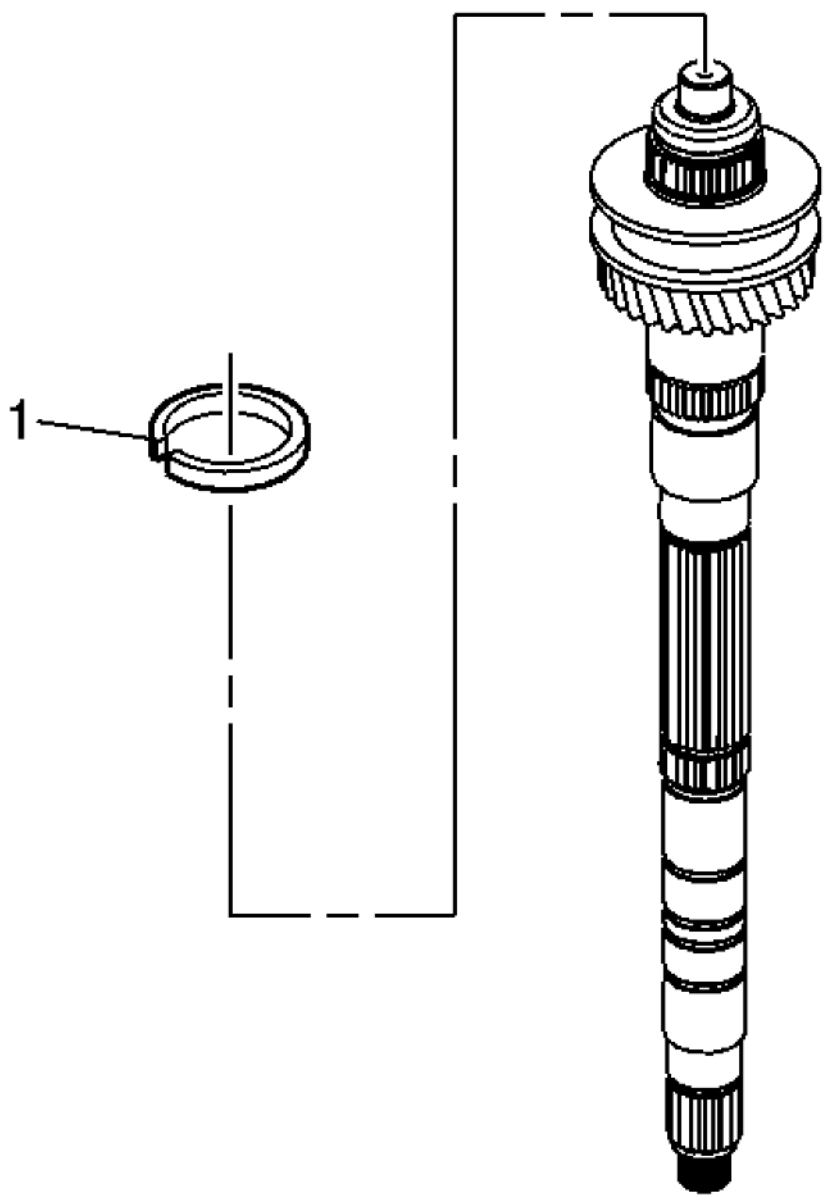

Fig. 211: Identifying Retainer Ring
Courtesy of GENERAL MOTORS CORP.

6. Install the 3rd/4th synchronizer retainer ring (1).

cardiagn.com

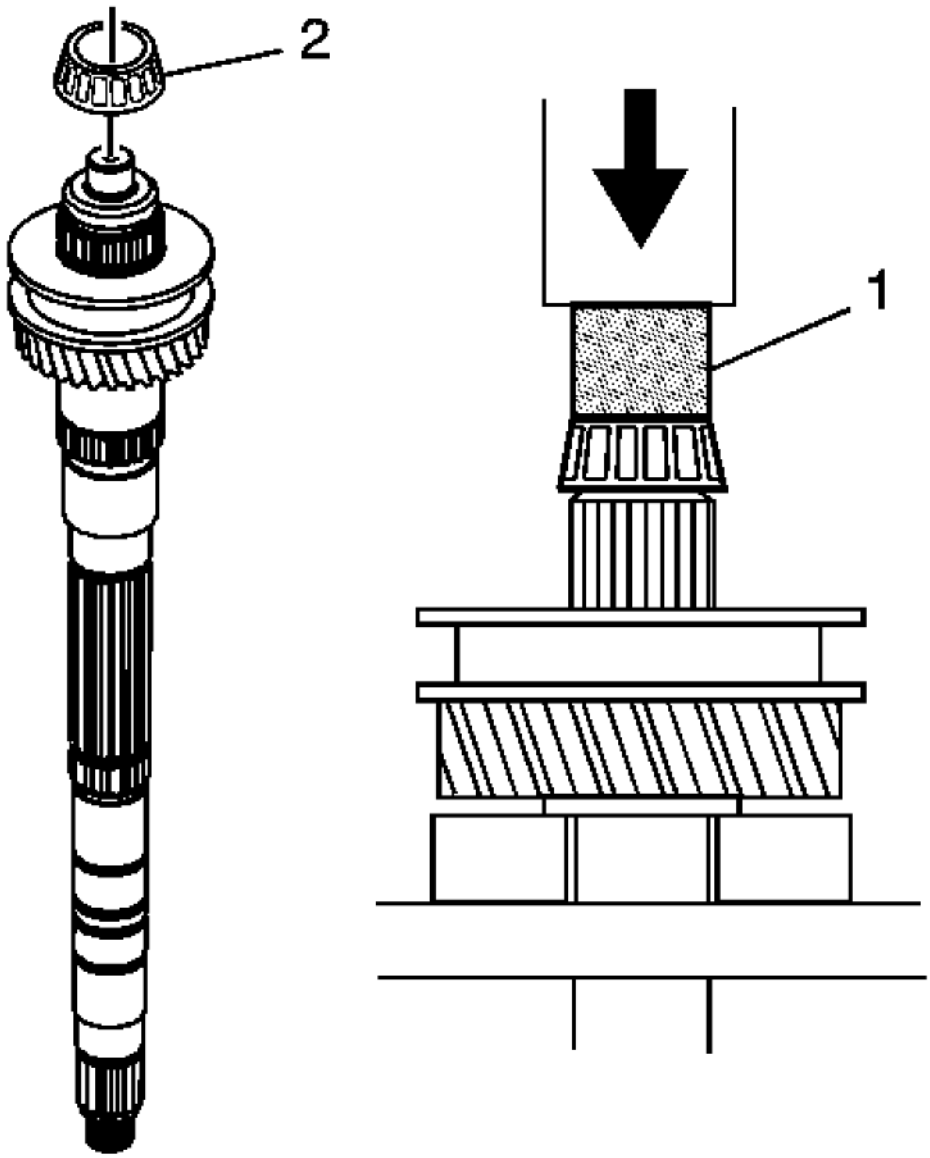

Fig. 212: Installing Mainshaft Small Tapered Bearing
Courtesy of GENERAL MOTORS CORP.

7. Install a new mainshaft small tapered bearing (2), using the **J 39473:** installers (1), V-blocks, and a hydraulic press.

cardiagn.com

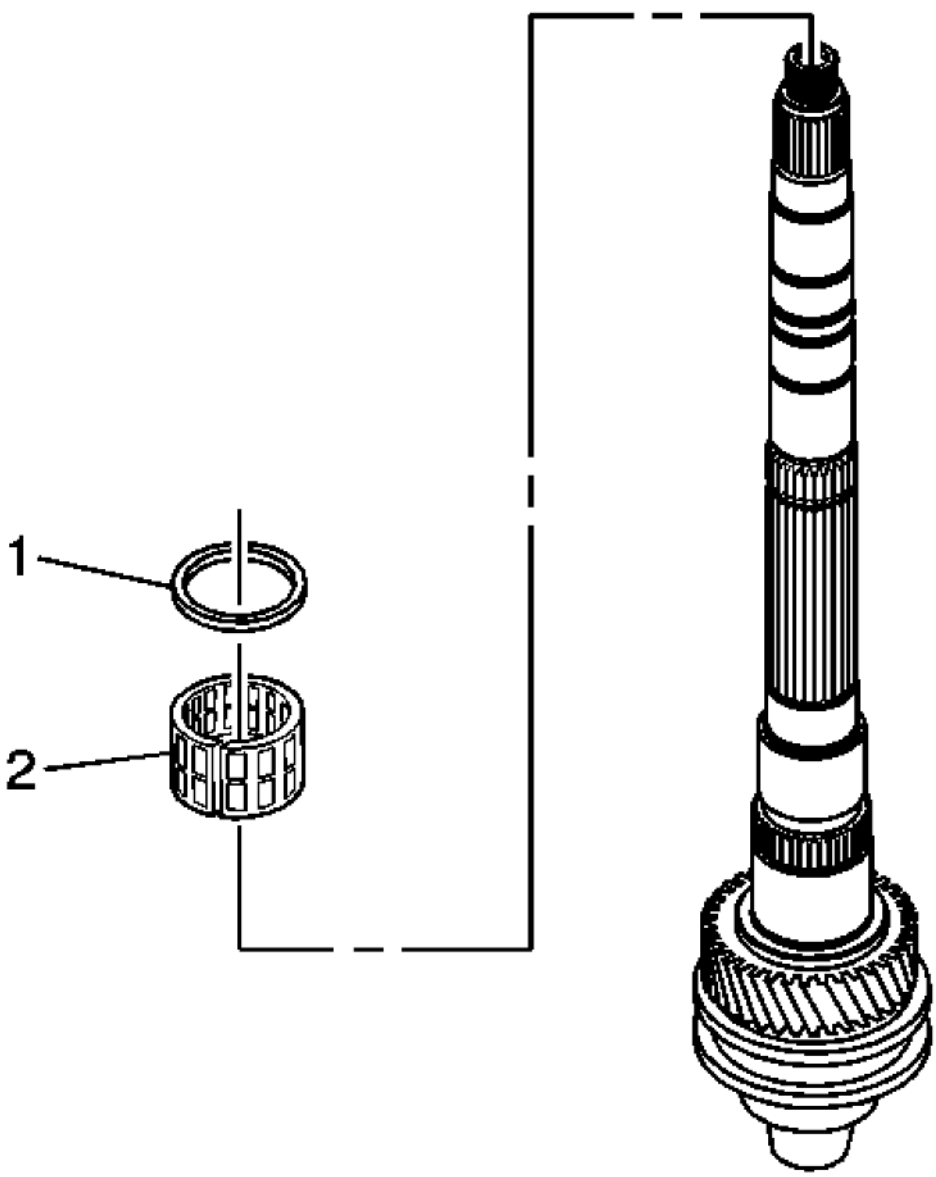

Fig. 213: View Of 2nd Speed Gear Spacer & Caged Needle Bearing
Courtesy of GENERAL MOTORS CORP.

8. Install the 2nd speed gear caged needle bearing (2) and bearing spacer (1).

cardiagn.com

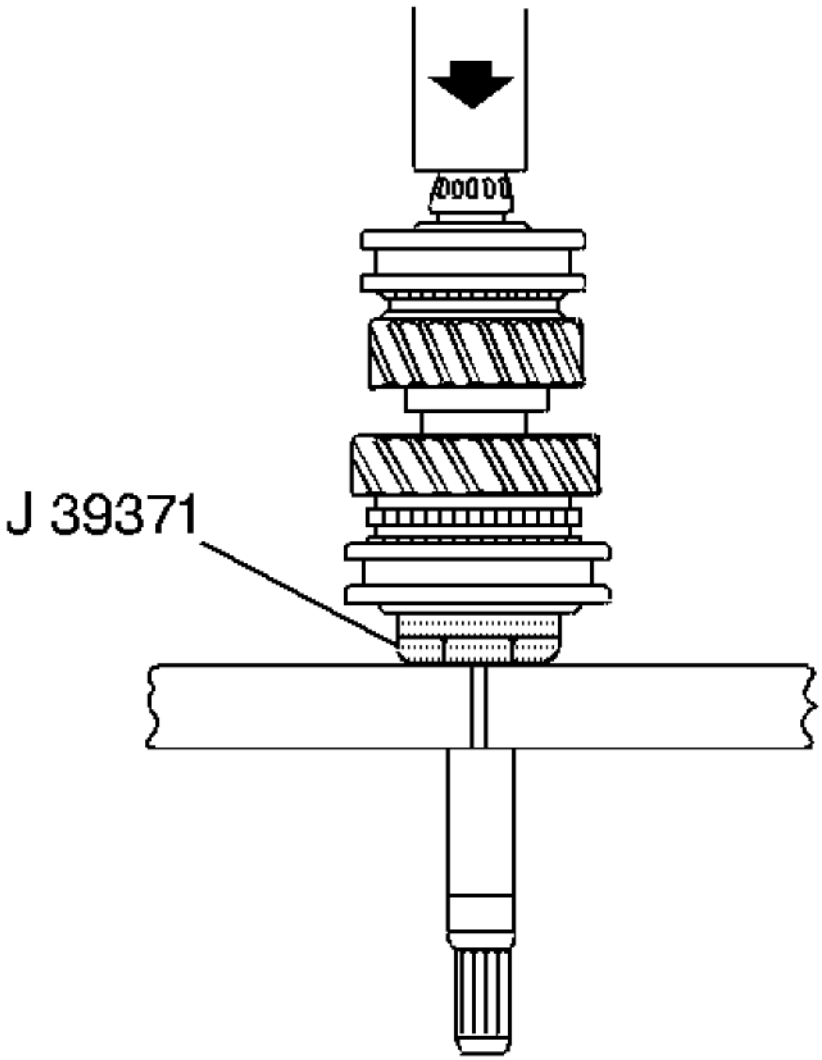

Fig. 214: Installing 1st/2nd Synchronizer Assembly
Courtesy of GENERAL MOTORS CORP.

9. Do the following when installing the 1st/2nd synchronizer assembly:
    1. Start the press operation.
    2. Stop pressing before the keys engage the blocking ring slots.
    3. Lift and rotate the 2nd speed gear in order to engage the keys with the blocking ring.
    4. Continue pressing until the synchronizer is seated.
10. Install the following parts in order using the **J 39371:** 1st/2nd installer and a hydraulic press:

cardiagn.com

1. The 2nd speed gear
2. The 2nd speed gear inner cone
3. The 2nd speed gear friction cone
4. The 2nd speed gear blocking ring
5. The 1st/2nd synchronizer assembly (The ID groove on the sleeve faces the 1st speed gear.)

cardiagn.com

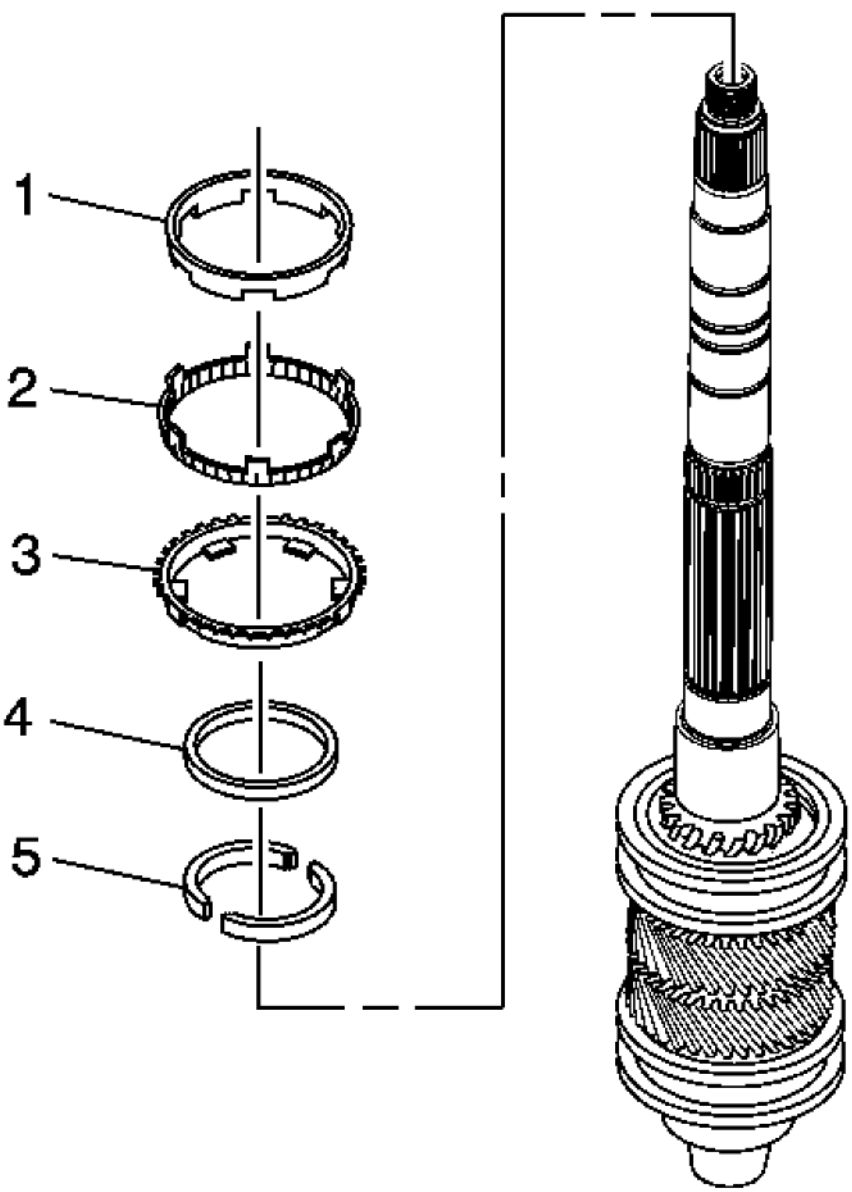

Fig. 215: Identifying 1st Speed Gear Components
Courtesy of GENERAL MOTORS CORP.

11. Install the following parts in order:
    1. The 1st speed gear two piece washer (5)
    2. The 1st speed gear locking ring (4)

cardiagn.com

3. The 1st speed gear synchronizer blocking ring (3)
4. The 1st speed gear outer cone (2)
5. The 1st speed gear inner cone (1)

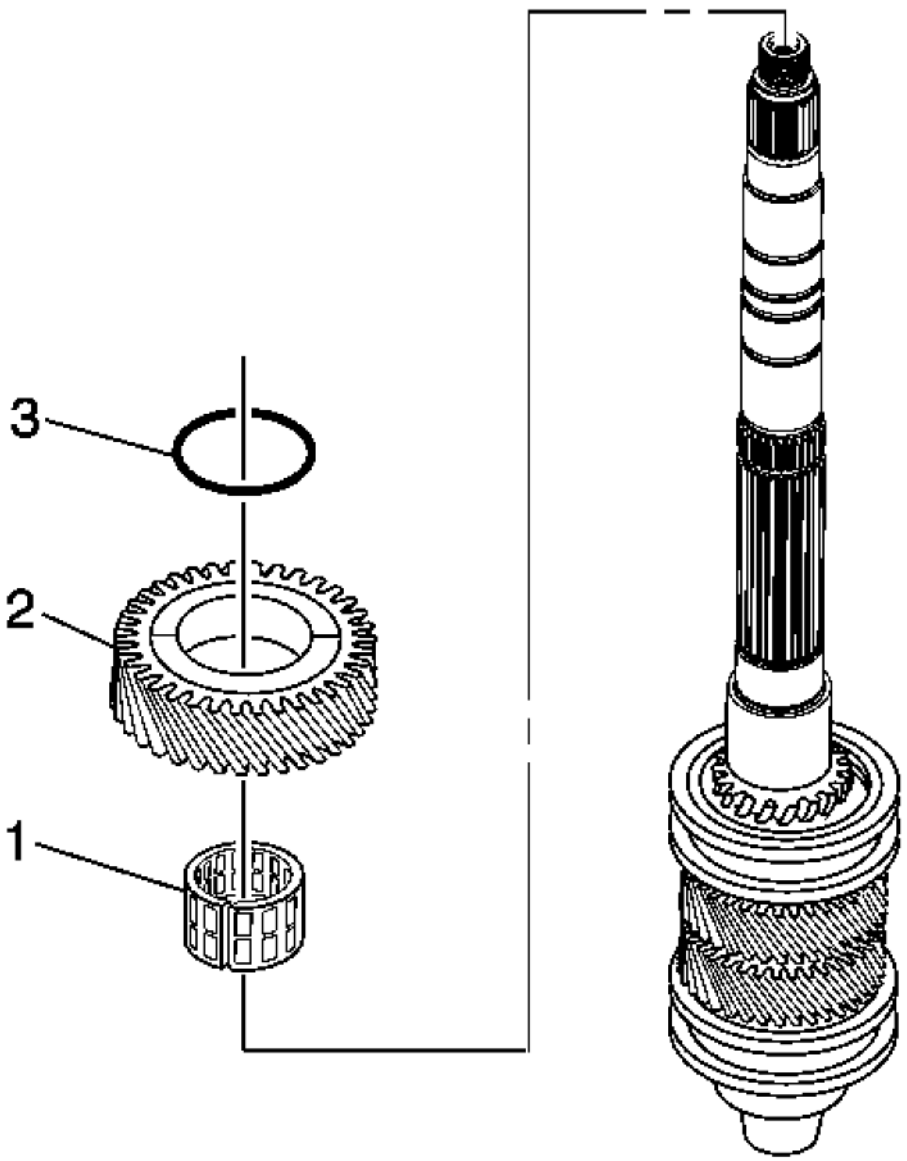

Fig. 216: Identifying 1st Speed Gear Caged Needle Bearing, 1st Speed Gear & Mainshaft Inner Seal O-ring

cardiagn.com

Courtesy of GENERAL MOTORS CORP.

12. Install the following parts in order:
    1. The 1st speed gear caged needle bearing (1)
    2. The 1st speed gear (2)
    3. The mainshaft inner seal O-ring (3)

cardiagn.com

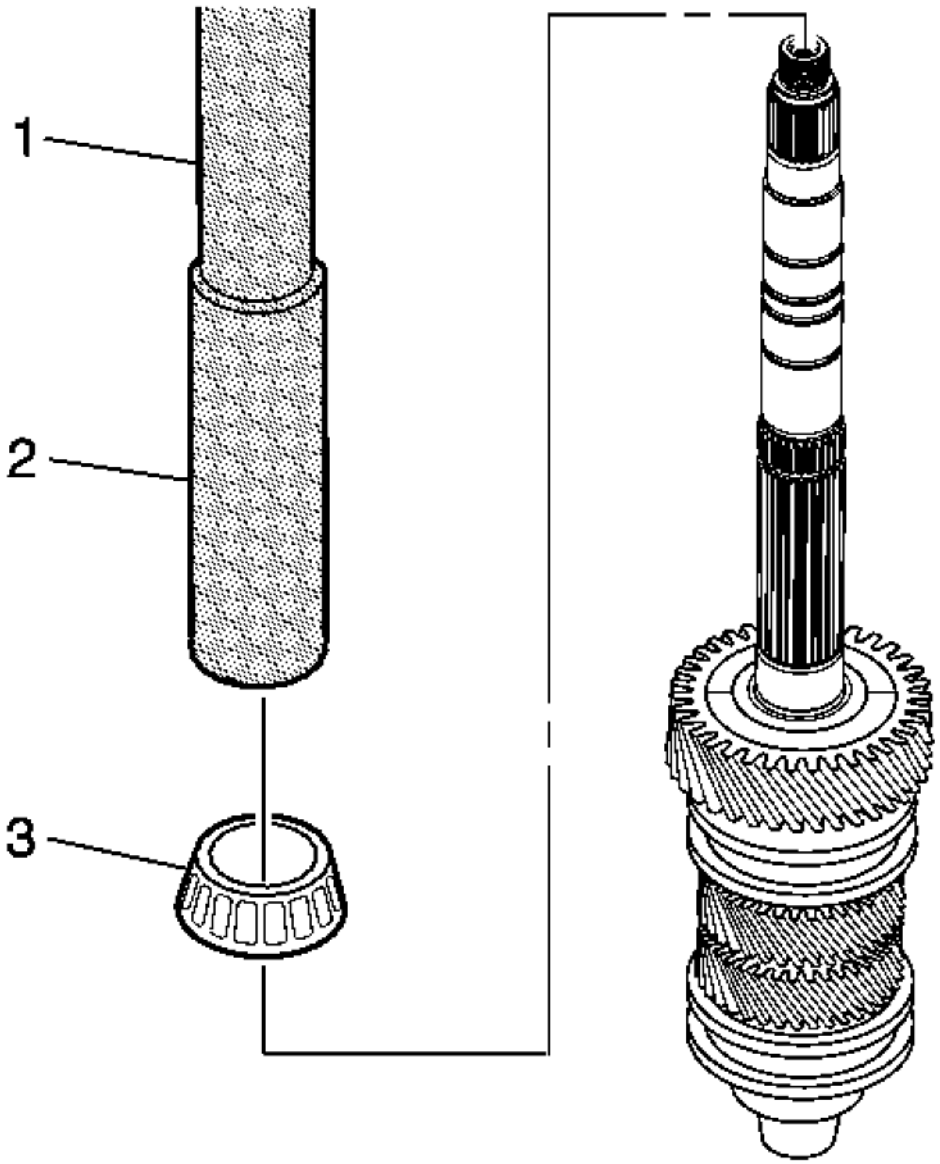

Fig. 217: Installing Mainshaft Large Tapered Bearing
Courtesy of GENERAL MOTORS CORP.

13. Using **J 39441:** installer (1), **J 39441-20:** adapter (2), and a press, install the mainshaft large tapered bearing (3).

cardiagn.com

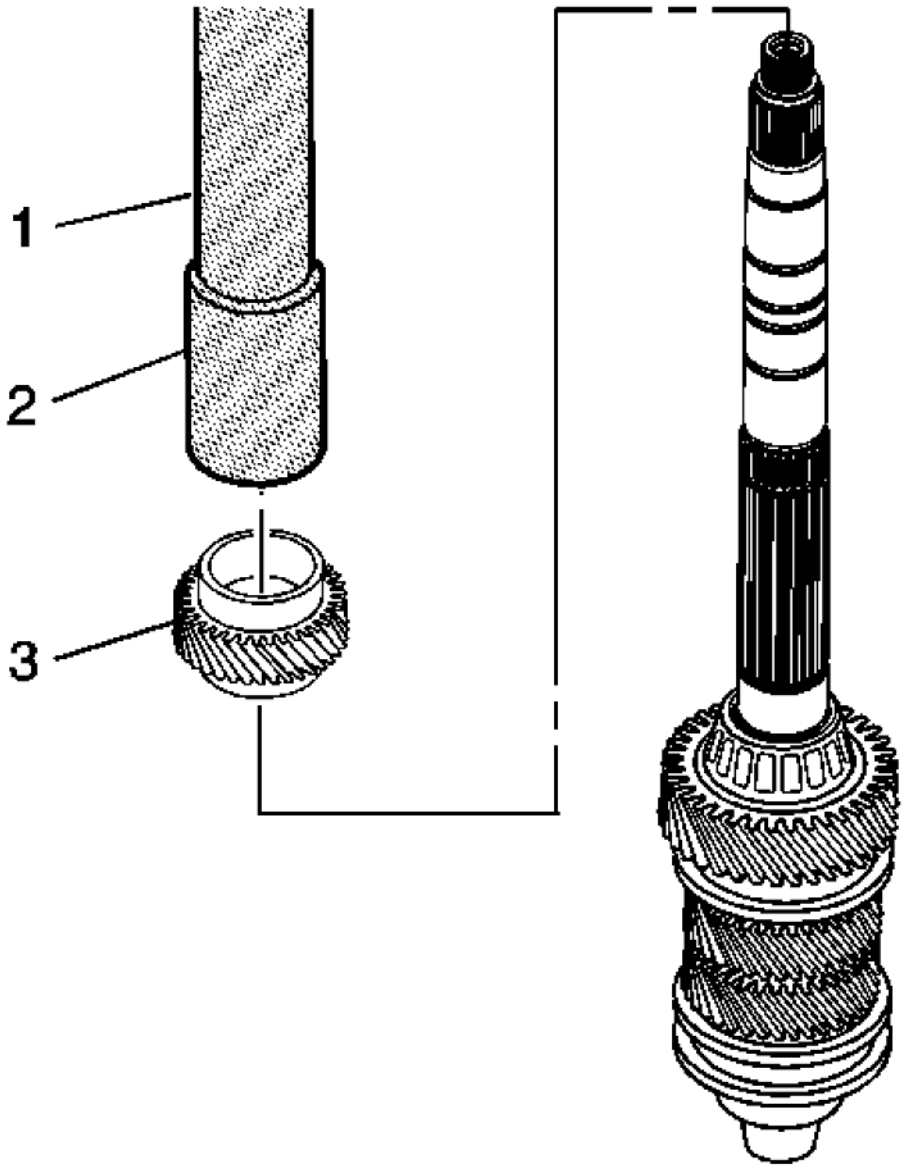

Fig. 218: Installing 6th Speed Driven Gear
Courtesy of GENERAL MOTORS CORP.

14. Using the **J 39441:** gear installer (1) and the **J 39441-10:** adapter (2), install the 6th speed driven gear (3).

Input Shaft

cardiagn.com

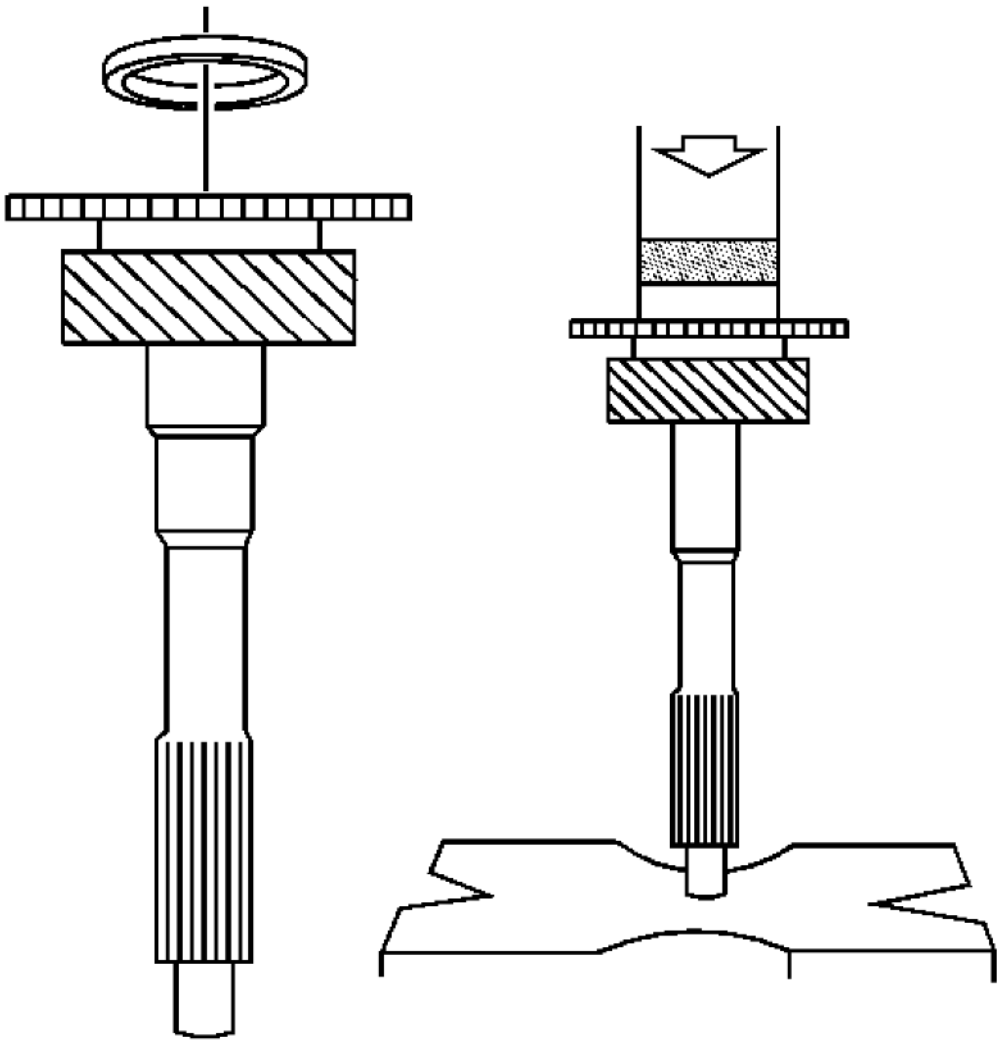

Fig. 219: Installing Bearing Race On Input Shaft
Courtesy of GENERAL MOTORS CORP.

1. Install a new bearing race on the input shaft, using the **J 28537-17:** installer and a hydraulic press.

cardiagn.com

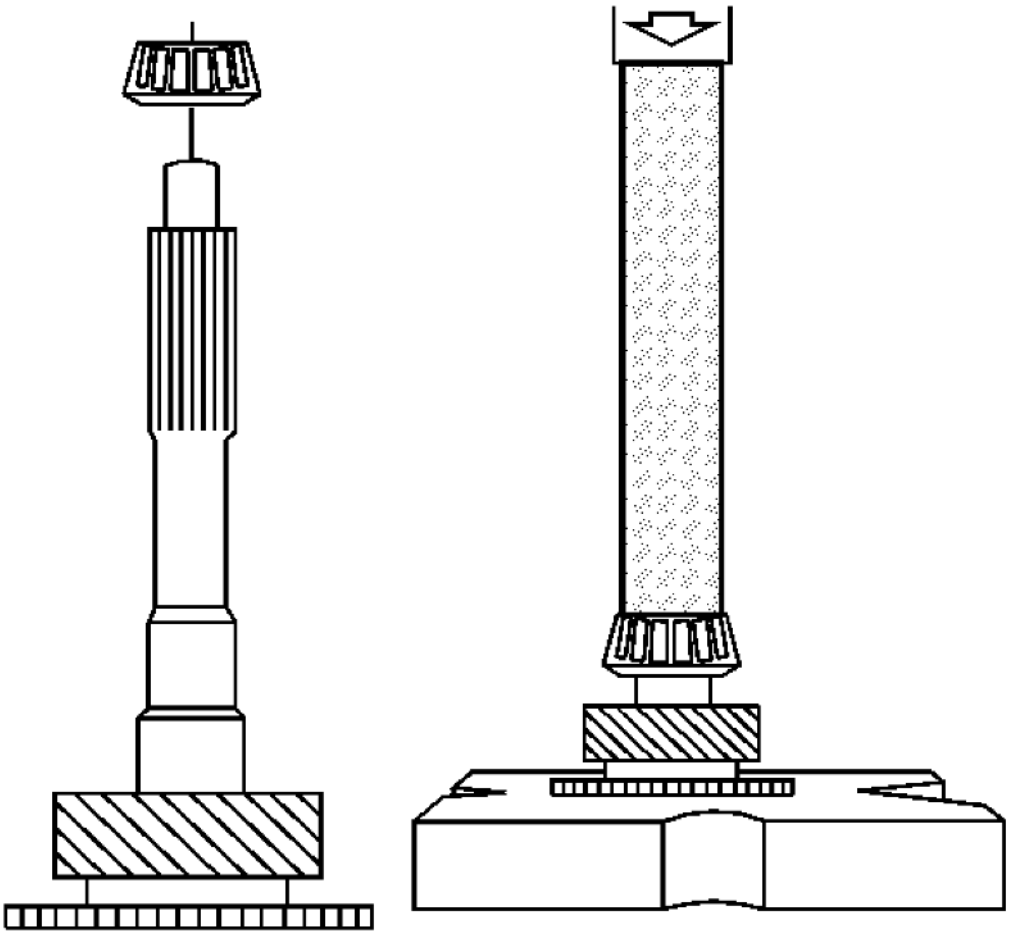

Fig. 220: Installing Tapered Bearing On Input Shaft
Courtesy of GENERAL MOTORS CORP.

2. Install a new tapered bearing on the input shaft. Use the **J 44735:** tube and a hydraulic press.

TRANSMISSION ASSEMBLE

Special Tools

- **DT 47678:** Transmission Holding Flange
- **DT 47678-10:** Transmission Holding Flange Adapter
- **DT 49293:** Gear Select/Skip Shift Solenoid Socket
- **J 08614A:** Pinion Flange Holder and Remover

cardiagn.com

- **J 3289-20:** Holding Fixture
- **J 36017:** Valve Seal Remover
- **J 36850:** Transjel® Lubricant Assembly Lube
- **J 38205-1:** Press Tube
- **J 39441-20:** Fifth Gear Installer Adapter
- **J 39441-30:** 5th/6th Gear Installer Adapter
- **J 39442:** Mainshaft and Countershaft Press Adapter
- **J 44395:** Transmission Holding Fixture

For equivalent regional tools, refer to **Special Tools**.

Shift Shaft Assemblies and Gear Clusters Installation

1. Lubricate all components as assembly progresses, using **J 36850:** transjel® lubricant.

cardiagn.com

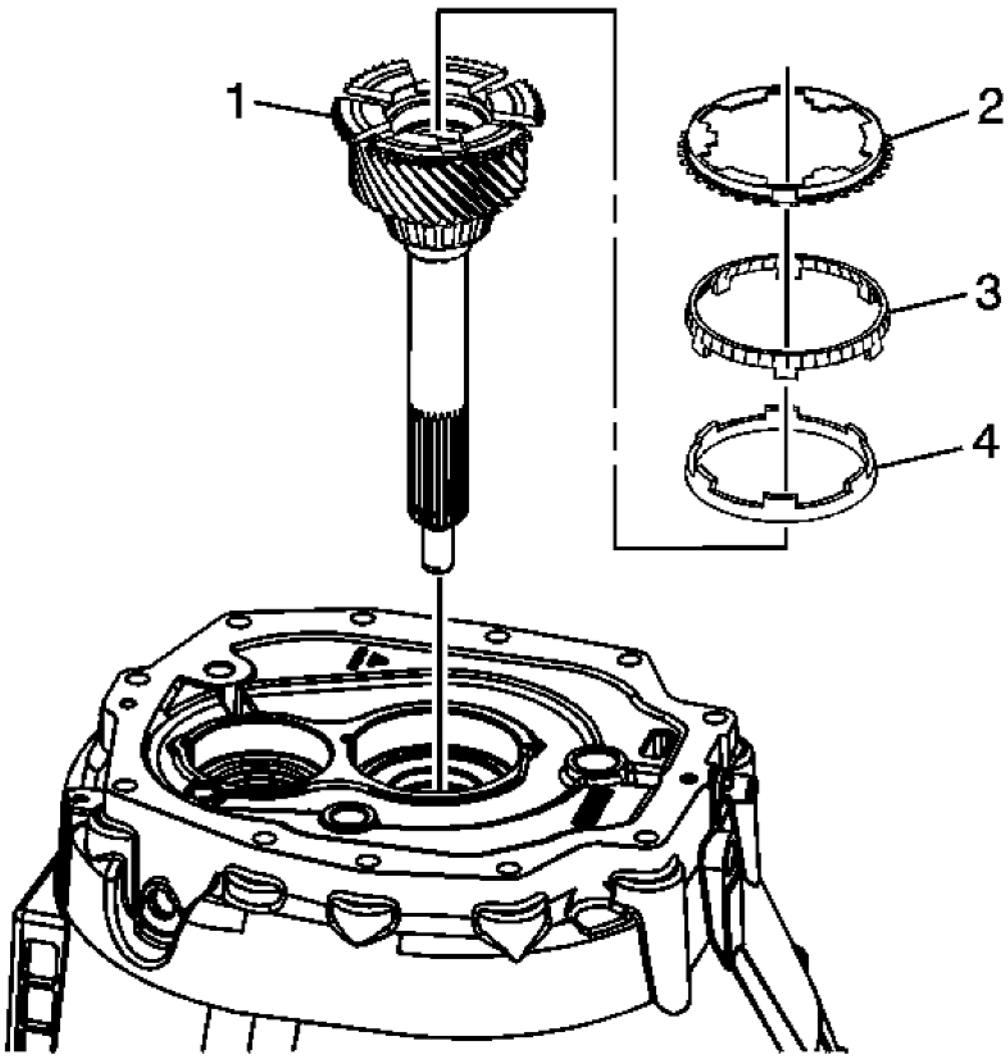

Fig. 221: Identifying 4th Gear Blocking Ring Assembly Components
Courtesy of GENERAL MOTORS CORP.

2. Install the input shaft (1) in the clutch housing.
3. Install the 4th gear blocking assembly:
    1. Install the 4th speed drive gear inner cone (4).
    2. Install the 4th speed drive gear outer cone (3).
    3. Install the 4th speed drive gear blocking ring (2).

cardiagn.com

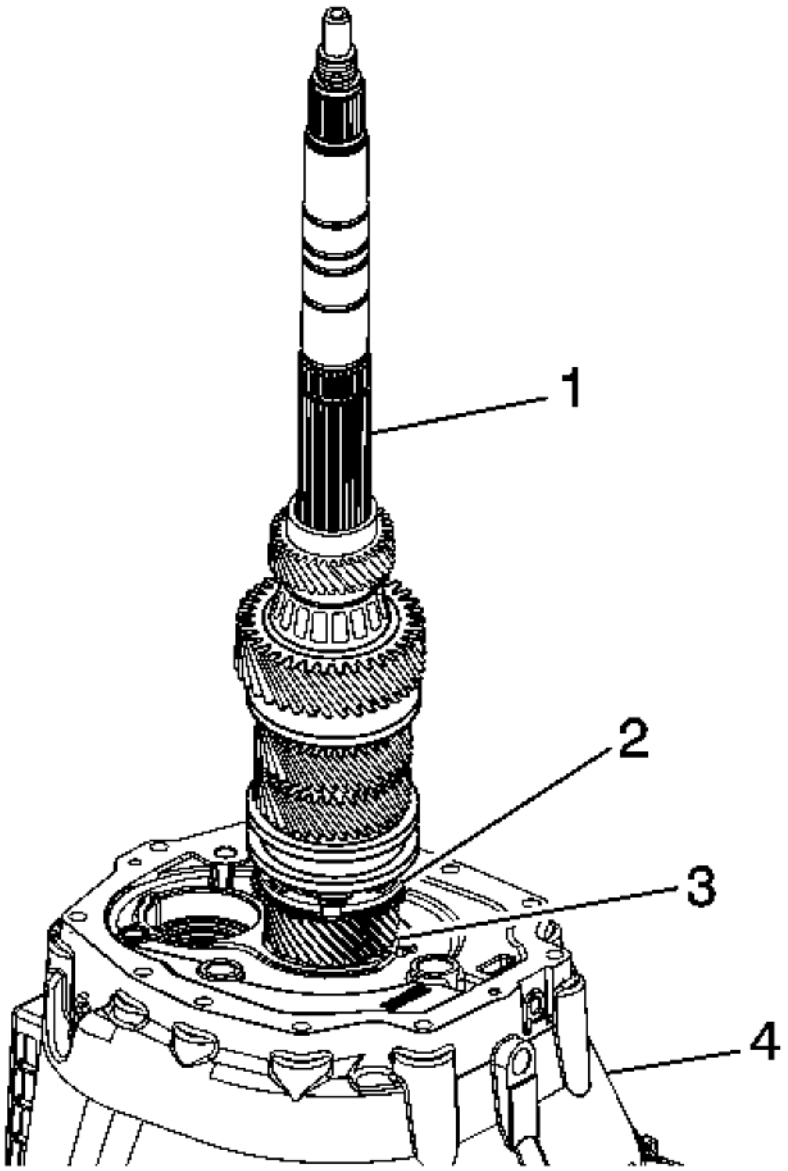

Fig. 222: Mainshaft Components
Courtesy of GENERAL MOTORS CORP.

NOTE: **In order for the shift forks to properly line up with the synchronizers, the shift shaft assembly must be assembled correctly. Refer to Shift Shaft and Fork Assemblies Assemble.**

cardiagn.com

4. Assemble the shift shaft to the mainshaft.
5. Install the mainshaft and the shift shaft assembly into the clutch housing.

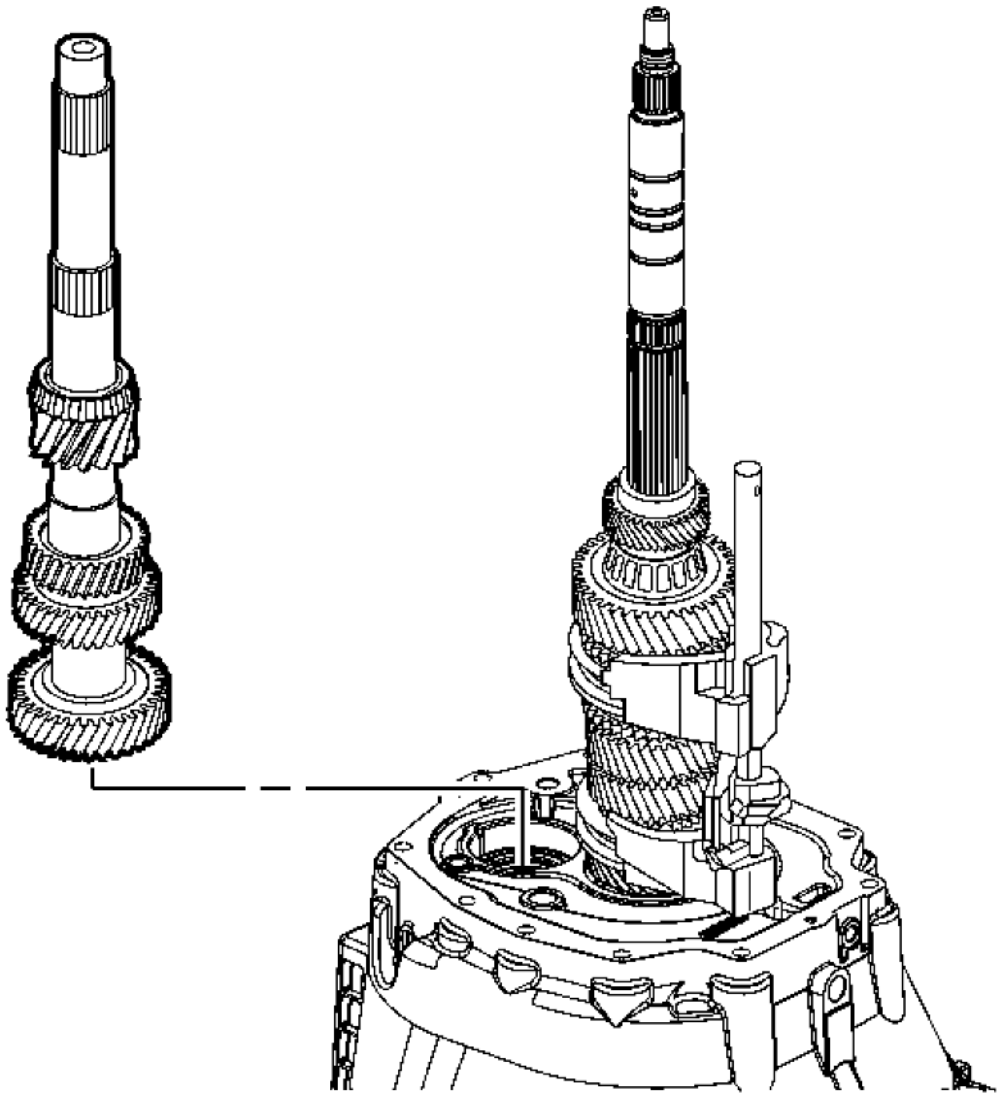

Fig. 223: Countershaft
Courtesy of GENERAL MOTORS CORP.

6. Install the countershaft assembly using the following sequence:
    1. Lift up the mainshaft assembly enough in order to install the countershaft assembly.

cardiagn.com

2. Install the countershaft assembly.
3. Lift the mainshaft assembly enough in order to rotate the input shaft to engage the synchronizer keys with 4th gear blocking ring.

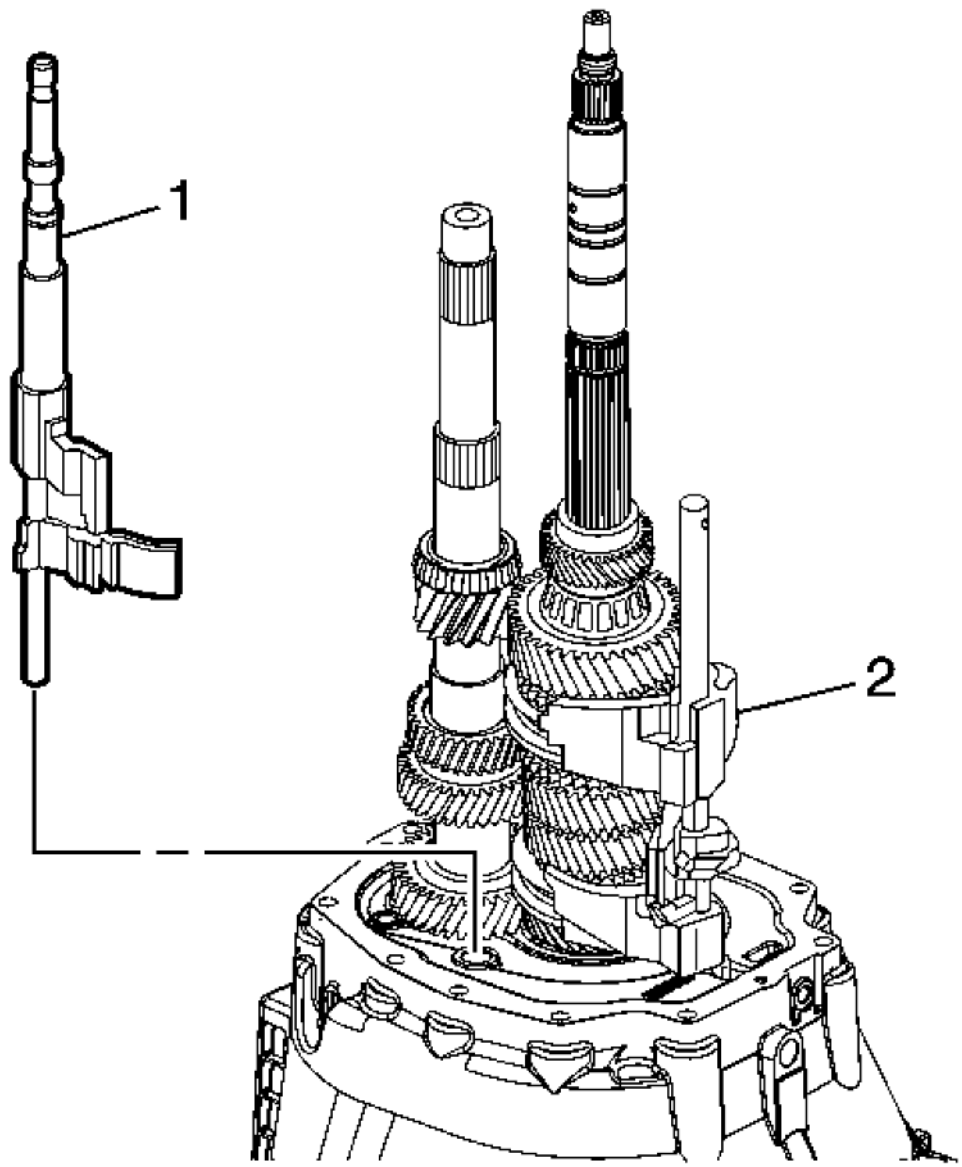

Fig. 224: 3rd/4th Shift Fork & 5th/6th & Reverse Shift Shaft Assemblies
Courtesy of GENERAL MOTORS CORP.

cardiagn.com

7. Install the 5th/6th and the reverse shift shaft.

   Align the slots of the shift shaft levers with the interlock plate.

Oil Filter Installation

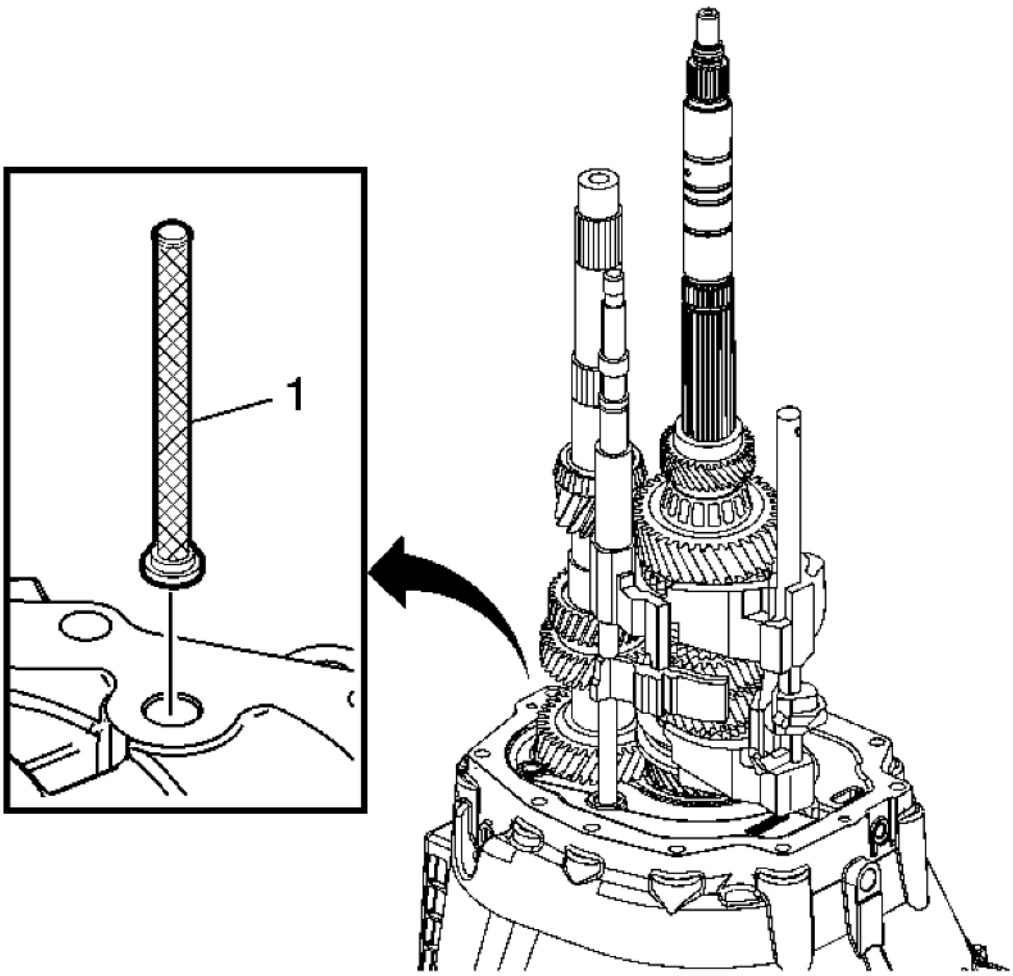

Fig. 225: Oil Filter
Courtesy of GENERAL MOTORS CORP.

Install the oil filter assembly (1).

Transmission Case Installation

cardiagn.com

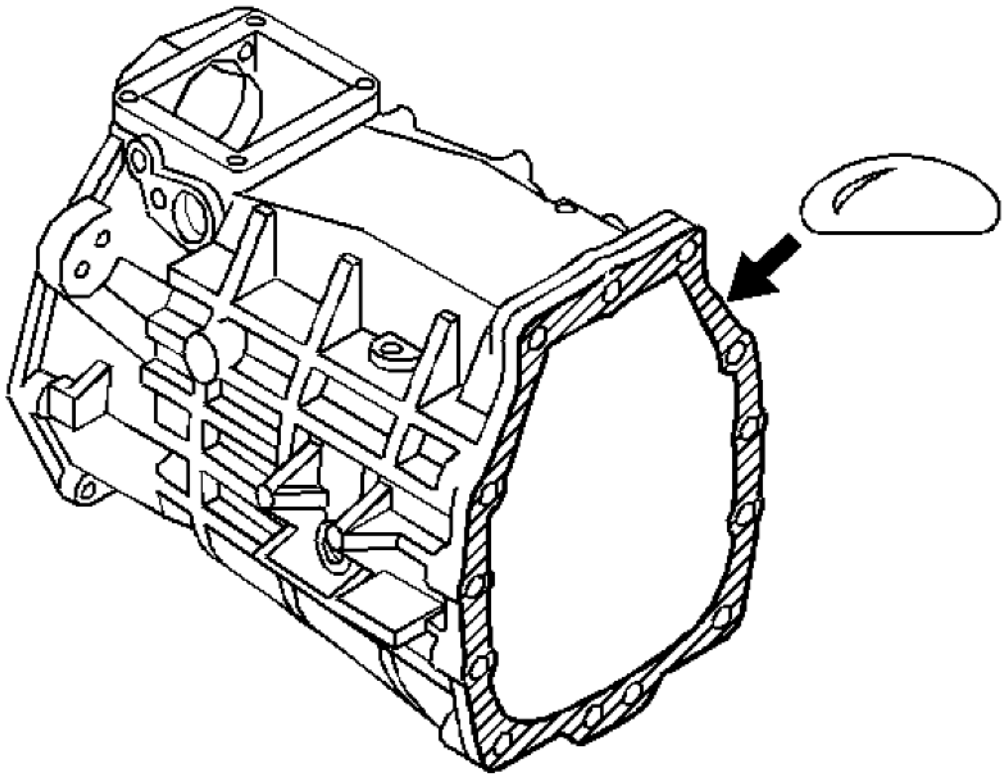

Fig. 226: Applying Sealer To Transmission Case Adapter Plate Mating Surface
Courtesy of GENERAL MOTORS CORP.

NOTE:

- **Clean housing, bolt holes and all sealing surfaces.**
- **Lubricate all components as the assembly progresses. Use J 36850: transjel® lubricant or the equivalent.**

1. Apply sealant GM P/N 12345739, (Canadian P/N 10953472) or equivalent to the transmission case to adapter plate mating surface.

cardiagn.com

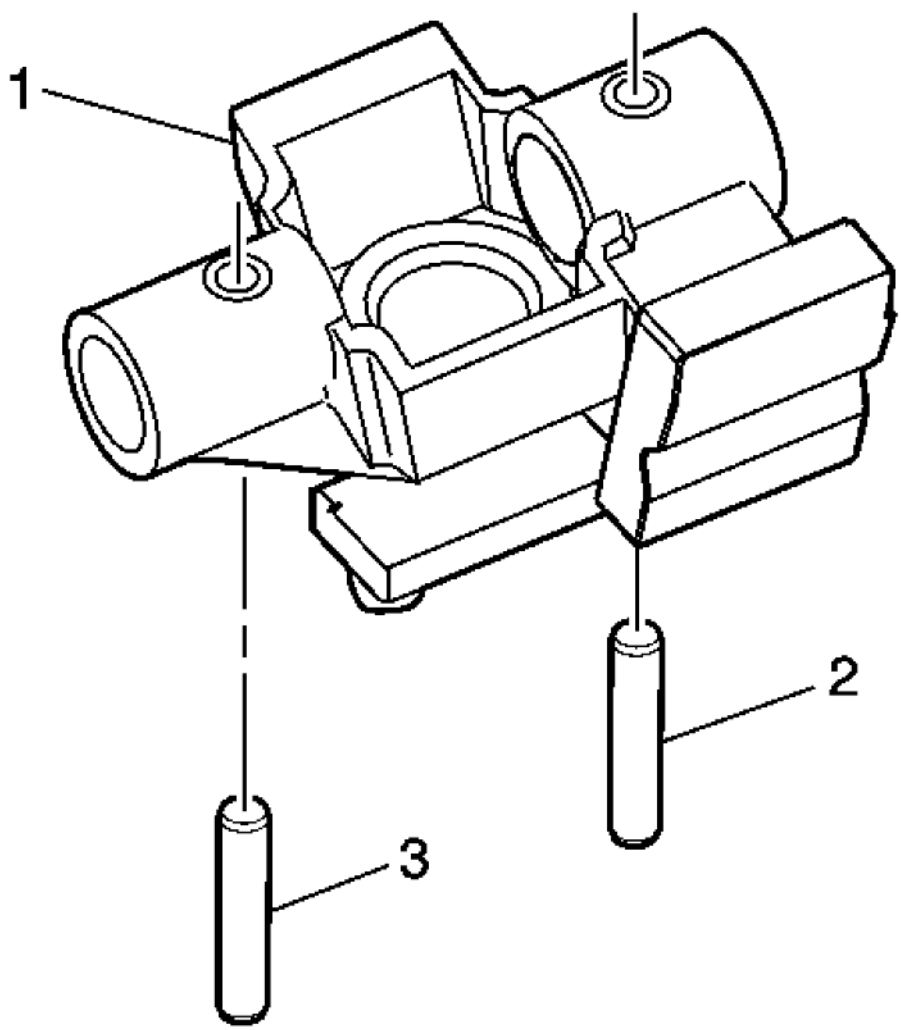

Fig. 227: Roll Pins & Shift Control Guide
Courtesy of GENERAL MOTORS CORP.

2. Remove and discard the roll pins (2 and 3) from the shift control guide.

cardiagn.com

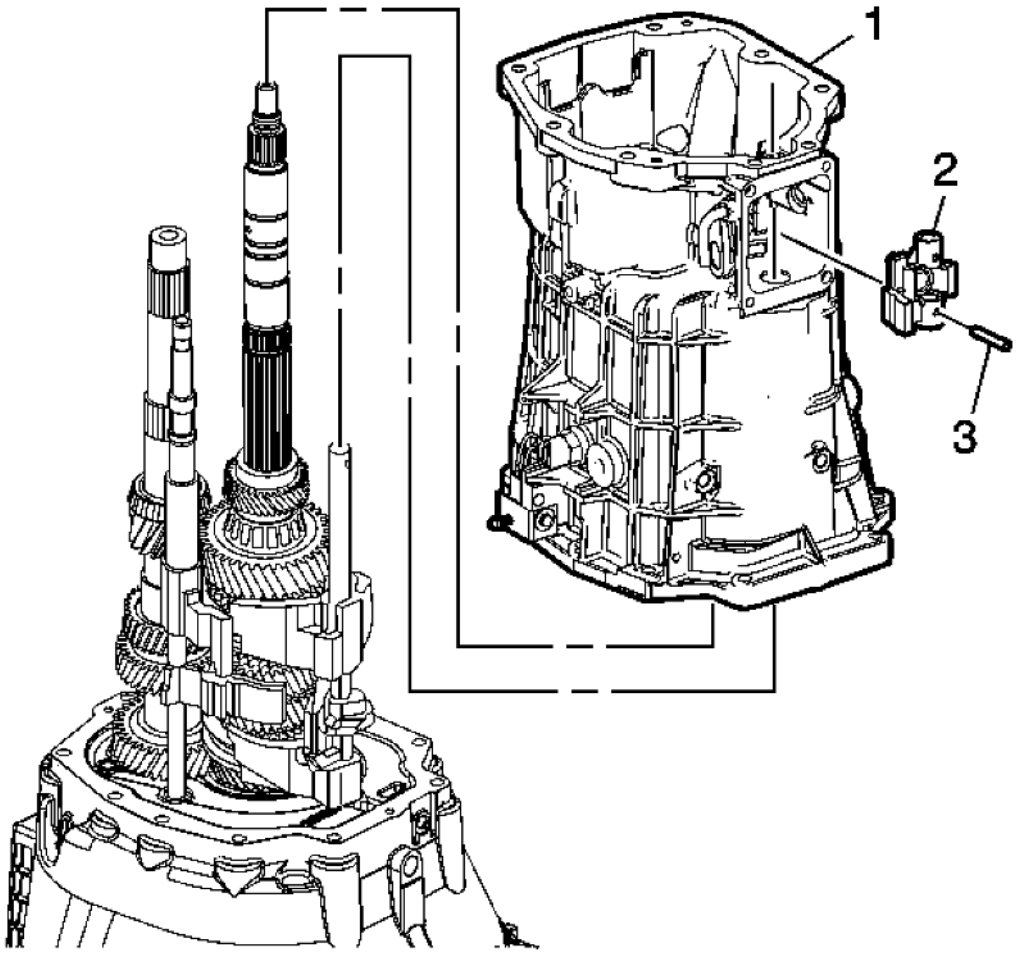

Fig. 228: Transmission Case & Select Control Lever Assembly
Courtesy of GENERAL MOTORS CORP.

3. Do the following in order to install the transmission case and the select control lever assembly:
    1. Shift the transmission into NEUTRAL in order to keep the 3rd/4th shift shaft from engaging.
    2. Install the select control lever assembly (2), through the transmission case opening, while sliding the transmission case (1) onto the gear clusters and the shift rail components.
    3. Install the select control lever assembly pin (3).

cardiagn.com

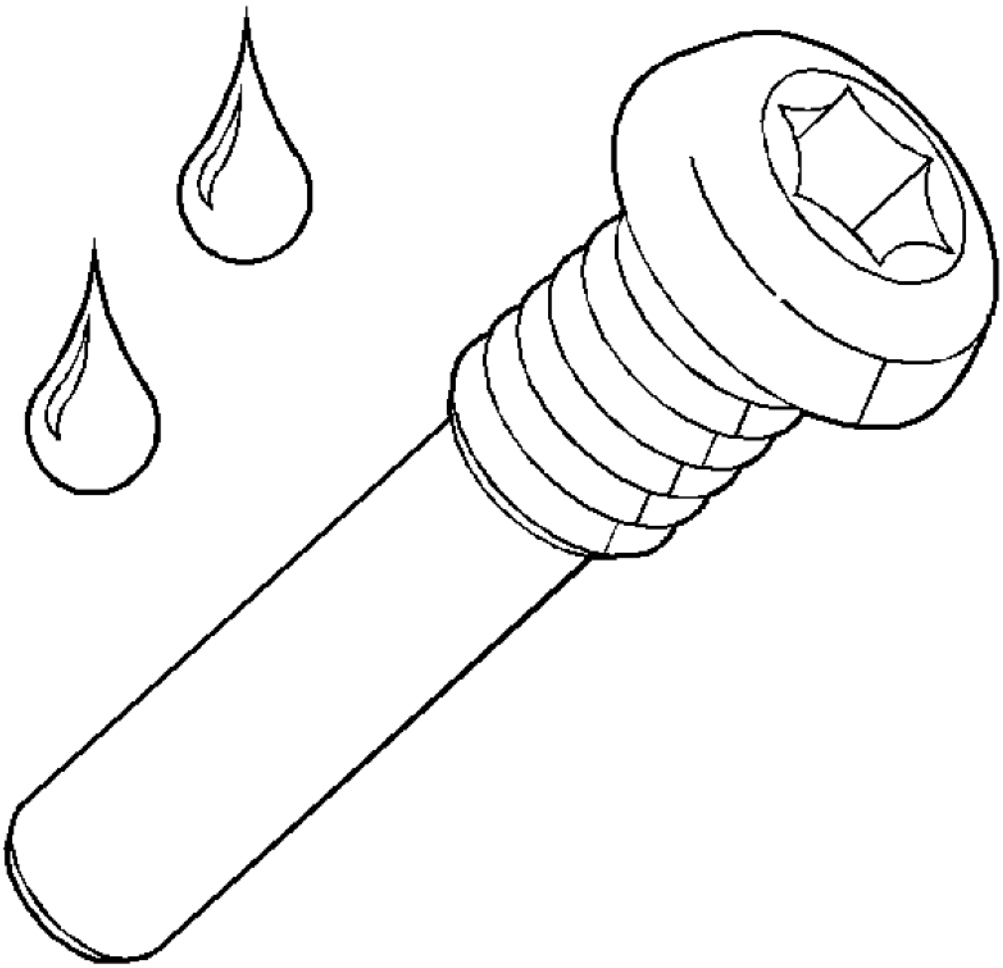

Fig. 229: Applying Threadlock To Shift Lever Guide Bolts Threads
Courtesy of GENERAL MOTORS CORP.

4. Apply threadlock GM P/N 12346004, (Canadian P/N 10953480) or equivalent to the threads of the shift lever guide bolts.

cardiagn.com

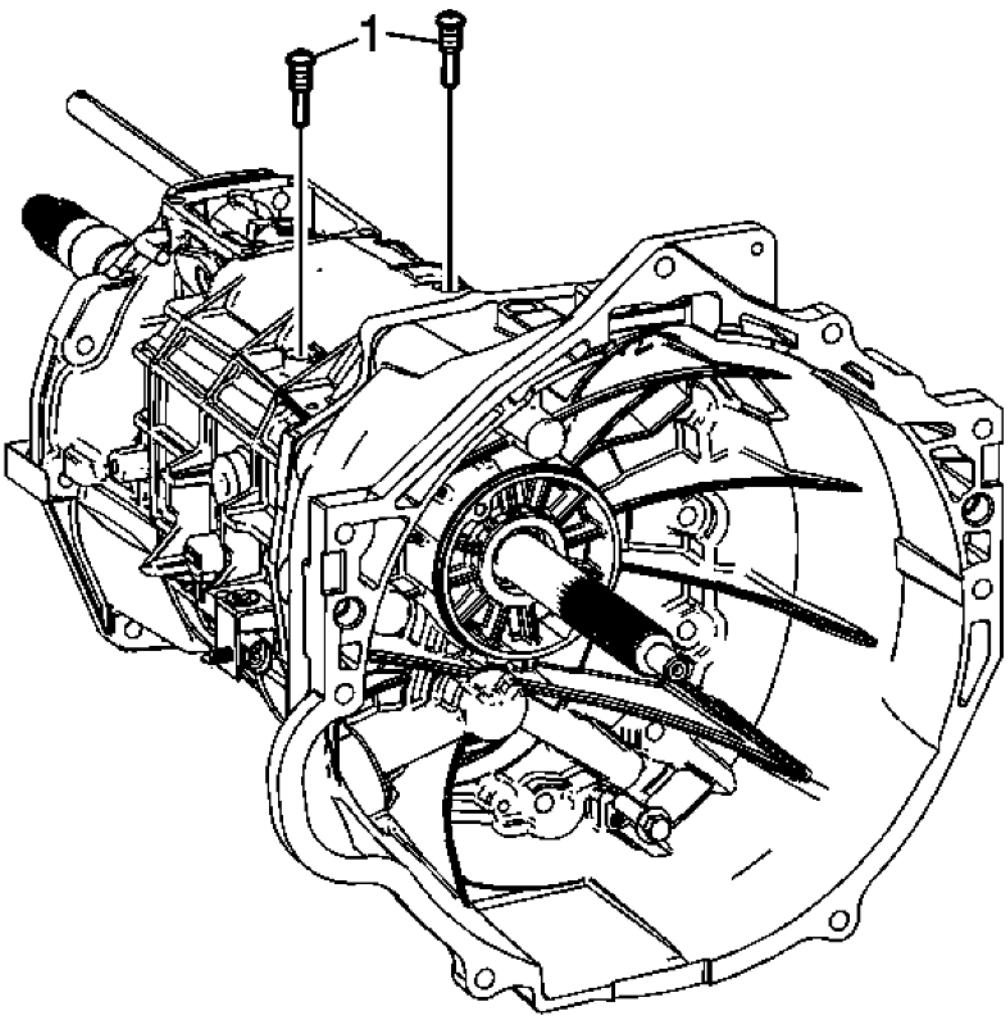

Fig. 230: Identifying Shift Lever Guide Bolts
Courtesy of GENERAL MOTORS CORP.

CAUTION: Refer to Fastener Caution .

NOTE: In order to align the shift interlock plate slot with the shift lever guide bolt holes, pull up on the 5th/6th and reverse shift rail assembly while installing the shift lever guide bolts.

5. Install the shift lever guide bolts (1) while pulling up on 5th/6th and reverse shift rail assembly. Tighten

cardiagn.com

the bolts to 27 N.m (20 Ib ft).

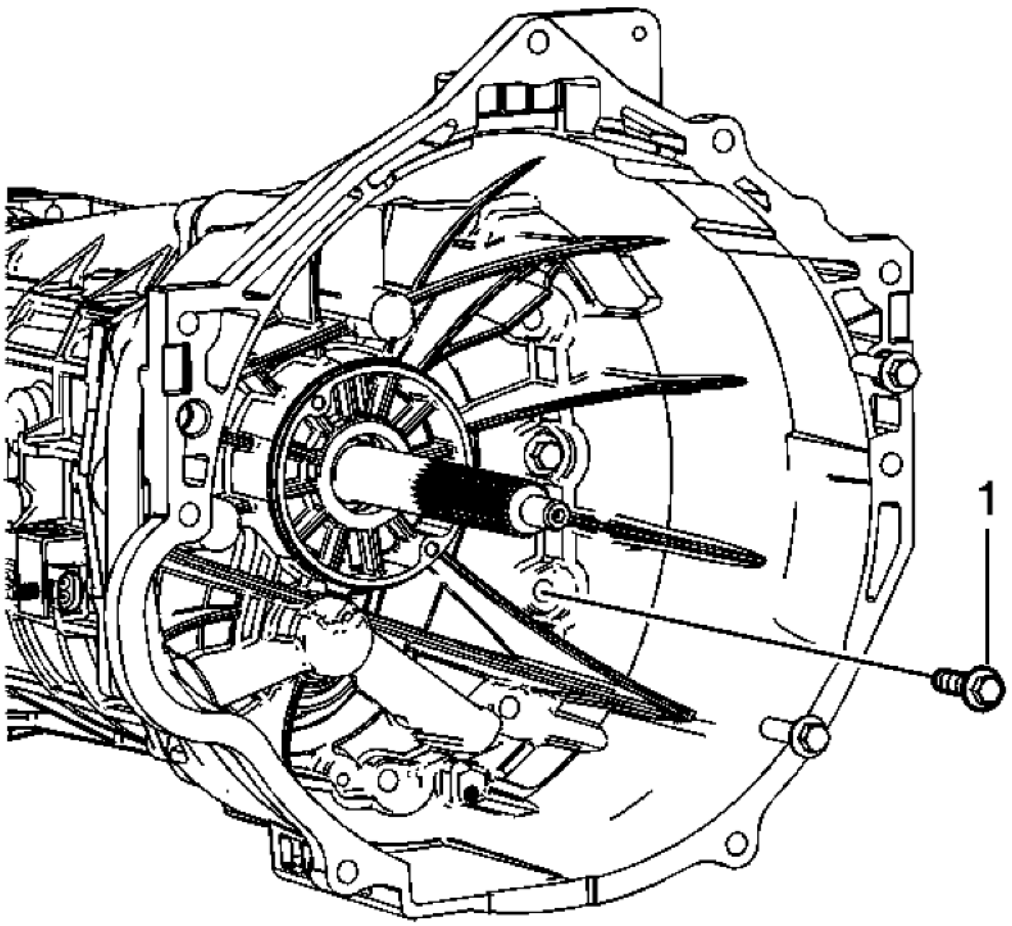

Fig. 231: Identifying Clutch Housing To Transmission Case Bolts
Courtesy of GENERAL MOTORS CORP.

6. Install the clutch housing to transmission case bolts (1) and tighten to 48 N.m (36 Ib ft).
7. Install the clutch concentric actuator cylinder. Refer to **Clutch Concentric Actuator Cylinder Replacement (Aisin)** or **Clutch Concentric Actuator Cylinder Replacement (Tremec)** .

cardiagn.com

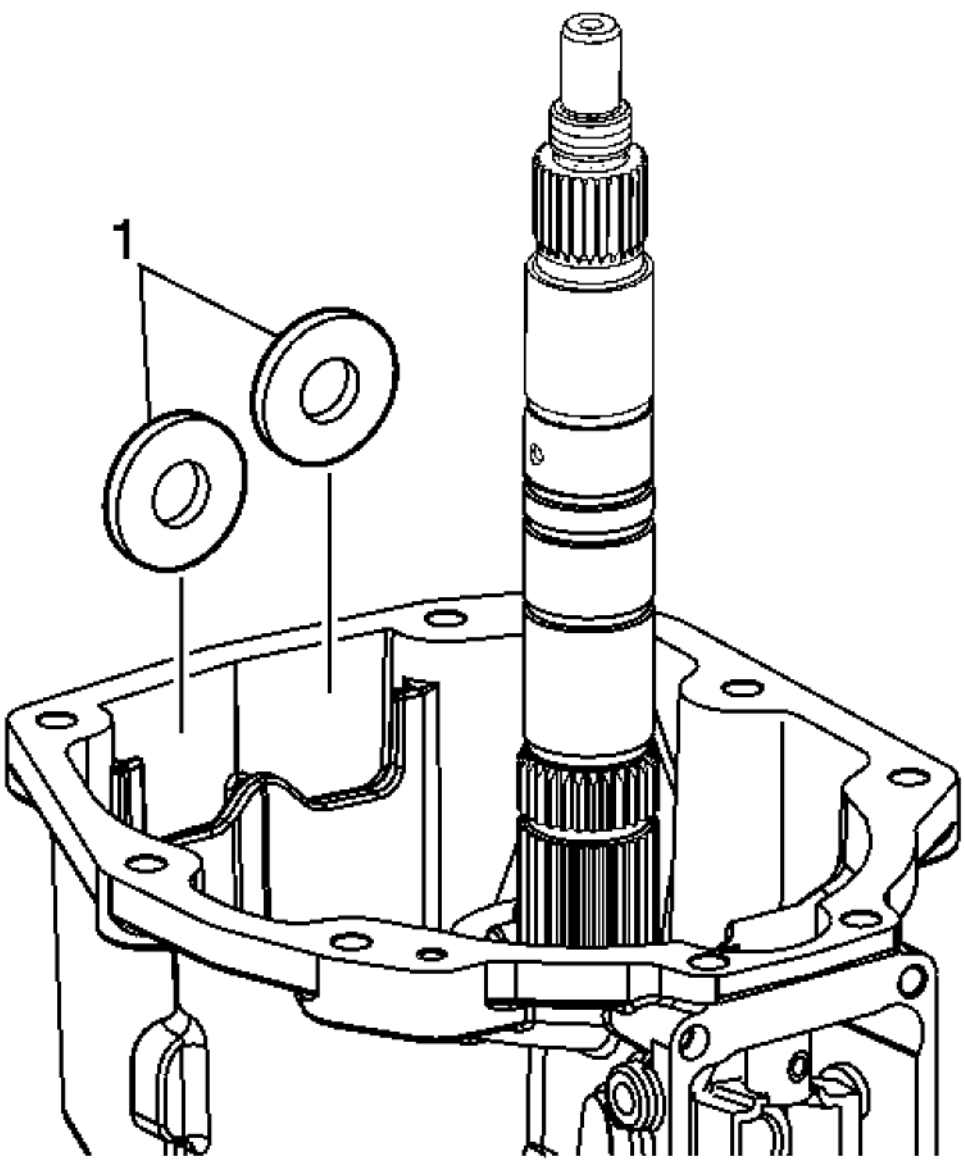

Fig. 232: Transmission Case Magnets
Courtesy of GENERAL MOTORS CORP.

8. Install the magnets (1) into the transmission case.

cardiagn.com

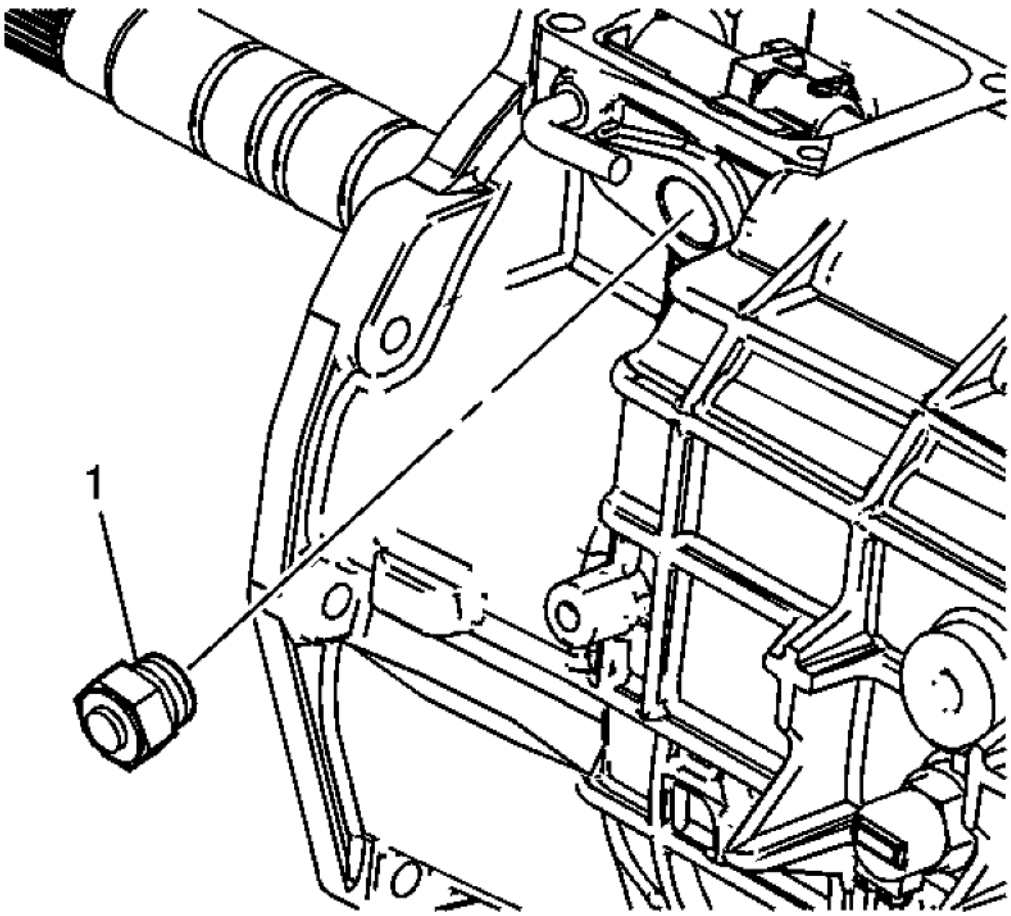

Fig. 233: Identifying Shift Detent Assembly
Courtesy of GENERAL MOTORS CORP.

9. Install the shift detent assembly (1) and tighten to 40 N.m (30 lb ft).

cardiagn.com

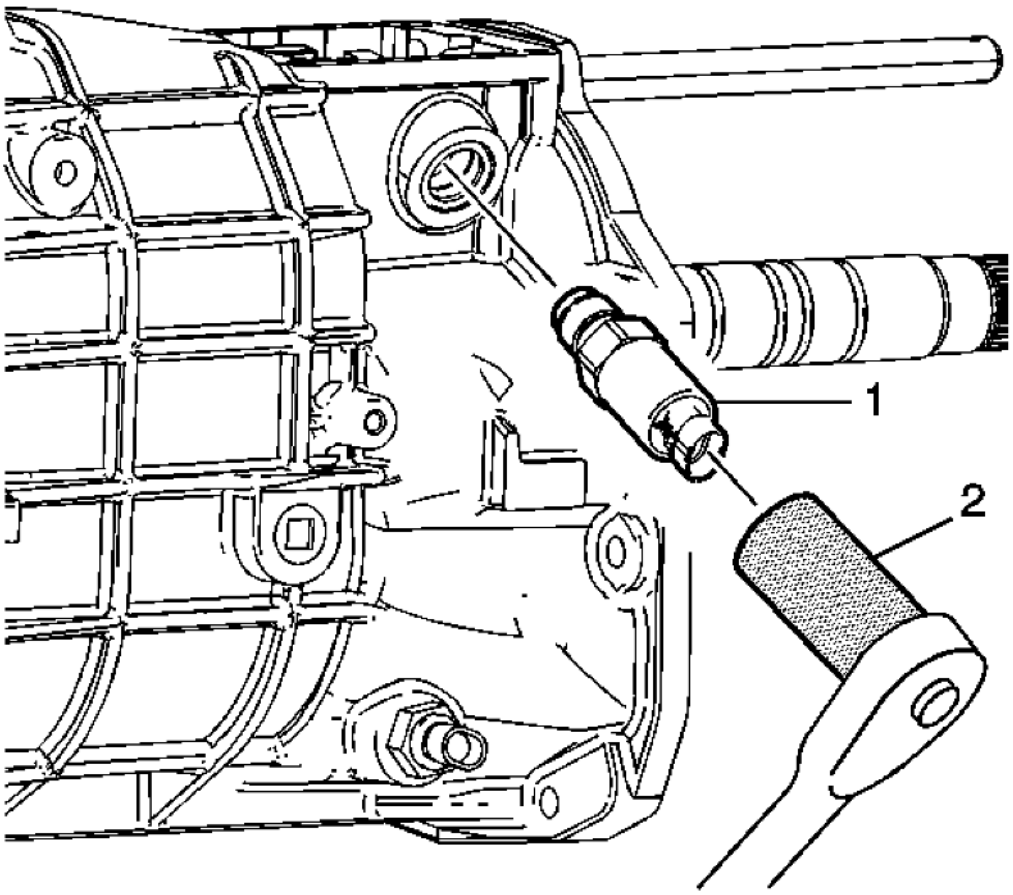

Fig. 234: Removing/Installing Gear Select/Skip Shift Solenoid
Courtesy of GENERAL MOTORS CORP.

10. Using **DT 49293:** socket (2), install the gear select/skip shift solenoid (1) and tighten to 40 N.m (30 lb ft).

5th Speed Driven Gear and 6th Speed Drive Gear Installation

cardiagn.com

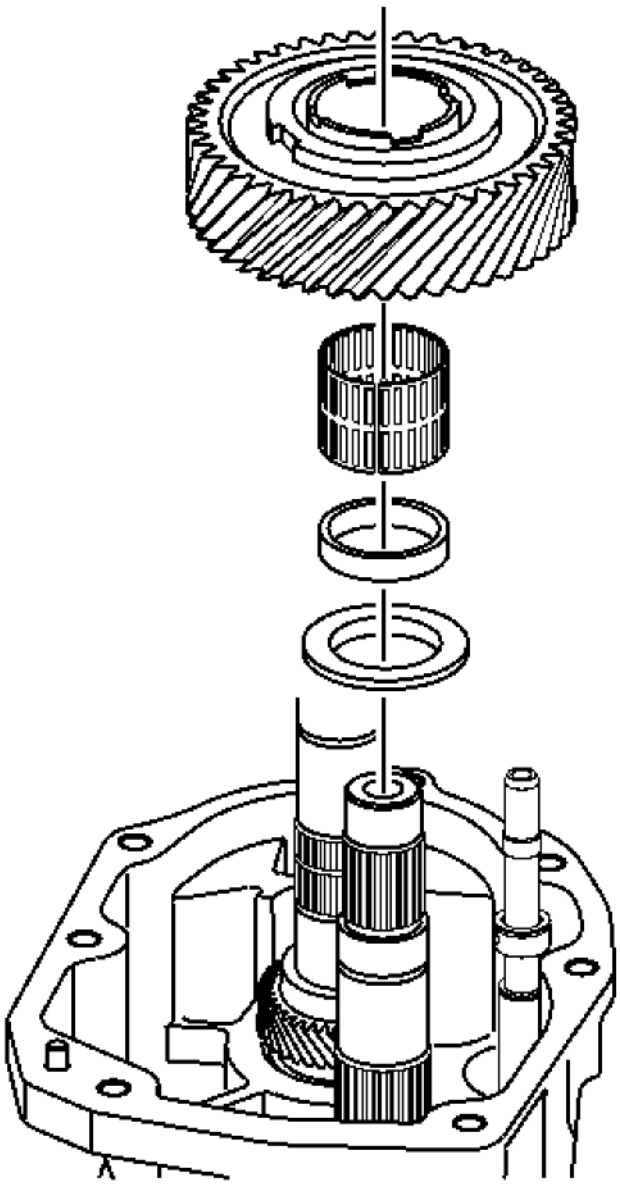

Fig. 235: View Of 6th Driven Gear, Caged Needle Bearing, And Spacers
Courtesy of GENERAL MOTORS CORP.

1. Install two spacers, caged needle bearing, and 6th drive gear.

cardiagn.com

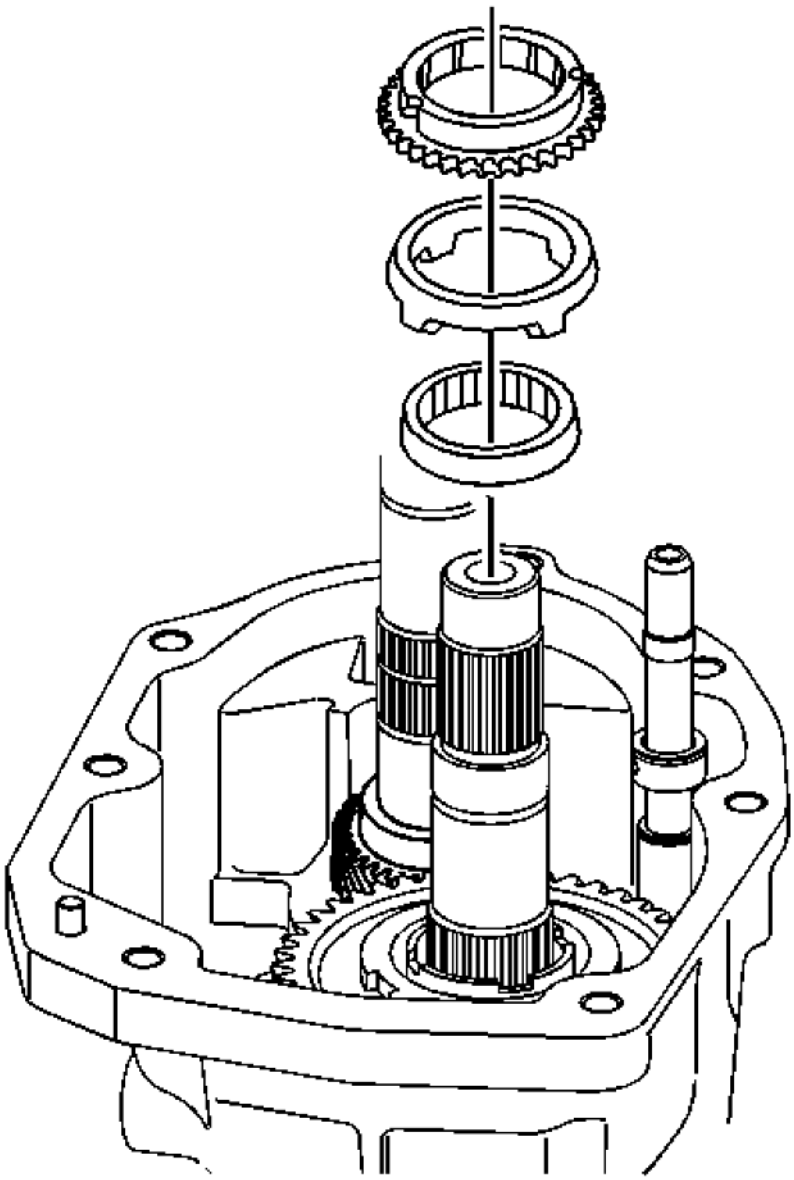

Fig. 236: 6th Speed Drive Gear Components
Courtesy of GENERAL MOTORS CORP.

2. Install the 6th speed drive gear inner cone, 6th speed drive gear friction cone, and synchronizer blocking ring.

cardiagn.com

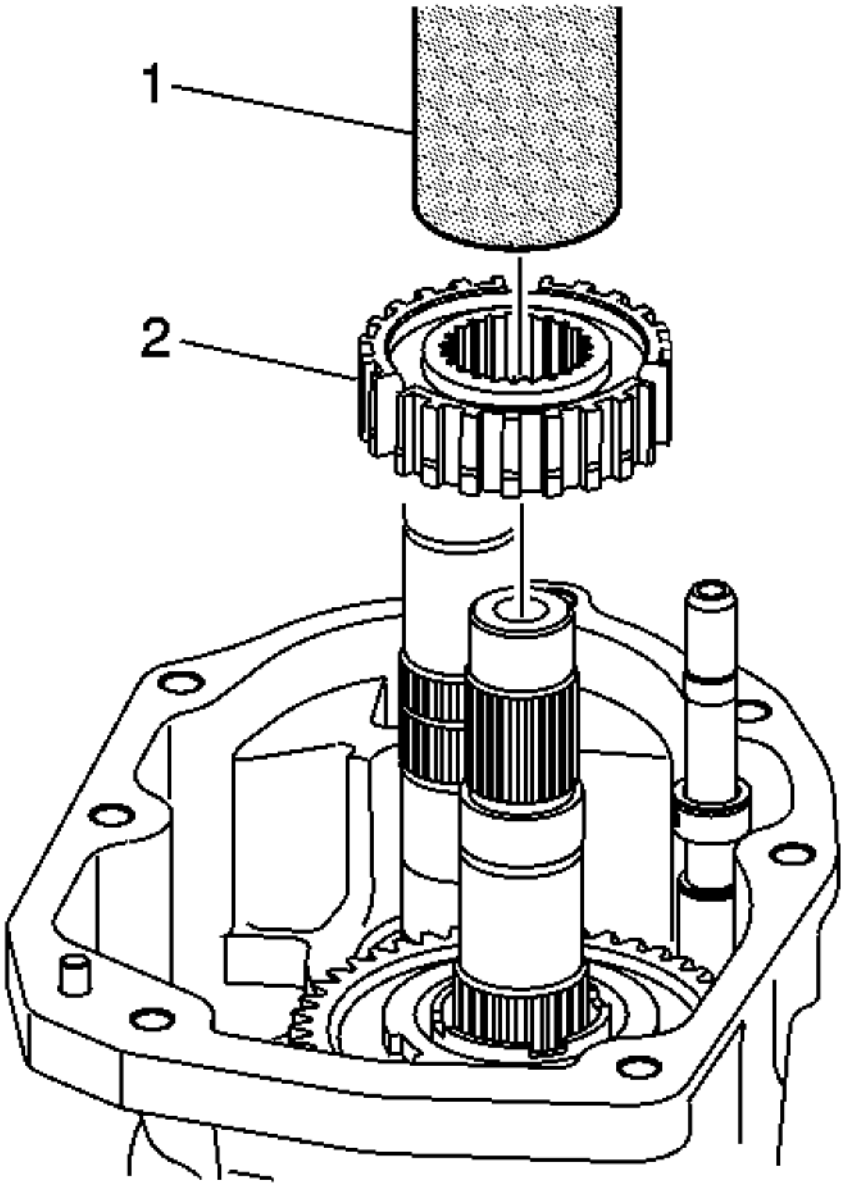

Fig. 237: Identifying Synchronizer Hub Assembly
Courtesy of GENERAL MOTORS CORP.

3. Install the 5th/6th synchronizer hub assembly (2) using **J 38205-1:** tube (1).

cardiagn.com

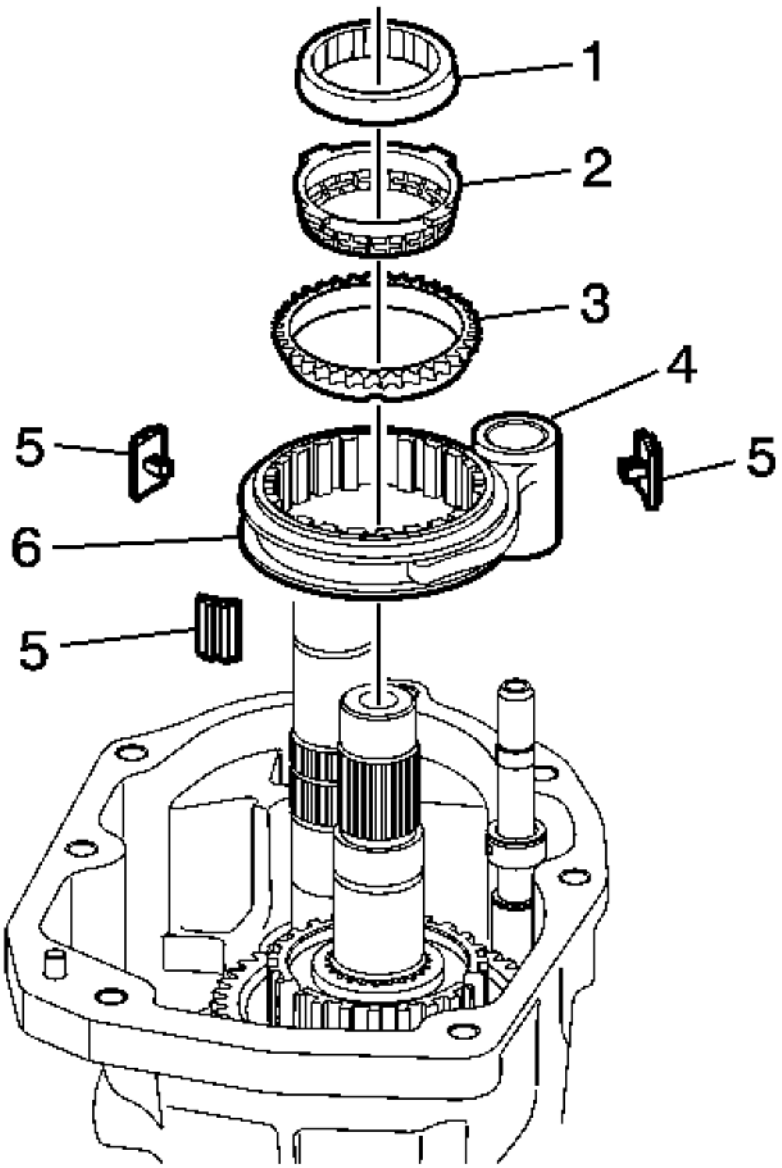

Fig. 238: 5th/6th Synchronizer Components
Courtesy of GENERAL MOTORS CORP.

4. Install the following components:
    - Drive gear inner cone
    - Drive gear friction cone

cardiagn.com

- Synchronizer blocking ring
- Synchronizer inserts
- Synchronizer sleeve
- 5th/6th shift fork

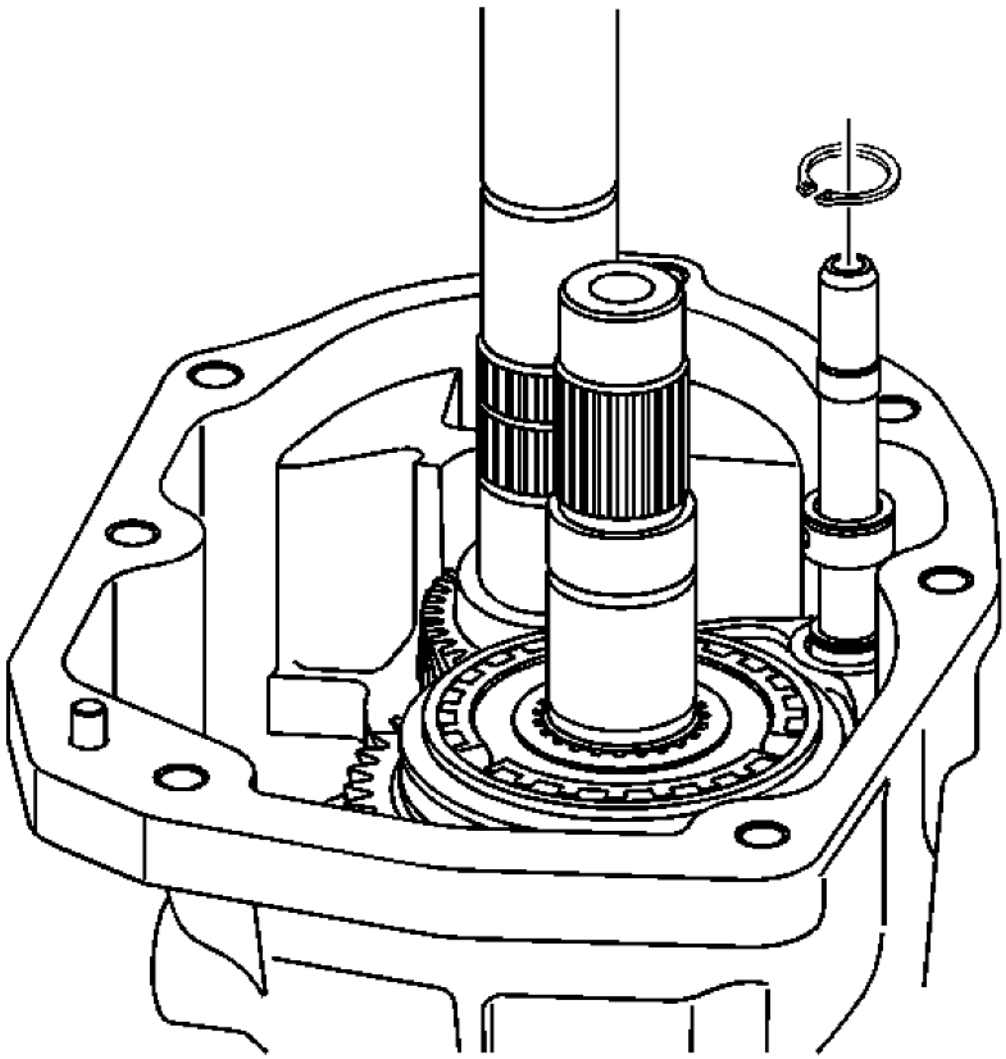

Fig. 239: View Of 5th/6th Speed Shift Fork Retainer Ring
Courtesy of GENERAL MOTORS CORP.

5. Install the 5th/6th speed shift fork retainer ring.

cardiagn.com

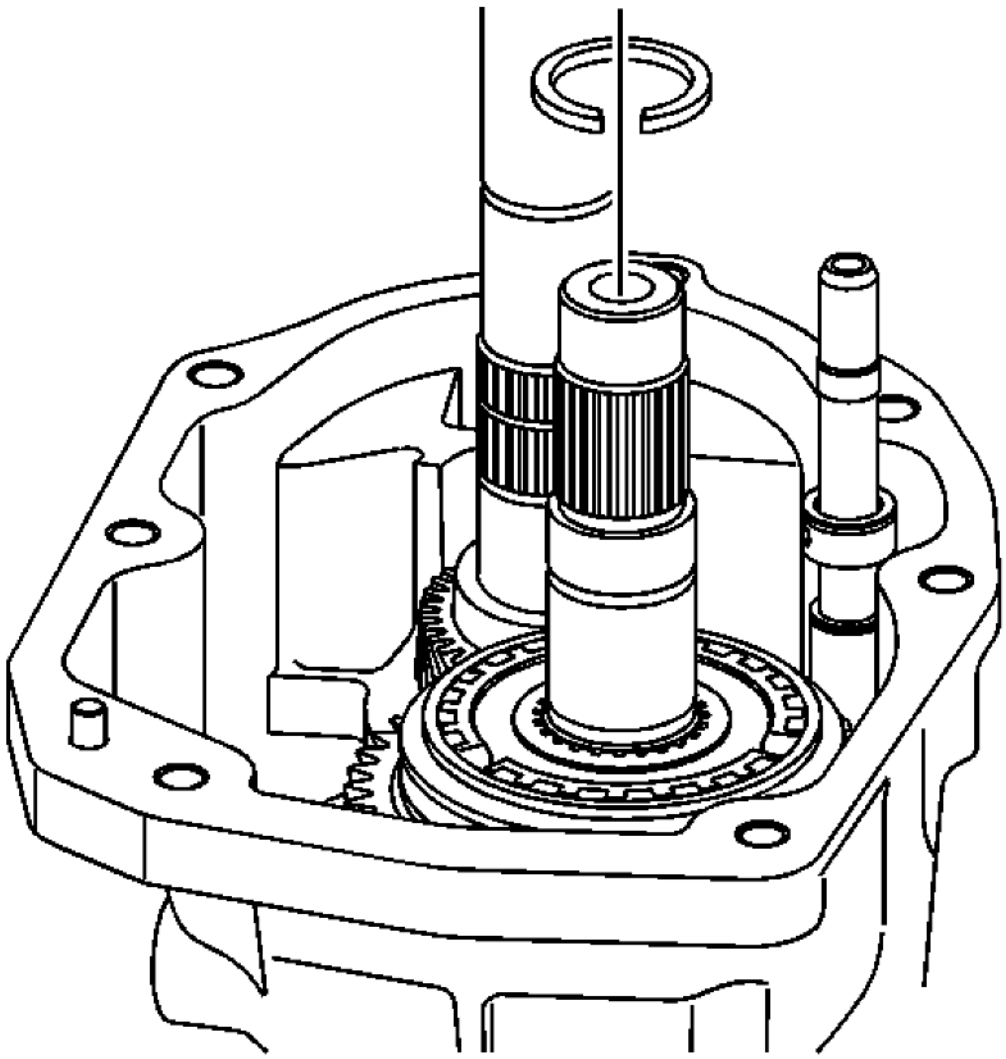

Fig. 240: 5th & 6th Gear Synchronizer Hub Retainer Ring
Courtesy of GENERAL MOTORS CORP.

6. Install the retainer clip to the countershaft.

cardiagn.com

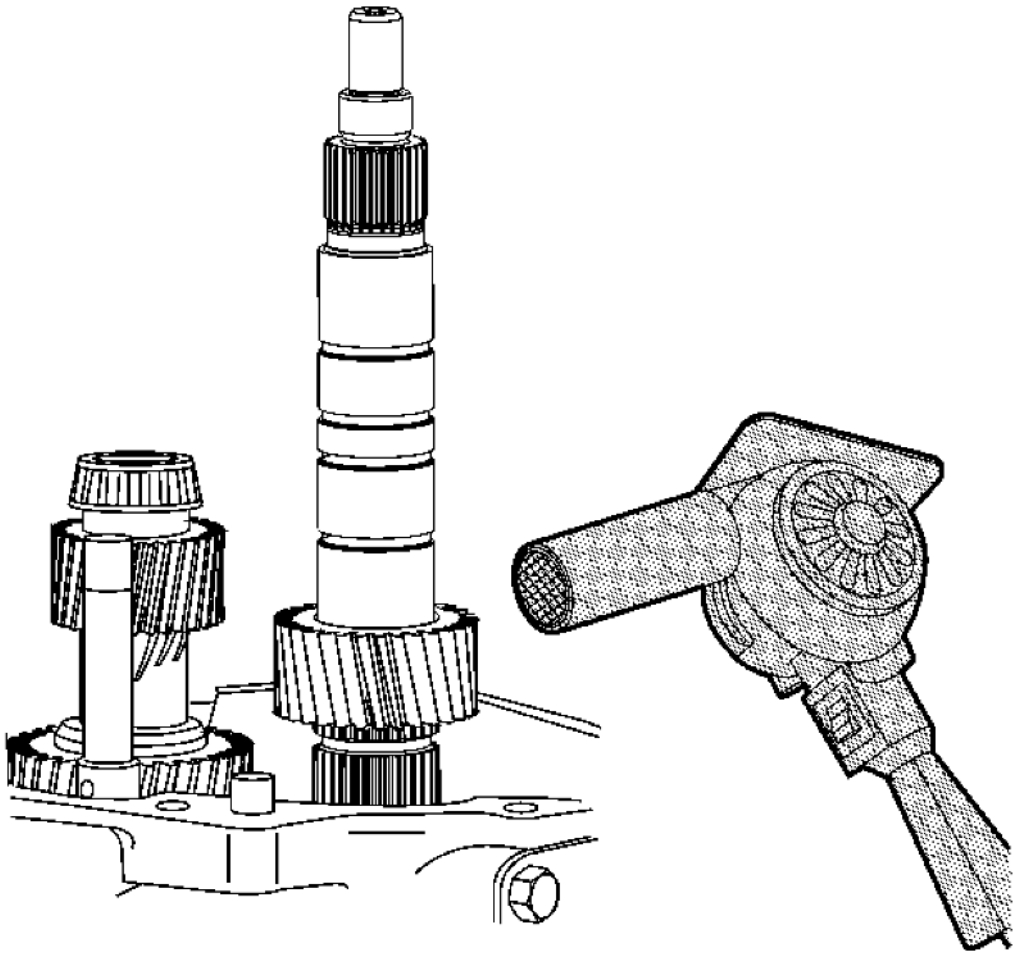

Fig. 241: Installing 5th/6th Speed Driven Gear
Courtesy of GENERAL MOTORS CORP.

7. Install the 5th/6th speed driven gear (1) by heating to 54°C (130°F). The smaller outside diameter (OD) of the gear faces down.

Reverse Shift Fork Installation

cardiagn.com

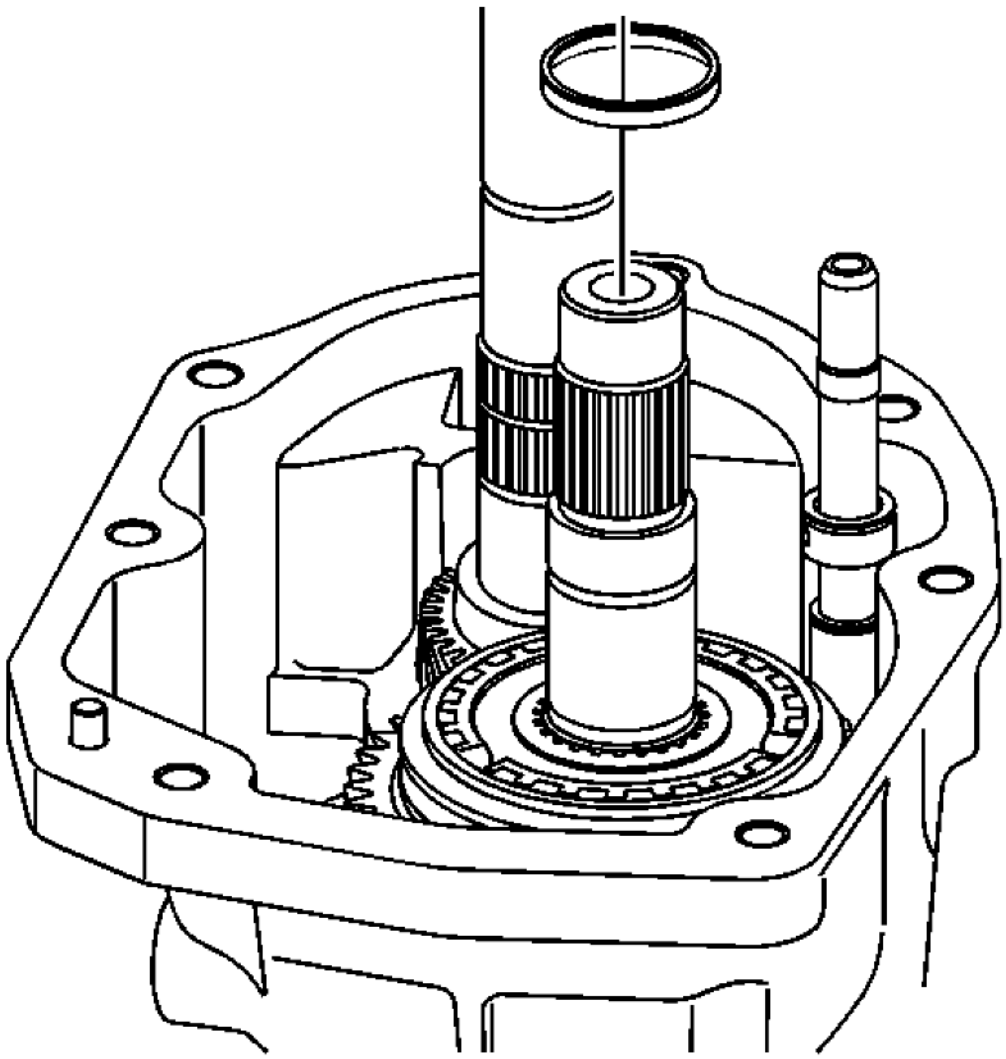

Fig. 242: View Of Countershaft Spacer
Courtesy of GENERAL MOTORS CORP.

1. Install the spacer to the countershaft.

cardiagn.com

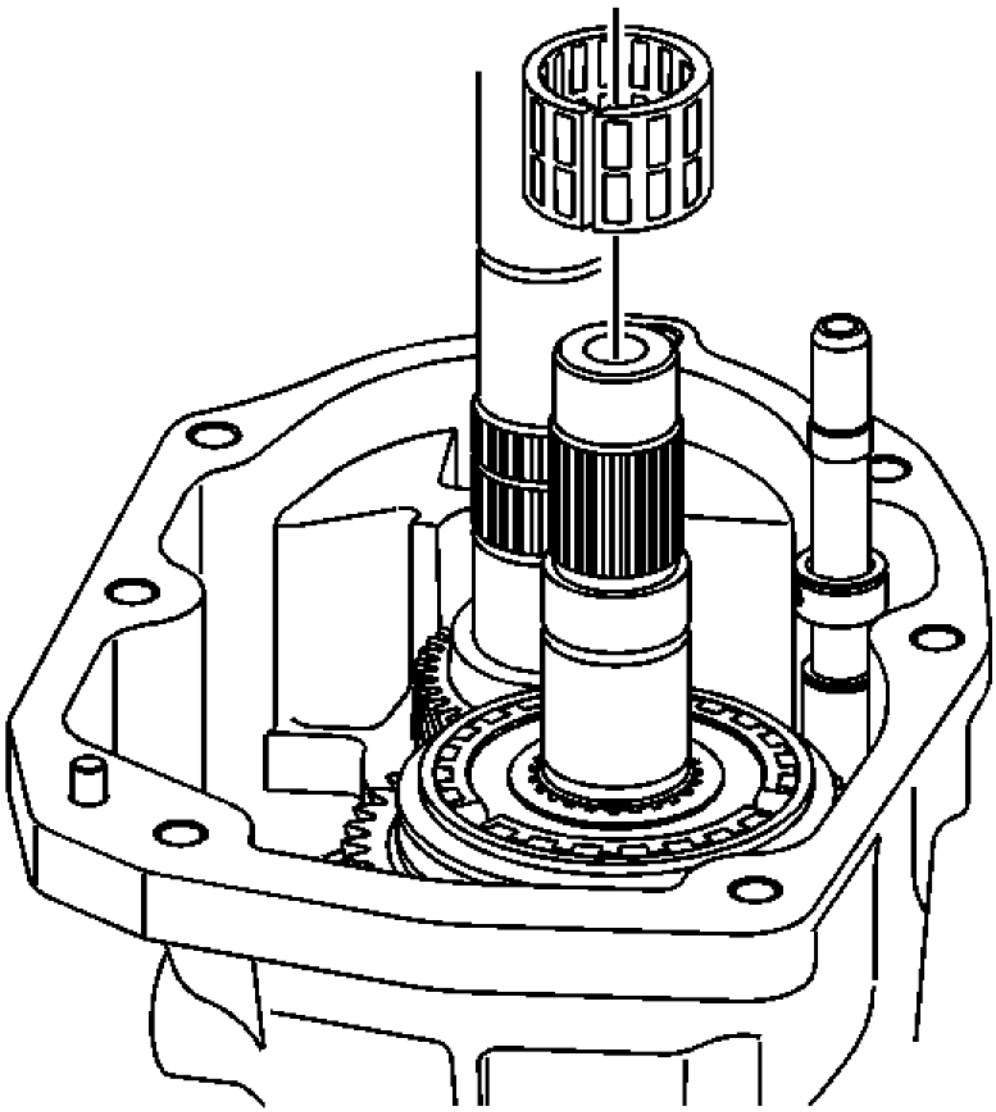

Fig. 243: View of Needle Bearing & Countershaft
Courtesy of GENERAL MOTORS CORP.

2. Install the needle bearing to the countershaft.

cardiagn.com

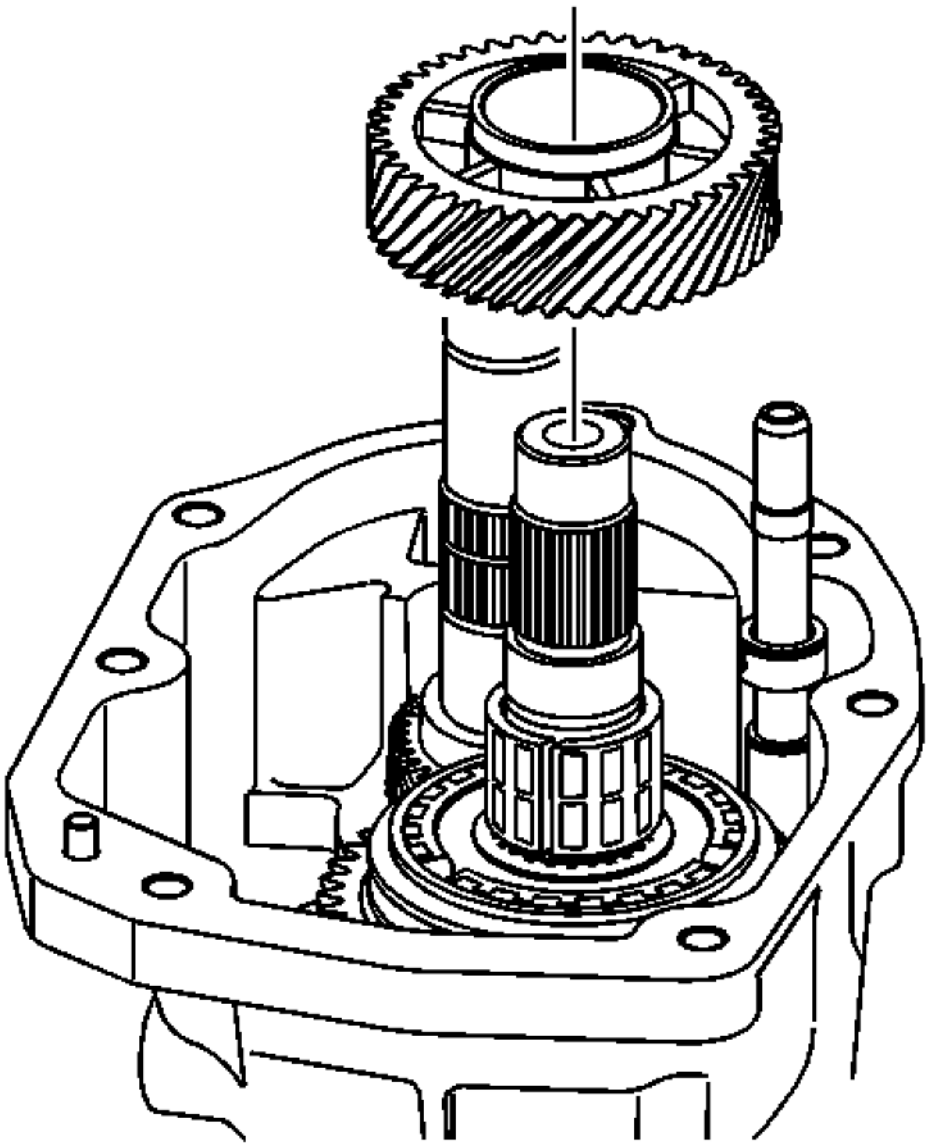

Fig. 244: View Of Gear & Countershaft
Courtesy of GENERAL MOTORS CORP.

NOTE: Align the gear with the raised tabs on the synchronizer to ensure the gear sets flush.

3. Install the gear to the countershaft.

cardiagn.com

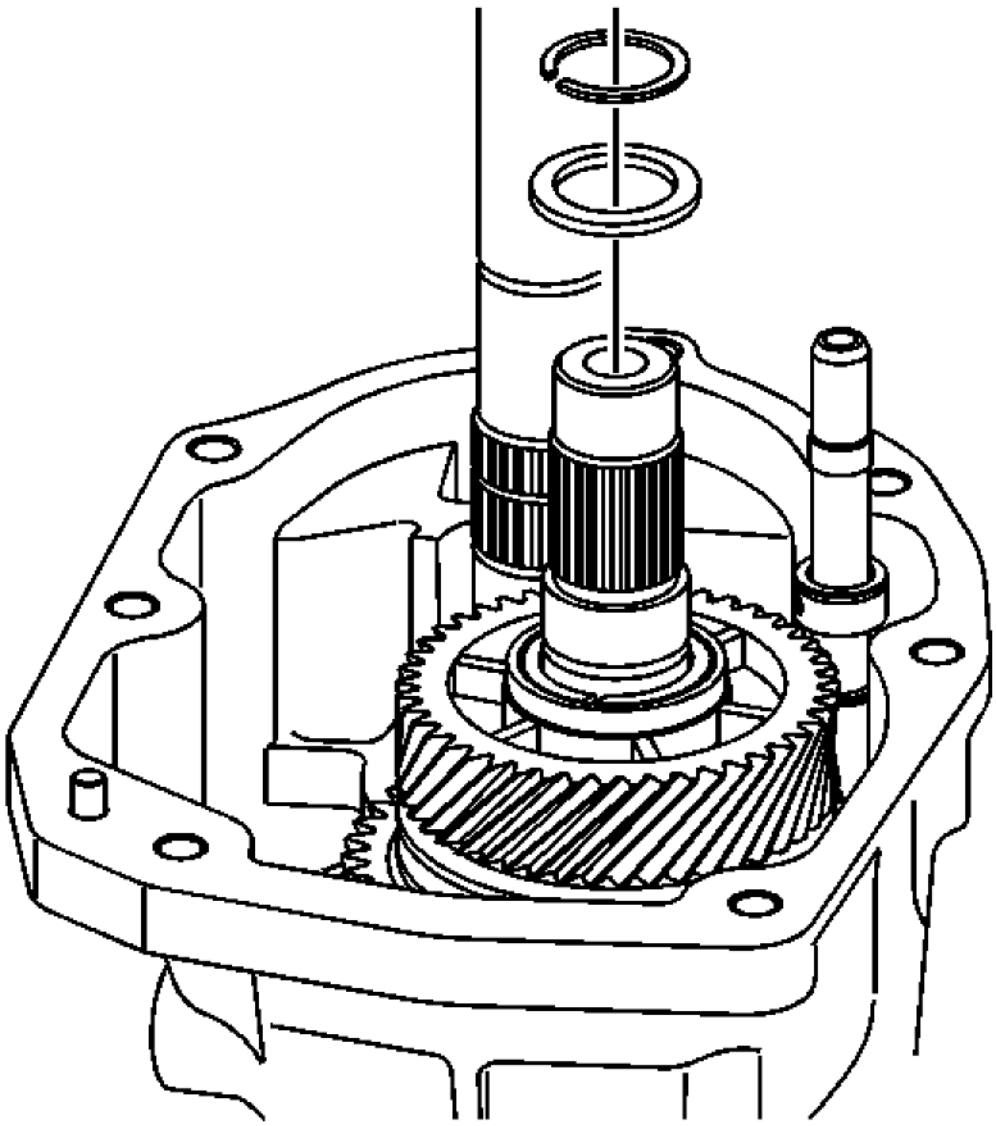

Fig. 245: View Of Countershaft Retainer & Spacer
Courtesy of GENERAL MOTORS CORP.

4. Install the countershaft retainer and spacer.

cardiagn.com

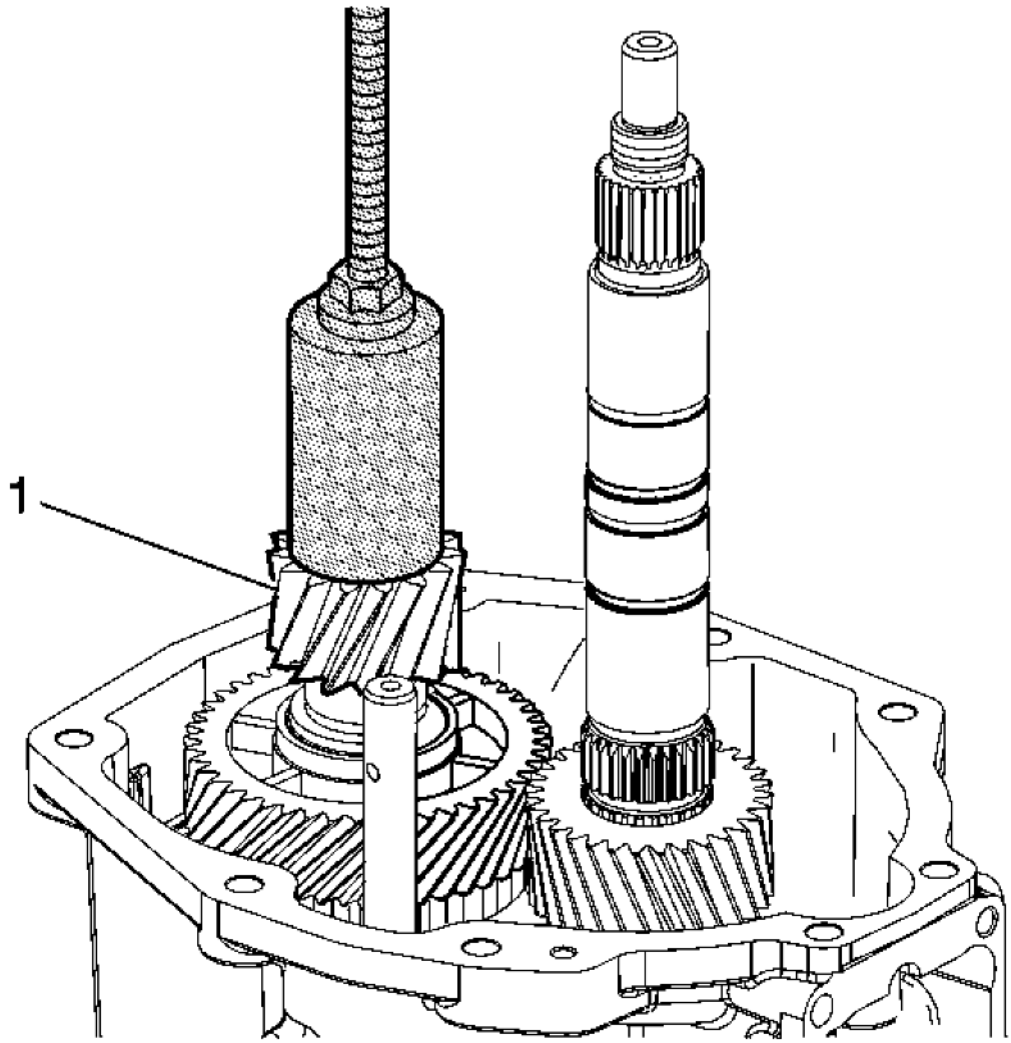

Fig. 246: Installing Countershaft Gear
Courtesy of GENERAL MOTORS CORP.

5. Install the countershaft gear (1) using **J 39441-30:** gear installer.

cardiagn.com

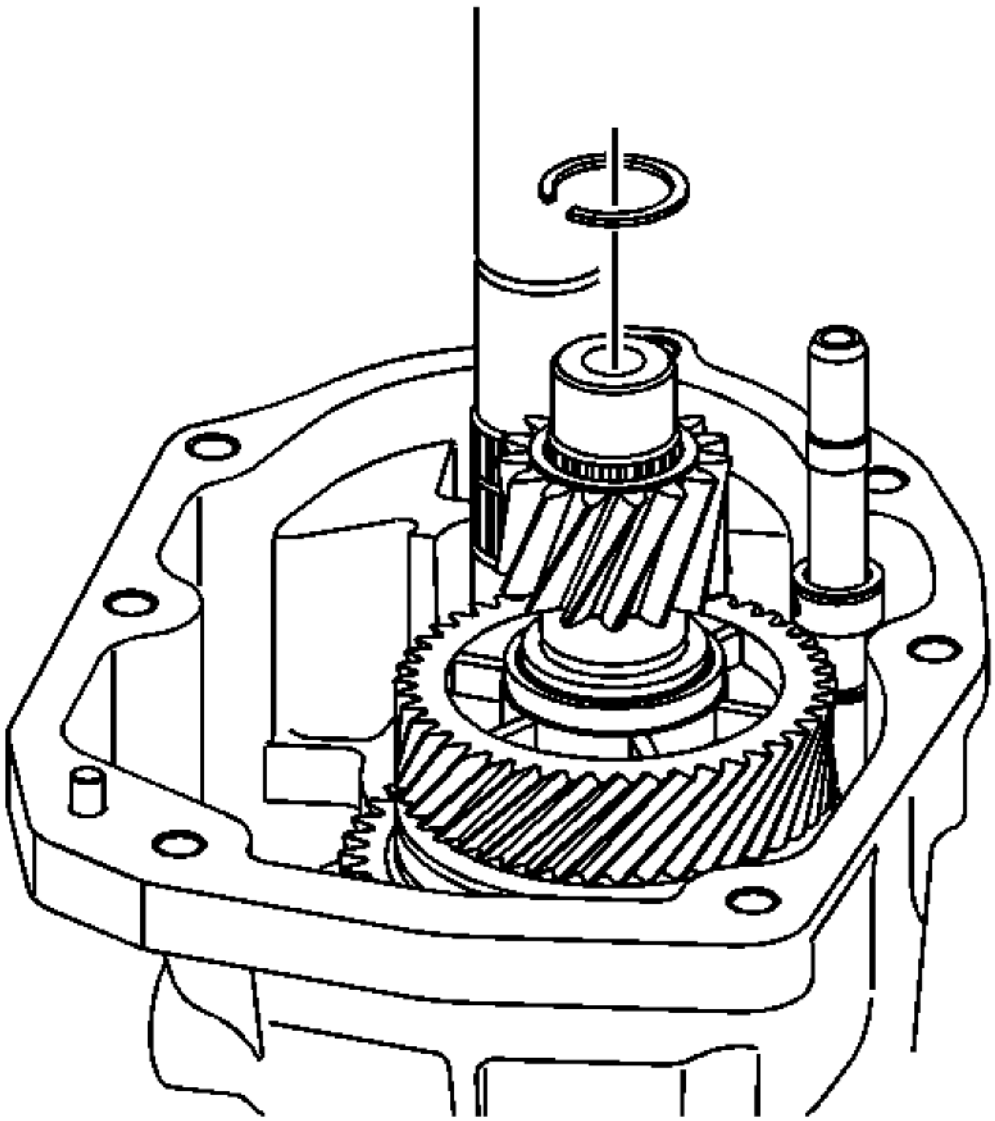

Fig. 247: Counter Shaft Retainer Ring
Courtesy of GENERAL MOTORS CORP.

6. Install the countershaft retainer ring.

cardiagn.com

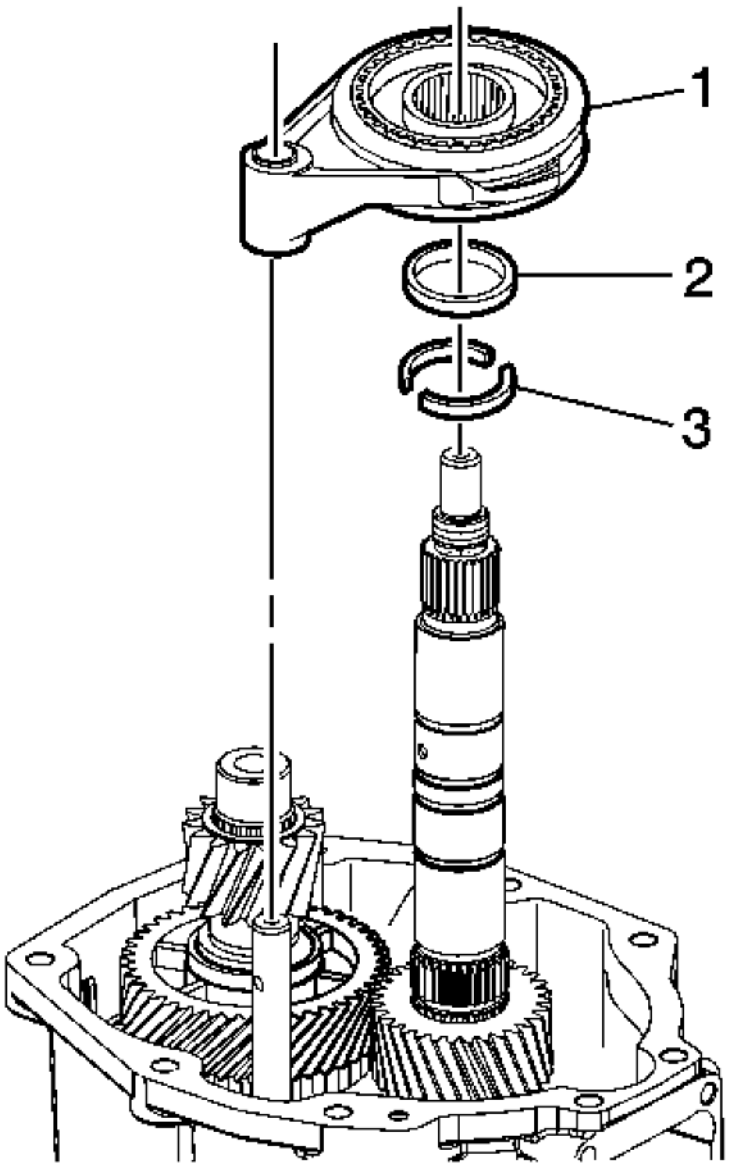

Fig. 248: Reverse Shift Fork Components
Courtesy of GENERAL MOTORS CORP.

7. Install the two piece thrust washer (3).
8. Install the locking ring (2).
9. Install the reverse shift fork and the synchronizer (1).

cardiagn.com

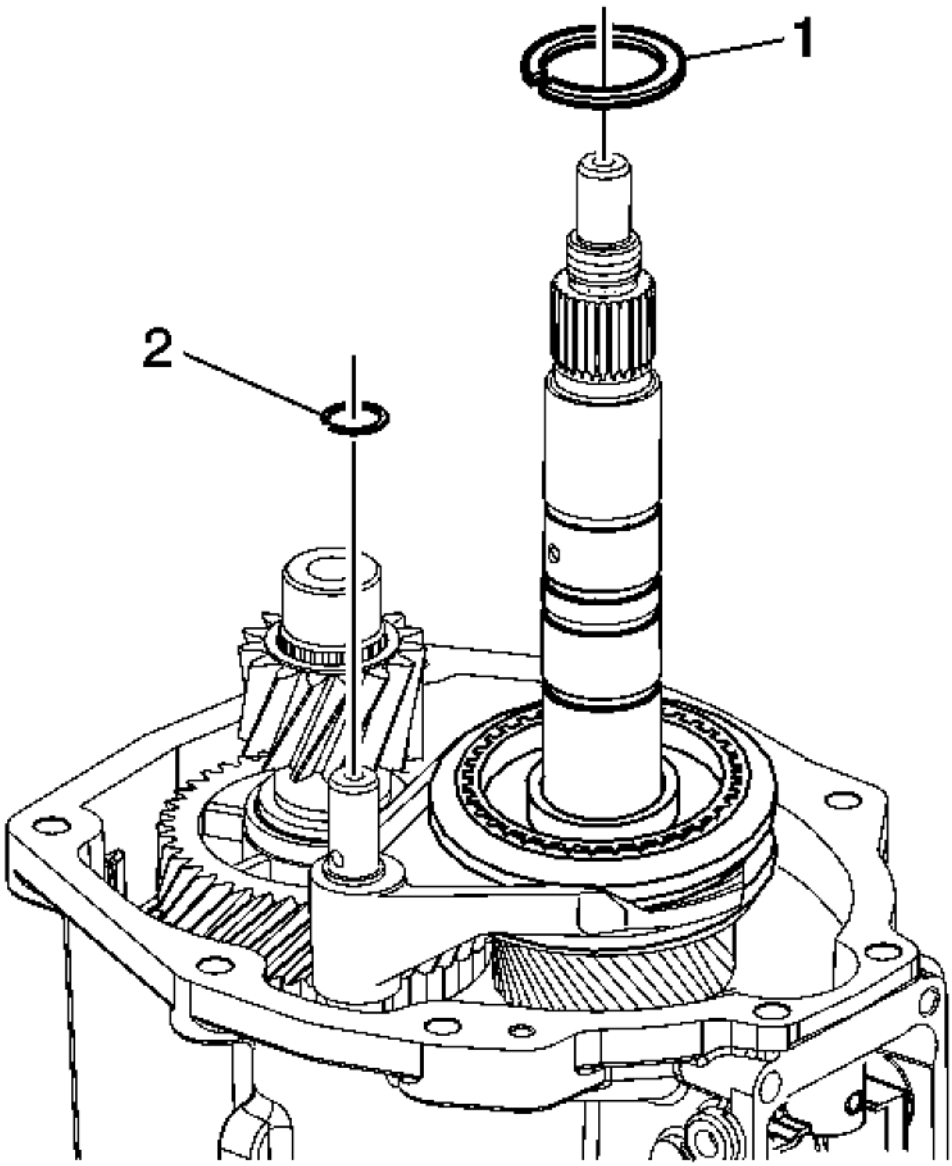

Fig. 249: Reverse Synchronizer & Reverse Shift Fork Retainer Rings
Courtesy of GENERAL MOTORS CORP.

10. Install a NEW shift fork retainer ring (2).
11. Install the reverse synchronizer retainer ring (1).

Reverse Speed Gear Installation

cardiagn.com

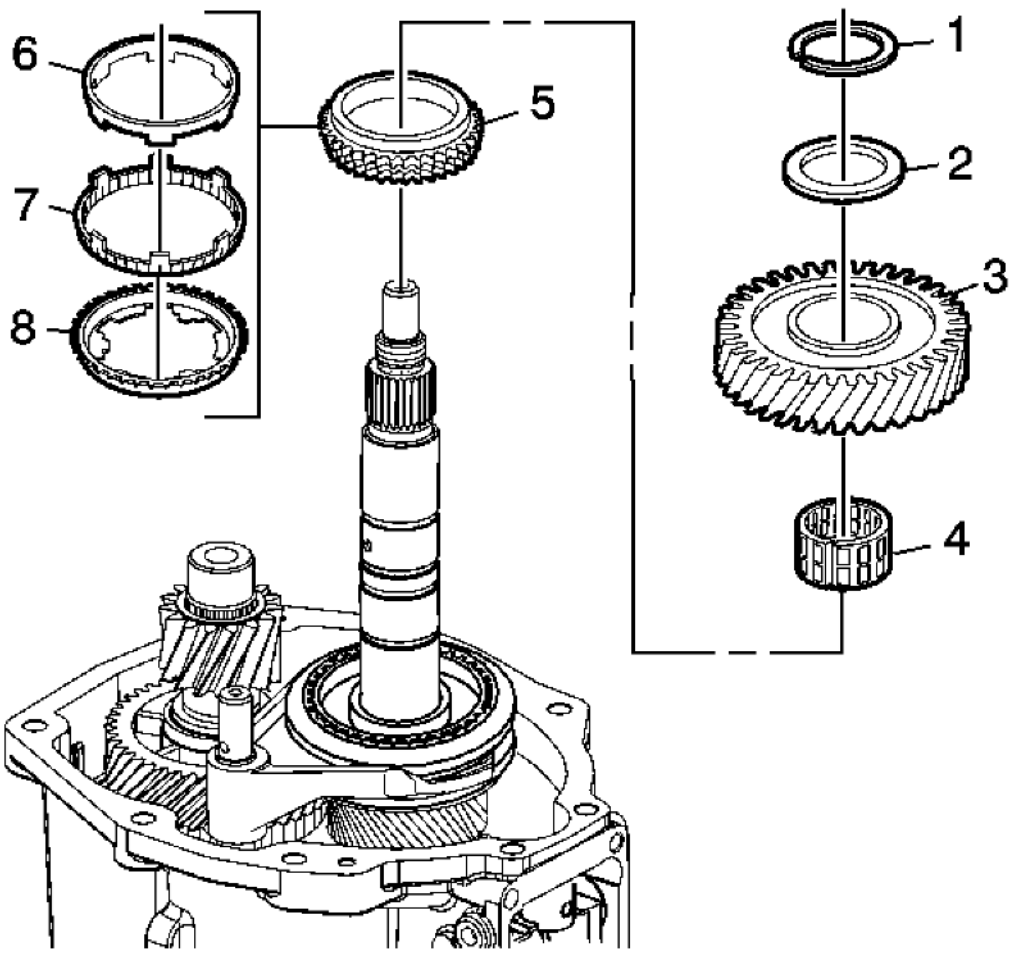

Fig. 250: Reverse Gear Components
Courtesy of GENERAL MOTORS CORP.

1. Install the following parts in order:
    1. The reverse gear blocking ring assembly (5), including the following components:
        - Reverse gear inner ring (6)
        - Reverse gear outer ring (7)
        - Reverse gear blocking ring (8)
    2. The caged needle bearing (4)
    3. The reverse speed gear (3)
    4. The thrust washer (2)
    5. The retainer ring (1)

cardiagn.com

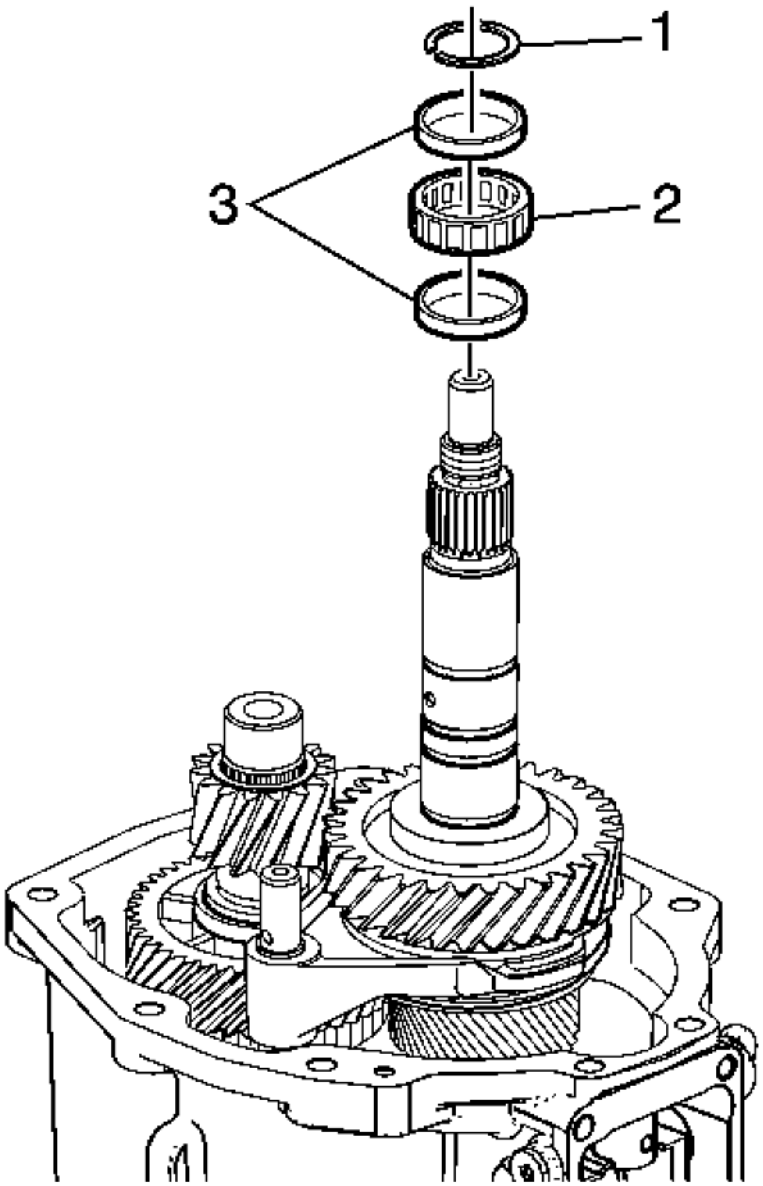

Fig. 251: Rear Bearing Retainer Ring, Spacers & Mainshaft Rear Roller Bearing
Courtesy of GENERAL MOTORS CORP.

2. Install the following parts in order:
    1. The spacer (3)
    2. The roller bearing (2)

cardiagn.com

3. The spacer (3)
4. The roller bearing retainer ring (1)

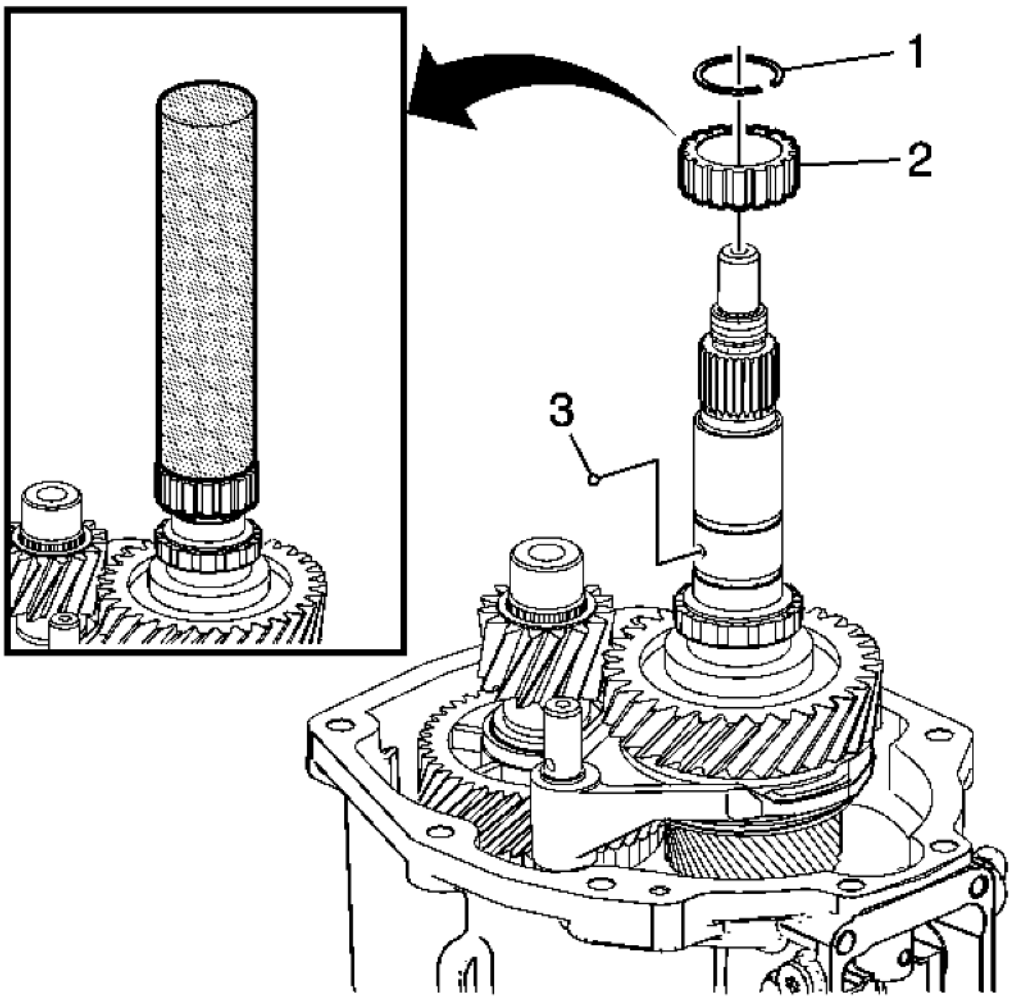

Fig. 252: Locking Ball, Speed Sensor Rotor & Snap Ring
Courtesy of GENERAL MOTORS CORP.

3. Install the following parts in order:
   - The locking ball (3)
   - The speed sensor rotor (2) using **J 38205-1:** press tube
   - The snap ring (1)

cardiagn.com

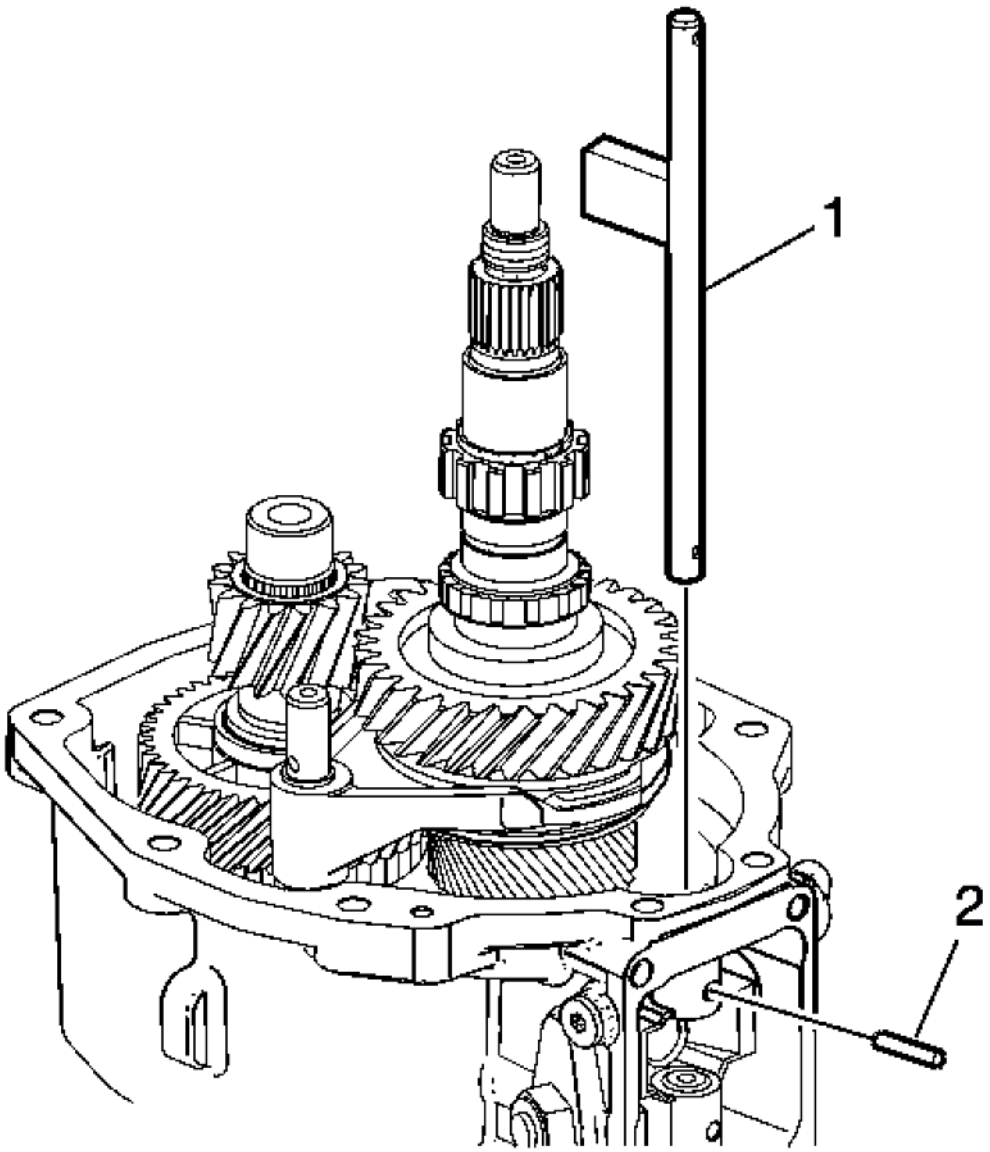

Fig. 253: Offset Shift Lever & Shift Guide Rollpin
Courtesy of GENERAL MOTORS CORP.

4. Install the extension housing main shaft bearing race (3).
5. Install the shift shaft extension (2).
6. Install NEW shift guide roll pin (1).

cardiagn.com

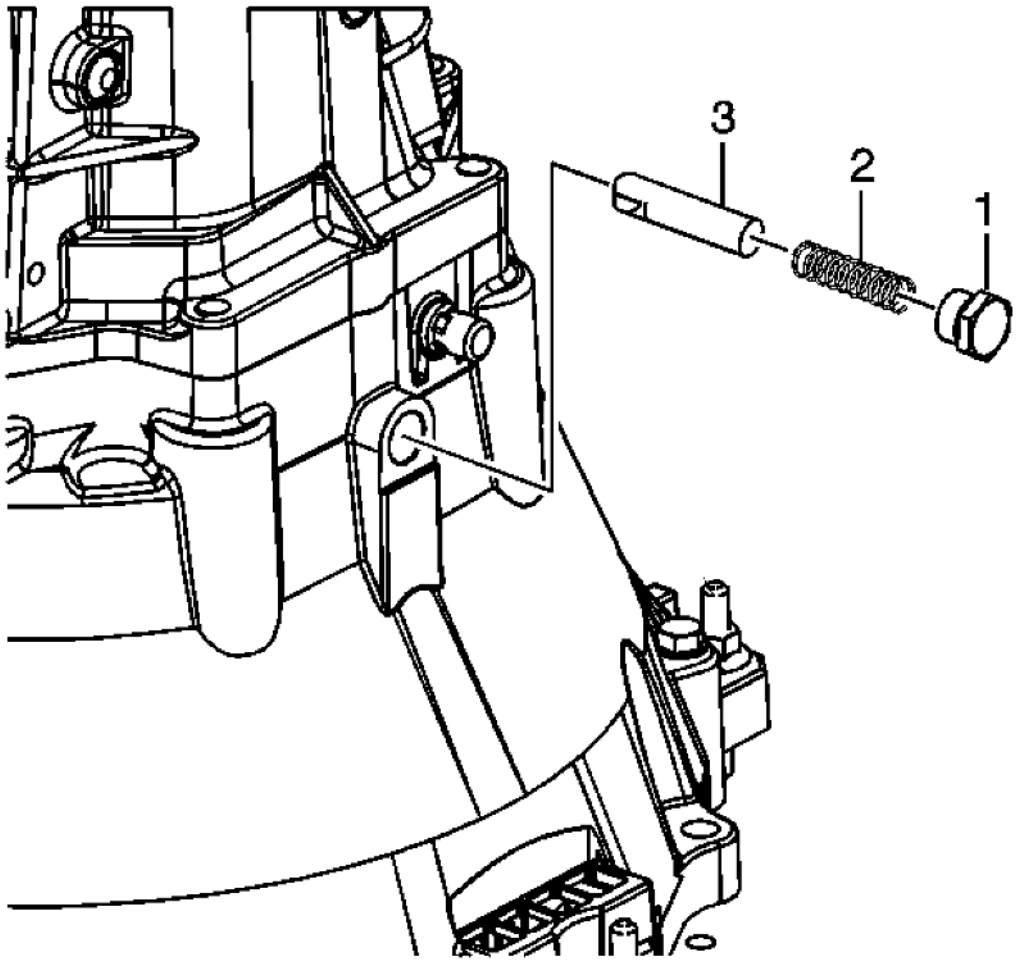

Fig. 254: Identifying Plug, Spring & Shift Detent Roller
Courtesy of GENERAL MOTORS CORP.

7. Lift up on the shift shaft extension while installing the shift detent roller (3), spring (2) and plug (1). Tighten the plug to 24 N.m (18 lb in).

Extension Housing Assembly Installation

cardiagn.com

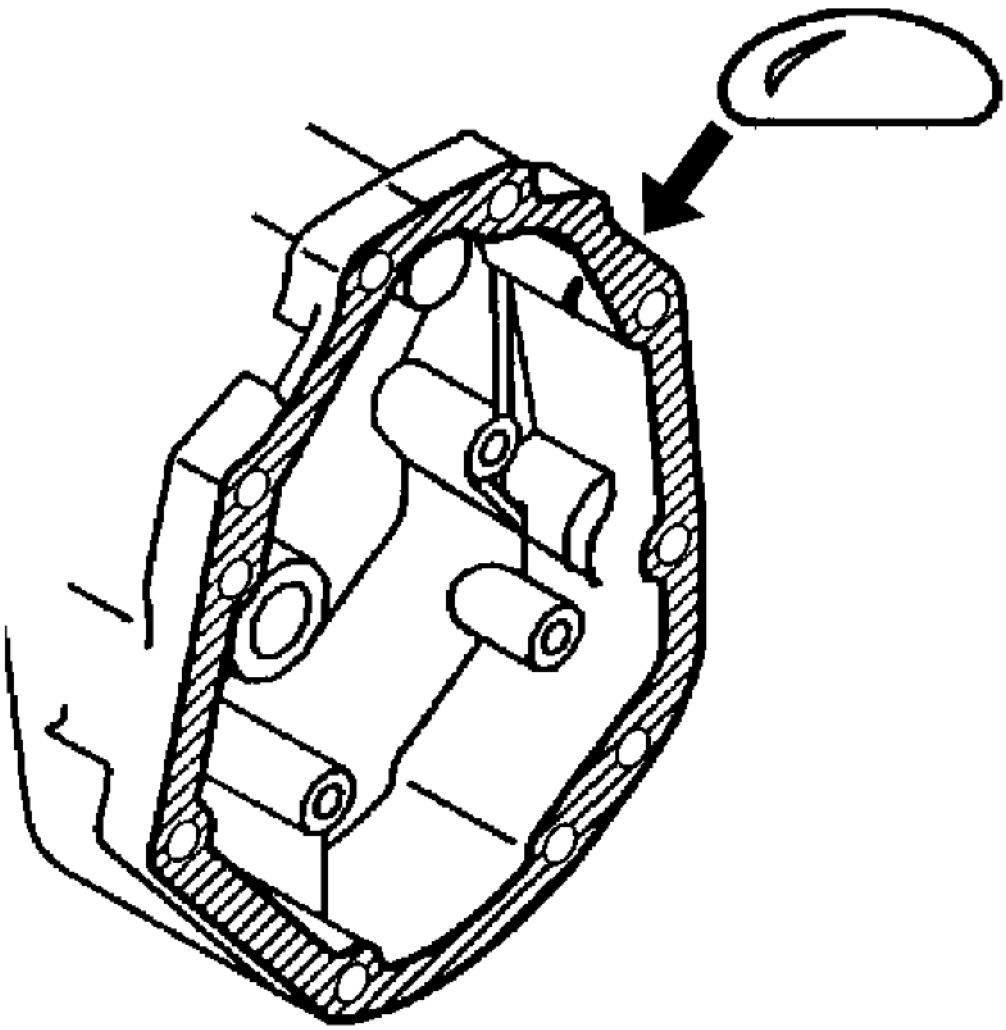

Fig. 255: Applying Sealant To Extension Housing To Transmission Case Mating Surface
Courtesy of GENERAL MOTORS CORP.

1. Apply sealant GM P/N 12345739, (Canadian P/N 10953472) or equivalent to the extension housing to the transmission case mating surface.

cardiagn.com

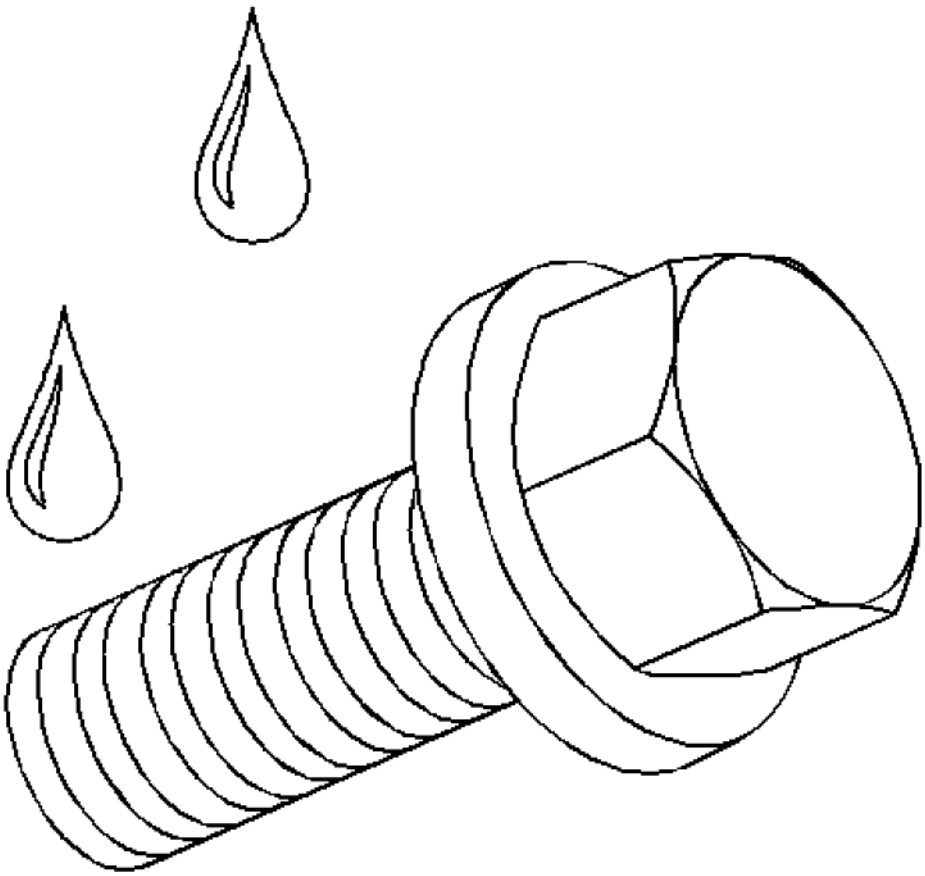

Fig. 256: Applying Thread Sealer To Bolt Threads
Courtesy of GENERAL MOTORS CORP.

2. Apply thread sealer GM P/N 12346004, (Canadian P/N 10953480) or equivalent to the top 2 extension housing bolts.

cardiagn.com

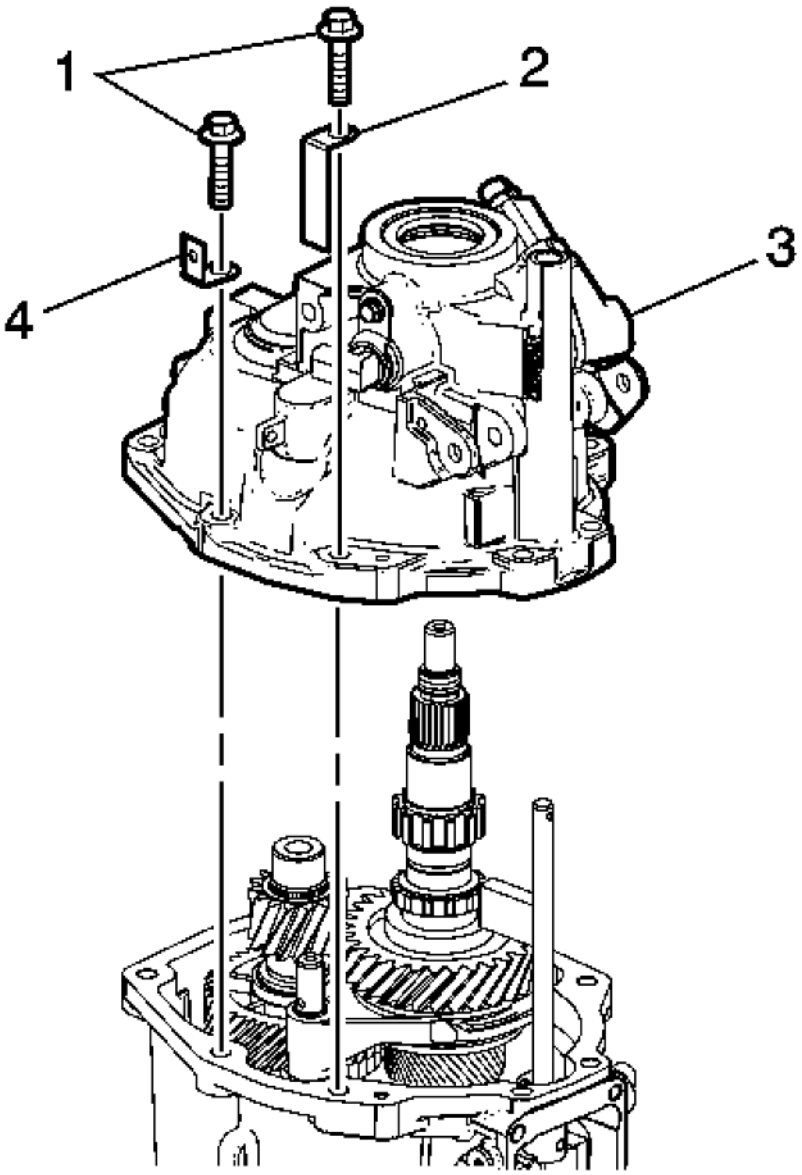

Fig. 257: Rear Extension Housing, Bolts, & Retainers
Courtesy of GENERAL MOTORS CORP.

NOTE: **Align the 5th/6th shift shaft to the extension housing bore in order to install the extension housing.**

cardiagn.com

3. Install the extension housing (2).
4. Install the extension housing bolts (1) and tighten to 48 N.m (36 lb ft).

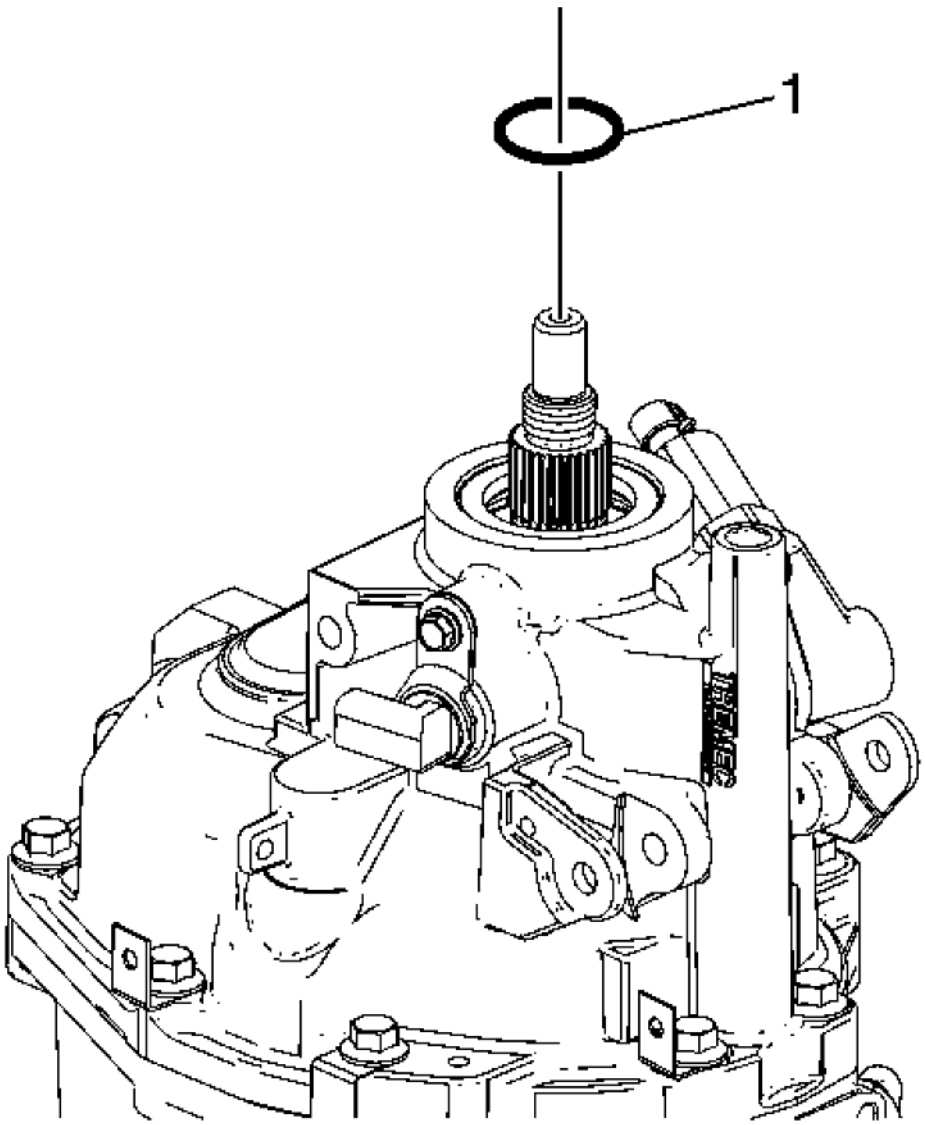

Fig. 258: Propshaft Transmission Yoke O-Ring
Courtesy of GENERAL MOTORS CORP.

5. Install the propshaft O-ring (1).

cardiagn.com

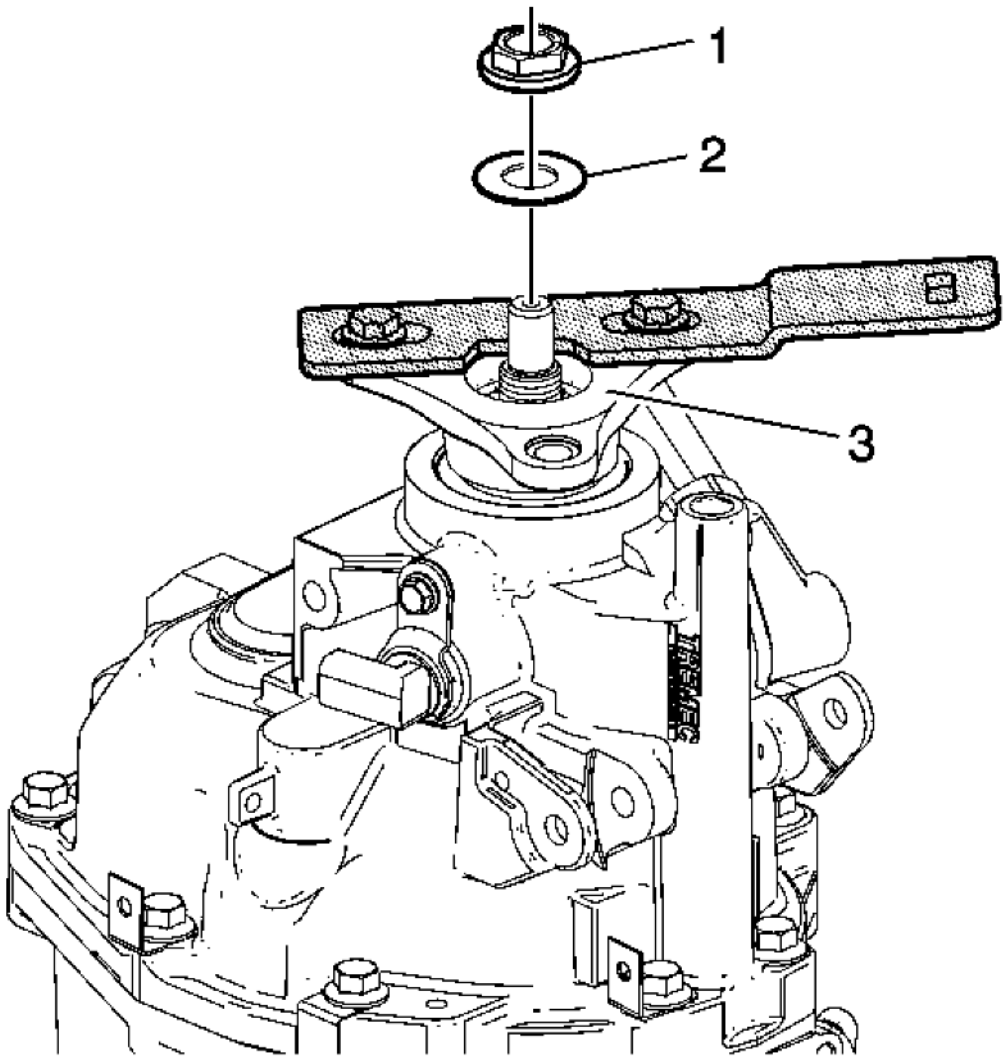

Fig. 259: Propshaft Transmission Yoke, Nut & Washer
Courtesy of GENERAL MOTORS CORP.

6. Install the propshaft transmission yoke (3).
7. Install the propshaft washer (2) and nut (1).
8. Use the **J 45012:** holder with the mounting bolts to hold the propshaft transmission yoke (3). Tighten the nut (1) to 136 N.m (100 lb ft).

cardiagn.com

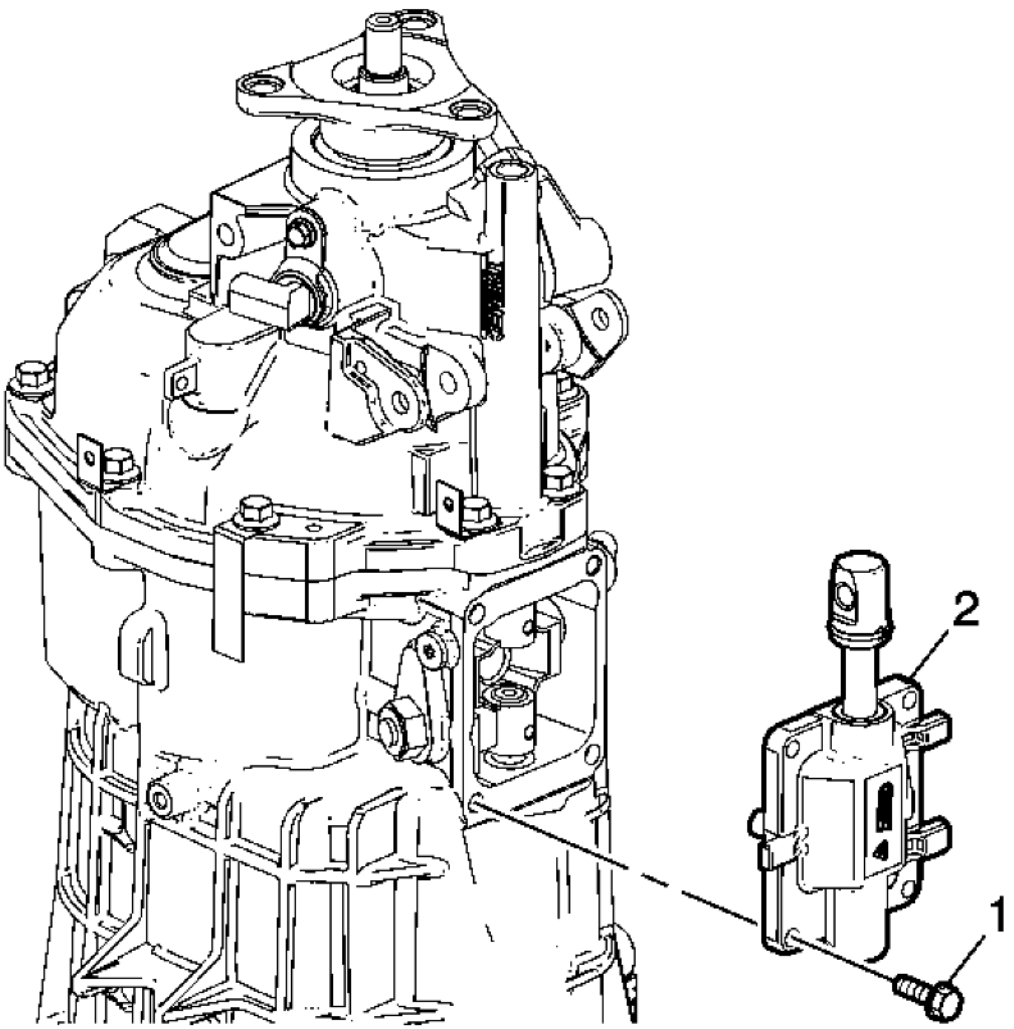

Fig. 260: Shift Control Cover & Bolts
Courtesy of GENERAL MOTORS CORP.

9. Install the shift control shaft cover (2).
10. Install the shift control shaft cover bolts (1) and tighten to 20 N.m (15 lb ft).

cardiagn.com

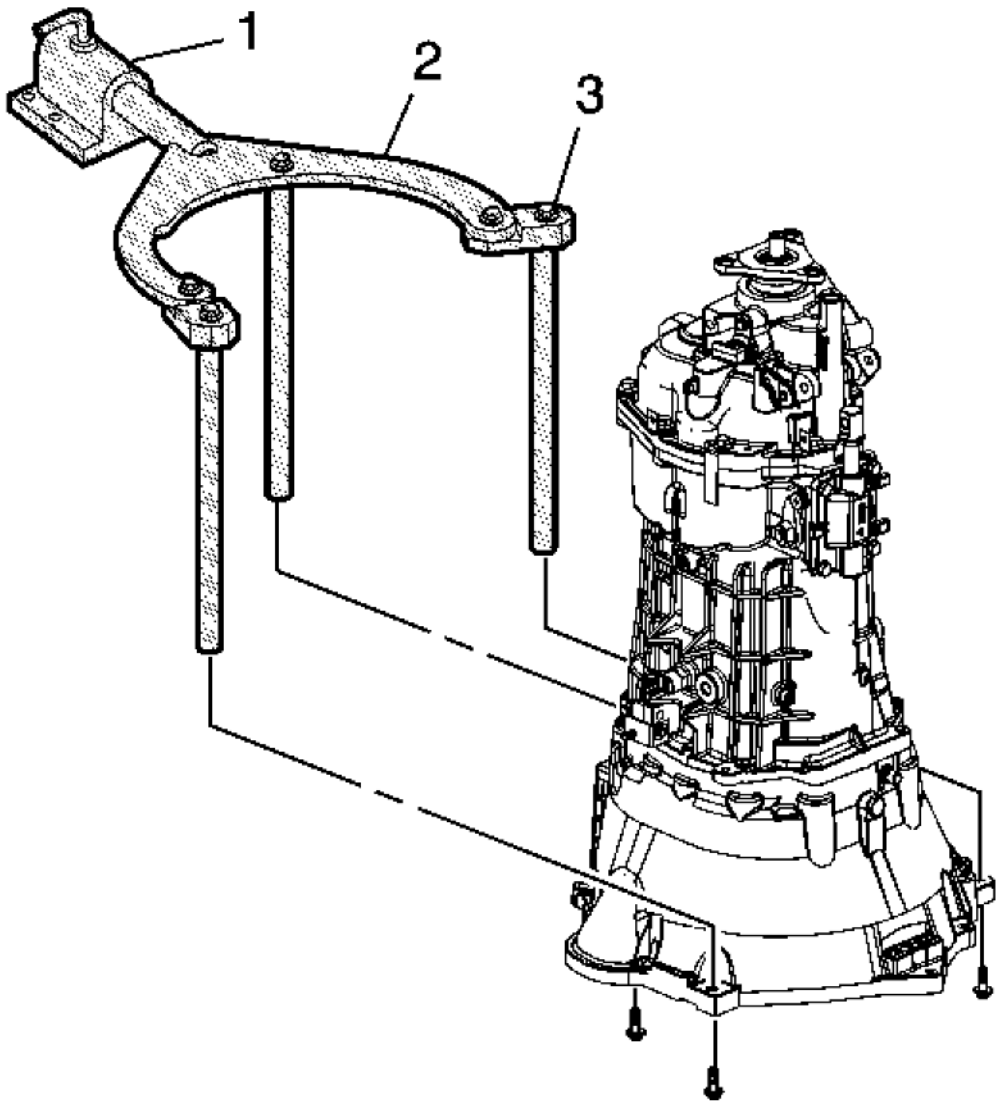

Fig. 261: Transmission Holding Fixture Components
Courtesy of GENERAL MOTORS CORP.

11. Remove the **DT 47678:** flange (2) and **DT 47678-10:** adapter.
12. Remove the **DT 47678:** flange and **DT 47678-10:** adapter from **J 3289-20:** fixture (1).

SHIMMING PROCEDURES

Special Tools

cardiagn.com

J 8001: Dial Indicator Set

For equivalent regional tools, refer to **Special Tools**.

NOTE: **The shimming procedure is required to be performed during service only when the following parts are replaced:**

- **The input shaft**
- **The counter shaft**
- **The main shaft**
- **The adapter plate**
- **The main housing**
- **The extension housing**

Input Shaft, Mainshaft, and Countershaft

cardiagn.com

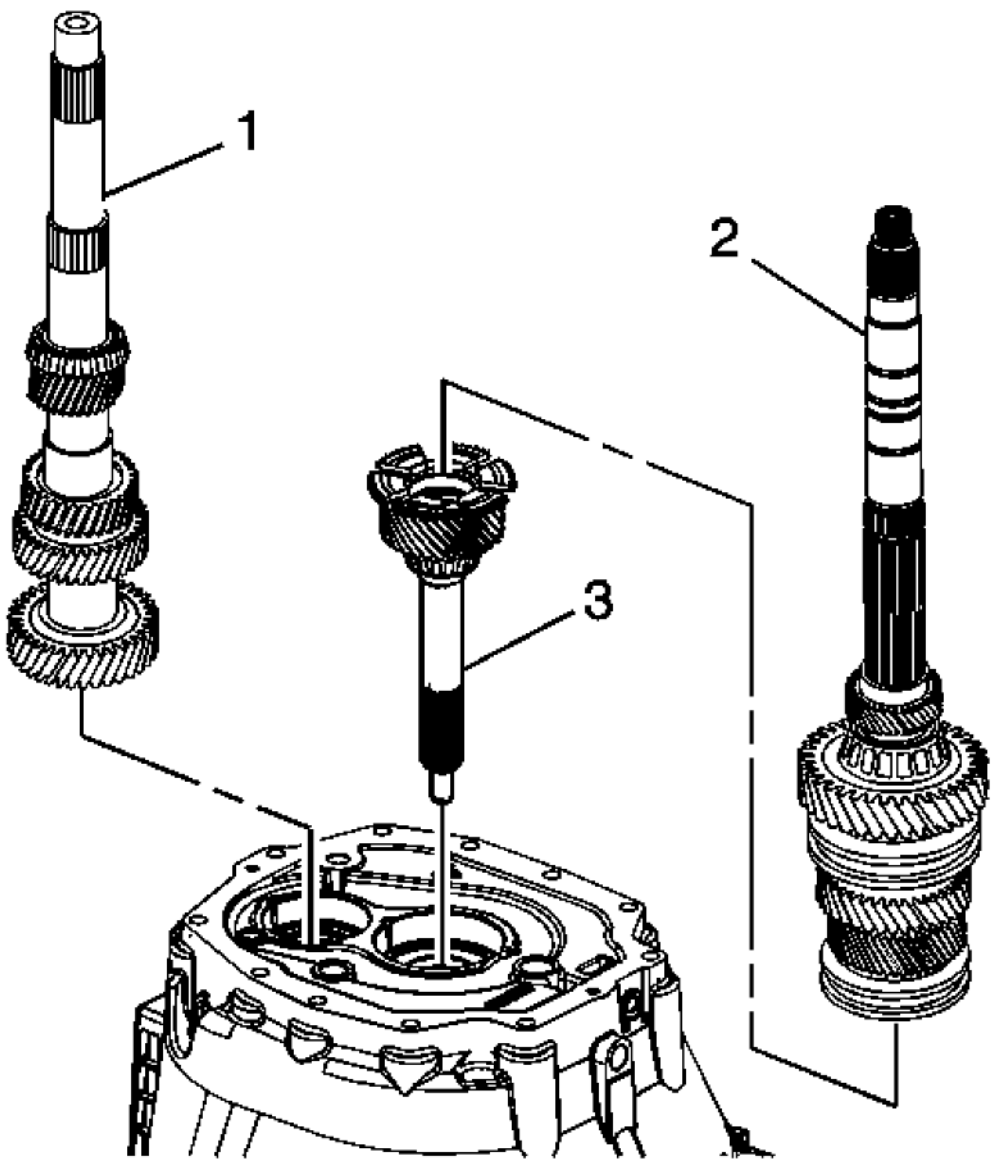

Fig. 262: Identifying Input Shaft, Mainshaft & Countershaft
Courtesy of GENERAL MOTORS CORP.

1. Rotate the clutch housing to the vertical position.
2. Install the following assemblies in order:
    1. The input shaft (3)

cardiagn.com

2. Align the 4th speed gear blocking ring to the input shaft.
3. The mainshaft assembly (2)
4. The countershaft (1), lifting up the mainshaft enough to install the countershaft.

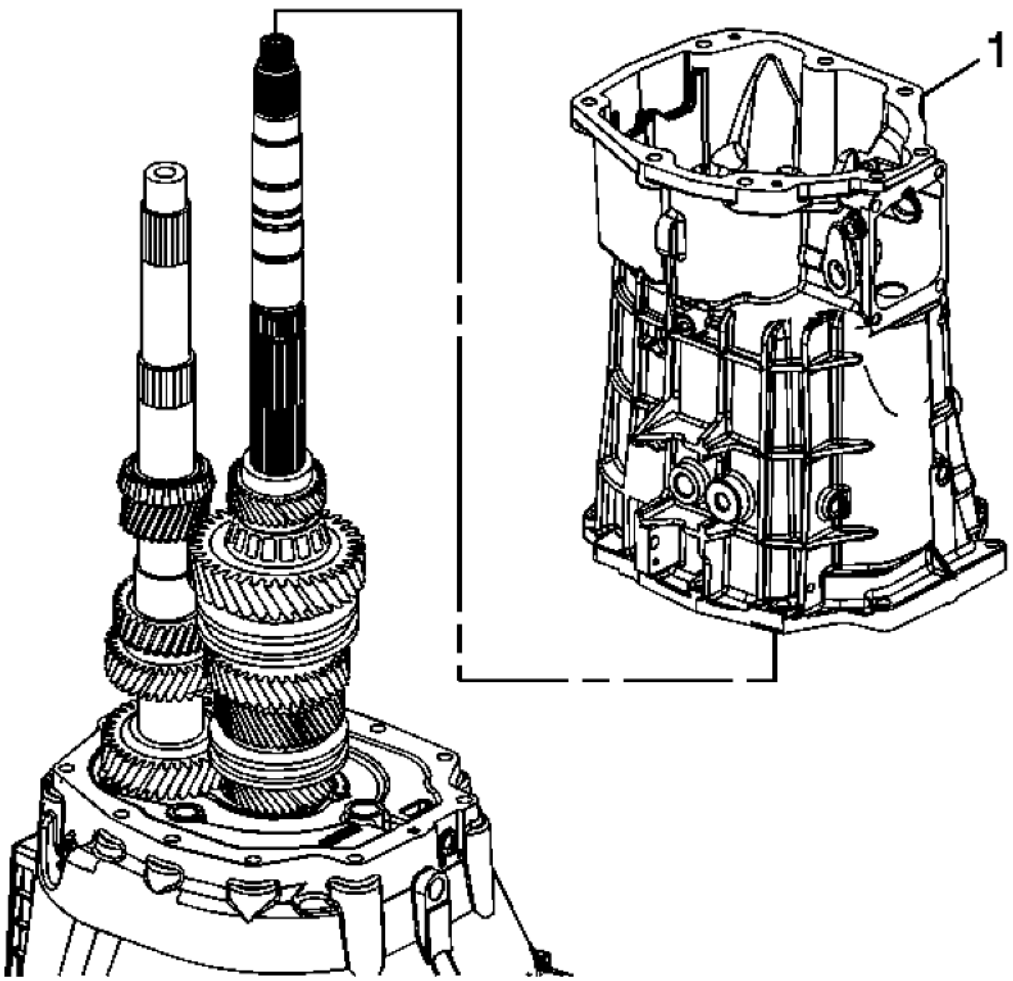

Fig. 263: Identifying Transmission Case
Courtesy of GENERAL MOTORS CORP.

3. Install the transmission case (1).

cardiagn.com

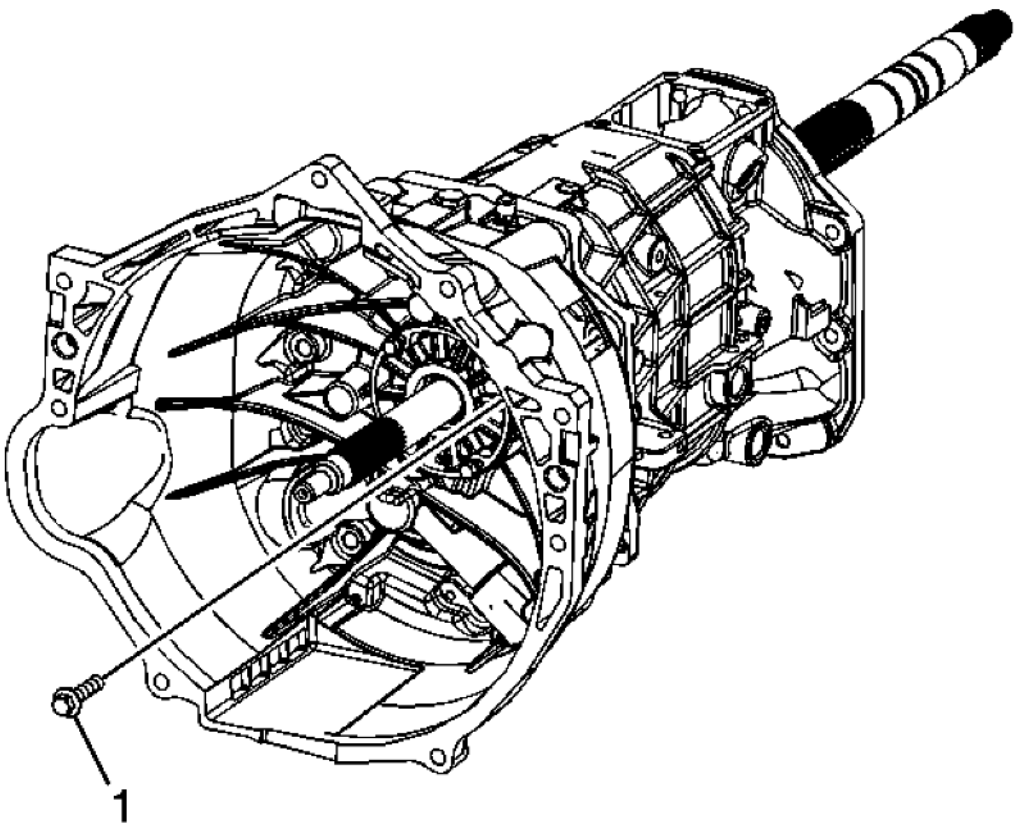

Fig. 264: Identifying Clutch Housing To Transmission Case Bolts
Courtesy of GENERAL MOTORS CORP.

CAUTION: Refer to Fastener Caution .

4. Install the clutch housing to transmission case bolts (1) and tighten to 36 N.m (27 lb ft).

cardiagn.com

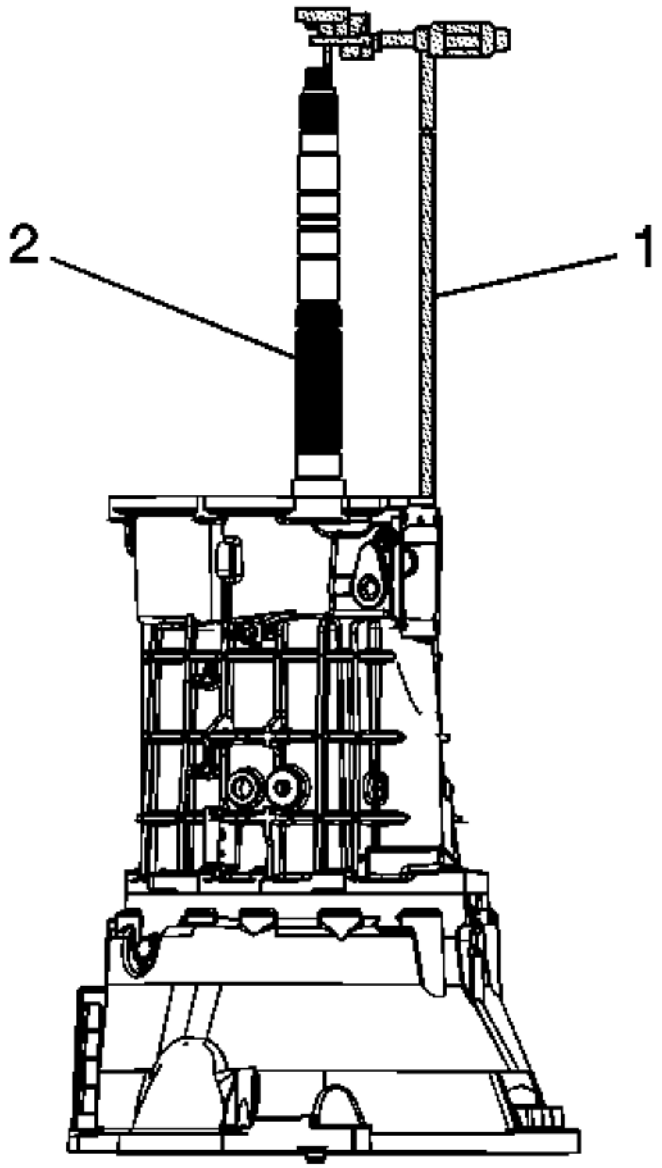

Fig. 265: Measuring Input Shaft/Mainshaft End Play
Courtesy of GENERAL MOTORS CORP.

5. Measure the input shaft/mainshaft end play using the following procedure:
    1. Place the tip of the **J 8001:** indicator set (1) on the end of the mainshaft.
    2. Move the main shaft up and down.

cardiagn.com

3. Record the measurement.

6. Select a shim to achieve 0.0127-0.0889 mm (0.00049-0.00349 in) preload.
7. Remove the **J 8001:** indicator set.

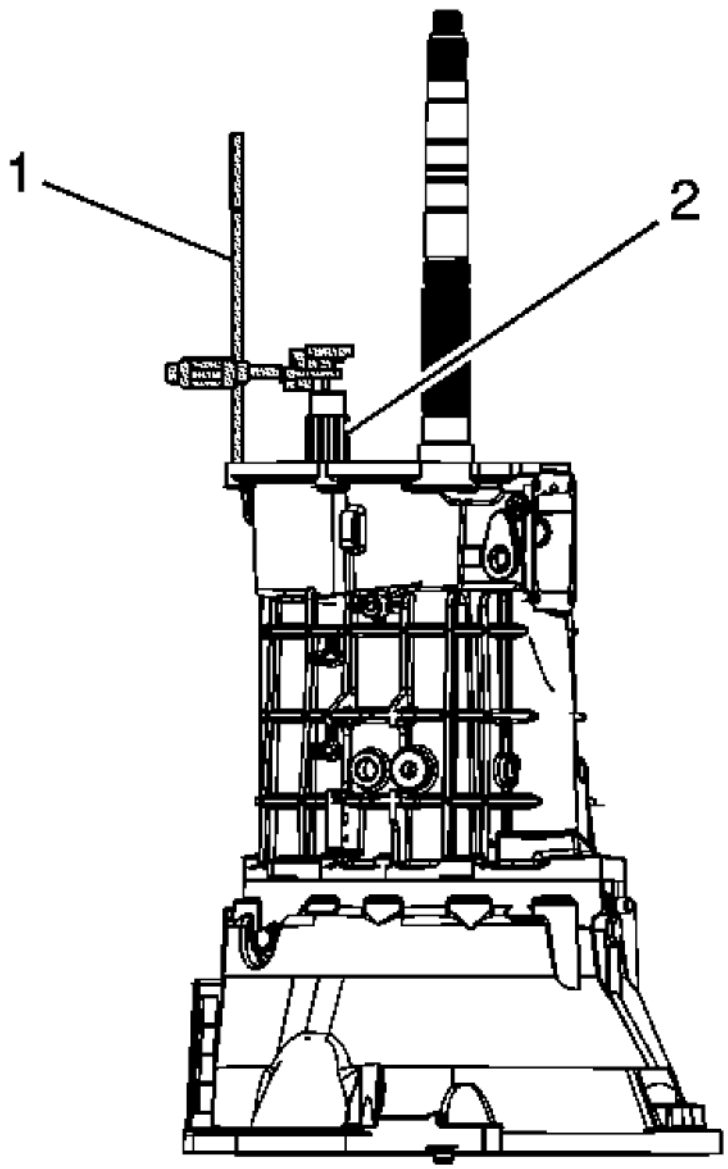

Fig. 266: Measuring Countershaft End Play
Courtesy of GENERAL MOTORS CORP.

cardiagn.com

8. Measure the countershaft end play using the following procedure:
    1. Place the tip of the **J 8001:** indicator set (1) on the end of the countershaft.
    2. Move the countershaft up and down.
    3. Record the measurement.
9. Select a shim to achieve 0.0127-0.0889 mm (0.00049-0.00349 in) preload.
10. Remove the **J 8001:** indicator set.

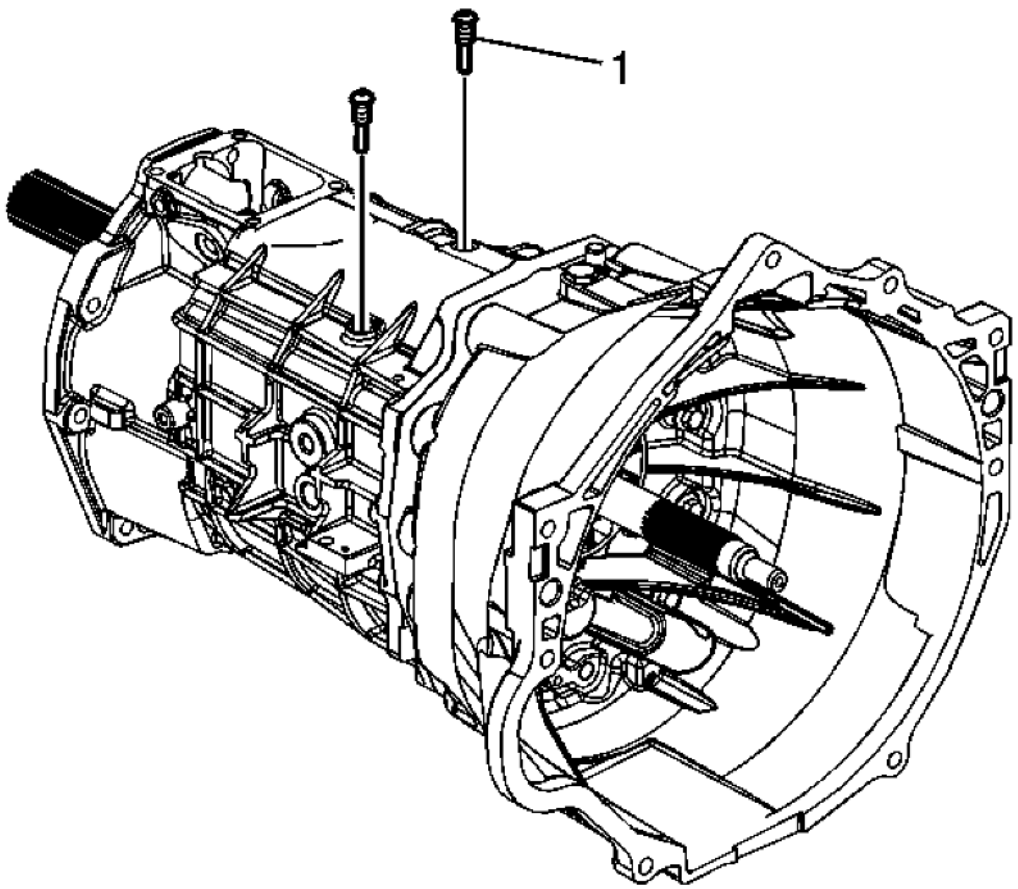

Fig. 267: Identifying Shift Lever Guide Bolts
Courtesy of GENERAL MOTORS CORP.

11. Remove the shift lever guide bolts (1).

cardiagn.com

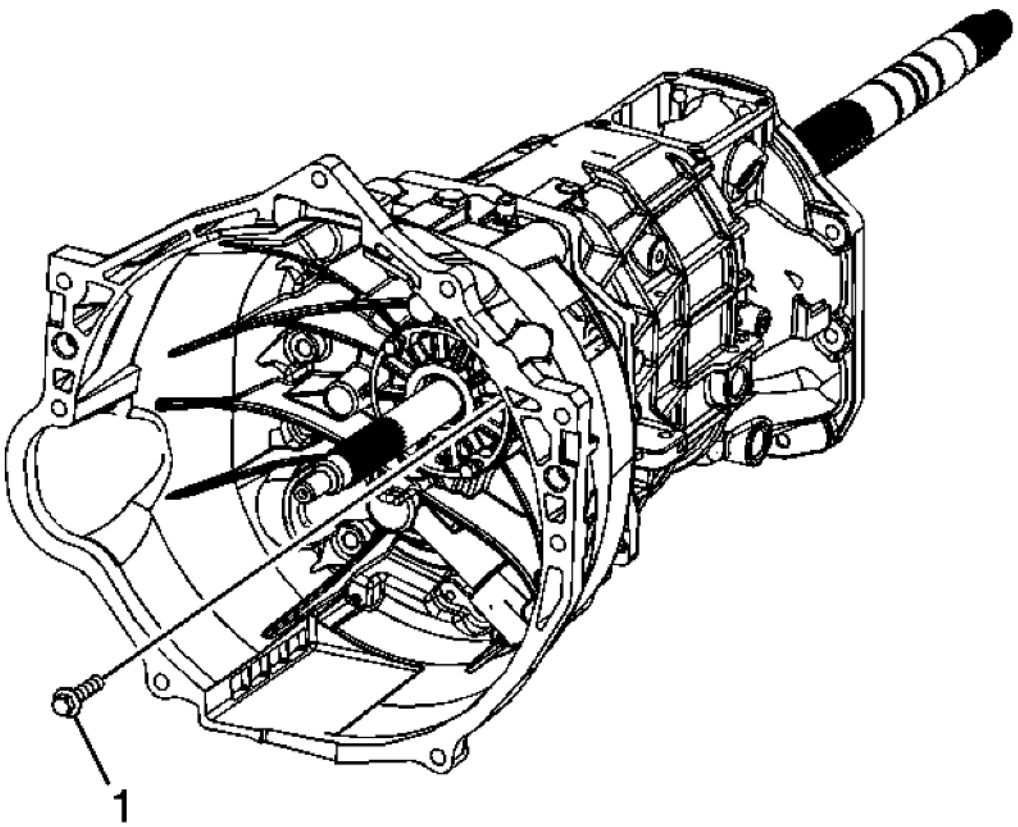

Fig. 268: Identifying Clutch Housing To Transmission Case Bolts
Courtesy of GENERAL MOTORS CORP.

12. Remove the clutch housing to the transmission case bolts (1).

cardiagn.com

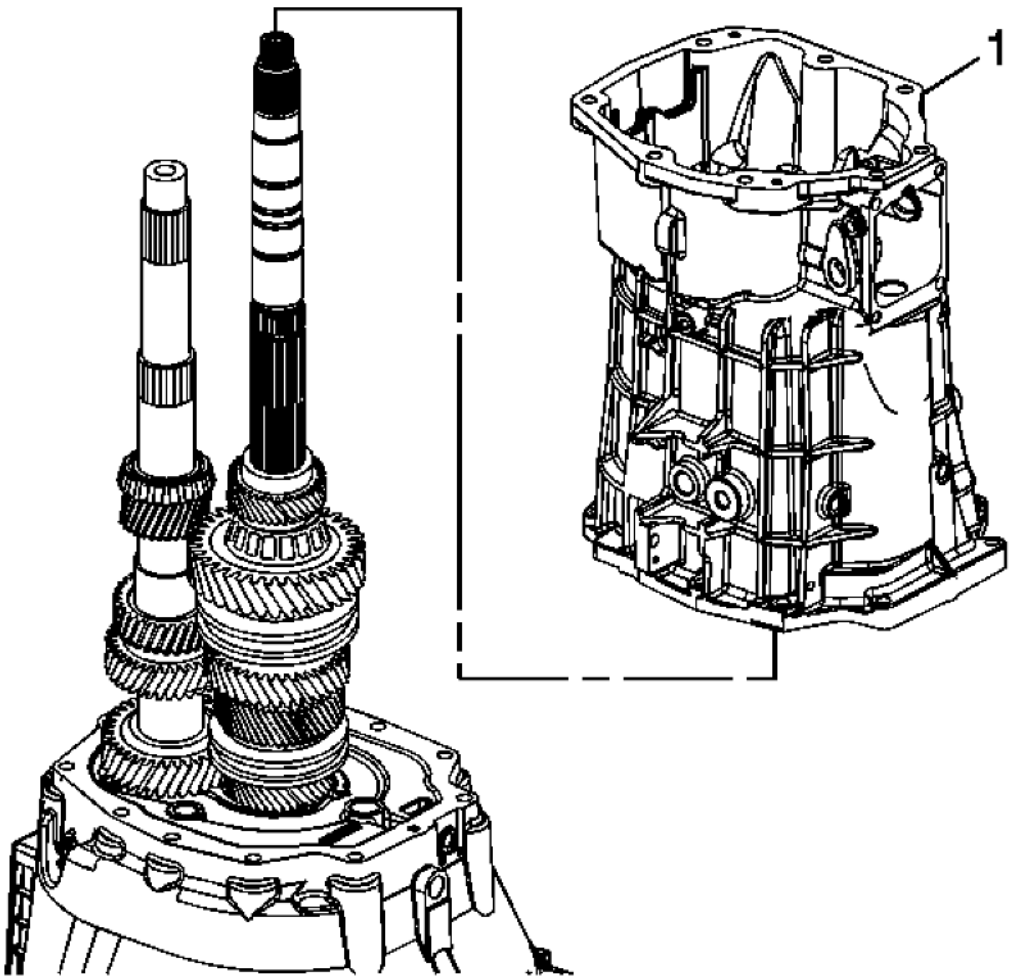

Fig. 269: Identifying Transmission Case
Courtesy of GENERAL MOTORS CORP.

13. Remove the transmission case (1).

cardiagn.com

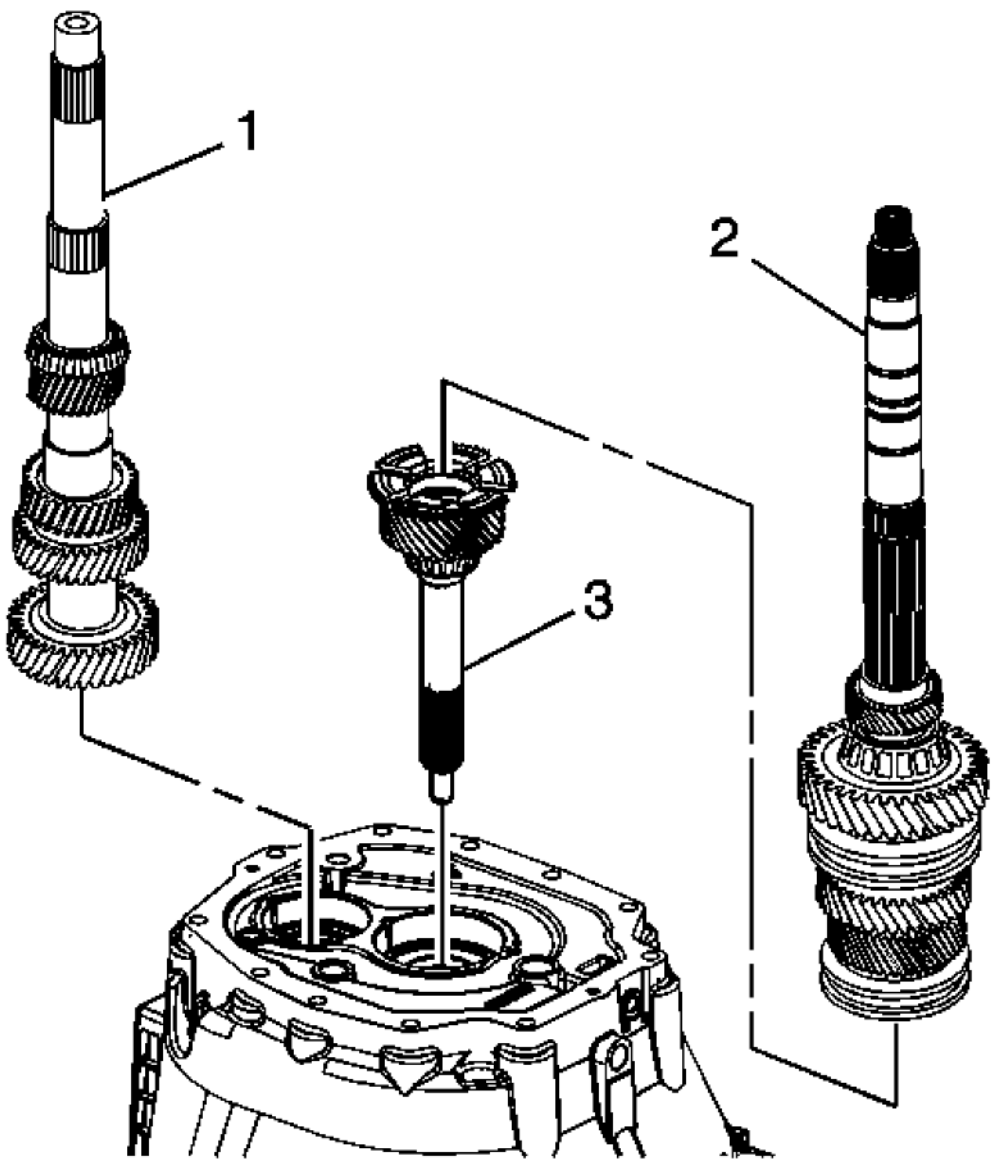

Fig. 270: Identifying Input Shaft, Mainshaft & Countershaft
Courtesy of GENERAL MOTORS CORP.

14. Remove the following parts in order:
    1. The countershaft (1), lifting up the mainshaft (2) enough to remove the countershaft.
    2. The mainshaft assembly (2)

cardiagn.com

3. The input shaft (3)

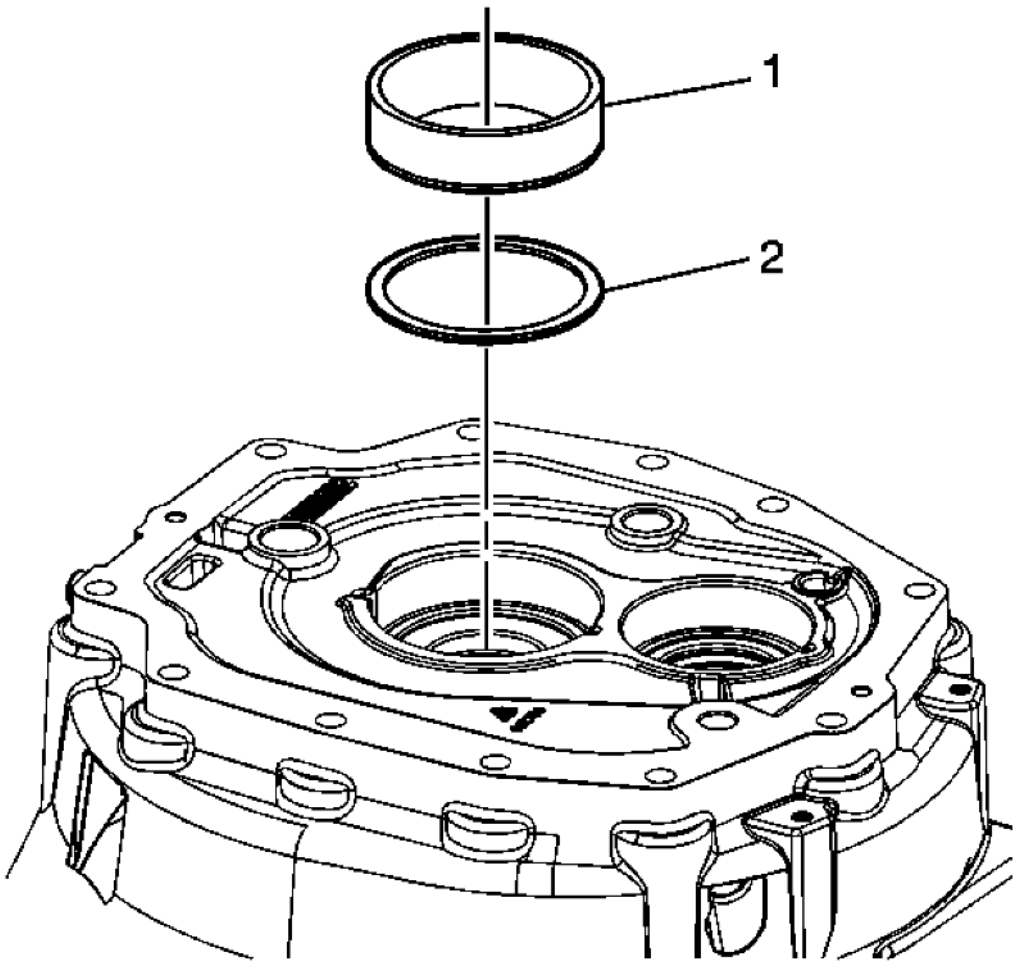

Fig. 271: Identifying Input Shaft Bearing Race & Shim
Courtesy of GENERAL MOTORS CORP.

15. Remove the input shaft bearing race (1).
16. Remove the input shaft bearing shim (2) and discard.
17. Install the new input shaft bearing shim, and the original bearing race.

cardiagn.com

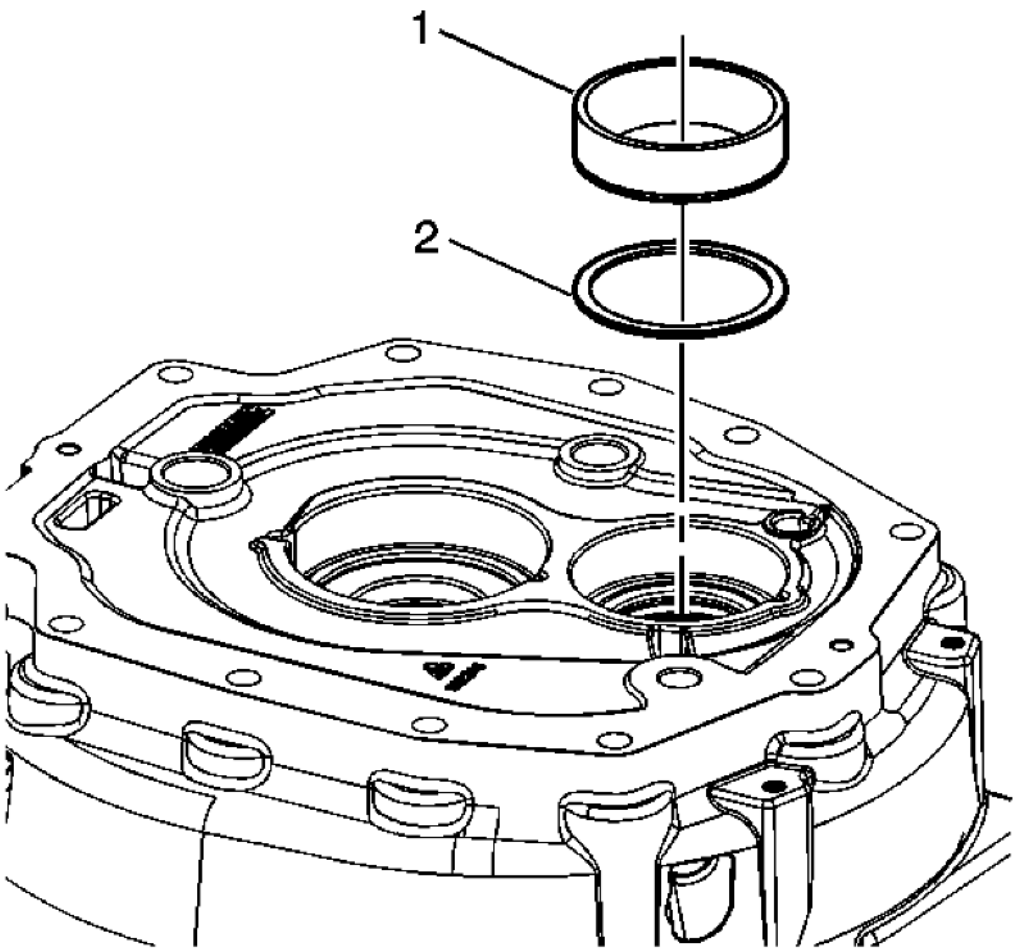

Fig. 272: Identifying Countershaft Bearing Race & Shim
Courtesy of GENERAL MOTORS CORP.

18. Remove the countershaft bearing race (1).
19. Remove the countershaft bearing shim (2) and discard.
20. Install the new input shaft bearing shim, and the original bearing race.

DESCRIPTION AND OPERATION

MANUAL TRANSMISSION DESCRIPTION AND OPERATION

cardiagn.com

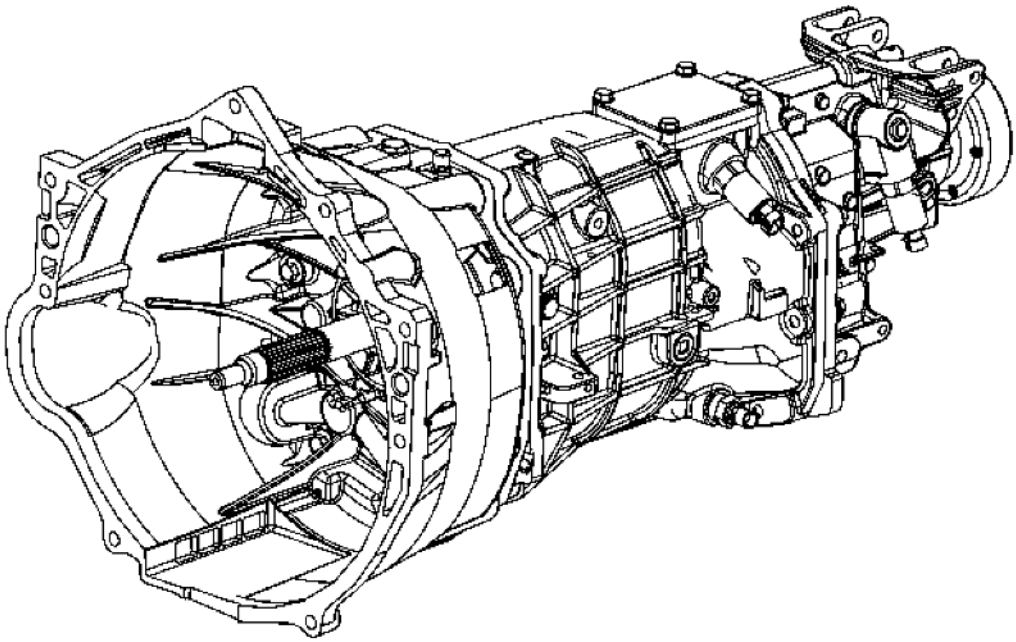

Fig. 273: View Of Manual Transmission
Courtesy of GENERAL MOTORS CORP.

Manual transmissions are identified by the number of forward gears and the measured distance between the centerline of the output shaft and the counter gear.

The 6-speed manual transmission RPO: MG9 incorporates the following features:

- An aluminum case
- Fully synchronized gearing with an enhanced synchronizer cone arrangement:
  - Triple-cone: FIRST, SECOND
  - Double-cone: THIRD, FOURTH, FIFTH, SIXTH, REVERSE
- An internal shift rail mechanism
- A remote transmission shift control mounted forward of the transmission
- An external transmission shift rod enabling the rearward mount location of the transmission shift control
- Tapered roller bearings supporting the mainshaft and countershaft
- Caged roller bearings under all speed gears
- Solenoid inhibit of SECOND and THIRD gears
- Solenoid inhibit of REVERSE gear during predefined forward motion

cardiagn.com

These features combine to yield a rugged, reliable system capable of handling input torques of 583 N.m (430 lb ft).

The gear ratios are as follows:

Gear	MG9 Ratio (:1)
FIRST	2.66
SECOND	1.78
THIRD	1.30
FOURTH	1.00
FIFTH	0.79
SIXTH	0.63
REVERSE	2.90

Shift Control and Shift Rod

cardiagn.com

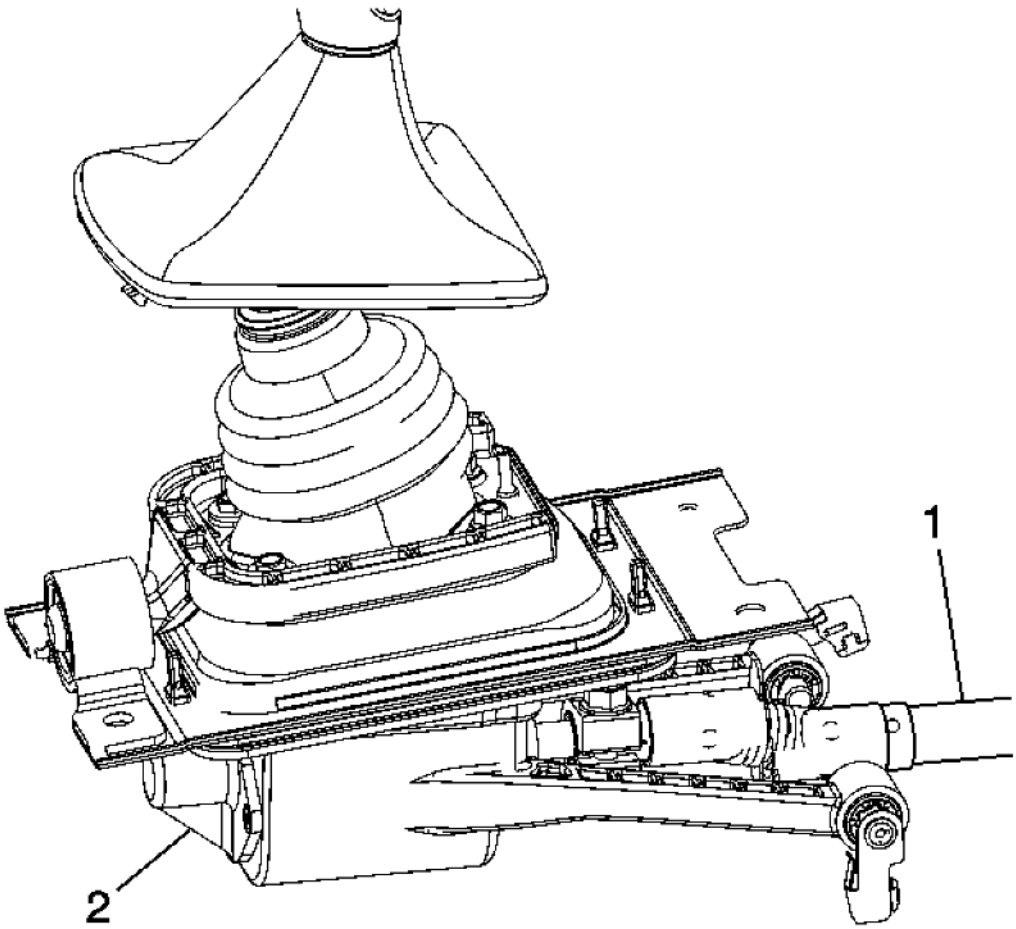

Fig. 274: Identifying Shift Control & Shift Rod
Courtesy of GENERAL MOTORS CORP.

The shift shaft is connected to a transmission shift rod (1) which contains two sealed universal-style joints, enabling the range of motion necessary in order to shift gears. The shift rod (1) is connected to the transmission shift control (2) which is a lubricated and sealed unit, mounted to the driveline support assembly. The mounting system utilized for the shift control (2) incorporates rubber insulators. The cockpit of the vehicle is isolated from the driveline through the use of a shift control closeout boot which seals off the shift control and the driveline tunnel shift control opening.

Gear Select - Skip Shift

To ensure good fuel economy and compliance with federal fuel economy standards, SECOND and THIRD gears are inhibited when shifting out of FIRST gear under the following conditions:

cardiagn.com

- Coolant temperature is above 77°C (171°F).
- Vehicle speed is 24-30 km/h (15-19 mph).
- Throttle is opened 13 percent or less.

Reverse Lockout

A reverse lockout system, consisting of a reverse lockout solenoid which operates a reverse lockout mechanism, is utilized to prevent shifting into REVERSE gear when the vehicle is moving forward at a speed of 5 km/h (3 mph) or more.

Temperature Sensor

The temperature sensor is a safety feature that provides a warning in the event the manual transmission is operating in temperatures above 163°C (325°F).

REVERSE INHIBIT DESCRIPTION AND OPERATION

The reverse inhibit solenoid is a safety feature which prevents an inadvertent shift into reverse at speeds above 5 km/h (3 mph). The system consist of the following components:

- The powertrain control module (PCM).
- The reverse inhibit solenoid.

With the ignition ON, battery voltage is supplied directly to the reverse inhibit solenoid. At forward speeds above 5 km/h (3 mph) the PCM opens the control circuit of the reverse inhibit solenoid. This de-energizes the solenoid and mechanically blocks the shift lever from going into the REVERSE position.

SKIP SHIFT DESCRIPTION AND OPERATION

The skip shift solenoid is a performance feature which forces the driver to shift from first gear to fourth gear during light acceleration and low engine load conditions. This feature is used to ensure good fuel economy and compliance with federal economy standards. The skip shift system consist of the following components:

- The powertrain control module (PCM).
- The skip shift solenoid.
- The skip shift lamp.

With the ignition ON, battery voltage is supplied directly to the skip shift solenoid. The powertrain control module (PCM) controls the solenoid by grounding the control circuit. When the skip shift system is active the PCM also grounds the control circuit of the skip shift lamp. The lamp illuminates to inform the driver that the 1-4 skip shift is engaged. The PCM determines when the skip shift system is active when the following parameters are met:

- The vehicle speed is between 24-30 km/h (15-19 mph).
- The engine coolant temperature (ECT) is greater than 77°C (171°F).
- The BARO is greater than 76 kPa.

cardiagn.com

- The accelerator pedal position (APP) is less than 13 percent.

When the conditions are met the powertrain control module (PCM) grounds the skip shift solenoid control circuit. This energizes the skip shift solenoid and mechanically blocks the gear shift lever from going into the second or third gear positions. When the drivers pulls back on the shift lever with the system enabled the transmission will go into fourth gear.

When the conditions for skip shift engagement are no longer met the powertrain control module (PCM) disables the skip shift solenoid, allowing the driver to use second and third gears.

Once the skip shift solenoid is enabled the system will not be re-enabled until the vehicle speed returns to 0 km/h (0 mph) and the conditions for enabling skip shift solenoid are met.

TRANSMISSION FLUID TEMPERATURE SENSOR DESCRIPTION AND OPERATION

The temperature sensor is a safety feature that triggers a warning light within the dashboard's instrument panel in the event the manual transmission is operating in temperatures above 163°C (325°F). This feature is provided to preserve oil viscosity.

SPECIAL TOOLS AND EQUIPMENT

SPECIAL TOOLS

Illustration	Tool Number/ Description
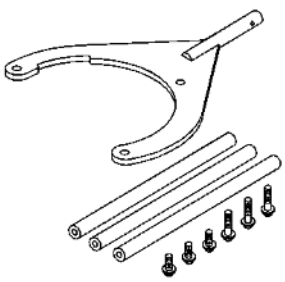	DT 47678 Transmission Holding Fixture
	DT 47678-10 Transmission Holding Fixture Adapter

cardiagn.com

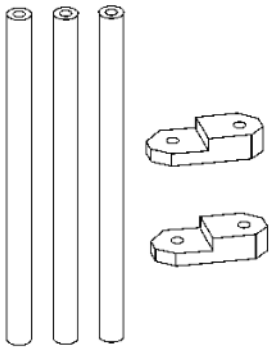	
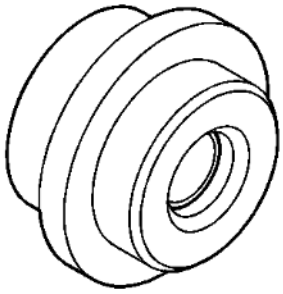	DT 48074 Input and Output Shaft Seal Installer
	DT 48802 Bearing Installer

cardiagn.com

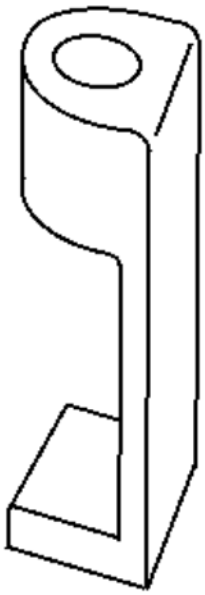	DT 49139 Hub Remover Tool
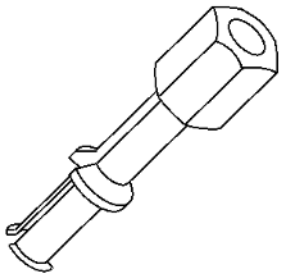	DT 49216 Bushing Remover
	DT 49293 Gear Select/Skip Shift Solenoid Socket

cardiagn.com

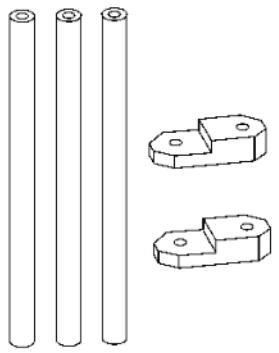	
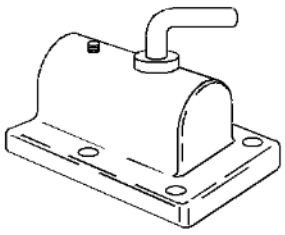	J 3289-20 Holding Fixture
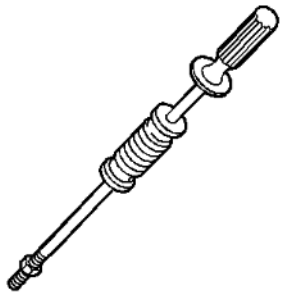	J 6125-1B Slide Hammer with Adapter
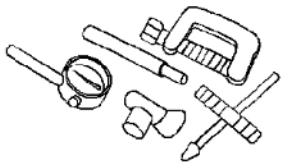	J 8001 Dial Indicator Set

cardiagn.com

	J 8092 Universal Driver Handle
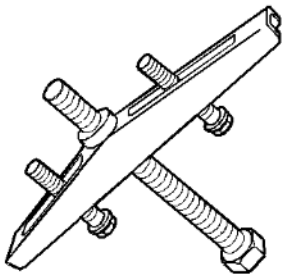	J 8433 Universal Bridge Puller

cardiagn.com

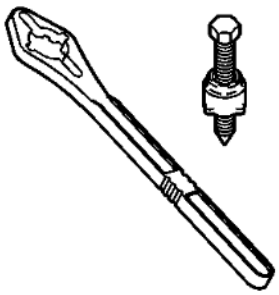	J 08614-A Pinion Flange Holder and Remover
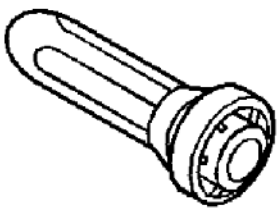	J 21426 Extension Housing Seal Installer
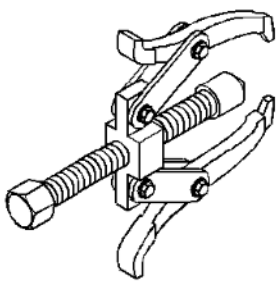	J 22888-20A Universal Two Jaw Puller
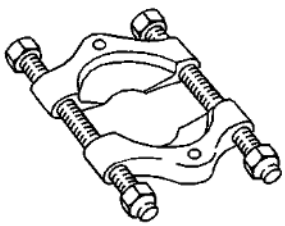	J 22912-B Rear Pinion and Axle Bearing Remover
	J 23129

cardiagn.com

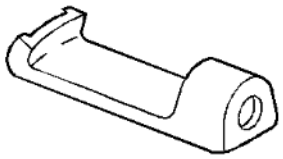	Universal Seal Remover
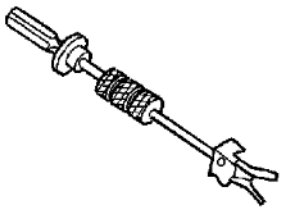	J 23907 Slide Hammer
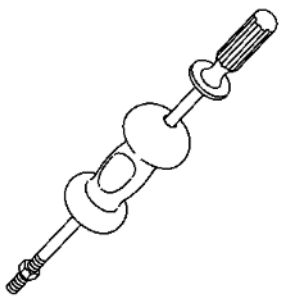	J 23907-1 Slide Hammer
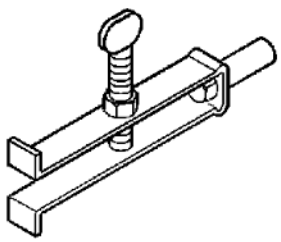	J 26941 Bearing Race Remover
	J 28537-17 Bearing Race Installer

cardiagn.com

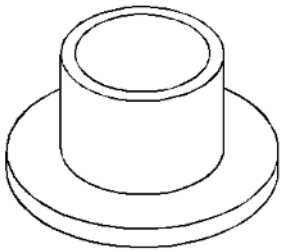	
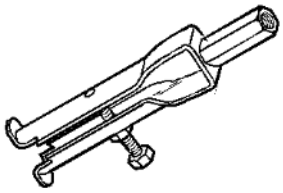	J 29369-2 Bushing and Bearing Remover - 2-3 in
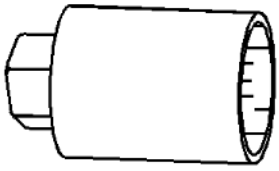	J 29873 Injector Nozzle Socket 30 mm
	J 35616 GM Terminal Test Kit
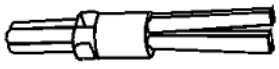	J 36017 Valve Seal Remover
	J 36183 Press Tube

cardiagn.com

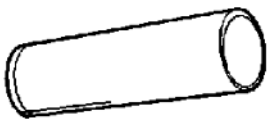	
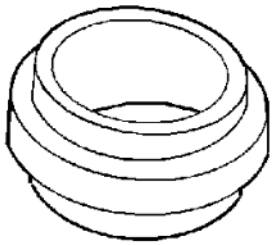	J 36184 Press Tube Adapter
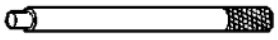	J 36190 Universal Driver Handle
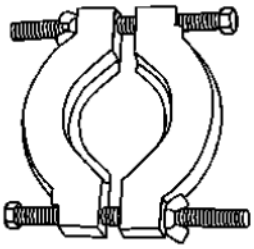	J 36513 Split Plate
	J 36850 Transjel® Lubricant

cardiagn.com

	
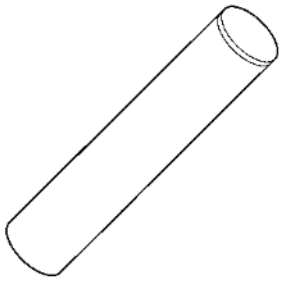	J 38205-1 Press Tube
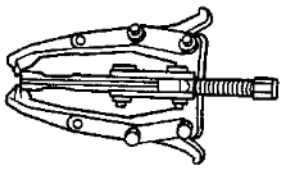	J 38416-B Harmonic Balancer Remover
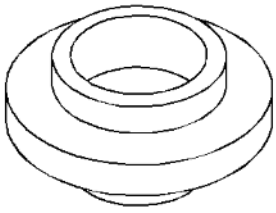	J 39371 1st/2nd Synchronizer Installer

cardiagn.com

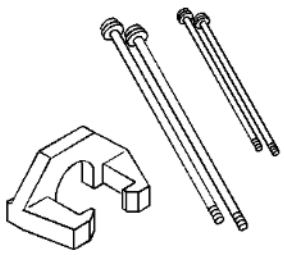	J 39431 5th/6th Driven Gear Puller
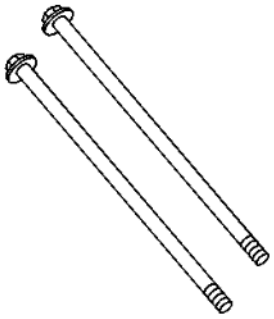	J 39431-3 5th Gear Puller Adapter Bolts
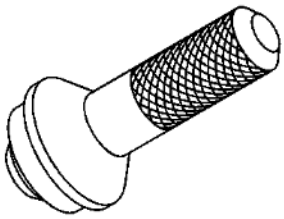	J 39433 Input Shaft Seal Installer
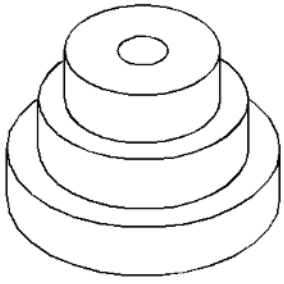	J 39435 Bearing Race Installer

cardiagn.com

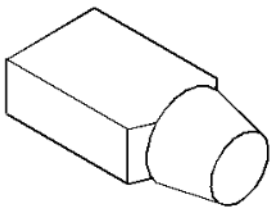	J 39437 Bushing Installer
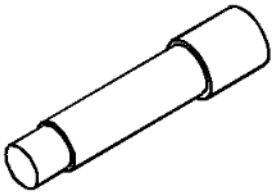	J 39439-1 Shift Rail Bushing Remover/Installer
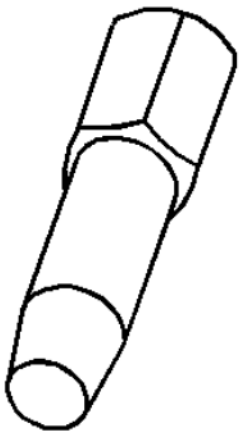	J 39439-2 Bushing Remover
	J 39439-3 Bushing Installer

cardiagn.com

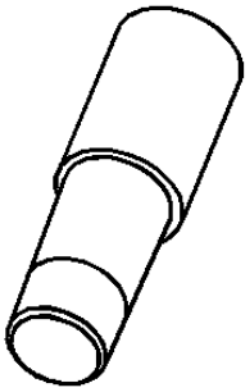	
	J 39441 5th/6th Driven Gear Installer
	J 39441-10 5th Gear Installer Adapter

cardiagn.com

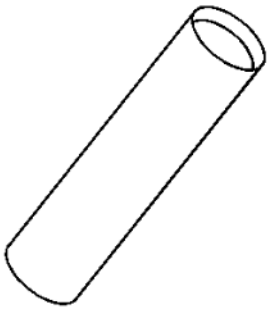	J 39441-20 5th Gear Installer Adapter
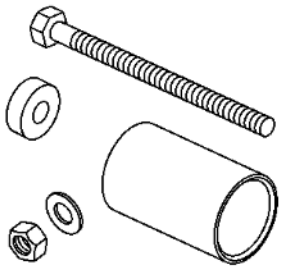	J 39441-30 5th Gear Installer Adapter
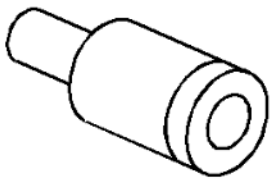	J 39442 Press Adapter
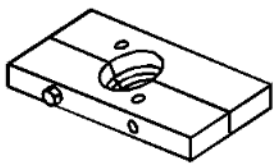	J 39443 Split Plate

cardiagn.com

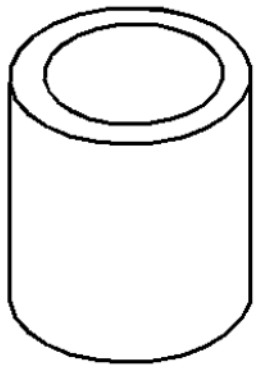	J 39473 Mainshaft Bearing Installer/Adapter
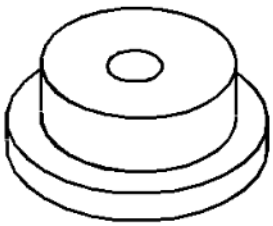	J 39546 Bearing Race Installer
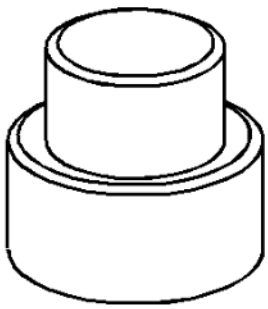	J 39547 Press Adapter
	J 39594 Bearing Race Remover

cardiagn.com

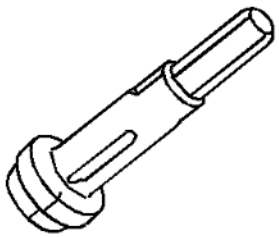	
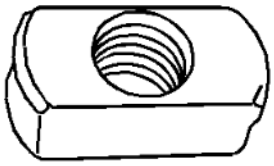	J 39790 Mainshaft Bearing Race Remover
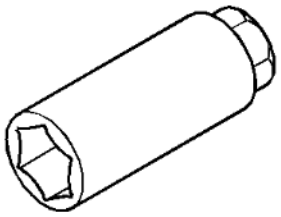	J 41099 Skip Shift Sensor Remover/Installer
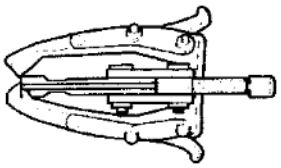	J 41816 Crankshaft Balancer Remover
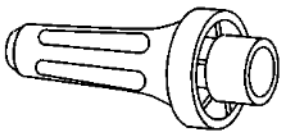	J 42464 Shift Shaft Seal Installer

cardiagn.com

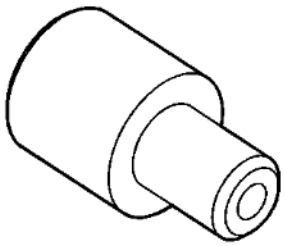	J 44384 Shift Fork Bearing Installer
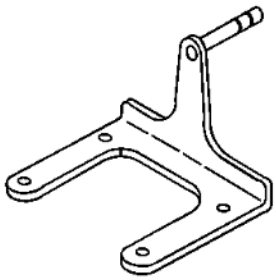	J 44395 Transmission Holding Fixture
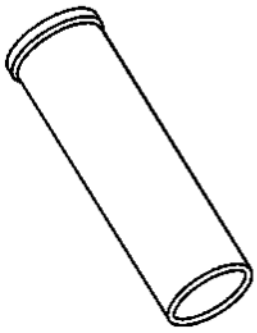	J 44735 Installation Tube
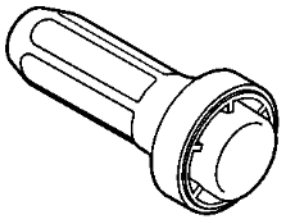	J 44765 Seal Installer

cardiagn.com

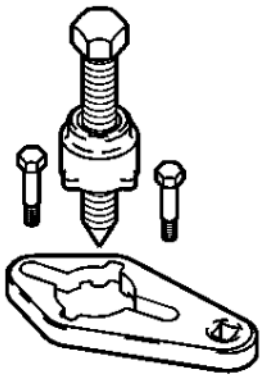	J 44873 Shoulder Bolts
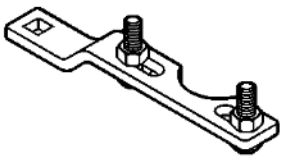	J 45012 Holding Fixture
	J 45019 Flange and Pinion Gauge Remover
	J 45124 Removal Bridge

cardiagn.com

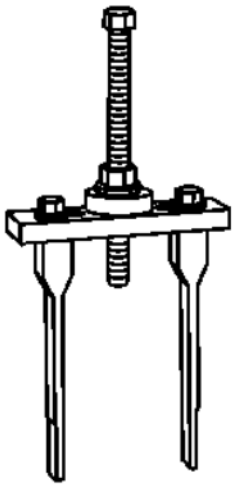	
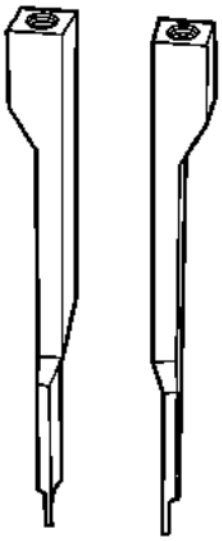	J 45124-9 Puller Leg

cardiagn.com

2010 TRANSMISSION

Manual Transmission - Aisin AY6 - Camaro

SPECIFICATIONS

FASTENER TIGHTENING SPECIFICATIONS

Application	Specification	
	Metric	English
Backup Lamp Switch	44 N.m	32 lb ft
Bearing Lock Plate Bolt	11.3 N.m	100 lb in
Clutch Release Cylinder Bolts	16.5 N.m	12 lb ft
Clutch Release Cylinder Piping Bolt	8.5 N.m	75 lb in
Drain Plug	37 N.m	27 lb ft
Fill Plug	37 N.m	27 lb ft
Front Case to Middle Case Bolts	40 N.m	29 lb ft
Shift Control Lever Bracket Bolts	21 N.m	15 lb ft
Middle Case to Rear Case Bolts	40 N.m	29 lb ft
Oil Trough Bolts	8.5 N.m	75 lb in
Rear Case to Housing Extension Bolts	29 N.m	21 lb ft
Reverse Idler Shaft Bolt	28 N.m	20 lb ft
Service Hole Plug	39.2 N.m	29 lb ft
Shift Fork Bolts	19.5 N.m	14 lb ft
Shift and Select Lever Bolt	33.3 N.m	24 lb ft
Shift Shaft Detent Plug	24.5 N.m	18 lb ft
Speed Sensor Bolt	8 N.m	71 lb in

ADHESIVES, FLUIDS, LUBRICANTS, AND SEALERS

Application	Type of Material	GM Part Number	
		United States	Canada
1st/2nd Gear Synchronizer Sleeve	Lubricant	88862475	88862476
2nd Gear	Lubricant	88862475	88862476
2nd Gear Bearings	Lubricant	88862475	88862476
2nd Gear Outer Blocker Ring	Lubricant	88862475	88862476
2nd Gear Synchronizer Inner Cone	Lubricant	88862475	88862476
2nd Gear Synchronizer Outer Cone	Lubricant	88862475	88862476
3rd Gear Bearings	Lubricant	88862475	88862476
3rd Gear Blocking Ring	Lubricant	88862475	88862476
3rd/4th Gear Spacer	Lubricant	88862475	88862476
4th Gear Bearings	Lubricant	88862475	88862476

cardiagn.com

5th Gear Blocking Ring	Lubricant	88862475	88862476
6th Gear Bearings	Lubricant	88862475	88862476
6th Gear Blocking Ring	Lubricant	88862475	88862476
Case to Case	Sealant	89020326	89021188
Control Select Arm	Lubricant	88862475	88862476
Internal Shift Control Lever	Lubricant	88862475	88862476
Service Hole Plug	Pipe Sealant	12346004	10953480
Shift and Select Lever Bolt	Threadlocker	12345382	10953489
Shift Fork Bolts	Threadlocker	12345382	10953489
Shift Shaft Detent Plug	Pipe Sealant	12346004	10953480
Transmission Fluid	SAE 75W-90 (GL-5)	88862475	88862476

LUBRICATION SPECIFICATIONS

Application	Specification	
	Metric	English
Manual Transmission Fluid GL-5 SAE 75W-90 GM P/N 88862475 (Canadian P/N 88862476)	1.8 liters	1.9 quarts

TRANSMISSION CLEARANCE SPECIFICATIONS

Gear Axial Clearance

Application	Standard Clearance Metric	Standard Clearance English
1st Countershaft Gear	0.10-0.43 mm	0.0039-0.0169 in
2nd Countershaft Gear	0.10-0.43 mm	0.0039-0.0169 in
3rd Gear	0.09-0.52 mm	0.0035-0.0204 in
4th Gear	0.12-0.38 mm	0.0047-0.0150 in
6th Gear	0.20-0.49 mm	0.0079-0.0193 in
Reverse Countershaft Gear	0.125-0.375 mm	0.0049-0.0148 in
Reverse Idler Gear	0.10-0.55 mm	0.0039-0.0216 in

Gear Radial Clearance

Application	Standard Clearance Metric	Standard Clearance English
1st Countershaft Gear	0.015-0.067 mm	0.0006-0.0026 in
2nd Countershaft Gear	0.015-0.067 mm	0.0006-0.0026 in
3rd Gear	0.015-0.067 mm	0.0006-0.0026 in
4th Gear	0.015-0.067 mm	0.0006-0.0026 in
6th Gear	0.015-0.065 mm	0.0006-0.0025 in
Reverse Countershaft Gear	0.015-0.065 mm	0.0006-0.0025 in

cardiagn.com

Reverse Idler Gear	0.015-0.050 mm	0.0006-0.0020 in

Output Shaft

Application	Specification	
	Metric	English
Runout - Maximum	0.136 mm	0.0053 in
Flange Thickness - Maximum	11.3 mm	0.4449 in

Input Shaft Bearing Journals - Minimum Diameter

Application	Specification	
	Metric	English
3rd Gear	44.985 mm	1.7710 in
4th Gear	44.985 mm	1.7710 in
6th Gear	41.985 mm	1.6529 in

Countershaft Bearing Journals - Minimum Diameter

Application	Specification	
	Metric	English
1st Countershaft Gear Bearing	47.985 mm	1.8891 in
2nd Countershaft Gear Bearing	53.985 mm	2.1254 in
Reverse	44.985 mm	1.7710 in
Reverse Idler Gear	27.937 mm	1.0999 in

Synchronizer Blocker Ring to Gear - Minimum Clearance

Application	Specification	
	Metric	English
1st, 2nd	0.88 mm	0.035 in
3rd	0.8 mm	0.031 in
4th, 5th, 6th	0.7 mm	0.027 in
Reverse	0.9 mm	0.035 in

Synchronizer Sleeve to Shift Fork - Maximum Clearance

Application	Specification	
	Metric	English
1st/2nd	0.35 mm	0.014 in
3rd/4th, 5th/6th, Reverse	0.84 mm	0.033 in

1ST AND 2ND GEAR SYNCHRONIZER RETAINING RING SPECIFICATIONS

Mark	Thickness (mm)	Thickness (in)
A	2.28-2.33	0.0898-0.0917
B	2.33-2.38	0.0917-0.0937

cardiagn.com

C	2.38-2.43	0.0937-0.0957
D	2.43-2.48	0.0957-0.0976
E	2.48-2.53	0.0976-0.0996
F	2.53-2.58	0.0996-0.1016
G	2.58-2.63	0.1016-0.1035

3RD AND 4TH GEAR SYNCHRONIZER RETAINING RING SPECIFICATIONS

Mark	Thickness (mm)	Thickness (in)
A	1.80-1.85	0.0709-0.0728
B	1.85-1.90	0.0728-0.0748
C	1.90-1.95	0.0748-0.0768
D	1.95-2.00	0.0768-0.0787
E	2.00-2.05	0.0787-0.0807
F	2.05-2.10	0.0807-0.0827
G	2.10-2.15	0.0827-0.0846

5TH GEAR SYNCHRONIZER RETAINING RING SPECIFICATIONS

Mark	Thickness (mm)	Thickness (in)
A	2.10-2.15	0.0827-0.0846
B	2.15-2.20	0.0846-0.0866
C	2.20-2.25	0.0866-0.0886
D	2.25-2.30	0.0886-0.0906
E	2.30-2.35	0.0906-0.0925
F	2.35-2.40	0.0925-0.0945
G	2.40-2.45	0.0945-0.0965

COUNTERSHAFT FRONT AND REAR BEARING RETAINING RING SPECIFICATIONS

Mark	Thickness (mm)	Thickness (in)
A	2.35-2.40	0.0925-0.0945
B	2.40-2.45	0.0945-0.0965
C	2.45-2.50	0.0965-0.0984
D	2.50-2.55	0.0984-0.1004
E	2.55-2.60	0.1004-0.1024
F	2.60-2.65	0.1024-0.1043
G	2.65-2.70	0.1043-0.1062
H	2.70-2.75	0.1062-0.1083
J	2.75-2.80	0.1083-0.1102
K	2.80-2.85	0.1102-0.1122
L	2.85-2.90	0.1122-0.1142

cardiagn.com

M	2.90-2.95	0.1142-0.1161

INPUT SHAFT BEARING RETAINING RING SPECIFICATIONS

Mark	Thickness (mm)	Thickness (in)
A	2.65-2.70	0.1043-0.1062
B	2.70-2.75	0.1062-0.1083
C	2.75-2.80	0.1083-0.1102
D	2.80-2.85	0.1102-0.1122
E	2.85-2.90	0.1122-0.1142
F	2.90-2.95	0.1142-0.1161

6TH GEAR RETAINING RING SPECIFICATIONS

Mark	Thickness (mm)	Thickness (in)
A	2.07-2.12	0.0815-0.0835
B	2.12-2.17	0.0835-0.0854
C	2.17-2.22	0.0854-0.0874
D	2.22-2.27	0.0874-0.0894
E	2.27-2.32	0.0894-0.0913
F	2.32-2.37	0.0913-0.0933

SCHEMATIC AND ROUTING DIAGRAMS

MANUAL TRANSMISSION SCHEMATICS

cardiagn.com

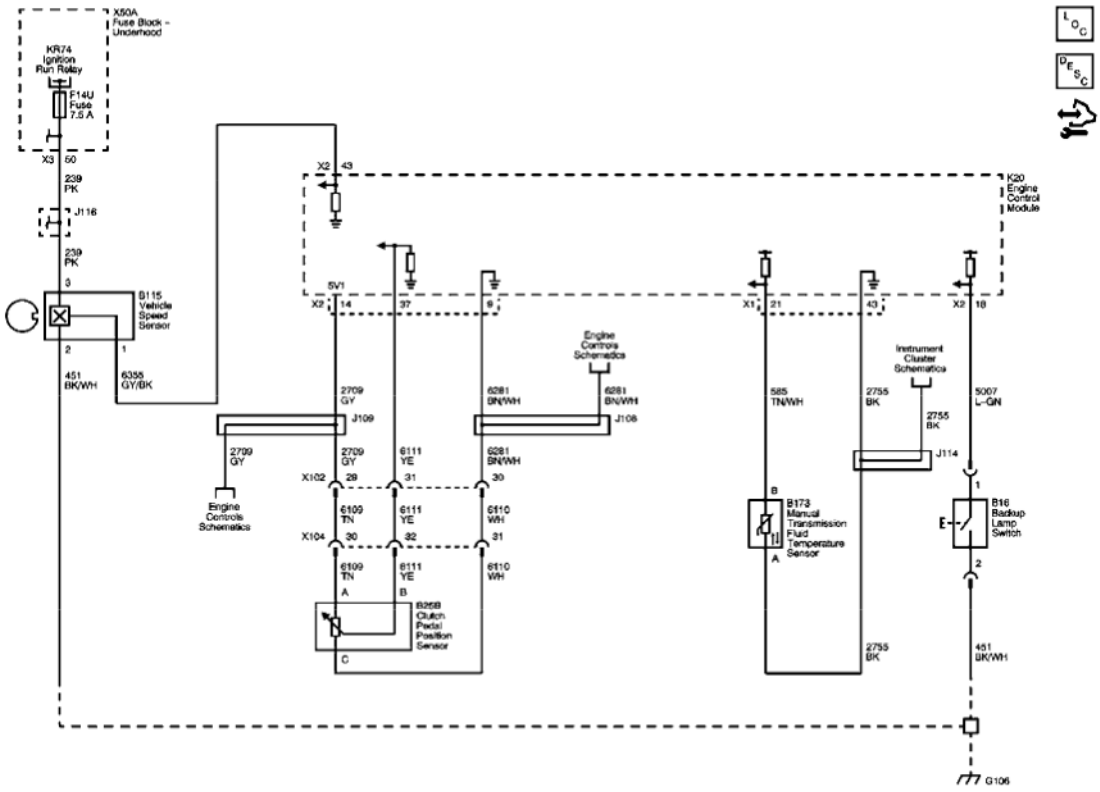

Fig. 1: Manual Transmission
Courtesy of GENERAL MOTORS CORP.

VISUAL IDENTIFICATION

DISASSEMBLED VIEWS

cardiagn.com

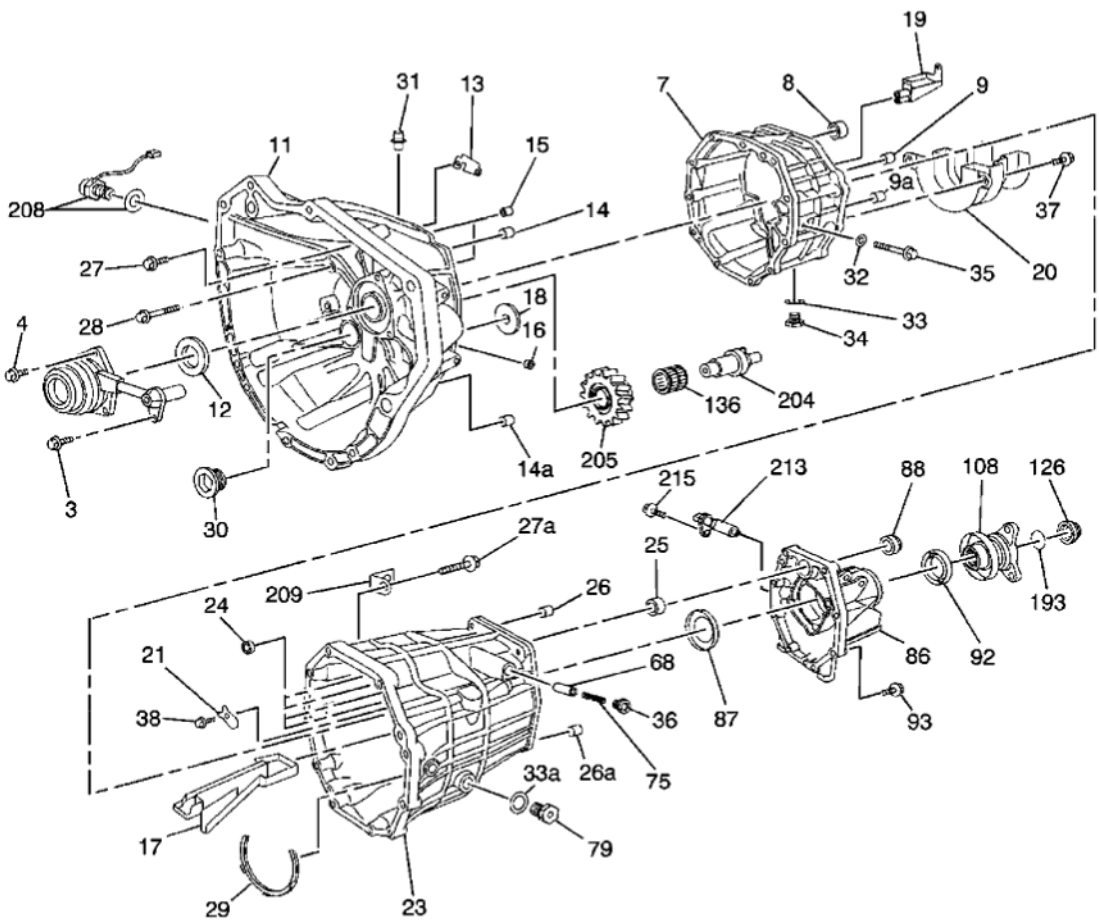

Fig. 2: Case Components
Courtesy of GENERAL MOTORS CORP.

Callout	Component Name
3	Clutch Actuator Bolt/Screw - M6 x 1.0
4	Clutch Actuator Bolt/Screw - M8 x 1.0
7	Transmission Intermediate Case
8	Shift Shaft Bearing Assembly
9	Transmission Rear Case Locating Pin
9a	Transmission Rear Case Locating Pin
11	Transmission Front Case
12	Input Shaft Seal
13	Input Shaft Bearing Oil Shield
14	Select Control Lever Bracket Pin
14a	Transmission Case Intermediate Locating Pin
15	Transmission Case Locating Pin
16	Transmission Case Hole Plug

cardiagn.com

17	Transmission Rear Case Oil Trough
18	Input Shaft Bearing Oil Slinger - Front
19	Oil Trough
20	Transmission Intermediate Case Oil Trough
21	Counter Gear Bearing Retainer
23	Transmission Rear Case
24	Shift Shaft Bushing
25	Shift Shaft Bearing Assembly
26	Transmission Extension Locating Pin
26a	Transmission Extension Locating Pin
27	Transmission Intermediate Case Bolt/Screw - M10 x 1.25
27a	Backup Switch Bracket Bolt/Screw
28	Transmission Intermediate Case Bolt/Screw - M10 x 1.25
29	Transmission Rear Case Oil Trough Gasket
30	Clutch Housing Hole Plug
31	Vent Assembly
32	Reverse Idler Gear Shaft Bolt Gasket
33	Oil Drain Plug Gasket
33a	Oil Fill Plug Gasket
34	Oil Drain Plug
35	Reverse Idler Gear Shaft Retainer Bolt/Screw
36	Shift Shaft Detent Plug
37	Transmission Intermediate Case Oil Trough Bolt/Screw
38	Counter Gear Bearing Retainer Bolt/Screw
68	Shift Shaft Detent Pin
75	Shift Shaft Detent Spring
79	Oil Fill Plug
86	Transmission Extension
87	Main Shaft Bearing Rear Oil Slinger
88	Shift Control Shaft Seal
92	Rear Output Shaft Seal Assembly
93	Transmission Extension Bolt/Screw
108	Propshaft Transmission Flange Assembly
126	Propshaft Transmission Flange Nut
136	Reverse Idler Gear Bearing Assembly
193	Propshaft Transmission Flange Fluid Seal
204	Reverse Idler Gear Shaft
205	Reverse Idler Gear
208	Backup Lamp Switch Assembly
209	Backup Lamp Switch Retainer
213	Output Sensor Assembly

cardiagn.com

	Vehicle Speed Sensor Bolt/Screw

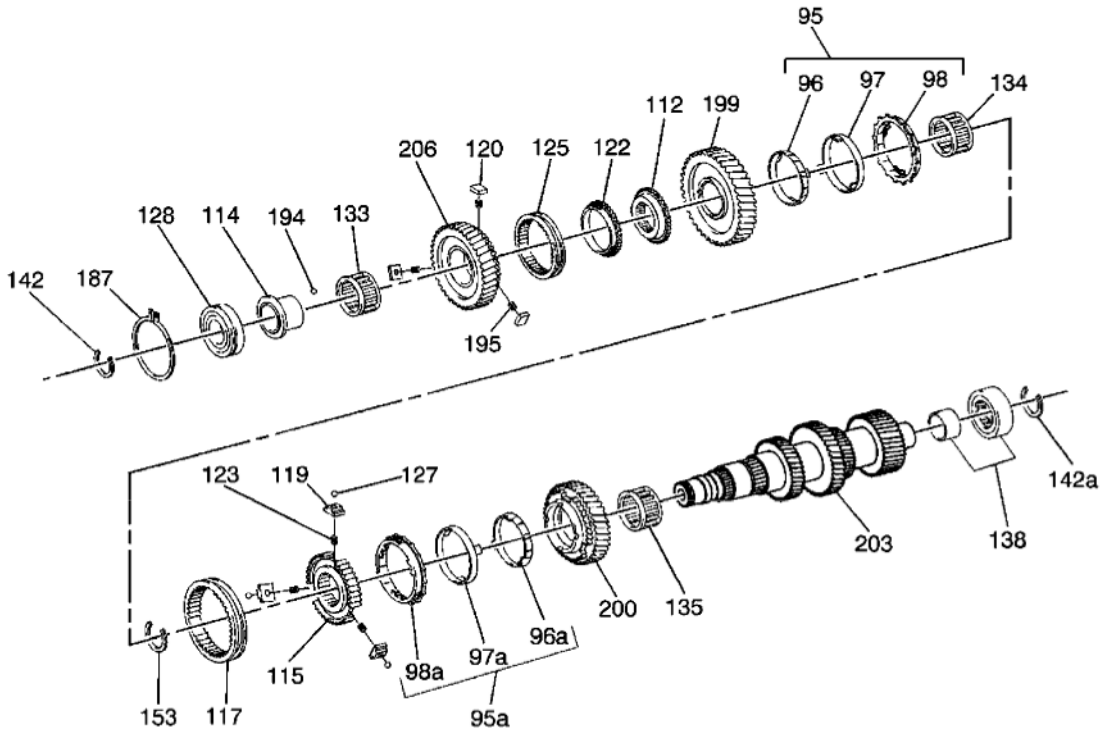

Fig. 3: Countershaft Components
Courtesy of GENERAL MOTORS CORP.

Callout	Component Name
95	1st Gear Blocking Ring Set
95a	2nd Gear Blocking Ring Set
96	1st Gear Synchronizer Inner Cone
96a	2nd Gear Synchronizer Inner Cone
97	1st Gear Synchronizer Outer Cone
97a	2nd Gear Synchronizer Outer Cone
98	1st Gear Outer Blocking Ring
98a	2nd Gear Outer Blocking Ring
112	Reverse Drive Gear
114	Reverse Gear Bearing Bushing w/Thrust Washer
115	1st/2nd Gear Synchronizer Hub
117	1st/2nd Gear Synchronizer Sleeve
119	1st/2nd Gear Synchronizer Insert
120	Reverse Gear Synchronizer Insert
122	Reverse Gear Blocking Ring
123	1st/2nd Gear Synchronizer Spring

cardiagn.com

125	Reverse Gear Synchronizer Sleeve
127	1st/2nd Gear Synchronizer Detent Ball
128	Counter Gear Front Bearing Assembly
133	Reverse Gear Bearing Assembly
134	1st Gear Bearing Assembly
135	2nd Gear Bearing Assembly
138	Counter Gear Rear Bearing Assembly
142	Counter Gear Front Bearing Retainer Ring
142a	Counter Gear Rear Bearing Retainer Ring
153	1st/2nd Gear Synchronizer Retaining Ring
187	Counter Gear Front Bearing Retainer
194	Reverse Gear Thrust Washer Locking Ball
195	Reverse Gear Synchronizer Spring
199	1st Gear
200	2nd Gear
203	Counter Gear
206	Reverse Gear

cardiagn.com

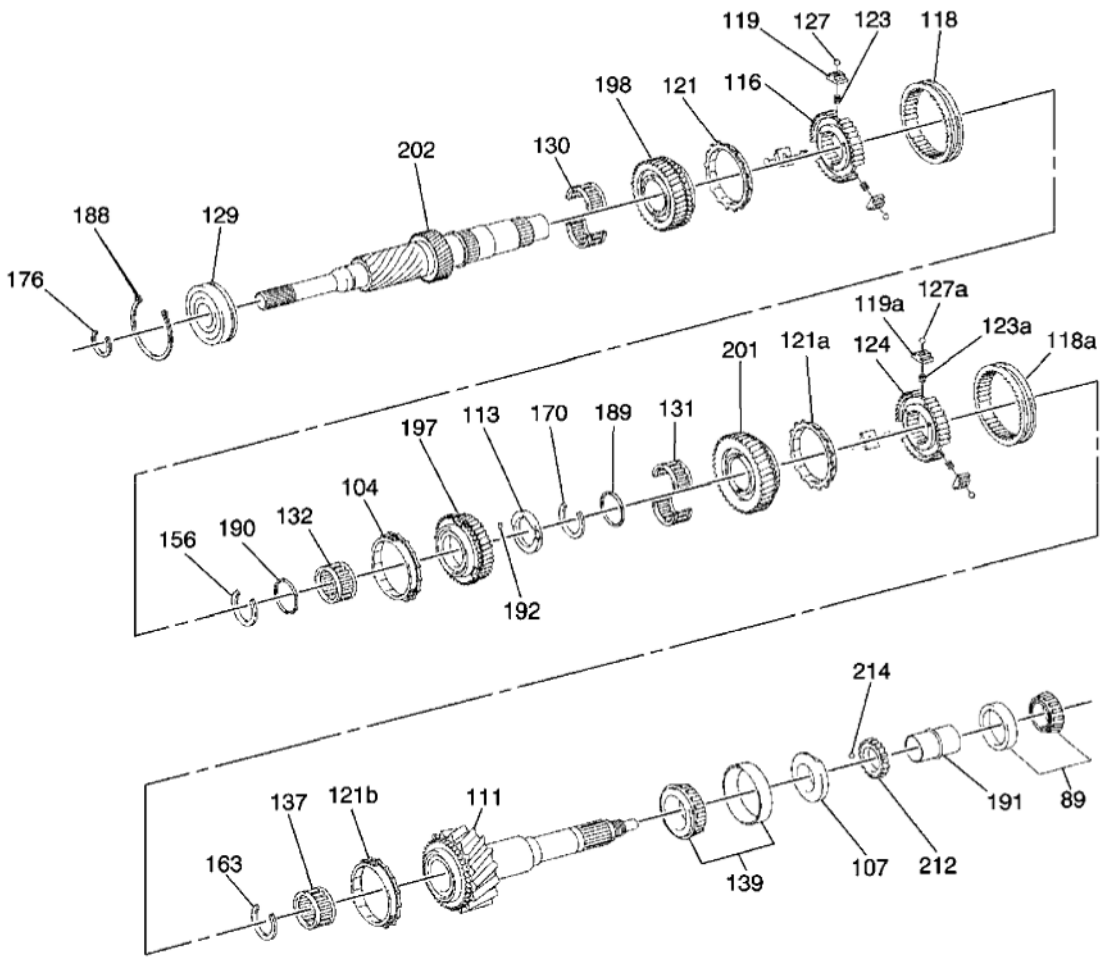

Fig. 4: Input Shaft Components
Courtesy of GENERAL MOTORS CORP.

Callout	Component Name
89	Rear Output Shaft Roller Bearing Assembly
104	3rd Gear Blocking Ring
107	Main Shaft Bearing Oil Slinger
111	Rear Output Shaft
113	3rd Gear Thrust Washer
116	3rd/4th Gear Synchronizer Hub
118	3rd/4th Gear Synchronizer Sleeve
118a	5th/6th Gear Synchronizer Sleeve
119	3rd/4th Gear Synchronizer Insert
119a	5th/6th Gear Synchronizer Insert
121	4th Gear Blocking Ring
121a	6th Gear Blocking Ring
121b	5th Gear Blocking Ring

cardiagn.com

123	3rd/4th Gear Synchronizer Spring
123a	5th/6th Gear Synchronizer Spring
124	5th/6th Gear Synchronizer Hub
127	3rd/4th Gear Synchronizer Detent Ball
127a	5th/6th Gear Synchronizer Detent Ball
129	Input Shaft Bearing Assembly
130	4th Gear Bearing Assembly
131	6th Gear Bearing Assembly
132	3rd Gear Bearing Assembly
137	Input Shaft Bearing
139	Rear Output Shaft Front Bearing Assembly
156	3rd Gear Retaining Ring
163	5th/6th Gear Synchronizer Hub Retaining Ring
170	6th Gear Retaining Ring
176	Input Shaft Bearing Retainer
188	Input Shaft Bearing Retainer Ring
189	6th Gear Bearing Spacer
190	3rd/4th Gear Spacer
191	Rear Output Shaft Rear Bearing Spacer
192	Gear Thrust Washer Locating Pin
197	3rd Gear
198	4th Gear
201	6th Gear
202	Input Shaft
212	Vehicle Speed Sensor Drive Gear
214	Speedometer Drive Gear Locking Ball

cardiagn.com

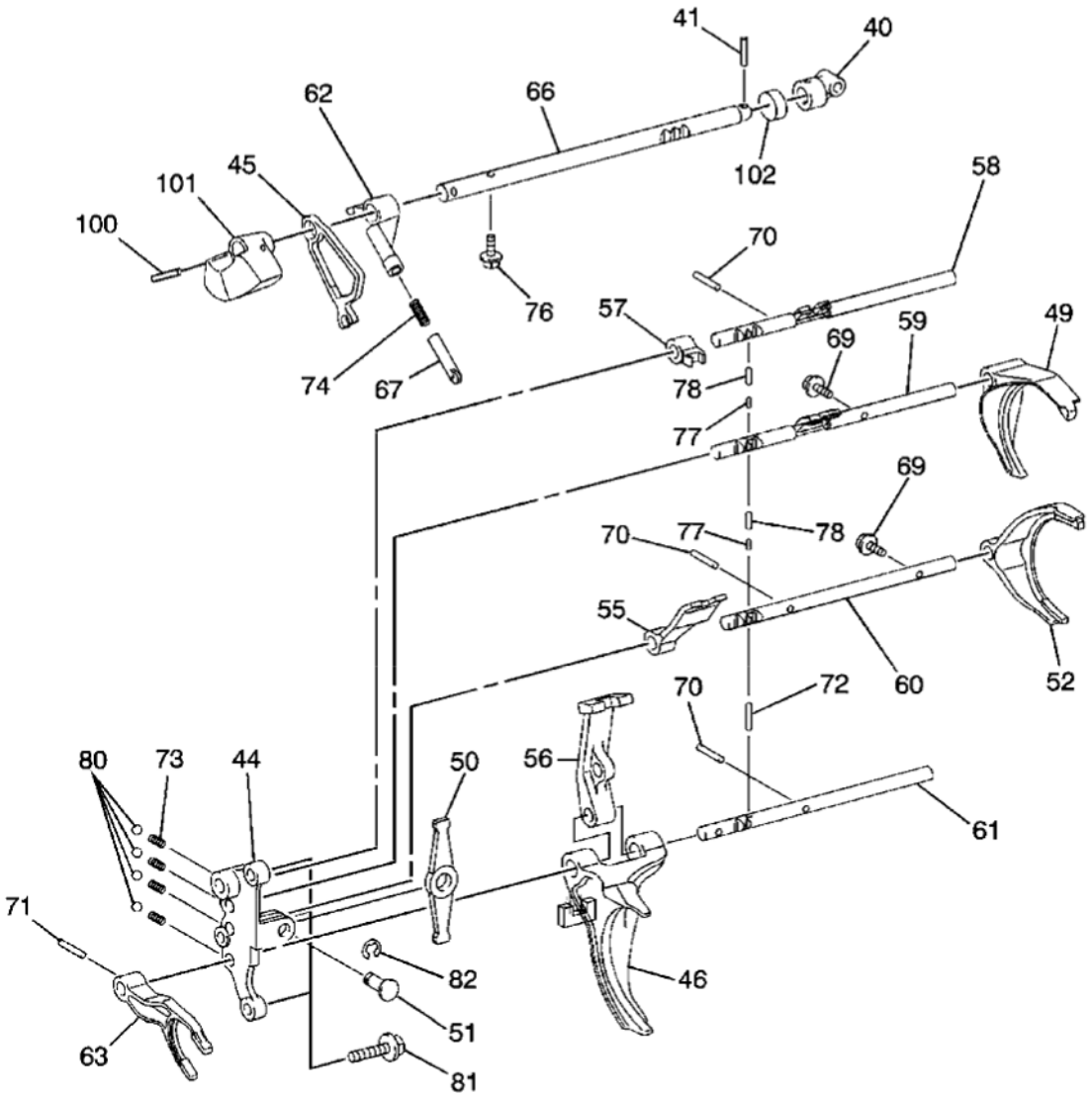

Fig. 5: Shift Rail Components
Courtesy of GENERAL MOTORS CORP.

Callout	Component Name
40	Shift Lever Rod Universal Joint Assembly
41	Shift Lever Pin
44	Shift Control Lever Bracket
45	Shift Shaft Detent Cam
46	1st/2nd Shift Fork Assembly w/Bushings
49	3rd/4th Shift Fork Assembly w/Inserts
50	Control Selector Arm
51	Control Selector Arm Pin
52	5th/6th Shift Fork Assembly w/Inserts

cardiagn.com

55	Shift Lever Assembly
56	Internal Shift Control Lever
57	Selector Control Lever Assembly
58	1st/2nd Shift Shaft
59	3rd/4th Shift Shaft
60	5th/6th Shift Shaft
61	Reverse Shift Shaft
62	Shift Shaft Detent Lever
63	Reverse Shift Fork Assembly w/Inserts
66	Shift Control Shaft
67	Shift Shaft Detent
69	3rd/4th Shift Fork Bolt/Screw
69	5th/6th Shift Fork Bolt/Screw
70	1st/2nd Shift Fork Pin
71	Reverse Shift Fork Pin
72	Shift Shaft Detent Roller
73	Shaft Detent Ball Spring
74	Shift Shaft Detent Spring
76	Shift Shaft Detent Lever Bolt/Screw
77	Shift Shaft Interlocking Pin
78	Shift Shaft Interlocking Pin
80	Shift Detent Ball
81	Shift Control Lever Bracket Bolt/Screw
82	Selector Control Lever Pin Retainer
100	Slotted Spring Pin
101	Dynamic Damper Weight
102	Damper

DIAGNOSTIC INFORMATION AND PROCEDURES

DIAGNOSTIC CODE INDEX

DIAGNOSTIC CODE INDEX

DTC	Description
DTC P0501 or P0502	P0501: Vehicle Speed Sensor (VSS) Performance P0502: Vehicle Speed Sensor (VSS) Circuit Low Voltage
DTC P0712 or P0713	P0712: Transmission Fluid Temperature (TFT) Sensor Circuit Low Voltage P0713: Transmission Fluid Temperature (TFT) Sensor Circuit High Voltage
DTC P0806	P0806: Clutch Pedal Position (CPP) Sensor Circuit Performance
DTC P0807 or P0808	P0807: Clutch Pedal Position (CPP) Sensor Circuit Low Voltage

cardiagn.com

	P0808: Clutch Pedal Position (CPP) Sensor Circuit High Voltage
DTC P080A	P080A: Clutch Pedal Position (CPP) Not Learned

DTC P0501 OR P0502

Diagnostic Instructions

- Perform the **Diagnostic System Check - Vehicle** prior to using this diagnostic procedure.
- Review **Strategy Based Diagnosis** for an overview of the diagnostic approach.
- **Diagnostic Procedure Instructions** provides an overview of each diagnostic category.

DTC Descriptors

DTC P0501

Vehicle Speed Sensor (VSS) Performance

DTC P0502

Vehicle Speed Sensor (VSS) Circuit Low Voltage

Diagnostic Fault Information

Circuit	Short to Ground	Open/High Resistance	Short to Voltage	Signal Performance
Ignition Voltage	P0502	P0502	-	P0501
Signal	P0502	P0502	P0502	P0501
Ground	-	P0502	-	P0501

Typical Scan Tool Information

Vehicle Speed Sensor Parameter

Circuit	Short to Ground	Open/High Resistance	Short to Voltage
Operating Conditions: Engine running, in gear, drive wheels rotating. **Parameter Normal Range:** Displays km/h (mph)			
Ignition Voltage	0 km/h (mph)	0 km/h (mph)	-
Signal	0 km/h (mph)	0 km/h (mph)	0 km/h (mph)
Ground	0 km/h (mph)	0 km/h (mph)	-

Circuit/System Description

Vehicle speed information is provided to the engine control module (ECM) by the vehicle speed sensor (VSS). The VSS consists of a hall-effect sensor mounted to the transmission case which interfaces with a rotor pressed onto the transmission output shaft. The hall-effect sensor contains a permanent magnet and a semiconductor

cardiagn.com

plate to which ignition voltage is applied. As the output shaft spins, the rotor directs the field of the permanent magnet either toward or away from the plate. The VSS produces a frequency signal that is proportional to vehicle speed. The ECM converts the VSS signal to vehicle speed, displayed on the scan tool in kilometers per hour or miles per hour. The ECM also uses the VSS signal to generate the 4,000 pulses per mile vehicle speed signal used by the instrument cluster.

Conditions for Running the DTC

- The engine speed is greater than 1800 RPM for 3 seconds.
- The engine coolant temperature (ECT) is greater than 40°C (104°F).

Conditions for Setting the DTC

The VSS indicates a speed of less than 0 km/h (0 mph) for 4 seconds.

Action Taken When the DTC Sets

- P0501 and P0502 are Type B DTCs.
- The ECM disables cruise control.

Conditions for Clearing the MIL/DTC

P0501 and P0502 are Type B DTCs.

Diagnostic Aids

The battery must be fully charged and pass a battery test. Refer to **Battery Inspection/Test** .

Reference Information

Schematic Reference

Manual Transmission Schematics

Connector End View Reference

Component Connector End Views

Description and Operation

Transmission System Description and Operation

Electrical Information Reference

- **Circuit Testing**
- **Connector Repairs**
- **Testing for Intermittent Conditions and Poor Connections**

cardiagn.com

- **Wiring Repairs**

DTC Type Reference

Powertrain Diagnostic Trouble Code (DTC) Type Definitions

Scan Tool Reference

Engine Control Module Scan Tool Information (LS3, L99) or **Engine Control Module Scan Tool Information (w/LLT)**

Circuit/System Verification

1. Operate the vehicle on the road at 64 km/h (40 mph). Observe the transmission vehicle speed sensor parameter with a scan tool. The VSS signal should match the instrument panel speedometer indicator.
2. Operate the vehicle within the Conditions for Running the DTC, to verify the DTC does not reset. You may also operate the vehicle within the conditions that you observed from the Freeze Frame/Failure Records.

Circuit/System Testing

1. Ignition OFF, disconnect the X2 harness connector at the ECM.
2. Disconnect the VSS harness connector.
3. Ignition OFF, test for less than 5 ohms between the ground circuit at the VSS harness connector terminal 3 and ground.
    - If greater than the specified value, repair the open/high resistance condition.
4. Ignition ON, test for less than 1 V between the signal circuit terminal 1 and ground at the VSS harness connector.
    - If greater than the specified value, test the signal circuit for a short to voltage.
5. Ignition ON, test for greater than 11 V between the ignition voltage circuit, at the VSS harness connector terminal 3, and ground.
    - If less than the specified value, test the ignition voltage circuit for a short to ground or an open/high resistance.
6. Ignition ON, install a 3 A fused jumper wire between the ignition voltage circuit terminal 3 and the signal circuit terminal 1 at the VSS harness connector. Test for greater than 11 V at X2, terminal 43 of the ECM harness connector.
    - If less than the specified value, test the VSS signal circuit for a short to ground, or an open/high resistance.
7. Remove the 3 A fused jumper wire.
8. Ignition ON, engine OFF, transmission in NEUTRAL.
9. Install a 3 A fused jumper wire between the ignition voltage circuit terminal 1 on the VSS harness connector and terminal 1 on the VSS. Connect a second jumper wire between the ground circuit terminal 2 on the VSS harness connector and terminal 2 on the VSS.
10. Test for greater than 0.15 V AC, at terminal 1 on the VSS sensor, while rotating the rear wheels by hand.

cardiagn.com

- If less than the specified value, replace the VSS.

11. If all circuits test normal, replace the ECM.

Component Testing

1. Remove the VSS sensor. Refer to **Vehicle Speed Sensor Replacement**.
2. Inspect and repair the VSS or the transmission for the following conditions:
   - Loose or damaged VSS
   - Excessive VSS to rotor gap
   - Incorrect VSS rotor alignment
   - Loose or damaged VSS rotor

Repair Procedures

Perform the **Diagnostic Repair Verification** after completing the diagnostic procedure.

- **Vehicle Speed Sensor Replacement**
- **Engine Control Module Programming and Setup (LS3, L99)** or **Engine Control Module Programming and Setup (LLT)**
- **Engine Control Module Replacement**

DTC P0712 OR P0713

Diagnostic Instructions

- Perform the **Diagnostic System Check - Vehicle** prior to using this diagnostic procedure.
- Review **Strategy Based Diagnosis** for an overview of the diagnostic approach.
- **Diagnostic Procedure Instructions** provides an overview of each diagnostic category.

DTC Descriptors

DTC P0712

Transmission Fluid Temperature (TFT) Sensor Circuit Low Voltage

DTC P0713

Transmission Fluid Temperature (TFT) Sensor Circuit High Voltage

Diagnostic Fault Information

Circuit	Short to Ground	Open/High Resistance	Short to Voltage	Signal Performance
TFT Sensor Signal	P0712	P0713	P0713[1]	-

cardiagn.com

Low Reference	-	P0713	P0713[1]	-
[1] Internal ECM damage may occur if the circuit is shorted to B+.				

Circuit/System Description

The transmission fluid temperature (TFT) sensor is a variable resistor that measures the temperature of the transmission fluid. The engine control module (ECM) supplies 5 V to the TFT signal circuit and supplies a ground to the low reference circuit.

The following table illustrates the difference between temperature, resistance, and voltage:

TFT	TFT Resistance	TFT Signal Voltage
Cold	High	High
Warm	Low	Low

Conditions for Running the DTC

P0712

- The engine speed is above 1,000 RPM for 7 seconds.
- This DTC runs continuously when the above condition is met.

P0713

- The engine speed is above 1,000 RPM for 7 seconds.
- This DTC runs continuously when the above condition is met.

Conditions for Setting the DTC

P0712

The TFT is greater than 145°C (299°F) for more than 5 seconds.

P0713

The TFT is less than -35°C (-31°F) for more than 5 seconds.

Action Taken When the DTC Sets

DTC P0712 and P0713 are Type C DTCs.

Conditions for Clearing the MIL/DTC

DTC P0712 and P0713 are Type C DTCs.

Reference Information

cardiagn.com

Schematic Reference

Manual Transmission Schematics

Connector End View Reference

Component Connector End Views

Description and Operation

Transmission System Description and Operation

Electrical Information Reference

- **Circuit Testing**
- **Connector Repairs**
- **Testing for Intermittent Conditions and Poor Connections**
- **Wiring Repairs**

DTC Type Reference

Powertrain Diagnostic Trouble Code (DTC) Type Definitions

Scan Tool Reference

Engine Control Module Scan Tool Information (LS3, L99) or **Engine Control Module Scan Tool Information (w/LLT)**

Circuit/System Verification

1. Engine running, DTC P0712 or P0713 should not set.
2. If the vehicle passes the Circuit/System Verification Test, then operate the vehicle within the conditions for running the DTC. You may also operate the vehicle within the conditions that are captured in the Freeze Frame/Failure Records List.

Circuit/System Testing

1. Ignition OFF, disconnect the harness connector at the B173 TFT sensor.
2. Ignition OFF, test for less than 5 ohms between the low reference circuit terminal A and ground.
    - If greater than 5 ohms, test the low reference circuit for a short to voltage or an open/high resistance. If the circuit tests normal, replace the K20 ECM.
3. Ignition ON, using a scan tool verify that the B173 TFT sensor parameter is at -40°C (-40°F).
    - If greater than -40°C (-40°F), test the signal circuit terminal B for a short to ground. If the circuit tests normal, replace the ECM.

cardiagn.com

NOTE: If the signal circuit of the B173 TFT sensor is shorted to voltage the TFT sensor may be damaged.

4. Install a 3 A fused jumper wire between the signal circuit terminal B and the low reference circuit terminal A. Verify the B173 TFT sensor parameter is greater than 128°C (262°F).
   - If less than 128°C (262°F), test the signal circuit of the B173 TFT sensor for a short to voltage or an open/high resistance. If the circuit test normal, replace the K20 ECM.
5. If all circuits test normal, test or replace the B173 TFT sensor.

Repair Procedures

Perform the **Diagnostic Repair Verification** after completing the diagnostic procedure.

- **Transmission Fluid Temperature Sensor Replacement**
- **Engine Control Module Replacement**
- **Engine Control Module Programming and Setup (LS3, L99)** or **Engine Control Module Programming and Setup (LLT)**

DTC P0806

Diagnostic Instructions

- Perform the **Diagnostic System Check - Vehicle** prior to using this diagnostic procedure.
- Review **Strategy Based Diagnosis** for an overview of the diagnostic approach.
- **Diagnostic Procedure Instructions** provides an overview of each diagnostic category.

DTC Descriptor

DTC P0806

Clutch Pedal Position (CPP) Sensor Circuit Performance

Diagnostic Fault Information

CPP Sensor

Circuit	Short to Ground	Open/High Resistance	Short to Voltage	Signal Performance
CPP Sensor Signal	P0807	P0807	P0808	P0806
CPP Sensor 5 V Reference	P0651, P0807	P0807	P0651, P0808	-
CPP Sensor Low Reference	-	P0808	P0808	-

Typical Scan Tool Information

CPP Sensor Voltage

	Short to		Short to

cardiagn.com

Circuit	Ground	Open	Voltage
Operating Conditions: Ignition ON. **CPP Sensor Voltage Parameter Normal Range:** 0 V with clutch pedal applied to 5 V when clutch pedal is released.			
CPP Sensor 5 V Reference	0 V	0 V	5 V
CPP Sensor Signal	0 V	0 V	5 V
CPP Sensor Low Reference	-	5 V	-

CPP Sensor Percentage

Circuit	Short to Ground	Open	Short to Voltage
Operating Conditions: Ignition ON. **CPP Sensor Percent Parameter Normal Range:** 0% with clutch pedal released to 100% when clutch pedal is applied.			
CPP Sensor 5 V Reference	100%	100%	0-100%
CPP Sensor Signal	100%	100%	100%
CPP Sensor Low Reference	-	0%	-

Circuit/System Description

The clutch pedal position (CPP) sensor is a three wire sensor, connected to a 5 V reference circuit, a low reference circuit, and a signal circuit. The engine control module (ECM) supplies 5 V to the CPP sensor, and also provides a sensor ground path on the low reference circuit. The CPP sensor sends a voltage signal to the ECM on the signal circuit. The voltage on the signal circuit will vary from a voltage less than or equal to 5 V when the clutch pedal is released, to a voltage less than or equal to 1.5 V when the clutch pedal is applied.

Conditions for Running the DTC

DTCs P0335, P0336, P0502, P0503, P0607, P0808, or P080A are not set.

Conditions for Setting the DTC

The CPP sensor is stuck in range.

Action Taken When the DTC Sets

P0806 is a Type A DTC.

Conditions for Clearing the MIL/DTC

P0806 is a Type A DTC.

Reference Information

Schematic Reference

cardiagn.com

Manual Transmission Schematics

Connector End View Reference

Component Connector End Views

Description and Operation

Transmission System Description and Operation

Electrical Information Reference

- **Circuit Testing**
- **Connector Repairs**
- **Testing for Intermittent Conditions and Poor Connections**
- **Wiring Repairs**

DTC Type Reference

Powertrain Diagnostic Trouble Code (DTC) Type Definitions

Scan Tool Reference

Engine Control Module Scan Tool Information (LS3, L99) or **Engine Control Module Scan Tool Information (w/LLT)**

Circuit/System Verification

1. Ignition ON, observe the scan tool CPP sensor percent parameter. The percentage should vary from 0% when the clutch pedal is released, to 100% when the clutch pedal is in the apply position.
2. Perform the CPP learn procedure. Refer to **Clutch Pedal Position Sensor Learn**.
3. Operate the vehicle within the conditions for running the DTC to verify the DTC does not reset. You may also operate the vehicle within the conditions that you observed from the Freeze Frame/Failure Records data.

Circuit/System Testing

1. Ignition OFF, disconnect the harness connector of the CPP sensor.
2. Ignition ON, observe the scan tool CPP sensor voltage parameter for 0.1 V.
    - If less than the specified value, replace the CPP sensor.
    - If greater than the specified value, replace the ECM.

Component Testing

1. Ignition OFF, disconnect the harness connector of the CPP sensor.

cardiagn.com

2. Measure the resistance between the signal terminal B and the low reference terminal A of the CPP sensor. Sweep the CPP sensor through the entire range. The resistance should vary low to high and high to low without any spikes or dropouts.
    - If the resistance is erratic with spikes or dropouts, replace the CPP sensor.

Repair Procedures

Perform the **Diagnostic Repair Verification** after completing the diagnostic procedure.

- **Clutch Pedal Position Sensor Replacement**
- **Engine Control Module Replacement**
- **Engine Control Module Programming and Setup (LS3, L99)** or **Engine Control Module Programming and Setup (LLT)**

DTC P0807 OR P0808

Diagnostic Instructions

- Perform the **Diagnostic System Check - Vehicle** prior to using this diagnostic procedure.
- Review **Strategy Based Diagnosis** for an overview of the diagnostic approach.
- **Diagnostic Procedure Instructions** provides an overview of each diagnostic category.

DTC Descriptors

DTC P0807

Clutch Pedal Position (CPP) Sensor Circuit Low Voltage

DTC P0808

Clutch Pedal Position (CPP) Sensor Circuit High Voltage

Diagnostic Fault Information

Circuit	Short to Ground	Open/High Resistance	Short to Voltage	Signal Performance
CPP Sensor Signal	P0807	P0807	P0808	P0806
CPP Sensor 5 V Reference	P0651, P0807	P0807	P0651, P0808	-
CPP Sensor Low Reference	-	P0808	P0808	-

Typical Scan Tool Information

CPP Sensor Voltage

Circuit	Short to Ground	Open	Short to Voltage

cardiagn.com

Operating Conditions: Ignition ON. **CPP Sensor Voltage Parameter Normal Range:** 0 V with clutch pedal applied to 5 V when clutch pedal is released.			
CPP Sensor 5 V Reference	0 V	0 V	5 V
CPP Sensor Signal	0 V	0 V	5 V
CPP Sensor Low Reference	-	5 V	-

CPP Sensor Percentage

Circuit	Short to Ground	Open	Short to Voltage
Operating Conditions: Ignition ON. **CPP Sensor Percentage Parameter Normal Range:** 0% with clutch pedal released to 100% when clutch pedal is applied.			
CPP Sensor 5 V Reference	100%	100%	0-100%
CPP Sensor Signal	100%	100%	100%
CPP Sensor Low Reference	-	0%	-

Circuit/System Description

The clutch pedal position (CPP) is a three wire sensor, connected to a 5 V reference circuit, a low reference circuit, and a signal circuit. The engine control module (ECM) supplies 5 V to the CPP sensor, and also provides a sensor ground path on the low reference circuit. The CPP sensor sends a voltage signal to the ECM on the signal circuit. The voltage on the signal circuit will vary from a voltage less than or equal to 5 V when the clutch pedal is released to a voltage less than or equal to 1.5 V when the clutch pedal is applied.

Conditions for Running the DTC

- DTCs P0641 or P0651 are not set.
- The system voltage is more than 9 V.
- The ignition is in the RUN position.

Conditions for Setting the DTC

P0807

The CPP sensor voltage is less than 0.1 V for more than 1 second.

P0808

The CPP sensor voltage is more than 5.2 V for more than 1 second.

Action Taken When the DTC Sets

P0807 and P0808 are Type A DTCs.

Conditions for Clearing the MIL/DTC

cardiagn.com

P0807 and P0808 are Type A DTCs.

Reference Information

Schematic Reference

Manual Transmission Schematics

Connector End View Reference

Component Connector End Views

Description and Operation

Transmission System Description and Operation

Electrical Information Reference

- **Circuit Testing**
- **Connector Repairs**
- **Testing for Intermittent Conditions and Poor Connections**
- **Wiring Repairs**

DTC Type Reference

Powertrain Diagnostic Trouble Code (DTC) Type Definitions

Scan Tool Reference

Engine Control Module Scan Tool Information (LS3, L99) or **Engine Control Module Scan Tool Information (w/LLT)** for scan tool information

Circuit/System Verification

1. If DTC P0641 or P0651 is set, refer to **Diagnostic Trouble Code (DTC) List - Vehicle** .
2. Ignition ON, observe the scan tool CPP sensor percent parameter. The percentage should vary from 0 percent when the clutch pedal is released, to 100 percent when the clutch pedal is in the apply position.
3. Perform the CPP learn procedure. Refer to **Clutch Pedal Position Sensor Learn**.
4. Operate the vehicle within the conditions for running the DTC to verify the DTC does not reset. You may also operate the vehicle within the conditions that you observed from the Freeze Frame/Failure Records data.

Circuit/System Testing

1. Ignition OFF, disconnect the harness connector of the CPP sensor.
2. Ignition OFF, test for less than 1 ohms between the low reference circuit terminal A and the negative post

cardiagn.com

of the battery.
    - If greater than the specified value, test the low reference circuit for an open/high resistance. If the circuit tests normal, replace the ECM.
3. Ignition ON, test for 4.8-5.2 V between the 5 V reference circuit terminal C and ground.
    - If less than the specified range, test the 5 V reference circuit for a short to ground or an open/high resistance. If the circuit tests normal, replace the ECM.
    - If greater than the specified range, test the 5 V reference circuit for a short to voltage. If the circuit tests normal, replace the ECM.
4. Ignition ON, verify that the scan tool CPP sensor parameter is less than 0.1 V.
    - If greater than the specified value, test the signal circuit for a short to voltage. If the circuit tests normal, replace the ECM.
5. Install a 3 A fused jumper wire between the signal circuit terminal B and the 5 V reference circuit terminal C. Verify that the scan tool CPP sensor parameter is between 4.8-5.2 V.
    - If less than the specified range, test the signal circuit for a short to ground or an open/high resistance. If the circuit tests normal, replace the ECM.
6. If all circuits test normal, test or replace the CPP sensor.

Component Testing

1. Ignition OFF, disconnect the harness connector of the CPP sensor.
2. Measure the resistance between the signal terminal B and the low reference terminal A of the CPP sensor. Sweep the CPP sensor through the entire range. The resistance should vary low to high and high to low without any spikes or dropouts.
    - If the resistance is erratic with spikes or dropouts, replace the CPP sensor.

Repair Procedures

Perform the **Diagnostic Repair Verification** after completing the diagnostic procedure.

- **Clutch Pedal Position Sensor Replacement**
- **Engine Control Module Replacement**
- **Engine Control Module Programming and Setup (LS3, L99)** or **Engine Control Module Programming and Setup (LLT)**

DTC P080A

Diagnostic Instructions

- Perform the **Diagnostic System Check - Vehicle** prior to using this diagnostic procedure.
- Review **Strategy Based Diagnosis** for an overview of the diagnostic approach.
- **Diagnostic Procedure Instructions** provides an overview of each diagnostic category.

DTC Descriptor

cardiagn.com

DTC P080A

Clutch Pedal Position (CPP) Not Learned

Circuit/System Description

The clutch pedal position (CPP) is a three wire sensor, connected to a 5 V reference circuit, a low reference circuit, and a signal circuit. The engine control module (ECM) supplies 5 V to the CPP sensor, and also provides a sensor ground path on the low reference circuit. The CPP sensor sends a voltage signal to the ECM on the signal circuit. The voltage on the signal circuit will vary from a voltage less than or equal to 5 V when the clutch pedal is released to a voltage less than or equal to 1.5 V when the clutch pedal is applied.

Conditions for Running the DTC

Clutch pedal fully applied.

Conditions for Setting the DTC

Clutch pedal position not learned.

Action Taken When the DTC Sets

P080A is a Type B DTC.

Conditions for Clearing the MIL/DTC

P080A is a Type B DTC.

Reference Information

Schematic Reference

Manual Transmission Schematics

Connector End View Reference

Component Connector End Views

Description and Operation

Transmission System Description and Operation

Electrical Information Reference

- **Circuit Testing**
- **Connector Repairs**
- **Testing for Intermittent Conditions and Poor Connections**

cardiagn.com

- **Wiring Repairs**

DTC Type Reference

Powertrain Diagnostic Trouble Code (DTC) Type Definitions

Scan Tool Reference

Engine Control Module Scan Tool Information (LS3, L99) or **Engine Control Module Scan Tool Information (w/LLT)** for scan tool information.

Circuit/System Verification

Perform the clutch pedal position sensor learn procedure. Refer to **Clutch Pedal Position Sensor Learn**.

Repair Procedures

Perform the **Diagnostic Repair Verification** after completing the diagnostic procedure.

- **Clutch Pedal Position Sensor Learn**
- **Engine Control Module Replacement**
- **Engine Control Module Programming and Setup (LS3, L99)** or **Engine Control Module Programming and Setup (LLT)**

CLUTCH PEDAL POSITION SENSOR LEARN

IMPORTANT: The clutch pedal position (CPP) sensor learn procedure is required when the following service procedures have been performed regardless of whether DTC P080A is set:

- **An engine control module (ECM) replacement**
- **A CPP sensor replacement**
- **Any repairs which affect the CPP sensor relationship**

1. Install a scan tool.
2. Monitor the ECM for DTCs with a scan tool. If other DTCs are set, except DTC P080A, refer to **Diagnostic Trouble Code (DTC) List - Vehicle** for the applicable DTC that set.
3. With a scan tool, select Clutch Pedal Position Learn under Module Setup in Manual Transmission, and perform the following instructions displayed on the scan tool screen.

IMPORTANT: The CPP sensor learn procedure cannot be performed more than once per ignition cycle. The clutch pedal needs to be fully depressed and held steady throughout this procedure in order to perform a correct learning.

4. The scan tool will display under CPP Learn Status: Not Learned, In Process, Complete, Fail - Low Volt,

cardiagn.com

Fail - High Volt, or Fail Moving. The scan tool will display under CPP Learn Status Complete if the process was successful.

5. If the scan tool indicates that DTC P080A ran and passed this ignition the CPP sensor learn procedure is complete. If the scan tool indicates DTC P080A failed or did not run this ignition, refer to **DTC P080A**. If any other DTC is set, refer to **Diagnostic Trouble Code (DTC) List - Vehicle** for the applicable DTC.
6. Turn OFF the ignition for 30 seconds after the learn procedure has successfully completed in order to store the CPP sensor variation values in ECM history.

SYMPTOMS - MANUAL TRANSMISSION

Strategy Based Diagnostics

Review the system operations in order to familiarize yourself with the system functions. Refer to **Transmission System Description and Operation**.

Visual/Physical Inspection

- Inspect the easily accessible or visible system components for obvious damage or conditions which could cause the symptom.
- Inspect the manual transmission for the correct fluid level.
- Inspect the manual transmission for fluid leaks.
- Inspect the manual transmission for broken or loose transmission mounts.
- Inspect the shifter for damage or excessive freeplay.

Intermittent

Test the vehicle under the same conditions that the customer reported in order to verify the system is operating properly.

Symptom List

Refer to a symptom diagnostic procedure from the following list in order to diagnose the symptom:

- **Transmission Shifts Hard**
- **Transmission Gear Clash When Shifting Gears**
- **Transmission Noisy**
- **Transmission Does Not Shift into One Gear**
- **Transmission Locked in One Gear**
- **Transmission Jumps Out of Gear**
- **Transmission Clunk on Acceleration or Deceleration**
- **Transmission Fluid Leak Diagnosis**

TRANSMISSION SHIFTS HARD

Diagnostic Aids

cardiagn.com

An intermittent hard shift may be caused by an intermittent clutch condition. With a self adjusting clutch, the clutch may be between adjustments and not give full clutch release. This might be felt by a low clutch pedal. After several applications, the clutch may adjust properly, to give the proper pedal feel.

Test Description

The numbers below refer to the step numbers on the diagnostic table.

3: A static shift test is performed by shifting into all of the gear positions with the engine not operating. While performing the test one should note how the shift lever movement is felt. Also while shifting from one gear to the other feel for binding in the shift rails. You should be able to feel the detent plungers operating when coming out of a gear and going into a gear.

5: A dynamic shift test is performed by shifting into the gear positions with the engine operating. Test for the correct mesh of the synchronizers and for the clutch releasing correctly. When shifting into and out of a gear, feel for the shift detent plungers and for the synchronizers sleeve for moving freely.

7: The transmission uses a synthetic transmission fluid that allows proper synchronizer operation. The incorrect fluid may cause hard shifting by varnish build up, or not enough lubrication for proper synchronizer operation.

Step	Action	Yes	No
DEFINITION: The transmission does not shift smoothly, or without difficulty, from one gear to the other.			
1	Did you review the Symptoms - Manual Transmission, and perform the necessary inspections?	Go to **Step 2**	Go to **Symptoms - Manual Transmission**
2	Inspect the clutch system for proper operation. Refer to **Clutch System Description and Operation** . Did you find or repair the condition?	Go to **Step 11**	Go to **Step 3**
3	1. Perform a static shift test on the transmission. 2. Test for the following: • Blockage preventing full shift lever movement • Excessive movement in the shift lever • Binding in the shift lever • Detent plungers or shift rails binding Are you able to shift into all gears?	Go to **Step 5**	Go to **Step 4**
4	Remove the shifter and inspect for worn or faulty components. Refer to **Shift Control Assembly Replacement**. Did you find and repair the condition?	Go to **Step 11**	Go to **Step 5**
	1. Perform a dynamic shift test on the transmission. 2. Test for the following: • Detent plungers or shift rails binding		

cardiagn.com

5	• Synchronizer sleeve binding • Gear clash into only one gear • Gear clash into all gears Did the transmission shift hard into all gears?	Go to **Step 6**	Go to **Step 10**
6	Inspect the transmission for the correct fluid level and type of the transmission fluid. Refer to **Transmission Fluid Replacement**. Is the transmission at the correct level and proper fluid being used?	Go to **Step 8**	Go to **Step 7**
7	Drain and refill the transmission with the correct type fluid. Refer to **Transmission Fluid Replacement**. Did you find and repair the condition?	Go to **Step 11**	Go to **Step 8**
8	1. Remove the transmission. Refer to **Transmission Replacement**. 2. Inspect the clutch pressure plate and/or clutch driven plate. Is the clutch pressure plate and/or clutch driven plate worn or faulty?	Go to **Step 9**	Go to **Step 10**
9	Replace the clutch assembly. Refer to **Clutch Assembly Replacement** . Did you find and repair the condition?	Go to **Step 11**	Go to **Step 10**
10	Replace the transmission. Refer to **Transmission Replacement**. Is the replacement complete?	Go to **Step 11**	-
11	Operate the system in order to verify the repair. Did you correct the condition?	System OK	Go to **Step 1**

TRANSMISSION GEAR CLASH WHEN SHIFTING GEARS

Diagnostic Aids

Gear clashing may be caused by shifting at too high of an engine RPM or by rushing the shift. If gear clashing is occurring in more than one gear, the clutch may not be releasing properly for proper synchronizer operation.

Test Description

The numbers below refer to the step numbers on the diagnostic table.

2: This step tests for the proper releasing of the clutch. If the clutch reserve is not proper, the mainshaft gears may still be turning causing the gear clashing.

5: This step inspects for the proper transmission fluid. A special fluid is required for the correct lubrication of the synchronizers.

7: A static shift test is performed by shifting into all of the gear positions with the engine not operating.

cardiagn.com

While performing the test, you should note how the shift lever movement is felt. Also, while shifting from one gear to another, feel for binding in the shift rails. You should be able to feel the detent plungers operating when coming out of a gear and going into a gear. Excessive play in the gear shift lever may prevent the shift forks from fully engaging the synchronizer.

9: A dynamic shift test is performed by shifting into all of the gear positions with the engine operating. Test for the correct mesh of the synchronizers, and for the clutch releasing correctly. Move the shift lever and feel for the synchronizer sleeve to just release from the gear, then let up on the clutch pedal. Depress the clutch pedal and move the shift lever to re-engage that gear. If it shifts back into the gear without clashing, the clutch is releasing correctly and the synchronizer is working. If clashing occurs, test on another gear. If all gears clash, the clutch is not releasing correctly.

Step	Action	Yes	No
DEFINITION: Noise from the transmission when shifting gears. A grinding or grating sound, when the synchronizer sleeve is engaging with the selector teeth on the speed gear. A suspected internal transmission condition, if the noise only occurs in one gear.			
1	Did you review the Symptoms - Manual Transmission, and perform the necessary inspections?	Go to **Step 2**	Go to **Symptoms - Manual Transmission**
2	With the engine operating, does the transmission shift from neutral to any gear, without the vehicle lurching or gear clashing?	Go to **Step 5**	Go to **Step 3**
3	Inspect for proper clutch operation. Refer to **Clutch System Description and Operation** . Does the clutch operate properly?	Go to **Step 5**	Go to **Step 4**
4	Repair the clutch system. Refer to **Symptoms - Clutch** . Did you find and repair the condition?	Go to **Step 11**	Go to **Step 5**
5	Inspect for the correct transmission fluid level and the proper fluid. Refer to **Transmission Fluid Replacement**. Is the transmission fluid level correct and at the proper level?	Go to **Step 7**	Go to **Step 6**
6	Fill the transmission to the correct level, or change the transmission fluid if it is not the correct type. Does the transmission still have gear clash?	Go to **Step 7**	Go to **Step 11**
7	1. Perform a static shift test on the transmission. 2. Test for the following: • Blockage preventing full shift lever movement • Excessive movement in the shift lever • Binding in the shift lever • Detent plungers or shift rails binding Did the transmission shift smoothly into the gear that		

cardiagn.com

	is clashing?	Go to **Step 9**	Go to **Step 8**
8	Remove the shifter and inspect for damage or worn components. Refer to **Shift Control Assembly Replacement**. Did you find and repair the condition?	Go to **Step 11**	Go to **Step 9**
9	1. Perform a dynamic shift test on the transmission. 2. Test for the following: • Detent plungers or shift rails binding • Synchronizer sleeve binding • Gear clashing in more than the suspected gear Is the transmission hard to shift into all gears?	Go to **Transmission Shifts Hard**	Go to **Step 10**
10	Replace the transmission. Refer to **Transmission Replacement**. Is the replacement complete?	Go to **Step 11**	-
11	Operate the system and verify the repair. Did you correct the condition?	System OK	Go to **Step 1**

TRANSMISSION NOISY

Diagnostic Aids

If the vehicle is equipped with the 2.8L and 3.6L engine, the transmission is in neutral with the engine operating, and a whirling kind of a noise, neutral gear rattle, is heard outside the vehicle, this is a normal condition.

Test Description

The numbers below refer to the step numbers on the diagnostic table.

3: This step inspects for vibration causing a noise.

5: This step inspects for the correct transmission fluid level. If the transmission fluid level is excessively low, damage may have occurred to the transmission components.

7: This step inspects for the correct type of transmission fluid. The transmission uses a special fluid. If the incorrect fluid was used, there may have been an overheating problem. Overheating may cause damage to the transmission components.

11: This step tests to determine if clutch components are making the noise. Depress the clutch pedal slowly and listen for the change in noise. If the noise changes while pressing the pedal, it may be a faulty clutch component. If the noise does not change until the clutch is completely disengaged, the transmission component is faulty. Improper sealing of the shifter may be allowing normal transmission noise to be heard by the driver.

Step	Action	Yes	No

cardiagn.com

DEFINITION: The transmission is making a noise. The different noises may be a whine or a growl from faulty bearings or gears. The noise may also be caused from a faulty component causing a vibration noise or rattle.

1	Did you review the Symptoms - Manual Transmission, and perform the necessary inspections?	Go to **Step 2**	Go to **Symptoms - Manual Transmission**
2	Is the noise present at a certain road speed, or with a certain load?	Go to **Step 3**	Go to **Step 4**
3	Is the noise present in all gears?	Go to **Step 5**	Go to **Step 4**
4	Is the noise present in just one gear?	Go to **Step 13**	Go to **Step 5**
5	Inspect the transmission fluid level. Is the fluid level correct?	Go to **Step 7**	Go to **Step 6**
6	Add transmission fluid. Refer to **Transmission Fluid Replacement**. Did you find and repair the condition?	Go to **Step 14**	Go to **Step 7**
7	Inspect the transmission for the correct fluid type. Refer to **Lubrication Specifications**. Is the transmission fluid the correct type?	Go to **Step 9**	Go to **Step 8**
8	Drain and refill the transmission with the correct type fluid. Refer to **Transmission Fluid Replacement**. Did you find and repair the condition?	Go to **Step 14**	Go to **Step 9**
9	1. Inspect for engine to transmission alignment. 2. Inspect for loose transmission mounting bolts. Are there any loose transmission mounting bolts?	Go to **Step 10**	Go to **Step 11**
10	Replace and tighten the transmission mounting bolts. Refer to **Transmission Mount Replacement**. Is the noise still present?	Go to **Step 11**	Go to **Step 14**
11	With the engine operating, depress the clutch pedal. Is the noise still present?	Go to **Step 12**	Go to **Step 13**
12	1. Remove the clutch. Refer to **Clutch Assembly Replacement** . 2. Inspect the following components for being the cause of the noise. • The release bearing • The dual mass flywheel • The pressure plate • The clutch disc • The engine crankshaft end play Did you find and repair the condition?	Go to **Step 14**	Go to **Step 13**
13	Replace the transmission. Refer to **Transmission Replacement**.		-

cardiagn.com

	Is the replacement complete?	Go to **Step 14**	
14	Operate the system in order to verify the repair. Did you correct the condition?	System OK	Go to **Step 1**

TRANSMISSION DOES NOT SHIFT INTO ONE GEAR

Diagnostic Aids

If the transmission shifts into gear and then jumps out of gear, refer to **Transmission Jumps Out of Gear**. If the vehicle is equipped with a transfer case, during certain load conditions, the transfer case may fail. If it is an intermittent condition, other driveline components may be faulty.

Test Description

The numbers below refer to the step numbers on the diagnostic table.

2: This step is to confirm that the clutch is not slipping. During certain conditions, the clutch may slip, and feel as though the transmission is not in gear.

3: A static shift test is performed by shifting into all gears with the engine not operating. While performing the test, you should note how the shift lever movement feels. Also, feel for the shift rails moving freely, the detent plungers operating when coming out of a gear and going in the next gear, and the synchronizer sleeve movement.

5: A dynamic shift test is performed by shifting into all gears with the engine operating. Test for the correct mesh of the synchronizers sleeve and the speed gear selector teeth. Move the shift lever and feel for the synchronizer sleeve to just release from the gear, then let up on the clutch pedal. Depress the clutch pedal and move the shift lever to re-engage that gear, to ensure full travel of the shift components.

Step	Action	Yes	No
DEFINITION: The shift lever will not move into a particular gear position, or when it is in a gear position, power is not delivered through the transmission.			
1	Did you review the Symptoms - Manual Transmission, and perform the necessary inspections?	Go to **Step 2**	Go to **Symptoms - Manual Transmission**
2	Inspect the clutch system for slipping. Refer to **Clutch Slipping** . Is the clutch working properly?	Go to **Step 3**	Go to **Clutch Assembly Replacement**
3	1. Perform a static shift test on the transmission. 2. Test for the following: • Blockage preventing full shift lever movement • Excessive movement in the shift lever • Binding in the shift lever • Detent plungers or shift rails binding • Synchronizer sleeve movement		

cardiagn.com

	Were you able to shift into the gear position that has the concern?	Go to **Step 5**	Go to **Step 4**
4	Remove the shifter and inspect for worn or faulty components Refer to **Shift Control Assembly Replacement**. Did you find and repair the condition?	Go to **Step 7**	Go to **Step 5**
5	1. Perform a dynamic shift test on the transmission. 2. Test for the following: • Detent plungers or shift rails binding • Synchronizer sleeve binding • Synchronizer sleeve engaging on the speed gear selector teeth Were you able to shift into the gear position that has the concern?	Go to **Step 7**	Go to **Step 6**
6	Replace the transmission. Refer to **Transmission Replacement**. Is the replacement complete?	Go to **Step 7**	-
7	Operate the system in order to verify the repair. Did you correct the condition?	System OK	Go to **Step 1**

TRANSMISSION JUMPS OUT OF GEAR

Diagnostic Aids

If the transmission jumps out of gear during deceleration, inspect the components that may allow for the gears or shafts to tip. If the gears or shafts tip, the synchronizer sleeve can disengage from the selector teeth on the speed gear. If the transmission jumps out of gear during acceleration, inspect the components that may not allow full engagement of the synchronizer sleeve to the selector teeth on the speed gear. Insufficient engagement of the selector teeth under torque may cause the transmission to jump out of gear.

Test Description

The numbers below refer to the step numbers on the diagnostic table.

2: A static shift test is performed by shifting into all gear positions with the engine not operating. While performing the test, slowly move the shift lever. Feel for proper movement of the shift lever and transmission internal shift components.

4: A dynamic shift test is performed by shifting into all gear positions with the engine operating. Test for the correct mesh of the synchronizers sleeve and the speed gear selector teeth. Move the shift lever to NEUTRAL and then let up on the clutch pedal. Depress the clutch pedal and move the shift lever to re-engage the gear, to ensure full travel of the shift components.

5: This step inspects for worn or damaged transmission or engine mounts. Loose mounts may cause a shock on the transmission allowing for gear disengagement.

cardiagn.com

Step	Action	Yes	No
DEFINITION: Gear disengagement occurs during acceleration or deceleration.			
1	Did you review the Symptoms - Manual Transmission, and perform the necessary inspections?	Go to **Step 2**	Go to **Symptoms - Manual Transmission**
2	1. Perform a static shift test. 2. Test for the following: • Blockage preventing full shift lever movement • Excessive movement in the shift lever • Detent plungers engaging in the shift rails • Synchronizer sleeve movement Did the transmission shift completely into all gears?	Go to **Step 4**	Go to **Step 3**
3	Remove the shifter and inspect for worn or faulty components. Refer to **Shift Control Assembly Replacement**. Did you find and repair the condition?	Go to **Step 8**	Go to **Step 4**
4	1. Perform a dynamic shift test on the transmission. 2. Test for the following: • Synchronizer sleeve engagement to the speed gear selector teeth • Detent plungers engaging in the shift rails Did the transmission shift completely into all gears?	Go to **Step 5**	Go to **Step 7**
5	Inspect the engine and/or transmission mounts. Refer to **Transmission Mount Replacement**. Did you find and repair the condition?	Go to **Step 8**	Go to **Step 6**
6	1. Align the housing, if required. 2. Tighten any loose housing bolts. Refer to **Transmission Replacement**. Did you find and repair the condition?	Go to **Step 8**	Go to **Step 7**
7	Replace the transmission. Refer to **Transmission Replacement**. Is the replacement complete?	Go to **Step 8**	-
8	Operate the system in order to verify the repair. Did you correct the condition?	System OK	Go to **Step 1**

TRANSMISSION LOCKED IN ONE GEAR

Test Description

cardiagn.com

The numbers below refer to the step numbers on the diagnostic table.

2: This step is to ensure the use of the proper transmission fluid. A special fluid is used to ensure proper synchronizer operation, and for sufficient lubrication. Improper fluid may cause the synchronizers to stick or the transmission components to overheat.

4: A static shift test is performed by shifting into all gears with the engine not operating. By confirming that the transmission can be shifted into all positions, ensures that the shift lever is not excessively worn or damaged.

6: A dynamic shift test is performed by shifting into all of the gear positions with the engine operating. Test to ensure that the internal shift components are functioning properly.

Step	Action	Yes	No
DEFINITION: The transmission cannot be shifted out of a gear, or the vehicle will not move because the transmission is locked.			
1	Did you review the Symptoms - Manual Transmission, and perform the necessary inspections?	Go to **Step 2**	Go to **Symptoms - Manual Transmission**
2	Inspect for the correct type of transmission fluid. Is the correct type transmission fluid being used?	Go to **Step 4**	Go to **Step 3**
3	Drain the transmission, and refill with the correct type of fluid. Refer to **Transmission Fluid Replacement**. Did you find and repair the condition?	Go to **Step 8**	Go to **Step 4**
4	1. Perform a static shift test on the transmission. 2. Test for the shift lever moving to all positions. Were you able to shift into all positions?	Go to **Step 6**	Go to **Step 5**
5	1. Remove the shifter. 2. Inspect for worn or faulty components. Refer to **Shift Control Assembly Replacement**. Did you find and repair the conditions?	Go to **Step 8**	Go to **Step 6**
6	1. Perform a dynamic shift test on the transmission. 2. Test for being able to shift in and out of the gear with the concern. Were you able to shift the transmission correctly?	Go to **Step 8**	Go to **Step 7**
7	Replace the transmission. Refer to **Transmission Replacement**. Is the replacement complete?	Go to **Step 8**	-
8	Operate the system in order to verify the repair. Did you correct the condition?	System OK	Go to **Step 1**

TRANSMISSION CLUNK ON ACCELERATION OR DECELERATION

cardiagn.com

Diagnostic Aids

All manual transmissions and axles have gear play that might cause a clunk. If the transmission is suspected of causing the clunk, compare it with a similar vehicle. An internal clunk in the transmission is the natural response of the driveline to an impact, but may also be caused by improper assembly, which would also cause other symptoms.

Step	Action	Yes	No
DEFINITION: A clunk is heard and/or felt on acceleration or deceleration.			
1	Did you review the Symptoms - Manual Transmission, and perform the necessary inspections?	Go to **Step 2**	Go to **Symptoms - Manual Transmission**
2	Inspect the engine mounts for being loose or damaged. Refer to **Engine Mount Inspection** . Did you find and repair the condition?	Go to **Step 7**	Go to **Step 3**
3	Inspect the transmission mounts for being loose or damaged. Refer to **Transmission Mount Replacement**. Did you find and repair the condition?	Go to **Step 7**	Go to **Step 4**
4	Inspect the transmission to engine fasteners for being loose or missing. Refer to **Fastener Tightening Specifications**. Did you find and repair the condition?	Go to **Step 7**	Go to **Step 5**
5	Inspect the driveline for causing the clunk. Refer to **Diagnostic Starting Point - Vehicle** . Did you find and repair the condition?	Go to **Step 7**	Go to **Step 6**
6	Replace the transmission. Refer to **Transmission Replacement**. Is the replacement complete?	Go to **Step 7**	-
7	Operate the system in order to verify the repair. Did you correct the condition?	System OK	Go to **Step 1**

TRANSMISSION FLUID LEAK DIAGNOSIS

Diagnostic Aids

Using the incorrect type of transmission fluid may affect the sealing ability of the seals. Ensure the use of the correct type of transmission fluid. The incorrect type of sealer may not be compatible with the transmission fluid or may not have the correct characteristics for sealing the affected components. Ensure the use of the correct type of sealers. Refer to **Adhesives, Fluids, Lubricants, and Sealers**.

Test Description

The number below refers to the step number on the diagnostic table.

5: Use an approved method to clean the transmission to ensure the leak location is correctly identified. If using a powder method or dye method ensure the products are compatible with the transmission fluid.

cardiagn.com

Step	Action	Yes	No
DEFINITION: Visible sign of the transmission fluid leaking from the transmission.			
1	Did you review the Symptoms - Manual Transmission, and perform the necessary inspections?	Go to **Step 2**	Go to **Symptoms - Manual Transmission**
2	1. Inspect for the transmission fluid level higher than the recommended level. Refer to **Transmission Fluid Level Inspection**. 2. Adjust the transmission level if incorrect. Was the transmission fluid level too high?	Go to **Step 25**	Go to **Step 3**
3	Inspect the transmission vent for a blockage. Is the transmission vent blocked?	Go to **Step 4**	Go to **Step 5**
4	Repair or replace the transmission vent. Did you find and repair the condition?	Go to **Step 25**	Go to **Step 5**
5	Verify the location of the leak. 1. Clean the transmission assembly. 2. Operate the vehicle for 24 km (15 mi), or until normal operating temperatures are reached. 3. Visual inspect or use the powder method or dye and black light method to locate the leak. Is the leak occurring at the drain or fill plug?	Go to **Step 6**	Go to **Step 7**
6	Replace the drain or fill plug. Refer to **Transmission Fluid Replacement**. Did you find and repair the condition?	Go to **Step 25**	Go to Diagnostic Aids
7	Is the leak at the transmission output shaft seal?	Go to **Step 8**	Go to **Step 9**
8	Remove the mainshaft rear oil seal and inspect for the following. Refer to **Extension Disassemble**. • Damaged or worn seal • Damaged seal bore • Improper installation • Cracks in the component • Output flange sealing surface is scratched, nicked, damaged, or worn • Loose or worn bearing causing excessive seal wear • Output flange nut loose		Go to Diagnostic

cardiagn.com

	Did you find and repair the condition?	Go to **Step 25**	Aids
9	Is the leak at the shift rail area?	Go to **Step 10**	Go to **Step 11**
10	Inspect the shift rail seal for damage. Did you find and repair the condition?	Go to **Step 25**	Go to Diagnostic Aids
11	Is the leak at the front of the transmission?	Go to **Step 12**	Go to **Step 15**
12	1. Remove the transmission. Refer to **Transmission Replacement**. 2. Inspect the input shaft for leaking. 3. Remove the CSC assembly. Refer to **Clutch Concentric Actuator Cylinder Replacement (Aisin)** or **Clutch Concentric Actuator Cylinder Replacement (Tremec)** . Did you find and repair the condition?	Go to **Step 25**	Go to **Step 13**
13	1. Inspect for the leak at the input shaft seal. 2. Inspect for the following if the input shaft seal is leaking: • Damaged or worn seal • Damaged seal bore • Improper installation • Cracks in the component • Input shaft sealing surface is scratched, nicked, damaged, or worn • Loose or worn bearing causing excessive seal wear 3. Replace the CSC assembly. Refer to **Clutch Concentric Actuator Cylinder Replacement (Aisin)** or **Clutch Concentric Actuator Cylinder Replacement (Tremec)** . Did you find and repair the condition?	Go to **Step 25**	Go to **Step 14**
14	1. Inspect the case for cracks or porosity. 2. If cracks and or porosity are found replace the transmission. Refer to **Transmission Replacement**. Did you find and repair the condition?	Go to **Step 25**	Go to Diagnostic Aids
15	Is the leak at the vehicle speed sensor (VSS)?	Go to **Step 16**	Go to **Step 17**
	1. Remove the VSS. Refer to **Vehicle Speed Sensor Replacement**. 2. Inspect for the following: • Cut or damaged O-ring seal		

cardiagn.com

16	• VSS over tightened causing deformation in the VSS • VSS bore scratched or damaged Did you find and repair the condition?	Go to **Step 25**	Go to **Step 1**
17	Is the leak at the backup light switch?	Go to **Step 18**	Go to **Step 19**
18	1. Remove the backup light switch. Refer to **Backup Lamp Switch Replacement**. 2. Inspect for the following: • Cross threaded or damaged threads • Insufficient sealant • Leaking switch • Improper installation Did you find and repair the condition?	Go to **Step 25**	Go to **Step 1**
19	Is the leak at the shift shaft plunger plug?	Go to **Step 20**	Go to **Step 21**
20	1. Remove the shift shaft detent plug. Refer to **Transmission Disassemble** and **Transmission Assemble**. 2. Inspect for the following: • Loose, not installed properly • Insufficient sealant • Cracked case • Improper installation Did you find and repair the condition?	Go to **Step 25**	Go to **Step 1**
21	Is the leak at the sealing flanges of the transmission cases?	Go to **Step 22**	Go to **Step 23**
22	1. Remove the transmission. Refer to **Transmission Replacement**. 2. Disassemble the transmission. Refer to **Transmission Disassemble**. 3. Inspect the sealing surfaces. Refer to **Transmission Case Cleaning and Inspection**. Did you find and repair the condition?	Go to **Step 25**	Go to **Step 23**
23	Is the leak coming from a crack or porosity in the transmission case?	Go to **Step 24**	Go to Diagnostic Aids
	1. Remove the transmission. Refer to **Transmission Replacement**. 2. Disassemble the transmission. Refer to		

cardiagn.com

24	**Transmission Disassemble**. 3. Replace the faulty case. Refer to **Transmission Assemble**. Did you find and repair the condition?	Go to **Step 25**	Go to Diagnostic Aids
25	Operate the system in order to verify the repair. Did you correct the condition?	System OK	Go to **Step 1**

REPAIR INSTRUCTIONS - ON VEHICLE

TRANSMISSION FLUID TEMPERATURE SENSOR REPLACEMENT

Removal Procedure

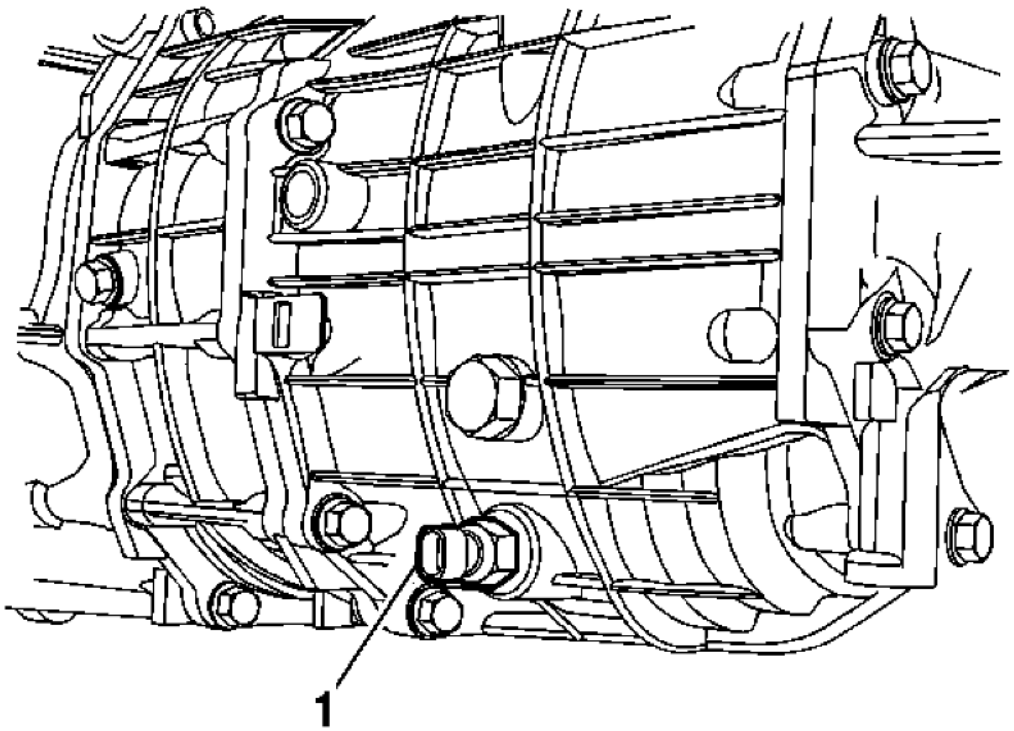

Fig. 6: TFT Sensor
Courtesy of GENERAL MOTORS CORP.

1. Raise and suitably support the vehicle. Refer to **Lifting and Jacking the Vehicle**
2. Disconnect the transmission fluid temperature (TFT) sensor electrical connector.

cardiagn.com

3. Clean away all dirt and debris from the TFT sensor.
4. Place a suitable drain pan under the transmission.
5. Remove the TFT sensor (1).

Installation Procedure

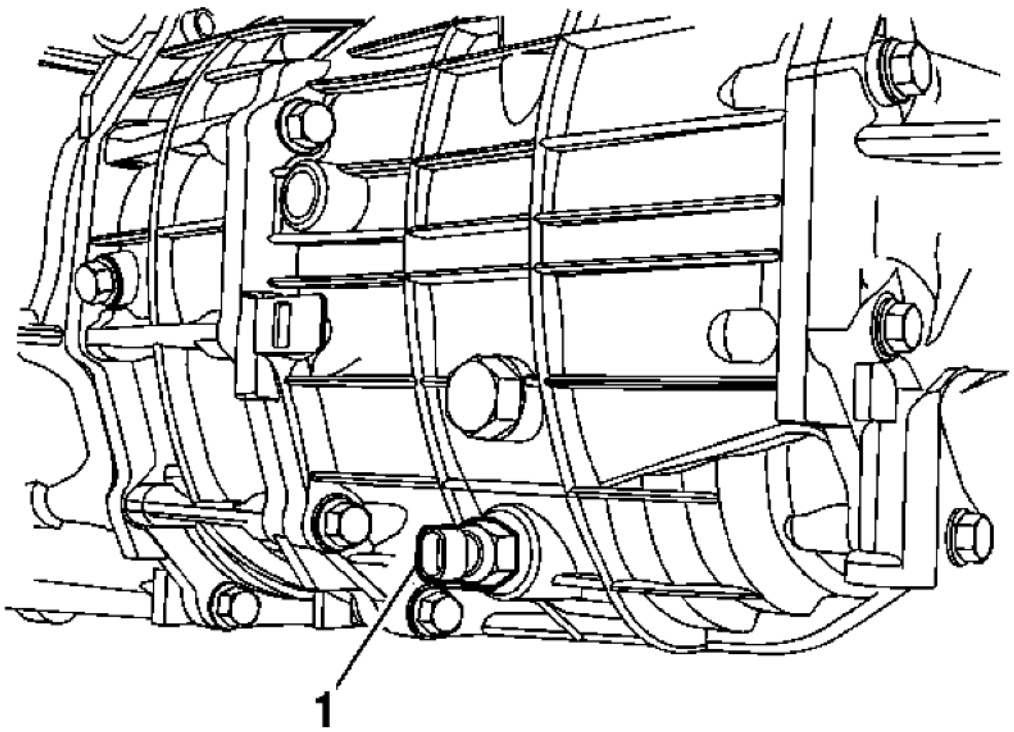

Fig. 7: TFT Sensor
Courtesy of GENERAL MOTORS CORP.

CAUTION: Refer to Fastener Caution .

1. Install the TFT sensor (1) and tighten the sensor to 18 N.m (13 lb ft).
2. Connect the TFT sensor electrical connector.
3. Fill the transmission to the proper level.
4. Remove the drain pan.
5. Lower the vehicle.

cardiagn.com

TRANSMISSION FLUID LEVEL INSPECTION

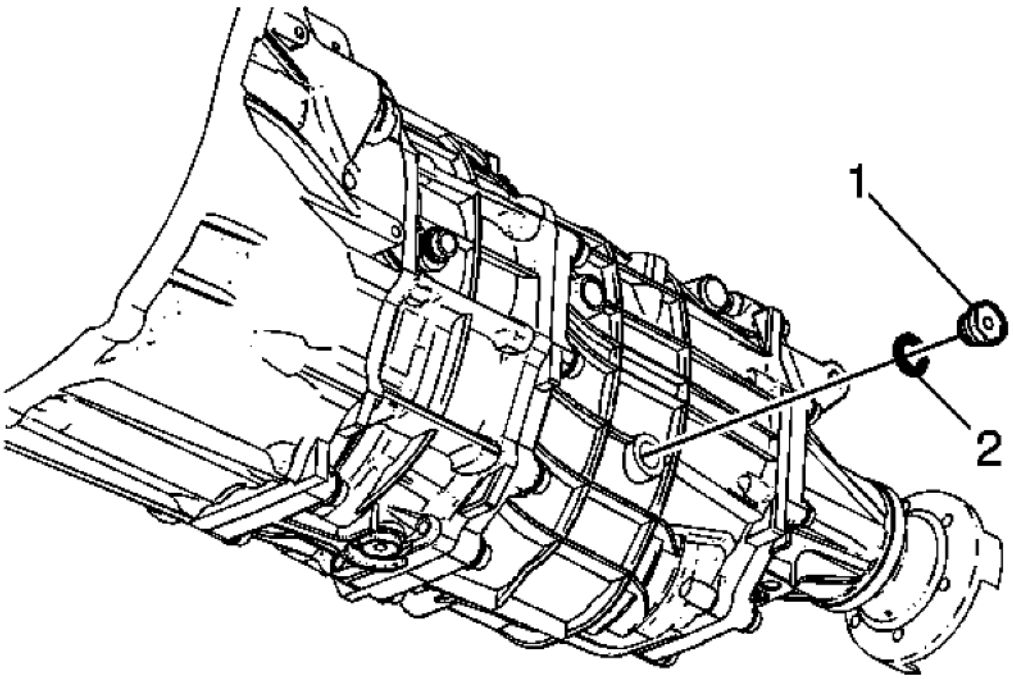

Fig. 8: Identifying Transmission Fill Plug & Washer
Courtesy of GENERAL MOTORS CORP.

1. Raise and support the vehicle. Refer to **Lifting and Jacking the Vehicle**
2. Clean any dirt from around the fill plug (1).
3. Remove the transmission fill plug (1) and washer (2) from the transmission.

cardiagn.com

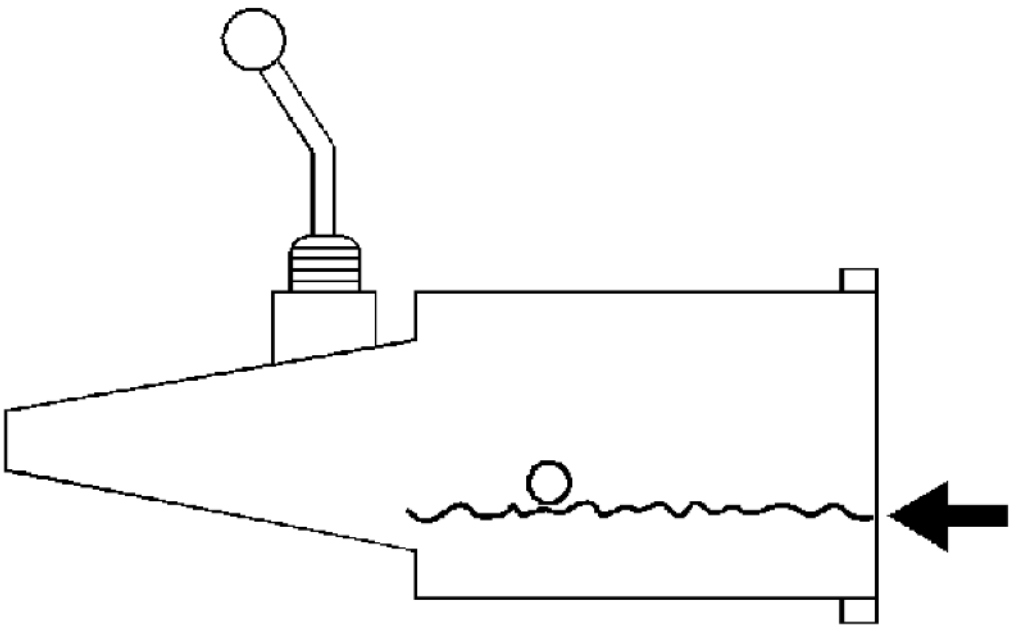

Fig. 9: Transmission Fluid Level
Courtesy of GENERAL MOTORS CORP.

4. Check that the transmission fluid level is even with the bottom of the fill plug hole.
5. Add transmission fluid, if necessary.

cardiagn.com

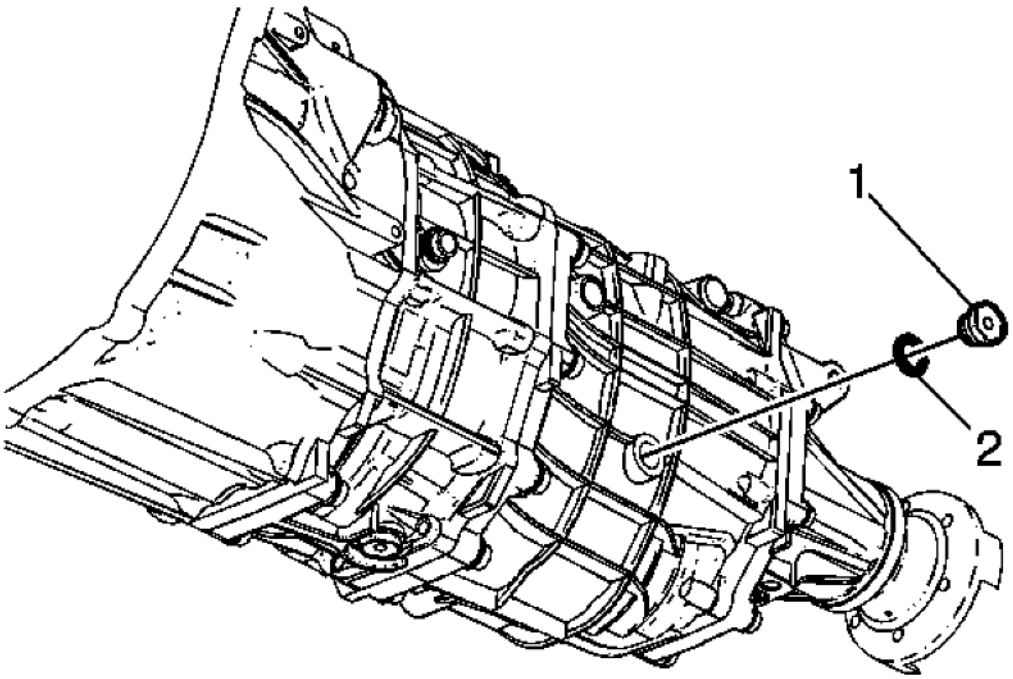

Fig. 10: Identifying Transmission Fill Plug & Washer
Courtesy of GENERAL MOTORS CORP.

6. Inspect the fill plug washer (2) and replace if necessary.

CAUTION: Refer to Component Fastener Tightening Caution .

7. Install the transmission fill plug (1) and washer (2) then tighten to 37 N.m (27 lb ft).
8. Lower the vehicle.

TRANSMISSION FLUID REPLACEMENT

Draining Procedure

cardiagn.com

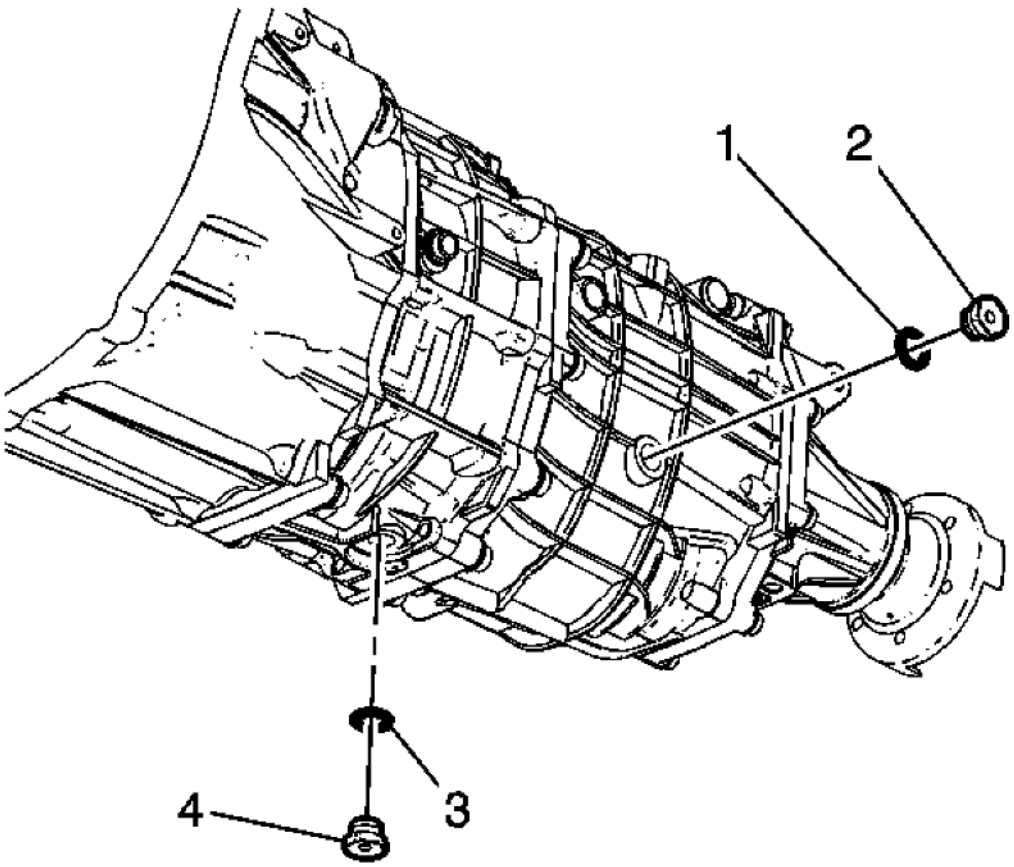

Fig. 11: Identifying Transmission Fluid Plugs & Washers
Courtesy of GENERAL MOTORS CORP.

1. Raise and support the vehicle. Refer to **Lifting and Jacking the Vehicle**
2. Clean away any dirt and debris from around the transmission fluid drain plug area.
3. Position an appropriate container below the transmission drain plug.
4. Remove the transmission fluid drain plug (4) and washer (3). Discard the washer.
5. Allow the transmission fluid to drain into the container.

CAUTION: Refer to Component Fastener Tightening Caution .

6. Install the transmission fluid drain plug (4) and a NEW washer (3) then tighten to 37 N.m (27 lb ft).
7. Remove the container used to catch the used transmission fluid from under the vehicle.

cardiagn.com

Filling Procedure

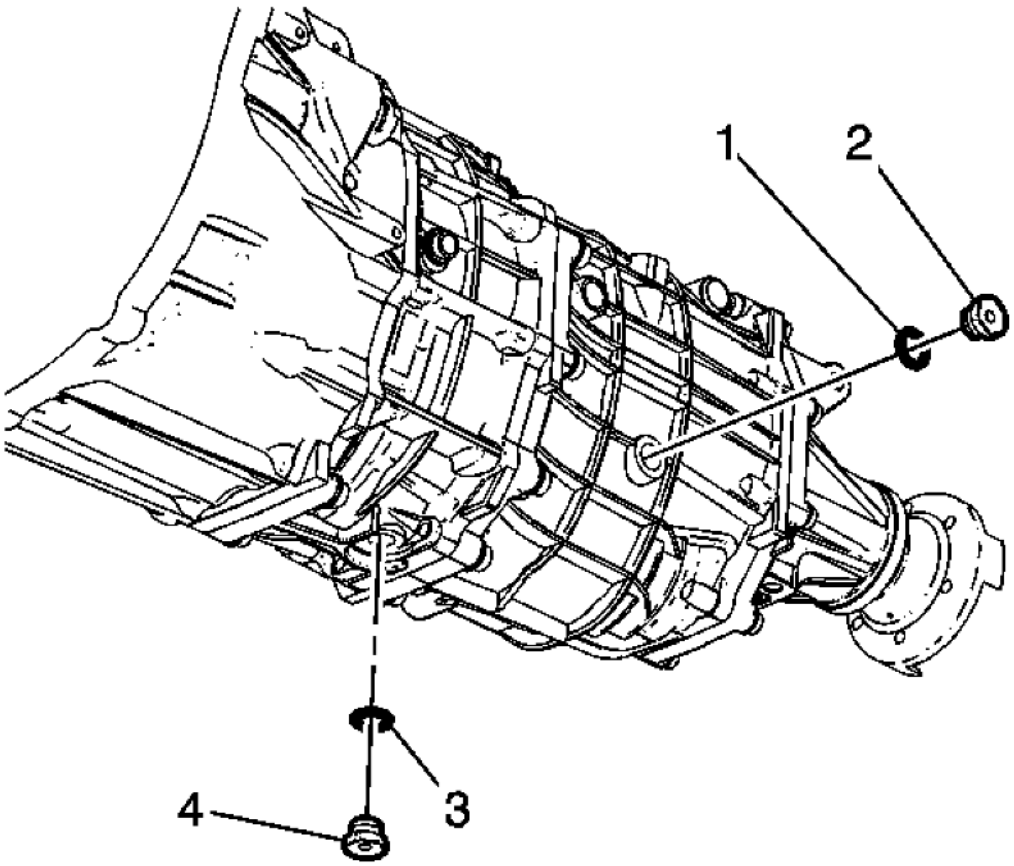

Fig. 12: Identifying Transmission Fluid Plugs & Washers
Courtesy of GENERAL MOTORS CORP.

1. Clean away any dirt and debris from the transmission fluid fill plug area.
2. Remove the transmission fluid fill plug (2) and washer (1). Discard the washer.

cardiagn.com

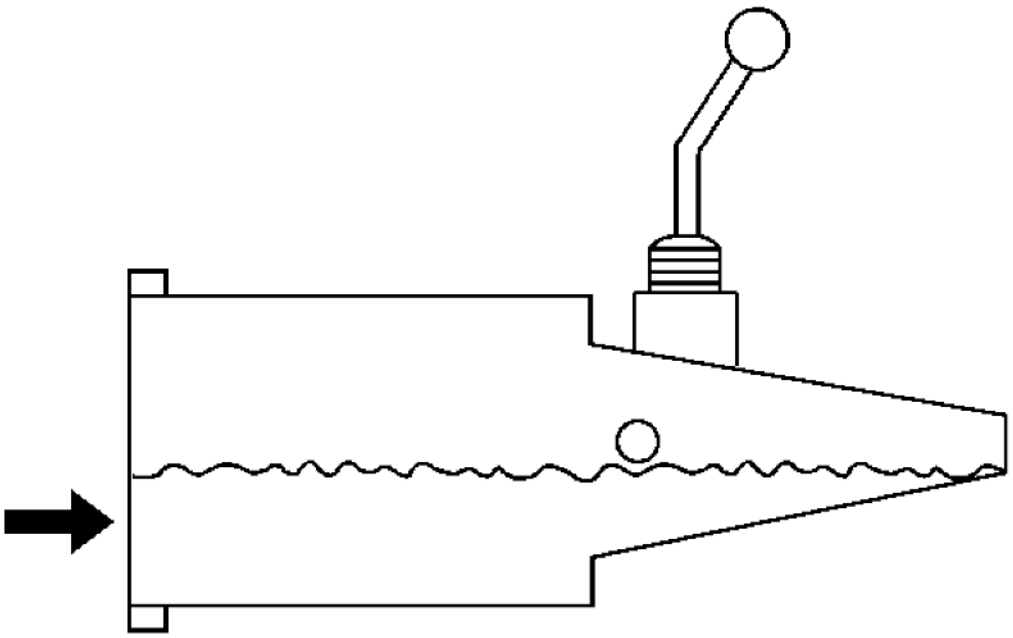

Fig. 13: Identifying Transmission Fluid Level
Courtesy of GENERAL MOTORS CORP.

3. Fill the transmission to just below the bottom of the fill plug hole with the recommended fluid.

cardiagn.com

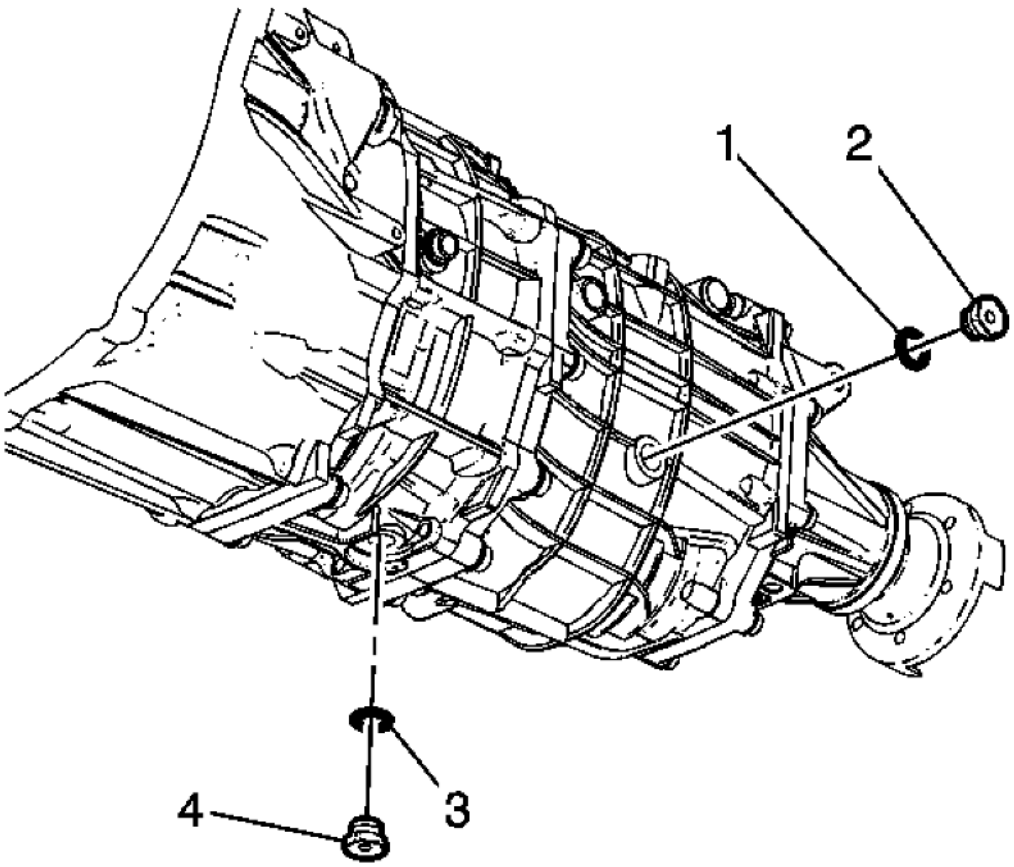

Fig. 14: Identifying Transmission Fluid Plugs & Washers
Courtesy of GENERAL MOTORS CORP.

4. Install the transmission fluid fill plug (2) and a NEW washer (1) then tighten to 37 N.m (27 lb ft).
5. Lower the vehicle.

SHIFT CONTROL ASSEMBLY REPLACEMENT

Removal Procedure

1. Remove the front floor console front cover. Refer to **Front Floor Console Front Cover Replacement (Without UMQ)** or **Front Floor Console Front Cover Replacement (With UMQ)**
2. Remove the transmission control lever knob. Refer to **Transmission Control Lever Knob Replacement**
3. Remove the exhaust system. Refer to **Exhaust Muffler with Resonator, Exhaust, and Tail Pipe Replacement (H-Pipe)** or **Exhaust Muffler with Resonator, Exhaust, and Tail Pipe Replacement (Vehicle Service)**

cardiagn.com

4. Disconnect the propeller shaft from the transmission and position out of the way. Refer to **Two-Piece Propeller Shaft Replacement**
5. Support the transmission with a suitable jack.
6. Remove the transmission support.
7. Lower the rear of the transmission in order to gain access to the top of the transmission.

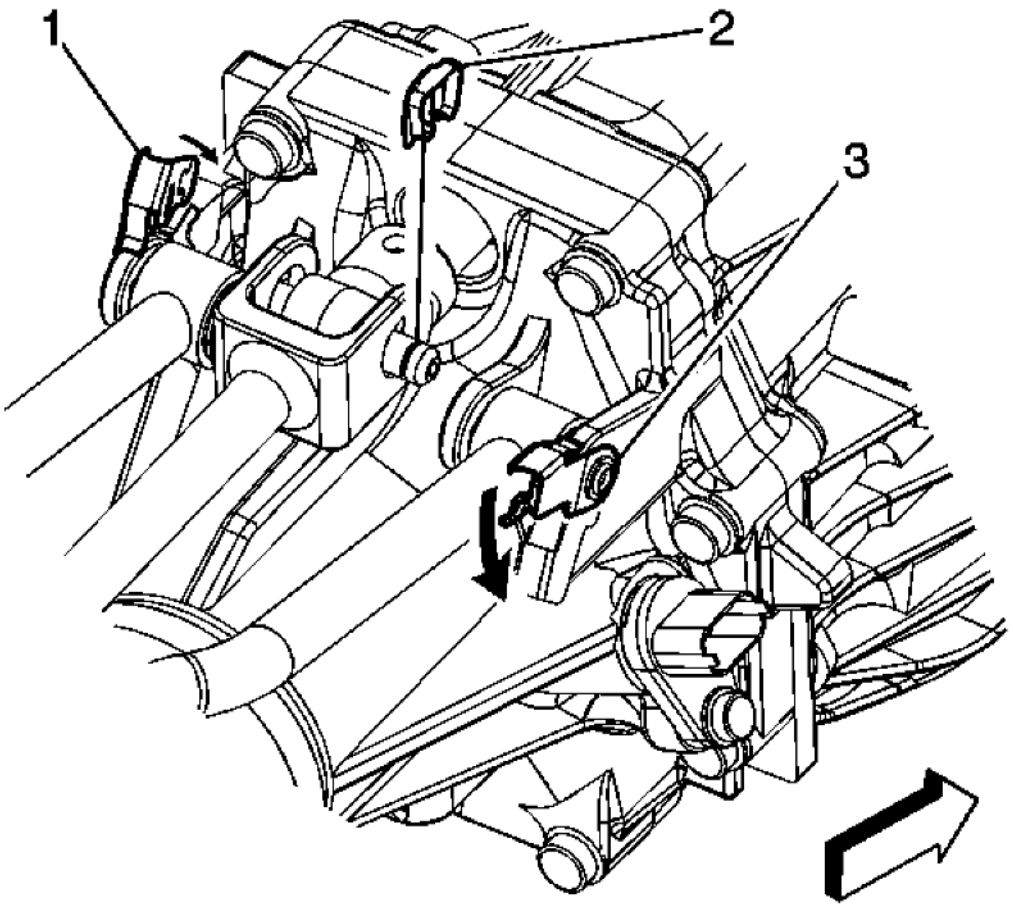

Fig. 15: Identifying Shift Control Rod Pin Retainers
Courtesy of GENERAL MOTORS CORP.

8. Using a flat-blade tool, release the left and right side shift control rod pin retainers (1,3).
9. Using a flat-blade tool, release the center shift control rod pin retainer (2).

cardiagn.com

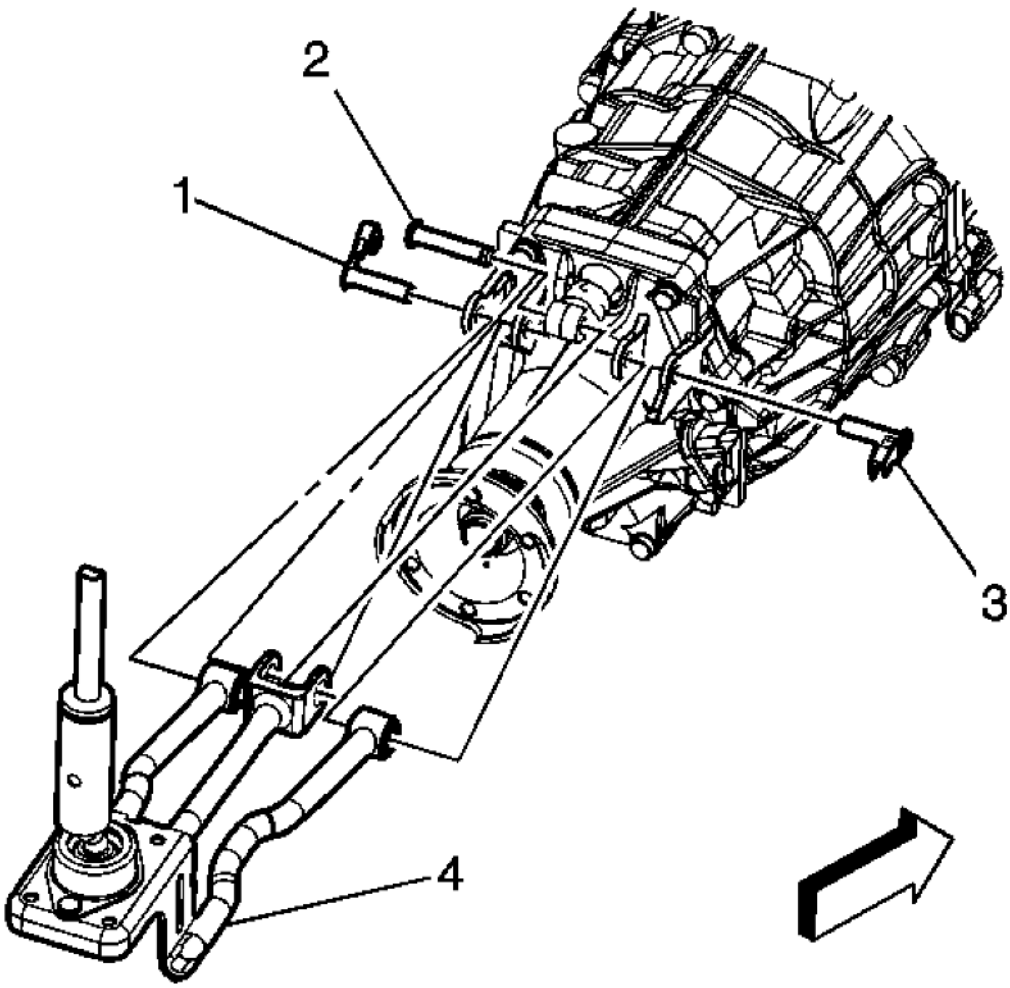

Fig. 16: Identifying Shift Control Rod Pins
Courtesy of GENERAL MOTORS CORP.

10. Remove the left and right side shift control rod pins (1, 3).
11. Remove the center shift control rod pin (2).
12. Remove the shift control mounting nuts.
13. Remove the manual transmission control assembly from the vehicle.

Installation Procedure

1. Position the manual transmission control assembly into the vehicle.

cardiagn.com

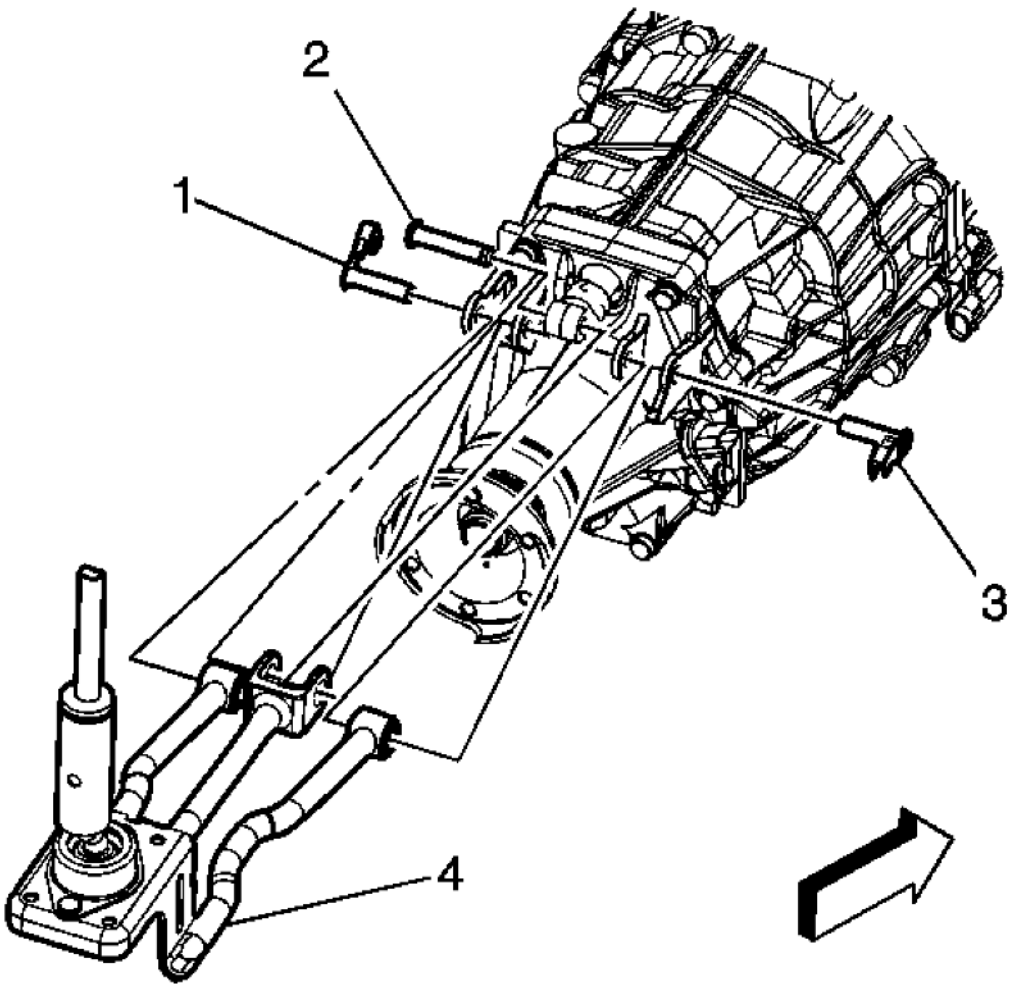

Fig. 17: Identifying Shift Control Rod Pins
Courtesy of GENERAL MOTORS CORP.

2. Install the center shift control rod pin (2).
3. Install the left and right side shift control rod pins (1,3).

cardiagn.com

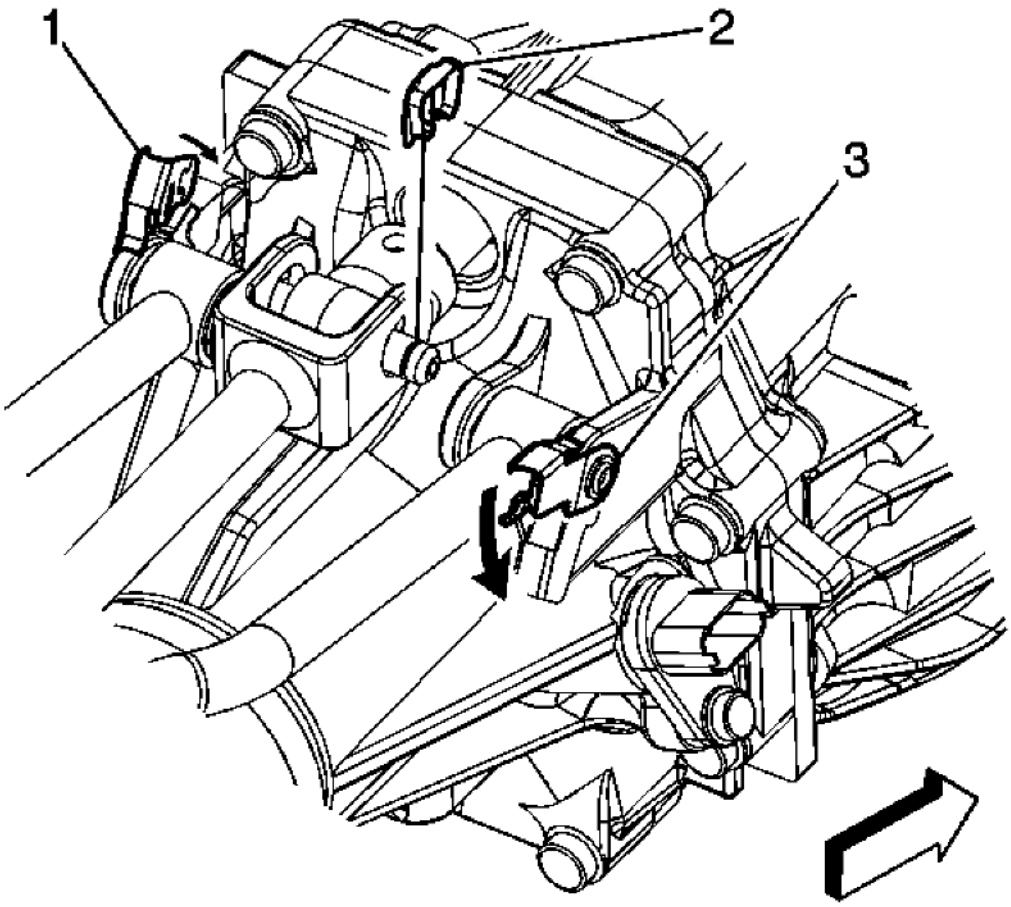

Fig. 18: Identifying Shift Control Rod Pin Retainers
Courtesy of GENERAL MOTORS CORP.

4. Install the center shift control rod pin retainer (2).
5. Rotate the left and right side shift control rod pins (1,2) in order to lock the retainers into place on the transmission.
6. Install the shift control mounting nuts.
7. Raise the transmission.
8. Install the transmission support. Refer to **Transmission Mount Replacement**
9. Remove the jack supporting the transmission.
10. Install the propeller shaft. Refer to **Two-Piece Propeller Shaft Replacement**
11. Install the exhaust system. Refer to **Exhaust Muffler with Resonator, Exhaust, and Tail Pipe Replacement (H-Pipe)** or **Exhaust Muffler with Resonator, Exhaust, and Tail Pipe Replacement (Vehicle Service)**

cardiagn.com

12. Lower the vehicle.
13. Install the front floor console front cover. Refer to **Front Floor Console Front Cover Replacement (Without UMQ)** or **Front Floor Console Front Cover Replacement (With UMQ)**
14. Install the transmission control lever knob. Refer to **Transmission Control Lever Knob Replacement**

TRANSMISSION CONTROL LEVER KNOB REPLACEMENT

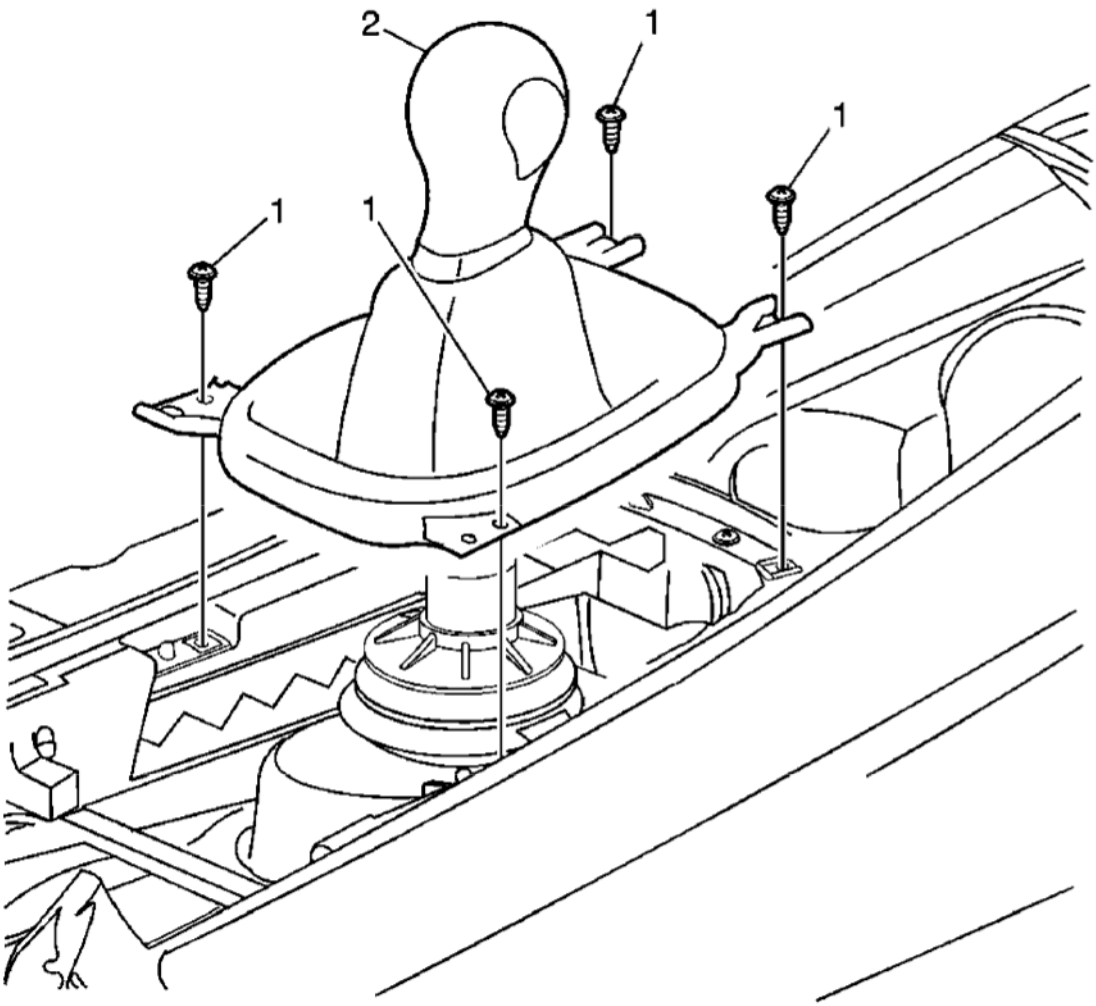

Fig. 19: Transmission Control Lever Knob
Courtesy of GENERAL MOTORS CORP.

Callout	Component Name
Preliminary Procedure: Remove the front floor console front cover. Refer to **Front Floor Console Front Cover Replacement (Without UMQ)** or **Front Floor Console Front Cover Replacement (With UMQ)** .	
1	Transmission Control Lever Knob Assembly Fastener (Qty: 4)
	Manual Transmission Control Lever Knob Assembly

cardiagn.com

2	**Procedure:** First remove the 4 fasteners securing the manual transmission control lever knob assembly to the front floor console. **Tip:** Firmly pull upward until knob is released from control assembly. **Tighten:** 9 N.m (80 lb in)

VEHICLE SPEED SENSOR REPLACEMENT

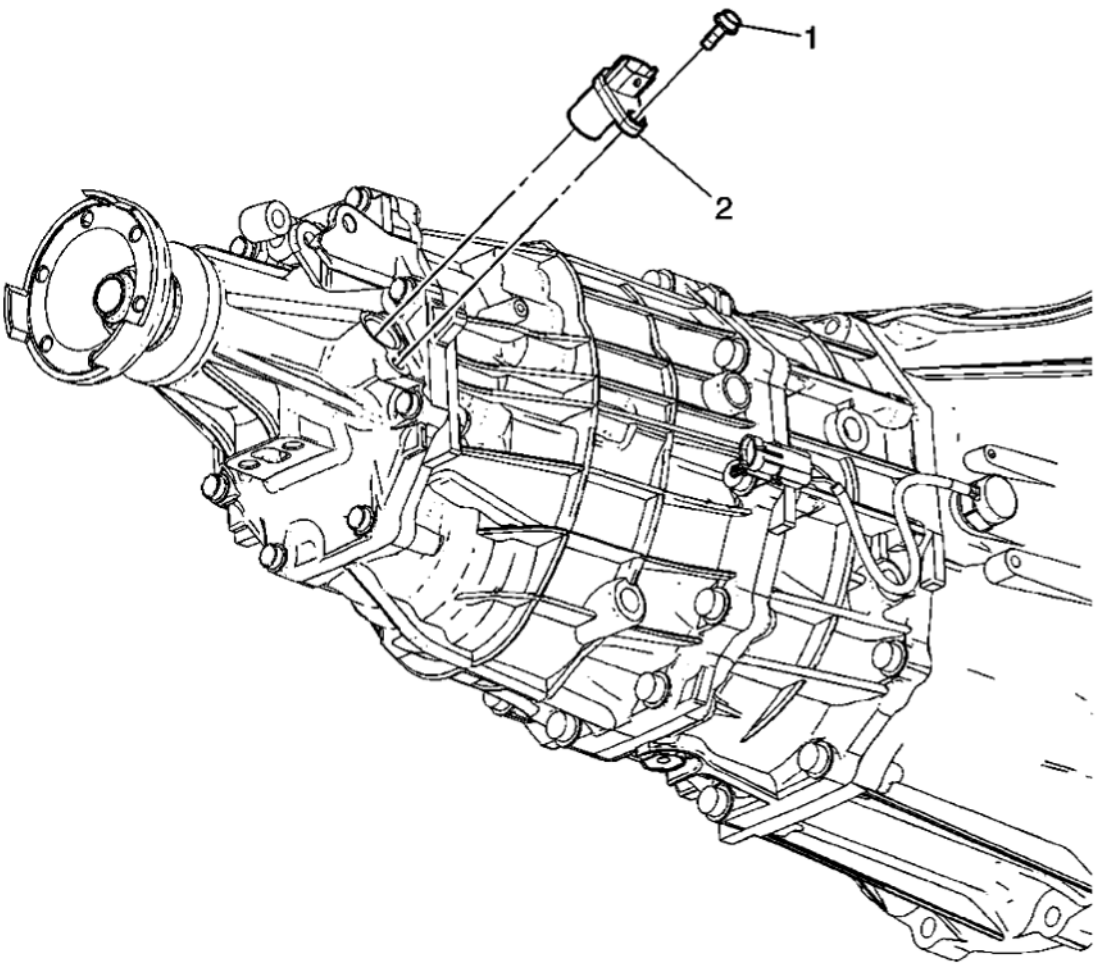

Fig. 20: Vehicle Speed Sensor
Courtesy of GENERAL MOTORS CORP.

Callout	Component Name
Preliminary Procedures 1. Raise and support the vehicle. Refer to **Lifting and Jacking the Vehicle** 2. Remove the transmission support. Refer to **Transmission Mount Replacement**	

cardiagn.com

3. Lower the rear of the transmission.

1	Vehicle Speed Sensor Bolt **CAUTION:** **Refer to Fastener Caution .** **Tighten:** 8 N.m (71 lb in)
2	Vehicle Speed Sensor **Procedure:** Disconnect the electrical wire harness from the vehicle speed sensor.

TRANSMISSION MOUNT REPLACEMENT

Removal Procedure

1. Raise and support the vehicle. Refer to **Lifting and Jacking the Vehicle** .

NOTE: **The engine mounts must NOT bend or deflect from the vertical position, damage to the mount will occur.**

2. Support the transmission with a suitable jack and a block of wood.

cardiagn.com

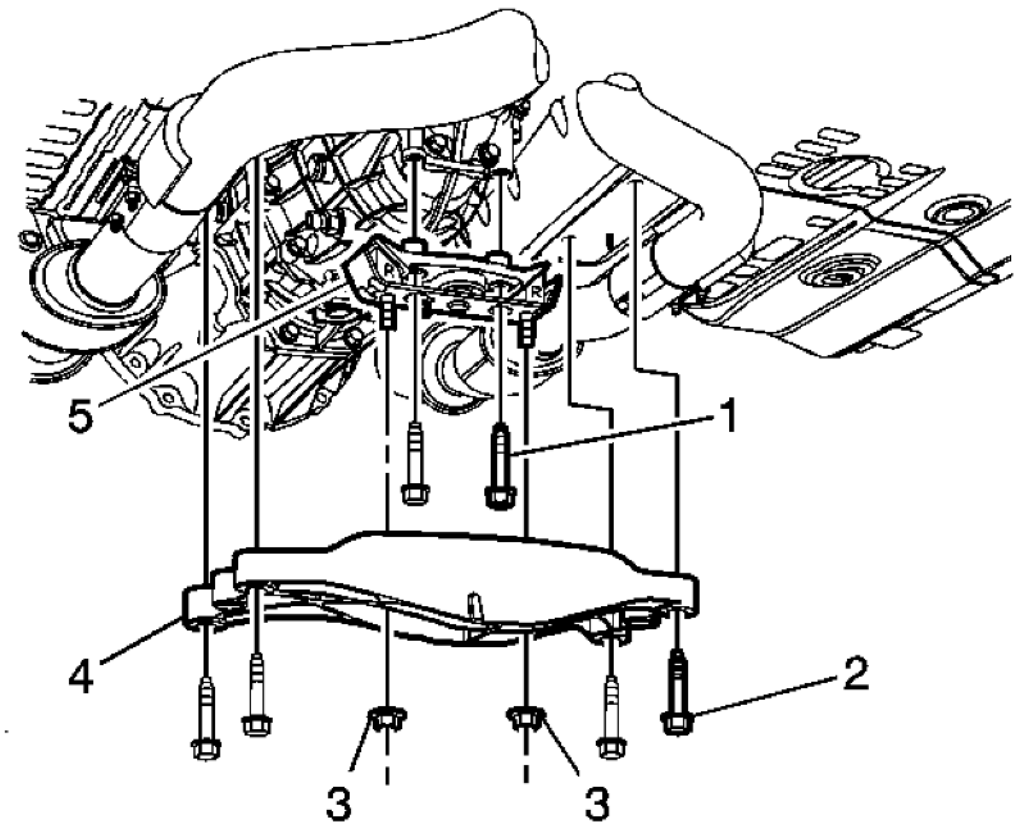

Fig. 21: Transmission Mount Components
Courtesy of GENERAL MOTORS CORP.

3. Remove the two transmission mount nuts (3).
4. Remove the four transmission support retaining bolts (2), then remove the transmission support (4) from the vehicle.
5. Remove the two transmission mount bolts (1).
6. Remove the transmission mount (5) from the transmission.

Installation Procedure

cardiagn.com

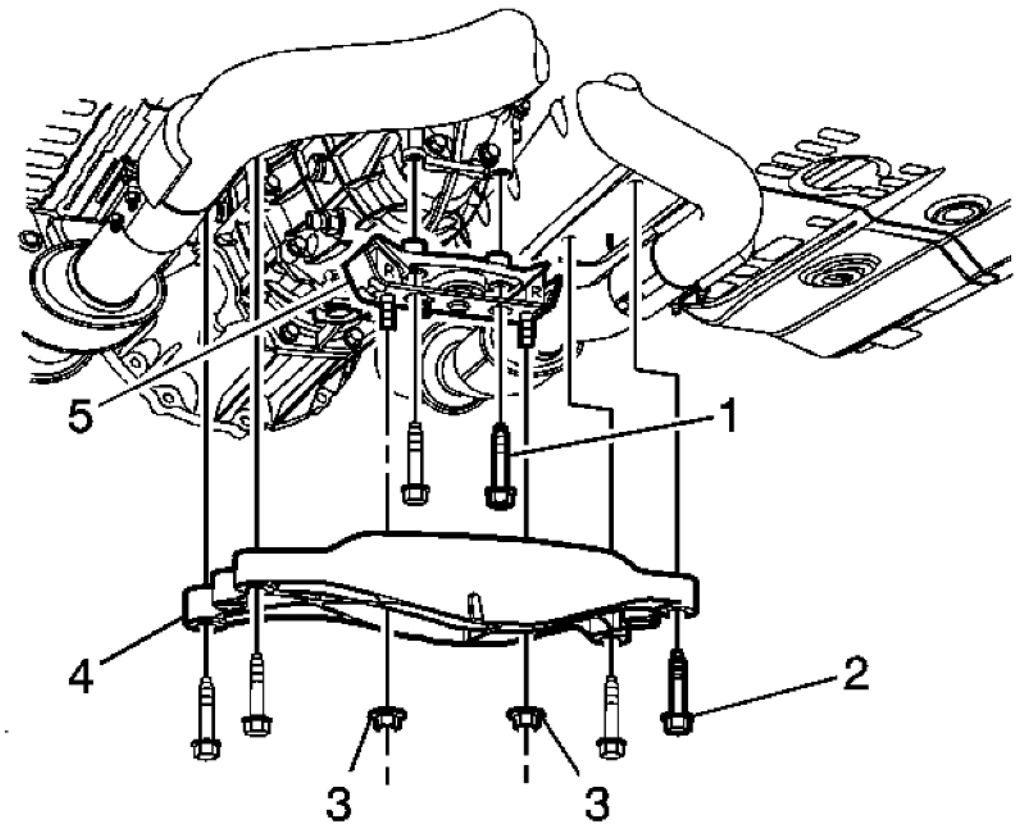

Fig. 22: Transmission Mount Components
Courtesy of GENERAL MOTORS CORP.

NOTE: The engine mounts must NOT bend or deflect from the vertical position, damage to the mount will occur.

1. Install the transmission mount (5) to the transmission.

CAUTION: Refer to Fastener Caution .

2. Install the two transmission mount bolts (1) and tighten to 58 N.m (43 lb ft).
3. Install the transmission support (4).
4. Install the four transmission support bolts (2) and tighten to 58 N.m (43 lb ft).
5. Install the transmission mount nuts (3) and tighten to 58 N.m (43 lb ft).
6. Remove the support from under the transmission.

cardiagn.com

7. Lower the vehicle.

BACKUP LAMP SWITCH REPLACEMENT

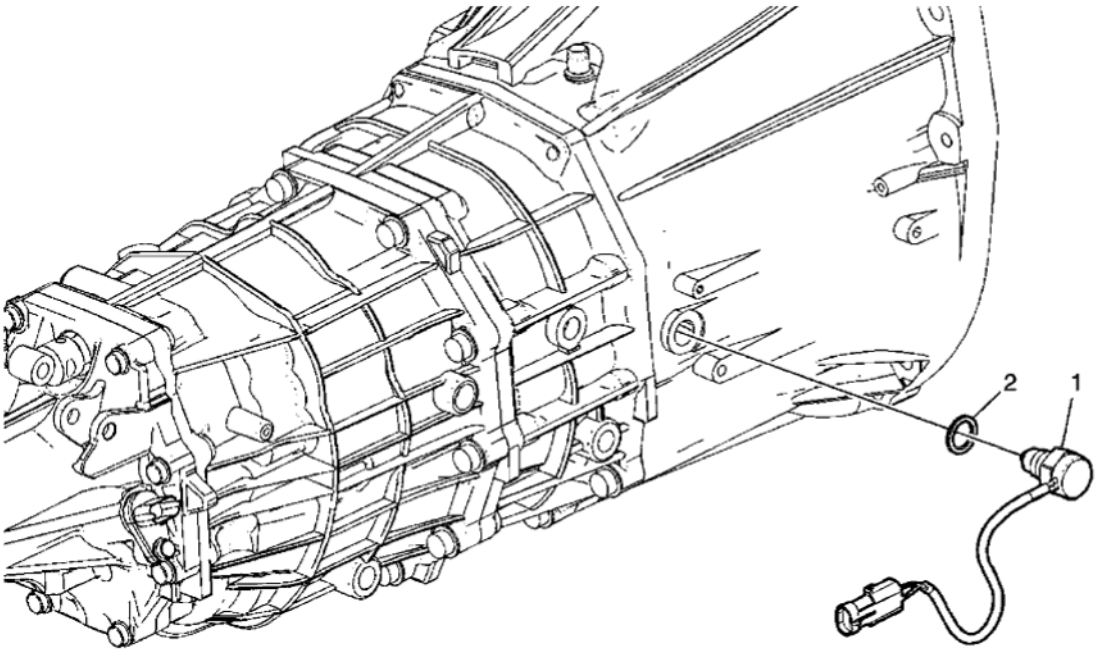

Fig. 23: Backup Lamp Switch
Courtesy of GENERAL MOTORS CORP.

Callout	Component Name
Preliminary Procedures: Raise and support the vehicle. Refer to **Lifting and Jacking the Vehicle**	
1	Backup Lamp Switch **CAUTION:** **Refer to Component Fastener Tightening Caution .** **Procedure:** Disconnect the electrical wire harness from the backup lamp switch. **Tighten:** 44 N.m (32 lb ft)
2	Backup Lamp Switch Washer **Tip:** Use a NEW backup lamp switch washer.

TRANSMISSION MOUNT INSPECTION

cardiagn.com

CAUTION: In order to avoid oil pan damage and possible engine failure, insert a block of wood that spans the width of the oil pan bottom between the oil pan and the jack support.

1. Raise and support the vehicle.

NOTE: Before replacing any transmission mount due to suspected fluid loss, verify that the source of the fluid is the transmission mount, not the engine, transmission or accessories.

2. Raise the transmission in order to remove the weight from the transmission mount and create slight tension in the rubber.
3. Observe the transmission mount while raising the transmission. Replace the transmission mount if the transmission mount exhibits any of the following conditions:
   - The hard rubber surface is covered with heat check cracks.
   - The rubber is separated from the metal plate of the transmission mount.
   - The rubber is split through the center of the transmission mount.
4. If there is movement between the metal plate of the transmission mount and its attaching points, lower the transmission on the transmission mount. Tighten the bolts or nuts attaching the transmission mount to the frame or transmission mount bracket.
5. Lower the vehicle.

TRANSMISSION REPLACEMENT

Removal Procedure

1. Turn the steering wheel so that the front wheels are pointing straight ahead.
2. Turn the ignition lock cylinder to the lock position and remove the key.
3. Remove the heater inlet and outlet pipes from the vehicle. Refer to **Heater Inlet And Outlet Pipe Replacement (LLT)**
4. Remove the shift control rods from the transmission. Refer to **Shift Control Assembly Replacement**.
5. Remove the exhaust system. Refer to **Exhaust Muffler with Resonator, Exhaust, and Tail Pipe Replacement (H-Pipe)** or **Exhaust Muffler with Resonator, Exhaust, and Tail Pipe Replacement (Vehicle Service)** .
6. Remove the propeller shaft. Refer to **Two-Piece Propeller Shaft Replacement** .

cardiagn.com

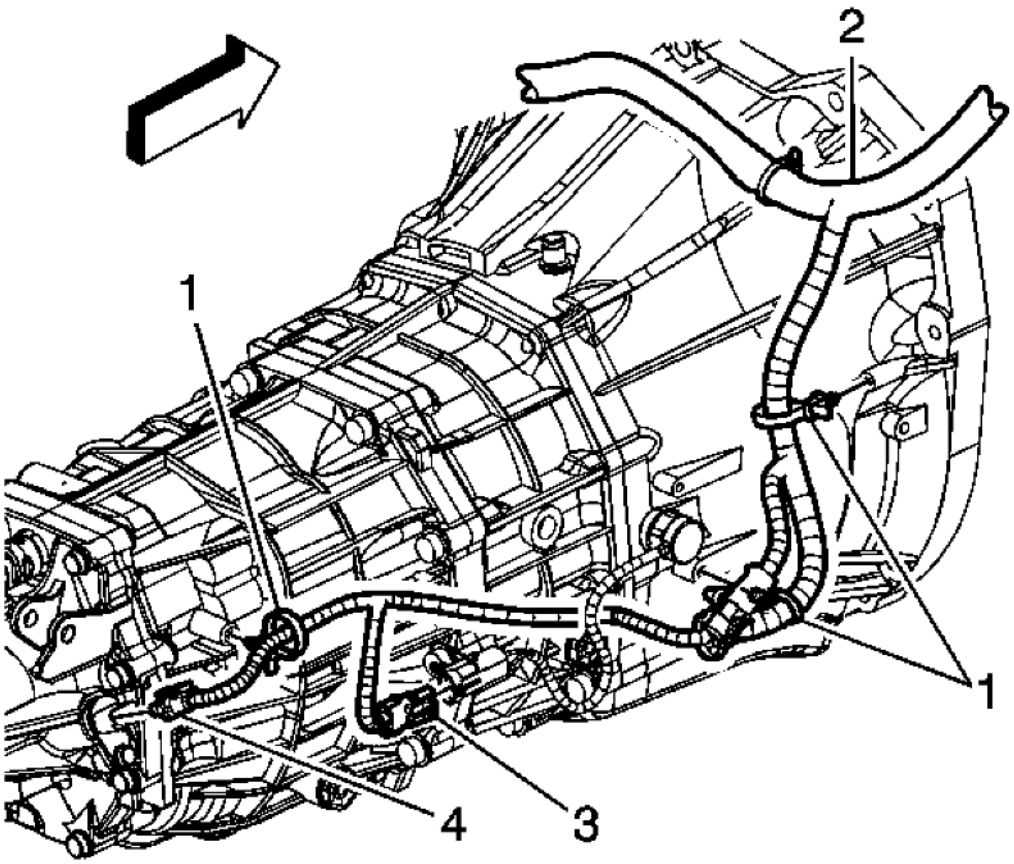

Fig. 24: Identifying Electrical Connectors & Harness Retainers
Courtesy of GENERAL MOTORS CORP.

7. Disconnect the electrical connector from the vehicle speed sensor.
8. Disconnect the electrical connector (4) from the backup lamp switch.
9. Remove the electrical harness retainers (1) from the transmission.
10. Position the electrical harness (2) out of the way.

cardiagn.com

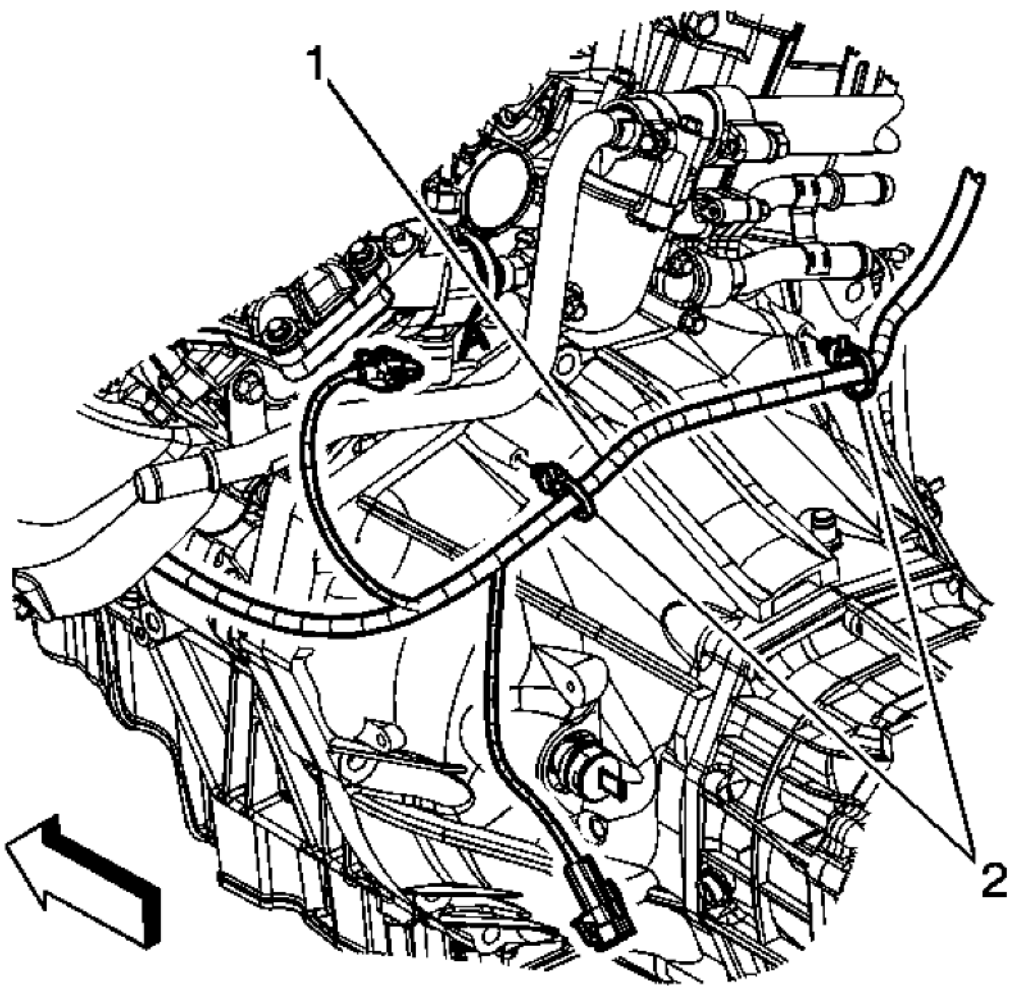

Fig. 25: Identifying Electrical Harness & Retainers
Courtesy of GENERAL MOTORS CORP.

11. Remove the electrical harness retainers (2) from the transmission.
12. Position the electrical harness (1) out of the way.
13. Support and secure the transmission with a suitable transmission jack.
14. Remove the transmission support. Refer to **Transmission Mount Replacement**.

cardiagn.com

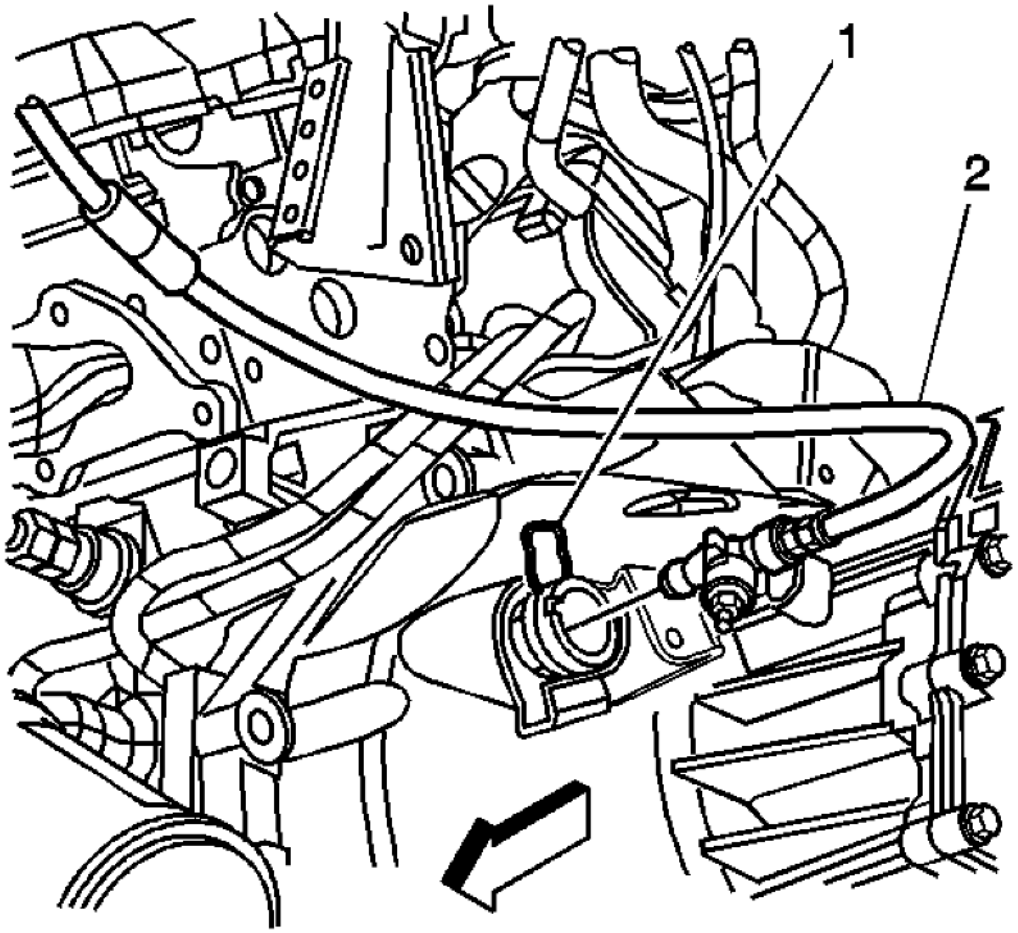

Fig. 26: Identifying Clutch Retaining Hose Retaining Clip & Clutch Hydraulic Hose
Courtesy of GENERAL MOTORS CORP.

15. Remove the clutch hydraulic hose retaining clip (1) from the clutch slave cylinder.
16. Disconnect the clutch hydraulic hose (2) from the clutch slave cylinder. Plug the lower hose end to prevent fluid loss.

cardiagn.com

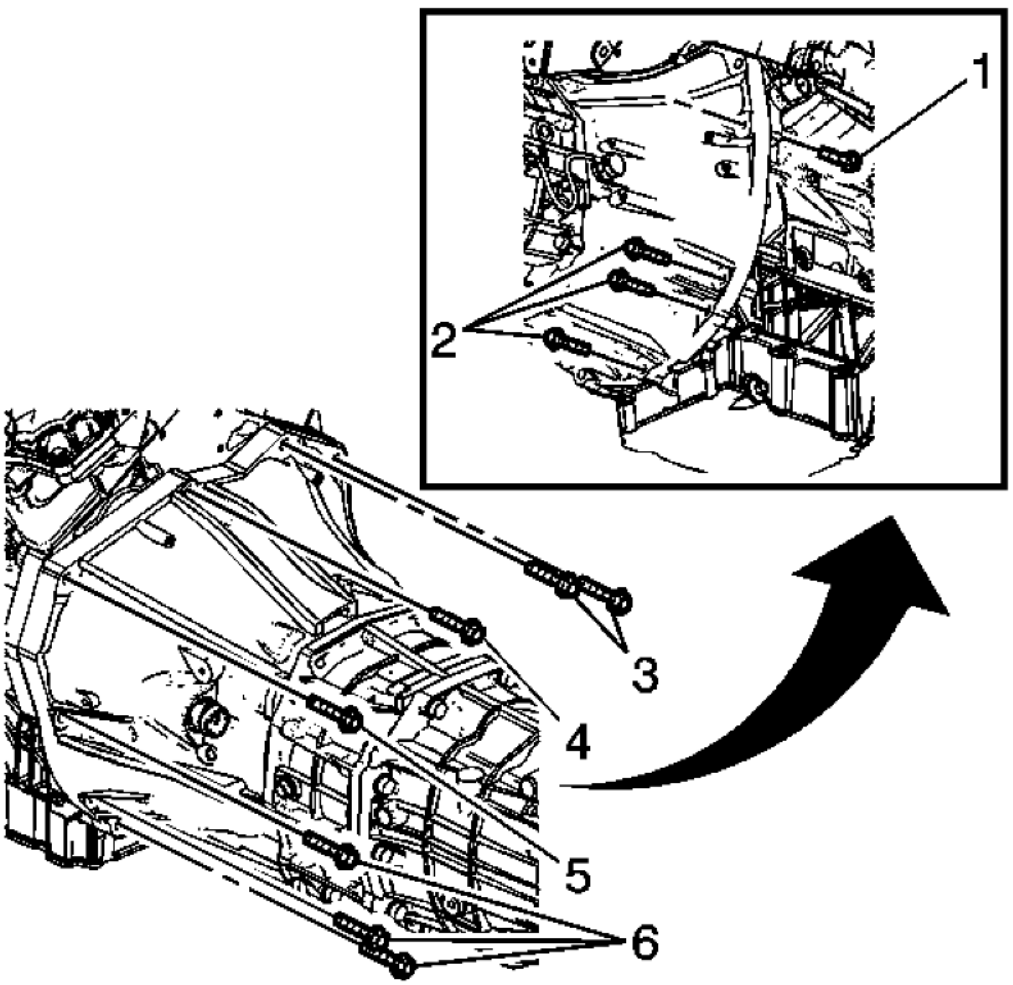

Fig. 27: Identifying Transmission Bolts
Courtesy of GENERAL MOTORS CORP.

17. Remove the transmission bolts (1-6).
18. Pull the transmission free from the engine dowels.

NOTE: **Ensure clearance is maintained between the transmission and the following:**

- **The clutch assembly**
- **The input shaft**
- **The catalytic converters**

cardiagn.com

- **The wiring harnesses**
- **The propeller shaft**

19. Using the transmission jack, carefully lower the transmission from the vehicle.

Installation Procedure

NOTE: Ensure clearance is maintained between the transmission and the following:

- **The clutch assembly**
- **The input shaft**
- **The catalytic converters**
- **The wiring harnesses**
- **The propeller shaft**

1. Using the transmission jack, carefully raise the transmission to the vehicle.

cardiagn.com

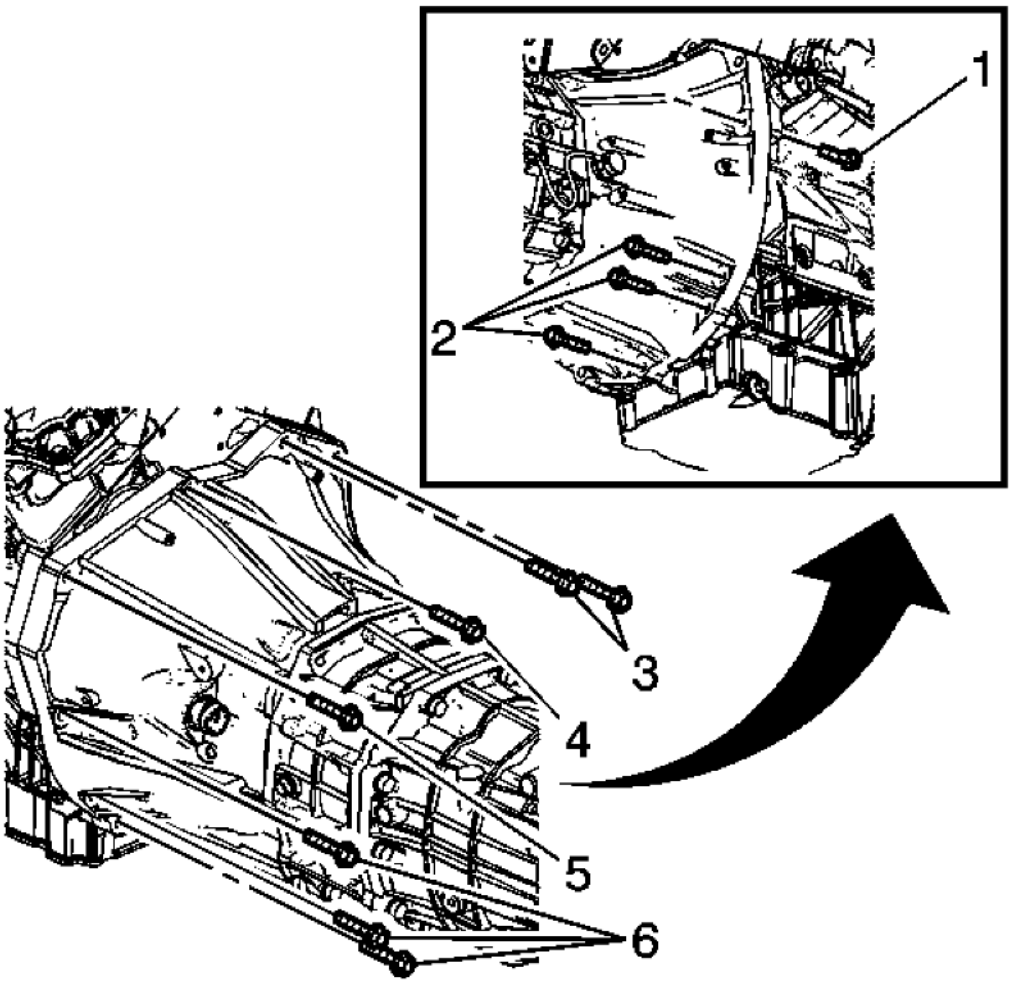

Fig. 28: Identifying Transmission Bolts
Courtesy of GENERAL MOTORS CORP.

2. Align the transmission with the engine dowels.

CAUTION: Refer to Fastener Caution .

3. Install the transmission bolts (1-6) and tighten to 50 N.m (37 lb ft).

cardiagn.com

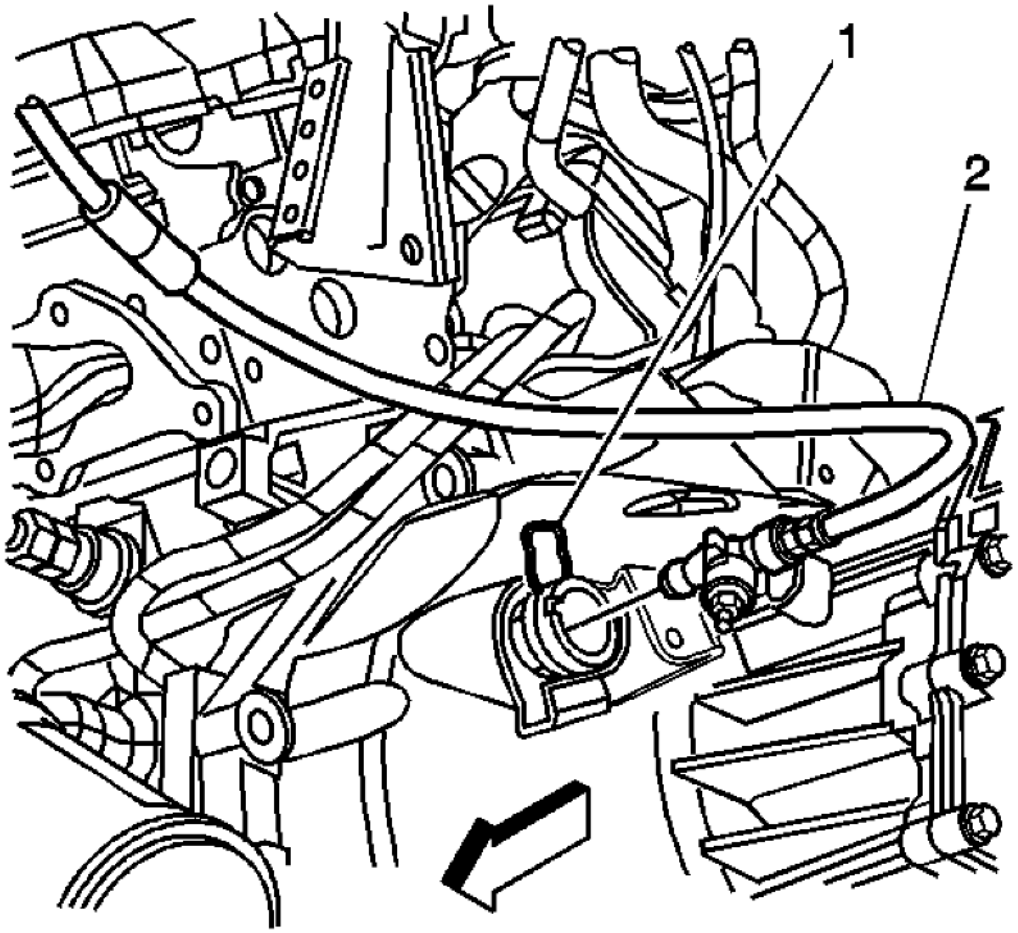

Fig. 29: Identifying Clutch Retaining Hose Retaining Clip & Clutch Hydraulic Hose
Courtesy of GENERAL MOTORS CORP.

4. Install the clutch hydraulic hose retaining clip (1) to the clutch slave cylinder.

NOTE: **Ensure the clutch hydraulic hose is routed in an upward direction above the clutch slave cylinder with no sharp bends, kinks, or downward loops. Ensure the clutch hydraulic hose does not come in contact with any sharp or potentially hot surfaces.**

5. Install the clutch hydraulic hose to the vehicle.
6. Align the clutch hydraulic hose locating tab with the notch in the slave cylinder hose fitting.
7. Push the clutch hydraulic hose (2) into the clutch slave cylinder until a "click" is heard.
8. Tug gently on the clutch hydraulic hose (2) to ensure proper retention to the clutch slave cylinder.

cardiagn.com

9. Install the shift control rods to the transmission. Refer to **Shift Control Assembly Replacement**.
10. Remove the transmission jack.
11. Install the transmission support. Refer to **Transmission Mount Replacement**.

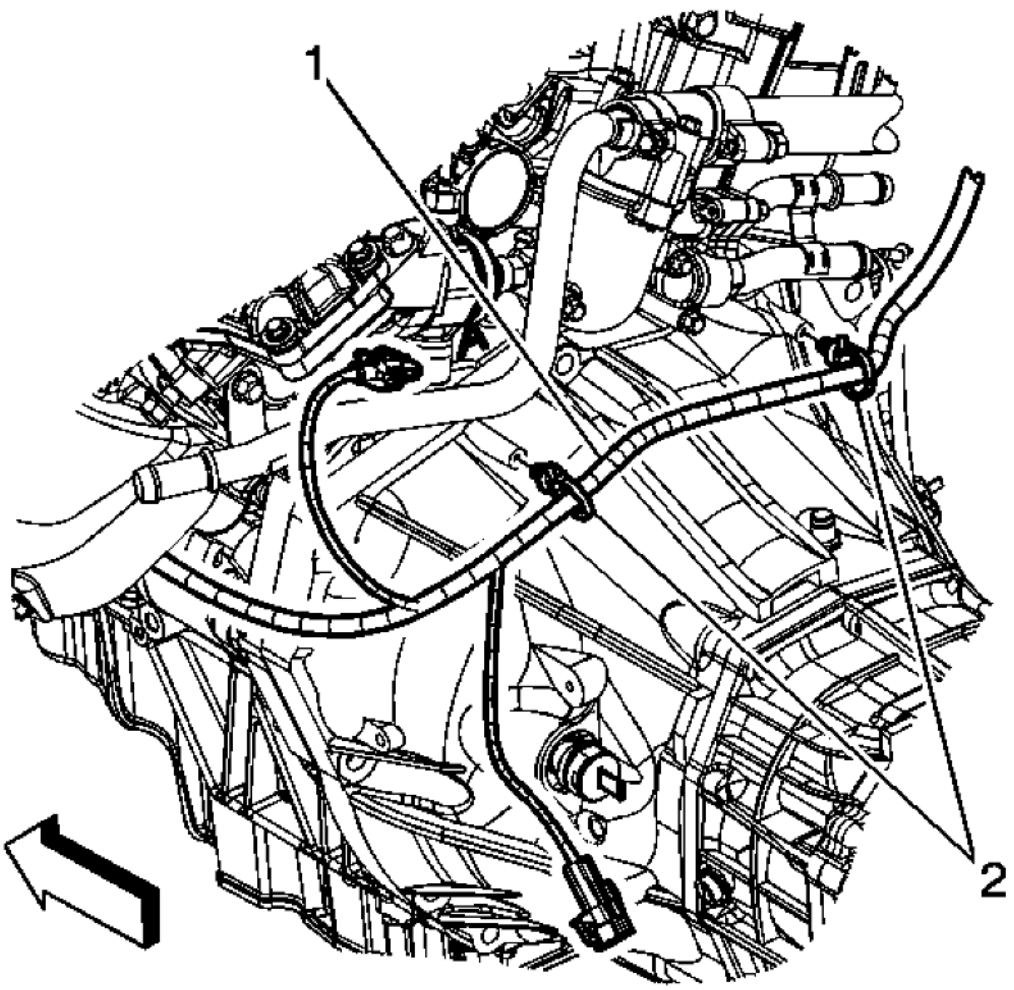

Fig. 30: Identifying Electrical Harness & Retainers
Courtesy of GENERAL MOTORS CORP.

12. Install the electrical harness retainers (2) to the transmission.

cardiagn.com

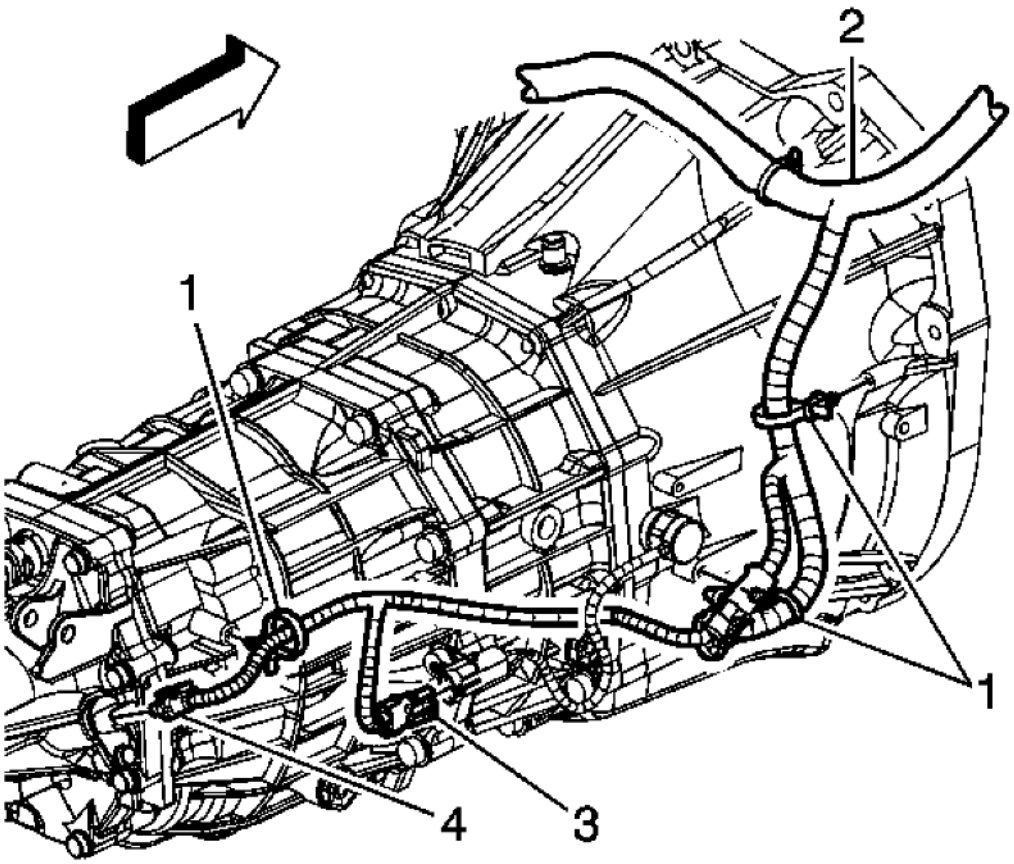

Fig. 31: Identifying Electrical Connectors & Harness Retainers
Courtesy of GENERAL MOTORS CORP.

13. Install the electrical harness retainers (1) to the transmission.
14. Connect the electrical connector (4) to the backup lamp switch.
15. Connect the electrical connector to the vehicle speed sensor.
16. Install the propeller shaft. Refer to **Two-Piece Propeller Shaft Replacement** .
17. Install the exhaust system. Refer to **Exhaust Muffler with Resonator, Exhaust, and Tail Pipe Replacement (H-Pipe)** or **Exhaust Muffler with Resonator, Exhaust, and Tail Pipe Replacement (Vehicle Service)** .
18. Inspect the transmission fluid level.
19. Lower the vehicle.
20. Install the heater inlet and outlet pipes in the vehicle. Refer to **Heater Inlet And Outlet Pipe Replacement (LLT)**
21. Install the transmission control lever knob. Refer to **Transmission Control Lever Knob Replacement**.

cardiagn.com

22. Bleed the clutch hydraulic system. Refer to **Hydraulic Clutch System Bleeding** .

Transmission Final Test and Inspection

Complete the following procedure after the transmission is installed in the vehicle:

1. With the ignition OFF or disconnected and clutch pedal depressed, crank the engine several times. Listen for any unusual noises or evidence that any parts are binding.
2. Place transmission in neutral, start the engine and listen for any unusual noises or evidence that any parts are binding.
3. While the engine continues to idle raise and support the vehicle.
4. Perform a final inspection for the proper fluid level.
5. Lower the vehicle.
6. Road test the vehicle.

REPAIR INSTRUCTIONS - OFF VEHICLE

TRANSMISSION DISASSEMBLE

Special Tools

- **DT-47678:** Transmission Holding Fixture
- **DT-47678-10:** Transmission Holding Fixture Adapter
- **DT-49027:** Coil Pin Remover and Installer
- **J 3289-20:** Holding Fixture
- **J 6125-1B:** Slide Hammer with Adapter
- **J 8433:** Two Jaw Puller
- **J 35467:** One-Way Clutch Tester
- **J 41816:** Crankshaft Balancer Remover
- **J 45012:** Holding Fixture

For equivalent regional tools, refer to **Special Tools**.

cardiagn.com

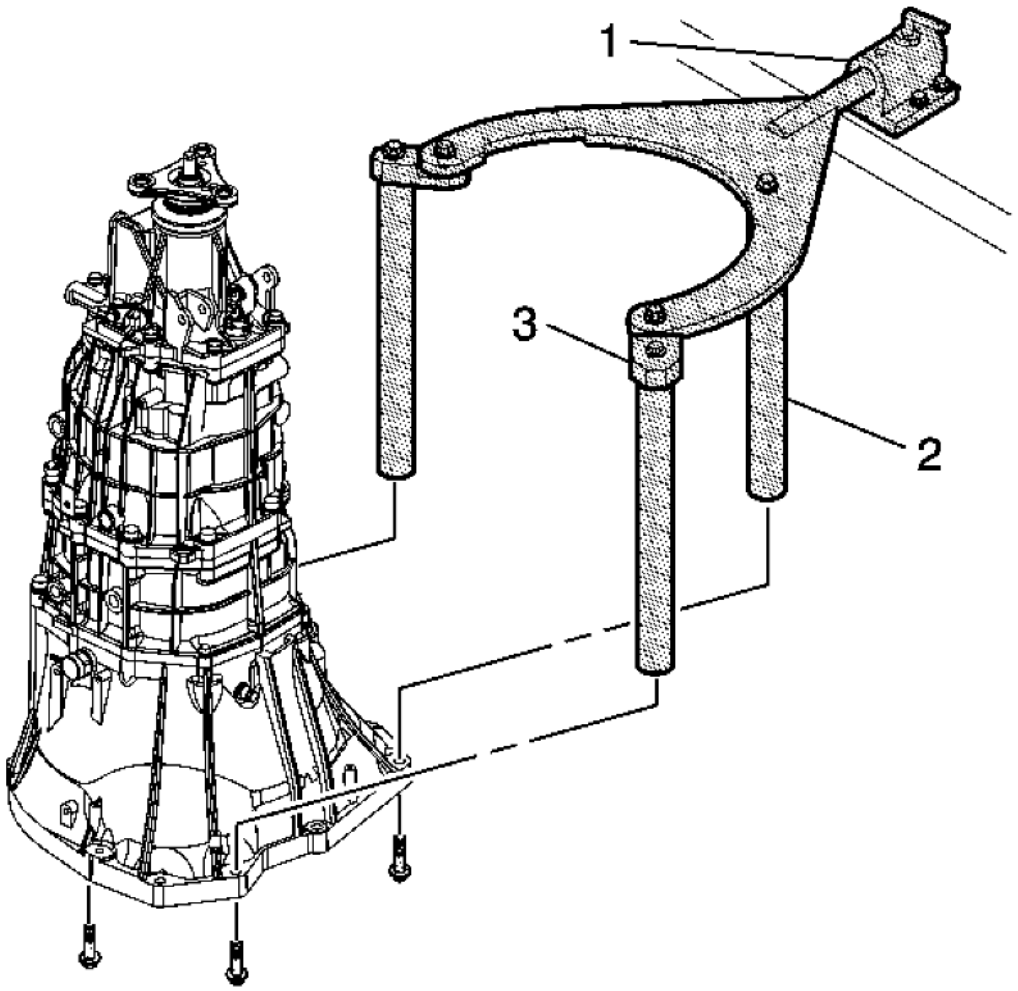

Fig. 32: Transmission Mounting Fixture & Adapters
Courtesy of GENERAL MOTORS CORP.

1. Install **DT-47678:** fixture (2) and **DT-47678-10:** adapters (3) to the transmission clutch housing.
2. Mount the transmission to a workbench using **J 3289-20:** fixture (1).
3. Remove the clutch release cylinder bolts and the clutch release cylinder. Refer to **Clutch Concentric Actuator Cylinder Replacement (Aisin)** or **Clutch Concentric Actuator Cylinder Replacement (Tremec)** .

cardiagn.com

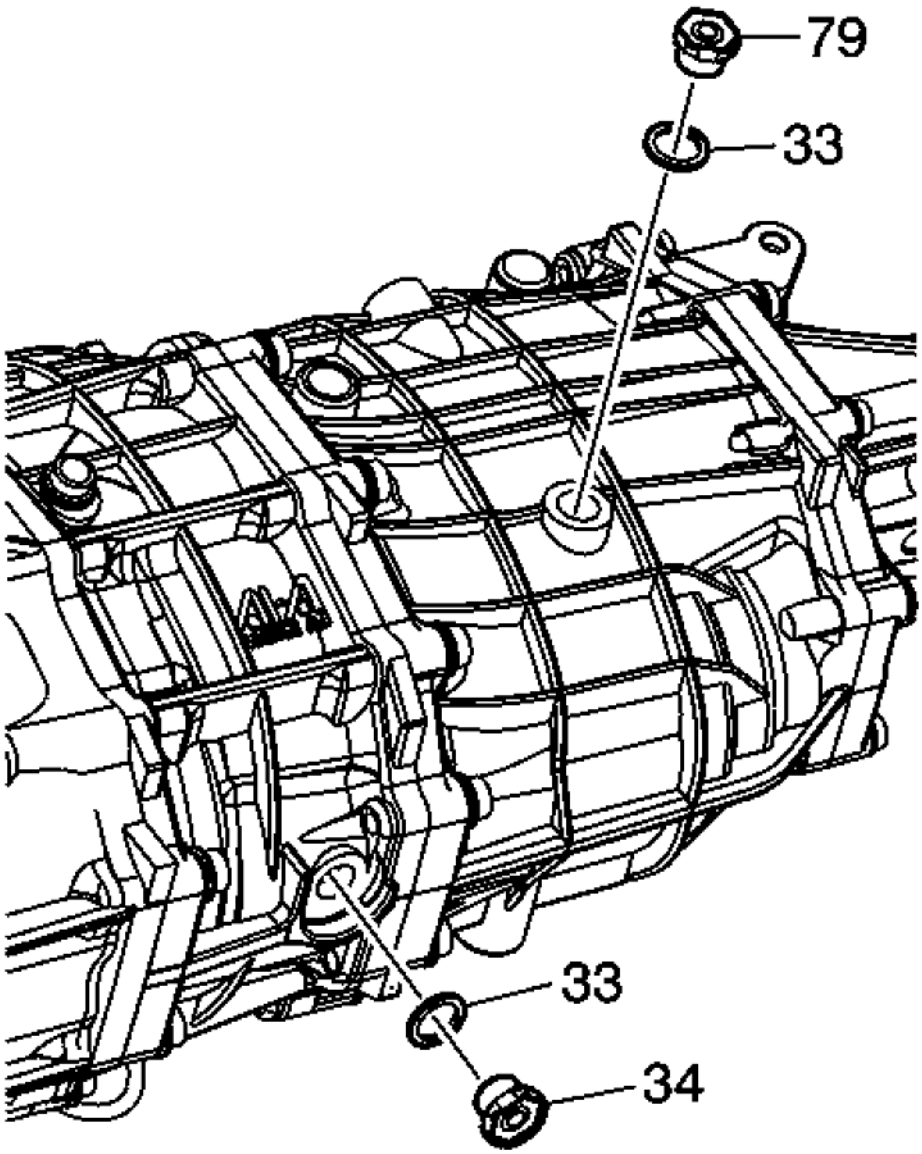

Fig. 33: Identifying Fill Plug, Drain Plug & Washers
Courtesy of GENERAL MOTORS CORP.

4. Remove the fill plug (79) and the washer (33).
5. Remove the drain plug (34) and the washer (33) then drain the transmission fluid.

cardiagn.com

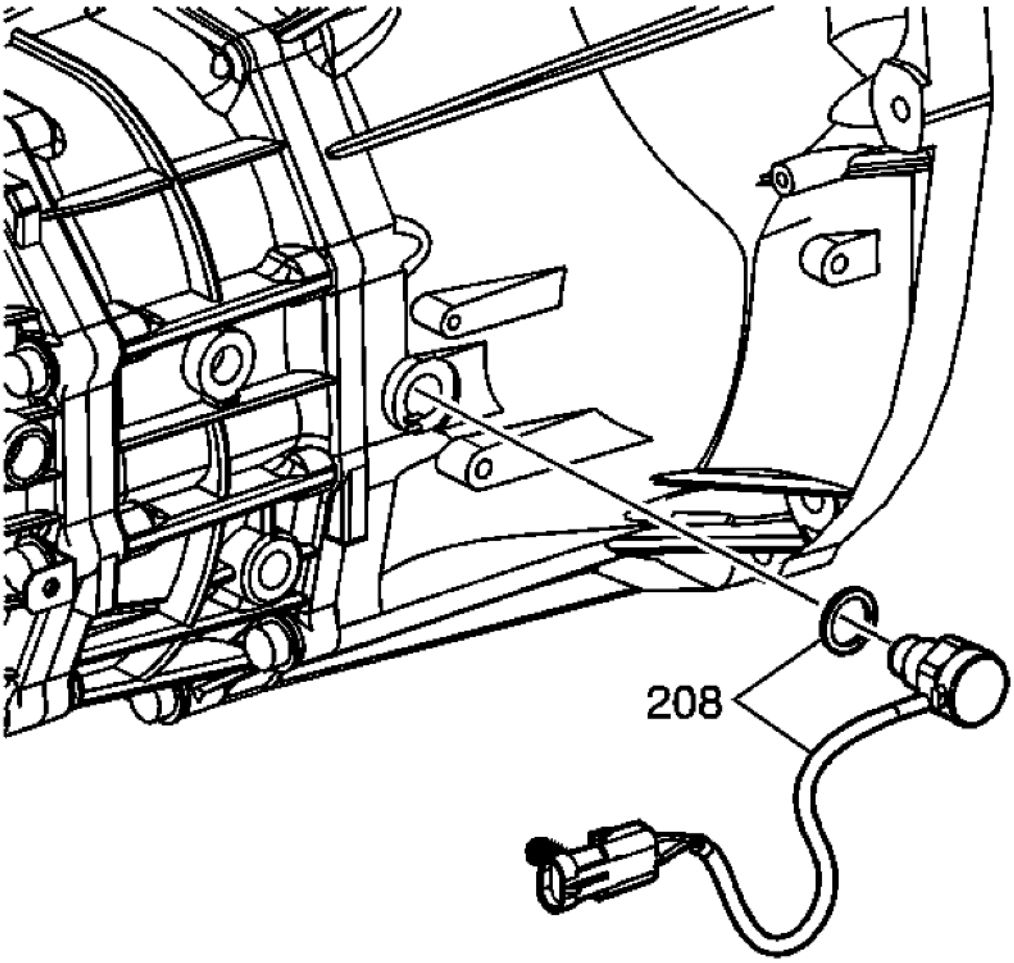

Fig. 34: Identifying Backup Lamp Switch & Washer
Courtesy of GENERAL MOTORS CORP.

6. Remove the backup lamp switch and washer (208) from the case.

cardiagn.com

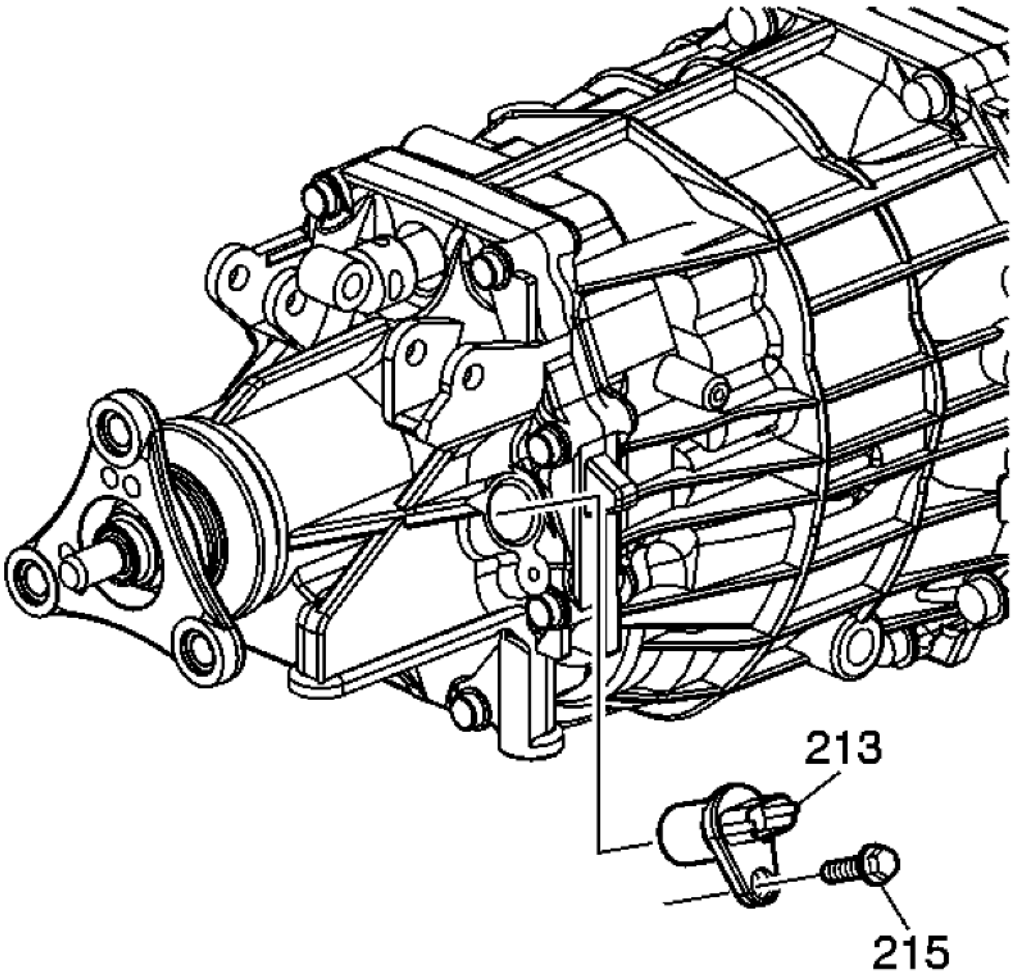

Fig. 35: Output Sensor & Bolt
Courtesy of GENERAL MOTORS CORP.

7. Remove the output sensor (213) and bolt (215) from the rear extension housing.

cardiagn.com

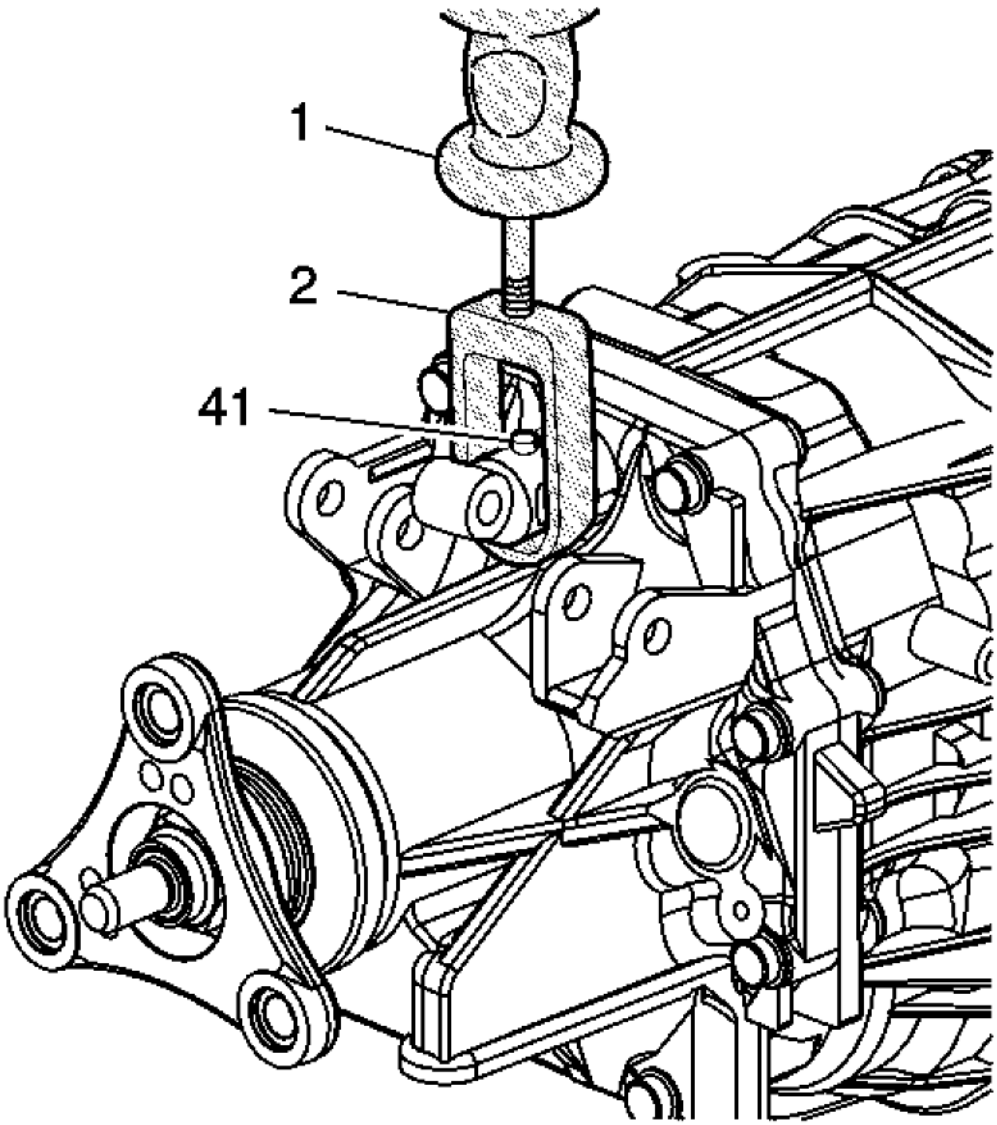

Fig. 36: Coil Pin Puller & Slide Hammer
Courtesy of GENERAL MOTORS CORP.

NOTE: Prior to the shift lever pin removal, the shift control shaft must be shifted forward into the transmission.

8. Install **DT-49027-1:** coil pin puller (2) onto **J 6125-1B:** slide hammer (1).
9. Position **DT-49027-1:** puller (2) directly beneath the shift lever pin (41), then repeatedly pull up on the

cardiagn.com

slide hammer handle until the bottom of the shift lever pin is flush with the machined O.D. of the shift lever rod universal joint.

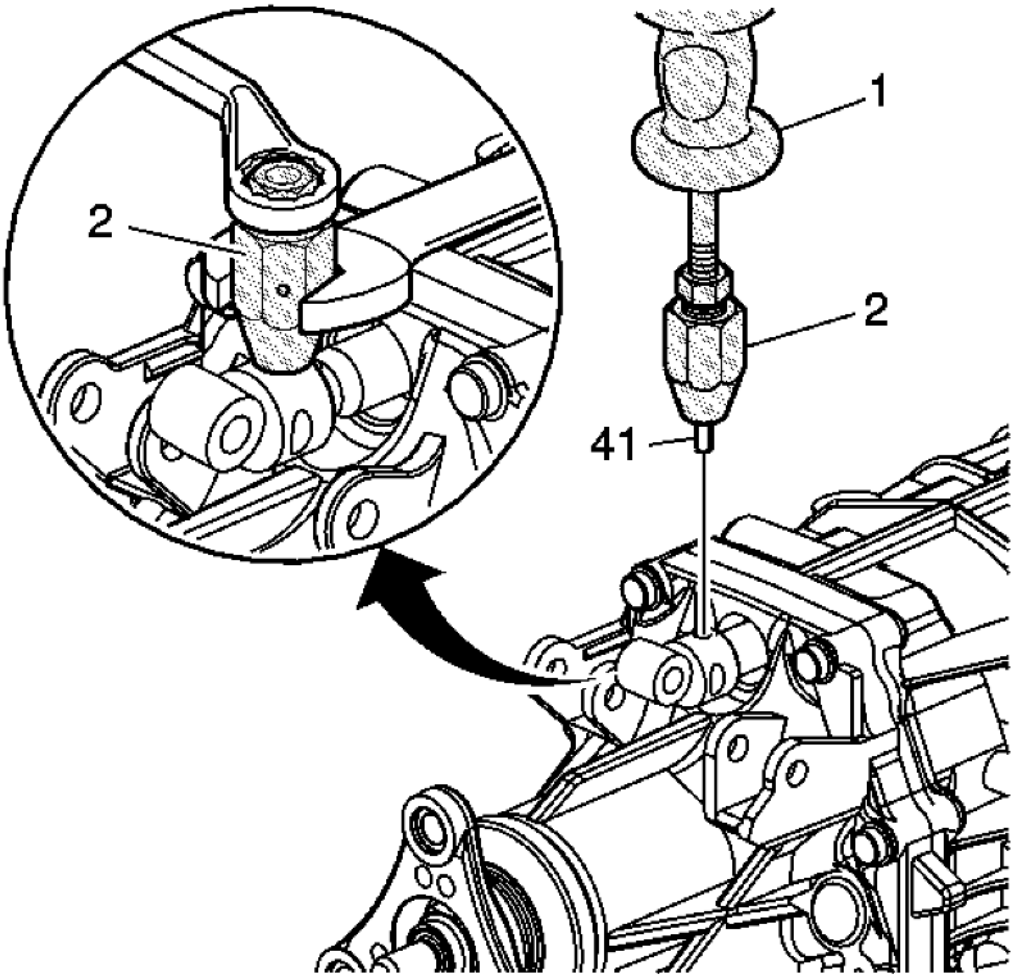

Fig. 37: Tightening Coil Pin Remover
Courtesy of GENERAL MOTORS CORP.

NOTE: Only rotate the wrench attached to the outer body of DT-49027-2: coil pin remover. The wrench attached to the inner body must remain stationary.

10. Install **DT-49027-2:** coil pin remover (2) onto the top of the shift lever pin (41) and tighten.
11. Install **J 6125-1B:** slide hammer (1) onto **DT-49027-2:** coil pin remover (2). Repeatedly, pull up on the slide hammer handle until the shift lever pin (41) is removed from the shift lever rod universal joint.

cardiagn.com

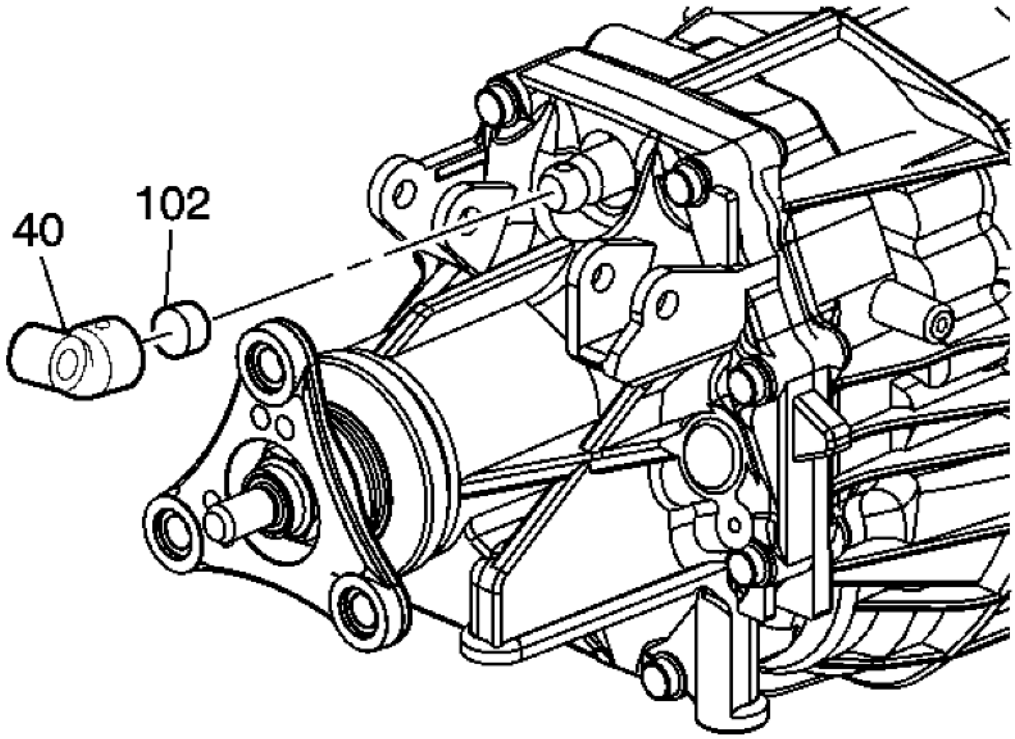

Fig. 38: Shift Lever Rod Universal Joint & Dampener
Courtesy of GENERAL MOTORS CORP.

12. Remove the shift lever rod universal joint (40) and dampener (102) from the end of the shift control shaft.

cardiagn.com

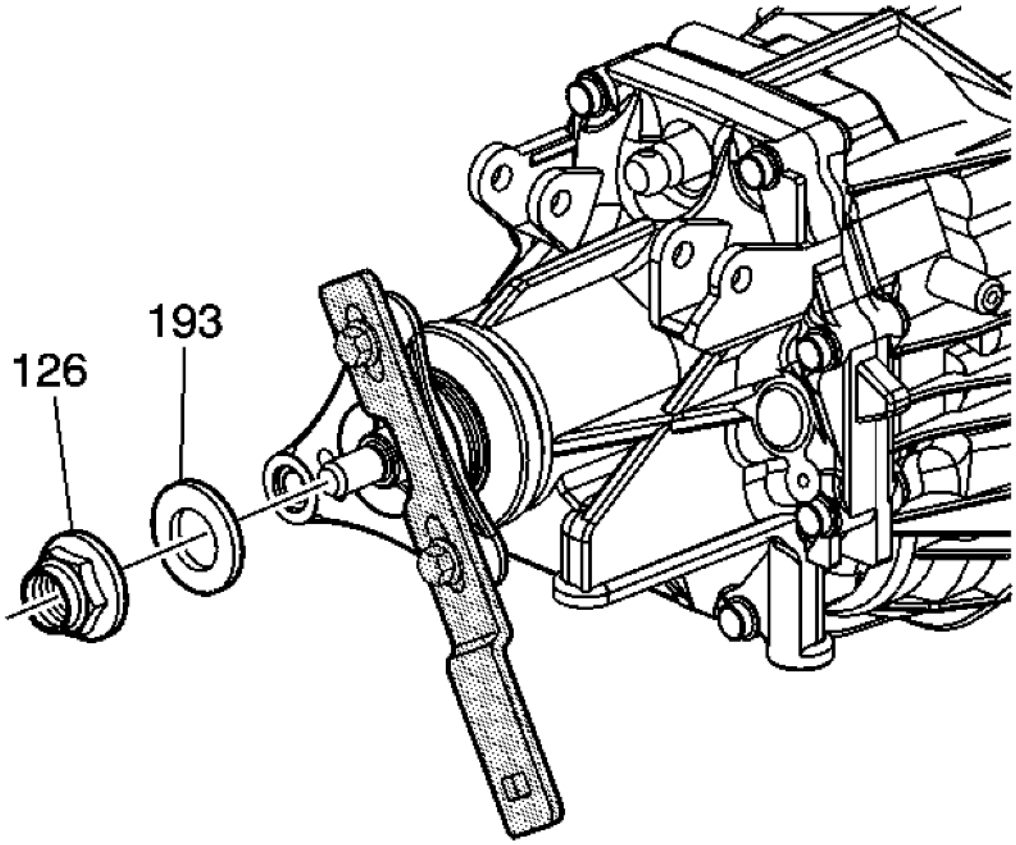

Fig. 39: Removing Propshaft Flange Nut & Propshaft Flange Fluid Seal
Courtesy of GENERAL MOTORS CORP.

13. Using a screwdriver, release the staking of the propshaft flange nut (126).
14. Install **J 45012:** fixture to the propshaft flange (108) to remove the propshaft flange nut (126) and propshaft flange fluid seal (193).

cardiagn.com

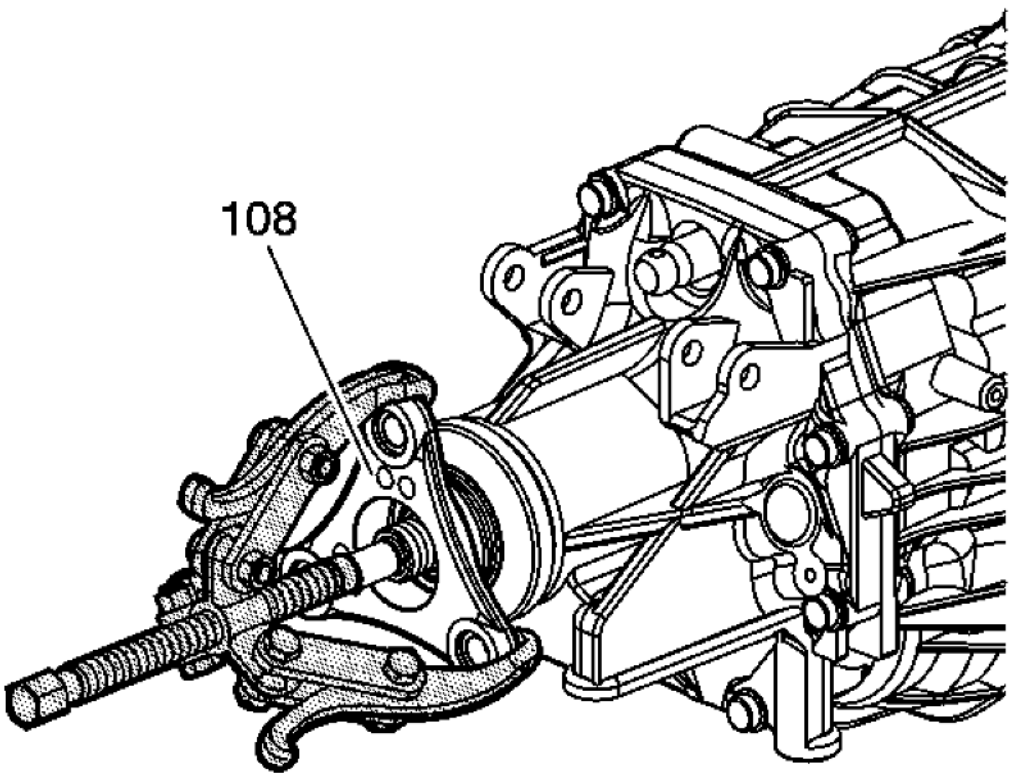

Fig. 40: Removing Propshaft Flange
Courtesy of GENERAL MOTORS CORP.

15. Using **J 41816:** remover to remove the propshaft flange (108).

cardiagn.com

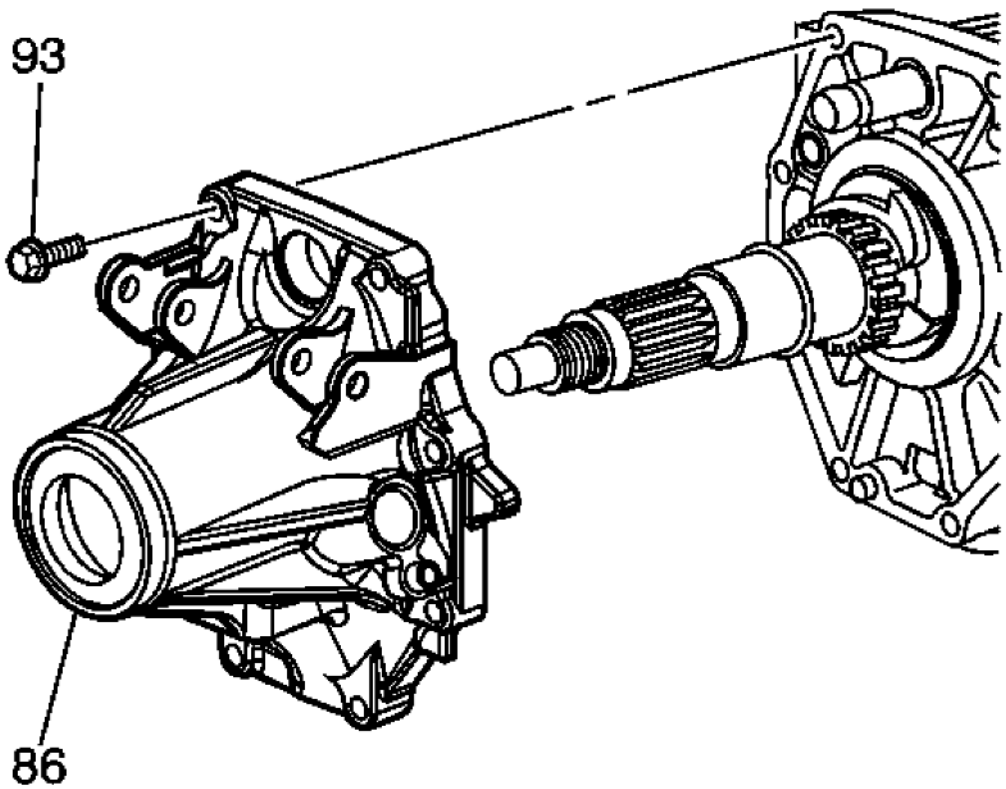

Fig. 41: Identifying Extension Housing & Bolts
Courtesy of GENERAL MOTORS CORP.

16. Remove the 8 bolts (93) from the extension housing (86).
17. Remove the extension housing.

cardiagn.com

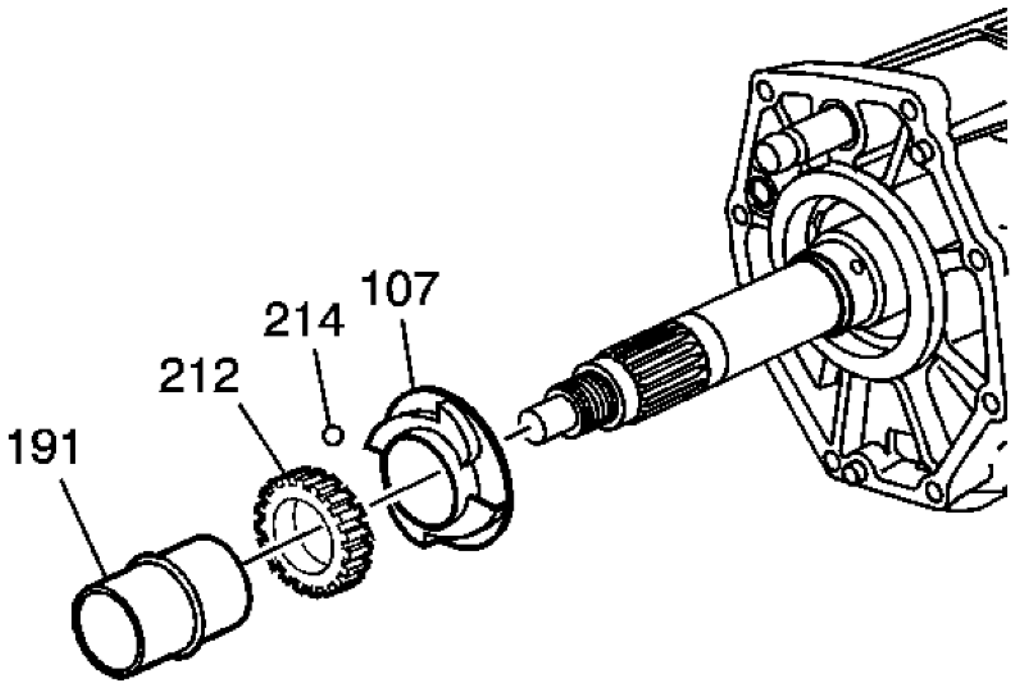

Fig. 42: View Of Vehicle Speed Sensor Drive Gear, Spacer, Locking Ball & Main Shaft Bearing Oil Slinger
Courtesy of GENERAL MOTORS CORP.

18. Remove the rear output shaft rear bearing spacer (191).
19. Remove the vehicle speed sensor drive gear (212).
20. Remove the locking ball (214).
21. Remove the main shaft bearing oil slinger (107).

cardiagn.com

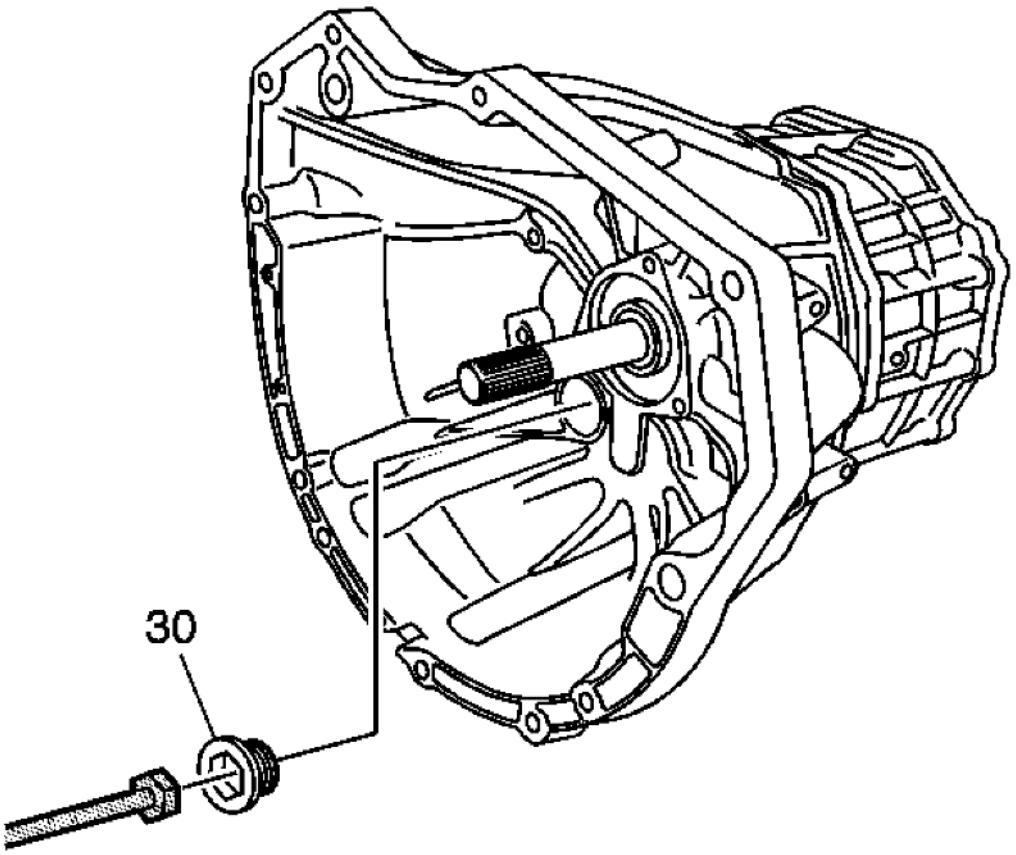

Fig. 43: Removing/Installing Clutch Housing Hole Plug
Courtesy of GENERAL MOTORS CORP.

22. Using **J 35467:** clutch tester, remove the clutch housing hole plug (30) from the clutch housing.

cardiagn.com

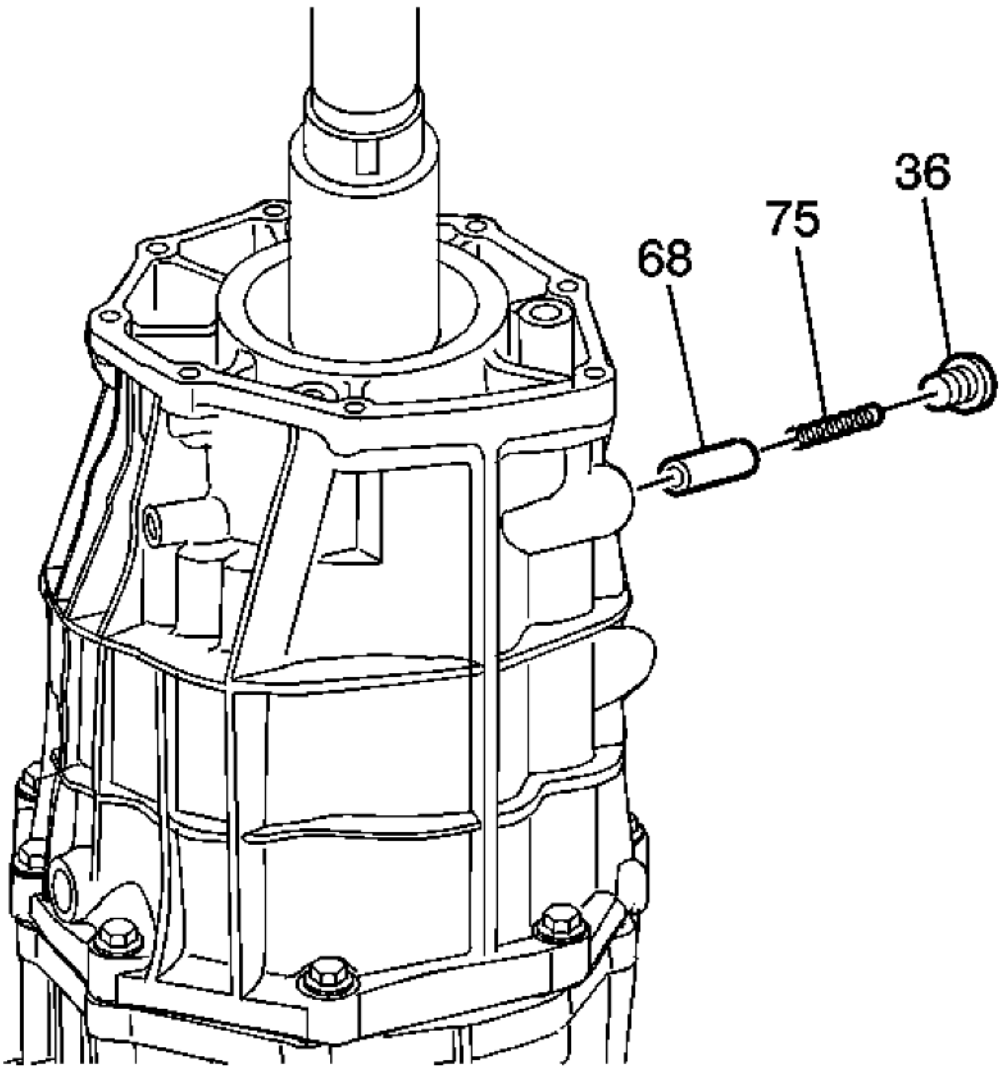

Fig. 44: View Of Shift Shaft Detent Plug, Spring & Pin
Courtesy of GENERAL MOTORS CORP.

23. Remove the following components:
    - The shift shaft detent plug (36)
    - The shift shaft detent spring (75)
    - The shift shaft detent pin (68)

cardiagn.com

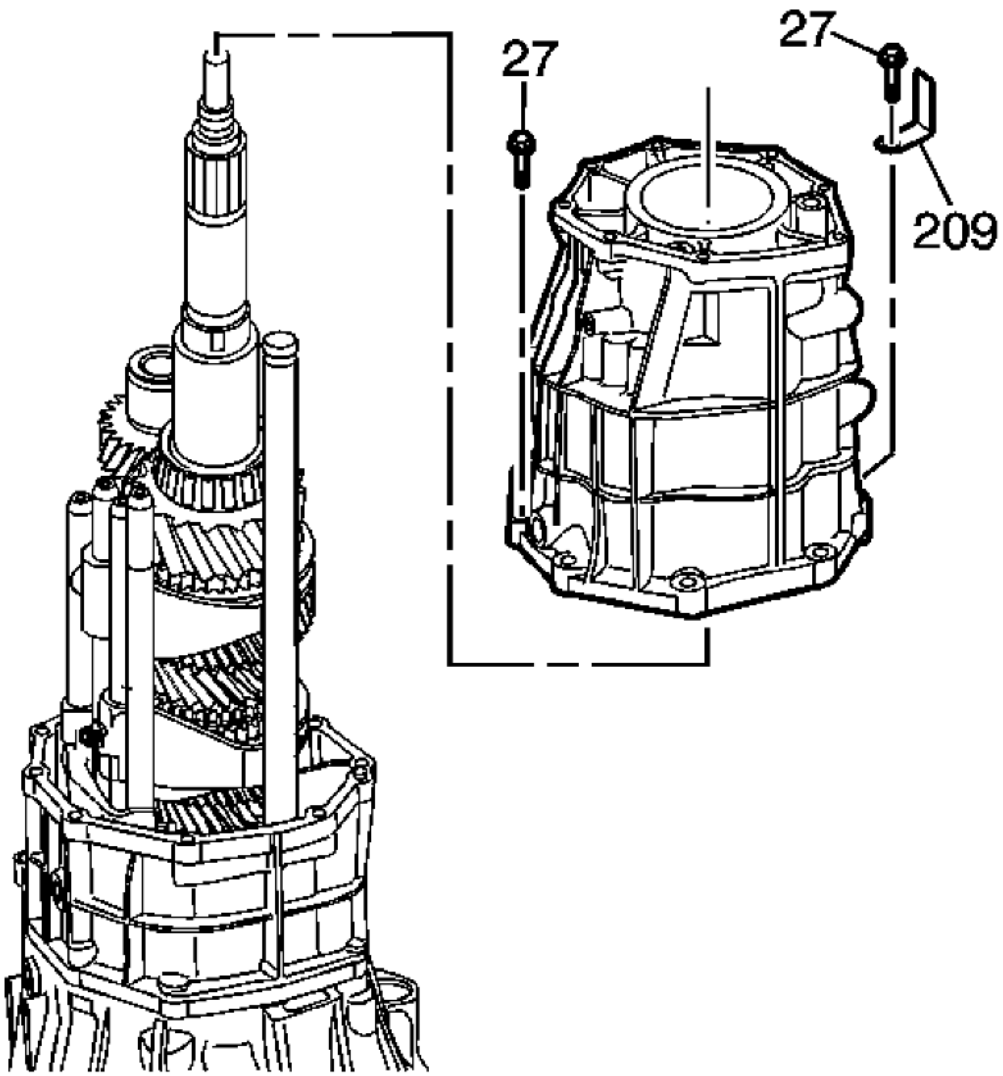

Fig. 45: View Of Rear Case Housing Retainer & Bolts
Courtesy of GENERAL MOTORS CORP.

24. Remove the 10 bolts (27) and retainer (209) from the rear case housing.

CAUTION: Refer to Machined Surface Damage Caution .

25. Using a soft-face hammer, separate the rear case housing from the intermediate case housing.

cardiagn.com

26. Remove the rear case housing.

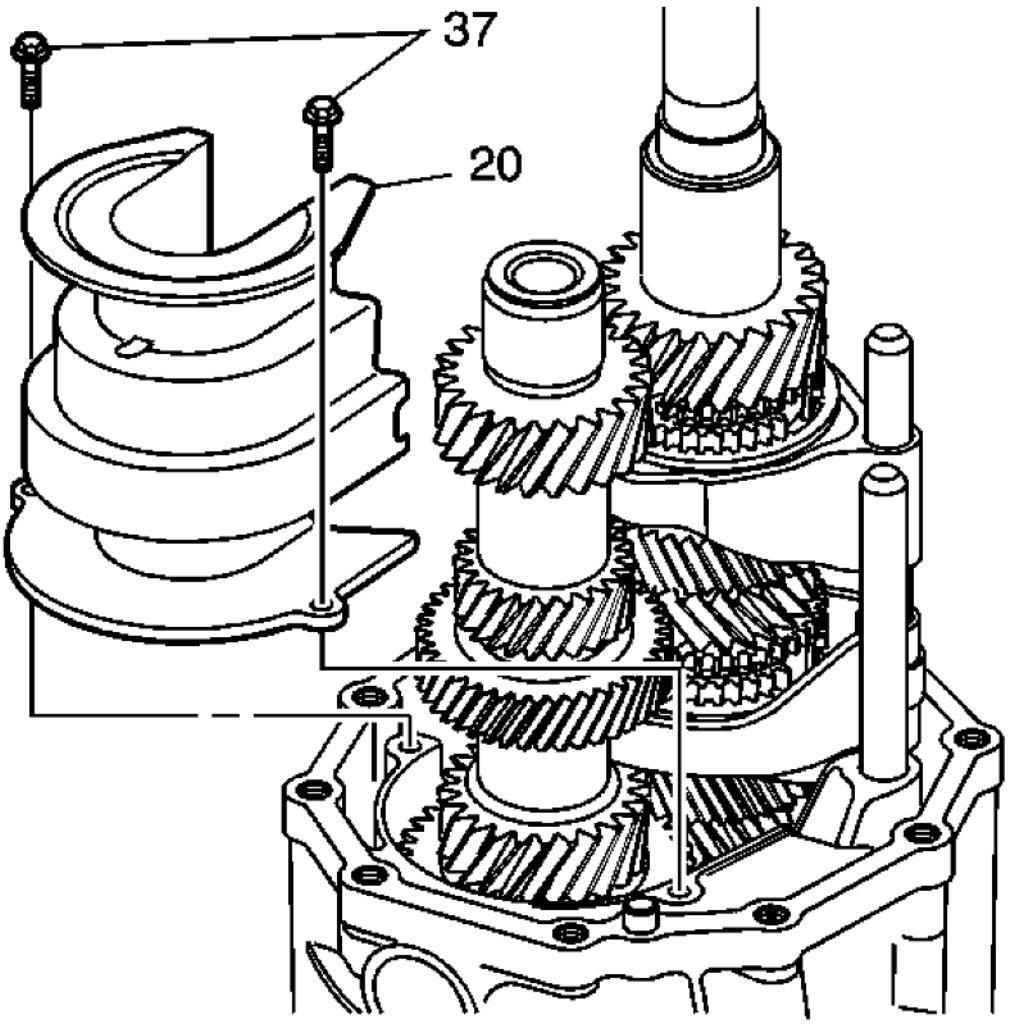

Fig. 46: Oil Trough Bolts & Oil Trough
Courtesy of GENERAL MOTORS CORP.

27. Remove the 2 oil trough bolts (37) and oil trough (20).

cardiagn.com

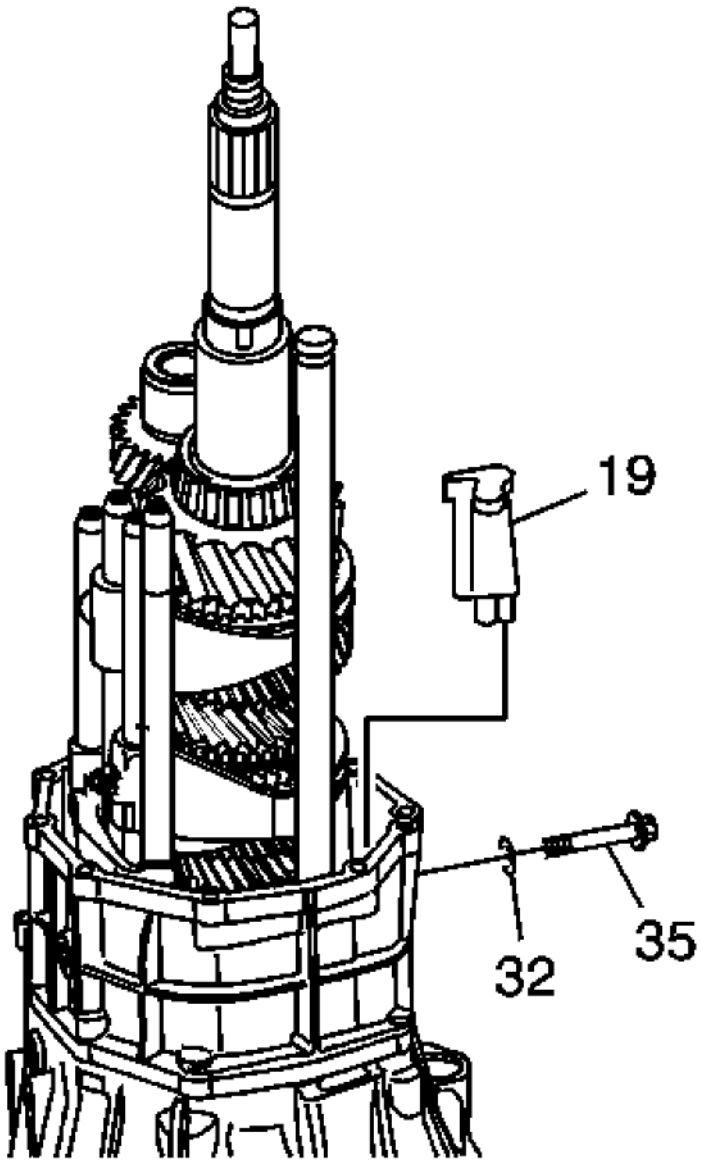

Fig. 47: Identifying Oil Trough Pipe, Reverse Idler Gear Shaft Bolt & Gasket
Courtesy of GENERAL MOTORS CORP.

28. Remove the oil trough pipe (19).
29. Remove the reverse idler gear shaft bolt (35) and gasket (32).

cardiagn.com

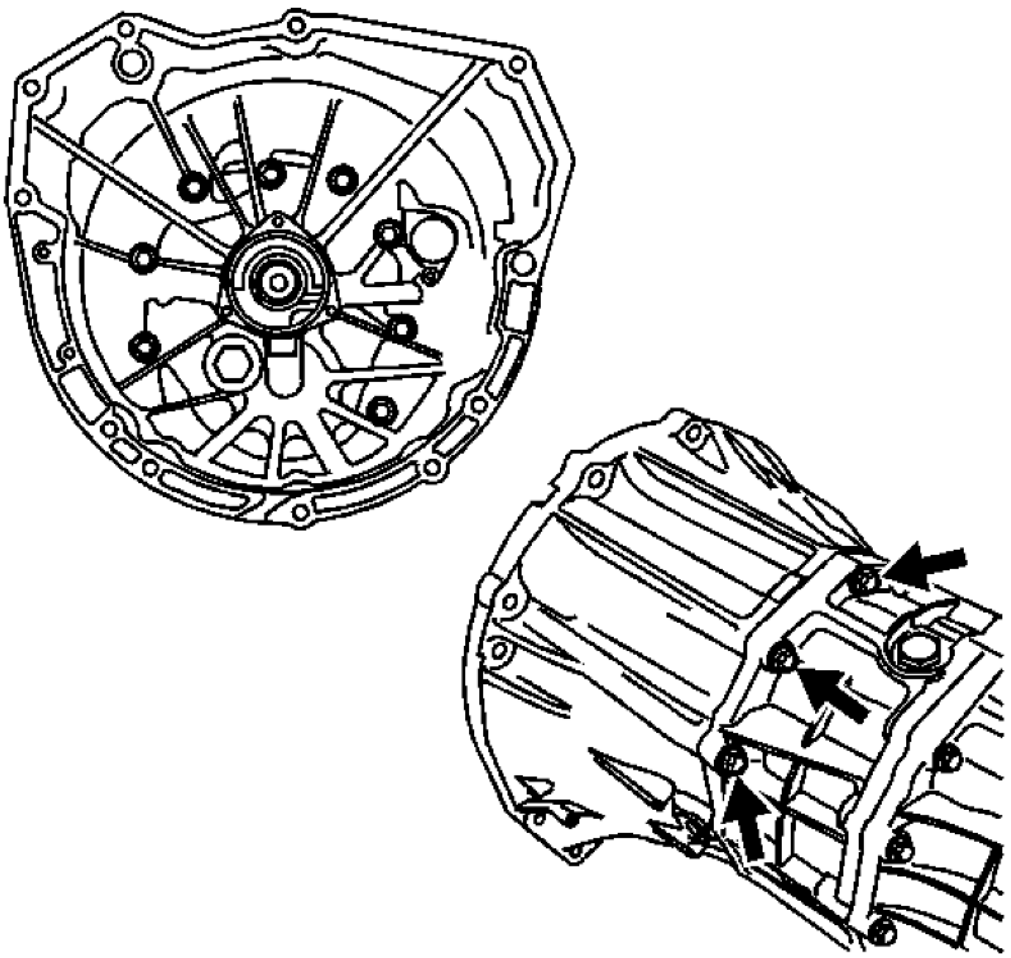

Fig. 48: View Of Clutch Housing Bolts
Courtesy of GENERAL MOTORS CORP.

30. Remove the 11 flange bolts retaining the clutch housing. This includes 8 bolts from the front and 3 bolts from the rear.

cardiagn.com

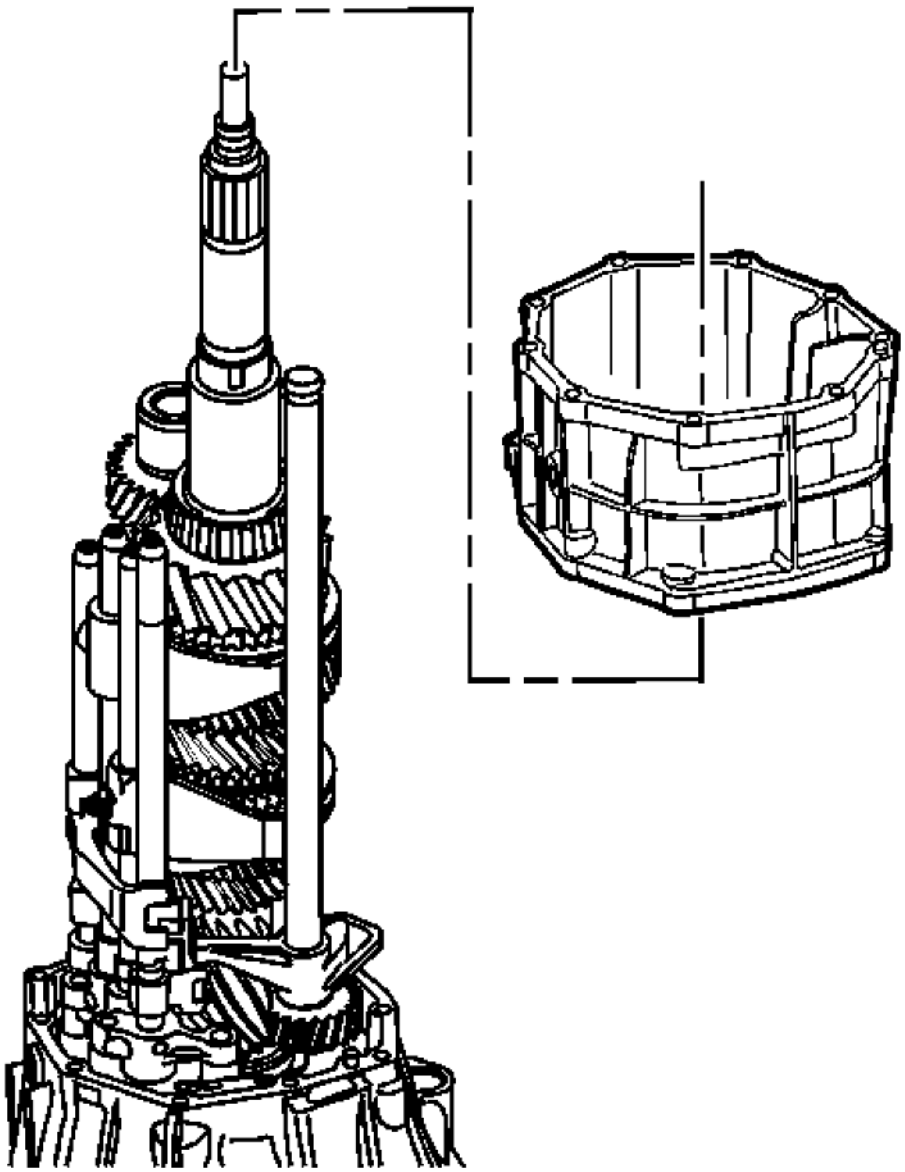

Fig. 49: View Of Intermediate Case Housing
Courtesy of GENERAL MOTORS CORP.

CAUTION: Refer to Machined Surface Damage Caution .

cardiagn.com

NOTE: Rotate case to avoid interference with shift fork.

31. Using a soft-face hammer, separate the intermediate case from the front clutch housing.
32. Remove the intermediate case housing.

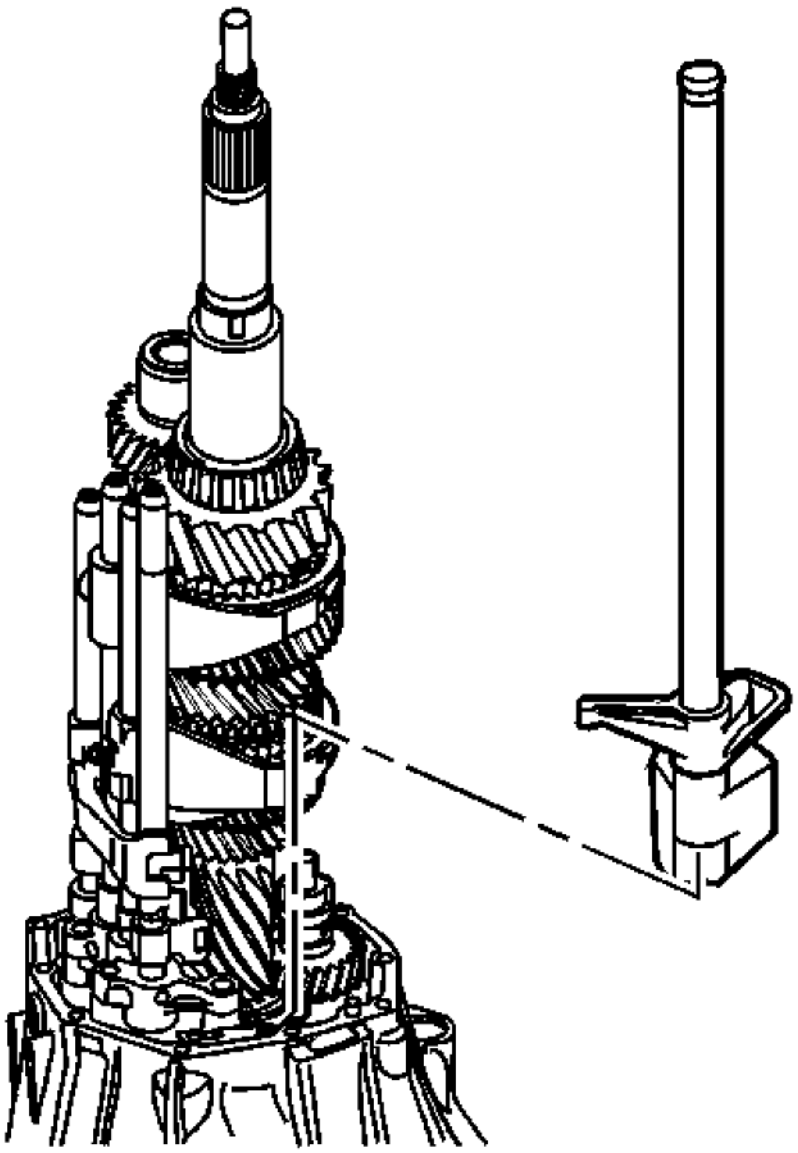

Fig. 50: View Of Shift Shaft Selector Lever
Courtesy of GENERAL MOTORS CORP.

cardiagn.com

33. Remove the shift shaft selector lever.

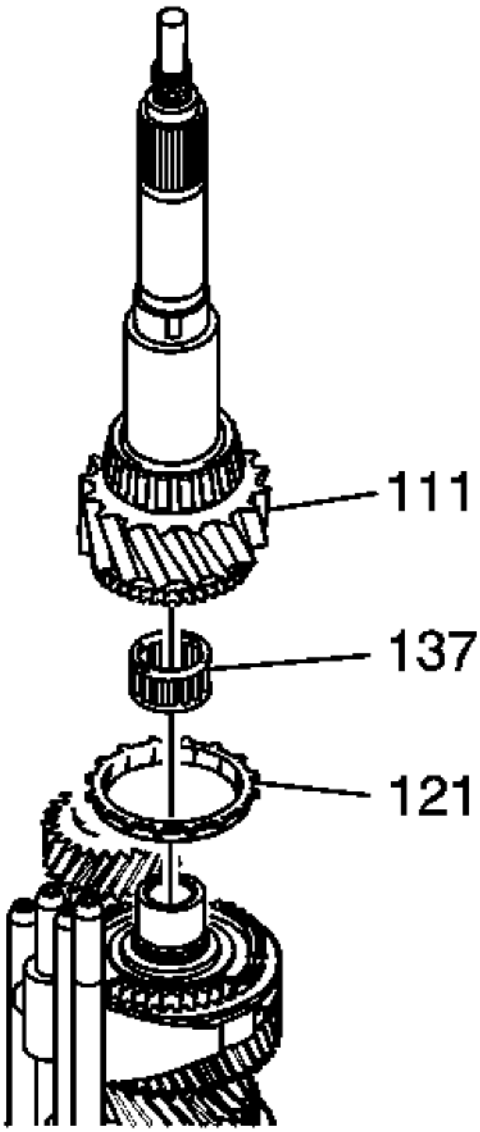

Fig. 51: View Of Rear Output Shaft, Input Shaft Bearing & Blocking Ring
Courtesy of GENERAL MOTORS CORP.

34. Remove the rear output shaft (111), input shaft bearing (137) and blocking ring (121) from the 6th gear synchronizer assembly.

cardiagn.com

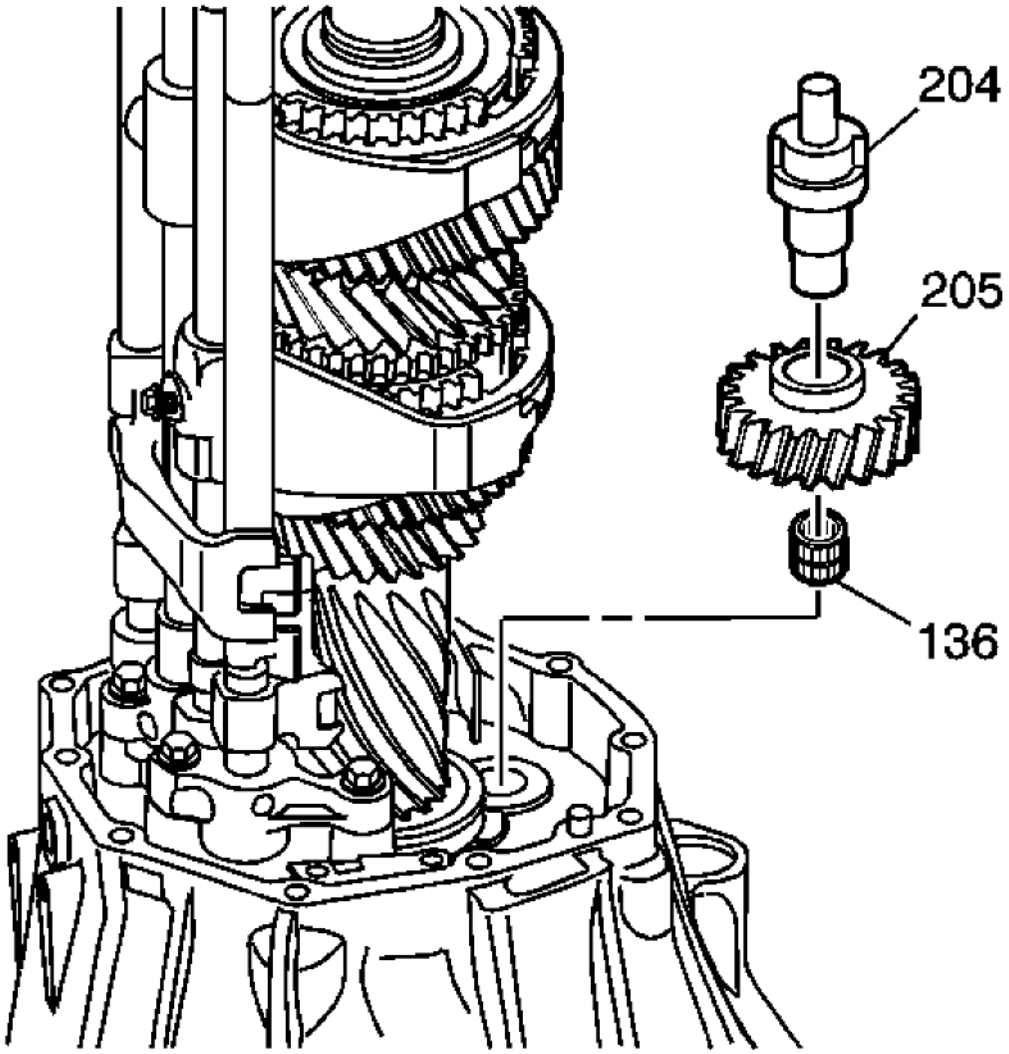

Fig. 52: View Of Reverse Idler Gear, Bearing & Shaft
Courtesy of GENERAL MOTORS CORP.

35. Remove the reverse idler gear bearing (136), reverse idler gear (205) and the reverse idler gear shaft (204).

cardiagn.com

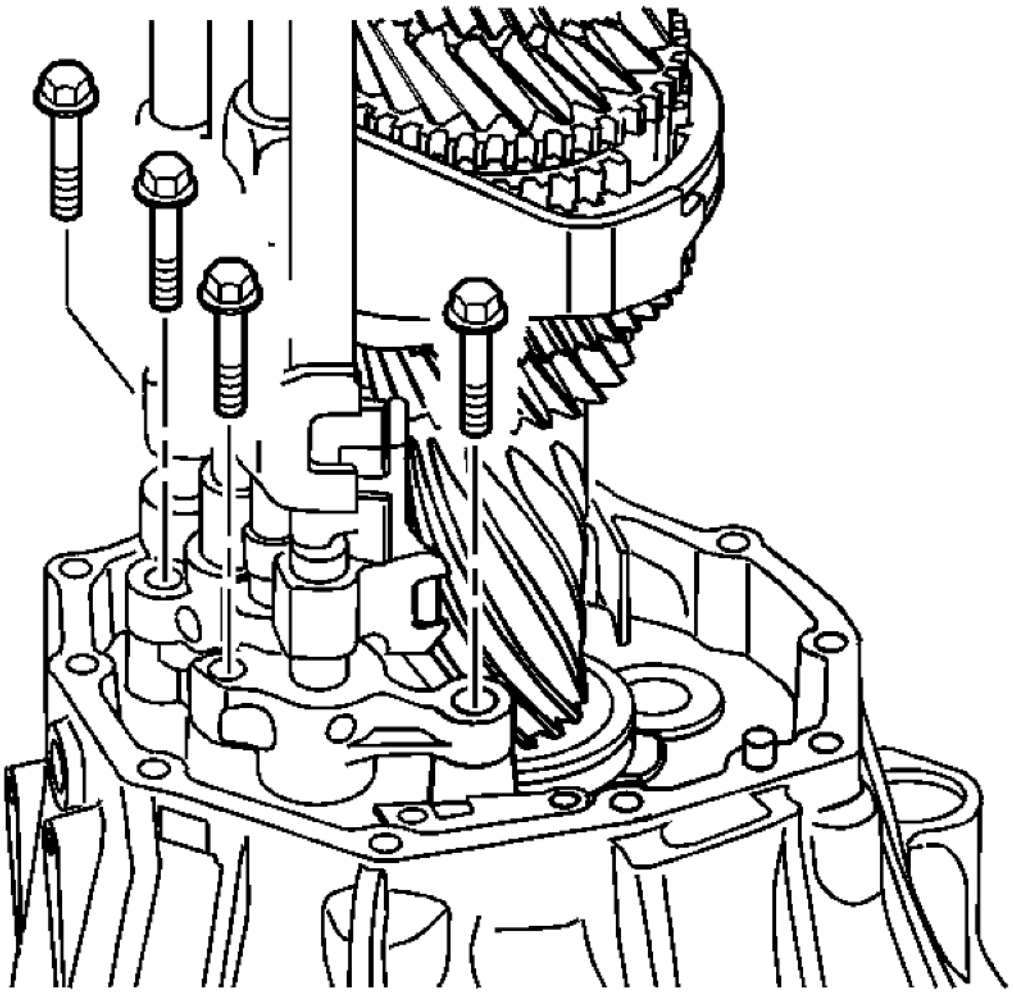

Fig. 53: View Of Shift Counter Lever Bracket Bolts
Courtesy of GENERAL MOTORS CORP.

36. Remove the 4 bracket bolts from the shift counter lever bracket.

cardiagn.com

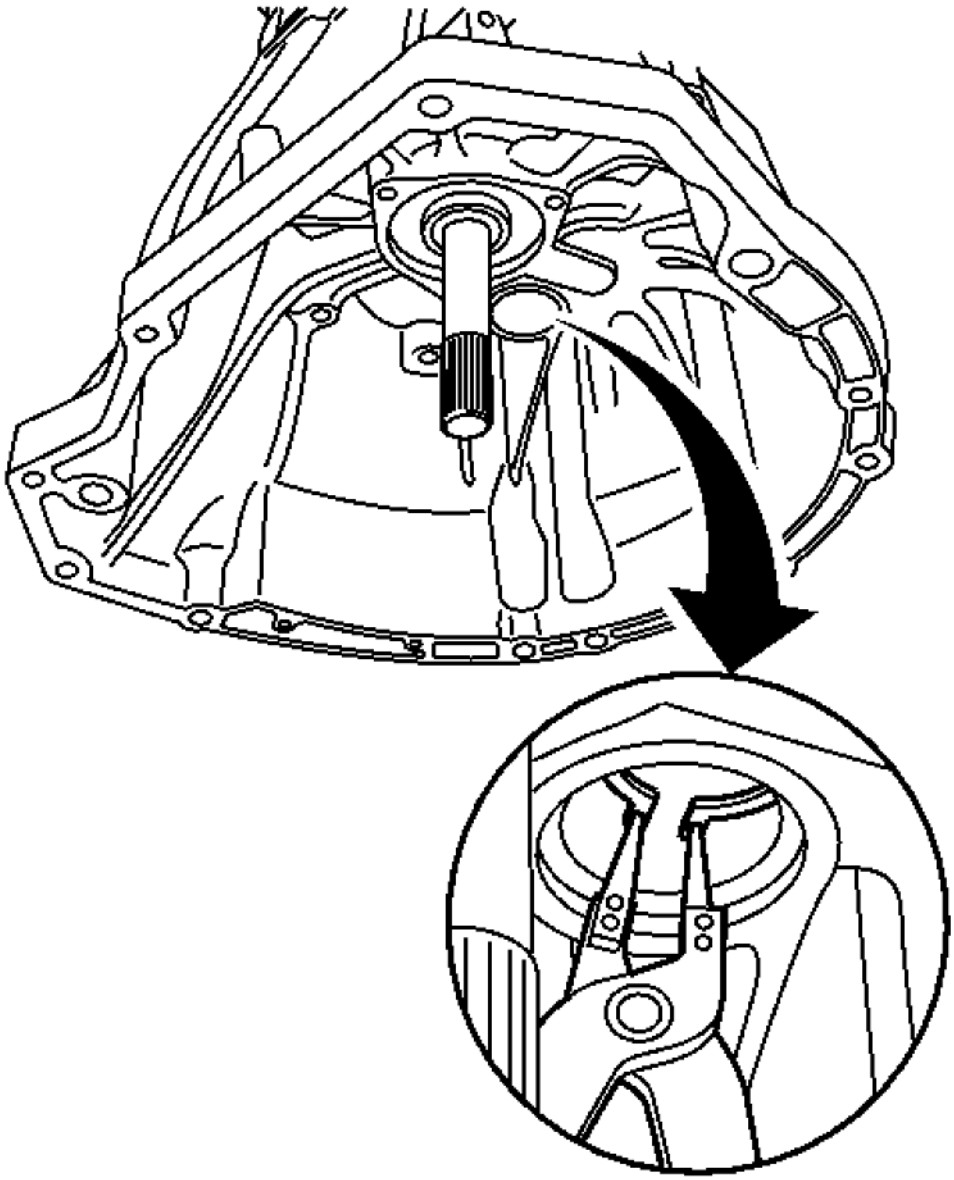

Fig. 54: Front Countershaft Bearing Snap Ring
Courtesy of GENERAL MOTORS CORP.

NOTE: **The removal of the input shaft and counter shaft assemblies will require an assistant.**

cardiagn.com

37. Expand and hold the snap ring on the front countershaft bearing.

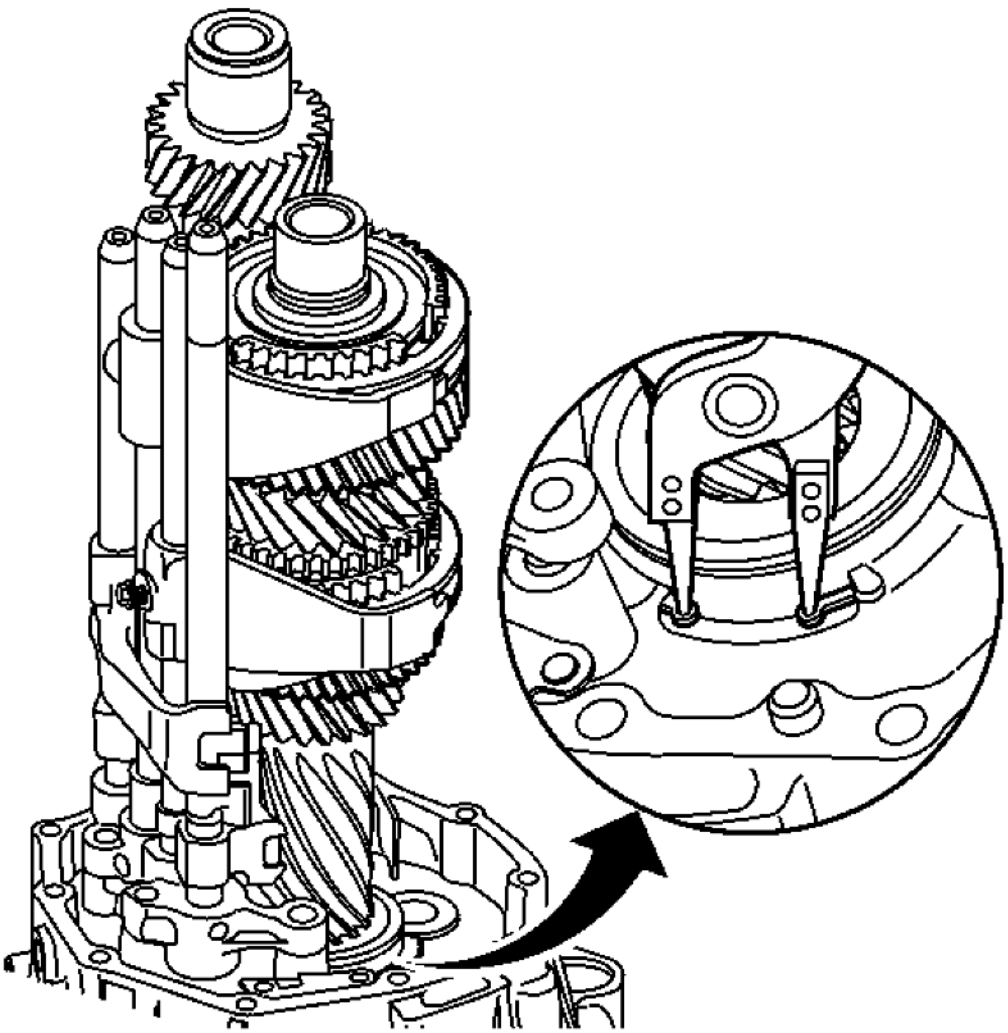

Fig. 55: Holding Snap Ring On Rear Input Shaft Bearing
Courtesy of GENERAL MOTORS CORP.

38. Expand and hold the snap ring on the rear input shaft bearing.

cardiagn.com

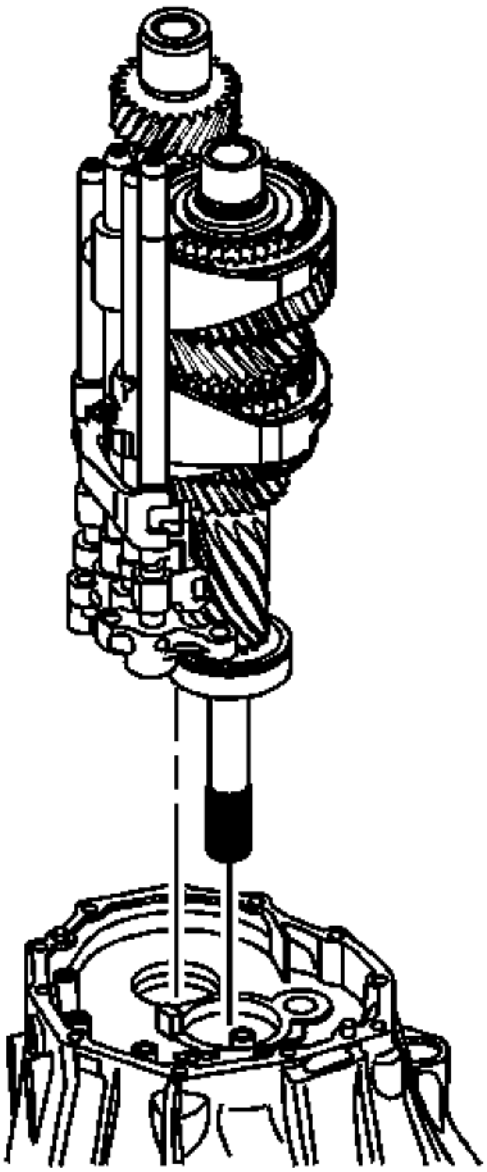

Fig. 56: View Of Input Shaft, Countershaft & Shift Rail Assembly
Courtesy of GENERAL MOTORS CORP.

39. Remove the input shaft, countershaft and shift rails as an assembly.

cardiagn.com

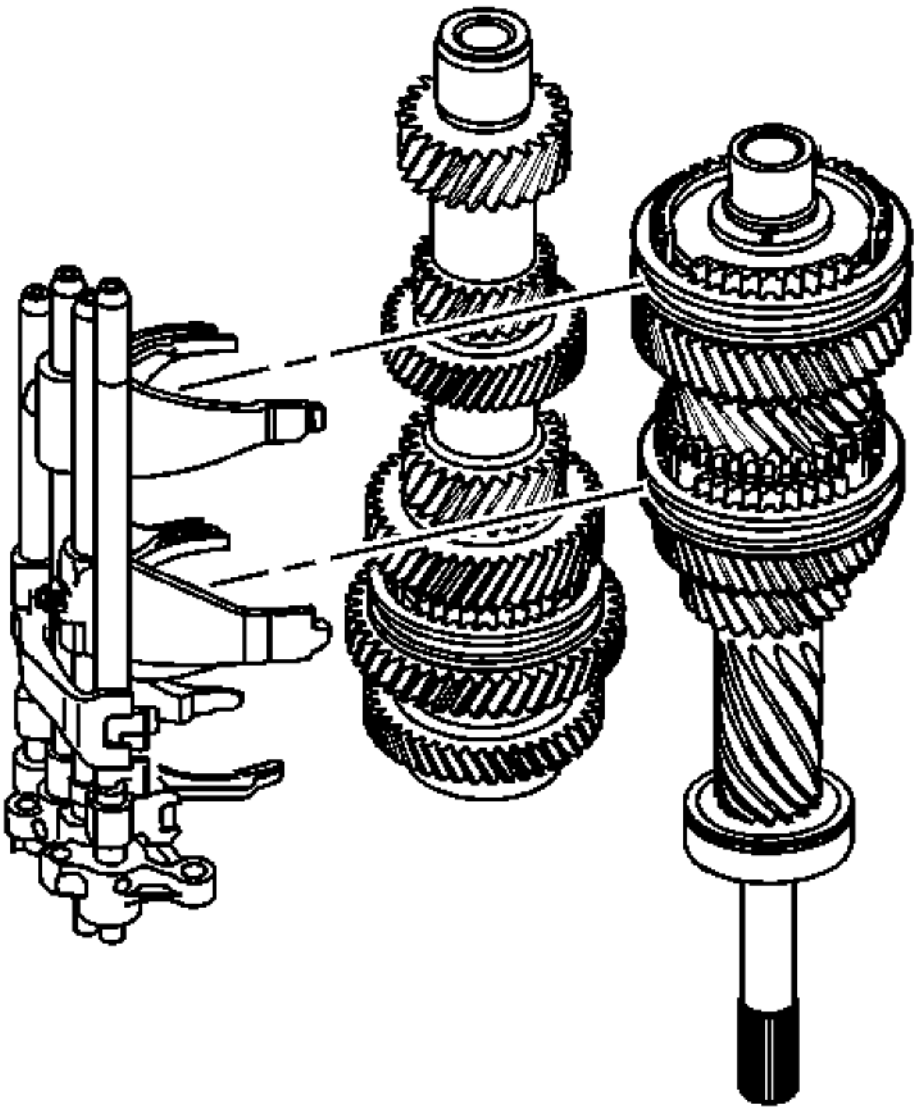

Fig. 57: Disassembling/Assembling Shift Rails, Input Shaft & Countershaft
Courtesy of GENERAL MOTORS CORP.

40. Separate the shift rails, the input shaft and countershaft.

OUTPUT SHAFT DISASSEMBLE

Tools Required

cardiagn.com

J 22912-B Split Plate Bearing Puller

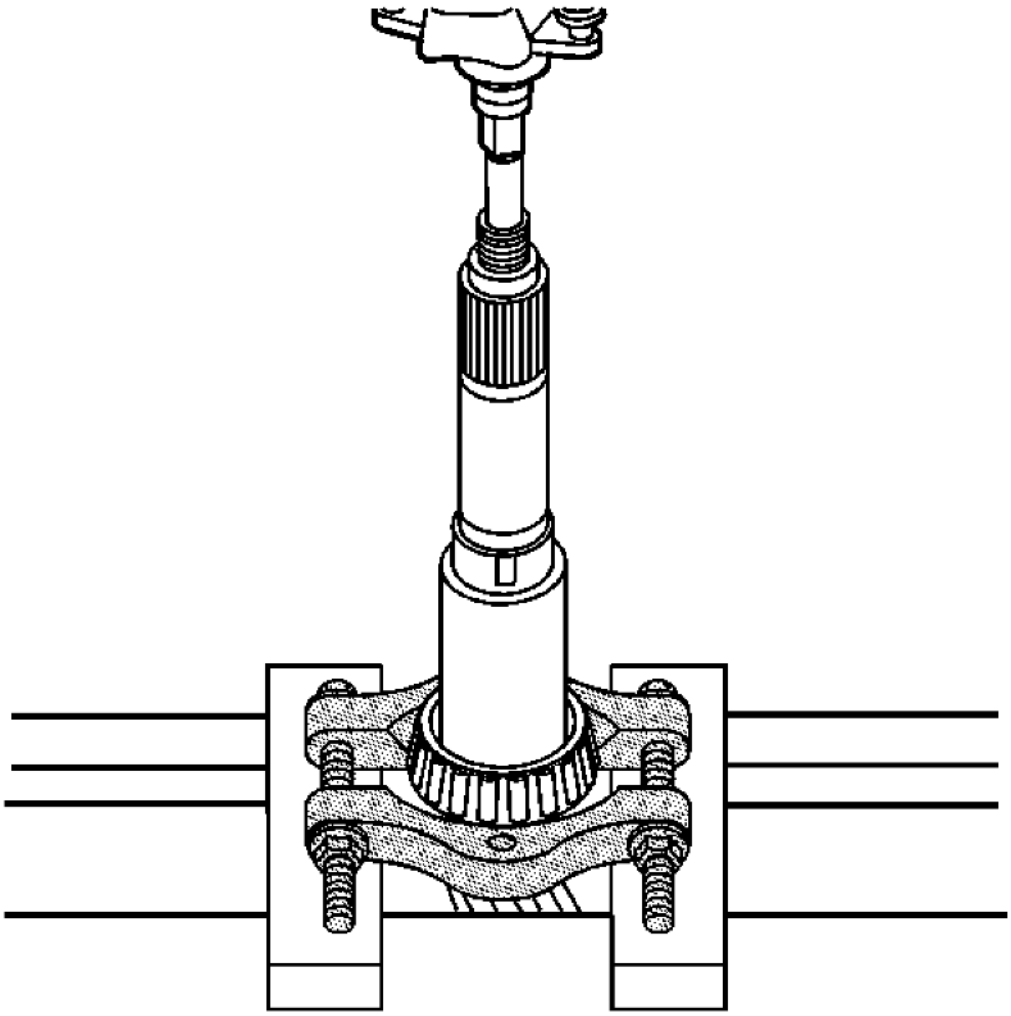

Fig. 58: Removing Tapered Roller Bearing
Courtesy of GENERAL MOTORS CORP.

IMPORTANT: Inspect the output shaft gear subassembly before disassemble. Refer to Gears and Shafts Cleaning and Inspection.

Using a hydraulic press and **J 22912-B** , remove the tapered roller bearing.

INPUT SHAFT DISASSEMBLE

cardiagn.com

Special Tools

- **J 22912-B:** Split Plate Bearing Puller
- **J 44749:** Split Plate Bearing Gear Puller

For equivalent regional tools, refer to **Special Tools**.

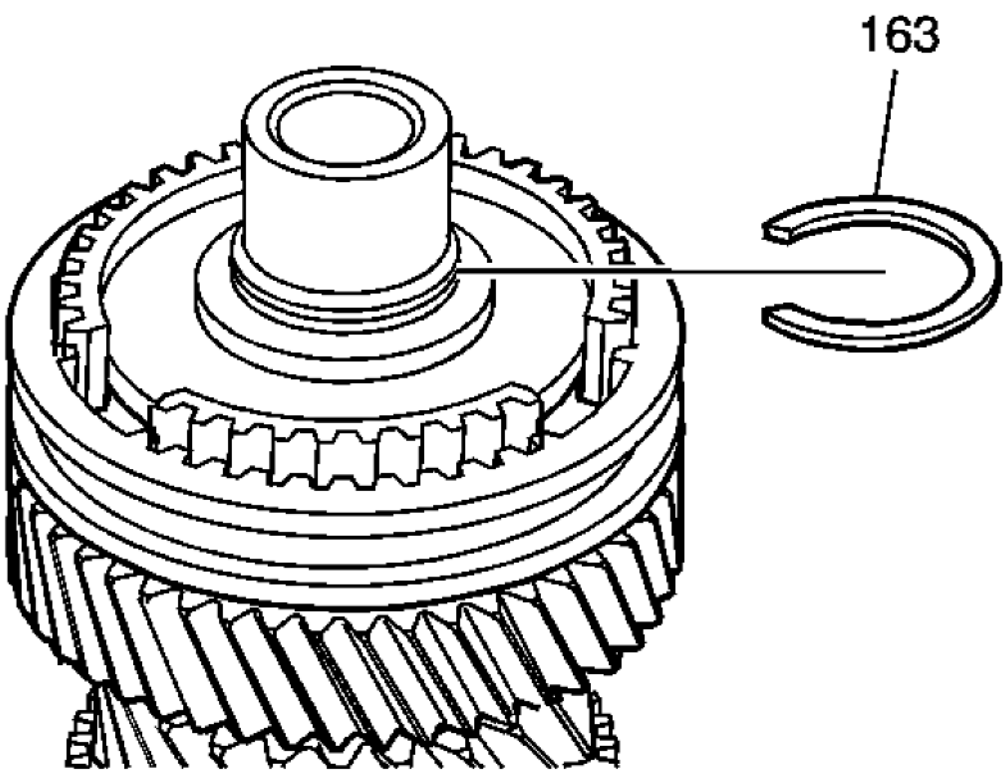

Fig. 59: View Of 5th/6th Gear Synchronizer Hub Snap Ring
Courtesy of GENERAL MOTORS CORP.

NOTE: **Inspect the input shaft subassembly before disassemble. Refer to Gears and Shafts Cleaning and Inspection.**

1. Remove the 5th/6th gear synchronizer hub snap ring (163).

cardiagn.com

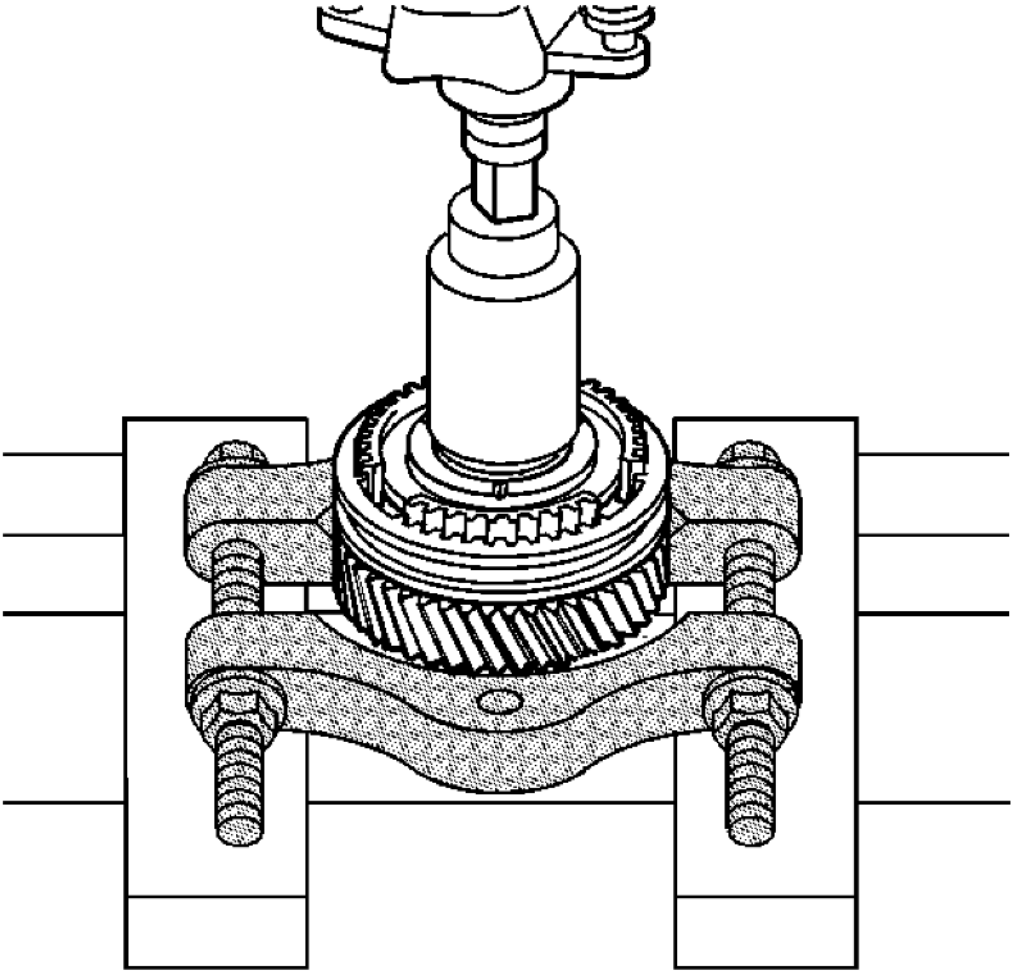

Fig. 60: Removing 6th Gear & Synchronizer
Courtesy of GENERAL MOTORS CORP.

NOTE: Place the edge of gear on press plate.

2. Using a hydraulic press and **J 44749:** bearing gear puller, remove the 6th gear and the synchronizer as a unit.

cardiagn.com

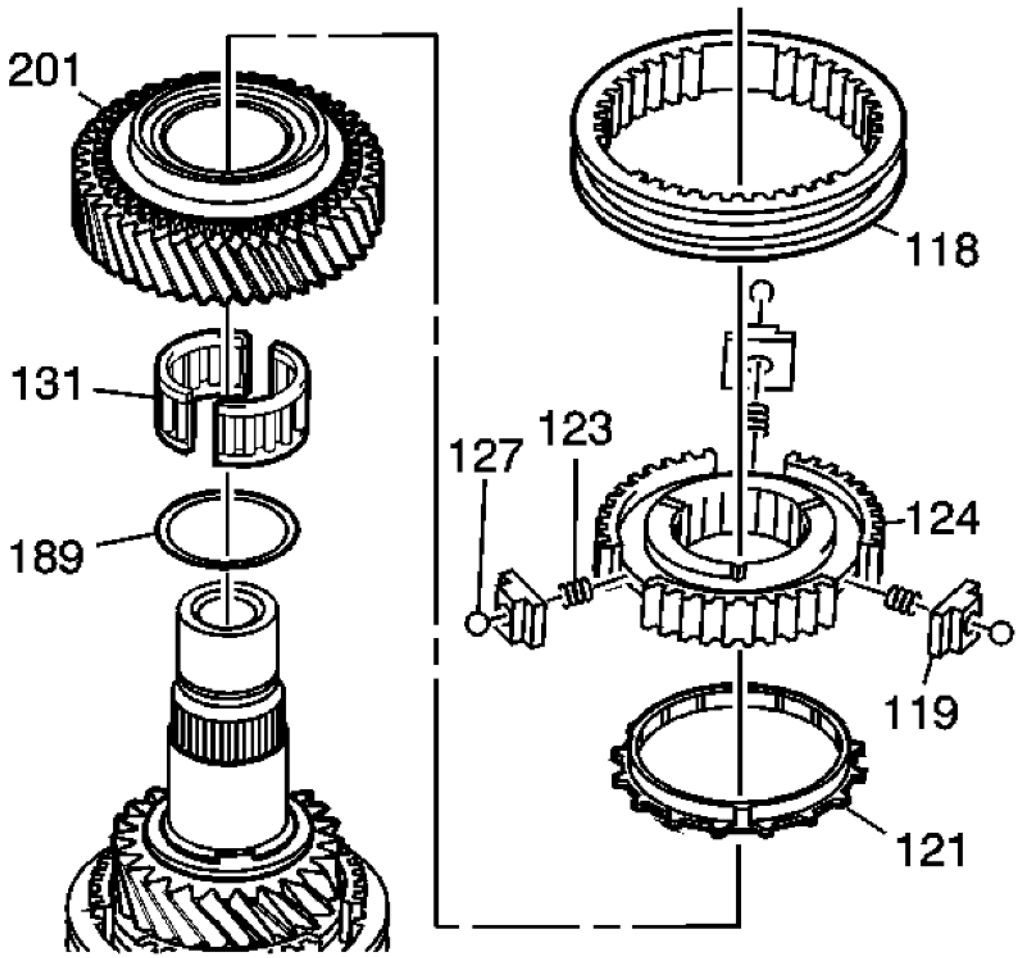

Fig. 61: View of 5th/6th Gear Assembly
Courtesy of GENERAL MOTORS CORP.

NOTE: Before removing sleeve (118), cover components in order to keep the ball and spring from ejecting loose.

3. Remove the following components as an assembly:
   - The 5th/6th gear synchronizer sleeve (118)
   - The 5th/6th gear synchronizer hub (124) including insert (119), detent ball (127) and spring (123)
   - The 5th gear synchronizer blocking ring (121)
   - The 6th gear (201)
   - The 6th gear bearing (131)

cardiagn.com

- The 6th gear bearing spacer (189)

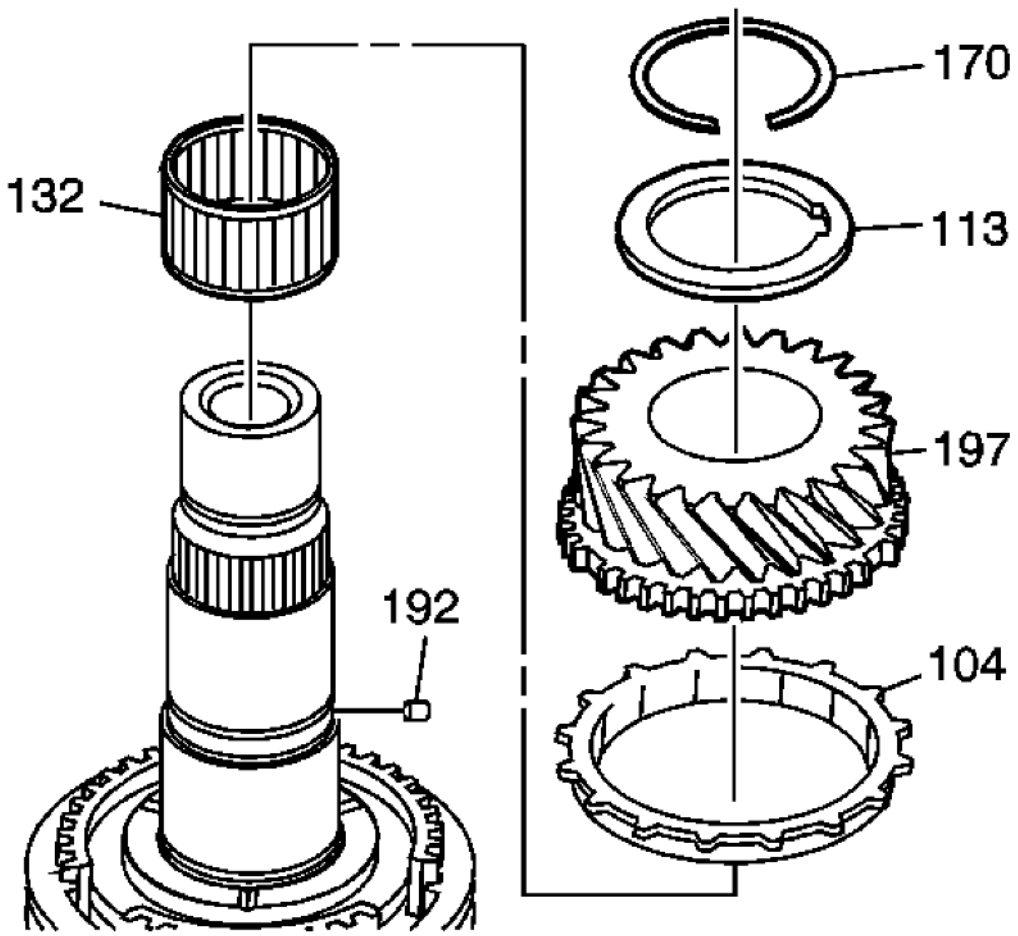

Fig. 62: View Of 3rd Gear & Components
Courtesy of GENERAL MOTORS CORP.

4. Remove the 6th gear snap ring (170).
5. Remove the 3rd gear thrust washer (113).
6. Remove the locating pin (192).
7. Remove the 3rd gear assembly which includes:
   - The 3rd gear (197)
   - The 3rd gear blocking ring (104)
8. Remove the 3rd gear bearing (132).

cardiagn.com

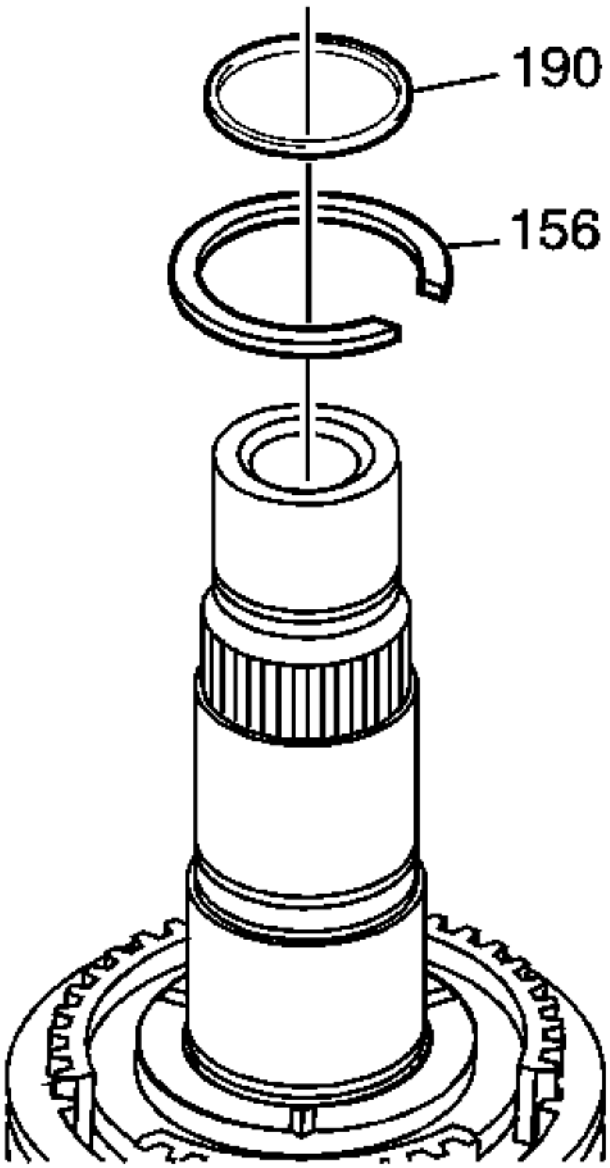

Fig. 63: View Of 3rd/4th Gear Spacer & Snap Ring
Courtesy of GENERAL MOTORS CORP.

9. Remove the 3rd/4th gear spacer (190).
10. Remove the snap ring (156) and discard.

cardiagn.com

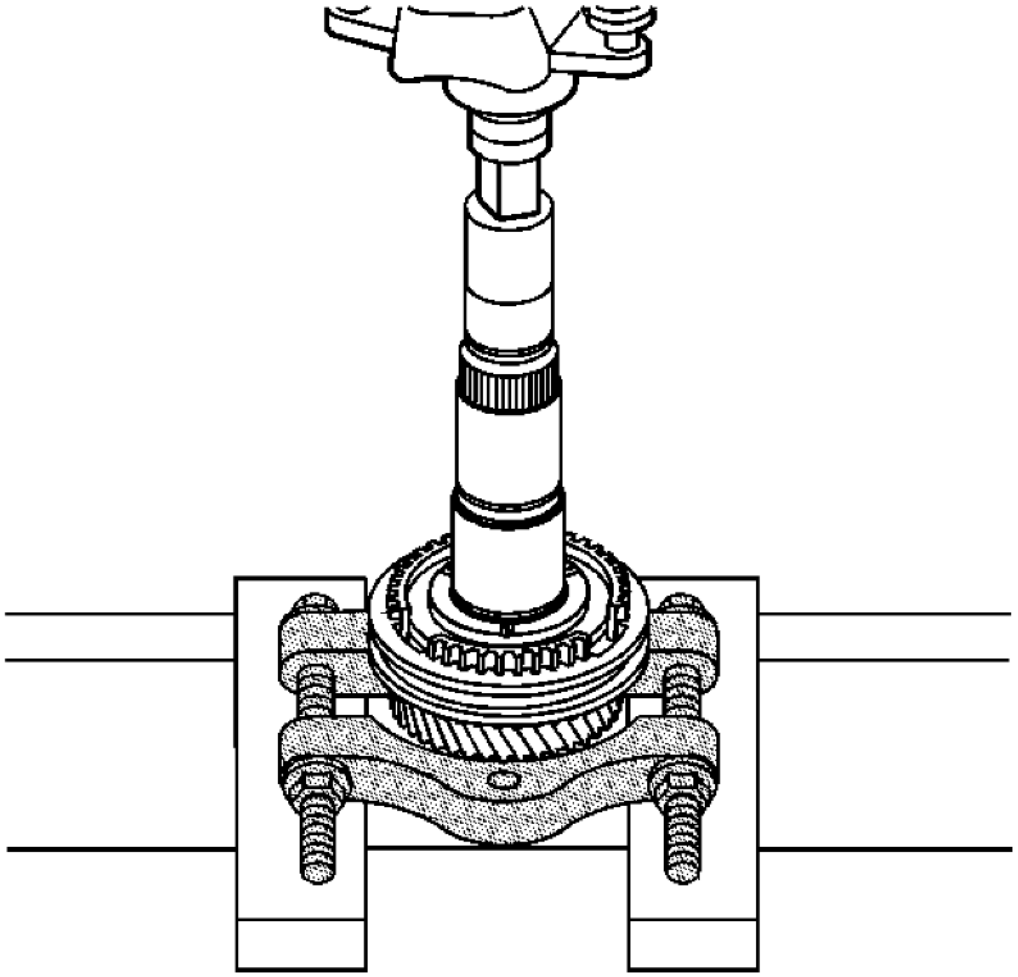

Fig. 64: Removing 4th Gear & Synchronizer
Courtesy of GENERAL MOTORS CORP.

NOTE: Place the edge of gear on press plate.

11. Using a hydraulic press and **J 22912-B:** bearing puller, remove the 4th gear and the synchronizer as a unit.

cardiagn.com

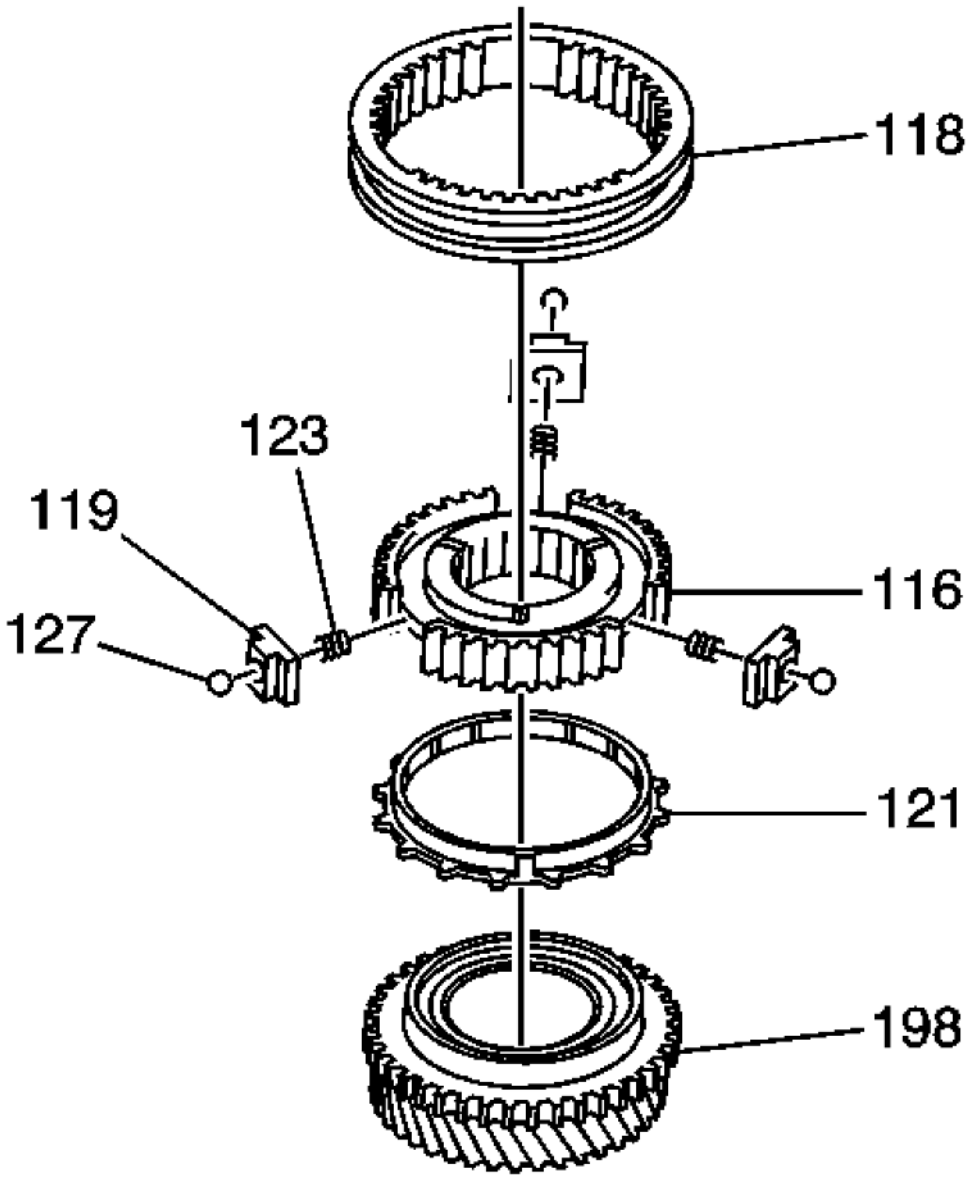

Fig. 65: View of 3rd/4th Gear Assembly
Courtesy of GENERAL MOTORS CORP.

NOTE: **Before removing sleeve (118), cover components in order to keep the ball and spring from ejecting loose.**

cardiagn.com

12. Remove the following components as an assembly:
    - The 3rd/4th gear synchronizer sleeve (118)
    - The 3rd/4th gear synchronizer hub (116) including insert (119), detent ball (127) and spring (123)
    - The 4th gear blocking ring (121)
    - The 4th gear (198)

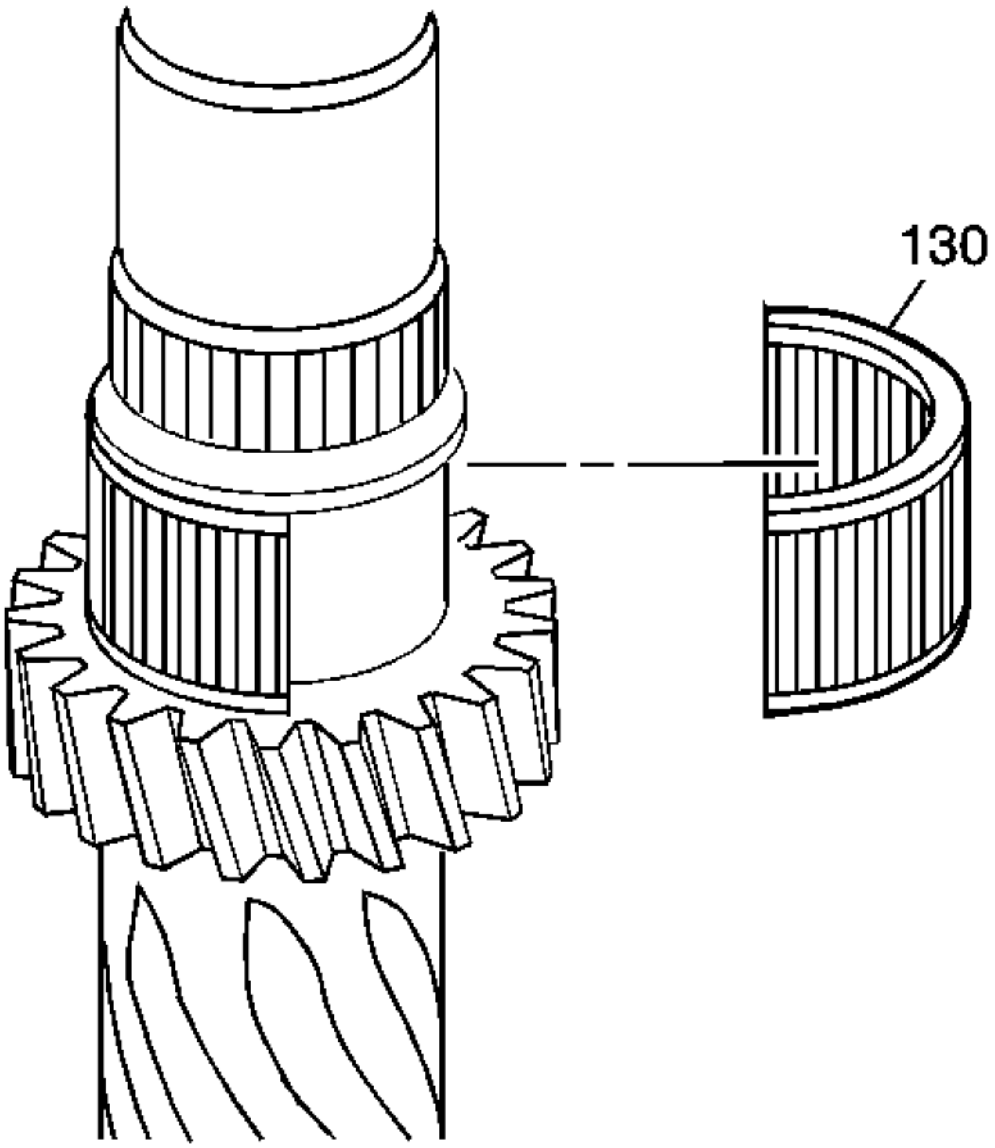

cardiagn.com

Fig. 66: View Of 4th Gear Bearing
Courtesy of GENERAL MOTORS CORP.

13. Remove the 4th gear bearing (130) from the input shaft.

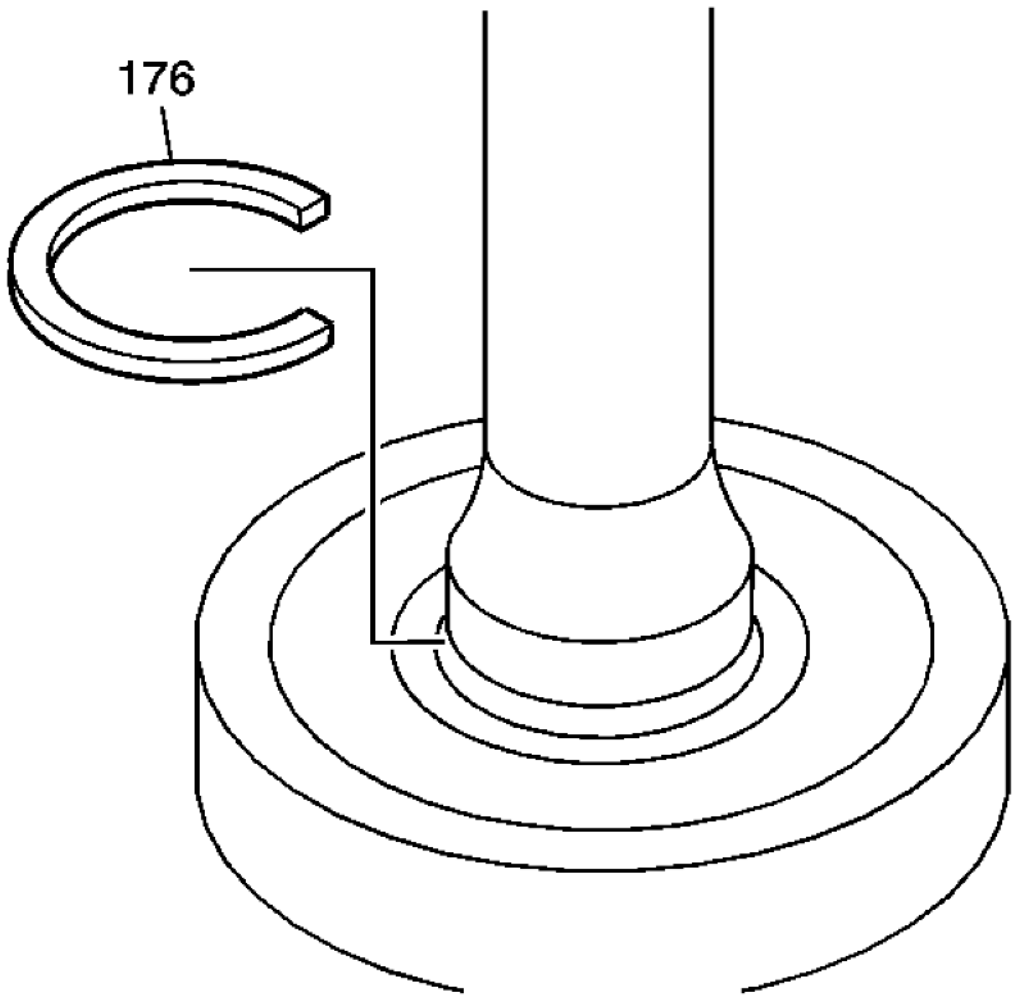

Fig. 67: View Of Snap Ring
Courtesy of GENERAL MOTORS CORP.

14. Remove the snap ring (176) and discard.

cardiagn.com

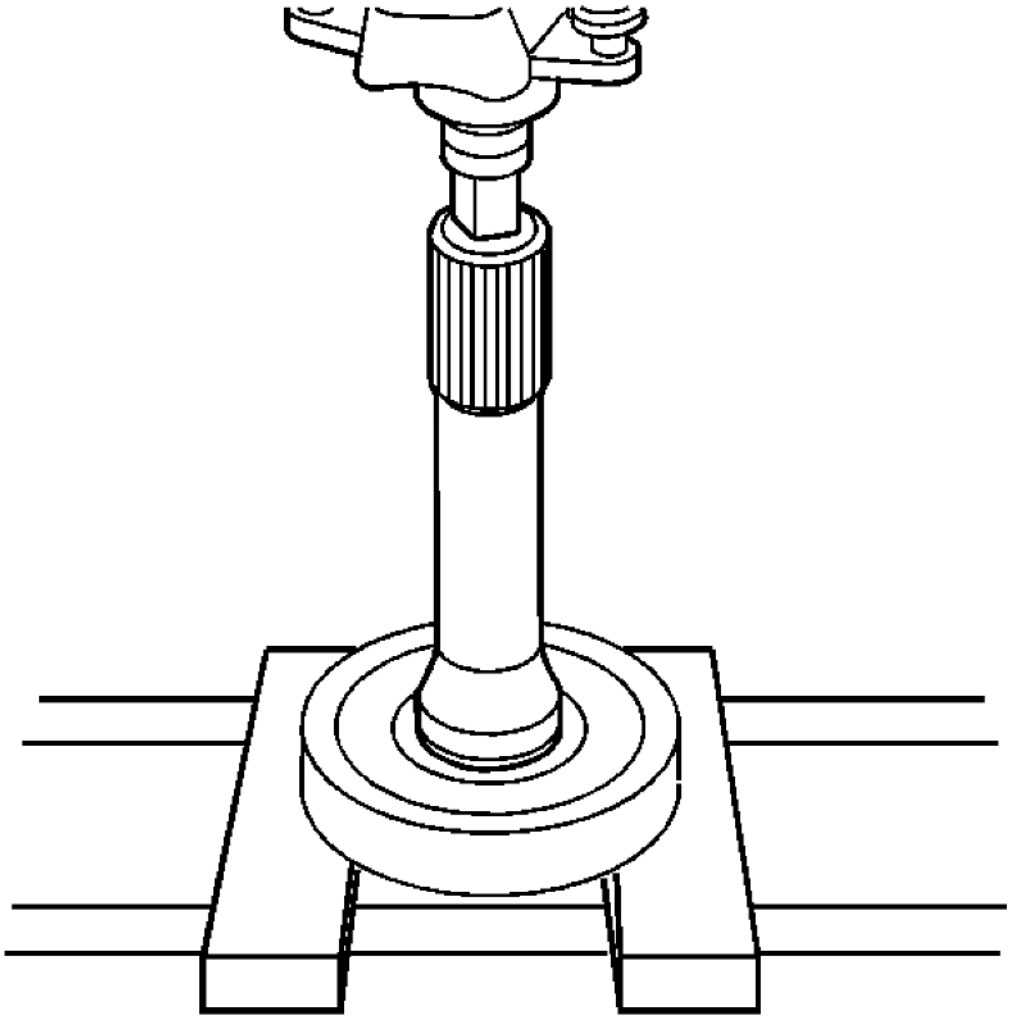

Fig. 68: Removing Counter Gear Front Bearing
Courtesy of GENERAL MOTORS CORP.

15. Using a hydraulic press, remove the counter gear front bearing from the input shaft.

COUNTER GEAR SHAFT DISASSEMBLE

Special Tools

J 44749: Split Plate Bearing Gear Puller

For equivalent regional tools, refer to **Special Tools**.

cardiagn.com

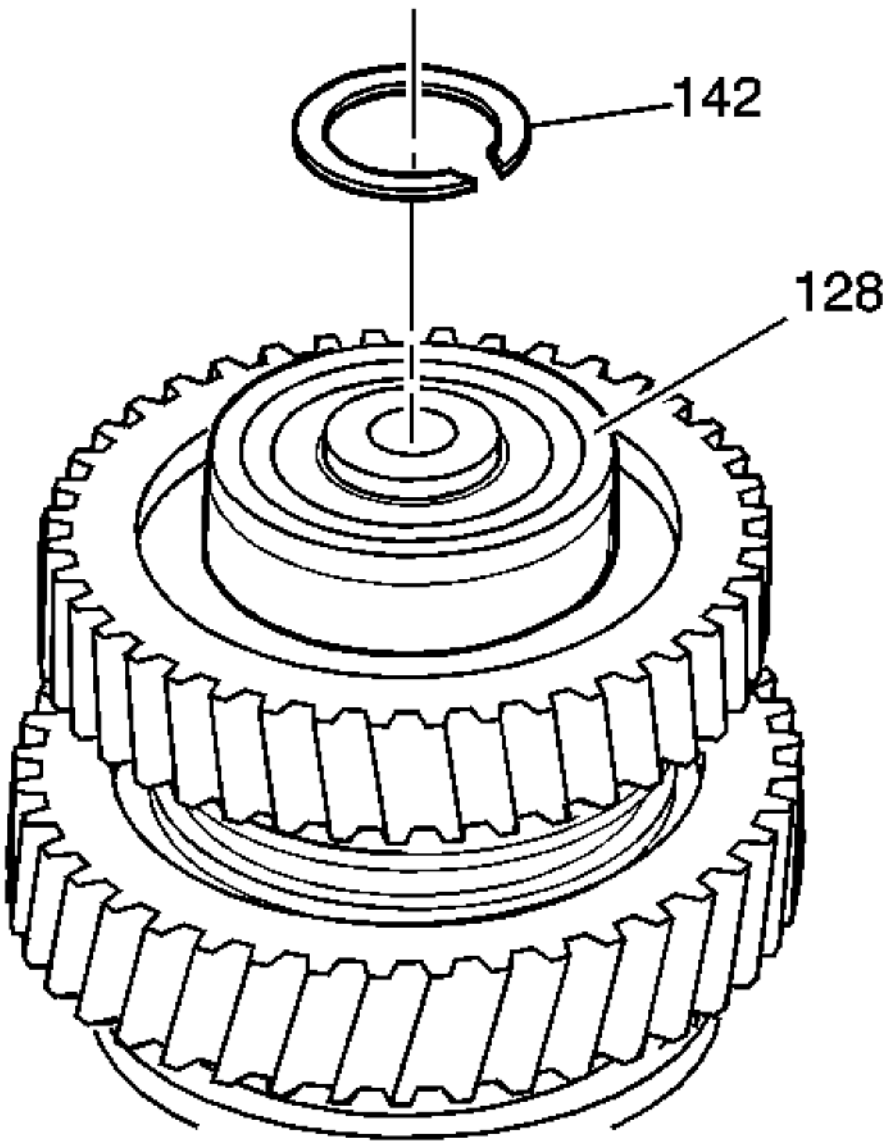

Fig. 69: View Of Counter Gear Front Bearing & Snap Ring
Courtesy of GENERAL MOTORS CORP.

NOTE: **Inspect the countershaft gear subassembly before disassemble. Refer to Gears and Shafts Cleaning and Inspection.**

1. Remove the snap ring (142) from the countershaft above the counter gear front bearing (128). Discard the

cardiagn.com

snap ring (142).

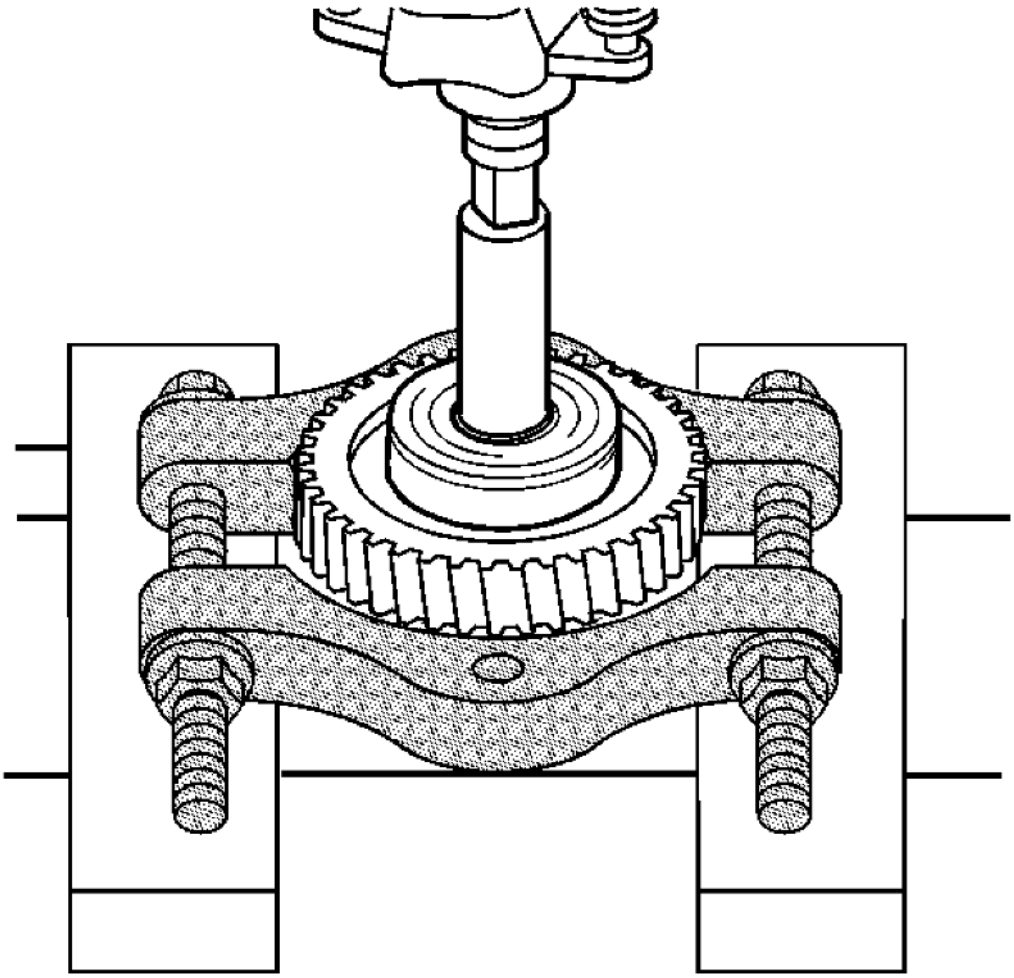

Fig. 70: Removing Counter Gear Front Bearing & Reverse Synchronizer Assembly
Courtesy of GENERAL MOTORS CORP.

NOTE: Place the edge of gear on press plate.

2. Using a hydraulic press and **J 44749:** gear puller, remove the counter gear front bearing and reverse synchronizer assembly as a unit.

cardiagn.com

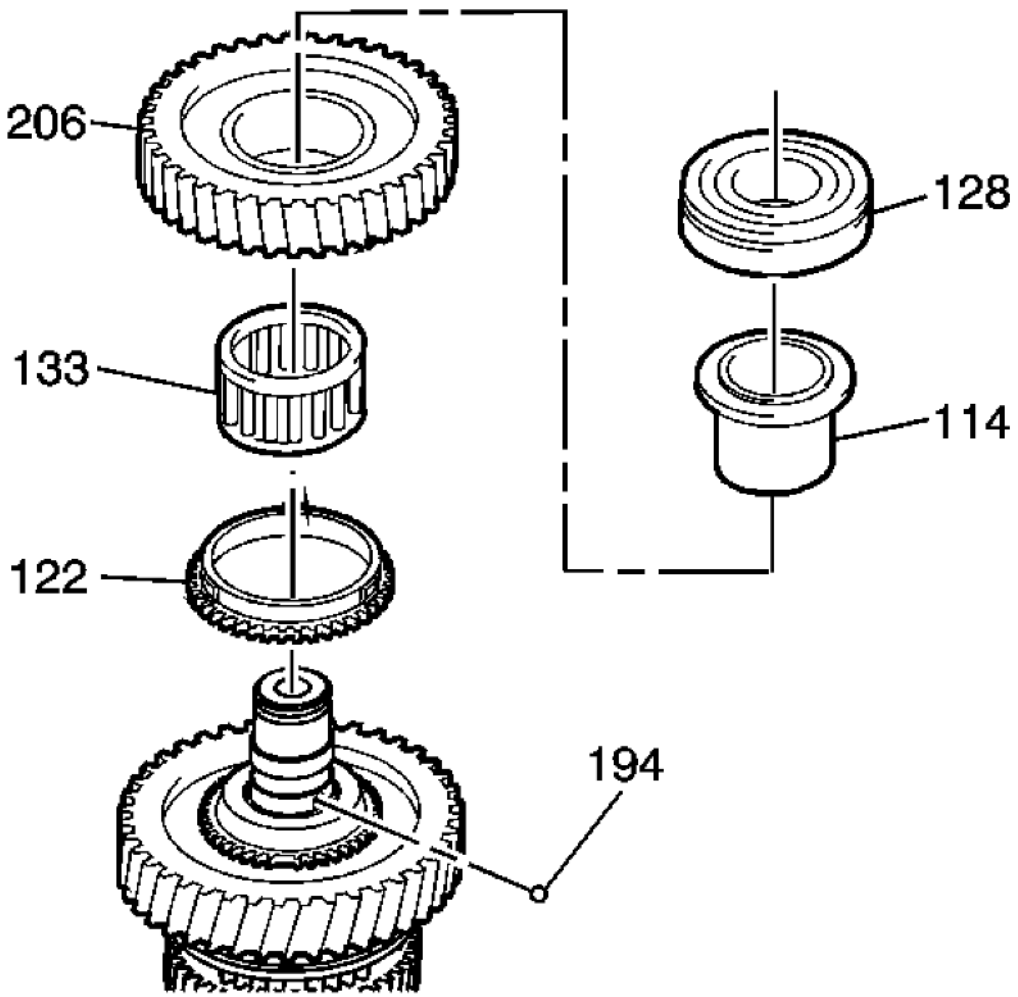

Fig. 71: Identifying Reverse & Counter Gear Components
Courtesy of GENERAL MOTORS CORP.

3. Remove the following components as an assembly:
    - The counter gear front bearing (128)
    - The reverse gear bushing (114)
    - The reverse gear (206)
    - The reverse gear bearing (133)
    - The reverse gear blocking ring (122)
4. Using a magnet, remove the locking ball (194) from the countershaft.

cardiagn.com

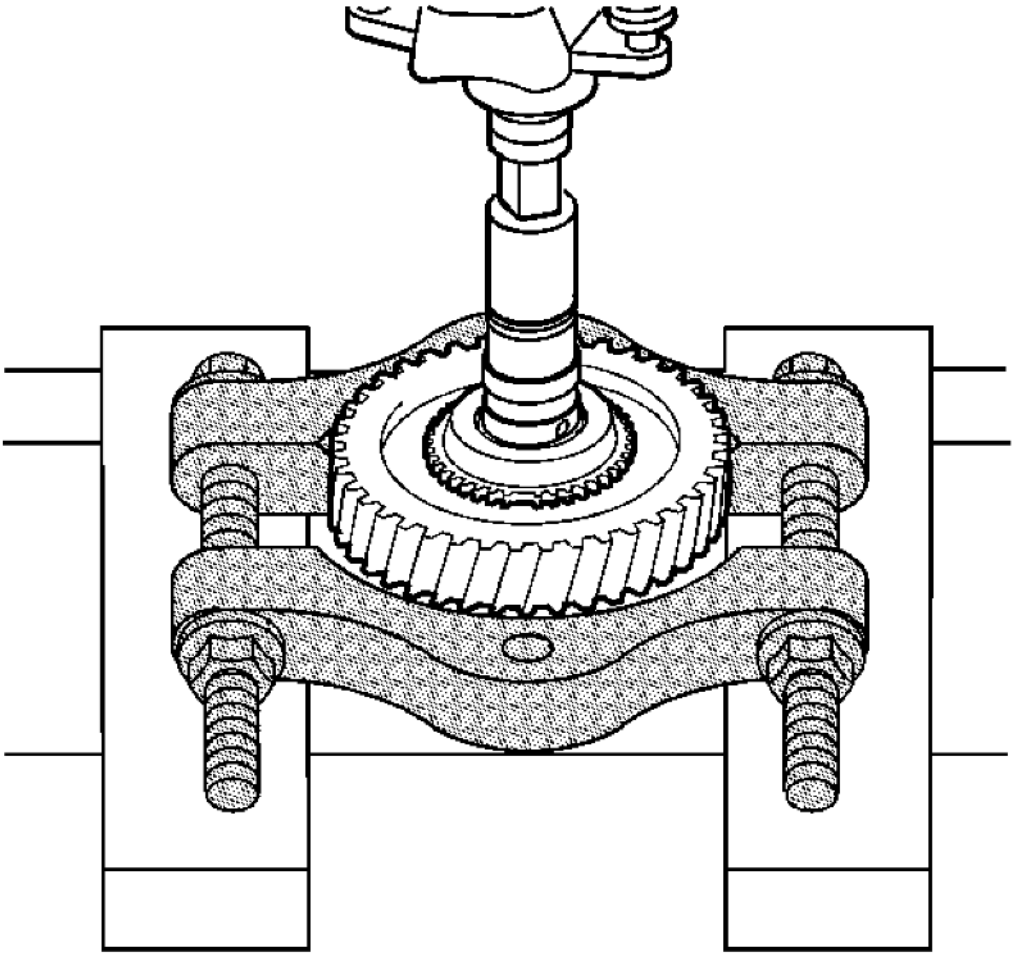

Fig. 72: Removing Reverse Gear Spline & 1st Gear
Courtesy of GENERAL MOTORS CORP.

5. Using a hydraulic press and **J 44749:** gear puller, remove the reverse gear spline and 1st gear as a unit.

cardiagn.com

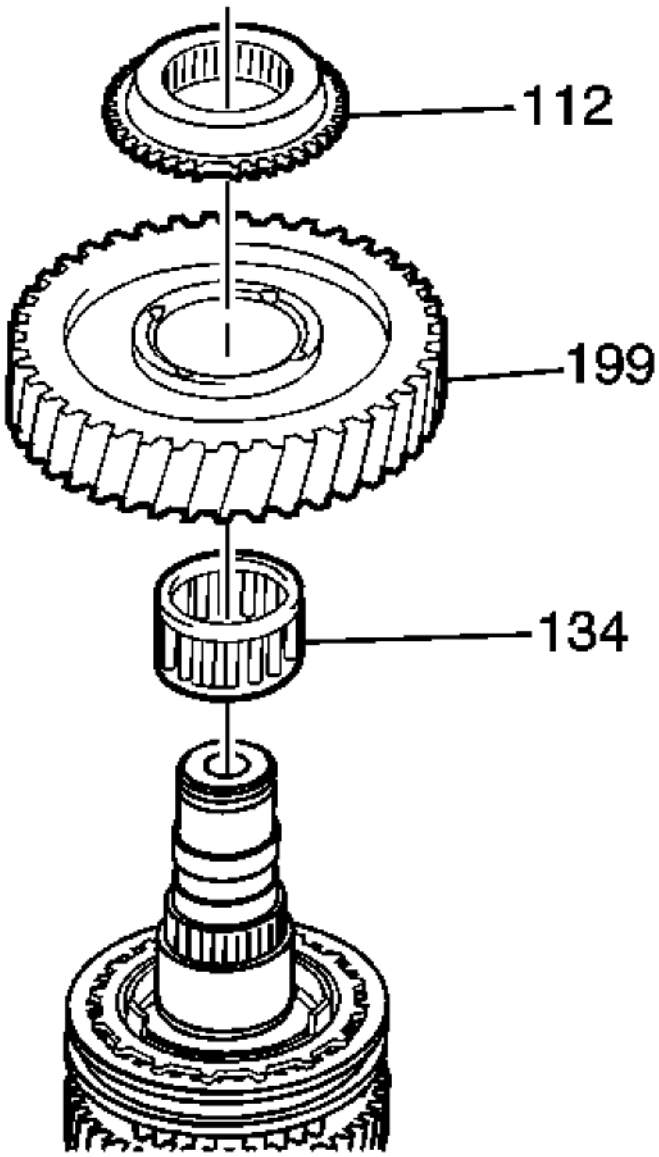

Fig. 73: View Of Reverse Gear Spline, 1st Gear & Bearing
Courtesy of GENERAL MOTORS CORP.

6. Remove the reverse gear spline (112).
7. Remove the 1st gear (199).
8. Remove the 1st gear bearing (134).

cardiagn.com

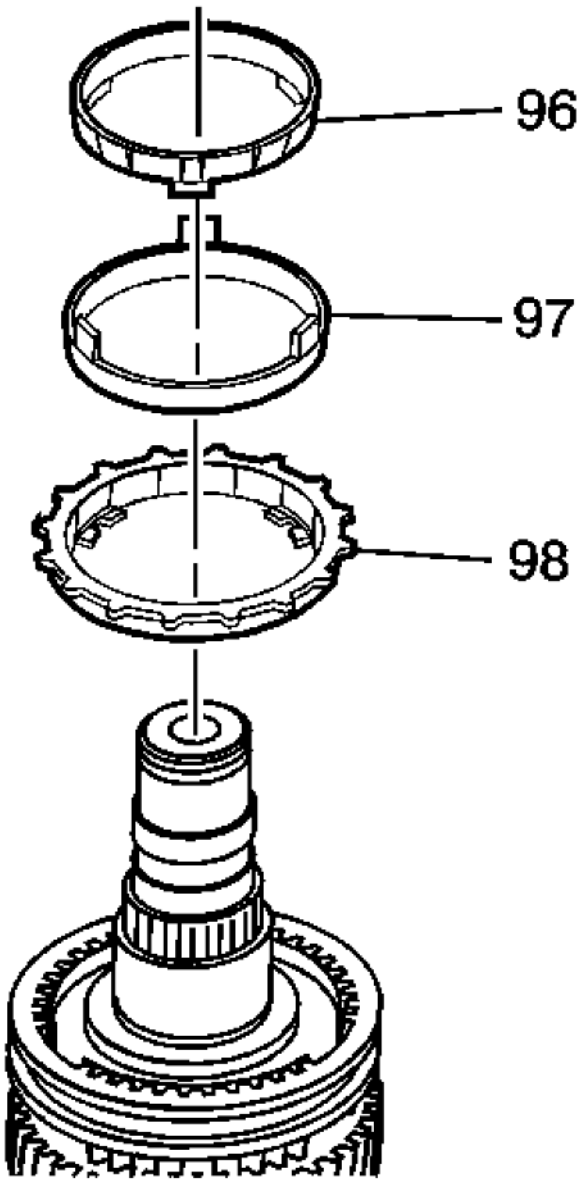

Fig. 74: View Of 1st Gear Synchronizer Cones & 1st Gear Outer/Inner Blocking Ring
Courtesy of GENERAL MOTORS CORP.

9. Remove the 1st gear synchronizer inner cone (96).
10. Remove the 1st gear synchronizer outer cone (97).
11. Remove the 1st gear outer blocking ring (98).

cardiagn.com

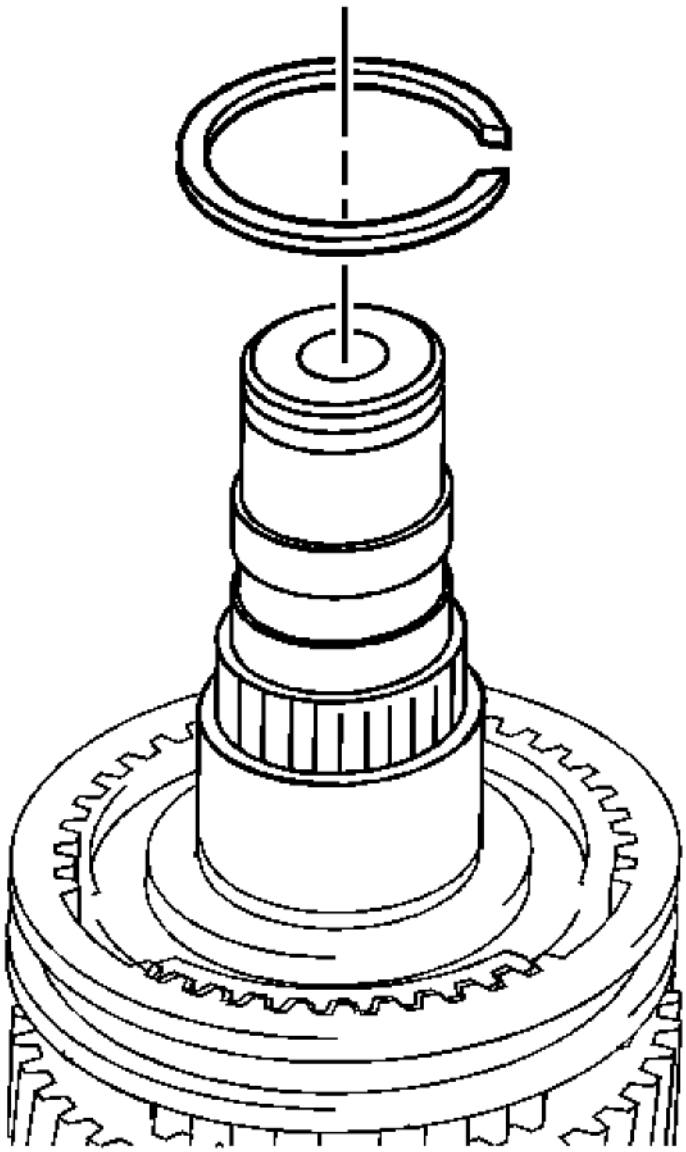

Fig. 75: View Of Snap Ring
Courtesy of GENERAL MOTORS CORP.

12. Remove the snap ring and discard.

cardiagn.com

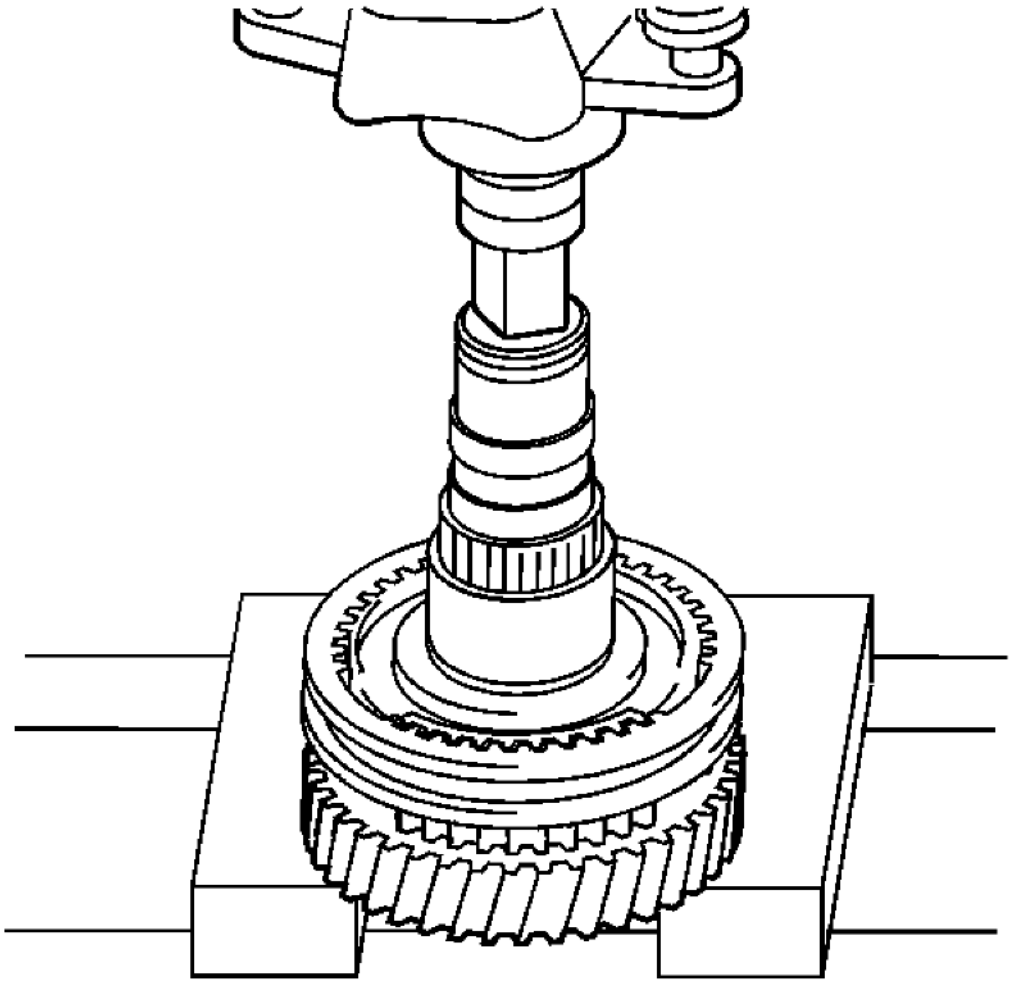

Fig. 76: Removing 2nd Gear & 1-2 Synchronizer Assembly
Courtesy of GENERAL MOTORS CORP.

NOTE: Place the edge of gear on press plate.

13. Using a hydraulic press, remove the 2nd gear and the 1-2 synchronizer assembly as a unit.

cardiagn.com

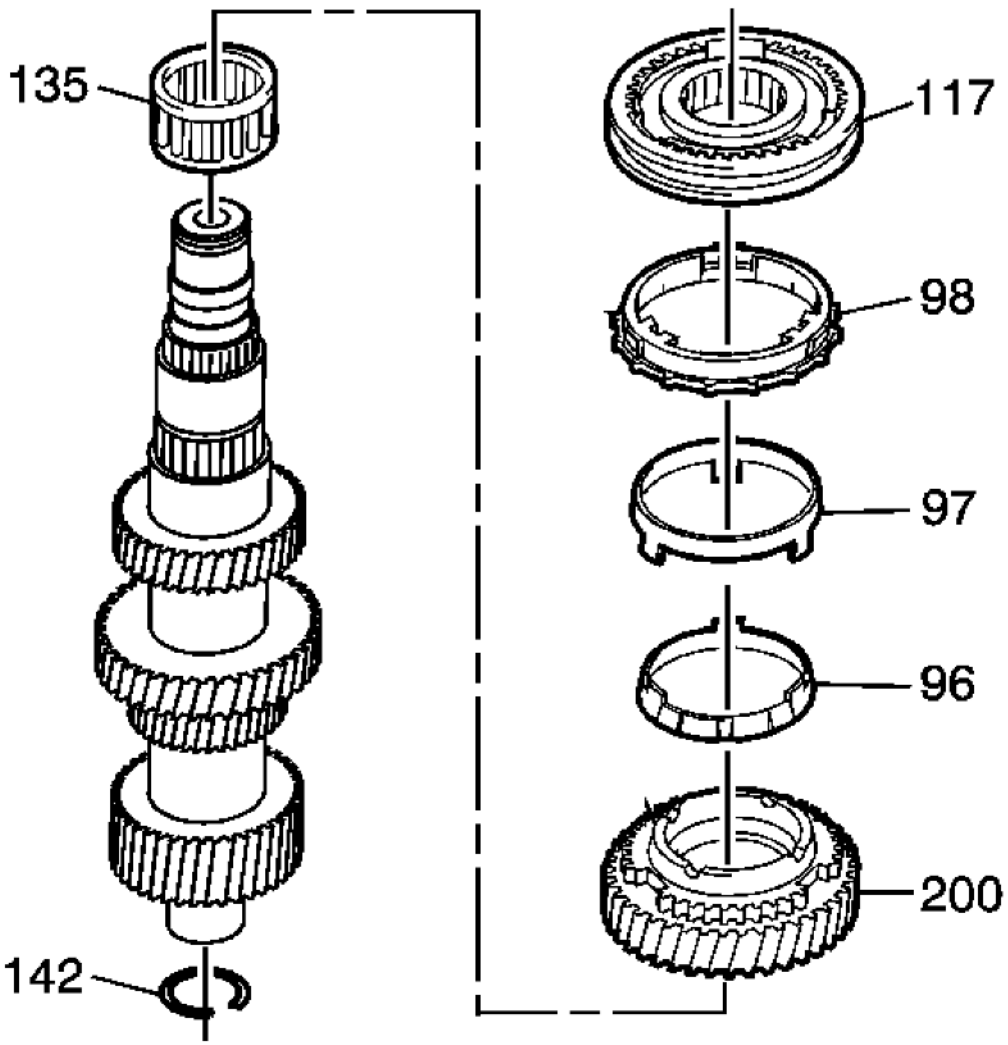

Fig. 77: View of 1st/2nd Gear Assembly
Courtesy of GENERAL MOTORS CORP.

14. Remove the following components as an assembly:
    - The 1st/2nd gear synchronizer sleeve (117)
    - The 2nd gear outer blocking ring (98)
    - The 2nd gear synchronizer outer cone (97)
    - The 2nd gear synchronizer inner cone (96)
    - The 2nd gear (200)
    - The 2nd gear bearing (135)

cardiagn.com

- The snap ring (142)

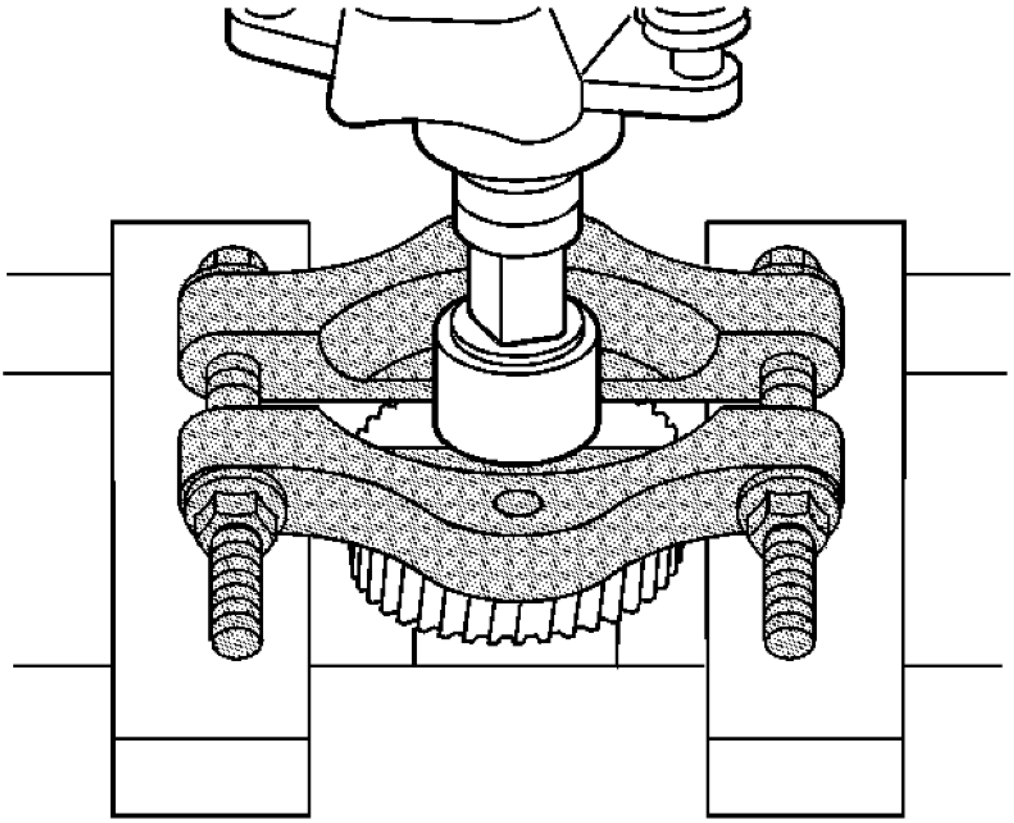

Fig. 78: Removing Cylindrical Roller Bearing Inner Race
Courtesy of GENERAL MOTORS CORP.

15. Using **J 44749:** gear puller and a hydraulic press, remove the cylindrical roller bearing inner race.

TRANSMISSION CASE DISASSEMBLE

Special Tools

- **DT-47722:** Shift Rail Bushing Remover and Installer
- **J 2619-01:** Slide Hammer
- **J 26941:** Bushing and Bearing Remover 3-4 in

For equivalent regional tools, refer to **Special Tools**.

cardiagn.com

Rear Case Disassemble

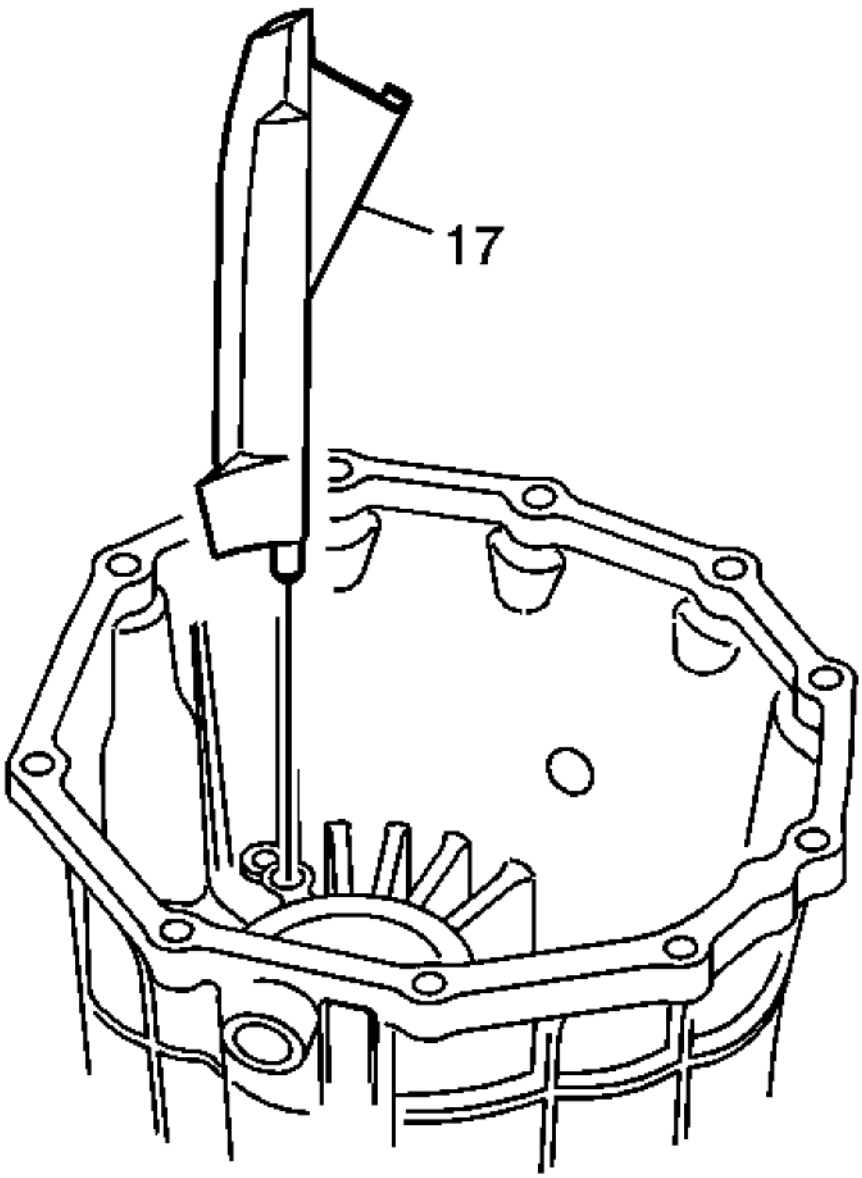

Fig. 79: View Of Oil Trough
Courtesy of GENERAL MOTORS CORP.

1. Remove the oil trough (17).

cardiagn.com

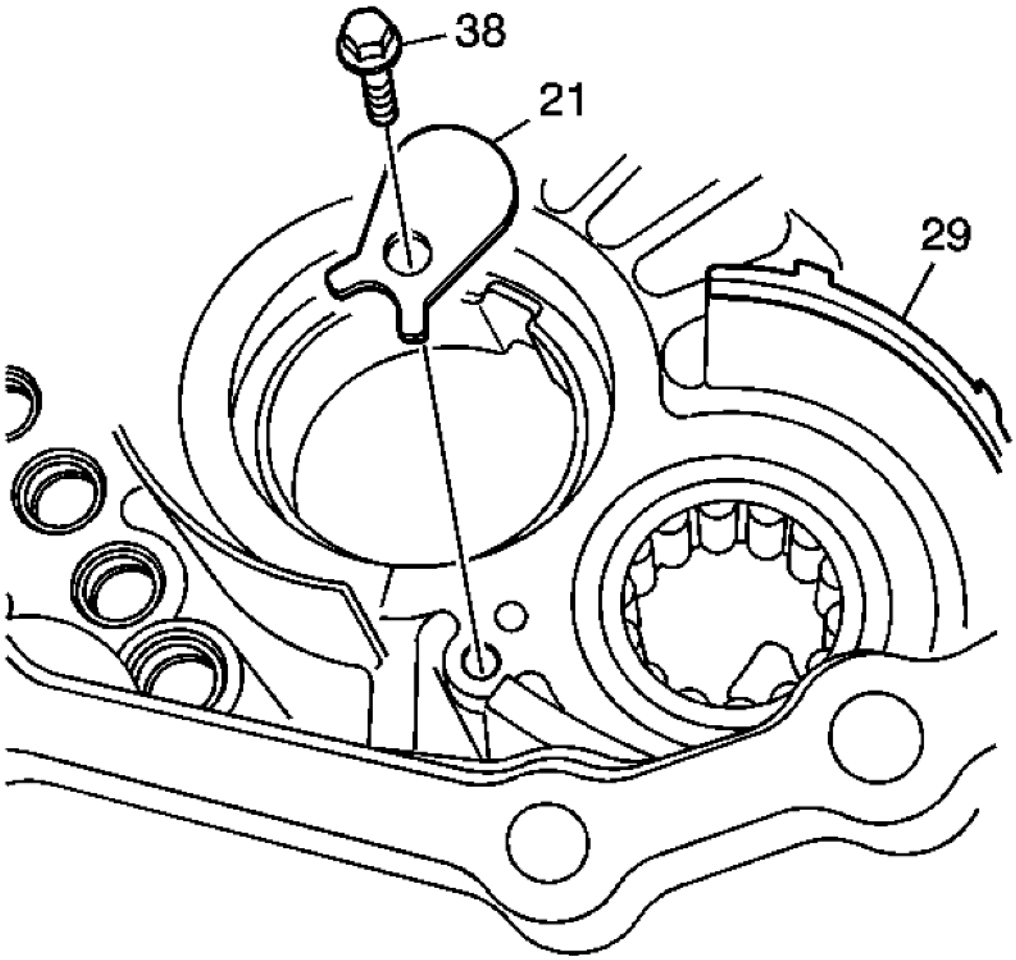

Fig. 80: View Of Bearing Retainer, Bolt & Gasket
Courtesy of GENERAL MOTORS CORP.

2. Remove the bolt (38) and retainer (21).
3. Remove the gasket (29).

cardiagn.com

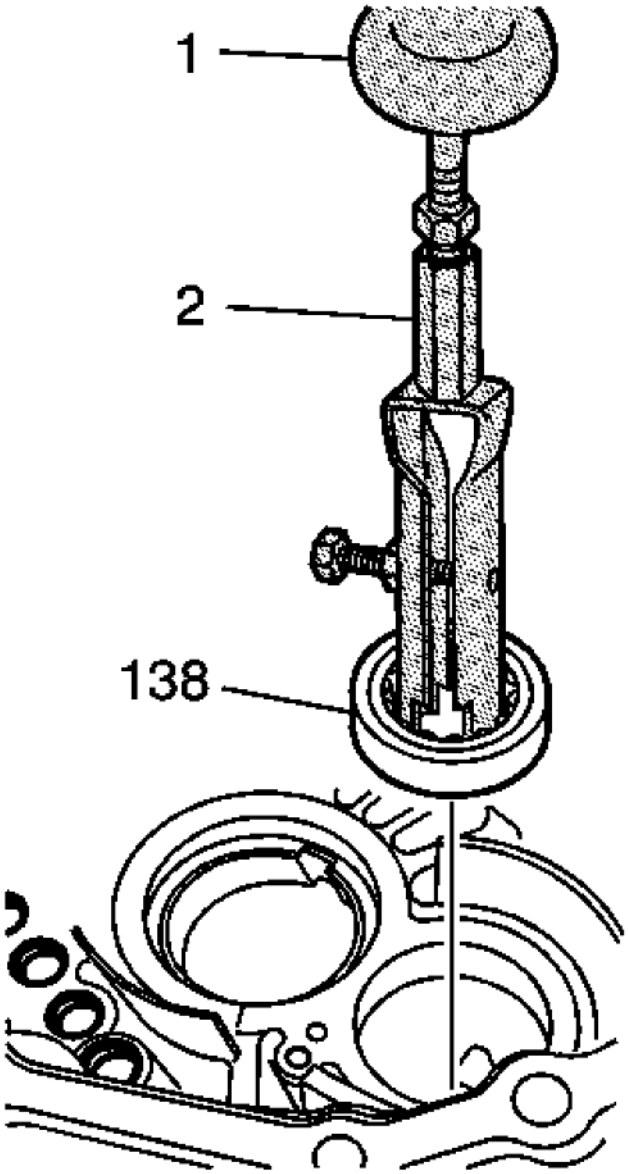

Fig. 81: Removing Counter Gear Roller Bearing
Courtesy of GENERAL MOTORS CORP.

NOTE: Case must be held down firmly to remove the bearing.

4. Using **J 26941:** remover (2) and **J 2619-01:** slide hammer (1), remove and discard the counter gear roller

cardiagn.com

bearing (138).

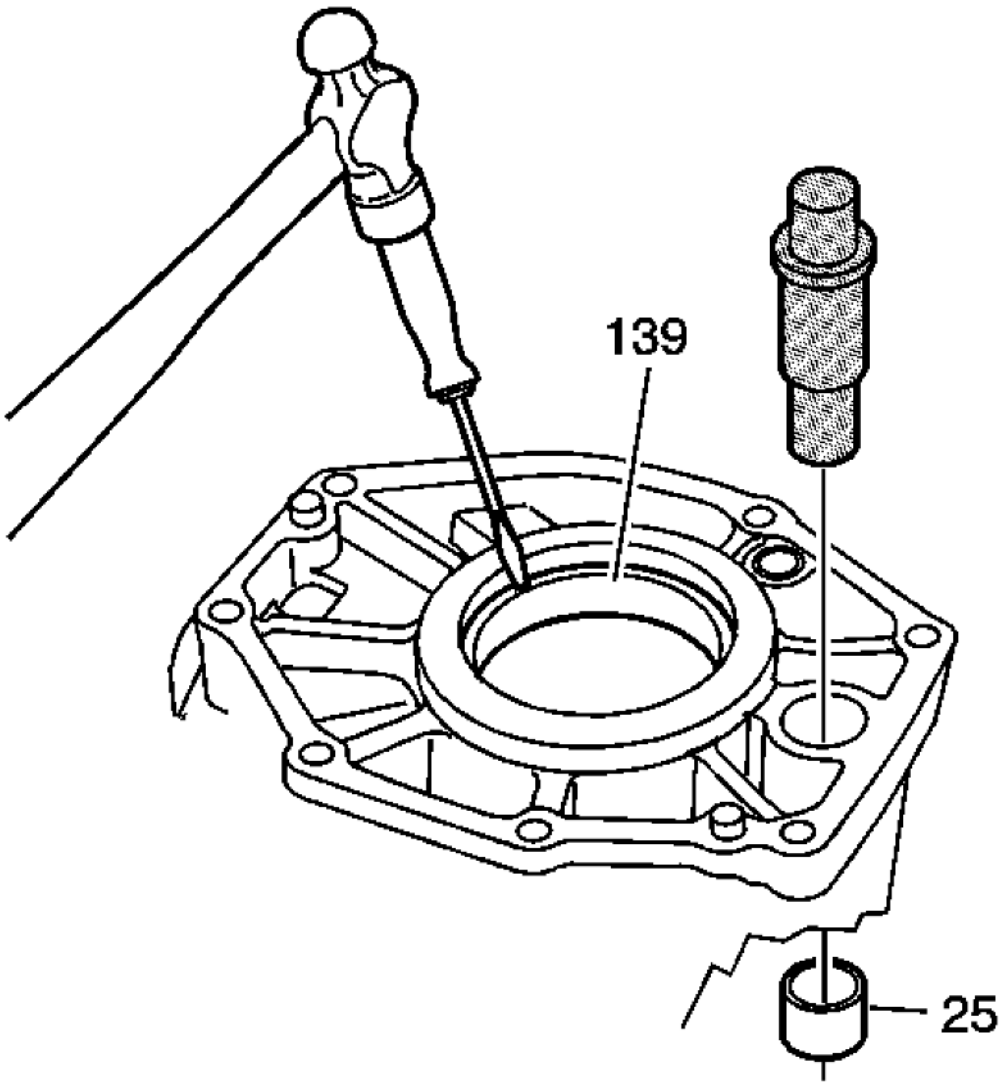

Fig. 82: Removing Shift Shaft Bearing & Output Shaft Bearing Race From Rear Case
Courtesy of GENERAL MOTORS CORP.

5. Using **DT-47722:** bushing remover, remove the shift shaft bearing (25) from the case.
6. Remove the output shaft bearing race (139).

Middle Case Disassemble

cardiagn.com

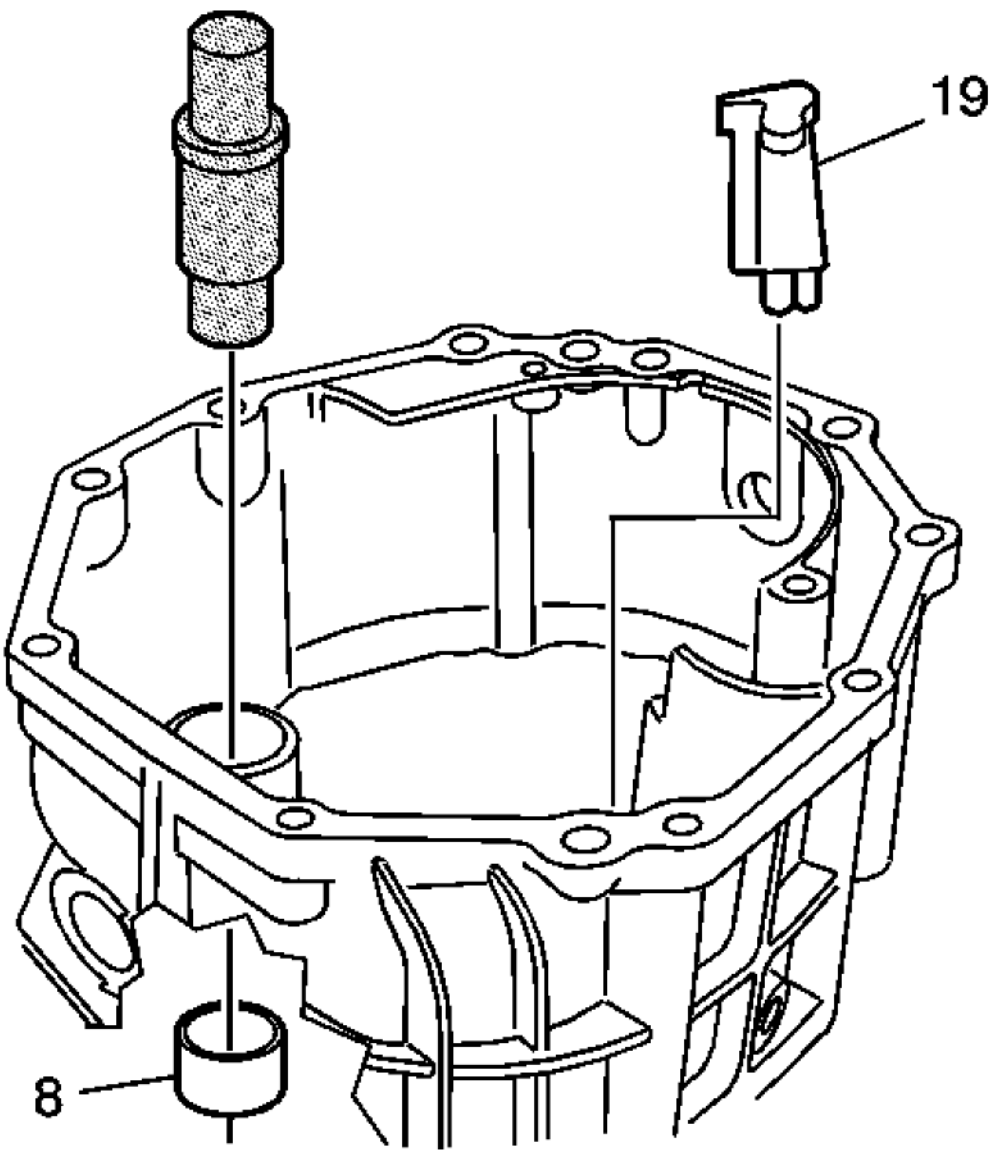

Fig. 83: Middle Case Oil Trough & Shift Shaft Bearing
Courtesy of GENERAL MOTORS CORP.

1. Using **DT-47722:** bushing remover, remove the shift shaft bearing (8) from the middle case.
2. Remove the oil trough (19) from the middle case.

Clutch Housing Disassemble

cardiagn.com

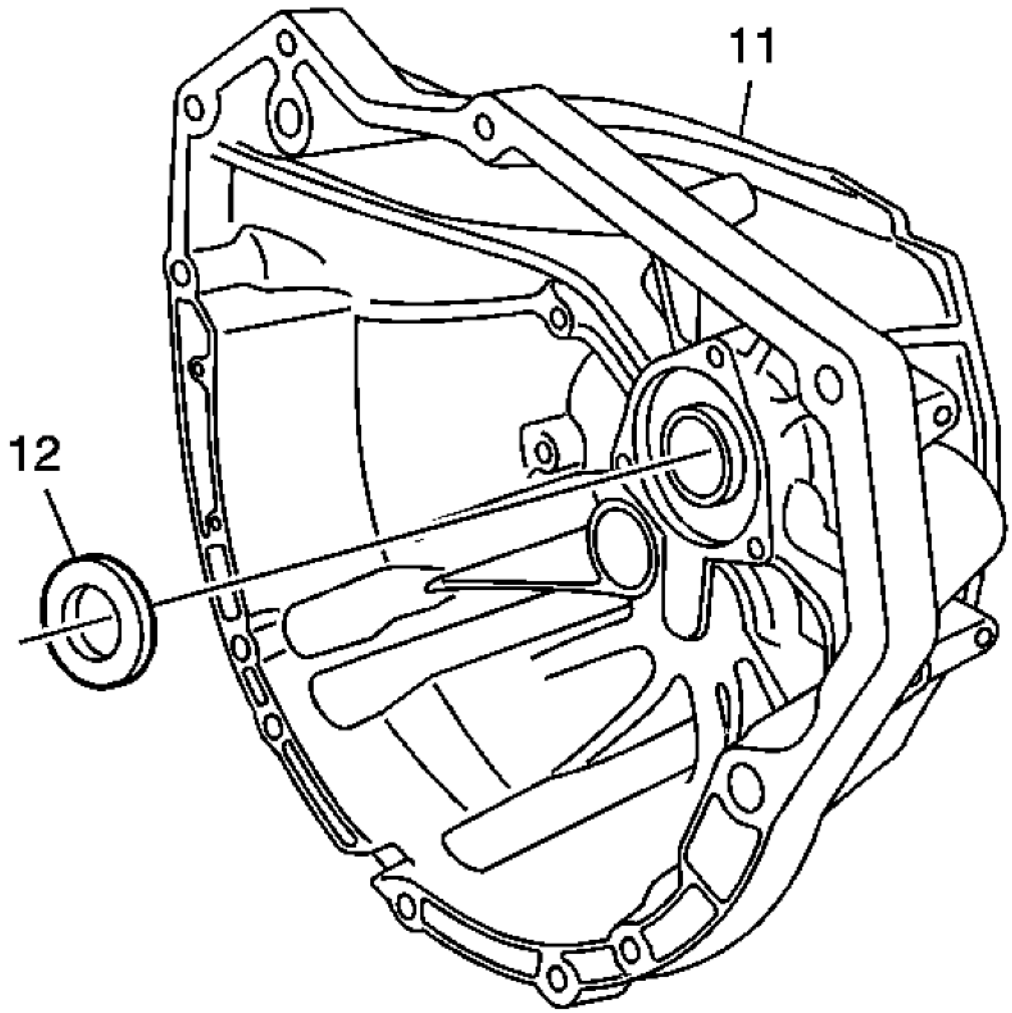

Fig. 84: Front Case Input Shaft Seal
Courtesy of GENERAL MOTORS CORP.

1. Remove and discard the input shaft seal (12) from the front case (11).

cardiagn.com

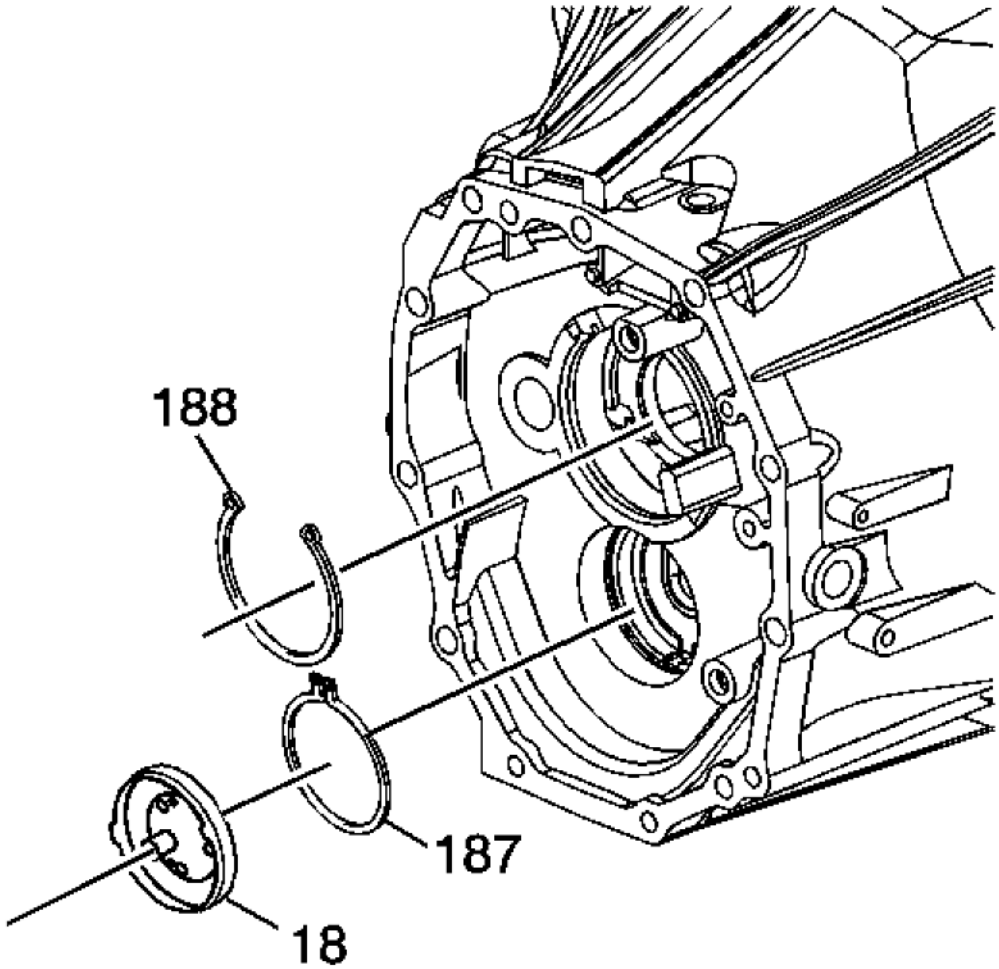

Fig. 85: Front Input Shaft Oil Slinger & Retainers
Courtesy of GENERAL MOTORS CORP.

2. Pry the front input shaft oil slinger (18) from the transmission front case using a suitable tool.
3. Remove the front input shaft oil slinger (18).
4. Remove the input shaft bearing front retainer (188).
5. Remove the counter shaft bearing front retainer (187).

EXTENSION DISASSEMBLE

Special Tools

cardiagn.com

- **DT-47722:** Shift Shaft Seal Installer
- **J 2619-01:** Slide Hammer
- **J 26941:** Bushing and Bearing Remover 3-4 in

For equivalent regional tools, refer to **Special Tools**.

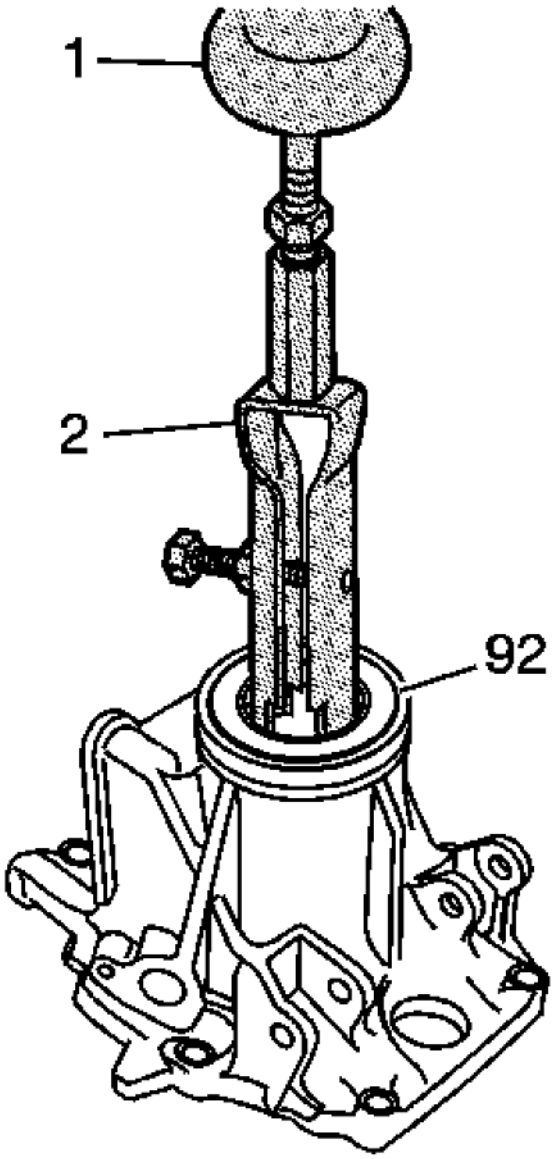

cardiagn.com

Fig. 86: Removing Rear Output Shaft Seal
Courtesy of GENERAL MOTORS CORP.

NOTE: The extension must be held down firmly to remove the output shaft seal.

1. Using **J 2619-01:** slide hammer (1) and **J 26941:** remover (2), remove the rear output shaft seal (92).

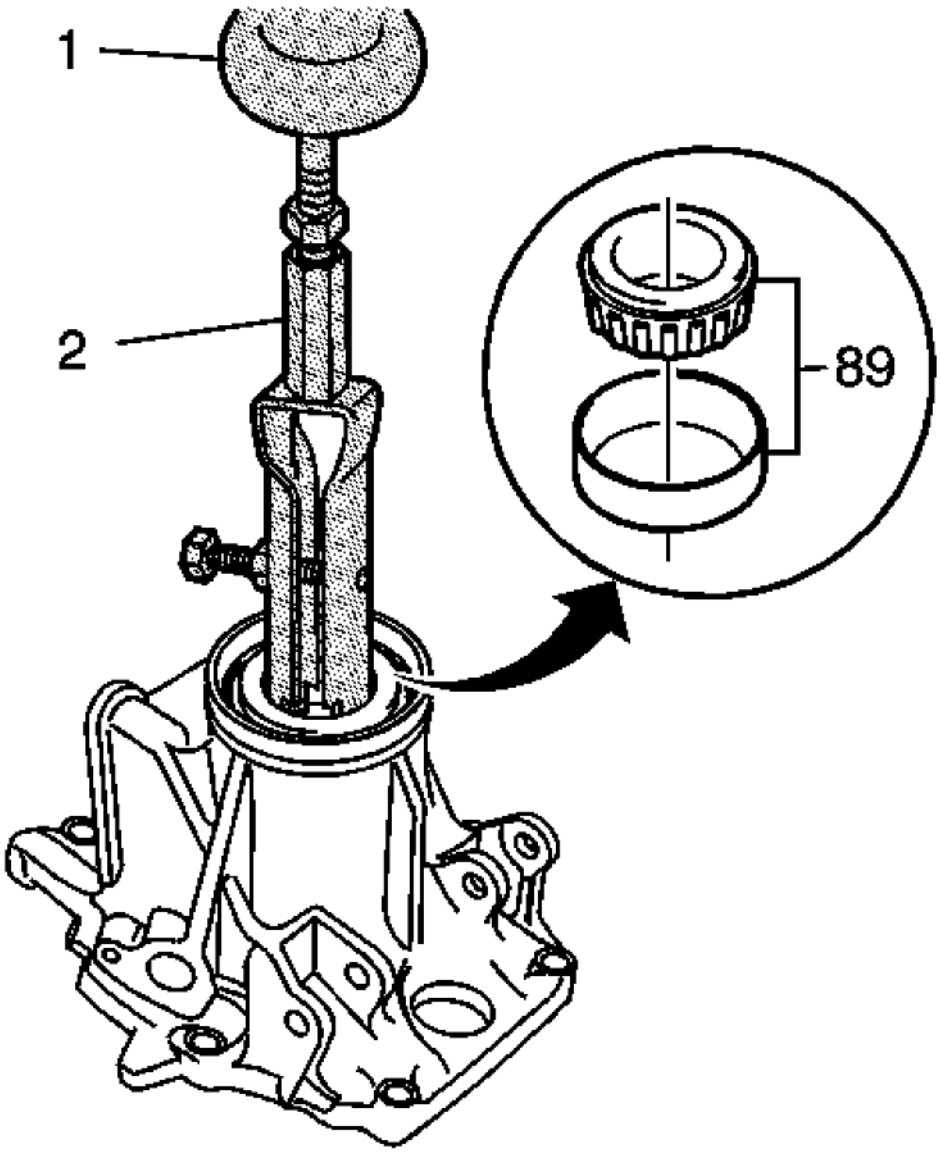

cardiagn.com

Fig. 87: Removing Rear Output Shaft Bearing Assembly
Courtesy of GENERAL MOTORS CORP.

NOTE: The extension must be held down firmly to remove the output shaft bearing.

2. Using **J 2619-01:** slide hammer (1) and **J 26941:** remover (2), remove the rear output shaft bearing assembly (89).

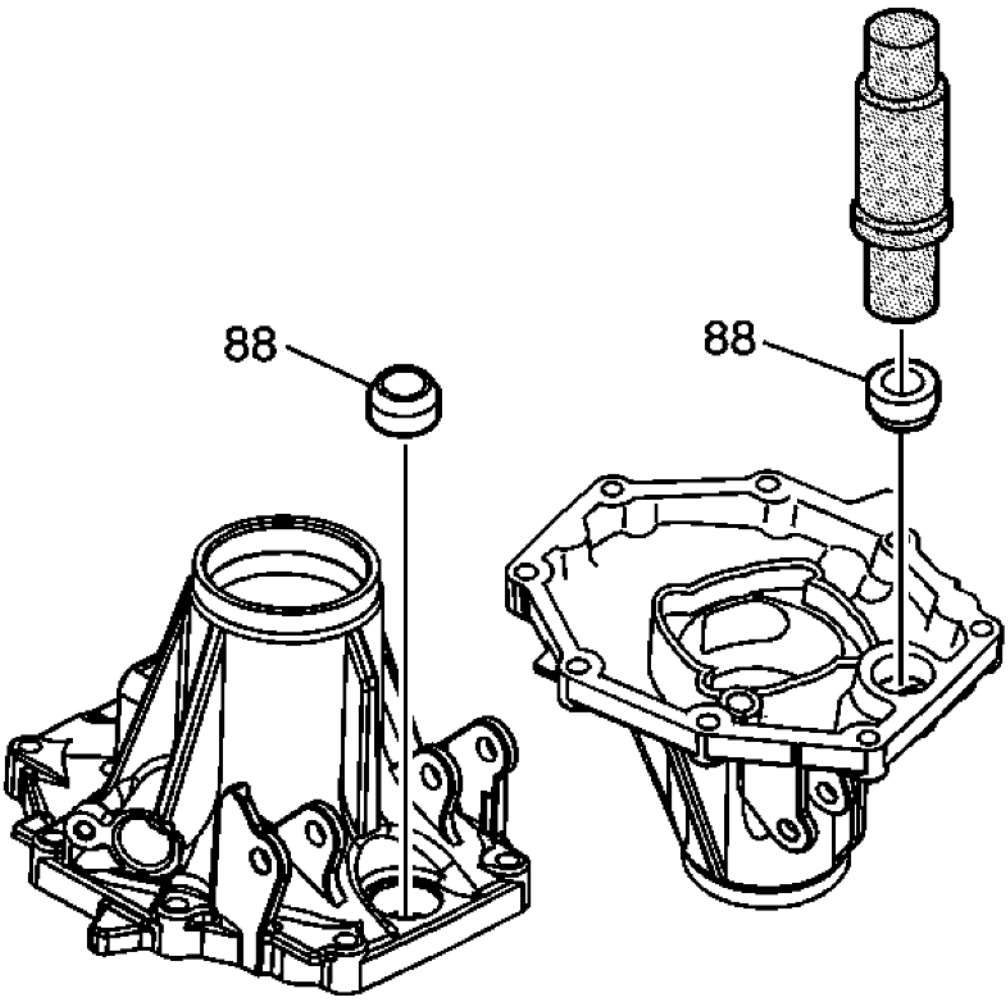

Fig. 88: Identifying Shift Shaft Seal
Courtesy of GENERAL MOTORS CORP.

cardiagn.com

3. Using tool **DT-47722:** seal installer, remove the shift shaft seal (88).

SYNCHRONIZERS DISASSEMBLE

1st/2nd, 3rd/4th Gear Synchronizer

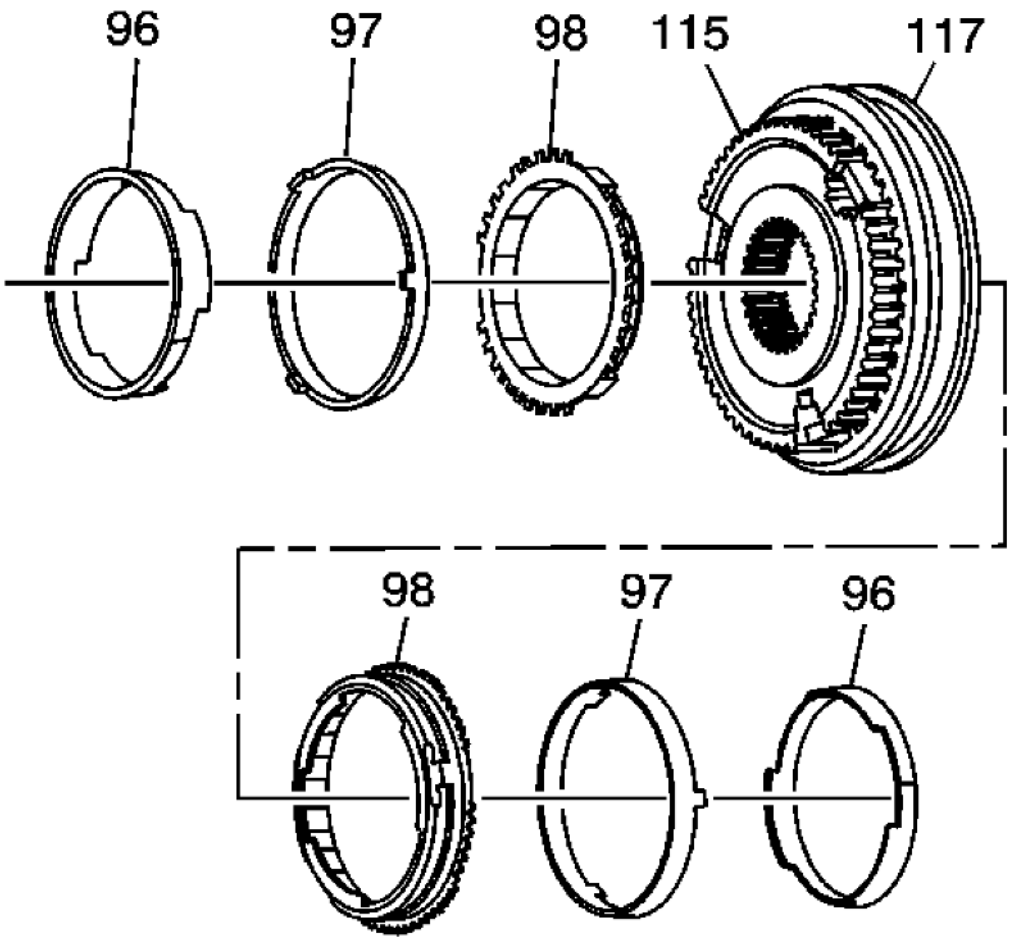

Fig. 89: View Of 1st Gear Synchronizer Components
Courtesy of GENERAL MOTORS CORP.

IMPORTANT: When you service the synchronizers, retain them in the same order that they are removed. Keep the synchronizer components together and mark them to identify correct location.

1. Remove the following components from the 1st/2nd gear synchronizer hub (115/117):

cardiagn.com

- the 1st gear synchronizer inner cone (96)
- the 1st gear synchronizer outer cone (97)
- the 1st gear synchronizer outer blocking ring (98)
- the 1st gear synchronizer outer blocking ring (98)
- the 1st gear synchronizer outer cone (97)
- the 1st gear synchronizer inner cone (96)

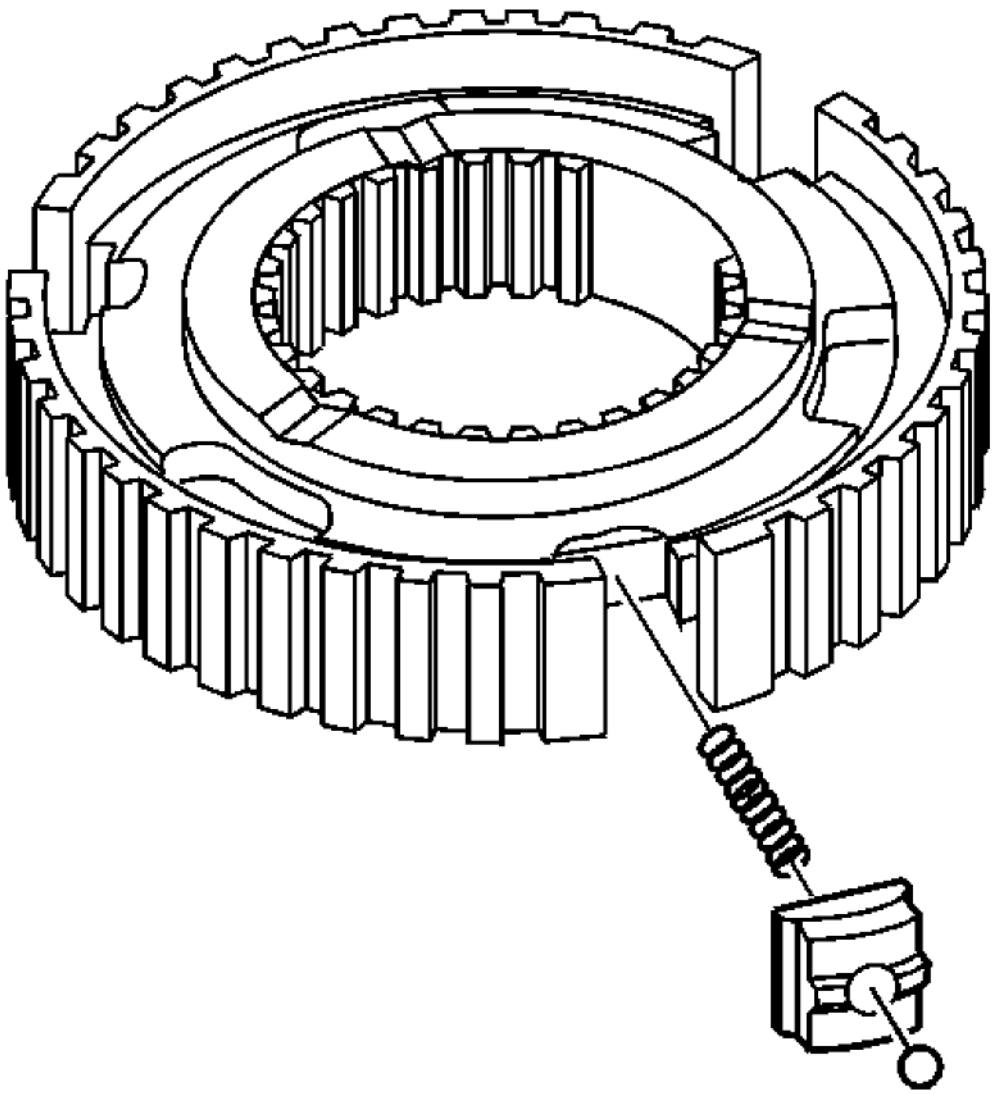

Fig. 90: View Of Synchronizer Insert & Spring

cardiagn.com

Courtesy of GENERAL MOTORS CORP.

2. Remove the synchronizer insert and spring from the synchronizer hub. Press the spring and slide the insert out.

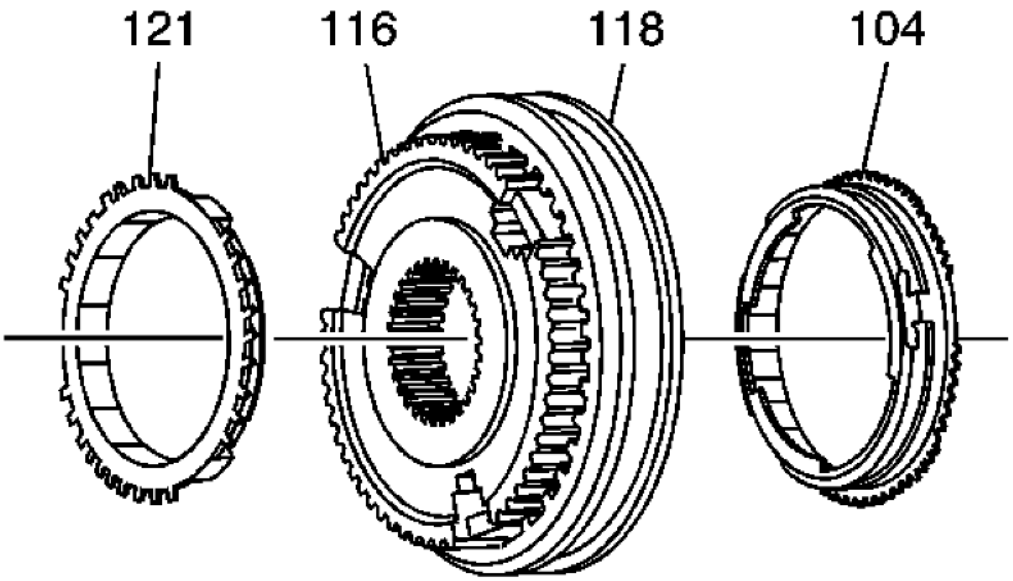

Fig. 91: View Of 3rd/4th Gear Synchronizer Hub & Blocking Rings
Courtesy of GENERAL MOTORS CORP.

3. Remove the following components from the 3rd/4th gear synchronizer hub (116/118):
   - the 4th gear blocking ring (121)
   - the 3rd gear blocking ring (104)

5th/6th Gear Synchronizer

cardiagn.com

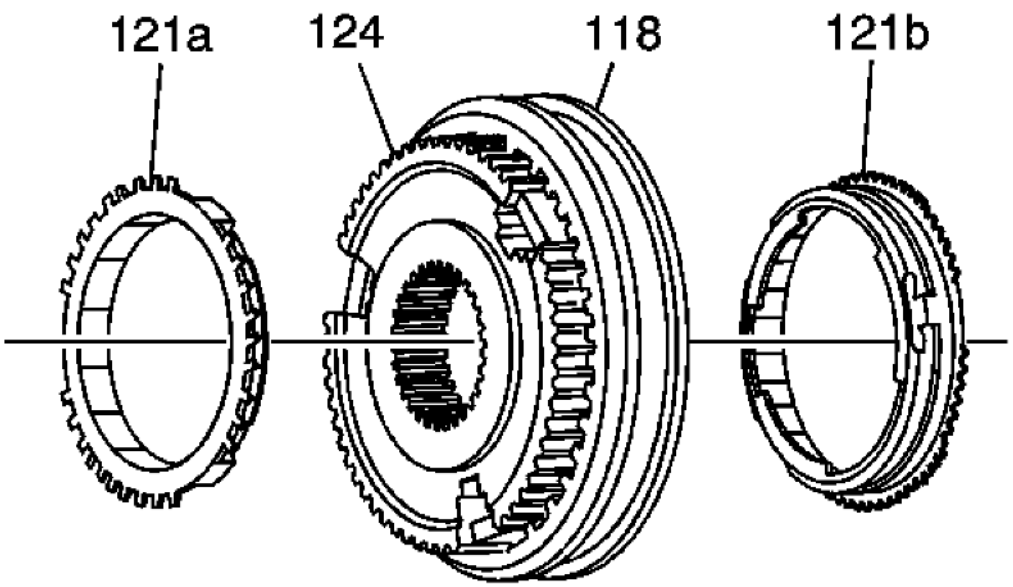

Fig. 92: View Of 5th/6th Synchronizer Hub & Blocking Rings
Courtesy of GENERAL MOTORS CORP.

1. Remove the following components from the 5th/6th synchronizer hub (124/118):
    - The 6th gear blocking ring (121a)
    - The 5th gear blocking ring (121b)

cardiagn.com

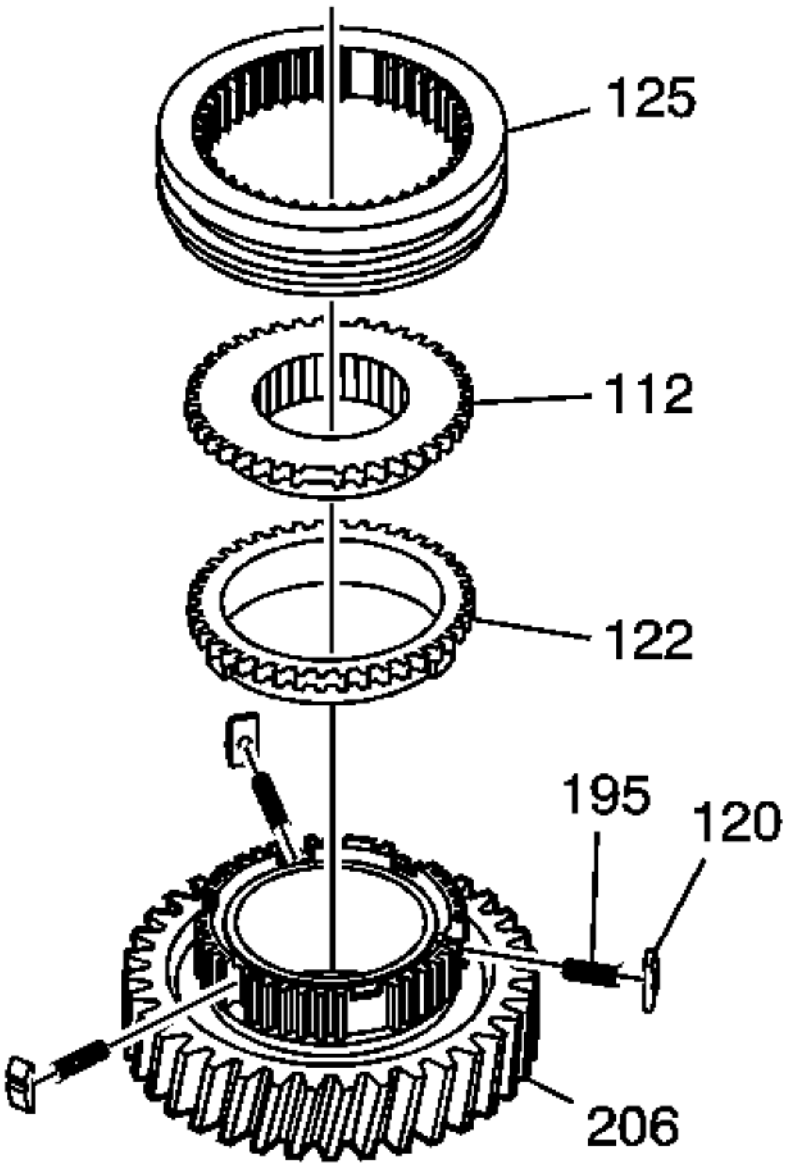

Fig. 93: View Of Reverse Gear Components
Courtesy of GENERAL MOTORS CORP.

2. Remove the following components from the reverse gear (206):
   - the synchronizer sleeve (125)
   - the reverse driven gear (112)

cardiagn.com

- the reverse gear blocking ring (122)
- the reverse gear synchronizer insert (120) and the spring (195)

GEARS AND SHAFTS CLEANING AND INSPECTION

Tools Required

- **J 8001-3** Dial Indicator. See **Special Tools**.
- **J 26900-12** Dial Indicator - 1-10 mm. See **Special Tools**.
- **J 26900-13** Magnetic Indicator Base

Input Shaft

cardiagn.com

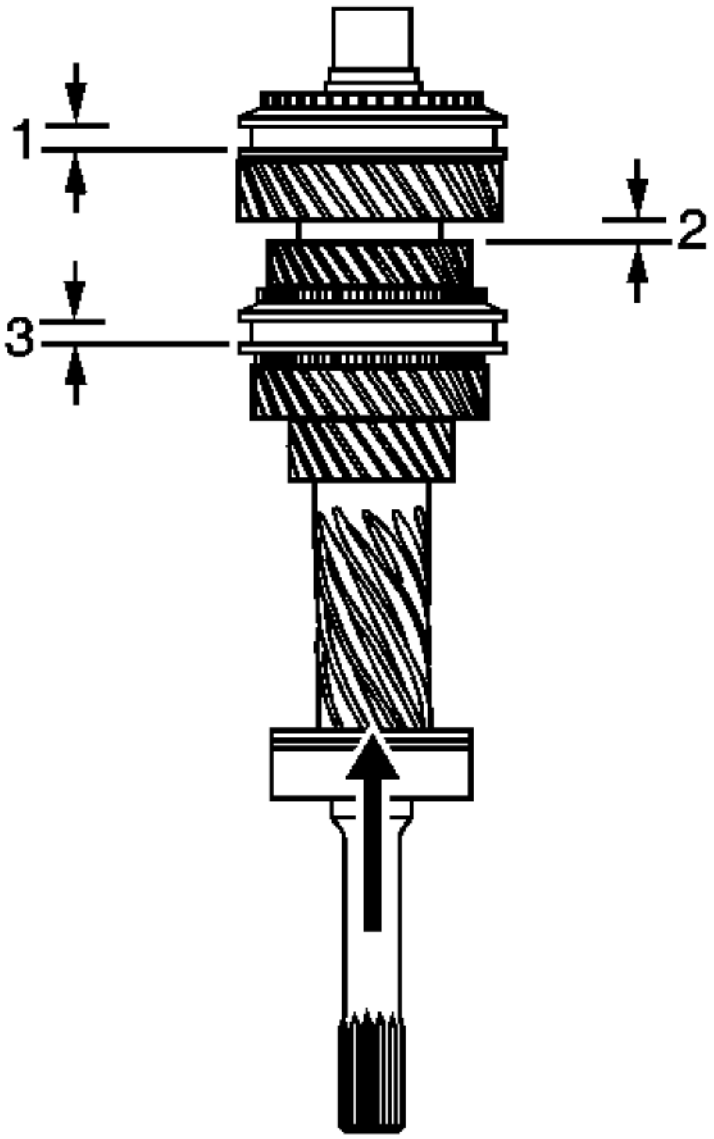

Fig. 94: Inspecting 3rd, 4th & 6th Gear Axle Clearance
Courtesy of GENERAL MOTORS CORP.

1. Inspect 3rd (2), 4th (3), and 6th gear (1) for axial clearance. Lift up on the gear from the settled position and measure travel. Refer to **Transmission Clearance Specifications**, Gear Axial Clearance table.

cardiagn.com

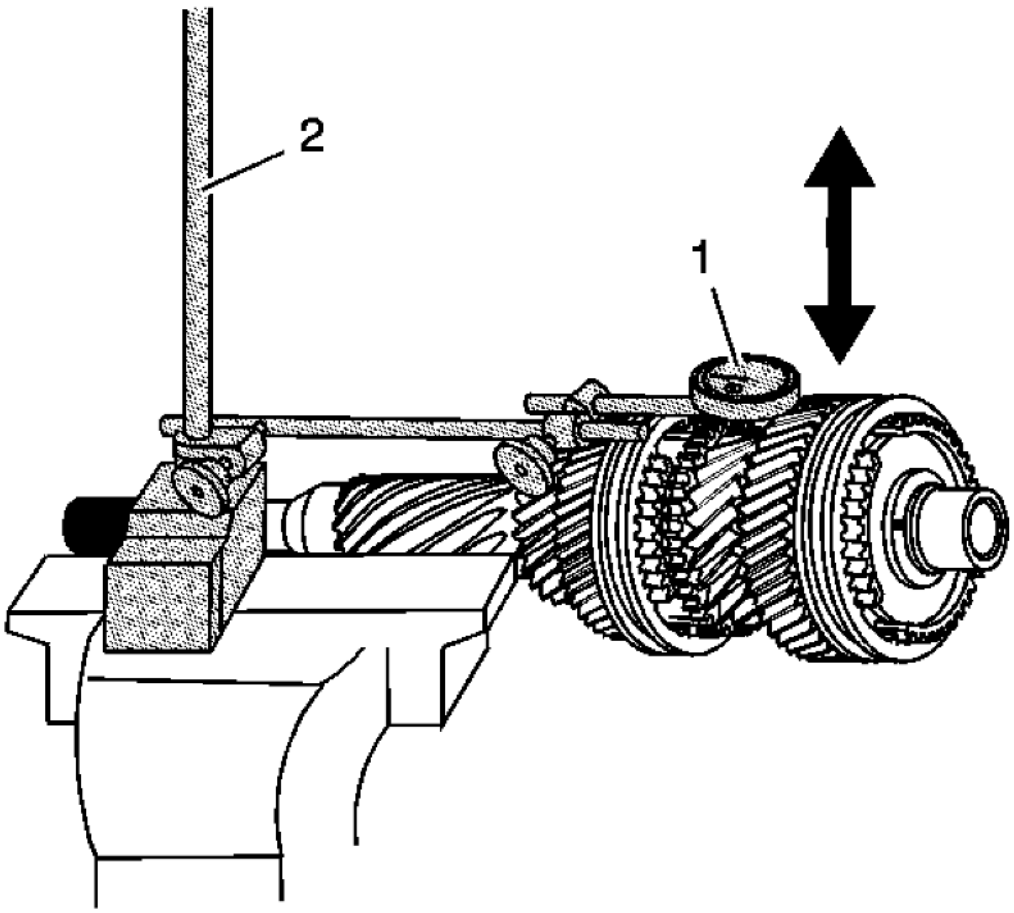

Fig. 95: Measuring Radial Clearance
Courtesy of GENERAL MOTORS CORP.

2. Measure the radial clearance for each of the speed gears.
    1. Place the speed gear, with the needle roller bearing, on the input shaft at the correct journal.
    2. Use **J 8001-3** or **J 26900-12** (1) and **J 26900-13** (2). See **Special Tools**.
    3. Position **J 8001-3** or **J 26900-12** on the gear. See **Special Tools**.
    4. Move the gear up and down.

    Specification:

    - Standard Clearance 1st gear: 0.02-0.073 mm (0.0008-0.0029 in)
    - Standard Clearance 2nd and 3rd gear: 0.015-0.068 mm (0.0006-0.0027 in)
    - Maximum Clearance 1st gear: 0.160 mm (0.0063 in)

cardiagn.com

- Maximum Clearance 2nd and 3rd gear: 0.160 mm (0.0063 in)

3. If the clearance exceeds the maximum, replace either the gear, the needle roller bearing, or the input shaft.

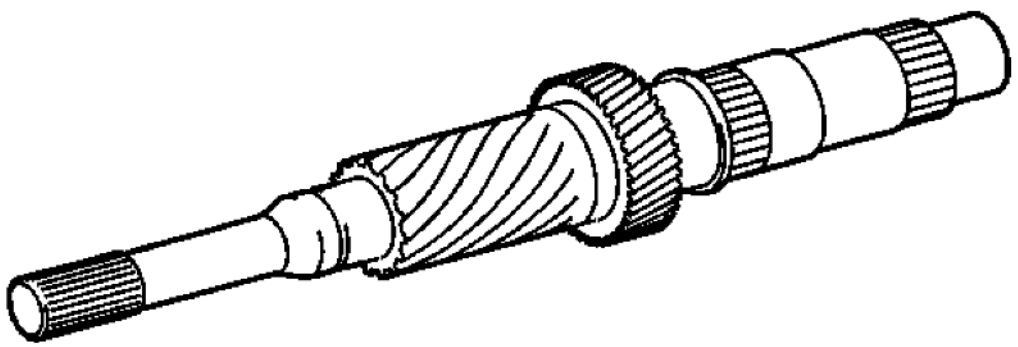

Fig. 96: View Of Input Shaft
Courtesy of GENERAL MOTORS CORP.

4. Clean the input shaft in a suitable solvent.
5. Clean and air dry the oil gallery.
6. Inspect the input shaft bearing surfaces for the following conditions:
   - Wear
   - Lack of lubricant
   - Debris embedded in the oil grooves
   - Brinelling
7. Inspect the input shaft splines for wear or damage.
8. Replace the input shaft if any of the above conditions are found.

cardiagn.com

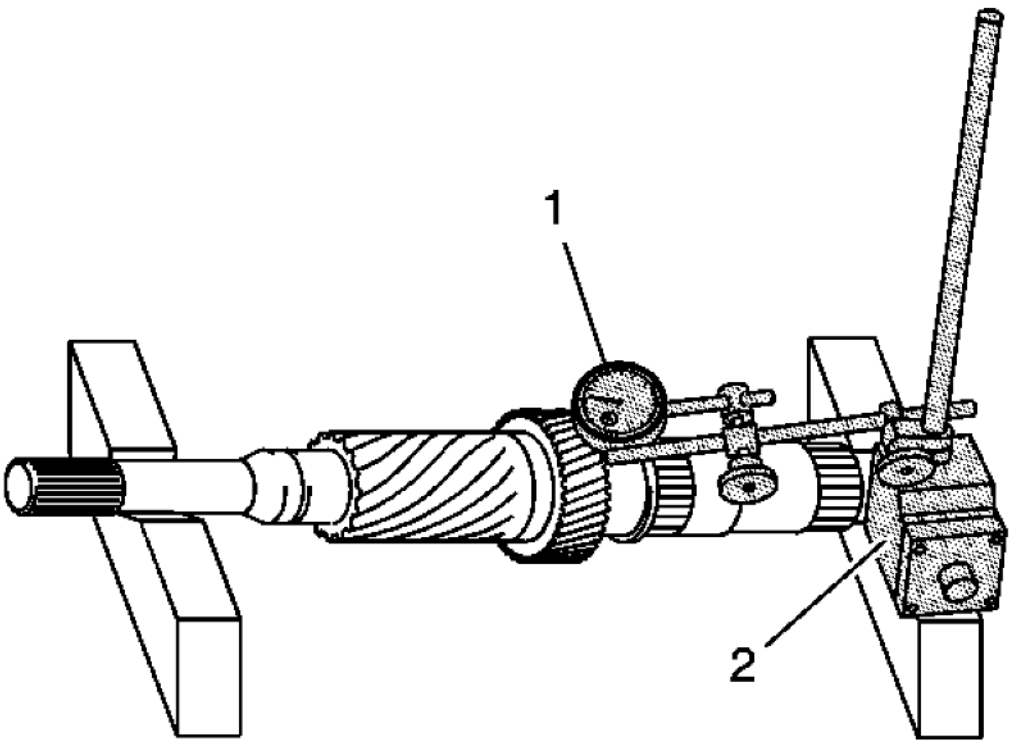

Fig. 97: Inspecting Input Shaft Runout
Courtesy of GENERAL MOTORS CORP.

9. Using **J 8001-3** or **J 26900-12** (1), **J 26900-13** (2) and V-blocks, inspect the input shaft for runout. See **Special Tools**.

   Specification: Maximum runout: 0.06 mm (0.0024 in)

10. If the runout exceeds the maximum, replace the input shaft.

cardiagn.com

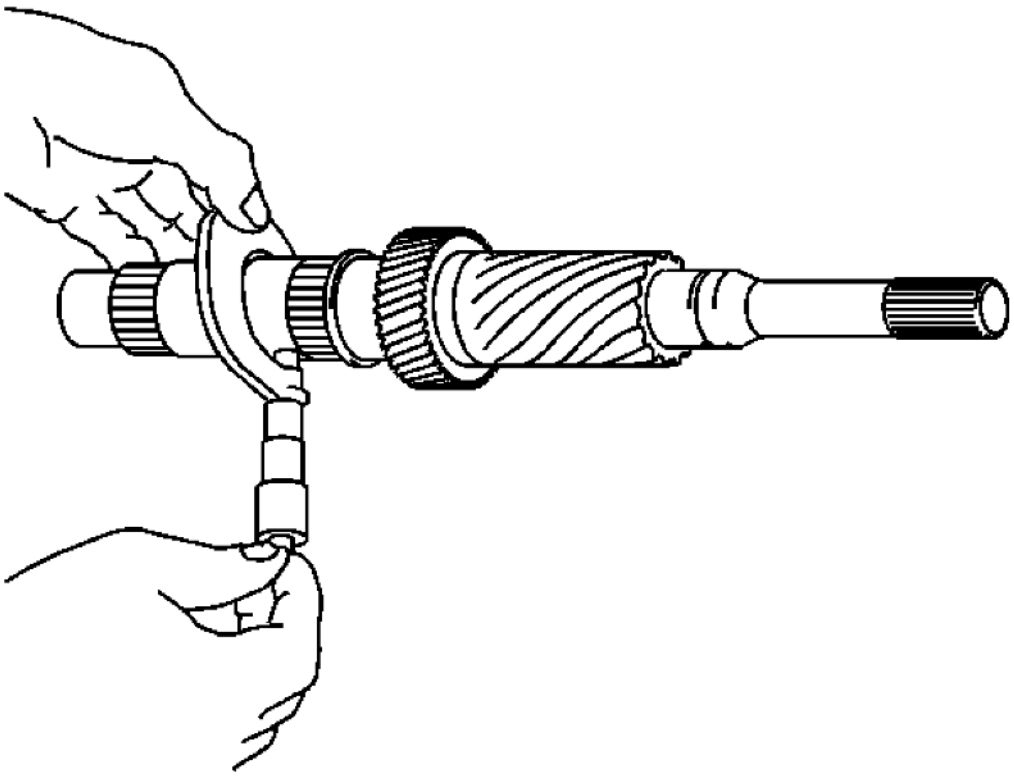

Fig. 98: Measuring Diameter Of Input Shaft Journals
Courtesy of GENERAL MOTORS CORP.

IMPORTANT: To calculate the radial clearance, measure shaft diameter, needle roller bearing diameter and gear inner diameter.

11. Using a micrometer, measure the diameter of the input shaft journals.

    Specification:

    - Minimum diameter 1st gear (a): 38.860 mm (1.5299 in)
    - Minimum diameter 2nd gear (b): 46.860 mm (1.8449 in)
    - Minimum diameter 3rd gear (c): 37.869 mm (1.4905 in)

12. If the journal diameter is less than the minimum, replace the input shaft.

Reverse Idler Gear and Shaft

cardiagn.com

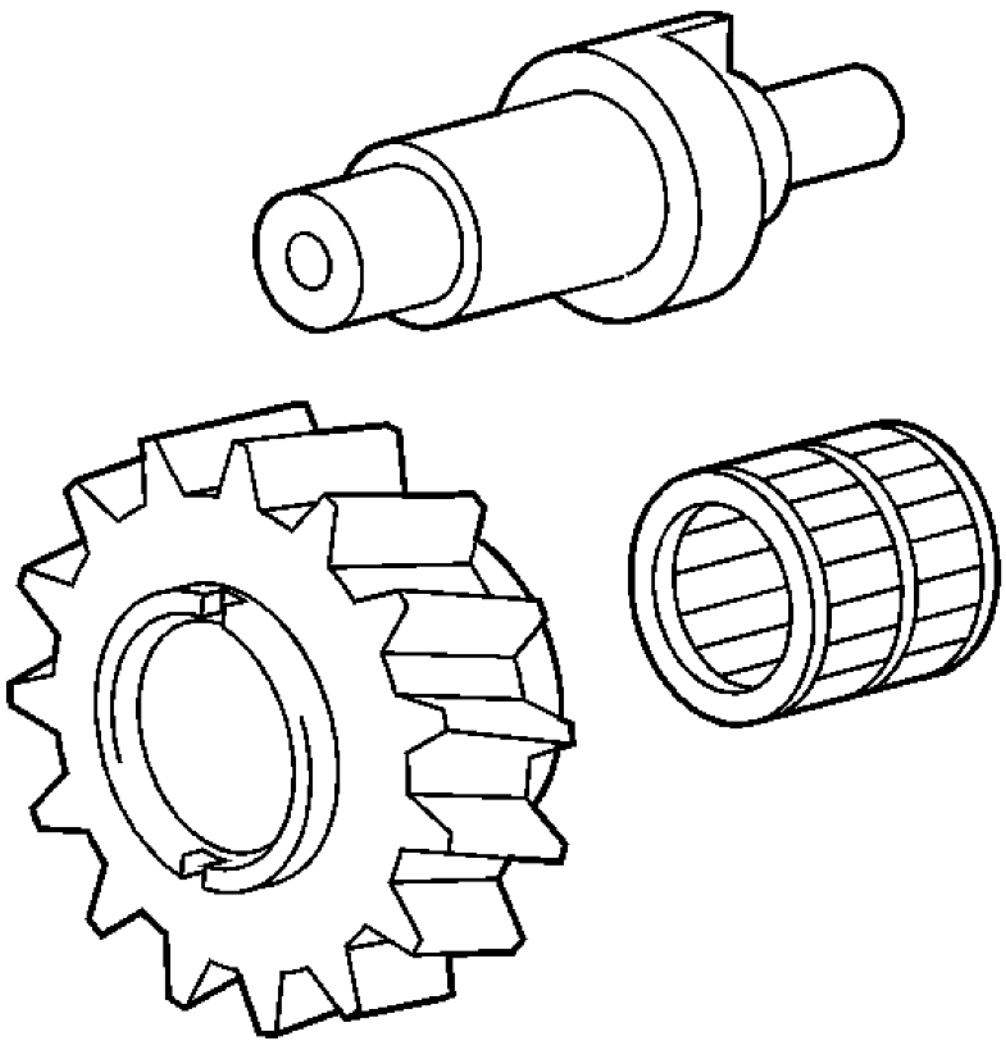

Fig. 99: View Of Reverse Idler Gear, Shaft & Bushing
Courtesy of GENERAL MOTORS CORP.

1. Clean the reverse idler gear and shaft in a suitable solvent and air dry all the parts.
2. Inspect the bushing in the reverse idler gear for the following conditions:
   - Excessive wear
   - Scoring
   - Pitting
3. Replace the reverse idler gear if the bushing is faulty.
4. Inspect the reverse idler gear shaft for the following conditions:

cardiagn.com

- Excessive wear
- Scoring
- Pitting

5. Replace the reverse idler gear shaft if it is faulty.

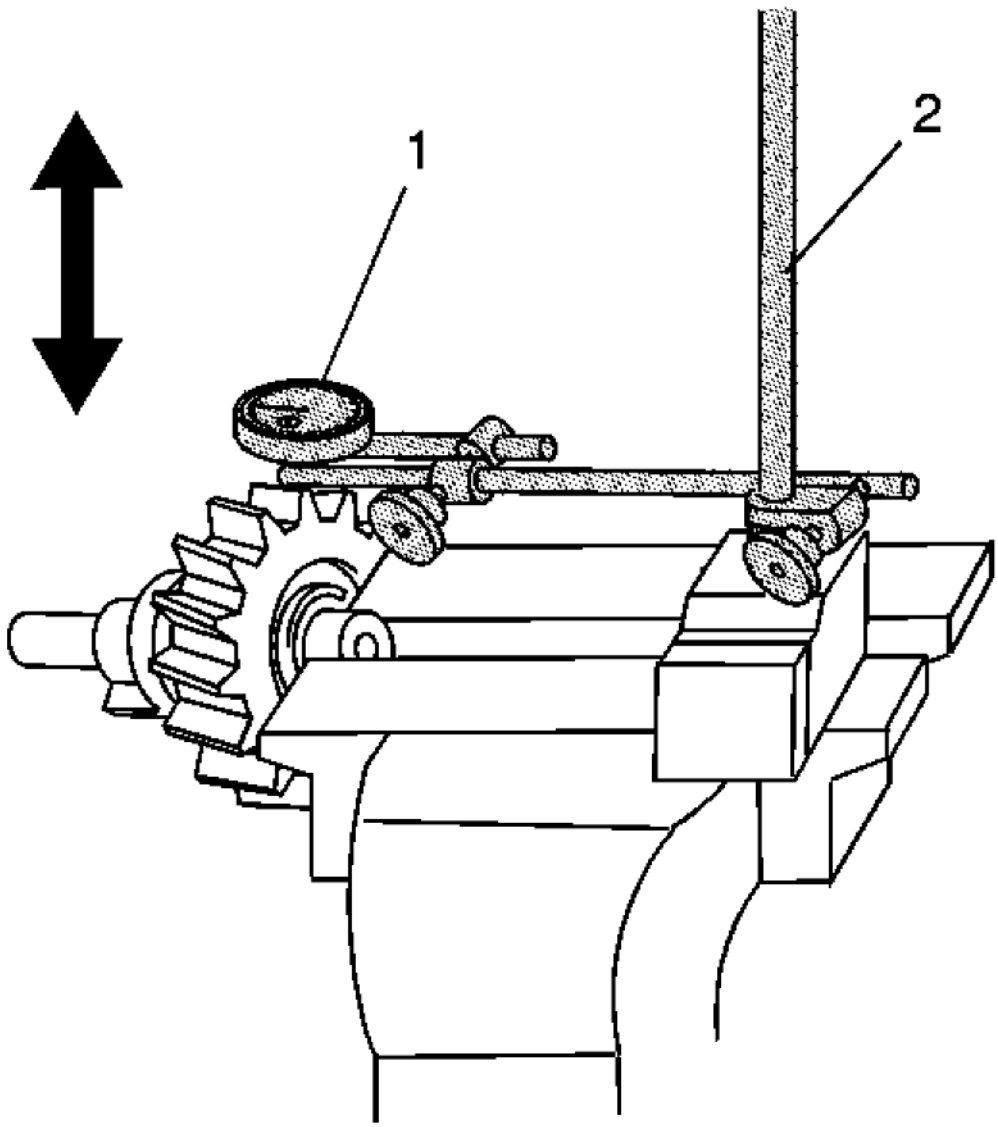

Fig. 100: Measuring Reverse Idler Gear Radial Clearance
Courtesy of GENERAL MOTORS CORP.

cardiagn.com

6. Using **J 8001-3** or **J 26900-12** (1) and **J 26900-13** (2), measure the reverse idler gear radial clearance. See **Special Tools**.

   Specification:

   - Standard Clearance: 0.040-0.082 mm (0.0016-0.0032 in)
   - Maximum Clearance: 0.130 mm (0.0051 in)

7. If the clearance exceeds the maximum, replace the reverse idler gear or the reverse idler gear shaft.

Countershaft

cardiagn.com

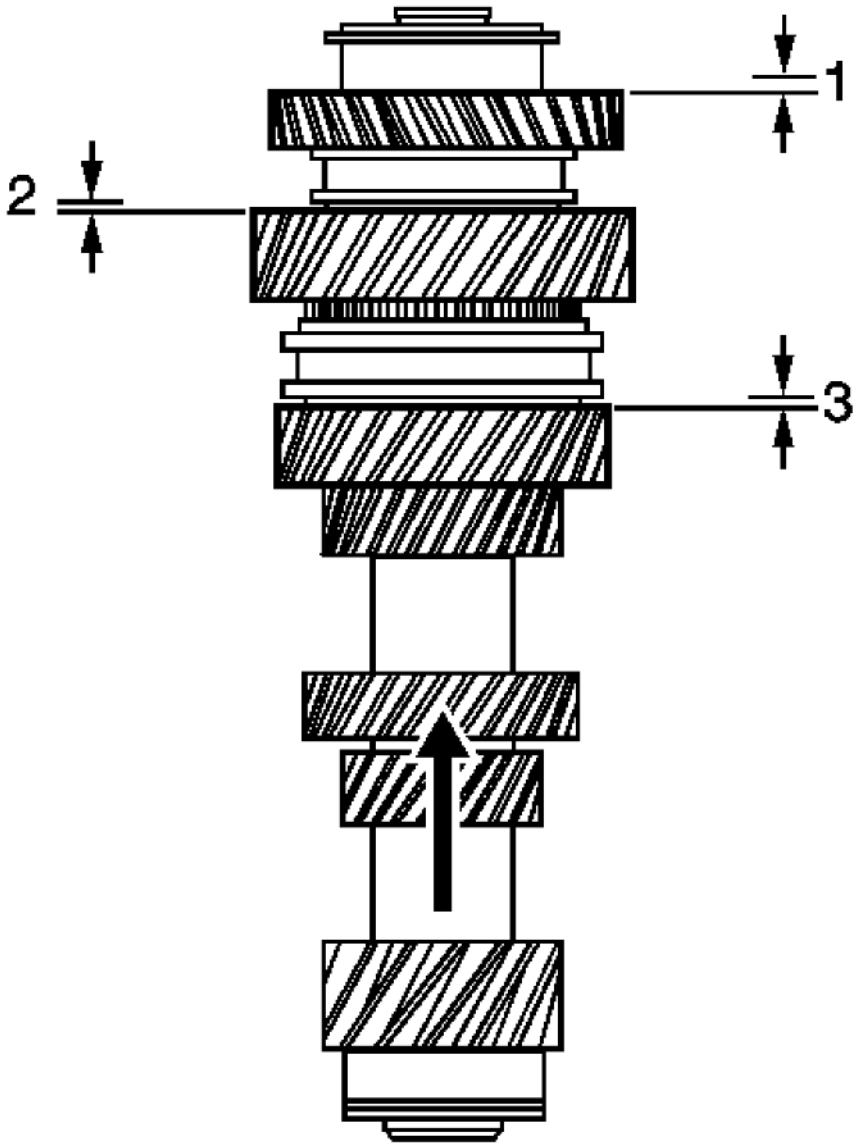

Fig. 101: Inspecting 1st, 2nd & Reverse Gear Axial Clearance
Courtesy of GENERAL MOTORS CORP.

1. Inspect 1st (2), 2nd (3), and reverse gear (1) for axial clearance. Lift up on the gear from the settled position and measure travel. Refer to **Transmission Clearance Specifications**, Gear Axial Clearance table.

cardiagn.com

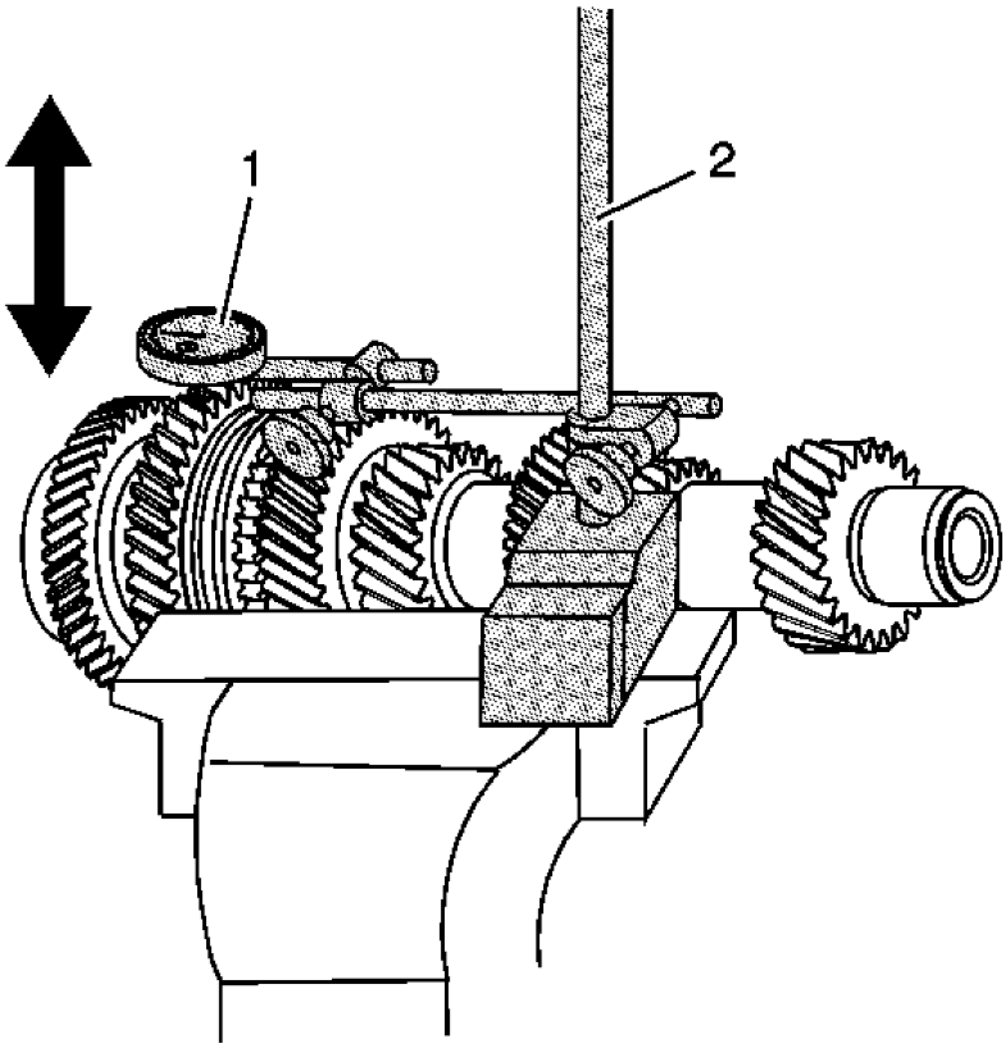

Fig. 102: Measuring Radial Clearance For 5th Countershaft Gear
Courtesy of GENERAL MOTORS CORP.

2. Measure the radial clearance for 5th countershaft gear.
    1. Place the 5th countershaft gear, with the needle roller bearing, on the countershaft journal.
    2. Use **J 8001-3** or **J 26900-12** (1) and **J 26900-13** (2). See **Special Tools**.
    3. Position **J 8001-3** or **J 26900-12** on the gear. See **Special Tools**.
    4. Move the gear up and down.

    Specification:

cardiagn.com

- Standard Clearance: 0.015-0.068 mm (0.0006-0.0027 in)
- Maximum Clearance: 0.160 mm (0.0063 in)

3. If the clearance exceeds the maximum, replace the gear, the roller bearing, or the countershaft.

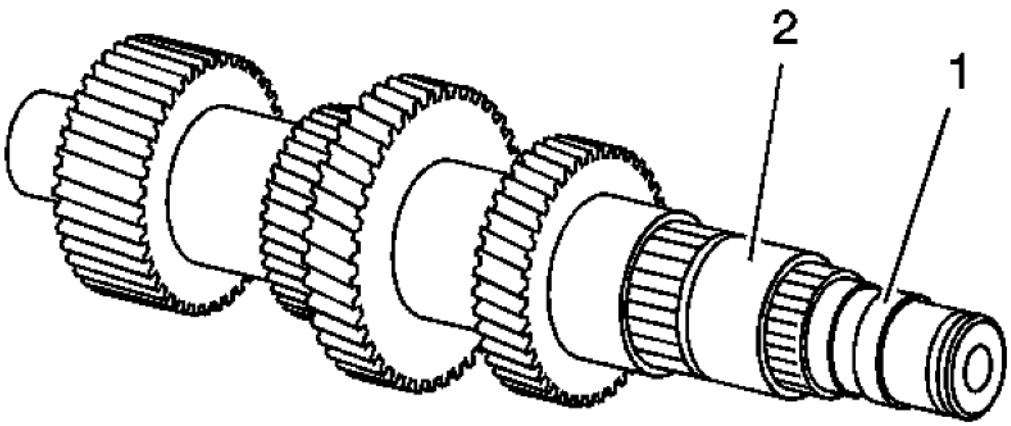

Fig. 103: Inspecting Rear Bearing Race On Countershaft
Courtesy of GENERAL MOTORS CORP.

4. Clean the countershaft in a suitable solvent and air dry all the parts.
5. Inspect the rear bearing race (1) on the countershaft for the following conditions:
   - Brinelling
   - Wear
   - Scoring
6. Inspect the 5th countershaft gear bearing race (2) for the following conditions:
   - Brinelling
   - Wear
   - Scoring

cardiagn.com

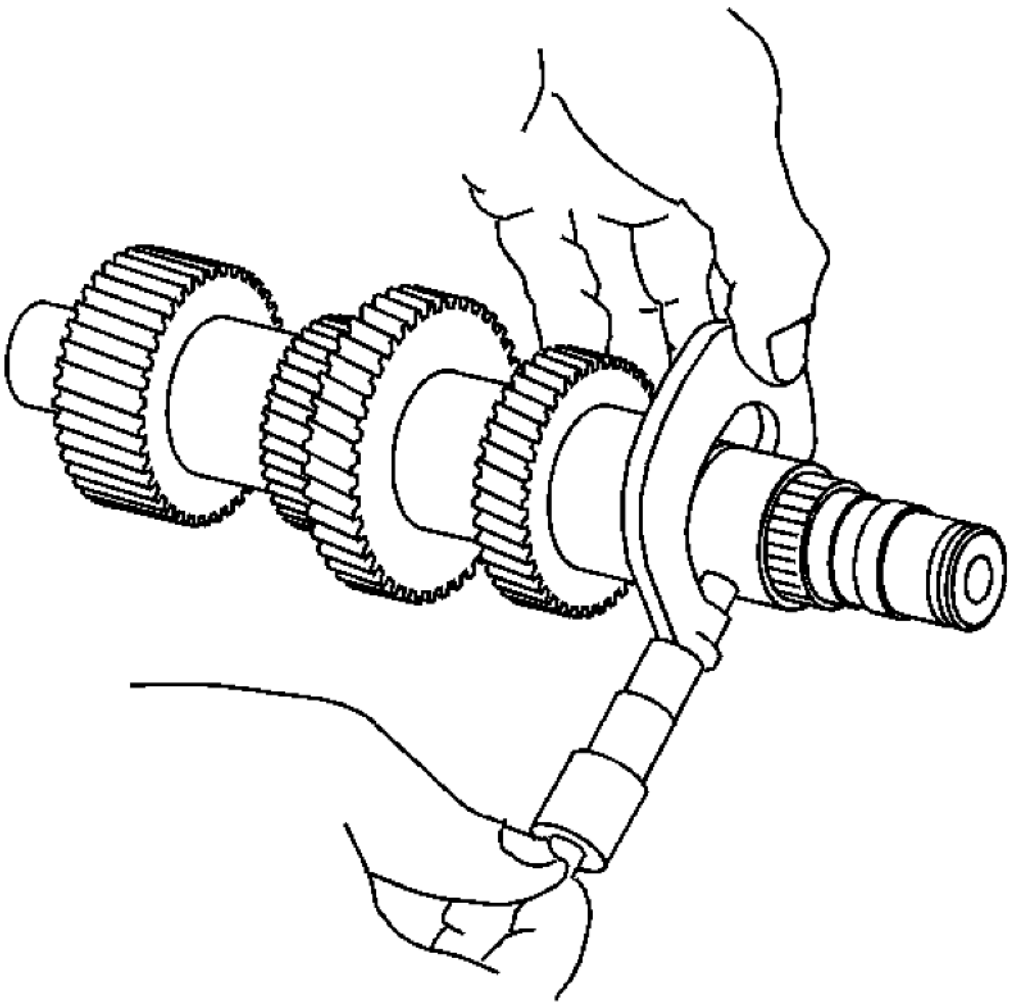

Fig. 104: Measuring Outer Diameter Of Countershaft Journal
Courtesy of GENERAL MOTORS CORP.

7. Using a micrometer, measure the outer diameter of the countershaft journal.

   Specification: Minimum diameter: 29.860 mm (1.1756 in)

8. Inspect all of the countershaft gears for being faulty following the gear inspection steps.
9. Replace the countershaft if it is faulty.

Output Shaft

cardiagn.com

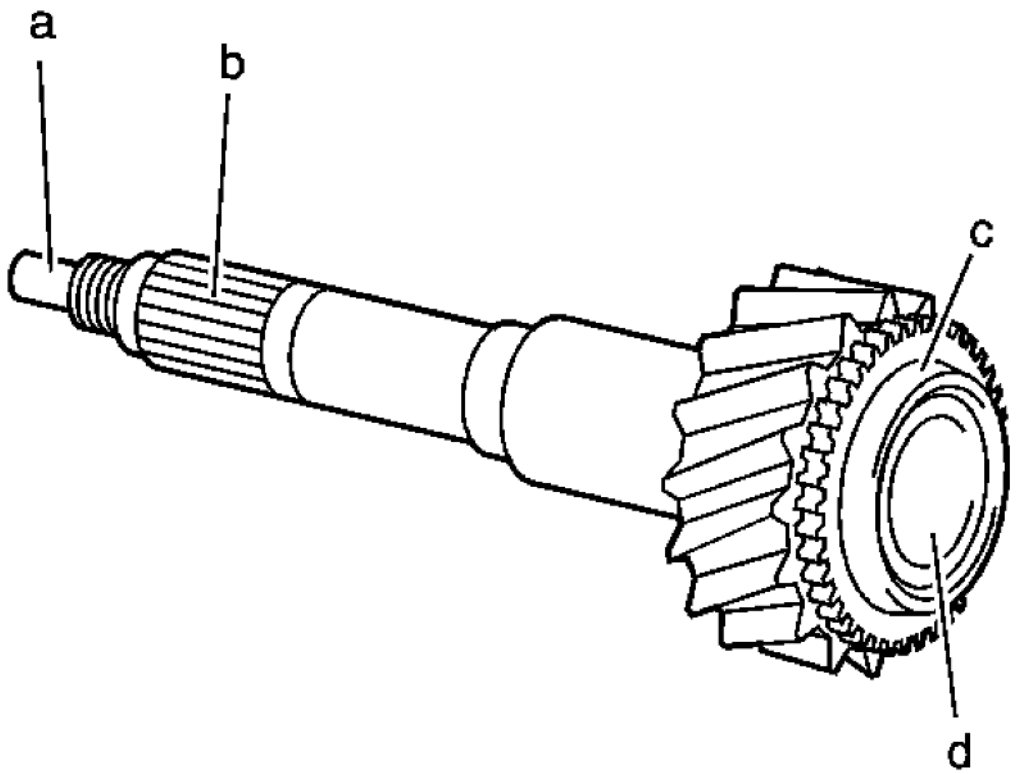

Fig. 105: Inspecting Output Shaft
Courtesy of GENERAL MOTORS CORP.

1. Clean the output shaft in a suitable solvent and air dry all the parts.
2. Inspect the pilot bearing journal (a) for wear or scoring.
3. Inspect the clutch disc splines (b) for wear. Steps in the splines may cause concerns with clutch operation.
4. Inspect the synchronizer blocking ring surface (c) for the following conditions:
   - Grooves
   - Excessive wear
   - Heat marks
   - Scoring
5. Inspect the input shaft front support bearing journal (d) for the following conditions:
   - Brinelling
   - Pitting
   - Excessive wear
6. Inspect the gear teeth and selector teeth for being faulty following the gear inspections steps.

cardiagn.com

7. Replace the output shaft if any of the above conditions are found.

Gears

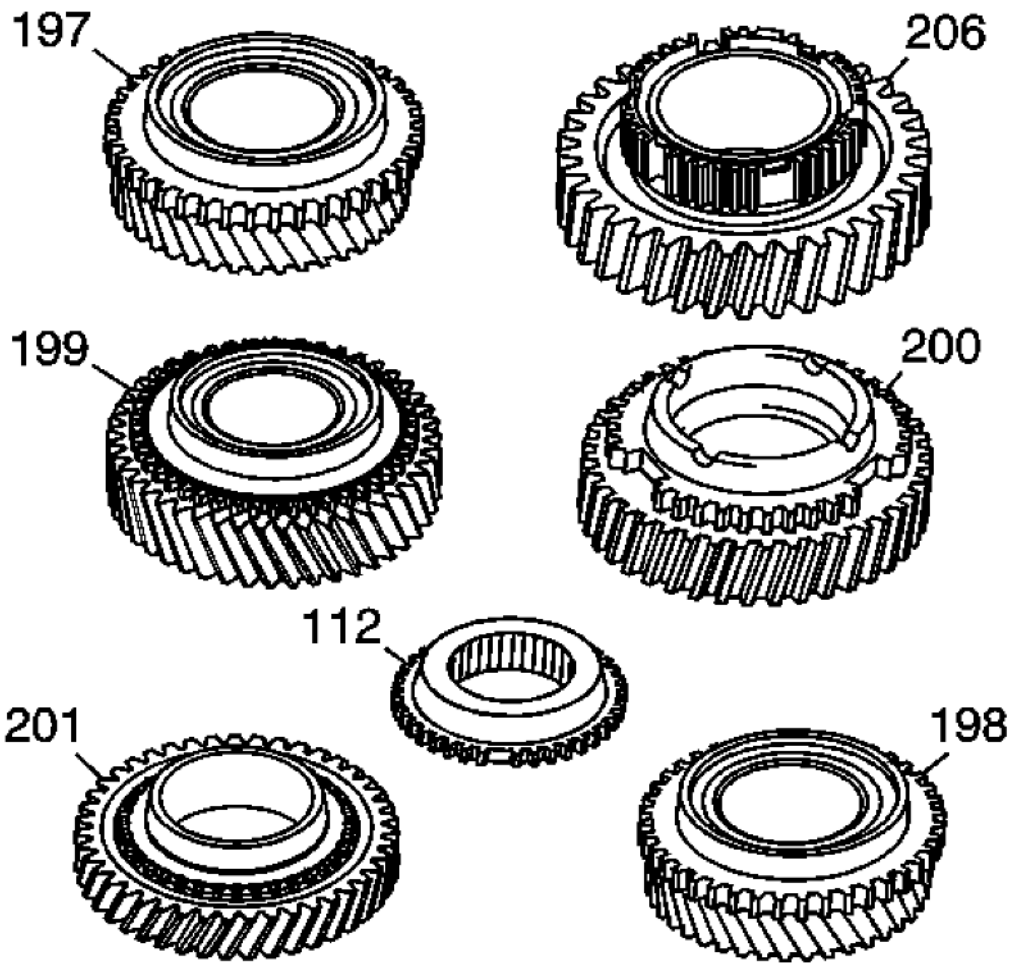

Fig. 106: Gears
Courtesy of GENERAL MOTORS CORP.

1. Clean the 1st gear (199), the 2nd gear (200), the 3rd gear (197), the 4th gear (198), reverse drive gear (112), the 6th gear (201), the reverse gear (206), and the countershaft gear in a suitable solvent and air dry all the parts.

cardiagn.com

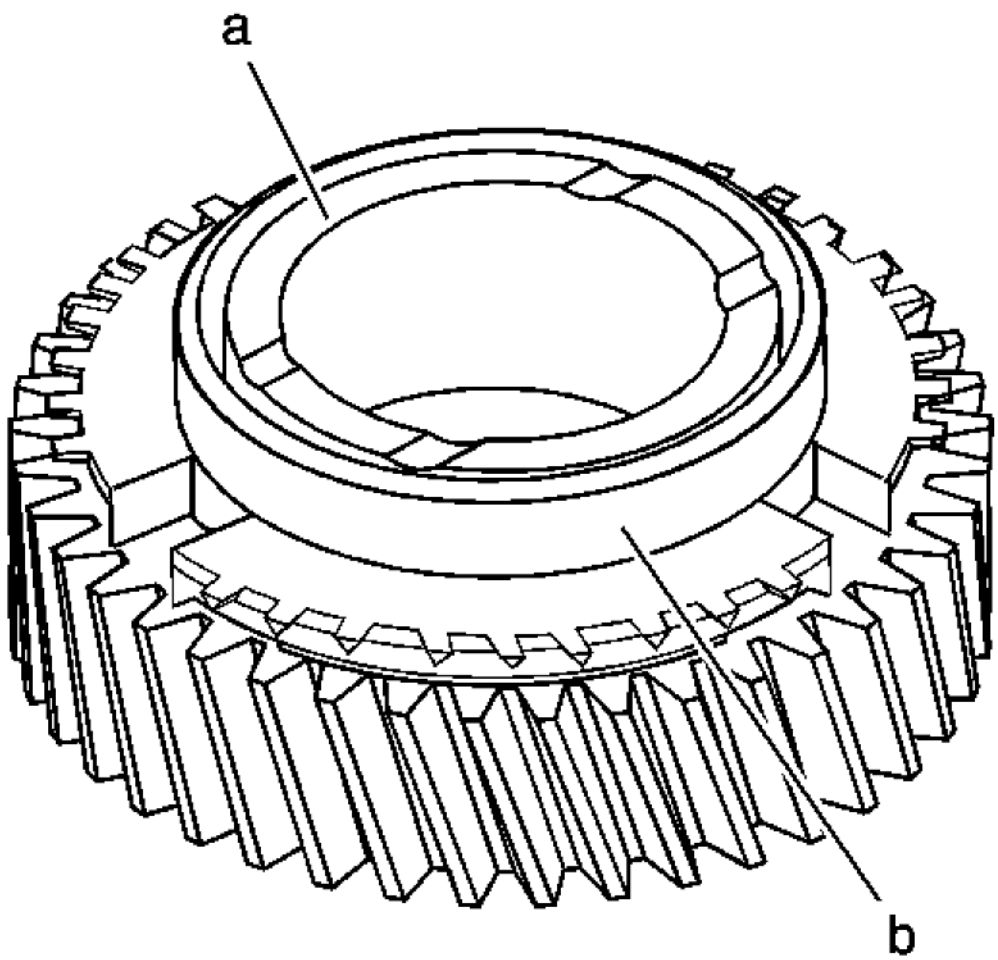

Fig. 107: Inspecting Thrust Surfaces Of Gears
Courtesy of GENERAL MOTORS CORP.

2. Inspect the thrust surfaces (a) on both sides of the gears for the following conditions:
   - Wear
   - Galling
   - Scoring
3. Replace any gears that have faulty thrust surfaces. Worn thrust surfaces may cause gear clashing or hard shifting, by not allowing full engagement of the synchronizer blocking rings. Worn thrust surfaces may also cause gear noise or may cause clunking during acceleration or deceleration.
4. Inspect the synchronizer blocking ring surface (b) for the following conditions:
   - Grooves

cardiagn.com

- Excessive wear
- Heat marks
- Scoring

5. Replace any gear that has a faulty blocking ring surface.

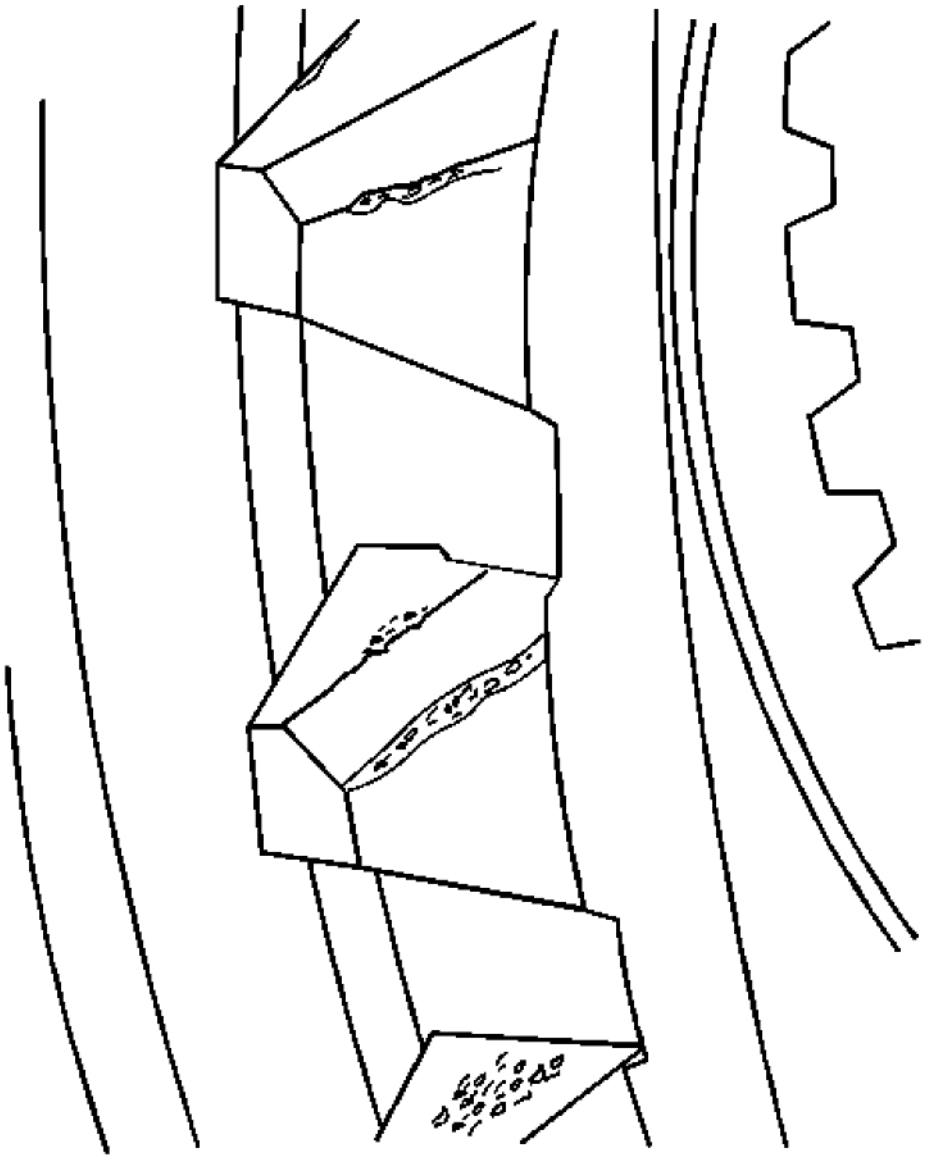

Fig. 108: View Of Gear Change Damage On Selector Teeth

cardiagn.com

Courtesy of GENERAL MOTORS CORP.

6. Inspect the selector teeth of the gears for gear change damage.

   If there is gear change damage, the tooth edges are worn and chipped and, in some cases, affected by plastic deformation because of high shift loads that resemble ragged edges. Such severe deformation of the selector teeth edges causes hard gearshift changes. The spline flanks may also show signs of wear resembling fretting corrosion.

7. If gear change damage is present, replace or repair the affected parts. Gear change damage is caused by any of the following conditions:
   - Corresponding speeds of gears not adequately matched
   - Operating the transmission incorrectly
   - Incorrect clutch operation

cardiagn.com

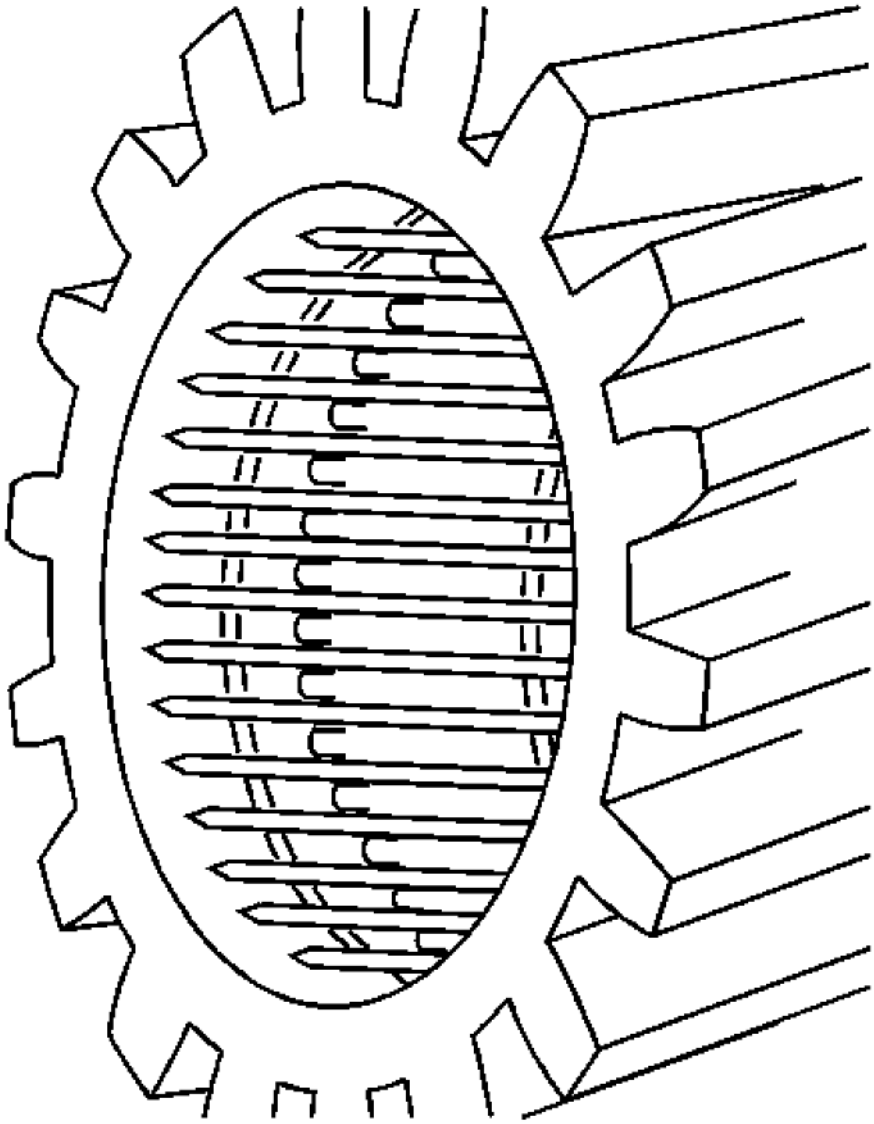

Fig. 109: Brinelling On Roller Races Of Gears
Courtesy of GENERAL MOTORS CORP.

8. Inspect the gears for brinelling.

   Brinelling occurs on the roller races of the gears and is characterized by what appears to be the impression of the bearing rollers.

cardiagn.com

9. Replace any gears showing brinelling.

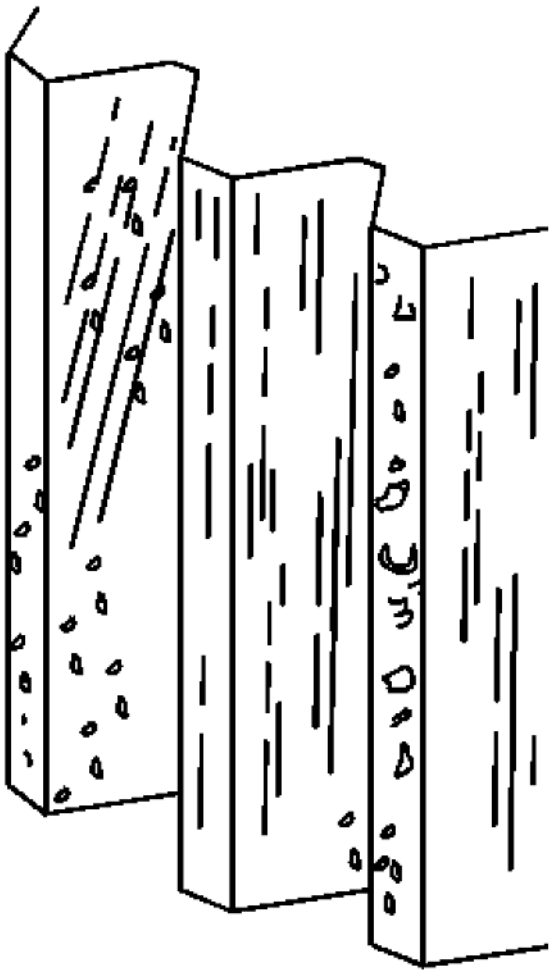

Fig. 110: View Of Break-in-Wear Or Running-In-Wear On Gears
Courtesy of GENERAL MOTORS CORP.

10. Inspect the gears for break-in-wear or running-in-wear.

Break-in-wear is not considered damage because it usually ceases after the running-in-period has expired, without damaging the components. Rough peaks produced during manufacture are worn away or, to some extent, are rolled into the surface. The grinding and shaving marks on the surface are still visible.

cardiagn.com

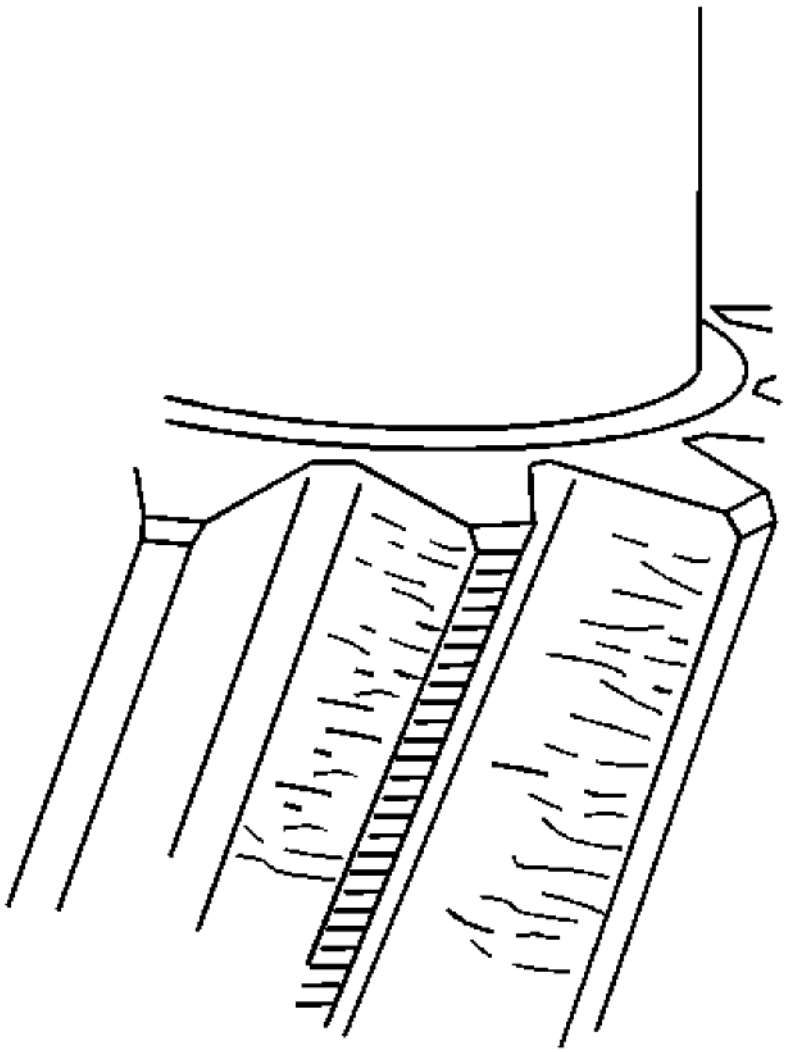

Fig. 111: View Of Scratched Gear Teeth
Courtesy of GENERAL MOTORS CORP.

11. Inspect the gear teeth for scratches.

    Scratches are linear indentations on the flank, running in the direction of sliding.

12. If scratches are present, replace the affected parts.

    Scratches can be caused by the following conditions:

cardiagn.com

- Dust and abrasive particles, including those caused by flank contact, in the lubricating oil
- The sliding action of the flanks

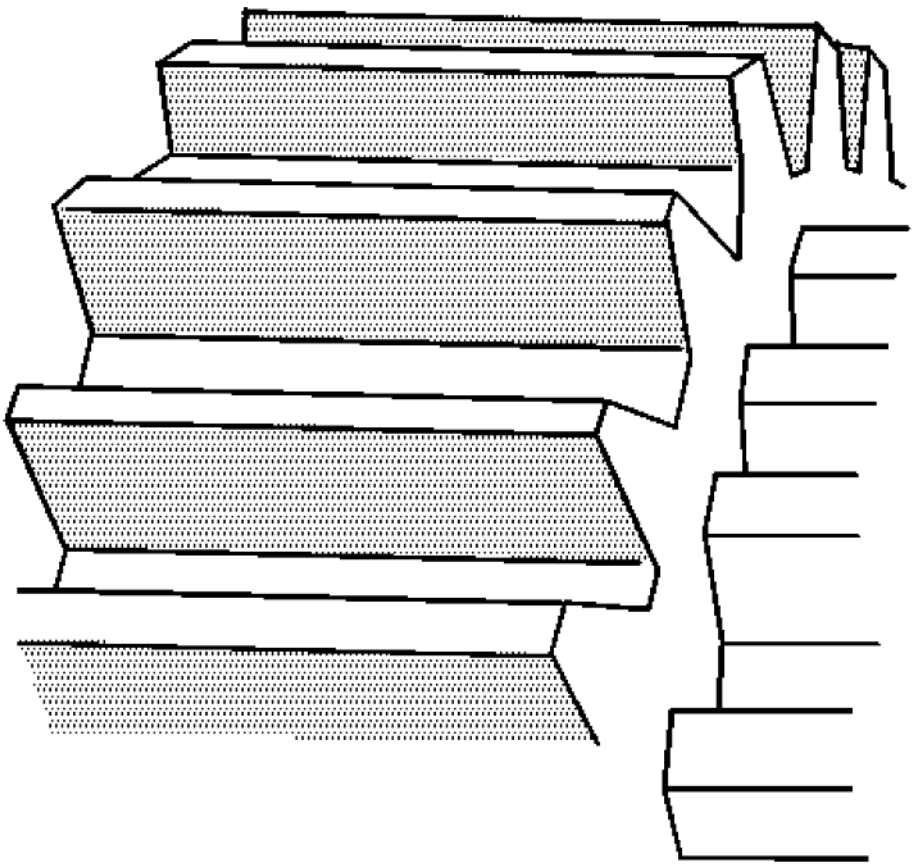

Fig. 112: Abrasive Wear On Gear Teeth
Courtesy of GENERAL MOTORS CORP.

13. Inspect the gear teeth for abrasive wear.

    The marks left by the machining process are erased from the active flank. Instead, the entire flank takes on a matte gray appearance. Substantial changes take place in the tooth profile and clearance once abrasive wear has reached an advanced stage. This not only increases the noise level, but can also cause secondary damage.

14. If abrasive wear is present, replace the affected parts.

cardiagn.com

Abrasive wear is caused by the following conditions:

- Oil contamination resulting from wear or surface fatigue in other areas of the transmission
- Sand, sludge, etc. penetrating into the transmission from the outside

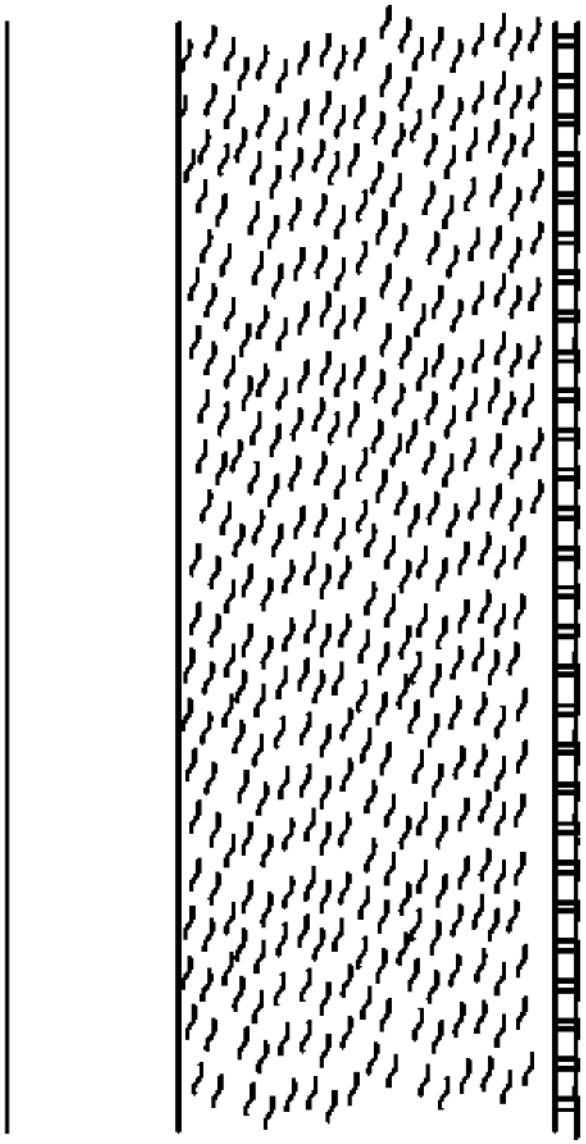

Fig. 113: View Of Rippling Or Brinelling On Gear Teeth
Courtesy of GENERAL MOTORS CORP.

cardiagn.com

15. Inspect the gear teeth for rippling or brinelling.

    The polished tooth flanks show signs of ripple-like alterations in the surface structure, which run perpendicular to the direction of sliding, and may resemble a washboard.

16. If rippling or brinelling is present, replace the affected parts.

    Rippling or brinelling is caused by the following conditions:

    - A combination of inadequate lubrication, high flank loads and low peripheral speeds
    - Friction-induced vibration

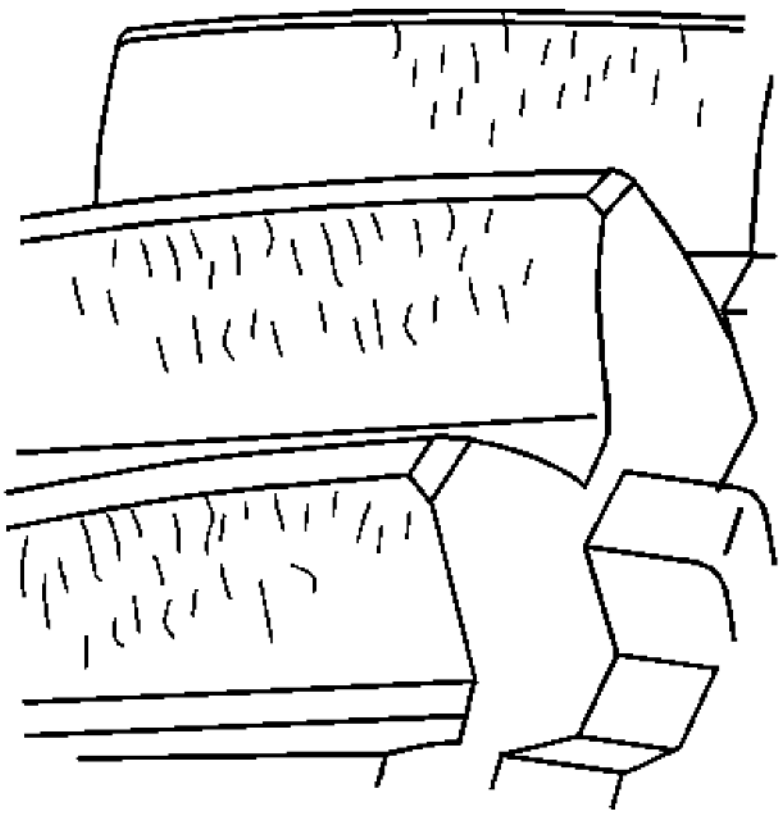

Fig. 114: Light Scoring On Gear Teeth
Courtesy of GENERAL MOTORS CORP.

17. Inspect the gear teeth for light scoring.

cardiagn.com

Light scoring is identified as rough, partially porous lines or areas aligned in the direction of sliding. When the film of lubricant is torn away between the flanks, this permits direct metal-to-metal contact causing seizure or welding. These welded zones are immediately torn apart again, producing the damage associated with scoring. Scoring initially occurs in areas subjected to high hertz frequency stresses and high sliding speeds, usually along the tooth root and tooth tip. Light scoring only covers a part of the entire surface of the flank, or is not strongly developed and has caused only insignificant wear after smoothing.

18. If light scoring is present, replace the affected parts.

    Light scoring is caused by the following conditions:

    - Inadequate oil viscosity
    - Unfavorable gear geometry
    - Temporary lack of lubricant
    - Surface roughness
    - Faulty heat treatment of the gears

cardiagn.com

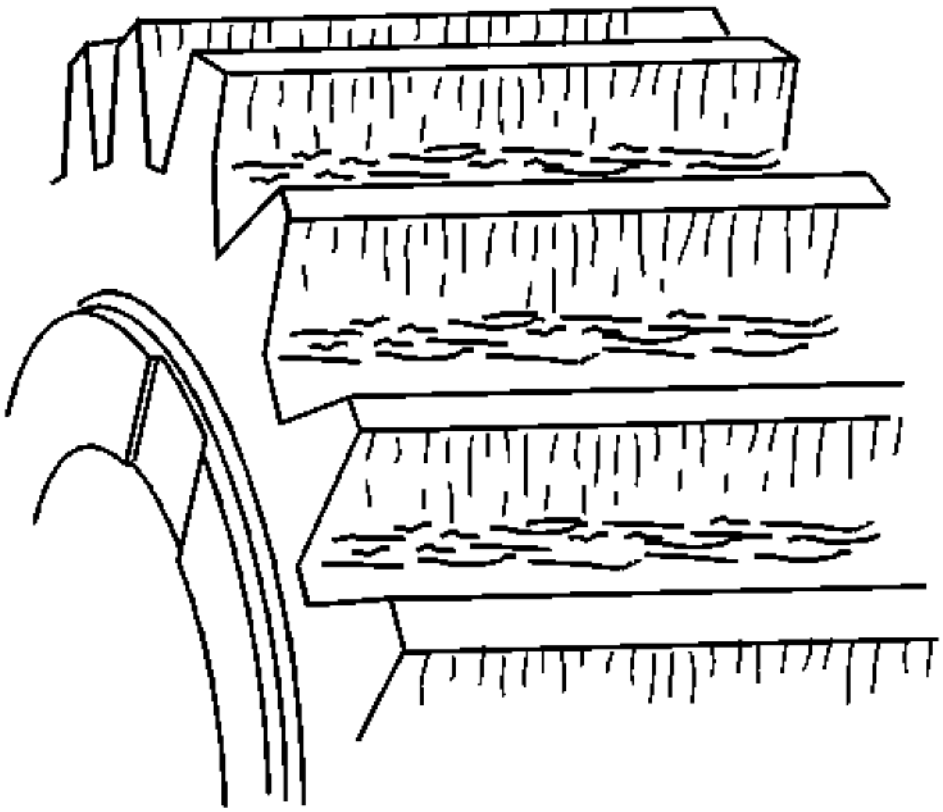

Fig. 115: Severe Scoring On Gear Teeth
Courtesy of GENERAL MOTORS CORP.

19. Inspect the gear teeth for severe scoring.

    Severe scoring is the same as light scoring, except large areas of the tooth flank are affected. At an advanced stage, the flank may heat up to such an extent that localized discoloring occurs.

20. If severe scoring is present, replace the affected parts.

    Severe scoring is caused by the following conditions:

    - Inadequate oil viscosity
    - Unfavorable gear geometry
    - Temporary lack of lubricant
    - Surface roughness

cardiagn.com

- Faulty heat treatment of the gears

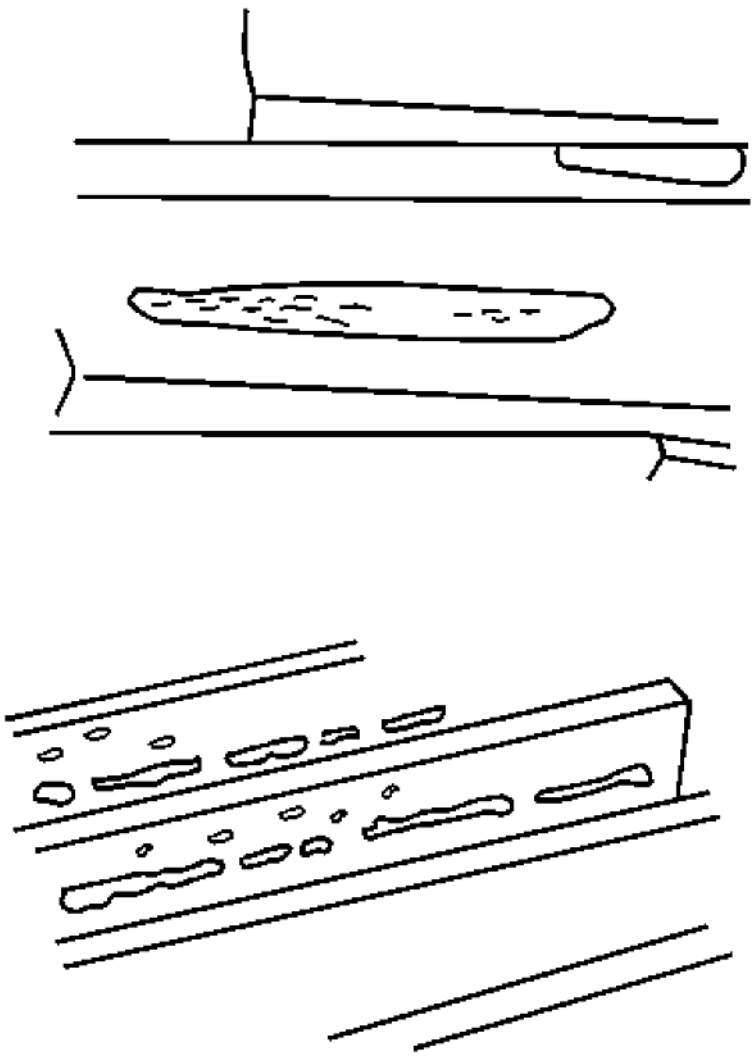

Fig. 116: View Of Flank Fatigue On Gears
Courtesy of GENERAL MOTORS CORP.

21. Inspect the gears for flank fatigue, causing gray spots.

Gray spots are localized pittings on the flank caused by material fatigue and extremely fine pittings formed on the load-bearing flanks. If they are in cluster, they appear to the naked eye as matte gray staining. Under high magnification, a large number of microscopic cracks become visible on the flank.

cardiagn.com

Pittings originating from these cracks may create the appearance of local flank wear. Most of the gray spots are located in the root zone of the gear teeth.

22. If gray spots are present, replace the affected parts.

    Gray spots are caused by the following conditions:

    - Material fatigue
    - Contact pressure
    - Sliding movement
    - Composite friction

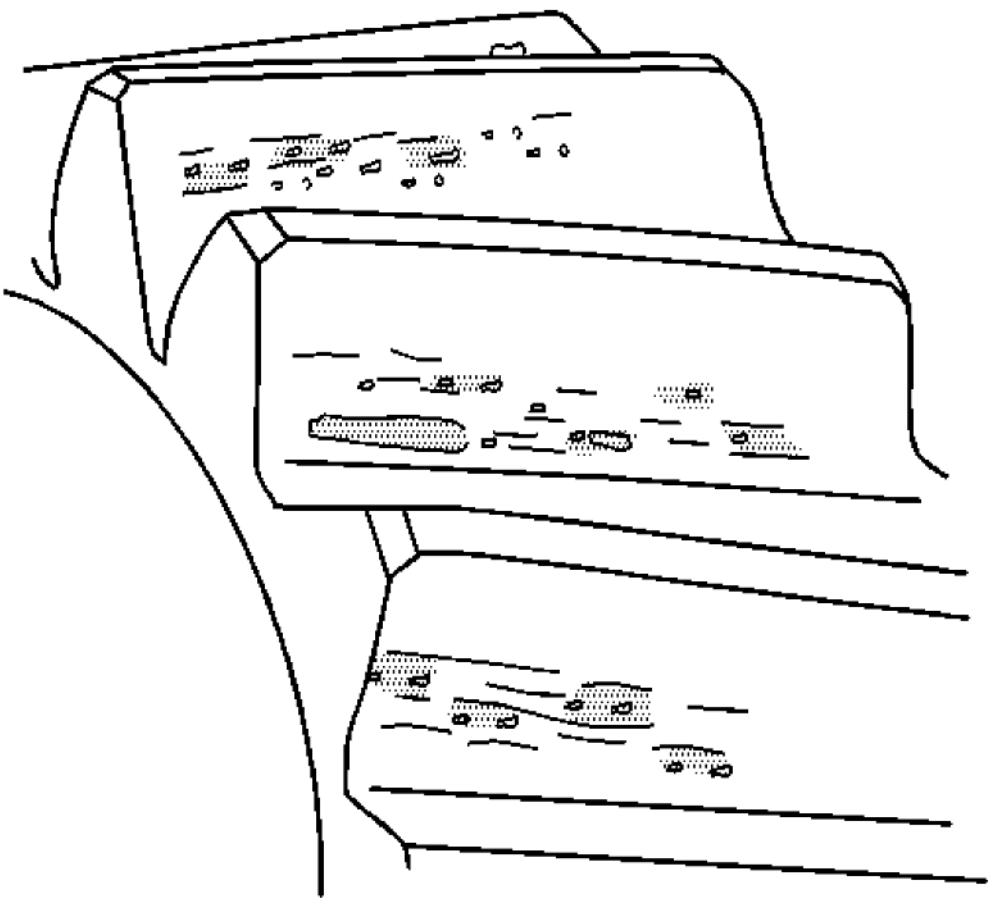

Fig. 117: Slight Pitting On Gear Teeth
Courtesy of GENERAL MOTORS CORP.

cardiagn.com

23. Inspect the gear teeth for slight pittings.

    Slight pittings are identified as pore-like areas of individual pittings on the flank caused by material fatigue. Usually, slight pittings are only present in the root zone of the flank. Slight pittings may cease after run-in. A change in operating conditions may also stop continued development of slight pitting.

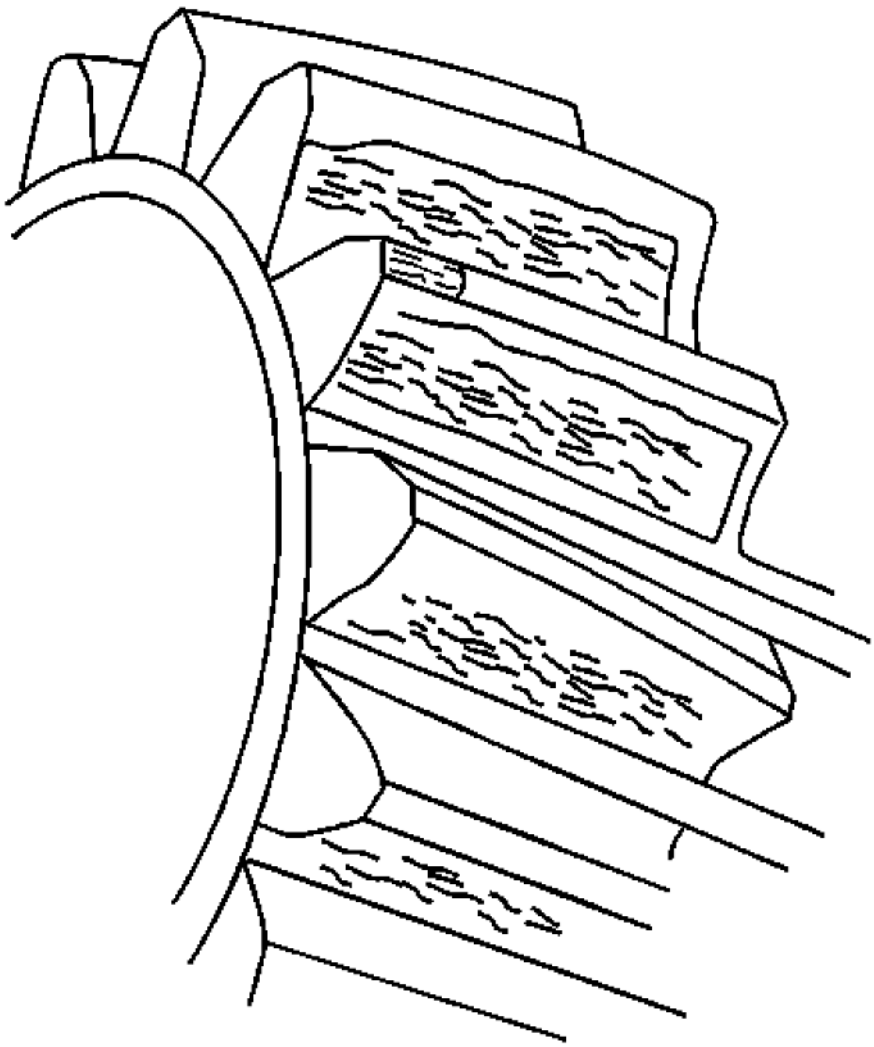

Fig. 118: Pitted Gear Teeth
Courtesy of GENERAL MOTORS CORP.

24. Inspect the gear teeth for pittings.

cardiagn.com

Pittings are material fatigue on the flank. The total pitting surface may become so large that smooth running is considerably impaired, or the remaining flank face still bearing the load will soon be destroyed by wear.

25. If pittings are present, replace the affected parts.

    Pitting is caused by the following conditions:

    - Exceeding the sliding and rolling stresses for the material
    - Incorrect oil viscosity
    - Excessive operating temperature

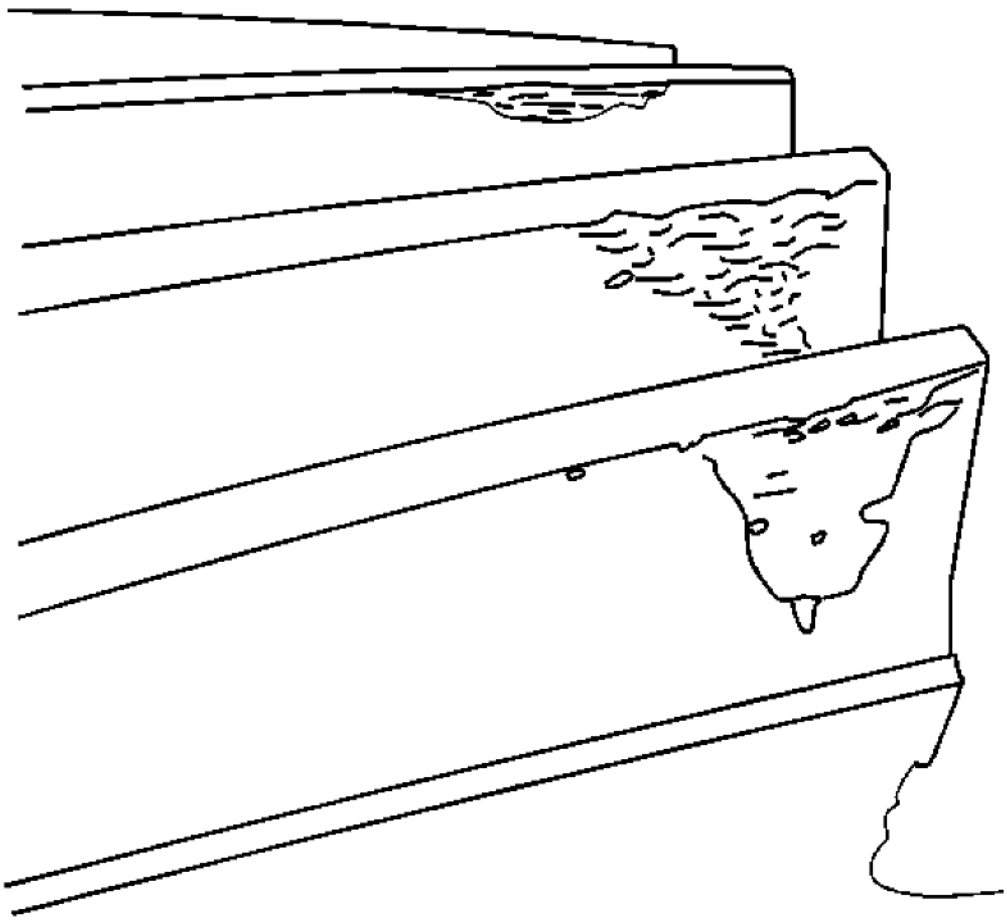

Fig. 119: Identifying Spalling On Gears
Courtesy of GENERAL MOTORS CORP.

cardiagn.com

26. Inspect the gears for spalling.

    Spalling is extensive triangular pits on the flank, spreading from a zone of gray spots or a fine line of pits at the root. The depth of the exposed surface is relatively constant throughout. Further cracks may extend from the pits at an angle. In some cases, the damage may even progress into the tip zone, causing tip damage.

27. If spalling is present, replace the affected parts.

    Spalling is caused by the following conditions:

    - Exceeding the sliding and rolling stresses for the material
    - Incorrect oil viscosity
    - Excessive operating temperature

cardiagn.com

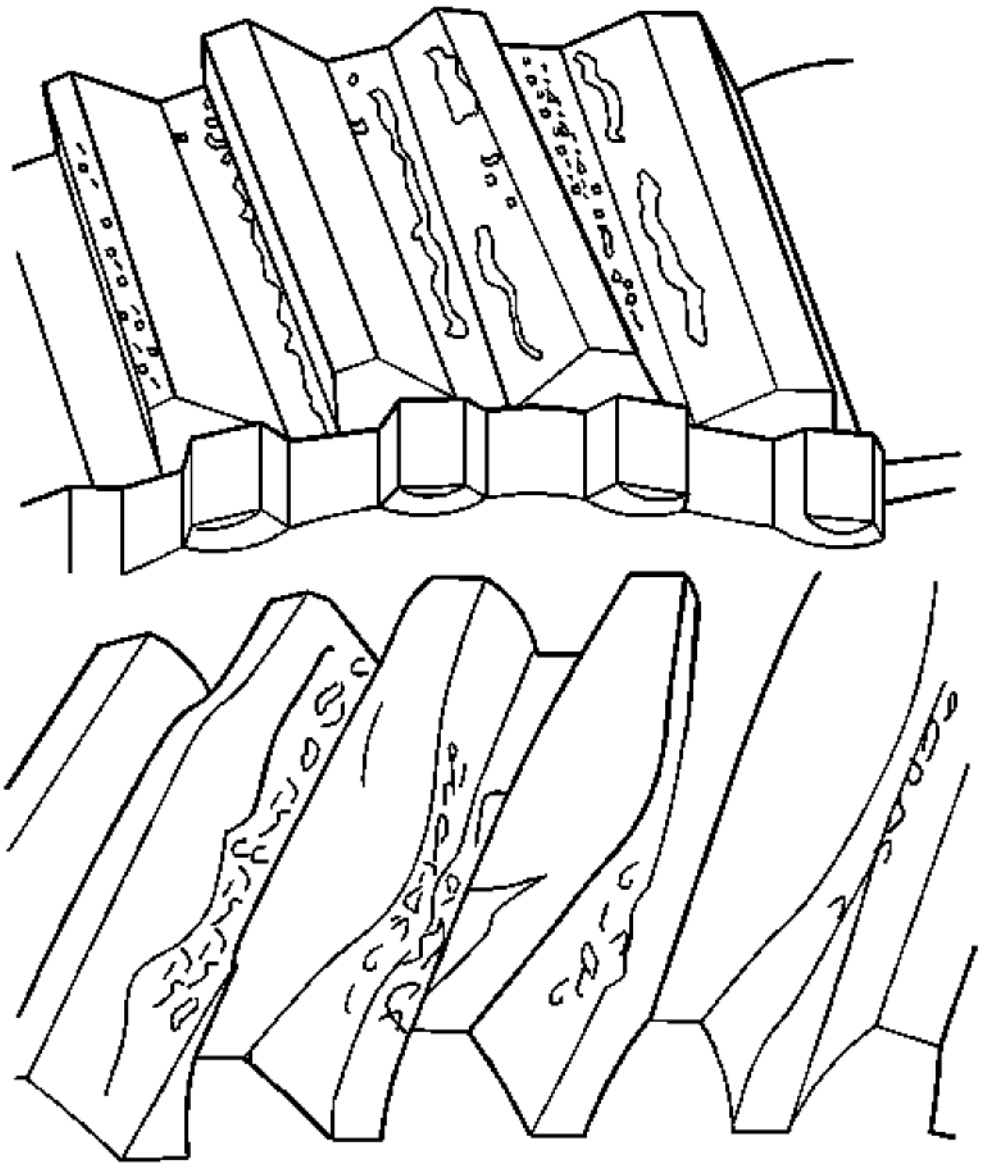

Fig. 120: View Of Overheated Gears
Courtesy of GENERAL MOTORS CORP.

28. Inspect the gears for damage from overheating.

Overheating damage is identified by grayish to bluish black discoloration of the gear, burnt oil, and reduced hardness. Due to the reduction in hardness, there is scored or grooved flank wear in the direction

cardiagn.com

of sliding, particularly in the tip and root zones. If there is extreme overheating, the material softens, causing distortion of the gear teeth, bending the teeth from thermal distortion.

29. If damage from overheating is present, replace or repair the affected parts.

    Overheating is caused by the following conditions:

    - Temporary or complete lack of lubrication - low oil level
    - Very high peripheral speeds
    - Insufficient tooth clearance

cardiagn.com

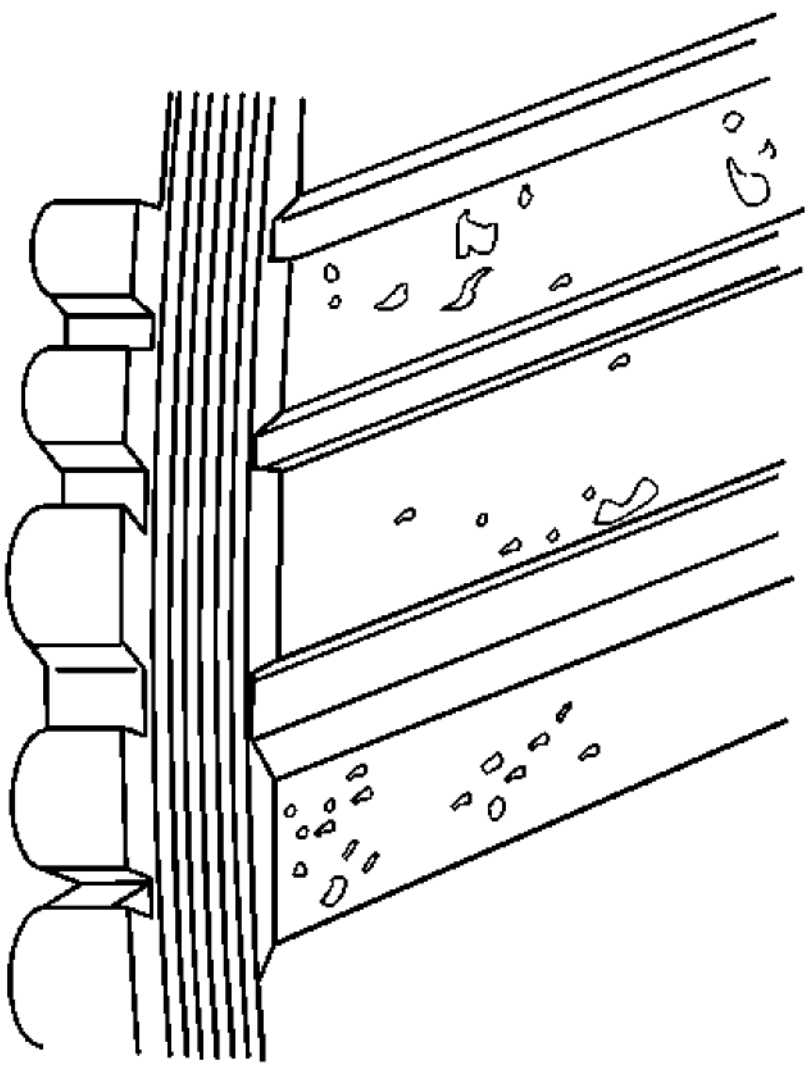

Fig. 121: Identifying Gear Corrosion
Courtesy of GENERAL MOTORS CORP.

30. Inspect the gears for corrosion.

    Corrosion is brownish red to black spots, sometimes with local material loss on the flank. If corrosion has not caused material loss to the flank, the sliding and rolling action of the flank can help to remove some of the corrosion.

31. If corrosion is severe, replace the affected parts.

cardiagn.com

Corrosion is caused by the following conditions:

- Water or salt water entering the transmission
- Condensation forming under unfavorable operating conditions
- Oil aging and the decomposition of corrosion inhibitors

BEARINGS AND SPACERS CLEANING AND INSPECTION

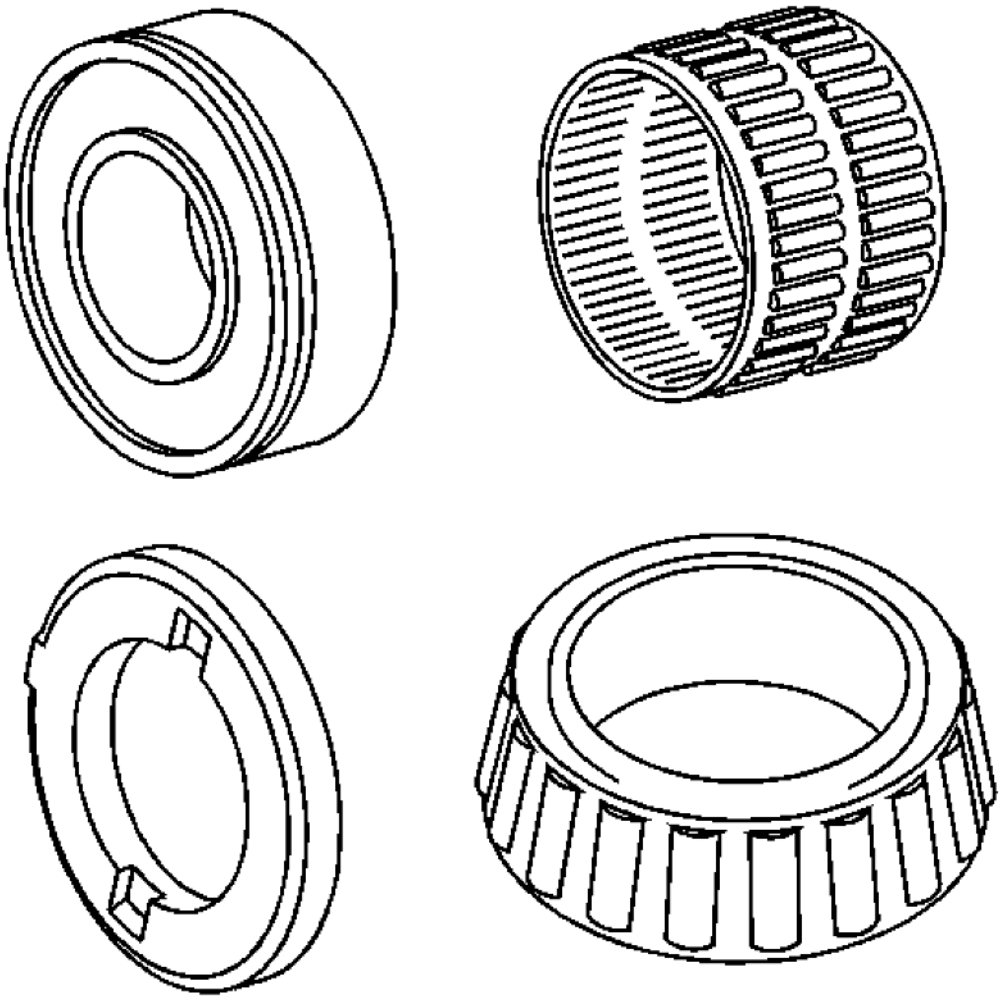

Fig. 122: Inspecting Bearings & Spacers
Courtesy of GENERAL MOTORS CORP.

cardiagn.com

CAUTION: Do not allow the bearings to spin. Turn them slowly by hand. Spinning the bearings may damage the race and the rollers.

1. Mark or tag the bearings in order to ensure they are properly installed in the correct location.
2. Clean all of the roller bearings, needle bearings, and ball bearings in a suitable solvent and air dry all the parts.
3. Inspect the bearings and races for the following conditions:
    - Roughness
    - Brinelling
    - Pitting
4. Inspect the cage bearings for being bent or for having damaged cages.
5. Replace the bearings with any of the above conditions.
6. Replace mated bearing parts when only one part is damaged.
7. Inspect the thrust washers for scoring or wear.
8. Replace any faulty thrust washers.
9. Do not file surfaces which have been hardened and precision ground.

SYNCHRONIZERS CLEANING AND INSPECTION

cardiagn.com

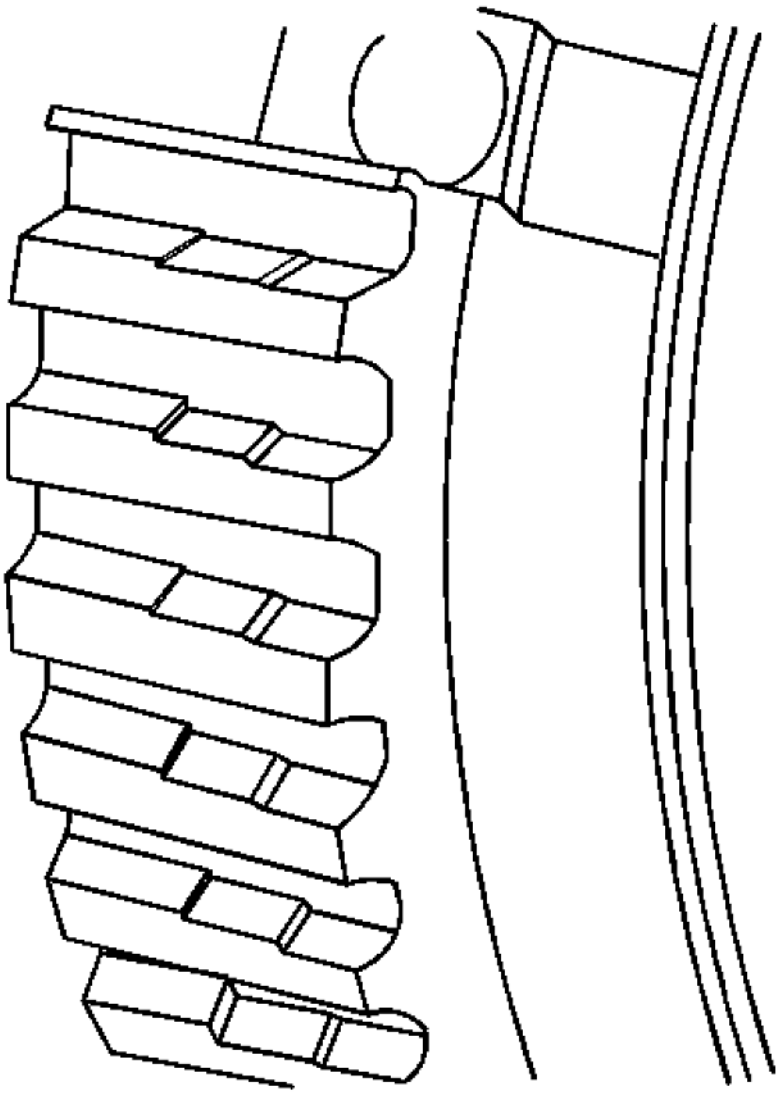

Fig. 123: View Of Stepped Effect On Synchronizer Teeth
Courtesy of GENERAL MOTORS CORP.

IMPORTANT: When you service the synchronizers, retain them in the order that they are removed. Mark the parts to ensure the correct position for inspection and assembly.

1. Clean all the synchronizer parts in a suitable cleaning solvent and air dry all the parts.

cardiagn.com

2. Inspect the 1st/2nd gear and the 3rd/4th gear synchronizer hubs for a force fit on the output shaft.
3. Replace synchronizer hubs that do not require a force fit.
4. Inspect the synchronizer hub for wear on the external splines. A stepped effect on the teeth, due to wear, may cause shift concerns.
5. Replace a worn hub.
6. Correct the cause, such as, but not limited to the following conditions:
    - Engine related vibrations
    - Driving at a low speed in a high gear
    - Defective vibration damper or crankshaft

cardiagn.com

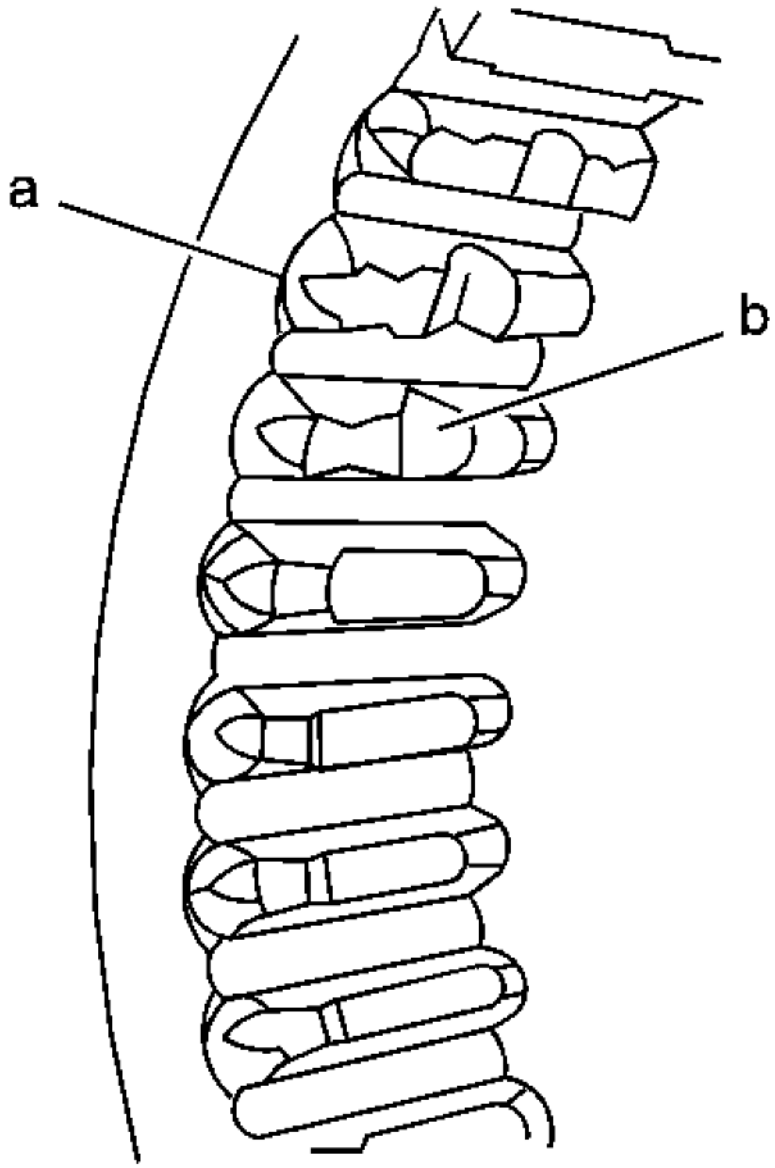

Fig. 124: Identifying Damage On Synchronizer Sleeve Teeth
Courtesy of GENERAL MOTORS CORP.

7. Inspect the synchronizer sleeve teeth (a) for the following conditions, which may cause shift concerns:
   - Grated teeth
   - Chipped off teeth

cardiagn.com

- Blunted teeth

8. Inspect the synchronizer sleeve detent stops (b) for wear or for being chipped off.
9. Replace the synchronizer assembly if the teeth or stops show the above conditions.

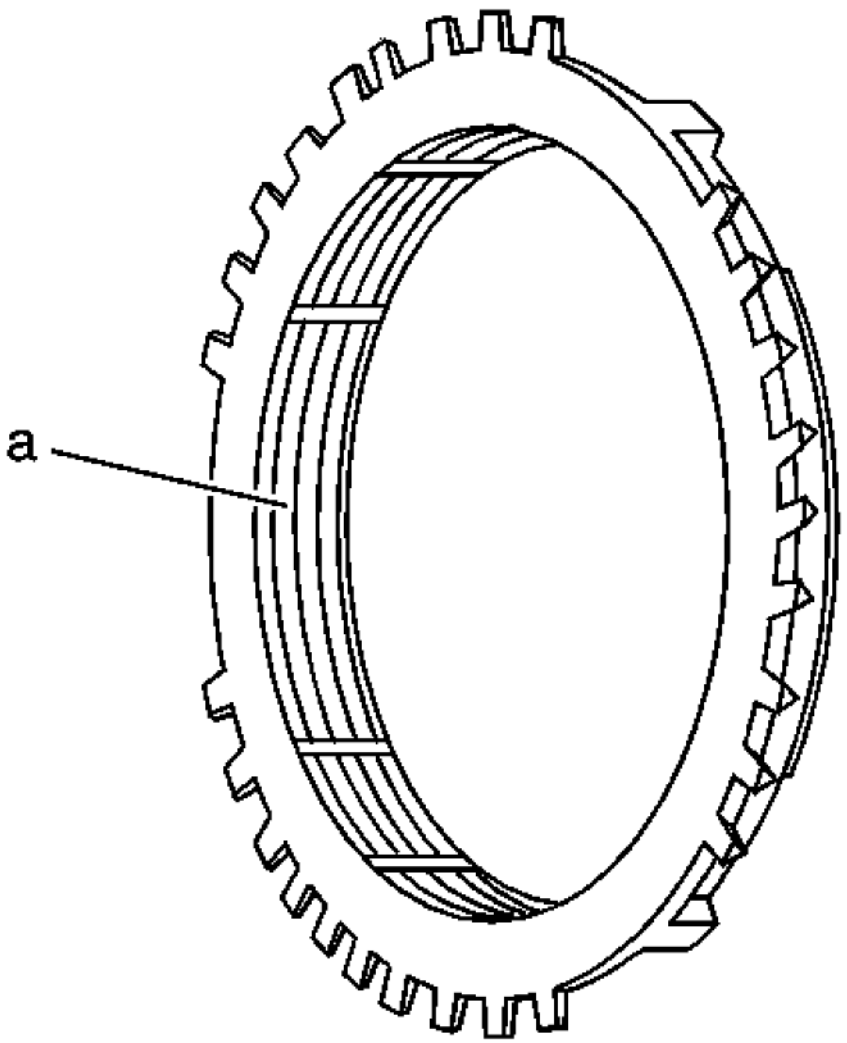

Fig. 125: View Of Synchronizer Blocker Ring Grooves
Courtesy of GENERAL MOTORS CORP.

10. Inspect the synchronizer blocker rings for worn away grooves (a).
11. Replace the blocker ring assembly if the blocker ring grooves are worn.

cardiagn.com

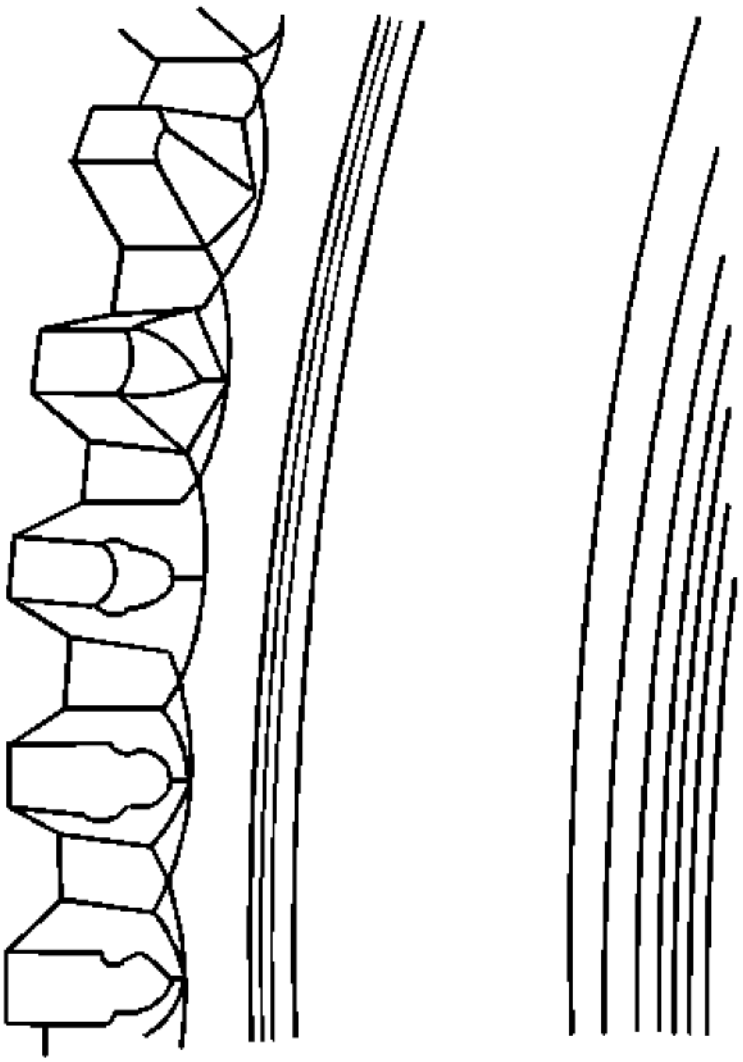

Fig. 126: Inspecting Synchronizer Blocker Rings For Wear Or Damage
Courtesy of GENERAL MOTORS CORP.

12. Inspect the synchronizer blocker rings for worn shift teeth.
13. Inspect the internal ring for being warped or damaged.
14. Inspect the outer ring for worn grooves.
15. Replace the synchronizer assembly for any of the above conditions.

cardiagn.com

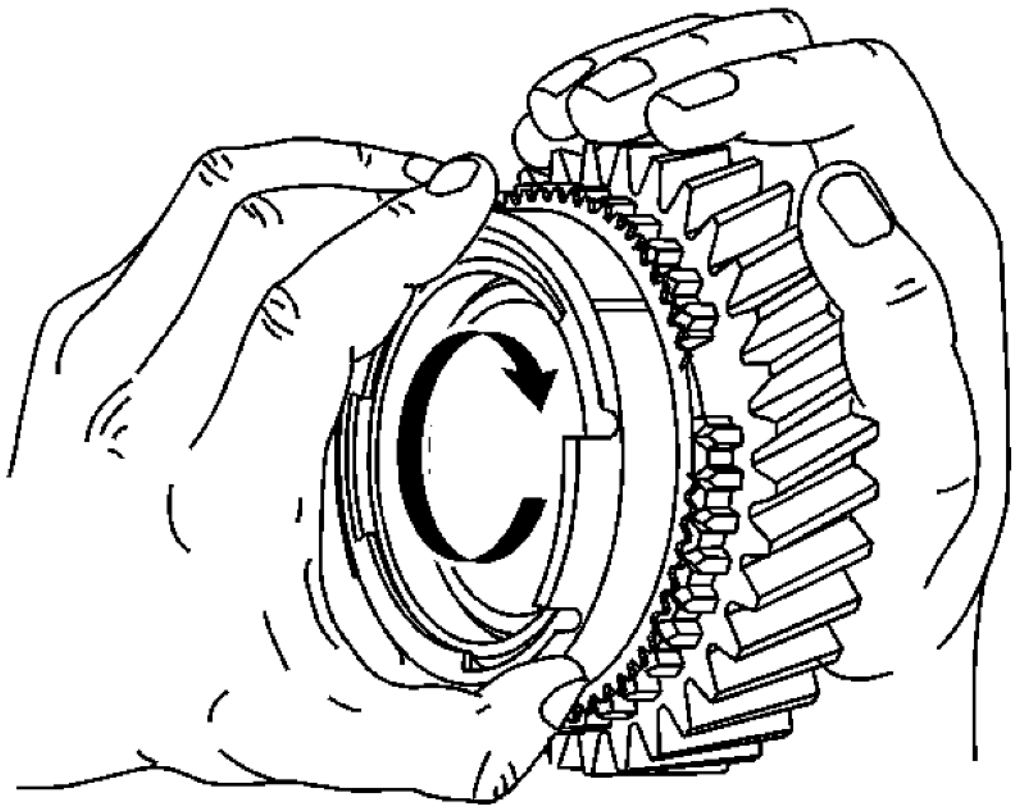

Fig. 127: Ensuring Blocking Ring Locks
Courtesy of GENERAL MOTORS CORP.

16. Install the synchronizer blocking rings to the correct speed gear.
17. Inspect the braking effect of the blocking ring. Turn the blocking ring in one direction while pushing to the gear cone. Ensure the ring locks.
18. If the ring does not lock, replace the synchronizer assembly.

cardiagn.com

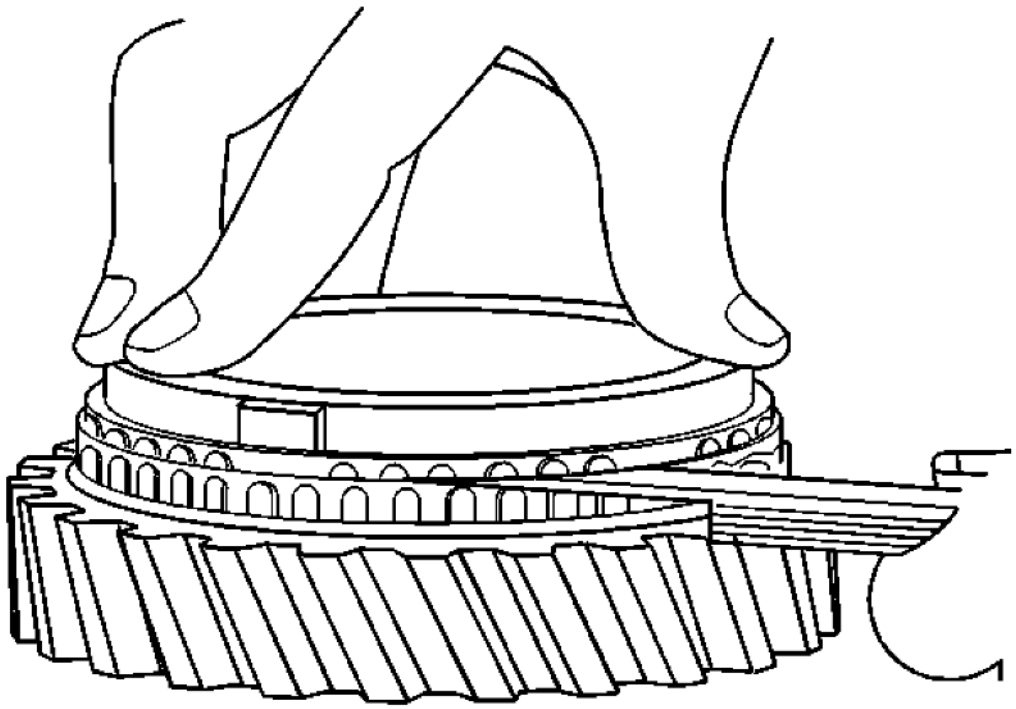

Fig. 128: Measuring Blocker Ring To Gear Clearance
Courtesy of GENERAL MOTORS CORP.

19. Except for 5th gear, measure the blocker ring to gear clearance.
    1. Assemble the correct blocker ring to the correct gear.
    2. Apply pressure to the blocker ring to fully seat the ring.
    3. Using a feeler gauge, measure between the blocker ring teeth and the teeth on the gear.

    Specification:
    - Minimum Clearance 4th Gear: 0.8 mm (0.031 in)
    - Minimum Clearance 3rd Gear: 0.8 mm (0.031 in)
    - Minimum Clearance 2nd Gear: 0.8 mm (0.031 in)
    - Minimum Clearance 1st Gear: 0.8 mm (0.031 in)

20. If using a NEW blocker ring and the standard clearance can not be obtained, replace the gear.

cardiagn.com

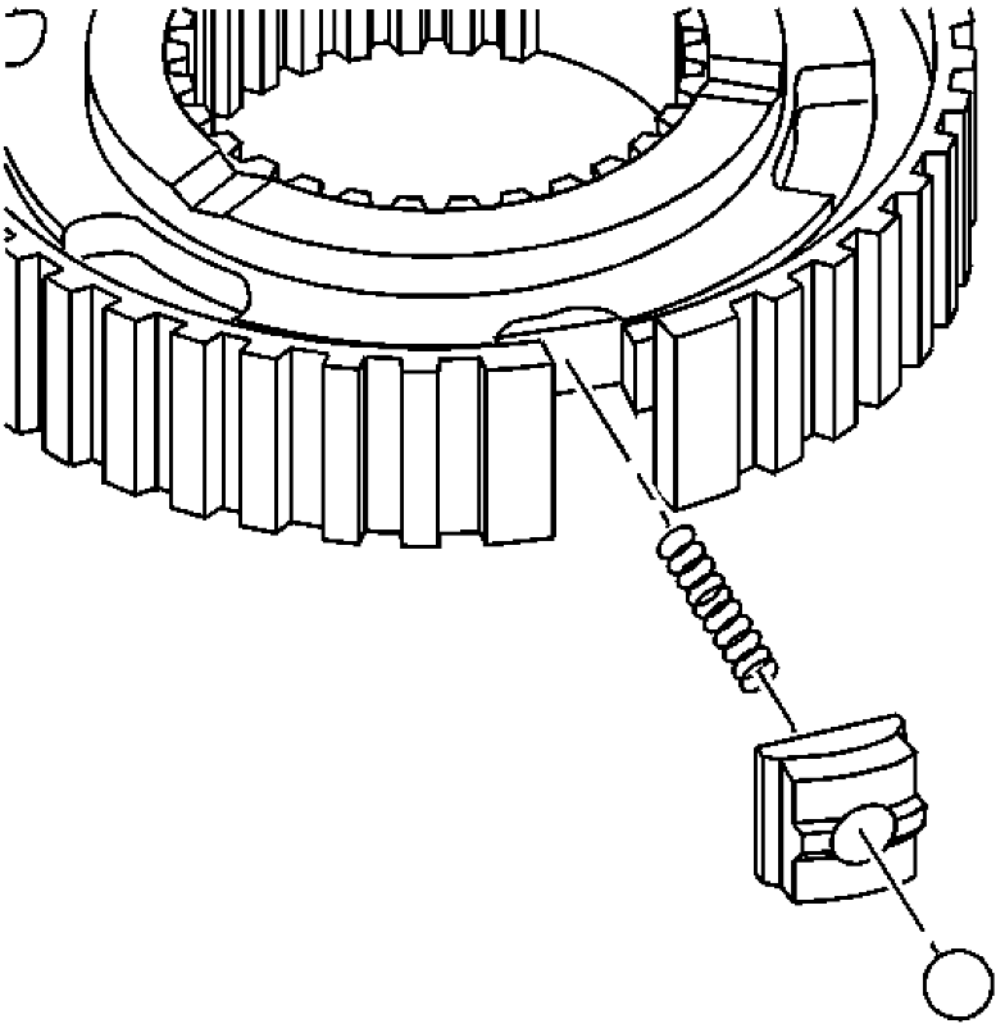

Fig. 129: View Of Pressure Pieces & Springs
Courtesy of GENERAL MOTORS CORP.

21. Inspect the pressure pieces for wear or damage.
22. Inspect the springs for distortion.
23. Replace the worn pressure pieces or faulty springs.

SHIFT SHAFT AND SHIFT FORK CLEANING AND INSPECTION

cardiagn.com

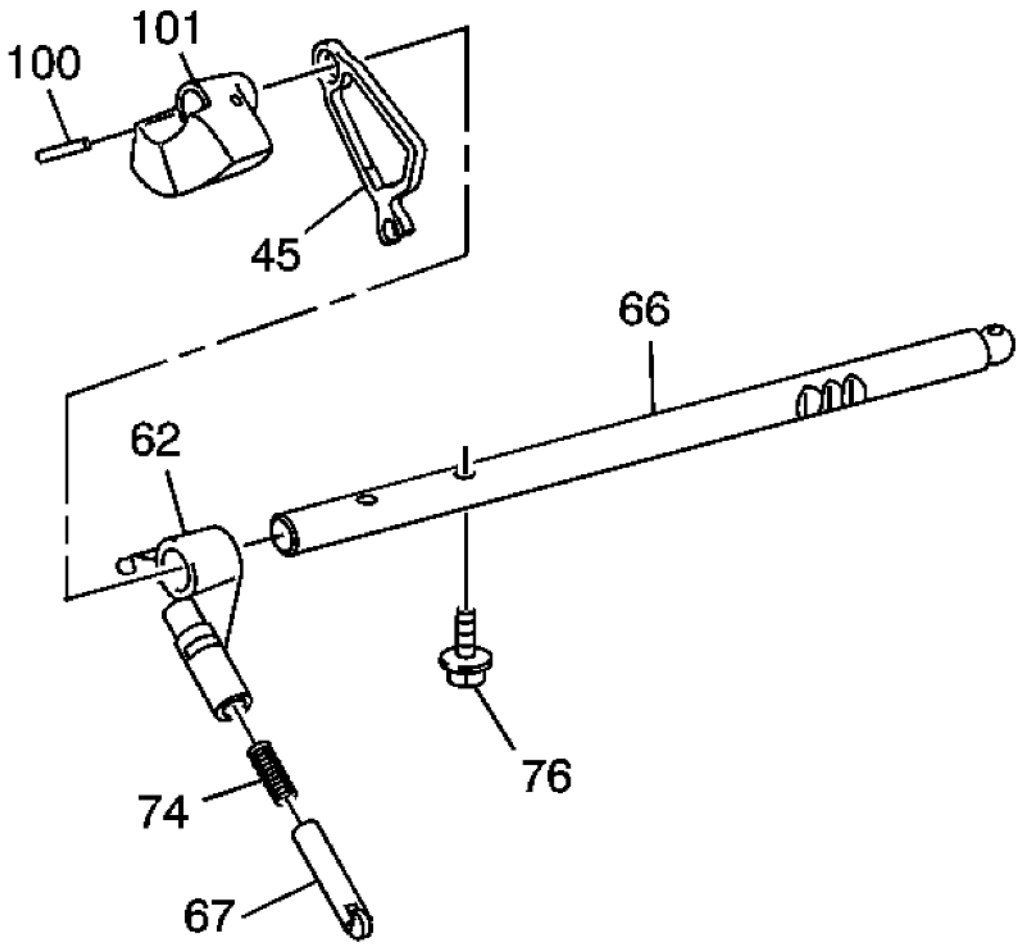

Fig. 130: View Of Shift Control Shaft, Shift Shaft Detent & Components
Courtesy of GENERAL MOTORS CORP.

NOTE: There are many small springs and detent balls within the shift shaft and shift fork assemblies. Use care when performing disassembly of these components.

1. Using a suitable punch and hammer, remove the pin (100) from the dynamic damper weight (101).
2. Remove the shift shaft detent cam (45) and the weight (101) from the shift control shaft (66).
3. Remove the shift shaft detent (67) and the shift shaft detent spring (74).
4. Remove the bolt (76) from the shift shaft detent lever (62).
5. Remove the shift shaft detent lever (62) from the shift control shaft (66).

cardiagn.com

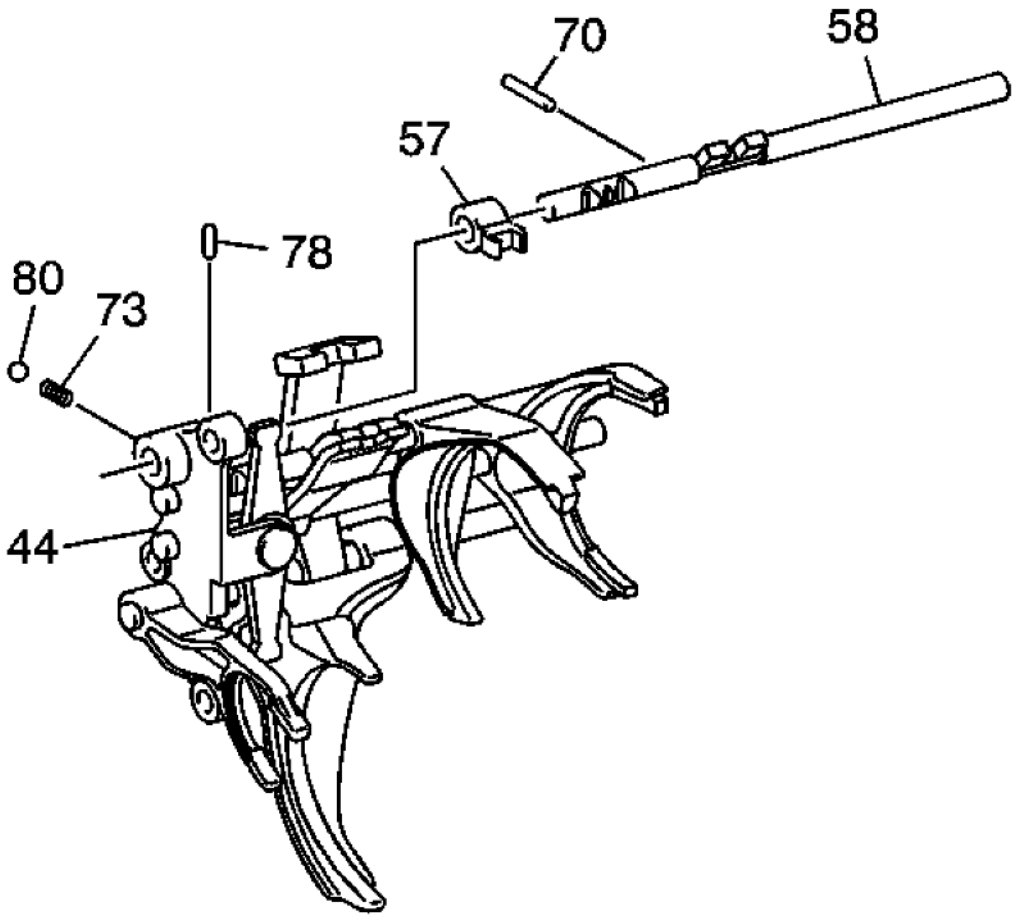

Fig. 131: View Of 1st/2nd Shift Shaft & Components
Courtesy of GENERAL MOTORS CORP.

NOTE: The shift detent ball (80) and spring (73) will come out of the shift control lever when the 1st/2nd shift shaft (58) is removed.

6. Remove the 1st/2nd shift fork pin (70).
7. Remove the 1st/2nd shift shaft (58).
8. Remove the slotted pin (70) from the select control lever assembly (57). Slide the select control lever assembly (57) from the 1st/2nd shift shaft (58).
9. Using a suitable punch and hammer, remove the pin (78) from the shift control lever bracket (44).

cardiagn.com

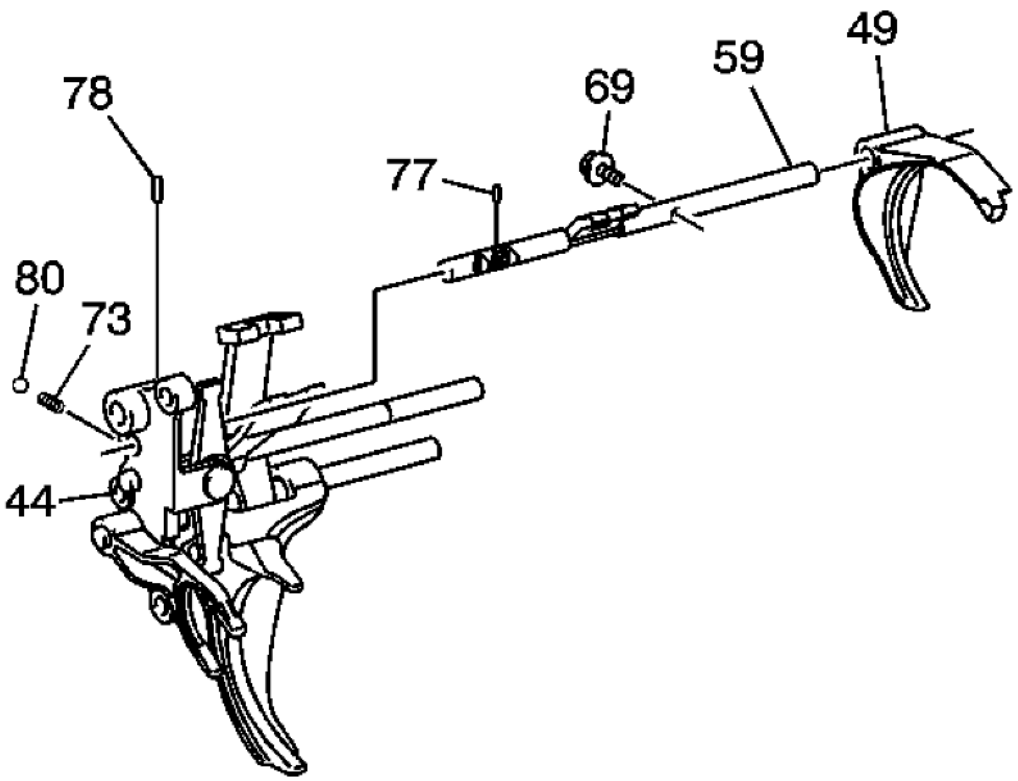

Fig. 132: View Of 3rd/4th Shift Shaft & Components
Courtesy of GENERAL MOTORS CORP.

NOTE:

- **The shift detent ball (80) and spring (73) will come out of the shift control lever bracket (44) when the 3rd/4th shift shaft (59) is removed.**
- **Please note the proper orientation of the 3rd/4th shift fork (49) prior to removal.**

10. Remove the bolt (69) from the 3rd/4th shift fork (49).
11. Remove the 3rd/4th shift shaft (59).
12. Remove the shift fork (49).
13. Use a magnet to remove pins (77 and 78).

cardiagn.com

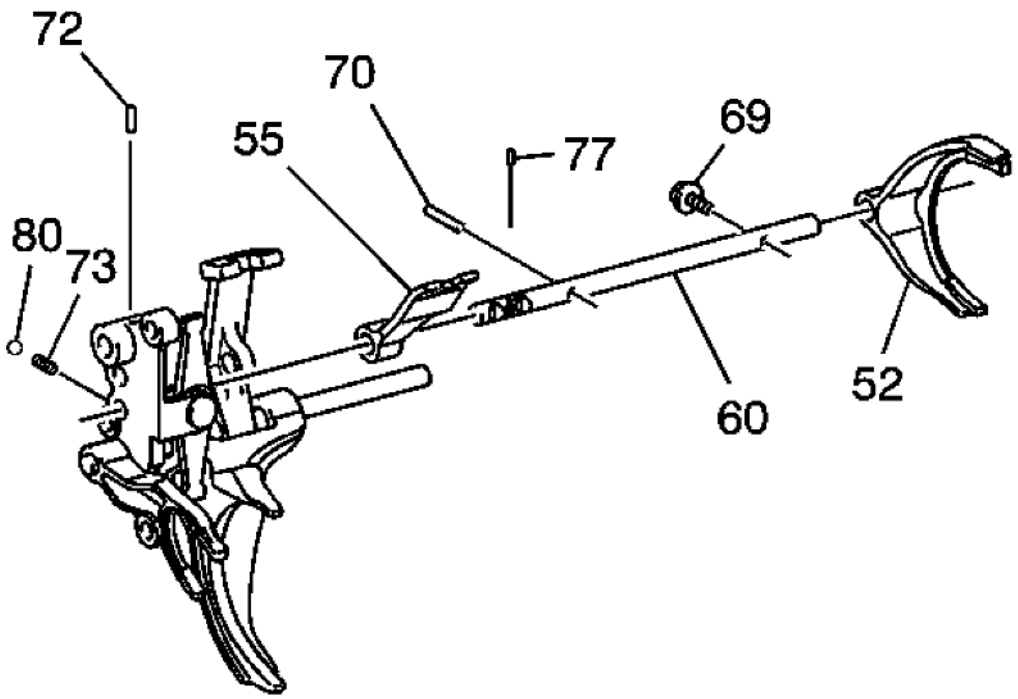

Fig. 133: View Of 5th/6th Shift Shaft & Components
Courtesy of GENERAL MOTORS CORP.

NOTE:

- **The shift detent ball (80) and spring (73) will come out of the shift control lever bracket (44) when the 5th/6th shift shaft (60) is removed.**
- **Please note the proper orientation of the 5th/6th shift fork (52) prior to removal.**

14. Remove the bolt (69) from the 5th/6th shift fork (52). Slide the 5th/6th shift fork (52) from the 5th/6th shift shaft (60).
15. Remove the 5th/6th shift shaft (60).
16. Using a suitable punch and hammer, remove the pin (70) from the shift lever assembly (55). Slide the shift lever assembly (55) from the 5th/6th shift shaft (60).
17. Using a suitable punch and hammer, remove pins (77 and 72).

cardiagn.com

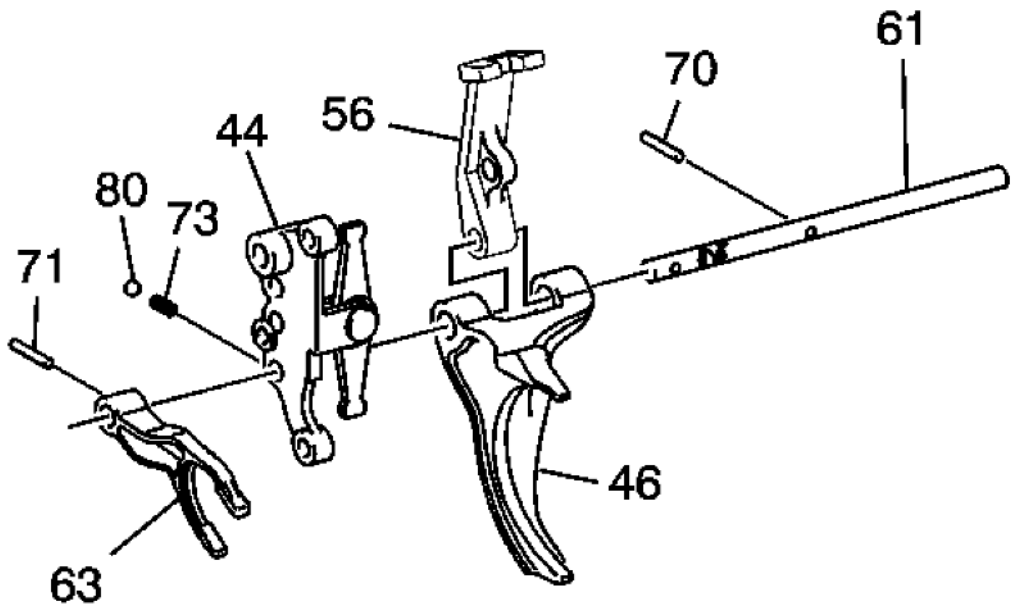

Fig. 134: View Of 1st/2nd Shift Fork Assembly, Reverse Shift Shaft & Components
Courtesy of GENERAL MOTORS CORP.

NOTE: The shift detent ball (80) and spring (73) will come out of the shift control lever bracket (44) when the reverse shift shaft (61) is removed.

18. Using a suitable punch and hammer, remove the slotted pin (71) from the reverse shift fork (63). Slide the reverse shift fork (63) off the reverse shift shaft (61).
19. Remove the reverse shift shaft assembly.

NOTE: Please note the proper orientation of the 1st/2nd shift fork (46) prior to removal.

20. Using a suitable punch and hammer, remove the long, slotted pin (70) from the internal shift control lever (56). Slide the internal shift control lever (56) and 1st/2nd shift fork assembly (46) from the reverse shift shaft (61).

cardiagn.com

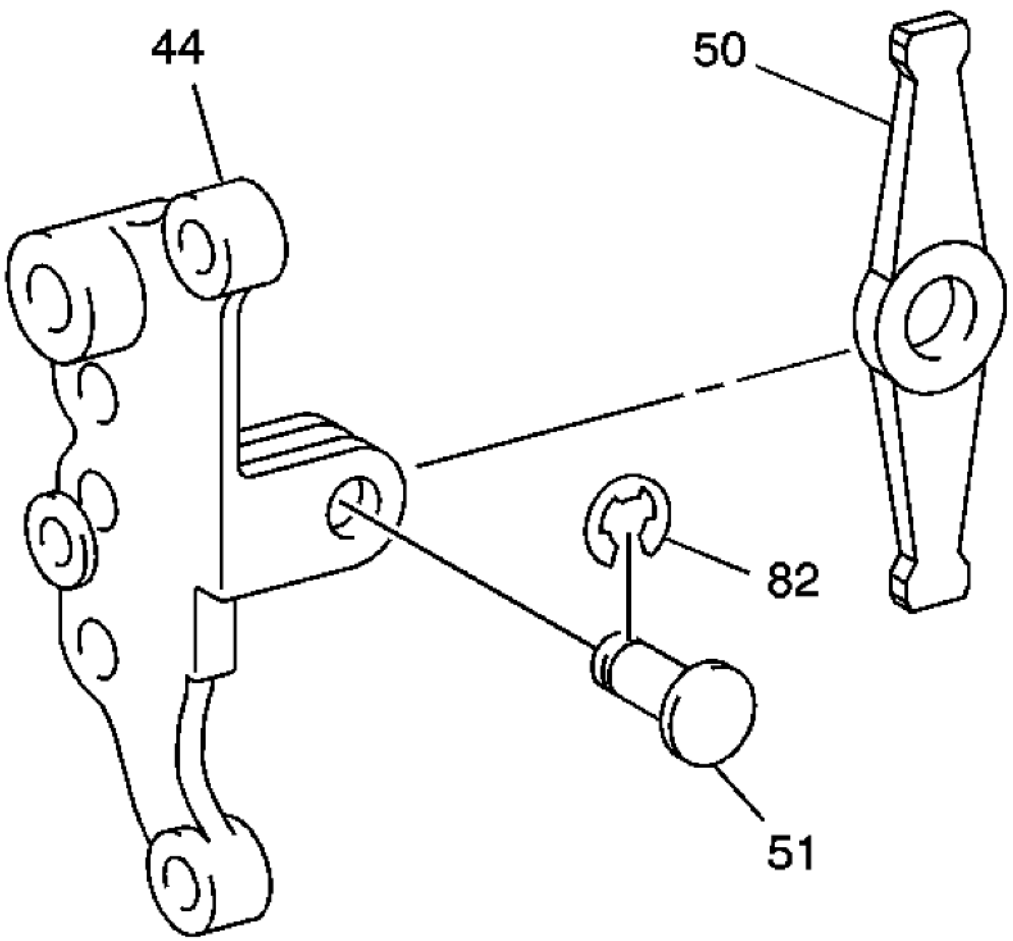

Fig. 135: View Of Control Select Arm Pin, Shift Control Lever Bracket & E-Ring
Courtesy of GENERAL MOTORS CORP.

21. Remove the selector control lever pin retainer (82) and pull the control select arm pin (51) from the shift control lever bracket (44).
22. Remove the control select arm (50) from the shift control lever bracket (44).

cardiagn.com

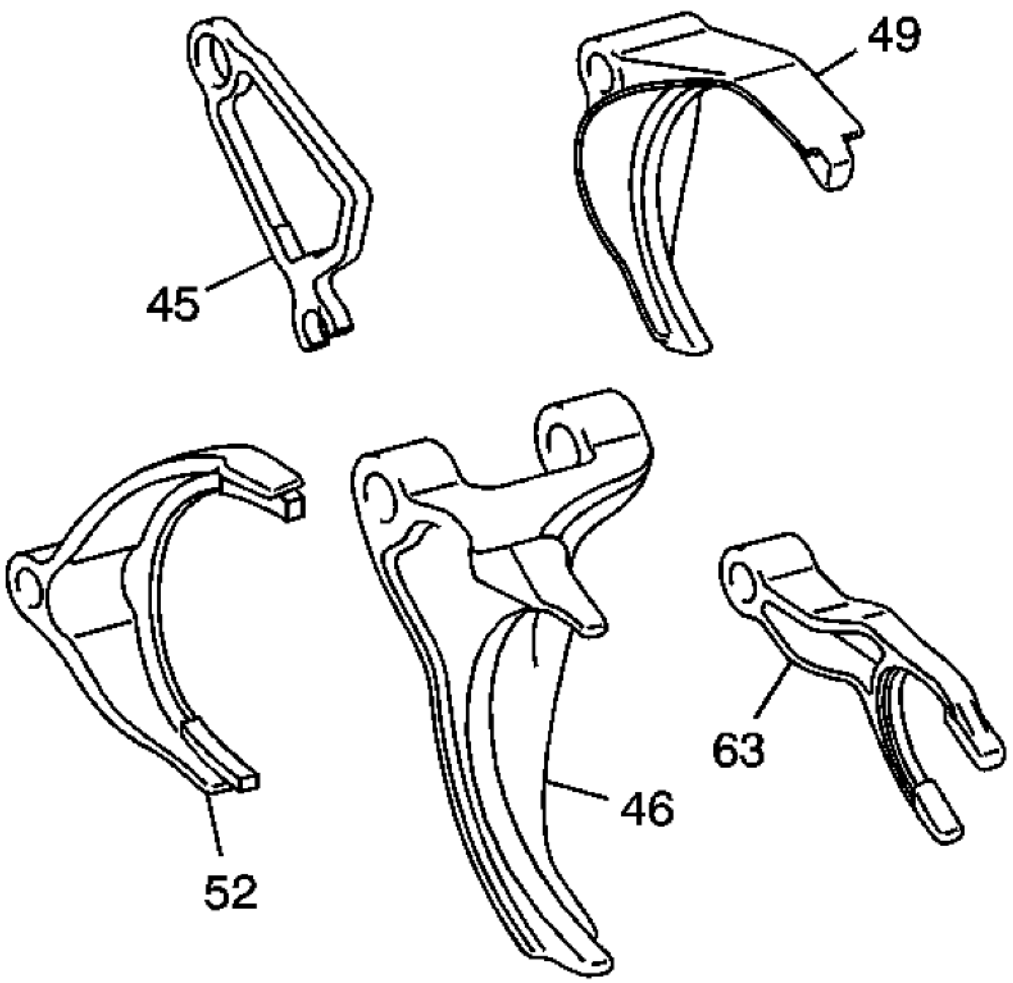

Fig. 136: Inspecting Cam, Shift Forks & Assembly
Courtesy of GENERAL MOTORS CORP.

23. Inspect the cam (45), shift forks (49), (52), (63) and assembly (46) for:
    - Bent fork
    - Hole for wear
    - Cracks

cardiagn.com

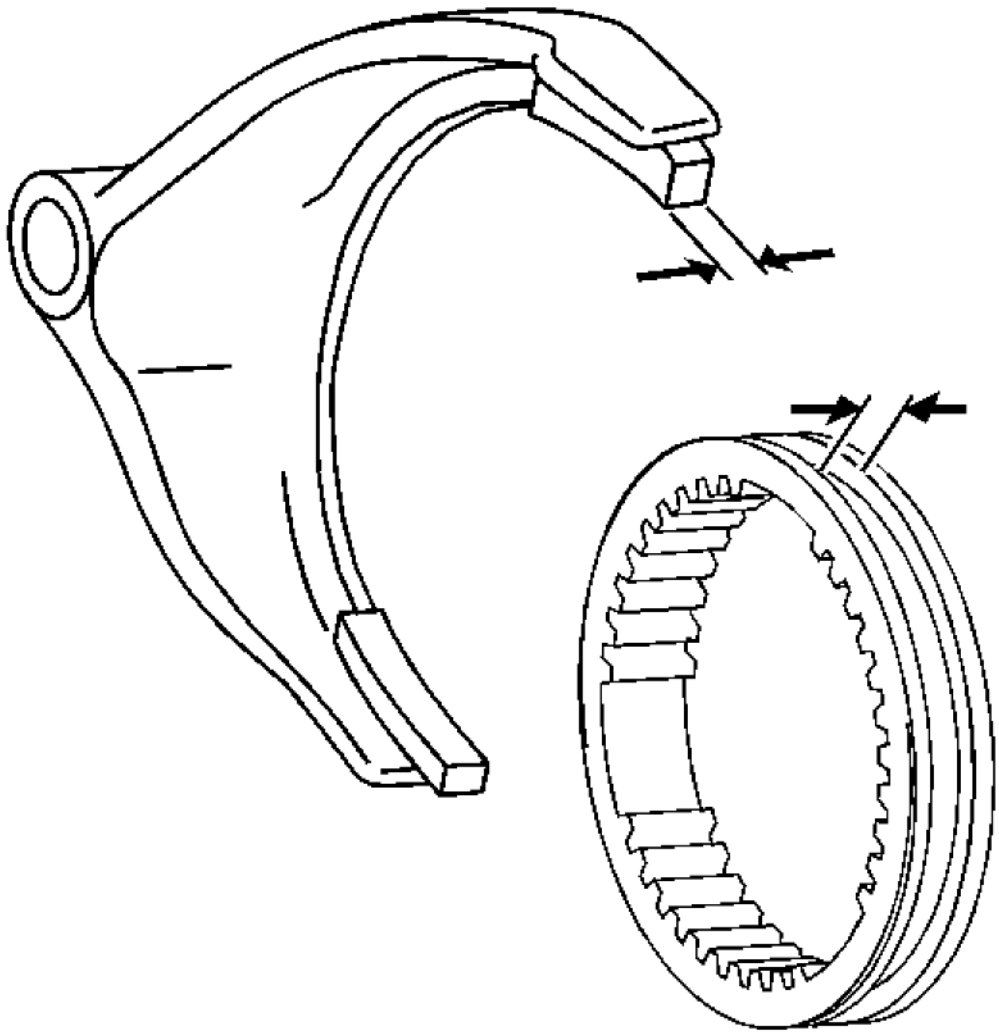

Fig. 137: Measuring Fork Width & Sleeve Groove Width
Courtesy of GENERAL MOTORS CORP.

24. Measure the fork width and sleeve groove width for wear. If synchronizer sleeve to shift fork width clearance exceeds the maximum, replace the synchronizer sleeve and/or shift fork. Refer to **Transmission Clearance Specifications** and see Synchronizer Sleeve to Shift Fork Clearance - Maximum Clearance table.

cardiagn.com

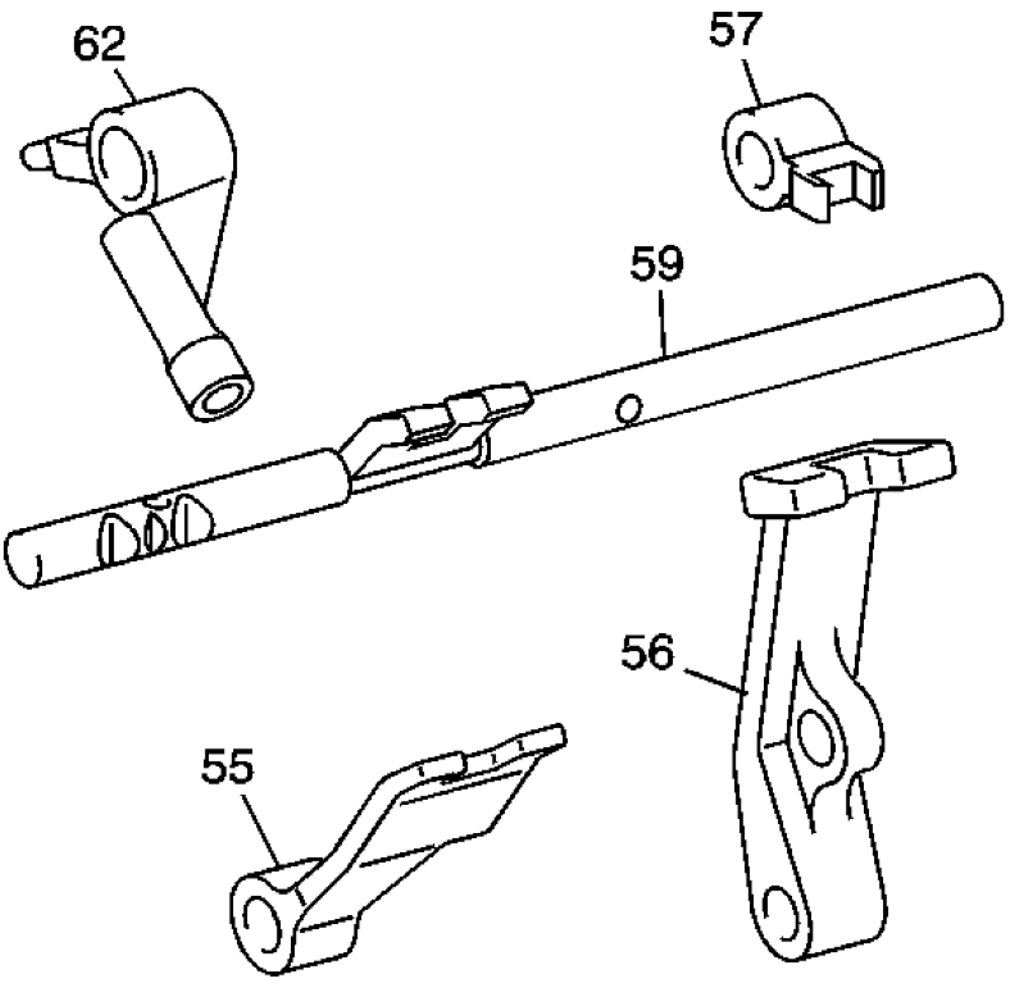

Fig. 138: Inspecting Detent Lever, Assembly, Shift Shaft & Control Lever
Courtesy of GENERAL MOTORS CORP.

25. Inspect the detent lever (62), assembly (56 and 57), shift shaft (59) and control lever (56) for:
    - Bent fork
    - Hole for wear
    - Cracks

Shift Shaft and Shift Forks Assemble

cardiagn.com

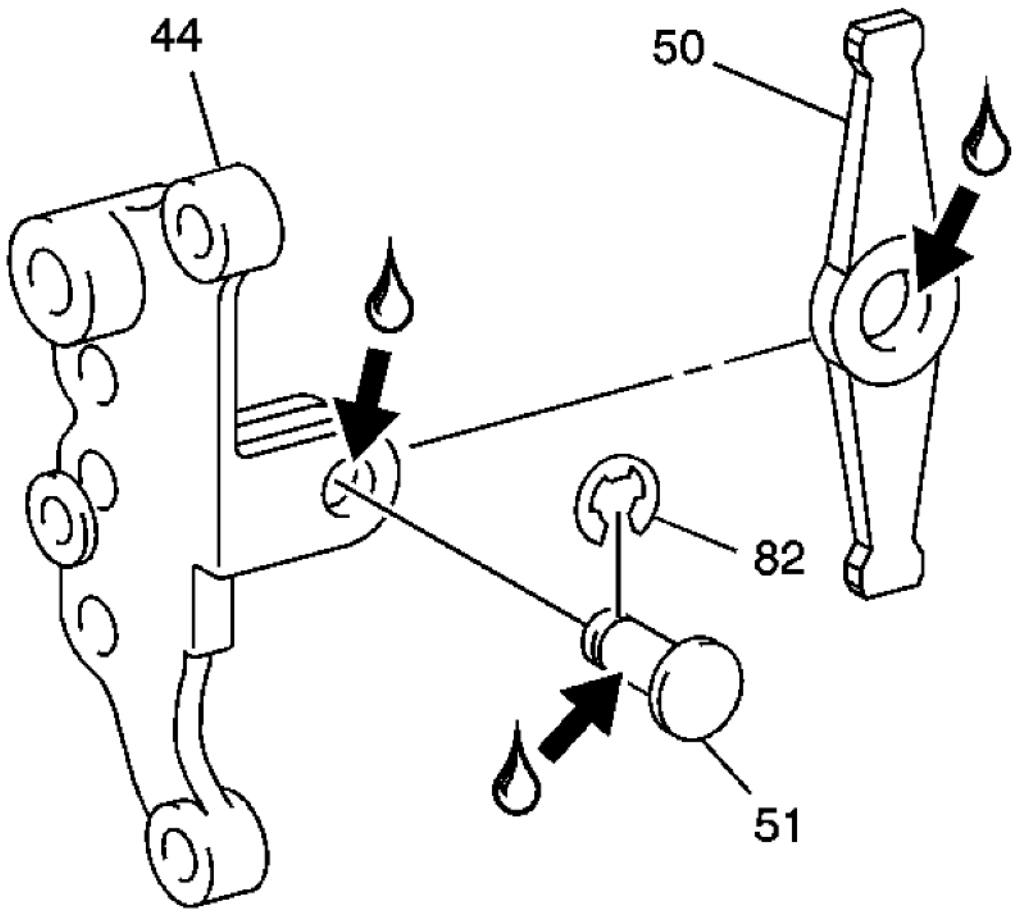

Fig. 139: View Of Control Select Arm, Shift Control Lever Bracket, Control Select Arm Pin & E-Ring
Courtesy of GENERAL MOTORS CORP.

1. Apply lubricant and install the control select arm (50) into the shift control lever bracket (44). Refer to **Adhesives, Fluids, Lubricants, and Sealers**.
2. Apply lubricant and install the control select arm pin (51).
3. Install the selector control lever pin retainer (82).

cardiagn.com

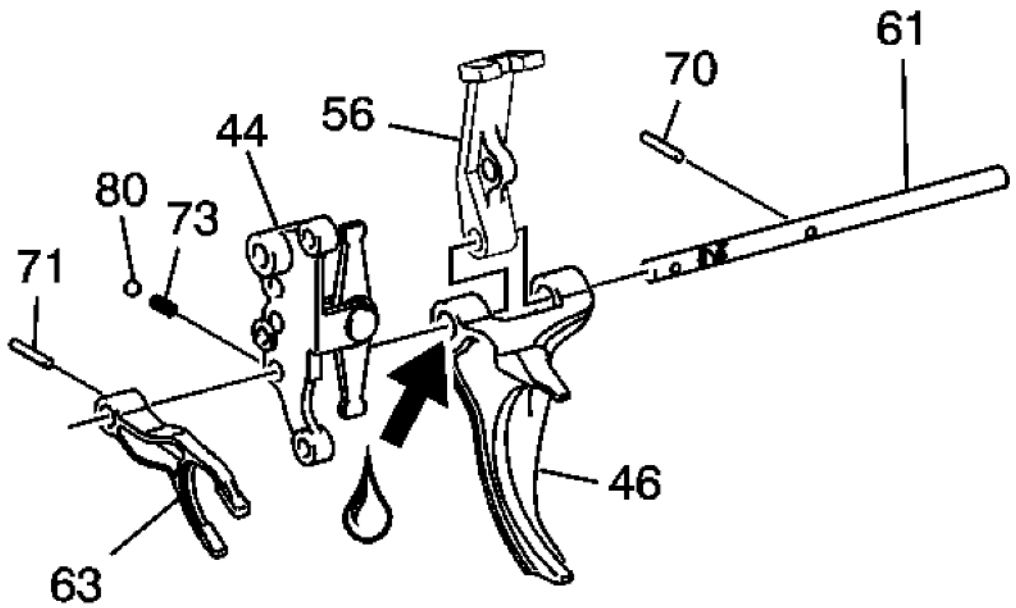

Fig. 140: View Of Reverse Shift Shaft Components
Courtesy of GENERAL MOTORS CORP.

4. Apply lubricant and slide the internal shift control lever (56) and 1st/2nd shift fork assembly (46) onto the reverse shift shaft (61). Refer to **Adhesives, Fluids, Lubricants, and Sealers**. Install the slotted pin (70) into the lever (56).
5. Install the shift control lever bracket (44) onto the reverse shift shaft (61).
6. Slide the reverse shift fork (63) onto the reverse shift shaft (61). Install the long, slotted pin (71) into the reverse shift fork (63).
7. Install the spring (73) and shift detent ball (80) into the bracket (44).

cardiagn.com

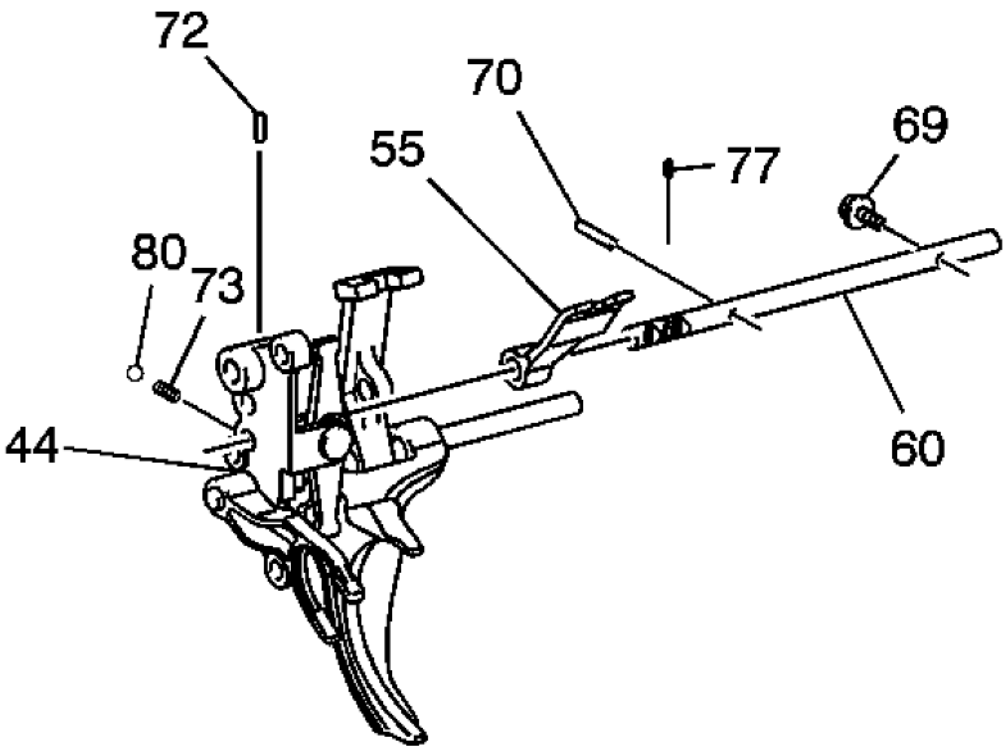

Fig. 141: View Of 5th/6th Shift Shaft Components
Courtesy of GENERAL MOTORS CORP.

8. Install the pin (72) into the shift control lever bracket (44).
9. Install the pin (77) into the 5th/6th shift shaft (60).
10. Install the 5th/6th shaft (60) into the hole in the shift lever assembly (55).

CAUTION: Refer to Fastener Caution .

11. Install a new bolt (69) into the shift lever assembly (55). Tighten the bolt to 19.5 N.m (14 lb ft).
12. Install the 5th/6th shift shaft (60) into the shift control lever bracket (44).

cardiagn.com

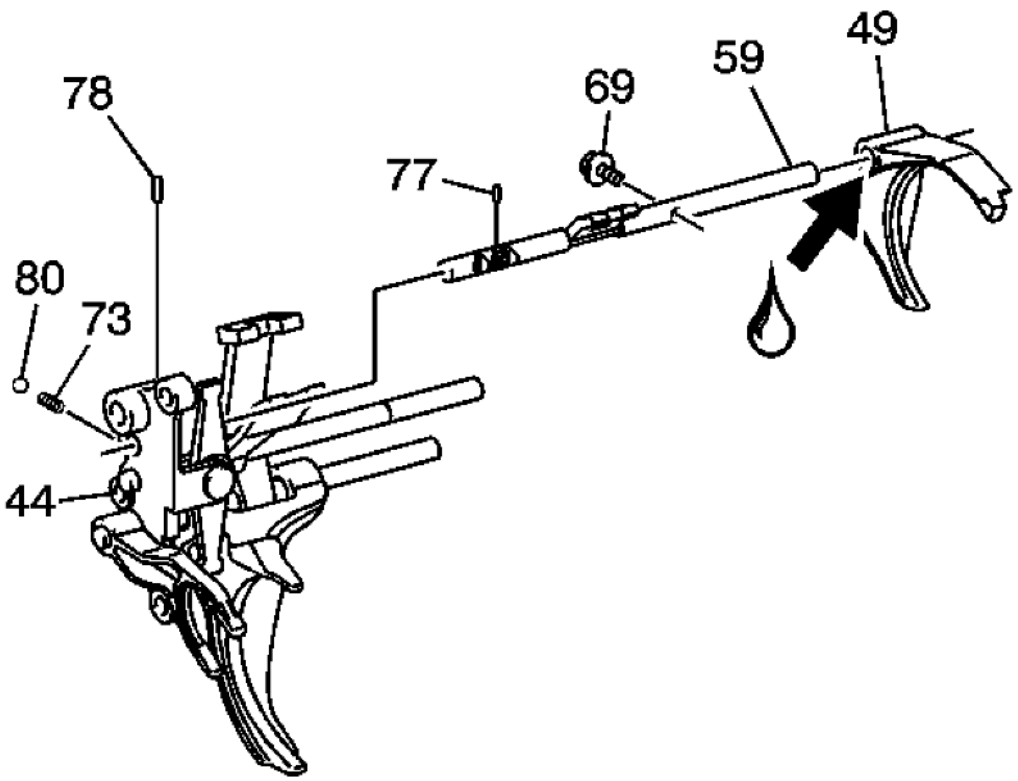

Fig. 142: View Of 3rd/4th Shift Shaft Components
Courtesy of GENERAL MOTORS CORP.

13. Apply lubricant and slide the 3rd/4th shift fork (49) onto the 3rd/4th shift shaft (59). Install a new bolt (69) into the 3rd/4th shift fork (49). Tighten the bolt to 19.5 N.m (14 lb ft).
14. Insert the spring (73) and the shift detent ball (80) into the shift control lever bracket (44).
15. Install the pin (77) into the 3rd/4th shift shaft (59).
16. Install pin (78) into the shift control lever bracket (44).
17. Install the 3rd/4th shift shaft (59) into the shift control lever (44).

cardiagn.com

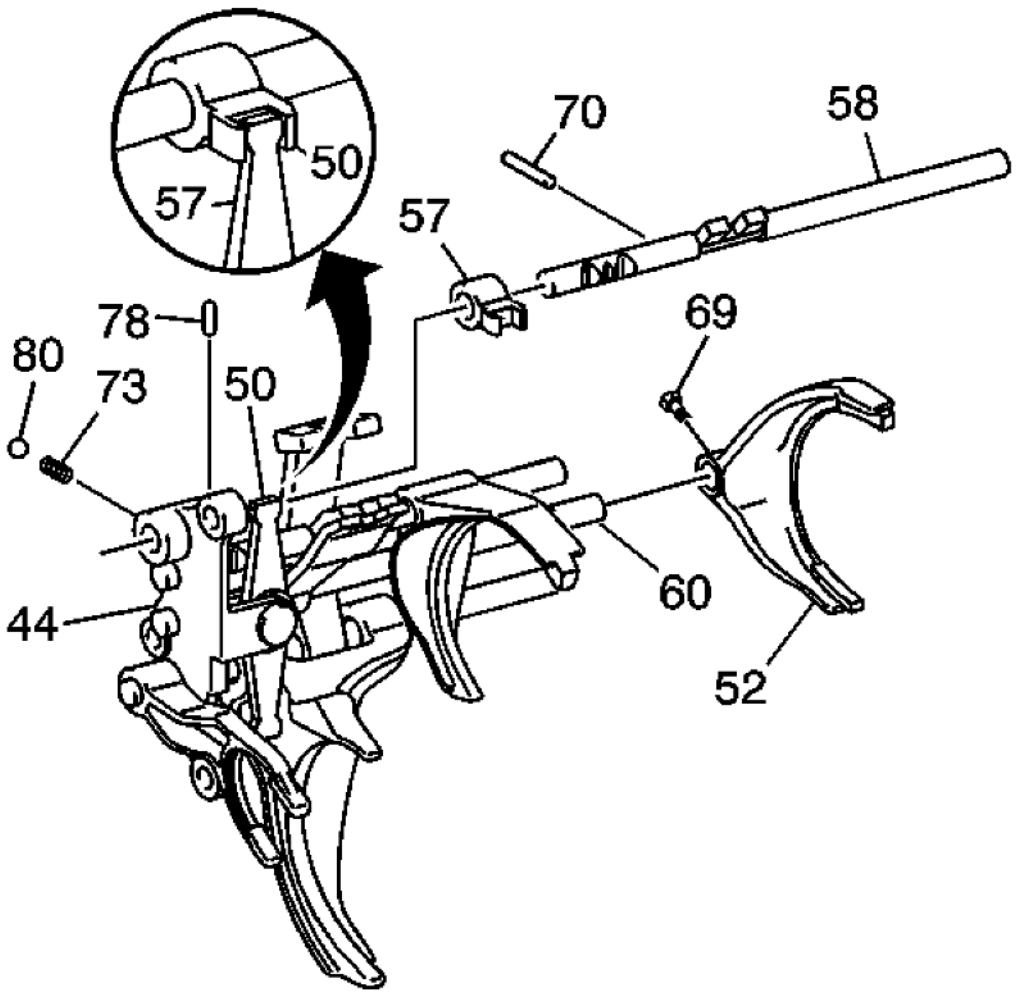

Fig. 143: View Of 1st/2nd Shift Shaft Components
Courtesy of GENERAL MOTORS CORP.

18. Install the spring (73) and detent ball (80) into the shift control lever bracket (44).
19. Install the pin (78) into the shift control lever bracket (44).
20. Install the groove of select control lever assembly (57) into the projection of the control select arm (50).
21. Slide the 1st/2nd shift shaft (58) into the shift control lever (57), and the shift control lever bracket (44).
22. Install pin (70) into the 1st/2nd shift shaft (58).
23. Install the 5th/6th shift fork (52) onto the 5th/6th shift shaft (60) and retain with a new bolt (69). Tighten the bolt to 19.5 N.m (14 lb ft).

cardiagn.com

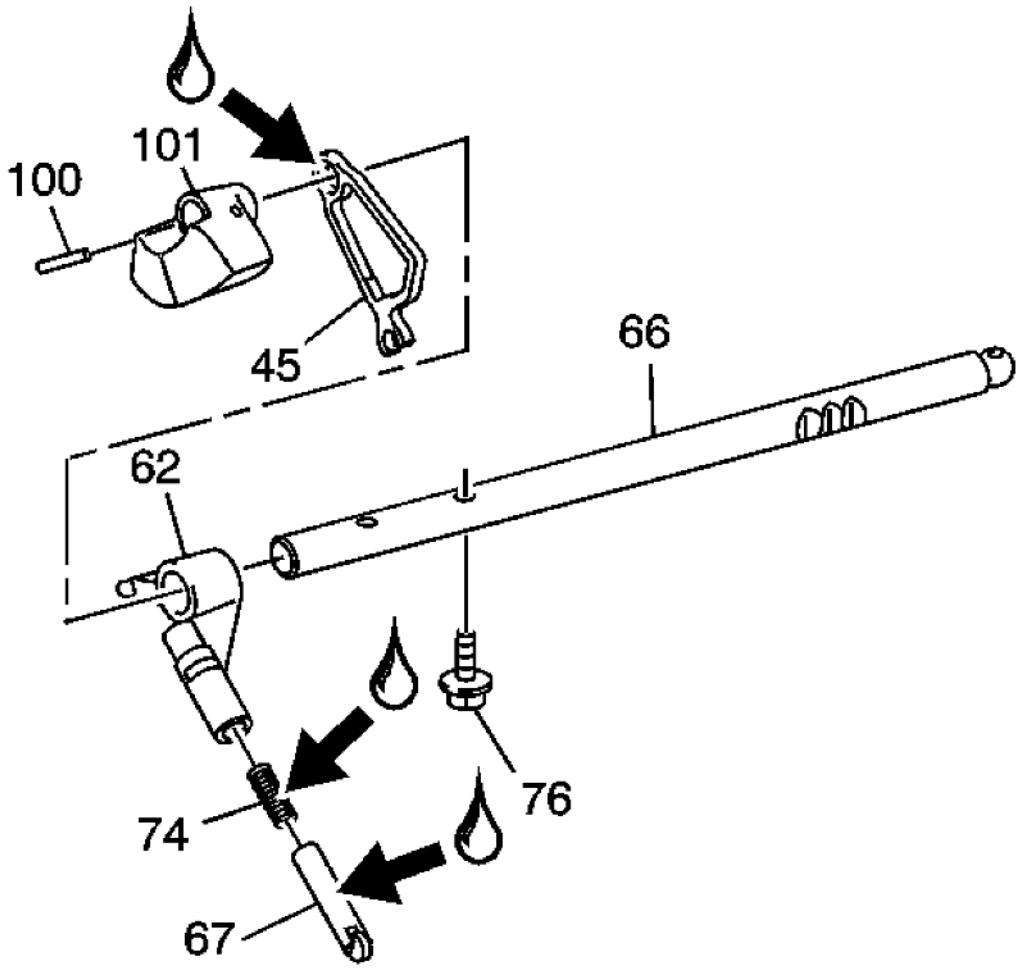

Fig. 144: View Of Shift Shaft Detent Lever & Shift Control Shaft Components
Courtesy of GENERAL MOTORS CORP.

24. Slide the shift shaft detent lever (62) onto the shift control shaft (66).
25. Install a new bolt (76) into the shift shaft detent lever (62). Tighten the bolt to 38 N.m (28 lb ft).
26. Apply lubricant and insert the shift shaft detent spring (74) and the shift shaft detent (67) into the lever (62).
27. Apply lubricant and slide the shift shaft detent cam (45) onto the shift control shaft (66).
28. Insert the assembled shift shaft detent lever (62, 74, 67) into the opening in the shift shaft detent cam (45).
29. Install the dynamic damper weight (101) onto the shift control shaft (66).
30. Insert the pin (100) into the dynamic damper weight (101).
31. Check the function of assembled components. The shift shaft detent (67) should slide on the shift shaft

cardiagn.com

detent cam (45).

TRANSMISSION CASE CLEANING AND INSPECTION

Clutch Housing

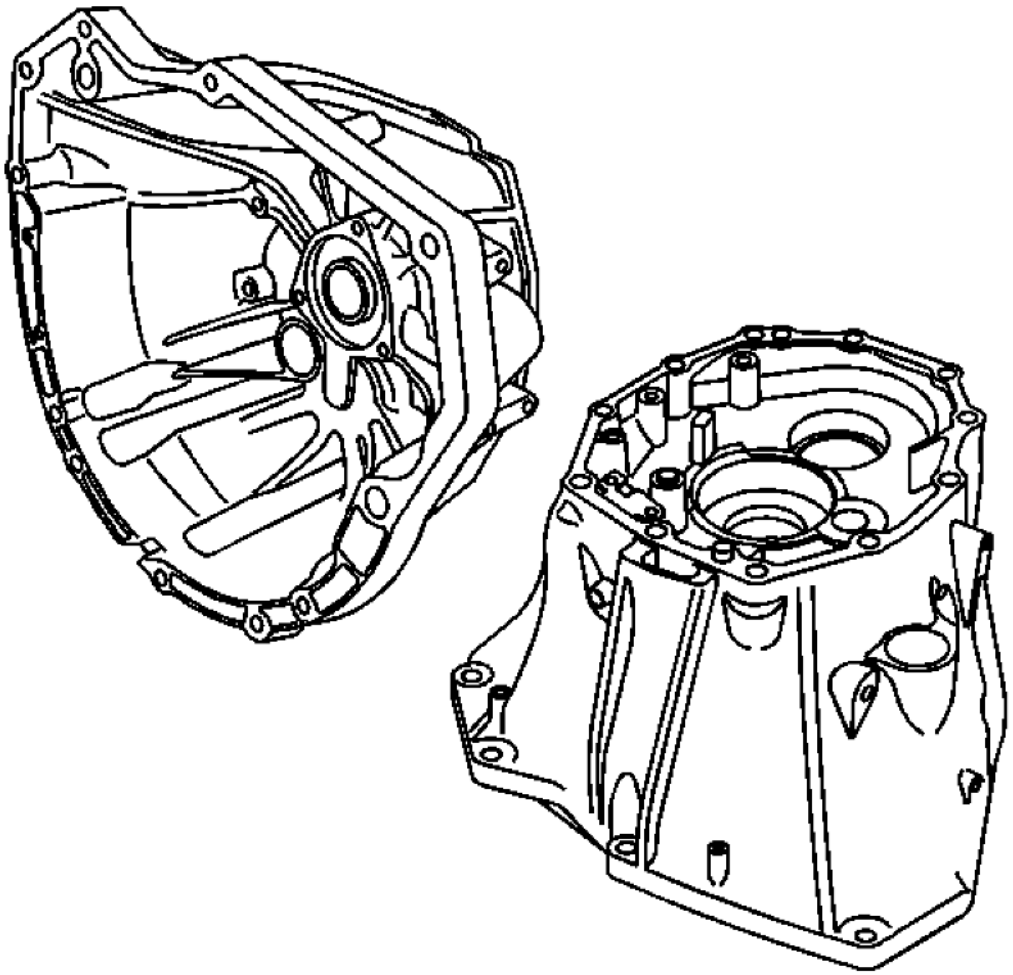

Fig. 145: Inspecting Clutch Housing
Courtesy of GENERAL MOTORS CORP.

1. Clean the clutch housing in a suitable cleaning solvent and air dry.
2. Inspect the clutch housing for the following conditions:
   - Cracks
   - Damaged mounting flanges

cardiagn.com

- Damaged bolt holes

CAUTION: Refer to Machined Surface Damage Caution .

3. Remove the sealer from the case sealing surfaces.
4. Inspect the case for being broken or cracked.
5. Inspect the bearing bore for the following conditions:
   - A spun bearing
   - Cracks
6. Replace the case assembly if any of the above conditions are found.
7. Inspect the sealing surfaces for damage.
8. Repair small scratches or nicks with a soft stone.
9. Inspect the case threaded bolt holes for damage.
10. Repair any damaged threads.
11. Inspect the location pins for being loose or missing.
12. Repair or replace any damaged location pins.

Middle Case

cardiagn.com

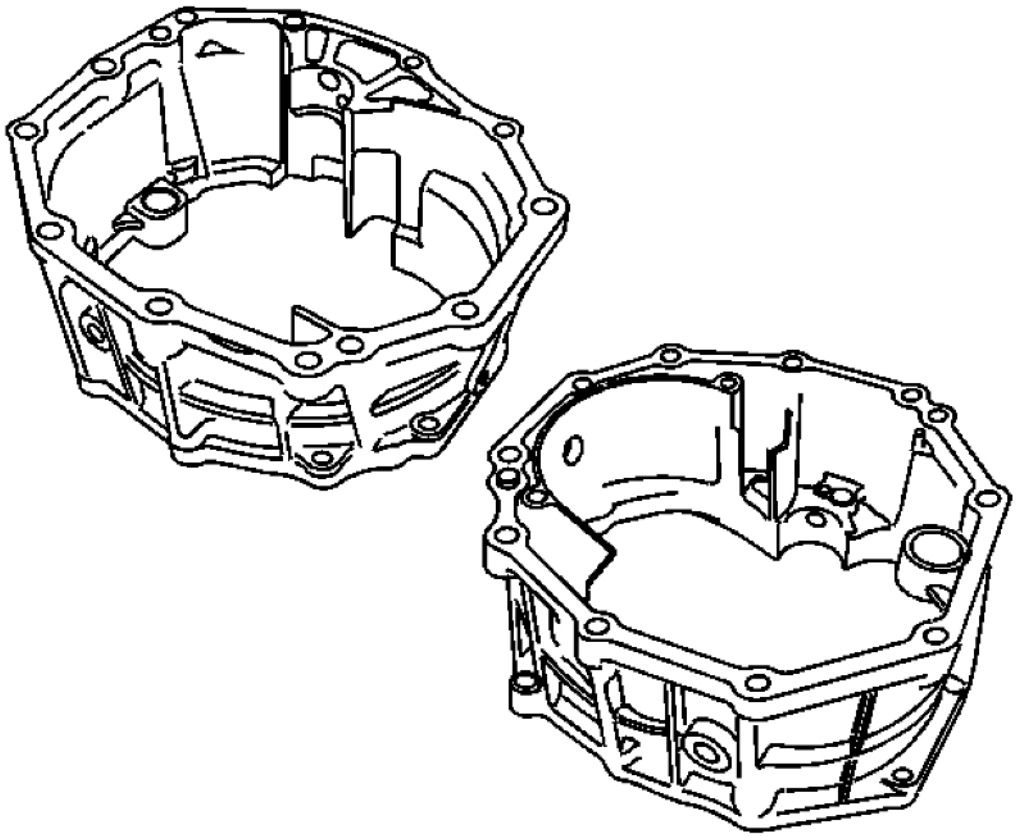

Fig. 146: Inspecting Middle Case
Courtesy of GENERAL MOTORS CORP.

1. Clean the middle case in a suitable cleaning solvent and air dry.

CAUTION: Refer to Machined Surface Damage Caution .

2. Remove the sealer from the case sealing surfaces.
3. Inspect the case for being broken or cracked.
4. Inspect the input shaft bearing bore for the following conditions:
   - A spun bearing
   - Cracks
5. Inspect the countershaft front bearing bore for the following conditions:
   - A spun bearing

cardiagn.com

- Cracks

6. Replace the case assembly if any of the above conditions are found.
7. Inspect the sealing surfaces for damage.
8. Repair small scratches or nicks with a soft stone.
9. Inspect the case threaded bolt holes for damage.
10. Repair any damaged threads.
11. Inspect the location pins for being loose or missing.
12. Repair or replace any damaged location pins.

Rear Case

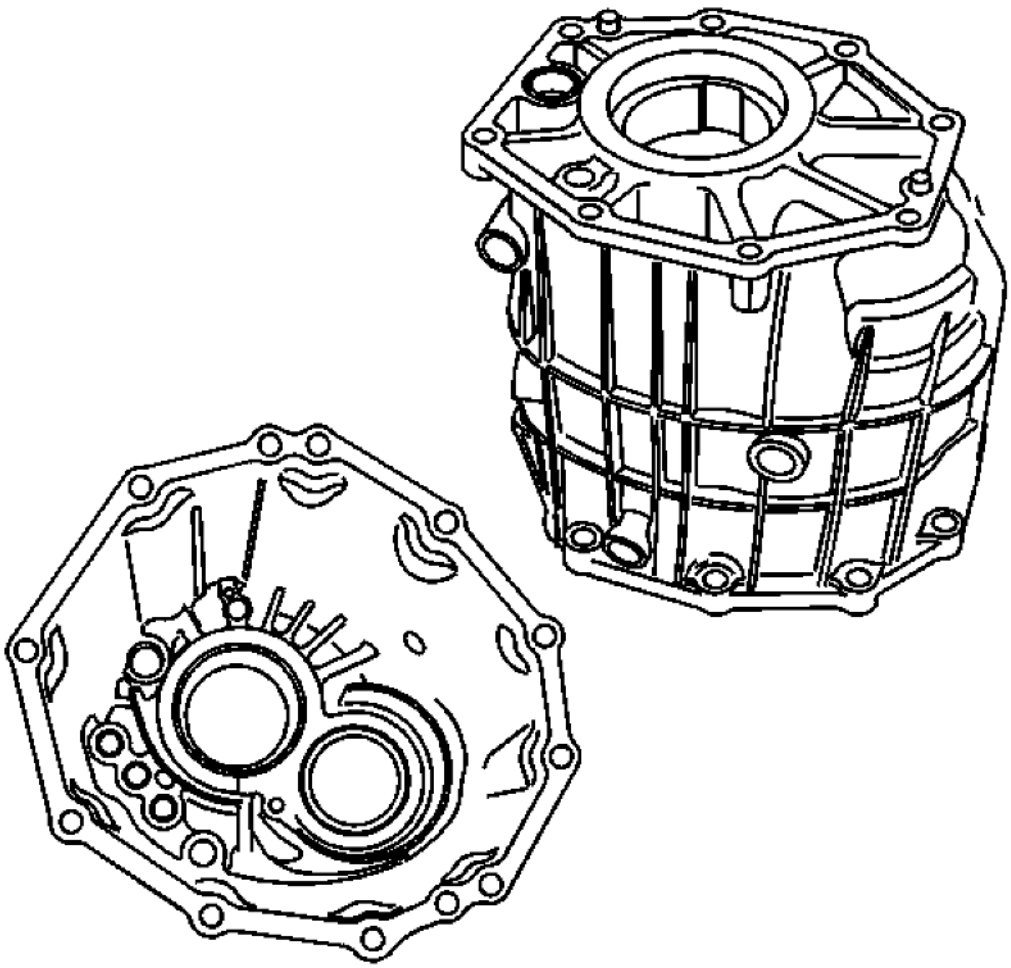

Fig. 147: Inspecting Rear Case

cardiagn.com

Courtesy of GENERAL MOTORS CORP.

1. Clean the rear case in a suitable cleaning solvent and air dry.

CAUTION: Refer to Machined Surface Damage Caution .

2. Remove the sealer from the case sealing surfaces.
3. Inspect the sealing surfaces for damage.
4. Inspect the case threaded bolt holes for damage.
5. Repair any damaged threads.
6. Inspect the location pins for being loose or missing.
7. Repair or replace any damaged location pins.
8. Inspect the shift shaft bushings for excessive wear.
9. Inspect the bearing bore.
10. Replace the case assembly if the shift shaft bushings are faulty.

Extension Housing

cardiagn.com

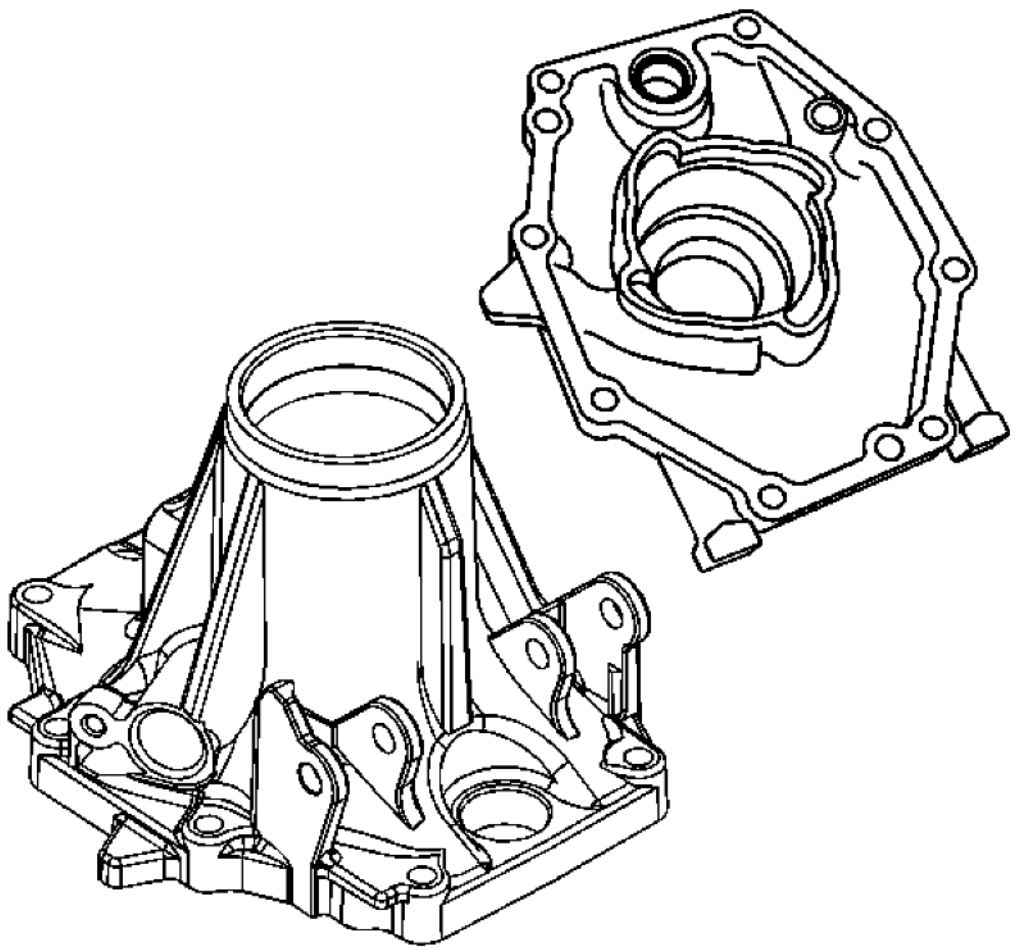

Fig. 148: View Of Extension Housing
Courtesy of GENERAL MOTORS CORP.

1. Clean the extension housing in a suitable cleaning solvent and air dry.

CAUTION: Refer to Machined Surface Damage Caution .

2. Remove the sealer from the extension sealing surfaces.
3. Inspect the sealing surfaces for damage.
4. Inspect the extension for being broken or cracked.
5. Inspect the oil seal for wear or damage. The oil seal is serviced only with the extension housing.

cardiagn.com

6. Inspect the bearing bore.
7. Replace the extension if any of the above conditions are found.
8. Inspect the case threaded bolt holes for damage.
9. Repair any damaged threads.
10. Repair or replace any damaged location pins.

SYNCHRONIZERS ASSEMBLE

5th/6th Gear Synchronizer

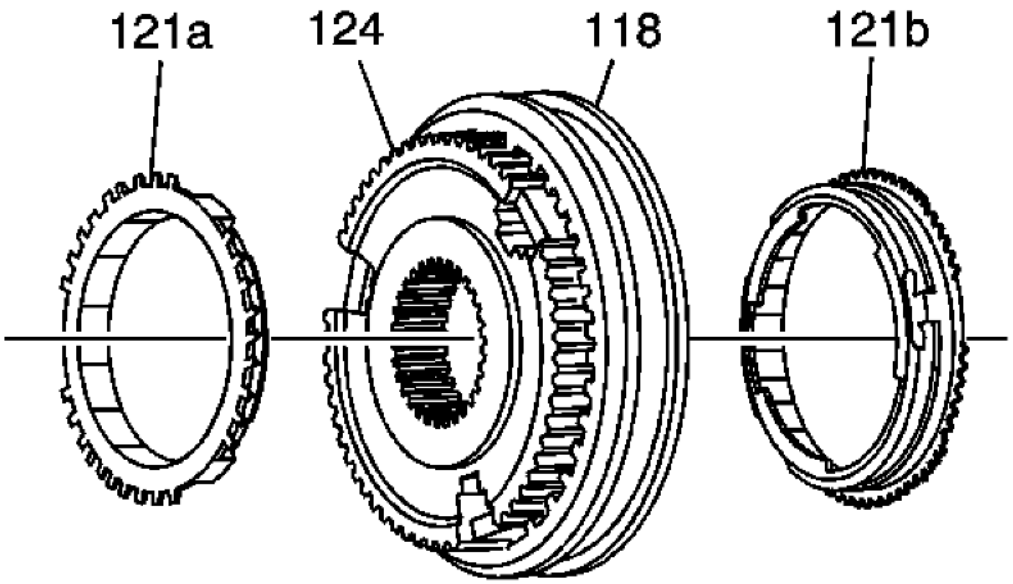

Fig. 149: View Of 5th/6th Synchronizer Hub & Blocking Rings
Courtesy of GENERAL MOTORS CORP.

NOTE: Ensure that the hub slides easily.

1. Apply lubricant and install the following components into the 5th/6th synchronizer hub (124/118):
   - The 5th gear blocking ring (121b)
   - The 6th gear blocking ring (121a)

   Refer to **Adhesives, Fluids, Lubricants, and Sealers**.

cardiagn.com

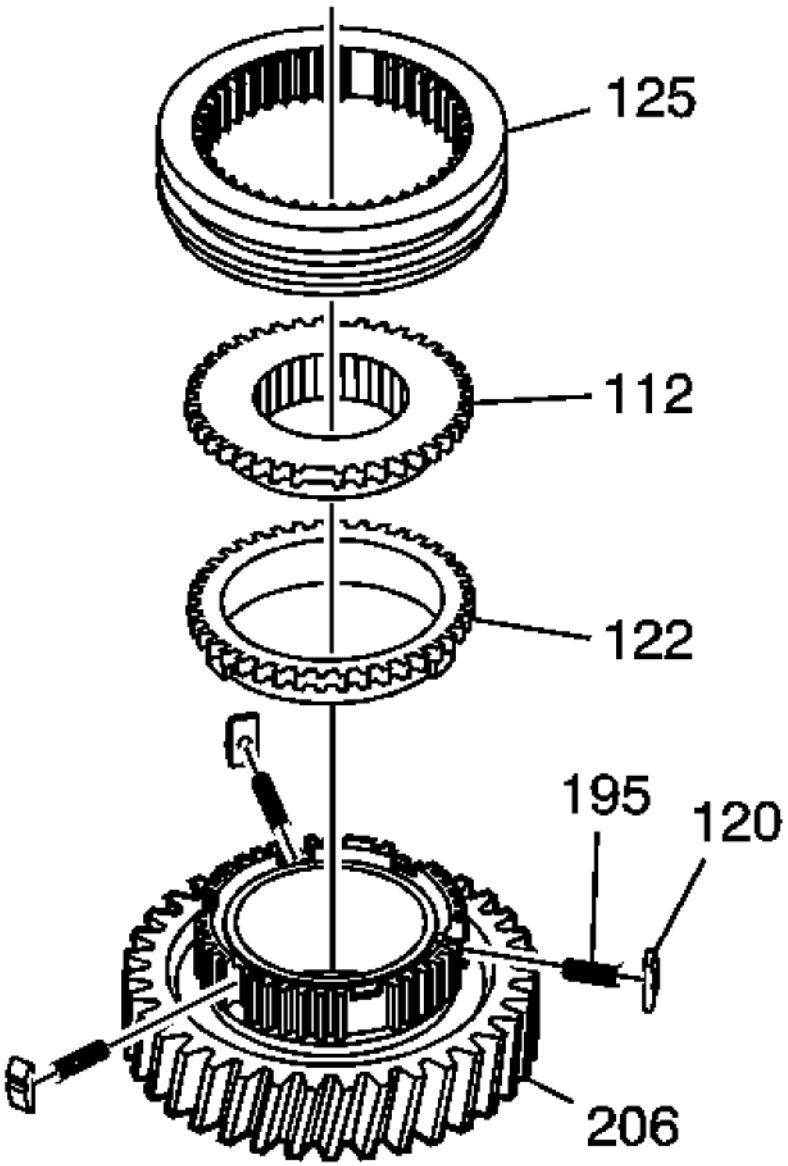

Fig. 150: View Of Reverse Gear Components
Courtesy of GENERAL MOTORS CORP.

2. Apply lubricant to the blocking ring, driven gear and sleeve. Install the following components into the reverse gear (206):
   - The reverse gear insert (120) and the spring (195)

cardiagn.com

- The reverse gear blocking ring (122)
- The reverse driven gear (112)
- The synchronizer sleeve (125)

1st/2nd, 3rd/4th Gear Synchronizer

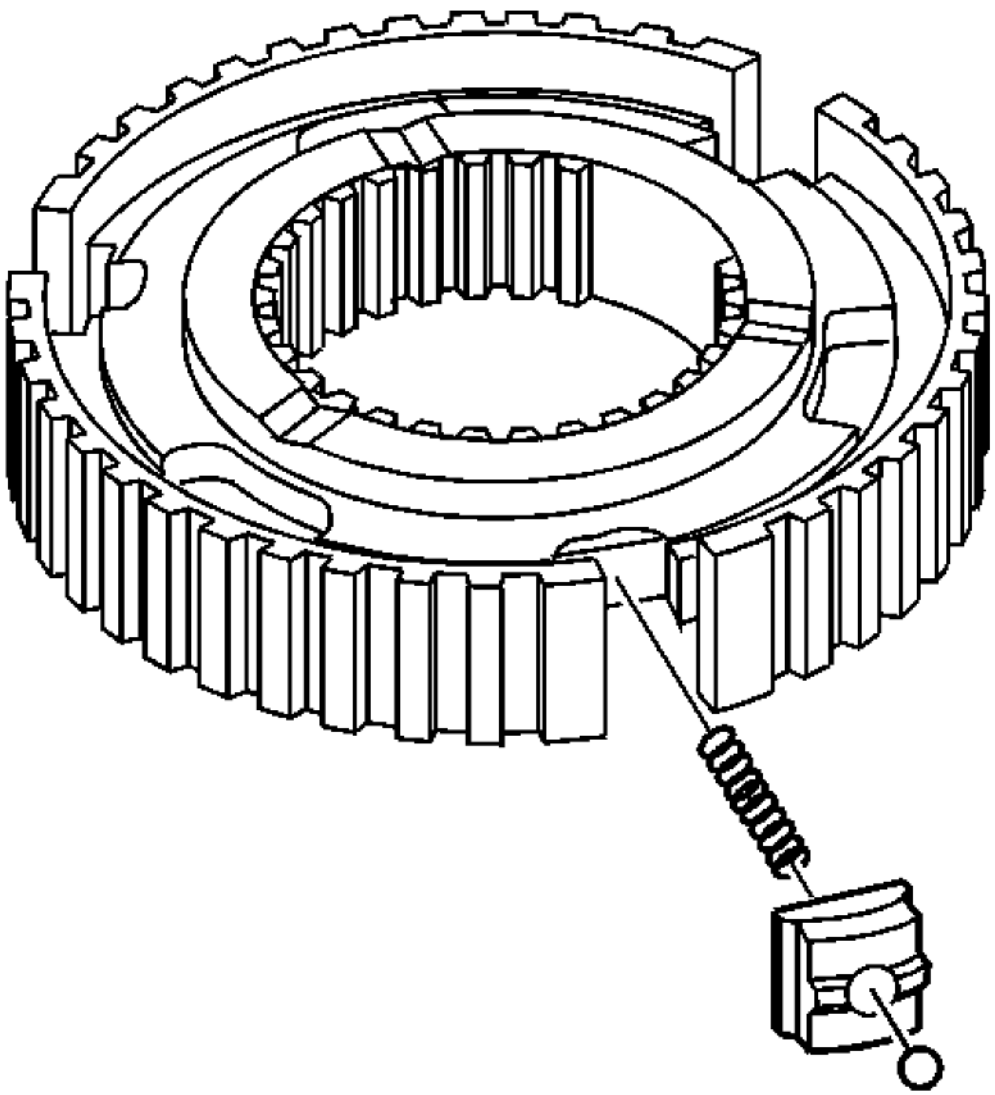

Fig. 151: View Of Synchronizer Insert & Spring
Courtesy of GENERAL MOTORS CORP.

cardiagn.com

1. Install the synchronizer insert and spring into the synchronizer hub. Press the spring and slide the insert in.

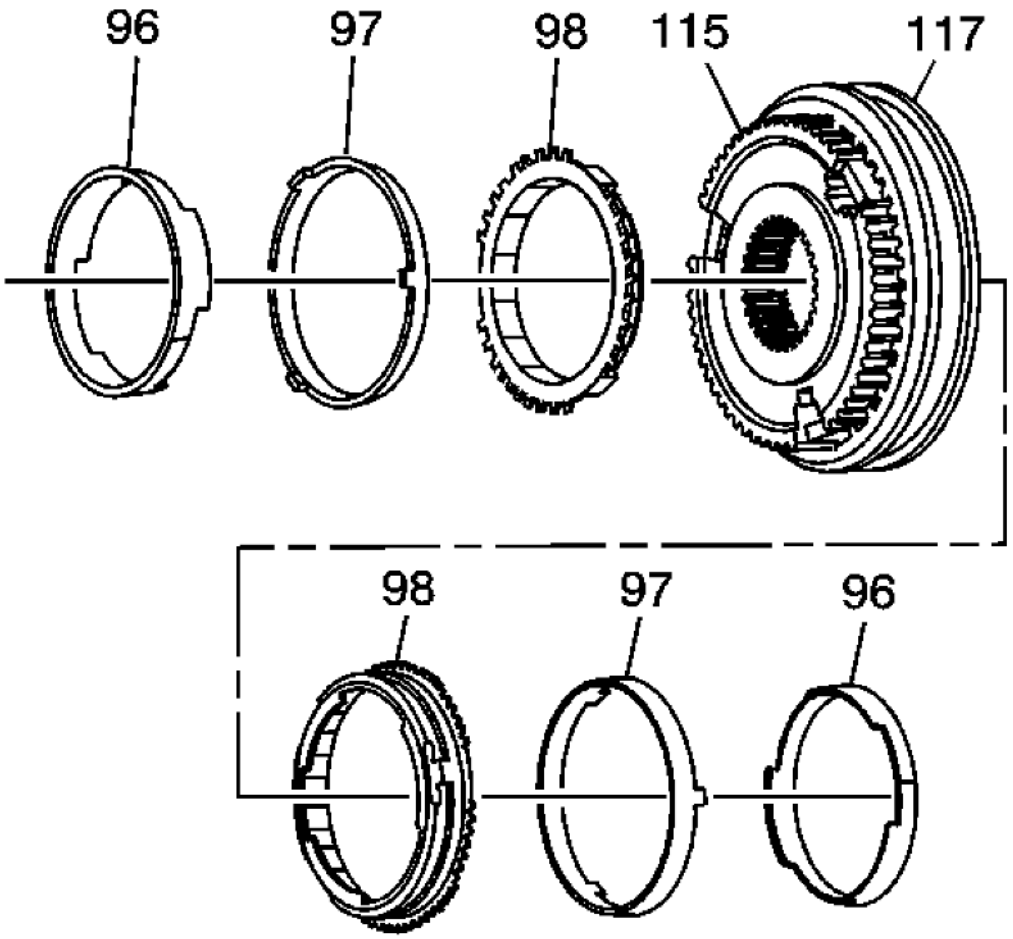

Fig. 152: View Of 1st Gear Synchronizer Components
Courtesy of GENERAL MOTORS CORP.

NOTE: When you service the synchronizers, retain them in the same order that they are removed. Keep the synchronizer components together and mark them to identify correct location.

2. Apply lubricant to the cones and blocking rings. Align and install the following components into the 1st/2nd gear synchronizer hub (115/117):
   - The 1st gear synchronizer inner cone (96)

cardiagn.com

- The 1st gear synchronizer outer cone (97)
- The 1st gear outer blocking ring (98)
- The 2nd gear outer blocking ring (98)
- The 2nd gear synchronizer outer cone (97)
- The 2nd gear synchronizer inner cone (96)

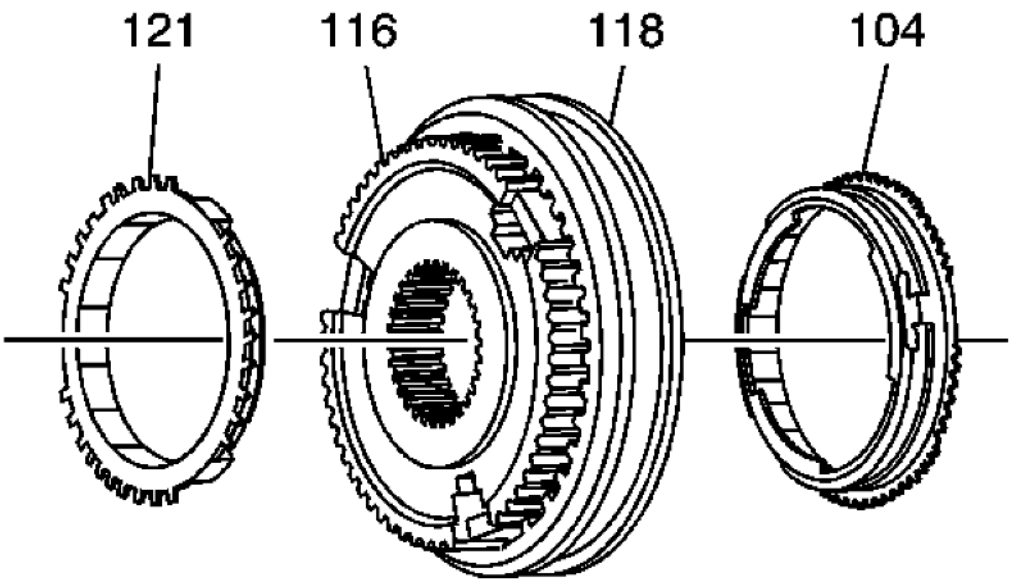

Fig. 153: View Of 3rd/4th Gear Synchronizer Hub & Blocking Rings
Courtesy of GENERAL MOTORS CORP.

3. Apply lubricant to the blocking rings. Install the following components into the 3rd/4th gear synchronizer hub (116/118):
   - The 3rd gear blocking ring (104)
   - The 4th gear blocking ring (121)

EXTENSION ASSEMBLE

Special Tools

- **DT-47722** Shift Rail Bushing Remover and Installer. See **Special Tools**.
- **DT-47724** Output Shaft Bearing Cup Installer. See **Special Tools**.
- **J 8092** Driver Handle
- **J 44765** Seal Installer. See **Special Tools**.

cardiagn.com

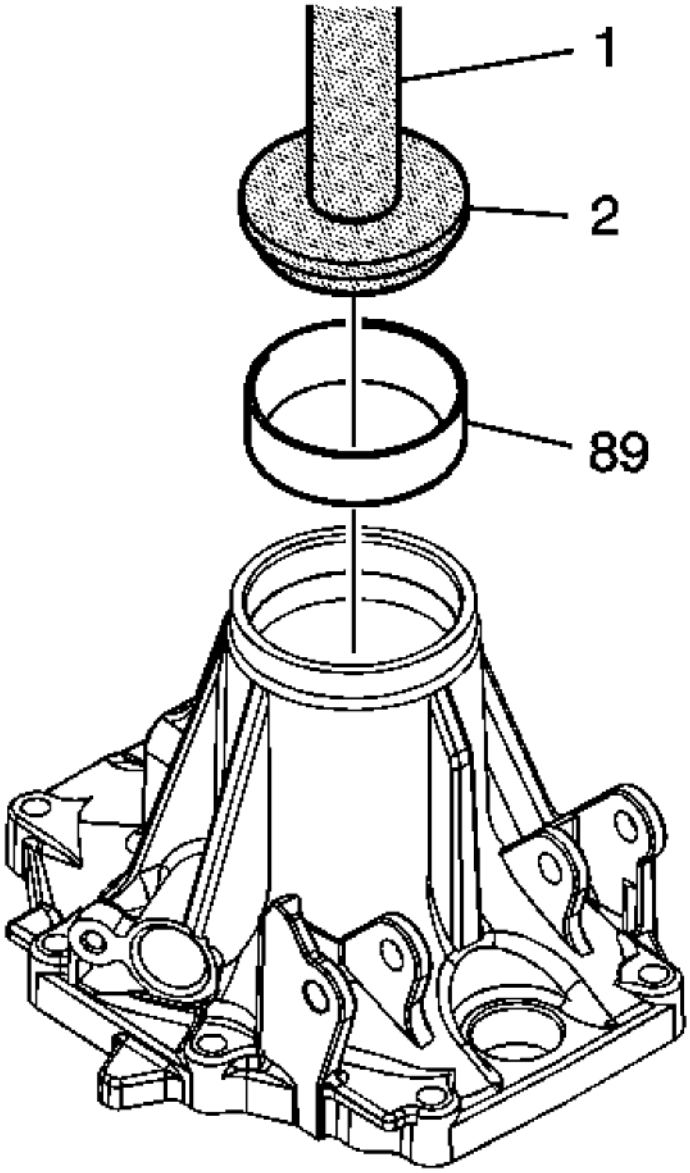

Fig. 154: Installing Tapered Bearing Race
Courtesy of GENERAL MOTORS CORP.

IMPORTANT: Ensure that the extension housing installation surfaces are clean.

1. Using **DT-47724** (2) and **J 8092** (1), install the tapered bearing race (89). See **Special Tools**.

cardiagn.com

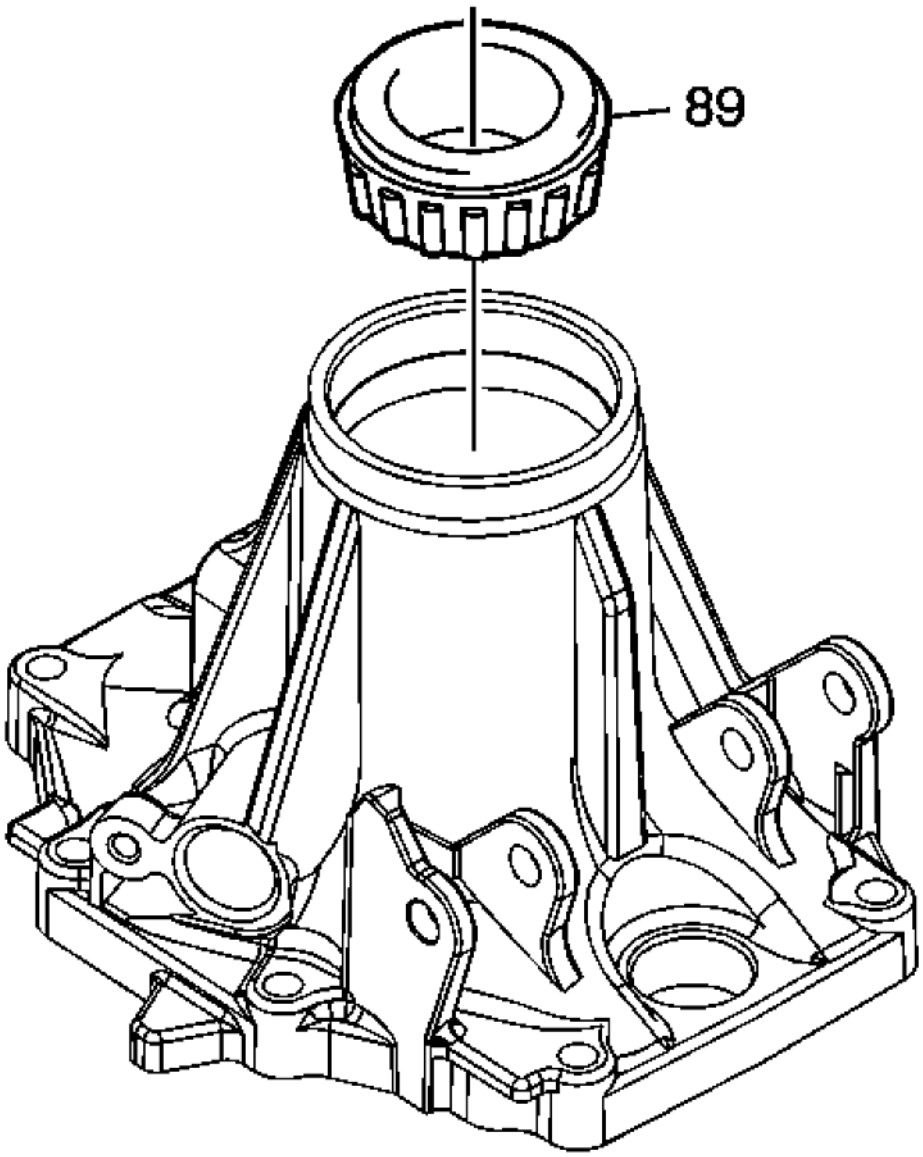

Fig. 155: Identifying Tapered Roller Bearing
Courtesy of GENERAL MOTORS CORP.

2. Apply gear oil and install the tapered roller bearing (89).

cardiagn.com

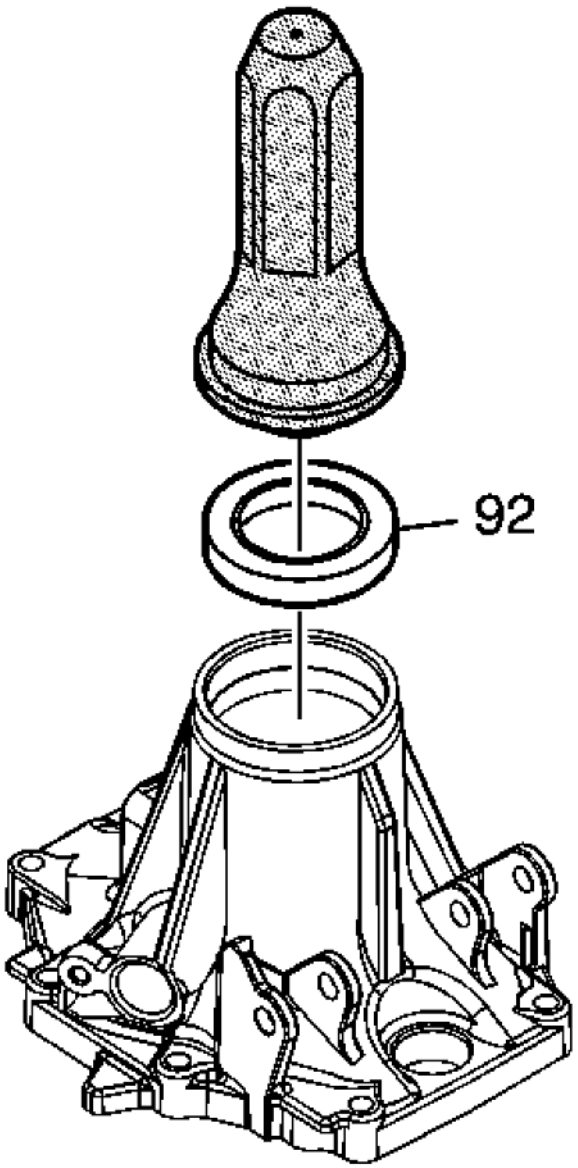

Fig. 156: View Of Output Shaft Oil Seal
Courtesy of GENERAL MOTORS CORP.

3. Using **J 44765** , install a NEW rear output shaft oil seal (92). See **Special Tools**.

cardiagn.com

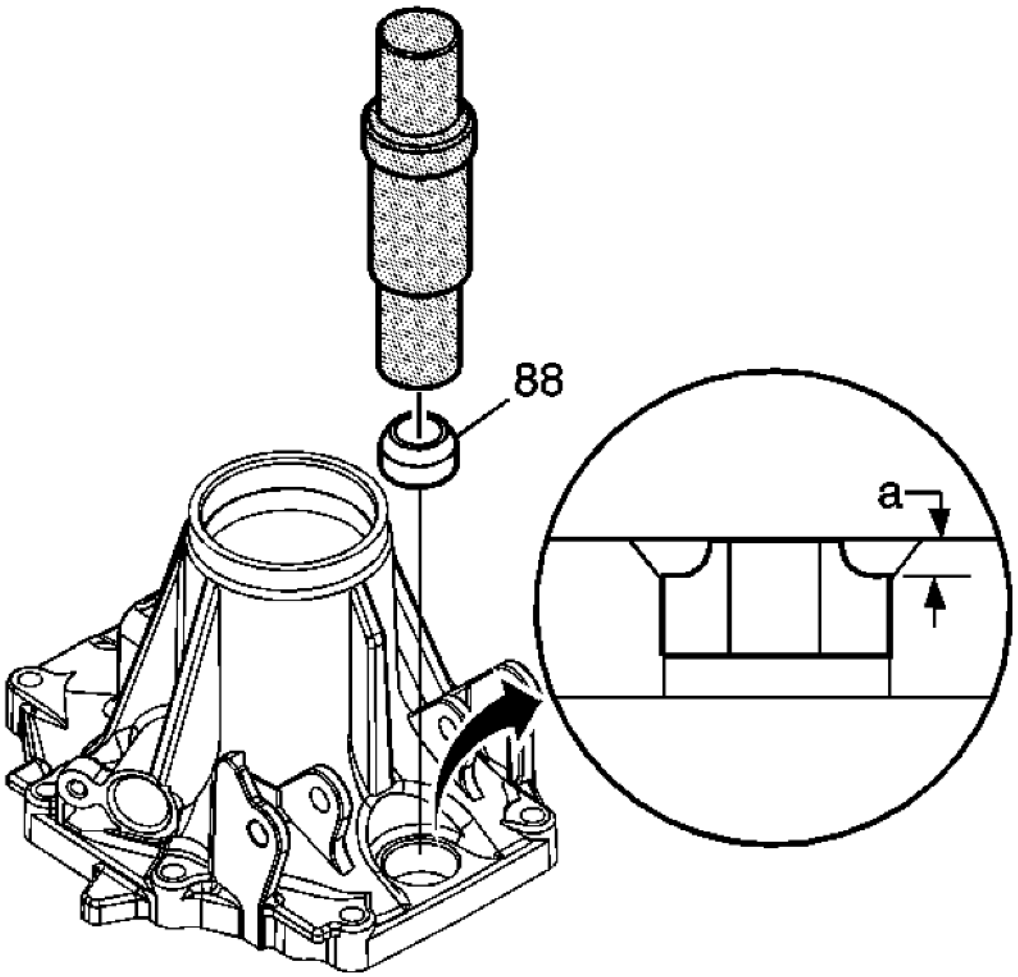

Fig. 157: Installing Shift Shaft Seal
Courtesy of GENERAL MOTORS CORP.

4. Using **DT-47722** , install a NEW shift shaft seal (88) to the specified depth (a). See **Special Tools**.

   Depth: Drive the shift shaft seal to a depth of 4.6-5.4 mm below the surface of the extension housing.

TRANSMISSION CASE ASSEMBLE

Special Tools

- **DT-47722:** Shift Rail Bushing Remover and Installer
- **DT-47725:** Extension Housing Bearing Cup Installer

cardiagn.com

- **DT-47726:** Countershaft Rear Bearing Installer

Rear Case Assemble

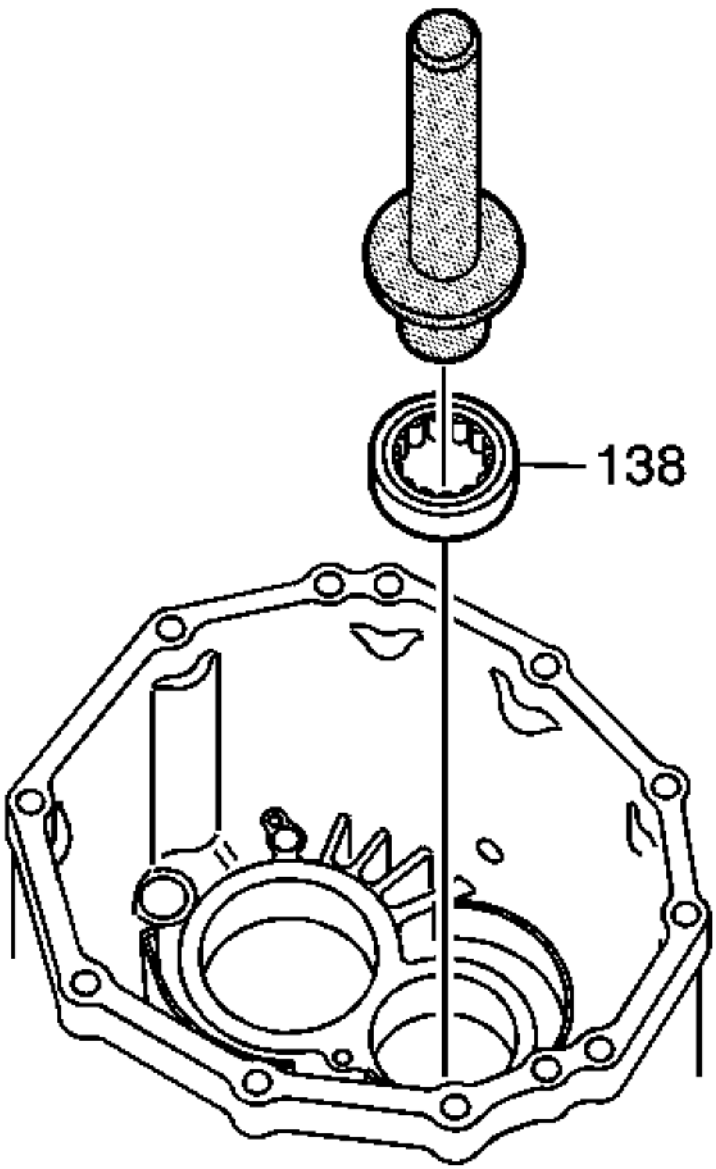

Fig. 158: Installing Bearing
Courtesy of GENERAL MOTORS CORP.

cardiagn.com

NOTE: Ensure that the rear case housing installation surfaces are free of dirt and sealant.

1. Apply gear oil to new bearing. Use **DT-47726:** installer to install new bearing (138).

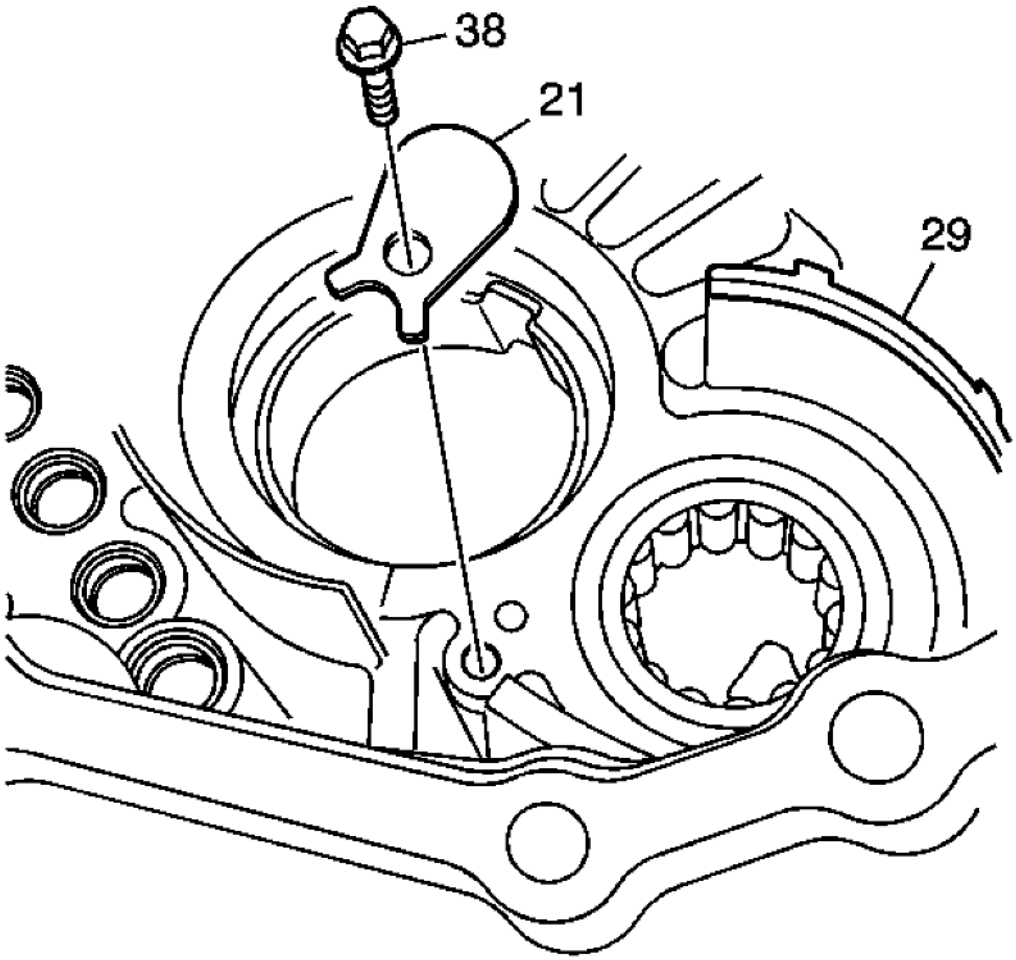

Fig. 159: View Of Bearing Retainer, Bolt & Gasket
Courtesy of GENERAL MOTORS CORP.

CAUTION: Refer to Fastener Caution .

2. Install the bearing retainer (21) and bolt (38) and tighten to 11.3 N.m (100 lb in).
3. Install the gasket (29).

cardiagn.com

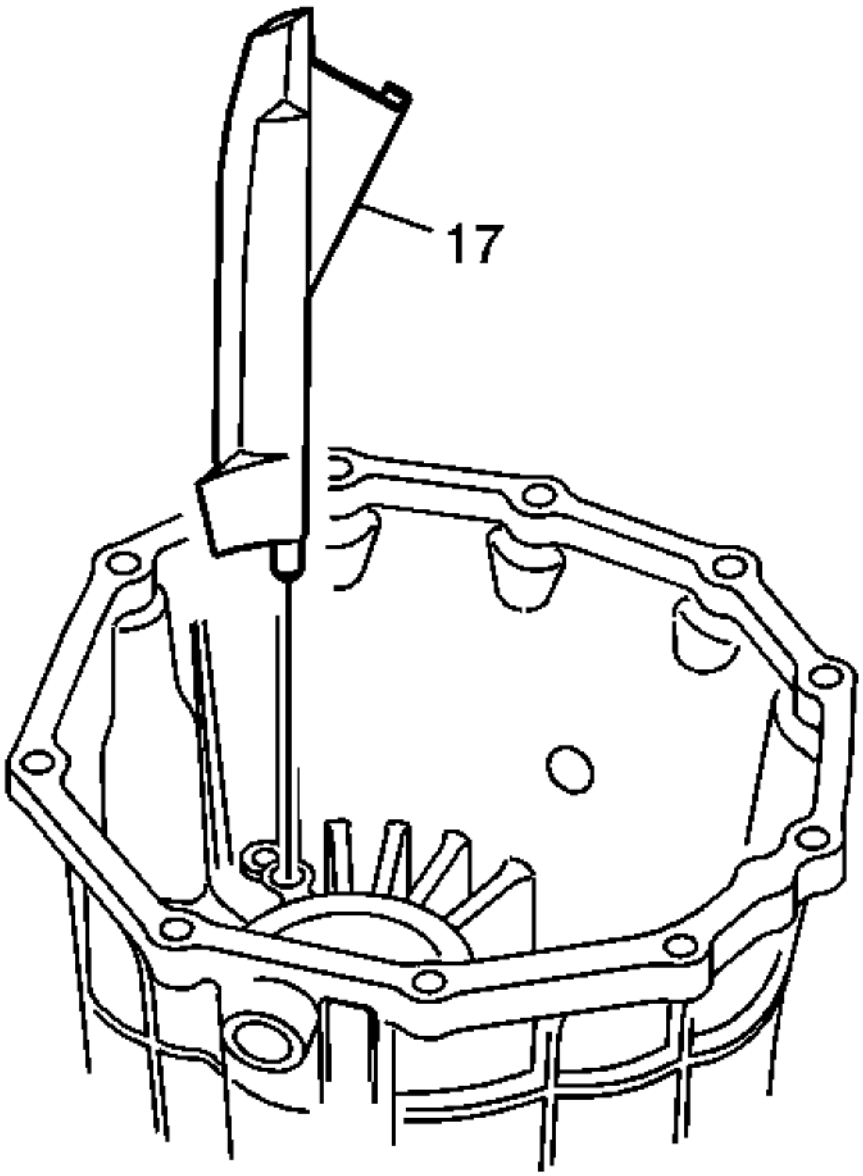

Fig. 160: View Of Oil Trough
Courtesy of GENERAL MOTORS CORP.

4. Install the oil trough (17).

cardiagn.com

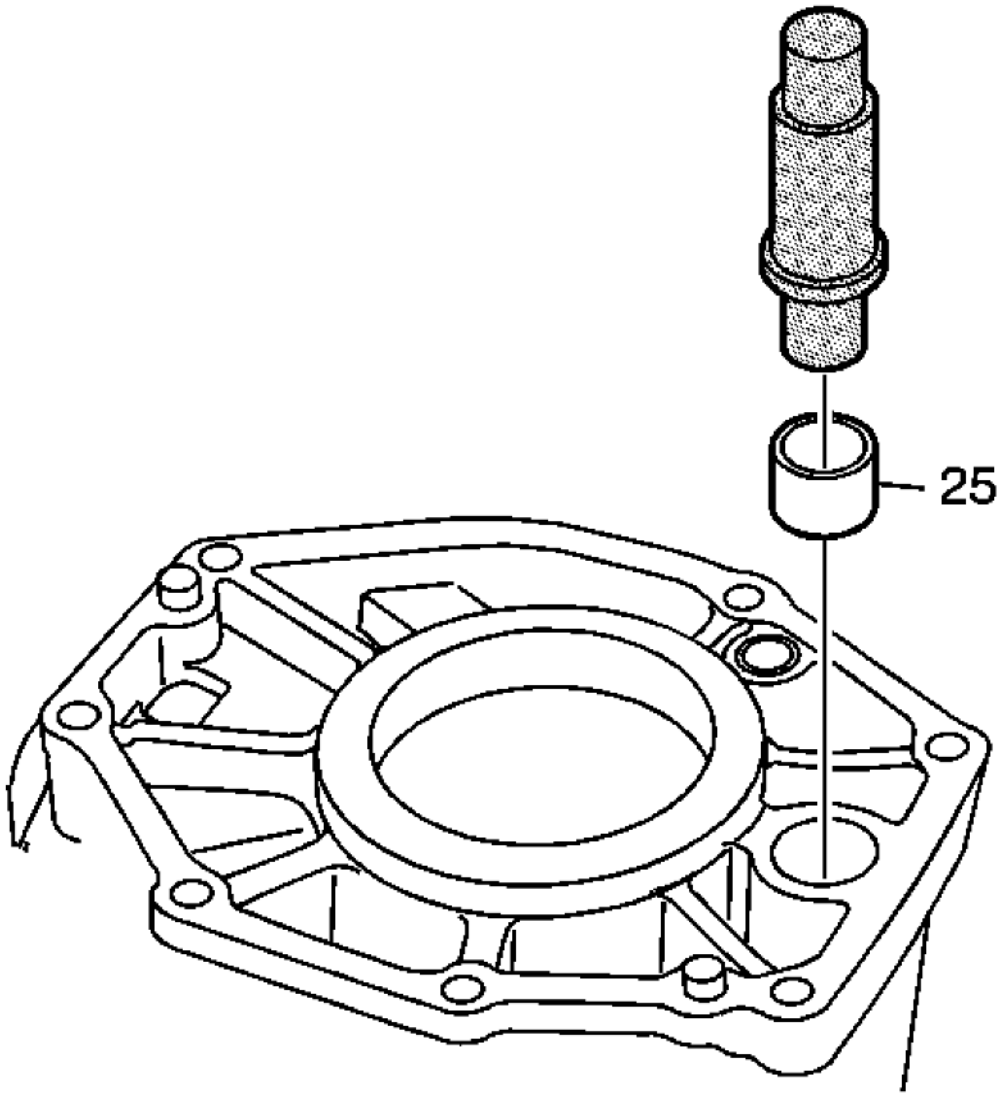

Fig. 161: Installing Bearing Into Rear Case
Courtesy of GENERAL MOTORS CORP.

5. Using **DT-47722:** remover/installer, install the bearing (25) in the rear case.

cardiagn.com

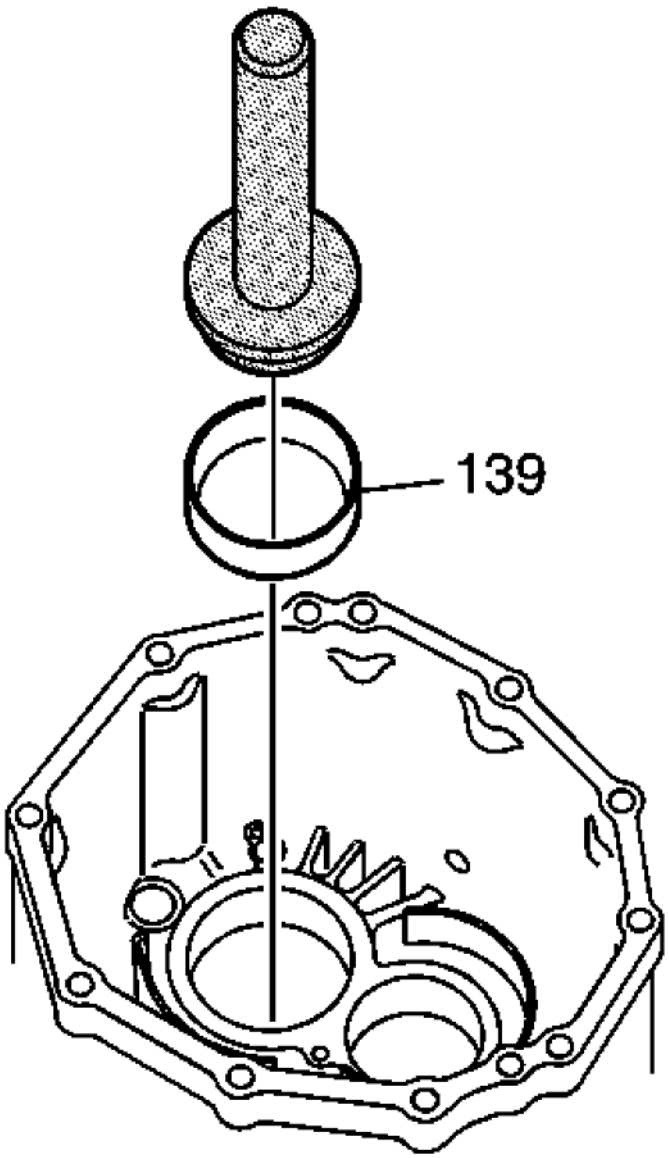

Fig. 162: Installing Tapered Bearing Race
Courtesy of GENERAL MOTORS CORP.

6. Using **DT-47725:** installer, install the tapered bearing race (139).

Middle Case Assemble

cardiagn.com

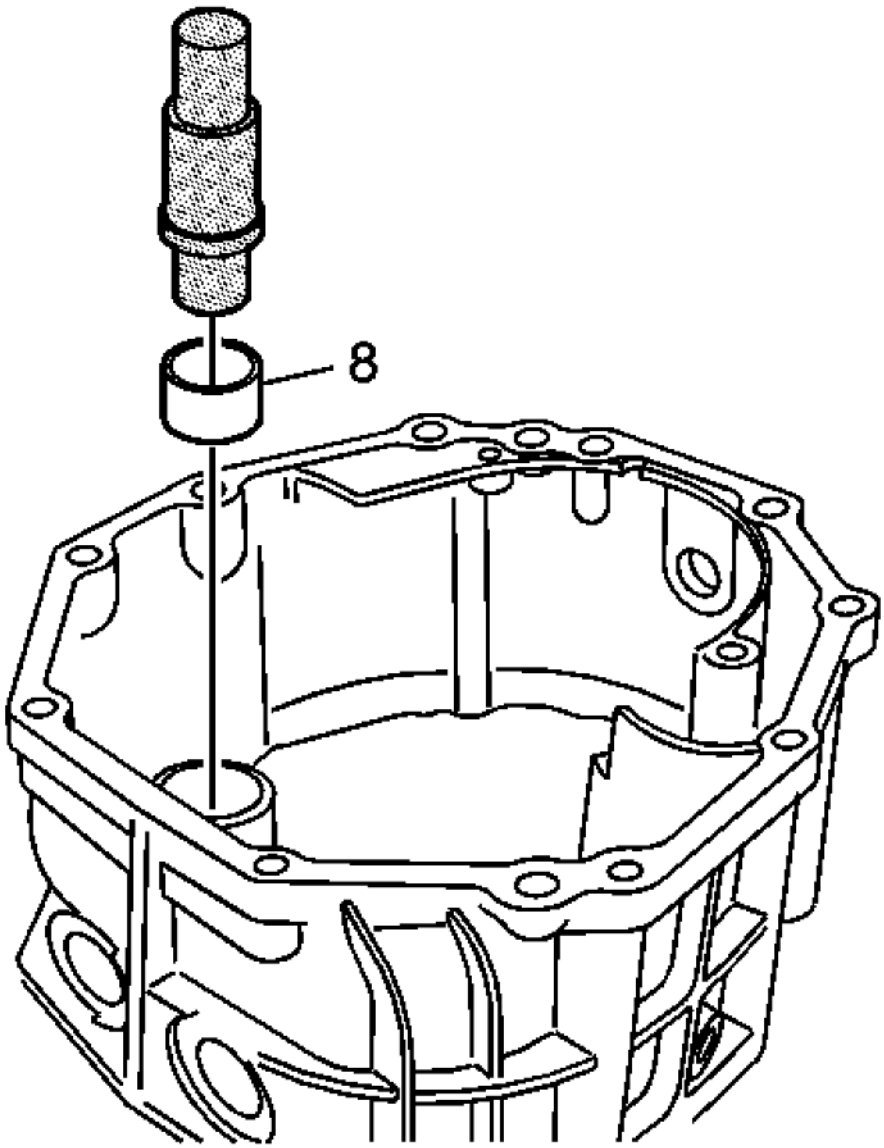

Fig. 163: Installing Bearing Into Middle Case
Courtesy of GENERAL MOTORS CORP.

Using **DT-47722:** remover/installer, install the bearing (8) in the middle case.

COUNTER GEAR SHAFT ASSEMBLE

cardiagn.com

Special Tools

- **J 5590:** Bearing and Seal Driver
- **J 36614:** Bearing Installer

For equivalent regional tools, refer to **Special Tools**.

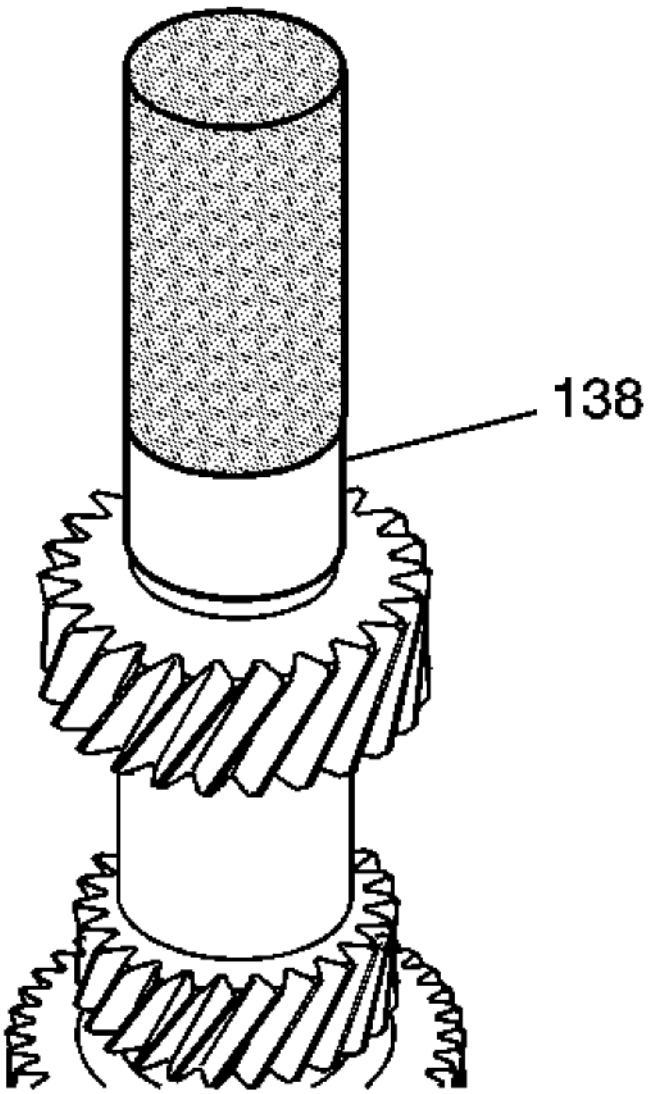

Fig. 164: View Of Inner Race
Courtesy of GENERAL MOTORS CORP.

cardiagn.com

1. Using **J 5590:** driver and a press or hammer install the inner race (138).

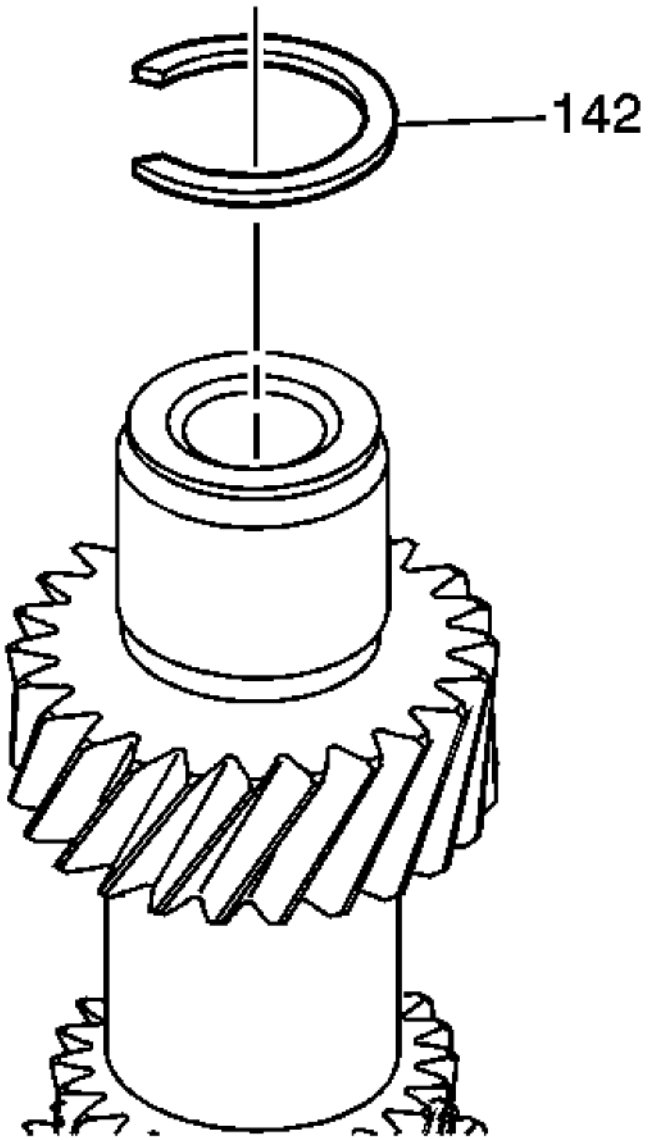

Fig. 165: Identifying Snap Ring
Courtesy of GENERAL MOTORS CORP.

2. Select and install a snap ring (142) with a maximum thickness that can be installed to the counter shaft.

cardiagn.com

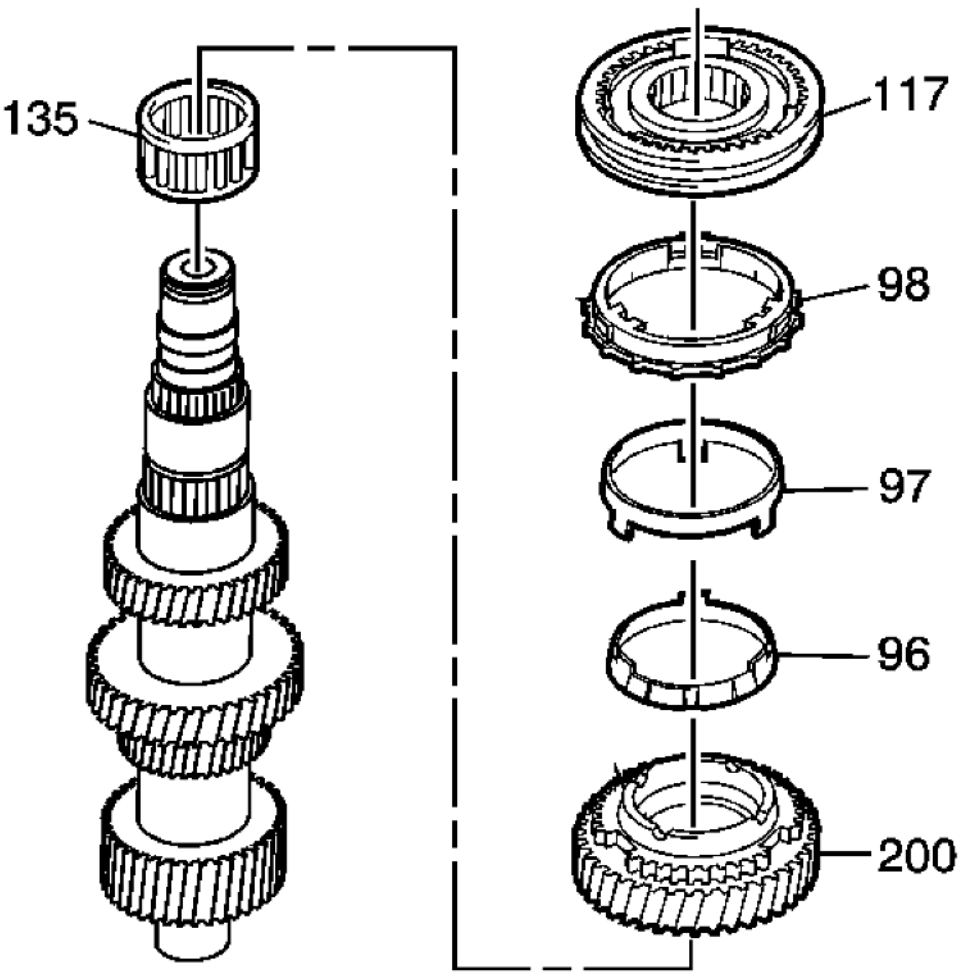

Fig. 166: View Of 2nd Gear Components
Courtesy of GENERAL MOTORS CORP.

3. Apply lubricant and install the following components:
   - The 2nd gear bearing (135)
   - The 2nd gear (200)
   - The 2nd gear synchronizer inner cone (96)
   - The 2nd gear synchronizer outer cone (97)
   - The 2nd gear outer blocker ring (98)
   - The 1st/2nd gear synchronizer sleeve (117)

cardiagn.com

Refer to **Adhesives, Fluids, Lubricants, and Sealers** .

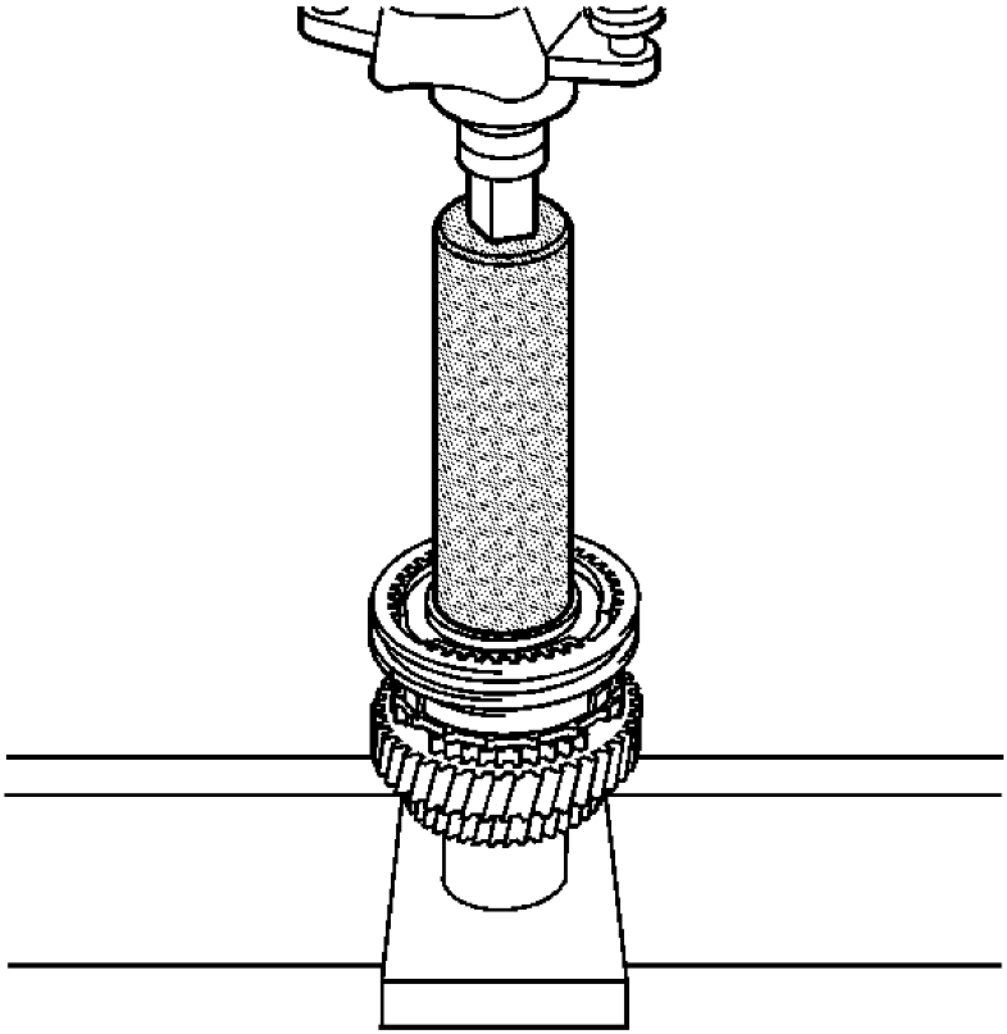

Fig. 167: Installing 1st/2nd Gear Synchronizer Sleeve
Courtesy of GENERAL MOTORS CORP.

4. Using a hydraulic press and **J 36614:** bearing installer, install the 1st/2nd gear synchronizer sleeve with the boss side facing 2nd gear. The synchronizer ring set and transmission clutch hub are to be aligned when installing the transmission clutch hub assembly.

cardiagn.com

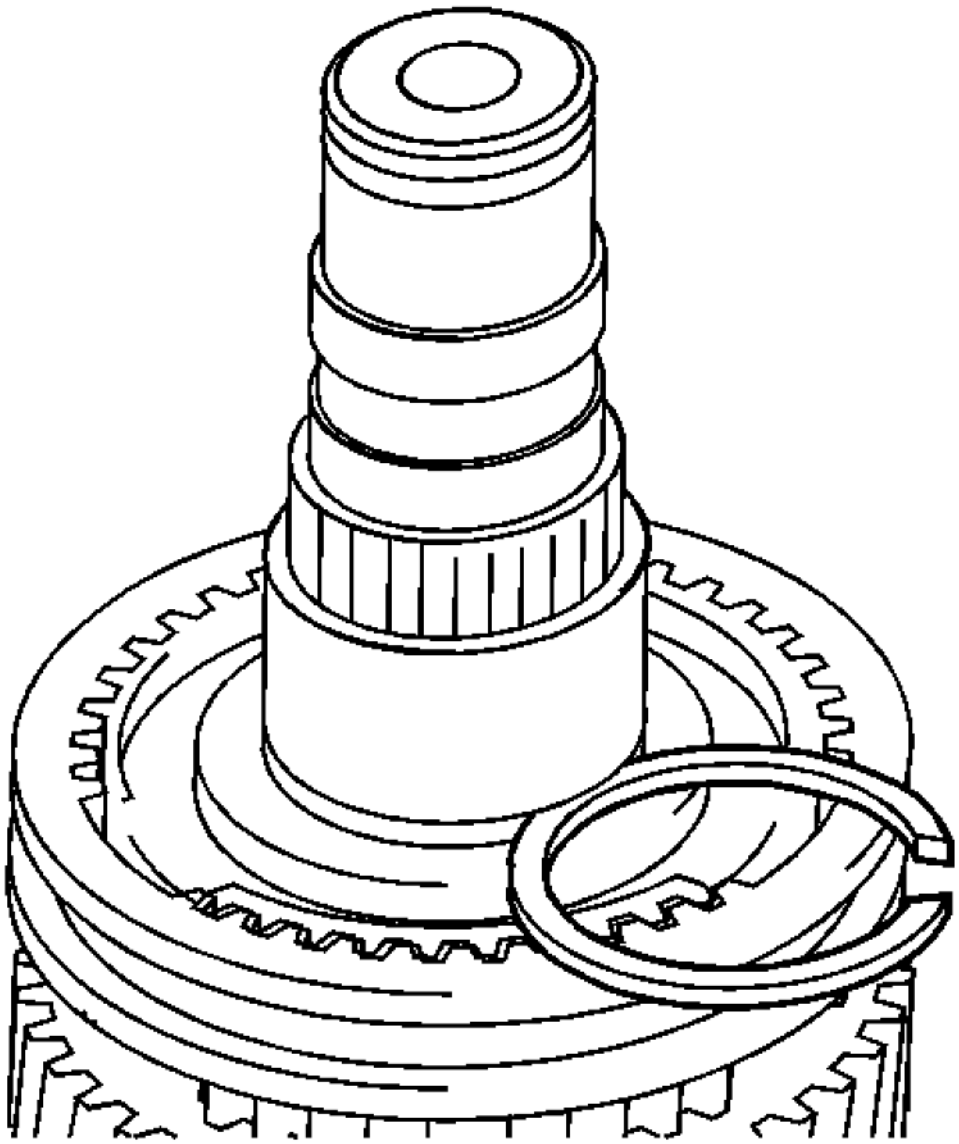

Fig. 168: View Of Retaining Ring
Courtesy of GENERAL MOTORS CORP.

NOTE: The retaining ring is a selected fit. Always install a NEW retaining ring.

5. Select the maximum thickness retaining ring that will fit in the groove. Refer to **Countershaft Front and Rear Bearing Retaining Ring Specifications**.

cardiagn.com

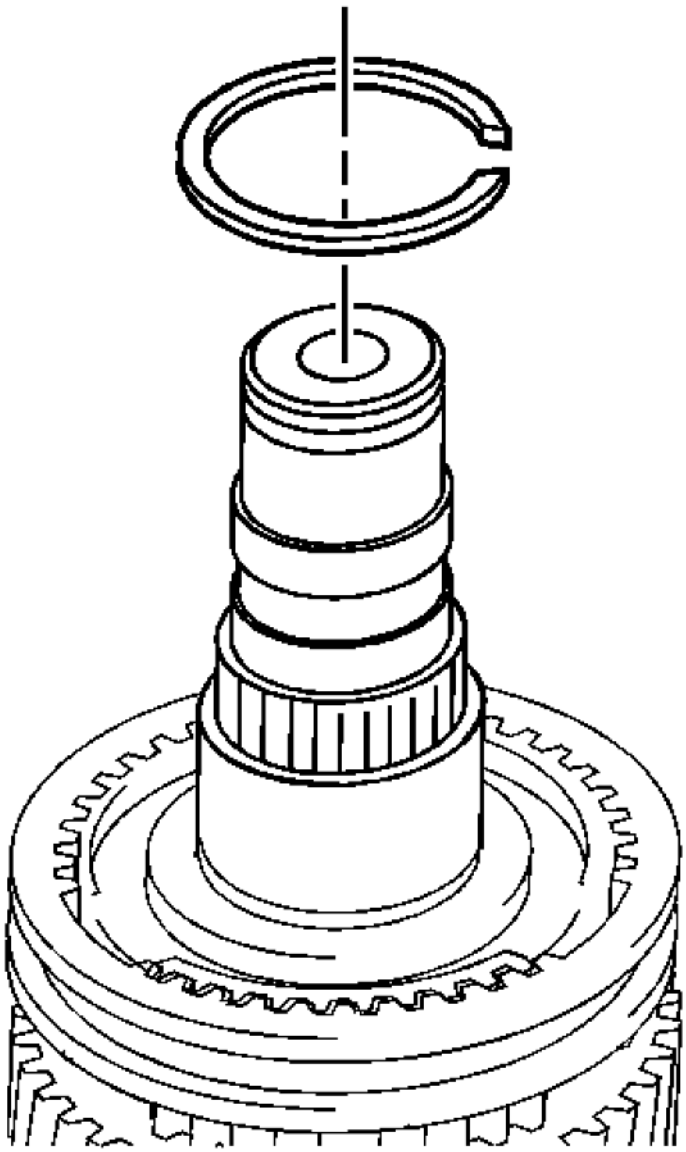

Fig. 169: View Of Snap Ring
Courtesy of GENERAL MOTORS CORP.

6. Install a NEW snap ring.

cardiagn.com

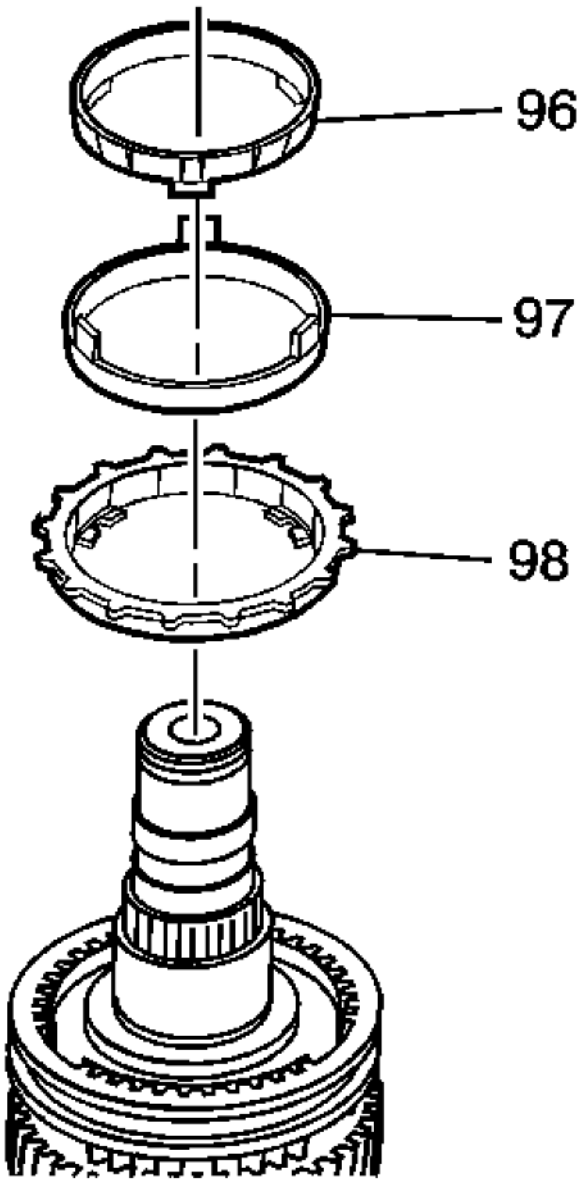

Fig. 170: View Of 1st Gear Synchronizer Cones & 1st Gear Outer/Inner Blocking Ring
Courtesy of GENERAL MOTORS CORP.

7. Apply lubricant and install the following components:
   - The 1st gear outer blocking ring (98)
   - The 1st gear synchronizer outer cone (97)

cardiagn.com

- The 1st gear synchronizer inner cone (96)

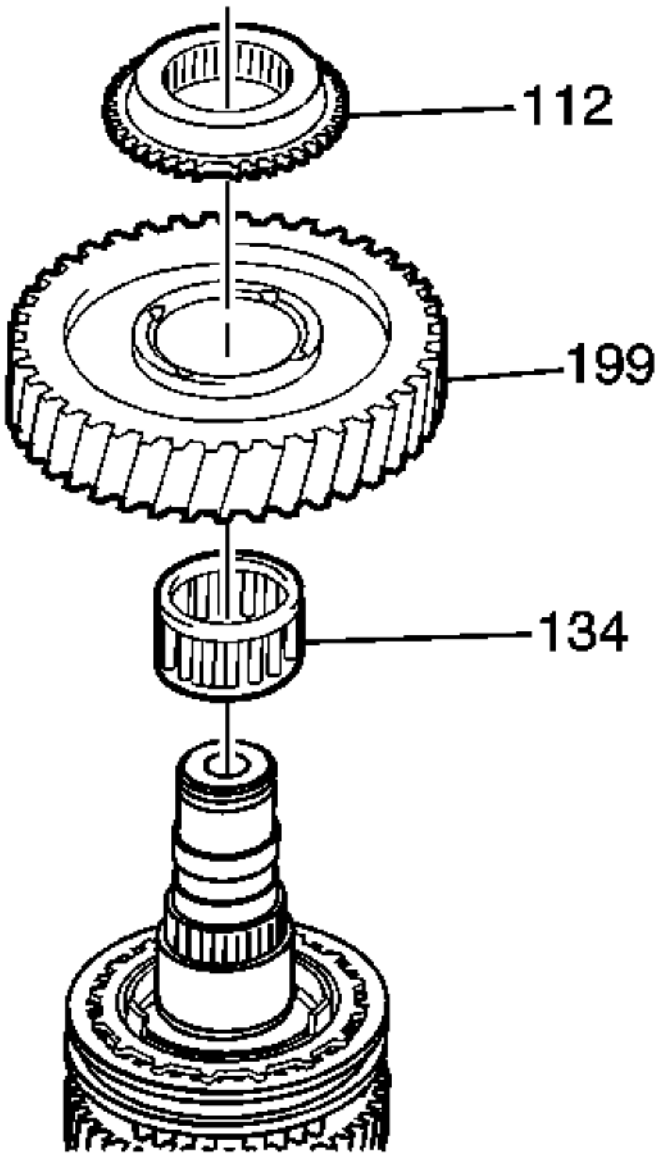

Fig. 171: View Of Reverse Gear Spline, 1st Gear & Bearing
Courtesy of GENERAL MOTORS CORP.

8. Apply lubricant, install and align the 1st gear bearing (134), 1st gear (199) and the reverse gear spline (112).

cardiagn.com

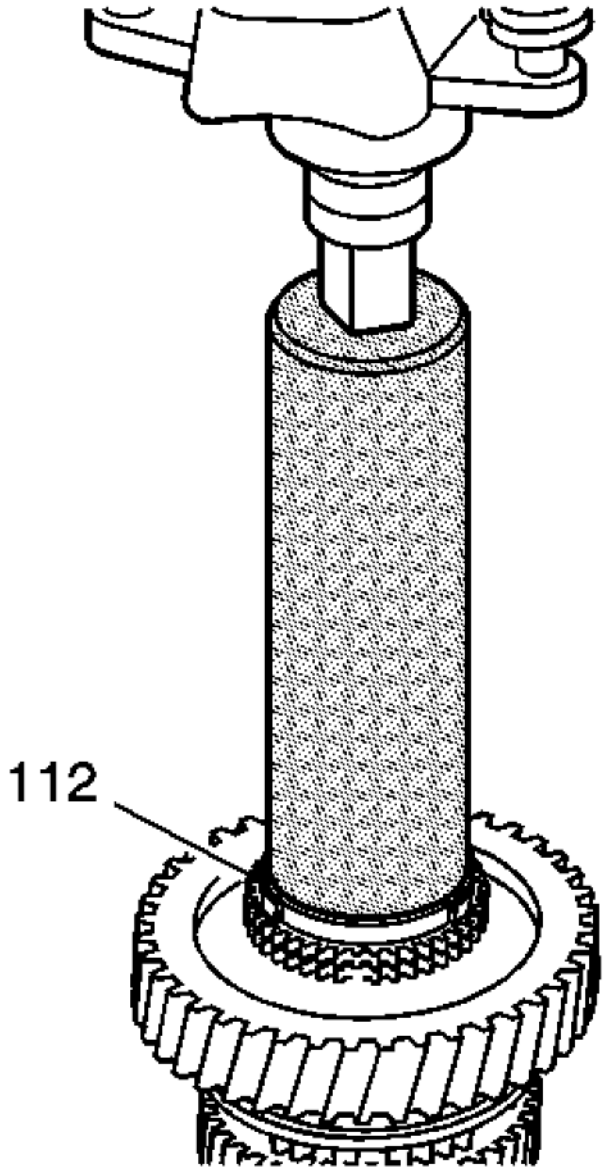

Fig. 172: Installing Reverse Gear Spline
Courtesy of GENERAL MOTORS CORP.

9. Using a hydraulic press and **J 36614:** bearing installer, install the reverse gear spline (112).

cardiagn.com

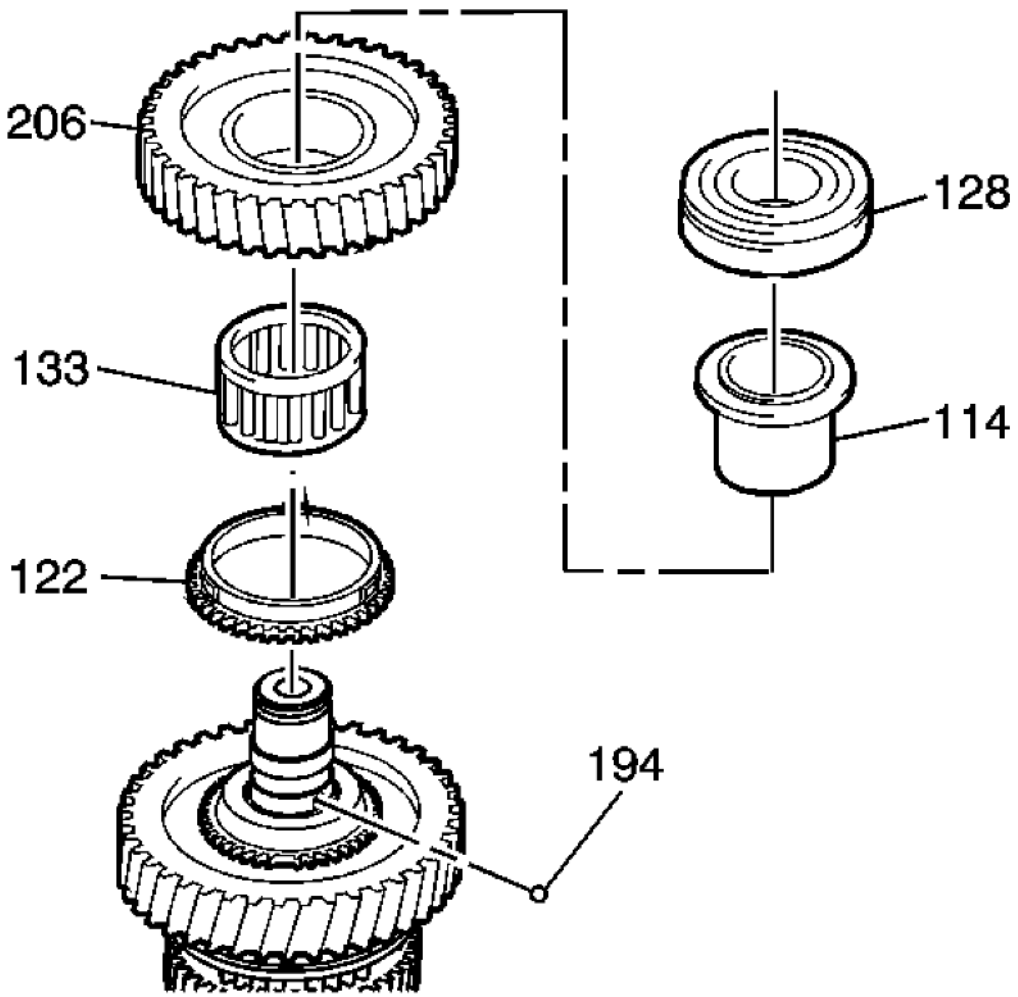

Fig. 173: Identifying Reverse & Counter Gear Components
Courtesy of GENERAL MOTORS CORP.

10. Apply lubricant and install the reverse gear blocking ring (122).
11. Install the ball (194) to the countershaft.
12. Apply lubricant and install the reverse gear bushing bearing (133).
13. Apply lubricant. Align and install the synchronizer sleeve and reverse gear (206) together.
14. Apply lubricant. Install the reverse gear bushing (114) with ball.
15. Install the counter gear front bearing (128) with groove facing forward.

cardiagn.com

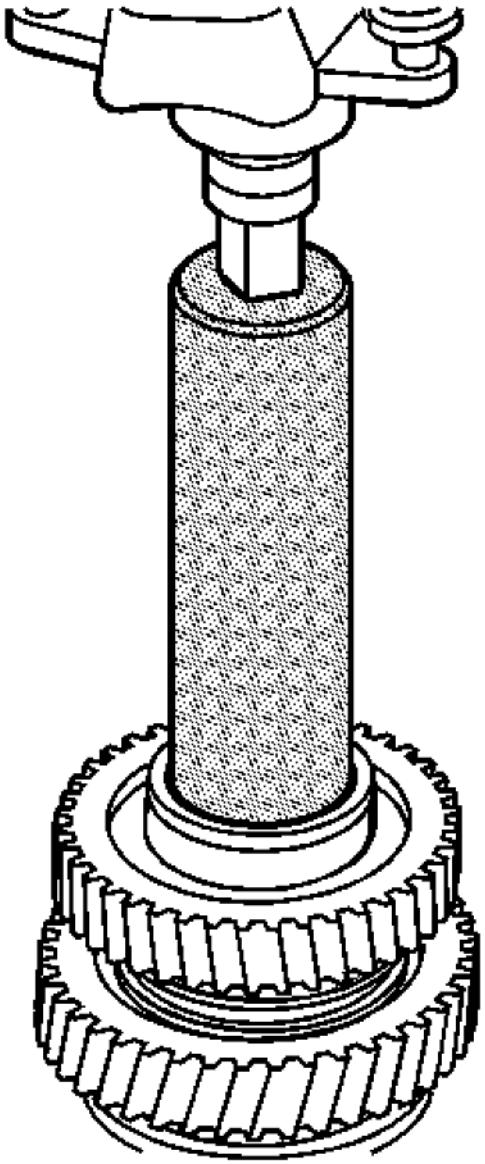

Fig. 174: Installing Counter Gear Front Bearing
Courtesy of GENERAL MOTORS CORP.

16. Using a hydraulic press and **J 5590:** driver, install the counter gear front bearing.

cardiagn.com

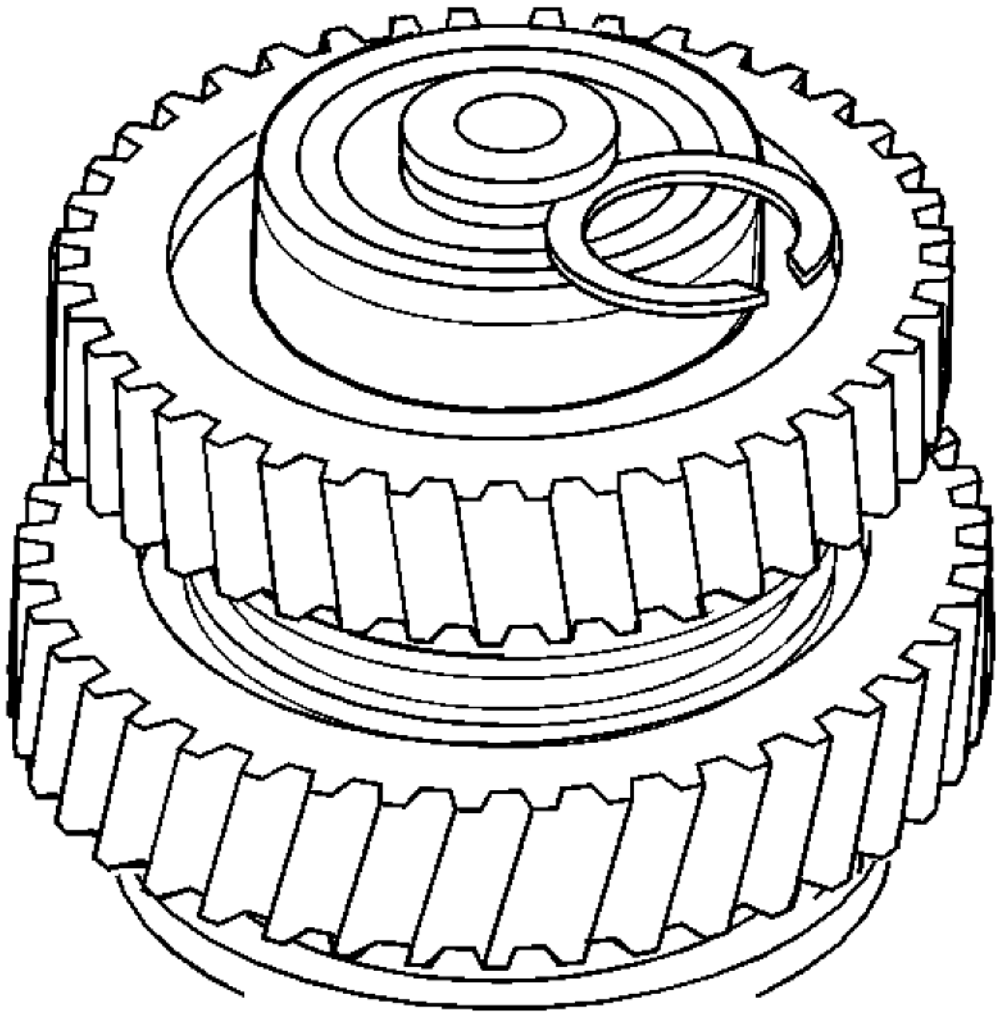

Fig. 175: View Of Retaining Ring
Courtesy of GENERAL MOTORS CORP.

NOTE: The retaining ring is a selected fit. Always install a NEW retaining ring.

17. Select the maximum thickness retaining ring that will fit in the groove. Refer to **1st and 2nd Gear Synchronizer Retaining Ring Specifications**.

cardiagn.com

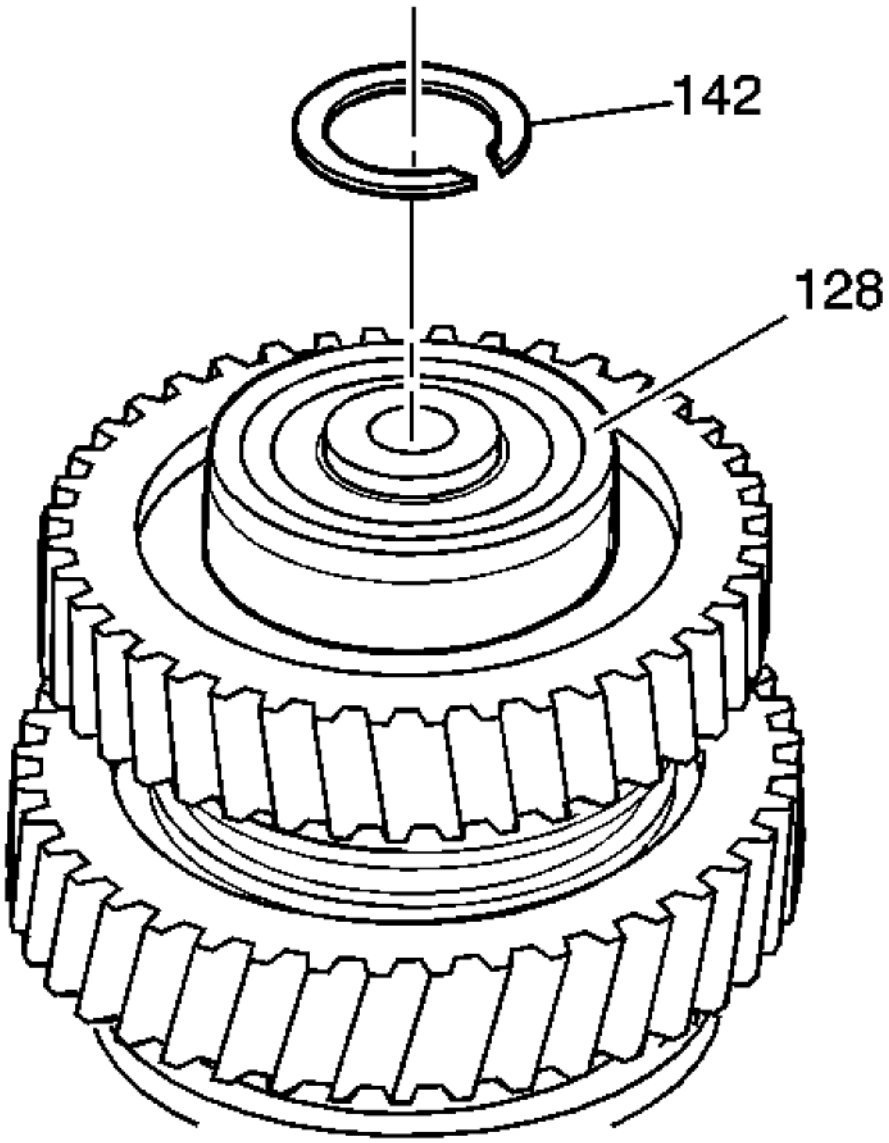

Fig. 176: View Of Counter Gear Front Bearing & Snap Ring
Courtesy of GENERAL MOTORS CORP.

18. Install a NEW snap ring (142).

INPUT SHAFT ASSEMBLE

Special Tools

cardiagn.com

- **DT-47723:** Output Shaft Bearing Installer
- **J 5590:** Bearing and Seal Driver

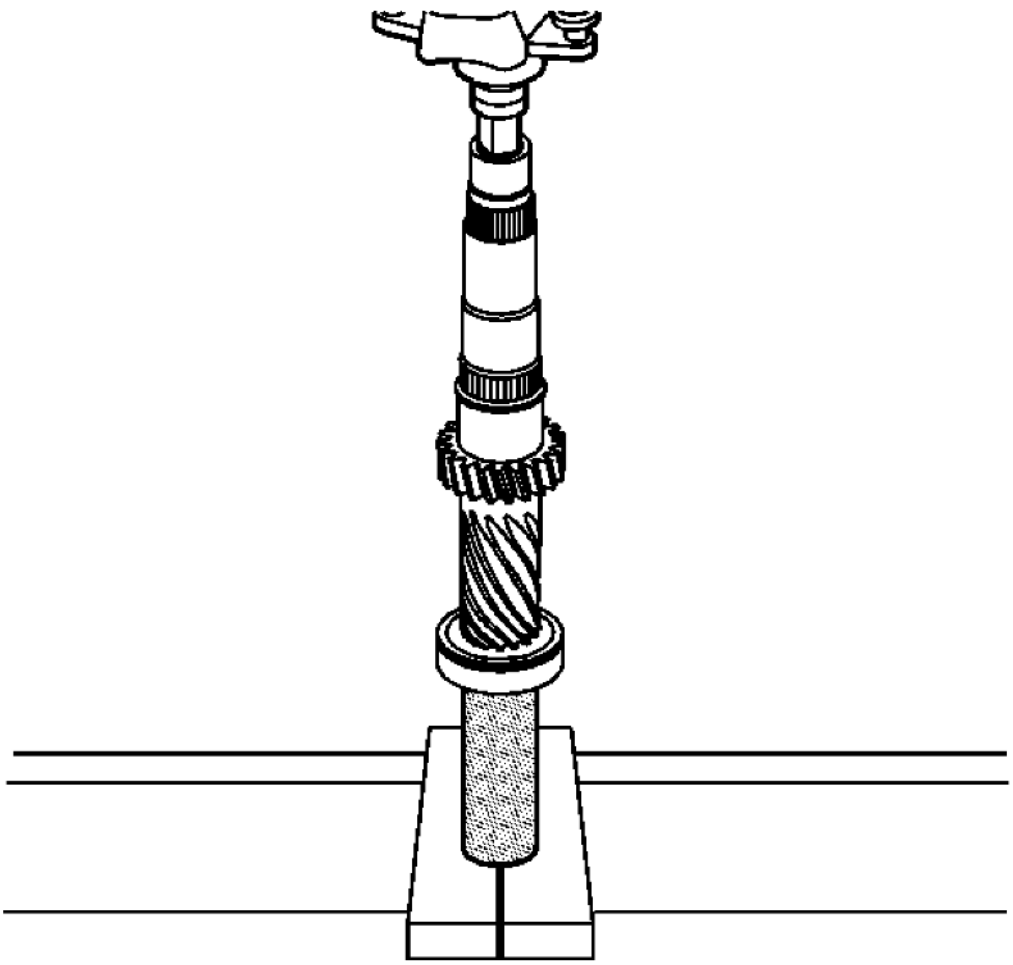

Fig. 177: Installing Counter Gear Front Bearing
Courtesy of GENERAL MOTORS CORP.

1. Using a hydraulic press and **J 5590:** driver, install the counter gear front bearing on the input shaft.

cardiagn.com

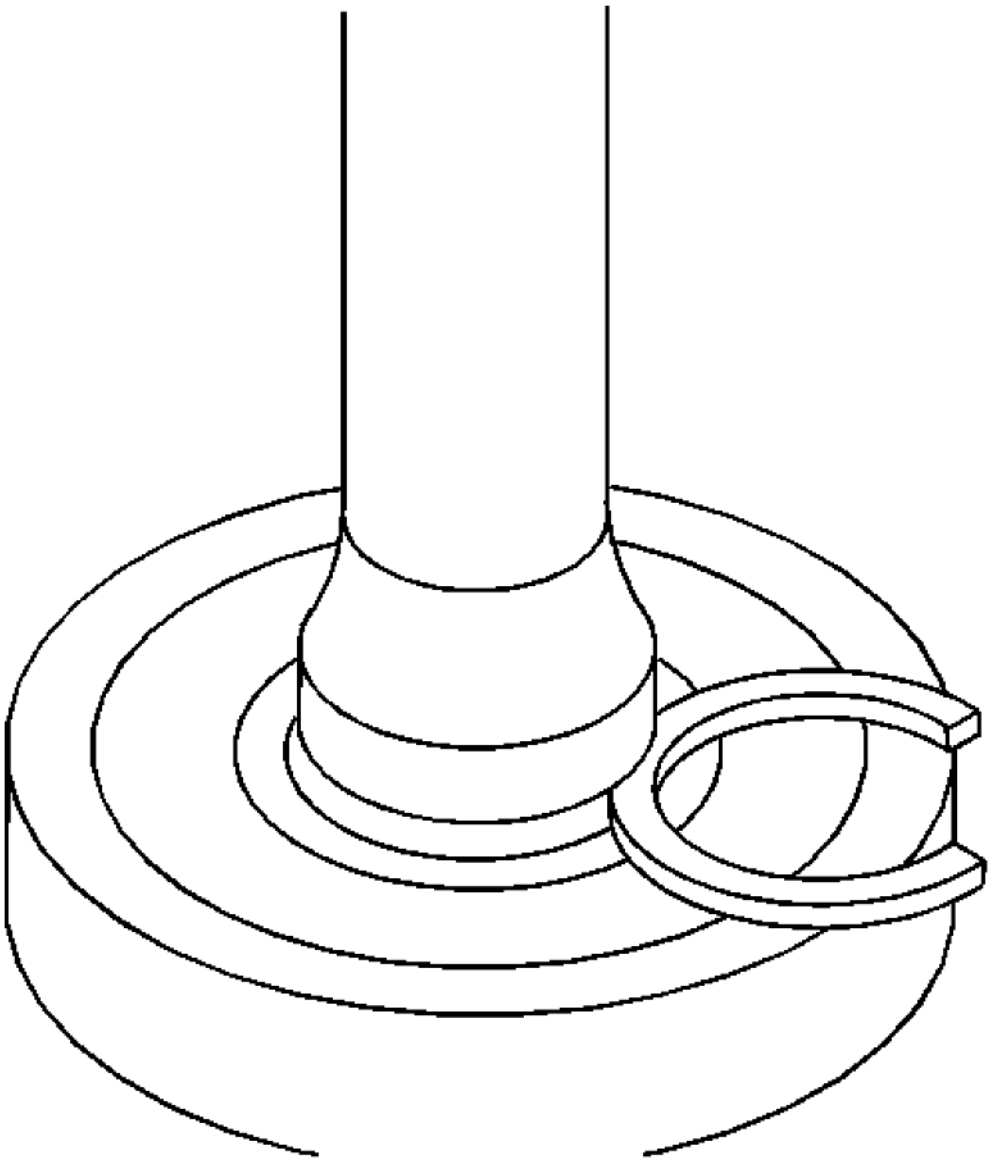

Fig. 178: View Of Retaining Ring
Courtesy of GENERAL MOTORS CORP.

NOTE: The retaining ring is a selected fit. Always install a NEW retaining ring.

2. Select the maximum thickness retaining ring that will fit in the groove. Refer to **Input Shaft Bearing Retaining Ring Specifications**.

cardiagn.com

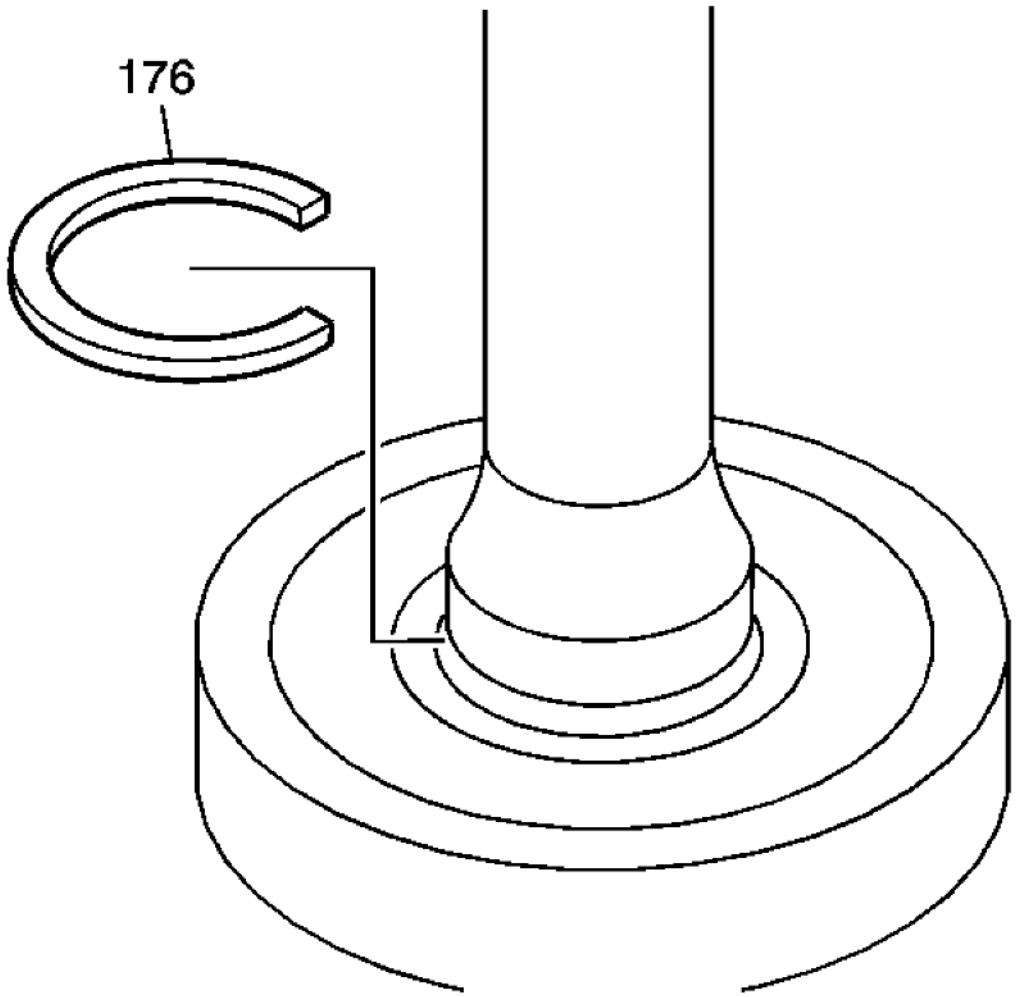

Fig. 179: View Of Snap Ring
Courtesy of GENERAL MOTORS CORP.

3. Install a NEW snap ring (176) and ensure that the radial bearing rotates smoothly.

cardiagn.com

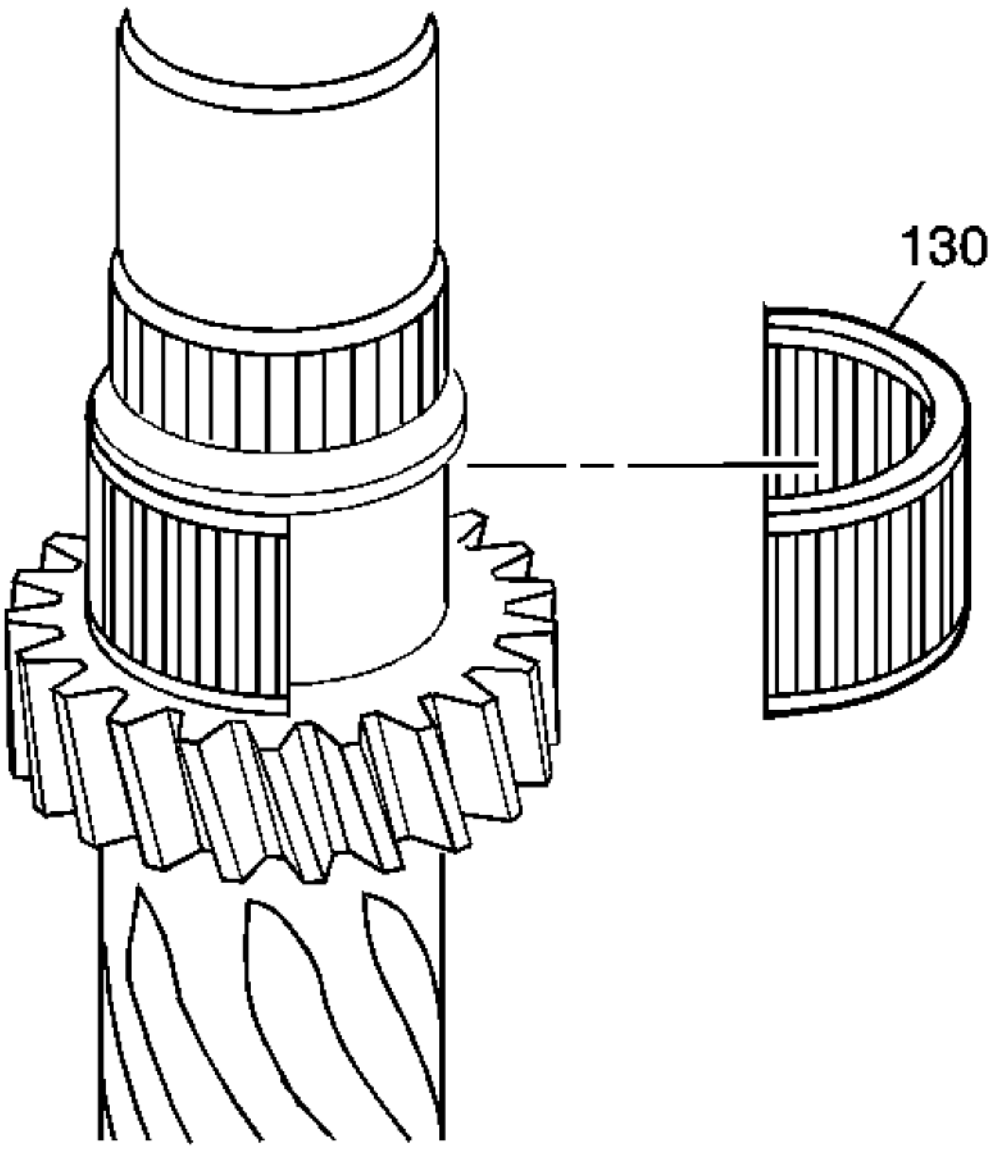

Fig. 180: View Of 4th Gear Bearing
Courtesy of GENERAL MOTORS CORP.

4. Apply lubricant and install the 4th gear bearing (130). Refer to **Adhesives, Fluids, Lubricants, and Sealers**.

cardiagn.com

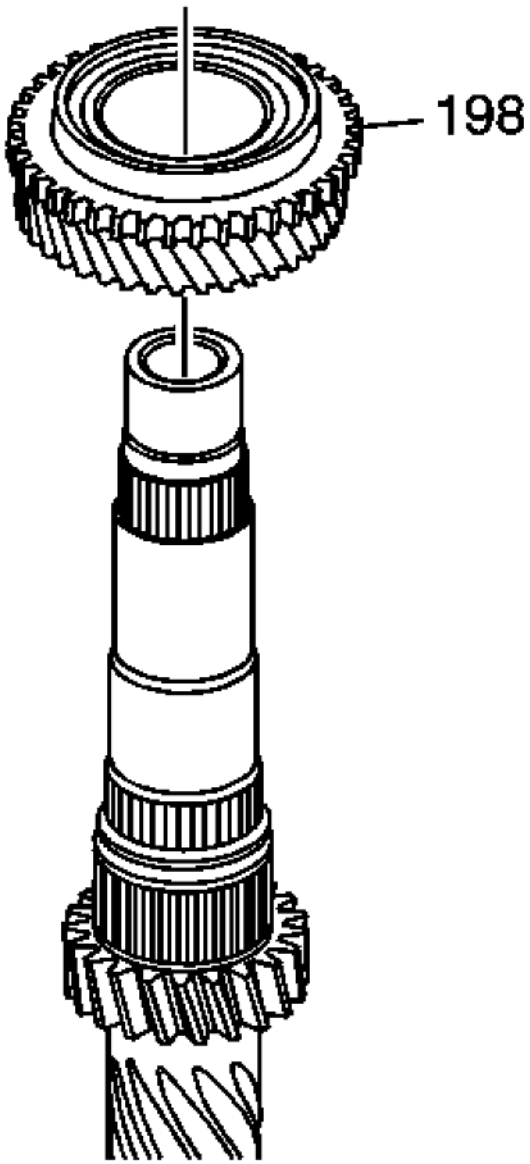

Fig. 181: View Of 4th Gear
Courtesy of GENERAL MOTORS CORP.

5. Apply lubricant and install the 4th gear (198).

cardiagn.com

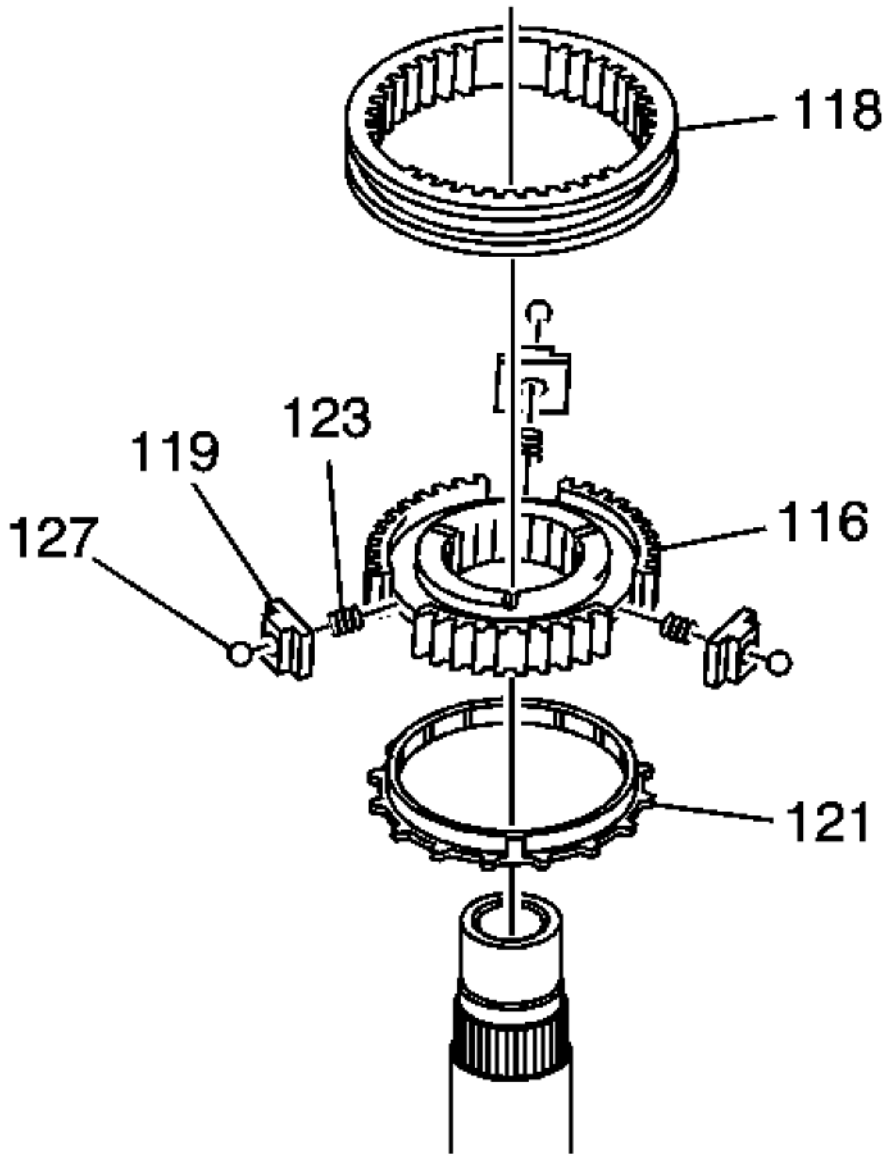

Fig. 182: View 3rd/4th Gear Assembly
Courtesy of GENERAL MOTORS CORP.

6. Apply lubricant and install the following components:
   - The blocking ring (121)
   - The 3rd/4th gear synchronizer hub (116) including the spring (123), detent ball (127) and insert (119)

cardiagn.com

- The 3rd/4th gear synchronizer sleeve (118) with the higher boss facing the front

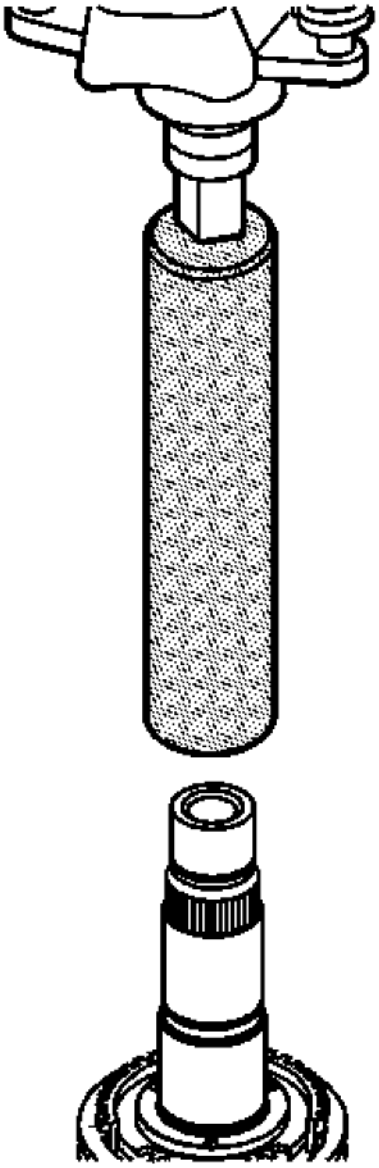

Fig. 183: Installing 3rd/4th Synchronizer Hub Assembly
Courtesy of GENERAL MOTORS CORP.

7. Using a hydraulic press and **DT-47723:** installer, install the 3rd/4th synchronizer hub assembly. Ensure that the synchronizer ring and 3rd/4th synchronizer hub assembly are aligned when installing.

cardiagn.com

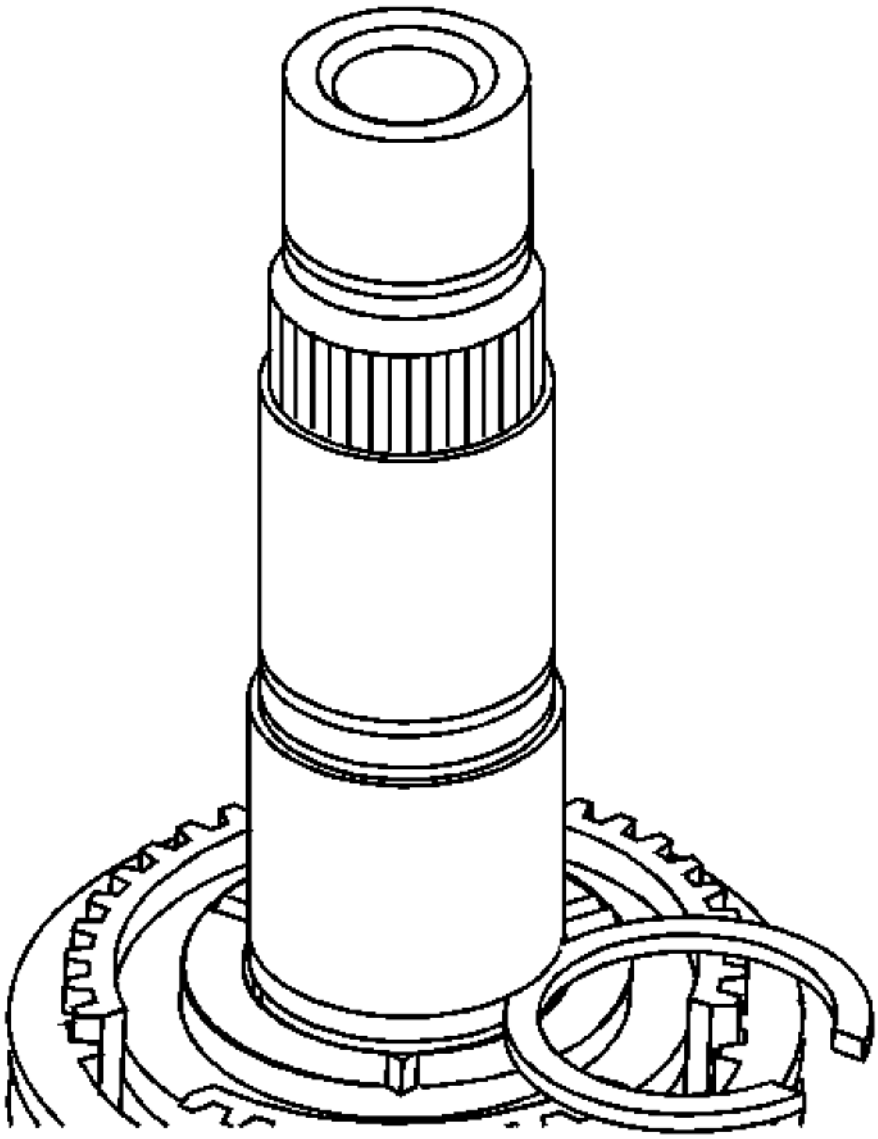

Fig. 184: View Of Retaining Ring
Courtesy of GENERAL MOTORS CORP.

NOTE: The retaining ring is a selected fit. Always install a NEW retaining ring.

8. Select the maximum thickness retaining ring that will fit in the groove. Refer to **3rd and 4th Gear Synchronizer Retaining Ring Specifications**.

cardiagn.com

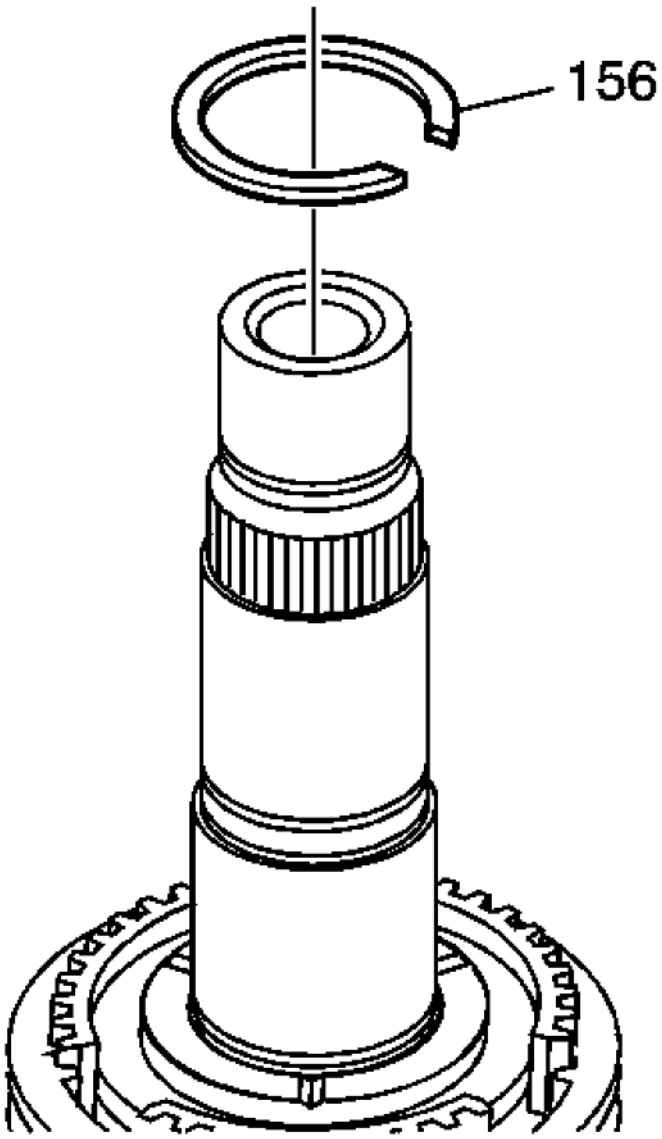

Fig. 185: View Of Snap Ring
Courtesy of GENERAL MOTORS CORP.

9. Install a NEW snap ring (156).

cardiagn.com

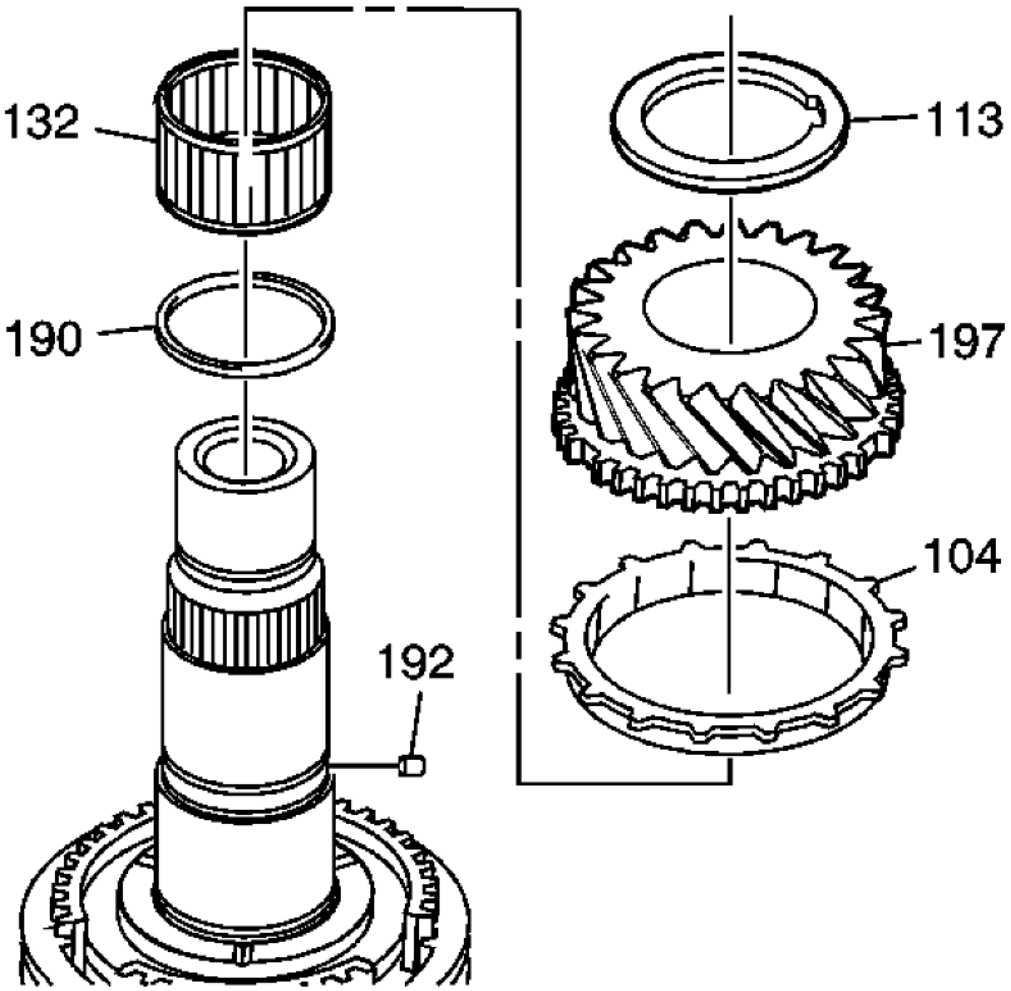

Fig. 186: View Of 3rd Gear Components
Courtesy of GENERAL MOTORS CORP.

10. Apply lubricant to components and install the following components:
    - 3rd/4th gear spacer (190)
    - 3rd gear bearing (132)
    - 3rd gear blocking ring (104)
    - Install and align the 3rd gear (197).
    - Locating pin (192)
    - Install and align the 3rd gear thrust washer (113) with the groove facing the front.

cardiagn.com

Refer to **Adhesives, Fluids, Lubricants, and Sealers** .

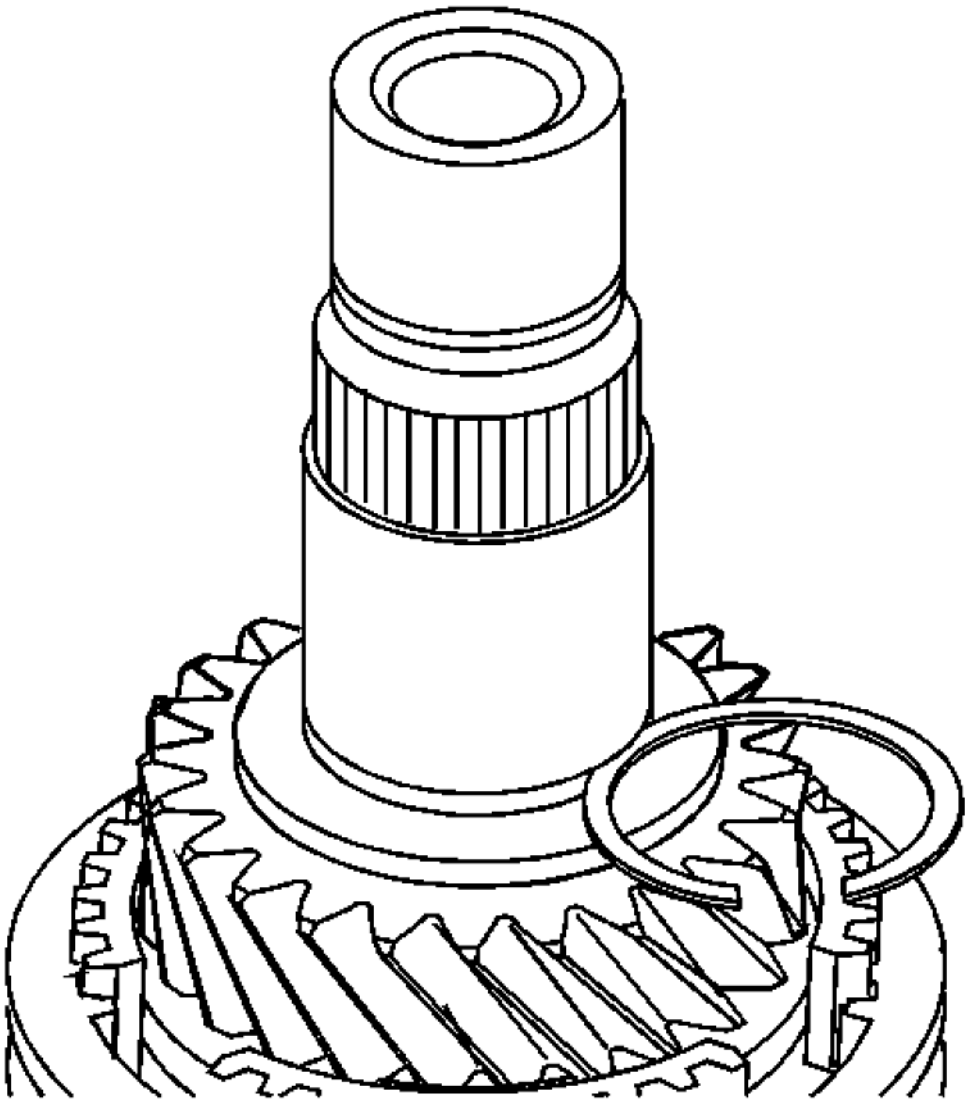

Fig. 187: View Of Retaining Ring
Courtesy of GENERAL MOTORS CORP.

NOTE: The retaining ring is a selected fit. Always install a NEW retaining ring.

11. Select the maximum thickness retaining ring that will fit in the groove. Refer to **3rd and 4th Gear**

cardiagn.com

Synchronizer Retaining Ring Specifications.

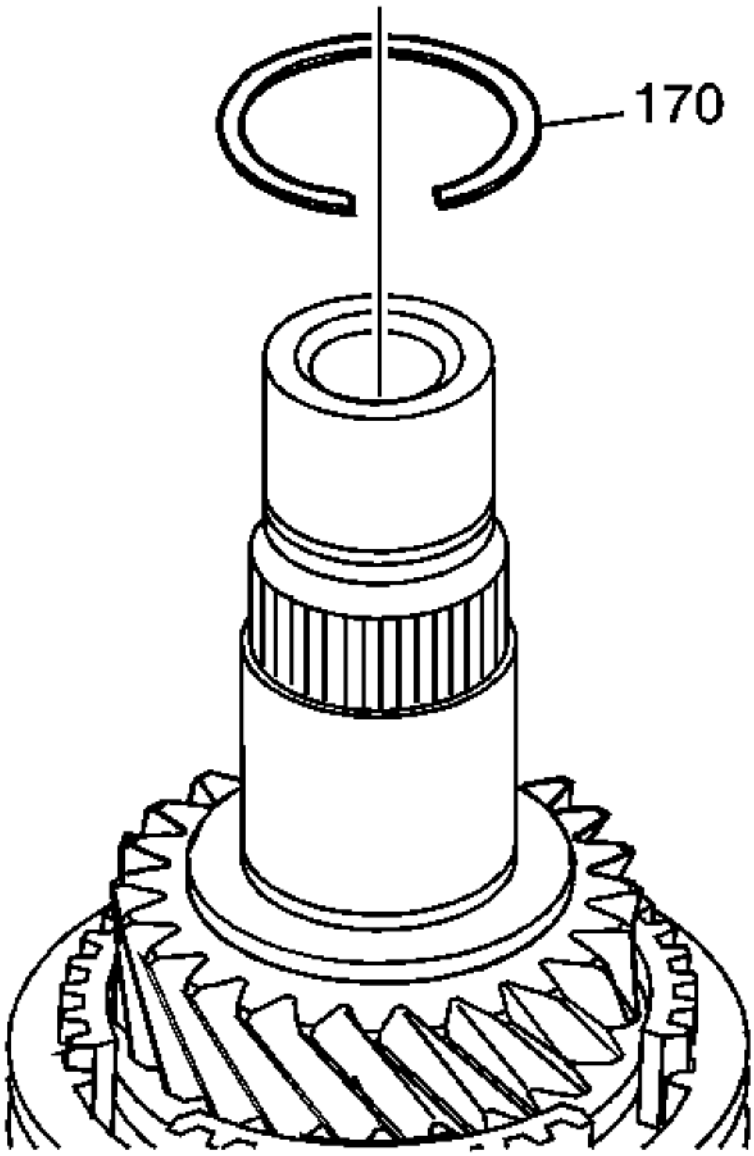

Fig. 188: View Of Snap Ring
Courtesy of GENERAL MOTORS CORP.

12. Install a NEW snap ring (170).

cardiagn.com

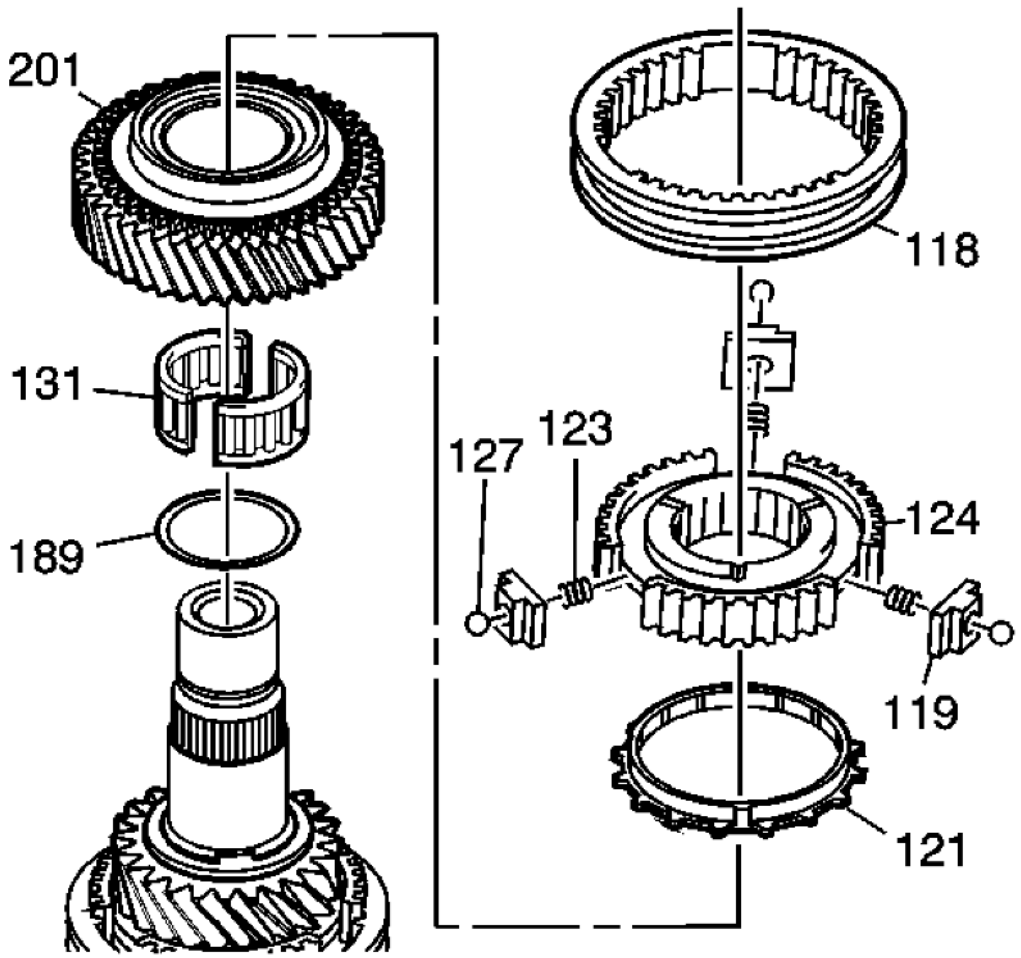

Fig. 189: View Of 5th/6th Gear Assembly
Courtesy of GENERAL MOTORS CORP.

13. Install the 6th gear bearing spacer (189).
14. Apply lubricant and install the 6th gear bearing (131). Refer to **Adhesives, Fluids, Lubricants, and Sealers**.
15. Apply lubricant and install the 6th gear (201).
16. Apply lubricant and install the 6th gear blocking ring (121).
17. Apply lubricant and install the 5th/6th gear synchronizer hub (124) including the spring (123), detent ball (127) and insert (119).
18. Apply lubricant and install the 5th/6th synchronizer sleeve (118) with higher boss of sleeve facing the rear.

cardiagn.com

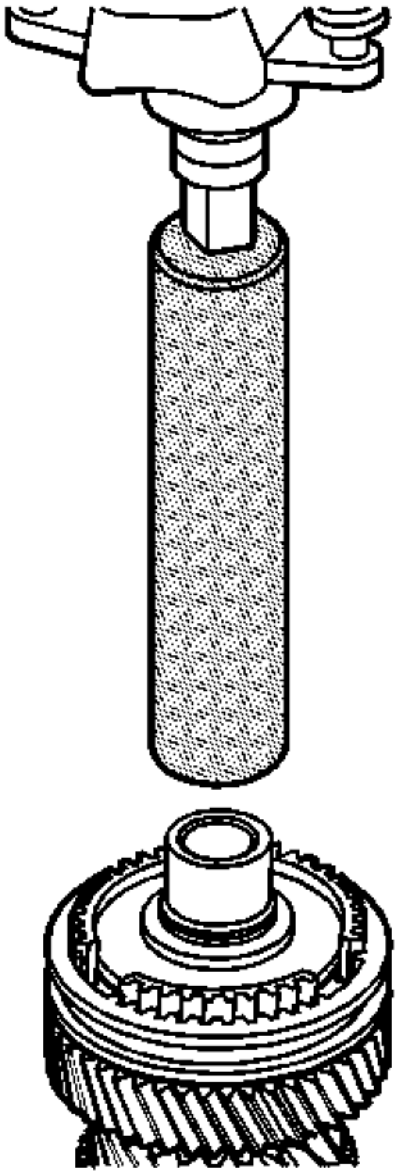

Fig. 190: Installing 5th/6th Synchronizer Hub Assembly
Courtesy of GENERAL MOTORS CORP.

19. Use a hydraulic press and **DT-47723:** installer to install the 5th/6th synchronizer hub assembly.

cardiagn.com

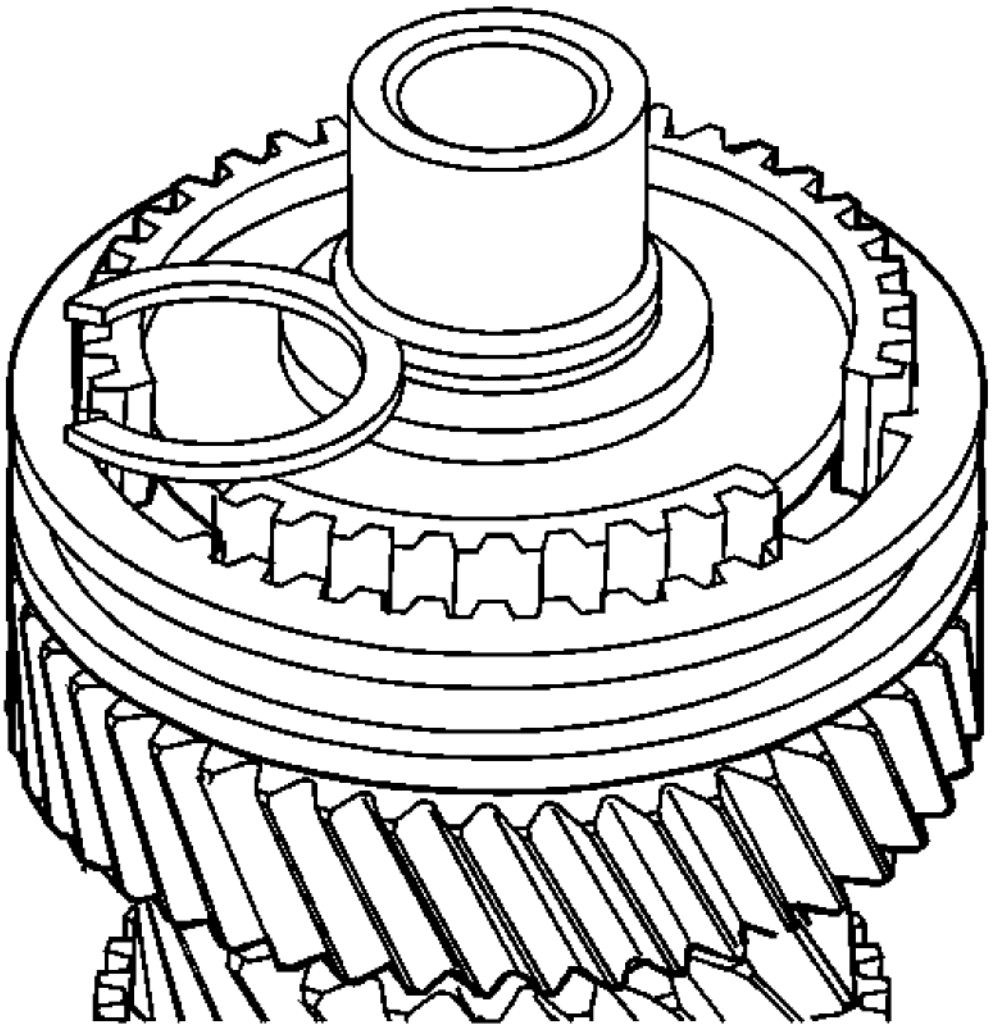

Fig. 191: View Of Retaining Ring
Courtesy of GENERAL MOTORS CORP.

NOTE: The retaining ring is a selected fit. Always install a NEW retaining ring.

20. Select the maximum thickness retaining ring that will fit in the groove. Refer to **6th Gear Retaining Ring Specifications**.

cardiagn.com

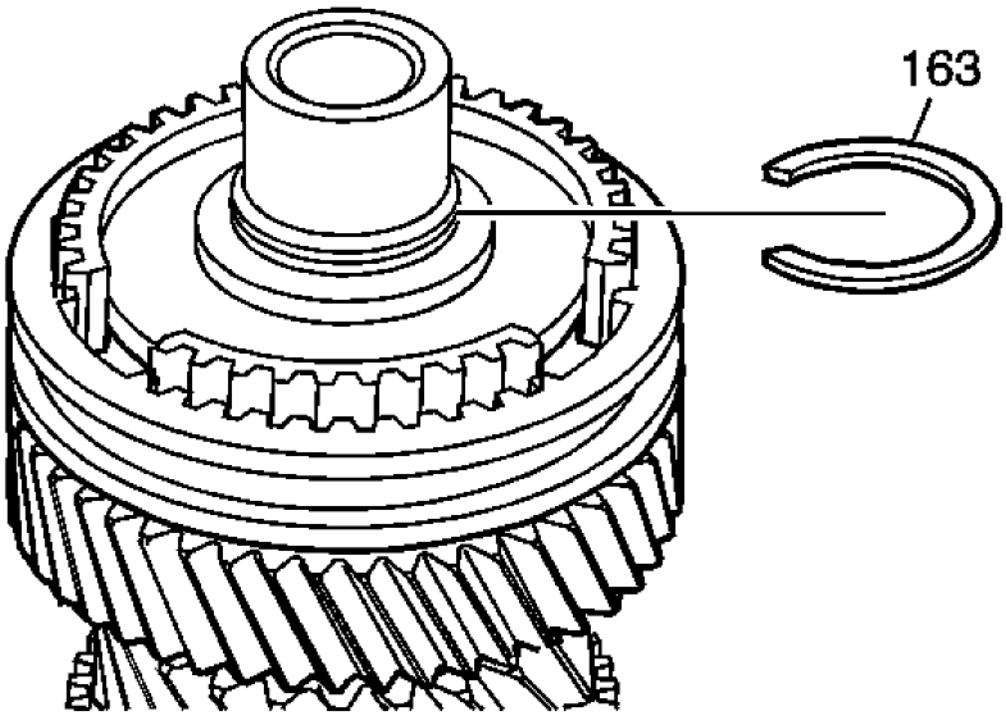

Fig. 192: View Of Snap Ring
Courtesy of GENERAL MOTORS CORP.

21. Install a NEW snap ring (163).

OUTPUT SHAFT ASSEMBLE

Tools Required

DT-47723 Output Shaft Bearing Installer. See **Special Tools**.

cardiagn.com

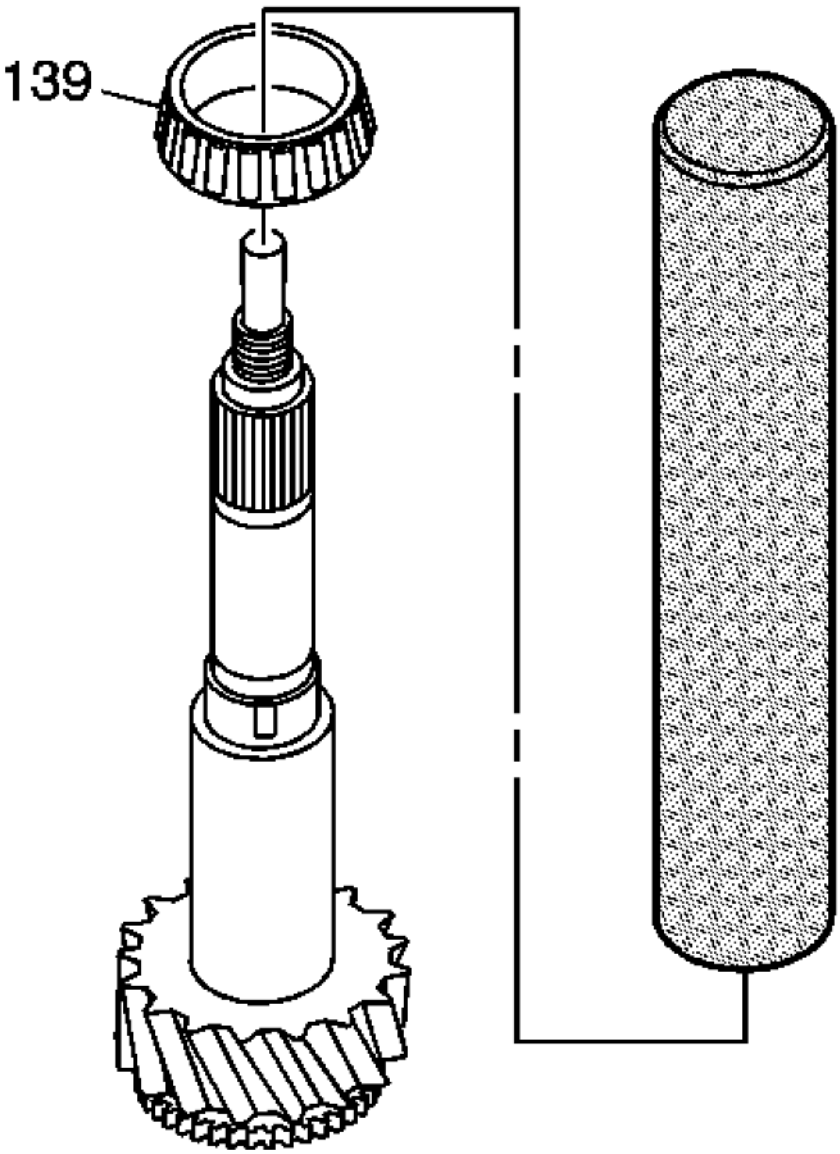

Fig. 193: Installing Output Shaft Bearing
Courtesy of GENERAL MOTORS CORP.

Using **DT-47723** , install the output shaft bearing (139). See **Special Tools**.

TRANSMISSION ASSEMBLE

cardiagn.com

Special Tools

- **DT-47678:** Transmission Holding Fixture
- **DT-49027:** Coil Pin Remover and Installer
- **J 3289-20:** Holding Fixture
- **J 35467:** One-Way Clutch Tester
- **J 44731:** Input Shaft Seal Installer
- **J 45012:** Holding Fixture

For equivalent regional tools, refer to **Special Tools**.

cardiagn.com

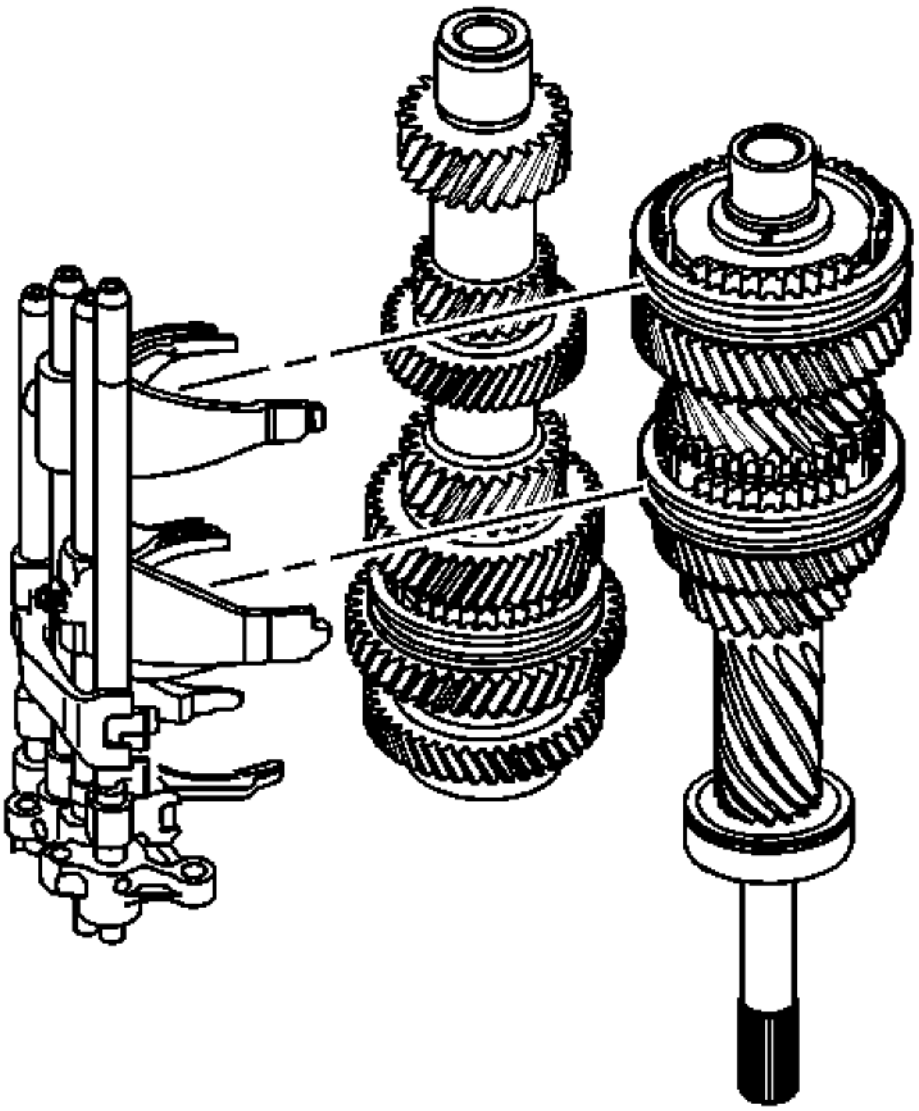

Fig. 194: Disassembling/Assembling Shift Rails, Input Shaft & Countershaft
Courtesy of GENERAL MOTORS CORP.

1. Apply lubricant GM P/N 88862475 (Canadian P/N 88862476) to each gear shift fork and gear shift head. Join the shift rail assembly to the input shaft and countershaft assembly.

cardiagn.com

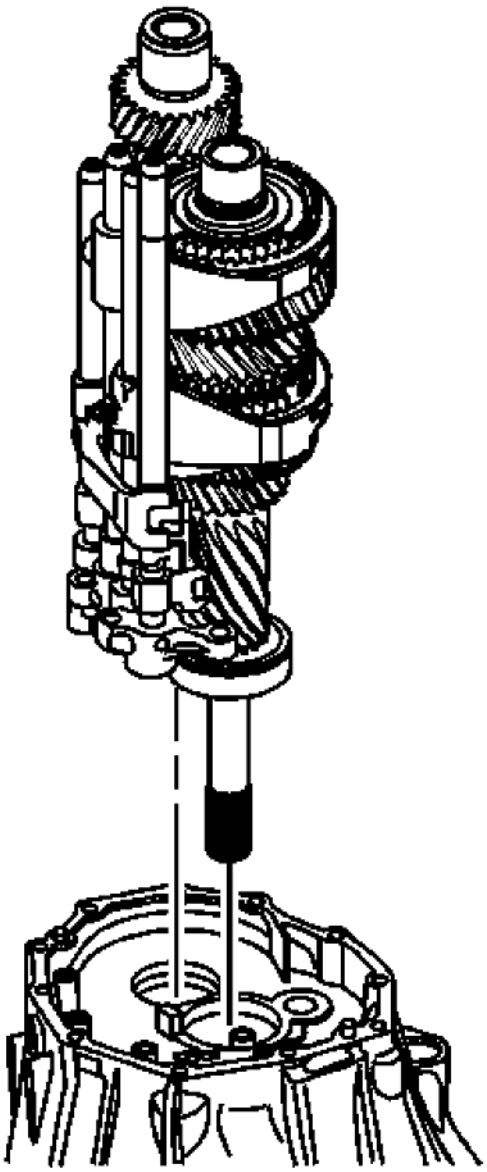

Fig. 195: View Of Input Shaft, Countershaft & Shift Rail Assembly
Courtesy of GENERAL MOTORS CORP.

2. With assistance install the input shaft, countershaft and shift rails as an assembly in the clutch housing.

cardiagn.com

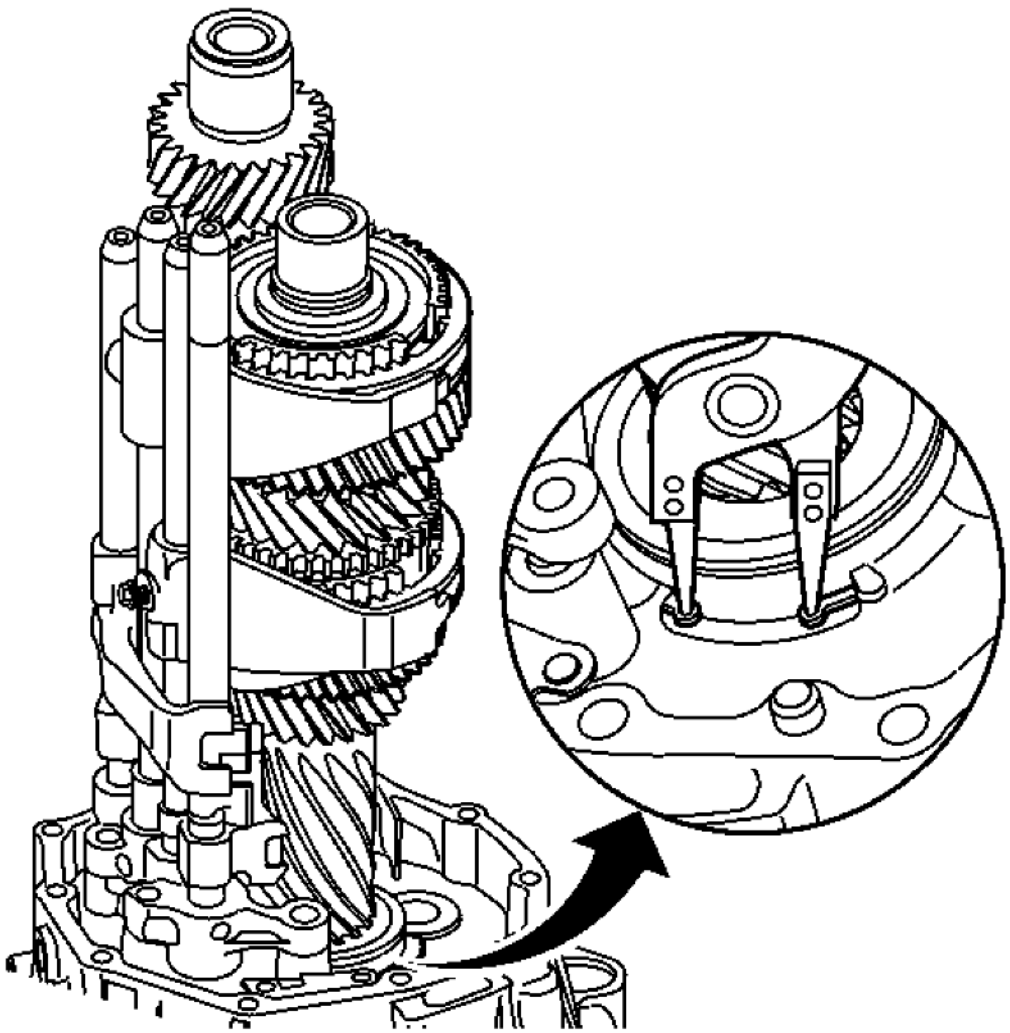

Fig. 196: Holding Snap Ring On Rear Input Shaft Bearing
Courtesy of GENERAL MOTORS CORP.

3. With assistance install the snap ring into the groove of the input shaft radial ball bearing.

cardiagn.com

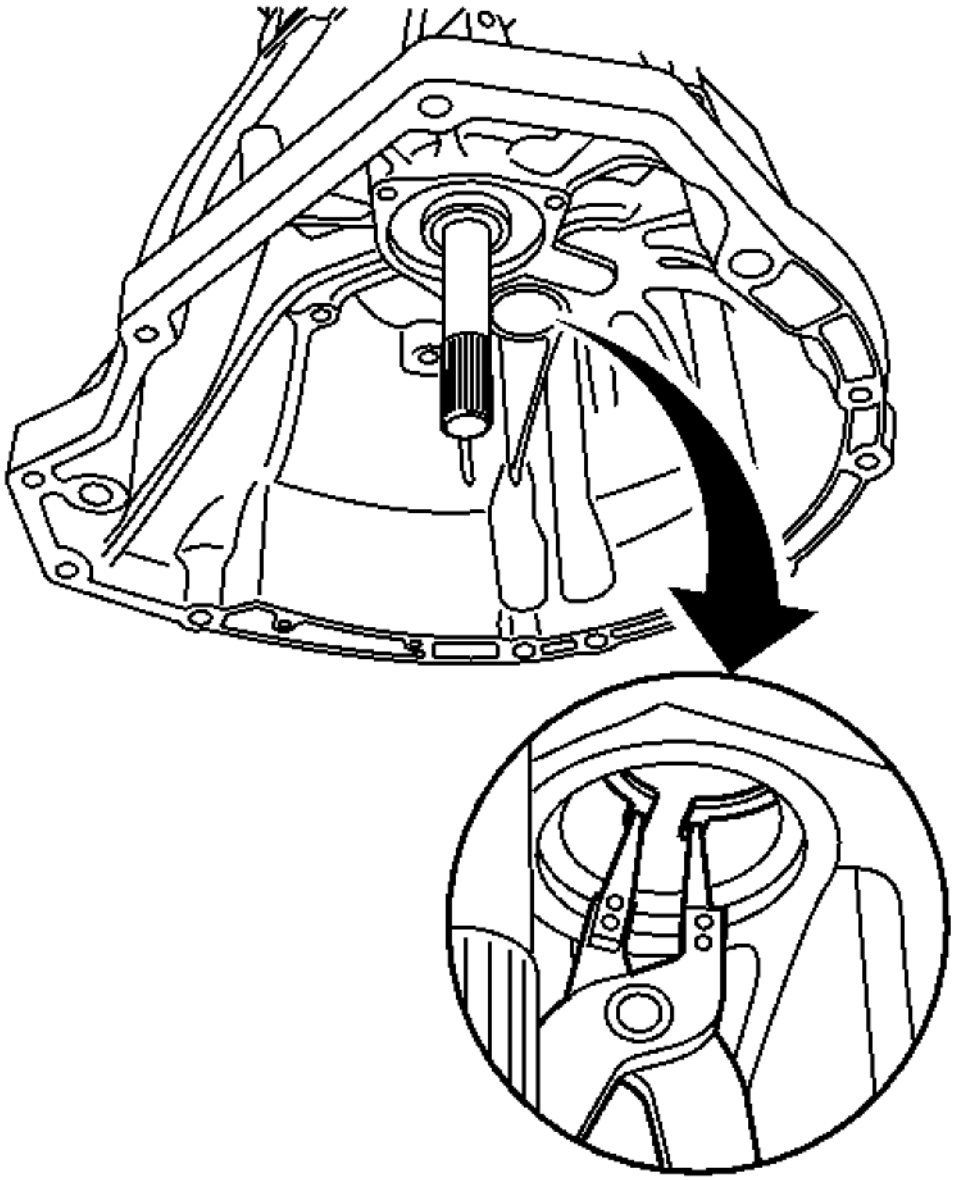

Fig. 197: Front Countershaft Bearing Snap Ring
Courtesy of GENERAL MOTORS CORP.

4. With assistance install the snap ring into the groove of the countershaft radial ball bearing.

cardiagn.com

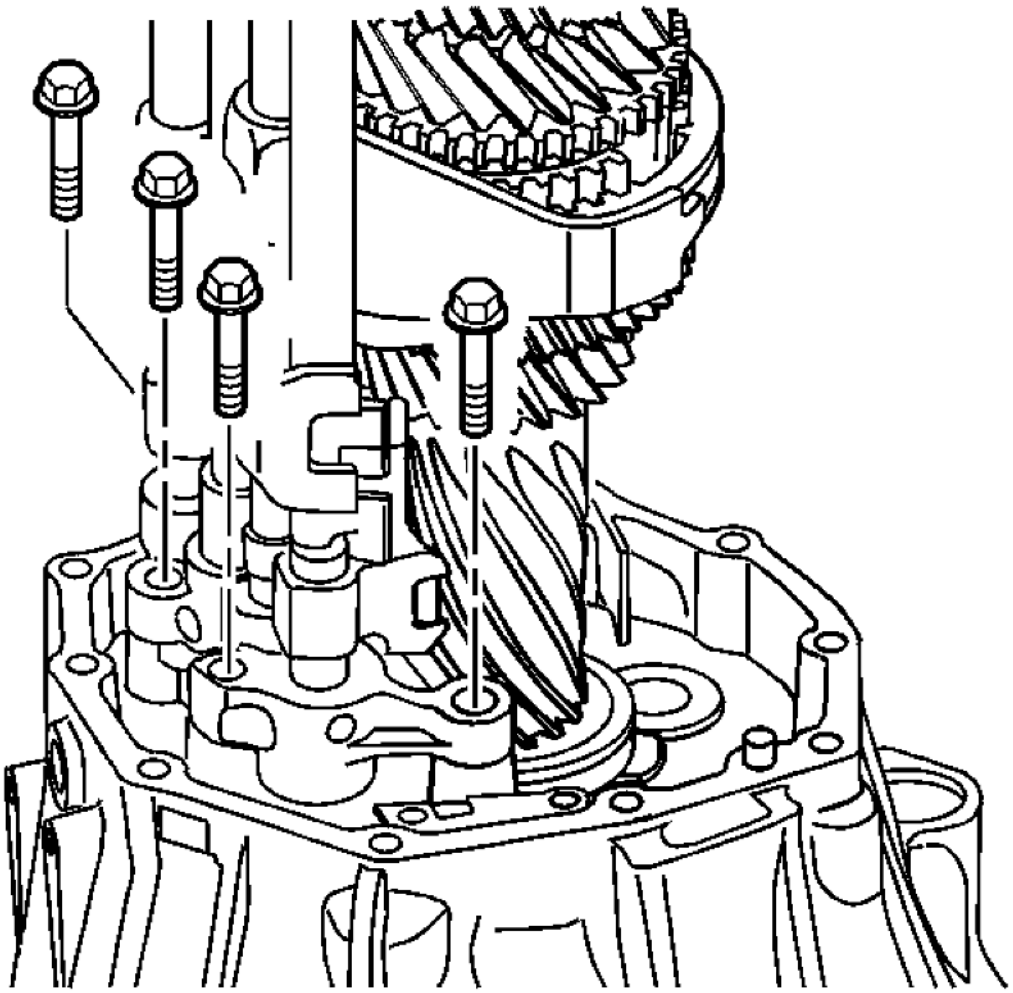

Fig. 198: View Of Shift Counter Lever Bracket Bolts
Courtesy of GENERAL MOTORS CORP.

5. Apply threadlocker GM P/N 12345382 (Canadian P/N 10953489) or equivalent to the shift rail bolts.

   CAUTION: Refer to Fastener Caution .

6. Install the 4 shift rail bolts and tighten to 21 N.m (15 lb ft).

cardiagn.com

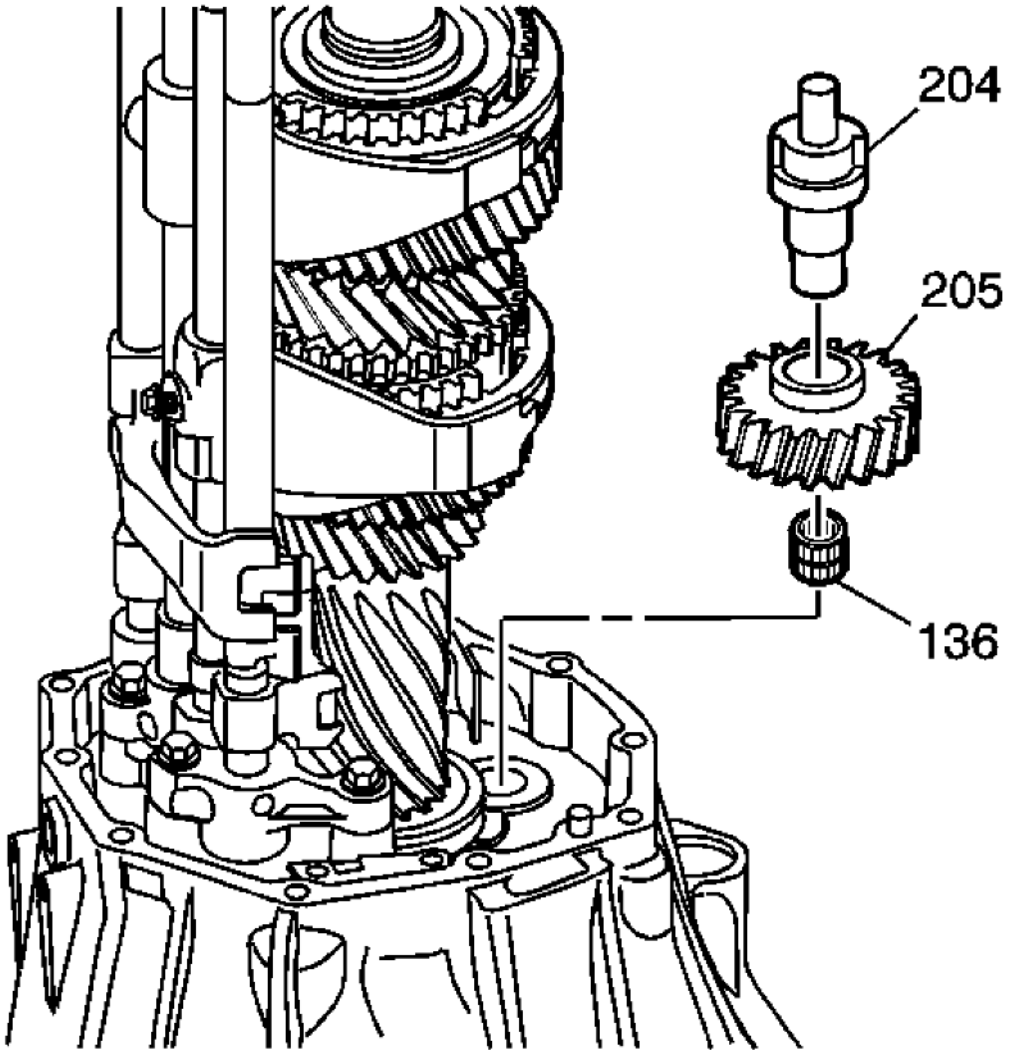

Fig. 199: View Of Reverse Idler Gear, Bearing & Shaft
Courtesy of GENERAL MOTORS CORP.

NOTE: During alignment, ensure that the thread hole of the reverse idler gear shaft (204) aligns with the thread hole of the middle case.

7. Apply lubricant GM P/N 88862475 (Canadian P/N 88862476) and install the following components:
   - The reverse idler gear bearing (136)
   - The reverse idler gear (205) with the higher boss facing the rear
   - The reverse idler gear shaft (204) with its hole facing outward

cardiagn.com

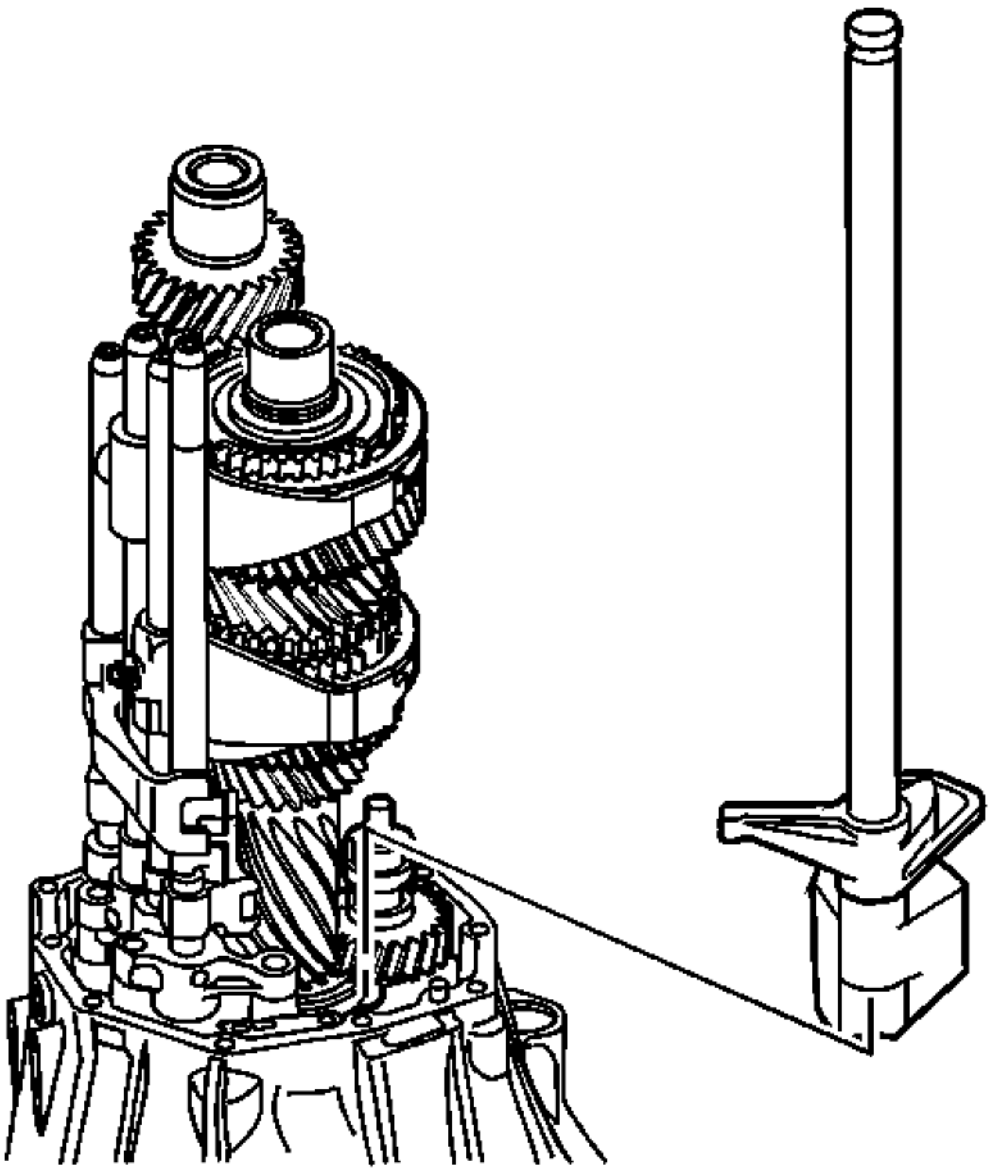

Fig. 200: Shift Shaft Selector Lever
Courtesy of GENERAL MOTORS CORP.

8. Apply sealer GM P/N 89020326 (Canadian P/N 89021188) or equivalent to the interface of either case.
9. Install the shift shaft selector lever.

cardiagn.com

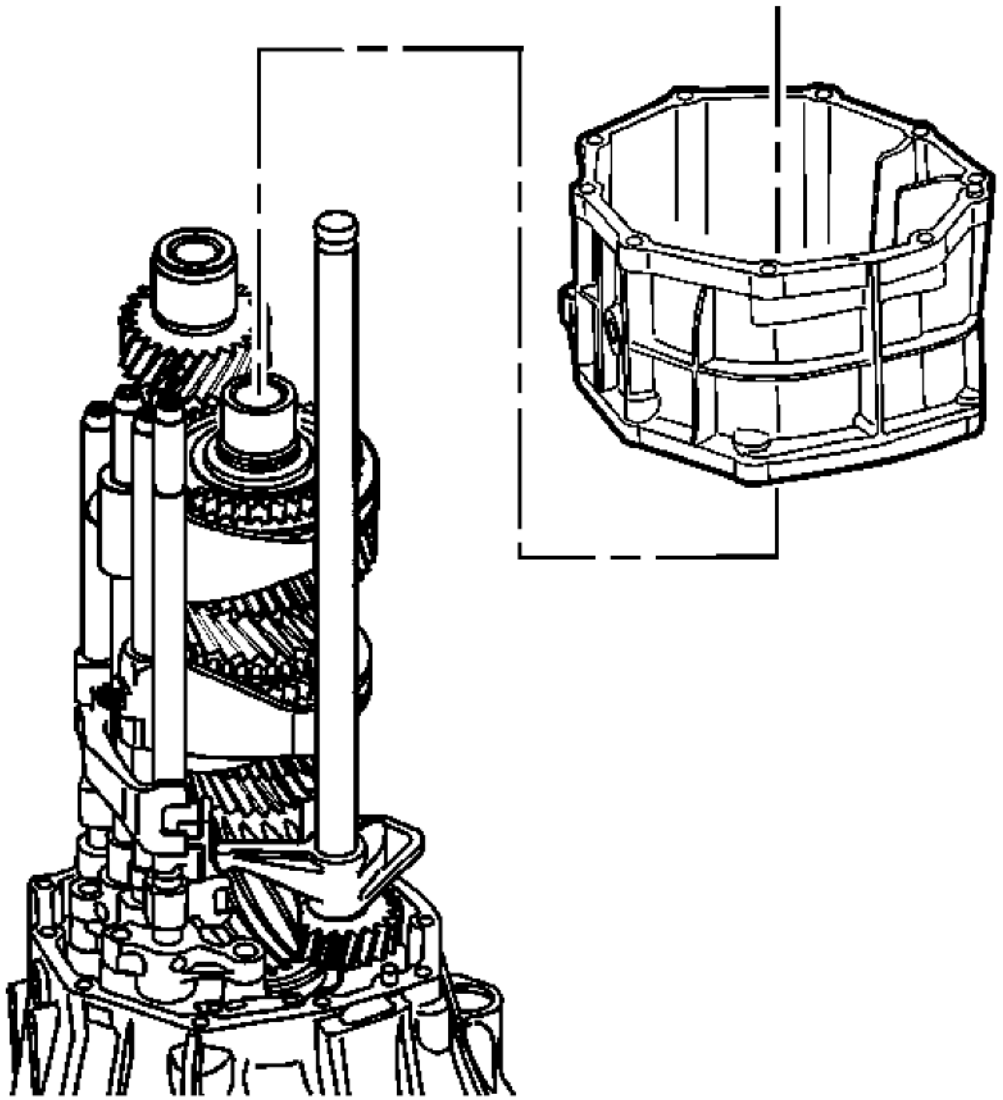

Fig. 201: Select Lever Shaft Bearing
Courtesy of GENERAL MOTORS CORP.

CAUTION: Refer to Machined Surface Damage Caution .

NOTE: Rotate case to avoid interference with shift fork.

cardiagn.com

10. Apply sealer GM P/N 89020326 (Canadian P/N 89021188) or equivalent to the interface of either case.
11. Apply lubricant GM P/N 88862475 (Canadian P/N 88862476 to the shift and select lever shaft bearing.
12. Install the intermediate case housing.

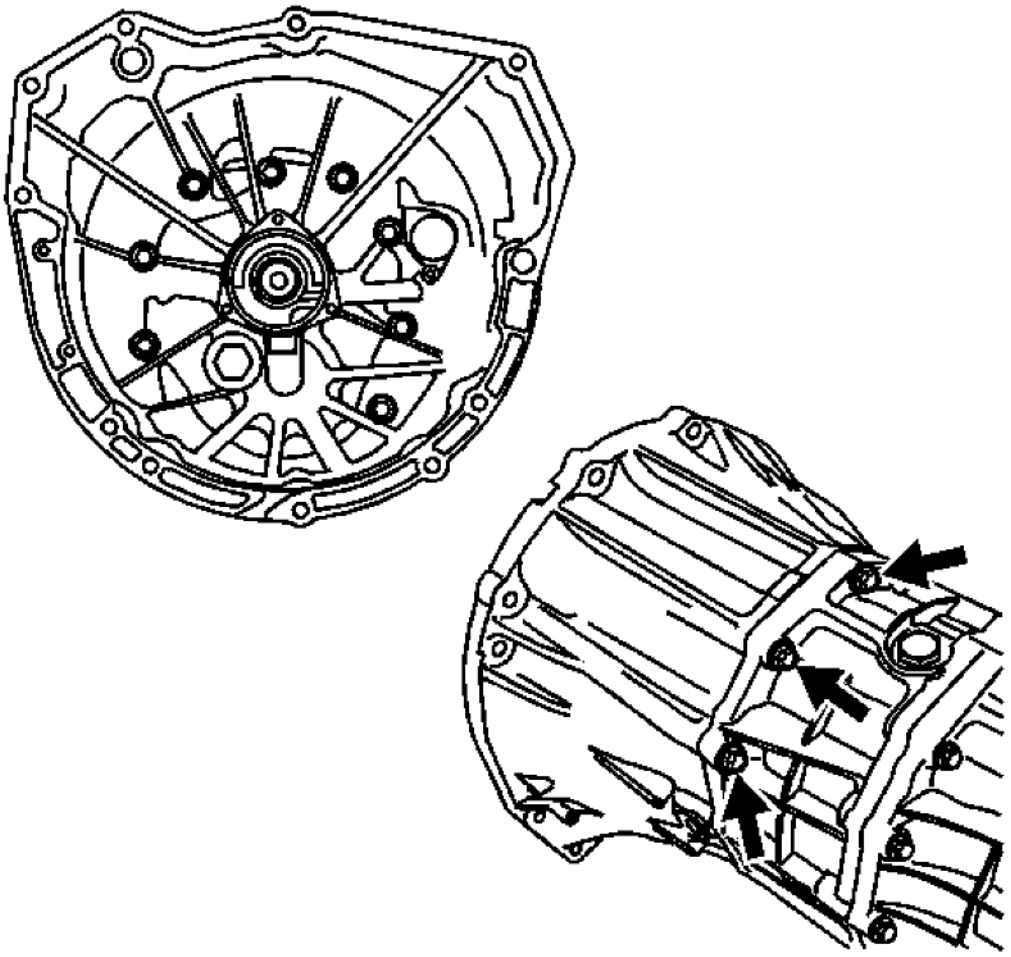

Fig. 202: View Of Clutch Housing Bolts
Courtesy of GENERAL MOTORS CORP.

13. Install the 8 bolts from the clutch housing and the 3 bolts from the middle case. Tighten the bolts to 40 N.m (29 lb ft).

cardiagn.com

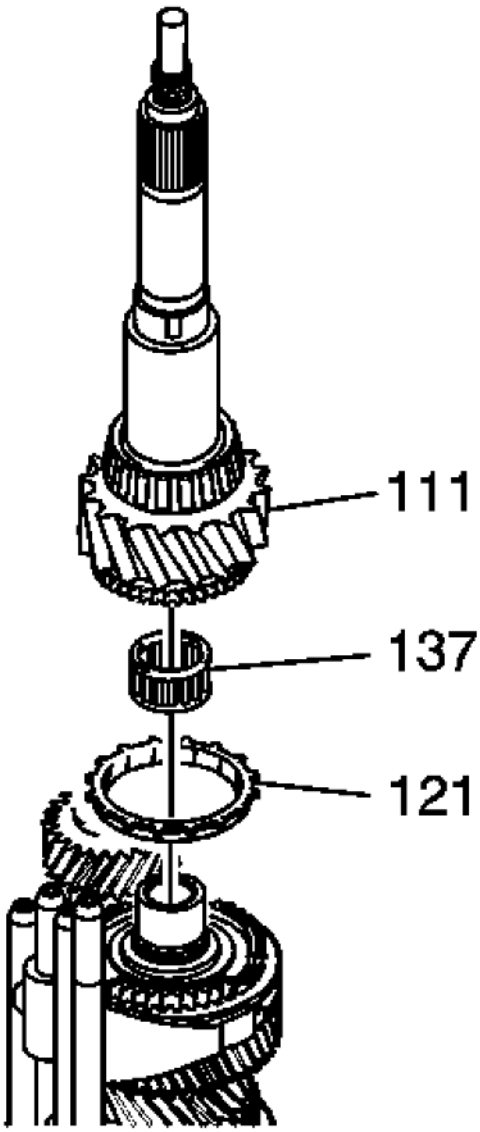

Fig. 203: View Of Rear Output Shaft, Input Shaft Bearing & Blocking Ring
Courtesy of GENERAL MOTORS CORP.

14. Apply lubricant GM P/N 88862475 (Canadian P/N 88862476) and install the input shaft bearing (137), blocking ring (121) and the rear output shaft (111).

cardiagn.com

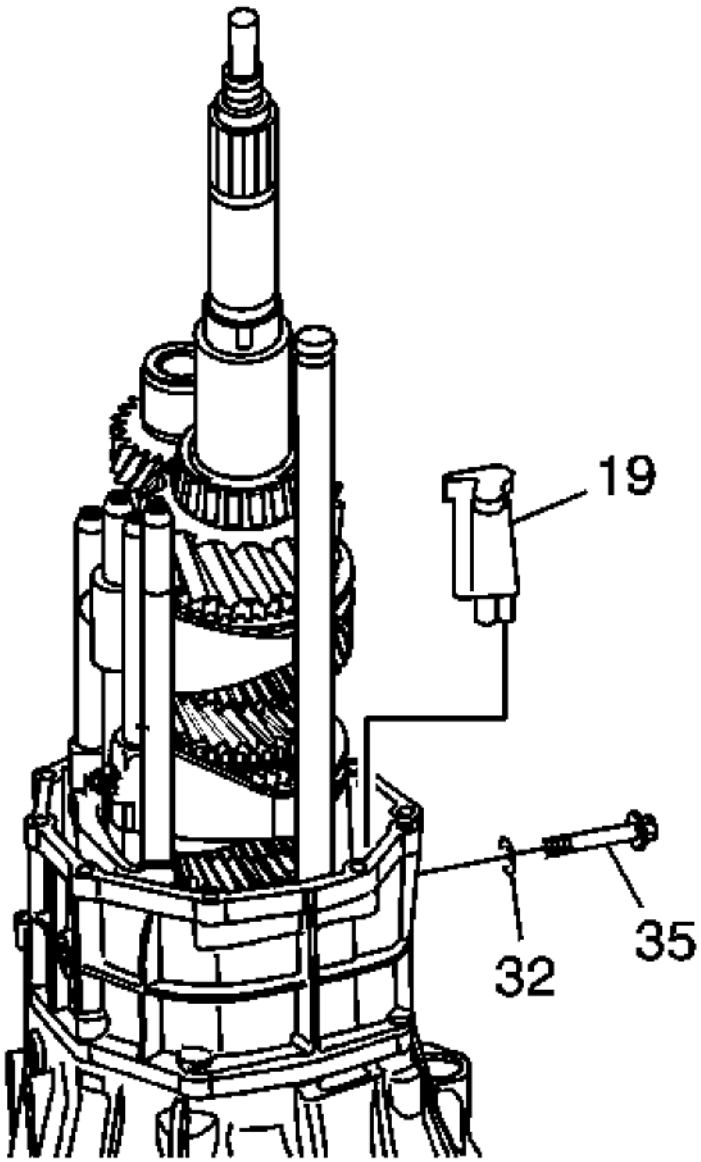

Fig. 204: Identifying Oil Trough Pipe, Reverse Idler Gear Shaft Bolt & Gasket
Courtesy of GENERAL MOTORS CORP.

15. Install the oil trough pipe (19).
16. Install a NEW gasket (32) and the bolt (35) to secure the reverse idler shaft. Tighten the bolt to 40 N.m (30 lb ft).

cardiagn.com

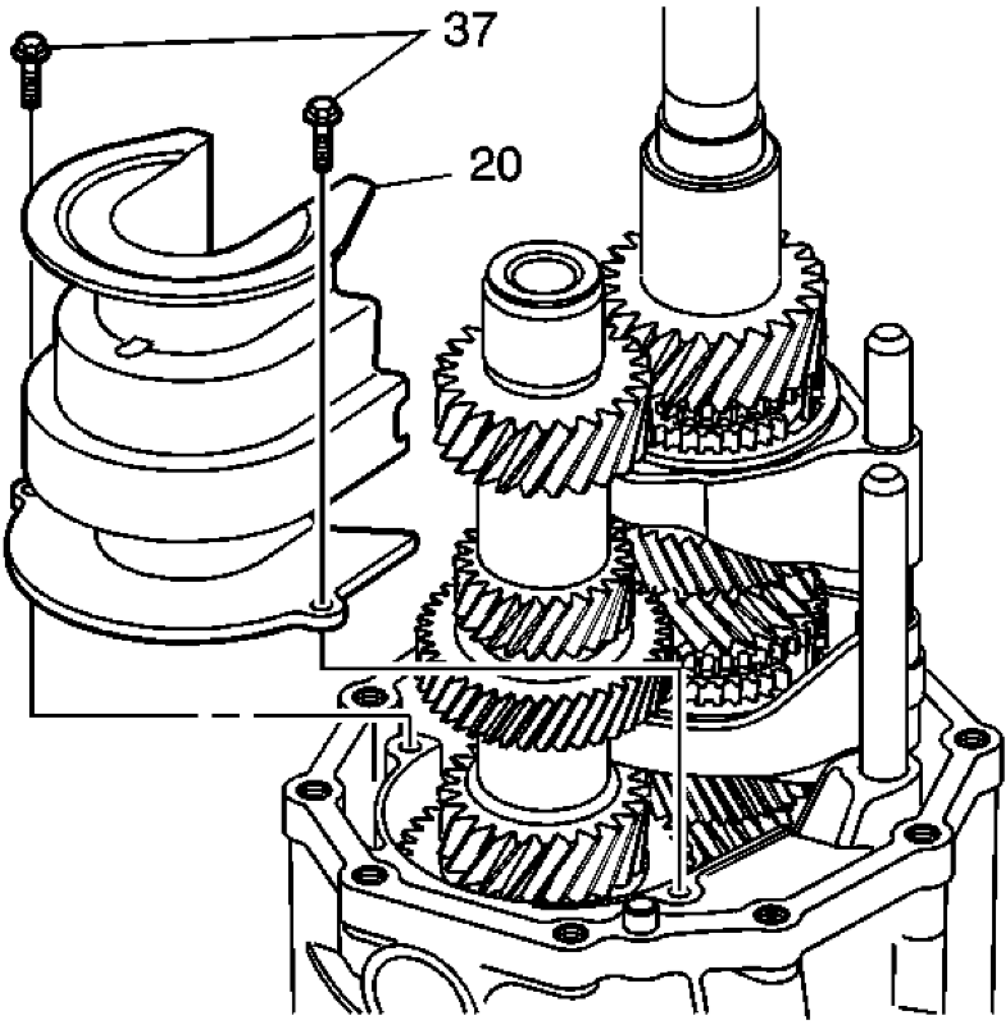

Fig. 205: Oil Trough Bolts & Oil Trough
Courtesy of GENERAL MOTORS CORP.

17. Install the oil trough (20) and the 2 oil trough bolts (37) and tighten to 8.5 N.m (75 lb in).

cardiagn.com

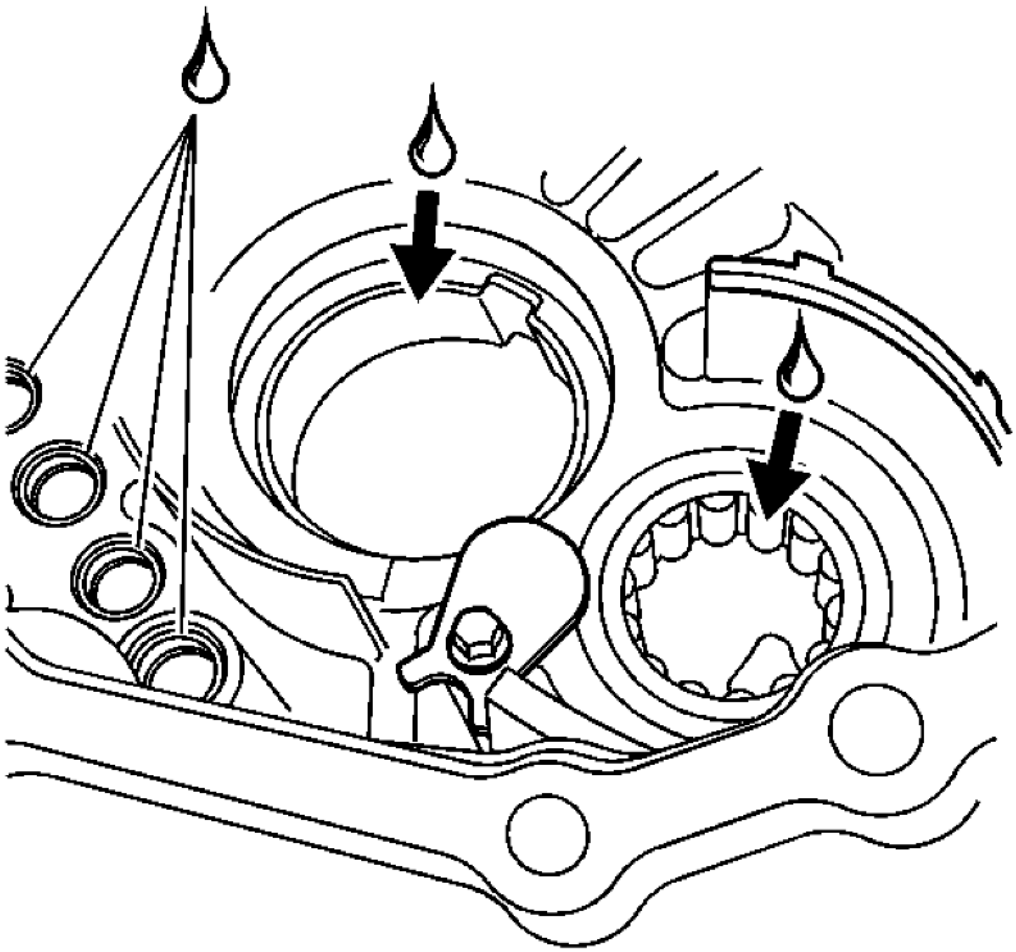

Fig. 206: Applying Lubricant To Cylindrical Roller Bearing, Outer Race & Control Sub-Assembly Holes
Courtesy of GENERAL MOTORS CORP.

18. Apply lubricant GM P/N 88862475 (Canadian P/N 88862476) to the following components:
    - The tapered roller bearing outer race
    - The cylindrical roller bearing
    - The control sub-assembly holes

cardiagn.com

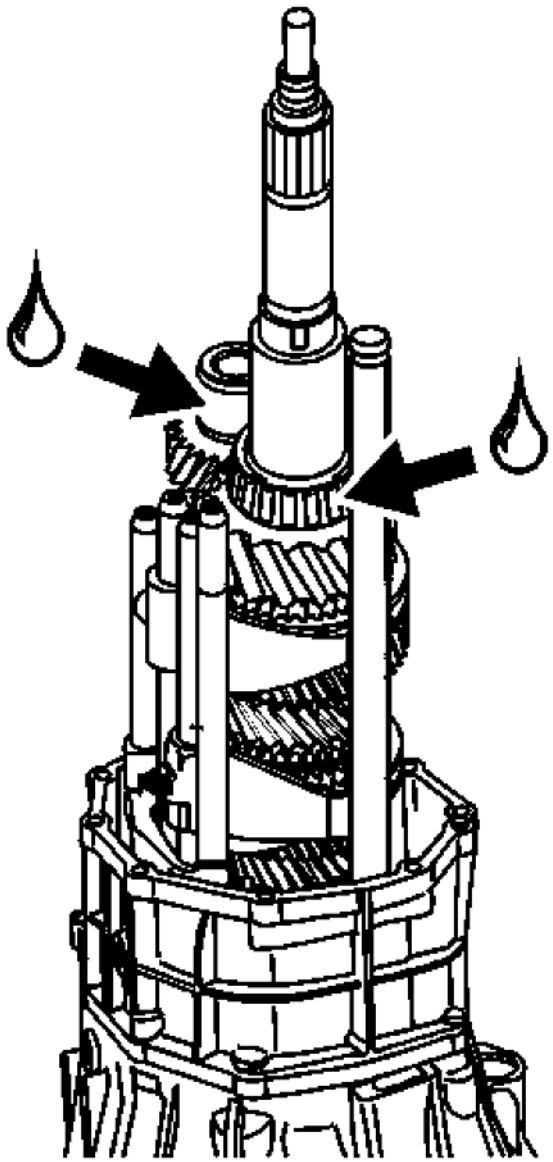

Fig. 207: Applying Lubricant To Tapered Roller Bearing & Cylindrical Roller Bearing Inner Race
Courtesy of GENERAL MOTORS CORP.

19. Apply lubricant GM P/N 88862475 (Canadian P/N 88862476) to the following components:
    - The tapered roller bearing of the output shaft
    - The cylindrical roller bearing inner race of counter gear

cardiagn.com

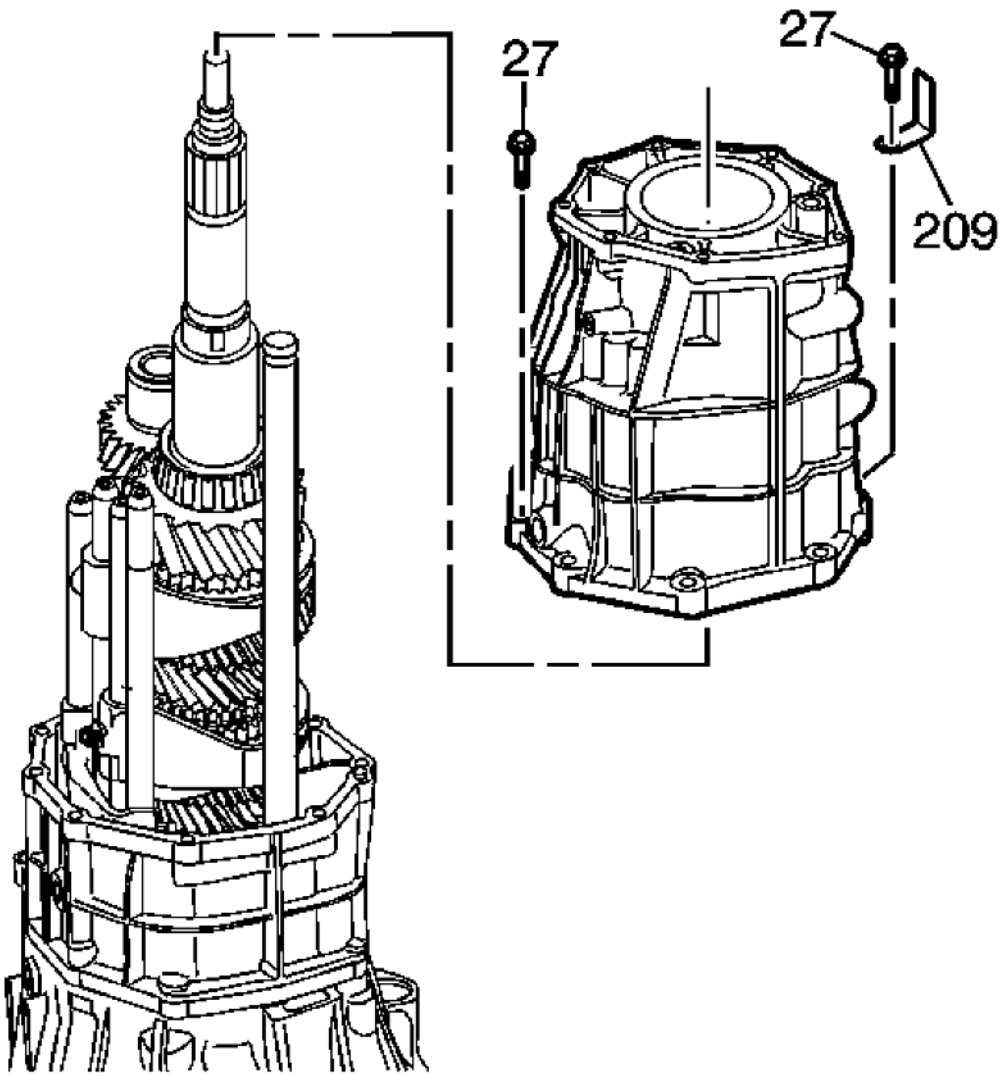

Fig. 208: View Of Rear Case Housing Retainer & Bolts
Courtesy of GENERAL MOTORS CORP.

20. Apply sealer GM P/N 89020326 (Canadian P/N 89021188) or equivalent to the clean interface of either case.

CAUTION: Refer to Machined Surface Damage Caution .

cardiagn.com

NOTE: Use care when installing the rear case housing so that the oil receiver is not damaged.

21. Install the rear case housing.
22. Install the 10 bolts (27) and retainer (209) to the rear case housing. Tighten the bolts to 40 N.m (29 lb ft).

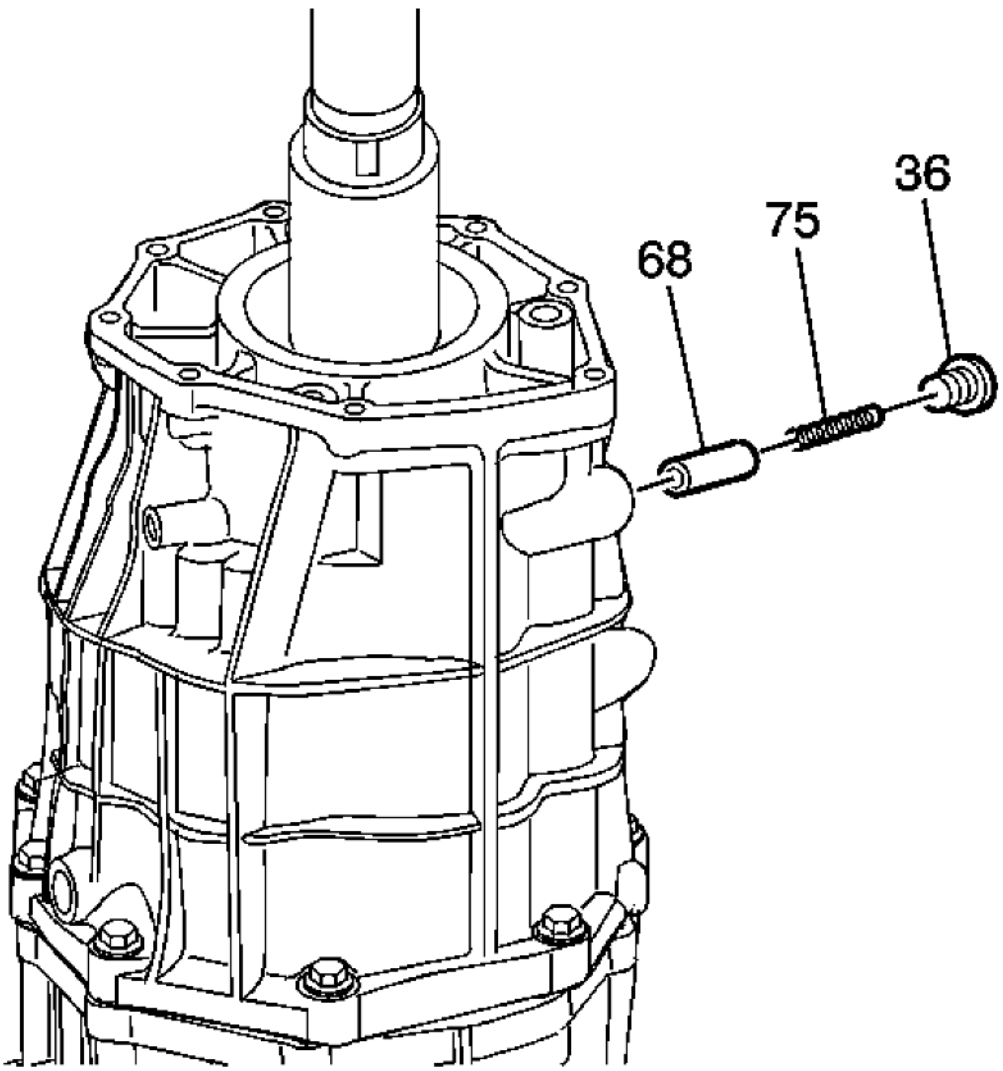

Fig. 209: View Of Shift Shaft Detent Plug, Spring & Pin
Courtesy of GENERAL MOTORS CORP.

23. Apply lubricant GM P/N 88862475 (Canadian P/N 88862476) and install the lock ball pin (68).

cardiagn.com

24. Install the spring (75) and a NEW plug (36). Tighten the plug to 24.5 N.m (18 lb ft).

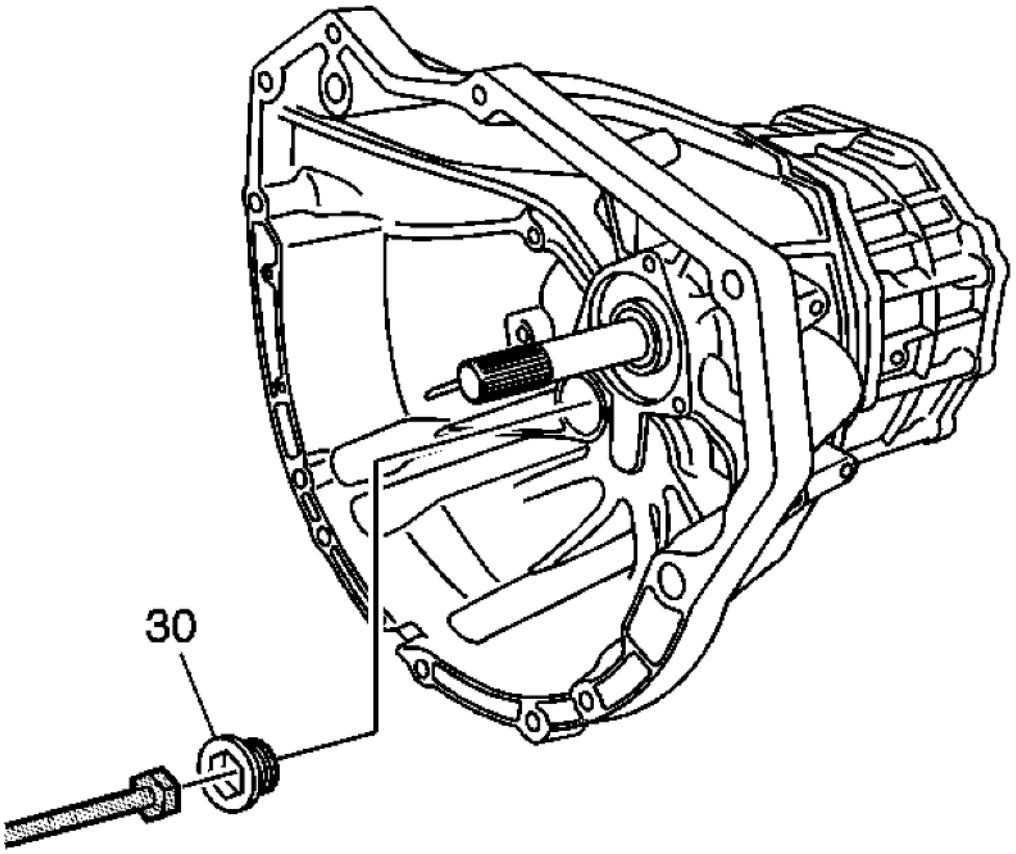

Fig. 210: Removing/Installing Clutch Housing Hole Plug
Courtesy of GENERAL MOTORS CORP.

25. Using **J 35467:** tester, install a NEW clutch housing hole plug (30) into the clutch housing. Tighten the bolt to 39.3 N.m (29 lb ft).

cardiagn.com

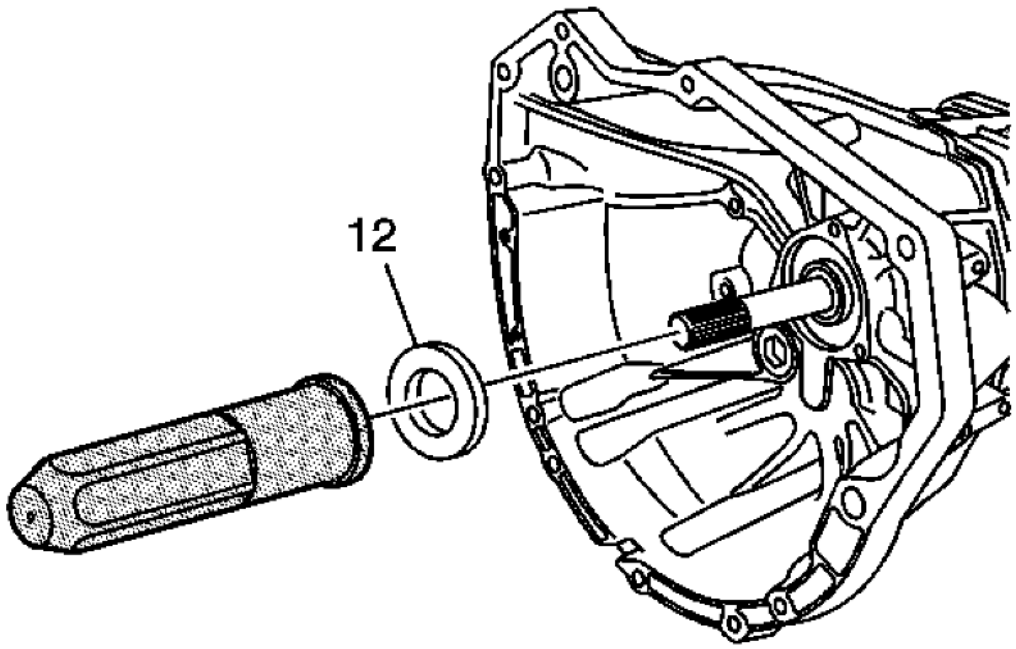

Fig. 211: Installing Input Shaft Seal
Courtesy of GENERAL MOTORS CORP.

26. Using **J 44731:** installer, install a NEW input shaft seal (12).

cardiagn.com

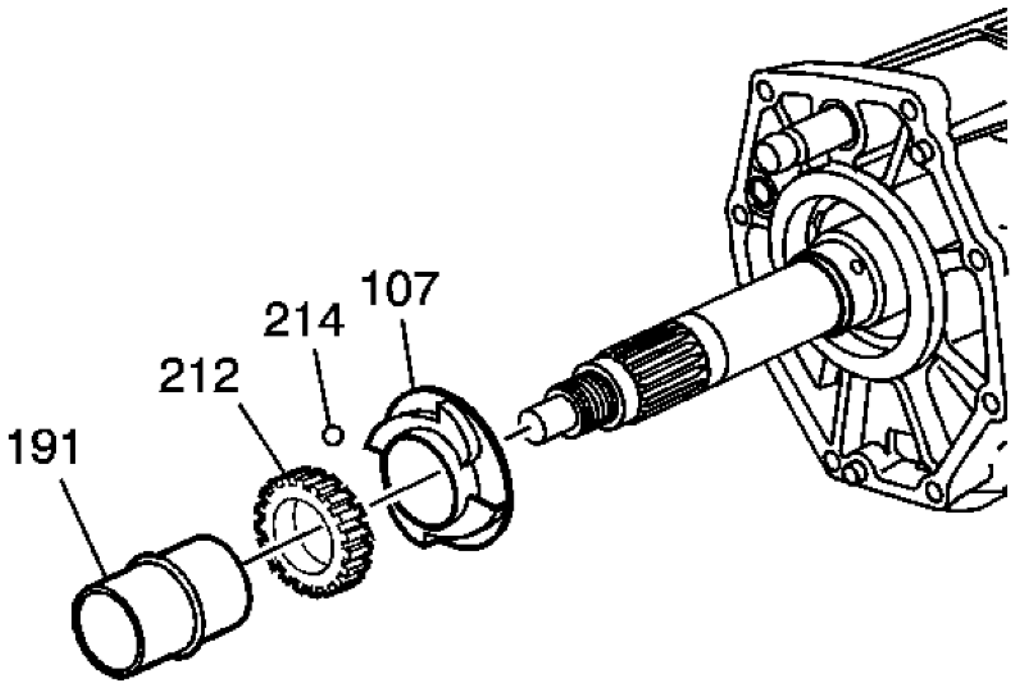

Fig. 212: View Of Vehicle Speed Sensor Drive Gear, Spacer, Locking Ball & Main Shaft Bearing Oil Slinger
Courtesy of GENERAL MOTORS CORP.

27. Align and install the main shaft bearing oil slinger (107).
28. Grease and install the locking ball (214).
29. Align and install the vehicle speed sensor drive gear (212).
30. Install a NEW rear output shaft rear bearing spacer (191).

cardiagn.com

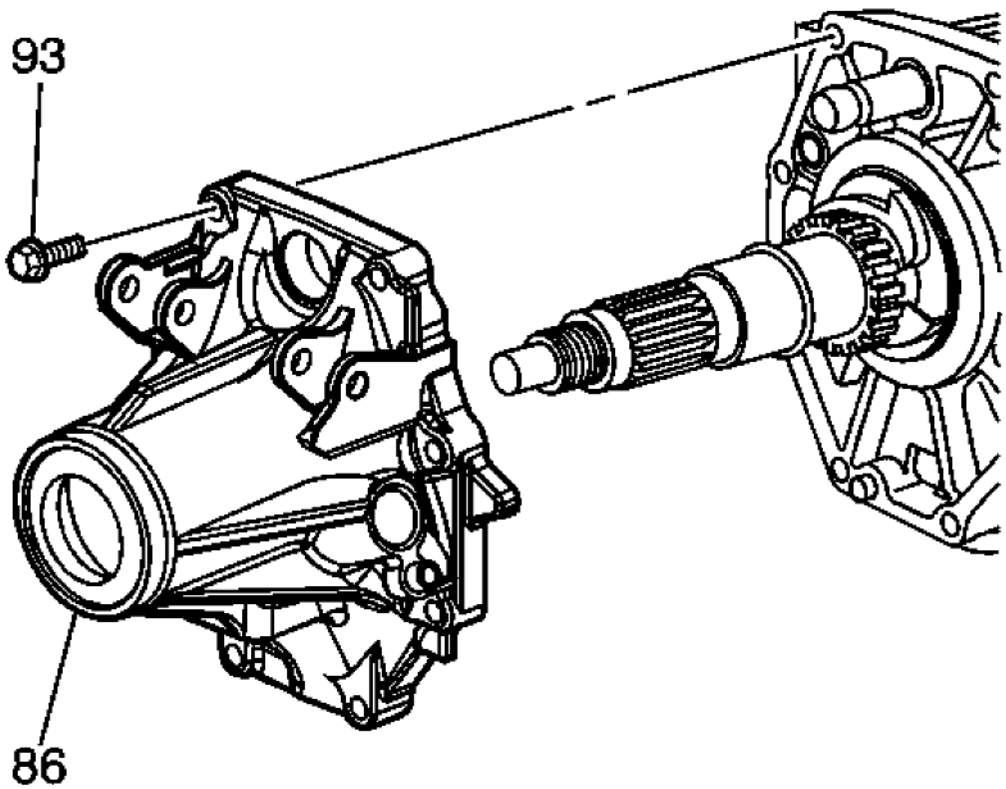

Fig. 213: Identifying Extension Housing & Bolts
Courtesy of GENERAL MOTORS CORP.

31. Apply sealer GM P/N 89020326 (Canadian P/N 89021188) or equivalent to the interface of either case.
32. Install the rear extension housing.
33. Install the 8 bolts (93) into the rear extension housing (86) and tighten to 29 N.m (21 lb ft).

cardiagn.com

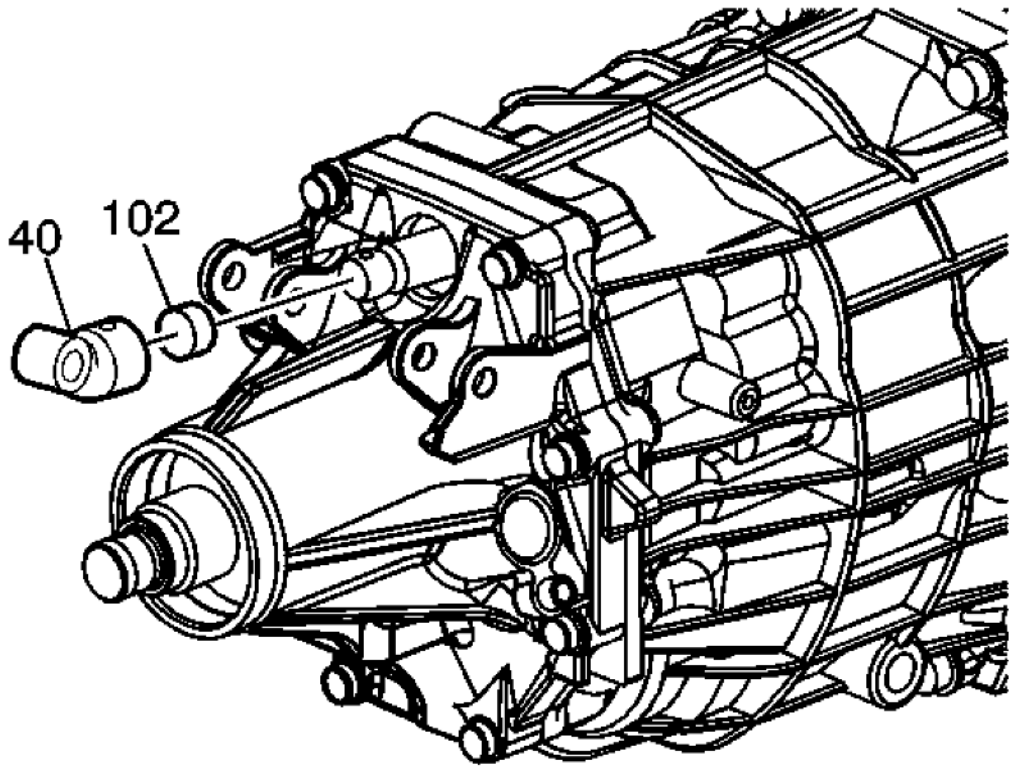

Fig. 214: Identifying Dampener & Shift Lever Rod Universal Joint
Courtesy of GENERAL MOTORS CORP.

34. Install the dampener (102) and shift lever rod universal joint (40) on the end of the shift control shaft.

cardiagn.com

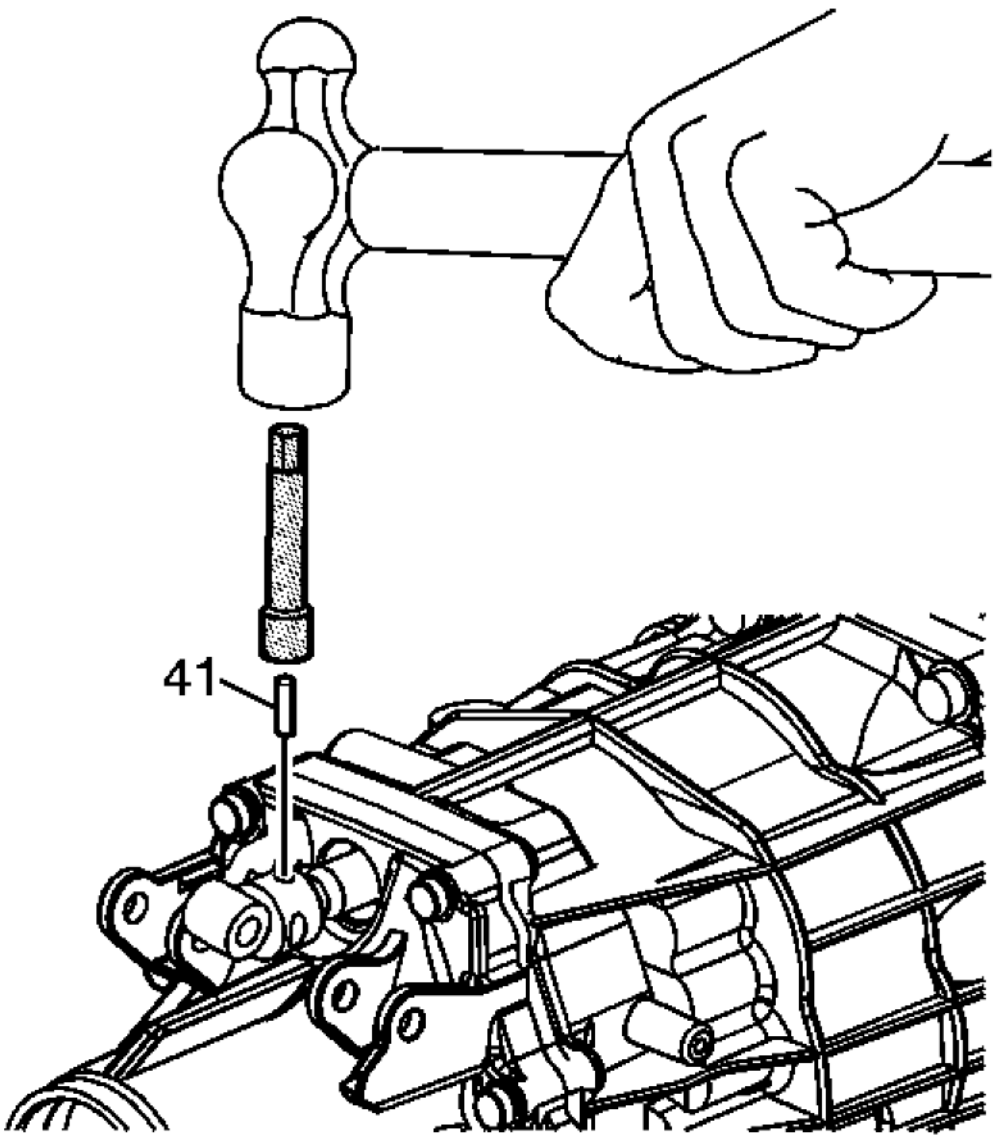

Fig. 215: Installing Shift Lever Pin
Courtesy of GENERAL MOTORS CORP.

NOTE: Prior to shift lever pin installation, the shift control shaft must be shifted forward into the transmission.

35. Position and align the shift lever pin (41) with the hole in the shift lever rod universal joint. Use **DT-49027-3:** coil pin installer and a mallet to install the pin (41) to the proper depth.

cardiagn.com

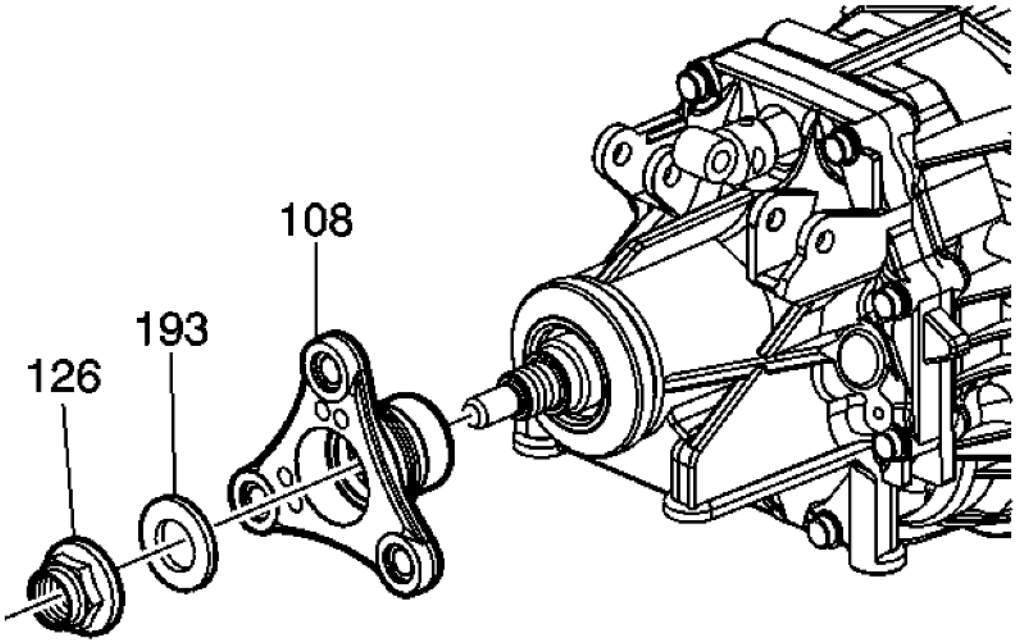

Fig. 216: Propshaft Flange Components
Courtesy of GENERAL MOTORS CORP.

36. Install the propshaft flange (108).
37. Grease and install a NEW propshaft flange fluid seal (193).
38. Install a NEW propshaft flange nut (126).

Preload Adjustment Procedure

cardiagn.com

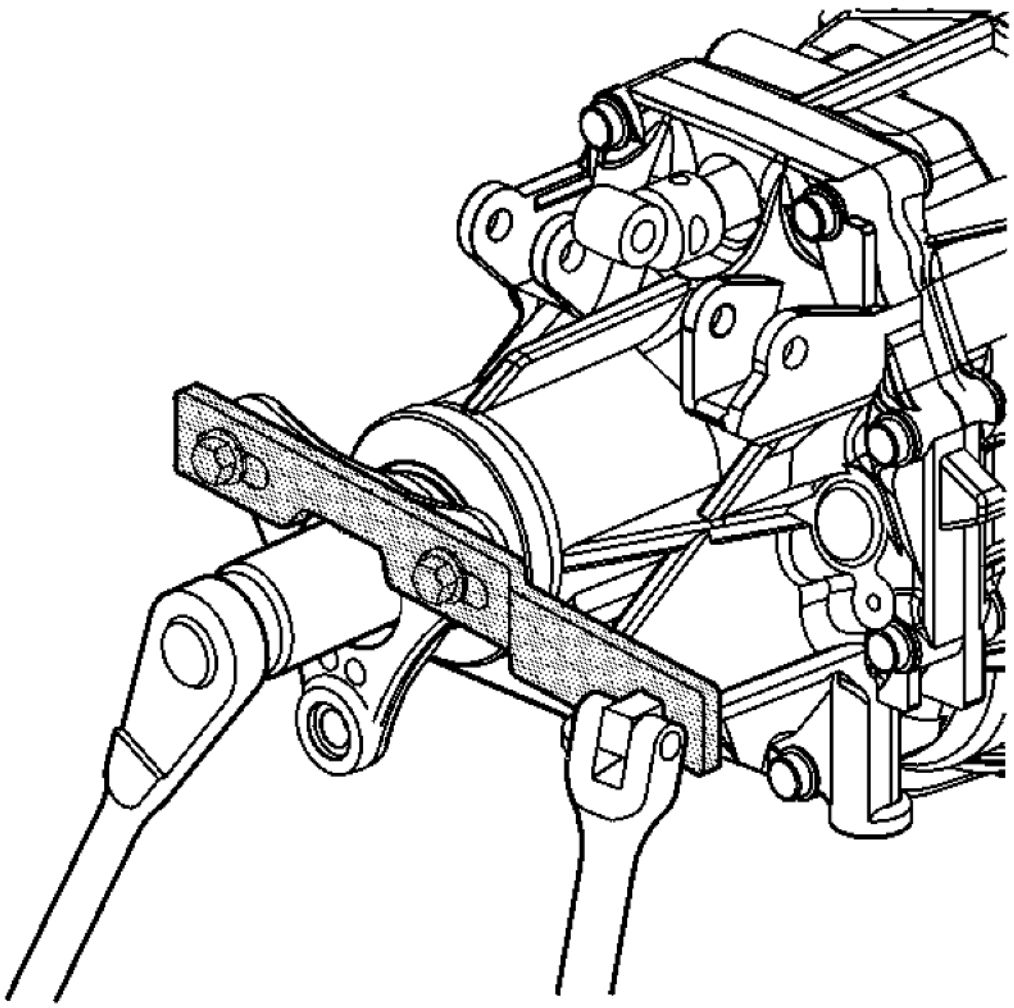

Fig. 217: Tightening Propshaft Flange Nut
Courtesy of GENERAL MOTORS CORP.

1. Shift the transmission into any gear.
2. Attach **J 45012:** holder to the propshaft flange.
3. Use **J 45012:** holder in order to prevent the propshaft flange from rotating. Install and tighten the propshaft flange nut. Tighten until the looseness is minimum.

cardiagn.com

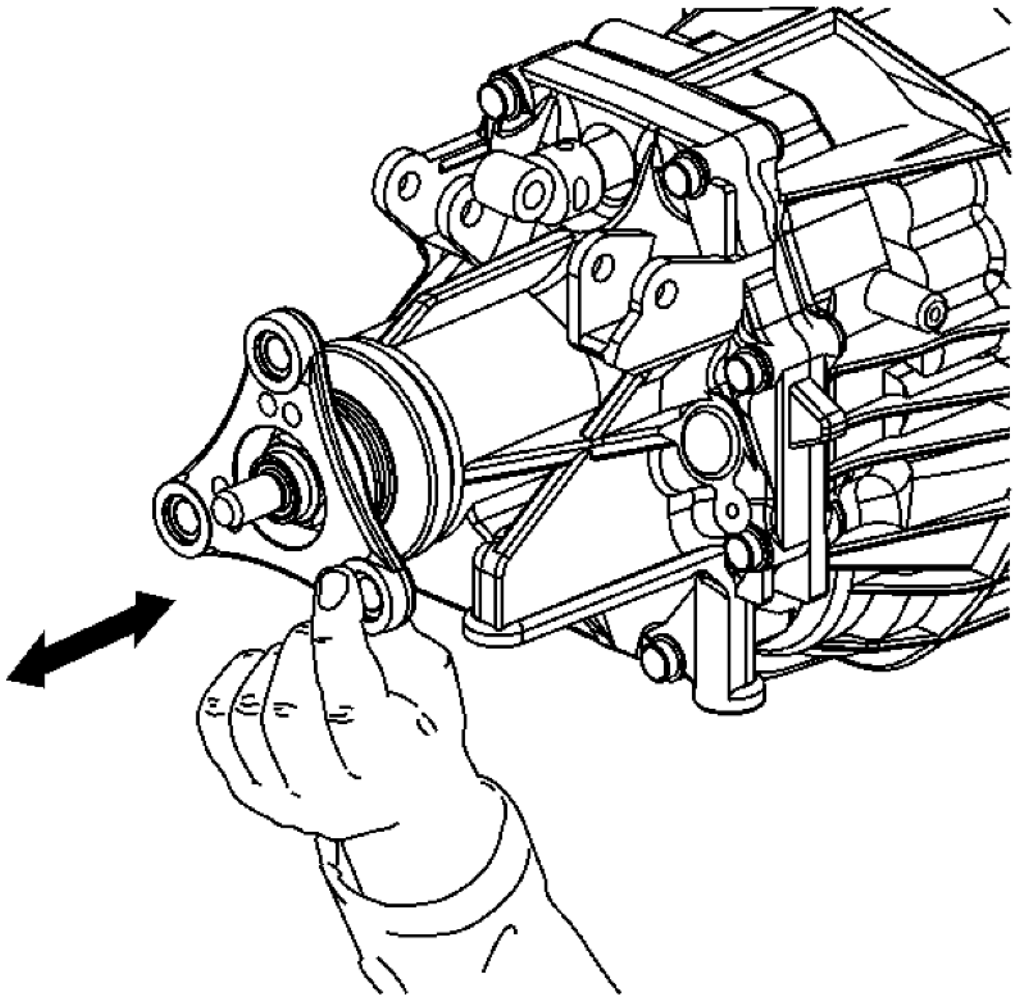

Fig. 218: Shaking Propshaft
Courtesy of GENERAL MOTORS CORP.

4. Verify looseness by shaking the propshaft longitudinally.

cardiagn.com

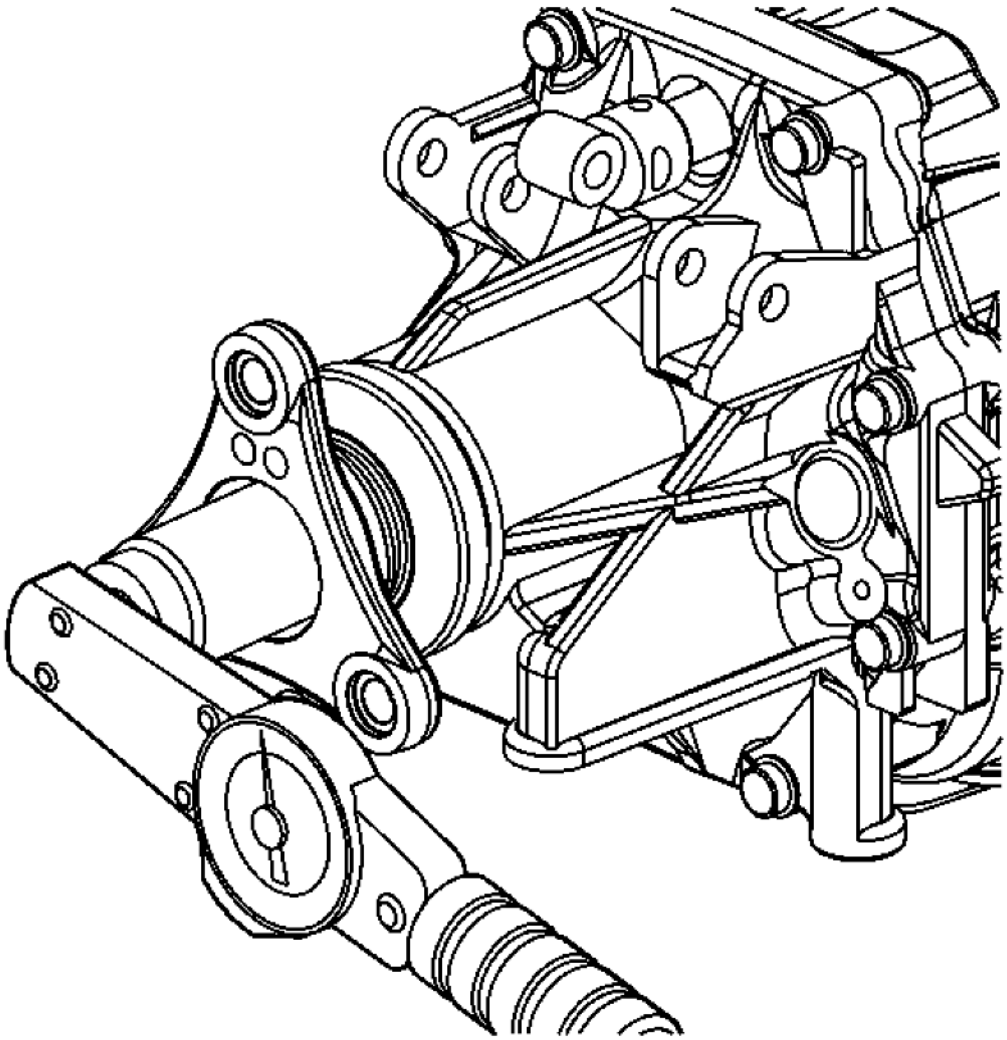

Fig. 219: Measuring Rotational Torque/Drag Torque Of Propshaft Flange
Courtesy of GENERAL MOTORS CORP.

5. Remove **J 45012:** holder from the propshaft flange.
6. Shift the transmission into NEUTRAL.
7. Rotate the propshaft flange several times in order to break in the gears, synchronizers and bearings.
8. Measure the rotational torque/drag torque of the propshaft flange by using a suitable tool. Record this initial rotational torque measurement as value A.

cardiagn.com

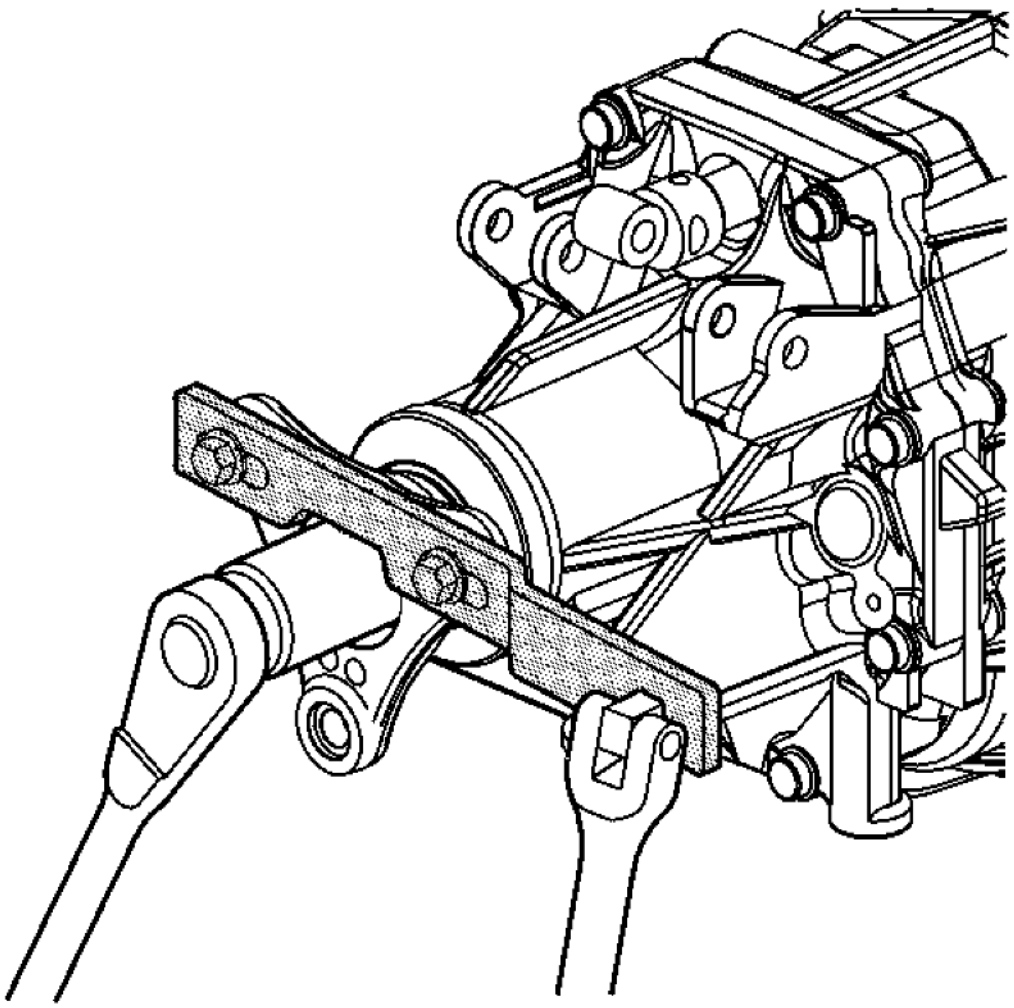

Fig. 220: Tightening Propshaft Flange Nut
Courtesy of GENERAL MOTORS CORP.

9. Attach **J 45012:** holder to the propshaft flange.
10. Shift the transmission into any gear.
11. Tighten the nut 220-565 N.m (162-417 lb ft).
12. Remove the **J 45012:** holder from the propshaft flange.
13. Shift the transmission into NEUTRAL.
14. Rotate the propshaft flange several times in order to seat the bearings.
15. Measure the rotational torque/drag torque of the propshaft flange by using a suitable tool. Record this measurement as value B.

cardiagn.com

16. Subtract value A from value B. Verify that the resulting measurement is within the specified range.

    Specification: The rotational torque specification is 0.45-1.35 N.m (4-12 lb in).

17. Repeat the previous steps until you have confirmed that the rotational torque specification is reached then stake the nut in place. If the rotational torque requirement has been exceeded, replace the spacer and repeat steps 2-16.

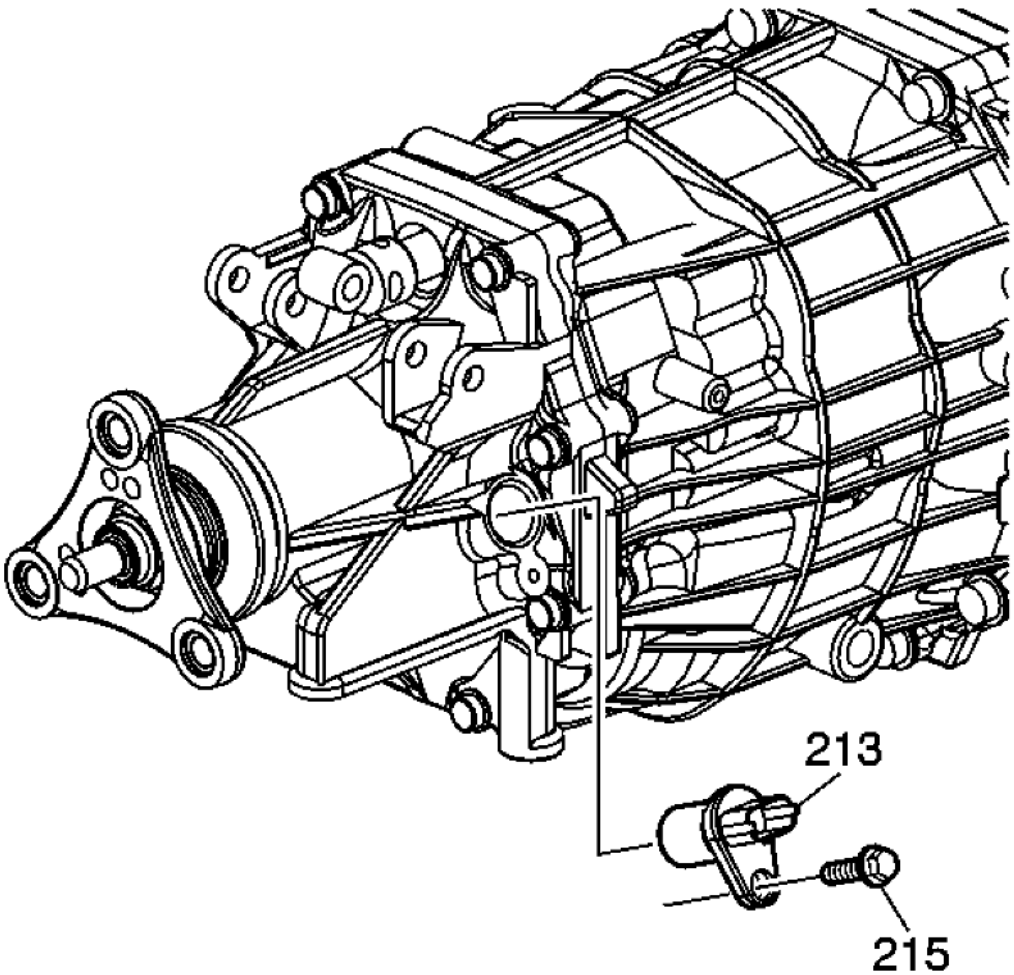

Fig. 221: Output Sensor & Bolt
Courtesy of GENERAL MOTORS CORP.

18. Install the output sensor (213) and bolt (215) into the rear extension housing and tighten to 8 N.m (71 lb in).

cardiagn.com

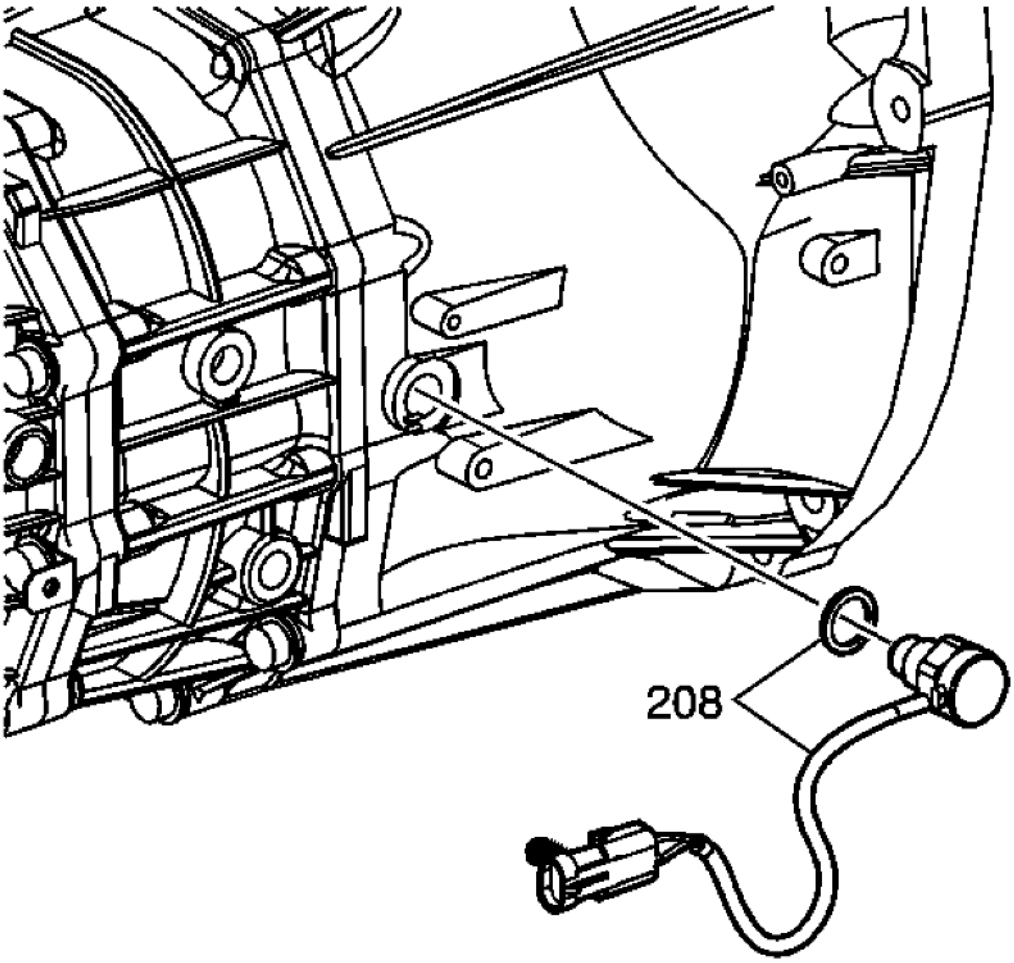

Fig. 222: Identifying Backup Lamp Switch & Washer
Courtesy of GENERAL MOTORS CORP.

19. Install a NEW backup lamp washer (208) and switch into the case. Tighten the switch to 44 N.m (32 lb ft).

cardiagn.com

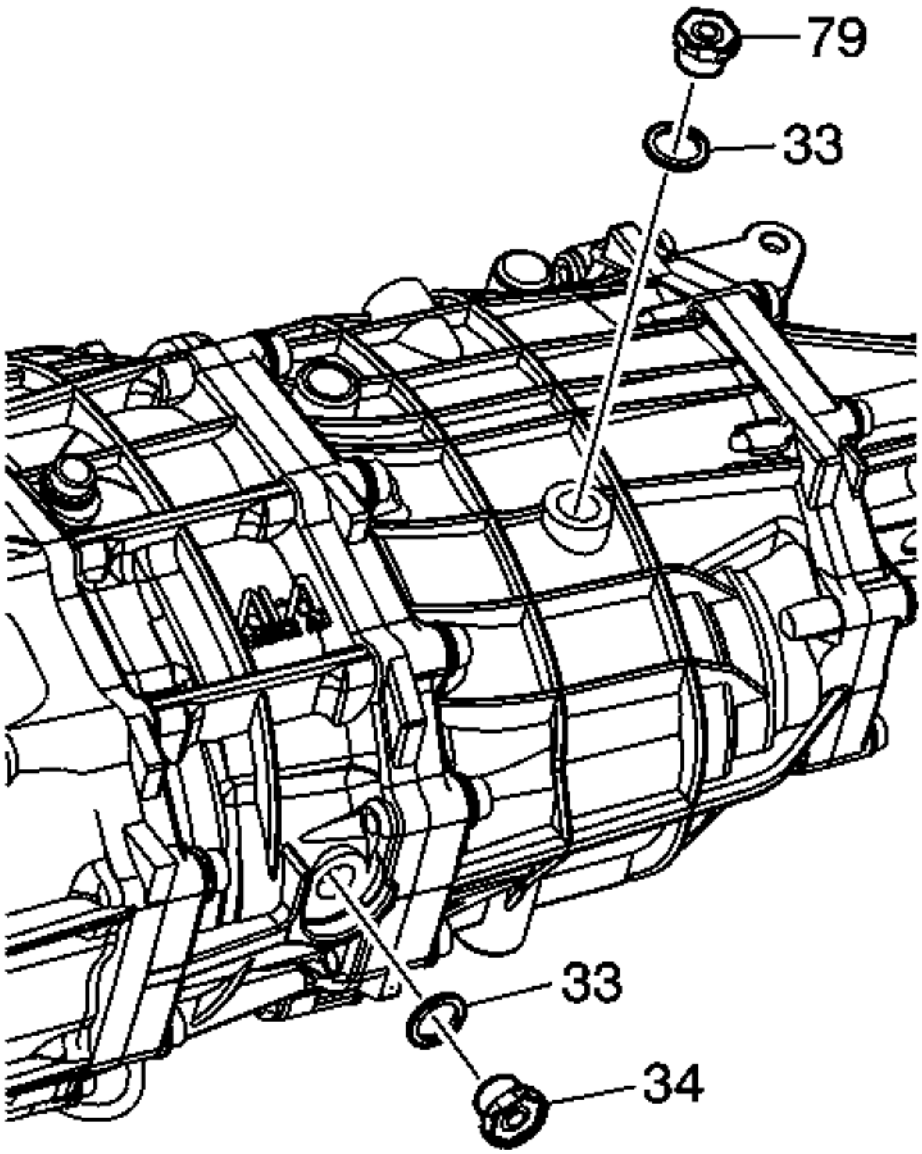

Fig. 223: Identifying Fill Plug, Drain Plug & Washers
Courtesy of GENERAL MOTORS CORP.

20. Install the NEW gaskets (33), drain plug (34) and fill plug (79). Tighten both plugs to 37 N.m (27 lb ft).
21. Install the clutch release cylinder and the clutch release cylinder bolts. Refer to **Clutch Concentric Actuator Cylinder Replacement (Aisin)** or **Clutch Concentric Actuator Cylinder Replacement (Tremec)** .

cardiagn.com

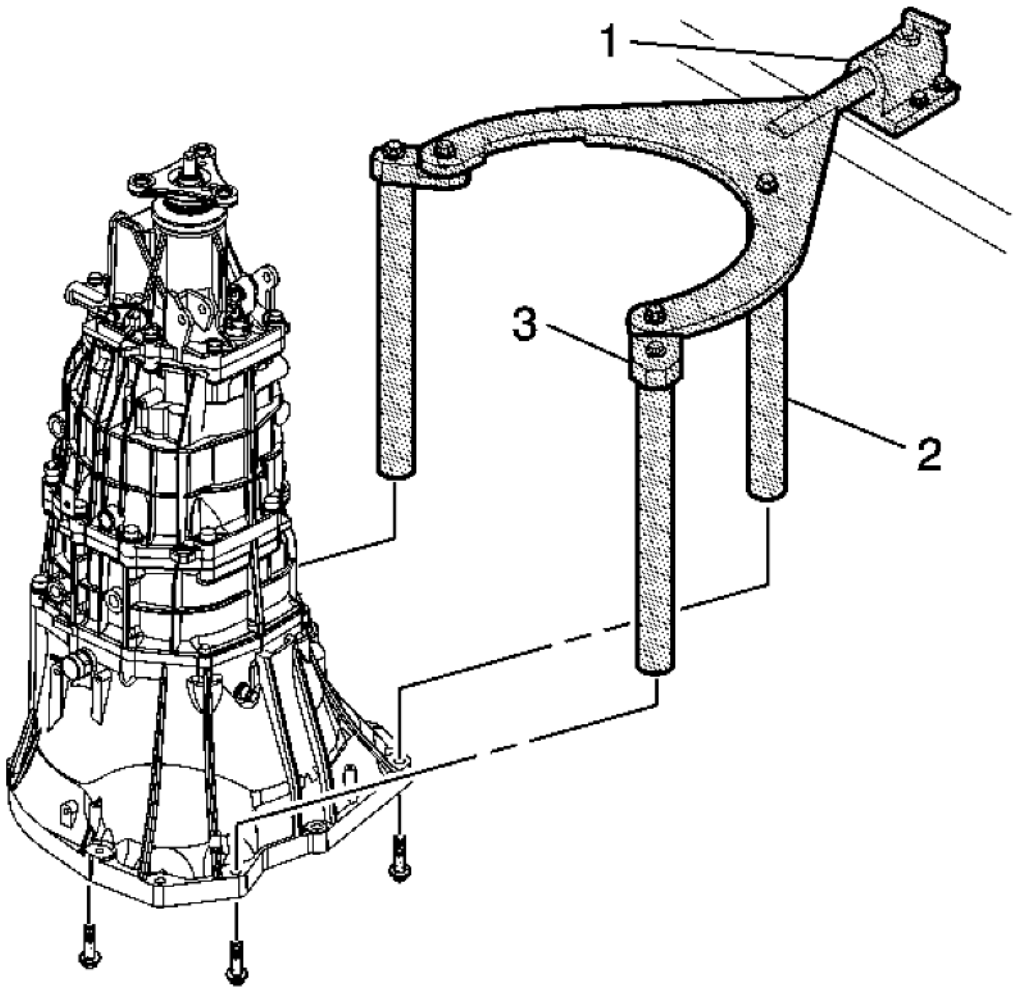

Fig. 224: Transmission Mounting Fixture & Adapters
Courtesy of GENERAL MOTORS CORP.

22. Remove the **DT-47678:** fixture (2) and **J 3289-20:** fixture (1) from the transmission clutch housing.

DESCRIPTION AND OPERATION

TRANSMISSION SYSTEM DESCRIPTION AND OPERATION

General Description

The Aisin AY6 is a 6-speed transmission with 6th gear being an overdrive ratio. All gear positions are synchronized. The transmission has a speed reflector wheel on the output shaft for the vehicle speed sensor. The

cardiagn.com

transmission uses 4 aluminum housings. Roller, tapered roller, and ball bearings support the input shaft, countershaft, and output shaft. No shimming is required. For proper set up, selective thickness retaining rings are used. All of the speed gears use needle bearings. The AY6 uses a special 75W-90 transmission fluid.

Shifting Operation

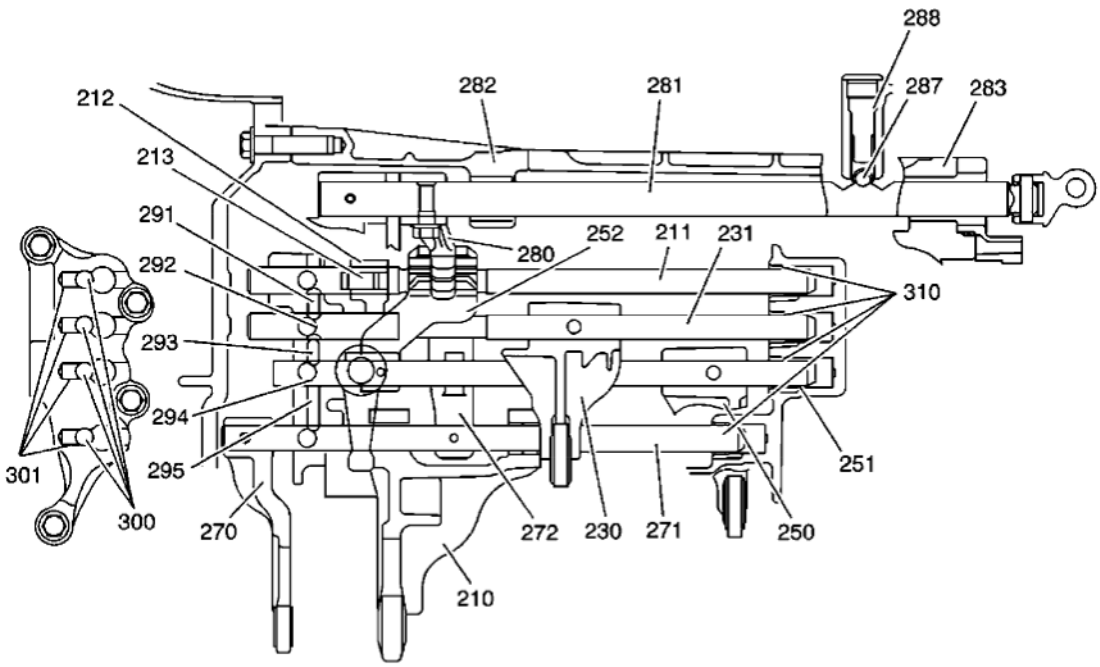

Fig. 225: Shifting Operation Diagram (AY6)
Courtesy of GENERAL MOTORS CORP.

The AY6 has a unique shift system. A single shift control shaft (281) operates 4 shift shafts. Shift control lever fits into a coupling on the shift control shaft (281). Positioning a bolt holds the lever (280) in place on the shift control shaft (281), in the gates of the shift shafts, operates the 1st/2nd shift shaft (211), the 3rd/4th shift shaft (231), the 5th/6th shift shaft (251) and the reverse shift shaft (271). Moving the shift control lever side to side allows the lever (280) on the shift control shaft (281) to engage into one of the 4 gates. Moving the shift control lever forward and reverse selects either position of the particular shift shaft. When shifted in position, a detent ball (300) and spring (301) located in the interlock bracket, holds the shift shaft, and a detent ball (287) and spring (288) located in the rear case, holds the shift control shaft (281). To aid in easy shift operation, the middle case shift control shaft bearing (282) and the rear case shift control shaft bearing (283) support the shift control shaft (281). In addition, the rear case shift shaft bushings (310) support the 1st/2nd shift shaft (211), the 3rd/4th shift shaft (231) and the 5th/6th shift shaft (251).

The 1st/2nd shift shaft (211) is the top shift shaft. A pin holds the no. 3 head (212) in place on the shift shaft. No. 3 head (212) links with 1st/2nd shift fork (210) via the reversal arm (213). The 1st/2nd shift fork (210) slides on the reverse shift shaft (271).

The 3rd/4th shift shaft (231) is the second shaft from the top. A bolt holds the 3rd/4th shift fork (230) in place on the shift shaft. A small shift shaft interlock pin (292) in the 3rd/4th shift shaft (231) prevents the other shafts

cardiagn.com

from moving. Interlock pins (291 or 293), located in the interlock bracket, contact the small interlock pin (292) and lock into a notch on the shift shaft, preventing multiple shift shaft movement.

The 5th/6th shift shaft (251) is located third from the top. A pin holds the 5th/6th shift head (252) in place on the shift shaft. A bolt holds the 5th/6th shift fork (250) in place on the shift shaft. A small shift shaft interlock pin (294) in the 5th/6th shift shaft (251) prevents the other shafts from moving. Interlock pins (293 or 295), located in the interlock bracket, contact the small interlock pin (294) and lock into a notch on the shift shaft, preventing multiple shift shaft movement.

The reverse shift shaft (271) is the bottom shift shaft. Pins hold the reverse shift head (272) and the reverse shift fork (270) in place on the shift shaft.

1st Gear Power Flow

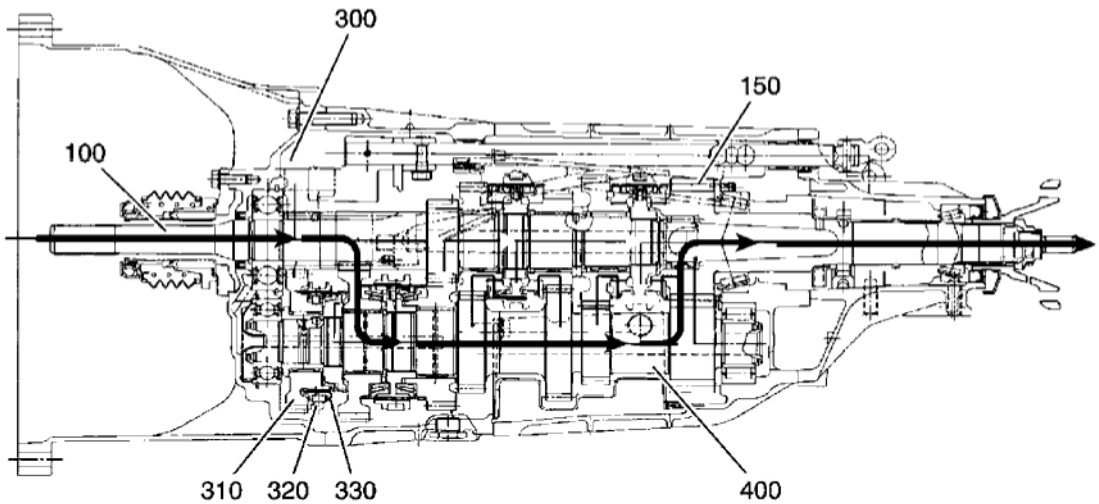

Fig. 226: 1st Gear Power Flow
Courtesy of GENERAL MOTORS CORP.

1st Gear

Moving the 1st/2nd shift fork (210) forward moves the 1st/2nd synchronizer sleeve (170). The synchronizer sleeve (170) slides on the synchronizer hub. The inner teeth on the synchronizer sleeve push against the synchronizer ring teeth, causing the synchronizer rings to contact, and the 1st gear (110) and the countershaft to match speeds. The synchronizer sleeve (170) then engages the selector teeth on 1st gear (110). The synchronizer hub is pressed on the countershaft (400). Power flow is now from the input shaft (100) to the 1st gear (110), through the synchronizer to the countershaft (400) and to the output shaft (150).

2nd Gear Power Flow

cardiagn.com

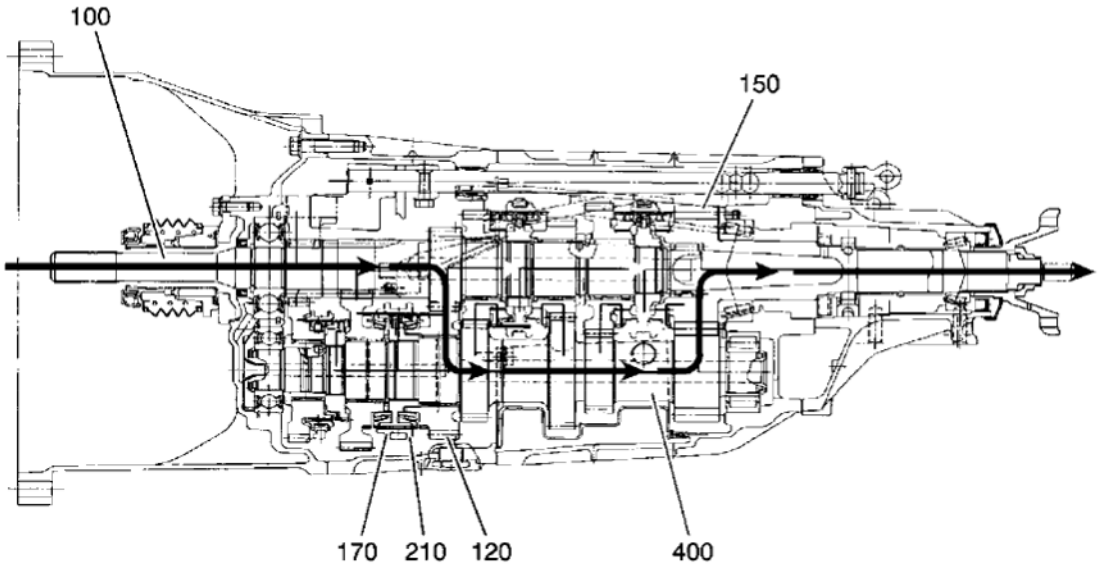

Fig. 227: 2nd Gear Power Flow
Courtesy of GENERAL MOTORS CORP.

2nd Gear

Moving the 1st/2nd shift fork (210) rearward moves the 1st/2nd synchronizer sleeve (170). The synchronizer sleeve (170) slides on the synchronizer hub. The inner teeth on the synchronizer sleeve push against the synchronizer ring teeth, causing the synchronizer rings to contact, and the 2nd gear (120) and the countershaft to match speeds. The synchronizer sleeve (170) then engages the selector teeth on 2nd gear (120). The synchronizer hub is pressed on the countershaft (400). Power flow is now from the input shaft (100) to the 2nd gear (120), through the synchronizer to the countershaft (400) and to the output shaft (150).

3rd Gear Power Flow

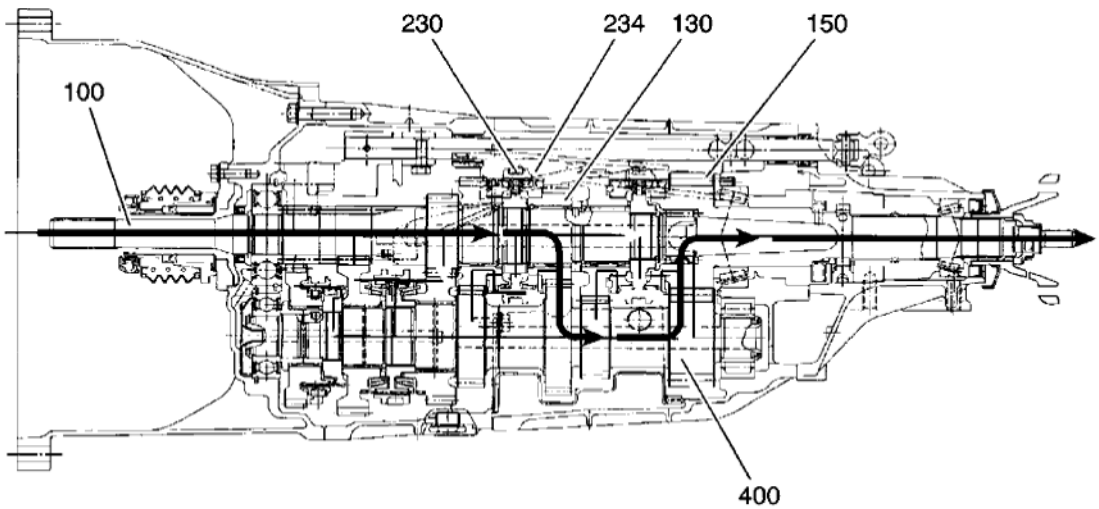

cardiagn.com

Fig. 228: 3rd Gear Power Flow
Courtesy of GENERAL MOTORS CORP.

3rd Gear

Moving the 3rd/4th shift fork (230) rearward moves the 3rd/4th synchronizer sleeve (234). The synchronizer sleeve (234) slides on the synchronizer hub. The inner teeth on the synchronizer sleeve push against the synchronizer ring teeth, causing the synchronizer ring to contact, and the 3rd gear (130) and the input shaft to match speeds. The synchronizer sleeve (234) then engages the selector teeth on 3rd gear (130). The synchronizer hub is pressed on the input shaft (100). Power flow is now from the input shaft (100) through the synchronizer, to the 3rd gear (130) to the countershaft (400) and to the output shaft (150).

4th Gear Power Flow

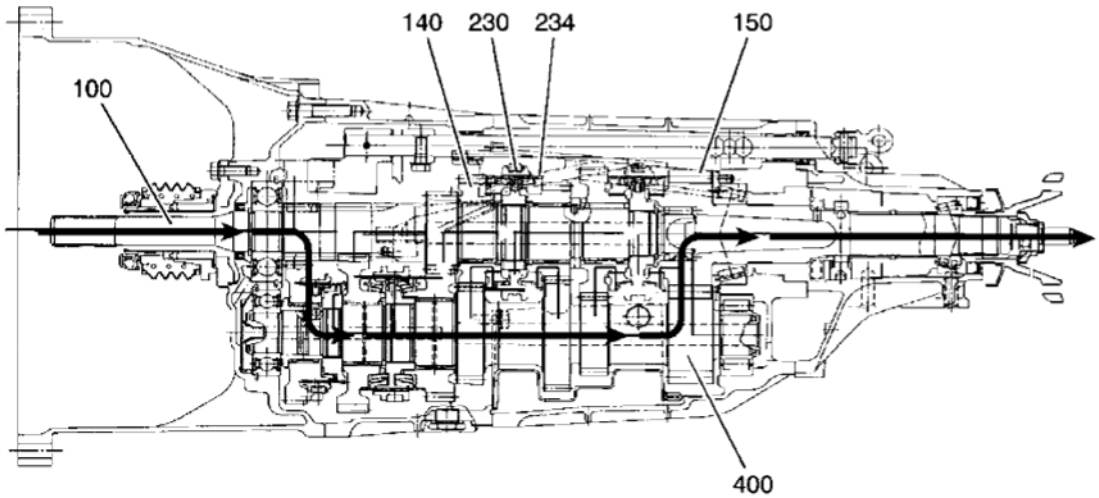

Fig. 229: 4th Gear Power Flow
Courtesy of GENERAL MOTORS CORP.

4th Gear

Moving the 3rd/4th shift fork (230) forward moves the 3rd/4th synchronizer sleeve (234). The synchronizer sleeve (234) slides on the synchronizer hub. The inner teeth on the synchronizer sleeve push against the synchronizer ring teeth, causing the synchronizer ring to contact, and the 4th gear (140) and the input shaft to match speeds. The synchronizer sleeve (234) then engages the selector teeth on 4th gear (140). The synchronizer hub is pressed on the input shaft (100). Power flow is now from the input shaft (100) through the synchronizer, to the 4th gear (140) to the countershaft (400) and to the output shaft (150).

5th Gear Power Flow

cardiagn.com

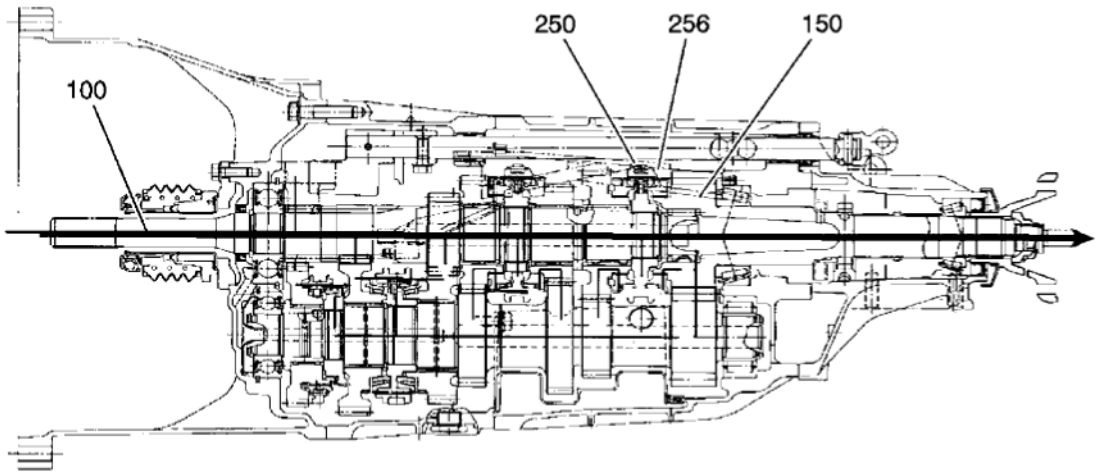

Fig. 230: 5th Gear Power Flow
Courtesy of GENERAL MOTORS CORP.

5th Gear

In 5th gear, the power flow goes directly from the input shaft (100) to the output shaft (150) through the 5th/6th synchronizer. This happens because 5th gear is the same ratio as the engine speed. Moving the 5th/6th shift fork (250) rearward moves the 5th/6th synchronizer sleeve (256). The synchronizer sleeve (256) slides on the synchronizer hub. The inner teeth on the synchronizer sleeve push against the synchronizer ring teeth for output shaft (150). Matching the input shaft (100) to the output shaft (150) allows the synchronizer sleeve to engage to the selector teeth on the output shaft (150). The synchronizer hub is pressed on the input shaft (100).

6th Gear Power Flow

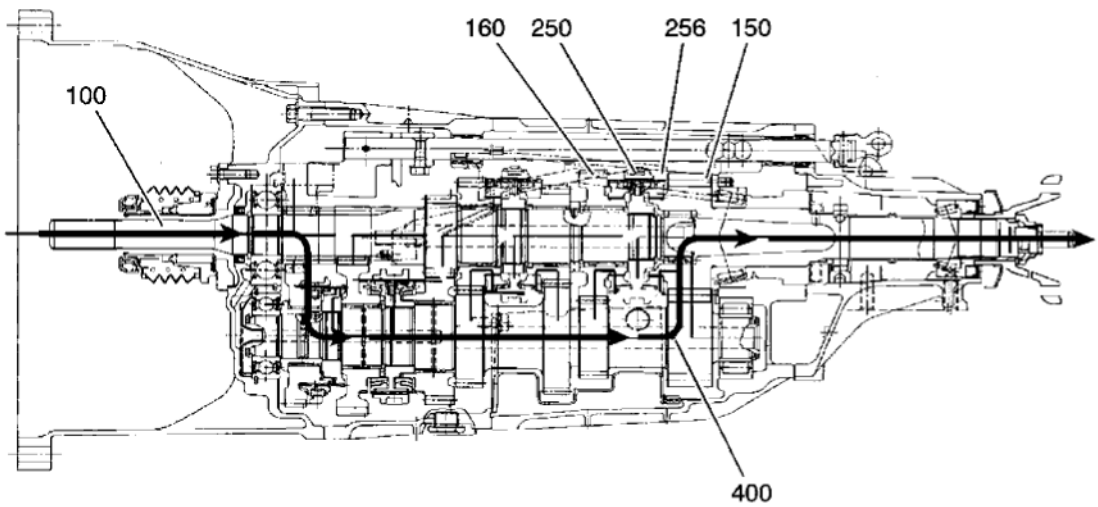

Fig. 231: 6th Gear Power Flow
Courtesy of GENERAL MOTORS CORP.

cardiagn.com

6th Gear

the 6th gear (160) is an overdrive ratio. Moving the 5th/6th shift fork (250) forward moves the 5th/6th synchronizer sleeve (256). The synchronizer sleeve (256) slides on the synchronizer hub. The inner teeth on the synchronizer sleeve push against the synchronizer ring teeth, causing the synchronizer ring to contact, and the 6th gear (160) and the input shaft to match speeds. The synchronizer sleeve (256) then engages the selector teeth on 6th gear (160). The synchronizer hub is pressed on the input shaft (100). Power flow is now from the input shaft (100) through the synchronizer to the 6th gear (160) to the countershaft (400) and to the output shaft (150), which now turns faster than the speed of the input shaft (100).

Reverse Gear Power Flow

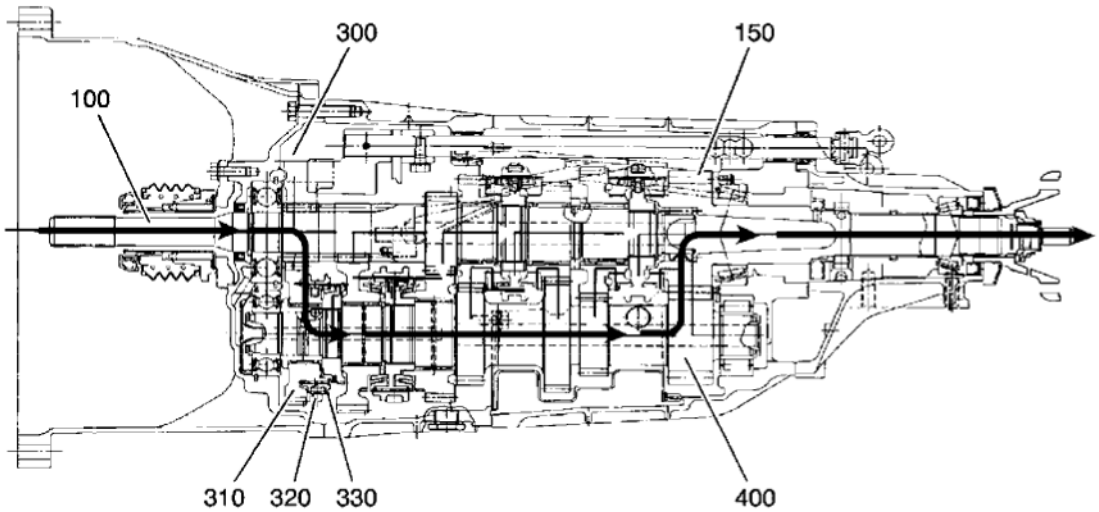

Fig. 232: Reverse Gear Power Flow
Courtesy of GENERAL MOTORS CORP.

Reverse Gear

The reverse idler gear (300) is located on the reverse idler shaft and rotates on needle bearings. The reverse idler gear (300) engages with the input shaft (100) and with the reverse gear (310). Moving the reverse shift fork (320) rearward moves the reverse synchronizer sleeve (330). The synchronizer sleeve (330) slides on the spline of the reverse gear. The inner teeth on the synchronizer sleeve push against the synchronizer ring teeth, causing the synchronizer ring to contact, and the reverse gear (310) and the countershaft to match speeds. The synchronizer sleeve (330) then engages the selector teeth (340). The selector teeth are pressed on the countershaft (400). Power flow is now from the input shaft (100) to the reverse idler gear (300), to the reverse gear (310), through the synchronizer to the countershaft (400) and to the output shaft (150).

SPECIAL TOOLS AND EQUIPMENT

SPECIAL TOOLS

Illustration	Tool Number/ Description

cardiagn.com

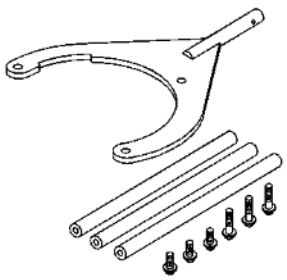	DT 47678 Transmission Holding Fixture
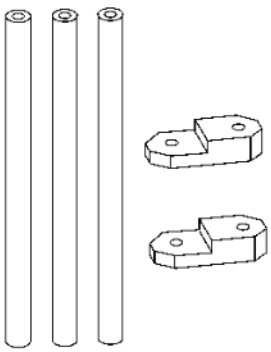	DT 47678-10 Transmission Holding Fixture Adapters
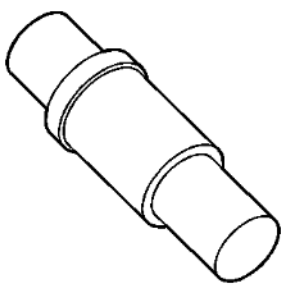	DT 47722 Shift Rail Bushing Remover/Installer
	DT 47723 Output Shaft Bearing Installer

cardiagn.com

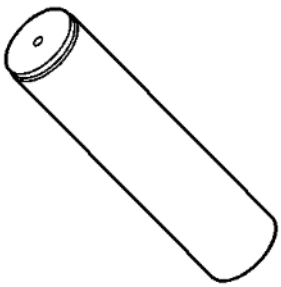	
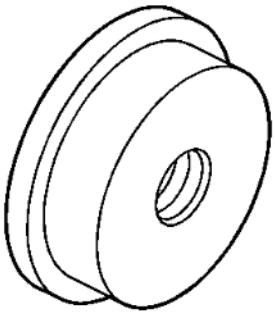	DT 47724 Output Shaft Bearing Cup Installer
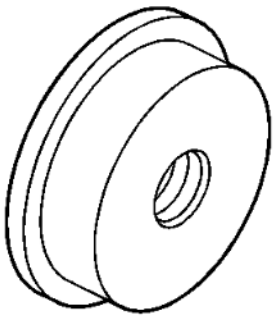	DT 47725 Extension Housing Bearing Cup Installer
	DT 47726 Counter Shaft Rear Bearing Installer

cardiagn.com

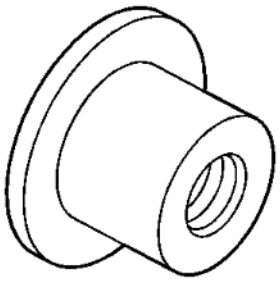	
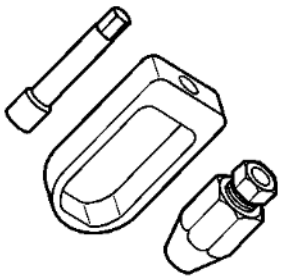	DT 49027 Coil Pin Remover and Installer
	J 2619-01 Slide Hammer
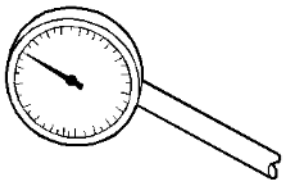	J 8001-3 Dial Indicator
	J 8092 Driver Handle

cardiagn.com

	
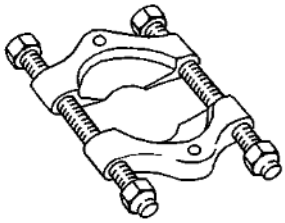	J 22912-B Split Plate Bearing Puller
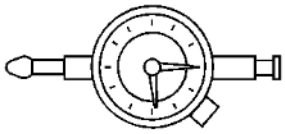	J 26900-12 Dial Indicator 1-10 mm
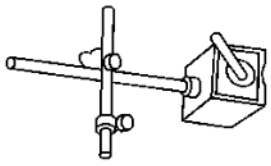	J 26900-13 Magnetic Indicator Base
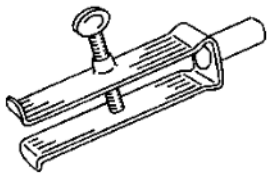	J 26941 Bushing and Bearing Remover 3-4 in

cardiagn.com

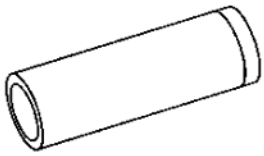	J 36614 Inner Pinion Bearing Installer
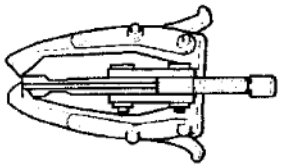	J 41816 Crankshaft Balancer Remover
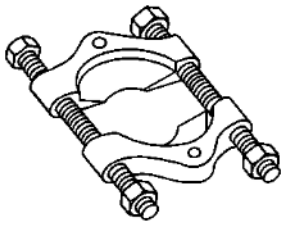	J 44749 Split Plate Bearing Gear Puller
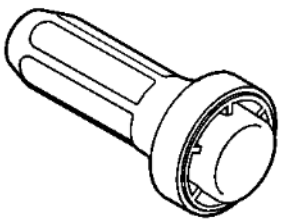	J 44765 Seal Installer
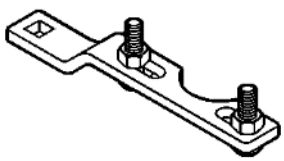	J 45012 Holding Fixture

cardiagn.com

2010 TRANSMISSION

Shift Lock Control - Camaro

SCHEMATIC AND ROUTING DIAGRAMS

SHIFT LOCK CONTROL SCHEMATICS

cardiagn.com

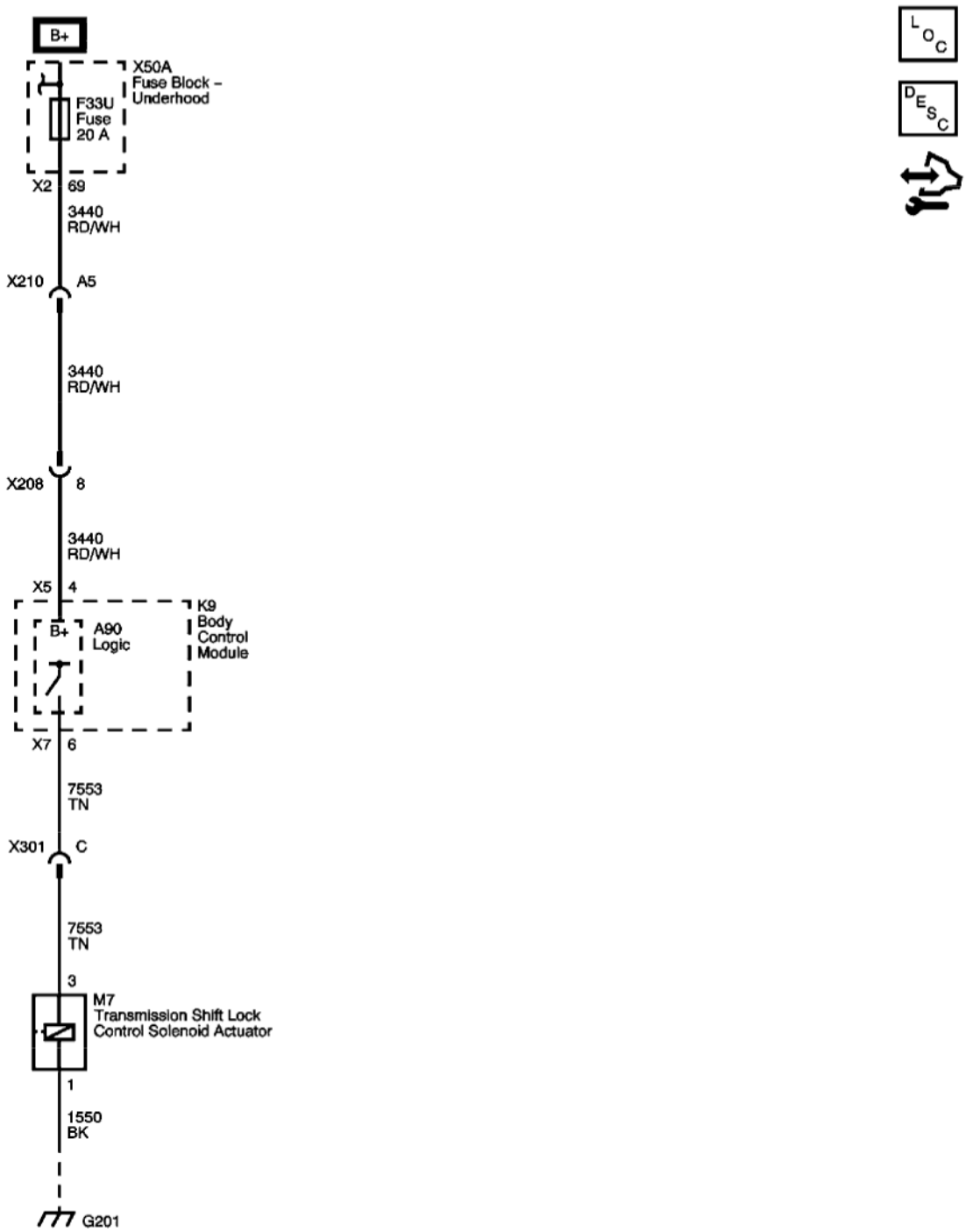

Fig. 1: Shift Lock Control
Courtesy of GENERAL MOTORS CORP.

DIAGNOSTIC INFORMATION AND PROCEDURES

DIAGNOSTIC CODE INDEX

cardiagn.com

DIAGNOSTIC CODE INDEX

DTC	Description
DTC B270A	B270A 01: Park Lock Solenoid Control Circuit Short to Voltage B270A 02: Park Lock Solenoid Control Circuit Short to Ground B270A 04: Park Lock Solenoid Control Circuit Open

DTC B270A

Diagnostic Instructions

- Perform the **Diagnostic System Check - Vehicle** prior to using this diagnostic procedure.
- Review **Strategy Based Diagnosis** for an overview of the diagnostic approach.
- **Diagnostic Procedure Instructions** provides an overview of each diagnostic category.

DTC Descriptors

DTC B270A 01

Park Lock Solenoid Control Circuit Short to Voltage

DTC B270A 02

Park Lock Solenoid Control Circuit Short to Ground

DTC B270A 04

Park Lock Solenoid Control Circuit Open

Diagnostic Fault Information

Circuit	Short to Ground	Open/High Resistance	Short to Voltage	Signal Performance
Control	B270A 02, 1	B270A 04, 1	B270A 01, 2	-
Ground	-	B270A 04, 1	-	-

1. Transmission shft control lever will not move from PARK with the brake pedal pressed.
2. Transmission shft control lever will move from PARK without the brake pedal pressed.

Circuit/System Description

The body control module controls the automatic transmission park lock control solenoid by providing a battery positive voltage to the solenoid. The body control module controls the voltage supply circuit to the automatic transmission park lock control solenoid. The BCM monitors the voltage and current flow of the control circuit.

Conditions for Running the DTC

- The ignition switch is in the ON position.

cardiagn.com

- The brake pedal is pressed.
- The transmission is in the PARK position.
- The DTC runs continuously once the above conditions are met.

Conditions for Setting the DTC

B270A 01

The body control module detects a short to voltage in the automatic transmission park lock control solenoid control circuit for 1 second.

B270A 02

The body control module detects a short to ground in the automatic transmission park lock control solenoid control circuit for 1 second.

B270A 04

The body control module detects an open in the automatic transmission park lock control solenoid control circuit for 1 second.

Action Taken When the DTC Sets

The body control module will not attempt to enable the voltage supply circuit of the automatic transmission park lock control solenoid until the next key cycle.

Conditions for Clearing the DTC

- A current DTC B270A will clear when the malfunction is no longer present and the ignition switch is cycled.
- A history DTC will clear after 100 ignition cycles with no current DTC active during the 100 ignition cycles.

Reference Information

Schematic Reference

Shift Lock Control Schematics

Connector End View Reference

Component Connector End Views

Description and Operation

Automatic Transmission Shift Lock Control Description and Operation

cardiagn.com

Electrical Information Reference

- **Circuit Testing**
- **Connector Repairs**
- **Testing for Intermittent Conditions and Poor Connections**
- **Wiring Repairs**

Scan Tool Reference

Control Module References for scan tool information

Circuit/System Verification

1. Ignition ON, observe the scan tool Brake Pedal Switch parameter while pressing and releasing the brake pedal. The parameter should change from ON to OFF when the brake pedal is depressed.
    - If the parameter does not change, refer to **Stop Lamps Malfunction** .
2. While pressing the brake pedal, the vehicle operator should be able to move the shifter lever out of the park position.

Circuit/System Testing

1. Ignition OFF, disconnect the harness connector at the M7 transmission shift lock control solenoid actuator.
2. Ignition OFF, test for less than 1.0 ohms between the ground circuit terminal 1 and ground.
    - If greater than the specified range, test the ground circuit for an open/high resistance.
3. Install a test lamp between the ground circuit terminal 1 and the control circuit terminal 3.
4. Ignition ON, command the scan tool Shift Lock Solenoid Actuator ON and OFF. The test lamp should turn ON and OFF when changing between the commanded states.
    - If the test lamp is always ON, test the control circuit for short to voltage. If the circuit tests normal, replace the K9 body control module.
    - If the test lamp is always OFF, test the control circuit for short to ground or an open/high resistance. If the circuit tests normal, replace the K9 body control module.
5. If all circuits test normal, test or replace the M7 transmission shift lock control solenoid actuator.

Repair Procedures

Perform the **Diagnostic Repair Verification** after completing the diagnostic procedure.

- **Transmission Control Replacement**
- **Control Module References** for BCM replacement, setup, and programming

SYMPTOMS - AUTOMATIC TRANSMISSION SHIFT LOCK CONTROL

IMPORTANT: The following steps must be completed before using the symptom tables.

cardiagn.com

1. Perform the **Diagnostic System Check - Vehicle** before using the Symptom Tables in order to verify that all of the following are true:
   - There are no DTCs set.
   - The control modules can communicate via the serial data link.
2. Review the system operation in order to familiarize yourself with the system functions. Refer to **Automatic Transmission Shift Lock Control Description and Operation**.

Visual/Physical Inspection

- Inspect for aftermarket devices which could affect the operation of the automatic transmission shift lock control. Refer to **Checking Aftermarket Accessories** .
- Inspect the easily accessible or visible system components for obvious damage or conditions which could cause the symptom.

Intermittent

Faulty electrical connections or wiring may be the cause of intermittent conditions. Refer to **Testing for Intermittent Conditions and Poor Connections**

Symptom List

Refer to a symptom diagnostic procedure in order to diagnose the symptom:

Transmission Control Lever Malfunction

TRANSMISSION CONTROL LEVER MALFUNCTION

Diagnostic Instructions

- Perform the **Diagnostic System Check - Vehicle** prior to using this diagnostic procedure.
- Review **Strategy Based Diagnosis** for an overview of the diagnostic approach.
- **Diagnostic Procedure Instructions** provides an overview of each diagnostic category.

Diagnostic Fault Information

Circuit	Short to Ground	Open/High Resistance	Short to Voltage	Signal Performance
Control	B270A 02, 1	B270A 04, 1	B270A 01, 2	-
Ground	-	B270A 04, 1	-	-
1. Transmission shft control lever will not move from PARK with the brake pedal pressed. 2. Transmission shft control lever will move from PARK without the brake pedal pressed.				

Circuit/System Description

The body control module controls the automatic transmission park lock control solenoid by providing a battery

cardiagn.com

positive voltage to the solenoid. The body control module controls the voltage supply circuit to the automatic transmission park lock control solenoid. The BCM monitors the voltage and current flow of the control circuit.

Reference Information

Schematic Reference

Shift Lock Control Schematics

Connector End View Reference

Component Connector End Views

Description and Operation

Automatic Transmission Shift Lock Control Description and Operation

Electrical Information Reference

- **Circuit Testing**
- **Connector Repairs**
- **Testing for Intermittent Conditions and Poor Connections**
- **Wiring Repairs**

Scan Tool Reference

Control Module References for scan tool information

Circuit/System Verification

1. Ignition ON, observe the scan tool Brake Applied Output Signal parameter while pressing and releasing the brake pedal. The parameter should change from ON to OFF when the brake pedal is depressed.
    - If the parameter does not change, refer to **Stop Lamps Malfunction** .
2. While pressing the brake pedal, the vehicle operator should be able to move the shifter lever out of the park position.

Circuit/System Testing

1. Ignition OFF, disconnect the harness connector at the M7 transmission shift lock control solenoid actuator.
2. Ignition OFF, test for less than 1.0 ohms between the ground circuit terminal 1 and ground.
    - If greater than the specified range, test the ground circuit for an open/high resistance.
3. Install a test lamp between the ground circuit terminal 1 and the control circuit terminal 3.
4. Ignition ON, command the scan tool Shift Lock Solenoid Actuator ON and OFF. The test lamp should turn ON and OFF when changing between the commanded states.

cardiagn.com

    - If the test lamp is always ON, test the control circuit for short to voltage. If the circuit tests normal, replace the K9 body control module.
    - If the test lamp is always OFF, test the control circuit for short to ground or an open/high resistance. If the circuit tests normal, replace the K9 body control module.
5. If all circuits test normal, test or replace the M7 transmission shift lock control solenoid actuator.

Repair Procedures

Perform the **Diagnostic Repair Verification** after completing the diagnostic procedure.

- **Transmission Control Replacement**
- **Control Module References** for BCM replacement, setup, and programming

DESCRIPTION AND OPERATION

AUTOMATIC TRANSMISSION SHIFT LOCK CONTROL DESCRIPTION AND OPERATION

The automatic transmission park lock control system is a safety device that prevents an inadvertent shift out of PARK. The driver must press the brake pedal before moving the park lever out of the PARK position. The system consists of the following components:

- The automatic transmission shift lock control solenoid, is located within the automatic transmission shift lever.
- The body control module, which controls the voltage supply circuit of the park lock control solenoid.
- The engine control module.

The body control module controls the voltage to the automatic transmission shift lock control solenoid. The following conditions must be met before the body control module will supply voltage to the automatic transmission shift lock control solenoid.

- The ignition is in the ON position.
- The engine control module sends an input via serial data to the body control module indicating the transmission is in the PARK position.
- The body control module determines the brake pedal is applied according the brake pedal position.

Since the automatic transmission shift lock control solenoid is permanently grounded, the body control module supplies voltage to the automatic transmission shift lock control solenoid, unlocking the park lever allowing the driver to move the park lever out of the PARK position as the solenoid energizes. When the brake pedal is not applied, the body control module turns the control voltage output of the park lock control solenoid OFF, de-energizing the park lock control solenoid. The de-energized solenoid mechanically locks the park lever in the PARK position.

cardiagn.com