2013 Chevrolet Malibu Owner Manual

In Brief 1-1
Instrument Panel 1-2
Initial Drive Information 1-4
Vehicle Features 1-16
eAssist Features 1-21
Performance and Maintenance 1-23

Keys, Doors, and Windows 2-1
Keys and Locks 2-2
Doors 2-13
Vehicle Security 2-15
Exterior Mirrors 2-17
Interior Mirrors 2-18
Windows 2-19
Roof 2-21

Seats and Restraints 3-1
Head Restraints 3-2
Front Seats 3-3
Rear Seats 3-9
Safety Belts 3-11
Airbag System 3-20
Child Restraints 3-34

Storage 4-1
Storage Compartments 4-1
Additional Storage Features ... 4-3

Instruments and Controls 5-1
Controls 5-2
Warning Lights, Gauges, and Indicators 5-8
Information Displays 5-25
Vehicle Messages 5-29
Vehicle Personalization 5-36
Universal Remote System 5-41

Lighting 6-1
Exterior Lighting 6-1
Interior Lighting 6-5
Lighting Features 6-6

Infotainment System 7-1
Introduction 7-1
Radio 7-9
Audio Players 7-14
Phone 7-22

Climate Controls 8-1
Climate Control Systems 8-1
Air Vents 8-7
Maintenance 8-8

Driving and Operating 9-1
Driving Information 9-2
Starting and Operating 9-15
Engine Exhaust 9-26
Automatic Transmission 9-27
Brakes 9-29
Ride Control Systems 9-33
Cruise Control 9-36
Object Detection Systems 9-38
Fuel 9-46
Towing 9-52
Conversions and Add-Ons ... 9-58

2013 Chevrolet Malibu Owner Manual

Vehicle Care 10-1
General Information 10-2
Vehicle Checks 10-4
Headlamp Aiming 10-28
Bulb Replacement 10-28
Electrical System 10-37
Wheels and Tires 10-44
Jump Starting 10-91
Towing 10-95
Appearance Care 10-97

Service and Maintenance ... 11-1
General Information 11-1
Maintenance Schedule 11-2
Special Application Services 11-8
Additional Maintenance and Care 11-9
Recommended Fluids, Lubricants, and Parts 11-12
Maintenance Records 11-14

Technical Data 12-1
Vehicle Identification 12-1
Vehicle Data 12-2

Customer Information 13-1
Customer Information 13-2
Reporting Safety Defects 13-18
Vehicle Data Recording and Privacy 13-19

OnStar 14-1
OnStar Overview 14-1
OnStar Services 14-2
OnStar Additional Information 14-5

Index i-1

The names, logos, emblems, slogans, vehicle model names, and vehicle body designs appearing in this manual including, but not limited to, GM, the GM logo, CHEVROLET, the CHEVROLET Emblem, MALIBU, and the MALIBU Emblem are trademarks and/or service marks of General Motors LLC, its subsidiaries, affiliates, or licensors.

This manual describes features that may or may not be on your specific vehicle either because they are options that you did not purchase or due to changes subsequent to the printing of this owner manual. Please refer to the purchase documentation relating to your specific vehicle to confirm each of the features found on your vehicle. For vehicles first sold in Canada, substitute the name “General Motors of Canada Limited” for Chevrolet Motor Division wherever it appears in this manual.

Keep this manual in the vehicle for quick reference.

Canadian Vehicle Owners

Propriétaires Canadiens

A French language manual can be obtained from your dealer, at www.helminc.com, or from:

On peut obtenir un exemplaire de ce guide en français auprès du concessionnaire ou à l'adresse savant:

Helm, Incorporated
Attention: Customer Service
47911 Halyard Drive
Plymouth, MI 48170

Litho in U.S.A.
Part No. 22941188 C Third Printing

©2012 General Motors LLC. All Rights Reserved.

Using this Manual

To quickly locate information about the vehicle, use the Index in the back of the manual. It is an alphabetical list of what is in the manual and the page number where it can be found.

Danger, Warnings, and Cautions

Warning messages found on vehicle labels and in this manual describe hazards and what to do to avoid or reduce them.

Danger indicates a hazard with a high level of risk which will result in serious injury or death.

Warning or **Caution** indicates a hazard that could result in injury or death.

⚠ WARNING

These mean there is something that could hurt you or other people.

Notice: **This means there is something that could result in property or vehicle damage. This would not be covered by the vehicle's warranty.**

A circle with a slash through it is a safety symbol which means “Do Not,” “Do not do this,” or “Do not let this happen.”

Symbols

The vehicle has components and labels that use symbols instead of text. Symbols are shown along with the text describing the operation or information relating to a specific component, control, message, gauge, or indicator.

: This symbol is shown when you need to see your owner manual for additional instructions or information.

: This symbol is shown when you need to see a service manual for additional instructions or information.

Vehicle Symbol Chart

Here are some additional symbols that may be found on the vehicle and what they mean. For more information on the symbol, refer to the Index.

: Airbag Readiness Light

: Air Conditioning

: Antilock Brake System (ABS)

: Audio Steering Wheel Controls or OnStar®

: Brake System Warning Light

: Charging System

: Cruise Control

: Engine Coolant Temperature

: Exterior Lamps

: First Responder

: Fog Lamps

: Fuel Gauge

: Fuses

: Headlamp High/Low-Beam Changer

: LATCH System Child Restraints

: Malfunction Indicator Lamp

: Oil Pressure

: Power

: Remote Vehicle Start

: Safety Belt Reminders

: Tire Pressure Monitor

: Traction Control/StabiliTrak®

: Windshield Washer Fluid

✍ NOTES

In Brief

Instrument Panel
Instrument Panel Overview 1-2

Initial Drive Information
Initial Drive Information 1-4
Remote Keyless Entry (RKE) System 1-4
Remote Vehicle Start 1-5
Door Locks 1-5
Windows 1-6
Seat Adjustment 1-7
Memory Features 1-9
Second Row Seats 1-9
Heated Seats 1-9
Head Restraint Adjustment 1-10
Safety Belts 1-10
Passenger Sensing System 1-10
Mirror Adjustment 1-11
Steering Wheel Adjustment 1-11
Interior Lighting 1-12
Exterior Lighting 1-13
Windshield Wiper/Washer 1-13
Climate Controls 1-14
Transmission 1-15

Vehicle Features
Radio(s) 1-16
Satellite Radio 1-16
Portable Audio Devices 1-16
Bluetooth® 1-16
Steering Wheel Controls 1-17
Cruise Control 1-17
Infotainment System 1-18
Driver Information Center (DIC) 1-18
Forward Collision Alert (FCA) System 1-18
Lane Departure Warning (LDW) 1-19
Rear Vision Camera (RVC) 1-19
Ultrasonic Parking Assist 1-19
Power Outlets 1-19
Universal Remote System ... 1-20
Sunroof 1-20

eAssist Features
eAssist® Overview 1-21
High Voltage Safety Information 1-21
Driver Efficiency Gauge 1-22
Automatic Engine Start/Stop Feature 1-22
Regenerative Braking 1-22
Battery 1-23
Service 1-23

Performance and Maintenance
Traction Control System (TCS) 1-23
StabiliTrak® System 1-23
Tire Pressure Monitor 1-24
Tire Sealant and Compressor Kit 1-24
Engine Oil Life System 1-24
Fuel E85 (85% Ethanol) 1-25
Driving for Better Fuel Economy 1-25
Roadside Assistance Program 1-25
OnStar® 1-25

Instrument Panel

Instrument Panel Overview

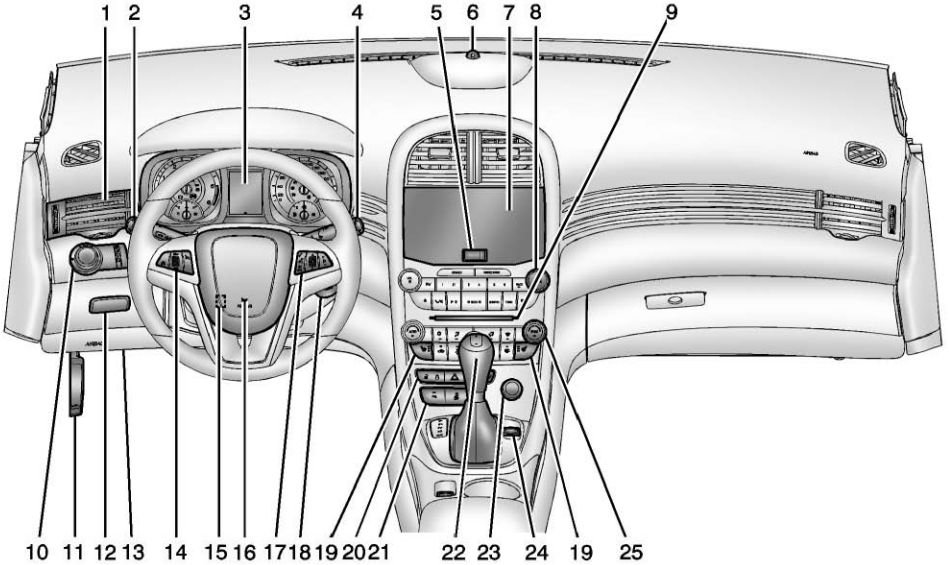

1. *Air Vents on page 8-7*.
2. Turn and Lane-Change Lever. See *Turn and Lane-Change Signals on page 6-4*.

   Driver Information Center Buttons. See *Driver Information Center (DIC) on page 5-25*.
3. *Instrument Cluster on page 5-9*.

   Driver Information Center (DIC) on page 5-25.
4. *Windshield Wiper/Washer on page 5-3*.
5. Storage Area. See *Instrument Panel Storage on page 4-1*.
6. Light Sensor. See *Automatic Headlamp System on page 6-3*.
7. Infotainment Display.
8. *Infotainment on page 7-1*.

   AM-FM Radio on page 7-9.
9. *CD Player on page 7-14*.
10. *Exterior Lamp Controls on page 6-1*.

    Fog Lamps on page 6-4.

    Instrument Panel Illumination Control on page 6-5.
11. Hood Release. See *Hood on page 10-5*.
12. Storage Compartment. See *Instrument Panel Storage on page 4-1*.
13. Data Link Connector (Out of View). See *Malfunction Indicator Lamp on page 5-15*.
14. *Cruise Control on page 9-36*.

    Forward Collision Alert (FCA) System on page 9-38 (If Equipped).
15. *Steering Wheel Adjustment on page 5-2*.
16. *Horn on page 5-3*.

    Driver Airbag. See *Where Are the Airbags? on page 3-23*.
17. *Steering Wheel Controls on page 5-2*.
18. *Ignition Positions (Key Access) on page 9-15* or *Ignition Positions (Keyless Access) on page 9-17*.
19. *Heated Front Seats on page 3-8* (If Equipped).
20. *Power Door Locks on page 2-11*.

    Hazard Warning Flashers on page 6-4.

    Passenger Airbag Status Indicator. See *Passenger Sensing System on page 3-27*.

21. *Lane Departure Warning (LDW) on page 9-44* (If Equipped).

    Ultrasonic Parking Assist on page 9-40 (If Equipped).

    Traction Control System (TCS) on page 9-33.

    StabiliTrak® System on page 9-34.
22. Shift Lever. See *Automatic Transmission on page 9-27*.
23. *Power Outlets on page 5-6*.
24. Electric Parking Brake. See *Parking Brake on page 9-30*.
25. *Climate Control Systems on page 8-1*.

    Dual Automatic Climate Control System on page 8-3.

Initial Drive Information

This section provides a brief overview about some of the important features that may or may not be on your specific vehicle.

For more detailed information, refer to each of the features which can be found later in this owner manual.

Remote Keyless Entry (RKE) System

The Remote Keyless Entry (RKE) transmitter may work up to 20 m (65 ft) away from the vehicle.

RKE without Remote Start

Press the button to extend the key. The key can be used for all locks. This key is also used for the ignition, if the vehicle does not have pushbutton start.

: Press to unlock the driver door or all doors.

: Press to lock all doors.

Lock and unlock feedback can be personalized.

: Press and hold to release the trunk.

: Press and release one time to initiate vehicle locator. Press and hold for at least three seconds to sound the panic alarm. Press again to cancel the panic alarm.

See *Keys on page 2-2* and *Remote Keyless Entry (RKE) System Operation on page 2-3*.

Remote Vehicle Start

With this feature the engine can be started from outside of the vehicle.

Starting the Vehicle

1. Aim the RKE transmitter at the vehicle.
2. Press and release .
3. Immediately after completing Step 2, press and hold for at least two seconds or until the turn signal lamps flash.

When the vehicle starts, the parking lamps will turn on and remain on as long as the engine is running. The doors will be locked and the climate control system may come on.

The engine will continue to run for 10 minutes. Repeat the steps for a 10-minute time extension. Remote start can be extended only once.

Canceling a Remote Start

To cancel a remote start, do one of the following:

- Aim the RKE transmitter at the vehicle and press and hold until the parking lamps turn off.
- Turn on the hazard warning flashers.
- Turn the vehicle on and then back off.

See *Remote Vehicle Start on page 2-8*.

Door Locks

To lock or unlock the doors from the outside:

- Press or on the Remote Keyless Entry (RKE) transmitter. See *Remote Keyless Entry (RKE) System Operation on page 2-3*.
- Use the key in the driver door.

To lock or unlock the doors from the inside:

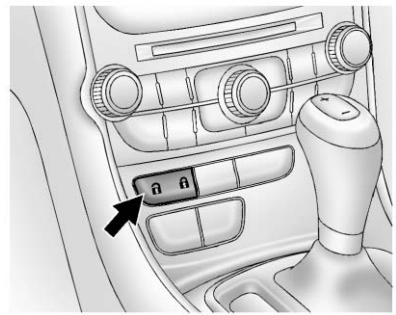

Center Stack

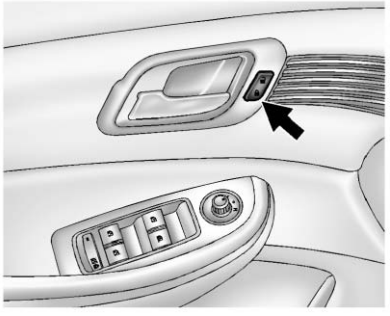

Front Door Panels

- Press 🔒 or 🔓 on the center stack or the front door panels.
- Push the door lock knob on the top of the door to lock the door only.
- Pull the door handle once to unlock the door. Pulling the handle again unlatches the door.

See *Door Locks on page 2-10* or *Power Door Locks on page 2-11*.

Windows

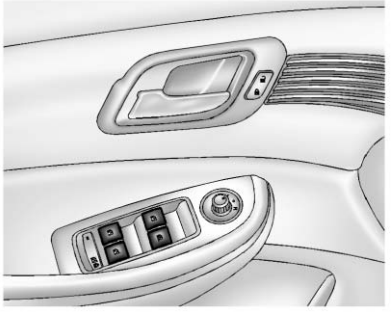

Press the switch down to open the window. Pull the front of the switch up to close it.

The power windows only operate with the ignition in ACC/ACCESSORY or ON/RUN/START, or when Retained Accessory Power (RAP) is active. See *Retained Accessory Power (RAP) on page 9-23*.

Express Window Operation

Windows with an express-down feature allow the window to be lowered without holding the switch. If equipped, windows may also have an express-up feature. Pull a window switch up or press it down all the way, release it, and the window goes up or down automatically. Stop the window by pulling or pressing the switch in the same direction a second time, or by briefly operating the switch to the first detent in either direction.

See *Power Windows on page 2-19*.

Seat Adjustment

Manual Front Seats

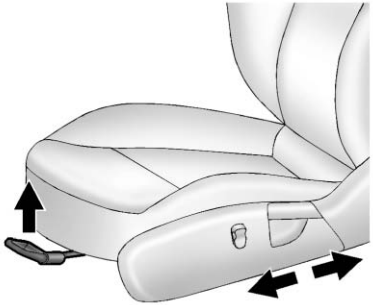

To adjust a manual seat:

1. Pull the handle at the front of the seat.
2. Slide the seat to the desired position and release the handle.
3. Try to move the seat back and forth to be sure it is locked in place.

Seat Height Adjuster

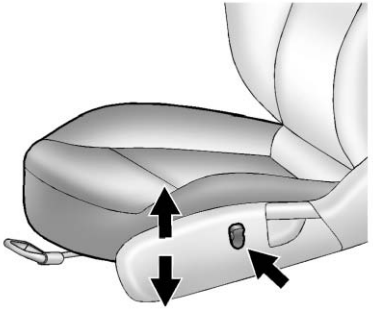

Press and hold the top or bottom of the switch to raise or lower the seat. Release the switch when the desired height is reached.

See *Seat Adjustment on page 3-3*.

Power Seats

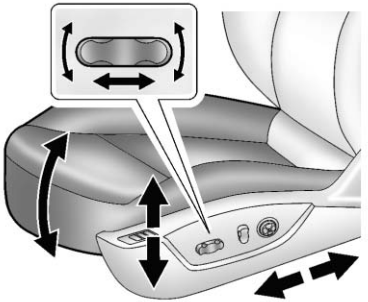

To adjust a power seat, if equipped:

- Move the seat forward or rearward by sliding the control forward or rearward.
- Raise or lower the front part of the seat cushion by moving the front of the control up or down.
- Raise or lower the entire seat by moving the entire control up or down.

See *Power Seat Adjustment on page 3-4*.

Lumbar Adjustment

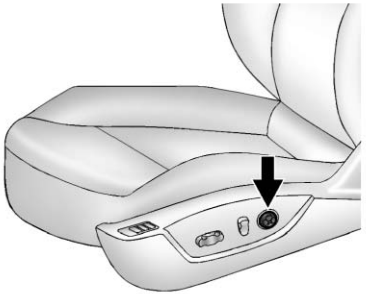

To adjust the lumbar support, if available:

- Press and hold the front or rear of the control to increase or decrease lumbar support.
- Press and hold the top or bottom of the control to raise or lower the height of the lumbar support.

See *Lumbar Adjustment on page 3-4*.

Reclining Seatbacks

Manual Reclining Seatbacks

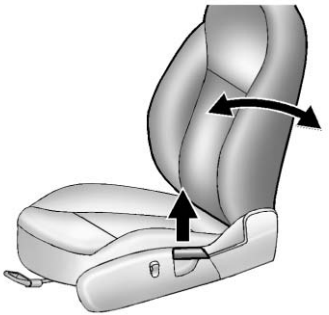

To recline a manual seatback:

1. Lift the lever.
2. Move the seatback to the desired position, and then release the lever to lock the seatback in place.
3. Push and pull on the seatback to make sure it is locked.

To return the seatback to the upright position:

1. Lift the lever fully without applying pressure to the seatback, and the seatback will return to the upright position.
2. Push and pull on the seatback to make sure it is locked.

Power Reclining Seatbacks

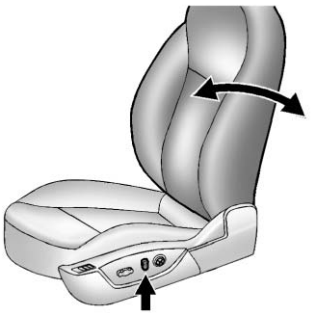

To adjust a power seatback, if available:

- Tilt the top of the control rearward to recline.

- Tilt the top of the control forward to raise.

See *Reclining Seatbacks on page 3-4*.

Memory Features

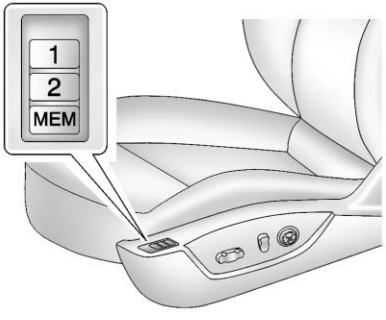

On vehicles with the memory feature, the “1” and “2” buttons on the outboard side of the driver seat are used to manually save and recall the positions of the driver seat and outside mirrors. These manually stored positions are referred to as Button Memory positions.

The vehicle will also automatically save driver seat and outside mirror positions to the current driver Remote Keyless Entry (RKE) transmitter when the ignition is placed in OFF. These automatically stored positions are referred to as RKE Memory positions.

See *Memory Seats on page 3-6* and *Vehicle Personalization on page 5-36*.

Second Row Seats

The rear seatbacks can be folded down to increase cargo space.

See *Rear Seats on page 3-9*.

Heated Seats

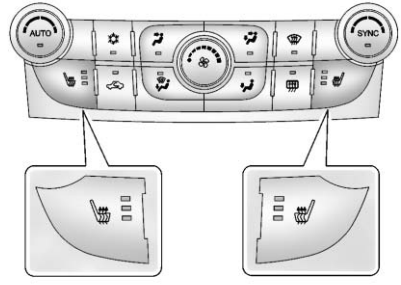

Uplevel Climate Control System Shown, Base Similar

If available, the buttons are on the climate control panel. To operate, the engine must be running.

Press or to heat the driver or passenger seat cushion and seatback. Indicator lights on the button show the current setting.

Press the button once for the highest setting. With each press of the button, the heated seat will change to the next lower setting, and then to the off setting. The lights indicate three for the highest setting and one for the lowest.

See *Heated Front Seats on page 3-8*.

Head Restraint Adjustment

Do not drive until the head restraints for all occupants are installed and adjusted properly.

To achieve a comfortable seating position, change the seatback recline angle as little as necessary while keeping the seat and the head restraint height in the proper position.

See *Head Restraints on page 3-2* and *Seat Adjustment on page 3-3*.

Safety Belts

Refer to the following sections for important information on how to use safety belts properly:

- *Safety Belts on page 3-11*.
- *How to Wear Safety Belts Properly on page 3-12*.
- *Lap-Shoulder Belt on page 3-13*.
- *Lower Anchors and Tethers for Children (LATCH System) on page 3-41*.

Passenger Sensing System

The passenger sensing system turns off the front outboard passenger frontal airbag and knee airbag under certain conditions. No other airbag is affected by the passenger sensing system.

The passenger airbag status indicator will light on the center stack when the vehicle is started. See *Passenger Sensing System on page 3-27* for important information.

Mirror Adjustment

Exterior Mirrors

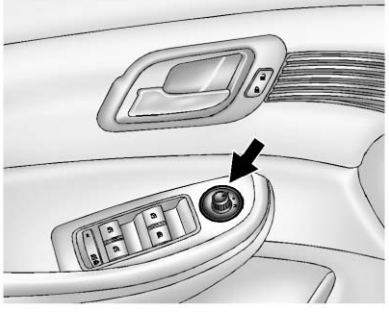

1. Turn the selector switch to L (Left) or R (Right) to choose the driver or passenger mirror.
2. Move the control to adjust the mirror.
3. Turn the selector switch to ◯ to deselect the mirror.

Interior Mirror

Adjustment

Hold the rearview mirror in the center and move it to view the area behind the vehicle.

Manual Rearview Mirror

For vehicles with a manual rearview mirror, push the tab forward for daytime use and pull it rearward for nighttime use to avoid glare from the headlamps from behind. See *Manual Rearview Mirror on page 2-18*.

Automatic Dimming Rearview Mirror

For vehicles with an automatic dimming rearview mirror, the mirror will automatically reduce the glare from the headlamps from behind. The dimming feature comes on when the vehicle is started.

See *Automatic Dimming Rearview Mirror on page 2-18*.

Steering Wheel Adjustment

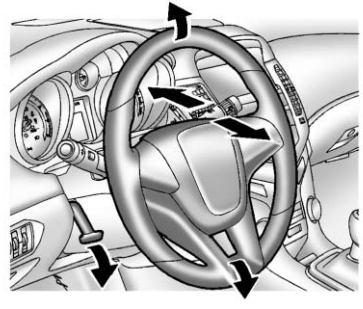

To adjust the steering wheel:

1. Pull the lever down.
2. Move the steering wheel up or down.
3. Pull or push the steering wheel closer or away from you.
4. Push the lever up to lock the steering wheel in place.

Do not adjust the steering wheel while driving.

Interior Lighting

Dome Lamps

The interior lamps control in the overhead console controls both the front and rear interior lamps.

To operate, press the buttons:

: Turns the lamps off.

: Turns the lamps on when any door is opened.

: Keeps the lamps on all the time.

Reading Lamps

There are front and rear reading lamps in the overhead console and the headliner.

Front Reading Lamps

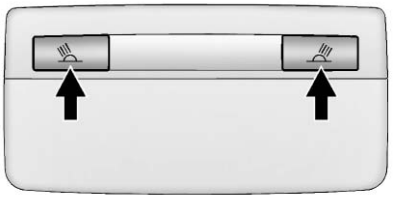

Rear Reading Lamps

or : Press the button near each lamp to turn it on or off.

For more information, see *Instrument Panel Illumination Control on page 6-5*.

Exterior Lighting

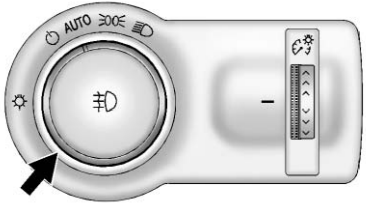

The exterior lamp control is on the instrument panel on the left side of the steering wheel.

⏻ **:** Turns off the exterior lamps. The knob returns to the AUTO position after it is released. Turn to ⏻ again to reactivate the AUTO mode.

In Canada, the headlamps will automatically reactivate once the vehicle is shifted out of P (Park).

AUTO: Automatically turns the exterior lamps on and off, depending on outside lighting.

: Turns on the parking lamps together with the following:

- Sidemarker Lamps
- Taillamps
- License Plate Lamps
- Instrument Panel Lights

: Turns on the headlamps together with the following:

- Sidemarker Lamps
- Taillamps
- License Plate Lamps
- Instrument Panel Lights
- Parking Lamps

See:

- *Exterior Lamp Controls on page 6-1*.
- *Daytime Running Lamps (DRL) on page 6-2*.
- *Fog Lamps on page 6-4*.

Windshield Wiper/Washer

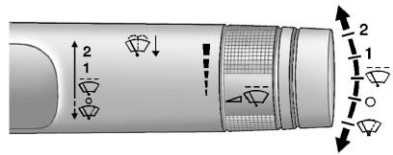

The windshield wiper lever is on the right side of the steering column. With the ignition in ACC/ACCESSORY or ON/RUN, move the windshield wiper lever to select the wiper speed.

2: Use for fast wipes.

1: Use for slow wipes.

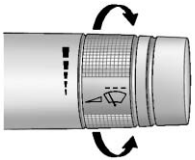

: Move the lever to , then turn the band up for more frequent wipes or down for less frequent wipes.

: Use to turn the windshield wipers off.

: Briefly move the wiper lever down for a single wipe or hold down for several wipes.

Windshield Washer

Pull the windshield wiper lever toward you to spray windshield washer fluid and activate the wipers.

See *Windshield Wiper/Washer on page 5-3*.

Climate Controls

The heating, cooling, and ventilation for the vehicle can be controlled with this system.

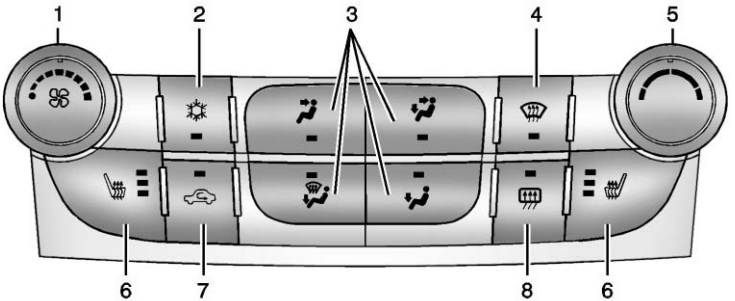

Climate Control System

1. Fan Control
2. Air Conditioning
3. Air Delivery Modes
4. Defrost
5. Temperature Control
6. Heated Seats (If Equipped)
7. Recirculation
8. Rear Window Defogger

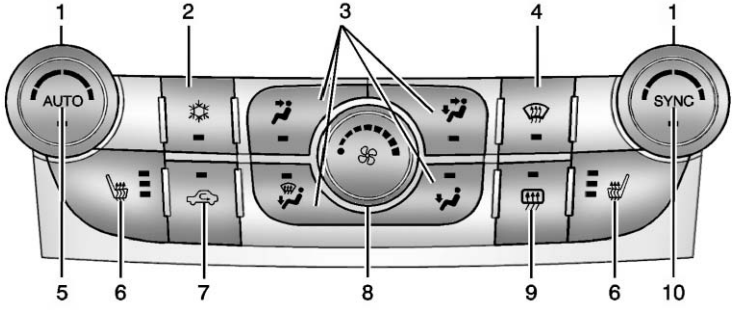

Dual Automatic Climate Control System

1. Driver and Passenger Temperature Controls
2. Comfort/Eco Air Conditioning
3. Air Delivery Modes
4. Defrost
5. AUTO (Automatic Operation)
6. Heated Seats (If Equipped)
7. Recirculation
8. Fan Control
9. Rear Window Defogger
10. SYNC

See *Climate Control Systems on page 8-1* or *Dual Automatic Climate Control System on page 8-3* (If Equipped).

Transmission

Driver Shift Control (DSC)

DSC allows you to change gears similar to a manual transmission. To use this feature:

1. Move the shift lever from D (Drive) rearward to M (Manual).
2. Press the + (plus) end of the button on the top of the shift lever to upshift, or push the − (minus) end of the button to downshift.

See *Manual Mode on page 9-28*.

Vehicle Features

Radio(s)

VOL/ ⏻ : Press to turn the system on and off. Turn to increase or decrease the volume.

RADIO/BAND: Press to choose between FM, AM, or SiriusXM®, if equipped.

TUNE/MENU: Turn to select radio stations. Press to select a menu.

⏮ SEEK ⏭ : Press to seek the previous or next station or track.

INFO: Press to show available information about the current station or track.

See *Overview on page 7-2*.

Satellite Radio

Vehicles with a SiriusXM® satellite radio tuner and a valid SiriusXM satellite radio subscription can receive SiriusXM programming.

SiriusXM Satellite Radio Service

SiriusXM is a satellite radio service based in the 48 contiguous United States and 10 Canadian provinces. SiriusXM satellite radio has a wide variety of programming and commercial-free music, coast to coast, and in digital-quality sound. A fee is required to receive the SiriusXM service.

Refer to:

- www.siriusxm.com or call 1-866-635-2349 (U.S.).
- www.xmradio.ca or call 1-877-209-0079 (Canada).

See *Satellite Radio on page 7-11*.

Portable Audio Devices

This vehicle has a 3.5 mm (1/8 in) auxiliary input and a USB port in the center console. External devices such as iPods®, laptop computers, MP3 players, and USB storage devices may be connected.

See *Auxiliary Devices on page 7-16*.

Bluetooth®

The Bluetooth® system allows users with a Bluetooth-enabled mobile phone to make and receive hands-free calls using the vehicle audio system and controls.

The Bluetooth-enabled mobile phone must be paired with the in-vehicle Bluetooth system before it can be used in the vehicle. Not all phones will support all functions.

See *Bluetooth (Overview) on page 7-22* or *Bluetooth (Voice Recognition) on page 7-27* or *Bluetooth (Infotainment Controls) on page 7-23*.

Steering Wheel Controls

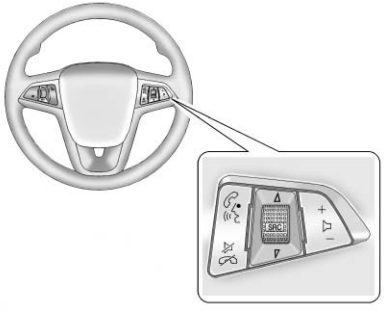

/ : Press to interact with the phone or navigation system.

/ : Press to mute. Press again to turn the sound on. Press to reject an incoming call, or to end a current call.

SRC : Use to select a radio band or audio source.

Use or to select the next or previous favorite radio station, CD track, DVD track/chapter, or MP3 track.

Press SRC to change between radio and CD or DVD.

Press and hold SRC to interact with the navigation system.

+ −: Press + to increase or − to decrease the volume.

See *Steering Wheel Controls on page 5-2*.

Cruise Control

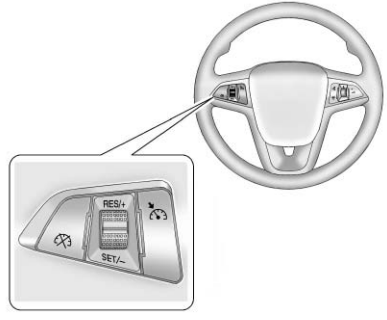

: Press to turn the cruise control system on and off. A white indicator light will turn on or off in the instrument cluster.

: Press to disengage cruise control without erasing the set speed from memory.

RES/+: Move the thumbwheel up to resume to a previously set speed or to accelerate.

SET/−: Move the thumbwheel down to set a speed and activate cruise control or to make the vehicle decelerate.

See *Cruise Control on page 9-36*.

Infotainment System

See the infotainment manual for information on the radio, audio players, phone, navigation system, and voice or speech recognition. There is also information on settings and downloadable applications (if equipped).

Driver Information Center (DIC)

The DIC display is in the center of the instrument cluster. It shows the status of many vehicle systems. The controls for the DIC are on the turn signal lever.

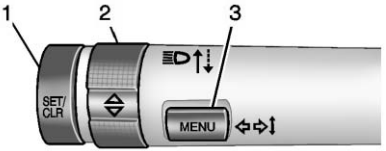

1. **SET/CLR:** Press to set, or press and hold to clear, the menu item displayed.
2. △ / ▽ **:** Use the thumbwheel to scroll through the items in each menu.
3. **MENU:** Press to display the DIC menus. This button is also used to return to or exit the last screen displayed on the DIC.

See *Driver Information Center (DIC) on page 5-25*.

Forward Collision Alert (FCA) System

For vehicles with FCA, this system is intended to help avoid or reduce the harm caused by front-end crashes. FCA provides a flashing visual alert and beeps when approaching a vehicle directly ahead too quickly. FCA also provides a visual alert if following another vehicle much too closely. The forward-looking FCA camera sensor is on the windshield ahead of the rearview mirror. FCA detects vehicles within a distance of approximately 60 m (197 ft) and operates at speeds above 40 km/h (25 mph).

See *Forward Collision Alert (FCA) System on page 9-38* for more information.

Lane Departure Warning (LDW)

For vehicles with LDW, it is intended to help avoid unintentional lane departures. It may provide a warning if the vehicle is crossing a lane without using a turn signal. LDW uses a camera sensor to detect the lane markings. It only operates at speeds of 56 km (35 mph) or greater.

The LDW indicator, , appears green if a lane marking is detected. It changes to amber, flashes, and sounds three beeps if the vehicle crosses a detected lane marking without using the turn signal.

To turn LDW on and off, press on the center stack, forward of the shift lever. The control indicator will light when LDW is on.

See *Lane Departure Warning (LDW) on page 9-44*.

Rear Vision Camera (RVC)

If available, the RVC displays a view of the area behind the vehicle when the vehicle is shifted into R (Reverse). The display will appear on the radio screen.

To clean the camera lens above the license plate, rinse it with water and wipe it with a soft cloth.

See *Rear Vision Camera (RVC) on page 9-42*.

Ultrasonic Parking Assist

If available, this system uses sensors on the rear bumper to assist with parking and avoiding objects while in R (Reverse). It operates at speeds less than 8 km/h (5 mph). URPA uses audible beeps to provide distance and system information.

Keep the sensors on the vehicle's rear bumper clean to ensure proper operation.

See *Ultrasonic Parking Assist on page 9-40*.

Power Outlets

The accessory power outlets can be used to plug in electrical equipment, such as a cell phone or MP3 player.

There are two accessory power outlets: one on the center stack below the climate control and one under the armrest inside the center console storage.

Open the protective cover to use the accessory power outlet.

See *Power Outlets on page 5-6*.

Universal Remote System

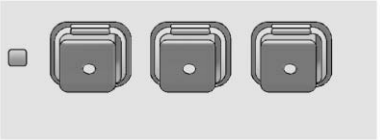

This system provides a way to replace up to three remote control transmitters used to activate devices such as garage door openers, security systems, and home automation devices.

Read the instructions completely before attempting to program the Universal Remote system. Because of the steps involved, it may be helpful to have another person available to assist with programming the Universal Remote system.

See *Universal Remote System on page 5-41*.

Sunroof

On vehicles with a sunroof, the switches used to operate it are on the headliner above the rearview mirror. The ignition must be in ON/RUN or ACC/ACCESSORY, or in Retained Accessory Power (RAP) to operate the sunroof. See *Ignition Positions (Key Access) on page 9-15* or *Ignition Positions (Keyless Access) on page 9-17* and *Retained Accessory Power (RAP) on page 9-23*.

Open/Close: Press and hold the front or rear of the switch (1) to open or close the sunroof. The sunshade automatically opens with the sunroof, but must be closed manually.

Express Open/Close: Press and release the front or rear of the switch (1) to express-open or express-close the sunroof.

Vent/Close: Press and hold the rear of the switch (2) to vent the sunroof. Press and hold the front of the switch to close.

The sunroof cannot be opened or closed if the vehicle has an electrical failure.

Anti-Pinch Feature

If an object is in the path of the sunroof when it is closing, the anti-pinch feature detects the object and stops the sunroof from closing at the point of the obstruction. The sunroof then returns to the full-open position.

See *Sunroof on page 2-21*.

eAssist Features

eAssist® Overview

If the vehicle has eAssist, there are several additional features that contribute to increased efficiency.

Vehicles with eAssist have an automatic engine start/stop feature. This feature saves fuel by shutting the engine off when the vehicle is stopped. When the engine shuts off automatically, all the accessories will continue to operate normally. In very hot or cold conditions, the engine will only shut off automatically part of the time. See *Starting the Engine on page 9-19*.

There are two air conditioning settings available. The comfort setting maximizes cabin comfort. The eco setting maximizes efficiency allowing more frequent, and longer engine stops than the comfort setting. See *Dual Automatic Climate Control System on page 8-3*.

This vehicle has a Hill Start Assist (HSA) feature, which may be useful when the vehicle is stopped on a grade. See *Hill Start Assist (HSA) on page 9-33*.

Vehicles with eAssist have a slightly different instrument cluster, which includes an efficiency gauge, and an AUTO STOP indicator on the tachometer. See *Instrument Cluster on page 5-9*. There is also a Power Flow display in the Driver Information Center (DIC). See *Driver Information Center (DIC) on page 5-25*.

The eAssist system uses a high voltage battery, which is cooled with air drawn from the vehicle interior.

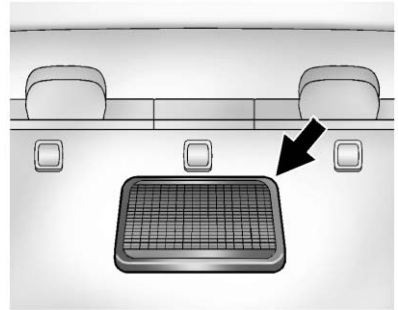

The cold air intake for the battery is behind the rear seat, on the filler panel. Do not cover the intake. See *Battery on page 10-25*.

High Voltage Safety Information

Vehicles with eAssist have a standard 12-volt battery and a high voltage battery. Only a trained service technician with the proper knowledge and tools should inspect, test, or replace the high voltage battery. See your dealer if the high voltage battery needs service.

In emergency situations, first responders can cut the two clearly labeled cut points in the engine compartment to disable the high voltage battery and air bag systems — do not cut the high voltage cable.

Driver Efficiency Gauge

For vehicles with eAssist, this gauge assists the driver in operating the vehicle more efficiently and will vary based on driver input.

See *Driver Efficiency Gauge on page 5-12*.

Automatic Engine Start/ Stop Feature

Vehicles with eAssist have an automatic engine start/stop feature. After the engine is started and has reached operating temperature, the auto stop feature may cause the engine to turn off when the brake pedal is applied and the vehicle comes to a complete stop. When the brake pedal is released, or the accelerator pedal is applied, the engine will restart. The engine will continue to run until the next auto stop.

To restart the engine during the auto stop, release the brake pedal or press the accelerator pedal. The engine starts immediately. The vehicle continues to run until the next stop.

AUTO STOP on the tachometer signifies that the engine is in auto stop mode. See *Tachometer on page 5-11* for more information.
A chime will sound when the driver door is opened while in auto stop mode. Remember to shift to P (Park) and turn the ignition to LOCK/OFF before exiting the vehicle.

See *Starting the Engine on page 9-19*.

Regenerative Braking

Regenerative braking takes some of the energy from the moving vehicle and turns it into electrical energy. This energy is then stored in the vehicle's high voltage battery system, contributing to increased fuel efficiency.

The system works whenever the accelerator pedal is released, and increases the energy captured as more brake pedal is applied.

Battery

This vehicle has a standard 12-volt battery. Refer to the replacement number on the original battery label when a new standard 12-volt battery is needed.

Vehicles with eAssist also have a high voltage battery. Only a trained service technician with the proper knowledge and tools should inspect, test, or replace the high voltage battery. See your dealer if the high voltage battery needs service. See *Battery on page 10-25*.

Service

Never try to do your own service on eAssist components. You can be injured and the vehicle can be damaged if you try to do your own service work. Service and repair of these high voltage components should only be performed by a trained service technician with the proper knowledge and tools. See *Doing Your Own Service Work on page 10-4*.

Performance and Maintenance

Traction Control System (TCS)

The traction control system limits wheel spin. The system turns on automatically every time the vehicle is started.

- To turn off traction control, press and release the TCS/StabiliTrak button OFF on the center stack. TC illuminates in the instrument cluster.
- Press and release the TCS/StabiliTrak button again to turn on traction control.

See *Traction Control System (TCS) on page 9-33*.

StabiliTrak® System

The StabiliTrak system assists with directional control of the vehicle in difficult driving conditions. The system turns on automatically every time the vehicle is started.

- To turn off both traction control and StabiliTrak, press and hold the TCS/StabiliTrak button OFF on the center stack, until TC and OFF illuminate in the instrument cluster.
- Press and release the TCS/StabiliTrak button again to turn on both systems.

See *StabiliTrak® System on page 9-34*.

Tire Pressure Monitor

This vehicle may have a Tire Pressure Monitor System (TPMS).

The low tire pressure warning light alerts to a significant loss in pressure of one of the vehicle's tires. If the warning light comes on, stop as soon as possible and inflate the tires to the recommended pressure shown on the Tire and Loading Information label. See *Vehicle Load Limits on page 9-10*. The warning light will remain on until the tire pressure is corrected.

The low tire pressure warning light may come on in cool weather when the vehicle is first started, and then turn off as the vehicle is driven. This may be an early indicator that the tire pressures are getting low and the tires need to be inflated to the proper pressure.

The TPMS does not replace normal monthly tire maintenance. Maintain the correct tire pressures.

See *Tire Pressure Monitor System on page 10-54*.

Tire Sealant and Compressor Kit

This vehicle may come with a spare tire and tire changing equipment or a tire sealant and compressor kit. The kit can be used to temporarily seal small punctures in the tread area of the tire. See *Tire Sealant and Compressor Kit (With Pressure Relief Button) on page 10-68* or *Tire Sealant and Compressor Kit (With Pressure Deflation Button) on page 10-76*.

If the vehicle came with a spare tire and tire changing equipment, see *If a Tire Goes Flat on page 10-66*.

Engine Oil Life System

The engine oil life system calculates engine oil life based on vehicle use and displays the CHANGE ENGINE OIL SOON message when it is time to change the engine oil and filter. The oil life system should be reset to 100% only following an oil change.

Resetting the Oil Life System

1. Turn the ignition to ON/RUN with the engine off.
2. Press the DIC MENU button on the turn signal lever to enter the Vehicle Information Menu. Use the thumbwheel to scroll through the menu items until you reach REMAINING OIL LIFE.
3. Press the SET/CLR button to reset the oil life at 100%.
4. Turn the ignition to LOCK/OFF.

See *Engine Oil Life System on page 10-13*.

Fuel E85 (85% Ethanol)

Vehicles with a yellow fuel cap can use either unleaded gasoline or ethanol fuel containing up to 85% ethanol (E85). See *Fuel E85 (85% Ethanol) on page 9-49*. For all other vehicles, use only the unleaded gasoline described under *Recommended Fuel on page 9-47*.

Driving for Better Fuel Economy

Driving habits can affect fuel mileage. Here are some driving tips to get the best fuel economy possible.

- Avoid fast starts and accelerate smoothly.
- Brake gradually and avoid abrupt stops.
- Avoid idling the engine for long periods of time.
- When road and weather conditions are appropriate, use cruise control.
- Always follow posted speed limits or drive more slowly when conditions require.
- Keep vehicle tires properly inflated.
- Combine several trips into a single trip.
- Replace the vehicle's tires with the same TPC Spec number molded into the tire's sidewall near the size.
- Follow recommended scheduled maintenance.

Roadside Assistance Program

U.S.: 1-800-243-8872

TTY Users (U.S. Only): 1-888-889-2438

Canada: 1-800-268-6800

Mexico: 01-800-466-0800

As the owner of a new Chevrolet, you are automatically enrolled in the Roadside Assistance program.

See *Roadside Assistance Program (Mexico) on page 13-7* or *Roadside Assistance Program (U.S. and Canada) on page 13-11*.

OnStar®

If equipped, this vehicle has a comprehensive, in-vehicle system that can connect to a live Advisor for Emergency, Security, Navigation, Connection, and Diagnostic Services. See *OnStar Overview on page 14-1*.

✍ NOTES

Keys, Doors, and Windows

Keys and Locks
Keys 2-2
Remote Keyless Entry (RKE) System 2-3
Remote Keyless Entry (RKE) System Operation 2-3
Remote Vehicle Start 2-8
Door Locks 2-10
Power Door Locks 2-11
Door Ajar Reminder 2-11
Automatic Door Locks 2-11
Lockout Protection 2-12
Safety Locks 2-12

Doors
Trunk 2-13

Vehicle Security
Vehicle Security 2-15
Vehicle Alarm System 2-15
Immobilizer 2-15
Immobilizer Operation (Key Access) 2-15
Immobilizer Operation (Keyless Access) 2-16

Exterior Mirrors
Convex Mirrors 2-17
Power Mirrors 2-17
Heated Mirrors 2-18
Reverse Tilt Mirrors 2-18

Interior Mirrors
Manual Rearview Mirror 2-18
Automatic Dimming Rearview Mirror 2-18

Windows
Windows 2-19
Power Windows 2-19
Sun Visors 2-21

Roof
Sunroof 2-21

Keys and Locks

Keys

⚠ WARNING

Leaving children in a vehicle with an ignition key or Remote Keyless Entry (RKE) transmitter is dangerous and children or others could be seriously injured or killed. They could operate the power window or other controls or make the vehicle move. The windows will function with the key in the ignition or with the RKE transmitter in the vehicle, and children or others could be caught in the path of a closing window. Do not leave children in a vehicle with the ignition key or an RKE transmitter.

The key that is part of the Remote Keyless Entry (RKE) transmitter can be used for the ignition and all locks if the vehicle is a key access vehicle. If the vehicle has the keyless ignition, the key can be used for the locks.

Press the button on the RKE transmitter to extend the key. Press the button and the key blade to retract the key.

If the vehicle has an ignition and it becomes difficult to turn the key, inspect the key blade for debris. Periodically clean with a brush or pick.

See your dealer if a new key is needed.

Remote Keyless Entry (RKE) System

See *Radio Frequency Statement on page 13-21* for information regarding Part 15 of the Federal Communications Commission (FCC) rules and Industry Canada Standards RSS-GEN/210/220/310.

If there is a decrease in the RKE operating range:

- Check the distance. The transmitter may be too far from the vehicle.
- Check the location. Other vehicles or objects may be blocking the signal.
- Check the transmitter's battery. See “Battery Replacement” later in this section.
- If the transmitter is still not working correctly, see your dealer or a qualified technician for service.

Remote Keyless Entry (RKE) System Operation

The transmitter functions may work up to 20 m (65 ft) away from the vehicle.

Keep in mind that other conditions, such as those previously stated, can impact the performance of the transmitter.

RKE without Remote Start

(Lock): Press to lock all doors.

The turn signal indicators may flash and/or the horn may sound to indicate locking. See “Locking Feedback” under *Vehicle Personalization on page 5-36*.

If the driver door is open when is pressed, all doors lock except the driver door, if Unlocked Door Anti Lock Out is enabled through vehicle personalization. See “Remote Locking, Unlocking, Starting” under *Vehicle Personalization on page 5-36*.

If the passenger door is open when is pressed, all doors lock.

Pressing may also arm the theft-deterrent system. See *Vehicle Alarm System on page 2-15*.

(Unlock): Press to unlock the driver door or all doors. See “Door Unlock Options” under *Vehicle Personalization on page 5-36*.

The turn signal indicators may flash and/or the horn may sound to indicate unlocking. See “Unlock Feedback (Lights)” under *Vehicle Personalization on page 5-36*.

Pressing 🔒 will disarm the theft-deterrent system. See *Vehicle Alarm System on page 2-15*.

Memory seat positions may be recalled when unlocking the vehicle. See *Memory Seats on page 3-6* and “Memory Remote Recall” under *Vehicle Personalization on page 5-36*.

🚗 **(Remote Trunk Release):** Press and hold to open the trunk.

(Vehicle Locator/Panic Alarm): Press and release one time to initiate vehicle locator. The exterior lamps flash and the horn chirps three times.

Press and hold for at least three seconds to sound the panic alarm. The horn sounds and the turn signals flash for about 30 seconds until is pressed again or the vehicle is started.

(Remote Vehicle Start): For vehicles with this feature, press 🔓 and release and then press and hold within two seconds to start the engine from outside the vehicle using the RKE transmitter. See *Remote Vehicle Start on page 2-8*.

The buttons on the keys are disabled when there is a key is in the ignition, if equipped.

Keyless Access Operation

Some vehicles have the keyless access system that lets you lock and unlock the doors and access the trunk without removing the RKE transmitter from your pocket, purse, briefcase, etc. The RKE transmitter must be within 1 m (3 ft) of the door being unlocked. If the vehicle has this feature, there will be a button on the outside front door handles.

The keyless access can be programmed to unlock all doors on the first unlock/lock button press from the driver door. See *Vehicle Personalization on page 5-36*.

Keyless Unlocking/Locking from the Driver Door

When the doors are locked and the RKE transmitter is within 1 m (3 ft) of the driver door handle, pressing the lock/unlock button on the driver door handle will unlock the driver door. If the lock/unlock button is pressed again within five seconds, all passenger doors will unlock. Pull the door handle to unlatch the door.

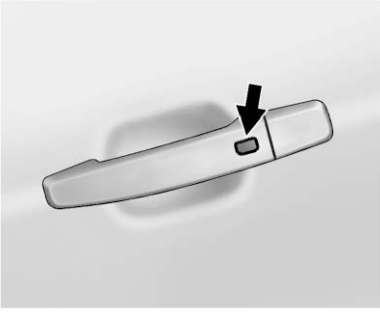

Driver Side Shown, Passenger Similar

Pressing the lock/unlock button will cause all doors to lock if any of the following occur:

- It has been more than five seconds since the first lock/unlock button press.
- Two lock/unlock button presses were used to unlock all doors.
- Any vehicle door has opened and all doors are now closed.

Keyless Unlocking/Locking from Passenger Doors

When the doors are locked and the RKE transmitter is within 1 m (3 ft) of the door handle, pressing the lock/unlock button on that door handle will unlock all doors.

Pressing the lock/unlock button will cause all doors to lock if any of the following occur:

- The lock/unlock button was used to unlock all doors.
- Any vehicle door has opened and all doors are now closed.

Passive Locking

If the vehicle has the keyless access system, this feature allows you to select whether the doors automatically lock during normal vehicle exit. When the vehicle is turned off and all doors are closed, the vehicle will determine how many RKE transmitters remain inside the vehicle. If at least one RKE transmitter has been removed from the interior of the vehicle, the doors will lock after eight seconds.

Temporarily disable the locking feature by pressing and holding 🔓 on the center stack for several seconds with a door open. Passive locking will then remain disabled until 🔒 is pressed, or until the vehicle is turned on.

To customize whether the doors automatically lock when you exit the vehicle, see “Remote Locking, Unlocking, Starting” under *Vehicle Personalization on page 5-36*.

Keyless Trunk Opening

Press the touch pad on the trunk Center High-Mounted Stoplamp (CHMSL) to open the trunk if the RKE transmitter is within 1 m (3 ft) of the trunk.

Programming Transmitters to the Vehicle

Only RKE transmitters programmed to the vehicle will work. If a transmitter is lost or stolen, a replacement can be purchased and programmed through your dealer. The vehicle can be reprogrammed so that lost or stolen transmitters no longer work. Any remaining transmitters will need to be reprogrammed. Each vehicle can have up to eight transmitters matched to it.

Programming with a Recognized Transmitter (Keyless Access Vehicles Only)

A new transmitter can be programmed to the vehicle when there is one recognized transmitter. To program, the vehicle must be off and all of the transmitters, both currently recognized and new, must be with you.

1. Place the recognized transmitter(s) in the transmitter pocket. The transmitter pocket is inside the center console storage area.
2. Insert the vehicle key of the new transmitter into the key lock cylinder on the outside of the driver door and turn the key to the unlock position five times within 10 seconds.

   The Driver Information Center (DIC) displays READY FOR REMOTE #2, 3, 4 or 5.

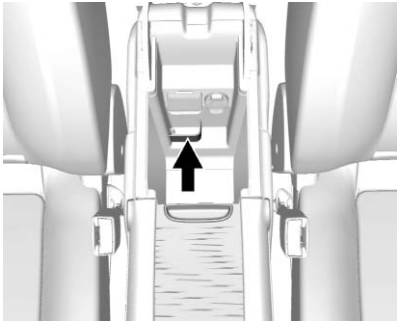

3. Place the new transmitter into the transmitter pocket.
4. Press the START button. When the transmitter is learned, the DIC will show that it is ready to program the next transmitter.
5. Remove the transmitter from the transmitter pocket and press 🔓.

   To program additional transmitters, repeat Steps 3–5.

When all additional transmitters are programmed, press and hold the START button for 10 seconds to exit programming mode.

Programming without a Recognized Transmitter (Keyless Access Vehicles Only)

If there are no currently recognized transmitters available, follow this procedure to program up to eight transmitters. This feature is not available in Canada. This procedure will take approximately 30 minutes to complete. The vehicle must be off and all of the transmitters to be programmed must be with you.

1. Insert the vehicle key of the transmitter into the key lock cylinder on the outside of the driver door and turn the key to the unlock position five times within 10 seconds.

   The Driver Information Center (DIC) displays REMOTE LEARN PENDING, PLEASE WAIT.

2. Wait for 10 minutes until the DIC displays PRESS ENGINE START BUTTON TO LEARN and then press the START button.

   The DIC displays will again show REMOTE LEARN PENDING, PLEASE WAIT.

3. Repeat Step 2 two additional times. After the third time, all previously known transmitters will no longer work with the vehicle. Remaining transmitters can be relearned during the next steps.

   The DIC display should now show READY FOR REMOTE # 1.

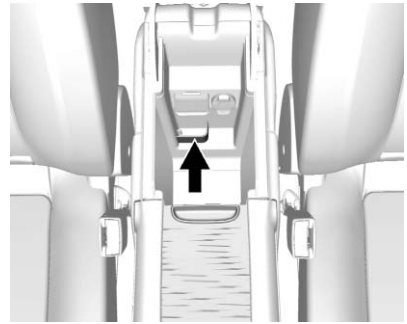

4. Place the new transmitter into the transmitter pocket, which is inside the center console storage area.
5. Press the START button. When the transmitter is learned the DIC will show that it is ready to program the next transmitter.
6. Remove the transmitter from the transmitter pocket and press 🔓.

   To program additional transmitters, repeat Steps 4–6.

When all additional transmitters are programmed, press and hold the for 10 seconds to exit programming mode.

Starting the Vehicle with a Low Transmitter Battery

If the transmitter battery is weak, the DIC may display NO REMOTE DETECTED when you try to start the vehicle. The REPLACE BATTERY IN REMOTE KEY message may also be displayed at this time.

To start the vehicle:

1. Open the center console and place the transmitter in the transmitter pocket with the buttons facing the front of the vehicle.
2. With the vehicle in P (Park) or N (Neutral), press the brake pedal and press the START button. See *Starting the Engine on page 9-19*.

   Replace the transmitter battery as soon as possible.

Battery Replacement

Replace the battery if the DIC indicates that battery replacement is necessary. See *Key and Lock Messages on page 5-32*.

The battery is not rechargeable. To replace the battery:

1. Press the button on the transmitter to extend the key blade.

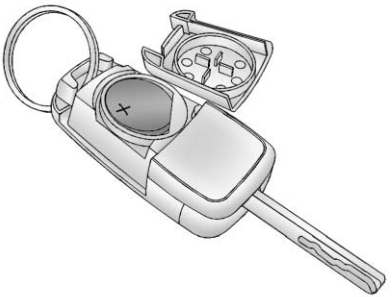

2. Remove the battery cover by prying it with a finger.
3. Remove the battery by pushing on the battery and sliding it toward the key blade.
4. Insert the new battery, positive side facing up. Push the battery down until it is held in place. Replace with a CR2032 or equivalent battery.
5. Snap the battery cover back on to the transmitter.

Remote Vehicle Start

The vehicle may have this feature that allows the engine to be started from outside the vehicle.

(Remote Vehicle Start): This button will be on the RKE transmitter if the vehicle has remote start.

The climate control system will use the previous settings during a remote start. The rear window defogger may come on during a remote start based on cold ambient

conditions. The rear defog indicator light does not come on during a remote start.

If the vehicle has heated seats, they may come on during a remote start. See *Heated Front Seats on page 3-8*.

Laws in some local communities may restrict the use of remote starters. For example, some laws require a person using remote start to have the vehicle in view. Check local regulations for any requirements.

Other conditions can affect the performance of the transmitter. See *Remote Keyless Entry (RKE) System on page 2-3*.

Starting the Vehicle

To start the engine using the remote start feature:

1. Aim the RKE transmitter at the vehicle.
2. Press and release 🔒.
3. Immediately after completing Step 2, press and hold ⟳ for at least two seconds or until the turn signal lamps flash. The turn signal lamps flashing confirms the request to remote start the vehicle has been received.

When the engine starts, the parking lamps will turn on and remain on as long as the engine is running. The doors will be locked and the climate control system may come on.

The engine will continue to run for 10 minutes. Repeat the steps for a 10-minute time extension. Remote start can be extended only once.

Start the vehicle before driving.

Extending Engine Run Time

For a 10-minute extension, repeat Steps 1–3 while the engine is still running. The remote start can be extended once.

When the remote start is extended, the second 10 minutes will start immediately.

For example, if the engine has been running for five minutes, and 10 minutes are added, the engine will run for a total of 15 minutes.

A maximum of two remote starts, or a single start with an extension, is allowed between ignition cycles.

The vehicle's ignition must be turned on and then back off before the remote start procedure can be used again.

Canceling a Remote Start

To cancel a remote start, do one of the following:

- Aim the RKE transmitter at the vehicle and press and hold ⟳ until the parking lamps turn off.
- Turn on the hazard warning flashers.
- Turn the vehicle on and then off.

Conditions in Which Remote Start Will Not Work

The remote vehicle start feature will not operate if:

- The key is in the ignition (key access) or if the key is in the vehicle (keyless access).
- The hood is not closed.
- The hazard warning flashers are on.
- The malfunction indicator lamp is on.
- The engine coolant temperature is too high.
- The oil pressure is low.
- Two remote vehicle starts, or a single remote start with an extension, have already been used.
- The vehicle is not in P (Park).

Door Locks

⚠ WARNING

Unlocked doors can be dangerous.

- Passengers, especially children, can easily open the doors and fall out of a moving vehicle. When a door is locked, the handle will not open it. The chance of being thrown out of the vehicle in a crash is increased if the doors are not locked. So, all passengers should wear safety belts properly and the doors should be locked whenever the vehicle is driven.
- Young children who get into unlocked vehicles may be unable to get out. A child can be overcome by extreme heat and can suffer permanent

(Continued)

WARNING (Continued)

injuries or even death from heat stroke. Always lock the vehicle whenever leaving it.

- Outsiders can easily enter through an unlocked door when you slow down or stop the vehicle. Locking the doors can help prevent this from happening.

To lock or unlock the doors from the outside:

- Press 🔒 or 🔓 on the Remote Keyless Entry (RKE) transmitter. See *Remote Keyless Entry (RKE) System Operation on page 2-3*.
- Use the key in the driver door.

To lock or unlock the doors from the inside:

- Push the door lock knob on the top of the door to lock the door only.

- Pull the door handle once to unlock the door. Pulling the handle again unlatches the door.
- Press 🔒 or 🔓 on the center stack or the front door panels. See *Power Door Locks on page 2-11*.

Power Door Locks

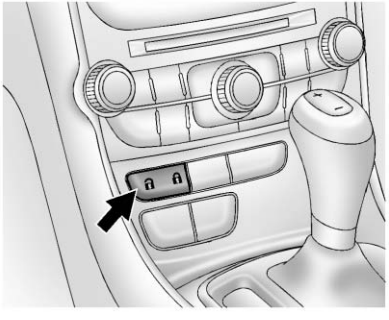

Center Stack

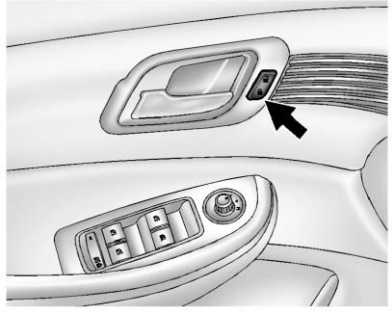

Front Door Panels

🔒 **(Lock):** Press to lock the doors.

🔓 **(Unlock):** Press to unlock the doors.

Locking or unlocking the doors will also lock or unlock the trunk. See *Trunk on page 2-13*.

Door Ajar Reminder

A chime will sound and the appropriate door message will display on the Driver Information Center (DIC) if one of the doors is not fully closed. This happens when the ignition is on and the shift lever is moved out of P (Park) or N (Neutral). See *Door Ajar Messages on page 5-30*.

Automatic Door Locks

The vehicle is programmed to lock all doors automatically when the following are met:

- All doors are closed.
- The ignition is on.
- The vehicle is shifted out of P (Park).

This feature cannot be disabled.

All doors will unlock when the vehicle is shifted into P (Park).

The power door unlock function can be programmed through prompts displayed on the Driver Information Center (DIC). See *Vehicle Personalization on page 5-36*.

Lockout Protection

If the power door lock switch is pressed when the key is in the ignition and any door is open, all doors will lock and then the driver door will unlock. Be sure to remove the key from the ignition when locking the vehicle.

If the Remote Keyless Entry (RKE) transmitter is used to lock the doors while the key is in the ignition, a chime will sound three times. All doors will then lock.

Safety Locks

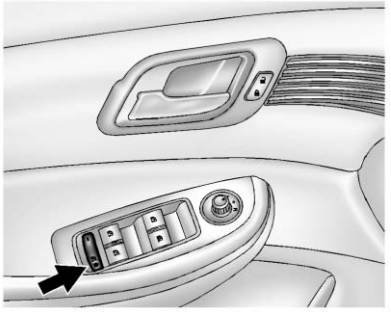

The rear door safety locks prevent passengers from opening the rear doors from inside the vehicle. Activating this feature will also activate the rear window lockout. See *Power Windows on page 2-19*.

Press to activate the rear door safety locks. The indicator light in the switch will illuminate.

Press again to deactivate the safety locks and window lockout.

If a rear door handle is pulled when the safety lock is deactivated, that door will remain locked and the indicator light may flash. Release the handle, then press the safety lock twice to deactivate the safety locks.

Doors

Trunk

⚠ WARNING

Exhaust gases can enter the vehicle if it is driven with the liftgate, trunk/hatch open, or with any objects that pass through the seal between the body and the trunk/hatch or liftgate. Engine exhaust contains carbon monoxide (CO) which cannot be seen or smelled. It can cause unconsciousness and even death.

If the vehicle must be driven with the liftgate or trunk/hatch open:

- Close all of the windows.
- Fully open the air outlets on or under the instrument panel.

(Continued)

WARNING (Continued)

- Adjust the climate control system to a setting that brings in only outside air and set the fan speed to the highest setting. See “Climate Control Systems” in the Index.
- If the vehicle is equipped with a power liftgate, disable the power liftgate function.

For more information about carbon monoxide, see *Engine Exhaust on page 9-26*.

Trunk Release

The trunk can only be opened while the vehicle is in P (Park) or when the ignition is off.

Press on the RKE transmitter. See *Remote Keyless Entry (RKE) System Operation on page 2-3*.

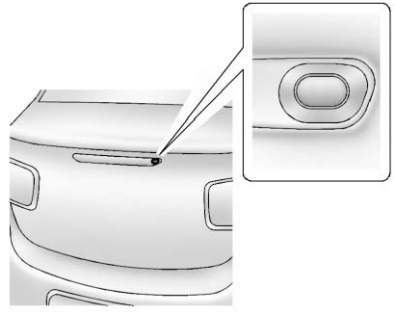

Unlock the trunk first by pressing on the center stack, front door panel, or RKE transmitter. Then, press the touch pad on the trunk Center High-Mounted Stoplamp (CHMSL).

Close the trunk by pulling on the handle.

Emergency Trunk Release Handle

Notice: **Do not use the emergency trunk release handle as a tie-down or anchor point when securing items in the trunk as it could damage the handle.**

The emergency trunk release handle is only intended to aid a person trapped in a latched trunk, enabling them to open the trunk from the inside.

There is a glow-in-the-dark emergency trunk release handle on the trunk lid. This handle will glow following exposure to light. Pull the release handle to open the trunk from the inside.

Vehicle Security

This vehicle has theft-deterrent features; however, they do not make the vehicle impossible to steal.

Vehicle Alarm System

This vehicle has an anti-theft alarm system.

Arming the System

To arm the system, press on the RKE transmitter.

The alarm automatically arms after about 30 seconds. The security light, on the instrument cluster, flashes.

Press on the RKE transmitter to open the trunk without setting off the alarm. The system rearms when the trunk is closed.

Disarming the System

To disarm the system, do one of the following:

- Press on the RKE transmitter.
- Approach the vehicle with the RKE transmitter (keyless access).
- Start the engine.

The alarm automatically disarms.

How to Detect a Tamper Condition

If is pressed and the horn sounds, an attempted break-in occurred while the system was armed.

If the alarm has been activated, a message will appear on the DIC. See *Security Messages on page 5-33*.

Immobilizer

See *Radio Frequency Statement on page 13-21* for information regarding Part 15 of the Federal Communications Commission (FCC) rules and Industry Canada Standards RSS-GEN/210/220/310.

Immobilizer Operation (Key Access)

This vehicle has a passive theft-deterrent system.

The system does not have to be manually armed or disarmed.

The vehicle is automatically immobilized when the key is removed from the ignition.

The system is automatically disarmed when the vehicle is started with the correct key. The key uses a transponder that matches an immobilizer control unit in the vehicle and automatically disarms the system. Only the correct key starts the vehicle. The vehicle may not start if the key is damaged.

The security light in the instrument cluster comes on if there is a problem with arming or disarming the theft-deterrent system.

When trying to start the vehicle, the security light comes on briefly when the ignition is turned on.

If the engine does not start and the security light stays on, there is a problem with the system. Turn the ignition off and try again.

If the engine still does not start, and the key appears to be undamaged or the light continues to stay on, try another ignition key.

If the engine still does not start with the other key, the vehicle needs service. If the vehicle does start, the first key may be damaged. See your dealer who can service the theft-deterrent system and have a new key made.

Do not leave the key or device that disarms or deactivates the theft-deterrent system in the vehicle.

Immobilizer Operation (Keyless Access)

This vehicle has a passive theft-deterrent system.

The system does not have to be manually armed or disarmed.

The vehicle is automatically immobilized when the transmitter leaves the vehicle.

The immobilization system is disarmed when the ignition button is pushed in and a valid transmitter is found in the vehicle.

The security light in the instrument cluster comes on when there is a problem with arming or disarming the theft-deterrent system.

The system has one or more transmitters matched to an immobilizer control unit in your vehicle. Only a correctly matched transmitter will start the vehicle. If the transmitter is ever damaged, you may not be able to start your vehicle.

When trying to start the vehicle, the security light comes on briefly when the ignition is turned on.

If the engine does not start and the security light stays on, there is a problem with the system. Turn the vehicle off and try again.

If the RKE transmitter appears to be undamaged, try another transmitter. Or, you may try placing the transmitter in the transmitter pocket in the center console. See “Starting the Vehicle with a Low Transmitter Battery” under *Remote Keyless Entry (RKE) System Operation on page 2-3*.

If the engine does not start with the other transmitter or when the transmitter is in the pocket in the center console, your vehicle needs service. See your dealer who can service the theft-deterrent system and have a new transmitter programmed to the vehicle.

Do not leave the transmitter or device that disarms or deactivates the theft-deterrent system in the vehicle.

Exterior Mirrors

Convex Mirrors

⚠ WARNING

A convex mirror can make things, like other vehicles, look farther away than they really are. If you cut too sharply into the right lane, you could hit a vehicle on the right. Check the inside mirror or glance over your shoulder before changing lanes.

The passenger side mirror is convex shaped. A convex mirror's surface is curved so more can be seen from the driver seat.

Power Mirrors

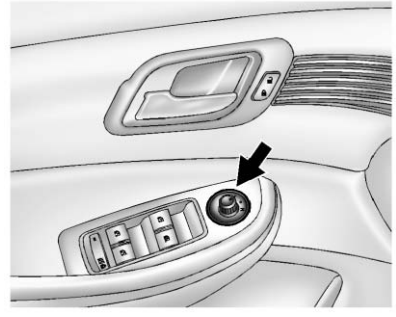

To adjust the mirrors:

1. Turn the selector switch to L (Left) or R (Right) to choose the driver or passenger mirror.
2. Move the control to adjust the mirror.
3. Turn the selector switch to ◯ to deselect the mirror.

Heated Mirrors

For vehicles with heated mirrors:

(Rear Window Defogger): Press to heat the mirrors.

See “Rear Window Defogger” under *Dual Automatic Climate Control System on page 8-3*.

Reverse Tilt Mirrors

If equipped with the memory package, the outside mirrors have a reverse tilt feature. This feature tilts the outside mirrors to a preselected position when the vehicle is in R (Reverse). This allows the driver to view the curb for parallel parking.

The passenger and/or driver mirror returns to its original position when the vehicle is shifted out of R (Reverse), or the ignition is turned off or to OFF/LOCK.

This feature can be turned on or off through the Driver Information Center (DIC). See *Vehicle Personalization on page 5-36*.

Interior Mirrors

Manual Rearview Mirror

To adjust the inside rearview mirror, hold the rearview mirror in the center and move it to view the area behind the vehicle.

For vehicles with a manual rearview mirror, push the tab forward for daytime use and pull it rearward for nighttime use to avoid glare from the headlamps from behind.

Vehicles with OnStar® have three control buttons at the bottom of the mirror. See a dealer for more information about OnStar and how to subscribe to it. See *OnStar Overview on page 14-1*.

Automatic Dimming Rearview Mirror

To adjust the inside rearview mirror, hold the rearview mirror in the center and move it to view the area behind the vehicle.

For vehicles with an automatic dimming rearview mirror, the mirror will automatically reduce the glare from the headlamps from behind. The dimming feature comes on when the vehicle is started.

Vehicles with OnStar have three control buttons at the bottom of the mirror. See a dealer for more information about OnStar and how to subscribe to it. See *OnStar Overview on page 14-1*.

Cleaning the Mirror

Do not spray glass cleaner directly on the mirror. Use a soft towel dampened with water.

Windows

⚠ WARNING

Never leave a child, a helpless adult, or a pet alone in a vehicle, especially with the windows closed in warm or hot weather. They can be overcome by the extreme heat and suffer permanent injuries or even death from heat stroke.

The vehicle aerodynamics are designed to improve fuel economy performance. This may result in a pulsing sound when either rear window is down and the front windows are up. To reduce the sound, open either a front window or the sunroof, if equipped.

Power Windows

⚠ WARNING

Children could be seriously injured or killed if caught in the path of a closing window. Never leave keys in a vehicle with children. When there are children in the rear seat, use the window lockout button to prevent operation of the windows. See *Keys on page 2-2*.

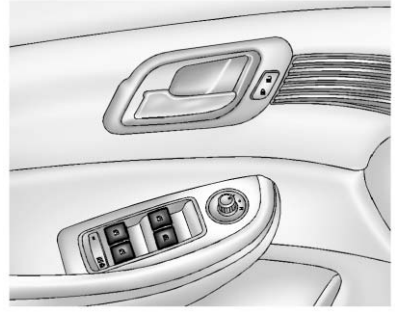

Press the switch down to open the window. Pull the front of the switch up to close it.

The power windows only operate with the ignition in ACC/ACCESSORY or ON/RUN/START, or when Retained Accessory Power (RAP) is active. See *Retained Accessory Power (RAP) on page 9-23*.

Express Window Operation

Windows with an express-down feature allow the window to be lowered without holding the switch.

If equipped, the driver window may also have an express-up feature. Pull a window switch up or press it down all the way, release it, and the window goes up or down automatically. Stop the window by pressing or pulling the switch in the same direction a second time, or by briefly operating the switch to the first detent in either direction.

Safety Function

This is for vehicles with the express-up feature. If any object is in the path of the window when the express-up feature is active, the window will stop and auto-reverse to a preset position. Weather conditions may cause the window to auto-reverse. The window switch may be held up to the second position to close the window. The window will return to normal operation once the obstruction or condition is removed.

Safety Function Override

This is for vehicles with the express-up feature. If the battery on the vehicle has been recharged or disconnected, or is not working, the windows will need to be reprogrammed for the express-up feature to work. Before reprogramming, replace or recharge the vehicle's battery.

To program the driver window:

1. Close all doors, with the ignition in ACC/ACCESSORY or ON/RUN, or with RAP active.
2. Press and hold the power window switch until the window is fully open.
3. Pull the power window switch up until the window is fully closed.
4. Continue holding the switch up for approximately two seconds after the window is completely closed.

The window is now reprogrammed.

Window Lockout

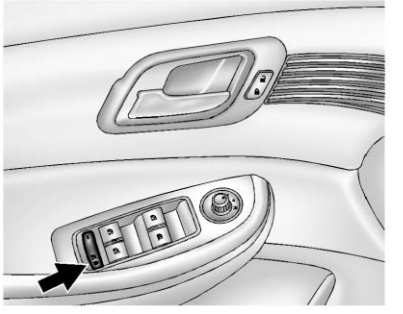

This feature prevents the rear passenger windows from operating, except from the driver position. Activating this feature will also activate the safety locks for the rear doors. See *Safety Locks on page 2-12*.

Press to activate the window lockout. The indicator light in the switch will illuminate.

Press again to deactivate the window lockout and safety locks.

Sun Visors

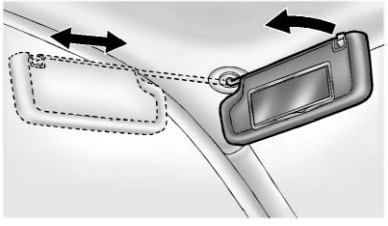

Pull the sun visor down to block glare. Detach the sun visor from the center mount to pivot to the side window, or to extend along the rod, if available.

The vehicle may have a lighted mirror; lift the cover.

Roof

Sunroof

On vehicles with a sunroof, the switches used to operate it are on the headliner above the rearview mirror. The ignition must be in ON/RUN or ACC/ACCESSORY, or in Retained Accessory Power (RAP) to operate the sunroof. See *Ignition Positions (Key Access) on page 9-15* or *Ignition Positions (Keyless Access) on page 9-17* and *Retained Accessory Power (RAP) on page 9-23*.

Open/Close: Press and hold the front or rear of the switch (1) to open or close the sunroof. The sunshade automatically opens with the sunroof, but must be closed manually.

Express Open/Close: Press and release the front or rear of the switch (1) to express-open or express-close the sunroof.

Vent/Close: Press and hold the rear of the switch (2) to vent the sunroof. Press and hold the front of the switch to close.

The sunroof cannot be opened or closed if the vehicle has an electrical failure.

Anti-Pinch Feature

If an object is in the path of the sunroof when it is closing, the anti-pinch feature detects the object and stops the sunroof from closing at the point of the obstruction. The sunroof then returns to the full-open position.

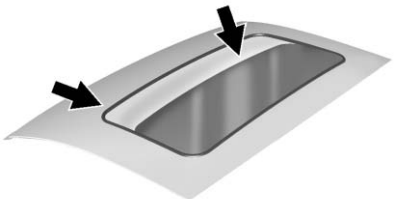

Dirt and debris may collect on the sunroof seal or in the track. This could cause an issue with sunroof operation or noise. It could also plug the water drainage system.

Periodically open the sunroof and remove any obstacles or loose debris. Wipe the sunroof seal and roof sealing area using a clean cloth, mild soap, and water. Do not remove grease from the sunroof.

Seats and Restraints

Head Restraints
Head Restraints 3-2

Front Seats
Seat Adjustment 3-3
Power Seat Adjustment 3-4
Lumbar Adjustment 3-4
Reclining Seatbacks 3-4
Memory Seats 3-6
Heated Front Seats 3-8

Rear Seats
Rear Seats 3-9
Rear Seat Armrest 3-11

Safety Belts
Safety Belts 3-11
How to Wear Safety Belts Properly 3-12
Lap-Shoulder Belt 3-13
Safety Belt Use During Pregnancy 3-18
Safety Belt Extender 3-19
Safety System Check 3-19
Safety Belt Care 3-19
Replacing Safety Belt System Parts after a Crash 3-20

Airbag System
Airbag System 3-20
Where Are the Airbags? 3-23
When Should an Airbag Inflate? 3-24
What Makes an Airbag Inflate? 3-25
How Does an Airbag Restrain? 3-26
What Will You See after an Airbag Inflates? 3-26
Passenger Sensing System 3-27
Servicing the Airbag-Equipped Vehicle 3-31
Adding Equipment to the Airbag-Equipped Vehicle . . . 3-32
Airbag System Check 3-33
Replacing Airbag System Parts after a Crash 3-33

Child Restraints
Older Children 3-34
Infants and Young Children 3-36
Child Restraint Systems 3-38
Where to Put the Restraint . . . 3-40
Lower Anchors and Tethers for Children (LATCH System) 3-41
Replacing LATCH System Parts After a Crash 3-49
Securing Child Restraints (Rear Seat) 3-50
Securing Child Restraints (Front Passenger Seat) 3-52

Head Restraints

⚠ WARNING

With head restraints that are not installed and adjusted properly, there is a greater chance that occupants will suffer a neck/spinal injury in a crash. Do not drive until the head restraints for all occupants are installed and adjusted properly.

Adjust the head restraint so that the top of the restraint is at the same height as the top of the occupant's head. This position reduces the chance of a neck injury in a crash.

Front Seat

The vehicle's front seats have adjustable head restraints in the outboard seating positions.

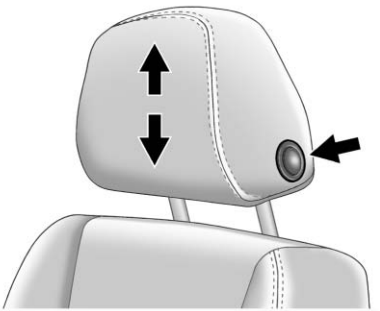

To raise or lower the head restraint, press the button located on the side of the head restraint and pull up or push the head restraint down and release the button.

Pull and push on the head restraint after the button is released to make sure that it is locked in place.

The front seat outboard head restraints are not designed to be removed.

Rear Seat

The vehicle's rear seats have adjustable head restraints in the outboard seating positions.

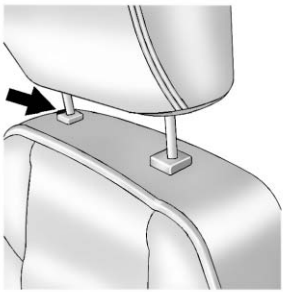

The height of the head restraint can be adjusted. Pull the head restraint up to raise it. Try to move the head restraint to make sure that it is locked in place.

To lower the head restraint, press the button, located on the top of the seatback, and push the head restraint down. Try to move the head restraint after the button is released to make sure that it is locked in place.

If you are installing a child restraint in the rear seat, see "Securing a Child Restraint Designed for the LATCH System" under *Lower Anchors and Tethers for Children (LATCH System) on page 3-41*.

Front Seats

Seat Adjustment

⚠ WARNING

You can lose control of the vehicle if you try to adjust a driver seat while the vehicle is moving. Adjust the driver seat only when the vehicle is not moving.

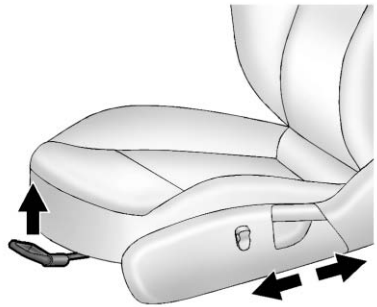

To adjust a manual seat:

1. Pull the handle at the front of the seat.
2. Slide the seat to the desired position and release the handle.
3. Try to move the seat back and forth to be sure it is locked in place.

Seat Height Adjuster

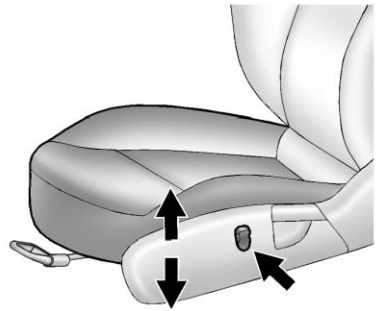

Press and hold the top or bottom of the switch to raise or lower the seat. Release the switch when the desired height is reached.

Power Seat Adjustment

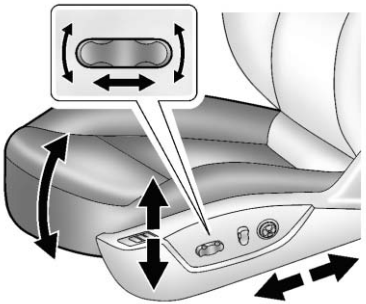

To adjust a power seat, if equipped:

- Move the seat forward or rearward by sliding the control forward or rearward.
- Raise or lower the front part of the seat cushion by moving the front of the control up or down.
- Raise or lower the entire seat by moving the entire control up or down.

To adjust the seatback, see *Reclining Seatbacks on page 3-4*.

Lumbar Adjustment

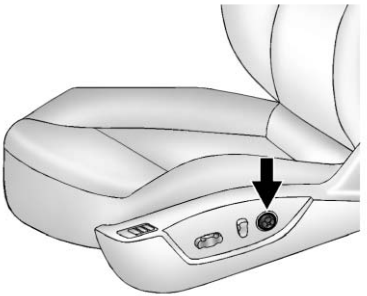

To adjust the lumbar support, if available:

- Press and hold the front or rear of the control to increase or decrease lumbar support.
- Press and hold the top or bottom of the control to raise or lower the height of the lumbar support.

Reclining Seatbacks

⚠ WARNING

Sitting in a reclined position when the vehicle is in motion can be dangerous. Even when buckled up, the safety belts cannot do their job.

The shoulder belt will not be against your body. Instead, it will be in front of you. In a crash, you could go into it, receiving neck or other injuries.

The lap belt could go up over your abdomen. The belt forces would be there, not at your pelvic bones. This could cause serious internal injuries.

For proper protection when the vehicle is in motion, have the seatback upright. Then sit well back in the seat and wear the safety belt properly.

Do not have a seatback reclined if the vehicle is moving.

Manual Reclining Seatbacks

⚠ WARNING

If either seatback is not locked, it could move forward in a sudden stop or crash. That could cause injury to the person sitting there. Always push and pull on the seatbacks to be sure they are locked.

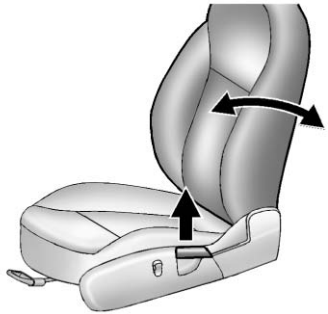

To recline a manual seatback:

1. Lift the lever.
2. Move the seatback to the desired position, and then release the lever to lock the seatback in place.
3. Push and pull on the seatback to make sure it is locked.

To return the seatback to the upright position:

1. Lift the lever fully without applying pressure to the seatback, and the seatback will return to the upright position.
2. Push and pull on the seatback to make sure it is locked.

Power Reclining Seatbacks

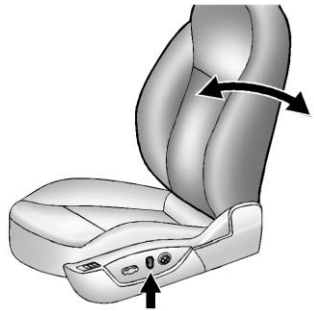

To adjust a power seatback, if available:

- Tilt the top of the control rearward to recline.
- Tilt the top of the control forward to raise.

Memory Seats

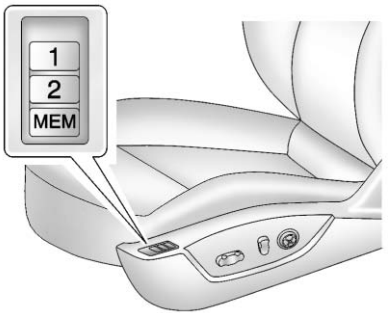

If available, the “1” and “2” buttons on the outboard side of the driver seat are used to manually save and recall the positions of the driver seat and outside mirrors. These manually stored positions are referred to as Button Memory positions.

The vehicle will also automatically save driver seat and outside mirror positions to the current driver Remote Keyless Entry (RKE) transmitter when the ignition is placed in OFF. These automatically stored positions are referred to as RKE Memory positions. See *Remote Keyless Entry (RKE) System Operation on page 2-3*.

Storing Button Memory Positions

To save positions into Button Memory:

1. Adjust the driver seat, seatback recliner, and both outside mirrors to the desired driving positions.
2. Press and hold MEM (Memory) and “1” at the same time until a beep sounds.
3. Repeat Steps 1 and 2 for a second driver using “2.”

Recalling Button Memory Positions

To recall the Button Memory positions, press and hold “1” or “2.” The driver seat and outside mirrors move to the positions stored to those buttons when pressed. Releasing “1” or “2” before the stored positions are reached stops the recall.

If something has blocked the driver seat while recalling a memory position, the recall may stop. Remove the obstruction; then press and hold the power driver seat control for two seconds. Try recalling the memory position again by pressing the appropriate memory button. If the memory position is still not recalling, see your dealer for service.

Recalling RKE Memory Positions

The RKE Memory feature can recall the driver seat and outside mirrors to previously stored RKE Memory positions when entering the vehicle.

Every time the ignition is placed in OFF, the positions of the driver seat and outside mirrors are automatically stored to the RKE transmitter that was used to start the vehicle. These positions are called RKE Memory positions and may be different than the previously mentioned Button Memory positions saved to the “1” or “2” buttons.

To recall RKE Memory positions:

- On vehicles with RKE, press 🔓 on the RKE transmitter and open the driver door.
- On vehicles with keyless access, press the lock/unlock button on the outside driver door handle and open the door. The RKE transmitter must be present for the recall to activate.
- If the driver door is already open, press 🔓 on the RKE transmitter to activate the recall.

The driver seat and outside mirrors will move to the previously saved RKE Memory positions.

This feature is turned on or off using the vehicle personalization menu. See *Vehicle Personalization on page 5-36*.

To stop recall movement, press one of the memory, power mirror, or power seat controls.

If something has blocked the driver seat while recalling a memory position, the recall may stop. Remove the obstruction; then press and hold the appropriate manual control for the memory item that is not recalling for two seconds. Try recalling the memory position again by opening the driver door and pressing the RKE transmitter 🔓 button. If the memory position is still not recalling, see your dealer for service.

Easy Exit Driver Seat

This feature moves the seat rearward allowing the driver more room to exit the vehicle.

To activate, place the ignition in OFF and open the driver door. If the driver door is already open, placing the ignition in OFF will activate the recall.

This feature is turned on or off using the vehicle personalization menu. See *Vehicle Personalization on page 5-36*.

To stop recall movement, press one of the memory or power seat controls.

If something has blocked the driver seat while recalling the exit position, the recall may stop. Remove the obstruction; then press and hold the power seat control rearward for two seconds. Try recalling the exit position again. If the exit position is still not recalling, see your dealer for service.

Heated Front Seats

⚠ WARNING

If you cannot feel temperature change or pain to the skin, the seat heater may cause burns. To reduce the risk of burns, people with such a condition should use care when using the seat heater, especially for long periods of time. Do not place anything on the seat that insulates against heat, such as a blanket, cushion, cover, or similar item. This may cause the seat heater to overheat. An overheated seat heater may cause a burn or may damage the seat.

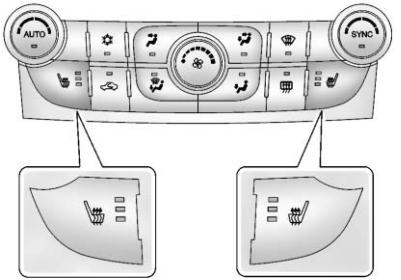

Uplevel Climate Control System Shown, Base Similar

If available, the buttons are on the climate control panel. To operate, the engine must be running.

Press or to heat the driver or passenger seat cushion and seatback. Indicator lights on the button show the current setting.

Press the button once for the highest setting. With each press of the button, the heated seat will change to the next lower setting, and then to the off setting. The lights indicate three for the highest setting and one for the lowest.

The passenger seat may take longer to heat up.

Remote Start Heated Seats

When it is cold outside, the heated seats can be turned on automatically during a remote vehicle start. The heated seats will be canceled when the ignition is turned on. Press the button to use the heated seats after the vehicle is started.

The heated seat indicator lights on the button do not turn on during a remote start.

The temperature performance of an unoccupied seat may be reduced. This is normal.

The heated seats will not turn on during a remote start unless the heated seat feature is enabled in the vehicle personalization menu. See *Remote Vehicle Start on page 2-8* and *Vehicle Personalization on page 5-36*.

Rear Seats

Folding the Seatback

Either side of the seatback can be folded down for more cargo space. Fold a seatback only when the vehicle is not moving.

Notice: **Folding a rear seat with the safety belts still fastened may cause damage to the seat or the safety belts. Always unbuckle the safety belts and return them to their normal stowed position before folding a rear seat.**

To fold the seatback down:

1. Lower the rear seat head restraints completely. See *Head Restraints on page 3-2*.
2. Lift the rear seat armrest and place it in the folded position, if necessary. See *Rear Seat Armrest on page 3-11*.

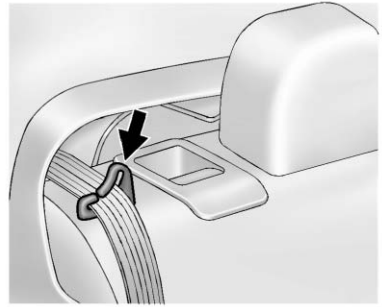

3. Make sure the outboard safety belt is in the belt guide.

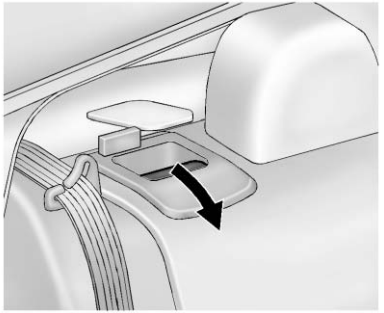

4. Pull on the lever on the top of the seatback to unlock it.

   A tab near the seatback lever raises when the seatback is unlocked.

5. Fold the seatback down.

   Repeat the steps for the other seatback, if desired.

Raising the Seatback

⚠ WARNING

If either seatback is not locked, it could move forward in a sudden stop or crash. That could cause injury to the person sitting there. Always push and pull on the seatbacks to be sure they are locked.

⚠ WARNING

A safety belt that is improperly routed, not properly attached, or twisted will not provide the protection needed in a crash. The person wearing the belt could be seriously injured. After raising the rear seatback, always check to be sure that the safety belts are properly routed and attached, and are not twisted.

To raise a seatback:

1. Lift the seatback up and push it rearward to lock it in place. Make sure the safety belt is in the belt guide and is not twisted or caught in the seatback.

   A tab near the seatback lever retracts when the seatback is locked in place.

   The center rear safety belt may lock when you raise the seatback. If this happens, let the belt go back all the way and start again.

2. Push and pull the top of the seatback to be sure it is locked into position.
3. Repeat Steps 1 and 2 for the other seatback, if necessary.

When the seat is not in use, it should be kept in the upright, locked position.

Rear Seat Armrest

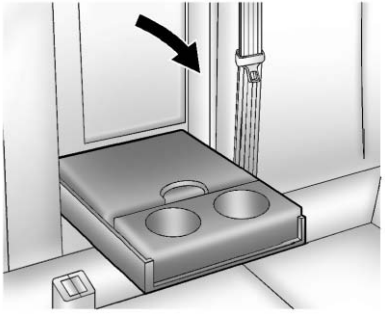

The rear seat has an armrest in the center of the seatback. Lower the armrest to access the two cupholders and the storage area.

To fold, lift the armrest up and push it rearward until it is flush with the seatback.

Safety Belts

This section of the manual describes how to use safety belts properly. It also describes some things not to do with safety belts.

⚠ WARNING

Do not let anyone ride where a safety belt cannot be worn properly. In a crash, if you or your passenger(s) are not wearing safety belts, injuries can be much worse than if you are wearing safety belts. You can be seriously injured or killed by hitting things inside the vehicle harder or by being ejected from the vehicle. In addition, anyone who is not buckled up can strike other passengers in the vehicle.

(Continued)

WARNING (Continued)

It is extremely dangerous to ride in a cargo area, inside or outside of a vehicle. In a collision, passengers riding in these areas are more likely to be seriously injured or killed. Do not allow passengers to ride in any area of the vehicle that is not equipped with seats and safety belts.

Always wear a safety belt, and check that all passenger(s) are restrained properly too.

This vehicle has indicators as a reminder to buckle the safety belts. See *Safety Belt Reminders on page 5-13*.

Why Safety Belts Work

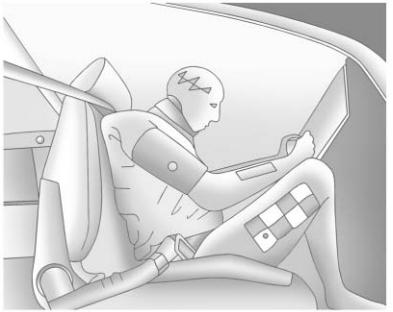

When riding in a vehicle, you travel as fast as the vehicle does. If the vehicle stops suddenly, you keep going until something stops you. It could be the windshield, the instrument panel, or the safety belts!

When you wear a safety belt, you and the vehicle slow down together. There is more time to stop because you stop over a longer distance and, when worn properly, your strongest bones take the forces from the safety belts. That is why wearing safety belts makes such good sense.

Questions and Answers About Safety Belts

Q: Will I be trapped in the vehicle after a crash if I am wearing a safety belt?

A: You *could* be — whether you are wearing a safety belt or not. Your chance of being conscious during and after a crash, so you *can* unbuckle and get out, is *much* greater if you are belted.

Q: If my vehicle has airbags, why should I have to wear safety belts?

A: Airbags are supplemental systems only; so they work *with* safety belts — not instead of them. Whether or not an airbag is provided, all occupants still have to buckle up to get the most protection.

Also, in nearly all states and in all Canadian provinces, the law requires wearing safety belts.

How to Wear Safety Belts Properly

This section is only for people of adult size.

There are special things to know about safety belts and children. And there are different rules for smaller children and infants. If a child will be riding in the vehicle, see *Older Children on page 3-34* or *Infants and Young Children on page 3-36*. Follow those rules for everyone's protection.

It is very important for all occupants to buckle up. Statistics show that unbelted people are hurt more often in crashes than those who are wearing safety belts.

There are important things to know about wearing a safety belt properly.

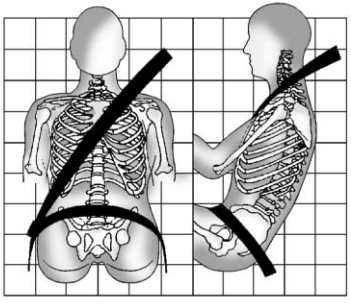

- Sit up straight and always keep your feet on the floor in front of you.
- Always use the correct buckle for your seating position.
- Wear the lap part of the belt low and snug on the hips, just touching the thighs. In a crash, this applies force to the strong pelvic bones and you would be less likely to slide under the lap belt. If you slid under it, the belt would apply force on your abdomen. This could cause serious or even fatal injuries.
- Wear the shoulder belt over the shoulder and across the chest. These parts of the body are best able to take belt restraining forces. The shoulder belt locks if there is a sudden stop or crash.

⚠ WARNING

You can be seriously injured, or even killed, by not wearing your safety belt properly.

- Never allow the lap or shoulder belt to become loose or twisted.

(Continued)

WARNING (Continued)

- Never wear the shoulder belt under both arms or behind your back.
- Never route the lap or shoulder belt over an armrest.

Lap-Shoulder Belt

All seating positions in the vehicle have a lap-shoulder belt.

The following instructions explain how to wear a lap-shoulder belt properly.

1. Adjust the seat, if the seat is adjustable, so you can sit up straight. To see how, see “Seats” in the Index.

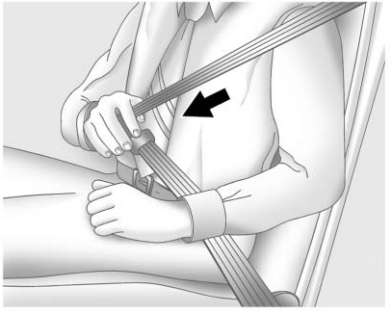

2. Pick up the latch plate and pull the belt across you. Do not let it get twisted.

   The lap-shoulder belt may lock if you pull the belt across you very quickly. If this happens, let the belt go back slightly to unlock it. Then pull the belt across you more slowly.

   If the shoulder portion of a passenger belt is pulled out all the way, the child restraint locking feature may be engaged. If this happens, let the belt go back all the way and start again.

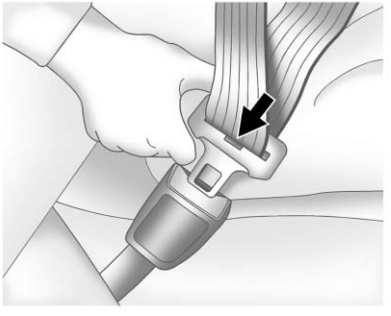

3. Push the latch plate into the buckle until it clicks.

   Pull up on the latch plate to make sure it is secure.

   Position the release button on the buckle so that the safety belt could be quickly unbuckled if necessary.

   If equipped with a shoulder belt height adjuster, move it to the height that is right for you. See “Shoulder Belt Height Adjuster” later in this section for instructions on use and important safety information.

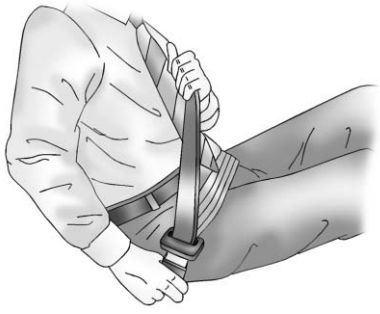

4. To make the lap part tight, pull up on the shoulder belt.

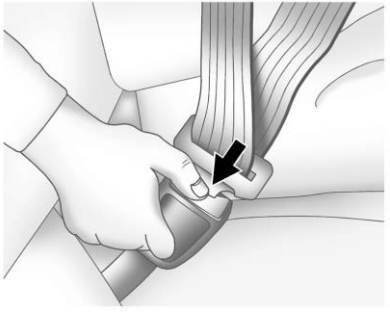

To unlatch the belt, push the button on the buckle. The belt should return to its stowed position.

Before a door is closed, be sure the safety belt is out of the way. If a door is slammed against a safety belt, damage can occur to both the safety belt and the vehicle.

Shoulder Belt Height Adjuster

The vehicle has a shoulder belt height adjuster for the driver and right front passenger seating positions.

Adjust the height so the shoulder portion of the belt is on the shoulder and not falling off of it. The belt should be close to, but not contacting, the neck. Improper shoulder belt height adjustment could reduce the effectiveness of the safety belt in a crash. See *How to Wear Safety Belts Properly on page 3-12*.

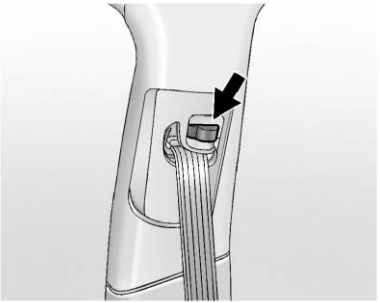

Press the release button and move the height adjuster to the desired position. The adjuster can be moved up by pushing the slide/trim up. After the adjuster is set to the desired position, try to move it down without pushing the release button to make sure it has locked into position.

Safety Belt Pretensioners

This vehicle has safety belt pretensioners for front outboard occupants. Although the safety belt pretensioners cannot be seen, they are part of the safety belt assembly. They can help tighten the safety belts during the early stages of a moderate to severe frontal and near frontal crash if the threshold conditions for pretensioner activation are met.

Pretensioners work only once. If the pretensioners activate in a crash, the pretensioners and probably other parts of the vehicle's safety belt system will need to be replaced. See *Replacing Safety Belt System Parts after a Crash on page 3-20*.

Rear Safety Belt Comfort Guides

This vehicle may have rear shoulder belt comfort guides. If not, they are available through your dealer. The guides may provide added safety belt comfort for older children who have outgrown booster seats and for some adults. When installed and properly adjusted, the comfort guide positions the belt away from the neck and head.

There is one guide for each outside passenger position in the rear seat. Here is how to install a comfort guide to the safety belt:

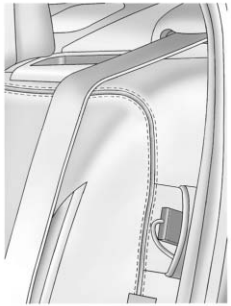

1. Remove the guide from its storage pocket on the side of the seat.

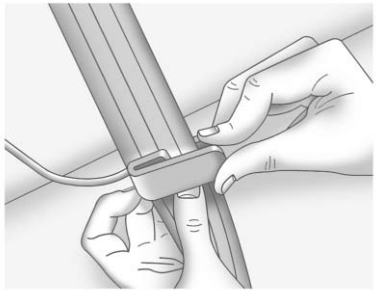

2. Place the guide over the belt, and insert the two edges of the belt into the slots of the guide.

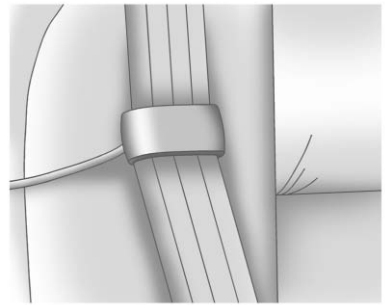

3. Be sure that the belt is not twisted and it lies flat. The elastic cord must be under the belt and the guide on top.

⚠ WARNING

A safety belt that is not properly worn may not provide the protection needed in a crash. The person wearing the belt could be seriously injured. The shoulder belt should go over the shoulder and across the chest. These parts of the body are best able to take belt restraining forces.

4. Buckle, position, and release the safety belt as described previously in this section. Make sure the shoulder portion of the belt is on the shoulder and not falling off of it. The belt should be close to, but not contacting, the neck.

Safety Belt Use During Pregnancy

Safety belts work for everyone, including pregnant women. Like all occupants, they are more likely to be seriously injured if they do not wear safety belts.

A pregnant woman should wear a lap-shoulder belt, and the lap portion should be worn as low as possible, below the rounding, throughout the pregnancy.

The best way to protect the fetus is to protect the mother. When a safety belt is worn properly, it is more likely that the fetus will not be hurt in a crash. For pregnant women, as for anyone, the key to making safety belts effective is wearing them properly.

Safety Belt Extender

If the vehicle's safety belt will fasten around you, you should use it.

But if a safety belt is not long enough, your dealer will order you an extender. When you go in to order it, take the heaviest coat you will wear, so the extender will be long enough for you. To help avoid personal injury, do not let someone else use it, and use it only for the seat it is made to fit. The extender has been designed for adults.

Never use it for securing child seats. To wear it, attach it to the regular safety belt. See the instruction sheet that comes with the extender.

Safety System Check

Now and then, check that the safety belt reminder light, safety belts, buckles, latch plates, retractors, and anchorages are all working properly. Look for any other loose or damaged safety belt system parts that might keep a safety belt system from doing its job. See your dealer to have it repaired. Torn or frayed safety belts may not protect you in a crash. They can rip apart under impact forces. If a belt is torn or frayed, get a new one right away.

Make sure the safety belt reminder light is working. See *Safety Belt Reminders on page 5-13*.

Keep safety belts clean and dry. See *Safety Belt Care on page 3-19*.

Safety Belt Care

Keep belts clean and dry.

⚠ WARNING

Do not bleach or dye safety belts. It may severely weaken them. In a crash, they might not be able to provide adequate protection. Clean safety belts only with mild soap and lukewarm water.

Replacing Safety Belt System Parts after a Crash

⚠ WARNING

A crash can damage the safety belt system in the vehicle.
A damaged safety belt system may not properly protect the person using it, resulting in serious injury or even death in a crash. To help make sure the safety belt systems are working properly after a crash, have them inspected and any necessary replacements made as soon as possible.

After a minor crash, replacement of safety belts may not be necessary. But the safety belt assemblies that were used during any crash may have been stressed or damaged. See your dealer to have the safety belt assemblies inspected or replaced.

New parts and repairs may be necessary even if the safety belt system was not being used at the time of the crash.

Have the safety belt pretensioners checked if the vehicle has been in a crash, or if the airbag readiness light stays on after you start the vehicle or while you are driving. See *Airbag Readiness Light on page 5-14*.

Airbag System

The vehicle has the following airbags:

- A frontal airbag for the driver.
- A frontal airbag for the front outboard passenger.
- A knee airbag for the driver.
- A knee airbag for the front outboard passenger.
- A seat-mounted side impact airbag for the driver.
- A seat-mounted side impact airbag for the front outboard passenger.
- Seat-mounted side impact airbags for the second row outboard passengers.
- A roof-rail airbag for the driver and the passenger seated directly behind the driver.

- A roof-rail airbag for the front outboard passenger and the passenger seated directly behind the front outboard passenger.

All vehicle airbags have the word AIRBAG on the trim or on a label near the deployment opening.

For frontal airbags, the word AIRBAG is on the center of the steering wheel for the driver and on the instrument panel for the front outboard passenger.

For knee airbags, the word AIRBAG is on the lower part of the instrument panel.

For seat-mounted side impact airbags, the word AIRBAG is on the side of the seatback closest to the door.

For roof-rail airbags, the word AIRBAG is on the ceiling or trim.

Airbags are designed to supplement the protection provided by safety belts. Even though today's airbags are also designed to help reduce the risk of injury from the force of an inflating bag, all airbags must inflate very quickly to do their job.

Here are the most important things to know about the airbag system:

⚠ WARNING

You can be severely injured or killed in a crash if you are not wearing your safety belt, even with airbags. Airbags are designed to work with safety belts, not replace them. Also, airbags are not designed to inflate in every crash. In some crashes safety belts are the only restraint. See *When Should an Airbag Inflate? on page 3-24*.

(Continued)

WARNING (Continued)

Wearing your safety belt during a crash helps reduce the chance of hitting things inside the vehicle or being ejected from it. Airbags are “supplemental restraints” to the safety belts. Everyone in the vehicle should wear a safety belt properly, whether or not there is an airbag for that person.

⚠ WARNING

Because airbags inflate with great force and faster than the blink of an eye, anyone who is up against, or very close to any airbag when it inflates can be seriously injured or killed. Do not sit unnecessarily close to any airbag, as you would be if sitting on the edge of the seat or leaning forward. Safety belts help keep you in position before and during a crash. Always wear a safety belt, even with airbags. The driver should sit as far back as possible while still maintaining control of the vehicle.

Occupants should not lean on or sleep against the door or side windows in seating positions with seat-mounted side impact airbags and/or roof-rail airbags.

⚠ WARNING

Children who are up against, or very close to, any airbag when it inflates can be seriously injured or killed. Airbags plus lap-shoulder belts offer protection for adults and older children, but not for young children and infants. Neither the vehicle's safety belt system nor its airbag system is designed for them. Young children and infants need the protection that a child restraint system can provide. Always secure children properly in the vehicle. To read how, see *Older Children on page 3-34* or *Infants and Young Children on page 3-36*.

There is an airbag readiness light on the instrument cluster, which shows the airbag symbol. The system checks the airbag electrical system for malfunctions. The light tells you if there is an electrical problem. See *Airbag Readiness Light on page 5-14* for more information.

Where Are the Airbags?

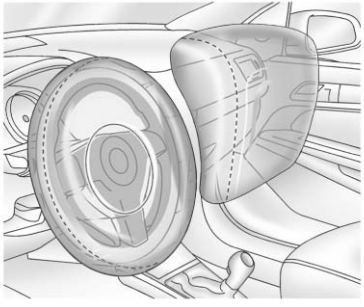

The driver frontal airbag is in the center of the steering wheel.

The front outboard passenger frontal airbag is in the passenger side instrument panel.

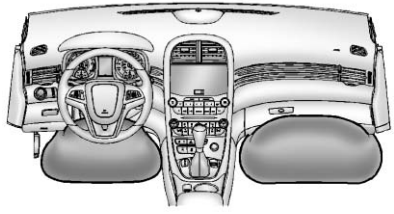

The driver knee airbag is below the steering column. The front outboard passenger knee airbag is below the glove box.

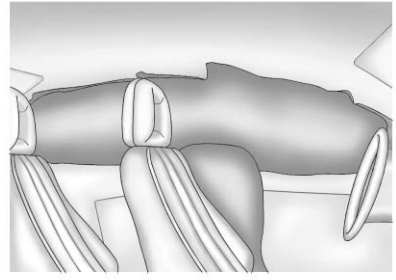

Driver Side Shown, Passenger Side Similar

The seat-mounted side impact airbags for the driver and front outboard passenger are in the side of the seatbacks closest to the door.

The roof-rail airbags for the driver, right front passenger, and second row outboard passengers are in the ceiling above the side windows.

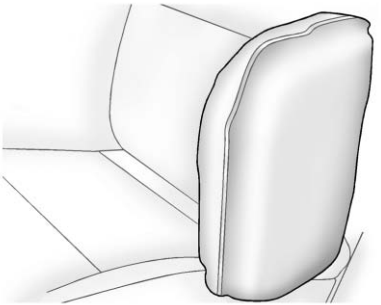

Rear Seat Driver Side Shown, Passenger Side Similar

On vehicles with second row seat-mounted side impact airbags, they are in the sides of the rear seatback closest to the door.

⚠ WARNING

If something is between an occupant and an airbag, the airbag might not inflate properly or it might force the object into that person causing severe injury or even death. The path of an inflating airbag must be kept clear. Do not put anything between an occupant and an airbag, and do not attach or put anything on the steering wheel hub or on or near any other airbag covering.

Do not use seat accessories that block the inflation path of a seat-mounted side impact airbag.

Never secure anything to the roof of a vehicle with roof-rail airbags by routing a rope or tie-down through any door or window opening. If you do, the path of an inflating roof-rail airbag will be blocked.

When Should an Airbag Inflate?

Frontal airbags are designed to inflate in moderate to severe frontal or near frontal crashes to help reduce the potential for severe injuries, mainly to the driver's or front outboard passenger's head and chest. However, they are only designed to inflate if the impact exceeds a predetermined deployment threshold. Deployment thresholds are used to predict how severe a crash is likely to be in time for the airbags to inflate and help restrain the occupants.

Whether the frontal airbags will or should inflate is not based primarily on how fast the vehicle is traveling. It depends on what is hit, the direction of the impact, and how quickly the vehicle slows down.

Frontal airbags may inflate at different crash speeds depending on whether the vehicle hits an object straight on or at an angle, and

whether the object is fixed or moving, rigid or deformable, narrow or wide.

Thresholds can also vary with specific vehicle design.

Frontal airbags are not intended to inflate during vehicle rollovers, in rear impacts, or in many side impacts.

In addition, the vehicle has dual-stage frontal airbags. Dual-stage airbags adjust the restraint according to crash severity.

Frontal knee airbags are designed to inflate in moderate to severe frontal or near frontal impacts that exceed a predetermined deployment threshold.

The vehicle has electronic frontal sensors, which help the sensing system distinguish between a moderate frontal impact and a more severe frontal impact. For moderate frontal impacts, dual-stage airbags inflate at a level less than full deployment. For more severe frontal impacts, full deployment occurs.

The vehicle has seat-mounted side impact airbags and roof-rail airbags. See *Airbag System on page 3-20*. Seat-mounted side impact and roof-rail airbags are intended to inflate in moderate to severe side crashes depending on the location of the impact. In addition, these roof-rail airbags are intended to inflate during a rollover or in a severe frontal impact. Seat-mounted side impact and roof-rail airbags will inflate if the crash severity is above the system's designed threshold level. The threshold level can vary with specific vehicle design.

Roof-rail airbags are not intended to inflate in rear impacts. A seat-mounted side impact airbag is intended to inflate on the side of the vehicle that is struck. Both roof-rail airbags will inflate when either side of the vehicle is struck or if the sensing system predicts that the vehicle is about to roll over on its side, or in a severe frontal impact.

In any particular crash, no one can say whether an airbag should have inflated simply because of the vehicle damage or repair costs.

What Makes an Airbag Inflate?

In a deployment event, the sensing system sends an electrical signal triggering a release of gas from the inflator. Gas from the inflator fills the airbag causing the bag to break out of the cover. The inflator, the airbag, and related hardware are all part of the airbag module.

For airbag location, see *Where Are the Airbags? on page 3-23*.

How Does an Airbag Restrain?

In moderate to severe frontal or near frontal collisions, even belted occupants can contact the steering wheel or the instrument panel. In moderate to severe side collisions, even belted occupants can contact the inside of the vehicle.

Airbags supplement the protection provided by safety belts by distributing the force of the impact more evenly over the occupant's body.

But airbags would not help in many types of collisions, primarily because the occupant's motion is not toward those airbags. See *When Should an Airbag Inflate? on page 3-24*.

Airbags should never be regarded as anything more than a supplement to safety belts.

What Will You See after an Airbag Inflates?

After the frontal airbags and seat-mounted side impact airbags inflate, they quickly deflate, so quickly that some people may not even realize an airbag inflated. Roof-rail airbags may still be at least partially inflated for some time after they inflate. Some components of the airbag module may be hot for several minutes. For location of the airbags, see *Where Are the Airbags? on page 3-23*.

The parts of the airbag that come into contact with you may be warm, but not too hot to touch. There may be some smoke and dust coming from the vents in the deflated airbags. Airbag inflation does not prevent the driver from seeing out of the windshield or being able to steer the vehicle, nor does it prevent people from leaving the vehicle.

⚠ WARNING

When an airbag inflates, there may be dust in the air. This dust could cause breathing problems for people with a history of asthma or other breathing trouble. To avoid this, everyone in the vehicle should get out as soon as it is safe to do so. If you have breathing problems but cannot get out of the vehicle after an airbag inflates, then get fresh air by opening a window or a door. If you experience breathing problems following an airbag deployment, you should seek medical attention.

The vehicle has a feature that may automatically unlock the doors, turn on the interior lamps and hazard warning flashers, and shut off the fuel system after the airbags inflate.

You can lock the doors, and turn off the interior lamps and hazard warning flashers by using the controls for those features.

⚠ WARNING

A crash severe enough to inflate the airbags may have also damaged important functions in the vehicle, such as the fuel system, brake and steering systems, etc. Even if the vehicle appears to be drivable after a moderate crash, there may be concealed damage that could make it difficult to safely operate the vehicle.

Use caution if you should attempt to restart the engine after a crash has occurred.

In many crashes severe enough to inflate the airbag, windshields are broken by vehicle deformation. Additional windshield breakage may also occur from the front outboard passenger airbag.

- Airbags are designed to inflate only once. After an airbag inflates, you will need some new parts for the airbag system. If you do not get them, the airbag system will not be there to help protect you in another crash. A new system will include airbag modules and possibly other parts. The service manual for the vehicle covers the need to replace other parts.
- The vehicle has a crash sensing and diagnostic module which records information after a crash. See *Vehicle Data Recording and Privacy on page 13-19* and *Event Data Recorders on page 13-20*.
- Let only qualified technicians work on the airbag systems. Improper service can mean that an airbag system will not work properly. See your dealer for service.

Passenger Sensing System

The vehicle has a passenger sensing system for the front outboard passenger position. The passenger airbag status indicator will light on the center stack when the vehicle is started.

The words ON and OFF will be visible during the system check. If you use remote start, if equipped, to start the vehicle from a distance you may not see the system check.

When the system check is complete, either the word ON or the word OFF will be visible. See *Passenger Airbag Status Indicator on page 5-14*.

The passenger sensing system turns off the front outboard passenger frontal airbag and knee airbag under certain conditions. No other airbag is affected by the passenger sensing system.

The passenger sensing system works with sensors that are part of the front outboard passenger seat. The sensors are designed to detect the presence of a properly seated occupant and determine if the front outboard passenger frontal airbag and knee airbag should be allowed to inflate or not.

According to accident statistics, children are safer when properly secured in a rear seat in the correct child restraint for their weight and size.

We recommend that children be secured in a rear seat, including: an infant or a child riding in a rear-facing child restraint; a child riding in a forward-facing child seat; an older child riding in a booster seat; and children, who are large enough, using safety belts.

Never put a rear-facing child seat in the front. This is because the risk to the rear-facing child is so great, if the airbag inflates.

⚠ WARNING

A child in a rear-facing child restraint can be seriously injured or killed if the passenger frontal airbag inflates. This is because the back of the rear-facing child restraint would be very close to the inflating airbag. A child in a forward-facing child restraint can be seriously injured or killed if the

(Continued)

WARNING (Continued)

passenger frontal airbag inflates and the passenger seat is in a forward position.

Even if the passenger sensing system has turned off the front outboard passenger airbag(s), no system is fail-safe. No one can guarantee that an airbag will not inflate under some unusual circumstance, even though the airbag(s) are off.

Secure rear-facing child restraints in a rear seat, even if the airbag(s) are off. If you secure a forward-facing child restraint in the front outboard passenger seat, always move the seat as far back as it will go. It is better to secure the child restraint in a rear seat.

The passenger sensing system is designed to turn off the front outboard passenger frontal airbag and knee airbag if:

- The front outboard passenger seat is unoccupied.
- The system determines that an infant is present in a child restraint.
- A front outboard passenger takes his/her weight off of the seat for a period of time.
- Or, if there is a critical problem with the airbag system or the passenger sensing system.

When the passenger sensing system has turned off the front outboard passenger frontal airbag and knee airbag, the off indicator will light and stay lit as a reminder that the airbags are off. See *Passenger Airbag Status Indicator on page 5-14*.

The passenger sensing system is designed to turn on the front outboard passenger frontal airbag and knee airbag anytime the system senses that a person of adult size is sitting properly in the front outboard passenger seat. When the passenger sensing system has allowed the airbags to be enabled, the on indicator will light and stay lit as a reminder that the airbags are active.

For some children, including children in child restraints and for very small adults, the passenger sensing system may or may not turn off the front outboard passenger frontal airbag and knee airbag, depending upon the person's seating posture and body build. Everyone in the vehicle who has outgrown child restraints should wear a safety belt properly — whether or not there is an airbag for that person.

⚠ WARNING

If the airbag readiness light ever comes on and stays on, it means that something may be wrong with the airbag system. To help avoid injury to yourself or others, have the vehicle serviced right away. See *Airbag Readiness Light on page 5-14* for more information, including important safety information.

If the On Indicator Is Lit for a Child Restraint

If a child restraint has been installed and the on indicator is lit:

1. Turn the vehicle off.
2. Remove the child restraint from the vehicle.
3. Remove any additional items from the seat such as blankets, cushions, seat covers, seat heaters, or seat massagers.

4. Reinstall the child restraint following the directions provided by the child restraint manufacturer and refer to *Securing Child Restraints (Front Passenger Seat) on page 3-52* or *Securing Child Restraints (Rear Seat) on page 3-50*.
5. If, after reinstalling the child restraint and restarting the vehicle, the on indicator is still lit, turn the vehicle off. Then slightly recline the vehicle seatback and adjust the seat cushion, if adjustable, to make sure that the vehicle seatback is not pushing the child restraint into the seat cushion.

   Also make sure the child restraint is not trapped under the vehicle head restraint. If this happens, adjust the head restraint. See *Head Restraints on page 3-2*.
6. Restart the vehicle.

The passenger sensing system may or may not turn off the airbags for a child in a child restraint depending upon the child's seating posture and body build. It is better to secure the child restraint in a rear seat.

If the Off Indicator Is Lit for an Adult-Size Occupant

If a person of adult-size is sitting in the front outboard passenger seat, but the off indicator is lit, it could be because that person is not sitting properly in the seat. Use the following steps to allow the system to detect that person and enable the front outboard passenger frontal airbag and knee airbag:

1. Turn the vehicle off.
2. Remove any additional material from the seat, such as blankets, cushions, seat covers, seat heaters, seat massagers, laptops, or other electronic devices.
3. Place the seatback in the fully upright position.
4. Have the person sit upright in the seat, centered on the seat cushion, with legs comfortably extended.
5. Restart the vehicle and have the person remain in this position for two to three minutes after the on indicator is lit.

Additional Factors Affecting System Operation

Safety belts help keep the passenger in position on the seat during vehicle maneuvers and braking, which helps the passenger sensing system maintain the passenger airbag status. See “Safety Belts” and “Child Restraints” in the Index for additional information about the importance of proper restraint use.

A thick layer of additional material, such as a blanket or cushion, or aftermarket equipment such as seat covers, seat heaters, and seat massagers can affect how well the passenger sensing system operates. We recommend that you not use seat covers or other aftermarket equipment except when approved by GM for your specific vehicle. See *Adding Equipment to the Airbag-Equipped Vehicle on page 3-32* for more information about modifications that can affect how the system operates.

A wet seat can affect the performance of the passenger sensing system. Here is how:

- The passenger sensing system may turn off the passenger frontal airbag when liquid is soaked into the seat. If this happens, the off indicator will be lit, and the airbag readiness light on the instrument panel will also be lit.
- Liquid pooled on the seat that has not soaked in may make it more likely that the passenger sensing system will turn on the passenger frontal airbag while a child restraint or child occupant is on the seat. If the passenger frontal airbag is turned on, the on indicator will be lit.

If the passenger seat gets wet, dry the seat immediately. If the airbag readiness light is lit, do not install a child restraint or allow anyone to occupy the seat. See *Airbag Readiness Light on page 5-14* for important safety information.

The on indicator may be lit if an object, such as a briefcase, handbag, grocery bag, laptop, or other electronic device is put on an unoccupied seat. If this is not desired remove the object from the seat.

⚠ WARNING

Stowing of articles under the passenger seat or between the passenger seat cushion and seatback may interfere with the proper operation of the passenger sensing system.

Servicing the Airbag-Equipped Vehicle

Airbags affect how the vehicle should be serviced. There are parts of the airbag system in several places around the vehicle. Your dealer and the service manual have information about servicing the vehicle and the airbag system.

To purchase a service manual, see *Service Publications Ordering Information on page 13-17*.

⚠ WARNING

For up to 10 seconds after the vehicle is turned off and the battery is disconnected, an airbag can still inflate during improper service. You can be injured if you are close to an airbag when it inflates. Avoid yellow connectors. They are probably part of the airbag system. Be sure to follow proper service procedures, and make sure the person performing work for you is qualified to do so.

Adding Equipment to the Airbag-Equipped Vehicle

Adding accessories that change the vehicle's frame, bumper system, height, front end, or side sheet metal, may keep the airbag system from working properly. The operation of the airbag system can also be affected by changing or moving any parts of the front seats, safety belts, the airbag sensing and diagnostic module, steering wheel, instrument panel, roof-rail airbag modules, ceiling headliner or pillar garnish trim, front sensors, side impact sensors, or airbag wiring.

Your dealer and the service manual have information about the location of the airbag sensors, sensing and diagnostic module, and airbag wiring.

In addition, the vehicle has a passenger sensing system for the front outboard passenger position, which includes sensors that are part of the passenger seat. The passenger sensing system may not operate properly if the original seat trim is replaced with non-GM covers, upholstery, or trim; or with GM covers, upholstery, or trim designed for a different vehicle. Any object, such as an aftermarket seat heater or a comfort-enhancing pad or device, installed under or on top of the seat fabric, could also interfere with the operation of the passenger sensing system. This could either prevent proper deployment of the passenger airbag(s) or prevent the passenger sensing system from properly turning off the passenger airbag(s). See *Passenger Sensing System on page 3-27*.

If your vehicle needs to be modified because you have a disability and you have questions about whether the modifications will affect the vehicle's airbag system, or if you have questions about whether the airbag system will be affected if the vehicle is modified for any other reason, call Customer Assistance. See *Customer Assistance Offices (U.S. and Canada) on page 13-5* or *Customer Assistance Offices (Mexico) on page 13-5*.

Airbag System Check

The airbag system does not need regularly scheduled maintenance or replacement. Make sure the airbag readiness light is working. See *Airbag Readiness Light on page 5-14*.

Notice: **If an airbag covering is damaged, opened, or broken, the airbag may not work properly. Do not open or break the airbag coverings. If there are any opened or broken airbag covers, have the airbag covering and/or airbag module replaced. For the location of the airbags, see *Where Are the Airbags? on page 3-23*. See your dealer for service.**

Replacing Airbag System Parts after a Crash

⚠ WARNING

A crash can damage the airbag systems in the vehicle.
A damaged airbag system may not work properly and may not protect you and your passenger(s) in a crash, resulting in serious injury or even death. To help make sure the airbag systems are working properly after a crash, have them inspected and any necessary replacements made as soon as possible.

If an airbag inflates, you will need to replace airbag system parts. See your dealer for service.

If the airbag readiness light stays on after the vehicle is started or comes on when you are driving, the airbag system may not work properly. Have the vehicle serviced right away. See *Airbag Readiness Light on page 5-14* for more information.

Vehicles with eAssist have a high voltage battery and a standard 12-volt battery. If an airbag inflates or the vehicle has been in a crash, the vehicle's sensing system may shut down the high voltage system. When this occurs, the high voltage battery is disconnected and the vehicle is not charging the 12-volt battery or the electrical system. The vehicle may start but it shuts down once the 12-volt battery is depleted. When the 12-volt battery is depleted, the vehicle will not start and the on-board jump start feature is disabled. The airbag readiness light and/or the 12-volt battery warning light are displayed. Before the vehicle can be operated again, it must be serviced at your dealer.

Child Restraints

Older Children

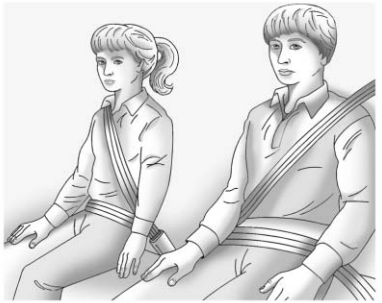

Older children who have outgrown booster seats should wear the vehicle safety belts.

The manufacturer instructions that come with the booster seat state the weight and height limitations for that booster. Use a booster seat with a lap-shoulder belt until the child passes the fit test below:

- Sit all the way back on the seat. Do the knees bend at the seat edge? If yes, continue. If no, return to the booster seat.
- Buckle the lap-shoulder belt. Does the shoulder belt rest on the shoulder? If yes, continue. If no, try using the rear safety belt comfort guide. See “Rear Safety Belt Comfort Guides” under *Lap-Shoulder Belt on page 3-13*. If the shoulder belt still does not rest on the shoulder, then return to the booster seat.
- Does the lap belt fit low and snug on the hips, touching the thighs? If yes, continue. If no, return to the booster seat.
- Can proper safety belt fit be maintained for the length of the trip? If yes, continue. If no, return to the booster seat.

Q: What is the proper way to wear safety belts?

A: An older child should wear a lap-shoulder belt and get the additional restraint a shoulder belt can provide. The shoulder belt should not cross the face or neck. The lap belt should fit snugly below the hips, just touching the top of the thighs. This applies belt force to the child's pelvic bones in a crash. It should never be worn over the abdomen, which could cause severe or even fatal internal injuries in a crash.

Also see “Rear Safety Belt Comfort Guides” under *Lap-Shoulder Belt on page 3-13*.

According to accident statistics, children and infants are safer when properly restrained in a child restraint system or infant restraint system secured in a rear seating position.

In a crash, children who are not buckled up can strike other people who are buckled up, or can be thrown out of the vehicle. Older children need to use safety belts properly.

⚠ WARNING

Never allow more than one child to wear the same safety belt. The safety belt cannot properly spread the impact forces. In a crash, they can be crushed together and seriously injured. A safety belt must be used by only one person at a time.

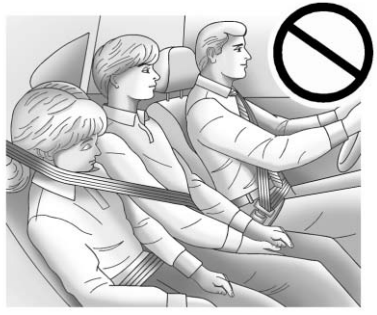

⚠ WARNING

Never allow a child to wear the safety belt with the shoulder belt behind their back. A child can be seriously injured by not wearing the lap-shoulder belt properly. In a crash, the child would not be restrained by the shoulder belt. The child could move too far forward increasing the chance of head and neck injury. The child might also slide under the lap

(Continued)

WARNING (Continued)

belt. The belt force would then be applied right on the abdomen. That could cause serious or fatal injuries. The shoulder belt should go over the shoulder and across the chest.

Infants and Young Children

Everyone in a vehicle needs protection! This includes infants and all other children. Neither the distance traveled nor the age and size of the traveler changes the need, for everyone, to use safety restraints. In fact, the law in every state in the United States and in every Canadian province says children up to some age must be restrained while in a vehicle.

⚠ WARNING

Children can be seriously injured or strangled if a shoulder belt is wrapped around their neck and the safety belt continues to tighten. Never leave children unattended in a vehicle and never allow children to play with the safety belts.

Airbags plus lap-shoulder belts offer protection for adults and older children, but not for young children and infants. Neither the vehicle's safety belt system nor its airbag system is designed for them. Every time infants and young children ride in vehicles, they should have the protection provided by appropriate child restraints.

Children who are not restrained properly can strike other people, or can be thrown out of the vehicle.

⚠ WARNING

Never hold an infant or a child while riding in a vehicle. Due to crash forces, an infant or a child will become so heavy it is not possible to hold it during a crash. For example, in a crash at only 40 km/h (25 mph), a 5.5 kg (12 lb) infant will suddenly become a 110 kg (240 lb) force on a person's

(Continued)

WARNING (Continued)

arms. An infant should be secured in an appropriate restraint.

⚠ WARNING

Children who are up against, or very close to, any airbag when it inflates can be seriously injured or killed. Never put a rear-facing child restraint in the right front seat. Secure a rear-facing child restraint in a rear seat. It is also better to secure a forward-facing child restraint in a rear seat. If you must secure a forward-facing child restraint in the right front seat, always move the front passenger seat as far back as it will go.

Q: What are the different types of add-on child restraints?

A: Add-on child restraints, which are purchased by the vehicle owner, are available in four basic types. Selection of a particular restraint should take into consideration not only the child's weight, height, and age but also whether or not the restraint will be compatible with the motor vehicle in which it will be used.

For most basic types of child restraints, there are many different models available. When purchasing a child restraint, be sure it is designed to be used in a motor vehicle. If it is, the restraint will have a label saying that it meets federal motor vehicle safety standards.

The restraint manufacturer instructions that come with the restraint state the weight and height limitations for a particular child restraint. In addition, there are many kinds of restraints available for children with special needs.

⚠ WARNING

To reduce the risk of neck and head injury during a crash, infants need complete support. In a crash, if an infant is in a rear-facing child restraint, the crash forces can be distributed across the strongest part of an infant's body, the back and shoulders. Infants should always be secured in rear-facing child restraints.

⚠ WARNING

A young child's hip bones are still so small that the vehicle's regular safety belt may not remain low on the hip bones, as it should. Instead, it may settle up around the child's abdomen. In a crash, the belt would apply force on a body area that is unprotected by any bony structure. This alone could cause serious or fatal injuries. To reduce the risk of serious or fatal injuries during a crash, young children should always be secured in appropriate child restraints.

Child Restraint Systems

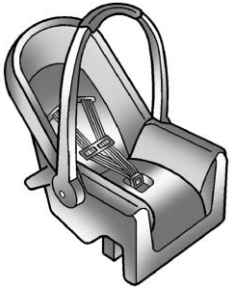

Rear-Facing Infant Seat

A rear-facing infant seat provides restraint with the seating surface against the back of the infant.

The harness system holds the infant in place and, in a crash, acts to keep the infant positioned in the restraint.

Forward-Facing Child Seat

A forward-facing child seat provides restraint for the child's body with the harness.

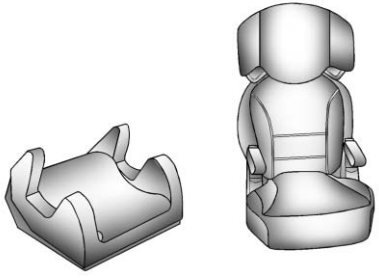

Booster Seats

A booster seat is a child restraint designed to improve the fit of the vehicle's safety belt system.
A booster seat can also help a child to see out the window.

Securing an Add-On Child Restraint in the Vehicle

⚠ WARNING

A child can be seriously injured or killed in a crash if the child restraint is not properly secured in the vehicle. Secure the child restraint properly in the vehicle using the vehicle safety belt or LATCH system, following the instructions that came with that child restraint and the instructions in this manual.

To help reduce the chance of injury, the child restraint must be secured in the vehicle. Child restraint systems must be secured in vehicle seats by lap belts or the lap belt portion of a lap-shoulder belt, or by the LATCH system. See *Lower Anchors and Tethers for Children (LATCH System) on page 3-41*.

Children can be endangered in a crash if the child restraint is not properly secured in the vehicle.

When securing an add-on child restraint, refer to the instructions that come with the restraint which may be on the restraint itself or in a booklet, or both, and to this manual. The child restraint instructions are important, so if they are not available, obtain a replacement copy from the manufacturer.

Keep in mind that an unsecured child restraint can move around in a collision or sudden stop and injure people in the vehicle. Be sure to properly secure any child restraint in the vehicle — even when no child is in it.

In some areas of the United States and Canada, Certified Child Passenger Safety Technicians (CPSTs) are available to inspect and demonstrate how to correctly use and install child restraints.

In the U.S., refer to the National Highway Traffic Safety Administration (NHTSA) website to locate the nearest child safety seat inspection station. For CPST availability in Canada, check with Transport Canada or the Provincial Ministry of Transportation office.

Securing the Child Within the Child Restraint

⚠ WARNING

A child can be seriously injured or killed in a crash if the child is not properly secured in the child restraint. Secure the child properly following the instructions that came with that child restraint.

Where to Put the Restraint

According to accident statistics, children and infants are safer when properly restrained in a child restraint system or infant restraint system secured in a rear seating position.

We recommend that children and child restraints be secured in a rear seat, including: an infant or a child riding in a rear-facing child restraint; a child riding in a forward-facing child seat; an older child riding in a booster seat; and children, who are large enough, using safety belts.

Never put a rear-facing child seat in the front. This is because the risk to the rear-facing child is so great if the airbag deploys.

⚠ WARNING

A child in a rear-facing child restraint can be seriously injured or killed if the right front passenger airbag inflates. This is because the back of the rear-facing child restraint would be very close to the inflating airbag. A child in a forward-facing child restraint can be seriously injured or killed if the right front passenger airbag inflates and the passenger seat is in a forward position.

Even if the passenger sensing system has turned off the right front passenger frontal airbag, no system is fail-safe. No one can guarantee that an airbag will not deploy under some unusual circumstance, even though it is turned off.

(Continued)

WARNING (Continued)

Secure rear-facing child restraints in a rear seat, even if the airbag is off. If you secure a forward-facing child restraint in the right front seat, always move the front passenger seat as far back as it will go. It is better to secure the child restraint in a rear seat.

See *Passenger Sensing System on page 3-27* for additional information.

When securing a child restraint in a rear seating position, study the instructions that came with the child restraint to make sure it is compatible with this vehicle.

Child restraints and booster seats vary considerably in size, and some may fit in certain seating positions better than others. Always make sure the child restraint is properly secured.

Depending on where you place the child restraint and the size of the child restraint, you may not be able to access adjacent safety belt assemblies or LATCH anchors for additional passengers or child restraints. Adjacent seating positions should not be used if the child restraint prevents access to or interferes with the routing of the safety belt.

Wherever a child restraint is installed, be sure to secure the child restraint properly.

Keep in mind that an unsecured child restraint can move around in a collision or sudden stop and injure people in the vehicle. Be sure to properly secure any child restraint in the vehicle — even when no child is in it.

Lower Anchors and Tethers for Children (LATCH System)

The LATCH system secures a child restraint during driving or in a crash. LATCH attachments on the child restraint are used to attach the child restraint to the anchors in the vehicle. This system is designed to make installation of a child restraint easier.

Make sure that a LATCH-compatible child restraint is properly installed using the anchors, or use the vehicle's safety belts to secure the restraint, following the instructions that came with that restraint, and also the instructions in this manual. When installing a child restraint with a top tether, you must also use either the lower anchors or the safety belts to properly secure the child restraint. A child restraint must never be installed using only the top tether and anchor.

In order to use the LATCH system in the vehicle, you need a child restraint that has LATCH attachments. The child restraint manufacturer will provide you with instructions on how to use the child restraint and its attachments. The following explains how to attach a child restraint with these attachments in the vehicle.

Not all vehicle seating positions or child restraints have lower anchors and attachments or top tether anchors and attachments.

Lower Anchors

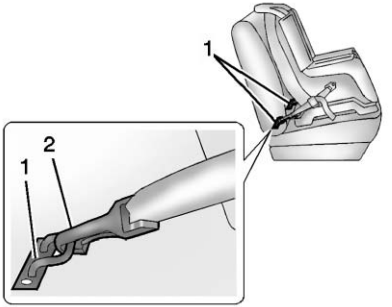

Lower anchors (1) are metal bars built into the vehicle. There are two lower anchors for each LATCH seating position that will accommodate a child restraint with lower attachments (2).

Top Tether Anchor

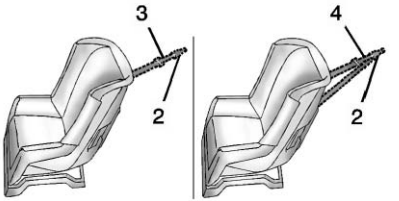

A top tether (3, 4) anchors the top of the child restraint to the vehicle. A top tether anchor is built into the vehicle. The top tether attachment (2) on the child restraint connects to the top tether anchor in the vehicle in order to reduce the forward movement and rotation of the child restraint during driving or in a crash.

The child restraint may have a single tether (3) or a dual tether (4). Either will have a single attachment (2) to secure the top tether to the anchor.

Some child restraints that have a top tether are designed for use with or without the top tether being attached. Others require the top tether always to be attached. In Canada, the law requires that forward-facing child restraints have a top tether, and that the tether be attached. Be sure to read and follow the instructions for the child restraint.

Lower Anchor and Top Tether Anchor Locations

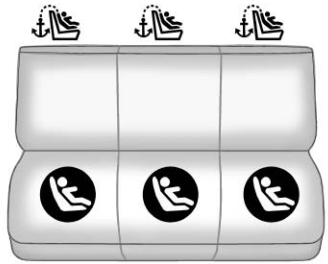

Rear Seat

(Top Tether Anchor): Seating positions with top tether anchors.

(Lower Anchor): Seating positions with two lower anchors.

To assist in locating the lower anchors, each rear anchor position has a label, near the crease between the seatback and the seat cushion.

To assist in locating the top tether anchors, the top tether anchor symbol is on the cover.

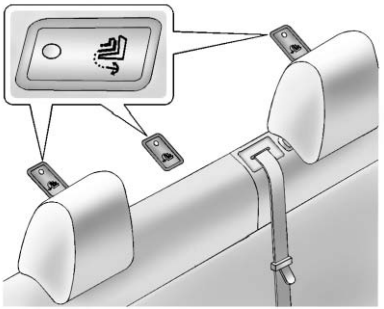

The top tether anchors are under the covers, behind the rear seat, on the filler panel. Be sure to use an anchor on the same side of the vehicle as the seating position where the child restraint will be placed.

Do not secure a child restraint in a position without a top tether anchor if a national or local law requires that the top tether be attached, or if the instructions that come with the child restraint say that the top tether must be attached.

According to accident statistics, children and infants are safer when properly restrained in a child restraint system or infant restraint system secured in a rear seating position. See *Where to Put the Restraint on page 3-40* for additional information.

Securing a Child Restraint Designed for the LATCH System

⚠ WARNING

If a LATCH-type child restraint is not attached to anchors, the child restraint will not be able to protect the child correctly. In a crash, the child could be seriously injured or killed. Install a LATCH-type child restraint properly using the anchors, or use the vehicle safety belts to secure the restraint, following the instructions that came with the child restraint and the instructions in this manual.

⚠ WARNING

Do not attach more than one child restraint to a single anchor. Attaching more than one child restraint to a single anchor could cause the anchor or attachment to come loose or even break during a crash. A child or others could be injured. To reduce the risk of serious or fatal injuries during a crash, attach only one child restraint per anchor.

⚠ WARNING

Children can be seriously injured or strangled if a shoulder belt is wrapped around their neck and the safety belt continues to tighten. Buckle any unused safety belts behind the child restraint so children cannot reach them. Pull the shoulder belt all the way out

(Continued)

WARNING (Continued)

of the retractor to set the lock, if the vehicle has one, after the child restraint has been installed.

Notice: **Do not let the LATCH attachments rub against the vehicle's safety belts. This may damage these parts. If necessary, move buckled safety belts to avoid rubbing the LATCH attachments.**

Do not fold the empty rear seat with a safety belt buckled. This could damage the safety belt or the seat. Unbuckle and return the safety belt to its stowed position, before folding the seat.

If you need to secure more than one child restraint in the rear seat, see *Where to Put the Restraint on page 3-40*.

You cannot secure three child restraints using the LATCH anchors in the rear seat at the same time, but you can install two of them. If you want to do this, install one LATCH child restraint in the right rear seating position, and install the other one either in the left rear seating position or in the center seating position. If you need to install child restraints in both the center and left rear seating positions, the one in the center seating position will need to be secured using the vehicle safety belts instead of the LATCH anchors.

Refer to the following illustration to learn which anchors to use.

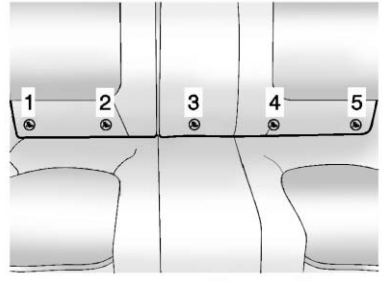

There are five lower LATCH anchors in the rear seat.

- Use anchors 1 and 2 when installing a child restraint using LATCH in the right rear seating position.
- Use anchors 3 and 4 when installing a child restraint using LATCH in the center rear seating position.

- Use anchors 4 and 5 when installing a child restraint using LATCH in left rear seating position.

Installing child restraints using LATCH in the center and left rear seating positions at the same time is prohibited.

Make sure to attach the child restraint at the proper anchor location.

This system is designed to make installation of child restraints easier. When using lower anchors, do not use the vehicle's safety belts. Instead use the vehicle's anchors and child restraint attachments to secure the restraints. Some restraints also use another vehicle anchor to secure a top tether.

1. Attach and tighten the lower attachments to the lower anchors. If the child restraint does not have lower attachments or the desired seating position does not have lower anchors, secure the child restraint with the top tether and the safety belts. Refer to the child restraint manufacturer instructions and the instructions in this manual.

   1.1. Find the lower anchors for the desired seating position.

   1.2. Put the child restraint on the seat.

   If the head restraint interferes with the proper installation of the child restraint, the head restraint may be removed. See “Head Restraint Removal and Reinstallation” at the end of this section.

   1.3. Attach and tighten the lower attachments on the child restraint to the lower anchors.

2. If the child restraint manufacturer recommends that the top tether be attached, attach and tighten the top tether to the top tether anchor, if equipped. Refer to the child restraint instructions and the following steps:

   2.1. Find the top tether anchor.

   Open the cover to expose the anchor.

2.2. Route, attach, and tighten the top tether according to the child restraint instructions and the following instructions:

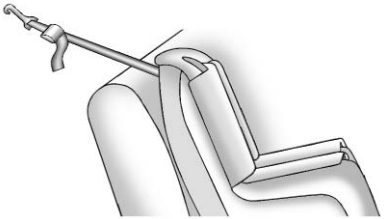

If the position you are using does not have a headrest or head restraint and you are using a single tether, route the tether over the seatback.

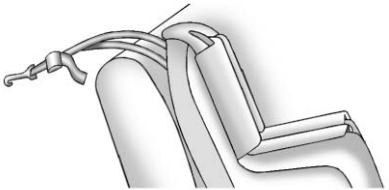

If the position you are using does not have a headrest or head restraint and you are using a dual tether, route the tether over the seatback.

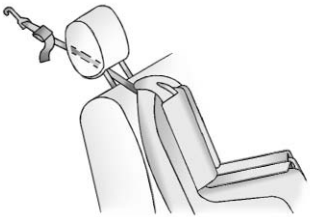

If the position you are using has an adjustable headrest or head restraint and you are using a single tether, route the tether under the headrest or head restraint and in between the headrest or head restraint posts.

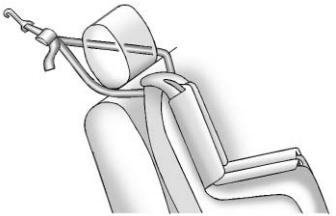

If the position you are using has an adjustable headrest or head restraint and you are using a dual tether route the tether around the headrest or head restraint.

3. Before placing a child in the child restraint, make sure it is securely held in place. To check, grasp the child restraint at the LATCH path and attempt to move it side to side and back and forth. There should be no more than 2.5 cm (1 in) of movement for proper installation.

Head Restraint Removal and Reinstallation

The rear outboard head restraints can be removed if they interfere with the proper installation of the child restraint.

To remove the head restraint:

1. Partially fold the seatback forward. See *Rear Seats on page 3-9* for additional information.

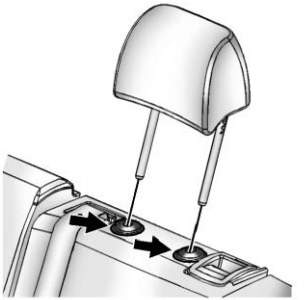

2. Press both buttons on the head restraint posts at the same time, and pull up on the head restraint.
3. Store the head restraint in the trunk of the vehicle.
4. When the child restraint is removed, reinstall the head restraint before the seating position is used.

⚠ WARNING

With head restraints that are not installed and adjusted properly, there is a greater chance that occupants will suffer a neck/spinal injury in a crash. Do not drive until the head restraints for all occupants are installed and adjusted properly.

To reinstall the head restraint:

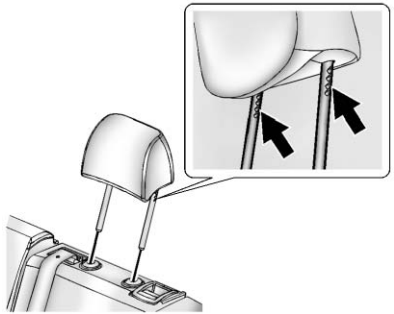

1. Insert the head restraint posts into the holes in the top of the seatback. The notches on the posts must face the driver side of the vehicle.
2. Push the head restraint down.

   If necessary, press the height adjustment release button to further lower the head restraint. See *Head Restraints on page 3-2*.
3. Try to move the head restraint to make sure that it is locked in place.

Replacing LATCH System Parts After a Crash

⚠ WARNING

A crash can damage the LATCH system in the vehicle. A damaged LATCH system may not properly secure the child restraint, resulting in serious injury or even death in a crash. To help make sure the LATCH system is working properly after a crash, see your dealer to have the system inspected and any necessary replacements made as soon as possible.

If the vehicle has the LATCH system and it was being used during a crash, new LATCH system parts may be needed.

New parts and repairs may be necessary even if the LATCH system was not being used at the time of the crash.

Securing Child Restraints (Rear Seat)

When securing a child restraint in a rear seating position, study the instructions that came with the child restraint to make sure it is compatible with this vehicle.

If the child restraint has the LATCH system, see *Lower Anchors and Tethers for Children (LATCH System) on page 3-41* for how and where to install the child restraint using LATCH. If a child restraint is secured in the vehicle using a safety belt and it uses a top tether, see *Lower Anchors and Tethers for Children (LATCH System) on page 3-41* for top tether anchor locations.

Do not secure a child seat in a position without a top tether anchor if a national or local law requires that the top tether be anchored, or if the instructions that come with the child restraint say that the top strap must be anchored.

In Canada, the law requires that forward-facing child restraints have a top tether, and that the tether be attached.

If the child restraint does not have the LATCH system, you will be using the safety belt to secure the child restraint in this position. Be sure to follow the instructions that came with the child restraint. Secure the child in the child restraint when and as the instructions say.

If more than one child restraint needs to be installed in the rear seat, be sure to read *Where to Put the Restraint on page 3-40*.

1. Put the child restraint on the seat.

   If the head restraint interferes with the proper installation of the child restraint, the head restraint may be removed. See “Head Restraint Removal and Reinstallation” under *Lower Anchors and Tethers for Children (LATCH System) on page 3-41*.

2. Pick up the latch plate, and run the lap and shoulder portions of the vehicle's safety belt through or around the restraint. The child restraint instructions will show you how.

3. Push the latch plate into the buckle until it clicks. If the latch plate will not go fully into the buckle, check if the correct buckle is being used.

   Position the release button on the buckle so that the safety belt could be quickly unbuckled if necessary.

4. Pull the shoulder belt all the way out of the retractor to set the lock. When the retractor lock is set, the belt can be tightened but not pulled out of the retractor.

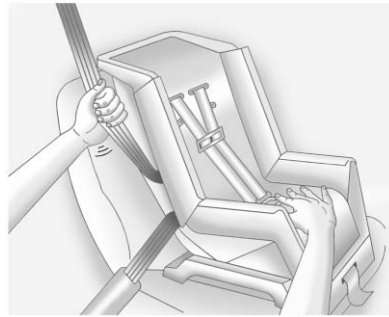

5. To tighten the belt, push down on the child restraint, pull the shoulder portion of the belt to tighten the lap portion of the belt, and feed the shoulder belt back into the retractor. When installing a forward-facing child restraint, it may be helpful to use your knee to push down on the child restraint as you tighten the belt.

   Try to pull the belt out of the retractor to make sure the retractor is locked. If the retractor is not locked, repeat Steps 4 and 5.

6. If the child restraint has a top tether, follow the child restraint manufacturer's instructions regarding the use of the top tether. See *Lower Anchors and Tethers for Children (LATCH System) on page 3-41*.
7. Before placing a child in the child restraint, make sure it is securely held in place. To check, grasp the child restraint at the safety belt path and attempt to move it side to side and back and forth. When the child restraint is properly installed, there should be no more than 2.5 cm (1 in) of movement.

To remove the child restraint, unbuckle the vehicle safety belt and let it return to the stowed position. If the top tether is attached to a top tether anchor, disconnect it. If the head restraint was removed, reinstall it before the seating position is used. See “Head Restraint Removal and Reinstallation” under *Lower Anchors and Tethers for Children (LATCH System) on page 3-41*.

Securing Child Restraints (Front Passenger Seat)

This vehicle has airbags. A rear seat is a safer place to secure a forward-facing child restraint. See *Where to Put the Restraint on page 3-40*.

In addition, the vehicle has a passenger sensing system which is designed to turn off the front outboard passenger frontal airbag and knee airbag under certain conditions. See *Passenger Sensing System on page 3-27* and *Passenger Airbag Status Indicator on page 5-14* for more information, including important safety information.

A label on the sun visor says, “Never put a rear-facing child seat in the front.” This is because the risk to the rear-facing child is so great, if the airbag deploys.

⚠ WARNING

A child in a rear-facing child restraint can be seriously injured or killed if the right front passenger airbag inflates. This is because the back of the rear-facing child restraint would be very close to the inflating airbag. A child in a forward-facing child restraint can be seriously injured or killed if the right front passenger airbag inflates and the passenger seat is in a forward position.

Even if the passenger sensing system has turned off the right front passenger frontal airbag, no system is fail-safe. No one can guarantee that an airbag will not deploy under some unusual circumstance, even though it is turned off.

(Continued)

WARNING (Continued)

Secure rear-facing child restraints in a rear seat, even if the airbag is off. If you secure a forward-facing child restraint in the right front seat, always move the front passenger seat as far back as it will go. It is better to secure the child restraint in a rear seat.

See *Passenger Sensing System on page 3-27* for additional information.

If the child restraint has the LATCH system, see *Lower Anchors and Tethers for Children (LATCH System) on page 3-41* for how and where to install the child restraint using LATCH. If a child restraint is secured using a safety belt and it uses a top tether, see *Lower Anchors and Tethers for Children (LATCH System) on page 3-41* for top tether anchor locations.

Do not secure a child seat in a position without a top tether anchor if a national or local law requires that the top tether be anchored, or if the instructions that come with the child restraint say that the top strap must be anchored.

In Canada, the law requires that forward-facing child restraints have a top tether, and that the tether be attached.

You will be using the lap-shoulder belt to secure the child restraint in this position. Follow the instructions that came with the child restraint.

1. Move the seat as far back as it will go before securing the forward-facing child restraint.

   When the passenger sensing system has turned off the front outboard passenger frontal airbag and knee airbag, the off indicator on the passenger airbag status indicator should light and stay lit when you start the vehicle. See *Passenger Airbag Status Indicator on page 5-14*.

2. Put the child restraint on the seat.

3. Pick up the latch plate, and run the lap and shoulder portions of the vehicle's safety belt through or around the restraint. The child restraint instructions will show you how.

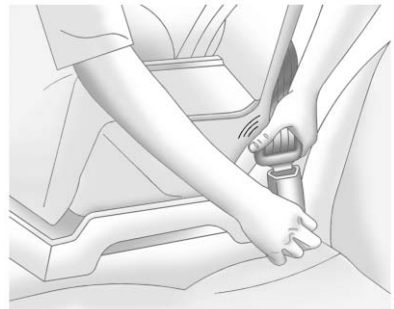

4. Push the latch plate into the buckle until it clicks.

Position the release button on the buckle so that the safety belt could be quickly unbuckled if necessary.

5. Pull the shoulder belt all the way out of the retractor to set the lock. When the retractor lock is set, the belt can be tightened but not pulled out of the retractor.

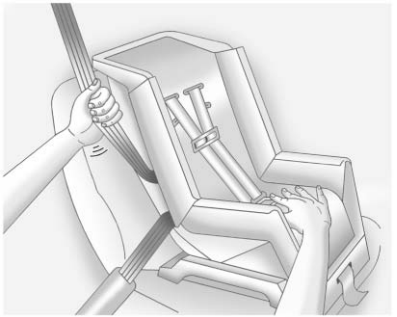

6. To tighten the belt, push down on the child restraint, pull the shoulder portion of the belt to tighten the lap portion of the belt, and feed the shoulder belt back into the retractor. When installing a forward-facing child restraint, it may be helpful to use your knee to push down on the child restraint as you tighten the belt.

   Try to pull the belt out of the retractor to make sure the retractor is locked. If the retractor is not locked, repeat Steps 5 and 6.

7. Before placing a child in the child restraint, make sure it is securely held in place. To check, grasp the child restraint at the safety belt path and attempt to move it side to side and back and forth. When the child restraint is properly installed, there should be no more than 2.5 cm (1 in) of movement.

If the airbags are off, the off indicator in the passenger airbag status indicator will come on and stay on when the vehicle is started.

If a child restraint has been installed and the on indicator is lit, see “If the On Indicator Is Lit for a Child Restraint” under *Passenger Sensing System on page 3-27*.

To remove the child restraint, unbuckle the vehicle safety belt and let it return to the stowed position.

Storage

Storage Compartments
Instrument Panel Storage 4-1
Glove Box 4-1
Cupholders 4-2
Sunglasses Storage 4-2
Center Console Storage 4-3

Additional Storage Features
Cargo Tie-Downs 4-3
Convenience Net 4-3

Storage Compartments

Instrument Panel Storage

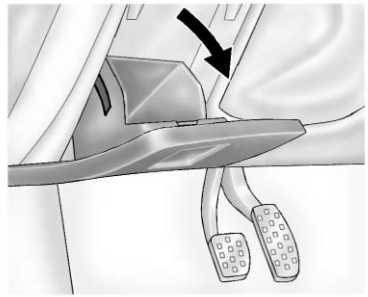

Pull the door down to access.

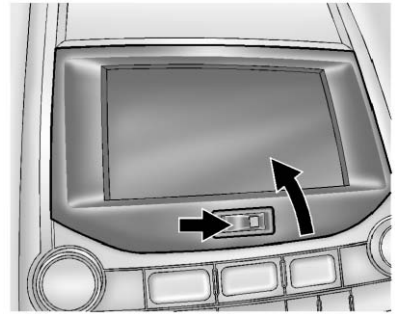

Uplevel

The vehicle may have a storage area behind the radio display. Push the button to the right and release; the door automatically opens.

Keep the storage area closed when not in use.

Push the door down to close.

Glove Box

Pull the handle up to open.

Cupholders

Center Console

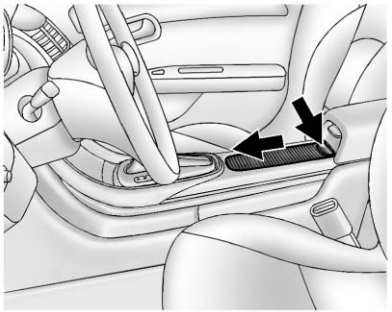

With the armrest in the rearward position, push down on the cover handle and slide the cover forward to access the cupholders.

The vehicle may have removable cupholders.

To remove the cupholders:

1. Pull and hold the tab at the rear of the cupholders.
2. Lift up and rearward.

To reinstall, place the two forward tabs into the slots and push down on the rear of the cupholder.

Rear Seat

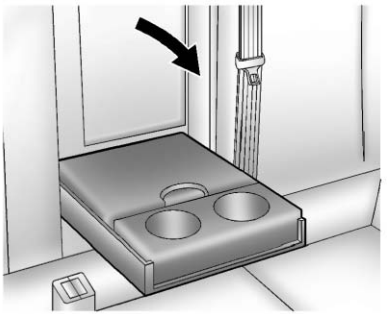

Lower the armrest to access the cupholders. There is also storage in the armrest; lift the lid to access.

Sunglasses Storage

Push on the cover and release to open the compartment.

Center Console Storage

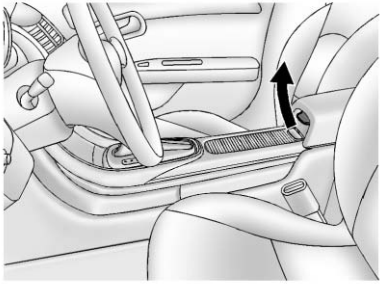

Pull up the latch and lift to open.

The center console has storage with a power outlet under the armrest. See *Power Outlets on page 5-6*. If equipped, there is a removable divider to configure storage.

The armrest can be adjusted to a rearward, middle, and forward position. Pull or push the front of the armrest to adjust to the desired position.

There is an auxiliary jack in the console. If equipped, there is also a USB port in the console. See *Auxiliary Devices on page 7-16*.

The vehicle may have removable cupholders with storage under them. See *Cupholders on page 4-2*.

Additional Storage Features

Cargo Tie-Downs

There are cargo tie-downs in the trunk. The cargo tie-downs can be used to secure small loads or the convenience net. See *Convenience Net on page 4-3*.

Convenience Net

For vehicles with a convenience net, it is in the trunk and used to store small loads. The net should not be used to store heavy loads. Attach the loops on each side of the net to the cargo tie-downs in the trunk. See *Cargo Tie-Downs on page 4-3*.

✍ NOTES

Instruments and Controls

Controls

Steering Wheel Adjustment . . . 5-2
Steering Wheel Controls 5-2
Horn 5-3
Windshield Wiper/Washer 5-3
Compass 5-5
Clock 5-5
Power Outlets 5-6

Warning Lights, Gauges, and Indicators

Warning Lights, Gauges, and Indicators 5-8
Instrument Cluster 5-9
Speedometer 5-11
Odometer 5-11
Trip Odometer 5-11
Tachometer 5-11
Fuel Gauge 5-11
Driver Efficiency Gauge 5-12
Engine Coolant Temperature Gauge 5-12
Safety Belt Reminders 5-13
Airbag Readiness Light 5-14
Passenger Airbag Status Indicator 5-14
Charging System Light 5-15
Malfunction Indicator Lamp 5-15
Brake System Warning Light 5-18
Electric Parking Brake Light 5-19
Service Electric Parking Brake Light 5-19
Antilock Brake System (ABS) Warning Light 5-19
Lane Departure Warning (LDW) Light 5-20
Vehicle Ahead Indicator 5-20
Traction Off Light 5-20
StabiliTrak® OFF Light 5-21
Traction Control System (TCS)/StabiliTrak® Light 5-21
Engine Coolant Temperature Warning Light 5-22
Tire Pressure Light 5-22
Engine Oil Pressure Light 5-23
Low Fuel Warning Light 5-23
Security Light 5-24
High-Beam On Light 5-24
Front Fog Lamp Light 5-24
Lamps On Reminder 5-24
Cruise Control Light 5-24
Door Ajar Light 5-25

Information Displays

Center Stack Display 5-25
Driver Information Center (DIC) 5-25

Vehicle Messages

Vehicle Messages 5-29
Battery Voltage and Charging Messages 5-29
Brake System Messages 5-29
Compass Messages 5-30
Cruise Control Messages 5-30
Door Ajar Messages 5-30
Engine Cooling System Messages 5-30
Engine Oil Messages 5-31
Engine Power Messages 5-32
Fuel System Messages 5-32
Key and Lock Messages 5-32
Lamp Messages 5-32
Object Detection System Messages 5-33
Ride Control System Messages 5-33
Security Messages 5-33

Service Vehicle Messages . . . 5-33
Starting the Vehicle Messages 5-34
Tire Messages 5-34
Transmission Messages 5-35
Vehicle Reminder Messages 5-35
Washer Fluid Messages 5-35
Window Messages 5-35

Vehicle Personalization
Vehicle Personalization 5-36

Universal Remote System
Universal Remote System . . . 5-41
Universal Remote System Programming 5-41
Universal Remote System Operation 5-44

Controls

Steering Wheel Adjustment

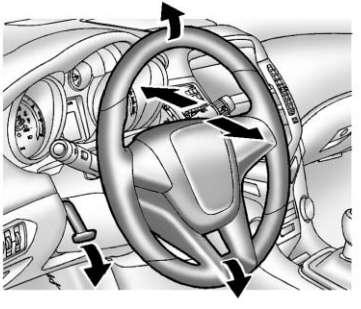

To adjust the steering wheel:

1. Pull the lever down.
2. Move the steering wheel up or down.
3. Pull or push the steering wheel closer or away from you.
4. Push the lever up to lock the steering wheel in place.

Do not adjust the steering wheel while driving.

Steering Wheel Controls

For vehicles with audio steering wheel controls, some audio controls can be adjusted at the steering wheel.

/ (Push to Talk): For vehicles with an OnStar, Bluetooth, or navigation system, press to interact with those systems. See *Bluetooth (Overview) on page 7-22* or *Bluetooth (Voice Recognition) on page 7-27* or *Bluetooth (Infotainment Controls) on page 7-23* and *OnStar Overview on page 14-1*.

/ (Mute/End Call): Press to silence the vehicle speakers only. Press again to turn the sound on. For vehicles with OnStar or Bluetooth systems, press to reject an incoming call, or to end a current call.

SRC (Thumbwheel Control): Use this control to select a radio band or audio source.

Use or to select the next or previous favorite radio station, CD track, DVD track/chapter, or MP3 track.

Press SRC to change between radio and CD or DVD.

Press and hold SRC to interact with the navigation system, if equipped.

+ − (Volume): Press + to increase the volume; press − to decrease the volume.

Horn

Press on the steering wheel pad to sound the horn.

Windshield Wiper/Washer

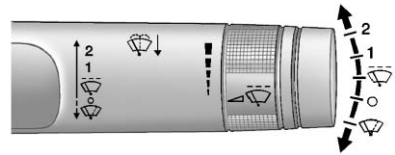

The windshield wiper lever is on the right side of the steering column. With the ignition in ACC/ACCESSORY or ON/RUN, move the windshield wiper lever to select the wiper speed.

2: Use for fast wipes.

1: Use for slow wipes.

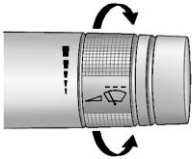

(Adjustable Interval Wipes): Move the lever to , then turn the band up for more frequent wipes or down for less frequent wipes.

(Off): Use to turn the windshield wipers off.

(Mist): Briefly move the wiper lever down for a single wipe or hold down for several wipes.

Clear ice and snow from the windshield and wiper blades before using them. If the wiper blades are frozen to the windshield, carefully loosen or thaw them. Damaged wiper blades should be replaced. See *Wiper Blade Replacement on page 10-27*.

Heavy snow or ice can overload the wipers. A circuit breaker stops them until the motor cools.

Wipe Parking

If the ignition is turned to LOCK/OFF while the wipers are on 1, 2, or , they will immediately stop.

If the windshield wiper lever is then moved to before the driver door is opened, or within 10 minutes, the wipers will restart and move to the base of the windshield.

If the ignition is turned to LOCK/OFF during a windshield wash, the wipers will stop when they reach the base of the windshield.

Windshield Washer

Pull the windshield wiper lever toward you to spray windshield washer fluid and activate the wipers.

The washer and wipers will continue until the lever is released or the maximum wash time is reached.

When the windshield wiper lever is released, additional wipes may occur depending on how long the windshield washer had been activated.

If the washer fluid is low, a message may display on the Driver Information Center (DIC). See *Washer Fluid Messages on page 5-35*. For information on filling the windshield washer fluid reservoir, see *Washer Fluid on page 10-22*.

⚠ WARNING

In freezing weather, do not use the washer until the windshield is warmed. Otherwise the washer fluid can form ice on the windshield, blocking your vision.

Compass

There is a compass display in the Driver Information Center (DIC). The compass receives its heading and other information from the Global Positioning System (GPS) antenna, StabiliTrak, and vehicle speed information.

Avoid covering the GPS antenna for long periods of time with objects that may interfere with the antenna's ability to receive a satellite signal. See *Backglass Antenna on page 7-14* and *Multi-Band Antenna on page 7-14* for the location of the vehicle's antennas. The compass system is designed to operate for a certain number of miles or degrees of turn before needing a signal from the GPS satellites. When the compass display shows CAL, drive the vehicle for a short distance in an open area where it can receive a GPS signal. The compass system will automatically determine when the GPS signal is restored and provide a heading again. See *Compass Messages on page 5-30* for more information on the messages that may be displayed for the compass.

Clock

The infotainment system controls are used to access the time and date settings through the menu system. The clock menu can only be used with the radio on while in ON/RUN or ACC/ACCESSORY. See *Overview on page 7-2* for information about how to use the menu system. For vehicles with a navigation system, see the navigation manual.

Setting the Clock (Radio with CD)

To set the time:

1. Press the CONFIG button and select Time Settings.
2. Select Set Time.
3. Turn the TUNE/MENU knob to adjust the highlighted number.
4. Press the TUNE/MENU knob to select the next number.
5. To save the time and return to the Time Settings menu, press the BACK ⇦ button at any time or press the TUNE/MENU knob after adjusting the minutes.

Setting the 12/24 Hour Format

1. Press the CONFIG button and select Time Settings.
2. Highlight 12/24 Hour Format.
3. Press the TUNE/MENU knob to select the 12 hour or 24 hour display format.

Setting the Clock (Radios with Touchscreen)

To set the time:

1. Press the CONFIG button to enter the menu options. Turn the TUNE/MENU knob to scroll through the available setup features. Press the TUNE/MENU knob or press the Time screen button to display other options within that feature.
2. Press + or − to increase or decrease the Hours and Minutes displayed on the clock.

12/24 HR Format: Press the 12 HR screen button for standard time; press the 24 HR screen button for military time.

Day + or Day −: Press the Day + or Day − display buttons to increase or decrease the day.

Display: Press Display to turn the display of the time on the screen on or off.

Power Outlets

The accessory power outlets can be used to plug in electrical equipment, such as a cell phone or MP3 player.

There are two accessory power outlets: one on the center stack below the climate control system, and one under the armrest inside the center console storage.

The outlet is powered when the ignition is in ON/RUN or ACC/ACCESSORY, or until the driver door is opened within 10 minutes of turning off the vehicle. See *Retained Accessory Power (RAP) on page 9-23*.

Open the protective cover to use the accessory power outlet.

Certain electrical accessories may not be compatible with the accessory power outlets and could overload vehicle or adapter fuses. If there is a problem, see your dealer.

When adding electrical equipment, be sure to follow the installation instructions included with the equipment. See *Add-On Electrical Equipment on page 9-58*.

Notice: **Hanging heavy equipment from the power outlet can cause damage not covered by the vehicle warranty. The power outlets are designed for accessory power plugs only, such as cell phone charge cords.**

Power Outlet 120 Volt Alternating Current

The vehicle may have a power outlet that can be used to plug in electrical equipment that uses a maximum limit of 150 watts.

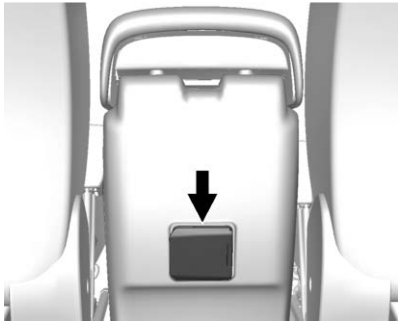

The power outlet is on the rear of the center console.

An indicator light on the outlet turns on to show it is in use. The light comes on when the ignition is in ON/RUN and equipment requiring less than 150 watts is plugged into the outlet, and no system fault is detected.

The indicator light does not come on if the ignition is in LOCK/OFF, no equipment is plugged into the outlet, or if the equipment is plugged, but not fully seated in the outlet.

If equipment is connected using more than 150 watts or a system fault is detected, the equipment may operate briefly then turn off. A protection circuit shuts off the power supply and the indicator light turns off. To reset the circuit, unplug the item and plug it back in or turn the Retained Accessory Power (RAP) off and then back on. See *Retained Accessory Power (RAP) on page 9-23*. The power restarts when equipment using 150 watts or less is plugged into the outlet and a system fault is not detected.

The power outlet is not designed for the following, and may not work properly if they are plugged in:

- Equipment with high initial peak wattage, such as compressor-driven refrigerators and electric power tools.
- Other equipment requiring an extremely stable power supply, such as microcomputer-controlled electric blankets and touch sensor lamps.

See *High Voltage Devices and Wiring on page 10-37*.

Warning Lights, Gauges, and Indicators

Warning lights and gauges can signal that something is wrong before it becomes serious enough to cause an expensive repair or replacement. Paying attention to the warning lights and gauges could prevent injury.

Warning lights come on when there could be a problem with a vehicle function. Some warning lights come on briefly when the engine is started to indicate they are working.

Gauges can indicate when there could be a problem with a vehicle function. Often gauges and warning lights work together to indicate a problem with the vehicle.

When one of the warning lights comes on and stays on while driving, or when one of the gauges shows there may be a problem, check the section that explains what to do. Follow this manual's advice. Waiting to do repairs can be costly and even dangerous.

Instrument Cluster

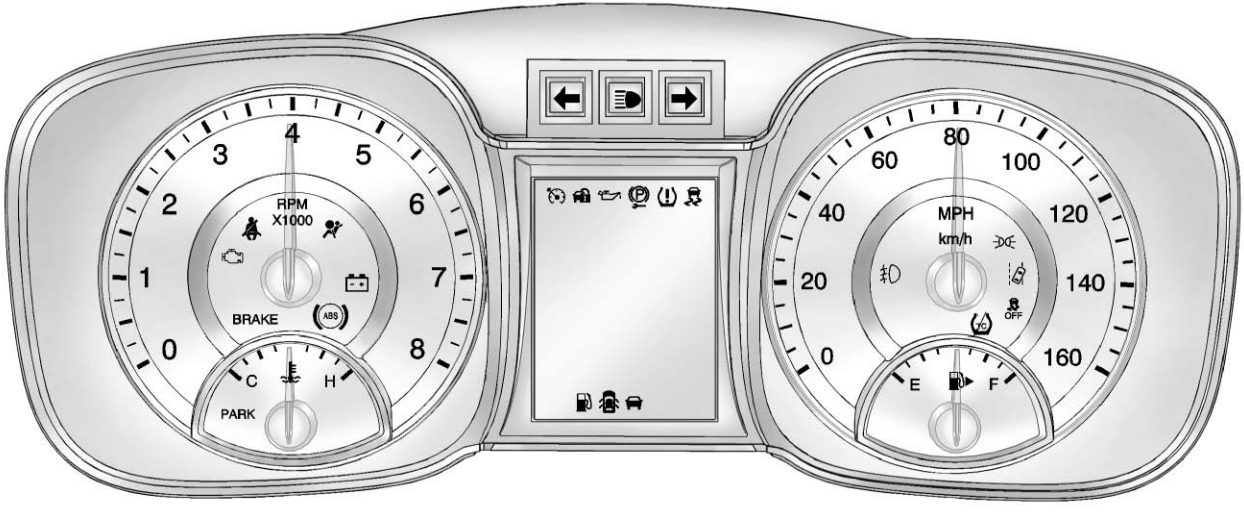

English Uplevel Shown, Metric and Base Level Similar

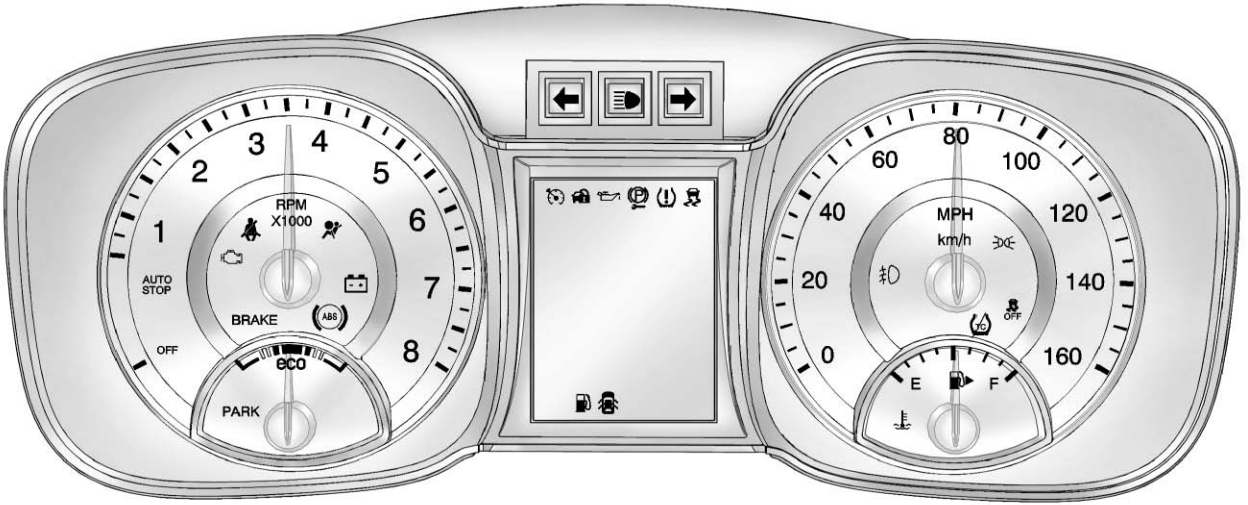

English eAssist Shown, Metric eAssist Similar

Speedometer

The speedometer shows the vehicle's speed in either kilometers per hour (km/h) or miles per hour (mph).

Odometer

The odometer shows how far the vehicle has been driven, in either kilometers or miles.

This vehicle has a tamper-resistant odometer. The digital odometer will read 999,999 if it is turned back.

If the vehicle needs a new odometer installed, it must be set to the mileage total of the old odometer. If that is not possible, then it must be set at zero and a label must be put on the driver door to show the old mileage reading when the new odometer was installed.

Trip Odometer

The trip odometer can show how far the vehicle has been driven since the trip odometer was last reset.

The trip odometer is accessed and reset through the Driver Information Center (DIC). See *Driver Information Center (DIC) on page 5-25*.

Tachometer

The tachometer displays the engine speed in revolutions per minute (rpm).

For eAssist vehicles, when the ignition is in ON/RUN, the tachometer indicates the vehicle status. When pointing to AUTO STOP, the engine is off but the vehicle is on and can move. The engine could auto start at any time. When the indicator points to OFF, the vehicle is off.

When the engine is on, the tachometer will indicate the engine's revolutions per minute (rpm). The tachometer may vary by several hundred rpm's, during auto stop mode, when the engine is shutting off and restarting.

A slight bump may be felt when the transmission is determining the most fuel efficient operating range.

Fuel Gauge

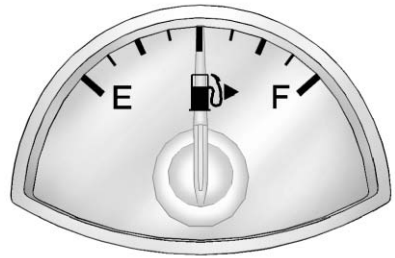

When the ignition is on, the fuel gauge shows how much fuel is left in the fuel tank. When the indicator nears empty, a message in the Driver Information Center (DIC) displays. See *Fuel System Messages on page 5-32*. The vehicle still has a little fuel left, but the vehicle should be fueled soon.

An arrow on the fuel gauge indicates the side of the vehicle the fuel door is on.

Here are four things that some owners ask about. These are normal and do not indicate a problem with the fuel gauge:

- At the service station, the gas pump shuts off before the gauge reads full.
- It takes a little more or less fuel to fill up than the gauge indicated. For example, the gauge may have indicated the fuel tank was half full, but it actually took a little more or less than half the fuel tank's capacity to fill it.
- The indicator moves a little while turning a corner or speeding up.
- The gauge goes back to empty when the ignition is turned off.

Driver Efficiency Gauge

For eAssist vehicles, this gauge assists in driving efficiently and will vary based on driver input.

To maximize efficiency, keep the gauge pointed in the solid green zone in the center of the gauge.

The gauge moves to the left when braking and to the right when accelerating. When either is done aggressively, the vehicle is being driven less efficiently and the gauge will move further from the center.

Engine Coolant Temperature Gauge

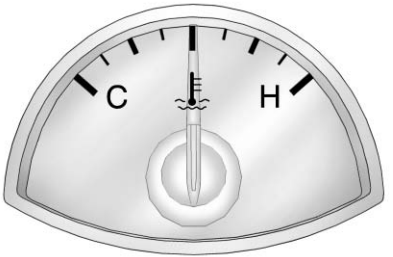

This gauge shows the engine coolant temperature.

If the indicator needle moves to the hot side of the gauge, the engine is too hot.

If the vehicle has been operated under normal driving conditions, pull off the road, stop the vehicle, and turn off the engine as soon as possible.

Safety Belt Reminders

Driver Safety Belt Reminder Light

There is a driver safety belt reminder light on the instrument cluster.

When the vehicle is started, this light flashes and a chime may come on to remind the driver to fasten their safety belt. Then the light stays on solid until the belt is buckled. This cycle may continue several times if the driver remains or becomes unbuckled while the vehicle is moving.

If the driver safety belt is buckled, neither the chime nor the light comes on.

Passenger Safety Belt Reminder Light

There is a passenger safety belt reminder light near the passenger airbag status indicator. See *Passenger Sensing System on page 3-27*.

When the vehicle is started, this light flashes and a chime may come on to remind passengers to fasten their safety belt. Then the light stays on solid until the belt is buckled.

This cycle continues several times if the passenger remains or becomes unbuckled while the vehicle is moving.

If the passenger safety belt is buckled, neither the chime nor the light comes on.

The front passenger safety belt warning light and chime may turn on if an object is put on the seat such as a briefcase, handbag, grocery bag, laptop, or other electronic device. To turn off the warning light and/or chime, remove the object from the seat or buckle the safety belt.

Airbag Readiness Light

This light shows if there is an electrical problem with the airbag system. The system check includes the airbag sensor(s), passenger sensing system, the pretensioners, the airbag modules, the wiring, and the crash sensing and diagnostic module. For more information on the airbag system, see *Airbag System on page 3-20*.

The airbag readiness light comes on for several seconds when the vehicle is started. If the light does not come on then, have it fixed immediately.

⚠ WARNING

If the airbag readiness light stays on after the vehicle is started or comes on while driving, it means the airbag system might not be working properly. The airbags in the vehicle might not inflate in a crash, or they could even inflate without a crash. To help avoid injury, have the vehicle serviced right away.

Passenger Airbag Status Indicator

The vehicle has a passenger sensing system. See *Passenger Sensing System on page 3-27*. The center stack has a passenger airbag status indicator.

When the vehicle is started, the passenger airbag status indicator will light ON and OFF for several seconds as a system check.

If you are using remote start, if equipped, to start the vehicle from a distance, you may not see the system check. Then, after several more seconds, the status indicator will light either ON or OFF to let you know the status of the front outboard passenger frontal airbag and knee airbag.

If the word ON is lit on the passenger airbag status indicator, it means that the front outboard passenger frontal airbag and knee airbag are allowed to inflate.

If the word OFF is lit on the airbag status indicator, it means that the passenger sensing system has turned off the front outboard passenger frontal airbag and knee airbag.

If, after several seconds, both status indicator lights remain on, or if there are no lights at all, there may be a problem with the lights or the passenger sensing system. See your dealer for service.

⚠ WARNING

If the airbag readiness light ever comes on and stays on, it means that something may be wrong with the airbag system. To help avoid injury to yourself or others, have the vehicle serviced right away. See *Airbag Readiness Light on page 5-14* for more information, including important safety information.

Charging System Light

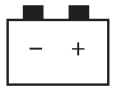

This light comes on briefly when the ignition key is turned to START, but the engine is not running, as a check to show it is working.

If it does not, have the vehicle serviced by your dealer.

The light should go out once the engine starts. If it stays on, or comes on while driving, there could be a problem with the charging system. This light could indicate that there are problems with a generator drive belt, or that there is an electrical problem. Have it checked right away. If the vehicle must be driven a short distance with the light on, turn off accessories, such as the radio and air conditioner.

Malfunction Indicator Lamp

A computer system called OBD II (On-Board Diagnostics-Second Generation) monitors the operation of the vehicle to ensure emissions are at acceptable levels, helping to maintain a clean environment. The malfunction indicator lamp comes on when the vehicle is placed in ON/RUN for key access or Service Only Mode for keyless access, as a check to show it is working. If it does not, have the vehicle serviced by your dealer. See *Ignition Positions (Key Access) on page 9-15* or *Ignition Positions (Keyless Access) on page 9-17* for more information.

If the malfunction indicator lamp comes on while the engine is running, this indicates that the OBD II system has detected a problem and diagnosis and service might be required.

Malfunctions often are indicated by the system before any problem is apparent. Being aware of the light can prevent more serious damage to the vehicle. This system also assists the dealer technician in correctly diagnosing any malfunction.

Notice: **If the vehicle is continually driven with this light on, the emission controls might not work as well, the vehicle fuel economy might not be as good, and the engine might not run as smoothly. This could lead to costly repairs that might not be covered by the vehicle warranty.**

Notice: **Modifications made to the engine, transmission, exhaust, intake, or fuel system of the vehicle or the replacement of the original tires with other than those of the same Tire Performance Criteria (TPC) can affect the vehicle's emission controls and can cause this light to come on. Modifications to these systems could lead to costly repairs not covered by the vehicle warranty. This could also result in a failure to pass a required Emission Inspection/ Maintenance test. See *Accessories and Modifications on page 10-3*.**

This light comes on during a malfunction in one of two ways:

Light Flashing: A misfire condition has been detected. A misfire increases vehicle emissions and could damage the emission control system on the vehicle. Diagnosis and service might be required.

To prevent more serious damage to the vehicle:

- Reduce vehicle speed.
- Avoid hard accelerations.
- Avoid steep uphill grades.

If the light continues to flash, find a safe place to stop and park the vehicle. Turn the vehicle off, wait at least 10 seconds, and restart the engine. If the light is still flashing, follow the previous steps and see your dealer for service as soon as possible.

Light On Steady: An emission control system malfunction has been detected on the vehicle. Diagnosis and service might be required.

The following may correct an emission control system malfunction:

- Check that the fuel cap is fully installed. See *Filling the Tank on page 9-50*. The diagnostic system can determine if the fuel cap has been left off or improperly installed. A loose or missing fuel cap allows fuel to evaporate into the atmosphere. A few driving trips with the cap properly installed should turn the light off.
- Check that good quality fuel is used. Poor fuel quality causes the engine not to run as efficiently as designed and may cause stalling after start-up, stalling when the vehicle is changed into gear, misfiring, hesitation on acceleration, or stumbling on acceleration. These conditions might go away once the engine is warmed up.

If one or more of these conditions occurs, change the fuel brand used. It may require at least one full tank of the proper fuel to turn the light off.

See *Recommended Fuel on page 9-47*.

If none of the above have made the light turn off, your dealer can check the vehicle. The dealer has the proper test equipment and diagnostic tools to fix any mechanical or electrical problems that might have developed.

Emissions Inspection and Maintenance Programs

Depending on where you live, your vehicle may be required to participate in an emission control system inspection and maintenance program. For the inspection, the emission system test equipment will likely connect to the vehicle's Data Link Connector (DLC).

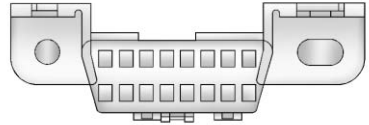

The DLC is under the instrument panel to the next to the steering wheel. See your dealer if assistance is needed.

The vehicle may not pass inspection if:

- The malfunction indicator lamp is on while the vehicle is running. The vehicle is in ON/RUN for key access, or Service Only Mode for keyless access and the malfunction indicator lamp does not come on. See your dealer for assistance in verifying proper operation of the malfunction indicator lamp.

- The OBD II (On-Board Diagnostics) system determines that critical emission control systems have not been completely diagnosed. The vehicle would be considered not ready for inspection. This can happen if the 12-volt battery has recently been replaced or run down. The diagnostic system is designed to evaluate critical emission control systems during normal driving. This can take several days of routine driving. If this has been done and the vehicle still does not pass the inspection for lack of OBD II system readiness, your dealer can prepare the vehicle for inspection.

Brake System Warning Light

The vehicle brake system consists of two hydraulic circuits. If one circuit is not working, the remaining circuit can still work to stop the vehicle. For normal braking performance, both circuits need to be working.

If the warning light comes on, there is a brake problem. Have the brake system inspected right away.

BRAKE

Metric **English**

This light comes on briefly when the vehicle is turned on. If it does not come on then, have it fixed so it will be ready to warn if there is a problem.

If the light comes on and stays on, there is a base brake problem.

⚠ WARNING

The brake system might not be working properly if the brake system warning light is on. Driving with the brake system warning light on can lead to a crash. If the light is still on after the vehicle has been pulled off the road and carefully stopped, have the vehicle towed for service.

Electric Parking Brake Light

PARK

Metric **English**

This light comes on when the parking brake is applied. If the light continues flashing after the parking brake is released, or while driving, there is a problem with the electric parking brake system or another system. A message may also display in the Driver Information Center (DIC). See *Brake System Messages on page 5-29*.

If the light does not come on, or remains flashing, see your dealer.

Service Electric Parking Brake Light

The service electric parking brake light should come on briefly when the vehicle is in ON/RUN. If it does not come on, have it fixed so it will be ready to warn if there is a problem.

If this light stays on, there is a problem with a system on the vehicle that is causing the parking brake system to work at a reduced level. The vehicle can still be driven, but should be taken to a dealer as soon as possible. See *Parking Brake on page 9-30*.

For vehicles with the uplevel or eAssist cluster, this telltale displays in the DIC screen.

Antilock Brake System (ABS) Warning Light

For vehicles with the Antilock Brake System (ABS), this light comes on briefly when the engine is started.

If it does not, have the vehicle serviced by your dealer. If the system is working normally, the indicator light then goes off.

If the ABS light stays on, turn the ignition off. If the light comes on while driving, stop as soon as it is safely possible and turn the ignition off. Then start the engine again to reset the system. If the ABS light stays on, or comes on again while driving, the vehicle needs service. If the regular brake system warning light is not on, the vehicle still has brakes, but not antilock brakes.

If the regular brake system warning light is also on, the vehicle does not have antilock brakes and there is a problem with the regular brakes. See *Brake System Warning Light on page 5-18*.

For vehicles with a Driver Information Center (DIC), see *Brake System Messages on page 5-29* for all brake-related DIC messages.

Lane Departure Warning (LDW) Light

For vehicles with the LDW system, this light briefly comes on amber while starting the vehicle. If it does not, have the vehicle serviced by your dealer. If the system is working normally, the indicator light then turns off.

This light also comes on green when the system is switched on and ready to operate.

See *Lane Departure Warning (LDW) on page 9-44*.

Vehicle Ahead Indicator

For vehicles with the FCA system, this light comes on in the Driver Information Center (DIC) when a vehicle is detected ahead.

See *Forward Collision Alert (FCA) System on page 9-38*.

Traction Off Light

This light comes on briefly while starting the engine. If it does not, have the vehicle serviced by your dealer.

This light comes on when the Traction Control System (TCS) has been turned off by pressing and releasing the TCS/StabiliTrak button.

This light also comes on and the system turns off if there is a problem with the TCS.

If the light comes on and stays on for an extended period of time while the system is turned on, the vehicle needs service.

See *Traction Control System (TCS) on page 9-33* and *StabiliTrak® System on page 9-34*.

StabiliTrak® OFF Light

This light comes on briefly while starting the engine. If it does not, have the vehicle serviced by your dealer.

This light comes on when the StabiliTrak system is turned off. If the Traction Control System (TCS) is off, wheel spin is not limited. If StabiliTrak is off, the system does not assist in controlling the vehicle. Turn on the TCS and the StabiliTrak system and the warning light turns off.

See *Traction Control System (TCS) on page 9-33* and *StabiliTrak® System on page 9-34* for more information.

Traction Control System (TCS)/StabiliTrak® Light

The TCS/StabiliTrak light comes on briefly when the engine is started.

If the light does not come on, have the vehicle serviced by the dealer. If the system is working normally, the indicator light turns off.

If the light is on while certain DIC messages display, this indicates that the TCS and StabiliTrak systems are not working or are disabled.

If the light is on and not flashing, the TCS and potentially the StabiliTrak system have been disabled. Check the DIC messages to determine which feature(s) is no longer functioning and whether it is because of the driver turning off the feature(s), or because the system is not working properly and the vehicle requires service.

If the TCS is disabled, wheel spin is not limited. If the StabiliTrak system is disabled, the system does not aid in maintaining directional control of the vehicle.

If the indicator/warning light is on and flashing, the TCS or the StabiliTrak system is actively working. Check the DIC messages for details to determine which system is working. If a message appears in the DIC, the system may be limiting wheel spin and aiding in maintaining directional control of the vehicle.

For vehicles with an uplevel or eAssist cluster, this light comes on in the Driver information Center (DIC).

See *StabiliTrak® System on page 9-34* and *Traction Control System (TCS) on page 9-33*.

See *Ride Control System Messages on page 5-33* for more information on the messages associated with this light.

Engine Coolant Temperature Warning Light

For eAssist vehicles, this light comes on briefly while starting the vehicle.

If it does not, have the vehicle serviced by the dealer. If the system is working normally, the indicator light goes off.

Notice: **Driving with the engine coolant temperature warning light on could cause the vehicle to overheat. See *Engine Overheating on page 10-20*. The vehicle's engine could be damaged, and it might not be covered by the vehicle warranty. Never drive with the engine coolant temperature warning light on.**

The engine coolant temperature warning light comes on when the engine has overheated.

If this happens, pull over and turn off the engine as soon as possible. See *Engine Overheating on page 10-20*.

Tire Pressure Light

For vehicles with the Tire Pressure Monitor System (TPMS), this light comes on briefly when the engine is started. It provides information about tire pressures and the TPMS.

For vehicles with an uplevel or eAssist cluster, this telltale displays in the Driver Information Center (DIC) screen.

When the Light Is On Steady

This indicates that one or more of the tires are significantly underinflated.

A DIC tire pressure message may also display. See *Tire Messages on page 5-34*. Stop as soon as possible, and inflate the tires to the pressure value shown on the Tire and Loading Information label. See *Tire Pressure on page 10-52*.

When the Light Flashes First and Then Is On Steady

If the light flashes for about a minute and then stays on, there may be a problem with the TPMS. If the problem is not corrected, the light will come on at every ignition cycle. See *Tire Pressure Monitor Operation on page 10-55*.

Engine Oil Pressure Light

Notice: **Lack of proper engine oil maintenance can damage the engine. Driving with the engine oil low can also damage the engine. The repairs would not be covered by the vehicle warranty. Check the oil level as soon as possible. Add oil if required, but if the oil level is within the operating range and the oil pressure is still low, have the vehicle serviced. Always follow the maintenance schedule for changing engine oil.**

The oil pressure light should come on briefly as the engine is started. If it does not come on have the vehicle serviced by your dealer.

If the light comes on and stays on, it means that oil is not flowing through the engine properly. The vehicle could be low on oil and might have some other system problem. See your dealer.

For vehicles with the uplevel or eAssist cluster, this telltale displays in the Driver Information Center (DIC) screen.

Low Fuel Warning Light

This light, below the fuel gauge, comes on briefly when the engine is started.

If it does not come on, have the vehicle serviced by your dealer. If the system is working normally, the indicator light then goes off.

This light also comes on when the fuel tank is low on fuel. When fuel is added the light should go off. If it does not, have your vehicle serviced.

For vehicles with an uplevel or eAssist cluster, this telltale displays in the Driver Information Center (DIC) screen.

Security Light

The immobilizer light should come on briefly as the engine is started. If it does not come on, have the vehicle serviced by your dealer. If the system is working normally, the indicator light turns off.

If the light stays on and the engine does not start, there could be a problem with the theft-deterrent system. See *Immobilizer Operation (Key Access) on page 2-15* or *Immobilizer Operation (Keyless Access) on page 2-16*.

For vehicles with an uplevel or eAssist cluster, this light displays in the Driver Information Center (DIC) screen.

High-Beam On Light

This light comes on when the high-beam headlamps are in use.

See *Headlamp High/Low-Beam Changer on page 6-2*.

Front Fog Lamp Light

The fog lamp light comes on when the fog lamps are in use.

The light goes out when the fog lamps are turned off. See *Fog Lamps on page 6-4*.

Lamps On Reminder

This light comes on when the exterior lamps are in use. See *Exterior Lamp Controls on page 6-1*.

Cruise Control Light

This light is white whenever the cruise control is on and turns green when the cruise control is active.

The light goes out when the cruise control is turned off. See *Cruise Control on page 9-36*.

For vehicles with the uplevel or eAssist cluster, this telltale will be shown in the Driver Information Center (DIC) screen.

Door Ajar Light

This light comes on in the Driver Information Center (DIC) when a door is open or not securely latched.

Before driving, check that all doors are properly closed.

Information Displays

Center Stack Display

Infotainment and vehicle personalization information displays in the center stack screen. See:

- The navigation system manual and *Infotainment on page 7-1*.
- *Vehicle Personalization on page 5-36*.

The center stack controls only need a light touch to operate and work best with bare hands. The controls will work with most gloves although they may take longer to respond. Use the finger pad rather than the finger tip to minimize response time. If the controls are not responding, remove the gloves.

Driver Information Center (DIC)

The DIC displays information about the vehicle. It also displays warning messages if a system problem is detected. See *Vehicle Messages on page 5-29*. All messages appear in the DIC display in the center of the instrument cluster.

The vehicle may also have features that can be customized through the controls on the radio. See *Vehicle Personalization on page 5-36*.

DIC Operation and Displays

The DIC has different displays, which can be accessed by using the DIC buttons on the turn signal lever to the left of the steering wheel. The DIC displays trip, fuel, vehicle system information, and warning messages if a system problem is detected.

DIC Buttons

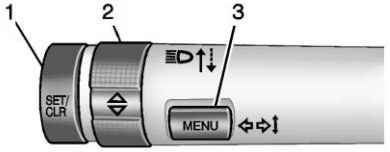

1. **SET/CLR:** Press to set or clear the menu item displayed.
2. △ / ▽ **(Thumbwheel):** Use to scroll through the menus.
3. **MENU:** Press to display the Trip/Fuel menu and the Vehicle Information menu. This button is also used to return to or exit the last screen displayed on the DIC.

Trip/Fuel Menu Items

Press MENU on the turn signal lever until Trip/Fuel Menu is displayed. Use △ / ▽ to scroll through the menu items. The following is the list of all possible trip/fuel displays. Some of the items may not be available for your particular vehicle.

- Digital Speedometer
- Trip 1
- Trip 2
- Power Flow (eAssist Only)
- Fuel Range
- Average Fuel Economy and Instantaneous Fuel Economy
- Average Vehicle Speed
- Timer
- Navigation
- Boost Gauge

Digital Speedometer

The speedometer shows how fast the vehicle is moving in either kilometers per hour (km/h) or miles per hour (mph). The speedometer cannot be reset.

Trip 1 and Trip 2

This display shows the current distance traveled, in either kilometers (km) or miles (mi), since the last reset for the trip odometer. The trip odometer can be reset to zero by pressing SET/CLR while the trip odometer display is showing.

Power Flow (eAssist Only)

This display shows the operating mode of the eAssist system and the high voltage battery charge level. The animation indicates the direction of energy flow.

Fuel Range

This display shows the approximate distance the vehicle can be driven without refueling. The fuel range estimate is based on an average of the vehicle's fuel economy over recent driving history and the amount of fuel remaining in the fuel tank. Fuel range cannot be reset.

Average Fuel Economy and Instantaneous Fuel Economy

This display shows the approximate average liters per 100 kilometers (L/100 km) or miles per gallon (mpg). This number is calculated based on the number of L/100 km (mpg) recorded since the last time this menu item was reset. The fuel economy can be reset by pressing SET/CLR while the Average Fuel Economy display is showing.

The instantaneous fuel economy display shows the current fuel economy in liters per 100 kilometers (L/100 km) or miles per gallon (mpg). This number reflects only the fuel economy that the vehicle has right now and changes frequently as driving conditions change. Unlike average economy, this display cannot be reset.

Average Vehicle Speed

This display shows the average speed of the vehicle in kilometers per hour (km/h) or miles per hour (mph). This average is calculated based on the various vehicle speeds recorded since the last reset of this value. The average speed can be reset by pressing SET/CLR while the Average Vehicle Speed display is showing.

Timer

This display can be used as a timer. To start the timer, press SET/CLR while Timer is displayed. The display will show the amount of time that has passed since the timer was last reset, not including time the ignition is off. Time will continue to be counted as long as the ignition is on, even if another display is being shown on the DIC. The timer will record up to 99 hours, 59 minutes, and 59 seconds (99:59:59) after which the display will return to zero. To stop the timer, press SET/CLR briefly while Timer is displayed. To reset the timer to zero, press and hold SET/CLR.

Navigation

This display is used for the Turn-by-Turn navigation, if equipped.

Boost Gauge

This display, available on some vehicles, is a boost gauge. It shows a visual display of the level of boost.

Vehicle Information Menu Items

Press MENU on the turn signal lever until Vehicle Information menu is displayed. Use △ / ▽ to scroll through the menu items. The following is the list of all possible vehicle information displays. Some of the items may not be available for your particular vehicle.

- Display Units
- Tire Pressure
- Jump Start (eAssist Only)

- Remaining Oil Life
- Battery

Display Units

Move △ / ▽ to switch between metric or US when the Unit display is active. Press SET/CLR to confirm the setting. This will change the displays on the cluster and DIC to either metric or English (US) measurements.

Tire Pressure

The display will show a vehicle with the approximate pressures of all four tires. Tire pressure is displayed in either kilopascal (kPa) or pounds per square inch (psi). See *Tire Pressure Monitor System on page 10-54* and *Tire Pressure Monitor Operation on page 10-55*.

Jump Start (eAssist Only)

This display allows for on-board jump starting of the vehicle. See "Jump Starting (On-board with eAssist Only)" for more information.

Remaining Oil Life

This display shows an estimate of the oil's remaining useful life. If Remaining Oil Life 99% is displayed, that means 99% of the current oil life remains.

When the remaining oil life is low, the CHANGE ENGINE OIL SOON message will appear on the display. See *Engine Oil Messages on page 5-31*. The oil should changed as soon as possible. See *Engine Oil on page 10-11*. In addition to the engine oil life system monitoring the oil life, additional maintenance is recommended. See *Maintenance Schedule on page 11-2*.

Remember, the Oil Life display must be reset after each oil change. It will not reset itself. Also, be careful not to reset the Oil Life display accidentally at any time other than when the oil has just been changed. It cannot be reset accurately until the next oil change. To reset the engine oil life system, press SET/CLR while the Oil Life display is active. See *Engine Oil Life System on page 10-13*.

Battery

This display, available on some vehicles, shows the current battery voltage. If the voltage is in the normal range, the value will display. For example, the display may read Battery Voltage 15.0 Volts. The vehicle's charging system regulates voltage based on the state of the battery. The battery voltage can fluctuate while viewing this information on the DIC. This is normal. See *Charging System Light on page 5-15*. If there is a problem with the battery charging system, the DIC will display a message.

Vehicle Messages

Messages displayed on the DIC indicate the status of the vehicle or some action that may be needed to correct a condition. Multiple messages may display one after the other.

The messages that do not require immediate action can be acknowledged and cleared by pressing SET/CLR. The messages that require immediate action cannot be cleared until that action is performed. All messages should be taken seriously and clearing the messages does not correct the problem.

The following are some of the vehicle messages that may be displayed depending on your vehicle content.

Battery Voltage and Charging Messages

BATTERY SAVER ACTIVE

This message displays when the vehicle has detected that the battery voltage is dropping beyond a reasonable point. The battery saver system starts reducing features of the vehicle that may be noticed. At the point that features are disabled, this message displays. Turn off unnecessary accessories to allow the battery to recharge.

LOW BATTERY

This message is displayed when the battery voltage is low. See *Battery on page 10-25*.

SERVICE BATTERY CHARGING SYSTEM

This message is displayed when there is a fault in the battery charging system. Take the vehicle to your dealer for service.

Brake System Messages

BRAKE FLUID LOW

This message is displayed when the brake fluid level is low. See *Brake Fluid on page 10-23*.

RELEASE PARKING BRAKE

This message is displayed if the Electric Parking Brake (EPB) is on while the vehicle is in motion. Release it before you attempt to drive. See *Parking Brake on page 9-30*.

SERVICE BRAKE ASSIST

This message may be displayed when there is a problem with the brake boost assist system. When this message is displayed, the brake boost assist motor might be heard operating and you might notice pulsation in the brake pedal. This is normal under these conditions. Take the vehicle to your dealer for service.

SERVICE PARKING BRAKE

This message is displayed when there is a problem with the Electric Parking Brake (EPB). See *Parking Brake on page 9-30*. Take the vehicle to your dealer.

STEP ON BRAKE TO RELEASE PARK BRAKE

This message is displayed if you attempt to release the Electric Parking Brake (EPB) without the brake pedal applied. See *Parking Brake on page 9-30*.

Compass Messages

CAL

This message is displayed when the compass needs to be calibrated. See *Compass on page 5-5*.

– –

Dashes will be displayed if the compass needs service. See your dealer for service.

Cruise Control Messages

CRUISE SET TO XXX

This message displays when the cruise control is set and shows the speed it was set to. See *Cruise Control on page 9-36*.

Door Ajar Messages

DRIVER DOOR OPEN

This message will display when the driver door is open. Close the door completely.

HOOD OPEN

This message will display when the hood is open. Close the hood completely.

LEFT REAR DOOR OPEN

This message will display when the driver side rear door is open. Close the door completely.

PASSENGER DOOR OPEN

This message will display when the front passenger door is open. Close the door completely.

RIGHT REAR DOOR OPEN

This message will display when the passenger side rear door is open. Close the door completely.

TRUNK OPEN

This message will display when the trunk is open. Close the trunk completely.

Engine Cooling System Messages

A/C OFF DUE TO HIGH ENGINE TEMP

This message displays when the engine coolant becomes hotter than the normal operating temperature. To avoid added strain on a hot engine, the air conditioning compressor automatically turns off.

When the coolant temperature returns to normal, the air conditioning compressor turns back on. You can continue to drive the vehicle.

If this message continues to appear, have the system repaired by your dealer as soon as possible to avoid damage to the engine.

COOLANT LEVEL LOW ADD COOLANT

This message will display if the coolant is low. See *Engine Coolant on page 10-18*.

ENGINE OVERHEATED — IDLE ENGINE

This message displays when the engine coolant temperature is too hot. Stop and allow the vehicle to idle until it cools down.

ENGINE OVERHEATED — STOP ENGINE

This message displays and a continuous chime sounds if the engine cooling system reaches unsafe temperatures for operation. Stop and turn off the vehicle as soon as it is safe to do so to avoid severe damage. This message clears when the engine has cooled to a safe operating temperature.

Engine Oil Messages

CHANGE ENGINE OIL SOON

This message displays when the engine oil needs to be changed. When the engine oil is changed, be sure to reset the Oil Life System. See *Engine Oil Life System on page 10-13*, *Driver Information Center (DIC) on page 5-25*, *Engine Oil on page 10-11*, and *Maintenance Schedule on page 11-2*.

ENGINE OIL HOT, IDLE ENGINE

This message displays when the engine oil temperature is too hot. Stop and allow the vehicle to idle until it cools down.

OIL PRESSURE LOW— STOP ENGINE

This message displays if low oil pressure levels occur. Stop the vehicle as soon as safely possible and do not operate it until the cause of the low oil pressure has been corrected. Check the oil as soon as possible and have the vehicle serviced by your dealer.

Engine Power Messages

ENGINE POWER IS REDUCED

This message displays when the vehicle's engine power is reduced. Reduced engine power can affect the vehicle's ability to accelerate. If this message is on, but there is no reduction in performance, proceed to your destination. The performance may be reduced the next time the vehicle is driven. The vehicle may be driven at a reduced speed while this message is on, but maximum acceleration and speed may be reduced. Anytime this message stays on, the vehicle should be taken to your dealer for service as soon as possible.

Fuel System Messages

FUEL LEVEL LOW

This message displays when the vehicle is low on fuel. Refuel as soon as possible.

TIGHTEN GAS CAP

This message displays when the fuel cap is not on tight. Tighten the fuel cap.

Key and Lock Messages

NO REMOTE DETECTED

This message displays when the transmitter battery is weak on vehicles with keyless access. See “Starting the Vehicle with a Low Transmitter Battery” under *Remote Keyless Entry (RKE) System Operation on page 2-3*.

REPLACE BATTERY IN REMOTE KEY

This message displays when the battery in the Remote Keyless Entry (RKE) transmitter needs to be replaced. See “Battery Replacement” under *Remote Keyless Entry (RKE) System Operation on page 2-3*.

Lamp Messages

AUTOMATIC LIGHT CONTROL ON/OFF

This message is displayed when the automatic light control has been turned on or off. See *Automatic Headlamp System on page 6-3*.

CHECK XXX TURN SIGNAL LAMP

When one of the turn signals is out, this message displays to show which bulb needs to be replaced. See *Bulb Replacement on page 10-28* and *Replacement Bulbs on page 10-36*.

TURN SIGNAL ON

This message is displayed if the turn signal has been left on. Turn off the turn signal.

Object Detection System Messages

LANE DEPARTURE WARNING UNAVAILABLE

This message may appear if LDW does not activate due to a temporary condition.

PARK ASSIST OFF

This message displays when the park assist system has been turned off or when there is a temporary condition causing the system to be disabled. See *Ultrasonic Parking Assist on page 9-40*.

SERVICE LANE DEPARTURE WARNING

This message may appear to indicate that LDW is not working properly. If this message remains on after continued driving, the system needs service. Take your vehicle to your dealer.

SERVICE PARK ASSIST

This message displays if there is a problem with the Ultrasonic Rear Parking Assist (URPA) system. Do not use this system to help you park. See *Ultrasonic Parking Assist on page 9-40* for more information. See your dealer for service.

Ride Control System Messages

SERVICE TRACTION CONTROL

This message displays when there is a problem with the Traction Control System (TCS). When this message is displayed, the system will not limit wheel spin. Adjust your driving accordingly. See your dealer for service.

SERVICE STABILITRAK

This message displays if there is a problem with the StabiliTrak system. If this message appears, try to reset the system. Stop; turn off the engine for at least 15 seconds; then start the engine again. If this message still comes on, it means there is a problem. See your dealer for service. The vehicle is safe to drive; however, you do not have the benefit of StabiliTrak, so reduce your speed and drive accordingly.

Security Messages

THEFT ATTEMPTED

This message displays if the vehicle detects a tamper condition.

Service Vehicle Messages

SERVICE AC SYSTEM

This message displays if there is a problem with the air conditioning system. Take the vehicle to your dealer for service.

SERVICE POWER STEERING

This message displays if there is a problem with the power steering system. Take the vehicle to your dealer for service.

SERVICE VEHICLE SOON

This message displays if there is a problem with the vehicle. Take the vehicle to your dealer for service.

Starting the Vehicle Messages

JUMP START ACTIVE WAIT TO START

This message displays while performing an on-board jump start of the vehicle. See “Jump Starting (On-board with eAssist Only).”

JUMP START COMPLETE ATTEMPT START

This message displays while performing an on-board jump start of the vehicle. See “Jump Starting (On-board with eAssist Only).”

JUMP START DISABLED SEE OWNERS MANUAL

This message displays if there is a problem with the on-board jump start system, or the 12 volt battery is too low to perform an on-board jump start. Try using jumper cables and performing a normal jump start. See “Jump Starting (On-board with eAssist Only).” Take the vehicle to your dealer for service if this message continues to be displayed.

Tire Messages

TIRE PRESSURE LOW ADD AIR TO TIRE

On vehicles with the Tire Pressure Monitor System (TPMS), this message displays when the pressure in one or more of the vehicle's tires is low.

The low tire pressure warning light will also come on. See *Tire Pressure Light on page 5-22*.

If a tire pressure message appears on the DIC, stop as soon as you can. Inflate the tires by adding air until the tire pressure is equal to the values shown on the Tire and Loading Information label. See *Tires on page 10-44*, *Vehicle Load Limits on page 9-10*, and *Tire Pressure on page 10-52*.

You can receive more than one tire pressure message at a time. To read the other messages that may have been sent at the same time, press the SET/CLR button. The DIC also shows the tire pressure values. See *Driver Information Center (DIC) on page 5-25*.

SERVICE TIRE MONITOR SYSTEM

This message displays if there is a problem with the Tire Pressure Monitor System (TPMS). See *Tire Pressure Monitor Operation on page 10-55*.

TIRE LEARNING ACTIVE

This message displays when the system is learning new tires. See *Tire Pressure Monitor Operation on page 10-55*.

Transmission Messages

SERVICE TRANSMISSION

This message displays if there is a problem with the transmission. See your dealer.

SHIFT DENIED

This message displays when attempting to use the automatic transmission manual mode to shift to too low or too high of a gear. See *Manual Mode on page 9-28*.

SHIFT TO PARK

This message displays when the transmission needs to be shifted to P (Park). This may appear when attempting to remove the key from the ignition or from the vehicle if the vehicle is not in P (Park).

TRANSMISSION HOT— IDLE ENGINE

This message displays and a chime sounds if the transmission fluid in the vehicle gets hot. Driving with the transmission fluid temperature high can cause damage to the vehicle. Stop the vehicle and let it idle to allow the transmission to cool. This message clears when the fluid temperature reaches a safe level.

Vehicle Reminder Messages

ICE POSSIBLE DRIVE WITH CARE

This message displays when ice conditions are possible.

Washer Fluid Messages

WASHER FLUID LOW ADD FLUID

This message may display when the washer fluid level is low. See *Washer Fluid on page 10-22*.

Window Messages

OPEN, THEN CLOSE DRIVER/ PASSENGER WINDOW

This message is displayed when the window needs to be reprogrammed. If the vehicle's battery has been recharged or disconnected, you will need to reprogram each front window for the express-up feature to work. See *Power Windows on page 2-19*.

Vehicle Personalization

The audio system controls are used to access the personalization menus for customizing vehicle features.

CONFIG (Configuration): Press to access the Configuration Settings menu.

TUNE/MENU: Turn to scroll through the menus. Press to enter the menus and select the menu items.

BACK ⇦ : Press to exit or move backward in a menu.

Entering the Personalization Menus

1. Press CONFIG to access the Configuration Settings menu.
2. Turn the TUNE/MENU knob to highlight Vehicle Settings.
3. Press TUNE/MENU to select the Vehicle Settings menu.

The following list of menu items will be available:

- Climate and Air Quality
- Comfort and Convenience
- Language
- Lighting
- Power Door Locks
- Remote Locking, Unlocking, Starting
- Return to Factory Settings

Turn the TUNE/MENU knob to highlight the menu. Press TUNE/MENU to select it. Each of the menus is detailed in the following information.

Climate and Air Quality

Select the Climate and Air Quality menu and the following may be displayed:

- Auto Fan Speed
- Remote Start Heated Seats
- Auto Defog
- Auto Rear Defog

Auto Fan Speed

This will allow you to select the automatic fan speed. It can be adjusted to run lower or higher than normal.

Press TUNE/MENU when Auto Fan Speed is highlighted to open the menu. Turn the TUNE/MENU knob to highlight High, Medium, or Low. Press TUNE/MENU to confirm the selection and move back to the last menu.

Remote Start Heated Seats

When turned on, this feature will turn the heated seats on when using remote start on cold days.

Press TUNE/MENU when Remote Start Heated Seats is highlighted. Turn the TUNE/MENU knob to select On or Off. Press TUNE/MENU to confirm the selection and move back to the last menu.

Auto Defog

Only vehicles with dual automatic climate control will have this option. This will allow you to turn the auto defog on or off.

Press TUNE/MENU when Auto Defog is highlighted to open the menu. Turn the TUNE/MENU knob to highlight On or Off. Press TUNE/MENU to confirm the selection and move back to the last menu.

Auto Rear Defog

This will allow you to turn the auto rear defog on or off. This feature will automatically turn on the rear window defogger when it is cold outside.

Press TUNE/MENU when Auto Rear Defog is highlighted to open the menu. Turn the TUNE/MENU knob to highlight On or Off. Press TUNE/MENU to confirm the selection and move back to the last menu.

Comfort and Convenience

Select the Comfort and Convenience menu and the following may be displayed:

- Easy Exit Driver Seat
- Chime Volume
- Reverse Tilt Mirror

Easy Exit Driver Seat

When on, this feature will move the driver seat rearward upon turning the ignition off and opening the driver door. This may be done to make it easier to exit the vehicle. See “Easy Exit Driver Seat” under *Memory Seats on page 3-6*.

This feature can be turned on or off.

Press TUNE/MENU when Easy Exit Driver Seat is highlighted. Turn the TUNE/MENU knob to select On or Off. Press TUNE/MENU to confirm and go back to the last menu.

Chime Volume

This allows selection of the chime volume level.

Press TUNE/MENU when Chime Volume is highlighted. Turn the TUNE/MENU knob to select Normal or High. Press TUNE/MENU to confirm and go back to the last menu.

Reverse Tilt Mirror

When on, both the driver and passenger mirrors will tilt downward when the vehicle is shifted to R (Reverse) to improve visibility of the ground near the rear wheels. They will return to their previous driving position when the vehicle is shifted out of R (Reverse), the ignition is turned to OFF, or the vehicle is left in R (Reverse). See *Reverse Tilt Mirrors on page 2-18*.

Press TUNE/MENU when Reverse Tilt Mirror is highlighted. Turn the TUNE/MENU knob to select On or Off. Press TUNE/MENU to confirm and go back to the last menu.

Language

Select the Language menu and the following will be displayed:

- English
- French
- Spanish

Press TUNE/MENU when Language is highlighted. Turn the TUNE/MENU knob to select the desired language. Press TUNE/MENU to confirm and go back to the last menu.

Lighting

Select the Lighting menu and the following may be displayed:

- Vehicle Locator Lights
- Exit Lighting

Vehicle Locator Lights

This allows the vehicle locator lights to be turned on or off. The vehicle locator lights come on when unlocking the vehicle with the RKE transmitter.

Press TUNE/MENU when Vehicle Locator Lights is highlighted. Turn the TUNE/MENU knob to select On or Off. Press TUNE/MENU to confirm and go back to the last menu.

Exit Lighting

This allows selection of how long the exterior lamps stay on when leaving the vehicle and it is dark outside.

Press TUNE/MENU when Exit Lighting is highlighted. Turn the TUNE/MENU knob to select Off, 30 Seconds, 1 Minute, or 2 Minutes. Press TUNE/MENU to confirm and go back to the last menu.

Power Door Locks

Select Power Door Locks and the following may be displayed:

- Unlocked Door Anti Lock Out
- Auto Door Unlock
- Delayed Door Lock
- Auto Door Lock

Unlocked Door Anti Lock Out

When on, this feature will keep the driver door from locking when the door is open. If Off is selected, the Delayed Door Lock menu will be available and the door will lock as programmed through this menu.

Press TUNE/MENU when Unlocked Door Anti Lock Out is highlighted. Turn the TUNE/MENU knob to select On or Off. Press TUNE/MENU to confirm and go back to the last menu.

Auto Door Unlock

This allows selection of which of the doors will automatically unlock when the vehicle is shifted into P (Park).

Press TUNE/MENU when Auto Door Unlock is highlighted. Turn the TUNE/MENU knob to select All Doors, Driver Door, or Off. Press TUNE/MENU to confirm and go back to the last menu.

Delayed Door Lock

When on, this feature will delay the locking of the doors until five seconds after the last door is closed. Three chimes will signal delayed locking is in use. Press either the power lock button or 🔒 on the RKE transmitter twice to override the delayed locking feature and immediately lock all of the doors.

Press TUNE/MENU when Delayed Door Lock is highlighted. Turn the TUNE/MENU knob to select On or Off. Press TUNE/MENU to confirm and go back to the last menu.

Auto Door Lock

This allows selection of which of the doors will automatically lock when the vehicle is shifted out of P (Park).

Press TUNE/MENU when Auto Door Lock is highlighted. Turn the TUNE/MENU knob to select All Doors, Driver Door, or Off. Press TUNE/MENU to confirm and go back to the last menu.

Remote Locking, Unlocking, Starting

Select Remote Locking, Unlocking, Starting and the following may be displayed:

- Unlock Feedback (Lights)
- Locking Feedback
- Door Unlock Options
- Memory Remote Recall
- Remote Left in Vehicle Reminder
- Relock Remote Door
- Passive Door Unlock
- Passive Door Lock

Unlock Feedback (Lights)

When on, the exterior lamps will flash when unlocking the vehicle with the RKE transmitter.

Press TUNE/MENU when Unlock Feedback (Lights) is highlighted. Turn the TUNE/MENU knob to select On or Off. Press TUNE/MENU to confirm and go back to the last menu.

Locking Feedback

This allows selection of what type of feedback is given when locking the vehicle with the RKE transmitter.

Press TUNE/MENU when Locking Feedback is highlighted. Turn the TUNE/MENU knob to select Lights and Horn, Lights Only, Horn Only, or Off. Press TUNE/MENU to confirm and go back to the last menu.

Door Unlock Options

This allows selection of which doors will unlock when pressing 🔓 on the RKE transmitter.

Press TUNE/MENU when Door Unlock Options is highlighted. Turn the TUNE/MENU knob to select All Doors or Driver Door Only. When set to Driver Door Only, the driver door will unlock the first time 🔓 is pressed and all doors will unlock when 🔓 is pressed a second time.

When set to All Doors, all of the doors will unlock at the first press of 🔓. Press TUNE/MENU to confirm and go back to the last menu.

Memory Remote Recall

This allows the Memory Remote Recall feature to be turned on or off.

When on, this feature will recall the current driver's last seat and outside mirror positions upon unlocking the driver door with the RKE transmitter, and opening that door. The current driver is identified when the RKE transmitter is used to unlock the driver door. If keyless access equipped, the recall will occur upon opening the driver door. See “Recalling RKE Memory Positions” under *Memory Seats on page 3-6*.

Press TUNE/MENU when Memory Remote Recall is highlighted. Turn the TUNE/MENU knob to select On or Off. Press TUNE/MENU to confirm and go back to the last menu.

Remote Left in Vehicle Reminder

This allows the Remote Left in Vehicle Reminder feature to be turned on or off. If on, the horn will chirp if a remote is left in the vehicle.

Press TUNE/MENU when Remote Left in Vehicle Reminder is highlighted. Turn the TUNE/MENU knob to select On or Off. Press TUNE/MENU to confirm and go back to the last menu.

Relock Remote Door

When on, the doors will automatically lock after a period of time if the vehicle is not entered or exited.

Press TUNE/MENU when Relock Remote Door is highlighted. Turn the TUNE/MENU knob to select On or Off. Press TUNE/MENU to confirm and go back to the last menu.

Passive Door Unlock

This allows selection of which doors are unlocked by pressing the button on the outside door handle.

Press TUNE/MENU when Passive Door Unlock is highlighted. Turn the TUNE/MENU knob to select All Doors or Driver Door. Press TUNE/MENU to confirm and go back to the last menu.

Passive Door Lock

This allows selection of turning Passive Locking Off, On or On with feedback.

Press TUNE/MENU when Passive Door Lock is highlighted. Turn the TUNE/MENU knob to select Off, On or On with Active Horn Chip. Press TUNE/MENU to confirm and go back to the last menu.

Return to Factory Settings

Select Return to Factory Settings for the option to return all vehicle personalization to the default settings. Turn the TUNE/MENU knob to select Yes or No. Press TUNE/MENU to confirm and go back to the last menu.

Universal Remote System

See *Radio Frequency Statement on page 13-21* for information regarding Part 15 of the Federal Communications Commission (FCC) rules and Industry Canada Standards RSS-GEN/210/220/310.

Universal Remote System Programming

If the vehicle has this feature, you will see these buttons with one indicator light next to them in the overhead console.

This system provides a way to replace up to three remote control transmitters used to activate devices such as garage door openers, security systems, and home automation devices.

Do not use the Universal Remote system with any garage door opener that does not have the stop and reverse feature. This includes any garage door opener model manufactured before April 1,1982.

Read the instructions completely before attempting to program the Universal Remote system. Because of the steps involved, it may be helpful to have another person available to assist with programming the Universal Remote system.

Keep the original hand-held transmitter for use in other vehicles as well as for future Universal Remote system programming. It is also recommended that upon the sale of the vehicle, the programmed Universal Remote system buttons be erased for security purposes. See “Erasing Universal Remote System Buttons” later in this section.

When programming a garage door, park outside of the garage. Park directly in line with and facing the garage door opener motor-head or gate motor-head. Be sure that people and objects are clear of the garage door or gate being programmed.

It is recommended that a new battery be installed in the hand-held transmitter for quicker and more accurate transmission of the radio-frequency signal.

Programming the Universal Remote System

For questions or help programming the Universal Remote system, call 1-800-355-3515 or go to www.homelink.com.

Programming a garage door opener involves time-sensitive actions, so read the entire procedure before starting. Otherwise, the device will time out and the procedure will have to be repeated.

To program up to three devices:

1. Hold the end of the hand-held transmitter about 3 to 8 cm (1 to 3 in) away from the Universal Remote system buttons while keeping the indicator light in view. The hand-held transmitter was supplied by the manufacturer of the garage door opener receiver (motor-head unit).
2. At the same time, press and hold both the hand-held transmitter button and one of the three Universal Remote system buttons to be used to operate the garage door. Do not release the Universal Remote system button or the hand-held transmitter button until the indicator light changes from a slowly to a rapidly flashing light. You now may release both buttons.

   Some entry gates and garage door openers may require substitution of Step 2 with the procedure noted in “Gate Operator and Canadian Programming” later in this section.

3. Press and hold for five seconds the newly trained Universal Remote system button (the button selected in Step 2) while observing the indicator light and garage door activation.
   - If the indicator light stays on continuously or the garage door starts to move when the Universal Remote system button is pressed and released, then the programming is complete. There is no need to continue programming Steps 4–6.
   - If the Universal Remote system indicator light blinks rapidly for two seconds, then turns to a constant light and the garage door does not move, continue with programming Steps 4–6.

     It may be helpful to have another person assist with the remaining Steps 4–6.

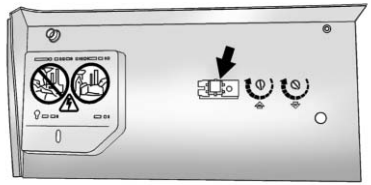

“Learn” or “Smart” Button

4. After Steps 1–3 have been completed, locate the “Learn” or “Smart” button inside the garage on the garage door opener receiver (motor-head unit). The name and color of the button may vary by manufacturer.
5. Firmly press and release the “Learn” or “Smart” button. After pressing this button, you will have 30 seconds to complete Step 6.
6. Immediately return to the vehicle. Firmly press and hold for two seconds the Universal Remote system button, selected in Step 2 to control the garage door, and then release it. If the garage door does not move or the lamp on the garage door opener receiver (motor-head unit) does not flash, press and hold the same button a second time for two seconds, then release it. Again, if the door does not move or the garage door lamp does not flash, press and hold the same button a third time for two seconds, then release.

The Universal Remote system should now activate the garage door.

To program the remaining two Universal Remote system buttons, begin with Step 1 of “Programming the Universal Remote System.”

Gate Operator and Canadian Programming

If you have questions or need help programming the Universal Remote system, call 1-800-355-3515 or go to www.homelink.com.

Canadian radio-frequency laws require transmitter signals to time out or quit after several seconds of transmission. This may not be long enough for the Universal Remote system to pick up the signal during programming. Similarly, some U.S. gate operators are manufactured to time out in the same manner.

If you live in Canada, or you are having difficulty programming a gate operator or garage door opener by using the “Programming the Universal Remote System” procedures, regardless of where you live, replace Step 2 under “Programming the Universal Remote System” with the following:

Continue to press and hold the Universal Remote system button while you press and release every two seconds (cycle) the hand-held transmitter button until the frequency signal has been successfully accepted by the Universal Remote system. The Universal Remote system indicator light will flash slowly at first and then rapidly. Proceed with Step 3 under “Programming the Universal Remote System” to complete.

Universal Remote System Operation

Using the Universal Remote System

Press and hold the appropriate Universal Remote system button for at least half of a second. The indicator light will come on while the signal is being transmitted.

Erasing Universal Remote System Buttons

All programmed buttons should be erased when the vehicle is sold or the lease ends.

To erase all programmed buttons on the Universal Remote system device:

1. Press and hold down the two outside buttons until the indicator light begins to flash. This should take about 10 seconds.
2. Release both buttons.

Reprogramming a Single Universal Remote System Button

To reprogram any of the three Universal Remote system buttons:

1. Press and hold the desired Universal Remote system button. Do not release the button.
2. The indicator light will begin to flash after 20 seconds. Without releasing the button, proceed with Step 1 under “Programming the Universal Remote System.”

If you have questions or need help programming the Universal Remote system, call 1-800-355-3515 or go to www.homelink.com. You may also call the customer assistance phone number under *Customer Assistance Offices (U.S. and Canada) on page 13-5* or *Customer Assistance Offices (Mexico) on page 13-5*.

✍ NOTES

Lighting

Exterior Lighting
Exterior Lamp Controls 6-1
Exterior Lamps Off Reminder 6-2
Headlamp High/Low-Beam Changer 6-2
Flash-to-Pass 6-2
Daytime Running Lamps (DRL) 6-2
Automatic Headlamp System 6-3
Hazard Warning Flashers 6-4
Turn and Lane-Change Signals 6-4
Fog Lamps 6-4

Interior Lighting
Instrument Panel Illumination Control 6-5
Courtesy Lamps 6-5
Dome Lamps 6-5
Reading Lamps 6-6

Lighting Features
Entry Lighting 6-6
Exit Lighting 6-7
Battery Load Management 6-7

Exterior Lighting

Exterior Lamp Controls

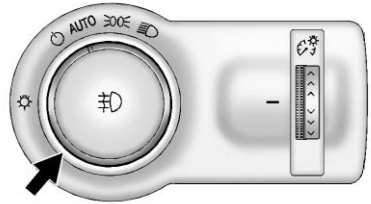

The exterior lamp control is on the instrument panel on the left side of the steering wheel.

Turn the control to the following positions:

⏻ **(Off):** Turns off the exterior lamps. The knob returns to the AUTO position after it is released. Turn to ⏻ again to reactivate the AUTO mode.

In Canada, the headlamps will automatically reactivate when the vehicle is shifted out of P (Park).

AUTO (Automatic): Automatically turns the exterior lamps on and off, depending on outside lighting.

(Parking Lamps): Turns on the parking lamps together with the following:

- Sidemarker Lamps
- Taillamps
- License Plate Lamps
- Instrument Panel Lights

(Headlamps): Turns on the headlamps together with the following:

- Sidemarker Lamps
- Taillamps
- License Plate Lamps
- Instrument Panel Lights
- Parking Lamps

Exterior Lamps Off Reminder

A warning chime sounds if the driver door is opened while the ignition is off and the exterior lamps are on.

Headlamp High/ Low-Beam Changer

(Headlamp High/Low-Beam Changer): Push the turn signal lever away from you and release, to turn the high beams on. To return to low beams, push the lever again or pull it toward you and release.

This indicator light turns on in the instrument cluster when the high-beam headlamps are on.

Flash-to-Pass

To flash the high beams, pull the turn signal lever toward you, and release.

Daytime Running Lamps (DRL)

Daytime running lamps (DRL) can make it easier for others to see the front of your vehicle during the day. Fully functional daytime running lamps are required on all vehicles first sold in Canada.

The DRL system turns on the low-beam headlamps at a reduced brightness. For vehicles with High Intensity Discharge (HID) headlamps, there is a dedicated DRL. The DRL will come on when all of the following conditions are met:

- The ignition is on.
- The exterior lamp control is in AUTO.

- The light sensor determines it is daytime.
- The vehicle is not in P (Park).

When the DRL are on, the taillamps, sidemarker lamps, instrument panel lights, and other lamps will not be on.

The DRL turn off when the headlamps are turned to ⏻ or the ignition is off.

This vehicle may have a DRL disabling function. When the DRL are on and a turn signal is activated, the DRL on that side will be off until the turn signal goes off.

Automatic Headlamp System

When the exterior lamp control is set to AUTO and it is dark enough outside, the headlamps come on automatically.

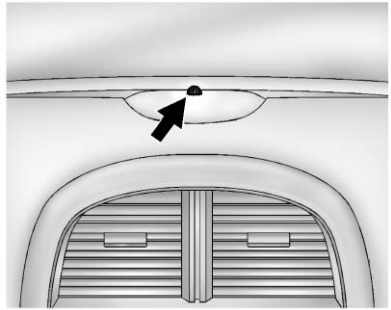

There is a light sensor on top of the instrument panel. Do not cover the sensor, otherwise the headlamps will come on when they are not needed.

The system may also turn on the headlamps when driving through a parking garage or tunnel.

When it is bright enough outside, the headlamps will turn off or may change to Daytime Running Lamps (DRL).

The automatic headlamp system turns off when the exterior lamp control is turned to ⏻ or the ignition is off.

Lights On with Wipers

If the windshield wipers are activated in daylight with the engine on, and the exterior lamp control is in AUTO, the headlamps, parking lamps, and other exterior lamps come on. The transition time for the lamps coming on varies based on wiper speed. When the wipers are not operating, these lamps turn off. Move the exterior lamp control to ⏻ or ≡DO≡ to disable this feature.

Hazard Warning Flashers

(Hazard Warning Flashers): Press this button to make the front and rear turn signal lamps flash on and off. Press again to turn the flashers off.

The hazard warning flashers turn on automatically if the airbags deploy.

Turn and Lane-Change Signals

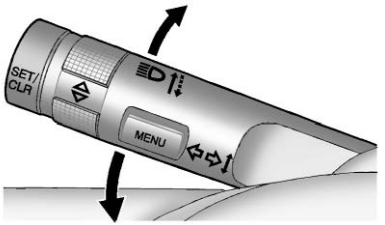

Move the turn signal lever all the way up or down to signal a turn.

An arrow on the instrument cluster flashes in the direction of the turn or lane change.

Raise or lower the lever until the arrow starts to flash to signal a lane change. Hold it there until the lane change is completed. If the lever is briefly pressed and released, the turn signal flashes three times.

The turn signal can be turned off manually by moving the lever back to its original position.

If after signaling a turn or lane change, the arrow flashes rapidly or does not come on, a signal bulb may be burned out.

Have any burned out bulbs replaced. If a bulb is not burned out, check the fuse. See *Fuses on page 10-38*.

Fog Lamps

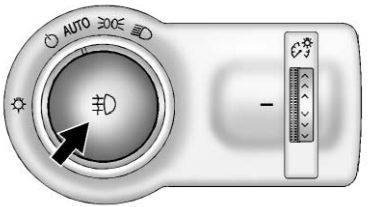

To turn on the fog lamps, the ignition and the headlamps or parking lamps must be on.

If the fog lamps are turned on while the exterior lamp control is in the AUTO position, the headlamps come on automatically.

(Fog Lamps): Press to turn on or off. An indicator light on the instrument cluster comes on when the fog lamps are on.

Some localities have laws that require the headlamps to be on along with the fog lamps.

Interior Lighting

Instrument Panel Illumination Control

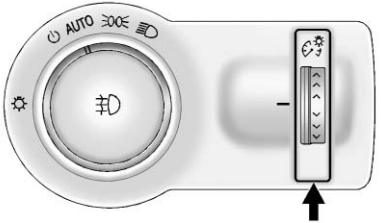

The brightness of the instrument panel lighting and steering wheel controls can be adjusted.

(Instrument Panel Illumination): Move and hold the thumbwheel up or down to brighten or dim the lights.

Courtesy Lamps

The courtesy lamps come on automatically when any door is opened and the dome lamp is in the door position.

Dome Lamps

The interior lamps control in the overhead console controls both the front and rear interior lamps.

To operate, press the buttons:

(Off): Turns the lamps off.

(Door): Turns the lamps on when any door is opened.

(On): Keeps the lamps on all the time.

Reading Lamps

There are front and rear reading lamps in the overhead console and the headliner.

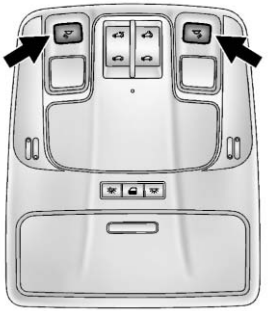

Front Reading Lamps

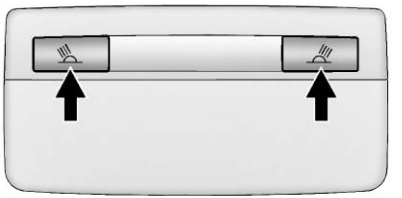

Rear Reading Lamps

or (Reading Lamps): Press the button near each lamp to turn it on or off.

Lighting Features

Entry Lighting

The headlamps, taillamps, license plate lamps, back-up lamps, dome lamps, and most of the interior lights turn on briefly when the Remote Keyless Entry (RKE) transmitter button is pressed, or when the door handle is pulled on a keyless access vehicle. See *Ignition Positions (Key Access) on page 9-15* or *Ignition Positions (Keyless Access) on page 9-17*. After about 30 seconds the exterior lamps turn off, then the dome lamps and remaining interior lights dim to off. Entry lighting can be disabled manually by changing the ignition out of the OFF position, or by pressing the RKE transmitter button.

This feature can be changed. See *Vehicle Personalization on page 5-36*.

Exit Lighting

The headlamps, taillamps, parking lamps, back-up lamps, and license plate lamps come on at night, or in areas with limited lighting, when the key is removed from the ignition. The dome lamps also come on when the key is removed from the ignition. The exterior lights and dome lamps remain on after the door is closed for a set amount of time, then automatically turn off.

For vehicles with keyless access, the exterior lamps automatically turn on when a door is opened after the ignition is turned off. The dome lamps come on after the ignition is changed to the OFF position. See *Ignition Positions (Key Access) on page 9-15* or *Ignition Positions (Keyless Access) on page 9-17*.

The exterior lamps turn off immediately by turning the exterior lamps control off.

This feature can be changed. See *Vehicle Personalization on page 5-36*.

Battery Load Management

The vehicle has Electric Power Management (EPM), which estimates the battery's temperature and state of charge. It then adjusts the voltage for best performance and extended life of the battery.

When the battery's state of charge is low, the voltage is raised slightly to quickly bring the charge back up. When the state of charge is high, the voltage is lowered slightly to prevent overcharging. If the vehicle has a voltage display on the Driver Information Center (DIC), you may see the voltage move up or down. This is normal. If there is a problem, an alert will be displayed.

The battery can be discharged at idle if the electrical loads are very high. This is true for all vehicles. This is because the generator (alternator) may not be spinning fast enough at idle to produce all the power that is needed for very high electrical loads.

A high electrical load occurs when several of the following are on, such as: headlamps, high beams, fog lamps, rear window defogger, climate control fan at high speed, heated seats, engine cooling fans, trailer loads, and loads plugged into accessory power outlets.

EPM works to prevent excessive discharge of the battery. It does this by balancing the generator's output and the vehicle's electrical needs. It can increase engine idle speed to generate more power, whenever needed. It can temporarily reduce the power demands of some accessories.

Normally, these actions occur in steps or levels, without being noticeable. In rare cases at the highest levels of corrective action, this action may be noticeable to the driver. If so, a DIC message might be displayed and it is recommended that the driver reduce the electrical loads as much as possible. See *Battery Voltage and Charging Messages on page 5-29*.

✍ NOTES

Infotainment System

Introduction
Infotainment 7-1
Theft-Deterrent Feature 7-2
Overview 7-2
Operation 7-5

Radio
AM-FM Radio 7-9
Satellite Radio 7-11
Radio Reception 7-13
Backglass Antenna 7-14
Multi-Band Antenna 7-14

Audio Players
CD Player 7-14
Auxiliary Devices 7-16

Phone
Bluetooth (Overview) 7-22
Bluetooth (Infotainment Controls) 7-23
Bluetooth (Voice Recognition) 7-27

Introduction

Infotainment

Determine which radio the vehicle has. For the radio without connectivity, read the following pages to become familiar with its features. For radios with connectivity, see the infotainment manual.

⚠ WARNING

Taking your eyes off the road for extended periods could cause a crash resulting in injury or death to you or others. Do not give extended attention to infotainment tasks while driving.

This system provides access to many audio and non-audio listings.

To minimize taking your eyes off the road while driving, do the following while the vehicle is parked:

- Become familiar with the operation and controls of the audio system.
- Set up the tone, speaker adjustments, and preset radio stations.

See *Defensive Driving on page 9-3.*

Notice: **Contact your dealer before adding any equipment.**

Adding audio or communication equipment could interfere with the operation of the engine, radio, or other systems, and could damage them. Follow federal rules covering mobile radio and telephone equipment.

Notice: **The chime signals related to safety belts, parking brake, and other functions of your vehicle operate through the radio/ entertainment system. If that equipment is replaced or additional equipment is added to your vehicle, the chimes may not work. Make sure that replacement or additional equipment is compatible with your vehicle before installing it. See *Accessories and Modifications on page 10-3*.**

The vehicle has Retained Accessory Power (RAP). With RAP, the audio system can be played even after the ignition is turned off. See *Retained Accessory Power (RAP) on page 9-23*.

Theft-Deterrent Feature

The theft-deterrent feature works by learning a portion of the Vehicle Identification Number (VIN) to the infotainment system. The infotainment system does not operate if it is stolen or moved to a different vehicle.

Overview

Infotainment System Overview

Radio faceplate examples are provided to help identify buttons and to help understand the functions of the radio. Find the faceplate that best matches the vehicle for a description.

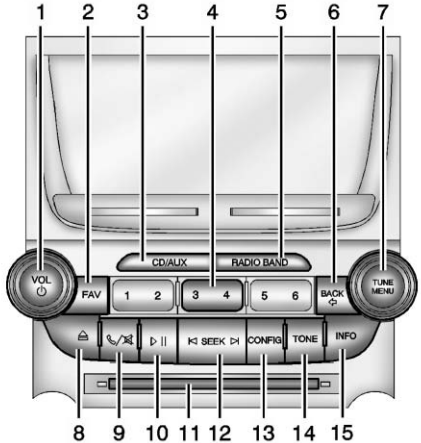

Radio with CD

1. VOL/ ⏻ (Volume/Power)
   - Turns the system on or off and adjusts the volume.
2. FAV (Favorites)
   - Opens the favorites list.
3. CD/AUX
   - Selects the CD player or external audio source.
   - Selects a connected external audio source.
4. Buttons 1 to 6
   - Saves and selects favorite stations.
5. RADIO/BAND
   - Changes the band while listening to the radio.
   - Selects the radio when listening to a different audio source.
6. BACK ⇦
   - Menu: Moves one level back.
   - Character Input: Deletes the last character.
7. TUNE/MENU
   - Radio: Manually selects radio stations.
   - CD: Selects tracks.
8. ⏏ (CD Eject)
   - Removes a disc from the CD slot.

9. ✆ / 🔇 (Phone/Mute)
   - Opens the Phone menu.
   - Mutes the audio system.
10. ▷II (Play/Pause)
   - Press to start, pause, and resume playback. See *CD Player on page 7-14*.
11. CD Slot
   - Insert a CD.
12. ⏮ SEEK ⏭
   - Press ⏮ to seek to the beginning of the current or previous track. If the track has been playing for less than five seconds, it seeks the previous track. If longer than five seconds, the current track starts from the beginning.
   - Press and hold ⏮ to quickly reverse through a track. Release the button to return to playing speed. See *CD Player on page 7-14*.
   - For AM or FM, press ⏮ to seek to the previous strong station.
   - Press ⏭ to seek the next track.
   - Press and hold ⏭ to fast forward through a track.
   - Release ⏭ to return to playing speed. See *CD Player on page 7-14*.
   - For AM or FM, press ⏭ to seek to the next strong station.
13. CONFIG (Configuration)
   - Opens the Configuration menu.
14. TONE
   - Press to access the Tone Settings menu to adjust bass, midrange, and treble. See *Operation on page 7-5*.
15. INFO
   - Radio: Shows available information about the current station.
   - CD: Shows available information about the current track.

Configuration Setup Menu

Press the CONFIG button to display the Configuration menu. The Configuration menu is used for changing the settings for the audio, phone, vehicle configuration, and time features.

Turn the TUNE/MENU knob to scroll through the available setup features. Once the desired feature displays, press the TUNE/MENU knob or press the desired feature on the screen, to display more options within that feature.

Languages

To change the display language, see *Vehicle Personalization on page 5-36*.

The vehicle supports English, French, and Spanish. The default language is English.

Operation

Controls

The infotainment system is operated by using the pushbuttons, multifunction knobs, menus shown on the display, and steering wheel controls, if equipped.

Turning the System On or Off

VOL/ ⏻ (Volume/Power): Press to turn the system on and off.

Automatic Switch-Off

If the infotainment system has been turned on after the ignition is turned off, the system will turn off automatically after 10 minutes.

Volume Control

VOL/ ⏻ (Volume/Power): Turn to adjust the volume.

/ (Phone): For vehicles with OnStar, press and hold / to mute the infotainment system. Press and hold / again, or turn the VOL/ ⏻ knob to cancel mute.

For vehicles without OnStar®, press / to mute the infotainment system. Press / again, or turn the VOL/ ⏻ knob to cancel mute.

Menu System

Controls

The TUNE/MENU knob and the BACK button are used to navigate the menu system.

TUNE/MENU: Press to:

- Select or activate the highlighted menu option.
- Confirm a set value.
- Turn a system setting on or off.

Turn to:

- Enter the menu system.
- Highlight a menu option.
- Select a value.

BACK : Press to:

- Exit a menu.
- Return from a submenu screen to the previous menu screen.
- Delete the last character in a sequence.

Selecting a Menu Option

The base radio displays one line of text at a time.

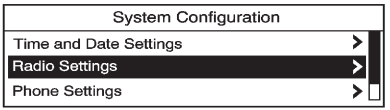

1. Turn the TUNE/MENU knob to move the highlighted bar.
2. Press TUNE/MENU to select the highlighted option.

Submenus

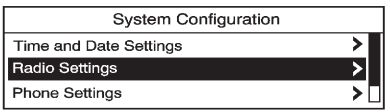

An arrow on the right-hand edge of the menu indicates that it has a submenu with other options.

Activating a Setting

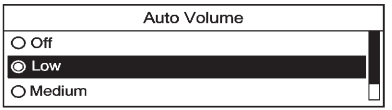

1. Turn the TUNE/MENU knob to highlight the setting.
2. Press TUNE/MENU to activate the setting.

Setting a Value

1. Turn the TUNE/MENU knob to change the current value of the setting.
2. Press TUNE/MENU to confirm the setting.

Turning a Function On or Off

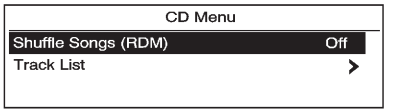

1. Turn the TUNE/MENU knob to highlight the function.
2. Press TUNE/MENU to turn the function on or off.

Entering a Character Sequence

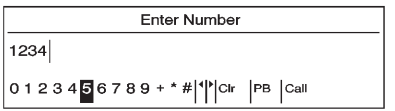

1. Turn the TUNE/MENU knob to highlight the character.
2. Press TUNE/MENU to select the character.

Press the BACK ⇦ button to delete the last character in the sequence or press and hold to delete the entire character sequence.

Audio Settings

The audio settings can be set for each radio band and each audio player source.

To quickly reset an audio setting value to 0:

1. Press the TONE button.
2. Select the audio setting.
3. Press and hold TUNE/MENU until the value changes to 0.

Press the BACK ⇦ button to go back to the Tone Settings menu.

Adjusting the Treble, Midrange, and Bass

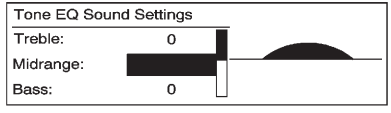

1. Press the TONE button.
2. Select Treble, Midrange, or Bass.
3. Select the value.

Press the BACK ⇦ button to go back to the Tone Settings menu.

Adjusting the Fader and Balance

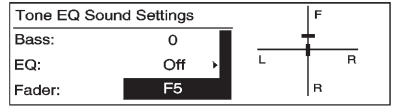

1. Press the TONE button.
2. Select Fader or Balance.
3. Select the value.

Press the BACK ⇦ button to go back to the Tone Settings menu.

Adjusting the EQ (Equalizer)

For vehicles that have an equalizer:

1. Press the TONE button.
2. Select EQ.
3. Select the setting.

Press the BACK ⇦ button to go back to the Tone Settings menu.

System Settings

Speed Compensated Volume

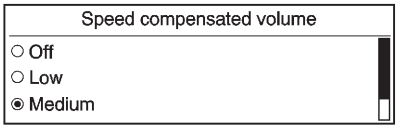

The Speed Compensated Volume feature automatically adjusts the radio volume to compensate for road and wind noise as the vehicle speeds up or slows down, so that the volume level is consistent.

The level of volume compensation can be selected, or the auto volume feature can be turned off.

1. Press the CONFIG button.
2. Select Radio Settings.
3. Select Speed compensated volume.
4. Select the setting.
5. Press BACK button to go back to the System Configuration menu.

Configuring the Number of Favorite Pages

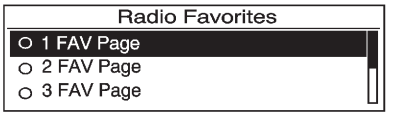

To configure the number of available favorite pages:

1. Press the CONFIG button.
2. Select Radio Settings.
3. Select Radio Favorites.
4. Select the number of available favorite pages.
5. Press the BACK button to go back to the System Configuration menu.

Auto Volume

The auto volume feature automatically adjusts the radio volume to compensate for road and wind noise as the vehicle speeds up or slows down, so that the volume level is consistent.

The level of volume compensation can be selected, or the auto volume feature can be turned off.

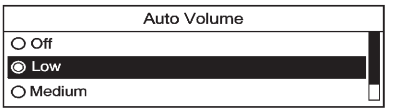

1. Press the CONFIG button.
2. Select Radio Settings.
3. Select Auto Volume.
4. Select the setting.
5. Press the BACK button to go back to the System Configuration menu.

Maximum Startup Volume

The maximum volume played when the radio is first turned on can be set.

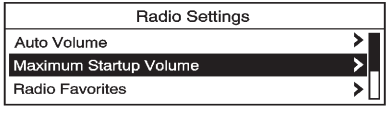

1. Press the CONFIG button.
2. Select Radio Settings.
3. Select Maximum Startup Volume.
4. Select the setting.
5. Press the BACK ⇦ button to go back to the System Configuration menu.

Regionalization

RDS stations will broadcast different programs on different frequencies. To set the Regional (REG) feature on or off:

1. Press the CONFIG button.
2. Select Regional (REG).
3. Select On or Off.
4. Press BACK ⇦ to go back to the previous menu.

Radio

AM-FM Radio

Control Buttons

The buttons used to control the radio are:

RADIO/BAND: Press to turn the radio on and choose between AM, FM, or SiriusXM if equipped.

TUNE/MENU: Press and turn to navigate the available menus. Turn to manually change stations.

INFO: Press to display additional information that may be available for the current song.

⏮ **SEEK** ⏭ **:** Press to search for stations.

FAV: Press to open the favorites list.

1 to 6: Press to select preset stations.

RDS (Radio Data System)

The radio may have RDS. The RDS feature is available for use only on FM stations that broadcast RDS information. This feature only works when the information from the radio station is available. In rare cases, a radio station could broadcast incorrect information that causes the radio features to work improperly. If this happens, contact the radio station.

While the radio is tuned to an FM-RDS station, the station name or call letters display.

Radio Menus

Radio menus are available for AM, FM, or SiriusXM if equipped.

Turn the TUNE/MENU knob to open the main radio menu for that frequency.

Selecting a Band

Press the RADIO/BAND button to choose AM, FM, or SiriusXM if equipped. The last station that was playing starts playing again.

Selecting a Station

Seek Tuning

If the radio station is not known:

Briefly press ⏮ or ⏭ to automatically search for the next available station. If a station is not found, the radio switches to a more sensitive search level. If a station still is not found, the frequency that was last active begins to play.

If the radio station is known:

Press and hold ⏮ or ⏭ until the station on the display is reached, then release the button.

Manual Tuning

Turn the TUNE/MENU knob to select the frequency on the display.

Favorites List

1. Turn the TUNE/MENU knob.
2. Select Favorites List.
3. Select the station.

Station Lists

1. Turn the TUNE/MENU knob.
2. Select AM or FM Station List. All receivable stations in the current reception area are displayed. If a station list has not been created, an automatic station search is done.
3. Select the station.

Category Lists

Most stations that broadcast an RDS program type code specify the type of programming transmitted. Some stations change the program type code depending on the content. The system stores the RDS stations sorted by program type in the FM category list.

To search for a programming type determined by station:

1. Turn the TUNE/MENU knob.
2. Select FM category list. A list of all programming types available displays.
3. Select the programming type. A list of stations that transmit programming of the selected type displays.
4. Select the station.

   The category lists are updated when the station lists are updated.

Updating Station & Category Lists

If stations stored in the station list can no longer be received:

1. Turn the TUNE/MENU knob.
2. Select Update AM or FM Station List, if the stations stored in the station list are no longer received. A station search will be completed and the first station in the updated list will play.

To cancel the station search, press TUNE/MENU.

Storing a Station as a Favorite

Stations from all bands can be stored in any order in the favorite pages.

Up to six stations can be stored in each favorite page and the number of available favorite pages can be set.

Storing Stations

To store the station to a position in the list, press the corresponding button 1 to 6 until a beep is heard.

Retrieving Stations

Press the FAV button to open a favorite page or to switch to another favorite page. Briefly press one of the 1 to 6 buttons to retrieve the station.

Satellite Radio

SiriusXM® Satellite Radio Service

Vehicles with a SiriusXM satellite radio tuner and a SiriusXM satellite radio subscription can receive SiriusXM programming.

SiriusXM is a satellite radio service based in the 48 contiguous United States and 10 Canadian provinces. SiriusXM satellite radio has a wide variety of programming and commercial-free music, coast to coast, and in digital-quality sound. A service fee is required to receive the SiriusXM service. For more information, see www.siriusxm.com or 1-866-635-2349 (U.S.), and www.xmradio.ca or 1-877-209-0079 (Canada).

When SiriusXM is active, the channel name and number, category name, song title, and artist display on the screen.

SiriusXM Categories

SiriusXM stations are organized in categories.

To customize which SiriusXM categories are used and displayed in the system, see “Adding or Removing SiriusXM Categories” following.

Adding or Removing SiriusXM Categories

1. Press the CONFIG button on the faceplate.
2. Select Radio Settings.
3. Select Add/Remove XM Categories.
4. From the Add/Remove XM Categories screen, select or deselect any category to be used in XM mode. A checkmark will indicate that the category is selected.

Turning SiriusXM Channel Graphic On or Off

1. Press the CONFIG button on the faceplate.
2. Select Radio Settings.
3. Select XM Channel Graphic to turn on or off.

SiriusXM Messages

XL (Explicit Language Channels): These channels, or any others, can be blocked by request, by calling 1-866-635-2349 (U.S.) or 1-877-209-0079 (Canada).

XM Updating: The encryption code in the receiver is being updated. No action is required. This process should take no longer than 30 seconds.

Loading XM: The audio system is acquiring and processing audio and text data. No action is needed. This message should disappear shortly.

Channel Off Air: This channel is not currently in service. Tune in to another channel.

Channel Unauth: This channel is blocked or cannot be received with your SiriusXM subscription package.

Channel Unavailable: This previously assigned channel is no longer assigned. Tune to another station.

No Artist Info: The system is working properly. No artist information is available at this time on this channel.

No Title Info: The system is working properly. No song title information is available at this time on this channel.

No CAT Info: The system is working properly. No category information is available at this time on this channel.

No Information: The system is working properly. No text or informational messages are available at this time on this channel.

No Subscription Please Renew: The SiriusXM subscription needs to be reactivated. Contact SiriusXM at www.siriusxm.com or 1-866-635-2349 (U.S.), and www.xmradio.ca or 1-877-209-0079 (Canada).

No XM Signal: The system is working properly. The vehicle may be in a location where the SiriusXM signal is being blocked. When the vehicle is moved into an open area, the signal should return.

CAT Not Found: The system is working properly. There are no channels available for the selected category.

XM Radio ID: If tuned to channel 0, this message alternates with the SiriusXM Radio eight-digit radio ID label. This label is needed to activate the service.

Unknown: If this message is received when tuned to channel 0, there could be a receiver fault. Consult with your dealer.

Check Antenna: If this message does not clear within a short period of time, the receiver could have a fault. Consult with your dealer.

XM Not Available: If this message does not clear within a short period of time, the receiver could have a fault. Consult with your dealer.

Radio Reception

Frequency interference and static can occur during normal radio reception if items such as phone chargers, vehicle convenience accessories, and external electronic devices are plugged into the accessory power outlet. If there is interference or static, unplug the item from the accessory power outlet.

FM

FM signals only reach about 16 to 65 km (10 to 40 mi). Although the radio has a built-in electronic circuit that automatically works to reduce interference, some static can occur, especially around tall buildings or hills, causing the sound to fade in and out.

AM

The range for most AM stations is greater than for FM, especially at night. The longer range can cause station frequencies to interfere with each other. Static can also occur when things like storms and power lines interfere with radio reception. When this happens, try reducing the treble on the radio.

SiriusXM Satellite Radio Service

SiriusXM Satellite Radio Service provides digital radio reception. Tall buildings or hills can interfere with satellite radio signals, causing the sound to fade in and out. In addition, traveling or standing under heavy foliage, bridges, garages, or tunnels may cause loss of the SiriusXM signal for a period of time.

Cell Phone Usage

Cell phone usage, such as making or receiving phone calls, charging, or just having the phone on may cause static interference in the radio. Unplug the phone or turn it off if this happens.

Backglass Antenna

The AM-FM antenna is integrated with the rear window defogger in the rear window. Do not scratch the inside surface or damage the lines in the glass. If the inside surface is damaged, it could interfere with radio reception. For proper radio reception, the antenna connector needs to be properly attached to the post on the glass.

If attaching a cell phone antenna to the glass, attach it between the grid lines.

Notice: **Using a razor blade or sharp object to clear the inside rear window can damage the rear window antenna and/or the rear window defogger. Repairs would not be covered by the vehicle warranty. Do not clear the inside rear window with sharp objects.**

Notice: **Do not apply aftermarket glass tinting with metallic film. The metallic film in some tinting materials will interfere with or distort the incoming radio reception. Any damage caused to the backglass antenna due to metallic tinting materials will not be covered by the vehicle warranty.**

Multi-Band Antenna

The roof antenna is for OnStar®, SiriusXM® Satellite Radio, and GPS (Global Positioning System). Keep clear of obstructions for clear reception. If the vehicle has a sunroof, and it is open, reception can also be affected.

Audio Players

CD Player

The player can be used for CDs and MP3s.

With the ignition on, insert a CD into the slot, label side up. The player pulls it in and begins playing.

The vehicle must be in P (Park) for video to display.

The system is capable of playing:

- Most audio CDs
- CD-R
- CD-RW
- MP3 or unprotected WMA formats

When playing any compatible recordable disc, the sound quality can be reduced due to disc quality, the method of recording, the quality of the music or video that has been recorded, or the way the disc has been handled.

To avoid damage to the CD player:

- Do not use scratched or damaged discs.
- Do not apply labels to discs. The labels could get caught in the player.
- Insert only one disc at a time.
- Keep the loading slot free of foreign materials, liquids, and debris.

If a description label is needed, try labeling the top of the disc using a marking pen.

Loading and Ejecting Discs

To load a disc:

1. Turn the ignition on.
2. Insert a disc into the slot. The player pulls it in the rest of the way. If the disc is damaged or improperly loaded, there is an error and the disc ejects.

The disc automatically plays once loaded.

Press ⏏ to eject a disc from the CD player.

Playing an Audio CD

CD/AUX: Press to use the CD player.

▷ II (Play/Pause): Use to start, pause, or resume play.

⏮ SEEK ⏭:

- Press ⏮ to seek to the beginning of the current or previous track. If the track has been playing for less than five seconds, it seeks the previous track. If longer than five seconds, the current track starts from the beginning.
- Press and hold ⏮ to quickly reverse through a track. Release the button to return to playing speed.
- For AM or FM, press ⏮ to seek to the previous strong station.
- Press ⏭ to seek the next track.
- Press and hold ⏭ to fast forward through a track.
- Release ⏭ to return to playing speed.

TUNE/MENU: Turn to the right or left to select the next or previous track. Press this knob to select the menu. If a track is selected from the list, the system plays the track and returns to the CD screen.

Error Messages

If Disc Read Error displays and/or the disc comes out, it could be for one of the following reasons:

- The disc has an invalid or unknown format.
- The disc is not from a correct region.
- The disc is very hot. Try the disc again when the temperature returns to normal.
- The road is very rough. Try the disc again when the road is smoother.

- The disc is dirty, scratched, wet, or upside down.
- The air is very humid. Try the disc again later.
- There was a problem while burning the disc.
- The label is caught in the CD player.

If the CD is not playing correctly, for any other reason, try a known good CD.

If any error continues, contact your dealer.

Auxiliary Devices

This vehicle has an auxiliary input jack in the center console. Possible auxiliary audio sources include:

- Laptop computer
- MP3 player
- Tape player

This jack is not an audio output. Do not plug headphones into the auxiliary input jack. Auxiliary devices should be set up while the vehicle is in P (Park).

Connect a 3.5 mm (1/8 in) cable from the auxiliary device to the auxiliary input jack. When a device is connected, the system automatically begins playing audio from the device over the vehicle speakers.

If an auxiliary device has already been connected, but a different source is currently active, press the CD/AUX button on the radio faceplate, then press SOURCE repeatedly to cycle through all of the available audio source screens, until the AUX source screen is selected.

Portable devices are controlled by using the menu system described in *Overview on page 7-2*.

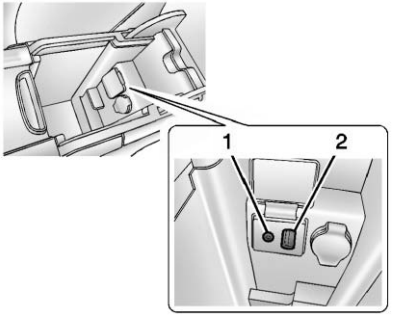

1. 3.5 mm Auxiliary Input Jack
2. USB Port

The auxiliary input jack and USB port are in the center console.

Keep the storage area closed when not in use.

USB Port

The following devices may be connected and controlled by the infotainment system.

- iPods®
- PlaysForSure Devices (PFD)
- USB Drives
- Zunes™

Not all iPods, PFDs, USB Drives, and Zunes are compatible with the infotainment system.

Connecting and Controlling an iPod®

Not all iPods can be controlled by the infotainment system.

Connecting an iPod

Connect the iPod to the USB port in the center console.

Searching for a Track

Tracks can be searched for by:

- Playlists
- Artists
- Albums
- Song Titles
- Podcasts
- Genres
- Audiobooks
- Composers

To search for tracks:

1. Turn the TUNE/MENU knob.
2. Select Search.
3. Select: Playlists, Artists, Albums, Song Titles, Podcasts, Genres, Audiobooks, or Composers.
4. Select the track.

Shuffle

Turn the TUNE/MENU knob and set Shuffle Songs (Random) to On or Off, then press the BACK button to return to the main screen.

On: Plays tracks in the current folder in random order.

Off: Plays tracks in the current folder in sequential order.

Repeat

Turn the TUNE/MENU knob and set Repeat to On or Off, then press the BACK button to return to the main screen.

On: Repeats the current track.

Off: Playback starts from the beginning of the current track after the last track finishes.

Connecting and Controlling a PlaysForSure Device (PFD) or Zune™

Connecting a PFD or Zune

Connect the PFD or Zune to the USB port in the center console.

Searching for a Track

Tracks can be searched for by:

- Playlists
- Artists
- Albums
- Song Titles
- Podcasts
- Genres

To search for tracks:

1. Turn the TUNE/MENU knob.
2. Select Search.
3. Select: Playlists, Artists, Albums, Song Titles, Podcasts, or Genres.
4. Select the track.

Shuffle Functionality

Turn the TUNE/MENU knob and set Shuffle Songs (Random) to On or Off.

On: Plays current tracks in random order.

Off: Plays current tracks in sequential order.

Repeat Functionality

Turn the TUNE/MENU knob and set Repeat to On or Off.

Repeat On: Repeats the current track.

Repeat Off: Playback starts from the beginning of the current track after the last track finishes.

Connecting and Controlling a USB Drive

The infotainment system can only play back .mp3 and .wma files from a USB drive.

Only the first 10,000 songs are recognized on the device.

When a device is not supported, the message “No supported data found. You can safely disconnect the device” appears.

Connecting a USB Drive

Connect the USB drive to the USB port in the center console.

Searching for a Track

It is normal for the search feature to take some time to display the information after reading the device due to the amount of information stored.

Files that do not have any meta data stored in the ID3 tag display as Unknown.

Tracks can be searched for by:

- Playlists*
- Artists
- Albums
- Song Titles
- Genres
- Folder View

*This only displays if a playlist is found on the device.

To search for tracks:

1. Turn the TUNE/MENU knob.
2. Select Search.
3. Select: Playlists, Artists, Albums, Song Titles, Genres, or Folder View.
4. Select the track.

Shuffle Functionality

Turn the TUNE/MENU knob and set Shuffle Songs (Random) to On or Off.

On: Plays current tracks in random order.

Off: Plays current tracks in sequential order.

Repeat Functionality

Turn the TUNE/MENU knob and set Repeat to On or Off.

Repeat On: Repeats the current track.

Repeat Off: Playback starts from the beginning of the current track after the last track finishes.

Connecting a Bluetooth® Device

Before a Bluetooth device can be connected to the infotainment system, it must first be paired to the system. Not all Bluetooth devices can be paired to the infotainment system. Before pairing the Bluetooth device, become familiar with its user guide for Bluetooth functions. The system only connects to Bluetooth devices that support A2DP (Advanced Audio Distribution Profile) version 1.2.

A Bluetooth phone with MP3 capability cannot be paired to the vehicle as a phone and an MP3 player at the same time.

Pairing Information:

- Up to five devices can be paired to the system.
- The pairing process is disabled when the vehicle is moving.
- The infotainment system automatically links with the first available paired device in the order the device was paired.
- Only one paired device can be connected to the infotainment system at a time.
- Pairing should only need to be completed once, unless changes to the pairing information have been made or the device is deleted.

Bluetooth Setup Menu

The Bluetooth Setup menu can be accessed with or without a device attached to the USB port.

To select the Bluetooth Setup menu when a device is attached to the USB port and active:

1. Turn the TUNE/MENU knob while in the iPod, Zune, PFD, or USB device main menu.
2. Select Bluetooth Music Setup.

To select the Bluetooth Music Setup menu when a device is not attached to the USB port, or when a device is attached to the USB port but not active:

1. Press the CD/AUX button until AUX is the active source.
2. Turn the TUNE/MENU knob.
3. Select Bluetooth Music Setup.

To select the Bluetooth Music Setup menu when a Bluetooth device is connected and active:

1. Turn the TUNE/MENU knob.
2. Select Bluetooth Music Setup.

Pairing a Device

1. Select Connect To New Device from the Bluetooth Music Setup menu.
2. The system asks a series of Yes/No questions to determine what type of device is being paired.
3. After the system determines what type of Bluetooth device is being paired, the Bluetooth device will need to be put into discovery mode.
4. Some devices may require a Personal Identification Number (PIN) in order to complete the pairing process. Locate the device named “GMusicConnect” in the list on the Bluetooth device and follow the instructions on the device to enter the four-digit PIN provided by the infotainment system.

Connecting to a Device

Once a device is paired to the infotainment system, it can be connected to the infotainment system.

To connect a paired device when no other device is connected to the infotainment system:

1. Select the Select Device option from the Bluetooth Music Setup menu.
2. Select the new device.

To connect a paired device when another device is connected to the infotainment system:

1. Select the Select Device option from the Bluetooth Music Setup menu.
2. Select the new device.
3. The active device is disconnected from the system and the new device is connected.

Removing a Device

1. Select Remove Device from the Bluetooth Music Setup menu.
2. Select the device.
3. The device is removed from the system.

Before connecting to the removed device again, it will need to paired to the infotainment system.

Changing the Default PIN

To change the default PIN:

1. Select Change Default PIN from the Bluetooth Music Setup menu.
2. Select one of the pre-defined PINs, or select Other to create a PIN.

To create a PIN:

1. Select the length of the PIN.
2. Enter the character sequence.

Messages

The following messages may appear on the infotainment screen.

Poor Bluetooth Signal Quality: This message displays when the Bluetooth signal strength is low.

This Feature is Unavailable While Vehicle is Moving: This message displays when an action is not allowed while the vehicle is moving.

Controlling a Bluetooth Device

Bluetooth devices that support AVRCP (Audio/Video Remote Control Profile) version 1.0 may be able to be controlled by the infotainment system.

Press and release ⏮ or ⏭ to skip tracks.

Other Information

The Bluetooth® word mark and logos are owned by the Bluetooth® SIG, Inc. and any use of such marks by General Motors is under license. Other trademarks and trade names are those of their respective owners.

Phone

Bluetooth (Overview)

For vehicles equipped with Bluetooth capability, the system can interact with many cell phones, allowing:

- Placement and receipt of calls in a hands-free mode.
- Sharing of the cell phone's address book or contact list with the vehicle.

To minimize driver distraction, before driving, and with the vehicle parked:

- Become familiar with the features of the cell phone. Organize the phone book and contact lists clearly and delete duplicate or rarely used entries. If possible, program speed dial or other shortcuts.
- Review the controls and operation of the infotainment system.
- Pair cell phone(s) to the vehicle. The system may not work with all cell phones. See "Pairing" in this section.
- If the cell phone has voice dialing capability, learn to use that feature to access the address book or contact list. See "Voice Pass-Thru" in this section.
- See "Storing and Deleting Phone Numbers" in this section.

⚠ WARNING

When using a cell phone, it can be distracting to look too long or too often at the screen of the phone or the infotainment (navigation) system. Taking your eyes off the road too long or too often could cause a crash resulting in injury or death. Focus your attention on driving.

Vehicles with a Bluetooth system can use a Bluetooth-capable cell phone with a Hands-Free Profile to make and receive phone calls. The infotainment system and voice recognition are used to control the system. The system can be used while in ON/RUN or ACC/ACCESSORY. The range of the Bluetooth system can be up to 9.1 m (30 ft). Not all phones support all functions and not all phones work with the Bluetooth system. See www.gm.com/bluetooth for more information about compatible phones.

Bluetooth Controls

Use the buttons on the infotainment system and the steering wheel to operate the Bluetooth system.

Steering Wheel Controls

/ (Push to Talk): Press to answer incoming calls, confirm system information, and start voice recognition.

/ (Mute/End Call): Press to end a call, reject a call, or cancel an operation.

Infotainment System Controls

To navigate the menu system using the infotainment controls, see *Overview on page 7-2*.

/ (Phone/Mute): Press to enter the Phone main menu.

Voice Recognition

The voice recognition system uses commands to control the system and dial phone numbers.

Noise: The system may not recognize voice commands if there is too much background noise.

When to Speak: A tone sounds to indicate that the system is ready for a voice command. Wait for the tone and then speak.

How to Speak: Speak clearly in a calm and natural voice.

Audio System

When using the Bluetooth system, sound comes through the vehicle's front audio system speakers and overrides the audio system. Use the VOL/ ⏻ knob during a call to change the volume level. The adjusted volume level remains in memory for later calls. The system maintains a minimum volume level.

Other Information

The Bluetooth® word mark and logos are owned by the Bluetooth® SIG, Inc. and any use of such marks by General Motors is under license. Other trademarks and trade names are those of their respective owners.

See *Radio Frequency Statement on page 13-21* for information regarding Part 15 of the Federal Communications Commission (FCC) rules and Industry Canada Standards RSS-GEN/210/220/310.

Bluetooth (Infotainment Controls)

To navigate the menu system using the infotainment controls, see *Overview on page 7-2*.

Pairing

A Bluetooth-enabled cell phone must be paired to the Bluetooth system and then connected to the vehicle before it can be used. See your cell phone manufacturer's user guide for Bluetooth functions before pairing the cell phone. If a Bluetooth phone is not connected, calls will be made using OnStar Hands-Free Calling, if available. See *OnStar Overview on page 14-1*.

Pairing Information

- A Bluetooth phone with MP3 capability cannot be paired to the vehicle as a phone and an MP3 player at the same time.
- Up to five cell phones can be paired to the Bluetooth system.

- The pairing process is disabled when the vehicle is moving.
- Pairing only needs to be completed once, unless the pairing information on the cell phone changes or the cell phone is deleted from the system.
- Only one paired cell phone can be connected to the Bluetooth system at a time.
- If multiple paired cell phones are within range of the system, the system connects to the first available paired cell phone in the order that they were first paired to the system. To connect to a different paired phone, see “Connecting to a Different Phone” later in this section.

Pairing a Phone

1. Press the CONFIG button.
2. Select Phone Settings or Bluetooth Settings.
3. Select Bluetooth.
4. Select Pair Device (Phone). A four-digit Personal Identification Number (PIN) appears on the display. The PIN is used in Step 6.
5. Start the pairing process on the cell phone to be paired to the vehicle. See the cell phone manufacturer's user guide for information on this process.
6. Locate the device named “Your Vehicle” in the list on the cell phone. Follow the instructions on the cell phone to enter the PIN provided in Step 4. After the PIN is successfully entered, the system prompts you to provide a name for the paired cell phone. This name will be used to indicate which phones are paired and connected to the vehicle. The system responds with “<Phone name> has been successfully paired” after the pairing process is complete.
7. Repeat Steps 1−6 to pair additional phones.

Listing All Paired and Connected Phones

1. Press the CONFIG button.
2. Select Phone Settings or Bluetooth Settings.
3. Select Bluetooth.
4. Select Device List.

Deleting a Paired Phone

1. Press the CONFIG button.
2. Select Phone Settings or Bluetooth Settings.
3. Select Bluetooth.
4. Select Device List.
5. Select the phone to delete and follow the on screen prompts.

Connecting to a Different Phone

To connect to a different phone, the new phone must be in the vehicle and available to be connected to the Bluetooth system before the process is started.

1. Press the CONFIG button.
2. Select Phone Settings or Bluetooth Settings.
3. Select Bluetooth.
4. Select Device List.
5. Select the new phone to connect to and follow the on screen prompts.

   If delete is selected, the highlighted phone will be deleted.

Making a Call Using the Phone Book

For cell phones that support the phone book feature, the Bluetooth system can use the contacts stored on your cell phone to make calls. See your cell phone manufacturer's user guide or contact your wireless provider to find out if this feature is supported by your phone.

When a cell phone supports the phone book feature, the Phone Book and Call Lists menus are automatically available.

The Phone Book menu allows you to access the phone book stored in the cell phone to make a call.

The Call Lists menu allows you to access the phone numbers from the Incoming Calls, Outgoing Calls, and Missed Calls menus on your cell phone to make a call.

To make a call using the Phone Book menu:

1. Press / once or twice (depending on the radio).
2. Select Phone Book.
3. Search through the list by selecting the letter group the phone book entry begins with, or press the TUNE/MENU button to scroll through the entire list of names/numbers in the phone book.
4. Select the name or number you want to call.

To make a call using the Call Lists menu:

1. Press / once or twice (depending on the radio).
2. Select Call Lists.
3. Select the Incoming Calls, Outgoing Calls, or Missed Calls list.
4. Select the name or number you want to call.

Making a Call

To make a call:

1. Press / once or twice (depending on the radio).
2. Enter the character sequence.
3. Select Call to start dialing the number.

Accepting or Declining a Call

When an incoming call is received, the infotainment system mutes and a ring tone is heard in the vehicle.

Accepting a Call

Turn the TUNE/MENU knob to “Answer” and press the TUNE/MENU knob to accept the call.

Declining a Call

Turn the TUNE/MENU knob to “Decline” and press the TUNE/MENU knob to decline the call.

Call Waiting

If equipped, call waiting must be supported on the Bluetooth phone and enabled by the wireless service carrier to work.

Accepting a Call

Turn the TUNE/MENU knob to “Answer” and press the TUNE/MENU knob to accept the call.

Declining a Call

Turn the TUNE/MENU knob to “Decline” and press the TUNE/MENU knob to decline the call.

Switching Between Calls (Call Waiting Calls Only)

To switch between calls:

1. Turn or press the TUNE/MENU knob.
2. Select Switch Call from the menu.

Conference Calling

If equipped, conference calling and three-way calling must be supported on the Bluetooth phone and enabled by the wireless service carrier to work.

To start a conference while in a current call:

1. Turn or press the TUNE/MENU knob.
2. Select Enter Number.
3. Enter the character sequence then select Call.
4. After the call has been placed, turn or press the TUNE/MENU knob and choose Merge Calls.
5. To add more callers to the conference call, repeat Steps 1−4. The number of callers that can be added is limited by your wireless service carrier.

Ending a Call

Turn or press the TUNE/MENU knob and select Hang Up.

Muting a Call

To Mute a Call

Turn or press the TUNE/MENU knob and select Mute Call.

To Cancel Mute

Turn or press the TUNE/MENU knob and select Mute Call.

Dual Tone Multi-Frequency (DTMF) Tones

The in-vehicle Bluetooth system can send numbers during a call. This is used when calling a menu-driven phone system.

1. Turn or press the TUNE/MENU knob and select Enter Number.
2. Enter the character sequence.

Bluetooth (Voice Recognition)

Using Voice Recognition

To use voice recognition, press the ✆ / button on the steering wheel. Use the commands below for the various voice features. For additional information, say "Help" while you are in a voice recognition menu.

Pairing

A Bluetooth-enabled cell phone must be paired to the Bluetooth system and then connected to the vehicle before it can be used. See your cell phone manufacturer's user guide for Bluetooth functions before pairing the cell phone. If a Bluetooth phone is not connected, calls will be made using OnStar Hands-Free Calling, if available. See *OnStar Overview on page 14-1*.

Pairing Information

- A Bluetooth phone with MP3 capability cannot be paired to the vehicle as a phone and an MP3 player at the same time.
- Up to five cell phones can be paired to the Bluetooth system.
- The pairing process is disabled when the vehicle is moving.
- Pairing only needs to be completed once, unless the pairing information on the cell phone changes or the cell phone is deleted from the system.
- Only one paired cell phone can be connected to the Bluetooth system at a time.
- If multiple paired cell phones are within range of the system, the system connects to the first available paired cell phone in the order that they were first paired to the system. To connect to a different paired phone, see “Connecting to a Different Phone” later in this section.

Pairing a Phone

1. Press ✆ / . The system responds “Ready,” followed by a tone.
2. Say “Bluetooth.” This command can be skipped.
3. Say “Pair.” The system responds with instructions and a four-digit Personal Identification Number (PIN). The PIN is used in Step 5.

4. Start the pairing process on the cell phone that you want to pair. For help with this process, see your cell phone manufacturer's user guide.
5. Locate the device named “Your Vehicle” in the list on the cell phone. Follow the instructions on the cell phone to enter the PIN provided in Step 3. After the PIN is successfully entered, the system prompts you to provide a name for the paired cell phone. This name will be used to indicate which phones are paired and connected to the vehicle. The system responds with “<Phone name> has been successfully paired” after the pairing process is complete.
6. Repeat Steps 1−5 to pair additional phones.

Listing All Paired and Connected Phones

The system can list all cell phones paired to it. If a paired cell phone is also connected to the vehicle, the system responds with “is connected” after that phone name.

1. Press ✆ / ⁂. The system responds “Ready,” followed by a tone.
2. Say “Bluetooth.”
3. Say “List.”

Deleting a Paired Phone

If the phone name you want to delete is unknown, see “Listing All Paired and Connected Phones.”

1. Press ✆ / ⁂. The system responds “Ready,” followed by a tone.
2. Say “Bluetooth.”
3. Say “Delete.” The system asks for which phone to delete.
4. Say the name of the phone you want to delete.

Connecting to a Different Phone

To connect to a different cell phone, the Bluetooth system looks for the next available cell phone in the order in which all the available cell phones were paired. Depending on which cell phone you want to connect to, you may have to use this command several times.

1. Press ✆ / ⁂. The system responds “Ready,” followed by a tone.
2. Say “Bluetooth.”
3. Say “Change phone.”
   - If another cell phone is found, the response will be “<Phone name> is now connected.”
   - If another cell phone is not found, the original phone remains connected.

Storing and Deleting Phone Numbers

The system can store up to 30 phone numbers as name tags in the Hands-Free Directory that is shared between the Bluetooth and OnStar systems.

The following commands are used to delete and store phone numbers.

Store: This command will store a phone number, or a group of numbers as a name tag.

Digit Store: This command allows a phone number to be stored as a name tag by entering the digits one at a time.

Delete: This command is used to delete individual name tags.

Delete All Name Tags: This command deletes all stored name tags in the Hands-Free Calling Directory and the Destinations Directory.

Using the "Store" Command

1. Press / . The system responds "Ready," followed by a tone.
2. Say "Store."
3. Say the phone number or group of numbers you want to store all at once with no pauses, then follow the directions given by the system to save a name tag for this number.

Using the "Digit Store" Command

If an unwanted number is recognized by the system, say "Clear" at any time to clear the last number.

To hear all of the numbers recognized by the system, say "Verify" at any time.

1. Press / . The system responds "Ready," followed by a tone.
2. Say "Digit Store."
3. Say each digit, one at a time, that you want to store. After each digit is entered, the system repeats back the digit it heard followed by a tone. After the last digit has been entered, say "Store," and then follow the directions given by the system to save a name tag for this number.

Using the "Delete" Command

1. Press / . The system responds "Ready," followed by a tone.
2. Say "Delete."
3. Say the name tag you want to delete.

Using the “Delete All Name Tags” Command

This command deletes all stored name tags in the Hands-Free Calling Directory and the Destinations Directory.

To delete all name tags:

1. Press ✆ / ⁂. The system responds “Ready,” followed by a tone.
2. Say “Delete all name tags.”

Listing Stored Numbers

The list command will list all stored numbers and name tags.

Using the “List” Command

1. Press ✆ / ⁂. The system responds “Ready,” followed by a tone.
2. Say “Directory.”
3. Say “Hands-Free Calling.”
4. Say “List.”

Making a Call

Calls can be made using the following commands.

Dial or Call: The call command can be used to call a phone number or a stored name tag

Digit Dial: This command allows a phone number to be dialed by entering the digits one at a time.

Re-dial: This command is used to dial the last number used on the cell phone.

Using the “Dial” or “Call” Command

1. Press ✆ / ⁂. The system responds “Ready,” followed by a tone.
2. Say “Dial” or “Call.”
3. Say the entire number without pausing or say the name tag.

Once connected, the person called will be heard through the audio speakers.

Calling 911 Emergency

1. Press ✆ / ⁂. The system responds “Ready,” followed by a tone.
2. Say “Dial” or “Call.”
3. Say “911” without pausing. Say “Dial” or “Call.”

Once connected, the person called will be heard through the audio speakers.

Using the “Digit Dial” Command

The digit dial command allows a phone number to be dialed by entering the digits one at a time. After each digit is entered, the system repeats back the digit it heard followed by a tone.

If an unwanted number is recognized by the system, say “Clear” at any time to clear the last number.

To hear all of the numbers recognized by the system, say “Verify” at any time.

1. Press / . The system responds “Ready,” followed by a tone.
2. Say “Digit Dial.”
3. Say each digit, one at a time, that you want to dial. After each digit is entered, the system repeats back the digit it heard followed by a tone. After the last digit has been entered, say “Dial.”

Once connected, the person called will be heard through the audio speakers.

Using the “Re-dial” Command

1. Press / . The system responds “Ready,” followed by a tone.
2. After the tone, say “Re-dial.” The system dials the last number called from the connected cell phone.

Once connected, the person called will be heard through the audio speakers.

Receiving a Call

When an incoming call is received, the audio system mutes and a ring tone is heard in the vehicle.

- Press / to answer the call.
- Press / to ignore a call.

Call Waiting

If equipped, call waiting must be supported on the cell phone and enabled by the wireless service carrier.

- Press / to answer an incoming call when another call is active. The original call is placed on hold.
- Press / again to return to the original call.
- To ignore the incoming call, no action is required.
- Press / to disconnect the current call and switch to the call on hold.

Three-Way Calling

If equipped, three-way calling must be supported on the cell phone and enabled by the wireless service carrier.

1. While on a call, press / .
2. Say “Three-way call.”
3. Use the dial or call command to dial the number of the third party to be called.
4. Once the call is connected, press / to connect all callers together.

Ending a Call

Press / to end a call.

Muting a Call

During a call, all sounds from inside the vehicle can be muted so that the person on the other end of the call cannot hear them.

To mute a call, press / , and then say “Mute Call.”

To cancel mute, press / , and then say “Un-mute Call.”

Transferring a Call

Audio can be transferred between the Bluetooth system and the cell phone.

The cell phone must be paired and connected with the Bluetooth system before a call can be transferred. The connection process can take up to two minutes after the ignition is turned to ON/RUN.

To Transfer Audio from the Bluetooth System to a Cell Phone

During a call with the audio in the vehicle:

1. Press / .
2. Say “Transfer Call.”

To Transfer Audio to the Bluetooth System from a Cell Phone

During a call with the audio on the cell phone, press / . The audio transfers to the vehicle. If the audio does not transfer to the vehicle, use the audio transfer feature on the cell phone. See your cell phone manufacturer's user guide.

Voice Pass-Thru

Voice pass-thru allows access to the voice recognition commands on the cell phone. See your cell phone manufacturer's user guide to see if the cell phone supports this feature.

To access contacts stored in the cell phone:

1. Press / . The system responds “Ready,” followed by a tone.
2. Say “Bluetooth.” This command can be skipped.
3. Say “Voice.” The system responds “OK, accessing <phone name>.”

The cell phone's normal prompt messages will go through their cycle according to the phone's operating instructions.

Dual Tone Multi-Frequency (DTMF) Tones

The Bluetooth system can send numbers and the numbers stored as name tags during a call. You can use this feature when calling a menu-driven phone system. Account numbers can also be stored for use.

Sending a Number or Name Tag During a Call

1. Press / . The system responds “Ready,” followed by a tone.
2. Say “Dial.”
3. Say the number or name tag to send.

Clearing the System

Unless information is deleted out of the in-vehicle Bluetooth system, it will be retained indefinitely. This includes all saved name tags in the phone book and phone pairing information. For information on how to delete this information, see the previous sections on “Deleting a Paired Phone,” “Using the ‘Delete’ Command,” and “Using the ‘Delete All Name Tags’ Command.”

✍ NOTES

Climate Controls

Climate Control Systems
Climate Control Systems 8-1
Dual Automatic Climate Control System 8-3

Air Vents
Air Vents 8-7

Maintenance
Passenger Compartment Air Filter 8-8
Service 8-9

Climate Control Systems

The heating, cooling, and ventilation for the vehicle can be controlled with this system.

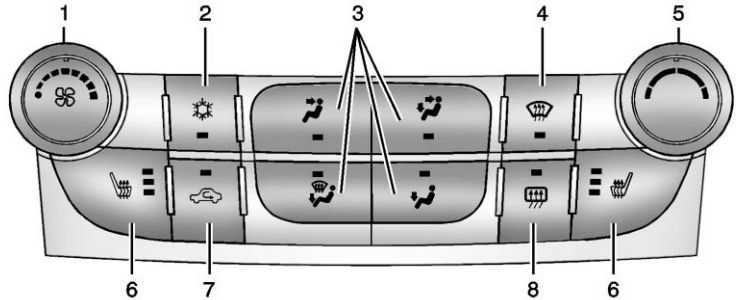

1. Fan Control
2. Air Conditioning
3. Air Delivery Modes
4. Defrost
5. Temperature Control
6. Heated Seats (If Equipped)
7. Recirculation
8. Rear Window Defogger

Temperature Control: Turn the knob clockwise or counterclockwise to increase or decrease the driver or passenger temperature setting.

Fan Control: Turn the knob clockwise or counterclockwise to increase or decrease the fan speed.

Air Delivery Modes: Press , , , or to change the direction of the airflow. An indicator light comes on in the selected mode button.

(Vent): Air is directed to the instrument panel outlets.

(Bi-Level): Air is directed to the instrument panel outlets and the floor outlets.

(Floor): Air is directed to the floor outlets.

(Defog): Air is directed to the windshield and floor outlets to clear the windows of fog or moisture.

(Defrost): Press to clear the windshield of fog or frost more quickly. Air is directed to the windshield and side window outlets.

For best results, clear all snow and ice from the windshield before defrosting.

(Air Conditioning): Press to turn the air conditioning on or off. If the fan is turned off or the outside temperature falls below freezing, the air conditioner will not run and the indicator light turns off.

(Recirculation): Press to turn on recirculation. An indicator light comes on. Air is recirculated to quickly cool the inside of the vehicle or prevent outside air and odors from entering.

or (Heated Seats, If Equipped): Press to turn the heated seats on or off. See *Heated Front Seats on page 3-8*.

Rear Window Defogger

(Rear Window Defogger): Press to turn the rear window defogger on or off.

The rear window defogger turns off automatically after about 10 minutes. If turned on again, it runs for about five minutes before turning off. At higher speeds, the rear window defogger may stay on continuously.

For vehicles with heated outside rearview mirrors, they turn on with the rear window defogger and help to clear fog or frost from the surface of the mirror. See *Heated Mirrors on page 2-18*.

Notice: **Using a razor blade or sharp object to clear the inside rear window can damage the rear window antenna and/or the rear window defogger. Repairs would not be covered by the vehicle warranty. Do not clear the inside rear window with sharp objects.**

Sensors

The solar sensor on top of the instrument panel near the windshield monitors the solar heat.

The climate control system uses the sensor information to adjust the temperature, fan speed, recirculation, and air delivery mode for best comfort.

If the sensor is covered, the automatic climate control system may not work properly.

Dual Automatic Climate Control System

The heating, cooling, and ventilation for the vehicle can be controlled with this system.

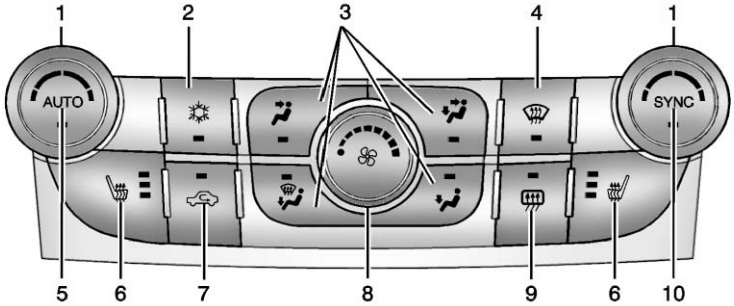

1. Driver and Passenger Temperature Controls
2. Air Conditioning or Comfort/Eco Air Conditioning
3. Air Delivery Modes
4. Defrost
5. AUTO (Automatic Operation)
6. Heated Seats (If Equipped)
7. Recirculation
8. Fan Control
9. Rear Window Defogger
10. SYNC

Climate Control Influence on eAssist Operation and Fuel Economy (If Equipped)

The climate control system is dependent upon other vehicle systems for heat and power input. Certain climate control settings can lead to higher fuel usage and/or fewer auto stops.

The following are climate control settings that use more fuel:

- Comfort air conditioning mode.
- Defrost mode.
- Extreme temperature settings, such as 15°C (60°F) or 32°C (90°F).
- High fan speed settings.

To help reduce fuel usage:

- Use the full automatic control as described under “Automatic Operation.”
- Use eco air conditioning, instead of the comfort air conditioning.

- Select a temperature setting that is higher in hot weather and lower in cold weather.
- Turn off the air conditioning when it is not needed.
- Only use defrost to clear the windows.

Automatic Operation

The system automatically controls the fan speed, air delivery, air conditioning, and recirculation in order to heat or cool the vehicle to the desired temperature.

When the indicator light is on, the system is in full automatic operation. If the air delivery mode or fan setting is manually adjusted, the auto indicator turns off and displays will show the selected settings.

To place the system in automatic mode:

1. Press AUTO.
2. Set the temperature. Allow the system time to stabilize. Then adjust the temperature as needed for best comfort.

To improve fuel efficiency and to cool the vehicle faster, recirculation may be automatically selected in warm weather.

The recirculation light will not come on. Press to select recirculation; press it again to select outside air.

Manual Operation

Driver and Passenger Temperature Control: The temperature can be adjusted separately for the driver and passenger.

Turn the knob clockwise or counterclockwise to increase or decrease the driver or passenger temperature setting.

SYNC: Press to link all climate zone settings to the driver settings. The SYNC indicator light will turn on. When the passenger settings are adjusted, the SYNC indicator light turns off.

Fan Control: Turn the knob clockwise or counterclockwise to increase or decrease the fan speed.

Press AUTO to return to automatic operation.

Air Delivery Modes: Press , , , or to change the direction of the airflow. An indicator light comes on in the selected mode button.

Changing the mode cancels the automatic operation and the system goes into manual mode. Press AUTO to return to automatic operation.

(Vent): Air is directed to the instrument panel outlets.

(Bi-Level): Air is directed to the instrument panel outlets and the floor outlets.

(Floor): Air is directed to the floor outlets.

(Defog): Air is directed to the windshield and floor outlets to clear the windows of fog or moisture.

(Defrost): Press to clear the windshield of fog or frost more quickly. Air is directed to the windshield and side window outlets.

For best results, clear all snow and ice from the windshield before defrosting.

(Air Conditioning (For Non-eAssist Vehicles)): Press to turn the air conditioning on or off. If the fan is turned off or the outside temperature falls below freezing, the air conditioner will not run and the indicator light turns off.

Press AUTO to return to automatic operation and the air conditioner runs as needed. When the indicator light is on, the air conditioner runs automatically to cool the air inside the vehicle or to dry the air needed to defog the windshield faster.

(Comfort/Eco Air Conditioning (For eAssist Vehicles)): Press to cycle between the off, comfort, and economy air conditioning modes. The indicator will be lit in comfort and economy modes and turns off when there is no A/C function. If the fan is turned off or the outside temperature falls below freezing, the air conditioner will not run and the indicator light turns off.

For eco a/c, press . The indicator will turn green. This setting balances fuel economy and air conditioning comfort. In warm weather conditions, auto stops may occur more frequently and the vehicle interior may be warmer as compared to the comfort air conditioning. This setting allows higher humidity inside the vehicle and window fogging before the engine restarts.

Pressing the button during an auto stop will restart the engine to prevent window fogging. To reach comfort levels quickly during an auto stop, the engine will restart if the air conditioner is off and AUTO or is selected.

If temperature controls are adjusted cooler by more than 1°C (1°F) during an auto stop, the engine will restart to ensure that comfort is reached.

For comfort a/c, press ✲ again. The indicator will turn amber.

Pressing this button cancels automatic air conditioning and turns off the air conditioner. Press AUTO to return to automatic operation and the air conditioner runs automatically as needed. When the indicator light is on, the air conditioner runs automatically to cool the air inside the vehicle or to dry the air needed to defog the windshield faster.

(Recirculation): Press to turn on recirculation. An indicator light comes on. Air is recirculated to quickly cool the inside of the vehicle or prevent outside air and odors from entering.

Auto Defog: The climate control system may have a sensor to automatically detect high humidity inside the vehicle. When high humidity is detected, the climate control system may adjust to outside air supply and turn on the air conditioner. The fan speed may slightly increase to help prevent fogging. If the climate control system does not detect possible window fogging, it returns to normal operation. To turn Auto Defog off or on, see “Climate and Air Quality” under *Vehicle Personalization on page 5-36*.

or (Heated Seats, If Equipped): Press to turn the heated seats on or off. See *Heated Front Seats on page 3-8*.

Rear Window Defogger

(Rear Window Defogger): Press to turn the rear window defogger on or off.

The rear window defogger turns off automatically after about 10 minutes. If turned on again, it runs for about five minutes before turning off. At higher speeds, the rear window defogger may stay on continuously.

For vehicles with heated outside rearview mirrors, they turn on with the rear window defogger and help to clear fog or frost from the surface of the mirror. See *Heated Mirrors on page 2-18*.

Notice: **Using a razor blade or sharp object to clear the inside rear window can damage the rear window antenna and/or the rear window defogger. Repairs would not be covered by the vehicle warranty. Do not clear the inside rear window with sharp objects.**

Remote Start Climate Control Operation (If Equipped): For vehicles with the remote start feature, the climate control system may run when the vehicle is started remotely. The system uses the driver’s previous settings to heat or cool the inside of the vehicle. The rear defog may come on during remote start based on cold ambient conditions. The rear defog indicator light does not come on during a remote start. The front heated seats

will turn on if it is cold outside. The heated seat indicator lights do not come on during a remote start.

Sensors

The solar sensor on top of the instrument panel near the windshield monitors the solar heat.

The climate control system uses the sensor information to adjust the temperature, fan speed, recirculation, and air delivery mode for best comfort.

If the sensor is covered, the automatic climate control system may not work properly.

Air Vents

Center Air Vents

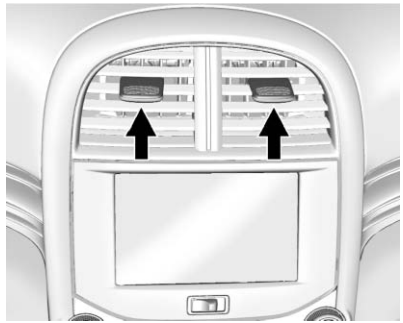

Use the slider knobs on the air vents to change the direction of the airflow.

Move the slider knobs outward or inward to open or close off the airflow.

Side Air Vents

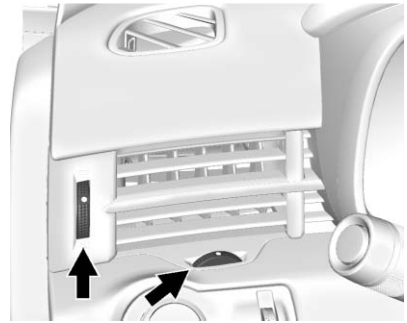

Use the thumbwheels to change the direction of the airflow.

Move the vertical thumbwheels up or down to open or close off the airflow.

Operation Tips

- Keep all outlets open whenever possible for best system performance.
- Keep the paths under all seats clear of objects to help circulate the air inside the vehicle more effectively.
- Use of non-GM approved hood deflectors can adversely affect the performance of the system.
- Do not attach any devices to the air vent louvers. This restricts airflow and may cause damage to the air vents.

Maintenance

Passenger Compartment Air Filter

The filter removes dust, pollen, and other airborne irritants from outside air that is pulled into the vehicle.

The filter should be replaced as part of routine scheduled maintenance; see *Maintenance Schedule on page 11-2*. To find out what type of filter to use, see *Maintenance Replacement Parts on page 11-13*.

1. Open the glove box completely.

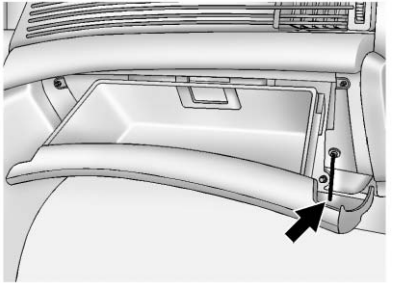

2. Disconnect the glove box door dampener string from the glove box door assembly. Please note: a pen or pencil may be inserted through the end of the dampener string to prevent the string from slipping inside the door assembly.
3. Squeeze both sides of the glove box door to open beyond the stops.

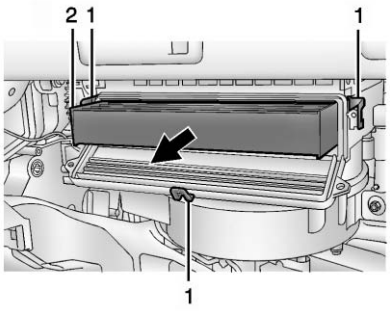

4. Release the retainer clips (1) holding the service door. Open the service door and remove the old filter (2).
5. Install the new air filter.
6. Close the service door and retainer clips.
7. Reverse the steps to reinstall the glove box.

See your dealer if additional assistance is needed.

Service

This vehicle may have the new environmentally friendly refrigerant, R1234yf. This refrigerant has a significantly reduced global warming impact on the environment, compared to the traditional automotive refrigerant, R-134a. All vehicles have a label underhood that identifies the refrigerant used in the vehicle.

The refrigerant system should only be serviced by trained and certified technicians. The air conditioning evaporator should never be repaired or replaced by one from a salvage vehicle. It should only be replaced by a new evaporator to ensure proper and safe operation.

During service, all refrigerants should be reclaimed with proper equipment. Venting refrigerants directly to the atmosphere is harmful to the environment and may also create unsafe conditions based on inhalation, combustion, frostbite, or other health-based concerns.

✍ NOTES

Driving and Operating

Driving Information
Distracted Driving 9-2
Defensive Driving 9-3
Drunk Driving 9-3
Control of a Vehicle 9-3
Braking 9-3
Steering 9-4
Off-Road Recovery 9-5
Loss of Control 9-5
Racing or Other Competitive Driving 9-6
Driving on Wet Roads 9-6
Highway Hypnosis 9-7
Hill and Mountain Roads 9-7
Winter Driving 9-8
If the Vehicle Is Stuck 9-9
Vehicle Load Limits 9-10

Starting and Operating
New Vehicle Break-In 9-15
Ignition Positions (Key Access) 9-15
Ignition Positions (Keyless Access) 9-17
Starting the Engine 9-19
Engine Heater 9-22
Retained Accessory Power (RAP) 9-23
Shifting Into Park 9-23
Shifting out of Park 9-24
Parking over Things That Burn 9-25

Engine Exhaust
Engine Exhaust 9-26
Running the Vehicle While Parked 9-26

Automatic Transmission
Automatic Transmission 9-27
Manual Mode 9-28

Brakes
Antilock Brake System (ABS) 9-29
Parking Brake 9-30
Brake Assist 9-32
Hill Start Assist (HSA) 9-33

Ride Control Systems
Traction Control System (TCS) 9-33
StabiliTrak® System 9-34

Cruise Control
Cruise Control 9-36

Object Detection Systems
Forward Collision Alert (FCA) System 9-38
Ultrasonic Parking Assist 9-40
Rear Vision Camera (RVC) 9-42
Lane Departure Warning (LDW) 9-44

Fuel
Fuel 9-46
Recommended Fuel 9-47
Gasoline Specifications 9-47
California Fuel Requirements 9-47
Fuels in Foreign Countries . . . 9-48
Fuel Additives 9-48
Fuel E85 (85% Ethanol) 9-49
Filling the Tank 9-50
Filling a Portable Fuel Container 9-52

Towing
General Towing Information 9-52
Driving Characteristics and Towing Tips 9-53
Trailer Towing (Except eAssist) 9-56
Trailer Towing (eAssist) 9-57
Towing Equipment 9-57

Conversions and Add-Ons
Add-On Electrical Equipment 9-58

Driving Information

Distracted Driving

Distraction comes in many forms and can take your focus from the task of driving. Exercise good judgment and do not let other activities divert your attention away from the road. Many local governments have enacted laws regarding driver distraction. Become familiar with the local laws in your area.

To avoid distracted driving, always keep your eyes on the road, hands on the wheel, and mind on the drive.

- Do not use a phone in demanding driving situations. Use a hands-free method to place or receive necessary phone calls.
- Watch the road. Do not read, take notes, or look up information on phones or other electronic devices.
- Designate a front seat passenger to handle potential distractions.
- Become familiar with vehicle features before driving, such as programming favorite radio stations and adjusting climate control and seat settings. Program all trip information into any navigation device prior to driving.
- Wait until the vehicle is parked to retrieve items that have fallen to the floor.
- Stop or park the vehicle to tend to children.
- Keep pets in an appropriate carrier or restraint.
- Avoid stressful conversations while driving, whether with a passenger or on a cell phone.

⚠ WARNING

Taking your eyes off the road too long or too often could cause a crash resulting in injury or death. Focus your attention on driving.

Refer to the Infotainment section for more information on using that system, including pairing and using a cell phone.

Defensive Driving

Defensive driving means “always expect the unexpected.” The first step in driving defensively is to wear the safety belt. See *Safety Belts on page 3-11*.

- Assume that other road users (pedestrians, bicyclists, and other drivers) are going to be careless and make mistakes. Anticipate what they might do and be ready.
- Allow enough following distance between you and the driver in front of you.
- Focus on the task of driving.

Drunk Driving

Death and injury associated with drinking and driving is a global tragedy.

⚠ WARNING

Drinking and then driving is very dangerous. Your reflexes, perceptions, attentiveness, and judgment can be affected by even a small amount of alcohol. You can have a serious — or even fatal — collision if you drive after drinking.

Do not drink and drive or ride with a driver who has been drinking. Ride home in a cab; or if you are with a group, designate a driver who will not drink.

Control of a Vehicle

Braking, steering, and accelerating are important factors in helping to control a vehicle while driving.

Braking

Braking action involves perception time and reaction time. Deciding to push the brake pedal is perception time. Actually doing it is reaction time.

Average driver reaction time is about three-quarters of a second. In that time, a vehicle moving at 100 km/h (60 mph) travels 20 m (66 ft), which could be a lot of distance in an emergency.

Helpful braking tips to keep in mind include:

- Keep enough distance between you and the vehicle in front of you.
- Avoid needless heavy braking.
- Keep pace with traffic.

If the engine ever stops while the vehicle is being driven, brake normally but do not pump the brakes. Doing so could make the pedal harder to push down. If the engine stops, there will be some power brake assist but it will be used when the brake is applied. Once the power assist is used up, it can take longer to stop and the brake pedal will be harder to push.

Steering

Electric Power Steering

The vehicle has electric power steering. It does not have power steering fluid. Regular maintenance is not required.

If power steering assist is lost due to a system malfunction, the vehicle can be steered, but may require increased effort. See your dealer if there is a problem.

If the steering wheel is turned until it reaches the end of its travel and is held against that position for an extended period of time, power steering assist may be reduced.

Normal use of the power steering assist should return when the system cools down.

See specific vehicle steering messages under *Service Vehicle Messages on page 5-33*.

See your dealer if there is a problem.

Curve Tips

- Take curves at a reasonable speed.
- Reduce speed before entering a curve.
- Maintain a reasonable steady speed through the curve.
- Wait until the vehicle is out of the curve before accelerating gently into the straightaway.

Steering in Emergencies

- There are some situations when steering around a problem may be more effective than braking.
- Holding both sides of the steering wheel allows you to turn 180 degrees without removing a hand.
- The Antilock Brake System (ABS) allows steering while braking.

Off-Road Recovery

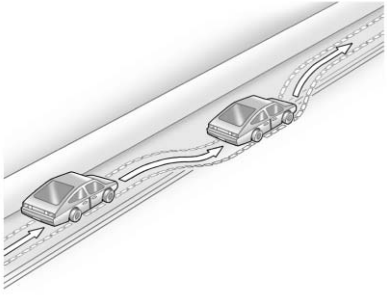

The vehicle's right wheels can drop off the edge of a road onto the shoulder while driving. Follow these tips:

1. Ease off the accelerator and then, if there is nothing in the way, steer the vehicle so that it straddles the edge of the pavement.
2. Turn the steering wheel about one-eighth of a turn, until the right front tire contacts the pavement edge.
3. Turn the steering wheel to go straight down the roadway.

Loss of Control

Skidding

There are three types of skids that correspond to the vehicle's three control systems:

- Braking Skid — wheels are not rolling.
- Steering or Cornering Skid — too much speed or steering in a curve causes tires to slip and lose cornering force.
- Acceleration Skid — too much throttle causes the driving wheels to spin.

Defensive drivers avoid most skids by taking reasonable care suited to existing conditions, and by not overdriving those conditions. But skids are always possible.

If the vehicle starts to slide, follow these suggestions:

- Ease your foot off the accelerator pedal and steer the way you want the vehicle to go. The vehicle may straighten out. Be ready for a second skid if it occurs.
- Slow down and adjust your driving according to weather conditions. Stopping distance can be longer and vehicle control can be affected when traction is reduced by water, snow, ice, gravel, or other material on the road. Learn to recognize warning clues — such as enough water, ice, or packed snow on the road to make a mirrored surface — and slow down when you have any doubt.
- Try to avoid sudden steering, acceleration, or braking, including reducing vehicle speed by shifting to a lower gear. Any sudden changes could cause the tires to slide.

Remember: Antilock brakes help avoid only the braking skid.

Racing or Other Competitive Driving

Racing, track testing, or Competitive driving may affect the vehicle warranty. See the warranty book before using the vehicle for racing or other competitive driving.

Notice: **If the vehicle is used for racing, track testing, or other competitive driving, the engine may use more oil than it would with normal use. Low oil levels can damage the engine. Check the oil level often and at the proper level.**

For the 2.0L and 2.5L Ecotec engine: Add and keep the oil level at 1 L (1 quart) above the high mark when driving under these conditions. For information on how to check and add oil, see *Engine Oil on page 10-11*.

Driving on Wet Roads

Rain and wet roads can reduce vehicle traction and affect your ability to stop and accelerate. Always drive slower in these types of driving conditions and avoid driving through large puddles and deep-standing or flowing water.

⚠ WARNING

Wet brakes can cause crashes. They might not work as well in a quick stop and could cause pulling to one side. You could lose control of the vehicle.

After driving through a large puddle of water or a car/vehicle wash, lightly apply the brake pedal until the brakes work normally.

(Continued)

WARNING (Continued)

Flowing or rushing water creates strong forces. Driving through flowing water could cause the vehicle to be carried away. If this happens, you and other vehicle occupants could drown. Do not ignore police warnings and be very cautious about trying to drive through flowing water.

Hydroplaning

Hydroplaning is dangerous. Water can build up under the vehicle's tires so they actually ride on the water. This can happen if the road is wet enough and you are going fast enough. When the vehicle is hydroplaning, it has little or no contact with the road.

There is no hard and fast rule about hydroplaning. The best advice is to slow down when the road is wet.

Other Rainy Weather Tips

Besides slowing down, other wet weather driving tips include:

- Allow extra following distance.
- Pass with caution.
- Keep windshield wiping equipment in good shape.
- Keep the windshield washer fluid reservoir filled.
- Have good tires with proper tread depth. See *Tires on page 10-44*.
- Turn off cruise control.

Highway Hypnosis

Always be alert and pay attention to your surroundings while driving. If you become tired or sleepy, find a safe place to park the vehicle and rest.

Other driving tips include:

- Keep the vehicle well ventilated.
- Keep the interior temperature cool.
- Keep your eyes moving — scan the road ahead and to the sides.
- Check the rearview mirror and vehicle instruments often.

Hill and Mountain Roads

Driving on steep hills or through mountains is different than driving on flat or rolling terrain. Tips for driving in these conditions include:

- Keep the vehicle serviced and in good shape.
- Check all fluid levels and brakes, tires, cooling system, and transmission.
- Shift to a lower gear when going down steep or long hills.

⚠ WARNING

If you do not shift down, the brakes could get so hot that they would not work well. You would then have poor braking or even

(Continued)

WARNING (Continued)

none going down a hill. You could crash. Shift down to let the engine assist the brakes on a steep downhill slope.

⚠ WARNING

Coasting downhill in N (Neutral) or with the ignition off is dangerous. The brakes will have to do all the work of slowing down and they could get so hot that they would not work well. You would then have poor braking or even none going down a hill. Steering may also be affected when ignition is off. You could crash. Always have the engine running and the vehicle in gear when going downhill.

- Stay in your own lane. Do not swing wide or cut across the center of the road. Drive at speeds that let you stay in your own lane.
- Be alert on top of hills; something could be in your lane (stalled car, accident).
- Pay attention to special road signs (falling rocks area, winding roads, long grades, passing or no-passing zones) and take appropriate action.

Winter Driving

Driving on Snow or Ice

Drive carefully when there is snow or ice between the tires and the road, creating less traction or grip. Wet ice can occur at about 0°C (32° F) when freezing rain begins to fall, resulting in even less traction. Avoid driving on wet ice or in freezing rain until roads can be treated with salt or sand.

Drive with caution, whatever the condition. Accelerate gently so traction is not lost. Accelerating too quickly causes the wheels to spin and makes the surface under the tires slick, so there is even less traction.

Try not to break the fragile traction. If you accelerate too fast, the drive wheels will spin and polish the surface under the tires even more.

The Antilock Brake System (ABS) improves vehicle stability during hard stops on slippery roads, but apply the brakes sooner than when on dry pavement. See *Antilock Brake System (ABS) on page 9-29*.

Allow greater following distance on any slippery road and watch for slippery spots. Icy patches can occur on otherwise clear roads in shaded areas. The surface of a curve or an overpass can remain icy when the surrounding roads are clear. Avoid sudden steering maneuvers and braking while on ice.

Turn off cruise control on slippery surfaces.

Blizzard Conditions

Being stuck in snow can be a serious situation. Stay with the vehicle unless there is help nearby. If possible, use Roadside Assistance. See *Roadside Assistance Program (Mexico) on page 13-7* or *Roadside Assistance Program (U.S. and Canada) on page 13-11*. To get help and keep everyone in the vehicle safe:

- Turn on the hazard warning flashers.
- Tie a red cloth to an outside mirror.

⚠ WARNING

Snow can trap engine exhaust under the vehicle. This may cause exhaust gases to get inside. Engine exhaust contains carbon monoxide (CO) which

(Continued)

WARNING (Continued)

cannot be seen or smelled. It can cause unconsciousness and even death.

If the vehicle is stuck in the snow:

- Clear away snow from around the base of your vehicle, especially any that is blocking the exhaust pipe.
- Check again from time to time to be sure snow does not collect there.
- Open a window about 5 cm (2 in) on the side of the vehicle that is away from the wind to bring in fresh air.
- Fully open the air outlets on or under the instrument panel.
- Adjust the climate control system to a setting that circulates the air inside the vehicle and set the fan speed

(Continued)

WARNING (Continued)

to the highest setting. See "Climate Control Systems" in the Index.

For more information about carbon monoxide, see *Engine Exhaust on page 9-26*.

To save fuel, run the engine for only short periods as needed to warm the vehicle and then shut the engine off and close the window most of the way to save heat. Repeat this until help arrives but only when you feel really uncomfortable from the cold. Moving about to keep warm also helps.

If it takes some time for help to arrive, now and then when you run the engine, push the accelerator pedal slightly so the engine runs faster than the idle speed. This keeps the battery charged to restart the vehicle and to signal for help with the headlamps. Do this as little as possible to save fuel.

If the Vehicle Is Stuck

Slowly and cautiously spin the wheels to free the vehicle when stuck in sand, mud, ice, or snow.

If stuck too severely for the traction system to free the vehicle, turn the traction system off and use the rocking method. See *Traction Control System (TCS) on page 9-33*.

⚠ WARNING

If the vehicle's tires spin at high speed, they can explode, and you or others could be injured. The vehicle can overheat, causing an engine compartment fire or other damage. Spin the wheels as little as possible and avoid going above 56 km/h (35 mph).

Rocking the Vehicle to Get it Out

Turn the steering wheel left and right to clear the area around the front wheels. Turn off any traction system. Shift back and forth between R (Reverse) and a low forward gear, spinning the wheels as little as possible. To prevent transmission wear, wait until the wheels stop spinning before shifting gears. Release the accelerator pedal while shifting, and press lightly on the accelerator pedal when the transmission is in gear. Slowly spinning the wheels in the forward and reverse directions causes a rocking motion that could free the vehicle. If that does not get the vehicle out after a few tries, it might need to be towed out. If the vehicle does need to be towed out, see *Towing the Vehicle on page 10-95*.

Vehicle Load Limits

It is very important to know how much weight the vehicle can carry. This weight is called the vehicle capacity weight and includes the weight of all occupants, cargo, and all nonfactory-installed options. Two labels on the vehicle show how much weight it may properly carry, the Tire and Loading Information label and the Certification label.

⚠ WARNING

Do not load the vehicle any heavier than the Gross Vehicle Weight Rating (GVWR), or either the maximum front or rear Gross Axle Weight Rating (GAWR). This can cause systems to break and change the way the vehicle handles. This could cause loss of control and a crash. Overloading can also shorten the life of the vehicle.

Tire and Loading Information Label

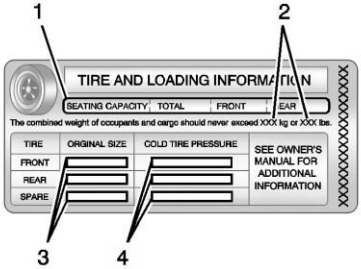

Label Example

1. Number of Occupant Seating Positions
2. Maximum Vehicle Capacity Weight
3. Size of the Original Equipment Tires
4. Recommended Cold Tire Inflation Pressure

A vehicle-specific Tire and Loading Information label is attached to the vehicle's center pillar (B-pillar). The Tire and Loading Information label shows the number of occupant seating positions (1), and the maximum vehicle capacity weight (2) in kilograms and pounds.

The Tire and Loading Information label also shows the tire size of the original equipment tires (3) and the recommended cold tire inflation pressures (4). For more information on tires and inflation see *Tires on page 10-44* and *Tire Pressure on page 10-52*.

There is also important loading information on the Certification label. It tells you the Gross Vehicle Weight Rating (GVWR) and the Gross Axle Weight Rating (GAWR) for the front and rear axle. See “Certification Label” later in this section.

Steps for Determining Correct Load Limit

1. Locate the statement “The combined weight of occupants and cargo should never exceed XXX kg or XXX lbs” on your vehicle's placard.
2. Determine the combined weight of the driver and passengers that will be riding in your vehicle.
3. Subtract the combined weight of the driver and passengers from XXX kg or XXX lbs.

4. The resulting figure equals the available amount of cargo and luggage load capacity. For example, if the “XXX” amount equals 1400 lbs and there will be five 150 lb passengers in your vehicle, the amount of available cargo and luggage load capacity is 650 lbs (1400 − 750 (5 x 150) = 650 lbs).
5. Determine the combined weight of luggage and cargo being loaded on the vehicle. That weight may not safely exceed the available cargo and luggage load capacity calculated in Step 4.
6. If your vehicle will be towing a trailer, the load from your trailer will be transferred to your vehicle. Consult this manual to determine how this reduces the available cargo and luggage load capacity of your vehicle.

See *Trailer Towing (Except eAssist) on page 9-56* or *Trailer Towing (eAssist) on page 9-57* for important information on towing a trailer, towing safety rules, and trailering tips.

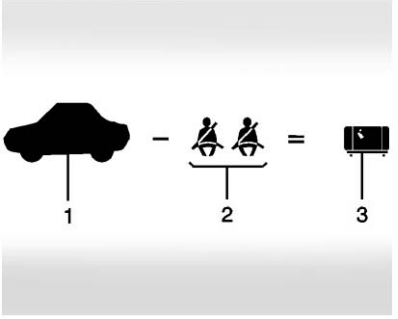

Example 1

1. Vehicle Capacity Weight for Example 1 = 453 kg (1,000 lbs).
2. Subtract Occupant Weight @ 68 kg (150 lbs) × 2 = 136 kg (300 lbs).
3. Available Occupant and Cargo Weight = 317 kg (700 lbs).

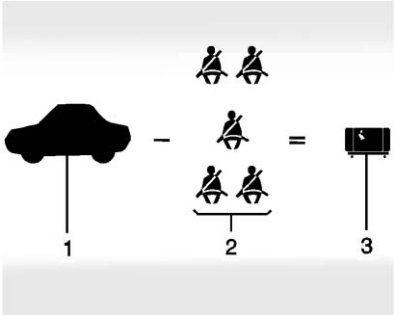

Example 2

1. Vehicle Capacity Weight for Example 2 = 453 kg (1,000 lbs).
2. Subtract Occupant Weight @ 68 kg (150 lbs) × 5 = 340 kg (750 lbs).
3. Available Cargo Weight = 113 kg (250 lbs).

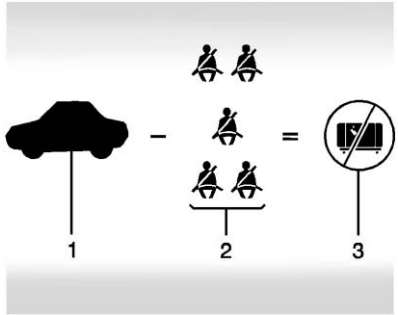

Example 3

1. Vehicle Capacity Weight for Example 3 = 453 kg (1,000 lbs).
2. Subtract Occupant Weight @ 91 kg (200 lbs) × 5 = 453 kg (1,000 lbs).
3. Available Cargo Weight = 0 kg (0 lbs).

Refer to the vehicle's Tire and Loading Information label for specific information about the vehicle's capacity weight and seating positions. The combined weight of the driver, passengers, and cargo should never exceed the vehicle's capacity weight.

Certification Label

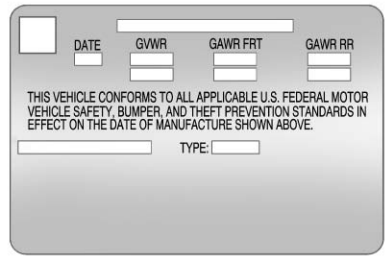

Label Example

A vehicle-specific Certification label is attached to the vehicle's center pillar (B-pillar). The label tells the gross weight capacity of the vehicle, called the Gross Vehicle Weight Rating (GVWR).

The GVWR includes the weight of the vehicle, all occupants, fuel, and cargo. Never exceed the GVWR for the vehicle, or the Gross Axle Weight Rating (GAWR) for either the front or rear axle.

And, if there is a heavy load, it should be spread out. See “Steps for Determining Correct Load Limit” earlier in this section.

⚠ WARNING

Do not load the vehicle any heavier than the Gross Vehicle Weight Rating (GVWR), or either the maximum front or rear Gross Axle Weight Rating (GAWR). This can cause systems to break and change the way the vehicle handles. This could

(Continued)

WARNING (Continued)

cause loss of control and a crash. Overloading can also shorten the life of the vehicle.

If you put things inside the vehicle — like suitcases, tools, packages, or anything else — they will go as fast as the vehicle goes. If you have to stop or turn quickly, or if there is a crash, they will keep going.

⚠ WARNING

Things inside the vehicle can strike and injure people in a sudden stop or turn, or in a crash.

- Put things in the cargo area of the vehicle. In the cargo area, put them as

(Continued)

WARNING (Continued)

far forward as possible. Try to spread the weight evenly.

- Never stack heavier things, like suitcases, inside the vehicle so that some of them are above the tops of the seats.
- Do not leave an unsecured child restraint in the vehicle.
- Secure loose items in the vehicle.
- Do not leave a seat folded down unless needed.

Starting and Operating

New Vehicle Break-In

Notice: **The vehicle does not need an elaborate break-in. But it will perform better in the long run if you follow these guidelines:**

- **Do not drive at any one constant speed, fast or slow, for the first 805 km (500 mi). Do not make full-throttle starts. Avoid downshifting to brake or slow the vehicle.**
- **Avoid making hard stops for the first 322 km (200 mi) or so. During this time the new brake linings are not yet broken in. Hard stops with new linings can mean premature wear and earlier replacement. Follow this breaking-in guideline every time you get new brake linings.**

Following break-in, engine speed and load can be gradually increased.

Ignition Positions (Key Access)

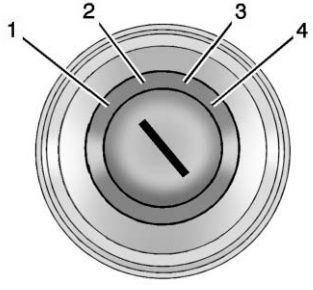

The ignition switch has four different positions.

Notice: **Using a tool to force the key to turn in the ignition could cause damage to the switch or break the key. Use the correct key, make sure it is all the way in, and turn it only with your hand. If the key cannot be turned by hand, see your dealer.**

The key must be fully extended to start the vehicle.

To shift out of P (Park), turn the ignition to ON/RUN and apply the brake pedal.

1 (STOPPING THE ENGINE/LOCK/OFF): When the vehicle is stopped, turn the ignition switch to LOCK/OFF to turn the engine off. Retained Accessory Power (RAP) will remain active. See *Retained Accessory Power (RAP) on page 9-23*.

This is the only position from which the key can be removed. This locks the ignition and automatic transmission.

Do not turn the engine off when the vehicle is moving. This will cause a loss of power assist in the brake and steering systems, and disable the airbags.

If the vehicle must be shut off in an emergency:

1. Brake using a firm and steady pressure. Do not pump the brakes repeatedly. This may deplete power assist, requiring increased brake pedal force.
2. Shift the vehicle to N (Neutral). This can be done while the vehicle is moving. After shifting to N (Neutral), firmly apply the brakes and steer the vehicle to a safe location.
3. Come to a complete stop, shift to P (Park), and turn the ignition to LOCK/OFF. On vehicles with an automatic transmission, the shift lever must be in P (Park) to turn the ignition switch to the LOCK/OFF position.
4. Set the parking brake. See *Parking Brake on page 9-30*.

⚠ WARNING

Turning off the vehicle while moving may cause loss of power assist in the brake and steering systems and disable the airbags. While driving, only shut the vehicle off in an emergency.

If the vehicle cannot be pulled over, and must be shut off while driving, turn the ignition to ACC/ACCESSORY.

2 (ACC/ACCESSORY): This position provides power to some of the electrical accessories. It unlocks the ignition. To move the key from ACC/ACCESSORY to LOCK/OFF, the shift lever must be in P (Park).

3 (ON/RUN): The ignition switch stays in this position when the engine is running. This position can be used to operate the electrical accessories, including the ventilation fan and 12-volt power outlets, as well as to display some warning and indicator lights. This position can also be used for service and diagnostics, and to verify the proper operation of the malfunction indicator lamp as may be required for emission inspection purposes. The transmission is also unlocked in this position.

The battery could be drained if the key is left in the ACC/ACCESSORY or ON/RUN position with the engine off. The vehicle might not restart if the battery is allowed to drain for an extended period of time.

4 (START): This position starts the engine. When the engine starts, release the key. The ignition switch will return to ON/RUN for normal driving.

A warning tone sounds when the driver door is opened when the ignition is still in ACC/ACCESSORY and the key is in the ignition. If the ignition becomes difficult to turn, see *Keys on page 2-2*.

Key Lock Release

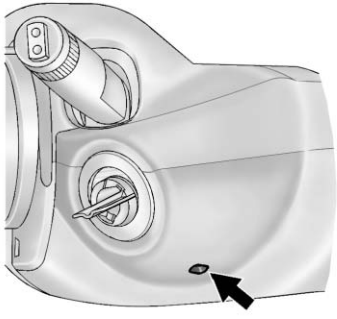

Vehicles with an automatic transmission are equipped with an electronic key lock release system. This system is to prevent ignition key removal unless the shift lever is in P (Park).

The key lock release will not work if the battery is charged less than 9 volts, or uncharged. Try charging or jump starting the battery. See *Jump Starting (with or without eAssist) on page 10-92* or *Jump Starting (On-board with eAssist Only) on page 10-91*.

If charging or jump starting the battery does not work, there is a manual key lock release. Locate the hole below the ignition lock. Insert a tool or key into the opening. Locate the lever, and press it toward the driver while removing the key from the ignition.

Ignition Positions (Keyless Access)

The vehicle has an electronic keyless ignition with pushbutton start.

Pressing the button cycles it through three modes, ACC/ACCESSORY, ON/RUN/START, and Stopping the Engine/OFF.

The transmitter must be in the vehicle for the system to operate. If the pushbutton start is not working, the vehicle may be near a strong radio antenna signal causing interference to the keyless access system. See *Remote Keyless Entry (RKE) System Operation on page 2-3* for more information.

To shift out of P (Park), the vehicle must be in ACC/ACCESSORY or ON/RUN and the brake pedal must be applied.

Stopping the Engine/LOCK/ OFF (No Indicator Lights): When the vehicle is stopped, press the ENGINE START/STOP button once to turn the engine off.

If the vehicle is in P (Park), the ignition will turn off, and Retained Accessory Power (RAP) will remain active. See *Retained Accessory Power (RAP) on page 9-23* for more information.

If the vehicle is not in P (Park), the ignition will return to ACC/ ACCESSORY and display the message SHIFT TO PARK in the Driver Information Center (DIC). See *Transmission Messages on page 5-35* for more information. When the vehicle is shifted into P (Park), the ignition system will switch to OFF.

Do not turn the engine off when the vehicle is moving. This will cause a loss of power assist in the brake and steering systems and disable the airbags.

If the vehicle must be shut off in an emergency:

1. Brake using a firm and steady pressure. Do not pump the brakes repeatedly. This may deplete power assist, requiring increased brake pedal force.
2. Shift the vehicle to N (Neutral). This can be done while the vehicle is moving. After shifting to N (Neutral), firmly apply the brakes and steer the vehicle to a safe location.
3. Come to a complete stop, shift to P (Park), and turn the ignition to OFF. On vehicles with an automatic transmission, the shift lever must be in P (Park) to turn the ignition switch to the OFF position.
4. Set the parking brake. See *Parking Brake on page 9-30*.

⚠ WARNING

Turning off the vehicle while moving may cause loss of power assist in the brake and steering systems and disable the airbags. While driving, only shut the vehicle off in an emergency.

If the vehicle cannot be pulled over, and must be shut off while driving, press and hold the engine START/ STOP button for longer than two seconds, or press twice in five seconds.

ACC/ACCESSORY (Amber Indicator Light): This mode allows you to use some electrical accessories when the engine is off.

With the ignition off, pressing the button one time without the brake pedal applied will place the ignition system in ACC/ACCESSORY.

The ignition will switch from ACC/ACCESSORY to OFF after five minutes to prevent battery run down.

ON/RUN/START (Green Indicator Light): This mode is for driving and starting. With the ignition off, and the brake pedal applied, pressing the button once will place the ignition system in ON/RUN/START. Once engine cranking begins, release the button. Engine cranking will continue until the engine starts. See *Starting the Engine on page 9-19* for more information. The ignition will then remain in ON/RUN.

Service Only Mode

This power mode is available for service and diagnostics, and to verify the proper operation of the malfunction indicator lamp as may be required for emission inspection purposes. With the vehicle off, and the brake pedal not applied, pressing and holding the button for more than five seconds will place the vehicle in Service Only Mode. The instruments and audio systems will operate as they do in ON/RUN, but the vehicle will not be able to be driven. The engine will not start in Service Only Mode. Push the button again to turn the vehicle off.

Starting the Engine

Move the shift lever to P (Park) or N (Neutral). The engine will not start in any other position. To restart the engine when the vehicle is already moving, use N (Neutral) only.

Notice: **Do not try to shift to P (Park) if the vehicle is moving. If you do, you could damage the transmission. Shift to P (Park) only when the vehicle is stopped.**

Notice: **If you add electrical parts or accessories, you could change the way the engine operates. Any resulting damage would not be covered by the vehicle warranty. See *Add-On Electrical Equipment on page 9-58*.**

Starting Procedure

1. With your foot off the accelerator pedal, turn the ignition key to START. When the engine starts, let go of the ignition.

   The idle speed will go down as your engine gets warm. Do not race the engine immediately after starting it. Operate the engine and transmission gently to allow the oil to warm up and lubricate all moving parts.

The vehicle has a Computer-Controlled Cranking System. This feature assists in starting the engine and protects components. If the ignition key is turned to the START position, and then released when the engine begins cranking, the engine will continue cranking for a few seconds or until the vehicle starts. If the engine does not start and the key is held in START for many seconds, cranking will be stopped after 15 seconds to prevent cranking motor damage. To prevent gear damage, this system also prevents cranking if the engine is already running. Engine cranking can be stopped by turning the ignition switch to ACC/ACCESSORY or LOCK/OFF.

Notice: **Cranking the engine for long periods of time, by returning the key to the START position immediately after cranking has ended, can overheat and damage the cranking motor, and drain the battery. Wait at least 15 seconds between each try, to let the cranking motor cool down.**

2. If the engine does not start after five to 10 seconds, especially in very cold weather (below −18°C or 0°F), it could be flooded with too much gasoline. Try pushing the accelerator pedal all the way to the floor and holding it there as you hold the key in START, or press the ENGINE START/STOP button, for up to a maximum of 15 seconds. Wait at least 15 seconds between each try, to allow the cranking motor to cool down. When the engine starts, let go of the key or button, and the accelerator. If the vehicle starts briefly but then stops again, do the same thing. This clears the extra gasoline from the engine. Do not race the engine immediately after starting it. Operate the engine and transmission gently until the oil warms up and lubricates all moving parts.

eAssist Automatic Engine Start/Stop

⚠ WARNING

Exiting the vehicle without first shifting into P (Park) may cause the vehicle to move. You or others may be injured. Because the vehicle has the automatic engine start/stop feature, the vehicle's engine might seem to be shut off; however, once the brake pedal is released, the engine will start up again.

Shift to P (Park) and turn the ignition to LOCK/OFF, before exiting the vehicle.

eAssist vehicles have an automatic engine start/stop feature. After the engine is started and has reached operating temperature, the auto stop feature may cause the engine to turn off when the brakes are applied and the vehicle comes to a complete stop. The vehicle may remain in auto stop for up to two minutes. When the brake is released or the accelerator pedal applied, the engine will restart. The engine will continue to run until the next auto stop.

AUTO STOP on the tachometer signifies that the engine is in auto stop mode. See *Tachometer on page 5-11*. When the vehicle is turned off, the tachometer will move to OFF. If the driver door is opened while in auto stop mode, a chime will sound.

There are several conditions that may prevent an auto stop or cause an auto start.

The Engine Will Remain Running When:

- The engine, transmission, or high voltage battery is not warmed up yet.
- The outside temperature is less than −20°C (−4°F).
- The air conditioning or defrost system need the compressor to maintain vehicle comfort. See *Dual Automatic Climate Control System on page 8-3*. The warmer it is outside, the shorter the time before the engine is restarted to provide cabin cooling. To maximize fuel economy, use the eco air conditioning mode.
- The shift lever is in P (Park), N (Neutral), R (Reverse), or M (Manual Mode).
- The high voltage battery pack charge is low.
- The hood is not fully closed.
- Brake pedal pressure is low.
- The malfunction indicator lamp is on; auto stop may be prevented.
- High humidity is detected.

The Engine Will Restart When:

- The brake pedal is released.
- The accelerator pedal is applied.
- Shifting out of D (Drive) to any other gear.
- The air conditioning or defrost system need the compressor to maintain vehicle comfort. See *Dual Automatic Climate Control System on page 8-3*. The warmer it is outside, the shorter the time before the engine is restarted to provide cabin cooling. To maximize fuel economy, use the eco air conditioning mode.
- The climate control system is turned from off to normal air conditioning or defrost. See *Dual Automatic Climate Control System on page 8-3*.

- The engine is required to run for either heater or climate control performance. See *Dual Automatic Climate Control System on page 8-3*.
- The high voltage battery pack charge is low and requires recharging.
- Auto stop time is greater than two minutes.
- The hood is opened.

Engine Heater

The engine coolant heater, if available, can help in cold weather conditions at or below −18°C (0°F) for easier starting and better fuel economy during engine warm-up. Plug in the coolant heater at least four hours before starting the vehicle. An internal thermostat in the plug end of the cord will prevent engine coolant heater operation at temperatures above −18°C (0°F).

To Use the Engine Coolant Heater

1. Turn off the engine.
2. Open the hood and unwrap the electrical cord.

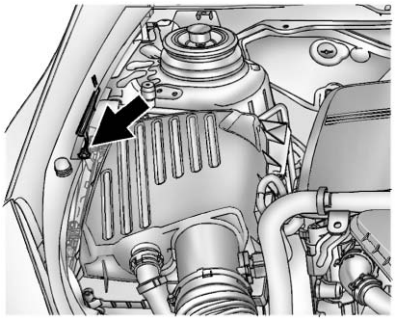

The electrical cord is on the passenger side of the engine compartment, between the fender and the air cleaner.

3. Plug it into a normal, grounded 110-volt AC outlet.

⚠ WARNING

Plugging the cord into an ungrounded outlet could cause an electrical shock. Also, the wrong kind of extension cord could overheat and cause a fire. You could be seriously injured. Plug the cord into a properly grounded three-prong 110-volt AC outlet. If the cord will not reach, use a heavy-duty three-prong extension cord rated for at least 15 amps.

4. Before starting the engine, be sure to unplug and store the cord as it was before to keep it away from moving engine parts.

The length of time the heater should remain plugged in depends on several factors. Ask a dealer in the area where you will be parking the vehicle for the best advice on this.

Retained Accessory Power (RAP)

These vehicle accessories can be used for up to 10 minutes after the engine is turned off:

- Audio System
- Power Windows
- Sunroof (if equipped)

These features continue to work up to 10 minutes after the ignition is turned to LOCK/OFF.

The power windows and sunroof will work until any door is opened.

The radio continues to work until the driver door is opened.

All these features operate when the key is in ON/RUN or ACC/ACCESSORY.

Shifting Into Park

1. Hold the brake pedal down and set the parking brake. See *Parking Brake on page 9-30*.
2. Move the shift lever into P (Park) by holding in the button on the shift lever and pushing the shift lever all the way toward the front of the vehicle.
3. Turn the ignition key to LOCK/OFF.
4. Remove the key and take it with you. If you can leave the vehicle with the ignition key in your hand, the vehicle is in P (Park).

Leaving the Vehicle with the Engine Running

⚠ WARNING

It can be dangerous to leave the vehicle with the engine running. It could overheat and catch fire.

It is dangerous to get out of the vehicle if the shift lever is not fully in P (Park) with the parking brake firmly set. The vehicle can roll.

(Continued)

WARNING (Continued)

Do not leave the vehicle when the engine is running. If you have left the engine running, the vehicle can move suddenly. You or others could be injured. To be sure the vehicle will not move, even when you are on fairly level ground, always set the parking brake and move the shift lever to P (Park). See *Shifting Into Park on page 9-23*.

If you have to leave the vehicle with the engine running, be sure the vehicle is in P (Park) and the parking brake is firmly set before you leave it. After you have moved the shift lever into P (Park), hold the regular brake pedal down. Then, see if you can move the shift lever away from P (Park) without first pushing the button.

If you can, it means that the shift lever was not fully locked in P (Park).

Torque Lock

Torque lock is when the weight of the vehicle puts too much force on the parking pawl in the transmission. This happens when parking on a hill and shifting the transmission into P (Park) is not done properly, then it is difficult to shift out of P (Park). To prevent torque lock, set the parking brake and then shift into P (Park). To find out how, see “Shifting Into Park” listed previously.

If torque lock does occur, your vehicle may need to be pushed uphill by another vehicle to relieve the parking pawl pressure, so you can shift out of P (Park).

If you are towing a trailer and parking on a hill, see *Driving Characteristics and Towing Tips on page 9-53*.

Shifting out of Park

This vehicle is equipped with an electronic shift lock release system. The shift lock release is designed to:

- Prevent ignition key removal unless the shift lever is in P (Park) with the shift lever button fully released.
- Prevent movement of the shift lever out of P (Park), unless the ignition is in ON/RUN and the brake pedal is applied.

The shift lock release is always functional except in the case of an uncharged or low voltage (less than 9-volt) battery.

If the vehicle has an uncharged battery or a battery with low voltage, try charging or jump starting the battery. See *Jump Starting (with or without eAssist) on page 10-92* or *Jump Starting (On-board with eAssist Only) on page 10-91*.

To shift out of P (Park):

1. Apply the brake pedal.
2. Place the ignition in ON/RUN.
3. Press the shift lever button.
4. Move the shift lever to the desired position.

If still unable to shift out of P (Park):

1. Fully release the shift lever button.
2. Hold the brake pedal down and press the shift lever button again.
3. Move the shift lever to the desired position.

If you are still having a problem shifting, see your dealer.

Shift Lock Manual Release

If jump starting the vehicle did not work, the shift lock manual release must be used.

To access the shift lock manual release:

1. Apply the parking brake.

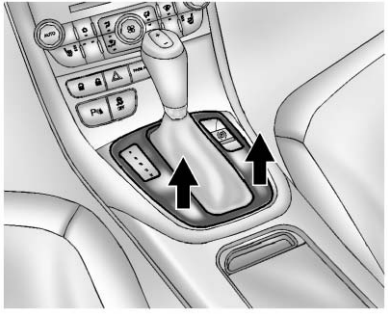

2. Release the shift lever trim from the center console at the rear, then fold upward and turn it to the left.

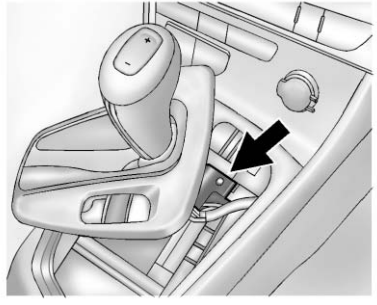

3. Insert a tool into the opening as far as it will go and move the shift lever out of P (Park).
   If P (Park) is selected again, the shift lever will be locked again. Have the cause of the problem fixed by your dealer.
4. Install the shift lever trim on the console.

Parking over Things That Burn

⚠ WARNING

Things that can burn could touch hot exhaust parts under the vehicle and ignite. Do not park over papers, leaves, dry grass, or other things that can burn.

Engine Exhaust

⚠ WARNING

Engine exhaust contains carbon monoxide (CO) which cannot be seen or smelled. Exposure to CO can cause unconsciousness and even death.

Exhaust may enter the vehicle if:

- The vehicle idles in areas with poor ventilation (parking garages, tunnels, deep snow that may block underbody airflow or tail pipes).
- The exhaust smells or sounds strange or different.
- The exhaust system leaks due to corrosion or damage.
- The vehicle exhaust system has been modified, damaged, or improperly repaired.

(Continued)

WARNING (Continued)

- There are holes or openings in the vehicle body from damage or aftermarket modifications that are not completely sealed.

If unusual fumes are detected or if it is suspected that exhaust is coming into the vehicle:

- Drive it only with the windows completely down.
- Have the vehicle repaired immediately.

Never park the vehicle with the engine running in an enclosed area such as a garage or a building that has no fresh air ventilation.

Running the Vehicle While Parked

It is better not to park with the engine running.

If the vehicle is left with the engine running, follow the proper steps to be sure the vehicle will not move. See *Shifting Into Park on page 9-23* and *Engine Exhaust on page 9-26*.

If parking on a hill and pulling a trailer, see *Driving Characteristics and Towing Tips on page 9-53*.

Automatic Transmission

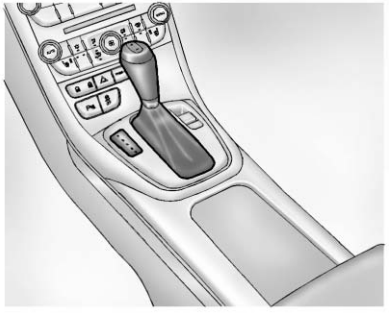

P (Park): This position locks the front wheels. It is the best position to use when you start the engine because the vehicle cannot move easily.

> **⚠ WARNING**
>
> It is dangerous to get out of the vehicle if the shift lever is not fully in P (Park) with the parking brake firmly set. The vehicle can roll.
>
> Do not leave the vehicle when the engine is running. If you have left the engine running, the vehicle can move suddenly. You or others could be injured. To be sure the vehicle will not move, even when you are on fairly level ground, always set the parking brake and move the shift lever to P (Park). See *Shifting Into Park on page 9-23*.

Make sure the shift lever is fully in P (Park) before starting the engine. The vehicle has an automatic transmission shift lock control system. You must fully apply the brake pedal then press the shift lever button before you can shift from P (Park) while the ignition key is in ON/RUN. If you cannot shift out of P (Park), ease pressure on the shift lever and push the shift lever all the way into P (Park) as you maintain brake application. Then move the shift lever into another gear. See *Shifting out of Park on page 9-24*.

R (Reverse): Use this gear to back up.

Notice: **Shifting to R (Reverse) while the vehicle is moving forward could damage the transmission. The repairs would not be covered by the vehicle warranty. Shift to R (Reverse) only after the vehicle is stopped.**

To rock the vehicle back and forth to get out of snow, ice, or sand without damaging the transmission, see *If the Vehicle Is Stuck on page 9-9*.

N (Neutral): In this position, the engine does not connect with the wheels. To restart the engine when the vehicle is already moving, use N (Neutral) only.

⚠ WARNING

Shifting into a drive gear while the engine is running at high speed is dangerous. Unless your foot is firmly on the brake pedal, the vehicle could move very rapidly. You could lose control and hit people or objects. Do not shift into a drive gear while the engine is running at high speed.

Notice: **Shifting out of P (Park) or N (Neutral) with the engine running at high speed may damage the transmission. The repairs would not be covered by the vehicle warranty. Be sure the engine is not running at high speed when shifting the vehicle.**

D (Drive): This position is for normal driving. It provides the best fuel economy. If you need more power for passing, and you are:

- Accelerating slowly or maintaining a constant speed, push the accelerator pedal about halfway down.
- Accelerating quickly or passing, push the accelerator all the way down.

M (Manual Mode): This position allows you to change gears similar to a manual transmission. If the vehicle has this feature, see *Manual Mode on page 9-28*.

Manual Mode

Driver Shift Control (DSC)

To use this feature:

1. Move the shift lever from D (Drive) rearward to M (Manual).

   While driving in manual mode, the transmission will remain in the driver selected gear. When coming to a stop in the manual position, the vehicle will automatically shift into 1 (First) gear.

2. Press the + (plus) end of the button on the top of the shift lever to upshift, or push the − (minus) end of the button to downshift.

The Driver Information Center (DIC) in the instrument cluster will change from the currently displayed message to the letter “M,” for Manual position, and a number indicating the requested gear.

While using the DSC feature the transmission will have firmer shifting and sportier performance. You can use this for sport driving or when climbing hills to stay in gear longer or to downshift for more power or engine braking.

The transmission will only allow you to shift into gears appropriate for the vehicle speed and engine revolutions per minute (rpm):

- The transmission will not allow shifting to the next higher gear if the vehicle speed or engine rpm is too low.
- The transmission will not allow shifting to the next lower gear if the vehicle speed or engine rpm is too high.

Second Gear Start Feature

When accelerating the vehicle from a stop in snowy and icy conditions, you may want to shift into 2 (Second) gear. A higher gear allows you to gain more traction on slippery surfaces.

With the DSC feature, the vehicle can be set to pull away in 2 (Second) gear.

1. Move the shift lever from D (Drive) to M (Manual Mode).
2. With the vehicle stopped, press the (+) end of the button to select 2 (Second) gear. The vehicle will start from a stop position in 2 (Second) gear.
3. Once moving, select the desired drive gear.

Brakes

Antilock Brake System (ABS)

This vehicle has the Antilock Brake System (ABS), an advanced electronic braking system that helps prevent a braking skid.

When the engine is started and the vehicle begins to drive away, ABS checks itself. A momentary motor or clicking noise might be heard while this test is going on, and it might even be noticed that the brake pedal moves a little. This is normal.

If there is a problem with ABS, this warning light stays on. See *Antilock Brake System (ABS) Warning Light on page 5-19*.

If driving safely on a wet road and it becomes necessary to slam on the brakes and continue braking to avoid a sudden obstacle, a computer senses that the wheels are slowing down. If one of the wheels is about to stop rolling, the computer will separately work the brakes at each wheel.

ABS can change the brake pressure to each wheel, as required, faster than any driver could. This can help the driver steer around the obstacle while braking hard.

As the brakes are applied, the computer keeps receiving updates on wheel speed and controls braking pressure accordingly.

Remember: ABS does not change the time needed to get a foot up to the brake pedal or always decrease stopping distance. If you get too close to the vehicle in front of you, there will not be enough time to apply the brakes if that vehicle suddenly slows or stops. Always leave enough room up ahead to stop, even with ABS.

Using ABS

Do not pump the brakes. Just hold the brake pedal down firmly and let ABS work. You might hear the ABS pump or motor operating and feel the brake pedal pulsate, but this is normal.

Braking in Emergencies

ABS allows the driver to steer and brake at the same time. In many emergencies, steering can help more than even the very best braking.

Parking Brake

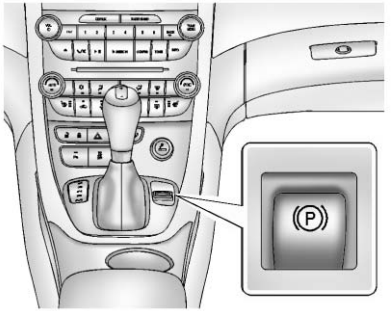

The vehicle has an Electric Parking Brake (EPB). The EPB can always be activated, even if the ignition is off. To prevent draining the battery, avoid repeated cycles of the EPB system when the engine is not running.

The system has a parking brake status light and a parking brake warning light. See *Electric Parking Brake Light on page 5-19*. There are also three Driver Information Center (DIC) messages. See *Brake System Messages on page 5-29*. In case of insufficient electrical power, the EPB cannot be applied or released.

Before leaving the vehicle, check the parking brake status light to ensure that the parking brake is applied.

EPB Apply

The EPB can be applied any time the vehicle is stopped. The EPB is applied by momentarily lifting up on the EPB switch. Once fully applied, the parking brake status light will be on. While the brake is being applied, the status light will flash until full apply is reached. If the light does not come on, or remains flashing, have the vehicle serviced. Do not drive the vehicle if the parking brake status light is flashing. See your dealer. See *Electric Parking Brake Light on page 5-19*.

If the EPB is applied while the vehicle is in motion, a chime will sound, and a DIC message will be displayed. The vehicle will decelerate as long as the switch is held in the up position. Releasing the EPB switch during deceleration will release the parking brake. If the switch is held in the up position until the vehicle comes to a stop, the EPB will remain applied.

If the parking brake status light flashes continuously, the EPB is only partially applied or released, or there is a problem with the EPB. A DIC message will be displayed. If this light flashes continuously, release the EPB, and attempt to apply it again. If this light continues to flash, do not drive the vehicle. See your dealer.

If the parking brake warning light is on, the EPB has detected an error in another system and is operating with reduced functionality. To apply the EPB when this light is on, lift up on the EPB switch and hold it in the up position. Full application of the parking brake by the EPB system may take longer than normal when this light is on. Continue to hold the switch until the parking brake status light remains on. If the parking brake warning light is on, see your dealer.

If the EPB fails to apply, the rear wheels should be blocked to prevent vehicle movement.

EPB Release

To release the EPB, place the ignition in the ACC/ACCESSORY or ON/RUN position, apply and hold the brake pedal, and push down momentarily on the EPB switch. If you attempt to release the EPB without the brake pedal applied, a chime will sound, and a DIC message will be displayed. The EPB is released when the parking brake status light is off.

If the parking brake warning light is on, the EPB has detected an error in another system and is operating with reduced functionality. To release the EPB when this light is on, push down on the EPB switch and hold it in the down position. EPB release may take longer than normal when this light is on. Continue to hold the switch until the parking brake status light is off. If the light is on, see your dealer.

Notice: **Driving with the parking brake on can overheat the brake system and cause premature wear or damage to brake system parts. Make sure that the parking brake is fully released and the brake warning light is off before driving.**

Automatic EPB Release

The EPB will automatically release if the vehicle is running, placed into gear, and an attempt is made to drive away. Avoid rapid acceleration when the EPB is applied, to preserve parking brake lining life.

For maximum EPB force when towing a trailer or parking on a hill, pull the EPB switch twice. If you are towing a trailer and parking on a hill, see *Driving Characteristics and Towing Tips on page 9-53*.

Brake Assist

This vehicle has a brake assist feature designed to assist the driver in stopping or decreasing vehicle speed in emergency driving conditions. This feature uses the stability system hydraulic brake control module to supplement the power brake system under conditions where the driver has quickly and forcefully applied the brake pedal in an attempt to quickly stop or slow down the vehicle. The stability system hydraulic brake control module increases brake pressure at each corner of the vehicle until the ABS activates. Minor brake pedal pulsation or pedal movement during this time is normal and the driver should continue to apply the brake pedal as the driving situation dictates. The brake assist feature will automatically disengage when the brake pedal is released or brake pedal pressure is quickly decreased.

Hill Start Assist (HSA)

This vehicle has a Hill Start Assist (HSA) feature, which may be useful when the vehicle is stopped on a grade. This feature is designed to prevent the vehicle from rolling, either forward or rearward, during vehicle drive off. After the driver completely stops and holds the vehicle in a complete standstill on a grade, HSA will be automatically activated. During the transition period between when the driver releases the brake pedal and starts to accelerate to drive off on a grade, HSA holds the braking pressure to ensure that there is no rolling. The brakes will automatically release when the accelerator pedal is applied within the two-second window. It will not activate if the vehicle is in a drive gear and facing downhill, or if the vehicle is facing uphill and in R (Reverse).

Ride Control Systems

Traction Control System (TCS)

The vehicle has a traction control system that limits wheel spin. This is especially useful in slippery road conditions. The system operates if it senses that one or both of the front wheels are spinning or beginning to lose traction. When this happens, the system brakes the spinning wheel(s) and/or reduces engine power to limit wheel spin.

The system may be heard or felt while it is working, but this is normal.

The TCS/StabiliTrak light flashes to indicate that the traction control system is active. This light comes on if there is a problem with the traction control system. When this light is on, the system does not limit wheel spin. Adjust your driving accordingly.

TCS automatically comes on whenever the vehicle is started. To limit wheel spin, especially in slippery road conditions, the system should always be left on. But, TCS can be turned off if needed.

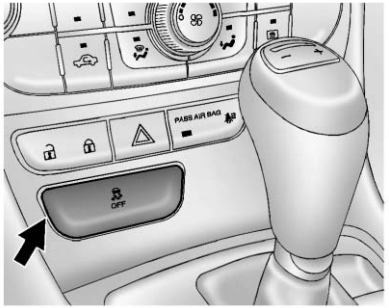

To turn the system off, press the TCS/StabiliTrak button on the center stack.

Notice: **Do not repeatedly brake or accelerate heavily when TCS is off. The vehicle's driveline could be damaged.**

The Traction Off light comes on to indicate that the traction control system has been turned off.

It might be necessary to turn the system off if the vehicle gets stuck in sand, mud, or snow and rocking the vehicle is required. See *If the Vehicle Is Stuck on page 9-9*. See also *Winter Driving on page 9-8* for information on using TCS when driving in snowy or icy conditions.

Press and release the TCS/StabiliTrak button again to turn the system back on. For information on turning StabiliTrak off and on, see *StabiliTrak® System on page 9-34*.

Adding accessories can affect the vehicle performance. See *Accessories and Modifications on page 10-3*.

StabiliTrak® System

The vehicle has a vehicle stability enhancement system called StabiliTrak. It is an advanced computer-controlled system that assists with directional control of the vehicle in difficult driving conditions.

StabiliTrak activates when the computer senses a difference between the intended path and the direction the vehicle is actually traveling. StabiliTrak selectively applies braking pressure at any one of the vehicle's brakes to help steer the vehicle in the intended direction.

When the stability control system activates, the TCS/StabiliTrak light flashes on the instrument panel.

This also occurs when traction control is activated. A noise might be heard or vibration might be felt in the brake pedal. This is normal. Continue to steer the vehicle in the intended direction.

If there is a problem detected with StabiliTrak, the TCS/StabiliTrak light comes on and the system is not operational. See *StabiliTrak® OFF Light on page 5-21*. Driving should be adjusted accordingly.

StabiliTrak comes on automatically whenever the vehicle is started. To assist with directional control of the vehicle, the system should always be left on.

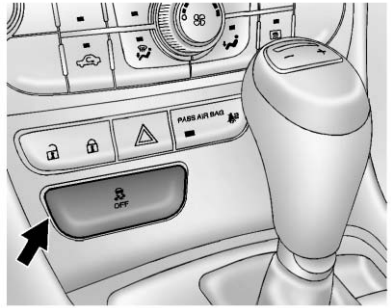

StabiliTrak OFF Light

Traction Off Light

StabiliTrak can be turned off if needed by pressing and holding the TCS/StabiliTrak button until the StabiliTrak OFF Light illuminates in the instrument cluster. Traction control will also be turned off and the Traction Off light will illuminate in the instrument cluster. For information on only turning TCS off and on, see *Traction Control System (TCS) on page 9-33*.

Press and release the TCS/ StabiliTrak button again to turn both systems back on.

If cruise control is being used when StabiliTrak activates, the cruise control automatically disengages. Press the cruise control button to reengage when road conditions allow. See *Cruise Control on page 9-36*.

Cruise Control

The cruise control lets the vehicle maintain a speed of about 40 km/h (25 mph) or more without keeping your foot on the accelerator. Cruise control does not work at speeds below 40 km/h (25 mph).

With the Traction Control System (TCS) or StabiliTrak system, the system may begin to limit wheel spin while you are using cruise control. If this happens, the cruise control will automatically disengage. See *Traction Control System (TCS) on page 9-33* or *StabiliTrak® System on page 9-34*.

⚠ WARNING

Cruise control can be dangerous where you cannot drive safely at a steady speed. So, do not use the cruise control on winding roads or in heavy traffic.

(Continued)

WARNING (Continued)

Cruise control can be dangerous on slippery roads. On such roads, fast changes in tire traction can cause excessive wheel slip, and you could lose control. Do not use cruise control on slippery roads.

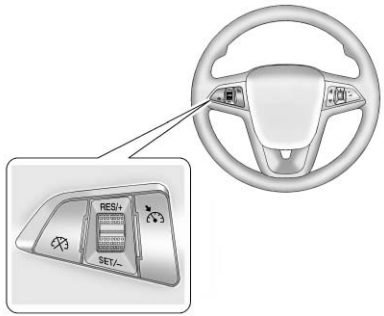

(On/Off): Press to turn the cruise control system on and off.

(Cancel): Press to disengage cruise control without erasing the set speed from memory.

RES/+ (Resume/Accel): Move the thumbwheel up to resume to a previously set speed or to accelerate.

SET/− (Set/Coast): Move the thumbwheel down to set a speed and activate cruise control or to make the vehicle decelerate.

Setting Cruise Control

If the cruise button is on when not in use, it could get bumped and go into cruise when not desired. Keep the cruise control button off when cruise is not being used.

To set a speed:

1. Press to turn cruise control on. A white indicator light turns on in the instrument cluster.
2. Get up to the speed desired.

3. Move the thumbwheel down toward SET/− and release it. The indicator turns green in the instrument cluster and the desired set speed briefly appears.
4. Take your foot off the accelerator pedal.

When the brakes are applied, the cruise control shuts off.

Resuming a Set Speed

If the cruise control is set at a desired speed and then the brakes are applied, the cruise control is disengaged without erasing the set speed from memory. Once the vehicle speed is about 40 km/h (25 mph) or greater, move the thumbwheel up toward RES/+ briefly and then release it. The vehicle returns to the previously set speed and stays there.

Increasing Speed While Using Cruise Control

If the cruise control system is already activated:

- Move the thumbwheel up toward RES/+ and hold it until the vehicle accelerates to the desired speed, then release it.
- To increase the speed in small amounts, move the thumbwheel up toward RES/+ briefly and then release it. Each time this is done, the vehicle goes about 1.6 km/h (1 mph) faster.

Reducing Speed While Using Cruise Control

If the cruise control system is already activated:

- Move the thumbwheel toward SET/− and hold until the desired lower speed is reached, then release it.
- To slow down in very small amounts, move the thumbwheel toward SET/− briefly. Each time this is done, the vehicle goes about 1.6 km/h (1 mph) slower.

Passing Another Vehicle While Using Cruise Control

Use the accelerator pedal to increase vehicle speed. When you take your foot off the pedal, the vehicle will slow down to the previously set cruise control speed.

Using Cruise Control on Hills

How well the cruise control works on hills depends upon the vehicle speed, load, and the steepness of the hills. When going up steep hills, you might have to step on the accelerator pedal to maintain the vehicle speed. When going downhill, you might have to brake or shift to a lower gear to maintain the vehicle speed. When the brakes are applied the cruise control is disengaged.

Ending Cruise Control

There are three ways to end cruise control:

- Step lightly on the brake pedal; when cruise control disengages, the indicator light will not be lit.
- Press .
- Press to turn the cruise control system off completely. The cruise control cannot be resumed.

Erasing Speed Memory

The cruise control set speed is erased from memory if is pressed or if the vehicle is turned off.

Object Detection Systems

Forward Collision Alert (FCA) System

For vehicles with this feature, read the following section before using it.

The FCA system may help to avoid or reduce the harm caused by front-end crashes. FCA provides a flashing visual alert and beeps when approaching a vehicle directly ahead too quickly. FCA also provides a visual alert if following another vehicle much too closely.

The forward-looking FCA camera sensor is on the windshield ahead of the rearview mirror. FCA detects vehicles within a distance of approximately 60 m (197 ft) and operates at speeds above 40 km/h (25 mph).

⚠ WARNING

FCA is a warning system and does not apply the brakes. When approaching a slower-moving or stopped vehicle ahead too rapidly, or when following a vehicle too closely, FCA may not provide a warning with enough time to help avoid a crash. FCA does not warn of pedestrians, animals, signs, guardrails, bridges, construction barrels, or other objects. Be ready to take action and apply the brakes. For more information, see *Defensive Driving on page 9-3*.

Detecting the Vehicle Ahead

The green vehicle ahead indicator will appear when a vehicle is detected ahead. Whenever this indicator does not appear, FCA will not respond. The indicator may disappear on curves, highway exit ramps, or hills, or due to poor visibility. The FCA system will not detect another vehicle ahead until it is completely in the driving lane.

⚠ WARNING

FCA does not provide a warning to help avoid a crash, unless it detects a vehicle. FCA may not detect a vehicle ahead if the FCA sensor is blocked by dirt, snow, or ice, or if the windshield is damaged. It may also not detect a vehicle on winding or hilly roads, or in conditions that can limit visibility such as fog, rain, or snow, or if the headlamps or windshield are not cleaned or in proper condition. Keep the windshield, headlamps, and FCA sensors clean and in good repair.

Collision Alert

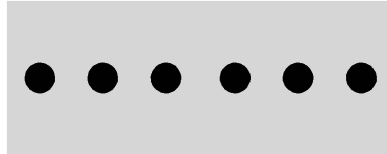

When your vehicle approaches another vehicle too rapidly, the red FCA display will flash and eight beeps will sound from the front. When this occurs, the brake system prepares for driver braking to occur more rapidly. Continue to apply the brake pedal as the driving situation dictates.

Tailgating Alert

The green vehicle ahead indicator will turn amber if the vehicle ahead remains much too close.

Selecting the Alert Timing

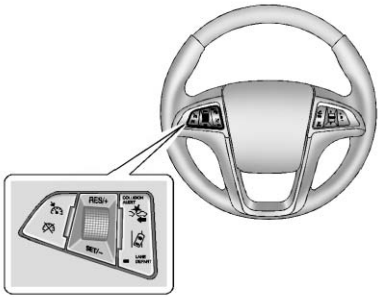

The Collision Alert control is on the steering wheel. Press COLLISION ALERT to set the alert timing to far, medium, near, or off. The first button press shows the current control setting on the DIC. Additional button presses will change this setting. The chosen setting will remain until it is changed and will affect both the Collision Alert and the Tailgating Alert features. The timing of both alerts will vary based on vehicle speed. The faster the vehicle speed, the further away the alert will occur. Consider traffic and weather conditions when selecting the alert timing. The range of selectable alert timing may not be appropriate for all drivers and driving conditions.

Unnecessary Alerts

FCA may provide unnecessary alerts to turning vehicles, vehicles in other lanes, objects that are not vehicles, or shadows. These alerts are normal operation and the vehicle does not need service.

Other Messages

There are messages that may appear on the Driver Information Center (DIC) in the instrument cluster to provide information about FCA. See *Object Detection System Messages on page 5-33*.

Cleaning the System

If the FCA system does not seem to operate properly, clean the outside of the windshield area in front of the camera sensor before considering taking the vehicle in for service.

Ultrasonic Parking Assist

If available, the Ultrasonic Rear Parking Assist (URPA) system assists the driver with parking and avoiding objects while in R (Reverse). URPA operates at speeds less than 8 km/h (5 mph). The sensors on the rear bumper detect objects up to 2.5 m (8 ft) behind the vehicle, and at least 20 cm (8 in) off the ground and below trunk level. The detection distance may be less during warmer or humid weather.

⚠ WARNING

The URPA system does not detect children, pedestrians, bicyclists, animals, or objects below the bumper or that are too close or too far from the vehicle. It is not available at speeds greater than 8 km/h (5 mph). To prevent injury, death, or vehicle damage, even with URPA, always check the area around the vehicle and check all mirrors before backing.

How the System Works

URPA comes on automatically when the shift lever is moved into R (Reverse). A single tone sounds to indicate the system is working.

URPA operates only at speeds less than 8 km/h (5 mph).

An obstacle is indicated by audible beeps. The interval between the beeps becomes shorter as the vehicle gets closer to the obstacle. When the distance is less than 30 cm (12 in) the beeping is a continuous tone for five seconds.

Turning the System On and Off

The URPA system can be turned on and off using the park assist button next to the shift lever.

The indicator light next to the park assist button lights up when the system is on and turns off when it has been disabled.

When the system is off, a message displays on the Driver Information Center (DIC). The message disappears after a short period of time.

URPA defaults to the on setting each time the vehicle is started.

When the System Does Not Seem to Work Properly

The following messages may be displayed on the DIC:

SERVICE PARK ASSIST: If this message occurs, take the vehicle to your dealer to repair the system.

PARK ASSIST OFF: If the URPA system does not activate due to a temporary condition, this message displays on the DIC. This can occur under the following conditions:

- The driver has disabled the system.
- The ultrasonic sensors are not clean. Keep the vehicle's rear bumper free of mud, dirt, snow, ice, and slush. For cleaning instructions, see *Exterior Care on page 10-97*.

- The park assist sensors are covered by frost or ice. Frost or ice can form around and behind the sensors and may not always be seen; this can occur after washing the vehicle in cold weather. The message may not clear until the frost or ice has melted.
- An object was hanging out of the trunk during the last drive cycle. Once the object is removed, URPA will return to normal operation.
- The bumper is damaged. Take the vehicle to your dealer to repair the system.
- Other conditions, such as vibrations from a jackhammer or the compression of air brakes on a very large truck, are affecting system performance.

Rear Vision Camera (RVC)

The vehicle may have an RVC system. Read this entire section before using it.

The RVC system can assist the driver when backing up by displaying a view of the area behind the vehicle.

⚠ WARNING

The RVC system does not display children, pedestrians, bicyclists, animals, or any other object located outside the camera's field of view, below the bumper, or under the vehicle. Perceived distances may be different from actual distances. Do not back the vehicle using only the RVC screen, during longer, higher speed backing maneuvers, or where there could be cross traffic. Failure to use proper care

(Continued)

WARNING (Continued)

before backing may result in injury, death, or vehicle damage. Always check behind and around the vehicle before backing.

How the System Works

When the vehicle is shifted into R (Reverse), the image of the area behind the vehicle appears in the radio screen. The previous screen displays when the vehicle is shifted out of R (Reverse) after approximately 10 seconds.

To see the previous screen sooner, do one of the following:

- Press a button on the infotainment system.
- Shift into P (Park).
- Reach a vehicle speed of 8 km/h (5 mph).

Turning the Rear Vision Camera System On or Off

To turn the RVC system on or off:

1. Shift into P (Park).
2. Press the CONFIG button on the infotainment system.
3. Select Display.
4. Select Camera. When a checkmark appears next to Camera, then the RVC system is on.

Guidelines

The RVC system has a guideline overlay that can help the driver align the vehicle when backing into a parking spot.

To turn the guidelines on or off:

1. Shift into P (Park).
2. Press the CONFIG button on the infotainment system.
3. Select Display.
4. Select Guidelines. When a checkmark appears next to Guidelines, guidelines will appear.

Rear Vision Camera Error Messages

SERVICE REAR VISION CAMERA SYSTEM: If this message appears in the center stack display, the system may need service.

If any other problem occurs or if a problem persists, see your dealer.

Rear Vision Camera Location

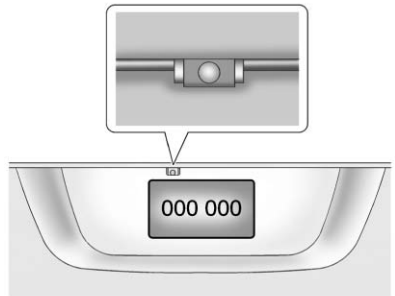

The RVC is above the license plate.

The area displayed by the camera is limited.

It does not display objects that are close to either corner or under the bumper and can vary depending on vehicle orientation or road conditions. The distance of the image that appears on the screen is different from the actual distance.

The following illustration shows the field of view that the camera provides.

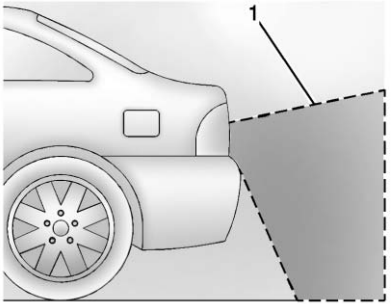

1. View displayed by the camera.

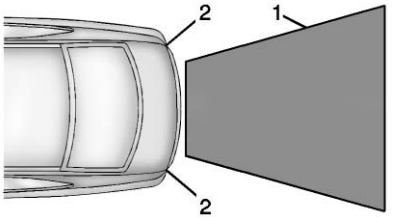

1. View displayed by the camera.
2. Corner of the rear bumper.

When the System Does Not Seem To Work Properly

The RVC system may not work properly or display a clear image if:

- The RVC is turned off. See “Turning the Rear Vision Camera System On or Off” earlier in this section.
- It is dark.
- The sun or the beam of headlamps is shining directly into the camera lens.
- Ice, snow, mud, or anything else has built up on the camera lens. Clean the lens, rinse it with water, and wipe it with a soft cloth.
- The back of the vehicle was in an accident. The position and mounting angle of the camera can change or the camera can be affected. Be sure to have the camera and its position and mounting angle checked at your dealer.

Lane Departure Warning (LDW)

The vehicle may have an LDW system. Read this entire section before using the system.

⚠ WARNING

The LDW system is an aid to help the vehicle stay in the driving lane. It does not steer the vehicle. The LDW system may not:

- Provide enough time to avoid a crash.
- Detect lane markings under bad weather conditions or if the windshield is dirty.
- Detect lane markings and will not detect road edges.
- Warn that the vehicle is crossing a lane marking if the system does not detect the lane marking.

If LDW only detects lane markings on one side of the road, it will only warn you when departing the lane on the side where it has detected a lane marker. Even with LDW, always keep your attention on the road

(Continued)

WARNING (Continued)

and maintain proper vehicle position within the lane, or vehicle damage, injury, or death could occur. Always keep the windshield clean and do not use LDW in bad weather conditions.

When the vehicle crosses a detected lane marking, the LDW indicator will flash and three beeps will sound from the left or right side, depending on the lane departure direction. LDW will not warn if the turn signal is on or if a sharp maneuver is made.

How the System Works

The LDW camera sensor is on the windshield ahead of the rearview mirror.

To turn LDW on and off, press on the center stack, forward of the shift lever. The control indicator will light when LDW is on.

When the vehicle is started, the LDW indicator will come on briefly.

LDW operates at speeds of 56 km (35 mph) or greater. If LDW is on, the LDW indicator will appear green if the system detects a left or right lane marking. This indicator will change to amber, flash, and sound three beeps if the vehicle crosses a detected lane marking without using the turn signal.

When the System Does Not Seem To Work Properly

If the LDW symbol does not appear:

- The lane markings on the road may not be seen.
- The camera sensor may be blocked by dirt, snow, or ice.

- The windshield may be damaged.
- The weather may be limiting visibility.

This is normal operation; the vehicle does not need service. Clean the windshield.

⚠ WARNING

If the LDW camera sensor is blocked by dirt, snow, or ice, or if the headlamps are not cleaned or properly aimed, or if the windshield is dirty or damaged, it may not detect the lanes ahead. LDW may not help avoid a crash under these conditions. Keep the headlamps cleaned and properly aimed and the windshield clean.

LDW warnings may occasionally occur due to tar marks, shadows, cracks in the road, or other road imperfections. This is normal system operation; the vehicle does not need service.

LDW Messages

SERVICE LANE DEPARTURE WARNING: This message may appear on the DIC to indicate that LDW is not working properly. If this message remains on after continued driving, the system needs service. Take your vehicle to your dealer.

LANE DEPARTURE WARNING UNAVAILABLE: This message may appear in the DIC if LDW does not activate due to a temporary condition.

Fuel

Use of the recommended fuel is an important part of the proper maintenance of this vehicle. To help keep the engine clean and maintain optimum vehicle performance, we recommend the use of gasoline advertised as TOP TIER Detergent Gasoline.

Look for the TOP TIER label on the fuel pump to ensure gasoline meets enhanced detergency standards developed by auto companies. A list of marketers providing TOP TIER Detergent Gasoline can be found at www.toptiergas.com. TOP TIER gasoline is only available in the U.S. and Canada.

The eighth digit of the Vehicle Identification Number (VIN) shows the code letter or number that identifies the vehicle's engine. The VIN is at the top left of the instrument panel. See *Vehicle Identification Number (VIN) on page 12-1*.

Vehicles that have a yellow fuel cap can use either unleaded gasoline or ethanol fuel containing up to 85% ethanol (E85). See *Fuel E85 (85% Ethanol) on page 9-49*. For all other vehicles, use only the unleaded gasoline described under *Recommended Fuel on page 9-47*.

Recommended Fuel

If the vehicle has a 2.4L L4 engine or a 2.5L L4 engine, use regular unleaded gasoline with a posted octane rating of 87 or higher. If the octane rating is less than 87, an audible knocking noise, commonly referred to as spark knock, might be heard when driving. If this occurs, use a gasoline rated at 87 octane or higher as soon as possible. If heavy knocking is heard when using gasoline rated at 87 octane or higher, the engine needs service.

If the vehicle has the 2.0L L4 engine, use premium unleaded gasoline with a posted octane rating of 91 or higher. You can also use regular unleaded gasoline rated at 87 octane or higher, but the vehicle's acceleration could be slightly reduced, and a slight audible knocking noise, commonly referred to as spark knock, might be heard. If the octane is less than 87, a heavy knocking noise might be heard when driving. If this occurs, use a gasoline rated at 87 octane or higher as soon as possible. Otherwise, you could damage the engine. If heavy knocking is heard when using gasoline rated at 87 octane or higher, the engine needs service.

Gasoline Specifications

At a minimum, gasoline should meet ASTM specification D 4814. Some gasolines contain an octane-enhancing additive called methylcyclopentadienyl manganese tricarbonyl (MMT). We recommend against the use of gasolines containing MMT. See *Fuel Additives on page 9-48*.

California Fuel Requirements

If the vehicle is certified to meet California Emissions Standards, it is designed to operate on fuels that meet California specifications.

See the underhood emission control label. If this fuel is not available in states adopting California Emissions Standards, the vehicle will operate satisfactorily on fuels meeting federal specifications, but emission control system performance might be affected. The malfunction indicator lamp could turn on and the vehicle might fail a smog-check test. See *Malfunction Indicator Lamp on page 5-15*. If this occurs, return to your authorized dealer for diagnosis. If it is determined that the condition is caused by the type of fuel used, repairs might not be covered by the vehicle warranty.

Fuels in Foreign Countries

If planning to drive in countries outside the U.S. or Canada, the proper fuel might be hard to find. Check regional auto club or fuel retail brand websites for availability in the country where driving. Never use leaded gasoline, fuel containing methanol, or any other fuel not recommended. Costly repairs caused by use of improper fuel would not be covered by the vehicle warranty.

Fuel Additives

To provide cleaner air, all gasolines in the United States are now required to contain additives that help prevent engine and fuel system deposits from forming, allowing the emission control system to work properly. In most cases, nothing should have to be added to the fuel. However, some gasolines contain only the minimum amount of additive required to meet U.S. Environmental Protection Agency regulations. To help keep fuel injectors and intake valves clean and avoid problems due to dirty injectors or valves, look for gasoline that is advertised as TOP TIER Detergent Gasoline. Look for the TOP TIER label on the fuel pump to ensure gasoline meets enhanced detergency standards developed by the auto companies. A list of marketers providing TOP TIER Detergent Gasoline can be found at www.toptiergas.com.

For customers who do not use TOP TIER Detergent Gasoline regularly, one bottle of GM Fuel System Treatment PLUS, added to the fuel tank at every engine oil change, can help clean deposits from fuel injectors and intake valves. GM Fuel System Treatment PLUS is the only gasoline additive recommended by General Motors. It is available at your dealer.

Gasolines containing oxygenates, such as ethers and ethanol, and reformulated gasolines might be available in your area. We recommend that you use these gasolines, if they comply with the specifications described earlier. However, E85 (85% ethanol) and other fuels containing more than 15% ethanol must not be used in vehicles that were not designed for those fuels.

Notice: **This vehicle was not designed for fuel that contains methanol. Do not use fuel containing methanol. It can corrode metal parts in the fuel system and also damage plastic and rubber parts. That damage would not be covered under the vehicle warranty.**

Some gasolines that are not reformulated for low emissions can contain an octane-enhancing additive called methylcyclopentadienyl manganese tricarbonyl (MMT); ask the attendant where you buy gasoline whether the fuel contains MMT. We recommend against the use of such gasolines. Fuels containing MMT can reduce spark plug life and affect emission control system performance. The malfunction indicator lamp might turn on. If this occurs, return to your dealer for service.

Fuel E85 (85% Ethanol)

Vehicles that have a yellow fuel cap can use either unleaded gasoline or ethanol fuel containing up to 85% ethanol (E85). For all other vehicles, use only the unleaded gasoline described under *Recommended Fuel on page 9-47*.

We encourage the use of E85 in vehicles that are designed to use it. The ethanol in E85 is a “renewable” fuel, meaning it is made from renewable sources such as corn and other crops.

Many service stations will not have an 85% ethanol fuel (E85) pump available. The U.S. Department of Energy has an alternative fuels website (www.afdc.energy.gov/afdc/locator/stations/) that can help you find E85 fuel. Those stations that do have E85 should have a label indicating ethanol content. Do not use the fuel if the ethanol content is greater than 85%.

At a minimum, E85 should meet ASTM Specification D 5798 or CGSB Specification 3.512. Filling the tank with fuel mixtures that do not meet ASTM or CGSB specifications can affect driveability and could cause the malfunction indicator lamp to come on. As the outside temperature approaches freezing, ethanol fuel distributors should supply winter grade ethanol, the same as with unleaded gasoline.

It is best not to alternate repeatedly between gasoline and E85. If you do switch fuels, it is recommended that you add as much fuel as possible — do not add less than 11 L (3 gal) when refueling. You should drive the vehicle immediately after refueling for at least 11 km (7 mi) to allow the vehicle to adapt to the change in ethanol concentration.

E85 has less energy per liter (gallon) than gasoline, so you will need to refill the fuel tank more often when using E85 than when you are using gasoline. See *Filling the Tank on page 9-50*.

Notice: **Some additives are not compatible with E85 fuel and can harm the vehicle's fuel system. Do not add anything to E85. Damage caused by additives would not be covered by the vehicle warranty.**

Notice: **This vehicle was not designed for fuel that contains methanol. Do not use fuel containing methanol. It can corrode metal parts in the fuel system and also damage plastic and rubber parts. That damage would not be covered under the vehicle warranty.**

Filling the Tank

⚠ WARNING

Fuel vapors and fuel fires burn violently and can cause injury or death.

- To help avoid injuries to you and others, read and follow all the instructions on the fuel pump island.
- Turn off the engine when refueling.
- Keep sparks, flames, and smoking materials away from fuel.
- Do not leave the fuel pump unattended.

(Continued)

WARNING (Continued)

- Do not reenter the vehicle while pumping fuel.
- Keep children away from the fuel pump and never let children pump fuel.
- Fuel can spray out if the fuel cap is opened too quickly. This spray can happen if the tank is nearly full, and is more likely in hot weather. Open the fuel cap slowly and wait for any hiss noise to stop then unscrew the cap all the way

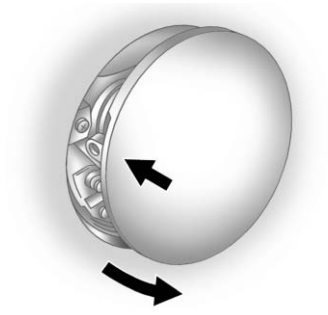

The fuel cap is behind the fuel door on the vehicle's passenger side. To open the fuel door, push the rearward center edge in and release.

Turn the tethered fuel cap counterclockwise to remove. If the vehicle has E85 fuel capability, the fuel cap will be yellow and state that E85 or gasoline can be used. See *Fuel E85 (85% Ethanol) on page 9-49*. While refueling, hang the tethered fuel cap from the hook on the fuel door. Reinstall the cap by turning it clockwise until it clicks.

If the cap is not properly installed, the malfunction indicator lamp will come on. See *Malfunction Indicator Lamp on page 5-15*.

Do not top off or overfill the tank and wait a few seconds before removing the nozzle. Clean fuel from painted surfaces as soon as possible. See *Exterior Care on page 10-97*.

⚠ WARNING

If a fire starts while you are refueling, do not remove the nozzle. Shut off the flow of fuel by shutting off the pump or by notifying the station attendant. Leave the area immediately.

Notice: **If a new fuel cap is needed, be sure to get the right type of cap from your dealer. The wrong type of fuel cap might not fit properly, might cause the malfunction indicator lamp to light, and could damage the fuel tank and emissions system. See *Malfunction Indicator Lamp on page 5-15*.**

Filling a Portable Fuel Container

⚠ WARNING

Filling a portable fuel container while it is in the vehicle can cause fuel vapors that can ignite either by static electricity or other means. You or others could be badly burned and the vehicle could be damaged. Always:

- Use approved fuel containers.
- Remove the container from the vehicle, trunk, or pickup bed before filling.
- Place the container on the ground.

(Continued)

WARNING (Continued)

- Place the nozzle inside the fill opening of the container before dispensing fuel, and keep it in contact with the fill opening until filling is complete.
- Fill the container no more than 95% full to allow for expansion.
- Do not smoke, light matches, or use lighters while pumping fuel.
- Avoid using cell phones or other electronic devices.

Towing

General Towing Information

Only use towing equipment that has been designed for the vehicle. Contact your dealer or trailering dealer for assistance with preparing the vehicle for towing a trailer. Read the entire section before towing a trailer.

For towing a disabled vehicle, see *Towing the Vehicle on page 10-95*. For towing the vehicle behind another vehicle such as a motor home, see *Recreational Vehicle Towing on page 10-95*.

Driving Characteristics and Towing Tips

Driving with a Trailer

When towing a trailer:

- Become familiar with the state and local laws that apply specifically to trailer towing.
- Do not tow a trailer during the first 800 km (500 mi), to prevent damage to the engine, axle or other parts.
- Then, during the first 800 km (500 mi) trailer towing, do not drive over 80 km/h (50 mph) and do not make starts at full throttle.
- The vehicle can tow in D (Drive) but M (Manual Mode) is recommended. See *Manual Mode on page 9-28*. Use a lower gear if the transmission shifts too often.

⚠ WARNING

When towing a trailer, exhaust gases may collect at the rear of the vehicle and enter if the liftgate, trunk/hatch, or rear-most window is open.

When towing a trailer:

- Do not drive with the liftgate, trunk/hatch, or rear-most window open.
- Fully open the air outlets on or under the instrument panel.
- Also adjust the Climate Control system to a setting that brings in only outside air. See “Climate Control Systems” in the Index.

For more information about Carbon Monoxide, see *Engine Exhaust on page 9-26*.

Towing a trailer requires a certain amount of experience. The combination you are driving is longer and not as responsive as the vehicle itself. Get acquainted with the handling and braking of the rig before setting out for the open road.

Before starting, check all trailer hitch parts and attachments, safety chains, electrical connectors, lamps, tires and mirrors. If the trailer has electric brakes, start the combination moving and then apply the trailer brake controller by hand to be sure the brakes work.

During the trip, check occasionally to be sure that the load is secure and the lamps and any trailer brakes still work.

Towing with a Stability Control System

When towing, the sound of the stability control system might be heard. The system is reacting to the vehicle movement caused by the trailer, which mainly occurs during cornering. This is normal when towing heavier trailers.

Following Distance

Stay at least twice as far behind the vehicle ahead as you would when driving the vehicle without a trailer. This can help to avoid situations that require heavy braking and sudden turns.

Passing

More passing distance is needed when towing a trailer. Because the rig is longer, it is necessary to go farther beyond the passed vehicle before returning to the lane.

Backing Up

Hold the bottom of the steering wheel with one hand. To move the trailer to the left, move your hand to the left. To move the trailer to the right, move your hand to the right. Always back up slowly and, if possible, have someone guide you.

Making Turns

Notice: **Making very sharp turns while trailering could cause the trailer to come in contact with the vehicle. The vehicle could be damaged. Avoid making very sharp turns while trailering.**

When turning with a trailer, make wider turns than normal so the trailer will not strike soft shoulders, curbs, road signs, trees or other objects. Use the turn signal well in advance and avoid jerky or sudden maneuvers.

Turn Signals When Towing a Trailer

The turn signal indicators on the instrument cluster flash whenever signaling a turn or lane change. Properly hooked up, the trailer lamps also flash, telling other drivers the vehicle is turning, changing lanes or stopping.

When towing a trailer, the arrows on the instrument cluster flash for turns even if the bulbs on the trailer are burned out. Check occasionally to be sure the trailer bulbs are still working.

Driving on Grades

Reduce speed and shift to a lower gear before starting down a long or steep downgrade. If the transmission is not shifted down, the brakes might have to be used so much that they would get hot and no longer work well.

The vehicle can tow in D (Drive). Use a lower gear if the transmission shifts too often.

When towing at high altitude on steep uphill grades, engine coolant boils at a lower temperature than at normal altitudes. If the engine is turned off immediately after towing at high altitude on steep uphill grades, the vehicle could show signs similar to engine overheating. To avoid this, let the engine run while parked, preferably on level ground, with the transmission in P (Park) for a few minutes before turning the engine off. If the overheat warning comes on, see *Engine Overheating on page 10-20*.

Parking on Hills

⚠ WARNING

Parking the vehicle on a hill with the trailer attached can be dangerous. If something goes wrong, the rig could start to move.

(Continued)

WARNING (Continued)

People can be injured, and both the vehicle and the trailer can be damaged. When possible, always park the rig on a flat surface.

If parking the rig on a hill:

1. Press the brake pedal, but do not shift into P (Park) yet. Turn the wheels into the curb if facing downhill or into traffic if facing uphill.
2. Have someone place chocks under the trailer wheels.
3. When the wheel chocks are in place, release the brake pedal until the chocks absorb the load.
4. Reapply the brake pedal. Then apply the parking brake and shift into P (Park).
5. Release the brake pedal.

Leaving After Parking on a Hill

1. Apply and hold the brake pedal while you:
   - Start the engine.
   - Shift into a gear.
   - Release the parking brake.
2. Let up on the brake pedal.
3. Drive slowly until the trailer is clear of the chocks.
4. Stop and have someone pick up and store the chocks.

Maintenance When Trailer Towing

The vehicle needs service more often when pulling a trailer. See the *Maintenance Schedule on page 11-2*. Things that are especially important in trailer operation are automatic transmission fluid, engine oil, axle lubricant, belts, cooling system and brake system. Inspect these before and during the trip.

Check periodically to see that all hitch nuts and bolts are tight.

Engine Cooling When Trailer Towing

The cooling system may temporarily overheat during severe operating conditions. See *Engine Overheating on page 10-20*.

Trailer Towing (Except eAssist)

Before pulling a trailer, there are three important considerations that have to do with weight:

- The weight of the trailer.
- The weight of the trailer tongue.
- The total weight on your vehicle's tires.

Weight of the Trailer

How heavy can a trailer safely be?

It should never weigh more than 454 kg (1,000 lbs). But even that can be too heavy.

It depends on how the rig is used. For example, speed, altitude, road grades, outside temperature, and how much the vehicle is used to pull a trailer are all important. It can depend on any special equipment on the vehicle, and the amount of tongue weight the vehicle can carry. See “Weight of the Trailer Tongue” later in this section.

Maximum trailer weight is calculated assuming only the driver is in the tow vehicle and it has all the required trailering equipment. The weight of additional optional equipment, passengers, and cargo in the tow vehicle must be subtracted from the maximum trailer weight.

Ask your dealer for trailering information or advice, or write us at our Customer Assistance Offices. See *Customer Assistance Offices (U.S. and Canada) on page 13-5* or *Customer Assistance Offices (Mexico) on page 13-5*.

Weight of the Trailer Tongue

The tongue load (1) of any trailer is an important weight to measure because it affects the total gross weight of the vehicle. The Gross Vehicle Weight (GVW) includes the curb weight of the vehicle, any cargo carried in it, and the people who will be riding in the vehicle. If there are a lot of options, equipment, passengers, or cargo in the vehicle, it will reduce the tongue weight the vehicle can carry, which will also reduce the trailer weight the vehicle can tow. If towing a trailer, the tongue load must be added to the GVW because the vehicle will be carrying that weight, too. See *Vehicle Load Limits on page 9-10*.

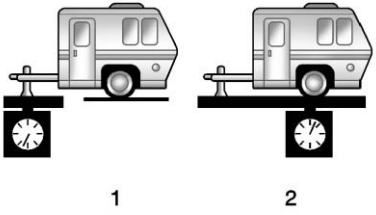

The trailer tongue (1) should weigh 10 to 15 percent of the total loaded trailer weight (2).

After loading the trailer, weigh the trailer and then the tongue, separately, to see if the weights are proper. If they are not, adjustments might be made by moving some items around in the trailer.

Total Weight on Your Vehicle's Tires

Be sure the vehicle's tires are inflated to the upper limit for cold tires. These numbers can be found on the Tire and Loading Information label. See *Vehicle Load Limits on page 9-10*. Make sure not to go over the GVW limit for the vehicle, including the weight of the trailer tongue.

Trailer Towing (eAssist)

The vehicle is neither designed nor intended to tow a trailer.

Towing Equipment

Hitches

Use the correct hitch equipment. See your dealer or a hitch dealer for assistance.

- The rear bumper on the vehicle is not intended for hitches. Do not attach rental hitches or other bumper-type hitches to it. Use only a frame-mounted hitch that does not attach to the bumper.
- Will any holes be made in the body of the vehicle when the trailer hitch is installed? If so, seal the holes when the hitch is removed. If the holes are not sealed, dirt, water, and deadly carbon monoxide (CO) from the exhaust can get into the vehicle. See *Engine Exhaust on page 9-26*.

Safety Chains

Always attach chains between the vehicle and the trailer. Cross the safety chains under the tongue of the trailer to help prevent the tongue from contacting the road if it becomes separated from the hitch. Leave enough slack so the rig can turn. Never allow safety chains to drag on the ground.

Trailer Brakes

Does the trailer have its own brakes? Be sure to read and follow the instructions for the trailer brakes so they are installed, adjusted, and maintained properly.

Because the vehicle has antilock brakes, do not tap into the vehicle's brake system. If this is done, both brake systems will not work well, or at all.

Conversions and Add-Ons

Add-On Electrical Equipment

Notice: **Some electrical equipment can damage the vehicle or cause components to not work and would not be covered by the warranty. Always check with your dealer before adding electrical equipment.**

Add-on equipment can drain the vehicle's 12-volt battery, even if the vehicle is not operating.

The vehicle has an airbag system. Before attempting to add anything electrical to the vehicle, see *Servicing the Airbag-Equipped Vehicle on page 3-31* and *Adding Equipment to the Airbag-Equipped Vehicle on page 3-32*.

Vehicle Care

General Information

General Information 10-2
California Proposition 65 Warning 10-3
California Perchlorate Materials Requirements 10-3
Accessories and Modifications 10-3

Vehicle Checks

Doing Your Own Service Work 10-4
Hood 10-5
Engine Compartment Overview 10-6
Engine Oil 10-11
Engine Oil Life System 10-13
Automatic Transmission Fluid 10-14
Engine Air Cleaner/Filter 10-15
Cooling System 10-16
Engine Coolant 10-18
Engine Overheating 10-20
Washer Fluid 10-22
Brakes 10-22
Brake Fluid 10-23
Battery 10-25
Starter Switch Check 10-26
Automatic Transmission Shift Lock Control Function Check 10-26
Ignition Transmission Lock Check 10-26
Park Brake and P (Park) Mechanism Check 10-27
Wiper Blade Replacement 10-27

Headlamp Aiming

Headlamp Aiming 10-28

Bulb Replacement

Bulb Replacement 10-28
Halogen Bulbs 10-28
High Intensity Discharge (HID) Lighting 10-29
LED Lighting 10-29
Headlamps, Front Turn Signal, Sidemarker, and Parking Lamps 10-29
Fog Lamps 10-32
Taillamps, Turn Signal, Stoplamps, and Back-Up Lamps (LS and LT) 10-33
Taillamps, Turn Signal, Stoplamps, and Back-Up Lamps (LTZ) 10-34
License Plate Lamp 10-35
Replacement Bulbs 10-36

Electrical System

High Voltage Devices and Wiring 10-37
Electrical System Overload 10-37
Fuses 10-38
Engine Compartment Fuse Block 10-38
Instrument Panel Fuse Block 10-42

Wheels and Tires

Tires 10-44
All-Season Tires 10-45
Winter Tires 10-46
Summer Tires 10-46
Tire Sidewall Labeling 10-46
Tire Designations 10-48
Tire Terminology and Definitions 10-49
Tire Pressure 10-52
Tire Pressure for High-Speed Operation 10-53

Tire Pressure Monitor System 10-54
Tire Pressure Monitor Operation 10-55
Tire Inspection 10-59
Tire Rotation 10-59
When It Is Time for New Tires 10-60
Buying New Tires 10-61
Different Size Tires and Wheels 10-63
Uniform Tire Quality Grading 10-63
Wheel Alignment and Tire Balance 10-65
Wheel Replacement 10-65
Tire Chains 10-66
If a Tire Goes Flat 10-66
Tire Sealant and Compressor Kit (With Pressure Relief Button) 10-68
Tire Sealant and Compressor Kit (With Pressure Deflation Button) 10-76
Storing the Tire Sealant and Compressor Kit 10-83
Tire Changing 10-84
Compact Spare Tire 10-90

Jump Starting
Jump Starting (On-board with eAssist Only) 10-91
Jump Starting (with or without eAssist) 10-92

Towing
Towing the Vehicle 10-95
Recreational Vehicle Towing 10-95

Appearance Care
Exterior Care 10-97
Interior Care 10-100
Floor Mats 10-103

General Information

For service and parts needs, visit your dealer. You will receive genuine GM parts and GM-trained and supported service people.

Genuine GM parts have one of these marks:

ACDelco®

Genuine GM® | Parts

GM® Accessories

California Proposition 65 Warning

Most motor vehicles, including this one, contain and/or emit chemicals known to the State of California to cause cancer and birth defects or other reproductive harm. Engine exhaust, many parts and systems, many fluids, and some component wear by-products contain and/or emit these chemicals.

California Perchlorate Materials Requirements

Certain types of automotive applications, such as airbag initiators, safety belt pretensioners, and lithium batteries contained in Remote Keyless Entry transmitters, may contain perchlorate materials. Special handling may be necessary. For additional information, see www.dtsc.ca.gov/hazardouswaste/perchlorate.

Accessories and Modifications

Adding non-dealer accessories or making modifications to the vehicle can affect vehicle performance and safety, including such things as airbags, braking, stability, ride and handling, emissions systems, aerodynamics, durability, and electronic systems like antilock brakes, traction control, and stability control. These accessories or modifications could even cause malfunction or damage not covered by the vehicle warranty.

Damage to vehicle components resulting from modifications or the installation or use of non-GM certified parts, including control module or software modifications, is not covered under the terms of the vehicle warranty and may affect remaining warranty coverage for affected parts.

GM Accessories are designed to complement and function with other systems on the vehicle. See your dealer to accessorize the vehicle using genuine GM Accessories installed by a dealer technician.

Also, see *Adding Equipment to the Airbag-Equipped Vehicle on page 3-32*.

Vehicle Checks

Doing Your Own Service Work

⚠ WARNING

It can be dangerous to work on your vehicle if you do not have the proper knowledge, service manual, tools, or parts. Always follow owner manual procedures and consult the service manual for your vehicle before doing any service work.

If doing some of your own service work, use the proper service manual. It tells you much more about how to service the vehicle than this manual can. To order the proper service manual, see *Service Publications Ordering Information on page 13-17*.

This vehicle has an airbag system. Before attempting to do your own service work, see *Servicing the Airbag-Equipped Vehicle on page 3-31*.

Keep a record with all parts receipts and list the mileage and the date of any service work performed. See *Maintenance Records on page 11-14*.

Notice: **Even small amounts of contamination can cause damage to vehicle systems. Do not allow contaminants to contact the fluids, reservoir caps, or dipsticks.**

Hood

To open the hood:

1. Pull the hood release handle with this symbol on it. It is inside the vehicle to the left of the steering column.

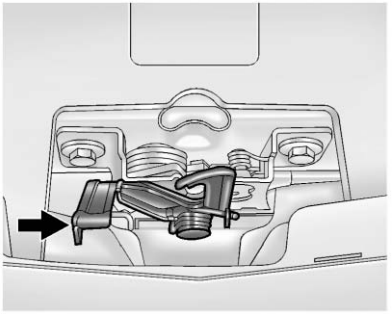

2. Go to the front of the vehicle and push the secondary hood release handle toward the driver side of the vehicle.
3. Lift the hood.
4. After the hood is slightly lifted, it will continue to open to the full position. Before closing the hood, be sure all the filler caps are on properly. Lower the hood until the lifting force of the strut is reduced, then release the hood to latch fully. Check to make sure the hood is closed and repeat the process if necessary.

Engine Compartment Overview

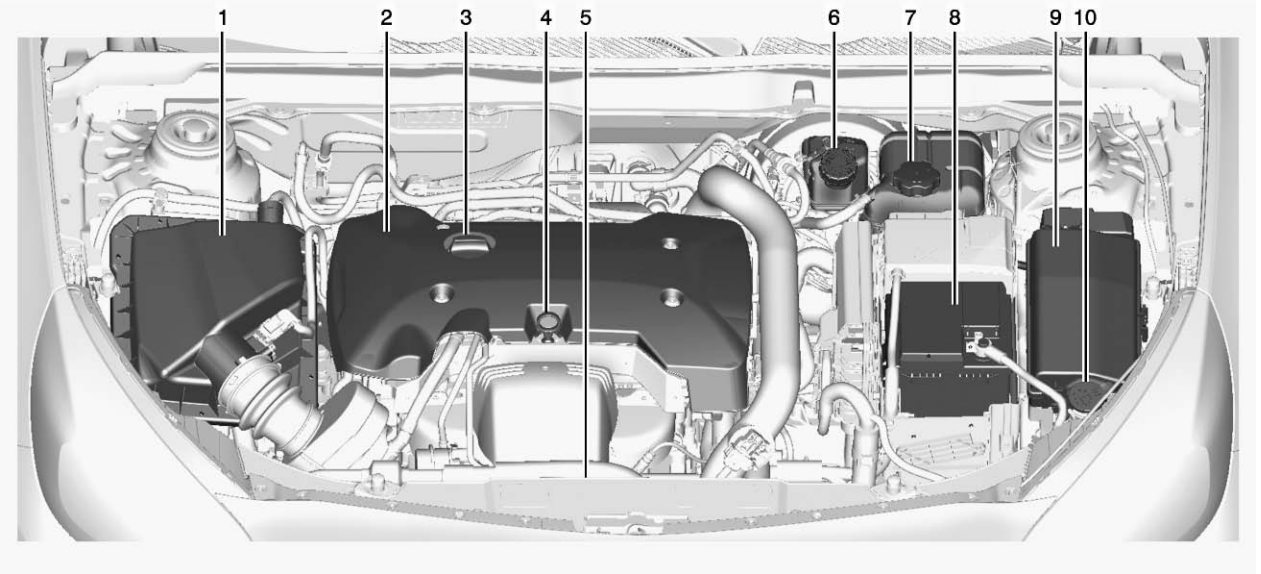

2.0L L4 Engine

1. *Engine Air Cleaner/Filter on page 10-15*.
2. Engine Cover.
3. Engine Oil Fill Cap. See *Engine Oil on page 10-11*.
4. Engine Oil Dipstick. See *Engine Oil on page 10-11*.
5. Engine Cooling Fans (Out of View). See *Cooling System on page 10-16*.
6. Brake Fluid Reservoir. See *Brakes on page 10-22*.
7. Coolant Surge Tank and Pressure Cap. See *Engine Coolant on page 10-18*.
8. *Battery on page 10-25*.
9. *Engine Compartment Fuse Block on page 10-38*.
10. Windshield Washer Fluid Reservoir. See *Washer Fluid on page 10-22*.

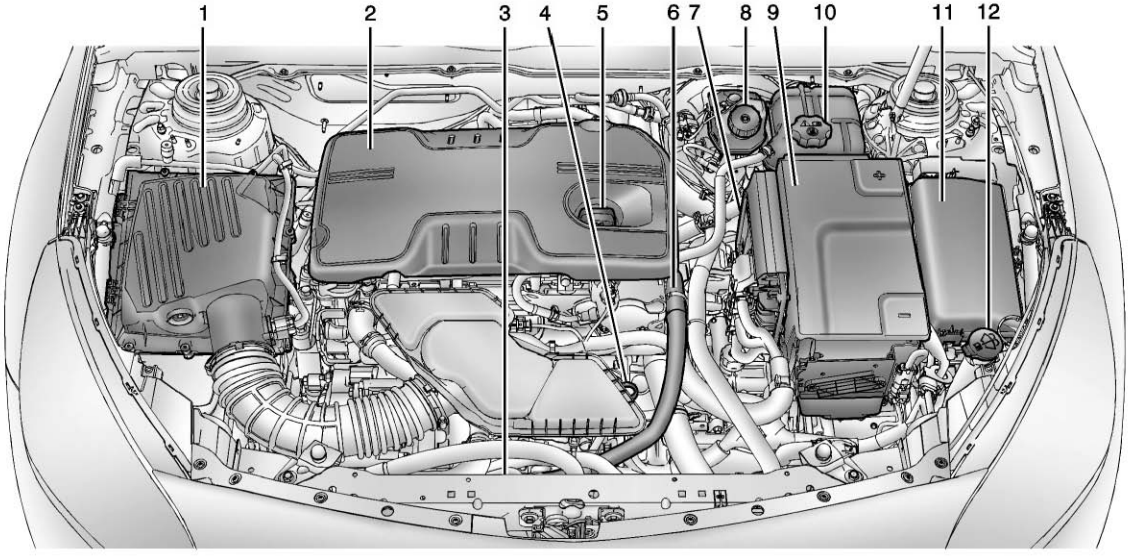

2.4L L4 Engine eAssist

1. *Engine Air Cleaner/Filter on page 10-15*.
2. Engine Cover.
3. Engine Cooling Fans (Out of View). See *Cooling System on page 10-16*.
4. Engine Oil Dipstick. See *Engine Oil on page 10-11*.
5. Engine Oil Fill Cap. See *Engine Oil on page 10-11*.
6. High Voltage Cable (Orange Color).
7. Transmission Fluid Cap (Out of View). See *Automatic Transmission Fluid on page 10-14*.
8. Brake Fluid Reservoir. See *Brakes on page 10-22*.
9. Battery (Under Cover). See *Battery on page 10-25*.
10. Coolant Surge Tank and Pressure Cap. See *Engine Coolant on page 10-18*.
11. *Engine Compartment Fuse Block on page 10-38*.
12. Windshield Washer Fluid Reservoir. See *Washer Fluid on page 10-22*.

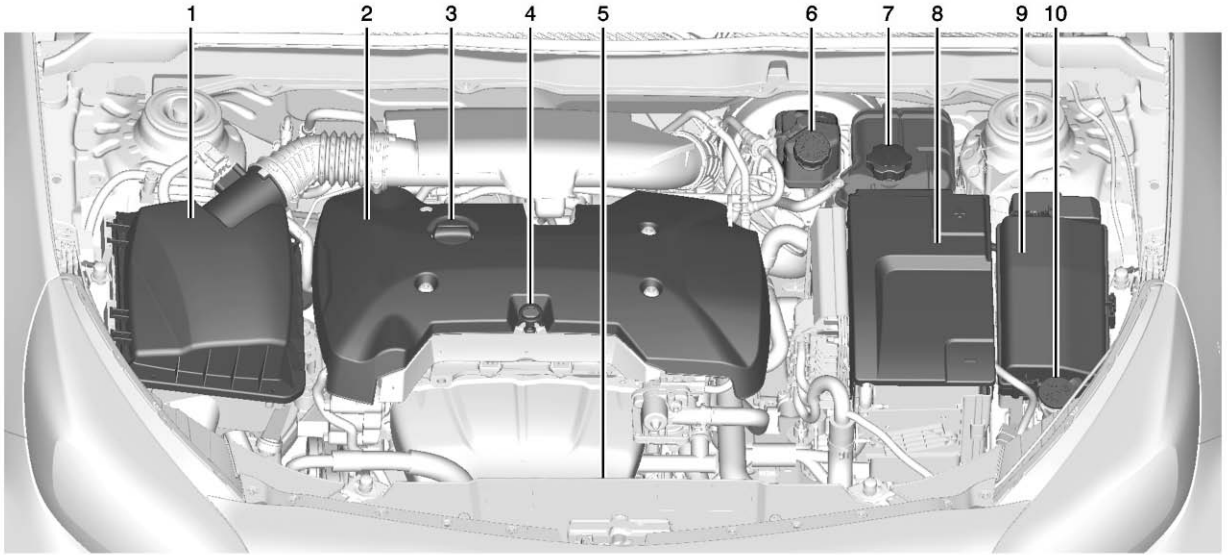

2.5L L4 Engine

1. *Engine Air Cleaner/Filter on page 10-15*.
2. Engine Cover.
3. Engine Oil Fill Cap. See *Engine Oil on page 10-11*.
4. Engine Oil Dipstick. See *Engine Oil on page 10-11*.
5. Engine Cooling Fans (Out of View). See *Cooling System on page 10-16*.
6. Brake Fluid Reservoir. See *Brakes on page 10-22*.
7. Coolant Surge Tank and Pressure Cap. See *Engine Coolant on page 10-18*.
8. Battery (Under Cover). See *Battery on page 10-25*.
9. *Engine Compartment Fuse Block on page 10-38*.
10. Windshield Washer Fluid Reservoir. See *Washer Fluid on page 10-22*.

Engine Oil

To ensure proper engine performance and long life, careful attention must be paid to engine oil. Following these simple, but important steps will help protect your investment:

- Always use engine oil approved to the proper specification and of the proper viscosity grade. See “Selecting the Right Engine Oil” in this section.
- Check the engine oil level regularly and maintain the proper oil level. See “Checking Engine Oil” and “When to Add Engine Oil” in this section.
- Change the engine oil at the appropriate time. See *Engine Oil Life System on page 10-13*.
- Always dispose of engine oil properly. See “What to Do with Used Oil” in this section.

Checking Engine Oil

It is a good idea to check the engine oil level at each fuel fill. In order to get an accurate reading, the vehicle must be on level ground. The engine oil dipstick handle is a loop. See *Engine Compartment Overview on page 10-6* for the location of the engine oil dipstick.

Obtaining an accurate oil level reading is essential:

1. If the engine has been running recently, turn off the engine and allow several minutes for the oil to drain back into the oil pan. Checking the oil level too soon after engine shutoff will not provide an accurate oil level reading.

⚠ WARNING

The engine oil dipstick handle may be hot; it could burn you. Use a towel or glove to touch the dipstick handle.

2. Pull out the dipstick and clean it with a paper towel or cloth, then push it back in all the way. Remove it again, keeping the tip down, and check the level.

When to Add Engine Oil

If the oil is below the MIN (minimum) mark, add 1 L (1 qt) of the recommended oil and then recheck the level. See “Selecting the Right Engine Oil” in this section for an explanation of what kind of oil to use. For engine oil crankcase capacity, see *Capacities and Specifications on page 12-2*.

Notice: **Do not add too much oil. Oil levels above or below the acceptable operating range shown on the dipstick are harmful to the engine. If you find that you have an oil level above the operating range, i.e., the engine has so much oil that the oil level gets above the upper mark that shows the proper operating range, the engine could be damaged. You should drain out the excess oil or limit driving of the vehicle and seek a service professional to remove the excess amount of oil.**

See *Engine Compartment Overview on page 10-6* for the location of the engine oil fill cap.

Add enough oil to put the level somewhere in the proper operating range. Push the dipstick all the way back in when through.

Selecting the Right Engine Oil

Selecting the right engine oil depends on both the proper oil specification and viscosity grade. See *Recommended Fluids and Lubricants on page 11-12*.

Specification

Use and ask for licensed engine oils with the dexos1® approved certification mark. Engine oils meeting the requirements for the vehicle should have the dexos1 approved certification mark. This certification mark indicates that the oil has been approved to the dexos1 specification.

Notice: **Failure to use the recommended engine oil or equivalent can result in engine damage not covered by the vehicle warranty. Check with your dealer or service provider on whether the oil is approved to the dexos1 specification.**

Viscosity Grade

SAE 5W-30 is the best viscosity grade for the 2.0L L4 engine and the 2.4L L4 engine. SAE 5W-20 is the best viscosity grade for the 2.5L L4 engine. Do not use other viscosity grade oils such as SAE 10W-30, 10W-40, or 20W-50.

Cold Temperature Operation: In an area of extreme cold, where the temperature falls below −29°C (−20°F), an SAE 0W-30 oil may be used. An oil of this viscosity grade will provide easier cold starting for the engine at extremely low temperatures. When selecting an oil of the appropriate viscosity grade, always select an oil of the correct specification. See “Specification” earlier in this section for more information.

Engine Oil Additives/Engine Oil Flushes

Do not add anything to the oil. The recommended oils with the dexos specification and displaying the dexos certification mark are all that is needed for good performance and engine protection.

Engine oil system flushes are not recommended and could cause engine damage not covered by the vehicle warranty.

What to Do with Used Oil

Used engine oil contains certain elements that can be unhealthy for your skin and could even cause cancer. Do not let used oil stay on your skin for very long. Clean your skin and nails with soap and water, or a good hand cleaner. Wash or properly dispose of clothing or rags containing used engine oil. See the manufacturer's warnings about the use and disposal of oil products.

Used oil can be a threat to the environment. If you change your own oil, be sure to drain all the oil from the filter before disposal. Never dispose of oil by putting it in the trash or pouring it on the ground, into sewers, or into streams or bodies of water. Recycle it by taking it to a place that collects used oil.

Engine Oil Life System

When to Change Engine Oil

This vehicle has a computer system that indicates when to change the engine oil and filter. This is based on a combination of factors which include engine revolutions, engine temperature, and miles driven. Based on driving conditions, the mileage at which an oil change is indicated can vary considerably. For the oil life system to work properly, the system must be reset every time the oil is changed.

When the system has calculated that oil life has been diminished, it indicates that an oil change is necessary. A CHANGE ENGINE OIL SOON message comes on. See *Engine Oil Messages on page 5-31*. Change the oil as soon as possible within the next 1 000 km (600 mi). It is possible that, if driving under the best conditions, the oil life system might indicate that an oil change is not necessary for up to a year. The engine oil and filter must be changed at least once a year and, at this time, the system must be reset. Your dealer has trained service people who will perform this work and reset the system. It is also important to check the oil regularly over the course of an oil drain interval and keep it at the proper level.

If the system is ever reset accidentally, the oil must be changed at 5 000 km (3,000 mi) since the last oil change. Remember to reset the oil life system whenever the oil is changed.

How to Reset the Engine Oil Life System

Reset the system whenever the engine oil is changed so that the system can calculate the next engine oil change. To reset the system:

1. Turn the ignition to ON/RUN with the engine off.
2. Press the DIC MENU button on the turn signal lever to enter the Vehicle Information Menu. Use the thumbwheel to scroll through the menu items until you reach REMAINING OIL LIFE.
3. Press the SET/CLR button to reset the oil life at 100%.
4. Turn the ignition to LOCK/OFF.

The system is reset when the CHANGE ENGINE OIL SOON message is off and the REMAINING OIL LIFE 100% message is displayed.

If the CHANGE ENGINE OIL SOON message comes back on when the vehicle is started, the engine oil life system has not been reset. Repeat the procedure.

Automatic Transmission Fluid

It is not necessary to check the transmission fluid level. A transmission fluid leak is the only reason for fluid loss. If a leak occurs, take the vehicle to your dealer and have it repaired as soon as possible.

Change the fluid and filter at the intervals listed in *Maintenance Schedule on page 11-2*, and be sure to use the fluid listed in *Recommended Fluids and Lubricants on page 11-12*.

Engine Air Cleaner/Filter

The engine air cleaner/filter is in the engine compartment on the passenger side of the vehicle. See *Engine Compartment Overview on page 10-6* for more information on location.

When to Inspect the Engine Air Cleaner/Filter

Inspect the air cleaner/filter at the scheduled maintenance intervals and replace it at the first oil change after each 80 000 km (50,000 mi) interval. See *Maintenance Schedule on page 11-2*. If you are driving in dusty/dirty conditions, inspect the filter at each engine oil change.

How to Inspect the Engine Air Cleaner/Filter

To inspect the air cleaner/filter, remove the filter from the vehicle and lightly shake the filter to release loose dust and dirt. If the filter remains covered with dirt, a new filter is required.

To inspect or replace the engine air cleaner/filter:

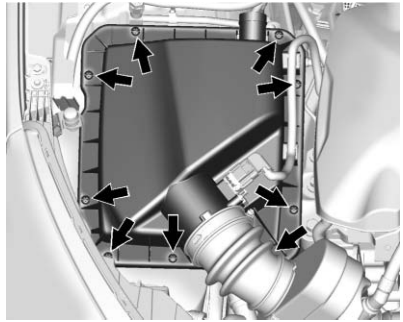

2.0L L4 Engine

1. Remove the nine screws on top of the engine air cleaner/filter housing.
2. Lift the filter cover housing away from the engine air cleaner/filter housing.
3. Pull out the filter.
4. Inspect or replace the engine air cleaner/filter.
5. Lower the filter cover housing toward the engine.
6. Install the nine screws on the top of the housing to lock the cover in place.

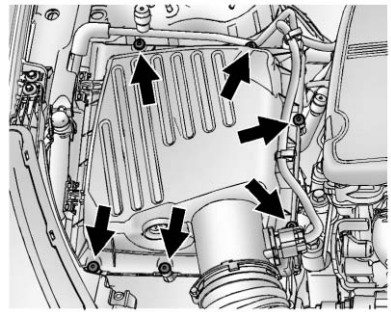

2.4L L4 Engine eAssist

1. Remove the six screws on top of the engine air cleaner/filter housing.
2. Lift the filter cover housing away from the engine air cleaner/filter housing.
3. Pull out the filter.
4. Inspect or replace the engine air cleaner/filter.

5. Lower the filter cover housing toward the engine.
6. Install the six screws on the top of the housing to lock the cover in place.

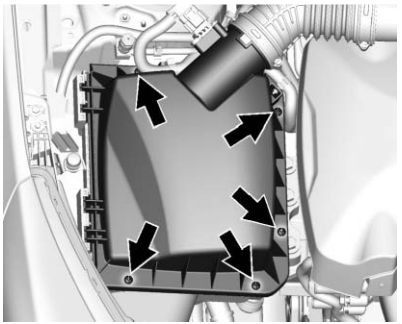

2.5L L4 Engine

1. Remove the five screws on top of the engine air cleaner/filter housing.
2. Lift the filter cover housing away from the engine air cleaner/filter housing.
3. Pull out the filter.
4. Inspect or replace the engine air cleaner/filter.
5. Lower the filter cover housing toward the engine.
6. Install the five screws on the top of the housing to lock the cover in place.

⚠ WARNING

Operating the engine with the air cleaner/filter off can cause you or others to be burned. The air cleaner not only cleans the air; it helps to stop flames if the engine backfires. Use caution when working on the engine and do not drive with the air cleaner/filter off.

Notice: **If the air cleaner/filter is off, dirt can easily get into the engine, which could damage it. Always have the air cleaner/filter in place when you are driving.**

Cooling System

The cooling system allows the engine to maintain the correct working temperature.

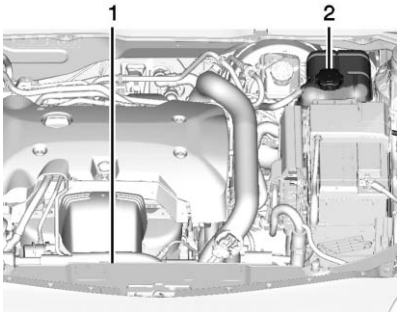

2.0L L4 Engine

1. Engine Cooling Fans (Out of View)
2. Coolant Surge Tank and Pressure Cap

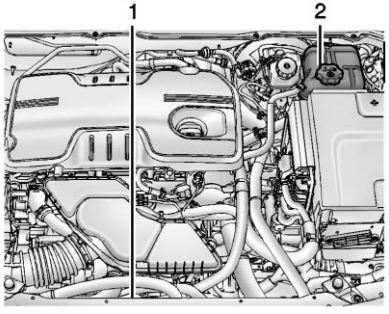

2.4L L4 Engine eAssist

1. Engine Cooling Fans (Out of View)
2. Coolant Surge Tank and Pressure Cap

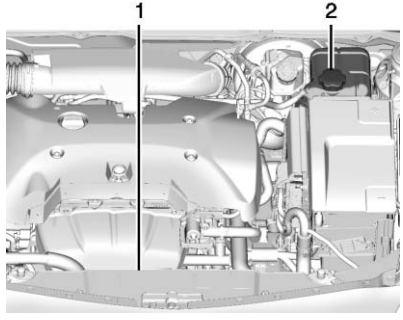

2.5L L4 Engine

1. Engine Cooling Fans (Out of View)
2. Coolant Surge Tank and Pressure Cap

⚠ WARNING

An electric engine cooling fan under the hood can start up even when the engine is not running and can cause injury. Keep hands, clothing, and tools away from any underhood electric fan.

⚠ WARNING

Heater and radiator hoses, and other engine parts, can be very hot. Do not touch them. If you do, you can be burned.

Do not run the engine if there is a leak. If you run the engine, it could lose all coolant. That could cause an engine fire, and you could be burned. Get any leak fixed before you drive the vehicle.

Notice: **Using coolant other than DEX-COOL® can cause premature engine, heater core, or radiator corrosion. In addition, the engine coolant could require changing sooner. Any repairs would not be covered by the vehicle warranty. Always use DEX-COOL (silicate-free) coolant in the vehicle.**

Engine Coolant

The cooling system in the vehicle is filled with DEX-COOL® engine coolant mixture. See *Recommended Fluids and Lubricants on page 11-12* and *Maintenance Schedule on page 11-2*.

The following explains the cooling system and how to check and add coolant when it is low. If there is a problem with engine overheating, see *Engine Overheating on page 10-20*.

What to Use

⚠ WARNING

Adding only plain water or some other liquid to the cooling system can be dangerous. Plain water and other liquids, can boil before the proper coolant mixture will. The coolant warning system is set for the proper coolant mixture. With plain water or the wrong mixture, the engine could get too hot but you would not get the overheat warning. The engine could catch fire and you or others could be burned. Use a 50/50 mixture of clean, drinkable water and DEX-COOL coolant.

Use a 50/50 mixture of clean, drinkable water and DEX-COOL coolant. If using this mixture, nothing else needs to be added.

This mixture:

- Gives freezing protection down to −37°C (−34°F), outside temperature.
- Gives boiling protection up to 129°C (265°F), engine temperature.
- Protects against rust and corrosion.
- Will not damage aluminum parts.
- Helps keep the proper engine temperature.

Notice: **If improper coolant mixture, inhibitors, or additives are used in the vehicle cooling system, the engine could overheat and be damaged. Too much water in the mixture can freeze and crack engine cooling parts. The repairs would not be covered by the warranty. Use only the proper mixture of engine coolant for the cooling system. See *Recommended Fluids and Lubricants on page 11-12*.**

Never dispose of engine coolant by putting it in the trash, pouring it on the ground, or into sewers, streams, or bodies of water. Have the coolant changed by an authorized service center, familiar with legal requirements regarding used coolant disposal. This will help protect the environment and your health.

Checking Coolant

The vehicle must be on a level surface when checking the coolant level.

Check to see if coolant is visible in the coolant surge tank. If the coolant inside the coolant surge tank is boiling, do not do anything else until it cools down.

If coolant is visible but the coolant level is not at or above the mark pointed to, add a 50/50 mixture of clean, drinkable water and DEX-COOL coolant.

Be sure the cooling system is cool before this is done.

If no coolant is visible in the coolant surge tank, add coolant as follows:

How to Add Coolant to the Coolant Surge Tank

⚠ WARNING

You can be burned if you spill coolant on hot engine parts. Coolant contains ethylene glycol and it will burn if the engine parts are hot enough. Do not spill coolant on a hot engine.

Notice: **This vehicle has a specific coolant fill procedure. Failure to follow this procedure could cause the engine to overheat and be severely damaged.**

⚠ WARNING

Steam and scalding liquids from a hot cooling system can blow out and burn you badly. Never turn the cap when the cooling system, including the surge tank pressure cap, is hot. Wait for the cooling system and surge tank pressure cap to cool.

The coolant surge tank pressure cap can be removed when the cooling system, including the surge tank pressure cap and upper radiator hose, is no longer hot.

1. Turn the pressure cap slowly counterclockwise. If a hiss is heard, wait for that to stop. A hiss means there is still some pressure left.
2. Keep turning the cap and remove it.

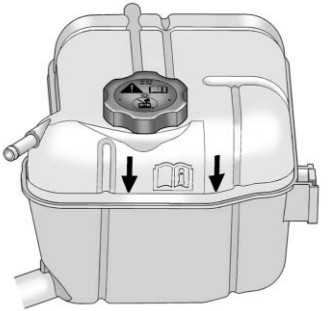

3. Fill the coolant surge tank with the proper mixture to the mark pointed to on the front of the coolant surge tank.
4. With the coolant surge tank cap off, start the engine and let it run until the upper radiator hose starts getting hot. Watch out for the engine cooling fans. By this time, the coolant level inside the coolant surge tank may be lower. If the level is lower, add more of the proper mixture to the coolant surge tank until the level reaches the mark pointed to on the front of the coolant surge tank.
5. Replace the cap tightly.

Notice: **If the pressure cap is not tightly installed, coolant loss and possible engine damage may occur. Be sure the cap is properly and tightly secured.**

Engine Overheating

The vehicle has an indicator to warn of engine overheating. See *Engine Coolant Temperature Warning Light on page 5-22*.

If the decision is made not to lift the hood when this warning appears, get service help right away. Contact your dealer for additional information.

If the decision is made to lift the hood, make sure the vehicle is parked on a level surface.

Then check to see if the engine cooling fans are running. If the engine is overheating, both fans should be running. If they are not, do not continue to run the engine and have the vehicle serviced.

Notice: **Running the engine without coolant may cause damage or a fire. Vehicle damage would not be covered by the warranty.**

If Steam Is Coming from the Engine Compartment

⚠ WARNING

Steam from an overheated engine can burn you badly, even if you just open the hood. Stay away from the engine if you see or hear steam coming from it. Just turn it off and get everyone away from the vehicle until it cools down.

(Continued)

WARNING (Continued)

Wait until there is no sign of steam or coolant before you open the hood.

If you keep driving when the engine is overheated, the liquids in it can catch fire. You or others could be badly burned. Stop the engine if it overheats, and get out of the vehicle until the engine is cool.

If No Steam Is Coming from the Engine Compartment

If an engine overheat warning is displayed but no steam can be seen or heard, the problem may not be too serious. Sometimes the engine can get a little too hot when the vehicle:

- Climbs a long hill on a hot day.
- Stops after high-speed driving.
- Idles for long periods in traffic.

If the overheat warning is displayed with no sign of steam:

1. Turn the air conditioning off.
2. Turn the heater on to the highest temperature and to the highest fan speed. Open the windows as necessary.
3. In heavy traffic, let the engine idle in N (Neutral) while stopped. If it is safe to do so, pull off the road, shift to P (Park) or N (Neutral), and let the engine idle.

If an overheat warning no longer displays, the vehicle can be driven. Continue to drive the vehicle slowly for about 10 minutes. Keep a safe distance from the vehicle in front. If the warning does not come back on, continue to drive normally.

If the warning continues, pull over, stop, and park the vehicle right away.

If there is no sign of steam, idle the engine for three minutes while parked. If the warning is still displayed, turn off the engine until it cools down.

Washer Fluid

What to Use

When windshield washer fluid is needed, be sure to read the manufacturer's instructions before use. If operating the vehicle in an area where the temperature may fall below freezing, use a fluid that has sufficient protection against freezing.

Adding Washer Fluid

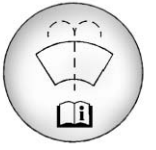

Open the cap with the washer symbol on it. Add washer fluid until the tank is full. See *Engine Compartment Overview on page 10-6* for reservoir location.

Notice

- **When using concentrated washer fluid, follow the manufacturer instructions for adding water.**
- **Do not mix water with ready-to-use washer fluid. Water can cause the solution to freeze and damage the washer fluid tank and other parts of the washer system.**
- **Fill the washer fluid tank only three-quarters full when it is very cold. This allows for fluid expansion if freezing occurs, which could damage the tank if it is completely full.**
- **Do not use engine coolant (antifreeze) in the windshield washer. It can damage the windshield washer system and paint.**

Brakes

This vehicle has disc brakes. Disc brake pads have built-in wear indicators that make a high-pitched warning sound when the brake pads are worn and new pads are needed. The sound can come and go or be heard all the time the vehicle is moving, except when applying the brake pedal firmly.

⚠ WARNING

The brake wear warning sound means that soon the brakes will not work well. That could lead to a crash. When the brake wear warning sound is heard, have the vehicle serviced.

Notice: **Continuing to drive with worn-out brake pads could result in costly brake repair.**

Some driving conditions or climates can cause a brake squeal when the brakes are first applied or lightly applied. This does not mean something is wrong with the brakes.

Properly torqued wheel nuts are necessary to help prevent brake pulsation. When tires are rotated, inspect brake pads for wear and evenly tighten wheel nuts in the proper sequence to torque specifications in *Capacities and Specifications on page 12-2*.

Brake linings should always be replaced as complete axle sets.

Brake Pedal Travel

See your dealer if the brake pedal does not return to normal height, or if there is a rapid increase in pedal travel. This could be a sign that brake service might be required.

Brake Adjustment

Every time the brakes are applied, with or without the vehicle moving, the brakes adjust for wear.

Replacing Brake System Parts

The braking system on a vehicle is complex. Its many parts have to be of top quality and work well together if the vehicle is to have really good braking. The vehicle was designed and tested with top-quality brake parts. When parts of the braking system are replaced, be sure to get new, approved replacement parts. If this is not done, the brakes might not work properly. For example, installing disc brake pads that are wrong for the vehicle, can change the balance between the front and rear brakes — for the worse. The braking performance expected can change in many other ways if the wrong replacement brake parts are installed.

Brake Fluid

The brake master cylinder reservoir is filled with DOT 3 brake fluid as indicated on the reservoir cap. See *Engine Compartment Overview on page 10-6* for the location of the reservoir.

There are only two reasons why the brake fluid level in the reservoir might go down:

- The brake fluid level goes down because of normal brake lining wear. When new linings are installed, the fluid level goes back up.
- A fluid leak in the brake hydraulic system can also cause a low fluid level. Have the brake hydraulic system fixed, since a leak means that sooner or later the brakes will not work well.

Do not top off the brake fluid. Adding fluid does not correct a leak. If fluid is added when the linings are worn, there will be too much fluid when new brake linings are installed. Add or remove brake fluid, as necessary, only when work is done on the brake hydraulic system.

⚠ WARNING

If too much brake fluid is added, it can spill on the engine and burn, if the engine is hot enough. You or others could be burned, and the vehicle could be damaged. Add brake fluid only when work is done on the brake hydraulic system.

When the brake fluid falls to a low level, the brake warning light comes on. See *Brake System Warning Light on page 5-18*.

What to Add

Use only new DOT 3 brake fluid from a sealed container. See *Recommended Fluids and Lubricants on page 11-12*.

Always clean the brake fluid reservoir cap and the area around the cap before removing it. This helps keep dirt from entering the reservoir.

⚠ WARNING

With the wrong kind of fluid in the brake hydraulic system, the brakes might not work well. This could cause a crash. Always use the proper brake fluid.

Notice

- **Using the wrong fluid can badly damage brake hydraulic system parts. For example, just a few drops of mineral-based oil, such as engine oil, in the brake hydraulic system can damage brake hydraulic system parts so badly that they will have to be replaced. Do not let someone put in the wrong kind of fluid.**

- **If brake fluid is spilled on the vehicle's painted surfaces, the paint finish can be damaged. Be careful not to spill brake fluid on the vehicle. If you do, wash it off immediately.**

Battery

This vehicle has a standard 12-volt battery. Refer to the replacement number on the original battery label when a new standard 12-volt battery is needed.

eAssist vehicles also have a high voltage battery. Only a trained service technician with the proper knowledge and tools should inspect, test, or replace the high voltage battery. See your dealer if the high voltage battery needs service. The dealer has information on how to recycle the high voltage battery. There is also information available at http://www.recyclemybattery.com.

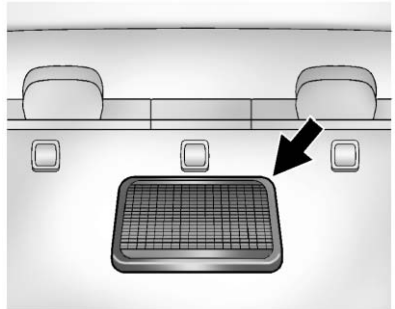

The eAssist system high voltage battery is cooled with air drawn from the vehicle interior. The cold air intake for the battery is behind the rear seat, on the filler panel. Do not cover the intake.

⚠ WARNING

Battery posts, terminals, and related accessories contain lead and lead compounds, chemicals known to the State of California to cause cancer and reproductive harm. Wash hands after handling.

Vehicle Storage

⚠ WARNING

Batteries have acid that can burn you and gas that can explode. You can be badly hurt if you are not careful. See *Jump Starting (with or without eAssist) on page 10-92* or *Jump Starting (On-board with eAssist Only) on page 10-91* for tips on working around a battery without getting hurt.

Infrequent Usage: Remove the 12-volt battery black, negative (−) cable from the battery to keep the battery from running down.

Extended Storage: Remove the 12-volt battery black, negative (−) cable from the battery or use a battery trickle charger.

Remember to reconnect the battery when ready to drive the vehicle.

Starter Switch Check

⚠ WARNING

When you are doing this inspection, the vehicle could move suddenly. If the vehicle moves, you or others could be injured.

1. Before starting this check, be sure there is enough room around the vehicle.
2. Firmly apply both the parking brake and the regular brake. See *Parking Brake on page 9-30*.

   Do not use the accelerator pedal, and be ready to turn off the engine immediately if it starts.
3. Try to start the engine in each gear. The vehicle should start only in P (Park) or N (Neutral).

   If the vehicle starts in any other position, contact your dealer for service.

Automatic Transmission Shift Lock Control Function Check

⚠ WARNING

When you are doing this inspection, the vehicle could move suddenly. If the vehicle moves, you or others could be injured.

1. Before starting this check, be sure there is enough room around the vehicle. It should be parked on a level surface.
2. Firmly apply the parking brake. See *Parking Brake on page 9-30*.

   Be ready to apply the regular brake immediately if the vehicle begins to move.
3. With the engine off, turn the ignition on, but do not start the engine. Without applying the regular brake, try to move the shift lever out of P (Park) with normal effort. If the shift lever moves out of P (Park), contact your dealer for service.

Ignition Transmission Lock Check

While parked, and with the parking brake set, try to turn the ignition to LOCK/OFF in each shift lever position.

- The ignition should turn to LOCK/OFF only when the shift lever is in P (Park).
- The ignition key should come out only in LOCK/OFF.

Contact your dealer if service is required.

Park Brake and P (Park) Mechanism Check

⚠ WARNING

When you are doing this check, the vehicle could begin to move. You or others could be injured and property could be damaged. Make sure there is room in front of the vehicle in case it begins to roll. Be ready to apply the regular brake at once should the vehicle begin to move.

Park on a fairly steep hill, with the vehicle facing downhill. Keeping your foot on the regular brake, set the parking brake.

- To check the parking brake's holding ability: With the engine running and the transmission in N (Neutral), slowly remove foot pressure from the regular brake pedal. Do this until the vehicle is held by the parking brake only.
- To check the P (Park) mechanism's holding ability: With the engine running, shift to P (Park). Then release the parking brake followed by the regular brake.

Contact your dealer if service is required.

Wiper Blade Replacement

Windshield wiper blades should be inspected for wear or cracking. See *Maintenance Schedule on page 11-2*.

It is a good idea to clean the wiper blade assembly on a regular basis. When worn, or cleaning is ineffective, replace the wiper blade. For proper windshield wiper blade length and type, see *Maintenance Replacement Parts on page 11-13*.

Notice: **Allowing the wiper arm to touch the windshield when no wiper blade is installed could damage the windshield. Any damage that occurs would not be covered by your warranty. Do not allow the wiper arm to touch the windshield.**

To replace the wiper blade:

1. Pull the wiper assembly away from the windshield.

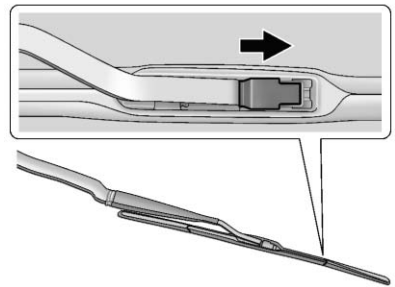

2. Lift up on the latch in the middle of the wiper blade where the wiper arm attaches.

3. With the latch open, pull the wiper blade down toward the windshield far enough to release it from the J-hooked end of the wiper arm.
4. Remove the wiper blade.
5. Reverse Steps 1–3 for wiper blade replacement.

Headlamp Aiming

Headlamp aim has been preset and should need no further adjustment.

If the vehicle is damaged in a crash, the headlamp aim may be affected. If adjustment to the headlamps is necessary, see your dealer.

Bulb Replacement

For the proper type of replacement bulbs, see *Replacement Bulbs on page 10-36*.

For any bulb-changing procedure not listed in this section, contact your dealer.

Halogen Bulbs

⚠ WARNING

Halogen bulbs have pressurized gas inside and can burst if you drop or scratch the bulb. You or others could be injured. Be sure to read and follow the instructions on the bulb package.

High Intensity Discharge (HID) Lighting

⚠ WARNING

The high intensity discharge lighting system operates at a very high voltage. If you try to service any of the system components, you could be seriously injured. Have your dealer or a qualified technician service them.

The vehicle may have HID headlamps. After an HID headlamp bulb has been replaced, you may notice that the beam is a slightly different shade than it was originally. This is normal.

LED Lighting

This vehicle has several LED lamps. For replacement of any LED lighting assembly, contact your dealer.

Headlamps, Front Turn Signal, Sidemarker, and Parking Lamps

Base Headlamp Assembly

The base model vehicle has halogen high-beam and low-beam headlamps, a parking lamp, a sidemarker lamp, and two turn signal lamps on the headlamp assembly.

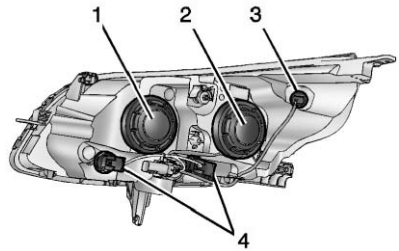

Passenger Side Shown, Driver Side Similar

1. High-Beam Headlamp
2. Low-Beam Headlamp
3. Sidemarker Lamp
4. Parking/Turn Signal Lamp

To replace one of the headlamp bulbs:

1. Open the hood. See *Hood on page 10-5*.

2. For the driver side bulb, remove the windshield washer bottle filler neck by firmly pulling it straight up and out of the bottle.
3. Remove the cap from the back of the headlamp assembly by turning it counterclockwise.
4. Disconnect the electrical connector.
5. Remove the bulb from the lamp assembly by turning counterclockwise.
6. Install a new bulb in the lamp assembly.
7. Connect the electrical connector.
8. Replace the cap from the back of the headlamp assembly by turning it clockwise.
9. For the driver side, reinstall the windshield washer bottle filler neck by firmly pushing it straight into the bottle. Ensure that the filler neck clip engages into the underhood electrical center retainer.

Uplevel Headlamp Assembly

The uplevel model vehicle has halogen high-beam and low-beam headlamps, a parking lamp, a sidemarker lamp, and two turn signal lamps on the headlamp assembly.

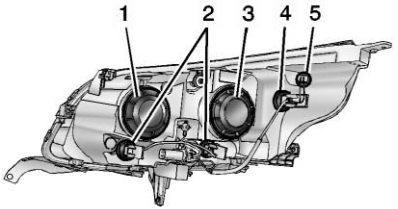

Passenger Side Shown, Driver Side Similar

1. High-Beam Headlamp
2. Turn Signal Lamps
3. Low-Beam Headlamp
4. Parking Lamp
5. Sidemarker Lamp

To replace one of these bulbs:

High-Beam Headlamp

1. Open the hood. See *Hood on page 10-5*.
2. For the driver side bulb, remove the windshield washer bottle filler neck by firmly pulling it straight up and out of the bottle.
3. Remove the cap from the back of the headlamp assembly by turning it counterclockwise.

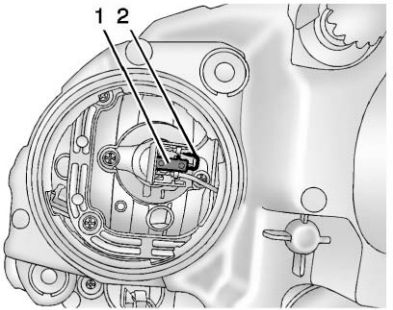

4. Disconnect the electrical connector (1).

5. Disengage the spring clip (2) from the bulb by pressing down on the end and then swing upward.
6. Remove the bulb from the lamp assembly.
7. Install a new bulb in the lamp assembly.
8. Install the spring clip (2).
9. Connect the electrical connector (1).
10. Replace the cap from the back of the headlamp assembly by turning it clockwise.
11. For the driver side, reinstall the windshield washer bottle filler neck by firmly pushing it straight into the bottle. Ensure that the filler neck clip engages into the underhood electrical center retainer.

Low-Beam Headlamp

1. For the driver side bulb, remove the windshield washer bottle filler neck by firmly pulling it straight up and out of the bottle.
2. Remove the cap from the back of the headlamp assembly by turning it counterclockwise.
3. Disconnect the electrical connector.
4. Remove the bulb from the lamp assembly by turning counterclockwise.
5. Install a new bulb in the lamp assembly.
6. Connect the electrical connector.
7. Replace the cap from the back of the headlamp assembly by turning it clockwise.
8. For the driver side, reinstall the windshield washer bottle filler neck by firmly pushing it straight into the bottle. Ensure that the filler neck clip engages into the underhood electrical center retainer.

HID Headlamp Assembly

The HID assembly has a high intensity discharge (HID) high/low beam, a DRL/parking lamp, sidemarker lamp, and a turn signal lamp on the headlamp assembly.

For replacement of the headlamp on an HID assembly, contact your dealer. See *High Intensity Discharge (HID) Lighting on page 10-29*.

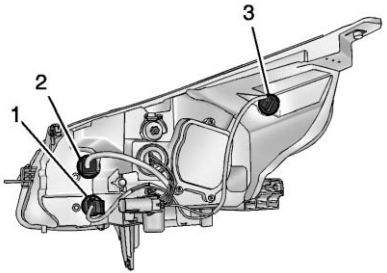

Passenger Side Shown, Driver Side Similar

1. Turn Signal Lamp
2. DRL/Parking Lamp
3. Sidemarker Lamp

Front Turn Signal, Parking, and Sidemarker Lamps

To replace one of these lamps on a base, uplevel, or HID assembly:

1. For the driver side bulb, remove the windshield washer bottle filler neck by firmly pulling it straight up and out of the bottle.
2. Remove the bulb socket from the headlamp assembly by turning it counterclockwise.
3. Remove the bulb from the socket.
4. Replace the bulb in the bulb socket.
5. Install the bulb socket in the headlamp assembly by turning it clockwise.
6. For the driver side, reinstall the windshield washer bottle filler neck by firmly pushing it straight into the bottle. Ensure that the filler neck clip engages into the underhood electrical center retainer.

Fog Lamps

To replace the front fog lamp bulb:

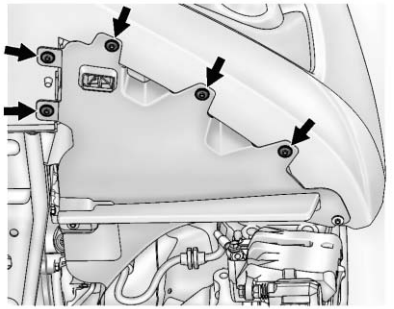

1. Remove the five access panel fasteners under the front fascia.
2. Lower the panel far enough to access the fog lamp bulb.

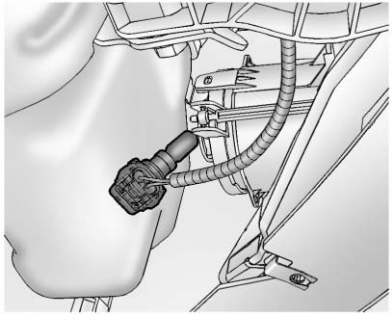

3. Remove the bulb by turning it counterclockwise and pulling it straight out of the assembly.
4. Disconnect the electrical connector from the fog lamp bulb assembly.
5. Install the new bulb by turning it clockwise into the assembly.
6. Reverse Steps 1–4 to reinstall.

Taillamps, Turn Signal, Stoplamps, and Back-Up Lamps (LS and LT)

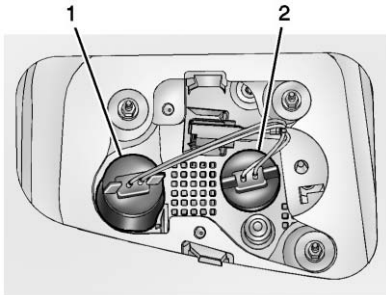

1. Back-Up Lamp
2. Taillamp

Trunk Deck Inboard Taillamp and Back-Up Lamp

1. Open the trunk. See *Trunk on page 2-13*.
2. Remove the push pins and pull back the trunk deck trim.
3. Remove the bulb socket by turning counterclockwise and pulling straight out.
4. Remove the bulb from the socket.
5. Install the new bulb in the bulb socket.
6. Install the bulb socket by turning clockwise.
7. Install the trunk deck trim.

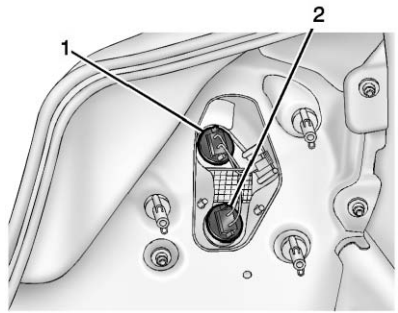

1. Stoplamp/Taillamp
2. Turn Signal Lamp

Notice: **Improper lamp assembly removal and installation can cause leaks and water intrusion which may cause damage to the taillamp. Do not remove the taillamp assembly to replace a bulb. Use the trunk opening to access the bulb.**

To replace any one of these bulbs:

Stoplamp/Taillamp and Turn Signal Lamp

1. Open the trunk. See *Trunk on page 2-13*.
2. Remove the push pins and pull the trunk trim away from the taillamp assembly.
3. Remove the bulb socket from the taillamp assembly by turning it counterclockwise.
4. Remove the bulb from the socket by turning the bulb counterclockwise one-quarter turn and pulling it straight out.
5. Install a new bulb into the socket.
6. Install the bulb socket into the taillamp assembly by turning it clockwise.
7. Install the trunk trim and push pins.

Taillamps, Turn Signal, Stoplamps, and Back-Up Lamps (LTZ)

The trunk deck inboard taillamp is an LED. To replace the taillamp see your dealer.

Back-Up Lamp

1. Open the trunk. See *Trunk on page 2-13*.
2. Remove the push pins and pull back the trunk deck trim.

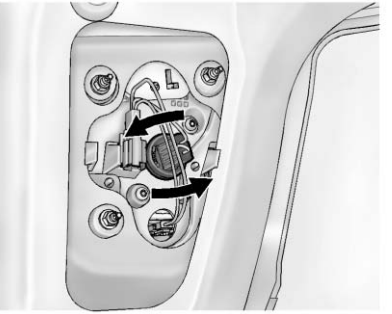

3. Remove the bulb socket by turning counterclockwise and pulling straight out.
4. Remove the bulb from the socket.
5. Install the new bulb in the bulb socket.
6. Install the bulb socket by turning clockwise.
7. Install the trunk deck trim.

Notice: **Improper lamp assembly removal and installation can cause leaks and water intrusion which may cause damage to the taillamp. Do not remove the taillamp assembly to replace a bulb. Use the trunk opening to access the bulb.**

The stoplamp/taillamp is an LED. To replace the stoplamp/taillamp see your dealer.

Turn Signal Lamp

1. Open the trunk. See *Trunk on page 2-13*.
2. Remove the push pins and pull the trunk trim away from the taillamp assembly.

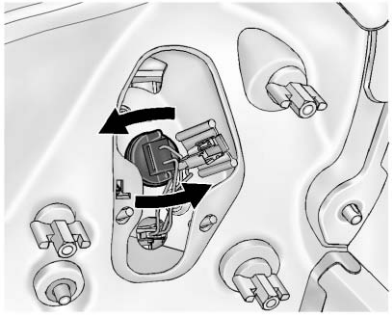

3. Remove the bulb socket from the taillamp assembly by turning it counterclockwise.
4. Remove the bulb from the socket by turning the bulb counterclockwise one-quarter turn and pulling it straight out.
5. Install a new bulb into the socket.
6. Install the bulb socket into the taillamp assembly by turning it clockwise.
7. Install the trunk trim and push pins.

License Plate Lamp

To replace one of these bulbs:

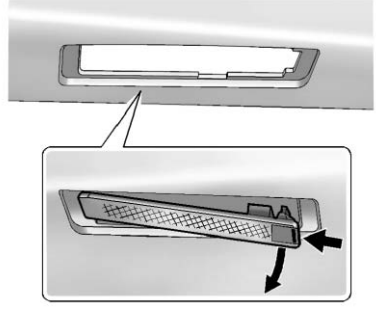

Passenger Side Shown, Driver Side Similar

1. Push the release tab toward the lamp assembly.
2. Pull the lamp assembly down to remove.

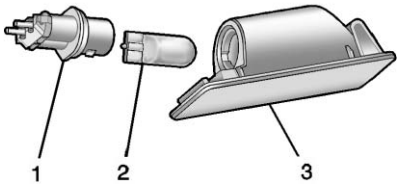

3. Turn the bulb socket (1) counterclockwise to remove it from the lamp assembly (3).
4. Pull the bulb (2) straight out of the bulb socket.
5. Push the replacement bulb straight into the bulb socket and turn the bulb socket clockwise to install it into the lamp assembly.
6. Push the lamp assembly back into position until the release tab locks into place.

Replacement Bulbs

Exterior Lamp	Bulb Number
Back-Up Lamp	921 LL
Deck Lid Taillamp	194
DRL and Parking Lamp (HID)	7443 ULL
Front Fog Lamp	H10
Front Parking Lamp (Uplevel)	7443
Front Sidemarker Lamp	W5WLL
Front Turn Signal Lamp (Base and Uplevel)	7444NA
Front Turn Signal Lamp (HID)	7443 NA
High-Beam Headlamp (Base)	9005 LL
High-Beam Headlamp (Uplevel)	H7 LL
License Plate Lamp	W5W LL
Low-Beam Headlamp (Base and Uplevel)	H11 LL
Stoplamp/Taillamp (LS and LT)	7440
Rear Turn Signal Lamp	7443 NA

For replacement bulbs not listed here, contact your dealer.

Electrical System

High Voltage Devices and Wiring

⚠ WARNING

Exposure to high voltage can cause shock, burns, and even death. The high voltage components in the vehicle can only be serviced by technicians with special training.

High voltage components are identified by labels. Do not remove, open, take apart, or modify these components. High voltage cable or wiring has orange covering. Do not probe, tamper with, cut, or modify high voltage cable or wiring.

Electrical System Overload

The vehicle has fuses and circuit breakers to protect against an electrical system overload.

When the current electrical load is too heavy, the circuit breaker opens and closes, protecting the circuit until the current load returns to normal or the problem is fixed. This greatly reduces the chance of circuit overload and fire caused by electrical problems.

Fuses and circuit breakers protect power devices in the vehicle.

Replace a bad fuse with a new one of the identical size and rating.

If there is a problem on the road and a fuse needs to be replaced, the same amperage fuse can be borrowed. Choose some feature of the vehicle that is not needed to use and replace it as soon as possible.

Headlamp Wiring

An electrical overload may cause the lamps to go on and off, or in some cases to remain off. Have the headlamp wiring checked right away if the lamps go on and off or remain off.

Windshield Wipers

If the wiper motor overheats due to heavy snow or ice, the windshield wipers will stop until the motor cools and will then restart.

Although the circuit is protected from electrical overload, overload due to heavy snow or ice may cause wiper linkage damage. Always clear ice and heavy snow from the windshield before using the windshield wipers.

If the overload is caused by an electrical problem and not snow or ice, be sure to get it fixed.

Fuses

The wiring circuits in the vehicle are protected from short circuits by fuses. This greatly reduces the chance of damage caused by electrical problems.

To check a fuse, look at the silver-colored band inside the fuse. If the band is broken or melted, replace the fuse. Be sure to replace a bad fuse with a new one of the identical size and rating.

Fuses of the same amperage can be temporarily borrowed from another fuse location, if a fuse goes out. Replace the fuse as soon as possible.

To identify and check fuses, circuit breakers, and relays, see *Engine Compartment Fuse Block on page 10-38* and *Instrument Panel Fuse Block on page 10-42*.

Engine Compartment Fuse Block

The engine compartment fuse block is on the driver side of the engine compartment, near the battery.

Notice: **Spilling liquid on any electrical component on the vehicle may damage it. Always keep the covers on any electrical component.**

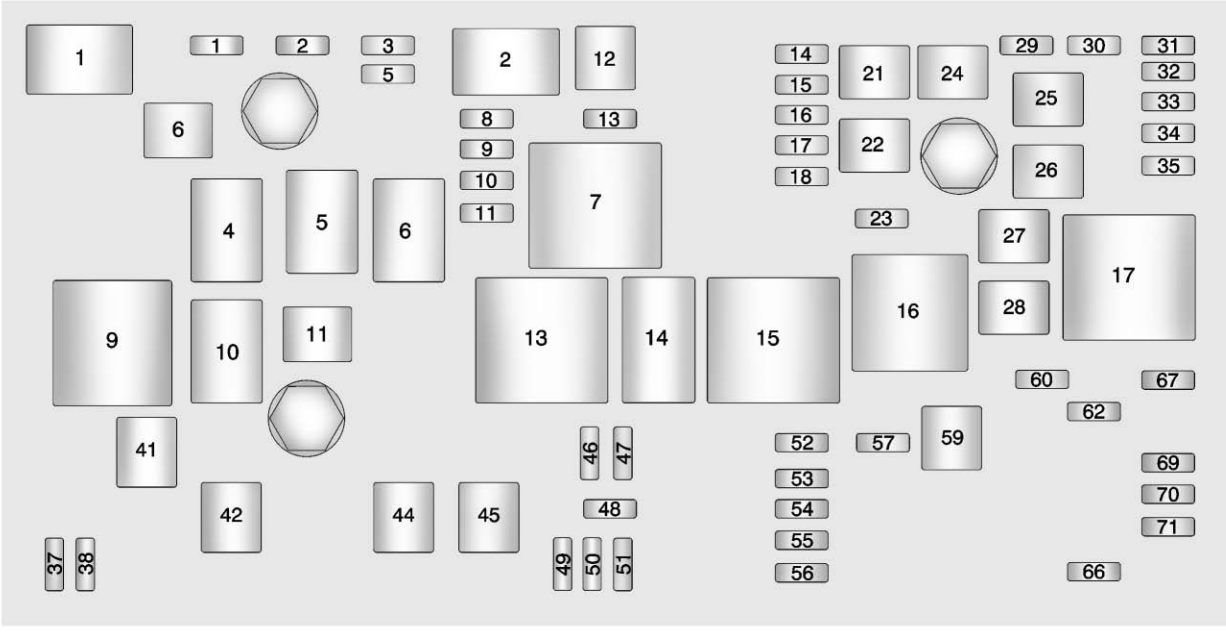
1
1
2
3
5
2
12
14
15
16
17
18
21
24
29
30
31
32
33
34
35
25
26
6
8
9
10
11
13
22
7
4
5
6
23
27
17
9
10
11
13
14
15
16
28
60
67
62
41
46
47
52
53
54
55
56
57
59
69
70
71
42
44
45
48
37
38
49
50
51
66

The vehicle may not be equipped with all of the fuses, relays, and features shown.

Mini Fuses	Usage
1	Transmission Control Module Battery
2	Engine Control Module Battery
3	Air Conditioning Compressor Clutch
5	Engine Control Module Ignition
8	Spare
9	Ignition Coils
10	Engine Control Module
11	Emissions
13	Transmission Module Ignition
14	Cabin Heater Coolant Pump/SAIR Solenoid
15	MGU Coolant Pump

Mini Fuses	Usage
16	Aero Shutter/eAssist Ignition
17	SDM Ignition
18	Spare
23	eAssist Module
29	Left Seat Power Lumber Control
30	Right Seat Power Lumber Control
31	eAssist Module/ Chassis Control Module
32	Back-Up Lamps/ Interior Lamps
33	Front Heated Seats
34	Antilock Brake System Valve
35	Amplifier
37	Right High Beam
38	Left High Beam

Mini Fuses	Usage
46	Cooling Fan
47	Emissions
48	Foglamp
49	Low Beam HID Headlamp Right
50	Low Beam HID Headlamp Left
51	Horn/Dual Horn
52	Cluster Ignition
53	Inside Rearview Mirror/Rear Camera/ Fuel Module Ignition
54	Heating, Ventilation, and Air Conditioning Module Ignition
55	Front Power Windows/Mirrors
56	Windshield Washer
57	Spare
60	Heated Mirror

Mini Fuses	Usage
62	Canister Vent Solenoid
66	SAIR Solenoid
67	Fuel Module
69	Battery Voltage Sensor
70	Lane Departure/Rear Parking Aid
71	PEPS BATT

J-Case Fuses	Usage
6	Front Wiper
12	Starter
21	Rear Power Window
22	Sunroof
24	Front Power Window
25	PEPS MTR

J-Case Fuses	Usage
26	Antilock Brake System Pump
27	Electric Parking Brake
28	Rear Defogger
41	Brake Vacuum Pump
42	Cooling Fan K2
44	Transmission Auxiliary Pump (eAssist)
45	Cooling Fan K1
59	Air Pump Emissions

Mini Relays	Usage
7	Powertrain
9	Cooling Fan K2
13	Cooling Fan K1
15	Run/Crank

Mini Relays	Usage
16	Air Pump Emissions
17	Window/Mirror Defogger

Micro Relays	Usage
1	Air Conditioning Compressor Clutch
2	Starter Solenoid
4	Front Wiper Speed
5	Front Wiper On
6	Cabin Pump eAssist/ SAIR Solenoid
10	Cooling Fan K3
11	Transmission Oil Pump
14	Headlamp Low Beam/DRL

Instrument Panel Fuse Block

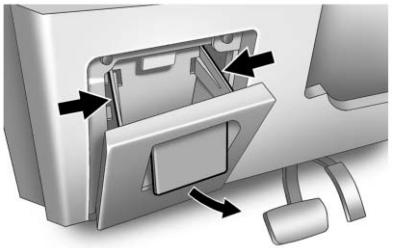

The instrument panel fuse block is in the instrument panel, on the driver side of the vehicle. To access the fuses, open the fuse panel door by pulling down at the top.

Press in on the sides of the door to release it from the instrument panel.

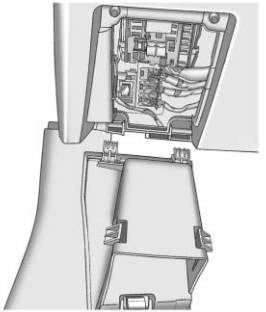

Pull the door toward you to release it from the hinge.

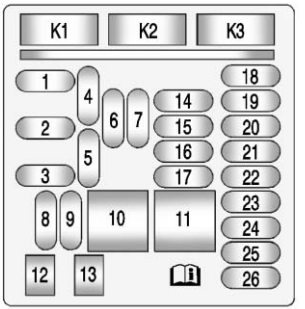

Instrument Panel Fuse Block

The vehicle may not be equipped with all of the fuses, relays, and features shown.

Fuses	Usage
1	Steering Wheel Controls Backlight
2	Right Rear Turn Signal, Left Mirror Turn Signal, Left Front Turn Signal, Door Locks

Fuses	Usage
3	Left Stoplamp, Left DRL Lamp, Headlamp Control, Right Taillamp, Right Park/Sidemarker Lamps, Right Mirror Turn, Right Front Turn Signals
4	Radio
5	OnStar
6	Front Accessory Power Outlet
7	Console Bin Power Outlet

Fuses	Usage
8	License Plate Lamp, Center High-Mounted Stoplamp, Rear Fog Lamps, Right Front Park/Sidemarker Lamps, LED Indicator Dim, Washer Pump, Right Stoplamp, Trunk Release
9	Left Low-Beam Headlamp, DRL
10	Body Control Module 8 (J-Case Fuse), Power Locks
11	Front Heater Ventilation Air Conditioning/Blower (J-Case Fuse)

Fuses	Usage
12	Passenger Seat (Circuit Breaker)
13	Driver Seat (Circuit Breaker)
14	Diagnostic Link Connector
15	Airbag, SDM
16	Trunk Release
17	Heater Ventilation Air Conditioning Controller
18	Audio Main
19	Displays
20	Passenger Occupant Sense
21	Instrument Cluster
22	Ignition Switch
23	Right Low-Beam Headlamp, DRL

Fuses	Usage
24	Ambient Light, Switch Backlighting (LED), Trunk Lamp, Shift Lock, Key Capture
25	110V AC
26	Spare

Relays	Usage
K1	Trunk Release
K2	Not Used
K3	Power Outlet Relay

Wheels and Tires

Tires

Every new GM vehicle has high-quality tires made by a leading tire manufacturer. See the warranty manual for information regarding the tire warranty and where to get service. For additional information refer to the tire manufacturer.

⚠ WARNING

- Poorly maintained and improperly used tires are dangerous.
- Overloading the tires can cause overheating as a result of too much flexing. There could be a blowout and a serious crash. See *Vehicle Load Limits on page 9-10*.
- Underinflated tires pose the same danger as overloaded tires. The resulting crash could cause serious injury. Check all tires frequently to maintain the recommended pressure. Tire pressure should be checked when the tires are cold.

(Continued)

WARNING (Continued)

- Overinflated tires are more likely to be cut, punctured, or broken by a sudden impact— such as when hitting a pothole. Keep tires at the recommended pressure.
- Worn or old tires can cause a crash. If the tread is badly worn, replace them.
- Replace any tires that have been damaged by impacts with potholes, curbs, etc.
- Improperly repaired tires can cause a crash. Only the dealer or an authorized tire service

(Continued)

WARNING (Continued)

center should repair, replace, dismount, and mount the tires.

- Do not spin the tires in excess of 56 km/h (35 mph) on slippery surfaces such as snow, mud, ice, etc. Excessive spinning may cause the tires to explode.

See *Tire Pressure for High-Speed Operation on page 10-53* for inflation pressure adjustment for high-speed driving.

All-Season Tires

This vehicle may come with all-season tires. These tires are designed to provide good overall performance on most road surfaces and weather conditions. Original equipment tires designed to GM's specific tire performance criteria have a TPC specification code molded onto the sidewall. Original equipment all-season tires can be identified by the last two characters of this TPC code, which will be “MS.”

Consider installing winter tires on the vehicle if frequent driving on snow or ice-covered roads is expected. All-season tires provide adequate performance for most winter driving conditions, but they may not offer the same level of traction or performance as winter tires on snow or ice-covered roads. See *Winter Tires on page 10-46*.

Winter Tires

This vehicle was not, originally, equipped with winter tires. Winter tires are designed for increased traction on snow and ice-covered roads. Consider installing winter tires on the vehicle if frequent driving on snow or ice-covered roads is expected. See your dealer for details regarding winter tire availability and proper tire selection. Also, see *Buying New Tires on page 10-61*.

With winter tires, there may be decreased dry road traction, increased road noise, and shorter tread life. After changing to winter tires, be alert for changes in vehicle handling and braking.

If using winter tires:

- Use tires of the same brand and tread type on all four wheel positions.
- Use only radial ply tires of the same size, load range, and speed rating as the original equipment tires.

Winter tires with the same speed rating as the original equipment tires may not be available for H, V, W, Y, and ZR speed rated tires. If winter tires with a lower speed rating are chosen, never exceed the tire's maximum speed capability.

Summer Tires

This vehicle may come with high performance summer tires. These tires have a special tread and compound that are optimized for maximum dry and wet road performance. This special tread and compound will decrease performance in cold climates, and on ice and snow. We recommend installing winter tires on the vehicle if frequent driving in cold temperatures or on snow or ice covered roads is expected. See *Winter Tires on page 10-46*.

Tire Sidewall Labeling

Useful information about a tire is molded into its sidewall. The examples show a typical passenger vehicle tire and a compact spare tire sidewall.

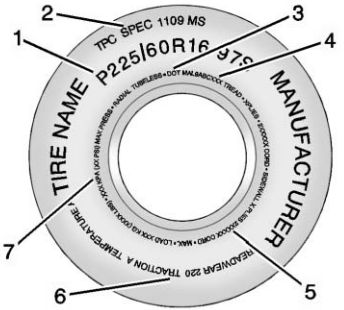

Passenger (P-Metric) Tire Example

(1) Tire Size: The tire size is a combination of letters and numbers used to define a particular tire's width, height, aspect ratio, construction type,

and service description. See the “Tire Size” illustration later in this section.

(2) TPC Spec (Tire Performance Criteria Specification): Original equipment tires designed to GM's specific tire performance criteria have a TPC specification code molded onto the sidewall. GM's TPC specifications meet or exceed all federal safety guidelines.

(3) DOT (Department of Transportation): The Department of Transportation (DOT) code indicates that the tire is in compliance with the U.S. Department of Transportation Motor Vehicle Safety Standards.

DOT Tire Date of Manufacture: The last four digits of the TIN indicate the tire manufactured date. The first two digits represent the week (01–52) and the last two digits, the year. For example, the third week of the year 2010 would have a four-digit DOT date of 0310.

(4) Tire Identification Number (TIN): The letters and numbers following the DOT (Department of Transportation) code are the Tire Identification Number (TIN). The TIN shows the manufacturer and plant code, tire size, and date the tire was manufactured. The TIN is molded onto both sides of the tire, although only one side may have the date of manufacture.

(5) Tire Ply Material: The type of cord and number of plies in the sidewall and under the tread.

(6) Uniform Tire Quality Grading (UTQG): Tire manufacturers are required to grade tires based on three performance factors: treadwear, traction, and temperature resistance. For more information see *Uniform Tire Quality Grading on page 10-63*.

(7) Maximum Cold Inflation Load Limit: Maximum load that can be carried and the maximum pressure needed to support that load.

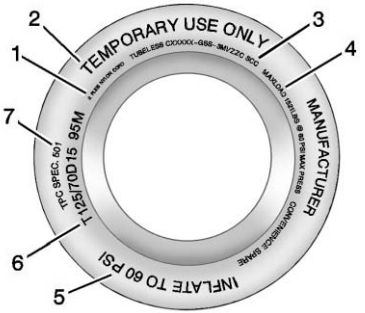

Compact Spare Tire Example

(1) Tire Ply Material: The type of cord and number of plies in the sidewall and under the tread.

(2) Temporary Use Only: The compact spare tire or temporary use tire should not be driven at speeds over 80 km/h (50 mph). The compact spare tire is for emergency use when a regular road tire has lost air and gone flat. If the vehicle has a compact spare tire, see *Compact Spare Tire on page 10-90* and *If a Tire Goes Flat on page 10-66*.

(3) Tire Identification Number (TIN): The letters and numbers following the DOT (Department of Transportation) code are the Tire Identification Number (TIN). The TIN shows the manufacturer and plant code, tire size, and date the tire was manufactured. The TIN is molded onto both sides of the tire, although only one side may have the date of manufacture.

(4) Maximum Cold Inflation Load Limit: Maximum load that can be carried and the maximum pressure needed to support that load.

(5) Tire Inflation: The temporary use tire or compact spare tire should be inflated to 420 kPa (60 psi). For more information on tire pressure and inflation see *Tire Pressure on page 10-52*.

(6) Tire Size: A combination of letters and numbers define a tire's width, height, aspect ratio, construction type, and service description. The letter T as the first character in the tire size means the tire is for temporary use only.

(7) TPC Spec (Tire Performance Criteria Specification): Original equipment tires designed to GM's specific tire performance criteria have a TPC specification code molded onto the sidewall. GM's TPC specifications meet or exceed all federal safety guidelines.

Tire Designations

Tire Size

The following is an example of a typical passenger vehicle tire size.

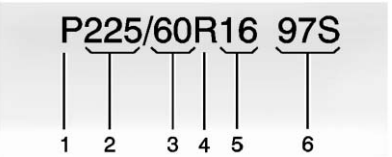

(1) Passenger (P-Metric) Tire: The United States version of a metric tire sizing system. The letter P as the first character in the tire size means a passenger

vehicle tire engineered to standards set by the U.S. Tire and Rim Association.

(2) Tire Width: The three-digit number indicates the tire section width in millimeters from sidewall to sidewall.

(3) Aspect Ratio: A two-digit number that indicates the tire height-to-width measurements. For example, if the tire size aspect ratio is 60, as shown in item 3 of the illustration, it would mean that the tire's sidewall is 60 percent as high as it is wide.

(4) Construction Code: A letter code is used to indicate the type of ply construction in the tire. The letter R means radial ply construction; the letter D means diagonal or bias ply construction; and the letter B means belted-bias ply construction.

(5) Rim Diameter: Diameter of the wheel in inches.

(6) Service Description: These characters represent the load index and speed rating of the tire. The load index represents the load carrying capacity a tire is certified to carry. The speed rating is the maximum speed a tire is certified to carry a load.

Tire Terminology and Definitions

Air Pressure: The amount of air inside the tire pressing outward on each square inch of the tire. Air pressure is expressed in kPa (kilopascal) or psi (pounds per square inch).

Accessory Weight: The combined weight of optional accessories. Some examples of optional accessories are automatic transmission, power steering, power brakes, power windows, power seats, and air conditioning.

Aspect Ratio: The relationship of a tire's height to its width.

Belt: A rubber coated layer of cords between the plies and the tread. Cords may be made from steel or other reinforcing materials.

Bead: The tire bead contains steel wires wrapped by steel cords that hold the tire onto the rim.

Bias Ply Tire: A pneumatic tire in which the plies are laid at alternate angles less than 90 degrees to the centerline of the tread.

Cold Tire Pressure: The amount of air pressure in a tire, measured in kPa (kilopascal) or psi (pounds per square inch) before a tire has built up heat from driving. See *Tire Pressure on page 10-52*.

Curb Weight: The weight of a motor vehicle with standard and optional equipment including the maximum capacity of fuel, oil, and coolant, but without passengers and cargo.

DOT Markings: A code molded into the sidewall of a tire signifying that the tire is in compliance with the U.S. Department of Transportation (DOT) Motor Vehicle Safety Standards. The DOT code includes the Tire Identification Number (TIN), an alphanumeric designator which can also identify the tire manufacturer, production plant, brand, and date of production.

GVWR: Gross Vehicle Weight Rating. See *Vehicle Load Limits on page 9-10*.

GAWR FRT: Gross Axle Weight Rating for the front axle. See *Vehicle Load Limits on page 9-10*.

GAWR RR: Gross Axle Weight Rating for the rear axle. See *Vehicle Load Limits on page 9-10*.

Intended Outboard Sidewall: The side of an asymmetrical tire, that must always face outward when mounted on a vehicle.

Kilopascal (kPa): The metric unit for air pressure.

Light Truck (LT-Metric) Tire: A tire used on light duty trucks and some multipurpose passenger vehicles.

Load Index: An assigned number ranging from 1 to 279 that corresponds to the load carrying capacity of a tire.

Maximum Inflation Pressure: The maximum air pressure to which a cold tire can be inflated. The maximum air pressure is molded onto the sidewall.

Maximum Load Rating: The load rating for a tire at the maximum permissible inflation pressure for that tire.

Maximum Loaded Vehicle Weight: The sum of curb weight, accessory weight, vehicle capacity weight, and production options weight.

Normal Occupant Weight: The number of occupants a vehicle is designed to seat multiplied by 68 kg (150 lb). See *Vehicle Load Limits on page 9-10*.

Occupant Distribution: Designated seating positions.

Outward Facing Sidewall: The side of an asymmetrical tire that has a particular side that faces outward when mounted on a vehicle. The side of the tire that contains a whitewall, bears white lettering, or bears manufacturer, brand, and/or model name molding that is higher or deeper than the same moldings on the other sidewall of the tire.

Passenger (P-Metric) Tire: A tire used on passenger cars and some light duty trucks and multipurpose vehicles.

Recommended Inflation Pressure: Vehicle manufacturer's recommended tire inflation pressure as shown on the tire placard. See *Tire Pressure on page 10-52* and *Vehicle Load Limits on page 9-10*.

Radial Ply Tire: A pneumatic tire in which the ply cords that extend to the beads are laid at 90 degrees to the centerline of the tread.

Rim: A metal support for a tire and upon which the tire beads are seated.

Sidewall: The portion of a tire between the tread and the bead.

Speed Rating: An alphanumeric code assigned to a tire indicating the maximum speed at which a tire can operate.

Traction: The friction between the tire and the road surface. The amount of grip provided.

Tread: The portion of a tire that comes into contact with the road.

Treadwear Indicators: Narrow bands, sometimes called wear bars, that show across the tread of a tire when only 1.6 mm (1/16 in) of tread remains. See *When It Is Time for New Tires on page 10-60*.

UTQGS (Uniform Tire Quality Grading Standards): A tire information system that provides consumers with ratings for a tire's traction, temperature, and treadwear. Ratings are determined by tire manufacturers using government testing procedures. The ratings are molded into the sidewall of the tire. See *Uniform Tire Quality Grading on page 10-63*.

Vehicle Capacity Weight: The number of designated seating positions multiplied by 68 kg (150 lb) plus the rated cargo load. See *Vehicle Load Limits on page 9-10*.

Vehicle Maximum Load on the Tire: Load on an individual tire due to curb weight, accessory weight, occupant weight, and cargo weight.

Vehicle Placard: A label permanently attached to a vehicle showing the vehicle capacity weight and the original equipment tire size and recommended inflation pressure. See “Tire and Loading Information Label” under *Vehicle Load Limits on page 9-10*.

Tire Pressure

Tires need the correct amount of air pressure to operate effectively.

Notice: **Neither tire underinflation nor overinflation is good. Underinflated tires, or tires that do not have enough air, can result in:**

- **Tire overloading and overheating which could lead to a blowout.**
- **Premature or irregular wear.**
- **Poor handling.**
- **Reduced fuel economy.**

Overinflated tires, or tires that have too much air, can result in:

- **Unusual wear.**
- **Poor handling.**
- **Rough ride.**
- **Needless damage from road hazards.**

The Tire and Loading Information label on the vehicle indicates the original equipment tires and the correct cold tire inflation pressures. The recommended pressure is the minimum air pressure needed to support the vehicle's maximum load carrying capacity. See *Vehicle Load Limits on page 9-10*.

How the vehicle is loaded affects vehicle handling and ride comfort. Never load the vehicle with more weight than it was designed to carry.

When to Check

Check the tires once a month or more. Do not forget the compact spare, if the vehicle has one. The cold compact spare tire pressure should be at 420 kPa (60 psi). See *Compact Spare Tire on page 10-90*.

How to Check

Use a good quality pocket-type gauge to check tire pressure. Proper tire inflation cannot be determined by looking at the tire. Check the tire inflation pressure when the tires are cold, meaning the vehicle has not been driven for at least three hours or no more than 1.6 km (1 mi).

Remove the valve cap from the tire valve stem. Press the tire gauge firmly onto the valve to get a pressure measurement. If the cold tire inflation pressure matches the recommended pressure on the Tire and Loading Information label, no further adjustment is necessary. If the inflation pressure is low, add air until the recommended pressure is reached. If the inflation pressure is high, press on the metal stem in the center of the tire valve to release air.

Recheck the tire pressure with the tire gauge.

Return the valve caps on the valve stems to prevent leaks and keep out dirt and moisture.

Tire Pressure for High-Speed Operation

⚠ WARNING

Driving at high speeds, 160 km/h (100 mph) or higher, puts an additional strain on tires. Sustained high-speed driving causes excessive heat buildup and can cause sudden tire failure. You could have a crash and you or others could be killed. Some high-speed rated tires require inflation pressure adjustment for high-speed operation. When speed limits and road conditions are such that a vehicle can be driven at high speeds, make sure the tires are rated for high-speed operation, in excellent condition, and set to the correct cold tire inflation pressure for the vehicle load.

Vehicles with P235/50R18 size tires require inflation pressure adjustment when driving the vehicle at speeds of 160 km/h (100 mph) or higher. Set the cold inflation pressure to 270 kPa (39 psi).

Vehicles with P245/40R19 size tires require inflation pressure adjustment when driving the vehicle at speeds of 160 km/h (100 mph) or higher. Set the cold inflation pressure to 310 kPa (45 psi).

Return the tires to the recommended cold tire inflation pressure when high-speed driving has ended. See *Vehicle Load Limits on page 9-10* and *Tire Pressure on page 10-52*.

Tire Pressure Monitor System

The Tire Pressure Monitor System (TPMS) uses radio and sensor technology to check tire pressure levels. The TPMS sensors monitor the air pressure in your tires and transmit tire pressure readings to a receiver located in the vehicle.

Each tire, including the spare (if provided), should be checked monthly when cold and inflated to the inflation pressure recommended by the vehicle manufacturer on the vehicle placard or tire inflation pressure label. (If your vehicle has tires of a different size than the size indicated on the vehicle placard or tire inflation pressure label, you should determine the proper tire inflation pressure for those tires.)

As an added safety feature, your vehicle has been equipped with a tire pressure monitoring system (TPMS) that illuminates a low tire pressure telltale when one or more of your tires is significantly under-inflated.

Accordingly, when the low tire pressure telltale illuminates, you should stop and check your tires as soon as possible, and inflate them to the proper pressure. Driving on a significantly under-inflated tire causes the tire to overheat and can lead to tire failure. Under-inflation also reduces fuel efficiency and tire tread life, and may affect the vehicle's handling and stopping ability.

Please note that the TPMS is not a substitute for proper tire maintenance, and it is the driver's responsibility to maintain correct tire pressure, even if under-inflation has not reached the level to trigger illumination of the TPMS low tire pressure telltale.

Your vehicle has also been equipped with a TPMS malfunction indicator to indicate when the system is not operating properly. The TPMS malfunction indicator is combined with the low tire pressure telltale. When the system detects a malfunction, the telltale will flash for approximately one minute and then remain continuously illuminated. This sequence will continue upon subsequent vehicle start-ups as long as the malfunction exists.

When the malfunction indicator is illuminated, the system may not be able to detect or signal low tire pressure as intended. TPMS malfunctions may occur for a variety of reasons, including the installation of replacement or alternate tires or wheels on the vehicle that prevent the TPMS from functioning properly. Always check the TPMS malfunction telltale after replacing one or more tires or wheels on your vehicle to ensure that the replacement or alternate tires and wheels allow the TPMS to continue to function properly.

See *Tire Pressure Monitor Operation on page 10-55*.

Federal Communications Commission (FCC) Rules and with Industry Canada Standards

See *Radio Frequency Statement on page 13-21* for information regarding Part 15 of the Federal Communications Commission (FCC) Rules and with Industry Canada Standards RSS-GEN/210/220/310.

Tire Pressure Monitor Operation

This vehicle may have a Tire Pressure Monitor System (TPMS). The TPMS is designed to warn the driver when a low tire pressure condition exists. TPMS sensors are mounted onto each tire and wheel assembly, excluding the spare tire and wheel assembly. The TPMS sensors monitor the air pressure in the tires and transmits the tire pressure readings to a receiver in the vehicle.

When a low tire pressure condition is detected, the TPMS illuminates the low tire pressure warning light on the instrument cluster. If the warning light comes on, stop as soon as possible and inflate the tires to the recommended pressure shown on the Tire and Loading Information label. See *Vehicle Load Limits on page 9-10*.

A message to check the pressure in a specific tire displays in the Driver Information Center (DIC). The low tire pressure warning light and the DIC warning message come on at each ignition cycle until the tires are inflated to the correct inflation pressure. Using the DIC, tire pressure levels can be viewed.

For additional information and details about the DIC operation and displays see *Driver Information Center (DIC) on page 5-25*.

The low tire pressure warning light may come on in cool weather when the vehicle is first started, and then turn off as the vehicle is driven. This could be an early indicator that the air pressure is getting low and needs to be inflated to the proper pressure.

A Tire and Loading Information label, attached to your vehicle, shows the size of the original equipment tires and the correct inflation pressure for the tires when they are cold. See *Vehicle Load Limits on page 9-10*, for an example of the Tire and Loading Information label and its location. Also see *Tire Pressure on page 10-52*.

The TPMS can warn about a low tire pressure condition but it does not replace normal tire maintenance. See *Tire Inspection on page 10-59*, *Tire Rotation on page 10-59* and *Tires on page 10-44*.

Notice: **Tire sealant materials are not all the same. A non-approved tire sealant could damage the TPMS sensors. TPMS sensor damage caused by using an incorrect tire sealant is not covered by the vehicle warranty. Always use only the GM-approved tire sealant available through your dealer or included in the vehicle.**

Factory-installed Tire Inflator Kits use a GM approved liquid tire sealant. Using non-approved tire sealants could damage the TPMS sensors. See *Tire Sealant and Compressor Kit (With Pressure Relief Button) on page 10-68* or *Tire Sealant and Compressor Kit (With Pressure Deflation Button) on page 10-76* for information regarding the inflator kit materials and instructions.

TPMS Malfunction Light and Message

The TPMS will not function properly if one or more of the TPMS sensors are missing or inoperable. When the system detects a malfunction, the low tire warning light flashes for about one minute and then stays on for the remainder of the ignition cycle. A DIC warning message also displays. The malfunction light and DIC warning message come on at each ignition cycle until the problem is corrected. Some of the conditions that can cause these to come on are:

- One of the road tires has been replaced with the spare tire. The spare tire does not have a TPMS sensor. The malfunction light and DIC message should go off after the road tire is replaced and the sensor matching process is performed successfully. See “TPMS Sensor Matching Process” later in this section.
- The TPMS sensor matching process was not done or not completed successfully after rotating the tires. The malfunction light and the DIC message should go off after successfully completing the sensor matching process. See "TPMS Sensor Matching Process" later in this section.
- One or more TPMS sensors are missing or damaged. The malfunction light and the DIC message should go off when the TPMS sensors are installed and the sensor matching process is performed successfully. See your dealer for service.
- Replacement tires or wheels do not match the original equipment tires or wheels. Tires and wheels other than those recommended could prevent the TPMS from functioning properly. See *Buying New Tires on page 10-61*.
- Operating electronic devices or being near facilities using radio wave frequencies similar to the TPMS could cause the TPMS sensors to malfunction.

If the TPMS is not functioning properly it cannot detect or signal a low tire condition. See your dealer for service if the TPMS malfunction light and DIC message comes on and stays on.

TPMS Sensor Matching Process

Each TPMS sensor has a unique identification code. The identification code needs to be matched to a new tire/wheel position after rotating the vehicle’s tires or replacing one or more of the TPMS sensors. The TPMS sensor matching process should also be performed after replacing a spare tire with a road tire containing the TPMS sensor. The malfunction light and the DIC message should go off at the next ignition cycle.

The sensors are matched to the tire/wheel positions, using a TPMS relearn tool, in the following order: driver side front tire, passenger side front tire, passenger side rear tire, and driver side rear. See your dealer for service or to purchase a relearn tool.

There are two minutes to match the first tire/wheel position, and five minutes overall to match all four tire/wheel positions. If it takes longer, the matching process stops and must be restarted.

The TPMS sensor matching process is:

1. Set the parking brake.
2. Turn the ignition to ON/RUN with the engine off or place the vehicle power mode in ON/RUN/START. See *Ignition Positions (Key Access) on page 9-15* or *Ignition Positions (Keyless Access) on page 9-17*.
3. Use the MENU button to select the Vehicle Information Menu in the Driver Information Center (DIC).
4. Use the thumbwheel to scroll to the Tire Pressure Menu Item screen.
5. Press the SET/CLR button to begin the sensor matching process.

   A message asking if the process should begin should appear.
6. Press the SET/CLR button again to confirm the selection.

   The horn sounds twice to signal the receiver is in relearn mode and the TIRE LEARNING ACTIVE message displays on the DIC screen.
7. Start with the driver side front tire.
8. Place the relearn tool against the tire sidewall, near the valve stem. Then press the button to activate the TPMS sensor.

   A horn chirp confirms that the sensor identification code has been matched to this tire and wheel position.
9. Proceed to the passenger side front tire, and repeat the procedure in Step 8.
10. Proceed to the passenger side rear tire, and repeat the procedure in Step 8.
11. Proceed to the driver side rear tire, and repeat the procedure in Step 8. The horn sounds two times to indicate the sensor identification code has been matched to the driver side rear tire, and the TPMS sensor matching process is no longer active. The TIRE LEARNING ACTIVE message on the DIC display screen goes off.
12. Turn the ignition to LOCK/OFF or press STOP to turn the ignition off.

13. Set all four tires to the recommended air pressure level as indicated on the Tire and Loading Information label.

Tire Inspection

We recommend that the tires, including the spare tire, if the vehicle has one, be inspected for signs of wear or damage at least once a month.

Replace the tire if:

- The indicators at three or more places around the tire can be seen.
- There is cord or fabric showing through the tire's rubber.
- The tread or sidewall is cracked, cut, or snagged deep enough to show cord or fabric.
- The tire has a bump, bulge, or split.
- The tire has a puncture, cut, or other damage that cannot be repaired well because of the size or location of the damage.

Tire Rotation

Tires should be rotated every 12 000 km (7,500 mi). See *Maintenance Schedule on page 11-2*.

Tires are rotated to achieve a uniform wear for all tires. The first rotation is the most important.

Anytime unusual wear is noticed, rotate the tires as soon as possible, check for proper tire inflation pressure, and check for damaged tires or wheels. If the unusual wear continues after the rotation, check the wheel alignment. See *When It Is Time for New Tires on page 10-60* and *Wheel Replacement on page 10-65*.

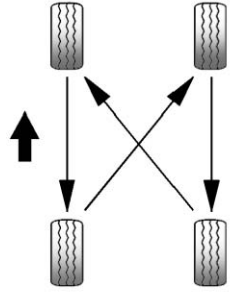

Use this rotation pattern when rotating the tires.

Do not include the compact spare tire in the tire rotation.

Adjust the front and rear tires to the recommended inflation pressure on the Tire and Loading Information label after the tires have been rotated. See *Tire Pressure on page 10-52* and *Vehicle Load Limits on page 9-10*.

Reset the Tire Pressure Monitor System. See *Tire Pressure Monitor Operation on page 10-55*.

Check that all wheel nuts are properly tightened. See “Wheel Nut Torque” under *Capacities and Specifications on page 12-2*.

⚠ WARNING

Rust or dirt on a wheel, or on the parts to which it is fastened, can make wheel nuts become loose after time. The wheel could come off and cause an accident. When changing a wheel, remove any rust or dirt from places where the wheel attaches to the vehicle. In an emergency, a cloth or a paper towel can be used; however, use a scraper or wire brush later to remove all rust or dirt.

Lightly coat the center of the wheel hub with wheel bearing grease after a wheel change or tire rotation to prevent corrosion or rust build-up. Do not get grease on the flat wheel mounting surface or on the wheel nuts or bolts.

When It Is Time for New Tires

Factors such as maintenance, temperatures, driving speeds, vehicle loading, and road conditions affect the wear rate of the tires.

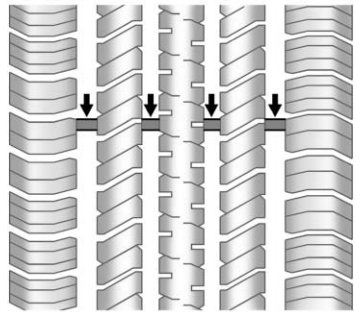

Treadwear indicators are one way to tell when it is time for new tires. Treadwear indicators appear when the tires have only 1.6 mm (1/16 in) or less of tread remaining. See *Tire Inspection on page 10-59* and *Tire Rotation on page 10-59*.

The rubber in tires ages over time. This also applies to the spare tire, if the vehicle has one, even if it is never used. Multiple factors including temperatures, loading conditions, and inflation pressure maintenance affect how fast aging takes place. GM recommends that tires, including the spare if equipped, be replaced after six years, regardless of tread wear. The tire manufacturer date is the last four digits of the DOT Tire Identification Number (TIN) which is molded into one side of the tire sidewall. The first two digits represent the week (01–52) and the last two digits, the year. For example, the third week of the year 2010 would have a four-digit DOT date of 0310.

Vehicle Storage

Tires age when stored normally mounted on a parked vehicle. Park a vehicle that will be stored for at least a month in a cool, dry, clean area away from direct sunlight to slow aging. This area should be free of grease, gasoline, or other substances that can deteriorate rubber.

Parking for an extended period can cause flat spots on the tires that may result in vibrations while driving. When storing a vehicle for at least a month, remove the tires or raise the vehicle to reduce the weight from the tires.

Buying New Tires

GM has developed and matched specific tires for the vehicle. The original equipment tires installed were designed to meet General Motors Tire Performance Criteria Specification (TPC Spec) system rating. When replacement tires are needed, GM strongly recommends buying tires with the same TPC Spec rating.

GM's exclusive TPC Spec system considers over a dozen critical specifications that impact the overall performance of the vehicle, including brake system performance, ride and handling, traction control, and tire pressure monitoring performance. GM's TPC Spec number is molded onto the tire's sidewall near the tire size. If the tires have an all-season tread design, the TPC Spec number will be followed by MS for mud and snow. See *Tire Sidewall Labeling on page 10-46*.

GM recommends replacing worn tires in complete sets of four. Uniform tread depth on all tires will help to maintain the performance of the vehicle. Braking and handling performance may be adversely affected if all the tires are not replaced at the same time.

If proper rotation and maintenance have been done, all four tires should wear out at about the same time. See *Tire Rotation on page 10-59* for information on proper tire rotation. However, if it is necessary to replace only one axle set of worn tires, place the new tires on the rear axle.

Winter tires with the same speed rating as the original equipment tires may not be available for H, V, W, Y and ZR speed rated tires. Never exceed the winter tire's maximum speed capability when using winter tires with a lower speed rating.

⚠ WARNING

Tires could explode during improper service. Attempting to mount or dismount a tire

(Continued)

WARNING (Continued)

could cause injury or death. Only your dealer or authorized tire service center should mount or dismount the tires.

⚠ WARNING

Mixing tires of different sizes, brands, or types may cause loss of control of the vehicle, resulting in a crash or other vehicle damage. Use the correct size, brand, and type of tires on all wheels.

⚠ WARNING

Using bias-ply tires on the vehicle may cause the wheel rim flanges to develop cracks

(Continued)

WARNING (Continued)

after many miles of driving. A tire and/or wheel could fail suddenly and cause a crash. Use only radial-ply tires with the wheels on the vehicle.

If the vehicle tires must be replaced with a tire that does not have a TPC Spec number, make sure they are the same size, load range, speed rating, and construction (radial) as the original tires.

Vehicles that have a tire pressure monitoring system could give an inaccurate low-pressure warning if non-TPC Spec rated tires are installed. See *Tire Pressure Monitor System on page 10-54*.

The Tire and Loading Information label indicates the original equipment tires on the vehicle. See *Vehicle Load Limits on page 9-10*.

Different Size Tires and Wheels

If wheels or tires are installed that are a different size than the original equipment wheels and tires, vehicle performance, including its braking, ride and handling characteristics, stability, and resistance to rollover may be affected. If the vehicle has electronic systems such as antilock brakes, rollover airbags, traction control, electronic stability control, or All-Wheel Drive, the performance of these systems can also be affected.

⚠ WARNING

If different sized wheels are used, there may not be an acceptable level of performance and safety if tires not recommended for those wheels are selected. This increases the chance of a crash and serious injury. Only use GM specific wheel and tire systems developed for the vehicle, and have them properly installed by a GM certified technician.

See *Buying New Tires on page 10-61* and *Accessories and Modifications on page 10-3*.

Uniform Tire Quality Grading

Quality grades can be found where applicable on the tire sidewall between tread shoulder and maximum section width. For example:

Treadwear 200 Traction AA Temperature A

The following information relates to the system developed by the United States National Highway Traffic Safety Administration (NHTSA), which grades tires by treadwear, traction, and temperature performance. This applies only to vehicles sold in the United States. The grades are molded on the sidewalls of most passenger car tires.

The Uniform Tire Quality Grading (UTQG) system does not apply to deep tread, winter tires, compact spare tires, tires with nominal rim diameters of 10 to 12 inches (25 to 30 cm), or to some limited-production tires.

While the tires available on General Motors passenger cars and light trucks may vary with respect to these grades, they must also conform to federal safety requirements and additional General Motors Tire Performance Criteria (TPC) standards.

All Passenger Car Tires Must Conform to Federal Safety Requirements In Addition To These Grades.

Treadwear

The treadwear grade is a comparative rating based on the wear rate of the tire when tested under controlled conditions on a specified government test course. For example, a tire graded 150 would wear one and one-half (1½) times as well on the government course as a tire graded 100. The relative performance of tires depends upon the actual conditions of their use, however, and may depart significantly from the norm due to variations in driving habits, service practices and differences in road characteristics and climate.

Traction – AA, A, B, C

The traction grades, from highest to lowest, are AA, A, B, and C. Those grades represent the tire's ability to stop on wet pavement as measured under controlled conditions on specified government test surfaces of asphalt and concrete. A tire marked C may have poor traction performance. Warning: The traction grade assigned to this tire is based on straight-ahead braking traction tests, and does not include acceleration, cornering, hydroplaning, or peak traction characteristics.

Temperature – A, B, C

The temperature grades are A (the highest), B, and C, representing the tire's resistance to the generation of heat and its ability to dissipate heat when tested under controlled conditions on a specified indoor laboratory test wheel. Sustained high temperature can cause the material of the tire to degenerate and reduce tire life, and excessive temperature can lead

to sudden tire failure. The grade C corresponds to a level of performance which all passenger car tires must meet under the Federal Motor Safety Standard No. 109. Grades B and A represent higher levels of performance on the laboratory test wheel than the minimum required by law. Warning: The temperature grade for this tire is established for a tire that is properly inflated and not overloaded. Excessive speed, underinflation, or excessive loading, either separately or in combination, can cause heat buildup and possible tire failure.

Wheel Alignment and Tire Balance

The tires and wheels were aligned and balanced at the factory to provide the longest tire life and best overall performance. Adjustments to wheel alignment and tire balancing will not be necessary on a regular basis. However, check the alignment if there is unusual tire wear or if the vehicle is pulling to one side or the other. If the vehicle vibrates when driving on a smooth road, the tires and wheels might need to be rebalanced. See your dealer for proper diagnosis.

Wheel Replacement

Replace any wheel that is bent, cracked, or badly rusted or corroded. If wheel nuts keep coming loose, the wheel, wheel bolts, and wheel nuts should be replaced. If the wheel leaks air, replace it. Some aluminum wheels can be repaired. See your dealer if any of these conditions exist.

Your dealer will know the kind of wheel that is needed.

Each new wheel should have the same load-carrying capacity, diameter, width, offset, and be mounted the same way as the one it replaces.

Replace wheels, wheel bolts, wheel nuts, or Tire Pressure Monitor System (TPMS) sensors with new GM original equipment parts.

⚠ WARNING

Using the wrong replacement wheels, wheel bolts, or wheel nuts can be dangerous. It could affect the braking and handling of the vehicle. Tires can lose air, and cause loss of control, causing a crash. Always use the correct wheel, wheel bolts, and wheel nuts for replacement.

Notice: **The wrong wheel can also cause problems with bearing life, brake cooling, speedometer or odometer calibration, headlamp aim, bumper height, vehicle ground clearance, and tire or tire chain clearance to the body and chassis.**

Used Replacement Wheels

⚠ WARNING

Replacing a wheel with a used one is dangerous. How it has been used or how far it has been driven may be unknown. It could fail suddenly and cause a crash. When replacing wheels, use a new GM original equipment wheel.

Tire Chains

⚠ WARNING

Do not use tire chains. There is not enough clearance. Tire chains used on a vehicle without the proper amount of clearance can cause damage to the brakes, suspension, or other vehicle

(Continued)

WARNING (Continued)

parts. The area damaged by the tire chains could cause loss of control and a crash.

Use another type of traction device only if its manufacturer recommends it for the vehicle's tire size combination and road conditions. Follow that manufacturer's instructions. To avoid vehicle damage, drive slow and readjust or remove the traction device if it contacts the vehicle. Do not spin the wheels. If traction devices are used, install them on the front tires.

If a Tire Goes Flat

It is unusual for a tire to blow out while driving, especially if the tires are maintained properly. See *Tires on page 10-44*. If air goes out of a tire, it is much more likely to leak out slowly. But if there is ever a blowout, here are a few tips about what to expect and what to do:

If a front tire fails, the flat tire creates a drag that pulls the vehicle toward that side. Take your foot off the accelerator pedal and grip the steering wheel firmly. Steer to maintain lane position, and then gently brake to a stop, well off the road, if possible.

A rear blowout, particularly on a curve, acts much like a skid and may require the same correction as used in a skid. Stop pressing the accelerator pedal and steer to straighten the vehicle. It may be very bumpy and noisy. Gently brake to a stop, well off the road, if possible.

⚠ WARNING

Driving on a flat tire will cause permanent damage to the tire. Re-inflating a tire after it has been driven on while severely underinflated or flat may cause a blowout and a serious crash. Never attempt to re-inflate a tire that has been driven on while severely underinflated or flat. Have your dealer or an authorized tire service center repair or replace the flat tire as soon as possible.

⚠ WARNING

Lifting a vehicle and getting under it to do maintenance or repairs is dangerous without the appropriate safety equipment and training. If a jack is provided with the vehicle, it is designed only for changing a flat tire. If it is used for anything else, you or others could be badly injured or killed if the vehicle slips off the jack. If a jack is provided with the vehicle, only use it for changing a flat tire.

If a tire goes flat, avoid further tire and wheel damage by driving slowly to a level place, well off the road, if possible. Turn on the hazard warning flashers. See *Hazard Warning Flashers on page 6-4*.

⚠ WARNING

Changing a tire can be dangerous. The vehicle can slip off the jack and roll over or fall causing injury or death. Find a level place to change the tire. To help prevent the vehicle from moving:

1. Set the parking brake firmly.
2. Put an automatic transmission in P (Park) or a manual transmission in 1 (First) or R (Reverse).
3. Turn off the engine and do not restart while the vehicle is raised.
4. Do not allow passengers to remain in the vehicle.
5. Place wheel blocks on both sides of the tire at the opposite corner of the tire being changed.

This vehicle may come with a jack and spare tire or a tire sealant and compressor kit. To use the jacking equipment to change a spare tire safely, follow the instructions below. Then see *Tire Changing on page 10-84*. To use the tire sealant and compressor kit, see *Tire Sealant and Compressor Kit (With Pressure Relief Button) on page 10-68* or *Tire Sealant and Compressor Kit (With Pressure Deflation Button) on page 10-76*.

When the vehicle has a flat tire (2), use the following example as a guide to assist you in the placement of wheel blocks (1).

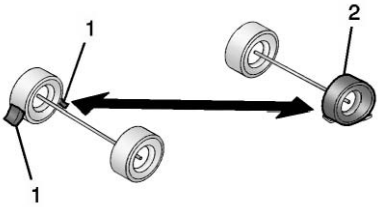

1. Wheel Block
2. Flat Tire

The following information explains how to repair or change a tire.

Tire Sealant and Compressor Kit (With Pressure Relief Button)

System Identification

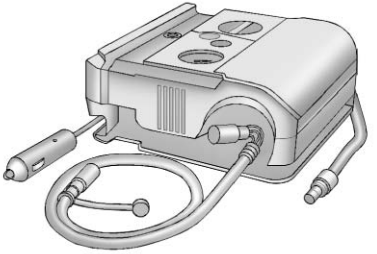

If the vehicle has the tire sealant and compressor kit shown above, see the operating instructions that follow.

If the vehicle has the tire sealant and compressor kit shown above, follow the operating instructions under "Tire Sealant and Compressor Kit (With Pressure Deflation Button).”

⚠ WARNING

Idling a vehicle in an enclosed area with poor ventilation is dangerous. Engine exhaust may enter the vehicle. Engine exhaust contains carbon monoxide (CO) which cannot be seen or smelled. It can cause unconsciousness and even death. Never run the engine in an enclosed area that has no fresh air ventilation. For more information, see *Engine Exhaust on page 9-26*.

⚠ WARNING

Overinflating a tire could cause the tire to rupture and you or others could be injured. Be sure to read and follow the tire sealant and compressor kit instructions and inflate the tire to its recommended pressure. Do not exceed the recommended pressure.

⚠ WARNING

Storing the tire sealant and compressor kit or other equipment in the passenger compartment of the vehicle could cause injury. In a sudden stop or collision, loose equipment could strike someone. Store the tire sealant and compressor kit in its original location.

If this vehicle has a tire sealant and compressor kit, there may not be a spare tire and tire changing equipment, and on some vehicles there may not be a place to store a tire.

The tire sealant and compressor can be used to temporarily seal punctures up to 6 mm (0.25 in) in the tread area of the tire. It can also be used to inflate an underinflated tire.

If the tire has been separated from the wheel, has damaged sidewalls, or has a large puncture, the tire is too severely damaged for the tire sealant and compressor kit to be effective. See *Roadside Assistance Program (Mexico) on page 13-7* or *Roadside Assistance Program (U.S. and Canada) on page 13-11*.

Read and follow all of the tire sealant and compressor kit instructions.

The kit includes:

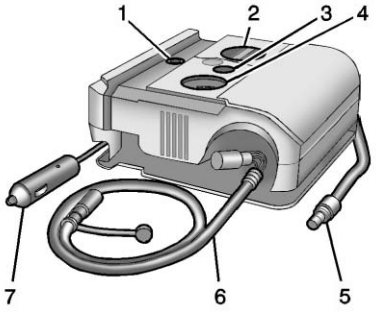

1. On/Off Button
2. Selector Switch (Sealant/Air or Air Only)
3. Pressure Relief Button
4. Pressure Gauge
5. Air Only Hose (Black)
6. Sealant/Air Hose (Clear)
7. Power Plug

Tire Sealant

Read and follow the safe handling instructions on the label adhered to the compressor.

Check the tire sealant expiration date on the sealant canister. The sealant canister should be replaced before its expiration date. Replacement sealant canisters are available at your local dealer. See “Removal and Installation of the Sealant Canister” later in this section.

There is only enough sealant to seal one tire. After usage, the sealant canister and sealant/air hose assembly must be replaced. See “Removal and Installation of the Sealant Canister” later in this section.

Using the Tire Sealant and Compressor Kit to Temporarily Seal and Inflate a Punctured Tire

Follow the directions closely for correct sealant usage.

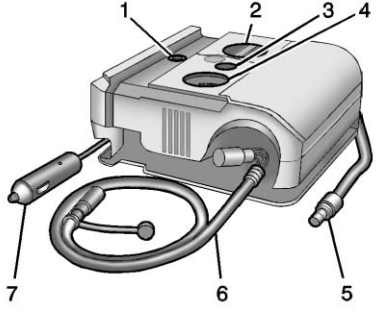

When using the tire sealant and compressor kit during cold temperatures, warm the kit in a heated environment for five minutes. This will help to inflate the tire faster.

If a tire goes flat, avoid further tire and wheel damage by driving slowly to a level place. Turn on the hazard warning flashers. See *Hazard Warning Flashers on page 6-4*.

See *If a Tire Goes Flat on page 10-66* for other important safety warnings.

Do not remove any objects that have penetrated the tire.

1. Remove the tire sealant and compressor kit from its storage location. See *Storing the Tire Sealant and Compressor Kit on page 10-83*.
2. Unwrap the sealant/air hose (6) and the power plug (7).
3. Place the kit on the ground.

   Make sure the tire valve stem is positioned close to the ground so the hose will reach it.
4. Remove the valve stem cap from the flat tire by turning it counterclockwise.
5. Attach the sealant/air hose (6) onto the tire valve stem. Turn it clockwise until it is tight.
6. Plug the power plug (7) into the accessory power outlet in the vehicle. Unplug all items from other accessory power outlets. See *Power Outlets on page 5-6*.

   If the vehicle has an accessory power outlet, do not use the cigarette lighter.

   If the vehicle only has a cigarette lighter, use the cigarette lighter.

   Do not pinch the power plug cord in the door or window.
7. Start the vehicle. The vehicle must be running while using the air compressor.
8. Turn the selector switch (2) clockwise to the Sealant + Air position.

9. Press the on/off button (1) to turn the tire sealant and compressor kit on.

   The compressor will inject sealant and air into the tire.

   The pressure gauge (4) will initially show a high pressure while the compressor pushes the sealant into the tire. Once the sealant is completely dispersed into the tire, the pressure will quickly drop and start to rise again as the tire inflates with air only.

10. Inflate the tire to the recommended inflation pressure using the pressure gauge (4). The recommended inflation pressure can be found on the Tire and Loading Information label. See *Tire Pressure on page 10-52*.

    The pressure gauge (4) may read higher than the actual tire pressure while the compressor is on. Turn the compressor off to get an accurate pressure reading. The compressor may be turned on/off until the correct pressure is reached.

Notice: **If the recommended pressure cannot be reached after approximately 25 minutes, the vehicle should not be driven farther. The tire is too severely damaged and the tire sealant and compressor kit cannot inflate the tire. Remove the power plug from the accessory power outlet and unscrew the inflating hose from the tire valve. See *Roadside Assistance Program (Mexico) on page 13-7* or *Roadside Assistance Program (U.S. and Canada) on page 13-11*.**

11. Press the on/off button (1) to turn the tire sealant and compressor kit off.

    The tire is not sealed and will continue to leak air until the vehicle is driven and the sealant is distributed in the tire; therefore, Steps 12–18 must be done immediately after Step 11.

    Be careful while handling the tire sealant and compressor kit as it could be warm after usage.

12. Unplug the power plug (7) from the accessory power outlet in the vehicle.

13. Turn the sealant/air hose (6) counterclockwise to remove it from the tire valve stem.

14. Replace the tire valve stem cap.

15. Return the sealant/air hose (6) and the power plug (7) back in their original locations.

16. If the flat tire was able to inflate to the recommended inflation pressure, remove the maximum speed label from the sealant canister and place it in a highly visible location. Do not exceed the speed on this label until the damaged tire is repaired or replaced.
17. Return the equipment to its original storage location in the vehicle.
18. Immediately drive the vehicle 8 km (5 mi) to distribute the sealant in the tire.
19. Stop at a safe location and check the tire pressure. Refer to Steps 1–11 under “Using the Tire Sealant and Compressor Kit without Sealant to Inflate a Tire (Not Punctured).”

    If the tire pressure has fallen more than 68 kPa (10 psi) below the recommended inflation pressure, stop driving the vehicle. The tire is too severely damaged and the tire sealant cannot seal the tire. See *Roadside Assistance Program (Mexico) on page 13-7* or *Roadside Assistance Program (U.S. and Canada) on page 13-11*.

    If the tire pressure has not dropped more than 68 kPa (10 psi) from the recommended inflation pressure, use the compressor kit to inflate the tire to the recommended inflation pressure.
20. Wipe off any sealant from the wheel, tire, and vehicle.
21. Dispose of the used sealant canister and sealant/air hose (6) assembly at a local dealer or in accordance with local state codes and practices.
22. Replace it with a new canister available from your dealer.
23. After temporarily sealing a tire using the tire sealant and compressor kit, take the vehicle to an authorized dealer within 161 km (100 mi) of driving to have the tire repaired or replaced.

Using the Tire Sealant and Compressor Kit without Sealant to Inflate a Tire (Not Punctured)

To use the air compressor to inflate a tire with air only and not sealant:

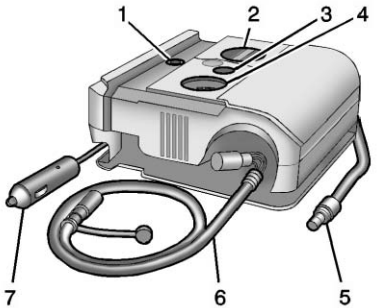

If a tire goes flat, avoid further tire and wheel damage by driving slowly to a level place. Turn on the hazard warning flashers. See *Hazard Warning Flashers on page 6-4*.

See *If a Tire Goes Flat on page 10-66* for other important safety warnings.

1. Remove the tire sealant and compressor kit from its storage location. See *Storing the Tire Sealant and Compressor Kit on page 10-83*.
2. Unwrap the air only hose (5) and the power plug (7).
3. Place the kit on the ground.

   Make sure the tire valve stem is positioned close to the ground so the hose will reach it.
4. Remove the tire valve stem cap from the flat tire by turning it counterclockwise.
5. Attach the air only hose (5) onto the tire valve stem by turning it clockwise until it is tight.
6. Plug the power plug (7) into the accessory power outlet in the vehicle. Unplug all items from other accessory power outlets. See *Power Outlets on page 5-6*.

   If the vehicle has an accessory power outlet, do not use the cigarette lighter.

   If the vehicle only has a cigarette lighter, use the cigarette lighter.

   Do not pinch the power plug cord in the door or window.
7. Start the vehicle. The vehicle must be running while using the air compressor.
8. Turn the selector switch (2) counterclockwise to the Air Only position.
9. Press the on/off button (1) to turn the compressor on.

   The compressor will inflate the tire with air only.

10. Inflate the tire to the recommended inflation pressure using the pressure gauge (4). The recommended inflation pressure can be found on the Tire and Loading Information label. See *Tire Pressure on page 10-52*.

    The pressure gauge (4) may read higher than the actual tire pressure while the compressor is on. Turn the compressor off to get an accurate reading. The compressor may be turned on/off until the correct pressure is reached. If the tire is inflated higher than the recommended pressure, press the pressure relief button (3), if equipped, until the proper pressure reading is reached. This option is only functional when using the air only hose (5).

11. Press the on/off button (1) to turn the tire sealant and compressor kit off.

    Be careful while handling the tire sealant and compressor kit as it could be warm after usage.

12. Unplug the power plug (7) from the accessory power outlet in the vehicle.

13. Disconnect the air only hose (5) from the tire valve stem, by turning it counterclockwise, and replace the tire valve stem cap.

14. Return the air only hose (5) and the power plug (7) back to their original locations.

15. Return the equipment to its original storage location in the vehicle.

Removal and Installation of the Sealant Canister

To remove the sealant canister:

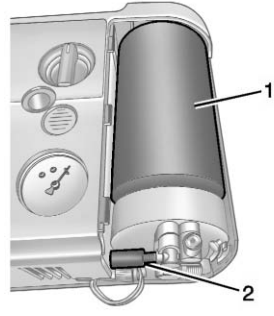

1. Remove the plastic cover.
2. Unscrew the connector (2) from the canister (1).
3. Pull up on the canister (1) to remove it.
4. Replace with a new canister which is available from your dealer.
5. Push the new canister into place.

6. Screw the connector (2) to the canister (1).
7. Slide the plastic cover back on.

Tire Sealant and Compressor Kit (With Pressure Deflation Button)

System Identification

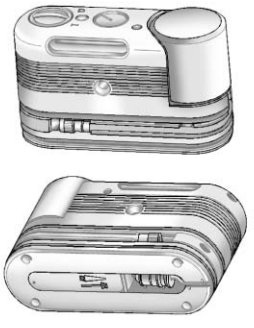

If the vehicle has the tire sealant and compressor kit shown above, see the operating instructions that follow.

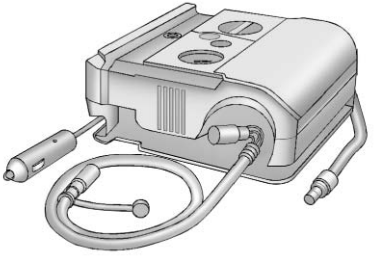

If the vehicle has the tire sealant and compressor kit shown above, follow the operating instructions under "Tire Sealant and Compressor Kit (With Pressure Relief Button)."

⚠ WARNING

Idling a vehicle in an enclosed area with poor ventilation is dangerous. Engine exhaust may enter the vehicle. Engine exhaust contains carbon monoxide (CO)

(Continued)

WARNING (Continued)

which cannot be seen or smelled. It can cause unconsciousness and even death. Never run the engine in an enclosed area that has no fresh air ventilation. For more information, see *Engine Exhaust on page 9-26*.

⚠ WARNING

Overinflating a tire could cause the tire to rupture and you or others could be injured. Be sure to read and follow the tire sealant and compressor kit instructions and inflate the tire to its recommended pressure. Do not exceed the recommended pressure.

⚠ WARNING

Storing the tire sealant and compressor kit or other equipment in the passenger compartment of the vehicle could cause injury. In a sudden stop or collision, loose equipment could strike someone. Store the tire sealant and compressor kit in its original location.

If this vehicle has a tire sealant and compressor kit, there may not be a spare tire and tire changing equipment, and on some vehicles there may not be a place to store a tire.

The tire sealant and compressor can be used to temporarily seal punctures up to 6 mm (0.25 in) in the tread area of the tire. It can also be used to inflate an underinflated tire.

If the tire has been separated from the wheel, has damaged sidewalls, or has a large puncture, the tire is too severely damaged for the tire sealant and compressor kit to be effective. See *Roadside Assistance Program (Mexico) on page 13-7* or *Roadside Assistance Program (U.S. and Canada) on page 13-11*.

Read and follow all of the tire sealant and compressor kit instructions.

The kit includes:

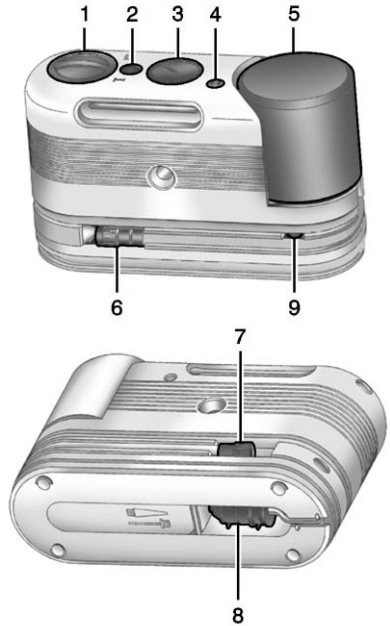

1. Selector Switch (Sealant/Air or Air Only)

2. On/Off Button
3. Pressure Gauge
4. Pressure Deflation Button (If equipped)
5. Tire Sealant Canister
6. Sealant/Air Hose (Clear)
7. Air Only Hose (Black)
8. Power Plug
9. Canister Release Button (Under Sealant/Air Hose)

Tire Sealant

Read and follow the safe handling instructions on the label adhered to the sealant canister.

Check the tire sealant expiration date on the sealant canister. The sealant canister should be replaced before its expiration date. Replacement sealant canisters are available at your local dealer. See “Removal and Installation of the Sealant Canister” following.

There is only enough sealant to seal one tire. After usage, the sealant canister and sealant/air hose assembly must be replaced. See “Removal and Installation of the Sealant Canister” following.

Using the Tire Sealant and Compressor Kit to Temporarily Seal and Inflate a Punctured Tire

Follow the directions closely for correct sealant usage.

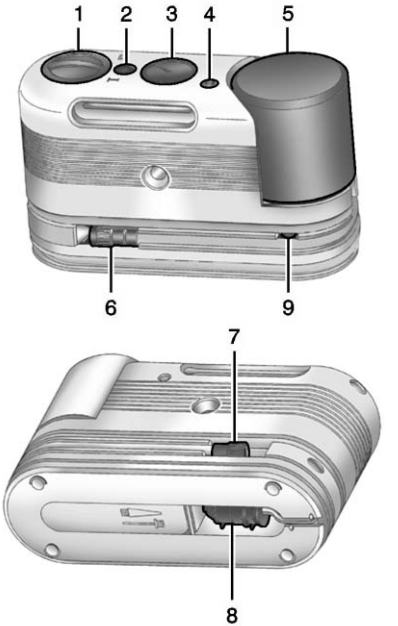

When using the tire sealant and compressor kit during cold temperatures, warm the kit in a

heated environment for five minutes. This will help to inflate the tire faster.

If a tire goes flat, avoid further tire and wheel damage by driving slowly to a level place. Turn on the hazard warning flashers. See *Hazard Warning Flashers on page 6-4*.

See *If a Tire Goes Flat on page 10-66* for other important safety warnings.

Do not remove any objects that have penetrated the tire.

1. Remove the tire sealant and compressor kit from its storage location. See *Storing the Tire Sealant and Compressor Kit on page 10-83*.
2. Unwrap the sealant/air hose (6) and the power plug (8).
3. Place the kit on the ground.

   Make sure the tire valve stem is positioned close to the ground so the hose will reach it.
4. Remove the valve stem cap from the flat tire by turning it counterclockwise.
5. Attach the sealant/air hose (6) onto the tire valve stem. Turn it clockwise until it is tight.
6. Plug the power plug (8) into the accessory power outlet in the vehicle. Unplug all items from other accessory power outlets. See *Power Outlets on page 5-6*.

   If the vehicle has an accessory power outlet, do not use the cigarette lighter.

   If the vehicle only has a cigarette lighter, use the cigarette lighter.

   Do not pinch the power plug cord in the door or window.
7. Start the vehicle. The vehicle must be running while using the air compressor.
8. Press and turn the selector switch (1) counterclockwise to the Sealant + Air position.
9. Press the on/off button (2) to turn the tire sealant and compressor kit on.

   The compressor will inject sealant and air into the tire.

   The pressure gauge (3) will initially show a high pressure while the compressor pushes the sealant into the tire. Once the sealant is completely dispersed into the tire, the pressure will quickly drop and start to rise again as the tire inflates with air only.
10. Inflate the tire to the recommended inflation pressure using the pressure gauge (3). The recommended inflation pressure can be found on the Tire and Loading Information label. See *Tire Pressure on page 10-52*.

The pressure gauge (3) may read higher than the actual tire pressure while the compressor is on. Turn the compressor off to get an accurate pressure reading. The compressor may be turned on/off until the correct pressure is reached.

Notice: **If the recommended pressure cannot be reached after approximately 25 minutes, the vehicle should not be driven farther. The tire is too severely damaged and the tire sealant and compressor kit cannot inflate the tire. Remove the power plug from the accessory power outlet and unscrew the inflating hose from the tire valve. See *Roadside Assistance Program (Mexico) on page 13-7* or *Roadside Assistance Program (U.S. and Canada) on page 13-11*.**

11. Press the on/off button (2) to turn the tire sealant and compressor kit off.

    The tire is not sealed and will continue to leak air until the vehicle is driven and the sealant is distributed in the tire; therefore, Steps 12–18 must be done immediately after Step 11.

    Be careful while handling the tire sealant and compressor kit as it could be warm after usage.

12. Unplug the power plug (8) from the accessory power outlet in the vehicle.
13. Turn the sealant/air hose (6) counterclockwise to remove it from the tire valve stem.
14. Replace the tire valve stem cap.
15. Replace the sealant/air hose (6), and the power plug (8) back in their original location.

16. If the flat tire was able to inflate to the recommended inflation pressure, remove the maximum speed label from the tire sealant canister (5) and place it in a highly visible location. Do not exceed the speed on this label until the damaged tire is repaired or replaced.
17. Return the equipment to its original storage location in the vehicle.
18. Immediately drive the vehicle 8 km (5 mi) to distribute the sealant in the tire.

19. Stop at a safe location and check the tire pressure. Refer to Steps 1–11 under “Using the Tire Sealant and Compressor Kit without Sealant to Inflate a Tire (Not Punctured).”

    If the tire pressure has fallen more than 68 kPa (10 psi) below the recommended inflation pressure, stop driving the vehicle. The tire is too severely damaged and the tire sealant cannot seal the tire. See *Roadside Assistance Program (Mexico) on page 13-7* or *Roadside Assistance Program (U.S. and Canada) on page 13-11*.

    If the tire pressure has not dropped more than 68 kPa (10 psi) from the recommended inflation pressure, inflate the tire to the recommended inflation pressure.

20. Wipe off any sealant from the wheel, tire, and vehicle.

21. Dispose of the used tire sealant canister (5) and sealant/air hose (6) assembly at a local dealer or in accordance with local state codes and practices.

22. Replace it with a new canister available from your dealer.

23. After temporarily sealing a tire using the tire sealant and compressor kit, take the vehicle to an authorized dealer within a 161 km (100 mi) of driving to have the tire repaired or replaced.

Using the Tire Sealant and Compressor Kit without Sealant to Inflate a Tire (Not Punctured)

To use the air compressor to inflate a tire with air only and not sealant:

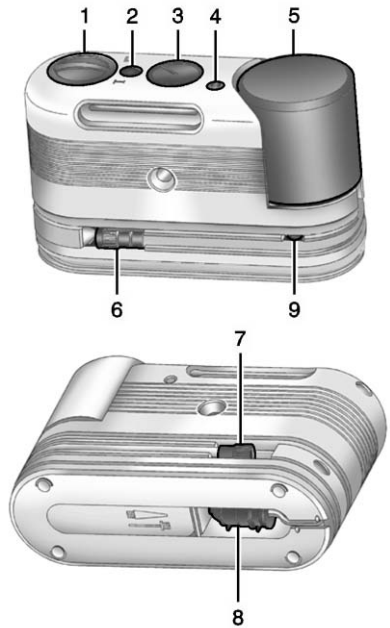

If a tire goes flat, avoid further tire and wheel damage by driving slowly to a level place. Turn on the hazard warning flashers. See *Hazard Warning Flashers on page 6-4*.

See *If a Tire Goes Flat on page 10-66* for other important safety warnings.

1. Remove the tire sealant and compressor kit from its storage location. See *Storing the Tire Sealant and Compressor Kit on page 10-83*.
2. Unwrap the air only hose (7) and the power plug (8).
3. Place the kit on the ground.

   Make sure the tire valve stem is positioned close to the ground so the hose will reach it.
4. Remove the tire valve stem cap from the flat tire by turning it counterclockwise.
5. Attach the air only hose (7) onto the tire valve stem by turning it clockwise until it is tight.
6. Plug the power plug (8) into the accessory power outlet in the vehicle. Unplug all items from other accessory power outlets. See *Power Outlets on page 5-6*.

   If the vehicle has an accessory power outlet, do not use the cigarette lighter.

   If the vehicle only has a cigarette lighter, use the cigarette lighter.

   Do not pinch the power plug cord in the door or window.
7. Start the vehicle. The vehicle must be running while using the air compressor.
8. Press and turn the selector switch (1) clockwise to the Air Only position.
9. Press the on/off button (2) to turn the compressor on.

   The compressor will inflate the tire with air only.
10. Inflate the tire to the recommended inflation pressure using the pressure gauge (3). The recommended inflation pressure can be found on the Tire and Loading Information label. See *Tire Pressure on page 10-52*.

    The pressure gauge (3) may read higher than the actual tire pressure while the compressor is on. Turn the compressor off to get an accurate reading. The compressor may be turned on/off until the correct pressure is reached.

    If you inflate the tire higher than the recommended pressure you can adjust the excess pressure by pressing the pressure deflation button (4), if equipped, until the proper pressure reading is reached. This option is only functional when using the air only hose (7).

11. Press the on/off button (2) to turn the tire sealant and compressor kit off.

    Be careful while handling the tire sealant and compressor kit as it could be warm after usage.

12. Unplug the power plug (8) from the accessory power outlet in the vehicle.
13. Disconnect the air only hose (7) from the tire valve stem by turning it counterclockwise, and replace the tire valve stem cap.
14. Replace the air only hose (7) and the power plug (8) and cord back in their original locations.
15. Place the equipment in the original storage location in the vehicle.

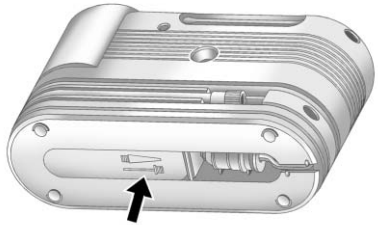

The tire sealant and compressor kit has an accessory adapter in a compartment on the bottom of its housing that may be used to inflate air mattresses, balls, etc.

Removal and Installation of the Sealant Canister

To remove the sealant canister:

1. Unwrap the sealant hose.
2. Press the canister release button (9).
3. Pull up and remove the canister.
4. Replace with a new canister which is available from your dealer.
5. Push the new canister into place.

Storing the Tire Sealant and Compressor Kit

To access the tire sealant and compressor kit:

1. Open the trunk. See *Trunk on page 2-13*.
2. Lift the cover.

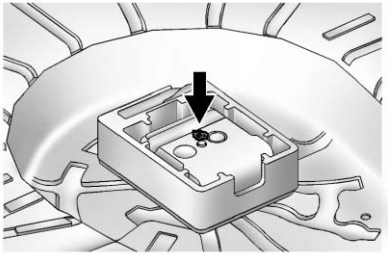

With Pressure Relief Button

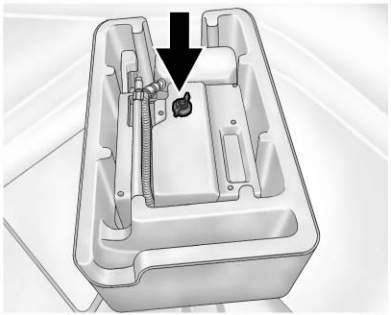

With Pressure Deflation Button

3. Turn the wing nut counterclockwise to remove it.
4. Remove the tire sealant and compressor kit.

To store the tire sealant and compressor kit, reverse the steps.

Tire Changing

Removing the Spare Tire and Tools

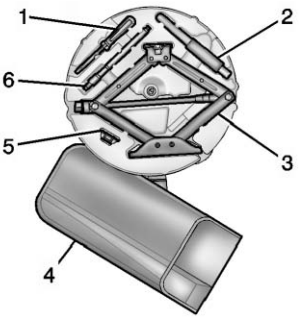

1. Screwdriver (If Equipped)
2. Tow Hook (If Equipped)
3. Jack
4. Wrench (In Bag)
5. Trim Removal (If Equipped)
6. Fastener (If Equipped)

To access the spare tire and tools:

1. Open the trunk.
2. Remove the spare tire cover.

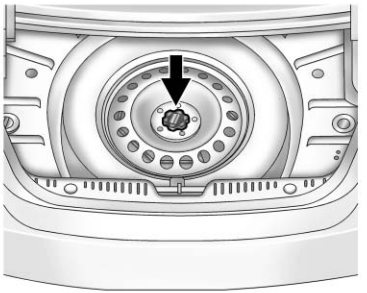

3. Turn the retainer nut counterclockwise and remove the spare tire. Place the spare tire next to the tire being changed.

4. The jack and tools are stored below the spare tire. Remove them from their container and place them near the tire being changed.

Removing the Flat Tire and Installing the Spare Tire

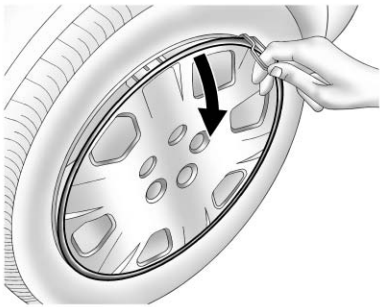

Take off the wheel cover or center cap, if the vehicle has one, to reach the wheel bolts.

1. Do a safety check before proceeding. See *If a Tire Goes Flat on page 10-66*.
2. Turn the wheel wrench counterclockwise to loosen and remove the wheel nut caps.

   Do not try to remove plastic caps from the cover or center cap.
3. Pull the cover or center cap away from the wheel. Store the wheel cover in the cargo area until you have the flat tire repaired or replaced.

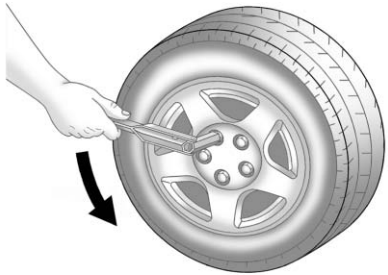

4. Turn the wheel wrench counterclockwise to loosen all the wheel nuts, but do not remove them yet.
5. Place the jack near the flat tire.
6. Put the compact spare tire near you.

⚠ WARNING

Getting under a vehicle when it is lifted on a jack is dangerous. If the vehicle slips off the jack, you could be badly injured or killed. Never get under a vehicle when it is supported only by a jack.

⚠ WARNING

Raising the vehicle with the jack improperly positioned can damage the vehicle and even make the vehicle fall. To help avoid personal injury and vehicle damage, be sure to fit the jack lift head into the proper location before raising the vehicle.

⚠ WARNING

Lifting a vehicle and getting under it to do maintenance or repairs is dangerous without the appropriate safety equipment and training. If a jack is provided with the vehicle, it is designed only for changing a flat tire. If it is used for anything else, you or others could be badly injured or killed if the vehicle slips off the jack. If a jack is provided with the vehicle, only use it for changing a flat tire.

7. Attach the jack lift assist tool to the jack by fitting both ends of the jack and tool over one another.
8. Place the jack under the vehicle.

Notice: **Make sure that the jack lift head is in the correct position or you may damage your vehicle. The repairs would not be covered by your warranty.**

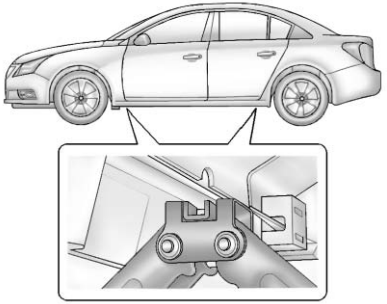

9. Position the jack lift head at the jack location nearest the flat tire. The location is indicated by a notch on the bottom edge of the body side. The jack must not be used in any other position.

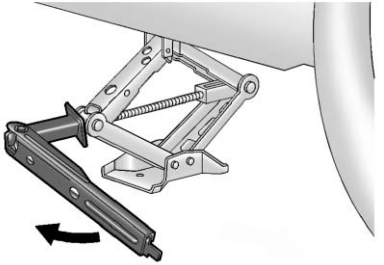

10. Raise the vehicle by turning the jack handle clockwise. Raise the vehicle far enough off the ground so there is enough room for the road tire to clear the ground.

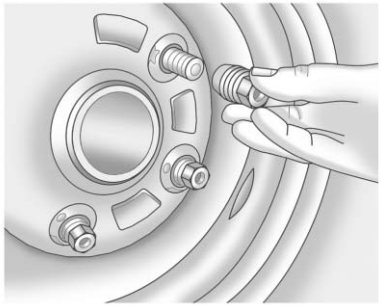

11. Remove all of the wheel nuts.
12. Remove the flat tire.

⚠ WARNING

Rust or dirt on a wheel, or on the parts to which it is fastened, can make wheel nuts become loose after time. The wheel could come off and cause an accident. When changing a wheel, remove any rust or dirt from places where the wheel attaches to the vehicle. In

(Continued)

WARNING (Continued)

an emergency, a cloth or a paper towel can be used; however, use a scraper or wire brush later to remove all rust or dirt.

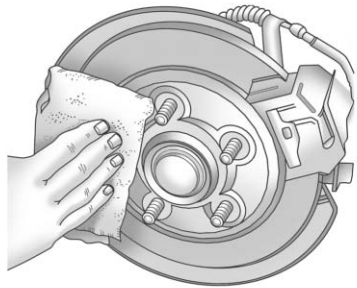

13. Remove any rust or dirt from the wheel bolts, mounting surfaces, and spare wheel.
14. Place the compact spare tire on the wheel-mounting surface.

⚠ WARNING

Never use oil or grease on bolts or nuts because the nuts might come loose. The vehicle's wheel could fall off, causing a crash.

15. Reinstall the wheel nuts. Tighten each nut by hand until the wheel is held against the hub.
16. Lower the vehicle by turning the jack handle counterclockwise.

⚠ WARNING

Wheel nuts that are improperly or incorrectly tightened can cause the wheels to become loose or come off. The wheel nuts should be tightened with a torque wrench to the proper torque specification after replacing. Follow the torque specification supplied by the aftermarket manufacturer when using accessory locking wheel nuts. See *Capacities and Specifications on page 12-2* for original equipment wheel nut torque specifications.

Notice: **Improperly tightened wheel nuts can lead to brake pulsation and rotor damage. To avoid expensive brake repairs, evenly tighten the wheel nuts in the proper sequence and to the proper torque specification. See *Capacities and Specifications on page 12-2* for the wheel nut torque specification.**

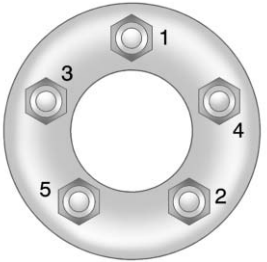

17. Tighten the wheel nuts firmly in a crisscross sequence, as shown.
18. Lower the jack all the way and remove the jack from under the vehicle.
19. Tighten the wheel nuts firmly with the wheel wrench.

When reinstalling the wheel cover or center cap on the full-size tire, tighten all five plastic caps hand snug with the aid of the wheel wrench and tighten them with the wheel wrench an additional one-quarter of a turn.

Notice: **Wheel covers will not fit on the vehicle's compact spare. If you try to put a wheel cover on the compact spare, the cover or the spare could be damaged.**

Storing a Flat or Spare Tire and Tools

⚠ WARNING

Storing a jack, a tire, or other equipment in the passenger compartment of the vehicle could cause injury. In a sudden stop or collision, loose equipment could strike someone. Store all these in the proper place.

Store the spare or flat tire in one of the ways shown below. Storage instructions will vary depending on the bolt that came with the vehicle and how it attaches to the vehicle. This vehicle will have a slide in fastener or a screw in fastener.

Storing a Flat or Spare Tire and Tools with a Screw in Fastener

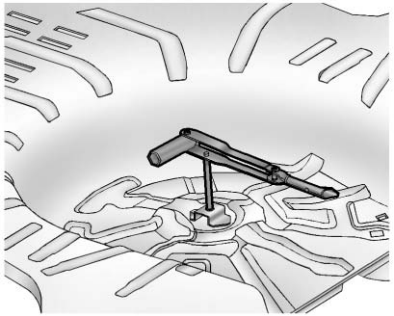

1. Turn the wrench counterclockwise to remove the fastener.
2. Replace the fastener with the one provided in the foam.

   Use the longer fastener to store the flat tire.
3. Turn the wrench clockwise to tighten the fastener.
4. Replace the foam, jack and tools, and the tire in their original storage location.
5. Place the tire, lying flat, facing up in the spare tire well.
6. Turn the retainer nut clockwise to secure the tire.
7. Place the floor cover on the wheel.

Storing a Flat or Spare Tire and Tools with a Slide In Fastener

1. If the flat tire is larger than the spare tire, use the longer mounting bolt from the tool bag.

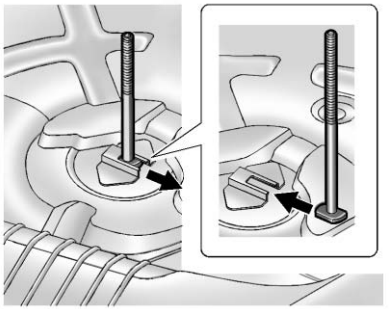

2. Slide the shorter bolt to remove it from the floor and insert the longer one.
3. Replace the jack and tools in their original storage location.
4. Place the tire, lying flat, facing up in the spare tire well.
5. Turn the retainer nut clockwise to secure the tire.
6. Place the floor cover on the wheel.

To store the compact spare tire, use the shorter mounting bolt.

The compact spare is for temporary use only. Replace the compact spare tire with a full-size tire as soon as you can.

Compact Spare Tire

⚠ WARNING

Driving with more than one compact spare tire at a time could result in loss of braking and handling. This could lead to a crash and you or others could be injured. Use only one compact spare tire at a time.

If this vehicle has a compact spare tire, it was fully inflated when new; however, it can lose air over time. Check the inflation pressure regularly. It should be 420 kPa (60 psi).

Stop as soon as possible and check that the spare tire is correctly inflated after being installed on the vehicle. The compact spare tire is designed for temporary use only. The vehicle will perform differently with the spare tire installed and it is recommended that the vehicle speed be limited to 80 km/h (50 mph). To conserve the tread of the spare tire, have the standard tire repaired or replaced as soon as convenient and return the spare tire to the storage area.

Notice: **When the compact spare is installed, do not take the vehicle through an automatic car wash with guide rails. The compact spare can get caught on the rails which can damage the tire, wheel, and other parts of the vehicle.**

Do not use the compact spare on other vehicles.

Do not mix the compact spare tire or wheel with other wheels or tires. They will not fit. Keep the spare tire and its wheel together.

Notice: **Tire chains will not fit the compact spare. Using them can damage the vehicle and the chains. Do not use tire chains on the compact spare.**

Jump Starting

Jump Starting (On-board with eAssist Only)

If the vehicle fails to crank, it may be jump started by using the eAssist battery to charge the 12-volt battery. Use the following procedure to activate the on-board jump start using the DIC controls.

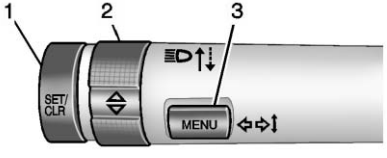

DIC Buttons

1. SET/CLR
2. △ / ▽ (Thumbwheel)
3. MENU

The vehicle may be equipped with an ignition key or an electronic keyless ignition with pushbutton start.

Key Access

Place the ignition key in the ON/RUN position and proceed as follows:

1. Press MENU (3) on the turn signal lever until Vehicle Information Menu is displayed.

   Use △ / ▽ (Thumbwheel) (2) to scroll through the menu items until Jump Start is displayed.
2. Press SET/CLR (1) to activate the jump start.
3. The system will then ask for confirmation. If yes is selected, the jump start will begin and the display will show JUMP START ACTIVE WAIT TO START.
4. When the jump start is complete, the display will show JUMP START COMPLETE ATTEMPT START.

Keyless Access

With the brake pedal not applied, press and hold the ENGINE START/STOP button for more than five seconds. This will place the vehicle in the Service Only Mode. Proceed as follows:

1. Press MENU (3) on the turn signal lever until Vehicle Information Menu is displayed.

   Use △ / ▽ (Thumbwheel) (2) to scroll through the menu items until Jump Start is displayed.
2. Press SET/CLR (1) to activate the jump start.
3. The system will then ask for confirmation. If yes is selected, the jump start will begin and the display will show JUMP START ACTIVE WAIT TO START.
4. When the jump start is complete, the display will show JUMP START COMPLETE ATTEMPT START.

If the vehicle is started, the on-board jump start function will be automatically disabled. If the vehicle cranks but does not start, the procedure may be repeated again. If the vehicle start is still unsuccessful, the jump start can be attempted using the following jump starting procedure under “Jump Starting (with or without eAssist).” On-board jump starting may be unavailable due to the 12-volt battery charge level, the eAssist battery charge level, power capability, or an issue with the eAssist system. In these cases, the display will not be available because of the power issue, or the DIC will display JUMP START DISABLED SEE OWNERS MANUAL.

Jump Starting (with or without eAssist)

For more information about the vehicle battery, see *Battery on page 10-25*.

If the battery has run down, you may want to use another vehicle and some jumper cables to start your vehicle. Be sure to use the following steps to do it safely.

⚠ WARNING

Batteries can hurt you. They can be dangerous because:

- They contain acid that can burn you.
- They contain gas that can explode or ignite.
- They contain enough electricity to burn you.

If you do not follow these steps exactly, some or all of these things can hurt you.

Notice: **Ignoring these steps could result in costly damage to the vehicle that would not be covered by the warranty.**

Trying to start the vehicle by pushing or pulling it will not work, and it could damage the vehicle.

1. Check the other vehicle. It must have a 12-volt battery with a negative ground system.

Notice: **Only use a vehicle that has a 12-volt system with a negative ground for jump starting. If the other vehicle does not have a 12-volt system with a negative ground, both vehicles can be damaged.**

2. Get the vehicles close enough so the jumper cables can reach, but be sure the vehicles are not touching each other. If they are, it could cause a ground connection you do not want. You would not be able to start your vehicle, and the bad grounding could damage the electrical systems.

To avoid the possibility of the vehicles rolling, set the parking brake firmly on both vehicles involved in the jump start procedure. Put an automatic transmission in P (Park) or a manual transmission in Neutral before setting the parking brake.

Notice: **If any accessories are left on or plugged in during the jump starting procedure, they could be damaged. The repairs would not be covered by the vehicle warranty. Whenever possible, turn off or unplug all accessories on either vehicle when jump starting the vehicle.**

3. Turn off the ignition on both vehicles. Unplug unnecessary accessories plugged into the accessory power outlet. Turn off the radio and all lamps that are not needed. This will avoid sparks and help save both batteries. And it could save the radio!

4. Open the hoods and locate the batteries. Find the positive (+) and negative (−) terminal locations on each vehicle. Your vehicle's positive (+) terminal and negative (–) terminal are under a black cover on the battery. See *Engine Compartment Overview on page 10-6* for more information on location. Remove the cover to access the positive (+) and negative (–) terminals.

⚠ WARNING

An electric fan can start up even when the engine is not running and can injure you. Keep hands, clothing and tools away from any underhood electric fan.

⚠ WARNING

Using a match near a battery can cause battery gas to explode. People have been hurt doing this, and some have been blinded. Use a flashlight if you need more light.

Be sure the battery has enough water. You do not need to add water to the battery installed in your new vehicle. But if a battery has filler caps, be sure the right amount of fluid is there. If it is low, add water to take care of that first. If you do not, explosive gas could be present.

Battery fluid contains acid that can burn you. Do not get it on you. If you accidentally get it in your eyes or on your skin, flush the place with water and get medical help immediately.

⚠ WARNING

Fans or other moving engine parts can injure you badly. Keep your hands away from moving parts once the engine is running.

5. Check that the jumper cables do not have loose or missing insulation. If they do, you could get a shock. The vehicles could be damaged too.

   Before you connect the cables, here are some things you should know. Positive (+) will go to positive (+) or to a remote positive (+) terminal if the vehicle has one. Negative (−) will go to a heavy, unpainted metal engine part or to a remote negative (−) terminal if the vehicle has one.

   Do not connect positive (+) to negative (−) or you will get a short that would damage the battery and maybe other parts too. And do not connect the negative (−) cable to the negative (−) terminal on the dead battery because this can cause sparks.

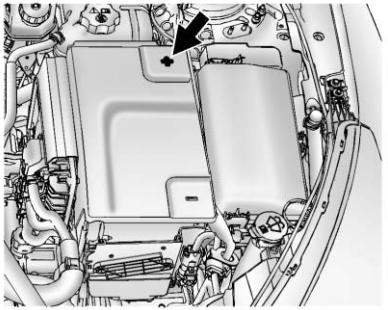

6. Connect the red positive (+) cable to the positive (+) terminal of the dead battery. Use a remote positive (+) terminal if the vehicle has one.
7. Do not let the other end touch metal. Connect it to the positive (+) terminal of the good battery. Use a remote positive (+) terminal if the vehicle has one.
8. Now connect the black negative (−) cable to the negative (−) terminal of the good battery. Use a remote negative (−) terminal if the vehicle has one.

   Do not let the other end touch anything until the next step. The other end of the negative (−) cable *does not* go to the dead battery. It goes to a heavy, unpainted metal engine part or to a remote negative (−) terminal on the vehicle with the dead battery.
9. Connect the other end of the negative (−) cable at least 45 cm (18 in) away from the dead battery, but not near engine parts that move. The electrical connection is just as good there, and the chance of sparks getting back to the battery is much less.

10. Now start the vehicle with the good battery and run the engine for a while.
11. Try to start the vehicle that had the dead battery. If it will not start after a few tries, it probably needs service.

Notice: **If the jumper cables are connected or removed in the wrong order, electrical shorting may occur and damage the vehicle. The repairs would not be covered by the vehicle warranty. Always connect and remove the jumper cables in the correct order, making sure that the cables do not touch each other or other metal.**

Jumper Cable Removal

Reverse the sequence exactly when removing the jumper cables.

Towing

Towing the Vehicle

Notice: **Incorrectly towing a disabled vehicle may cause damage. The damage would not be covered by the vehicle warranty.**

Have the vehicle towed on a wheel lift tow truck. A flatbed car carrier could damage the vehicle. The wheel lift tow truck must raise the rear of the vehicle and wheel dollies must be used to lift the front wheels off the ground.

Consult your dealer or a professional towing service if the disabled vehicle must be towed.

To tow the vehicle behind another vehicle for recreational purposes, such as behind a motor home, see “Recreational Vehicle Towing” in this section.

Recreational Vehicle Towing

Recreational vehicle towing means towing the vehicle behind another vehicle – such as behind a motor home. The two most common types of recreational vehicle towing are known as dinghy towing and dolly towing. Dinghy towing is towing the vehicle with all four wheels on the ground. Dolly towing is towing the vehicle with two wheels on the ground and two wheels up on a device known as a dolly.

Here are some important things to consider before recreational vehicle towing:

- What is the towing capacity of the towing vehicle? Be sure to read the tow vehicle manufacturer's recommendations.

- How far will the vehicle be towed? Some vehicles have restrictions on how far and how long they can tow.
- Does the vehicle have the proper towing equipment? See your dealer or trailering professional for additional advice and equipment recommendations.
- Is the vehicle ready to be towed? Just as preparing the vehicle for a long trip, make sure the vehicle is prepared to be towed.

Dinghy Towing

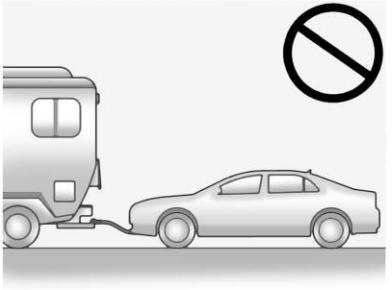

Notice: **If the vehicle is towed with all four wheels on the ground, the drivetrain components could be damaged. The repairs would not be covered by the vehicle warranty. Do not tow the vehicle with all four wheels on the ground.**

The vehicle was not designed to be towed with all four wheels on the ground. If the vehicle must be towed, a dolly should be used. See “Dolly Towing” later in this section.

Dolly Towing

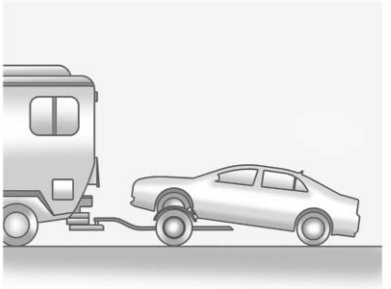

Tow the vehicle with the two rear wheels on the ground and the front wheels on a dolly.

To tow the vehicle with two wheels on the ground and a dolly:

1. Put the front wheels on a dolly.
2. Put the shift lever in P (Park).
3. Set the parking brake.
4. Remove the key from the ignition.

5. Secure the vehicle to the dolly.
6. Release the parking brake.

Notice: **Towing the vehicle from the rear could damage it. Also, repairs would not be covered by the vehicle warranty. Never have the vehicle towed from the rear.**

Appearance Care

Exterior Care

Locks

Locks are lubricated at the factory. Use a de-icing agent only when absolutely necessary, and have the locks greased after using. See Recommended Fluids and Lubricants.

Washing the Vehicle

To preserve the vehicle's finish, wash it often and out of direct sunlight.

Notice: **Do not use petroleum-based, acidic, or abrasive cleaning agents as they can damage the vehicle's paint, metal, or plastic parts. If damage occurs, it would not be covered by the vehicle's warranty. Approved cleaning products can be obtained from your dealer.**

Follow all manufacturer directions regarding correct product usage, necessary safety precautions, and appropriate disposal of any vehicle care product.

Notice: **Avoid using high-pressure washes closer than 30 cm (12 in) to the surface of the vehicle. Use of power washers exceeding 8,274 kPa (1,200 psi) can result in damage or removal of paint and decals.**

Rinse the vehicle well, before washing and after, to remove all cleaning agents completely. If they are allowed to dry on the surface, they could stain.

Dry the finish with a soft, clean chamois or an all-cotton towel to avoid surface scratches and water spotting.

Finish Care

Application of aftermarket clearcoat sealant/wax materials is not recommended. If painted surfaces are damaged, see your dealer to have the damage assessed and repaired. Foreign materials such as calcium chloride and other salts, ice melting agents, road oil and tar, tree sap, bird droppings, chemicals from industrial chimneys, etc., can damage the vehicle's finish if they remain on painted surfaces. Wash the vehicle as soon as possible. If necessary, use non-abrasive cleaners that are marked safe for painted surfaces to remove foreign matter.

Occasional hand waxing or mild polishing should be done to remove residue from the paint finish. See your dealer for approved cleaning products.

Do not apply waxes or polishes to uncoated plastic, vinyl, rubber, decals, simulated wood, or flat paint as damage can occur.

Notice: **Machine compounding or aggressive polishing on a basecoat/clearcoat paint finish may damage it. Use only non-abrasive waxes and polishes that are made for a basecoat/clearcoat paint finish on the vehicle.**

To keep the paint finish looking new, keep the vehicle garaged or covered whenever possible.

Protecting Exterior Bright Metal Parts

Regularly clean bright metal parts with water or chrome polish on chrome or stainless steel trim, if necessary.

For aluminum, never use auto or chrome polish, steam, or caustic soap to clean. A coating of wax, rubbed to a high polish, is recommended for all bright metal parts.

Cleaning Exterior Lamps/ Lenses and Emblems

Use only lukewarm or cold water, a soft cloth, and a car washing soap to clean exterior lamps, lenses and emblems. Follow instructions under "Washing the Vehicle" in this section.

Windshield and Wiper Blades

Clean the outside of the windshield with glass cleaner.

Clean rubber blades using a lint-free cloth or paper towel soaked with windshield washer fluid or a mild detergent. Wash the windshield thoroughly when cleaning the blades. Bugs, road grime, sap, and a buildup of vehicle wash/wax treatments may cause wiper streaking.

Replace the wiper blades if they are worn or damaged. Damage can be caused by extreme dusty conditions, sand, salt, heat, sun, snow, and ice.

Weatherstrips

Apply silicone grease on weatherstrips to make them last longer, seal better, and not stick or squeak. Lubricate weatherstrips once a year. Black marks from rubber material on painted surfaces can be removed by rubbing with a clean cloth. See *Recommended Fluids and Lubricants on page 11-12*.

Tires

Use a stiff brush with tire cleaner to clean the tires.

Notice: **Using petroleum-based tire dressing products on the vehicle may damage the paint finish and/or tires. When applying a tire dressing, always wipe off any overspray from all painted surfaces on the vehicle.**

Wheels and Trim — Aluminum or Chrome

Use a soft, clean cloth with mild soap and water to clean the wheels. After rinsing thoroughly with clean water, dry with a soft, clean towel. A wax may then be applied.

Notice: **Chrome wheels and other chrome trim may be damaged if the vehicle is not washed after driving on roads that have been sprayed with magnesium, calcium, or sodium chloride. These chlorides are used on roads for conditions such as ice and dust. Always wash the chrome with soap and water after exposure.**

Notice: **To avoid surface damage, do not use strong soaps, chemicals, abrasive polishes, cleaners, brushes, or cleaners that contain acid on aluminum or chrome-plated wheels. Use only approved cleaners. Also, never drive a vehicle with aluminum or chrome-plated wheels through an automatic car wash that uses silicone carbide tire cleaning brushes. Damage could occur and the repairs would not be covered by the vehicle warranty.**

Steering, Suspension, and Chassis Components

Visually inspect the front and rear suspension and steering system for damaged, loose, or missing parts or signs of wear. Inspect the power steering for proper hook-up, binding, leaks, cracks, chafing, etc. Visually check constant velocity joints, rubber boots, and axle seals for leaks.

Body Component Lubrication

Lubricate all key lock cylinders, hood hinges, liftgate hinges, and the steel fuel door hinge unless the components are plastic. Applying silicone grease on weatherstrips with a clean cloth will make them last longer, seal better, and not stick or squeak.

Underbody Maintenance

Use plain water to flush dirt and debris from the vehicle's underbody. Your dealer or an underbody car washing system can do this. If not removed, rust and corrosion can develop.

Sheet Metal Damage

If the vehicle is damaged and requires sheet metal repair or replacement, make sure the body repair shop applies anti-corrosion material to parts repaired or replaced to restore corrosion protection.

Original manufacturer replacement parts will provide the corrosion protection while maintaining the vehicle warranty.

Finish Damage

Quickly repair minor chips and scratches with touch-up materials available from your dealer to avoid corrosion. Larger areas of finish damage can be corrected in your dealer's body and paint shop.

Chemical Paint Spotting

Airborne pollutants can fall upon and attack painted vehicle surfaces causing blotchy, ring-shaped discolorations, and small, irregular dark spots etched into the paint surface.

Interior Care

To prevent dirt particle abrasions, regularly clean the vehicle's interior. Immediately remove any soils. Note that newspapers or dark garments that can transfer color to home furnishings can also permanently transfer color to the vehicle's interior.

Use a soft bristle brush to remove dust from knobs and crevices on the instrument cluster. Using a mild soap solution, immediately remove hand lotions, sunscreen, and insect repellent from all interior surfaces or permanent damage may result.

Your dealer may have products for cleaning the interior. Use cleaners specifically designed for the surfaces being cleaned to prevent permanent damage. Apply all cleaners directly to the cleaning cloth. Do not spray cleaners directly on any switches or controls. Cleaners should be removed quickly. Never allow cleaners to remain on the surface being cleaned for extended periods of time.

Cleaners may contain solvents that can become concentrated in the interior. Before using cleaners, read and adhere to all safety instructions on the label. While cleaning the interior, maintain adequate ventilation by opening the doors and windows.

To prevent damage, do not clean the interior using the following cleaners or techniques:

- Never use a razor or any other sharp object to remove a soil from any interior surface.
- Never use a brush with stiff bristles.
- Never rub any surface aggressively or with excessive pressure.
- Do not use laundry detergents or dishwashing soaps with degreasers. For liquid cleaners, use approximately 20 drops per 3.78 L (1 gal) of water. A concentrated soap solution will leave a residue that creates streaks and attracts dirt. Do not use solutions that contain strong or caustic soap.
- Do not heavily saturate the upholstery when cleaning.
- Do not use solvents or cleaners containing solvents.

Interior Glass

To clean, use a terry cloth fabric dampened with water. Wipe droplets left behind with a clean dry cloth. Commercial glass cleaners may be used, if necessary, after cleaning the interior glass with plain water.

Notice: **To prevent scratching, never use abrasive cleaners on automotive glass. Abrasive cleaners or aggressive cleaning may damage the rear window defogger.**

Notice: **Cleaning the windshield with water during the first three to six months of ownership will reduce tendency to fog.**

Speaker Covers

Vacuum around a speaker cover gently, so that the speaker will not be damaged. Clean spots with just water and mild soap.

Coated Moldings

Coated moldings should be cleaned.

- When lightly soiled, wipe with a sponge or soft lint-free cloth dampened with water.
- When heavily soiled, use warm soapy water.

Fabric/Carpet/Suede

Start by vacuuming the surface using a soft brush attachment. If a rotating brush attachment is being used during vacuuming, only use it on the floor carpet. Before cleaning, gently remove as much of the soil as possible using one of the following techniques:

- Gently blot liquids with a paper towel. Continue blotting until no more soil can be removed.
- For solid soils, remove as much as possible prior to vacuuming.

To clean:

1. Saturate a clean lint-free colorfast cloth with water or club soda. Microfiber cloth is recommended to prevent lint transfer to the fabric or carpet.
2. Remove excess moisture by gently wringing until water does not drip from the cleaning cloth.
3. Start on the outside edge of the soil and gently rub toward the center. Fold the cleaning cloth to a clean area frequently to prevent forcing the soil in to the fabric.
4. Continue gently rubbing the soiled area until there is no longer any color transfer from the soil to the cleaning cloth.
5. If the soil is not completely removed, use a mild soap solution followed only by club soda or plain water.

If the soil is not completely removed, it may be necessary to use a commercial upholstery cleaner or spot lifter. Test a small hidden area for colorfastness before using a commercial upholstery cleaner or spot lifter. If ring formation occurs, clean the entire fabric or carpet.

Following the cleaning process, a paper towel can be used to blot excess moisture.

Cleaning High Gloss Surfaces and Vehicle Information and Radio Displays

For vehicles with high gloss surfaces or vehicle displays, use a microfiber cloth to wipe surfaces. Before wiping the surface with the microfiber cloth, use a soft bristle brush to remove dirt that could scratch the surface. Then use the microfiber cloth by gently rubbing to clean. Never use window cleaners or solvents. Periodically hand wash the microfiber cloth separately, using mild soap. Do not use bleach or fabric softener. Rinse thoroughly and air dry before next use.

Notice: **Do not attach a device with a suction cup to the display. This may cause damage and would not be covered by the warranty.**

Instrument Panel, Leather, Vinyl, and Other Plastic Surfaces

Use a soft microfiber cloth dampened with water to remove dust and loose dirt. For a more thorough cleaning, use a soft microfiber cloth dampened with a mild soap solution.

Notice: **Soaking or saturating leather, especially perforated leather, as well as other interior surfaces, may cause permanent damage. Wipe excess moisture from these surfaces after cleaning and allow them to dry naturally. Never use heat, steam, spot lifters, or spot removers.**

Do not use cleaners that contain silicone or wax-based products. Cleaners containing these solvents can permanently change the appearance and feel of leather or soft trim and are not recommended.

Do not use cleaners that increase gloss, especially on the instrument panel. Reflected glare can decrease visibility through the windshield under certain conditions.

Notice: **Use of air fresheners may cause permanent damage to plastics and painted surfaces. If an air freshener comes in contact with any plastic or painted surface in the vehicle, blot immediately and clean with a soft cloth dampened with a mild soap solution. Damage caused by air fresheners would not be covered by the vehicle warranty.**

Cargo Cover and Convenience Net

Wash with warm water and mild detergent. Do not use chlorine bleach. Rinse with cold water, and then dry completely.

Care of Safety Belts

Keep belts clean and dry.

⚠ WARNING

Do not bleach or dye safety belts. It may severely weaken them. In a crash, they might not be able to provide adequate protection. Clean safety belts only with mild soap and lukewarm water.

Floor Mats

⚠ WARNING

If a floor mat is the wrong size or is not properly installed, it can interfere with the pedals. Interference with the pedals can cause unintended acceleration and/or increased stopping distance which can cause a crash and injury. Make sure the floor mat does not interfere with the pedals.

Use the following guidelines for proper floor mat usage:

- The original equipment floor mats were designed for your vehicle. If the floor mats need replacing, it is recommended that GM certified floor mats be purchased. Non-GM floor mats may not fit properly and may interfere with the pedals. Always check that the floor mats do not interfere with the pedals.

- Use the floor mat with the correct side up. Do not turn it over.
- Do not place anything on top of the driver side floor mat.
- Use only a single floor mat on the driver side.
- Do not place one floor mat on top of another.

Removing and Replacing the Floor Mats

Pull up on the rear of the floor mat to unlock each retainer and remove.

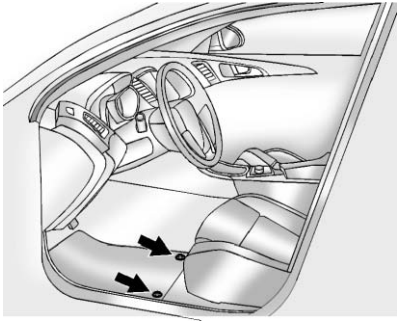

Reinstall by lining up the floor mat retainer openings over the carpet retainers and snapping into position.

Make sure the floor mat is properly secured in place.

Verify the floor mat does not interfere with the pedals.

Service and Maintenance

General Information
General Information 11-1

Maintenance Schedule
Maintenance Schedule 11-2

Special Application Services
Special Application Services 11-8

Additional Maintenance and Care
Additional Maintenance and Care 11-9

Recommended Fluids, Lubricants, and Parts
Recommended Fluids and Lubricants 11-12
Maintenance Replacement Parts 11-13

Maintenance Records
Maintenance Records 11-14

General Information

Your vehicle is an important investment. This section describes the required maintenance for the vehicle. Follow this schedule to help protect against major repair expenses resulting from neglect or inadequate maintenance. It may also help to maintain the value of the vehicle if it is sold. It is the responsibility of the owner to have all required maintenance performed.

Your dealer has trained technicians who can perform required maintenance using genuine replacement parts. They have up-to-date tools and equipment for fast and accurate diagnostics. Many dealers have extended evening and Saturday hours, courtesy transportation, and online scheduling to assist with service needs.

Your dealer recognizes the importance of providing competitively priced maintenance and repair services. With trained technicians, the dealer is the place for routine maintenance such as oil changes and tire rotations and additional maintenance items like tires, brakes, batteries, and wiper blades.

Notice: **Damage caused by improper maintenance can lead to costly repairs and may not be covered by the vehicle warranty. Maintenance intervals, checks, inspections, recommended fluids, and lubricants are important to keep the vehicle in good working condition.**

The Tire Rotation and Required Services are the responsibility of the vehicle owner. It is recommended to have your dealer perform these services every 12 000 km/7,500 mi. Proper vehicle maintenance helps to keep the vehicle in good working condition, improves fuel economy, and reduces vehicle emissions.

Because of the way people use vehicles, maintenance needs vary. There may need to be more frequent checks and services. The Additional Required Services - Normal are for vehicles that:

- Carry passengers and cargo within recommended limits on the Tire and Loading Information label. See *Vehicle Load Limits on page 9-10*.
- Are driven on reasonable road surfaces within legal driving limits.
- Use the recommended fuel. See *Recommended Fuel on page 9-47*.

Refer to the information in the Maintenance Schedule Additional Required Services - Normal chart.

The Additional Required Services - Severe are for vehicles that are:

- Mainly driven in heavy city traffic in hot weather.
- Mainly driven in hilly or mountainous terrain.
- Frequently towing a trailer.
- Used for high speed or competitive driving.
- Used for taxi, police, or delivery service.

Refer to the information in the Maintenance Schedule Additional Required Services - Severe chart.

⚠ WARNING

Performing maintenance work can be dangerous and can cause serious injury. Perform maintenance work only if the required information, proper tools, and equipment are available.
If they are not, see your dealer to have a trained technician do the work. See *Doing Your Own Service Work on page 10-4*.

Maintenance Schedule

Owner Checks and Services

At Each Fuel Stop

- Check the engine oil level. See *Engine Oil on page 10-11*.

Once a Month

- Check the tire inflation pressures. See *Tire Pressure on page 10-52*.
- Inspect the tires for wear. See *Tire Inspection on page 10-59*.
- Check the windshield washer fluid level. See *Washer Fluid on page 10-22*.

Engine Oil Change

When the CHANGE ENGINE OIL SOON message displays, have the engine oil and filter changed within the next 1 000 km/600 mi. If driven under the best conditions, the engine oil life system might not indicate the need for vehicle service for more than a year. The engine oil and filter must be changed at least once a year and the oil life system must be reset. Your trained dealer technician can perform this work. If the engine oil life system is reset accidentally, service the vehicle within 5 000 km/3,000 mi since the last service. Reset the oil life system when the oil is changed. See *Engine Oil Life System on page 10-13*.

Tire Rotation and Required Services Every 12 000 km/ 7,500 mi

Rotate the tires, if recommended for the vehicle, and perform the following services. See *Tire Rotation on page 10-59*.

- Check engine oil level and oil life percentage. If needed, change engine oil and filter, and reset oil life system. See *Engine Oil on page 10-11* and *Engine Oil Life System on page 10-13*.
- Check engine coolant level. See *Engine Coolant on page 10-18*.
- Check windshield washer fluid level. See *Washer Fluid on page 10-22*.
- Visually inspect windshield wiper blades for wear, cracking, or contamination. See *Exterior Care on page 10-97*. Replace worn or damaged wiper blades. See *Wiper Blade Replacement on page 10-27*.
- Check tire inflation pressures. See *Tire Pressure on page 10-52*.
- Inspect tire wear. See *Tire Inspection on page 10-59*.
- Visually check for fluid leaks.
- Inspect engine air cleaner filter. See *Engine Air Cleaner/Filter on page 10-15*.
- Inspect brake system.
- Visually inspect steering, suspension, and chassis components for damaged, loose, or missing parts or signs of wear. See *Exterior Care on page 10-97*.
- Check restraint system components. See *Safety System Check on page 3-19*.
- Visually inspect fuel system for damage or leaks.
- Visually inspect exhaust system and nearby heat shields for loose or damaged parts.

- Lubricate body components. See *Exterior Care on page 10-97*.
- Check starter switch. See *Starter Switch Check on page 10-26*.
- Check automatic transmission shift lock control function. See *Automatic Transmission Shift Lock Control Function Check on page 10-26*.
- Check ignition transmission lock. See *Ignition Transmission Lock Check on page 10-26*.
- Check parking brake and automatic transmission park mechanism. See *Park Brake and P (Park) Mechanism Check on page 10-27*.
- Check accelerator pedal for damage, high effort, or binding. Replace if needed.
- Visually inspect gas strut for signs of wear, cracks, or other damage. Check the hold open ability of the strut. See your dealer if service is required.
- Check tire sealant expiration date, if equipped. See *Tire Sealant and Compressor Kit (With Pressure Relief Button) on page 10-68* or *Tire Sealant and Compressor Kit (With Pressure Deflation Button) on page 10-76*.
- Inspect sunroof track and seal, if equipped. See *Sunroof on page 2-21*.

Maintenance Schedule Additional Required Services – Normal	12 000 km/7,500 mi	24 000 km/15,000 mi	36 000 km/22,500 mi	48 000 km/30,000 mi	60 000 km/37,500 mi	72 000 km/45,000 mi	84 000 km/52,500 mi	96 000 km/60,000 mi	108 000 km/67,500 mi	120 000 km/75,000 mi	132 000 km/82,500 mi	144 000 km/90,000 mi	156 000 km/97,500 mi	168 000 km/105,000 mi	180 000 km/112,500 mi	192 000 km/120,000 mi	204 000 km/127,500 mi	216 000 km/135,000 mi	228 000 km/142,500 mi	240 000 km/150,000 mi
Rotate tires and perform Required Services. Check engine oil level and oil life percentage. Change engine oil and filter, if needed.	✓	✓	✓	✓	✓	✓	✓	✓	✓	✓	✓	✓	✓	✓	✓	✓	✓	✓	✓	✓
Replace passenger compartment air filter. (1)			✓			✓			✓			✓			✓			✓		
Inspect evaporative control system. (2)						✓						✓						✓		
Replace engine air cleaner filter. (3)						✓						✓						✓		
Except 2.0L Engine: Replace spark plugs. Inspect spark plug wires.													✓							
2.0L Engine Only: Replace spark plugs. Inspect spark plug wires.								✓								✓				
Change automatic transmission fluid, if equipped. If filter is serviceable, change filter.													✓							
Drain, flush, and fill engine cooling system. (4)																				✓
Except eAssist: Visually inspect accessory drive belts. (5) (6)																				✓
eAssist Only: Visually inspect accessory drive belts. (5) (6)													✓							
Replace brake fluid. (5)																				✓

Footnotes — Maintenance Schedule Additional Required Services — Normal

(1) Or every two years, whichever comes first. More frequent replacement may be needed if the vehicle is driven in areas with heavy traffic, areas with poor air quality, or areas with high dust levels. Replacement may also be needed if there is a reduction in air flow, excessive window fogging, or odors.

(2) Check all fuel and vapor lines and hoses for proper hook-up, routing, and condition. Check that the purge valve, if the vehicle has one, works properly. Replace as needed.

(3) Or every four years, whichever comes first.

(4) Or every five years, whichever comes first. See *Cooling System on page 10-16*.

(5) Or every 10 years, whichever comes first.

(6) Inspect for fraying, excessive cracking, or damage; replace, if needed.

Maintenance Schedule Additional Required Services – Severe	12 000 km/7,500 mi	24 000 km/15,000 mi	36 000 km/22,500 mi	48 000 km/30,000 mi	60 000 km/37,500 mi	72 000 km/45,000 mi	84 000 km/52,500 mi	96 000 km/60,000 mi	108 000 km/67,500 mi	120 000 km/75,000 mi	132 000 km/82,500 mi	144 000 km/90,000 mi	156 000 km/97,500 mi	168 000 km/105,000 mi	180 000 km/112,500 mi	192 000 km/120,000 mi	204 000 km/127,500 mi	216 000 km/135,000 mi	228 000 km/142,500 mi	240 000 km/150,000 mi
Rotate tires and perform Required Services. Check engine oil level and oil life percentage. Change engine oil and filter, if needed.	✓	✓	✓	✓	✓	✓	✓	✓	✓	✓	✓	✓	✓	✓	✓	✓	✓	✓	✓	✓
Replace passenger compartment air filter. (1)			✓			✓			✓			✓			✓			✓		
Inspect evaporative control system. (2)						✓						✓						✓		
Replace engine air cleaner filter. (3)						✓						✓						✓		
Change automatic transmission fluid, if equipped. If filter is serviceable, change filter.						✓						✓						✓		
Except 2.0L Engine: Replace spark plugs. Inspect spark plug wires.													✓							
2.0L Engine Only: Replace spark plugs. Inspect spark plug wires.								✓								✓				
Drain, flush, and fill engine cooling system. (4)																				✓
Except eAssist: Visually inspect accessory drive belts. (5) (6)																				✓
eAssist Only: Visually inspect accessory drive belts. (5) (6)													✓							
Replace brake fluid. (5)																				✓

Footnotes — Maintenance Schedule Additional Required Services — Severe

(1) Or every two years, whichever comes first. More frequent replacement may be needed if the vehicle is driven in areas with heavy traffic, areas with poor air quality, or areas with high dust levels. Replacement may also be needed if there is a reduction in air flow, excessive window fogging, or odors.

(2) Check all fuel and vapor lines and hoses for proper hook-up, routing, and condition. Check that the purge valve, if the vehicle has one, works properly. Replace as needed.

(3) Or every four years, whichever comes first.

(4) Or every five years, whichever comes first. See *Cooling System on page 10-16*.

(5) Or every 10 years, whichever comes first.

(6) Inspect for fraying, excessive cracking, or damage; replace, if needed.

Special Application Services

- Severe Commercial Use Vehicles Only: Lubricate chassis components every 5 000 km/3,000 mi.
- Have underbody flushing service performed once a year.

Additional Maintenance and Care

Your vehicle is an important investment and caring for it properly may help to avoid future costly repairs. To maintain vehicle performance, additional maintenance services may be required. It is recommended that your dealer perform these services — their trained dealer technicians know your vehicle best. Your dealer can also perform a thorough assessment with a multi-point inspection to recommend when your vehicle may need attention. The following list is intended to explain the services and conditions to look for that may indicate services are required.

Battery

The battery supplies power to start the engine and operate any additional electrical accessories.

- To avoid break-down or failure to start the vehicle, maintain a battery with full cranking power.
- Trained dealer technicians have the diagnostic equipment to test the battery and ensure that the connections and cables are corrosion-free.

Belts

- Belts may need replacing if they squeak or show signs of cracking or splitting.
- Trained dealer technicians have access to tools and equipment to inspect the belts and recommend adjustment or replacement when necessary.

Brakes

Brakes stop the vehicle and are crucial to safe driving.

- Signs of brake wear may include chirping, grinding, or squealing noises, or difficulty stopping.
- Trained dealer technicians have access to tools and equipment to inspect the brakes and recommend quality parts engineered for the vehicle.

Fluids

Proper fluid levels and approved fluids protect the vehicle's systems and components. See *Recommended Fluids and Lubricants on page 11-12* for GM approved fluids.

- Engine oil and windshield washer fluid levels should be checked at every fuel fill.
- Instrument cluster lights may come on to indicate that fluids may be low and need to be filled.

Hoses

Hoses transport fluids and should be regularly inspected to ensure that there are no cracks or leaks. With a multi-point inspection, your dealer can inspect the hoses and advise if replacement is needed.

Lamps

Properly working headlamps, taillamps, and brake lamps are important to see and be seen on the road.

- Signs that the headlamps need attention include dimming, failure to light, cracking, or damage. The brake lamps need to be checked periodically to ensure that they light when braking.
- With a multi-point inspection, your dealer can check the lamps and note any concerns.

Shocks and Struts

Shocks and struts help aid in control for a smoother ride.

- Signs of wear may include steering wheel vibration, bounce/sway while braking, longer stopping distance, or uneven tire wear.
- As part of the multi-point inspection, trained dealer technicians can visually inspect the shocks and struts for signs of leaking, blown seals, or damage, and can advise when service is needed.

Tires

Tires need to be properly inflated, rotated, and balanced. Maintaining the tires can save money, fuel, and can reduce the risk of tire failure.

- Signs that the tires need to be replaced include three or more visible treadwear indicators; cord or fabric showing through the rubber; cracks or cuts in the tread or sidewall; or a bulge or split in the tire.
- Trained dealer technicians can inspect and recommend the right tires. Your dealer can also provide tire/wheel balancing services to ensure smooth vehicle operation at all speeds. Your dealer sells and services name brand tires.

Vehicle Care

To help keep the vehicle looking like new, vehicle care products are available from your dealer. For information on how to clean and protect the vehicle's interior and exterior, see *Interior Care on page 10-100* and *Exterior Care on page 10-97*.

Wheel Alignment

Wheel alignment is critical for ensuring that the tires deliver optimal wear and performance.

- Signs that the alignment may need to be adjusted include pulling, improper vehicle handling, or unusual tire wear.
- Your dealer has the required equipment to ensure proper wheel alignment.

Windshield

For safety, appearance, and the best viewing, keep the windshield clean and clear.

- Signs of damage include scratches, cracks, and chips.
- Trained dealer technicians can inspect the windshield and recommend proper replacement if needed.

Wiper Blades

Wiper blades need to be cleaned and kept in good condition to provide a clear view.

- Signs of wear include streaking, skipping across the windshield, and worn or split rubber.
- Trained dealer technicians can check the wiper blades and replace them when needed.

Recommended Fluids, Lubricants, and Parts

Recommended Fluids and Lubricants

Usage	Fluid/Lubricant
Engine Oil	Use only engine oil licensed to the dexos1 specfication, or equivalent, of the proper SAE viscosity grade. ACDelco dexos1 Synthetic Blend is recommended. See *Engine Oil on page 10-11*.
Engine Coolant	50/50 mixture of clean, drinkable water and use only DEX-COOL Coolant. See *Engine Coolant on page 10-18*.
Hydraulic Brake System	DOT 3 Hydraulic Brake Fluid (GM Part No. 19299818, in Canada 19299819).
Windshield Washer	Automotive windshield washer fluid that meets regional freeze protection requirements.
Automatic Transmission	DEXRON®-VI Automatic Transmission Fluid.
Key Lock Cylinders	Multi-Purpose Lubricant, Superlube (GM Part No. 12346241, in Canada 10953474).
Hood Latch Assembly, Secondary Latch, Pivots, Spring Anchor, and Release Pawl	Lubriplate Lubricant Aerosol (GM Part No. 89021668, in Canada 89021674) or lubricant meeting requirements of NLGI #2 Category LB or GC-LB.
Hood and Door Hinges	Multi-Purpose Lubricant, Superlube (GM Part No. 12346241, in Canada 10953474).
Weatherstrip Conditioning	Weatherstrip Lubricant (GM Part No. 3634770, in Canada 10953518) or Dielectric Silicone Grease (GM Part No. 12345579, in Canada 10953481).

Maintenance Replacement Parts

Replacement parts identified below by name, part number, or specification can be obtained from your dealer.

Part	GM Part Number	ACDelco Part Number
Engine Air Cleaner/Filter	55560894	A3128C
Engine Oil Filter		
2.0L L4 Engine	12640445	PF64
2.4L L4 Engine	12605566	PF457G
2.5L L4 Engine	12640445	PF64
Passenger Compartment Air Filter	13271190	—
Spark Plugs		
2.0L L4 Engine	12626906	41-116
2.4L L4 Engine	12620540	41-108
2.5L L4 Engine	12627160	41-115
Wiper Blades		
Driver Side – 60 cm (23.6 in)	92231676	—
Passenger Side – 47.5 cm (18.7 in)	20980551	—

Maintenance Records

After the scheduled services are performed, record the date, odometer reading, who performed the service, and the type of services performed in the boxes provided. Retain all maintenance receipts.

Date	Odometer Reading	Serviced By	Services Performed

Date	Odometer Reading	Serviced By	Services Performed

Date	Odometer Reading	Serviced By	Services Performed

Technical Data

Vehicle Identification
Vehicle Identification Number (VIN) 12-1
Service Parts Identification Label 12-1

Vehicle Data
Capacities and Specifications 12-2
Engine Drive Belt Routing . . . 12-4

Vehicle Identification

Vehicle Identification Number (VIN)

This legal identifier is in the front corner of the instrument panel, on the left side of the vehicle. It can be seen through the windshield from outside. The VIN also appears on the Vehicle Certification and Service Parts labels and certificates of title and registration.

Engine Identification

The eighth character in the VIN is the engine code. This code identifies the vehicle's engine, specifications, and replacement parts. See “Engine Specifications” under *Capacities and Specifications on page 12-2* for the vehicle's engine code.

Service Parts Identification Label

This label, in either the glove box or the trunk area, has the following information:

- Vehicle Identification Number (VIN).
- Model designation.
- Paint information.
- Production options and special equipment.

Do not remove this label from the vehicle.

Vehicle Data

Capacities and Specifications

Application	Capacities	
	Metric	English
Air Conditioning Refrigerant	For the air conditioning system refrigerant type and charge amount, see the refrigerant label under the hood. See your dealer for more information.	
Engine Cooling System		
2.0L L4 Engine	7.0 L	7.4 qt
2.4L L4 Engine	9.6 L	10.1 qt
2.5L L4 Engine	7.1 L	7.5 qt
Engine Oil with Filter		
2.0L L4 Engine AWD	5.7 L	6.0 qt
2.0L L4 Engine FWD	4.7 L	5.0 qt
2.4L L4 Engine	4.7 L	5.0 qt
2.5L L4 Engine	4.7 L	5.0 qt
Fuel Tank		
Base model	59.7 L	15.8 gal

Application	Capacities	
	Metric	English
LT or LTZ model with eAssist	59.7 L	15.8 gal
LT or LTZ model without eAssist	70.0 L	18.5 gal
Wheel Nut Torque	150 N•m	110 lb ft
*See *Automatic Transmission Fluid on page 10-14* for information on checking fluid level.		
All capacities are approximate. When adding, be sure to fill to the approximate level, as recommended in this manual. Recheck fluid level after filling.		

Engine Specifications

Engine	VIN Code	Transmission	Spark Plug Gap
2.0L L4 Engine	X	Automatic	0.9 mm (0.035 in)
2.4L L4 Engine	R	Automatic	0.9 mm (0.035 in)
2.5L L4 Engine	A	Automatic	1.1 mm (0.043 in)

Engine Drive Belt Routing

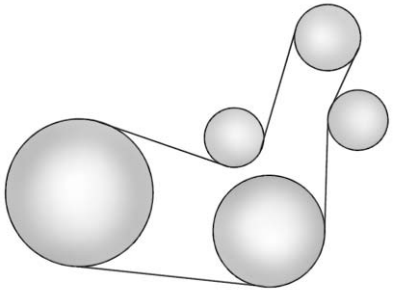

2.4L L4 Engine

Belt removal and installation requires special tools. See your dealer for service.

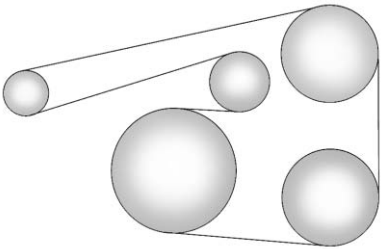

2.0L or 2.5L L4 Engine

Customer Information

Customer Information

Customer Satisfaction Procedure (U.S. and Canada) 13-2
Customer Satisfaction Procedure (Mexico) 13-4
Customer Assistance Offices (U.S. and Canada) 13-5
Customer Assistance Offices (Mexico) 13-5
Customer Assistance for Text Telephone (TTY) Users (U.S. and Canada) 13-6
Online Owner Center (U.S. and Canada) 13-6
GM Mobility Reimbursement Program (U.S. and Canada) 13-7
Roadside Assistance Program (Mexico) 13-7
Roadside Assistance Program (U.S. and Canada) 13-11
Scheduling Service Appointments (U.S. and Canada) 13-13
Courtesy Transportation Program (U.S. and Canada) 13-13
Collision Damage Repair (U.S. and Canada) 13-15
Service Publications Ordering Information 13-17

Reporting Safety Defects

Reporting Safety Defects to the United States Government 13-18
Reporting Safety Defects to the Canadian Government 13-19
Reporting Safety Defects to General Motors 13-19

Vehicle Data Recording and Privacy

Vehicle Data Recording and Privacy 13-19
Event Data Recorders 13-20
OnStar® 13-21
Infotainment System 13-21
Radio Frequency Identification (RFID) 13-21
Radio Frequency Statement 13-21

Customer Information

Customer Satisfaction Procedure (U.S. and Canada)

Your satisfaction and goodwill are important to your dealer and to Chevrolet. Normally, any concerns with the sales transaction or the operation of the vehicle will be resolved by your dealer's sales or service departments. Sometimes, however, despite the best intentions of all concerned, misunderstandings can occur. If your concern has not been resolved to your satisfaction, the following steps should be taken:

STEP ONE: Discuss your concern with a member of dealership management. Normally, concerns can be quickly resolved at that level. If the matter has already been reviewed with the sales, service, or parts manager, contact the owner of your dealership or the general manager.

STEP TWO: If after contacting a member of dealership management, it appears your concern cannot be resolved by your dealership without further help, in the U.S., call the Chevrolet Customer Assistance Center at 1-800-222-1020. In Canada, call General Motors of Canada Customer Care Centre at 1-800-263-3777 (English), or 1-800-263-7854 (French).

We encourage you to call the toll-free number in order to give your inquiry prompt attention. Have the following information available to give the Customer Assistance representative:

- Vehicle Identification Number (VIN). This is available from the vehicle registration or title, or the plate at the top left of the instrument panel and visible through the windshield.
- Dealership name and location.
- Vehicle delivery date and present mileage.

When contacting Chevrolet, remember that your concern will likely be resolved at a dealer's facility. That is why we suggest following Step One first.

STEP THREE — U.S. Owners: Both General Motors and your dealer are committed to making sure you are completely satisfied with your new vehicle. However, if you continue to remain unsatisfied after following the procedure outlined in Steps One and Two, you can file with the Better Business Bureau (BBB) Auto Line® Program to enforce your rights.

The BBB Auto Line Program is an out-of-court program administered by the Council of Better Business Bureaus to settle automotive disputes regarding vehicle repairs or the interpretation of the New Vehicle Limited Warranty. Although you may be required to resort to this informal dispute resolution program prior to filing a court action, use of the program is free of charge and your case will generally be heard within

40 days. If you do not agree with the decision given in your case, you may reject it and proceed with any other venue for relief available to you.

You may contact the BBB Auto Line Program using the toll-free telephone number or write them at the following address:

BBB Auto Line Program
Council of Better Business Bureaus, Inc.
4200 Wilson Boulevard
Suite 800
Arlington, VA 22203-1838

Telephone: 1-800-955-5100
www.dr.bbb.org/goauto

This program is available in all 50 states and the District of Columbia. Eligibility is limited by vehicle age, mileage, and other factors. General Motors reserves the right to change eligibility limitations and/or discontinue its participation in this program.

STEP THREE — Canadian Owners: In the event that you do not feel your concerns have been addressed after following the procedure outlined in Steps One and Two, General Motors of Canada Limited wants you to be aware of its participation in a no-charge Mediation/Arbitration Program. General Motors of Canada Limited has committed to binding arbitration of owner disputes involving factory-related vehicle service claims. The program provides for the review of the facts involved by an impartial third party arbiter, and may include an informal hearing before the arbiter. The program is designed so that the entire dispute settlement process, from the time you file your complaint to the final decision, should be completed in about 70 days. We believe our impartial program offers advantages over courts in most jurisdictions because it is informal, quick, and free of charge.

For further information concerning eligibility in the Canadian Motor Vehicle Arbitration Plan (CAMVAP), call toll-free 1-800-207-0685, or call the General Motors Customer Care Centre, 1-800-263-3777 (English), 1-800-263-7854 (French), or write to:

The Mediation/Arbitration Program
c/o Customer Care Centre
General Motors of Canada Limited
Mail Code: CA1-163-005
1908 Colonel Sam Drive
Oshawa, Ontario L1H 8P7

Your inquiry should be accompanied by the Vehicle Identification Number (VIN).

Customer Satisfaction Procedure (Mexico)

Did you get the Warranty Extension Plan? This plan is recommended by General Motors to supplement the warranty included with the new vehicle purchase.

See your dealer for details.

Customer Assistance Procedure

Owner satisfaction and goodwill are very important to your dealer and General Motors.

Normally, any problem with the transaction, sale, or usage of the vehicle must be handled by your dealer sales or service departments. However, we recognize that despite the good intentions of all parties involved, sometimes a misunderstanding may occur.

If you have a problem that has not been satisfactorily handled through the normal means, we suggest the following steps:

STEP ONE

Explain your case to your dealer service agent, service manager, dealer sales agent, or sales manager, depending on your case.

Make sure that they have all necessary information. They are interested in your continual satisfaction.

STEP TWO

If you are not satisfied, please contact the general manager or your dealership owner to ask for their help. If they are not able to resolve your case, ask them to contact the right people at General Motors for support, if needed.

STEP THREE

If your case is not resolved in a reasonable amount of time by your dealer, please call the General Motors Customer Assistance Center (CAC) and provide the following information:

- Name
- Address
- Phone number
- Model year
- Brand
- Vehicle Identification Number (VIN)
- Mileage
- Delivery date
- Description of the problem
- Dealership name
- Dealership address

See *Customer Assistance Offices (U.S. and Canada) on page 13-5* or *Customer Assistance Offices (Mexico) on page 13-5*.

Customer Assistance Offices (U.S. and Canada)

Chevrolet encourages customers to call the toll-free number for assistance. However, if a customer wishes to write or e-mail Chevrolet, the letter should be addressed to:

United States and Puerto Rico

Chevrolet Motor Division
Chevrolet Customer Assistance Center
P.O. Box 33170
Detroit, MI 48232-5170
www.Chevrolet.com

1-800-222-1020
1-800-833-2438 (For Text Telephone Devices (TTYs))
Roadside Assistance:
1-800-243-8872

From U.S. Virgin Islands:

1-800-496-9994

Canada

General Motors of Canada Limited
Customer Care Centre,
Mail Code: CA1-163-005
1908 Colonel Sam Drive
Oshawa, Ontario L1H 8P7
www.gm.ca

1-800-263-3777 (English)
1-800-263-7854 (French)
1-800-263-3830 (For Text Telephone devices (TTYs))
Roadside Assistance:
1-800-268-6800

Overseas

Please contact the local General Motors Business Unit.

Customer Assistance Offices (Mexico)

To contact the Customer Assistance Center (CAC), use the phone numbers listed in this section. Customer assistance is available Monday through Friday, 08:00 to 20:00 hours, and Saturdays from 08:00 to 15:00 hours.

All e-mail inquiries to the Customer Assistance Center (CAC) should be sent to: cac.chevrolet@gm.com.

Mexico

From Mexico City

5329-0811

From Other Mexico Locations

01-800-466-0811

United States and Canada

1-866-466-8190

Costa Rica

00-800-052-1005

Guatemala

1-800-999-5252

Panama

00-800-052-0001

Dominican Republic

1-888-751-5301

El Salvador

800-6273

Honduras

800-0122-6101

Customer Assistance for Text Telephone (TTY) Users (U.S. and Canada)

To assist customers who are deaf, hard of hearing, or speech-impaired and who use Text Telephones (TTYs), Chevrolet has TTY equipment available at its Customer Assistance Center. Any TTY user in the U.S. can communicate with Chevrolet by dialing: 1-800-833-2438. TTY users in Canada can dial 1-800-263-3830.

Online Owner Center (U.S. and Canada)

Online Owner Experience (U.S.) my.chevrolet.com

The Chevrolet online owner experience is a one-stop resource that allows interaction with Chevrolet and keeps important vehicle-specific information in one place.

Membership Benefits

(Vehicle Information): Download owner manuals and view vehicle-specific how-to videos.

(Maintenance Information): View maintenance schedules, required alerts, OnStar onboard vehicle diagnostic information, and schedule service appointments.

(Service History): View printable dealer-recorded service records and self-recorded service records.

(Preferred Dealer Information): Select a preferred dealer and view dealer location, maps, phone numbers, and hours.

(Warranty Tracking Information): Track the vehicle's warranty information.

(Recall Information): View active recalls or search by Vehicle Identification Number (VIN). See *Vehicle Identification Number (VIN) on page 12-1*.

(Other Account Information): View GM Card, SiriusXM Satellite radio, and OnStar account information.

(Live Chat Support): Chat live with online help representatives.

Visit my.chevrolet.com to register your vehicle.

Chevrolet Owner Centre (Canada) chevroletowner.ca

Take a trip to the Chevrolet Owner Centre:

- Chat live with online help representatives.
- Use the Vehicle Tools section.
- Access third party enthusiast sites and social media networks.
- Locate owner resources such as lease-end, financing, and warranty information.
- Retrieve your favorite articles, quizzes, tips, and multimedia galleries organized into the Features and Auto Care Sections.
- Download the owner manual for your vehicle, quickly and easily.
- Find the Chevrolet-recommended maintenance services for your vehicle.

GM Mobility Reimbursement Program (U.S. and Canada)

This program is available to qualified applicants for cost reimbursement of eligible aftermarket adaptive equipment required for the vehicle, such as hand controls or a wheelchair/scooter lift for the vehicle.

For more information on the limited offer, visit www.gmmobility.com or call the GM Mobility Assistance Center at 1-800-323-9935. Text Telephone (TTY) users, call 1-800-833-9935.

General Motors of Canada also has a Mobility Program. Call 1-800-GM-DRIVE (463-7483) for details. TTY users call 1-800-263-3830.

Roadside Assistance Program (Mexico)

As a new owner, your vehicle is automatically enrolled in the Roadside Assistance program. The services are available at no cost under the terms and conditions of the program. The Roadside Assistance program is not part of, or included, in the coverage provided by the New Vehicle Limited Warranty.

Roadside Assistance provides assistance to the driver and passengers while driving the vehicle within your city of residence or on any passable road in Mexico, the United States, and Canada.

Services are subject to the limitations described in the following pages. Program coverage varies by country.

Roadside Assistance is available 24 hours a day, 365 days of the year.

This program expires two years from the date of the invoice for the vehicle, regardless of vehicle mileage and changes in vehicle ownership.

For more information about the renewal of this program at the end of its term, contact the Chevrolet Customer Assistance Center at 01-800-466-0800.

Services Provided

- **Flat Tire Change**: If unable to change a flat tire, Roadside Assistance will provide towing service to the nearest authorized Chevrolet dealership. It is the owner's responsibility for the repair or replacement of the tire. This service is limited to the transfer of the vehicle to the repair facility.
- **Emergency Fuel Delivery**: Delivery of enough fuel for the vehicle to get to the nearest service station.
- **Lock-Out Service**: Service to unlock the vehicle if you are locked out.
- **Battery Jump Start**: Service to jump start a dead battery.
- ***Emergency Messages**: Transmission of urgent phone messages.
- ***Emergency Calls**: Call for emergency services.
- ***Dealership Location Assistance**: Information regarding addresses and telephone numbers for Chevrolet dealers.
- **Emergency Towing**: Tow to the nearest dealer for warranty service if the vehicle cannot be driven.

  If the vehicle is involved in an accident during the commission of a crime, administrative violation, or breach of traffic regulations, Roadside Assistance will not provide service. When the vehicle is not accessible to be towed, all maneuvers required to access it will be at the owner's expense.

If the vehicle is in another city outside of your residence, Roadside Assistance is limited to moving the vehicle to the nearest dealer. If you would like the vehicle moved to a different dealer, you will be asked to cover the difference in cost at the time of the move.

If the vehicle cannot be received by the nearest Chevrolet dealer due to scheduling conflicts, the vehicle will be taken to a safe place where it will remain for up to 48 hours until it can be taken to the dealer. If the storage costs exceed the amount authorized, the owner is responsible to pay the difference at the time of service. Contact Roadside Assistance for more information on authorized amounts.

- ***Trip Interruption**: This service is provided if you are prevented from further usage of your vehicle while traveling and it is not possible for the nearest Chevrolet dealership to repair the vehicle the same day, requiring the vehicle to stay at the dealership for a night or more. If this happens, in addition to the previously listed services and prior to confirmation by the dealership, you are entitled to choose one of the following alternatives, within the limits of existing Roadside Assistance program guidelines. If the costs exceed the amount authorized for these services, you must pay the difference at the time of service.

  Roadside Assistance will coordinate hotel accommodations for all vehicle travelers for up to two nights.

  A rental car will be provided for up to two days and the vehicle must be returned to its original destination, excluding vehicles with a carrying capacity greater than 3.5 tons.

  Complimentary Transportation: If you prefer to continue your trip to the intended destination or return to your place of residence, and the trip requires more than eight hours driving on the road, transportation for the driver and passengers by first class bus or coach commercial airline will be provided to a location chosen by Roadside Assistance, depending on availability at the chosen destination. Restrictions apply based on vehicle specifications.

  If you are on the road, taxi service to the nearest bus station or airport will be provided.

- ***Complimentary Transportation for Vehicle Pick Up**: Transportation to pick up your vehicle after repairs are complete. Once the dealer has reported that the vehicle has been repaired, Roadside Assistance will provide bus or commercial airline one-way service (subject to availability) for the person designated by you to collect your vehicle at the dealership's location if you or the designated person are not in the same town or city as the dealership.

*These services are not provided for U.S. or Canada residents. All services provided in the U.S. and Canada are at the owner's expense and will be reimbursed by Roadside Assistance.

Services Not Included in Roadside Assistance

Roadside Assistance does not cover or reimburse services for the following:

- Events caused by fraud or bad faith by the driver.
- Vehicle immobilization situations due to a major force or unforeseen circumstances, such as natural phenomena of an extraordinary nature, earthquakes, volcanic eruptions, and other cyclonic storms.
- Vehicle immobilization situations arising from car accidents caused by the driver of the vehicle or third parties. This means any occurrence that causes physical injury to the occupants and/or the vehicle caused by external forces.
- Acts of terrorism, riot or uproar, armed forces or police actions which prevent timely delivery of assistance services.
- Food service, beverages, telephone calls, or other extra costs. Accommodation costs apply only to Mexico per the terms and conditions of the Roadside Assistance program.
- Any damage to the vehicle without intent, derived from the services provided.
- Cost of towing a trailer when choosing a Chevrolet dealer that is nearest to the temporary storage facility for the disabled vehicle.
- Cost of all maneuvers required to access the vehicle when it is not available to be towed.
- Cost of fuel provided.

Routine vehicle repair costs are not covered by the Roadside Assistance program. For more information, see your new vehicle warranty.

Contacting Roadside Assistance

Roadside Assistance services are of no cost to you and available 24 hours a day, 365 days a year. Costs are only incurred in situations that exceed the limits of the program, some of which are listed previously in this section.

To contact Roadside Assistance by phone, use the following numbers:

Mexico

01-800-466-0800

United States

1-866-466-8901

Canada

1-800-268-6800

E-mail

asistencia.chevrolet@gm.com

Chevrolet reserves the right to make any changes or discontinue the Roadside Assistance program at any time without notification.

Roadside Assistance Program (U.S. and Canada)

For U.S.-purchased vehicles, call 1-800-243-8872; (Text Telephone (TTY): 1-888-889-2438).

For Canadian-purchased vehicles, call 1-800-268-6800.

Service is available 24 hours a day, 365 days a year.

Calling for Assistance

When calling Roadside Assistance, have the following information ready:

- Your name, home address, and home telephone number.
- Telephone number of your location.
- Location of the vehicle.
- Model, year, color, and license plate number of the vehicle.
- Odometer reading, Vehicle Identification Number (VIN), and delivery date of the vehicle.
- Description of the problem.

Coverage

Services are provided up to 5 years/ 160 000 km (100,000 mi), whichever comes first.

In the U.S., anyone driving the vehicle is covered. In Canada, a person driving the vehicle without permission from the owner is not covered.

Roadside Assistance is not a part of the New Vehicle Limited Warranty. Chevrolet and General Motors of Canada Limited reserve the right to make any changes or discontinue the Roadside Assistance program at any time without notification.

Chevrolet and General Motors of Canada Limited reserve the right to limit services or payment to an owner or driver if they decide the claims are made too often, or the same type of claim is made many times.

Services Provided

- **Emergency Fuel Delivery:** Delivery of enough fuel for the vehicle to get to the nearest service station.
- **Lock-Out Service:** Service to unlock the vehicle if you are locked out. A remote unlock may be available if you have OnStar. For security reasons, the driver must present identification before this service is given.
- **Emergency Tow from a Public Road or Highway:** Tow to the nearest Chevrolet dealer for warranty service, or if the vehicle was in a crash and cannot be driven. Assistance is also given when the vehicle is stuck in the sand, mud, or snow.
- **Flat Tire Change:** Service to change a flat tire with the spare tire. The spare tire, if equipped, must be in good condition and properly inflated. It is the owner's responsibility for the repair or replacement of the tire if it is not covered by the warranty.
- **Battery Jump Start:** Service to jump start a dead battery.

Services Not Included in Roadside Assistance

- Impound towing caused by violation of any laws.
- Legal fines.
- Mounting, dismounting, or changing of snow tires, chains, or other traction devices.
- Towing or services for vehicles driven on a non-public road or highway.

Services Specific to Canadian-Purchased Vehicles

- **Fuel Delivery:** Reimbursement is approximately $5 Canadian. Diesel fuel delivery may be restricted. Propane and other fuels are not provided through this service.
- **Lock-Out Service:** Vehicle registration is required.
- **Trip Interruption Benefits and Assistance:** Must be over 250 kilometers from where your trip was started to qualify. General Motors of Canada Limited requires pre-authorization, original detailed receipts, and a copy of the repair orders. Once authorization has been received, the Roadside Assistance advisor will help to make arrangements and explain how to receive payment.

- **Alternative Service:** If assistance cannot be provided right away, the Roadside Assistance advisor may give permission to get local emergency road service. You will receive payment, up to $100, after sending the original receipt to Roadside Assistance. Mechanical failures may be covered, however any cost for parts and labor for repairs not covered by the warranty are the owner responsibility.

Scheduling Service Appointments (U.S. and Canada)

When the vehicle requires warranty service, contact your dealer and request an appointment. By scheduling a service appointment and advising the service consultant of your transportation needs, your dealer can help minimize your inconvenience.

If the vehicle cannot be scheduled into the service department immediately, keep driving it until it can be scheduled for service, unless, of course, the problem is safety related. If it is, please call your dealership, let them know this, and ask for instructions.

If your dealer requests you to bring the vehicle for service, you are urged to do so as early in the work day as possible to allow for same-day repair.

Courtesy Transportation Program (U.S. and Canada)

To enhance your ownership experience, we and our participating dealers are proud to offer Courtesy Transportation, a customer support program for vehicles with the Bumper-to-Bumper (Base Warranty Coverage period in Canada), extended powertrain, and/or warranties specific to e-Assist in both the U.S. and Canada.

Several Courtesy Transportation options are available to assist in reducing inconvenience when warranty repairs are required.

Courtesy Transportation is not a part of the New Vehicle Limited Warranty. A separate booklet entitled “Limited Warranty and Owner Assistance Information” furnished with each new vehicle provides detailed warranty coverage information.

Transportation Options

Warranty service can generally be completed while you wait. However, if you are unable to wait, GM helps to minimize inconvenience by providing several transportation options. Depending on the circumstances, your dealer can offer one of the following:

Shuttle Service

Shuttle service is the preferred means of offering Courtesy Transportation. Dealers may provide shuttle service to get you to your destination with minimal interruption of your daily schedule. This includes one-way or round-trip shuttle service within reasonable time and distance parameters of your dealer's area.

Public Transportation or Fuel Reimbursement

If the vehicle requires overnight warranty repairs, and public transportation is used instead of your dealer's shuttle service, the expense must be supported by original receipts and can only be up to the maximum amount allowed by GM for shuttle service. In addition, for U.S. customers, should you arrange transportation through a friend or relative, limited reimbursement for reasonable fuel expenses may be available. Claim amounts should reflect actual costs and be supported by original receipts. See your dealer for information regarding the allowance amounts for reimbursement of fuel or other transportation costs.

Courtesy Rental Vehicle

Your dealer may arrange to provide you with a courtesy rental vehicle or reimburse you for a rental vehicle that you obtain if the vehicle is kept for an overnight warranty repair. Rental reimbursement will be limited and must be supported by original receipts. This requires that you sign and complete a rental agreement and meet state/provincial, local, and rental vehicle provider requirements. Requirements vary and may include minimum age requirements, insurance coverage, credit card, etc. You are responsible for fuel usage charges and may also be responsible for taxes, levies, usage fees, excessive mileage, or rental usage beyond the completion of the repair.

It may not be possible to provide a like vehicle as a courtesy rental.

Additional Program Information

All program options, such as shuttle service, may not be available at every dealer. Please contact your dealer for specific information about availability. All Courtesy Transportation arrangements will be administered by appropriate dealer personnel.

General Motors reserves the right to unilaterally modify, change, or discontinue Courtesy Transportation at any time and to resolve all questions of claim eligibility pursuant to the terms and conditions described herein at its sole discretion.

Collision Damage Repair (U.S. and Canada)

If the vehicle is involved in a collision and it is damaged, have the damage repaired by a qualified technician using the proper equipment and quality replacement parts. Poorly performed collision repairs diminish the vehicle resale value, and safety performance can be compromised in subsequent collisions.

Collision Parts

Genuine GM Collision parts are new parts made with the same materials and construction methods as the parts with which the vehicle was originally built. Genuine GM Collision parts are the best choice to ensure that the vehicle's designed appearance, durability, and safety are preserved. The use of Genuine GM parts can help maintain the GM New Vehicle Limited Warranty.

Recycled original equipment parts may also be used for repair. These parts are typically removed from vehicles that were total losses in prior crashes. In most cases, the parts being recycled are from undamaged sections of the vehicle. A recycled original equipment GM part may be an acceptable choice to maintain the vehicle's originally designed appearance and safety performance; however, the history of these parts is not known. Such parts are not covered by the GM New Vehicle Limited Warranty, and any related failures are not covered by that warranty.

Aftermarket collision parts are also available. These are made by companies other than GM and may not have been tested for the vehicle. As a result, these parts may fit poorly, exhibit premature durability/corrosion problems, and may not perform properly in subsequent collisions. Aftermarket parts are not covered by the GM New Vehicle Limited Warranty, and any vehicle failure related to such parts is not covered by that warranty.

Repair Facility

GM also recommends that you choose a collision repair facility that meets your needs before you ever need collision repairs. Your dealer may have a collision repair center with GM-trained technicians and state-of-the-art equipment, or be able to recommend a collision repair center that has GM-trained technicians and comparable equipment.

Insuring the Vehicle

Protect your investment in the GM vehicle with comprehensive and collision insurance coverage. There are significant differences in the quality of coverage afforded by various insurance policy terms.

Many insurance policies provide reduced protection to the GM vehicle by limiting compensation for damage repairs through the use of aftermarket collision parts. Some insurance companies will not specify aftermarket collision parts. When purchasing insurance, we recommend that you ensure that the vehicle will be repaired with GM original equipment collision parts. If such insurance coverage is not available from your current insurance carrier, consider switching to another insurance carrier.

If the vehicle is leased, the leasing company may require you to have insurance that ensures repairs with Genuine GM Original Equipment Manufacturer (OEM) parts or Genuine Manufacturer replacement parts. Read the lease carefully, as you may be charged at the end of the lease for poor quality repairs.

If a Crash Occurs

If there has been an injury, call emergency services for help. Do not leave the scene of a crash until all matters have been taken care of. Move the vehicle only if its position puts you in danger, or you are instructed to move it by a police officer.

Give only the necessary information to police and other parties involved in the crash.

For emergency towing see *Roadside Assistance Program (Mexico) on page 13-7* or *Roadside Assistance Program (U.S. and Canada) on page 13-11*.

Gather the following information:

- Driver name, address, and telephone number.
- Driver license number.
- Owner name, address, and telephone number.
- Vehicle license plate number.
- Vehicle make, model, and model year.
- Vehicle Identification Number (VIN).
- Insurance company and policy number.
- General description of the damage to the other vehicle.

Choose a reputable repair facility that uses quality replacement parts. See “Collision Parts” earlier in this section.

If the airbag has inflated, see *What Will You See after an Airbag Inflates? on page 3-26*.

Managing the Vehicle Damage Repair Process

In the event that the vehicle requires damage repairs, GM recommends that you take an active role in its repair. If you have a pre-determined repair facility of choice, take the vehicle there, or have it towed there.

Specify to the facility that any required replacement collision parts be original equipment parts, either new Genuine GM parts or recycled original GM parts. Remember, recycled parts will not be covered by the GM vehicle warranty.

Insurance pays the bill for the repair, but you must live with the repair. Depending on your policy limits, your insurance company may initially value the repair using aftermarket parts. Discuss this with the repair professional, and insist on Genuine GM parts. Remember, if the vehicle is leased, you may be obligated to have the vehicle repaired with Genuine GM parts, even if your insurance coverage does not pay the full cost.

If another party's insurance company is paying for the repairs, you are not obligated to accept a repair valuation based on that insurance company's collision policy repair limits, as you have no contractual limits with that company. In such cases, you can have control of the repair and parts choices as long as the cost stays within reasonable limits.

Service Publications Ordering Information

Service Manuals

Service Manuals have the diagnosis and repair information on the engines, transmission, axle, suspension, brakes, electrical, steering, body, etc.

Service Bulletins

Service Bulletins give additional technical service information needed to knowledgeably service General Motors cars and trucks. Each bulletin contains instructions to assist in the diagnosis and service of the vehicle.

Owner Information

Owner publications are written specifically for owners and intended to provide basic operational information about the vehicle. The Owner Manual includes the Maintenance Schedule for all models.

In-Portfolio: Includes a Portfolio, Owner Manual, and Warranty Manual.

RETAIL SELL PRICE: $35.00 (U.S.) plus handling and shipping fees.

Without Portfolio: Owner Manual only.

RETAIL SELL PRICE: $25.00 (U.S.) plus handling and shipping fees.

Current and Past Models

Technical Service Bulletins and Manuals are available for current and past model GM vehicles.

ORDER TOLL FREE:
1-800-551-4123 Monday – Friday
8:00 AM – 6:00 PM Eastern Time

For Credit Card Orders Only (VISA-MasterCard-Discover), see Helm, Inc. at: www.helminc.com.

Or write to:

Helm, Incorporated
Attention: Customer Service
47911 Halyard Drive
Plymouth, MI 48170

Prices are subject to change without notice and without incurring obligation. Allow ample time for delivery.

All listed prices are quoted in U.S. funds. Make checks payable in U.S. funds.

Reporting Safety Defects

Reporting Safety Defects to the United States Government

If you believe that your vehicle has a defect which could cause a crash or could cause injury or death, you should immediately inform the National Highway Traffic Safety Administration (NHTSA) in addition to notifying General Motors.

If NHTSA receives similar complaints, it may open an investigation, and if it finds that a safety defect exists in a group of vehicles, it may order a recall and remedy campaign.

However, NHTSA cannot become involved in individual problems between you, your dealer, or General Motors.

To contact NHTSA, you may call the Vehicle Safety Hotline toll-free at 1-888-327-4236 (TTY: 1-800-424-9153); go to *http://www.safercar.gov;* or write to:

Administrator, NHTSA
1200 New Jersey Avenue, S.E.
Washington, D.C. 20590

You can also obtain other information about motor vehicle safety from *http://www.safercar.gov*.

Reporting Safety Defects to the Canadian Government

If you live in Canada, and you believe that the vehicle has a safety defect, notify Transport Canada immediately, and notify General Motors of Canada Limited.
Call Transport Canada at 1-800-333-0510 or write to:

Transport Canada
Road Safety Branch
80 rue Noel
Gatineau, QC J8Z 0A1

Reporting Safety Defects to General Motors

In addition to notifying NHTSA (or Transport Canada) in a situation like this, notify General Motors.

Call 1-800-222-1020, or write:

Chevrolet Motor Division
Chevrolet Customer Assistance Center
P.O. Box 33170
Detroit, MI 48232-5170

In Canada, call 1-800-263-3777 (English) or 1-800-263-7854 (French), or write:

General Motors of Canada Limited
Customer Care Centre,
Mail Code: CA1-163-005
1908 Colonel Sam Drive
Oshawa, Ontario L1H 8P7

Vehicle Data Recording and Privacy

The vehicle has a number of computers that record information about the vehicle's performance and how it is driven. For example, the vehicle uses computer modules to monitor and control engine and transmission performance, to monitor the conditions for airbag deployment and deploy them in a crash, and, if equipped, to provide antilock braking to help the driver control the vehicle. These modules may store data to help the dealer technician service the vehicle.
Some modules may also store data about how the vehicle is operated, such as rate of fuel consumption or average speed. These modules may retain personal preferences, such as radio presets, seat positions, and temperature settings.

Event Data Recorders

This vehicle is equipped with an event data recorder (EDR). The main purpose of an EDR is to record, in certain crash or near crash-like situations, such as an air bag deployment or hitting a road obstacle, data that will assist in understanding how a vehicle's systems performed. The EDR is designed to record data related to vehicle dynamics and safety systems for a short period of time, typically 30 seconds or less. The EDR in this vehicle is designed to record such data as:

- How various systems in your vehicle were operating;
- Whether or not the driver and passenger safety belts were buckled/fastened;
- How far (if at all) the driver was depressing the accelerator and/or brake pedal; and,
- How fast the vehicle was traveling.

These data can help provide a better understanding of the circumstances in which crashes and injuries occur. NOTE: EDR data are recorded by your vehicle only if a non-trivial crash situation occurs; no data are recorded by the EDR under normal driving conditions and no personal data (e.g., name, gender, age, and crash location) are recorded. However, other parties, such as law enforcement, could combine the EDR data with the type of personally identifying data routinely acquired during a crash investigation.

To read data recorded by an EDR, special equipment is required, and access to the vehicle or the EDR is needed. In addition to the vehicle manufacturer, other parties, such as law enforcement, that have the special equipment, can read the information if they have access to the vehicle or the EDR.

GM will not access this data or share it with others except: with the consent of the vehicle owner or, if the vehicle is leased, with the consent of the lessee; in response to an official request by police or similar government office; as part of GM's defense of litigation through the discovery process; or, as required by law. Data that GM collects or receives may also be used for GM research needs or may be made available to others for research purposes, where a need is shown and the data is not tied to a specific vehicle or vehicle owner.

OnStar®

If the vehicle is equipped with OnStar® and has an active subscription, additional data may be collected through the OnStar system. This includes information about the vehicle's operation; about collisions involving the vehicle; the use of the vehicle and its features; and, in certain situations, the location and approximate GPS speed of the vehicle. Refer to the OnStar Terms and Conditions and Privacy Statement on the OnStar website.

Infotainment System

If the vehicle is equipped with a navigation system as part of the infotainment system, use of the system may result in the storage of destinations, addresses, telephone numbers, and other trip information. See the infotainment manual for information on stored data and for deletion instructions.

Radio Frequency Identification (RFID)

RFID technology is used in some vehicles for functions such as tire pressure monitoring and ignition system security, as well as in connection with conveniences such as Remote Keyless Entry (RKE) transmitters for remote door locking/unlocking and starting, and in-vehicle transmitters for garage door openers. RFID technology in GM vehicles does not use or record personal information or link with any other GM system containing personal information.

Radio Frequency Statement

This vehicle has systems that operate on a radio frequency that comply with Part 15 of the Federal Communications Commission (FCC) rules and with Industry Canada Standards RSS-GEN/210/220/310.

Operation is subject to the following two conditions:

1. The device may not cause harmful interference.
2. The device must accept any interference received, including interference that may cause undesired operation of the device.

Changes or modifications to any of these systems by other than an authorized service facility could void authorization to use this equipment.

✍ NOTES

OnStar

OnStar Overview
OnStar Overview 14-1

OnStar Services
Emergency 14-2
Security 14-2
Navigation 14-2
Connections 14-4
Diagnostics 14-5

OnStar Additional Information
OnStar Additional Information 14-5

OnStar Overview

If equipped, this vehicle has a comprehensive, in-vehicle system that can connect to a live Advisor for Emergency, Security, Navigation, Connection, and Diagnostic Services.

The OnStar system status light is next to the OnStar buttons. If the status light is:

- Solid Green: System is ready.
- Flashing Green: On a call.
- Red: Indicates a problem.

Press On or call 1-888-4ONSTAR (1-888-466-7827) to speak to an Advisor.

Press to:

- Make a call, end a call, or answer an incoming call.
- Give OnStar Hands-Free Calling voice commands.
- Give OnStar Turn-by-Turn Navigation voice commands. Requires the available Directions and Connections service plan.

Press On to connect to a live Advisor to:

- Verify account information or update contact information.
- Get driving directions. Requires the available Directions and Connections service plan.
- Receive On-Demand Diagnostics for a check of the vehicle's key operating systems.
- Receive Roadside Assistance.

Press the OnStar Emergency button SOS to get a priority connection to an Emergency Advisor available 24/7 to:

- Get help for an emergency.
- Be a Good Samaritan or respond to an AMBER Alert.
- Get crisis assistance and evacuation routes.

OnStar Services

Emergency

With Automatic Crash Response, the built-in system can automatically connect to help in most crashes, even if help cannot be requested.

Press SOS to connect to an Emergency Advisor. GPS technology is used to identify the vehicle location and can provide critical information to emergency personnel. The Advisor is also trained to offer critical assistance in emergency situations before first responders arrive.

Security

OnStar provides services like Stolen Vehicle Assistance, Remote Ignition Block, and Roadside Assistance, if the vehicle is equipped with these services. OnStar can unlock the vehicle doors remotely, if it is equipped with automatic door locks, and can help police locate the vehicle if it is stolen.

Navigation

OnStar navigation requires the Directions and Connections service plan.

Press On to receive directions or have them sent to the vehicle navigation screen, if equipped. Destinations can also be forwarded to the vehicle from MapQuest.com. The OnStar mapping database is continuously updated. For coverage maps, see www.onstar.com (U.S.) www.onstar.ca (Canada).

Turn-by-Turn Navigation

1. Press On to connect to a live Advisor.
2. Request directions.
3. Directions are downloaded to the vehicle.
4. Follow the voice-guided commands.

Using Voice Commands During a Planned Route

Cancel Route

1. Press . System responds: “OnStar ready,” then a tone. Say “Cancel route.” System responds: “Do you want to cancel directions?”
2. Say “Yes.” System responds: “OK, request completed, thank you, goodbye.”

Route Preview

1. Press . System responds: “OnStar ready,” then a tone.
2. Say “Route preview.” System responds with the next three maneuvers.
3. Say “Goodbye.” Exits voice commands.

Repeat

1. Press . System responds: “OnStar ready,” then a tone.
2. Say “Repeat.” System responds with the last direction given, then responds with “OnStar ready,” then a tone.
3. Say “Goodbye.” Exits voice commands.

Get My Destination

1. Press . System responds: “OnStar ready,” then a tone.
2. Say “Get my destination.” System responds with address and the distance to the destination, then responds with “OnStar ready,” then a tone.
3. Say “Goodbye.” Exits voice commands.

Other Navigation Services Available from OnStar

OnStar eNav: Allows subscribers to send destinations from MapQuest.com to their Turn-by-Turn Navigation or screen-based navigation system. When ready, the directions will be downloaded to the vehicle.

Destination Download: Press , then request the Advisor to download directions to the navigation system in the vehicle. After the call ends, press the “Go” button on the navigation screen to begin driving directions.

Destinations can also be downloaded on the go. For information about eNav, Destination Download, and coverage maps see www.onstar.com (U.S.), www.onstar.ca (Canada).

Connections

OnStar Hands-Free Calling allows calls to be made and received from the vehicle. The vehicle can also be controlled from a cell phone through the OnStar RemoteLink mobile app. For coverage maps, see www.onstar.com (U.S.), www.onstar.ca (Canada).

Hands-Free Calling

1. Press . System responds: “OnStar ready.”
2. Say “Call.” System responds: “Please say the name or number to call.”
3. Say the entire number without pausing, including a “1” and the area code. System responds: “OK calling.”

Calling 911 Emergency

1. Press . The system responds “OnStar Ready,” followed by a tone.
2. Say “Call.” The system responds “Please say the name or number to call.”
3. Say “911” without pausing. The system responds “911.”
4. Say “Call.” The system responds “OK, dialing 911.”

Retrieve My Number

1. Press . System responds: “OnStar ready.”
2. Say “My number.” System responds: “Your OnStar Hands-Free Calling number is.”

End a Call

Press . System responds: “Call ended.”

Store a Name Tag for Speed Dialing

1. Press . System responds: “OnStar ready.”
2. Say “Store.” System responds: “Please say the number you would like to store.”
3. Say the entire number without pausing. System responds: “Please say the name tag.”
4. Pick a name tag. System responds: “About to store <name tag>. Does that sound OK?”
5. Say “Yes” or say “No” to try again. System responds: “OK, storing <name tag>.”

Place a Call Using a Stored Number

1. Press . System responds: “OnStar ready.”
2. Say “Call <name tag>.” System responds: “OK, calling <name tag>.”

Verify Minutes and Expiration

Press and say “Minutes” then “Verify” to check how many minutes remain and their expiration date.

OnStar Mobile App

Download the OnStar RemoteLink mobile app to select Apple, Android and Blackberry devices to check vehicle fuel level, oil life, or tire pressure; to start the vehicle (if equipped) or unlock it; or to connect to an OnStar Advisor. For OnStar RemoteLink information and compatibility, see www.onstar.com (U.S.), www.onstar.ca (Canada).

Diagnostics

OnStar Vehicle Diagnostics will perform a vehicle check every month. It will check the engine, transmission, antilock brakes, and major vehicle systems. It also checks the tire pressures, if the vehicle is equipped with the Tire Pressure Monitoring System. If a diagnostics check is needed between e-mails, press On, and an Advisor can run a check.

OnStar Additional Information

Transferring Service

Press On to request account transfer eligibility information. The Advisor can assist in canceling or removing account information. If OnStar receives information that vehicle ownership has changed, OnStar may send a voice message to the vehicle, requesting updated account information.

Reactivation for Subsequent Owners

Press On and follow the prompts to speak to an Advisor as soon as possible after acquiring the vehicle. The Advisor will update vehicle records and will explain the OnStar service offers and options available.

How OnStar Service Works

Automatic Crash Response, Emergency Services, Crisis Assist, Stolen Vehicle Assistance, Vehicle Diagnostics, Remote Door Unlock, Roadside Assistance, Turn-by-Turn Navigation, and Hands-Free Calling are available on most vehicles. Not all OnStar services are available everywhere or on all vehicles. For more information, a full description of OnStar services, system limitations, and OnStar terms and conditions:

- In the U.S. see www.onstar.com (U.S.) or call 1.888.4.ONSTAR. (1.888.466.7827).
- In Canada see www.onstar.ca (Canada) or call 1.888.4.ONSTAR. (1.888.466.7827).
- TTY 1-877-248-2080.
- Press On to speak with an Advisor.

OnStar services require a vehicle electrical system, wireless service, and GPS satellite technologies to be available and operating for features to function properly. These systems may not operate if the battery is discharged or disconnected.

OnStar service cannot work unless your vehicle is in a place where OnStar has an agreement with a wireless service provider for service in that area, and the wireless service provider has coverage, network capacity, reception, and technology compatible with OnStar service. Service involving location information about the vehicle cannot work unless GPS signals are available, unobstructed, and compatible with the OnStar hardware. OnStar service may not work if the OnStar equipment is not properly installed or it has not been properly maintained. If equipment or software is added, connected, or modified, OnStar service may not work. Other problems beyond the control of OnStar may prevent service such as hills, tall buildings, tunnels, weather, electrical system design and architecture of the vehicle, damage to the vehicle in a crash, or wireless phone network congestion or jamming.

See *Radio Frequency Statement on page 13-21* for information regarding Part 15 of the Federal Communications Commission (FCC) rules and Industry Canada Standards RSS-GEN/210/220/310.

Services for People with Disabilities

Advisors provide services to help subscribers with physical disabilities and medical conditions.

Press On for help with:

- Locating a gas station with an attendant to pump gas.
- Finding a hotel, restaurant, etc., that meets accessibility needs.
- Providing directions to the closest hospital or pharmacy in urgent situations.

TTY Users

OnStar has the ability to communicate to the deaf, hard-of-hearing, or speech-impaired customers while in the vehicle. The available dealer-installed TTY system can provide in-vehicle access to all of the OnStar services, except Virtual Advisor and OnStar Turn-by-Turn Navigation.

OnStar.com (U.S.) or OnStar.ca (Canada)

The website provides access to account information, allows management of the OnStar subscription, and viewing of videos of each service. Get subscription plan pricing and sign up for OnStar Vehicle Diagnostics. Click on the “My Account” tab on the home page. The website navigation and services provided may vary by country.

OnStar Personal Identification Number (PIN)

A PIN is needed to access some of the OnStar services, like Remote Door Unlock and Stolen Vehicle Assistance. You will be prompted to change the PIN the first time when speaking with an Advisor. To change the OnStar PIN, call OnStar and provide the Advisor with the current number.

Warranty

OnStar equipment may be warranted as part of the New Vehicle Limited Warranty. The manufacturer of the vehicle furnishes detailed warranty information.

Languages

The vehicle can be programmed to respond in English, French or Spanish. Press and ask an Advisor. Advisors can speak English, French or Spanish.

Potential Issues

Some OnStar services are disabled after five days. OnStar cannot perform Remote Door Unlock or Stolen Vehicle Assistance after the vehicle has been off continuously for five days. After five days, OnStar can contact Roadside Assistance and a locksmith to help gain access to the vehicle.

Global Positioning System (GPS)

- Obstruction of the GPS can occur in a large city with tall buildings; in parking garages; around airports; in tunnels, underpasses, or parking garages; or in an area with very dense trees. If GPS signals are not available, the OnStar system should still operate to call OnStar. However, OnStar could have difficulty identifying the exact location.
- In emergency situations, OnStar can use the last stored GPS location to send to emergency responders.
- A temporary loss of GPS can cause loss of the ability to send a Turn-by-Turn Navigation route. The Advisor may give a verbal route or may ask for a call back after the vehicle is driven into an open area.

Cellular and GPS Antennas

Avoid placing items over or near the antenna to prevent blocking cellular and GPS signal reception. Cellular reception is required for OnStar to send remote signals to the vehicle.

Unable to Connect to OnStar Message

If there is limited cellular coverage or the cellular network has reached maximum capacity, this message may come on. Press to try the call again or try again after driving a few miles into another cellular area.

Vehicle and Power Issues

OnStar services require a vehicle electrical system, wireless service, and GPS satellite technologies to be available and operating for features to function properly. These systems may not operate if the battery is discharged or disconnected.

Add-on Electrical Equipment

The OnStar system is integrated into the electrical architecture of the vehicle. Do not add any electrical equipment. See *Add-On Electrical Equipment on page 9-58*. Added electrical equipment may interfere with the operation of the OnStar system and cause it to not operate.

Privacy

The complete OnStar Privacy Statement may be found at www.onstar.com (U.S.), or www.onstar.ca (Canada). Privacy-sensitive users of wireless communications are cautioned that the privacy of any information sent via wireless cellular communications cannot be assured. Third parties may unlawfully intercept or access transmissions and private communications without consent.

OnStar - libcurl and unzip acknowledgments

Certain OnStar components include libcurl and unzip software. Below are the notices and licenses associated with this software:

libcurl:

COPYRIGHT AND PERMISSION NOTICE

Copyright (c) 1996 - 2010, Daniel Stenberg, <daniel@haxx.se>.

All rights reserved.

Permission to use, copy, modify, and distribute this software for any purpose with or without fee is hereby granted, provided that the above copyright notice and this permission notice appear in all copies.

THE SOFTWARE IS PROVIDED “AS IS,” WITHOUT WARRANTY OF ANY KIND, EXPRESS OR IMPLIED, INCLUDING BUT NOT LIMITED TO THE WARRANTIES OF MERCHANTABILITY, FITNESS FOR A PARTICULAR PURPOSE AND NONINFRINGEMENT OF THIRD PARTY RIGHTS. IN NO EVENT SHALL THE AUTHORS OR COPYRIGHT HOLDERS BE LIABLE FOR ANY CLAIM, DAMAGES OR OTHER LIABILITY, WHETHER IN AN ACTION OF CONTRACT, TORT OR OTHERWISE, ARISING FROM, OUT OF OR IN CONNECTION WITH THE SOFTWARE OR THE USE OR OTHER DEALINGS IN THE SOFTWARE.

Except as contained in this notice, the name of a copyright holder shall not be used in advertising or otherwise to promote the sale, use or other dealings in this Software without prior written authorization of the copyright holder.

unzip:

This is version 2005-Feb-10 of the Info-ZIP copyright and license. The definitive version of this document should be available at ftp://ftp.info-zip.org/pub/infozip/license.html indefinitely.

Copyright (c) 1990-2005 Info-ZIP. All rights reserved.

For the purposes of this copyright and license, “Info-ZIP” is defined as the following set of individuals:

Mark Adler, John Bush, Karl Davis, Harald Denker, Jean-Michel Dubois, Jean-loup Gailly, Hunter Goatley, Ed Gordon, Ian Gorman, Chris Herborth, Dirk Haase, Greg Hartwig, Robert Heath, Jonathan Hudson, Paul Kienitz, David Kirschbaum, Johnny Lee, Onno van der Linden, Igor Mandrichenko, Steve P. Miller, Sergio Monesi, Keith Owens, George Petrov, Greg Roelofs, Kai Uwe Rommel, Steve Salisbury, Dave Smith, Steven M. Schweda, Christian Spieler, Cosmin Truta, Antoine Verheijen, Paul von Behren, Rich Wales, Mike White

This software is provided “as is,” without warranty of any kind, express or implied. In no event shall Info-ZIP or its contributors be held liable for any direct, indirect, incidental, special or consequential damages arising out of the use of or inability to use this software.

Permission is granted to anyone to use this software for any purpose, including commercial applications, and to alter it and redistribute it freely, subject to the following restrictions:

1. Redistributions of source code must retain the above copyright notice, definition, disclaimer, and this list of conditions.
2. Redistributions in binary form (compiled executables) must reproduce the above copyright notice, definition, disclaimer, and this list of conditions in documentation and/or other materials provided with the distribution. The sole exception to this condition is redistribution of a standard UnZipSFX binary (including SFXWiz) as part of a self-extracting archive; that is permitted without inclusion of this license, as long as the normal SFX banner has not been removed from the binary or disabled.

3. Altered versions–including, but not limited to, ports to new operating systems, existing ports with new graphical interfaces, and dynamic, shared, or static library versions–must be plainly marked as such and must not be misrepresented as being the original source. Such altered versions also must not be misrepresented as being Info-ZIP releases–including, but not limited to, labeling of the altered versions with the names “Info-ZIP” (or any variation thereof, including, but not limited to, different capitalizations), “Pocket UnZip,” “WiZ” or “MacZip” without the explicit permission of Info-ZIP. Such altered versions are further prohibited from misrepresentative use of the Zip-Bugs or Info-ZIP e-mail addresses or of the Info-ZIP URL(s).

4. Info-ZIP retains the right to use the names “Info-ZIP,” “Zip,” “UnZip,” “UnZipSFX,” “WiZ,” “Pocket UnZip,” “Pocket Zip,” and “MacZip” for its own source and binary releases.

A

Accessories and
Modifications 10-3
Accessory Power 9-23
Add-On Electrical
Equipment 9-58
Additional Information
OnStar® 14-5
Adjustments
Lumbar, Front Seats 3-4
Air Cleaner/Filter, Engine 10-15
Air Filter, Passenger
Compartment 8-8
Air Vents 8-7
Airbag System
Check 3-33
How Does an Airbag
Restrain? 3-26
Passenger Sensing
System 3-27
What Makes an Airbag
Inflate? 3-25
Airbag System (cont'd)
What Will You See after an
Airbag Inflates? 3-26
When Should an Airbag
Inflate? 3-24
Where Are the Airbags? 3-23
Airbags
Adding Equipment to the
Vehicle 3-32
Passenger Status Indicator . . .5-14
Readiness Light 5-14
Servicing Airbag-Equipped
Vehicles 3-31
System Check 3-20
Alarm
Vehicle Security 2-15
AM-FM Radio 7-9
Antenna
Multi-band 7-14
Antilock Brake
System (ABS) 9-29
Warning Light 5-19
Appearance Care
Exterior 10-97
Interior 10-100
Armrest
Rear Seat 3-11
Assistance Program,
Roadside 13-7, 13-11
Audio Players 7-14
CD 7-14
Audio System
Backglass Antenna 7-14
Radio Reception 7-13
Theft-Deterrent Feature 7-2
Automatic
Door Locks 2-11
Headlamp System 6-3
Transmission 9-27
Transmission Fluid 10-14
Automatic Transmission
Manual Mode 9-28
Shift Lock Control
Function Check 10-26
Auxiliary
Devices 7-16

B

Battery 10-25
Jump Starting 10-91, 10-92
Load Management 6-7
Voltage and Charging Messages 5-29
Blade Replacement, Wiper ... 10-27
Bluetooth 7-22, 7-23, 7-27
Brake System Warning Light 5-18
Brakes 10-22
Antilock 9-29
Assist 9-32
Fluid 10-23
Parking 9-30
System Messages 5-29
Braking 9-3
Break-In, New Vehicle 9-15
Bulb Replacement 10-36
Fog Lamps 10-32, 6-4
Halogen Bulbs 10-28
Headlamp Aiming 10-28
Headlamps 10-28
Headlamps, Front Turn Signal, Sidemarker, and Parking Lamps 10-29
Bulb Replacement (cont'd)
High Intensity Discharge (HID) Lighting 10-29
License Plate Lamps 10-35
Taillamps, Turn Signal, Stoplamps, and Back-up Lamps 10-33, 10-34
Buying New Tires 10-61

C

Calibration 5-5
California
Fuel Requirements 9-47
Perchlorate Materials Requirements 10-3
Warning 10-3
Camera, Rear Vision 9-42
Canadian Vehicle Owners iii
Capacities and Specifications 12-2
Carbon Monoxide
Engine Exhaust 9-26
Trunk 2-13
Winter Driving 9-8
Cargo
Tie-Downs 4-3
Cautions, Danger, and Warnings iv
CD Player 7-14
Center Console Storage 4-3
Chains, Tire 10-66
Charging System Light 5-15
Check
Engine Light 5-15
Ignition Transmission Lock 10-26
Child Restraints
Infants and Young Children 3-36
Lower Anchors and Tethers for Children 3-41
Older Children 3-34
Securing 3-50, 3-52
Systems 3-38
Cleaning
Exterior Care 10-97
Interior Care 10-100

Climate Control Systems 8-1
Air Conditioning 8-1
Dual Automatic 8-3
Heating 8-1
Clock 5-5
Cluster, Instrument 5-9
Collision Damage Repair 13-15
Compact Spare Tire 10-90
Compass 5-5
Messages 5-30
Competitive Driving, Racing or Other 9-6
Compressor Kit, Tire Sealant 10-68, 10-76
Connections
OnStar® 14-4
Control of a Vehicle 9-3
Convenience Net 4-3
Convex Mirrors 2-17
Coolant
Engine 10-18
Engine Temperature Gauge 5-12
Engine Temperature Warning Light 5-22
Cooling System 10-16
Engine Messages 5-30
Courtesy Lamps 6-5
Courtesy Transportation Program 13-13
Cruise Control 9-36
Light 5-24
Messages 5-30
Cupholders 4-2
Customer Assistance 13-6
Offices 13-5
Text Telephone (TTY) Users 13-6
Customer Information Service Publications Ordering Information 13-17
Customer Satisfaction Procedure 13-2, 13-4

D

Damage Repair, Collision 13-15
Danger, Warnings, and Cautions iv
Data Recorders, Event 13-20
Daytime Running Lamps (DRL) 6-2
Defensive Driving 9-3
Devices
Auxiliary 7-16
Diagnostics
OnStar® 14-5
Distracted Driving 9-2
Dome Lamps 6-5
Door
Ajar Light 5-25
Ajar Messages 5-30
Ajar Reminder 2-11
Locks 2-10
Power Locks 2-11
Drive Belt Routing, Engine 12-4
Driver Efficiency Gauge 5-12
Driver Information Center (DIC) 5-25
Driving
Characteristics and Towing Tips 9-53
Defensive 9-3
Drunk 9-3
For Better Fuel Economy 1-25
Highway Hypnosis 9-7
Hill and Mountain Roads 9-7
If the Vehicle is Stuck 9-9

Driving (cont'd)
Loss of Control 9-5
Off-Road Recovery 9-5
Vehicle Load Limits 9-10
Wet Roads 9-6
Winter 9-8
Dual Automatic Climate
Control System 8-3

E

E85 Fuel 9-49
Electric Parking Brake Light . . . 5-19
Electrical Equipment,
Add-On 9-58
Electrical System
Engine Compartment
Fuse Block 10-38
Fuses 10-38
Instrument Panel Fuse
Block 10-42
Overload 10-37
Emergency
OnStar® 14-2
Engine
Air Cleaner/Filter 10-15
Check and Service Engine
Soon Light 5-15
Compartment Overview 10-6
Coolant 10-18
Coolant Temperature
Gauge 5-12
Coolant Temperature
Warning Light 5-22
Cooling System 10-16
Cooling System Messages . . . 5-30
Drive Belt Routing 12-4
Exhaust 9-26
Heater 9-22
Oil Life System 10-13
Oil Messages 5-31
Overheating 10-20
Power Messages 5-32
Pressure Light 5-23
Running While Parked 9-26
Starting 9-19
Entry Lighting 6-6
Equipment, Towing 9-57
Event Data Recorders 13-20
Exit Lighting 6-7
Extender, Safety Belt 3-19
Exterior Lamp Controls 6-1
Exterior Lamps Off Reminder . . . 6-2

F

Features
Memory 1-9
Filter,
Engine Air Cleaner 10-15
Flash-to-Pass 6-2
Flashers, Hazard Warning 6-4
Flat Tire 10-66
Changing 10-84
Floor Mats 10-103
Fluid
Automatic Transmission 10-14
Brakes 10-23
Washer 10-22
Fog Lamps
Bulb Replacement 10-32, 6-4
Forward Collision Alert
(FCA) System 9-38
Front Fog Lamp
Light 5-24

Front Seats
Adjustment 3-3
Heated 3-8
Fuel 9-46
Additives 9-48
E85 (85% Ethanol) 9-49
Economy Driving 1-25
Filling a Portable Fuel Container 9-52
Filling the Tank 9-50
Foreign Countries 9-48
Gasoline Specifications 9-47
Gauge 5-11
Low Fuel Warning Light 5-23
Recommended 9-47
Requirements, California 9-47
System Messages 5-32
Fuses 10-38
Engine Compartment Fuse Block 10-38
Instrument Panel Fuse Block 10-42

G

Garage Door Opener 5-41
Programming 5-41
Gasoline
Specifications 9-47
Gauges
Driver Efficiency 5-12
Engine Coolant Temperature 5-12
Fuel 5-11
Odometer 5-11
Speedometer 5-11
Tachometer 5-11
Trip Odometer 5-11
Warning Lights and Indicators 5-8
General Information
Service and Maintenance 11-1
Towing 9-52
Vehicle Care 10-2
Glove Box 4-1
GM Mobility Reimbursement Program 13-7

H

Halogen Bulbs 10-28
Hazard Warning Flashers 6-4
Head Restraints 3-2
Headlamps
Aiming 10-28
Automatic 6-3
Bulb Replacement 10-28
Daytime Running Lamps (DRL) 6-2
Flash-to-Pass 6-2
Headlamps, Front Turn Signal, Sidemarker, and Parking Lamps 10-29
High Intensity Discharge (HID) Lighting 10-29
High-Beam On Light 5-24
High/Low Beam Changer 6-2
Lamps On Reminder 5-24
Heated Front Seats 3-8
Heated Mirrors 2-18
Heater
Engine 9-22
Heating and Air Conditioning . . . 8-1
High Voltage Devices and Wiring 10-37

High-Beam On Light 5-24
High-Speed Operation 10-53
Highway Hypnosis 9-7
Hill and Mountain Roads 9-7
Hill Start Assist (HSA) 9-33
Hood 10-5
Horn 5-3
How to Wear Safety Belts Properly 3-12

I

Ignition Positions 9-15, 9-17
Ignition Transmission Lock Check 10-26
Immobilizer 2-15
Indicator
  Vehicle Ahead 5-20
Infants and Young Children, Restraints 3-36
Infotainment 7-1
Infotainment System 13-21
Instrument Cluster 5-9
Instrument Panel
  Storage Area 4-1
Instrument Panel Overview 1-2
Introduction iii

J

Jump Starting 10-91, 10-92

K

Key and Lock Messages 5-32
Keyless Entry
  Remote (RKE) System 2-3
Keys 2-2

L

Labeling, Tire Sidewall 10-46
Lamps
  Courtesy 6-5
  Daytime Running (DRL) 6-2
  Dome 6-5
  Exterior Controls 6-1
  Exterior Lamps Off Reminder 6-2
  License Plate 10-35
  Malfunction Indicator 5-15
  Messages 5-32
  On Reminder 5-24
  Reading 6-6
Lane Departure Warning 9-44
Lane Departure Warning Light 5-20
Lap-Shoulder Belt 3-13
LATCH System
  Replacing Parts after a Crash 3-49
LATCH, Lower Anchors and Tethers for Children 3-41
LED Lighting 10-29
Lighting
  Entry 6-6
  Exit 6-7
  Illumination Control 6-5
  LED 10-29
Lights
  Airbag Readiness 5-14
  Antilock Brake System (ABS) Warning 5-19
  Brake System Warning 5-18
  Charging System 5-15
  Cruise Control 5-24
  Door Ajar 5-25
  Electric Parking Brake 5-19
  Engine Coolant Temperature Warning 5-22

Lights (cont'd)
Engine Oil Pressure 5-23
Flash-to-Pass 6-2
Front Fog Lamp 5-24
High-Beam On 5-24
High/Low Beam Changer 6-2
Lane Departure Warning 5-20
Low Fuel Warning 5-23
Safety Belt Reminders 5-13
Security 5-24
Service Electric Parking Brake 5-19
StabiliTrak® OFF 5-21
Tire Pressure 5-22
Traction Control System (TCS)/StabiliTrak® 5-21
Traction Off 5-20
Locks
Automatic Door 2-11
Door 2-10
Lockout Protection 2-12
Power Door 2-11
Safety 2-12
Loss of Control 9-5
Low Fuel Warning Light 5-23
Lower Anchors and Tethers for Children (LATCH System) 3-41
Lumbar Adjustment 3-4
Front Seats 3-4

M

Maintenance Records 11-14
Maintenance Schedule
Recommended Fluids and Lubricants 11-12
Malfunction Indicator Lamp 5-15
Manual Mode 9-28
Memory Features 1-9
Memory Seats 3-6
Messages
Battery Voltage and Charging 5-29
Brake System 5-29
Compass 5-30
Door Ajar 5-30
Engine Cooling System 5-30
Engine Oil 5-31
Engine Power 5-32
Fuel System 5-32
Messages (cont'd)
Key and Lock 5-32
Lamp 5-32
Object Detection System 5-33
Ride Control System 5-33
Security 5-33
Service Vehicle 5-33
Starting the Vehicle 5-34
Tire 5-34
Transmission 5-35
Vehicle 5-29
Vehicle Reminder 5-35
Washer Fluid 5-35
Window 5-35
Mirrors
Automatic Dimming Rearview 2-18
Convex 2-17
Heated 2-18
Manual Rearview 2-18
Power 2-17
Tilt in Reverse 2-18
Monitor System, Tire Pressure 10-54
Multi-band Antenna 7-14

N

Navigation
OnStar® 14-2
Net, Convenience 4-3
New Vehicle Break-In 9-15

O

Object Detection System
Messages 5-33
Odometer 5-11
Trip 5-11
Off-Road
Recovery 9-5
Oil
Engine 10-11
Engine Oil Life System 10-13
Messages 5-31
Pressure Light 5-23
Older Children, Restraints 3-34
Online Owner Center 13-6
OnStar®
System, In Brief 1-25
OnStar® Additional
Information 14-5
OnStar® Connections 14-4
OnStar® Diagnostics 14-5
OnStar® Emergency 14-2
OnStar® Navigation 14-2
OnStar® Overview 14-1
OnStar® Security 14-2
Operation, Infotainment
System 7-5
Ordering
Service Publications 13-17
Outlets
Power 5-6
Overheating, Engine 10-20
Overview, Infotainment
System 7-2

P

Park
Shifting Into 9-23
Shifting Out of 9-24
Parking
Assist, Ultrasonic 9-40
Brake 9-30
Brake and P (Park)
Mechanism Check 10-27
Over Things That Burn 9-25
Passenger Airbag Status
Indicator 5-14
Passenger Compartment Air
Filter 8-8
Passenger Sensing System ... 3-27
Perchlorate Materials
Requirements, California 10-3
Personalization
Vehicle 5-36
Phone
Bluetooth 7-22, 7-23, 7-27
Power
Door Locks 2-11
Mirrors 2-17
Outlets 5-6
Retained Accessory (RAP) ...9-23
Seat Adjustment 3-4
Windows 2-19
Pregnancy, Using Safety
Belts 3-18
Privacy
Radio Frequency
Identification (RFID) 13-21

Program
Courtesy Transportation 13-13
Proposition 65 Warning,
California 10-3

R

Racing or Other Competitive
Driving 9-6
Radio Frequency
Identification (RFID) 13-21
Statement 13-21
Radios
AM-FM Radio 7-9
Reception 7-13
Satellite 7-11
Reading Lamps 6-6
Rear Seat Armrest 3-11
Rear Seats 3-9
Rear Vision Camera (RVC) 9-42
Rearview Mirrors 2-18
Automatic Dimming 2-18
Reclining Seatbacks 3-4
Recommended
Fuel 9-47
Recommended Fluids and
Lubricants 11-12
Records
Maintenance 11-14
Recreational Vehicle
Towing 10-95
Reimbursement Program,
GM Mobility 13-7
Remote Keyless Entry (RKE)
System 2-3
Remote Vehicle Start 2-8
Replacement Bulbs 10-36
Replacement Parts
Airbags 3-33
Maintenance 11-13
Replacing Airbag System 3-33
Replacing LATCH System
Parts after a Crash 3-49
Replacing Safety Belt
System Parts after a Crash ... 3-20
Reporting Safety Defects
Canadian Government 13-19
General Motors 13-19
U.S. Government 13-18
Restraints
Where to Put 3-40
Retained Accessory
Power (RAP) 9-23
Reverse Tilt Mirrors 2-18
Ride Control Systems
Messages 5-33
Roads
Driving, Wet 9-6
Roadside Assistance
Program 13-7, 13-11
Roof
Sunroof 2-21
Rotation, Tires 10-59
Routing, Engine Drive Belt 12-4
Running the Vehicle While
Parked 9-26

S

Safety Belts 3-11
Care 3-19
Extender 3-19
How to Wear Safety Belts
Properly 3-12
Lap-Shoulder Belt 3-13
Reminders 5-13
Replacing after a Crash 3-20
Use During Pregnancy 3-18

Safety Defects Reporting
Canadian Government 13-19
General Motors 13-19
U.S. Government 13-18
Safety Locks 2-12
Safety System Check 3-19
Satellite Radio 7-11
Scheduling Appointments 13-13
Sealant Kit, Tire 10-68, 10-76
Seats
Adjustment, Front 3-3
Head Restraints 3-2
Heated Front 3-8
Lumbar Adjustment, Front 3-4
Memory 3-6
Power Adjustment, Front 3-4
Rear 3-9
Reclining Seatbacks 3-4
Securing Child
Restraints 3-50, 3-52
Security
Light 5-24
Messages 5-33
OnStar® 14-2
Vehicle 2-15
Vehicle Alarm 2-15
Service 8-9
Accessories and
Modifications 10-3
Doing Your Own Work 10-4
Engine Soon Light 5-15
Maintenance Records 11-14
Maintenance, General
Information 11-1
Parts Identification Label 12-1
Publications Ordering
Information 13-17
Scheduling Appointments ... 13-13
Vehicle Messages 5-33
Service Electric Parking
Brake Light 5-19
Servicing the Airbag 3-31
Shift Lock Control Function
Check, Automatic
Transmission 10-26
Shifting
Into Park 9-23
Out of Park 9-24
Signals, Turn and
Lane-Change 6-4
Spare Tire
Compact 10-90
Specifications and
Capacities 12-2
Speedometer 5-11
StabiliTrak
OFF Light 5-21
System 9-34
Start Assist, Hills 9-33
Start Vehicle, Remote 2-8
Starter Switch Check 10-26
Starting the Engine 9-19
Starting the Vehicle
Messsages 5-34
Steering 9-4
Wheel Adjustment 5-2
Wheel Controls 5-2
Stoplamps and Back-up Lamps
Bulb Replacement ... 10-33, 10-34
Storage Areas
Center Console 4-3
Convenience Net 4-3
Glove Box 4-1
Instrument Panel 4-1
Sunglasses 4-2
Storing the Tire Sealant
and Compressor Kit 10-83
Stuck Vehicle 9-9

Sun Visors 2-21
Sunglass Storage 4-2
Sunroof 2-21
Symbols iv
System
Forward Collision
Alert (FCA) 9-38
Infotainment 13-21, 7-1

T

Tachometer 5-11
Taillamps
Bulb Replacement . . . 10-33, 10-34
Text Telephone (TTY) Users . . . 13-6
Theft-Deterrent
Systems 2-15, 2-16
Immobilizer 2-15
Time 5-5
Tires
Buying New Tires 10-61
Chains 10-66
Changing 10-84
Compact Spare 10-90
Designations 10-48
Different Size 10-63
If a Tire Goes Flat 10-66
Tires (cont'd)
Inflation Monitor System 10-55
Inspection 10-59
Messages 5-34
Pressure 10-53
Pressure Light 5-22
Pressure Monitor System . . . 10-54
Rotation 10-59
Sealant and
Compressor Kit 10-68, 10-76
Sealant and Compressor
Kit, Storing 10-83
Sidewall Labeling 10-46
Terminology and
Definitions 10-49
Uniform Tire Quality
Grading 10-63
Wheel Alignment and Tire
Balance 10-65
Wheel Replacement 10-65
When It Is Time for New
Tires 10-60
Winter 10-46
Towing
Driving Characteristics 9-53
Equipment 9-57
General Information 9-52
Towing (cont'd)
Recreational Vehicle 10-95
Trailer 9-56, 9-57
Vehicle 10-95
Traction
Control System (TCS) 9-33
Control System (TCS)/
StabiliTrak® Light 5-21
Off Light 5-20
Trailer
Towing 9-56, 9-57
Transmission
Automatic 9-27
Fluid, Automatic 10-14
Messages 5-35
Transportation Program,
Courtesy 13-13
Trip Odometer 5-11
Trunk 2-13
Turn and Lane-Change
Signals 6-4
Turn Signal
Bulb Replacement . . . 10-33, 10-34

U

Ultrasonic Parking Assist 9-40
Uniform Tire Quality
Grading 10-63
Universal Remote System 5-41
Operation 5-44
Programming 5-41
Using This Manual iv

V

Vehicle
Alarm System 2-15
Canadian Owners iii
Control 9-3
Identification
Number (VIN) 12-1
Load Limits 9-10
Messages 5-29
Personalization 5-36
Reminder Messages 5-35
Remote Start 2-8
Security 2-15
Towing 10-95
Vehicle Ahead Indicator 5-20
Vehicle Care
Storing the Tire Sealant
and Compressor Kit 10-83
Tire Pressure 10-52
Ventilation, Air 8-7
Visors 2-21
Voltage Devices and
Wiring 10-37

W

Warning
Brake System Light 5-18
Warning Lights, Gauges, and
Indicators 5-8
Warnings iv
Cautions and Danger iv
Hazard Flashers 6-4
Washer Fluid 10-22
Messages 5-35
Wheels
Alignment and Tire
Balance 10-65
Different Size 10-63
Replacement 10-65
When It Is Time for New
Tires 10-60
Where to Put the Restraint 3-40
Windows 2-19
Messages 5-35
Power 2-19
Windshield
Wiper/Washer 5-3
Winter
Driving 9-8
Winter Tires 10-46
Wiper Blade Replacement 10-27
Wiring, High Voltage
Devices 10-37