2014 Engine

Engine Controls/Fuel - 2.4L (LEA, LUK) - Description and Operation - Regal

DESCRIPTION AND OPERATION

ENGINE CONTROL MODULE DESCRIPTION

The Engine Control Module (ECM) interacts with many emission related components and systems, and monitors emission related components and systems for deterioration. OBD II diagnostics monitor the system performance and a diagnostic trouble code (DTC) sets if the system performance degrades. The ECM is part of a network and communicates with various other vehicle control modules.

Malfunction indicator lamp (MIL) operation and DTC storage are dictated by the DTC type. A DTC is ranked as a Type A or Type B if the DTC is emissions related. Type C is a non-emissions related DTC.

The ECM is the control center of the engine controls system. Review the components and wiring diagrams in order to determine which systems are controlled by the ECM.

The ECM constantly monitors the information from various sensors and other inputs, and controls the systems that affect engine performance and emissions. The ECM also performs diagnostic tests on various parts of the system and can turn on the MIL when it recognizes an operational problem that affects emissions. When the ECM detects a malfunction, the ECM stores a DTC. The condition area is identified by the particular DTC that is set. This aids the technician in making repairs.

ECM Function

The ECM can supply 5 V or 12 V to various sensors or switches. This is done through pull-up resistors to regulated power supplies within the ECM. In some cases, even an ordinary shop voltmeter will not give an accurate reading due to low input resistance. Therefore, a digital multimeter (DMM) with at least 10 megaohms input impedance is required in order to ensure accurate voltage readings.

The ECM controls the output circuits by controlling the ground or the power feed circuit through transistors or a device called an output driver module.

EEPROM

The electronically erasable programmable read only memory (EEPROM) is an integral part of the ECM. The EEPROM contains program and calibration information that the ECM needs in order to control engine operation.

Special equipment, as well as the correct program and calibration for the vehicle, are required in order to reprogram the ECM.

Data Link Connector (DLC)

The data link connector (DLC) provides serial data communication for ECM diagnosis. This connector allows the technician to use a scan tool in order to monitor various serial data parameters, and display DTC information. The DLC is located inside the driver's compartment, underneath the instrument panel.

Malfunction Indicator Lamp (MIL)

The malfunction indicator lamp (MIL) is inside the instrument panel cluster (IPC). The MIL is controlled by the ECM and illuminates when the ECM detects a condition that affects vehicle emissions.

ECM Service Precautions

The ECM, by design, can withstand normal current draws that are associated with vehicle operations. However, care must be used in order to avoid overloading any of these circuits. When testing for opens or shorts, do not ground or apply voltage to any of the ECM circuits unless the diagnostic procedure instructs you to do so. These circuits should only be tested with a DMM unless the diagnostic procedure instructs otherwise.

Emissions Diagnosis For State I/M Programs

This OBD II equipped vehicle is designed to diagnose any conditions that could lead to excessive levels of the following emissions:

- Hydrocarbons (HC)
- Carbon monoxide (CO)
- Oxides of nitrogen (NOx)
- Evaporative emission (EVAP) system losses

Should this vehicle's on-board diagnostic system (ECM) detect a condition that could result in excessive emissions, the ECM turns ON the MIL and stores a DTC that is associated with the condition.

Aftermarket (Add-On) Electrical And Vacuum Equipment

CAUTION: Do not attach add-on vacuum operated equipment to this vehicle. The use of add-on vacuum equipment may result in damage to vehicle components or systems.

CAUTION: Connect any add-on electrically operated equipment to the vehicle's electrical system at the 12 V battery (power and ground) in order to prevent damage to the vehicle.

Aftermarket, add-on, electrical and vacuum equipment is defined as any equipment installed on a vehicle after leaving the factory that connects to the vehicle's electrical or vacuum systems. No allowances have been made in the vehicle design for this type of equipment.

Add-on electrical equipment, even when installed to these strict guidelines, may still cause the powertrain system to malfunction. This may also include equipment not connected to the vehicle electrical system, such as portable telephones and radios. Therefore, the first step in diagnosing any powertrain condition is to eliminate all of the aftermarket electrical equipment from the vehicle. After this is done, if the problem still exists, the problem may be diagnosed in the normal manner.

Electrostatic Discharge (ESD) Damage

NOTE: In order to prevent possible electrostatic discharge damage to the ECM, DO NOT touch the connector pins on the ECM.

The electronic components that are used in the control systems are often designed to carry very low voltage. These electronic components are susceptible to damage caused by electrostatic discharge. Less than 100 V of static electricity can cause damage to some electronic components. By comparison, it takes as much as 4,000 V for a person to even feel a static discharge.

There are several ways for a person to become statically charged. The most common methods of charging are by friction and by induction. An example of charging by friction is a person sliding across a car seat.

Charging by induction occurs when a person with well insulated shoes stands near a highly charged object and momentarily touches ground. Charges of the same polarity are drained off leaving the person highly charged with the opposite polarity. Static charges can cause damage, therefore, it is important to use care when handling and testing electronic components.

Emissions Control Information Label

The underhood Vehicle Emissions Control Information Label contains important emission specifications. This identifies the year, the displacement of the engine in liters, and the class of the vehicle.

This label is located in the engine compartment of every General Motors vehicle. If the label has been removed, it can be ordered from GM service parts operations (GMSPO).

THROTTLE ACTUATOR CONTROL (TAC) SYSTEM DESCRIPTION

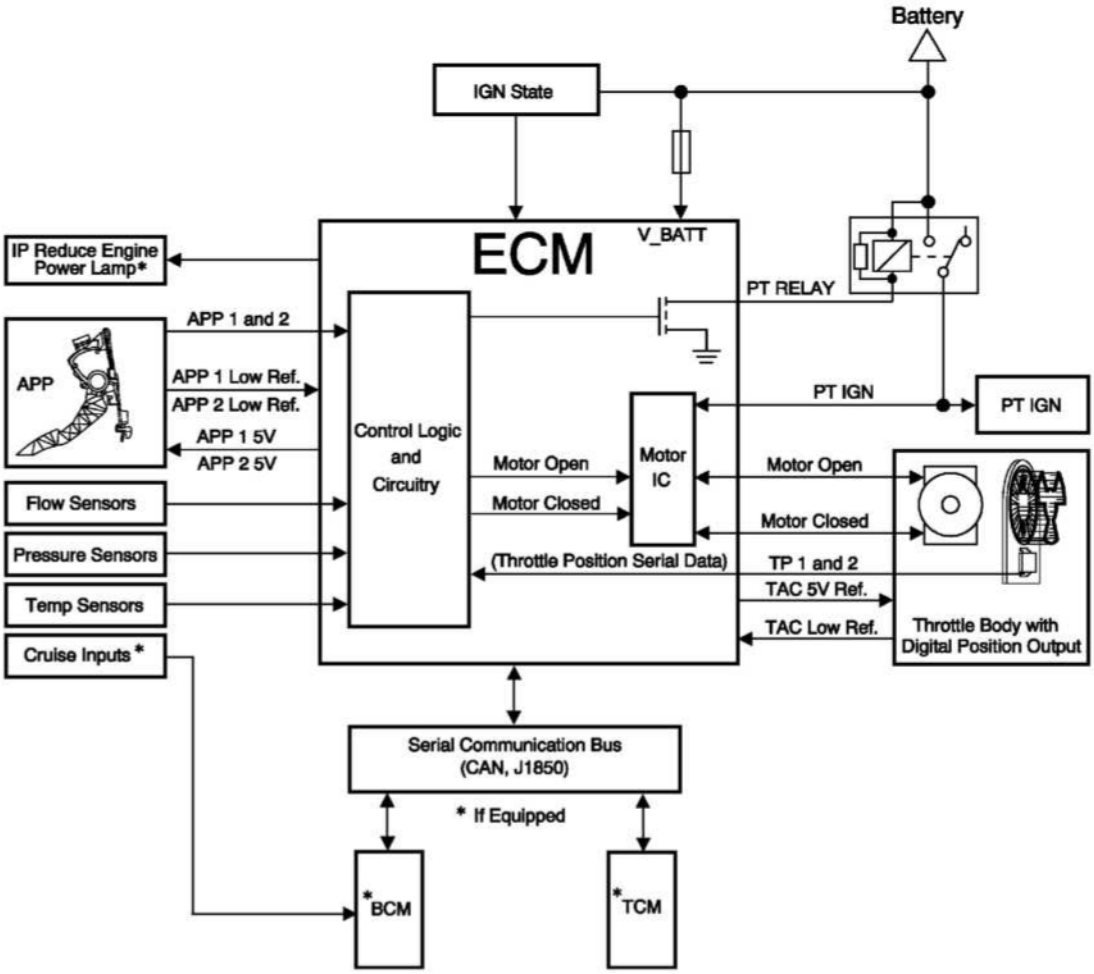

Fig. 1: Throttle Actuator Control (TAC) System Diagram
Courtesy of GENERAL MOTORS COMPANY

The engine control module (ECM) is the control center for the throttle actuator control (TAC) system. The ECM determines the driver's intent based on input from the accelerator pedal position sensors, then calculates the appropriate throttle response based on the throttle position sensors. The ECM achieves throttle positioning by providing a pulse width modulated voltage to the throttle actuator motor. The throttle blade is spring loaded in both directions, and the default position is slightly open.

Modes Of Operation

Normal Mode

During the operation of the TAC system, several modes, or functions, are considered normal. The following modes may be entered during normal operations:

- Minimum pedal value-At key-up, the ECM updates the learned minimum pedal value.
- Minimum throttle position values-At key-up, the ECM updates the learned minimum throttle position value. In order to learn the minimum throttle position value, the throttle blade is moved to the Closed position.
- Ice break mode-If the throttle blade is not able to reach a predetermined minimum throttle position, the ice break mode is entered. During the ice break mode, the ECM commands the maximum pulse width several times to the throttle actuator motor in the closing direction.
- Battery saver mode-After a predetermined time without engine speed, the ECM commands the battery saver mode. During the battery saver mode, the TAC module removes the voltage from the motor control circuits, which removes the current draw used to maintain the idle position and allows the throttle to return to the spring loaded default position.

Reduced Engine Power Mode

When the ECM detects a condition with the TAC system, the ECM may enter a reduced engine power mode. Reduced engine power may cause one or more of the following conditions:

- Acceleration limiting-The ECM will continue to use the accelerator pedal for throttle control, however, the vehicle acceleration is limited.
- Limited throttle mode-The ECM will continue to use the accelerator pedal for throttle control, however, the maximum throttle opening is limited.
- Throttle default mode-The ECM will turn OFF the throttle actuator motor, and the throttle will return to the spring loaded default position.
- Forced idle mode-The ECM will perform the following actions:
  - Limit engine speed to the idle position
  - Ignore the accelerator pedal input.
- Engine shutdown mode-The ECM will disable fuel and de-energize the throttle actuator.

CAMSHAFT ACTUATOR SYSTEM DESCRIPTION

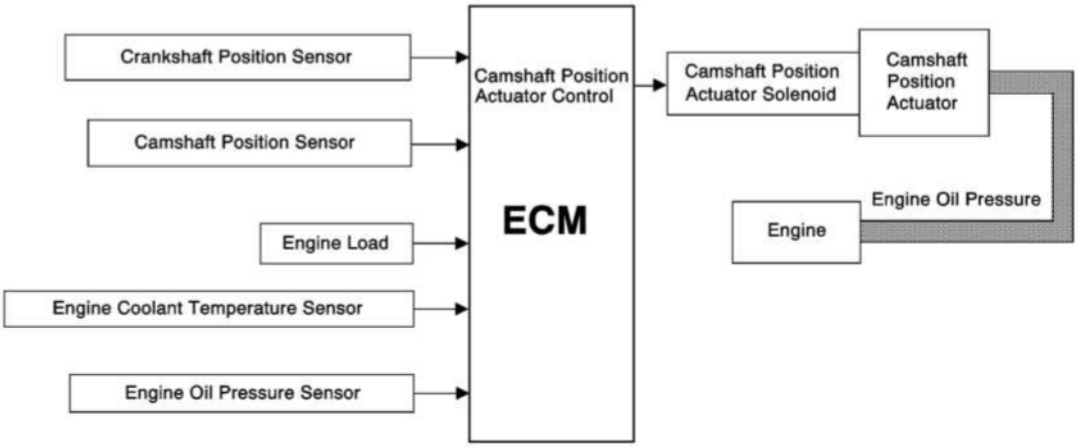

Fig. 2: Camshaft Actuator System Description
Courtesy of GENERAL MOTORS COMPANY

Camshaft Position (CMP) Actuator System

The camshaft position (CMP) actuator system is an electro-hydraulic operated device used for a variety of engine performance and operational enhancements. These enhancements include lower emission output through exhaust gas dilution of the intake charge in the combustion chamber, a broader engine torque range, and improved fuel economy. The CMP actuator system accomplishes this by changing the angle or timing of the camshaft relative to the crankshaft position. The CMP actuator simply allows earlier or later intake and exhaust valve opening during the four stroke engine cycle. The CMP actuator cannot vary the duration of valve opening, or the valve lift.

During engine Off, engine idling conditions, and engine shutdown, the camshaft actuator is held in the Park position. Internal to the CMP actuator assembly is a return spring and a locking pin. During non-phasing modes of the camshaft, the return spring rotates the camshaft back to the Park position, and the locking pin retains the CMP actuator sprocket to the camshaft.

CMP Actuator System Operation

The CMP actuator system is controlled by the engine control module (ECM). The ECM sends a signal to a CMP actuator solenoid in order to control the amount of engine oil flow to a Cam Actuator passage. The pressurized engine oil is sent to unseat the locking pin, and to the vane and rotor assembly of the CMP actuator. There are 2 different passages for oil to flow through, a passage for cam advance and a passage for cam retard. The Cam Actuator is attached to a camshaft and is hydraulically operated in order to change the angle of the camshaft relative to crankshaft position (CKP). Engine oil pressure (EOP), viscosity, temperature and engine oil level can have an adverse affect on Cam Actuator performance.

FUEL SYSTEM DESCRIPTION

Fuel System Overview

The fuel system is an electronic returnless on-demand design. The returnless fuel system reduces the internal temperature of the fuel tank by not returning hot fuel from the engine to the fuel tank. Reducing the internal temperature of the fuel tank results in lower evaporative emissions.

An electric turbine style fuel pump attaches to the fuel tank fuel pump module inside the fuel tank. The fuel pump supplies fuel through the fuel feed pipe to the high pressure fuel pump. The high pressure fuel pump supplies fuel to a variable-pressure fuel rail. Fuel enters the combustion chamber through precision multi-hole fuel injectors. The high pressure fuel pump, fuel rail pressure, fuel injection timing, and injection duration are controlled by the engine control module (ECM).

Electronic Returnless Fuel System

The electronic returnless fuel system is a microprocessor controlled fuel delivery system which transports fuel from the tank to the fuel rail. It functions as an electronic replacement for a traditional, mechanical fuel pressure regulator. The pressure relief regulator valve within the fuel tank provides an added measure of over-pressure protection. Desired fuel pressure is commanded by the engine control module (ECM), and transmitted to the chassis control module via a GMLAN serial data message. A fuel pressure sensor located on the fuel feed pipe provides the feedback the chassis control module requires for Closed Loop fuel pressure control.

Chassis Control Module

The chassis control module is a serviceable GMLAN module. The chassis control module receives the desired fuel pressure message from the engine control module (ECM) and controls the fuel pump located within the fuel tank to achieve the desired fuel pressure. The chassis control module sends a 25 kHz PWM signal to the fuel pump, and pump speed is changed by varying the duty cycle of this signal. Maximum current supplied to the fuel pump is 15 amps. A fuel pressure sensor located on the fuel feed pipe provides fuel pressure feedback to the chassis control module.

Fuel Pressure Sensor

The fuel pressure sensor is a serviceable 5 V, 3-pin device. It is located on the fuel feed pipe forward of the fuel tank, and receives power and ground from the chassis control module through a vehicle wiring harness. The sensor provides a fuel pressure signal to the chassis control module, which is used to provide Closed Loop fuel pressure control.

Fuel Tank

The fuel tank stores the fuel supply. The fuel tank is located in the rear of the vehicle. The fuel tank is held in place by 2 metal straps that attach to the underbody of the vehicle. The fuel tank is molded from high-density polyethylene.

Fuel Fill Pipe

The fuel fill pipe has a built-in restrictor in order to prevent refueling with leaded fuel.

Fuel Filler Cap

The fuel fill pipe has a tethered fuel filler cap. A torque-limiting device prevents the cap from being over-

tightened. To install the cap, turn the cap clockwise until you hear audible clicks. This indicates that the cap is correctly torqued and fully seated.

Fuel Tank Fuel Pump Module

The electric turbine style fuel pump attaches to the fuel tank fuel pump module inside the fuel tank and supplies fuel through the fuel feed pipe to the high pressure fuel pump. The fuel tank fuel pump module contains a reverse flow check valve. The check valve maintains fuel pressure in the fuel feed pipe in order to prevent long cranking times.

The fuel tank fuel pump module consists of the following major components:

- The fuel level sensor
- The fuel pump and reservoir assembly
- The fuel filter
- The pressure relief regulator valve

Fuel Level Sensor

The fuel level sensor consists of a float, a wire float arm, and a ceramic resistor card. The position of the float arm indicates the fuel level. The fuel level sensor contains a variable resistor which changes resistance in correspondence with the position of the float arm.

Fuel Pump

The fuel pump is mounted in the fuel tank fuel pump module reservoir. The fuel pump is an electric turbine style pump which pumps fuel to the high pressure fuel pump at a pressure that is based on feedback from the fuel pressure sensor. The fuel pump delivers a constant flow of fuel even during low fuel conditions and aggressive vehicle maneuvers. The fuel pump flex pipe acts to dampen the fuel pulses and noise generated by the fuel pump.

Pressure Relief Regulator Valve

The pressure relief regulator valve replaces the typical fuel pressure regulator used on a mechanical returnless fuel system. The pressure relief regulator valve is closed during normal vehicle operation. The pressure relief regulator valve is used to vent pressure during hot soaks and also functions as a fuel pressure regulator in the event of the chassis control module defaulting to 100 percent pulse width modulation (PWM) of the fuel pump. Due to variation in the fuel system pressures, the opening pressure for the pressure relief regulator valve is set higher than the pressure that is used on a mechanical returnless fuel system pressure regulator.

Nylon Fuel Pipes

WARNING: In order to reduce the risk of fire and personal injury observe the following items:

- **Replace all nylon fuel pipes that are nicked, scratched or damaged during installation, do not attempt to repair the sections of the nylon fuel pipes**
- **Do not hammer directly on the fuel harness body clips when**

installing new fuel pipes. Damage to the nylon pipes may result in a fuel leak.

- **Always cover nylon vapor pipes with a wet towel before using a torch near them. Also, never expose the vehicle to temperatures higher than 115°C (239°F) for more than one hour, or more than 90°C (194°F) for any extended period.**
- **Apply a few drops of clean engine oil to the male pipe ends before connecting fuel pipe fittings. This will ensure proper reconnection and prevent a possible fuel leak. (During normal operation, the O-rings located in the female connector will swell and may prevent proper reconnection if not lubricated.)**

Nylon pipes are constructed to withstand maximum fuel system pressure, exposure to fuel additives, and changes in temperature.

Heat resistant rubber hose or corrugated plastic conduit protect the sections of the pipes that are exposed to chafing, high temperature, or vibration.

Nylon fuel pipes are somewhat flexible and can be formed around gradual turns under the vehicle. However, if nylon fuel pipes are forced into sharp bends, the pipes may kink and restrict the fuel flow. Also, once exposed to fuel, nylon pipes may become stiffer and are more likely to kink if bent too far. Take special care when working on a vehicle with nylon fuel pipes.

Quick-Connect Fittings

Quick-connect fittings provide a simplified means of installing and connecting fuel system components. The fittings consist of a unique female connector and a compatible male pipe end. O-rings, located inside the female connector, provide the fuel seal. Integral locking tabs inside the female connector hold the fittings together.

High Pressure Fuel Pump

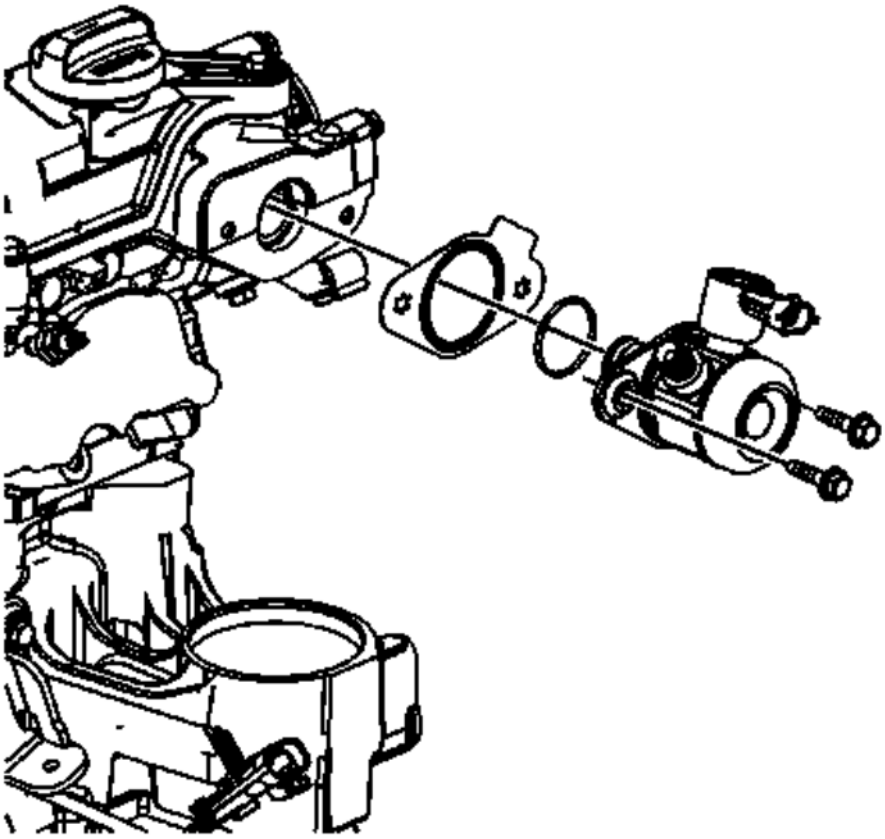

Fig. 3: High Pressure Fuel Pump & Bolts
Courtesy of GENERAL MOTORS COMPANY

The high fuel pressure necessary for direct injection is supplied by the high pressure fuel pump. The pump is mounted on the rear of the engine and is driven by a three-lobe cam on the camshaft. This pump also regulates the fuel pressure using an actuator in the form of an internal solenoid-controlled valve. In order to keep the engine running efficiently under all operating conditions, the engine control module (ECM) requests pressure ranging from 2 to 15 MPa (290 to 2176 psi), depending on engine speed and load. Output drivers in the ECM provide the pump control circuit with a 12 V pulse-width modulated (PWM) signal, which regulates fuel pressure by closing and opening the control valve at specific times during pump strokes. This effectively regulates the portion of each pump stroke that is delivered to the fuel rail. When the control solenoid is NOT powered, the pump operates at maximum flow rate. In the event of pump control failure, the high pressure system is protected by a relief valve in the pump.

Fuel Rail Assembly

The fuel rail assembly attaches to the cylinder head and distributes the high pressure fuel to the fuel injectors. The fuel rail assembly consists of the following components:

- The direct fuel injectors
- The fuel rail pressure sensor

Fuel Injectors

The fuel injection system is a high pressure, direct injection, returnless on-demand design. The fuel injectors

are mounted in the cylinder head beneath the intake ports and spray fuel directly into the combustion chamber. Direct injection requires high fuel pressure due to the fuel injector's location in the combustion chamber. Fuel pressure must be higher than compression pressure requiring a high pressure fuel pump. The fuel injectors also require more electrical power due to the high fuel pressure. The ECM supplies a high voltage supply circuit and a high voltage control circuit for each fuel injector. The injector high voltage supply circuit and the high voltage control circuit are both controlled by the ECM. The ECM energizes each fuel injector by grounding the control circuit. The ECM controls each fuel injector with 65 V. This is controlled by a boost capacitor in the ECM. During the 65 V boost phase, the capacitor is discharged through an injector, allowing for initial injector opening. The injector is then held open with 12 V.

The fuel injector assembly is an inside opening electrical magnetic injector. The injector has six precision machined holes that generate a cone shaped oval spray pattern. The fuel injector has a slim extended tip in order to allow a sufficient cooling jacket in the cylinder head.

Fuel Injection Fuel Rail Fuel Pressure Sensor

The fuel rail pressure sensor detects fuel pressure within the fuel rail. The engine control module (ECM) provides a 5 V reference voltage on the 5 V reference circuit and ground on the reference ground circuit. The ECM receives a varying signal voltage on the signal circuit. The ECM monitors the voltage on the fuel rail pressure sensor circuits. When the fuel pressure is high, the signal voltage is high. When the fuel pressure is low, the signal voltage is low.

Fuel Metering Modes of Operation

The ECM monitors voltages from several sensors in order to determine how much fuel to give the engine. The ECM controls the amount of fuel delivered to the engine by changing the fuel injector pulse width. The fuel is delivered under one of several modes.

Starting Mode

The ECM supplies voltage to the chassis control module when the ECM detects that the ignition is ON. The voltage from the ECM to the chassis control module remains active for 2 s, unless the engine is in Crank or Run. While this voltage is being received, the chassis control module closes the ground switch of the fuel tank fuel pump module and also supplies a varying voltage to the fuel tank fuel pump module in order to maintain the desired fuel line pressure. The ECM calculates the air/fuel ratio based on inputs from the engine coolant temperature (ECT), manifold absolute pressure (MAP), mass air flow (MAF), and throttle position sensors. The system stays in starting mode until the engine speed reaches a predetermined RPM.

Clear Flood Mode

If the engine floods, the engine can be cleared by pressing the accelerator pedal down to the floor and then cranking the engine. When the throttle position sensor is at wide open throttle (WOT), the ECM reduces the fuel injector pulse width in order to increase the air to fuel ratio. The ECM holds this injector rate as long as the throttle stays wide open and the engine speed is below a predetermined RPM. If the throttle is not held wide open, the ECM returns to the starting mode.

Run Mode

The run mode has 2 conditions called Open Loop and Closed Loop. When the engine is first started and the engine speed is above a predetermined RPM, the system begins Open Loop operation. The ECM ignores the signal from the heated oxygen sensor (HO2S). The ECM calculates the air/fuel ratio based on inputs from

the engine coolant temperature (ECT), manifold absolute pressure (MAP), mass air flow (MAF), and throttle position sensors. The system stays in Open Loop until meeting the following conditions:

- The HO2S has varying voltage output, showing that the HO2S is hot enough to operate properly.
- The ECT sensor is above a specified temperature.
- A specific amount of time has elapsed after starting the engine.

Specific values for the above conditions exist for each different engine, and are stored in the electrically erasable programmable read-only memory (EEPROM). The system begins Closed Loop operation after reaching these values. In Closed Loop, the ECM calculates the air/fuel ratio, injector ON time, based upon the signal from various sensors, but mainly from the HO2S. This allows the air/fuel ratio to stay very close to 14.7:1.

Acceleration Mode

When the driver pushes on the accelerator pedal, air flow into the cylinders increases rapidly. To prevent possible hesitation, the ECM increases the pulse width to the injectors to provide extra fuel during acceleration. This is also known as power enrichment. The ECM determines the amount of fuel required based upon throttle position, engine coolant temperature (ECT), manifold absolute pressure (MAP), mass air flow (MAF), and engine speed.

Deceleration Mode

When the driver releases the accelerator pedal, air flow into the engine is reduced. The ECM monitors the corresponding changes in throttle position, mass air flow (MAF), and manifold absolute pressure (MAP). The ECM shuts OFF fuel completely if the deceleration is very rapid, or for long periods, such as long, closed-throttle coast-down. The fuel shuts OFF in order to prevent damage to the catalytic converters.

Battery Voltage Correction Mode

When the battery voltage is low, the ECM compensates for the weak spark delivered by the ignition system in the following ways:

- Increasing the amount of fuel delivered
- Increasing the idle RPM
- Increasing the ignition dwell time

Fuel Cutoff Mode

The ECM cuts OFF fuel from the fuel injectors when the following conditions are met in order to protect the powertrain from damage and improve driveability:

- The ignition is OFF. This prevents engine run-on.
- The ignition is ON but there is no ignition reference signal. This prevents flooding or backfiring.
- The engine speed is too high, above red line.
- The vehicle speed is too high, above rated tire speed.
- During an extended, high speed, closed throttle coast down-This reduces emissions and increases engine braking.
- During extended deceleration, in order to prevent damage to the catalytic converters

Fuel Trim

The ECM controls the air/fuel metering system in order to provide the best possible combination of driveability, fuel economy, and emission control. The ECM monitors the heated oxygen sensor (HO2S) signal voltage while in Closed Loop and regulates the fuel delivery by adjusting the pulse width of the injectors based on this signal. The ideal fuel trim values are around 0 percent for both short and long term fuel trim. A positive fuel trim value indicates the ECM is adding fuel in order to compensate for a lean condition by increasing the pulse width. A negative fuel trim value indicates that the ECM is reducing the amount of fuel in order to compensate for a rich condition by decreasing the pulse width. A change made to the fuel delivery changes the long and short term fuel trim values. The short term fuel trim values change rapidly in response to the HO2S signal voltage. These changes fine tune the engine fueling. The long term fuel trim makes coarse adjustments to fueling in order to re-center and restore control to short term fuel trim. A scan tool can be used to monitor the short and long term fuel trim values. The long term fuel trim diagnostic is based on an average of several of the long term speed load learn cells. The ECM selects the cells based on the engine speed and engine load. If the ECM detects an excessively lean or rich condition, the ECM will set a fuel trim diagnostic trouble code (DTC).

EVAPORATIVE EMISSION CONTROL SYSTEM DESCRIPTION

Typical Evaporative Emission (EVAP) System Hose Routing Diagram

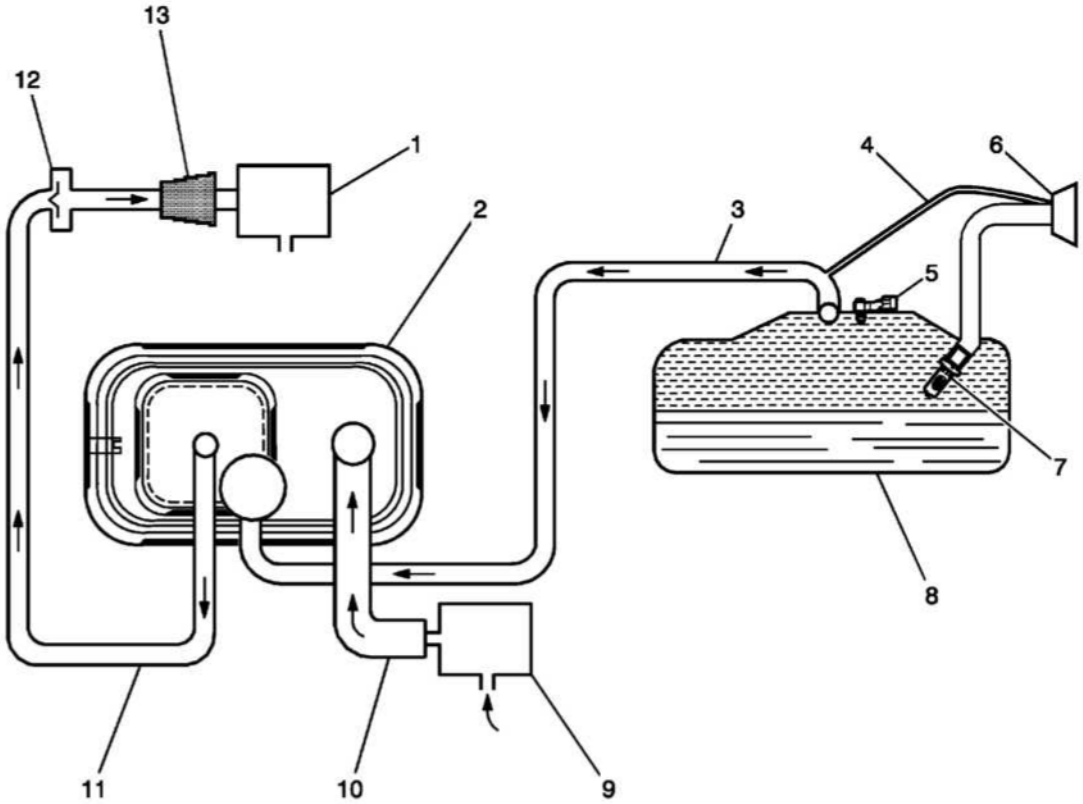

Fig. 4: Typical Evaporative Emission (EVAP) System Hose Routing Diagram

Courtesy of GENERAL MOTORS COMPANY

Callout	Component Name
1	Evaporative Emissions (EVAP) Purge Solenoid Valve
2	EVAP Canister
3	EVAP Vapor Tube
4	Vapor Recirculation Tube
5	Fuel Tank Pressure Sensor
6	Fuel Filler Cap (Some Vehicles May Have A Capless Design)
7	Fuel Fill Pipe Inlet Check Valve
8	Fuel Tank
9	EVAP Canister Vent Solenoid Valve
10	Vent hose
11	EVAP Purge Tube
12	Purge Tube Check Valve, Turbo-Charged Applications Only
13	EVAP Canister Purge Tube Connector

EVAP System Operation

The evaporative emission (EVAP) control system limits fuel vapors from escaping into the atmosphere. Fuel tank vapors are allowed to move from the fuel tank, due to pressure in the tank, through the EVAP vapor tube, into the EVAP canister. Carbon in the canister absorbs and stores the fuel vapors. Excess pressure is vented through the vent hose and EVAP vent solenoid valve to the atmosphere. The EVAP canister stores the fuel vapors until the engine is able to use them. At an appropriate time, the engine control module (ECM) will command the EVAP purge solenoid valve ON, allowing engine vacuum to be applied to the EVAP canister. With the normally open EVAP vent solenoid valve OFF, fresh air is drawn through the vent solenoid valve and the vent hose to the EVAP canister. Fresh air is drawn through the canister, pulling fuel vapors from the carbon. The air/fuel vapor mixture continues through the EVAP purge tube and EVAP purge solenoid valve into the intake manifold to be consumed during normal combustion. The ECM uses several tests to determine if the EVAP system is leaking or restricted.

Purge Solenoid Valve Leak Test

If the EVAP purge solenoid valve does not seal properly fuel vapors could enter the engine at an undesired time, causing driveability concerns. The ECM tests for this by commanding the EVAP purge solenoid valve OFF and the vent solenoid valve ON which seals the system. With the engine running, the ECM then monitors the fuel tank pressure (FTP) sensor for an increase in vacuum. The ECM will log a fault if a vacuum develops in the tank under these test conditions.

Large Leak Test

This diagnostic creates a vacuum condition in the EVAP system. When the enabling criteria has been met, the ECM commands the normally open EVAP vent solenoid valve closed and the EVAP purge solenoid valve open, creating a vacuum in the EVAP system. The ECM then monitors the FTP sensor voltage to verify that the system is able to reach a predetermined level of vacuum within a set amount of time. Failure to achieve the expected level of vacuum indicates the presence of a large leak in the EVAP system or a restriction in the purge path. The ECM will log a fault if it detects a weaker than expected vacuum level under these test conditions.

Canister Vent Restriction Test

If the EVAP vent system is restricted, fuel vapors will not be properly purged from the EVAP canister. The ECM tests this by commanding the EVAP purge solenoid valve ON while commanding the EVAP vent solenoid valve OFF, and then monitoring the FTP sensor for an increase in vacuum. If the vacuum increases more than the expected amount, in a set amount of time, a fault will be logged by the ECM.

Small Leak Test

The engine off natural vacuum diagnostic is the small-leak detection diagnostic for the EVAP system. The engine off natural vacuum diagnostic monitors the EVAP system pressure with the ignition OFF. Because of this, it may be normal for the ECM to remain active for up to 40 min after the ignition is turned OFF. This is important to remember when performing a parasitic draw test on vehicles equipped with engine off natural vacuum.

When the vehicle is driven, the temperature rises in the tank due to heat transfer from the exhaust system. After the vehicle is parked, the temperature in the tank continues to rise for a period of time, then starts to drop. The engine off natural vacuum diagnostic relies on this temperature change, and the corresponding pressure change in a sealed system, to determine if an EVAP system leak is present.

The engine off natural vacuum diagnostic is designed to detect leaks as small as 0.51 mm (0.020 in).

EVAP System Components

The EVAP system consists of the following components:

EVAP Purge Solenoid Valve

The EVAP purge solenoid valve controls the flow of vapors from the EVAP system to the intake manifold. The purge solenoid valve opens when commanded ON by the ECM. This normally closed valve is pulse width modulated (PWM) by the ECM to precisely control the flow of fuel vapor to the engine. The valve will also be opened during some portions of the EVAP testing when the engine is running, allowing engine vacuum to enter the EVAP system.

Purge Tube Check Valve

Turbocharged vehicles have a check valve in the purge tube between the EVAP purge solenoid valve and the EVAP canister to prevent pressurization of the EVAP system under boost conditions. Note that the presence of this one-way check valve prevents pressure testing the EVAP system for leaks at the EVAP canister purge tube connector.

EVAP Canister

The canister is filled with carbon pellets used to absorb and store fuel vapors. Fuel vapor is stored in the canister until the ECM determines that the vapor can be consumed in the normal combustion process.

Vapor Recirculation Tube

A vapor path between the fuel fill pipe and the vapor tube to the carbon canister is necessary for Vehicle Onboard Diagnostics to fully diagnose the EVAP system. It also accommodates service diagnostic procedures by allowing the entire EVAP system to be diagnosed from either end of the system.

Fuel Tank Pressure Sensor

The FTP sensor measures the difference between the pressure or vacuum in the fuel tank and outside air pressure. The ECM provides a 5 V reference and a ground to the FTP sensor. Depending on the vehicle, the sensor can be located in the vapor space on top of the fuel tank, in the vapor tube between the canister and the tank, or on the EVAP canister. The FTP sensor provides a signal voltage back to the ECM that can vary between 0.1-4.9 V. A high FTP sensor voltage indicates a low fuel tank pressure or vacuum. A low FTP sensor voltage indicates a high fuel tank pressure.

Fuel Fill Pipe Check Valve

The check valve on the fuel fill pipe is there to prevent spit-back during refueling.

EVAP Vent Solenoid Valve

The EVAP vent solenoid valve controls fresh airflow into the EVAP canister. The valve is normally open. The canister vent solenoid valve is closed only during EVAP system tests performed by the ECM.

Fuel Fill Cap

The fuel fill cap is equipped with a seal and a vacuum relief valve.

Capless Fuel Fill

Some vehicles may have a capless fuel fill design behind a locking fuel door. There is no fuel fill cap to remove. One just fully inserts the fuel nozzle into the fill neck, making sure it latches before refueling. Flapper valves close to seal this interface once the fill nozzle is removed.

ELECTRONIC IGNITION SYSTEM DESCRIPTION

The electronic ignition system produces and controls a high-energy secondary spark. This spark is used to ignite the compressed air/fuel mixture at precisely the correct time. This provides optimal performance, fuel economy, and control of exhaust emissions. This ignition system uses an individual coil for each cylinder. The ignition coils are mounted in the center of each camshaft cover with short integrated boots connecting the coils to the spark plugs. The driver modules within each ignition coil are commanded ON/OFF by the engine control module (ECM). The ECM primarily uses engine speed, the mass air flow (MAF) sensor signal, and position information from the crankshaft position and the camshaft position sensors. This controls the sequence, dwell, and timing of the spark. The electronic ignition system consists of the following components:

Crankshaft Position Sensor

The crankshaft position sensor works in conjunction with a reluctor wheel on the crankshaft (front mounted crankshaft position sensor) or a reluctor wheel that is part of the flywheel (rear mounted crankshaft position sensor). The engine control module (ECM) monitors the voltage frequency on the crankshaft position sensor signal circuit. As each reluctor wheel tooth rotates past the sensor, the sensor creates a digital ON/OFF pulse. This digital signal is processed by the ECM. This creates a signature pattern that enables the ECM to determine the crankshaft position. The ECM uses the signal to determine which pair of cylinders is approaching top dead center based on the crankshaft position signal alone. The camshaft position sensor signals are used in order to determine which of these 2 cylinders is on a firing stroke, and which is on the exhaust stroke. The ECM uses this to properly synchronize the ignition system, the fuel injectors, and the

knock control. This sensor is also used in order to detect misfire.

The ECM also has a dedicated replicated crankshaft position sensor signal output circuit that may be used as an input signal to other modules for monitoring engine RPM.

Camshaft Position Sensor

This engine uses a camshaft position sensor for each camshaft. The camshaft position sensor signals are a digital ON/OFF pulse and output 4 times per revolution of the camshaft. The camshaft position sensor does not directly affect the operation of the ignition system. The camshaft position sensor information is used by the engine control module (ECM) to determine the position of the camshaft relative to the crankshaft position. By monitoring the camshaft position and crankshaft position signals the ECM can accurately time the operation of the fuel injectors. The ECM supplies the camshaft position sensor with a 5 V reference circuit and a low reference circuit. The camshaft position sensor signals are an input to the ECM. These signals are also used to detect camshaft alignment with the crankshaft.

The ECM also has a dedicated replicated camshaft position sensor signal output circuit that may be used as an input signal to other modules for monitoring engine RPM.

Knock Sensor

The knock sensor system enables the control module to control the ignition timing for the best possible performance while protecting the engine from potentially damaging levels of detonation, also known as spark knock. The knock sensor system uses 1 or 2 flat response 2-wire sensors. The sensor uses piezo-electric crystal technology that produces an AC voltage signal of varying amplitude and frequency based on the engine vibration or noise level. The amplitude and frequency depend upon the level of knock that the knock sensor detects. The control module receives the knock sensor signal through the signal circuit. The knock sensor ground is supplied by the control module through the low reference circuit.

The control module learns a minimum noise level, or background noise, at idle from the knock sensor and uses calibrated values for the rest of the RPM range. The control module uses the minimum noise level to calculate a noise channel. A normal knock sensor signal will ride within the noise channel. As engine speed and load change, the noise channel upper and lower parameters will change to accommodate the normal knock sensor signal, keeping the signal within the channel. In order to determine which cylinders are knocking, the control module only uses knock sensor signal information when each cylinder is near top dead center (TDC) of the firing stroke. If knock is present, the signal will range outside of the noise channel.

If the control module has determined that knock is present, it will retard the ignition timing to attempt to eliminate the knock. The control module will always try to work back to a zero compensation level, or no spark retard. An abnormal knock sensor signal will stay outside of the noise channel or will not be present. Knock sensor diagnostics are calibrated to detect faults with the knock sensor circuitry inside the control module, the knock sensor wiring, or the knock sensor voltage output. Some diagnostics are also calibrated to detect constant noise from an outside influence such as a loose/damaged component or excessive engine mechanical noise.

Ignition Coils

Each ignition coil contains a solid state driver module as its primary element. The engine control module (ECM) signals the coil driver to initiate a firing event by applying ignition control (IC) circuit voltage for the appropriate amount of time otherwise known as dwell. When the voltage is removed the coil fires the spark plug.

Engine Control Module (ECM)

The engine control module (ECM) controls all ignition system functions and constantly corrects the spark timing. The ECM monitors information from various sensor inputs that may include the following components, if applicable:

- Throttle position sensor
- Engine coolant temperature (ECT) sensor
- Mass air flow (MAF) sensor
- Intake air temperature (IAT) sensor
- Vehicle speed sensor (VSS)
- Transmission gear position or range information sensors
- Engine knock sensors
- Ambient pressure sensor (BARO)

SECONDARY AIR INJECTION SYSTEM DESCRIPTION

The Secondary Air Injection System aids in the reduction of hydrocarbon exhaust emissions during a cold start. This occurs when the start-up engine coolant temperature (ECT) is between -10 to +56°C (14-133°F), the intake air temperature (IAT) is greater than -10°C (14°F) and it has been more than 60 minutes since the last engine start. The secondary air injection pump operates 5-60 s after start-up.

The engine control module (ECM) activates the secondary air injection system by simultaneously completing the ground paths for the secondary air injection pump relay and the secondary air injection solenoid (shutoff and check) valve relay. This action closes the relays' internal contacts. The pump and both valves are in turn energized. The pump turns ON and both valves open.

The secondary air injection pump sends pressurized filtered fresh air into the pipes/hoses, through the open valves and into the exhaust manifold(s). The extra air accelerates the catalyst operation, helping it to reach operating temperature faster. The secondary air injection pump remains ON for a short period of time after the valves are commanded OFF. When the pump is commanded OFF it will not run or be activated until the next vehicle cold start. When the secondary air injection system is inactive, the valves are closed to prevent air/exhaust flow in either direction.

The ECM monitors the secondary air injection system pressure by tracking voltage signals from the pressure sensors, which are integral to the solenoid (shutoff and check) valve assemblies.

The ECM utilizes a 3 phase diagnostic routine to test the secondary air injection system:

During phase 1, DTCs P0411, P2430 and P2435 run and both the secondary air injection pump and the solenoid (shutoff and check) valves are activated. Normal secondary air function occurs. Expected system pressure is 5-13 kPa (0.7-1.9 psi) above BARO.

During phase 2, DTCs P2430, P2435 and P2440 run and only the secondary air injection pump is activated. The valves are closed. Pressure sensor performance and valve deactivation are tested. Expected system pressure is 14-22 kPa (2.0-3.2 psi) above BARO.

During phase 3, DTC P2444 runs and neither the secondary air injection pump nor the valves are activated. Secondary air injection pump deactivation is tested. Expected system pressure equals BARO.

The secondary air injection system includes the following components:

- The secondary air injection pump-The electric secondary air injection pump supplies pressurized, filtered air to the secondary air injection solenoid (shutoff and check) valves. The secondary air injection pump is a turbine type pump that is permanently lubricated and requires no periodic maintenance.

NOTE: The secondary air injection solenoid valve and the pressure sensor are serviced as an assembly.

- The secondary air injection solenoid (shutoff and check) valve assemblies-The valve assemblies have direct current (DC) motor operated valves. When the valve motors are energized by the secondary air injection solenoid valve relay, the valves open, pressurized air from the secondary air injection pump flows through the valves and is directed into the exhaust manifold(s).
- The secondary air injection pressure sensors-The pressure sensors are integral to the secondary air injection solenoid valve assemblies. The sensors are 3-wire sensors that measure the secondary air injection system pressure at the inlets of the valve assemblies.
- The secondary air injection pump relay-The relay supplies high current and battery voltage to the secondary air injection pump. The ECM commands the relay ON by supplying a ground to the relay control circuit.
- The secondary air injection solenoid valve relay-The relay supplies high current and battery voltage to the secondary air injection solenoid valves. The ECM commands the relay ON by supplying a ground to the relay control circuit.
- The pipes and hoses-The secondary air injection pump inlet hose carries filtered air from the engine intake air cleaner to the secondary air injection pump inlet. The secondary air injection pump pipe carries the air from the pump outlet to the solenoid valves which in turn feed the exhaust manifold(s).

2014 Engine

Engine Controls/Fuel - 2.4L (LEA, LUK) - Diagnostic Information and Procedures - Regal

DIAGNOSTIC INFORMATION AND PROCEDURES

DTC P0010, P0013, OR P2088-P2091

Diagnostic Instructions

- Perform the **Diagnostic System Check - Vehicle** prior to using this diagnostic procedure.
- Review **Strategy Based Diagnosis** for an overview of the diagnostic approach.
- **Diagnostic Procedure Instructions** provides an overview of each diagnostic category.

DTC Descriptors

DTC P0010

Intake Camshaft Position Actuator Solenoid Valve Control Circuit

DTC P0013

Exhaust Camshaft Position Actuator Solenoid Valve Control Circuit

DTC P2088

Intake Camshaft Position Actuator Solenoid Control Circuit Low Voltage

DTC P2089

Intake Camshaft Position Actuator Solenoid Control Circuit High Voltage

DTC P2090

Exhaust Camshaft Position Actuator Solenoid Control Circuit Low Voltage

DTC P2091

Exhaust Camshaft Position Actuator Solenoid Control Circuit High Voltage

Diagnostic Fault Information

Circuit	Short to Ground	High Resistance	Open	Short to Voltage	Signal Performance
Camshaft Position Actuator Solenoid Valve High Control	P0010, P0013, P2088, P2090	P0010, P0013	P0010, P0013	P0010, P0013, P2089, P2091	P0011, P0014
Camshaft Position					

Actuator Solenoid Valve Low Reference	-	P0010, P0013	P0010, P0013	-	-

Circuit/System Description

The camshaft position actuator system enables the engine control module (ECM) to change the timing of the camshafts while the engine is operating. The camshaft position actuator solenoid valve signal from the ECM is pulse width modulated (PWM). The ECM controls the camshaft position actuator solenoid valve duty cycle by controlling the amount of solenoid valve On time. The camshaft position actuator solenoid valve controls the advance or the retard of each camshaft. The camshaft position actuator solenoid valve controls the oil flow that applies the pressure to advance or retard the camshafts.

The ECM controls the camshaft position actuator solenoid valve by supplying a 12 V pulse width modulated (PWM) signal. The ECM supplies a ground to the low reference circuit.

Conditions for Running the DTC

- The ignition voltage is greater than 11 V.
- The ECM has commanded the camshaft position actuator solenoid valve On.
- The DTCs run continuously once the above conditions are met.

Conditions for Setting the DTC

The ECM detects that the commanded state of the driver and the actual state of the control circuit do not match for greater than 5 s.

Action Taken When the DTC Sets

DTCs P0010, P0013 and P2088 - P2091 are Type B DTCs.

Conditions for Clearing the DTC

DTCs P0010, P0013 and P2088 - P2091 are Type B DTCs.

Diagnostic Aids

If the condition is intermittent, move the related harnesses and connectors, with the engine operating, while monitoring the scan tool Circuit Test Status parameters for the component. The Circuit Test Status parameters change from OK or Not Run to Malfunction if there is a condition with the circuit or a connection.

Reference Information

Schematic Reference

Engine Controls Schematics

Connector End View Reference

COMPONENT CONNECTOR END VIEWS - INDEX

Component View Reference

Powertrain Component Views

Description and Operation

Camshaft Actuator System Description

Electrical Information Reference

- **Circuit Testing**
- **Connector Repairs**
- **Testing for Intermittent Conditions and Poor Connections**
- **Wiring Repairs**

DTC Type Reference

Powertrain Diagnostic Trouble Code (DTC) Type Definitions

Scan Tool Reference

Control Module References for scan tool information

Circuit/System Verification

NOTE: If a crankshaft or camshaft position sensor DTC is set, the Camshaft Position Actuator output control will not function.

1. Ignition On.
2. Verify DTC P0335, P0336, P0340, or P0341 is not set.
   - **If any of the DTCs are set**

     If any of the DTCs are set, refer to **Diagnostic Trouble Code (DTC) List - Vehicle** for further diagnosis.

   - **If none of the DTCs are set**
3. Observe the appropriate control circuit status parameters listed below with a scan tool:
   - Exhaust/Intake Camshaft Position Actuator Solenoid Valve Control Circuit Open test status
   - Exhaust/Intake Camshaft Position Actuator Solenoid Valve Control Circuit High Voltage test status
   - Exhaust/Intake Camshaft Position Actuator Solenoid Valve Control Circuit Low Voltage test status
   - **If Malfunction is displayed**

     Refer to Circuit/System Testing.

   - **If Malfunction is not displayed**

4. Engine idling at normal operating temperature.
5. Verify the scan tool parameters listed below do not display Malfunction when commanding the appropriate scan tool Camshaft Position Actuator from 0-20° and back to 0° with a scan tool:
   - Camshaft Position Actuator Solenoid Valve Control Circuit Open test status
   - Camshaft Position Actuator Solenoid Valve Control Circuit High Voltage test status
   - Camshaft Position Actuator Solenoid Valve Control Circuit Low Voltage test status
   - **If Malfunction is displayed**

     Refer to Circuit/System Testing

   - **If Malfunction is not displayed**
6. Operate the vehicle within the Conditions for Running the DTC to verify the DTC does not reset. You may also operate the vehicle within the conditions that you observed from the Freeze Frame/Failure Records data.
7. Verify the DTC does not set.
   - **If the DTC sets**

     Refer to Circuit/System Testing.

   - **If the DTC does not set**
8. All OK.

Circuit/System Testing

1. Ignition Off and all vehicle systems Off, disconnect the harness connector at the appropriate Q6 Camshaft Position Actuator Solenoid Valve. It may take up to 2 minutes for all vehicle systems to power down.
2. Test for less than 5 ohms between the low reference circuit terminal B or 2 and ground.
   - **If 5 ohms or greater**
     1. Ignition Off, disconnect the harness connector at the K20 Engine Control Module.
     2. Test for less than 2 ohms in the low reference circuit end to end.
        - If 2 ohms or greater, repair the open/high resistance in the circuit
        - If less than 2 ohms, replace the K20 Engine Control Module
   - **If less than 5 ohms**
3. Ignition On.

NOTE: **A test lamp must be used for this test. The control circuit is pulled-up to a low current voltage, 1.5-3.5 V on the control circuit is normal.**

4. Verify that a test lamp does not illuminate between the control circuit terminal A or 1 and ground.
   - **If the test lamp illuminates**
     1. Ignition Off, disconnect the harness connector at the K20 Engine Control Module, ignition On.
     2. Test for less than 1 V between the control circuit and ground.
   - If 1 V or greater, repair the short to voltage on the circuit

- If less than 1 V, replace the K20 Engine Control Module.
- **If the test lamp does not illuminate**

5. Remove the test lamp.
6. Connect the DMM black lead to the control circuit terminal A or 1. Connect the DMM red lead to B+. Set the DMM on the diode setting. Command the CMP actuator solenoid On and Off with a scan tool. The DMM should transition from OL when commanded Off to less than 1 V when commanded On.
   - **If the circuit voltage does not correspond to the specified values**
     1. Ignition Off, disconnect the harness connector at the K20 Engine Control Module.
     2. Test for less than 2 ohms in the control circuit end to end.
        - If 2 ohms or greater, repair the open/high resistance or short to ground in the circuit
        - If less than 2 ohms, replace the K20 Engine Control Module.
   - **If the circuit voltage corresponds to the specified values**
7. Test or replace the Q6 Camshaft Position Actuator Solenoid Valve.

Component Testing

1. Ignition Off, disconnect the harness connector at the appropriate Q6 Camshaft Position Actuator Solenoid Valve.
2. Test for 8-13 ohms between the control terminal 1 and the low reference terminal 2.
   - **If not between 8-13 ohms**

     Replace the Q6 Camshaft Position Actuator Solenoid Valve.

   - **If between 8-13 ohms**
3. Test for infinite resistance between each terminal and the Q6 Camshaft Position Actuator Solenoid Valve housing.
   - **If not infinite resistance**

     Replace the Q6 Camshaft Position Actuator Solenoid Valve.

   - **If infinite resistance**
4. All OK.

Repair Instructions

Perform the **Diagnostic Repair Verification** after completing the repair.

- **Camshaft Position Intake Actuator Replacement**
- **Camshaft Position Exhaust Actuator Replacement**
- **Control Module References** for engine control module replacement, programming, and setup.

DTC P0011 OR P0014

Diagnostic Instructions

- Perform the **Diagnostic System Check - Vehicle** prior to using this diagnostic procedure.

- Review **Strategy Based Diagnosis** for an overview of the diagnostic approach.
- **Diagnostic Procedure Instructions** provides an overview of each diagnostic category.

DTC Descriptors

DTC P0011

Intake Camshaft Position System Performance

DTC P0014

Exhaust Camshaft Position System Performance

Diagnostic Fault Information

Circuit	Short to Ground	High Resistance	Open	Short to Voltage	Signal Performance
Camshaft Position Actuator Solenoid Valve High Control	P0010, P0013, P2088, P2090	P0010, P0013	P0010, P0013	P0010, P0013, P2089, P2091	P0011, P0014
Camshaft Position Actuator Solenoid Valve Low Reference	-	P0010, P0013	P0010, P0013	-	-

Circuit/System Description

The camshaft position actuator system enables the engine control module (ECM) to change the timing of the camshafts while the engine is operating. The camshaft position actuator solenoid signal from the ECM is pulse width modulated (PWM). The ECM controls the camshaft position actuator solenoid duty cycle by controlling the amount of solenoid On time. The camshaft position actuator solenoid controls the advance or the retard of each camshaft. The camshaft position actuator solenoid controls the oil flow that applies the pressure to advance or retard the camshafts.

Conditions for Running the DTC

- DTC P0010, P0013, P0016, P0017, P0335, P0336, P0340, P0341, P0365, or P0366 is not set.
- The ignition voltage is greater than 11 V.
- The engine is operating.
- The desire camshaft position is not changing greater than 4.5 degrees for at least 1 s.
- Both of the desired and actual camshaft position actuator values cannot be greater than 25 degrees or less than 5 degrees.
- DTCs P0011 and P0014 run continuously once the above conditions are met.

Conditions for Setting the DTC

The ECM detects the difference between the desired camshaft position angle and the actual camshaft position angle is greater than 6 degrees for greater 13.5 s.

Action Taken When the DTC Sets

- DTCs P0011 and P0014 are Type B DTCs.
- The Auto Stop and Auto Start function of the hybrid system is disabled.

Conditions for Clearing the DTC

DTCs P0011 and P0014 are Type B DTCs.

Diagnostic Aids

- The engine oil condition has a major impact on the camshaft actuator system.
- A low oil level condition may set this DTC. The engine may require an oil change. Inquire with the customer when the last oil change was performed. You may also monitor the scan tool Engine Oil Life Remaining parameter. Advise the customer an oil change may be required.
- Inspect the engine for any recent engine mechanical repairs. An incorrectly installed camshaft, camshaft actuator, or timing chain can cause this DTC to set.

Reference Information

Schematic Reference

Engine Controls Schematics

Connector End View Reference

COMPONENT CONNECTOR END VIEWS - INDEX

Component View Reference

Powertrain Component Views

Description and Operation

Camshaft Actuator System Description

Electrical Information Reference

- **Circuit Testing**
- **Connector Repairs**
- **Testing for Intermittent Conditions and Poor Connections**
- **Wiring Repairs**

DTC Type Reference

Powertrain Diagnostic Trouble Code (DTC) Type Definitions

Scan Tool Reference

Control Module References for scan tool information

Circuit/System Verification

NOTE:

- **The engine oil level and the oil pressure are critical to the correct operation of the camshaft position actuator system. Verify that the engine has the correct oil level and the correct oil pressure before continuing with this diagnostic.**
- **The engine oil condition has a major impact on the camshaft actuator system. Debris in the oil can interfere with the camshaft position actuator solenoid and the mechanical camshaft actuator operation. Inspect for dirty or degraded crankcase oil. The engine may require an oil change. Inquire with the customer when the last oil change was performed. You may also monitor the scan tool Engine Oil Life Remaining parameter. Advise the customer an oil change may be required.**

1. Ignition On.
2. Verify the engine has the correct oil level and pressure. Refer to **Oil Pressure Diagnosis and Testing** .
   - **If the oil level and the oil pressure are not correct**

     Repair as necessary

   - **If the oil level and the oil pressure are correct**

NOTE: **If a crankshaft or camshaft position sensor DTC is set, the scan tool Camshaft Position Actuator output control will not function.**

3. Verify that DTC P0010, P0013, P0016, P0017, P0335, P0336, P0340, P0341, P0365, or P0366 is not set.
   - **If any of the DTCs are set**

     Refer to **Diagnostic Trouble Code (DTC) List - Vehicle** for further diagnosis.

   - **If none of the DTCs are set**
4. Engine idling.
5. Verify the scan tool parameters are less than 2° in each of the commanded states when commanding the Camshaft Position Actuator from 0-20° and back to 0° with the scan tool.
   - Intake Camshaft Position Variance
   - Exhaust Camshaft Position Variance
   - **If 2° or greater**

     Refer to Circuit/System Testing.

   - **If less than 2°**
6. Verify that DTC P0011 or P0014 is not set.

- **If any of the DTCs are set**

  Refer to Circuit/System Testing.

- **If none of the DTCs set**

7. Operate the vehicle within the Conditions for Running the DTC. You may also operate the vehicle within the conditions that you observed from the Freeze Frame/Failure Records data.
8. Verify the DTC does not set.
   - **If the DTC sets**

     Refer to Circuit/System Testing.

   - **If the DTC does not set**
9. All OK.

Circuit/System Testing

1. Ignition Off, disconnect the harness connector at the appropriate Q6 Camshaft Position Actuator Solenoid Valve. It may take up to 2 minutes for all vehicle systems to power down.
2. Test for less than 5 ohms between the low reference circuit terminal B and ground.
   - **If 5 ohms or greater**
     1. Ignition Off, disconnect the harness connector at the K20 Engine Control Module.
     2. Test for less than 2 ohms in the low reference circuit end to end.
     - If 2 ohms or greater, repair the open/high resistance in the circuit.
     - If less than 2 ohms, replace the K20 Engine Control Module.
   - **If less than 5 ohms**
3. Ignition On.

NOTE: **A test lamp must be used for this test. The control circuit is pulled-up to a low current voltage, 1.5-4.5 V on the control circuit is normal.**

4. Verify that a test lamp does not illuminate between the control circuit terminal A and ground.
   - **If the test lamp illuminates**
     1. Ignition Off, disconnect the harness connector at the K20 Engine Control Module, ignition On.
     2. Test for less than 1 V between the control circuit and ground.
     - If 1 V or greater, repair the short to voltage on the circuit.
     - If less than 1 V, replace the K20 Engine Control Module.
   - **If the test lamp does not illuminate**
5. Remove the test lamp.
6. Verify the scan tool parameters listed below do not display Malfunction when commanding the appropriate Camshaft Position Actuator Solenoid Valve On with a scan tool.
   - Intake Camshaft Position Actuator Solenoid Valve Control Circuit High Voltage Test Status
   - Intake Camshaft Position Actuator Solenoid Valve Control Circuit Open Test Status
   - Intake Camshaft Position Actuator Solenoid Valve Control Circuit Low Voltage Test Status

- Exhaust Camshaft Position Actuator Solenoid Valve Control Circuit High Voltage Test Status
- Exhaust Camshaft Position Actuator Solenoid Valve Control Circuit Open Test Status
- Exhaust Camshaft Position Actuator Solenoid Valve Control Circuit Low Voltage Test Status
- **If Malfunction is displayed**

1. Ignition Off, disconnect the harness connector at the K20 Engine Control Module.
2. Test for less than 2 ohms in the control circuit end to end.
   - If 2 ohms or greater, repair the open/high resistance or short to ground in the circuit.
   - If less than 2 ohms, replace the K20 Engine Control Module.
   - **If Malfunction is not displayed**

7. Ignition Off, remove the Q6 Camshaft Position Actuator Solenoid Valve.
8. Verify the conditions listed below do not exist with the Q6 Camshaft Position Actuator Solenoid Valve:
   1. Torn, restricted, mis-positioned, or missing screens.
   2. Engine oil leak between the oil sealing lands of the solenoid. Inspect the lands of the solenoid for nicks.
   3. Oil seepage at the solenoid connector.
   - **If a condition is found**

     Replace the Q6 Camshaft Position Actuator Solenoid Valve.

   - **If a condition is not found**

NOTE: **After swapping toe solenoids, install jumper wires to the appropriate terminals of the harness connectors and the solenoids.**

9. Ignition Off, swap the Q6 Camshaft Position Actuator Solenoid Valve with the Q6 Camshaft Position Actuator Solenoid Valve that is operating correctly.
10. Engine idling.
11. Verify the scan tool Camshaft Position Variance parameter is less than 2° in each of the commanded states when commanding the Camshaft Position Actuator from 0-20° and back to 0° with a scan tool.
    - **If 2° or greater**

      Replace the mechanical camshaft position actuator.

    - **If less than 2°**
12. Test or replace the Q6 Camshaft Position Actuator Solenoid Valve.

Component Testing

1. Ignition Off, disconnect the harness connector at the Q6 Camshaft Position Actuator Solenoid Valve.
2. Test for 8-13 ohms between the control terminal 2 and the low reference circuit terminal 1.
   - **If not between 8-13 ohms**

     Replace the Q6 Camshaft Position Actuator Solenoid Valve.

- **If between 8-13 ohms**

3. Test for infinite resistance between each terminal and the Q6 Camshaft Position Actuator Solenoid Valve housing.
   - **If not infinite resistance**

     Replace the Q6 Camshaft Position Actuator Solenoid Valve.

   - **If infinite resistance**
4. All OK

Repair Instructions

Perform the **Diagnostic Repair Verification** after completing the repair.

- **Camshaft Position Intake Actuator Replacement**
- **Camshaft Position Exhaust Actuator Replacement**
- **Control Module References** for engine control module replacement, programming, and setup

DTC P0016 OR P0017

Diagnostic Instructions

- Perform the **Diagnostic System Check - Vehicle** prior to using this diagnostic procedure.
- Review **Strategy Based Diagnosis** for an overview of the diagnostic approach.
- **Diagnostic Procedure Instructions** provides an overview of each diagnostic category.

DTC Descriptors

DTC P0016

Crankshaft Position - Intake Camshaft Position Not Plausible

DTC P0017

Crankshaft Position - Exhaust Camshaft Position Not Plausible

Circuit/System Description

The engine control module (ECM) uses the crankshaft position sensor, intake camshaft position sensor, and exhaust camshaft position sensor information to monitor the correlation between the crankshaft, intake camshaft, and exhaust camshaft position.

Conditions for Running the DTC

- DTC P0335, P0336, P0340, P0341, P0365, P0366, P0641, and P0651 is not set.
- The engine is cranking or running.
- The crankshaft and camshaft position signals are synchronized.
- The camshaft position actuator is in the parked position.

The DTCs run continuously once the above conditions are met.

Conditions for Setting the DTC

The ECM detects a camshaft that is greater than 10 degrees advanced or 10 degrees retarded in relationship to the crankshaft.

Action Taken When the DTC Sets

DTCs P0016 and P0017 are type B DTCs.

Conditions for Clearing the DTC

DTCs P0016 and P0017 are type B DTCs.

Diagnostic Aids

- Inspect the engine for any recent engine mechanical repairs. An incorrectly installed timing chain can cause this DTC to set.
- An camshaft position actuator solenoid valve that is in the full advance or retard position can cause this DTC to set.

Reference Information

Description and Operation

Camshaft Actuator System Description

DTC Type Reference

Powertrain Diagnostic Trouble Code (DTC) Type Definitions

Scan Tool Reference

Control Module References for scan tool information

Circuit/System Verification

1. Ignition ON.
2. Verify DTC P0010, P0013, P0335, P0336, P0340, P0341, P0365, or P0366 is not set.
   - **If any of the DTCs are set**

     Refer to **Diagnostic Trouble Code (DTC) List - Vehicle** .

   - **If none of the DTCs are set**
3. Engine Running at normal operating temperature.
4. Verify DTC P0016 or P0017 is not set.
   - **If the DTC is set**

Inspect for the following and repair as necessary:

- A Q6 Camshaft Position Actuator Solenoid Valve that is stuck in the full advance or retard position.
- The correct installation of the Q6 Camshaft Position Actuator Solenoid Valves.
- The correct installation of the B23 Camshaft Position Sensors.
- The correct installation of the B26 Crankshaft Position Sensor.
- A timing chain tensioner condition.
- An incorrectly installed timing chain.
- Excessive play in the timing chain.
- A timing chain that jumped teeth.
- A crankshaft reluctor wheel that has moved in relationship to top dead center (TDC) on the crankshaft.
- **If the DTC is not set**

5. Operate the vehicle within the Conditions for Running the DTC. You may also operate the vehicle within the conditions that you observed from the Freeze Frame/Failure Records data.
6. Verify the DTC does not set.
   - **If the DTC sets**

     A mechanical condition listed above still exists.

   - **If the DTC does not set**
7. All OK.

Repair Instructions

Perform the **Diagnostic Repair Verification** after completing the repair.

- **Camshaft Position Actuator Exhaust Solenoid Valve Replacement**
- **Camshaft Position Actuator Intake Solenoid Valve Replacement**
- **Camshaft Position Sensor Replacement - Exhaust**
- **Camshaft Position Sensor Replacement - Intake**
- **Camshaft Timing Chain and Sprocket Cleaning and Inspection**
- **Camshaft Timing Chain, Sprocket, and Tensioner Replacement**
- **Crankshaft Position Sensor Replacement**

DTC P0030-P0032, P0036-P0038, P0053, P0054, P0135, OR P0141

Diagnostic Instructions

- Perform the **Diagnostic System Check - Vehicle** prior to using this diagnostic procedure.
- Review **Strategy Based Diagnosis** for an overview of the diagnostic approach.
- **Diagnostic Procedure Instructions** provides an overview of each diagnostic category.

DTC Descriptors

DTC P0030

HO2S Heater Control Circuit Sensor 1

DTC P0031

HO2S Heater Control Circuit Low Voltage Sensor 1

DTC P0032

HO2S Heater Control Circuit High Voltage Sensor 1

DTC P0036

HO2S Heater Control Circuit Sensor 2

DTC P0037

HO2S Heater Control Circuit Low Voltage Sensor 2

DTC P0038

HO2S Heater Control Circuit High Voltage Sensor 2

DTC P0053

HO2S Heater Resistance Sensor 1

DTC P0054

HO2S Heater Resistance Sensor 2

DTC P0135

HO2S Heater Performance Sensor 1

DTC P0141

HO2S Heater Performance Sensor 2

Diagnostic Fault Information

Circuit	Short to Ground	Open/High Resistance	Short to Voltage	Signal Performance
HO2S Heater Voltage Supply	P0030, P0036, P0132, P0135, P0138, P0141, *	P0030, P0036, P0132, P0134, P0135, P0138, P0140, P0141	P0690	P0135, P0141
	P0030, P0031,	P0030, P0036,	P0030, P0032,	

HO2S Heater Control	P0036, P0037, P0053, P0054, P0135, P0141	P0132, P0134, P0135, P0138, P0140, P0141	P0036, P0038, P0132, P0134, P0135, P0138, P0140, P0141	P0135, P0141
* Opens fuse				

Circuit Description

The heated oxygen sensor (HO2S) heater reduces the time required for the oxygen sensor to reach operating temperature and maintains the operating temperature during extended idle periods. When the ignition is turned to the ON position, ignition voltage is supplied directly to the sensor heater. The engine control module (ECM) controls the heater operation by first modulating the control circuit to ground when the sensors are cold. This prevents the possibility of thermal shock to the sensor, from condensation build-up on the sensor, by controlling the sensors rate of heating. After a predetermined amount of time, the ECM commands the heaters ON continuously. Once the sensor reaches operating temperature, the ECM may modulate the heater control circuit to ground, to maintain a desired temperature.

The ECM controls the heater by grounding the control circuit with a solid state device called a driver. The driver is equipped with a feedback circuit that is pulled-up to voltage. The ECM can determine if the control circuit is open, shorted to ground, or shorted to a voltage by monitoring the feedback voltage.

Conditions for Running the DTC

P0030-P0032 or P0036-P0038

- The ignition voltage is between 11-32 V.
- The engine speed is greater than 400 RPM.
- The DTCs run continuously once the above conditions are met for 10 s.

P0053 or P0054

- DTCs P0112, P0113, P0117, P0118, P0128, P2610 are not set.
- The engine is running.
- Ignition voltage is less than 32 V.
- The ignition is OFF for greater than 8 h.
- The Engine Coolant Temperature (ECT) is between -30 to +45°C (-22 to +113°F) at engine start-up.
- DTCs P0053 and P0054 run once per drive cycle when the above conditions are met.

P0135 or P0141

- DTCs P0116, P0117, P0118, P0128 are not set.
- The ECT is hotter than 70°C (158°F).
- The Ignition voltage is between 10-32 V.
- DTC P0135 and P0141 run twice per drive cycle when the above conditions are met for 2 min.

Conditions for Setting the DTC

P0030 or P0036

- The ECM detects that the affected HO2S heater low control circuit voltage is not within a specified range.
- DTCs P0030 and P0036 set within 3 s when the above condition is met.

P0031 and P0037

The ECM detects a short to ground in the heater control circuit of the heated oxygen sensor when the heater is commanded OFF. The condition exists for greater than 7 s.

P0032 and P0038

The ECM detects a short to voltage in the heater circuits of the heated oxygen sensor when the heater is commanded ON. The condition exists for greater than 7 s.

P0053 or P0054

- The ECM detects that the affected HO2S heater low control circuit resistance is not within a specified range at engine start-up.
- DTCs P0053 and P0054 set within 1 s when the above condition is met.

P0135

- The ECM detects that the affected HO2S 1 heater current parameter is more than 2.5 A or less than 0.3 A.
- DTC P0135 sets within 60 s when the above condition is met.

P0141

- The ECM detects that the affected HO2S 2 heater current parameter is more than 2.5 A or less than 0.3 A.
- DTC P0141 sets within 60 s when the above condition is met.

Action Taken When the DTC Sets

DTCs P0030, P0031, P0032, P0036, P0037, P0038, P0053, P0054, P0135, and P0141 are Type B DTCs.

Conditions for Clearing the MIL/DTC

DTCs P0030, P0031, P0032, P0036, P0037, P0038, P0053, P0054, P0135, and P0141 are Type B DTCs.

Diagnostic Aids

- If the condition is intermittent, move the related harnesses and connectors, with the engine operating, while monitoring the scan tool circuit test status parameters for the component. The circuit test status parameters change from OK or Not Run to Malfunction if there is a condition with the circuit or a connection.
- An open fuse in the HO2S heater circuit may be caused by the heater element in one of the sensors. The condition may not be present until the sensor operates for a period of time. If no fault is present in the heater circuit, monitor the amperage of each heater using the DMM to determine if one of the

heater elements is the cause of the open fuse. Inspect the sensor pigtail or the harness for contacting the exhaust system.

Reference Information

Schematic Reference

Engine Controls Schematics

Connector End View Reference

COMPONENT CONNECTOR END VIEWS - INDEX

Electrical Information Reference

- **Circuit Testing**
- **Connector Repairs**
- **Testing for Intermittent Conditions and Poor Connections**
- **Wiring Repairs**

DTC Type Reference

Powertrain Diagnostic Trouble Code (DTC) Type Definitions

Scan Tool Reference

Control Module References for scan tool information

Circuit/System Verification

1. Ignition ON.
2. Verify the parameters listed below do not display Malfunction when commanding the HO2S Heater Sensor 1 or 2 ON and OFF with a scan tool:
   - HO2S 1 or 2 Heater Control Circuit Low Voltage Test Status
   - HO2S 1 or 2 Heater Control Circuit Open Test Status
   - HO2S 1 or 2 Heater Control Circuit High Voltage Test Status
   - **If Malfunction is displayed**

     Refer to Circuit/System Testing.

   - **If Malfunction is not displayed**
3. Operate the vehicle within the Conditions for Running the DTC. You may also operate the vehicle within the conditions that you observed from the Freeze Frame/Failure Records data.
4. Verify the DTC does not set.
   - **If the DTC sets**

     Refer to Circuit/System Testing.

- **If the DTC does not set**

5. All OK.

Circuit/System Testing

1. Ignition OFF, disconnect the harness connector at the appropriate B52 Heated Oxygen Sensor. Ignition ON.
2. Verify that a test lamp illuminates between the ignition voltage circuit terminal D and ground.
   - **If the test lamp does not illuminate and the circuit fuse is good**
   1. Ignition OFF, remove the test lamp.
   2. Test for less than 2 ohms in the ignition circuit end to end.
   - If 2 ohms or greater, repair the open/high resistance in the circuit.
   - If less than 2 ohms, verify the fuse is OK and there is voltage at the fuse.
   - **If the test lamp does not illuminate and the circuit fuse is open**
   1. Ignition OFF.
   2. Test for infinite resistance between the ignition circuit and ground.
   - If less than infinite resistance, repair the short to ground on the circuit.
   - If infinite resistance, test all components connected to the fuse and replace as necessary.
   - **If the test lamp illuminates**
3. Verify that a test lamp does not illuminate between the ignition voltage circuit terminal D and the control circuit terminal indicated below.
   - HO2S 1 terminal C
   - HO2S 1 terminal E
   - **If the test lamp illuminates**
   1. Ignition OFF, disconnect the harness connector at the K20 Engine Control Module.
   2. Test for infinite resistance between the control circuit and ground.
   - If less than infinite resistance, repair the short to ground on the circuit.
   - If infinite resistance, replace the K20 Engine Control Module.
   - **If the test lamp does not illuminate**
4. Remove the test lamp.
5. Verify the scan tool HO2S 1 or 2 Heater Control Circuit High Voltage Test Status parameter is OK when commanding the HO2S Heater ON with a scan tool.
   - **If the parameter is not OK**
   1. Ignition OFF, disconnect the harness connector at the K20 Engine Control Module. Ignition ON.
   2. Test for less than 1 V between the control circuit and ground.
   - **If the parameter is OK**

NOTE:

- **Less than 10 ohms of additional resistance on the ignition voltage circuit or control circuit may set a DTC. If there is a resistance on a circuit, the driver will remain ON and the scan tool HO2S High Voltage Test Status parameter will display OK.**

- **Performing this test may set additional DTCs.**

6. Install a 10 A fused jumper wire between the control circuit terminal indicated below and the ignition voltage circuit terminal D.
   - HO2S 1 terminal C
   - HO2S 1 terminal E

NOTE: **This test may only be performed once per key cycle. If test is repeated, ignition OFF, allow the engine control module to shut down completely, then ignition ON.**

7. Verify the scan tool HO2S 1 or 2 Heater Control Circuit High Voltage Test Status parameter is Malfunction when commanding the HO2S Heater ON with a scan tool.
   - **If the parameter is not Malfunction**
   1. Ignition OFF, disconnect the harness connector at the K20 Engine Control Module.
   2. Test for less than 2 ohms in the control circuit end to end.
   - If 2 ohms or greater, repair the open/high resistance in the circuit.
   - If less than 2 ohms, replace the K20 Engine Control Module.
   - **If the parameter is Malfunction**
8. Test or replace the B52 Heated Oxygen Sensor.

Repair Instructions

Perform the **Diagnostic Repair Verification** after completing the repair.

- **Heated Oxygen Sensor Replacement - Sensor 1**
- **Heated Oxygen Sensor Replacement - Sensor 2**
- **Control Module References** for ECM replacement, programming and setup

DTC P0068 OR P1101

Diagnostic Instructions

- Perform the **Diagnostic System Check - Vehicle** prior to using this diagnostic procedure.
- Review **Strategy Based Diagnosis** for an overview of the diagnostic approach.
- **Diagnostic Procedure Instructions** provides an overview of each diagnostic category.

DTC Descriptor

DTC P0068

Throttle Body Air Flow Performance

DTC P1101

Intake Air Flow System Performance

Circuit/System Description

The engine control module (ECM) compares actual airflow based on throttle position (TP) to a calculated airflow based on manifold absolute pressure (MAP) sensor, and mass air flow (MAF).

Conditions for Running the DTC

DTC P0068

- The engine speed is at least 800 RPM.
- The ignition voltage is at least 6.4 V.
- The throttle actuator control system is not in reduced power mode.
- The DTC runs continuously when the above conditions are met.

DTC P1101

- DTC P0102, P0103, P0107, P0108, P0111, P0112, P0113, P0116, P0117, P0118, P0128, P0335, or P0336 is not set
- The engine speed is between 500-6,400 RPM
- The engine coolant temperature (ECT) is between -7 to +125°C (+19 to +257°F).
- The intake air temperature (IAT) is between -20 to +125°C (-4 to +257°F).
- The DTC runs continuously when the above conditions are met.

Conditions for Setting the DTCs

The ECM detects that the actual airflow rate is greater than the calculated airflow.

Action Taken When the DTCs Set

- DTC P0068 is a type A DTC.
- DTC P1101 is a type B DTC.

Conditions for Clearing the DTCs

- DTC P0068 is a type A DTC.
- DTC P1101 is a type B DTC.

Reference Information

Schematic Reference

Engine Controls Schematics

Connector End View Reference

COMPONENT CONNECTOR END VIEWS - INDEX

Electrical Information Reference

- **Circuit Testing**
- **Connector Repairs**
- **Testing for Intermittent Conditions and Poor Connections**
- **Wiring Repairs**

Powertrain Component Views

Powertrain Component Views

DTC Type Reference

Powertrain Diagnostic Trouble Code (DTC) Type Definitions

Scan Tool Reference

Control Module References for scan tool information

Circuit/System Verification

1. Ignition ON.
2. Verify that DTC P0641, P0651, P0697, or P06A3 is not set.
   - **If a DTC is set**

     Refer to **DTC P0641, P0651, P0697, or P06A3 (ECM)** for further diagnosis.

   - **If the DTC is not set**
3. Ignition ON, verify the scan tool Throttle Body Idle Airflow Compensation parameter is less than 90 %.
   - **If 90 % or greater**

     Refer to **Throttle Body Cleaning** .

   - **If less than 90 %**
4. Verify the scan tool Throttle Position Sensors 1 and 2 Agree/Disagree parameter displays Agree while performing the Throttle Sweep Test with a scan tool.
   - **If Disagree**

     Refer to **DTC P0121-P0123, P0222, P0223, P16A0-P16A2, or P2135** for further diagnosis.

   - **If Agree**
5. Determine the current vehicle testing altitude.
6. Verify the scan tool MAP Sensor pressure parameter is within the range specified in the **Altitude Versus Barometric Pressure** table.
   - **If the MAP Sensor parameter is not in range**

     Refer to **DTC P0106** for further diagnosis.

- **If the MAP Sensor parameter is within range**

7. Engine idling, verify the scan tool MAP Sensor pressure parameter is between 26-52 kPa (3.8-7.5 PSI) and changes with accelerator pedal input.
   - **If not between 26-52 kPa (3.8-7.5 PSI) or does not change**

     Refer to **DTC P0106** for further diagnosis.

   - **If between 26-52 kPa (3.8-7.5 PSI) and changes**
8. Verify the scan tool MAF Sensor g/s parameter changes smoothly and gradually as the engine speed is increased and decreased while performing the actions listed below.
   1. Engine idling
   2. Perform the scan tool snapshot function.
   3. Increase the engine speed slowly to 3,000 RPM and then back to idle.
   4. Exit from the scan tool snapshot and review the data.
   5. Observe the MAF Sensor parameter frame by frame with a scan tool.
   - **If the MAF Sensor parameter does not change smoothly and gradually**

     Refer to **DTC P0101 (With LEA)**, **DTC P0101 (With LUK)** for further diagnosis.

   - **If the MAF Sensor parameter changes smoothly and gradually**
9. Operate the vehicle within the Conditions for Running the DTC. You may also operate the vehicle within the conditions that you observed from the Freeze Frame/Failure Records data.
10. Verify the DTC does not set.
    - **If the DTC sets**

      Refer to Circuit/System Testing for further diagnosis.

    - **If the DTC does not set**
11. All OK

Circuit/System Testing

NOTE: You must perform the Circuit/System Verification before proceeding with Circuit/System Testing.

1. Verify the integrity of the entire air induction system by verifying that none of the following conditions exist:
   - Any damaged components
   - Improperly installed components
   - Collapsed, restricted, or damaged components
   - Loose clamps, cracks, or other damage
   - An air flow restriction
   - Restricted air filter
   - Splits, kinks, leaks, or improper connections at the vacuum hoses

- Vacuum leaks at the intake manifold, MAP sensor, and throttle body
- Water intrusion
- Any snow or ice buildup, in cold climates
- Contamination of the MAF sensor element
- Missing, restricted, or leaking exhaust components-Refer to **Symptoms - Engine Exhaust** for further diagnosis.
  - **If a condition is found**

    Repair or replace component as appropriate.

  - **If no condition is found**

2. Test the engine for a mechanical condition. Refer to **Symptoms - Engine Mechanical** for diagnosis.
   - **If a condition is found**

     Repair or replace component as appropriate.

   - **If no condition is found**
3. All OK

Repair Instructions

Perform the **Diagnostic Repair Verification** after completing the repair.

Control Module References for Engine Control Module replacement, programming, and setup

DTC P0089, P00C6, P228C, OR P228D (LUK)

Diagnostic Instructions

- Perform the **Diagnostic System Check - Vehicle** prior to using this diagnostic procedure.
- Review **Strategy Based Diagnosis** for an overview of the diagnostic approach.
- **Diagnostic Procedure Instructions** provides an overview of each diagnostic category.

DTC Descriptors

DTC P0089

Fuel Pressure Regulator Performance

DTC P00C6

Fuel Rail Pressure Low During Engine Cranking

DTC P228C

Fuel Pressure Regulator Control Performance - Low Pressure

DTC P228D

Fuel Pressure Regulator Control Performance - High Pressure

Circuit/System Description

The fuel rail pressure sensor detects fuel pressure within the fuel rail. The engine control module (ECM) provides a 5 V reference voltage on the 5 V reference circuit and ground on the low reference circuit. The ECM receives a varying signal voltage on the signal circuit.

High pressure fuel is regulated by the high pressure fuel pump actuator, which is a part of the high pressure fuel pump. The high pressure fuel pump actuator is a solenoid valve. The ECM provides a voltage on the actuator high control circuit and ground on the actuator low control circuit. Both circuits are controlled through output drivers within the ECM. When deactivated, both drivers are disabled. When activated, the high control circuit driver energizes the high pressure fuel pump actuator and the low control circuit driver pulse-width modulates (PWM) the low control circuit to ground.

The high pressure mechanical fuel pump is driven by three lobes on the camshaft. The ECM uses the camshaft and crankshaft position sensor inputs to synchronize the high pressure fuel pump actuator with the position of each of the camshaft lobes. The ECM regulates fuel pressure by adjusting the portion of each pump stroke that provides fuel to the rail.

The ECM monitors the fuel rail fuel pressure sensor and the high pressure fuel pump actuator to determine if the commanded and actual pressure are within a predetermined range, or if the amount of fuel pressure correction exceeds a calibrated pressure.

Conditions for Running the DTC

P0089, P228C, or P228D

- DTC P0016, P0017, P0090, P0091, P0092, P00C8, P00C9, P00CA, P0112, P0113, P0116, P0117, P0118, P0128, P0192, P0193, P0335, P0336, P0340, P0341, P0365, P0366, P0628, or P1682 is not set.
- The ignition voltage is more than 11 V.
- The engine is running.
- The low side fuel pressure is more than 275 kPa (40 psi).
- The DTC runs continuously when the above conditions are met for 60 s.

P00C6

- DTC P0016, P0017, P0090, P0091, P0092, P00C8, P00C9, P00CA, P0112, P0113, P0116, P0117, P0118, P0128, P0192, P0193, P0335, P0336, P0340, P0341, P0365, P0366, P0628, or P1682 is not set.
- The ignition voltage is more than 8 V.
- The engine coolant temperature is between -100 and +80°C (-148 and +176°F).
- The low side fuel pressure is more than 300 kPa (43.5 psi).
- The engine is not running.
- The DTC runs once for each engine start.

Conditions for Setting the DTC

P0089

The high pressure fuel pump actuator command is greater than or equal to 240° or less than or equal to 0°. The condition exists for greater than 5 s.

P00C6

The ECM detects that the fuel pressure is not rising or has fallen beyond acceptable limits during engine cranking.

P228C

The actual fuel rail pressure is 3 MPa (435 psi) less than the desired fuel pressure. The condition exists for greater than 5 s.

P228D

The actual fuel rail pressure is 3 MPa (435 psi) greater than the desired fuel rail pressure. The condition exists for greater than 5 s.

Action Taken When the DTC Sets

- DTCs P0089 and P00C6 are Type B DTCs.
- DTCs P228C and P228D are Type A DTCs.
- A message center or an indicator displays Reduced Engine Power.
- Scan tool control of the high pressure fuel pump is inhibited.

Conditions for Clearing the DTC

- DTCs P0089 and P00C6 are Type B DTCs.
- DTCs P228C and P228D are Type A DTCs.

Diagnostic Aids

- A restricted fuel feed pipe between the fuel feed pipe fuel pressure sensor and the high pressure fuel pump may set a DTC.
- A condition with the fuel tank fuel pump module or the chassis control module may set a DTC.
- A skewed fuel rail pressure sensor, or an intermittent condition in the fuel rail pressure sensor circuits may set a DTC.
- A leaking or restricted fuel injector may set a DTC.
- A short to voltage in the crankshaft position signal circuit may set a DTC.
- A short to voltage in the camshaft position actuator solenoid valve control circuit may set a DTC.

Reference Information

Schematic Reference

Engine Controls Schematics

Connector End View Reference

COMPONENT CONNECTOR END VIEWS - INDEX

Description and Operation

Fuel System Description

Electrical Information Reference

- **Circuit Testing**
- **Connector Repairs**
- **Testing for Intermittent Conditions and Poor Connections**
- **Wiring Repairs**

DTC Type Reference

Powertrain Diagnostic Trouble Code (DTC) Type Definitions

Scan Tool Reference

Control Module References for scan tool information

Circuit/System Verification

1. Observe the DTC information with a scan tool. DTC P0628, P069E, or U0109 should not set.
   - If a DTC is set refer to **Diagnostic Trouble Code (DTC) List - Vehicle** .
2. Attempt to start and idle the engine.
3. Observe the DTC information with a scan tool. DTCs P0089, P00C6, P228C, and P228D should not set.
4. Engine idling, observe the Fuel Rail Pressure Sensor parameter with a scan tool. The pressure should be approximately 2.96-3.24 Mpa (429-470 psi).
5. Command an increase and decrease in Fuel Rail Pressure with a scan tool. Observe the scan tool Fuel Rail Pressure Sensor parameter. The Fuel Rail Pressure Sensor should increase or decrease with each commanded state.
6. Operate the vehicle within the Conditions for Running the DTC. You may also operate the vehicle within the conditions that you observed from the Freeze Frame/Failure Records data.

Circuit/System Testing

NOTE: Circuit/System Verification must be performed first or misdiagnosis may result.

1. Ignition ON, observe the scan tool Chassis Control Module Fuel Pressure Sensor parameter. Command an increase in Fuel Pressure with a scan tool. Verify the scan tool Fuel Pressure Sensor parameter increases to greater than 414 kPa (60 psi) as commanded.

- If less than the specified range, refer to **Fuel System Diagnosis** .

2. Remove the G18 high pressure fuel pump and visually inspect the lobes on the camshaft for unusual wear.
   - If the lobes appear normal, replace the G18 high pressure fuel pump.
   - If the lobes are worn, replace the camshaft.

Component Testing

Static Test

1. Ignition OFF, disconnect the harness connector at the G18 high pressure fuel pump.

NOTE: The DMM and test leads must be calibrated to 0 ohms in order to prevent misdiagnosis.

2. Test for 10 ohms plus/minus 1 ohms at 25°C (77°F) between the low control circuit terminal 1 and the high control circuit terminal 2.
   - If not within the specified range, replace the G18 high pressure fuel pump.
3. Test for infinite resistance between each terminal and the G18 high pressure fuel pump housing.
   - If not the specified value, replace the G18 high pressure fuel pump.

Repair Instructions

Perform the **Diagnostic Repair Verification** after completing the diagnostic procedure.

- **Fuel Injection Fuel Rail Fuel Pressure Sensor Replacement**
- **Fuel Pump Replacement**
- **Intake Camshaft and Valve Lifter Replacement**
- Perform the Fuel Rail Pressure Relief Valve Reset procedure, if supported on the scan tool.

DTC P0089, P00C6, P228C, OR P228D (LEA)

Diagnostic Instructions

- Perform the **Diagnostic System Check - Vehicle** prior to using this diagnostic procedure.
- Review **Strategy Based Diagnosis** for an overview of the diagnostic approach.
- **Diagnostic Procedure Instructions** provides an overview of each diagnostic category.

DTC Descriptors

DTC P0089

Fuel Pressure Regulator Performance

DTC P00C6

Fuel Rail Pressure Low During Engine Cranking

DTC P228C

Fuel Pressure Regulator Control Performance - Low Pressure

DTC P228D

Fuel Pressure Regulator Control Performance - High Pressure

Circuit/System Description

The fuel rail pressure sensor detects fuel pressure within the fuel rail. The engine control module (ECM) provides a 5 V reference voltage on the 5 V reference circuit and ground on the low reference circuit. The ECM receives a varying signal voltage on the signal circuit.

High pressure fuel is regulated by the high pressure fuel pump actuator, which is a part of the high pressure fuel pump. The high pressure fuel pump actuator is a solenoid valve. The ECM provides a voltage on the actuator high control circuit and ground on the actuator low control circuit. Both circuits are controlled through output drivers within the ECM. When deactivated, both drivers are disabled. When activated, the high control circuit driver energizes the high pressure fuel pump actuator and the low control circuit driver pulse-width modulates (PWM) the low control circuit to ground.

The high pressure mechanical fuel pump is driven by three lobes on the camshaft. The ECM uses the camshaft and crankshaft position sensor inputs to synchronize the high pressure fuel pump actuator with the position of each of the camshaft lobes. The ECM regulates fuel pressure by adjusting the portion of each pump stroke that provides fuel to the rail.

The ECM monitors the fuel rail fuel pressure sensor and the high pressure fuel pump actuator to determine if the commanded and actual pressure are within a predetermined range, or if the amount of fuel pressure correction exceeds a calibrated pressure.

Conditions for Running the DTC

P0089, P228C, or P228D

- DTC P0016, P0017, P0090, P0091, P0092, P00C8, P00C9, P00CA, P0112, P0113, P0116, P0117, P0118, P0128, P0192, P0193, P0335, P0336, P0340, P0341, P0365, P0366, P0627, P0628, P0629 or P1682 is not set.
- The ignition voltage is more than 11 V.
- The engine is running.
- The low side fuel pressure is more than 275 kPa (40 psi).
- The DTC runs continuously when the above conditions are met for 60 s.

P00C6

- DTC P0016, P0017, P0090, P0091, P0092, P00C8, P00C9, P00CA, P0112, P0113, P0116, P0117, P0118, P0128, P0192, P0193, P0335, P0336, P0340, P0341, P0365, P0366, P0627, P0628, P0629 or P1682 is not set.
- The ignition voltage is more than 8 V.
- The engine coolant temperature is between -100 and +80°C (-148 and +176°F).

- The low side fuel pressure is more than 300 kPa (43.5 psi).
- The engine is not running.
- The DTC runs once for each engine start.

Conditions for Setting the DTC

P0089

The high pressure fuel pump actuator command is greater than or equal to 240 ° or less than or equal to 0 °. The condition exists for greater than 5 s.

P00C6

The ECM detects that the fuel pressure is not rising or has fallen beyond acceptable limits during engine cranking.

P228C

The actual fuel rail pressure is 3 MPa (435 psi) less than the desired fuel pressure. The condition exists for greater than 5 s.

P228D

The actual fuel rail pressure is 3 MPa (435 psi) greater than the desired fuel rail pressure. The condition exists for greater than 5 s.

Action Taken When the DTC Sets

- DTCs P0089 and P00C6 are Type B DTCs.
- DTCs P228C and P228D are Type A DTCs.
- A message center or an indicator displays Reduced Engine Power.
- Scan tool control of the high pressure fuel pump is inhibited.

Conditions for Clearing the DTC

- DTCs P0089 and P00C6 are Type B DTCs.
- DTCs P228C and P228D are Type A DTCs.

Diagnostic Aids

- A restricted fuel feed pipe between the fuel feed pipe fuel pressure sensor and the high pressure fuel pump may set a DTC.
- A condition with the fuel tank fuel pump module or the fuel pump power control module may set a DTC.
- A skewed fuel rail pressure sensor, or an intermittent condition in the fuel rail pressure sensor circuits may set a DTC.
- A leaking or restricted fuel injector may set a DTC.
- A short to voltage in the crankshaft position signal circuit may set a DTC.

- A short to voltage in the camshaft position actuator solenoid valve control circuit may set a DTC.

Reference Information

Schematic Reference

Engine Controls Schematics

Connector End View Reference

COMPONENT CONNECTOR END VIEWS - INDEX

Description and Operation

Fuel System Description

Electrical Information Reference

- **Circuit Testing**
- **Connector Repairs**
- **Testing for Intermittent Conditions and Poor Connections**
- **Wiring Repairs**

DTC Type Reference

Powertrain Diagnostic Trouble Code (DTC) Type Definitions

Scan Tool Reference

Control Module References for scan tool information

Circuit/System Verification

1. Observe the DTC information with a scan tool. DTC P0627, P0628, P0629, P069E, or U0109 should not set.
    - If a DTC is set refer to **Diagnostic Trouble Code (DTC) List - Vehicle** .
2. Attempt to start and idle the engine.
3. Observe the DTC information with a scan tool. DTCs P0089, P00C6, P228C, and P228D should not set.
4. Engine idling, observe the Fuel Rail Pressure Sensor parameter with a scan tool. The pressure should be approximately 2.96-3.24 Mpa (429-470 psi).
5. Command an increase and decrease in Fuel Rail Pressure with a scan tool. Observe the scan tool Fuel Rail Pressure Sensor parameter. The Fuel Rail Pressure Sensor should increase or decrease with each commanded state.
6. Operate the vehicle within the Conditions for Running the DTC. You may also operate the vehicle within the conditions that you observed from the Freeze Frame/Failure Records data.

Circuit/System Testing

NOTE: Circuit/System Verification must be performed first or misdiagnosis may result.

1. Ignition ON, observe the scan tool Fuel Pressure Sensor parameter. Command an increase in Fuel Pressure with a scan tool. Verify the scan tool Fuel Pressure Sensor parameter increases to greater than 414 kPa (60 psi) as commanded.
   - If less than the specified range, refer to **Fuel System Diagnosis** .
2. Remove the G18 high pressure fuel pump and visually inspect the lobes on the camshaft for unusual wear.
   - If the lobes appear normal, replace the G18 high pressure fuel pump.
   - If the lobes are worn, replace the camshaft.

Component Testing

Static Test

1. Ignition OFF, disconnect the harness connector at the G18 high pressure fuel pump.

NOTE: The DMM and test leads must be calibrated to 0 ohms in order to prevent misdiagnosis.

2. Test for 10 ohms plus/minus 1 ohms at 25°C (77°F) between the low control circuit terminal 1 and the high control circuit terminal 2.
   - If not within the specified range, replace the G18 high pressure fuel pump.
3. Test for infinite resistance between each terminal and the G18 high pressure fuel pump housing.
   - If not the specified value, replace the G18 high pressure fuel pump.

Repair Instructions

Perform the **Diagnostic Repair Verification** after completing the diagnostic procedure.

- **Fuel Injection Fuel Rail Fuel Pressure Sensor Replacement**
- **Fuel Pump Replacement**
- **Intake Camshaft and Valve Lifter Replacement**
- Perform the Fuel Rail Pressure Relief Valve Reset procedure, if supported on the scan tool.

DTC P0090-P0092, P00C8, P00C9, OR P00CA

Diagnostic Instructions

- Perform the **Diagnostic System Check - Vehicle** prior to using this diagnostic procedure.
- Review **Strategy Based Diagnosis** for an overview of the diagnostic approach.
- **Diagnostic Procedure Instructions** provides an overview of each diagnostic category.

DTC Descriptors

DTC P0090

Fuel Pressure Regulator Control Circuit

DTC P0091

Fuel Pressure Regulator Control Circuit Low Voltage

DTC P0092

Fuel Pressure Regulator Control Circuit High Voltage

DTC P00C8

Fuel Pressure Regulator High Control Circuit

DTC P00C9

Fuel Pressure Regulator High Control Circuit Low Voltage

DTC P00CA

Fuel Pressure Regulator High Control Circuit High Voltage

Diagnostic Fault Information

Circuit	Short to Ground	Open/High Resistance	Short to Voltage	Signal Performance
High Pressure Fuel Pump Actuator High Control	P0091, P00C9	P0090, P00C8	P0092, P00CA, P0690	-
High Pressure Fuel Pump Actuator Low Control	P0091, P00C9	P0090, P00C8	P0092, P00CA, P0690	-

Circuit/System Description

High pressure fuel is regulated by the high pressure fuel pump actuator, which is a part of the high pressure fuel pump. The high pressure fuel pump actuator is a solenoid valve. The ECM provides battery voltage on the actuator high control circuit and ground on the actuator low control circuit. Both circuits are controlled through output drivers within the ECM. When deactivated, both drivers are disabled. When activated, the high control circuit driver energizes the high pressure fuel pump actuator and the low control circuit driver pulse-width modulates (PWM) the low control circuit to ground. The ECM monitors the voltage on the circuits to detect a failure.

Conditions for Running the DTC

- The ignition voltage is greater than 11 V.
- The engine speed is greater than 50 RPM.
- The DTCs run continuously within the enabling conditions.

Conditions for Setting the DTC

P0090

- The ECM detects an open circuit in the high pressure fuel pump actuator low control circuit.
- The DTC sets when the above condition is present for 4 s.

P0091

- The ECM detects a short to ground in the high pressure fuel pump actuator low control circuit.
- The DTC sets when the above condition is present for 4 s.

P0092

- The ECM detects a short to voltage in the high pressure fuel pump actuator low control circuit.
- The DTC sets when the above condition is present for 4 s.

P00C8

- The ECM detects an open circuit in the high pressure fuel pump actuator high control circuit.
- The DTC sets when the above condition is present for 4 s.

P00C9

- The ECM detects a short to ground in the high pressure fuel pump actuator high control circuit.
- The DTC sets when the above condition is present for 4 s.

P00CA

- The ECM detects a short to voltage in the high pressure fuel pump actuator high control circuit.
- The DTC sets when the above condition is present for 4 s.

Action Taken When the DTC Sets

- DTCs P0090, P0091, P0092, P00C8, P00C9, and P00CA are Type A DTCs.
- A message center or an indicator displays Reduced Engine Power.

Conditions for Clearing the DTC

DTCs P0090, P0091, P0092, P00C8, P00C9, and P00CA are Type A DTCs.

Reference Information

Schematic Reference

Engine Controls Schematics

Connector End View Reference

COMPONENT CONNECTOR END VIEWS - INDEX

Description and Operation

Fuel System Description

Electrical Information Reference

- **Circuit Testing**
- **Connector Repairs**
- **Testing for Intermittent Conditions and Poor Connections**
- **Wiring Repairs**

DTC Type Reference

Powertrain Diagnostic Trouble Code (DTC) Type Definitions

Scan Tool Reference

Control Module References for scan tool information

Circuit/System Verification

1. Observe the DTC information with a scan tool. DTC P0090, P0091, P0092, P00C8, P00C9, P00CA, P0685, or P1682 should not set.
   - If a DTC is set, refer to **Diagnostic Trouble Code (DTC) List - Vehicle** for further diagnosis.
2. Ignition ON, command the Fuel Pressure Regulator ON and OFF with a scan tool while observing the following control circuit status parameters:
   - Fuel Pressure Regulator Control Circuit High Voltage Test Status
   - Fuel Pressure Regulator Control Circuit Open Test Status
   - Fuel Pressure Regulator Control Circuit Low Voltage Test Status
   - Fuel Pressure Regulator High Control Circuit High Voltage Test Status
   - Fuel Pressure Regulator High Control Circuit Open Test Status
   - Fuel Pressure Regulator High Control Circuit Low Voltage Test Status

   Each parameter should toggle between OK and Not Run or Not Run and OK.
3. Operate the vehicle within the Conditions for Running the DTC to verify the DTC does not reset. You may also operate the vehicle within the conditions that you observed from the Freeze Frame/Failure Records data.

Circuit/System Testing

1. Ignition OFF, disconnect the harness connector at the G18 high pressure fuel pump.
2. Ignition ON, verify that a test lamp does not illuminate between the high control circuit terminal 2 and ground and the low control circuit terminal 1 and ground.
   - If the test lamp illuminates, test the appropriate control circuit for a short to voltage. If the circuit tests normal, replace the K20 ECM.
3. Verify that a test lamp does not illuminate between the high control circuit terminal 2 and B+ and the

low control circuit terminal 1 and B+.

- If the test lamp illuminates, test the appropriate control circuit for a short to ground. If the circuit tests normal, replace the K20 ECM.

4. Connect a 3 A fused jumper wire between the high control circuit terminal 2 and ground. The Fuel Pressure Regulator High Control Circuit Open Test Status should transition from Malfunction to OK and the Fuel Pressure Regulator High Control Circuit Low Voltage Test Status should transition from OK to Malfunction.
   - If not the specified value, test the high control circuit for an open/high resistance.
5. Connect a 3 A fused jumper wire between the low control circuit terminal 1 and B+. The Fuel Pressure Regulator Control Circuit Open Test Status should transition from Malfunction to OK and the Fuel Pressure Regulator Control Circuit High Voltage Test Status should transition from OK to Malfunction.
   - If not the specified value, test the low control circuit for an open/high resistance.
6. If all circuits test normal, test or replace the G18 high pressure fuel pump.

Component Testing

Static Test

1. Ignition OFF, disconnect the harness connector at the G18 high pressure fuel pump.

NOTE: The DMM and test leads must be calibrated to 0 ohms in order to prevent misdiagnosis.

2. Test for 9-11 ohms at 25°C (77°F) between the low control circuit terminal 1 and the high control circuit terminal 2 at the G18 high pressure fuel pump.
   - If not within the specified range, replace the G18 high pressure fuel pump.
3. Measure the resistance between each terminal and the high pressure fuel pump housing. The DMM should display OL.
   - If less than the specified value, replace the G18 high pressure fuel pump.

Repair Instructions

Perform the **Diagnostic Repair Verification** after completing the diagnostic procedure.

- **Fuel Pump Replacement**
- **Control Module References** for ECM replacement, setup, and programming
- Perform the Fuel Rail Pressure Relief Valve Reset procedure, if supported on the scan tool.

DTC P0096 OR P0111 (WITH LEA)

Diagnostic Instructions

- Perform the **Diagnostic System Check - Vehicle** prior to using this diagnostic procedure.
- Review **Strategy Based Diagnosis** for an overview of the diagnostic approach.
- **Diagnostic Procedure Instructions** provides an overview of each diagnostic category.

DTC Descriptors

DTC P0096

Intake Air Temperature (IAT) Sensor 2 Performance

DTC P0111

Intake Air Temperature (IAT) Sensor 1 Performance

Diagnostic Fault Information

IAT Sensor 1

Circuit	Short to Ground	Open/High Resistance	Short to Voltage	Signal Performance
Signal	P0112, P0114, P2199	P0111, P0113, P0114, P2199	P0113*, P0114, P2199	P0111, P2199
Low Reference	-	P0111, P0113, P0114, P2199	P0113*, P0114	-
*Internal ECM or sensor damage may occur if the circuit is shorted to B+.				

IAT Sensor 2

Circuit	Short to Ground	Open/High Resistance	Short to Voltage	Signal Performance
Ignition Voltage	P0096, P0097, P0102, P11C2, P2199	P0096, P0097, P0102, P11C2, P2199	-	P0096
Signal	P0096, P0097, P11C3, P2199	P0096, P0097, P11C2, P2199	P0096*, P0097, P11C2, P2199	P0096
Ground	-	P0096, P0097, P0102, P11C2, P2199	-	P0096
*Internal ECM or sensor damage may occur if the circuit is shorted to B+.				

Typical Scan Tool Data

IAT Sensor 1

Circuit	Short to Ground	Open or High Resistance	Short to Voltage
Operating Conditions: Engine Running **Parameter Normal Range:** Varies with ambient temperature			
Signal	150°C (302°F)	-40°C (-40°F)	-40°C (-40°F)*
Low Reference	-	-40°C (-40°F)	-40°C (-40°F)*
*Internal ECM or sensor damage may occur if the circuit is shorted to B+			

IAT Sensor 2

	Short to	Open or High	Short to

Circuit	Ground	Resistance	Voltage
Operating Conditions: Engine Running **Parameter Normal Range:** Varies with ambient temperature			
Ignition Voltage	-40°C (-40°F) 10 Hz	-40°C (-40°F) 10 Hz	-
Signal	-40°C (-40°F)	-40°C (-40°F)	-40°C (-40°F)* 10 Hz*
Ground	-	-40°C (-40°F) 10 Hz	-
*Internal ECM or sensor damage may occur if the circuit is shorted to B+			

Circuit/System Description

The intake air temperature (IAT) sensor 1 is a variable resistor that measures the temperature of the air in the sensor bore. The engine control module (ECM) supplies 5 V to the IAT sensor 1 signal circuit and a ground for the IAT sensor 1 low reference circuit. The signal varies with inlet air temperature and is displayed by the scan tool as °C (°F).

The IAT sensor 2 produces a frequency signal based on the inlet air temperature very close to the humidity sensor within the sensor bore. The signal varies with inlet air temperature and is displayed by the scan tool as °C (°F) and Hertz (Hz). The ECM applies 5 V to the circuit. The signal circuit is shared by the IAT sensor 2 and the humidity sensor. Ignition voltage and ground circuits are also supplied to the multifunction intake air sensor's internal circuits for these sensors:

- IAT sensor 2
- Humidity sensor
- MAF sensor

The multifunction intake air sensor houses the following:

- IAT sensor 1
- IAT sensor 2
- Humidity sensor
- MAF sensor
- BARO pressure sensor

IAT Sensor 1	IAT Sensor 1 Resistance	IAT Sensor 1 Signal Voltage
Cold	High	High
Warm	Low	Low

IAT Sensor 2	IAT Sensor 2 Frequency	IAT Sensor 2 Temperature
Cold	45 Hz	-40°C (-40°F)
Warm	302 Hz	104°C (219°F)

Conditions for Running the DTCs

P0096 and P0111

- DTCs P0097, P0098, P0112, P0113, P0117, P0118, P0119, or P1682 are not set.
- The vehicle has been OFF at least 8 hours.
- Ignition 1 voltage is at least 11 V for longer than 0.9 s.
- These DTCs run once per ignition cycle when the enabling conditions are met.

Conditions for Setting the DTCs

P0096

- The ECM determines the absolute difference between IAT sensor 1 start-up temperature and the IAT sensor 2 start-up temperature is greater than 25°C (45°F).

  AND

- The absolute difference between ECT start-up temperature and the IAT sensor 2 start-up temperature is greater or equal to the absolute difference between ECT start-up temperature and the IAT sensor 1 start-up temperature.
- This DTC runs once per ignition cycle when the enabling conditions are met.

P0111

- The ECM determines the absolute difference between IAT sensor 1 start-up temperature and the IAT sensor 2 start-up temperature is greater than 25°C (45°F).

  AND

- The absolute difference between ECT start-up temperature and the IAT sensor 1 start-up temperature is greater or equal to the absolute difference between ECT start-up temperature and the IAT 2 start-up temperature.
- This DTC runs once per ignition cycle when the enabling conditions are met.

Action Taken When the DTCs Set

DTCs P0096 and P0111 are Type B DTCs.

Conditions for Clearing the DTCs

DTCs P0096 and P0111 are Type B DTCs.

Diagnostic Aids

- With the ignition ON, when the engine is OFF and is cold; properly functioning IAT sensors 1 and 2 will gradually increase the scan tool IAT Sensor 1 and 2 parameters. This is due to the heat that is generated by the multifunction intake air sensor internal heating elements.
- The humidity sensor and the IAT sensor 2 signals are sent to the ECM on the same circuit. If the IAT Sensor 2 parameter displays the values: 10 Hz; -40°C (-40°F), and there are also Humidity Sensor DTCs, check for a circuit problem.

Reference Information

Schematic Reference

Engine Controls Schematics

Connector End View Reference

COMPONENT CONNECTOR END VIEWS - INDEX

Electrical Information Reference

- **Circuit Testing**
- **Connector Repairs**
- **Testing for Intermittent Conditions and Poor Connections**
- **Wiring Repairs**

Powertrain Component Views

Powertrain Component Views

DTC Type Reference

Powertrain Diagnostic Trouble Code (DTC) Type Definitions

Scan Tool Reference

Control Module References for scan tool information

Special Tools

EL-38522-A Variable Signal Generator

For equivalent regional tools, refer to **Special Tools (Diagnostic Tools)** , **Special Tools (Mechanical Tools)** .

Circuit/System Verification

NOTE: **To minimize the effects of residual engine heat and sensor internal heating elements, perform Steps 1 and 2 of this verification procedure only if the ignition has been OFF for 8 hours or more.**

1. Ignition ON.
2. Verify the following scan tool parameters are within 55°C (99°F) of each other.
   - Start-Up IAT Sensor 1
   - IAT Sensor 2
   - Start-Up ECT
   - **If not within 55°C (99°F)**

     Refer to Circuit/System Testing.

- **If within 55°C (99°F)**

3. Engine idling, verify the following scan tool parameters are between: -38 and +149°C (-36 and +300° F).
   - IAT Sensor 1
   - IAT Sensor 2
   - Start-Up ECT
   - **If not between: -38 and +149°C (-36 and +300°F)**

     Refer to Circuit/System Testing.

   - **If between: -38 and +149°C (-36 and +300°F)**
4. Operate the vehicle within the conditions for running the DTC to verify that the DTC does not reset. You may also operate the vehicle within the conditions that you observed from the freeze frame/failure records data.
5. Verify the DTCs do not set.
   - **If any of the DTCs set**

     Refer to Circuit/System Testing.

   - **If none of the DTCs set**
6. All OK

Circuit/System Testing

NOTE: You must perform the Circuit/System Verification before proceeding with Circuit/System Testing.

1. Verify none of the following conditions exist:
   - A restricted or collapsed air intake duct
   - An intake manifold leak
   - A MAP sensor seal that is leaking, missing, or damaged
   - A restricted or collapsed air intake duct
   - A misaligned or damaged air intake duct
   - Any water intrusion in the induction system
   - An Intake Manifold Resonator with a leaking seal, or a cracked or broken housing
   - **If a condition exists**

     Repair or replace component as appropriate.

   - **If no condition exists**
2. Ignition OFF, disconnect the harness connector at the B75C Multifunction Intake Air sensor.
3. Ignition OFF and all systems OFF. It may take up to for 2 minutes for all vehicle systems to power down. Test for less than 2 ohms between the low reference circuit terminal 3 and ground.
   - **If 2 ohms or greater**

1. Ignition OFF, disconnect the harness connector at the K20 Engine Control Module.
2. Test for less than 2 ohms in the low reference circuit end to end.
    - If 2 ohms or greater, repair the open or high resistance in the circuit.
    - If less than 2 ohms replace the K20 Engine Control Module.

- **If less than 2 ohms**

4. Ignition OFF, all vehicle systems OFF, test for less than 2 ohms between the ground circuit terminal 7 and ground.
    - **If 2 ohms or greater**
    1. Ignition OFF, disconnect the sensor chassis ground.
    2. Test for less than 2 ohms in the ground circuit end to end.
        - If 2 ohms or greater, repair the open or high resistance in the circuit.
        - If less than 2 ohms, repair the open/high resistance in the ground connection.
    - **If less than 2 ohms**
5. Ignition ON, verify that a test lamp illuminates between the ignition circuit terminal 5 and ground.
    - **If the test lamp does not illuminate and the circuit fuse is good**
    1. Ignition OFF, remove the test lamp and remove the fuse for the ignition voltage circuit.
    2. Test for less than 2 ohms in the ignition voltage circuit end to end.
        - If 2 ohms or greater, repair the open/high resistance in the circuit.
        - If less than 2 ohms, verify the fuse is not open and there is voltage at the fuse.
    - **If the test lamp does not illuminate and the circuit fuse is open**
    1. Ignition OFF, remove the test lamp and remove the fuse for the ignition voltage circuit.
    2. Test for infinite resistance between the ignition voltage circuit and ground.
        - If less than infinite resistance, repair the short to ground on the circuit.
        - If infinite resistance
    3. Test for greater than 2 ohms between the ignition voltage circuit terminal 5 and ground.
        - If less than 2 ohms, repair the short to ground on the circuit.
        - If greater than 2 ohms, test all the components connected to the circuit and repair or replace as necessary.
    - **If a test lamp illuminates**
6. Ignition ON, test for 4.8-5.2 V between the intake air temperature signal 1 circuit terminal 1 and ground.
    - **If less than 4.8 V**
    1. Ignition OFF, disconnect the harness connector at the K20 Engine Control Module.
    2. Test for infinite resistance between the signal circuit and ground.
        - If less than infinite resistance, repair the short to ground on the circuit.
        - If infinite resistance
    3. Test for less than 2 ohms in the signal circuit end to end.
        - If 2 ohms or greater, repair the open/high resistance in the circuit.
        - If less than 2 ohms, replace the K20 Engine Control Module.
    - **If greater than 5.2 V**

NOTE: **If the signal circuit is shorted to a voltage the engine control module or the sensor may be damaged.**

1. Ignition OFF, disconnect the harness connector at the K20 Engine Control Module.
2. Ignition ON, test for less than 1 V between the signal circuit and ground.
   - If 1 V or greater, repair the short to voltage on the circuit.
   - If less than 1 V, replace the K20 Engine Control Module.

- **If between 4.8-5.2 V**

7. Ignition ON, test for 4.8-5.2 V between the intake air temperature signal 2 circuit terminal 8 and ground.
   - **If less than 4.8 V**
   1. Ignition OFF, disconnect the harness connector at the K20 Engine Control Module.
   2. Test for infinite resistance between the signal circuit and ground.
      - If less than infinite resistance, repair the short to ground on the circuit.
      - If infinite resistance
   3. Test for less than 2 ohms in the signal circuit end to end.
      - If 2 ohms or greater, repair the open/high resistance in the circuit.
      - If less than 2 ohms, replace the K20 Engine Control Module.
   - **If greater than 5.2 V**

NOTE: **If the signal circuit is shorted to a voltage the engine control module or the sensor may be damaged.**

1. Ignition OFF, disconnect the harness connector at the K20 Engine Control Module.
2. Ignition ON, test for less than 1 V between the signal circuit and ground.
   - If 1 V or greater, repair the short to voltage on the circuit.
   - If less than 1 V, replace the K20 Engine Control Module.

- **If between 4.8-5.2 V**

8. Determine if **EL-38522-A** Variable Signal Generator or equivalent is available.
   - **EL-38522-A, Variable Signal Generator; or equivalent is not available**
   1. Replace the K20 Engine Control Module.
   2. Operate the vehicle within the Conditions for Running the DTC. You may also operate the vehicle within the conditions that you observed from the freeze frame/failure records data.
   3. Verify the DTC does not set.
      - **If the DTC sets**

        Test or replace the B75C Multifunction Intake Air sensor.

      - **If no DTCs set**
   4. All OK.
   - **EL-38522-A, Variable Signal Generator; or equivalent is available**
9. Ignition OFF, connect the leads of the **EL-38522-A** Variable Signal Generator as follows:

- Red lead to the signal circuit terminal 8 at the harness connector
- Black leads to ground
- Battery voltage supply lead to B+

10. Set the **EL-38522-A** Variable Signal Generator to the following specifications.
    - Signal switch to 5 V
    - Duty Cycle switch to 50 % (Normal)
    - Frequency switch to 30 Hz
11. Ignition ON, verify the scan tool IAT Sensor 2 parameter is between 28-32 Hz.
    - **If not between 28-32 Hz**

      Replace the K20 Engine Control Module.

    - **If between 28-32 Hz**
12. Test or replace the appropriate temperature sensor.

Component Testing

Multifunction Intake Air Sensor

1. Ignition OFF, disconnect the harness connector at the B75C Multifunction Intake Air sensor.

   NOTE: A thermometer can be used to test the sensor off the vehicle.

2. Test the IAT sensor 1 by varying the sensor temperature while monitoring the sensor resistance. Compare the readings with the **Temperature Versus Resistance - Intake Air Temperature Sensor (Hitachi Sensor)** table for Hitachi Sensors. The resistance values should be in range of the table values.
   - If not within the specified range, replace the B75C Multifunction Intake Air sensor.

Multifunction Intake Air Sensor

- Test the IAT Sensor 2 by varying the sensor temperature while monitoring the air temperature with a thermometer. Compare the readings with the scan tool IAT Sensor 2 parameter. The values should be within 5%.
  - If not within the specified range, replace the B75C Multifunction Intake Air sensor.

Repair Instructions

Perform the **Diagnostic Repair Verification** after completing the repair.

- **Mass Airflow Sensor with Intake Air Temperature Sensor Replacement** for multifunction intake air sensor replacement.
- **Control Module References** for engine control module replacement, programming, and setup

DTC P0097, P0098, OR P0099 (WITH LEA)

Diagnostic Instructions

- Perform the **Diagnostic System Check - Vehicle** prior to using this diagnostic procedure.
- Review **Strategy Based Diagnosis** for an overview of the diagnostic approach.
- **Diagnostic Procedure Instructions** provides an overview of each diagnostic category.

DTC Descriptors

DTC P0097

Intake Air Temperature (IAT) Sensor 2 Circuit Low Voltage

DTC P0098

Intake Air Temperature (IAT) Sensor 2 Circuit High Voltage

DTC P0099

Intake Air Temperature (IAT) Sensor 2 Circuit Intermittent

Diagnostic Fault Information

IAT Sensor 2

Circuit	Short to Ground	Open/High Resistance	Short to Voltage	Signal Performance
Ignition Voltage	P0096, P0097, P0102, P11C2, P2199	P0096, P0097, P0102, P11C2, P2199	P0690	P0096, P0101, P0103
Signal	P0096, P0097, P11C3, P2199	P0096, P0097, P11C2, P2199	P0096, P0097, P11C2, P2199*	P0096
Ground	-	P0096, P0097, P0102, P11C2, P2199	-	P0096, P0102
*Internal ECM or sensor damage may occur if the circuit is shorted to B+.				

Typical Scan Tool Data

IAT Sensor 2

Circuit	Short to Ground	Open or High Resistance	Short to Voltage
Operating Conditions: Engine Running **Parameter Normal Range:** Varies with ambient temperature			
Ignition Voltage	-40°C (-40°F) 10 Hz	-40°C (-40°F) 10 Hz	-
Signal	-40°C (-40°F) 10 Hz	-40°C (-40°F) 10 Hz	-40°C (-40°F)* 10 Hz*
Ground	-	-40°C (-40°F) 10 Hz	-
*Internal ECM or sensor damage may occur if the circuit is shorted to B+			

Circuit/System Description

The intake air temperature (IAT) sensor 1 is a variable resistor that measures the temperature of the air in the sensor bore. The engine control module (ECM) supplies 5 V to the IAT sensor 1 signal circuit and a ground for the IAT sensor 1 low reference circuit. The signal varies with inlet air temperature and is displayed by the scan tool as °C (°F).

The IAT sensor 2 produces a frequency signal based on the inlet air temperature very close to the humidity sensor within the sensor bore. The signal varies with inlet air temperature and is displayed by the scan tool as °C (°F) and Hertz (Hz). The ECM applies 5 V to the circuit. The signal circuit is shared by the IAT sensor 2 and the humidity sensor. Ignition voltage and ground circuits are also supplied to the multifunction intake air sensor's internal circuits for these sensors:

- IAT sensor 2
- Humidity sensor
- Mass Air Flow (MAF) sensor

The multifunction intake air sensor houses the following:

- IAT sensor 1
- IAT sensor 2
- Humidity sensor
- MAF sensor
- BARO pressure sensor

IAT Sensor 1	IAT Sensor 1 Resistance	IAT Sensor 1 Signal Voltage
Cold	High	High
Warm	Low	Low

IAT Sensor 2	IAT Sensor 2 Frequency	IAT Sensor 2 Temperature
Cold	45 Hz	-40°C (-40°F)
Warm	302 Hz	104°C (219°F)

Conditions for Running the DTCs

P0097, P0098, and P0099

- The ignition is ON, or the engine is running.
- The Ignition 1 voltage is at least 11 V for longer than 0.9 s.
- The DTCs run continuously within the enabling conditions.

Conditions for Setting the DTCs

P0097

NOTE: The scan tool display range is between -40 and +150°C (-40 and +302°F).

The ECM detects that the IAT sensor 2 signal is less than 13 Hz, colder than -60°C (-76°F), for greater than 5 s.

P0098

The ECM detects that the IAT sensor 2 signal is greater than 390 Hz, warmer than 150°C (302°F), for greater than 5 s.

P0099

The ECM monitors the IAT sensor 2 signal every 0.1 s, to determine if the signal has changed more than 100°C (212°F). The DTC fails when the condition exists for longer than 4 s.

Action Taken When the DTC Sets

- DTCs P0097, P0098, and P0099 are Type B DTCs.
- The ECM commands the cooling fans ON.

Conditions for Clearing the MIL/DTCs

DTCs P0097, P0098, and P0099 are Type B DTCs.

Diagnostic Aids

- With the ignition ON, the engine OFF, if the engine is cold, a properly functioning IAT sensor 2 will gradually increase the scan tool IAT Sensor 2 parameter. This is due to the heat that is generated by the MAF sensor heating elements.
- The humidity sensor and the IAT sensor 2 signals are sent to the ECM on the same circuit. If the IAT Sensor 2 parameter displays the values: 10 Hz; -40°C (-40°F), and there are also Humidity Sensor DTCs, check for a circuit problem.

Reference Information

Schematic Reference

Engine Controls Schematics

Connector End View Reference

COMPONENT CONNECTOR END VIEWS - INDEX

Electrical Information Reference

- **Circuit Testing**
- **Connector Repairs**
- **Testing for Intermittent Conditions and Poor Connections**
- **Wiring Repairs**

Powertrain Component Views

Powertrain Component Views

DTC Type Reference

Powertrain Diagnostic Trouble Code (DTC) Type Definitions

Scan Tool Reference

Control Module References Control Module References for scan tool information

Special Tools

EL-38522-A Variable Signal Generator

For equivalent regional tools, refer to **Special Tools (Diagnostic Tools)** , **Special Tools (Mechanical Tools)** .

Circuit/System Verification

NOTE: **To minimize the effects of residual engine heat and sensor internal heating elements, perform Steps 1 and 2 of this verification procedure only if the ignition has been OFF for 8 hours or more.**

1. Ignition ON.
2. Verify the following scan tool parameters are within 55°C (99°F) of each other.
   - Start-Up IAT Sensor 1
   - IAT Sensor 2
   - Start-Up ECT
   - **If not within 55°C (99°F)**

     Refer to Circuit/System Testing.

   - **If within 55°C (99°F)**
3. Engine idling, verify the following scan tool parameters are between: between -38 and +149°C (-36 and +300°F).
   - IAT Sensor 1
   - IAT Sensor 2
   - **If not between: -38 and +149°C (-36 and +300°F)**

     Refer to Circuit System Testing.

   - **If between: -38 and +149°C (-36 and +300°F)**
4. Operate the vehicle within the conditions for running the DTC to verify that the DTC does not reset. You may also operate the vehicle within the conditions that you observed from the freeze frame/failure records data.
5. Verify the DTCs do not set.
   - **If any of the DTCs set**

Refer to Circuit/System Testing.

- **If none of the DTCs set**

6. All OK

Circuit/System Testing

1. Ignition OFF, disconnect the harness connector at the B75C Multifunction Intake Air sensor.
2. Ignition OFF, all systems OFF. It may take up to for 2 minutes for all vehicle systems to power down. Test for less than 2 ohms between the low reference circuit terminal 3 and ground.
   - **If 2 ohms or greater**
   1. Ignition OFF, disconnect the harness connector at the K20 Engine Control Module.
   2. Test for less than 2 ohms in the low reference circuit end to end.
      - If 2 ohms or greater, repair the open or high resistance in the circuit.
      - If less than 2 ohms replace the K20 Engine Control Module.
   - **If less than 2 ohms**
3. Ignition OFF, all vehicle systems OFF, test for less than 2 ohms between the ground circuit terminal 7 and ground.
   - **If 2 ohms or greater**
   1. Ignition OFF, disconnect the sensor chassis ground.
   2. Test for less than 2 ohms in the ground circuit end to end.
      - If 2 ohms or greater, repair the open or high resistance in the circuit.
      - If less than 2 ohms, repair the open/high resistance in the ground connection.
   - **If less than 2 ohms**
4. Ignition ON, verify that a test lamp illuminates between the ignition circuit terminal 5 and ground.
   - **If the test lamp does not illuminate and the circuit fuse is good**
   1. Ignition OFF, remove the test lamp and remove the fuse for the ignition voltage circuit.
   2. Test for less than 2 ohms in the ignition voltage circuit end to end.
      - If 2 ohms or greater, repair the open/high resistance in the circuit.
      - If less than 2 ohms, verify the fuse is not open and there is voltage at the fuse.
   - **If the test lamp does not illuminate and the circuit fuse is open**
   1. Ignition OFF, remove the test lamp and remove the fuse for the ignition voltage circuit.
   2. Test for infinite resistance between the ignition voltage circuit and ground.
      - If less than infinite resistance, repair the short to ground on the circuit.
      - If infinite resistance
   3. Test for greater than 2 ohms between the ignition voltage circuit terminal 5 and ground.
      - If less than 2 ohms, repair the short to ground on the circuit.
      - If greater than 2 ohms, test all the components connected to the circuit and repair or replace as necessary.
   - **If a test lamp illuminates**
5. Ignition ON, test for 4.8-5.2 V between the intake air temperature sensor 2 signal circuit terminal 8 and ground.

- **If less than 4.8 V**

1. Ignition OFF, disconnect the harness connector at the K20 Engine Control Module.
2. Test for infinite resistance between the signal circuit and ground.
   - If less than infinite resistance, repair the short to ground on the circuit.
   - If infinite resistance
3. Test for less than 2 ohms in the signal circuit end to end.
   - If 2 ohms or greater, repair the open/high resistance in the circuit.
   - If less than 2 ohms, replace the K20 Engine Control Module.

- **If greater than 5.2 V**

NOTE: **If the signal circuit is shorted to a voltage the engine control module or the sensor may be damaged.**

1. Ignition OFF, disconnect the harness connector at the K20 Engine Control Module.
2. Ignition ON, test for less than 1 V between the signal circuit and ground.
   - If 1 V or greater, repair the short to voltage on the circuit.
   - If less than 1 V, replace the K20 Engine Control Module.

- **If between 4.8-5.2 V**

6. Determine if **EL-38522-A** Variable Signal Generator or equivalent is available.
   - **EL-38522-A, Variable Signal Generator; or equivalent is not available**

   1. Replace the K20 Engine Control Module.
   2. Operate the vehicle within the Conditions for Running the DTC. You may also operate the vehicle within the conditions that you observed from the freeze frame/failure records data.
   3. Verify the DTC does not set.
      - **If the DTC sets**

        Test or replace the B75C Multifunction Intake Air sensor.

      - **If no DTCs set**
   4. All OK.

   - **EL-38522-A, Variable Signal Generator; or equivalent is available**

7. Ignition OFF, connect the leads of the **EL-38522-A** Variable Signal Generator as follows:
   - Red lead to the signal circuit terminal 8 at the harness connector
   - Black leads to ground
   - Battery voltage supply lead to B+
8. Set the **EL-38522-A** Variable Signal Generator to the following specifications.
   - Signal switch to 5 V
   - Duty Cycle switch to 50 % (Normal)
   - Frequency switch to 30 Hz
9. Ignition ON, observe the scan tool IAT Sensor 2 parameter. The scan tool parameter should be between 28-32 Hz.
   - **If not between 28-32 Hz**

Replace the K20 Engine Control Module.

- **If between 28-32 Hz**

10. Test or replace the B75C Multifunction Intake Air sensor.

Component Testing

Multifunction Intake Air Sensor

- Test the IAT Sensor 2 by varying the sensor temperature while monitoring the air temperature with a thermometer. Compare the readings with the scan tool IAT Sensor 2 parameter. The values should be within 5%.
  - If not within the specified range, replace the B75C Multifunction Intake Air sensor.

Repair Instructions

Perform the **Diagnostic Repair Verification** after completing the repair.

- **Mass Airflow Sensor with Intake Air Temperature Sensor Replacement** for multifunction intake air sensor replacement
- **Control Module References** for engine control module replacement, programming, and setup

DTC P0101 (WITH LEA)

Diagnostic Instructions

- Perform the **Diagnostic System Check - Vehicle** prior to using this diagnostic procedure.
- Review **Strategy Based Diagnosis** for an overview of the diagnostic approach.
- **Diagnostic Procedure Instructions** provides an overview of each diagnostic category.

DTC Descriptor

DTC P0101

Mass Air Flow (MAF) Sensor Performance

Diagnostic Fault Information

Circuit	Short to Ground	High Resistance	Open	Short to Voltage	Signal Performance
Ignition Voltage	P0102	P0101	P0102	-	P0101, P0103
Signal	P0102	P0102	P0102	P0102	P0101, P0103, P1101
Ground	-	P0102	P0102	-	P0102

Typical Scan Tool Data

MAF Sensor

Circuit	Short to Ground	Open	Short to Voltage
Operating Conditions: Engine running at various operating conditions **Parameter Normal Range:** 1,500-10,000 Hz			
Ignition Voltage	0 Hz	0 Hz	-
Signal	0 Hz	0 Hz	0 Hz
Ground	-	0 Hz	-

Circuit Description

The manifold absolute pressure (MAP) sensor measures the pressure inside the intake manifold. Pressure in the intake manifold is affected by engine speed, throttle opening, air temperature, and barometric pressure (BARO). A diaphragm within the MAP sensor is displaced by the pressure changes that occur from the varying load and operating conditions of the engine. The sensor translates this action into electrical resistance. The MAP sensor wiring includes 3 circuits. The engine control module (ECM) supplies a regulated 5 volts to the sensor on a 5 V reference circuit. The ECM supplies a ground on a low reference circuit. The MAP sensor provides a signal voltage to the ECM, relative to the pressure changes, on the MAP sensor signal circuit. The ECM converts the signal voltage input to a pressure value.

Under normal operation the greatest pressure that can exist in the intake manifold is at ignition ON, engine OFF, which is equal to the BARO. When the vehicle is operated at wide-open throttle (WOT), the pressure in the intake manifold is close to BARO. The lowest manifold pressure occurs when the vehicle is idling or decelerating. The ECM monitors the MAP sensor signal for pressure outside of the normal range.

Conditions for Running the DTCs

- DTCs P0102, P0103, P0107, P0108, P0111, P0112, P0113, P0116, P0117, P0118, P0128, P0335 or P0336 are not set.
- The engine speed is between 500-6,400 RPM
- The engine coolant temperature (ECT) is between -7 and +125°C (+19 and +257°F).
- The intake air temperature (IAT) is between -20 and +125°C (-4 and +257°F).
- The DTC runs continuously when the above conditions are met.

Conditions for Setting the DTC

The engine control module (ECM) detects that the actual measured airflow from the MAF, MAP, and throttle position sensors is not within range of the calculated airflow that is derived from the system of models for greater than 2 s.

Action Taken When the DTC Sets

DTC P0101 is a Type B DTC.

Conditions for Clearing the MIL/DTC

DTC P0101 is a Type B DTC.

Diagnostic Aids

- Certain aftermarket air filters may cause this DTC to set.

- Certain aftermarket air induction systems may cause this DTC to set.
- Modifications to the air induction system may cause this DTC to set.

Reference Information

Schematic Reference

Engine Controls Schematics

Connector End View Reference

COMPONENT CONNECTOR END VIEWS - INDEX

Electrical Information Reference

- **Circuit Testing**
- **Connector Repairs**
- **Testing for Intermittent Conditions and Poor Connections**
- **Wiring Repairs**

Powertrain Component Views

Powertrain Component Views

DTC Type Reference

Powertrain Diagnostic Trouble Code (DTC) Type Definitions

Scan Tool Reference

Control Module References for scan tool information

Special Tools

EL-38522-A Variable Signal Generator

For equivalent regional tools, refer to **Special Tools (Diagnostic Tools)** , **Special Tools (Mechanical Tools)** .

Circuit/System Verification

1. Ignition ON.
2. Verify that DTC P0641, P0651, P0697, or P06A3 is not set.
   - **If any of the DTCs are set**

     Refer to **DTC P0641, P0651, P0697, or P06A3 (ECM)** for further diagnosis.

   - **If none of the DTCs are set**

3. If you were sent here from DTC P0068, P0106, P0121, or P1101; refer to Circuit/System Testing.
4. Ignition ON, verify the scan tool TB Idle Airflow Compensation parameter is less than 90 %.
   - **90 % or greater**

     Refer to **Throttle Body Cleaning** .

   - **If less than 90 %**
5. Verify the scan tool TP Sensors 1 and 2 Agree/Disagree parameter displays Agree while performing the Throttle Sweep Test with a scan tool.
   - **If Disagree**

     Refer to **DTC P0121-P0123, P0222, P0223, P16A0-P16A2, or P2135** for further diagnosis.

   - **If Agree**
6. Determine the current vehicle testing altitude.
7. Verify the scan tool MAP Sensor pressure parameter is within the range specified in the **Altitude Versus Barometric Pressure** table.
   - **If the MAP Sensor parameter is not in range**

     Refer to **Altitude Versus Barometric Pressure** for further diagnosis.

   - **If the MAP Sensor parameter is within range**
8. Engine idling, verify the scan tool MAP Sensor pressure parameter is between 26-52 kPa (3.8-7.5 PSI) and changes with accelerator pedal input.
   - **If not between 26-52 kPa (3.8-7.5 PSI) or does not change**

     Refer to **DTC P0106** for further diagnosis.

   - **If between 26-52 kPa (3.8-7.5 PSI) and changes**
9. Verify the scan tool MAF Sensor g/s parameter changes smoothly and gradually as the engine speed is increased and decreased while performing the actions listed below.
   1. Engine idling
   2. Perform the scan tool snapshot function.
   3. Increase the engine speed slowly to 3,000 RPM and then back to idle.
   4. Exit from the scan tool snapshot and review the data.
   5. Observe the MAF Sensor parameter frame by frame with a scan tool.
   - **If the MAF Sensor parameter does not change smoothly and gradually**

     Refer to Circuit/System Testing.

   - **If the MAF Sensor parameter changes smoothly and gradually**
10. Operate the vehicle within the Conditions for Running the DTC. You may also operate the vehicle within the conditions that you observed from the Freeze Frame/Failure Records data.
11. Verify a DTC does not set.
    - **If any DTC sets**

Refer to **Diagnostic Trouble Code (DTC) List - Vehicle** for further diagnosis.

- **If no DTCs set**

12. All OK

Circuit/System Testing

NOTE: You must perform the Circuit/System Verification before proceeding with Circuit/System Testing.

1. Verify the integrity of the entire air induction system by verifying that none of the following conditions exist:
   - Any damaged components
   - Improperly installed components
   - Collapsed, restricted, or damaged components
   - Loose clamps, cracks, or other damage
   - An air flow restriction
   - Restricted air filter
   - Splits, kinks, leaks, or improper connections at the vacuum hoses
   - Vacuum leaks at the intake manifold, MAP sensor, and throttle body
   - Water intrusion
   - Any snow or ice buildup, in cold climates
   - Contamination of the mass air flow sensor element
   - Improper operation of the positive crankcase ventilation system
   - **If a condition is found**

     Repair or replace component as appropriate.

   - **If no condition is found**
2. Ignition OFF, disconnect the harness connector at the B75C Multifunction Intake Air sensor.
3. Ignition OFF and all systems OFF. It may take up to for 2 minutes for all vehicle systems to power down. Test for less than 2 ohms between the ground circuit terminal 7 and ground.
   - **If 2 ohms or greater**
   1. Ignition OFF, disconnect the sensor chassis ground.
   2. Test for less than 2 ohms in the ground circuit end to end.
      - If 2 ohms or greater, repair the open/high resistance in the circuit.
      - If less than 2 ohms, repair the open/high resistance in the ground connection.
   - **If less than 2 ohms**
4. Ignition ON, verify that a test lamp illuminates between the ignition circuit terminal 5 and ground.
   - **If the test lamp does not illuminate and the circuit fuse is good**
   1. Ignition OFF, remove the test lamp and remove the fuse for the ignition voltage circuit.
   2. Test for less than 2 ohms in the ignition voltage circuit end to end.
      - If 2 ohms or greater, repair the open/high resistance in the circuit.

- If less than 2 ohms, verify the fuse is not open and there is voltage at the fuse.
- **If the test lamp does not illuminate and the circuit fuse is open**

1. Ignition OFF, remove the test lamp and remove the fuse for the ignition voltage circuit.
2. Test for infinite resistance between the ignition voltage circuit and ground.
   - If less than infinite resistance, repair the short to ground on the circuit.
   - If infinite resistance
3. Test for greater than 2 ohms between the ignition voltage circuit terminal 5 and ground.
   - If less than 2 ohms, repair the short to ground on the circuit.
   - If greater than 2 ohms, test all the components connected to the circuit and repair or replace as necessary.

- **If a test lamp illuminates**

5. Ignition ON, test for 4.8-5.2 V between the signal circuit terminal 6 and ground.
   - **If less than 4.8 V**

   1. Ignition OFF, disconnect the harness connector at the K20 Engine Control Module.
   2. Test for infinite resistance between the signal circuit and ground.
      - If less than infinite resistance, repair the short to ground on the circuit.
      - If infinite resistance
   3. Test for less than 2 ohms in the signal circuit end to end.
      - If 2 ohms or greater, repair the open/high resistance in the circuit.
      - If less than 2 ohms, replace the K20 Engine Control Module.

   - **If greater than 5.2 V**

   1. Ignition OFF, disconnect the harness connector at the K20 Engine Control Module.
   2. Ignition ON, test for less than 1 V between the signal circuit and ground.
      - If 1 V or greater, repair the short to voltage on the circuit.
      - If less than 1 V, replace the K20 Engine Control Module.

   - **If between 4.8-5.2 V**

6. Determine if **EL-38522-A** Variable Signal Generator or equivalent is available.
   - **EL-38522-A, Variable Signal Generator; or equivalent is not available**

   1. Test or replace the B75C Multifunction Intake Air sensor
   2. Operate the vehicle within the Conditions for Running the DTC. You may also operate the vehicle within the conditions that you observed from the freeze frame/failure records data.
   3. Verify the DTC does not set.
      - **If the DTC sets**

        Replace the K20 Engine Control Module.

      - **If no DTCs set**
   4. All OK.

   - **EL-38522-A, Variable Signal Generator; or equivalent is available**

7. Ignition OFF, connect the leads of the **EL-38522-A** Variable Signal Generator as follows:
   - Red lead to the signal circuit terminal 6 at the harness connector

- Black leads to ground
- Battery voltage supply lead to B+

8. Set the **EL-38522-A** Variable Signal Generator to the following specifications.
   - Signal switch to 5 V
   - Frequency switch to 5 kHz
   - Duty Cycle switch to 50 % (Normal)
9. Engine idling, verify the scan tool MAF Sensor parameter is between 4,950-5,050 Hz.
   - **If not between 4,950-5,050 Hz.**

     Replace the K20 Engine Control Module.

   - **If between 4,950-5,050 Hz.**
10. Test or replace the B75C Multifunction Intake Air sensor.

Repair Instructions

Perform the **Diagnostic Repair Verification** after completing the repair.

- **Mass Airflow Sensor with Intake Air Temperature Sensor Replacement** for multifunction intake air sensor replacement.
- **Control Module References** for engine control module replacement, programming, and setup

DTC P0101 (WITH LUK)

Diagnostic Instructions

- Perform the **Diagnostic System Check - Vehicle** prior to using this diagnostic procedure.
- Review **Strategy Based Diagnosis** for an overview of the diagnostic approach.
- **Diagnostic Procedure Instructions** provides an overview of each diagnostic category.

DTC Descriptor

DTC P0101

Mass Air Flow (MAF) Sensor Performance

Diagnostic Fault Information

Circuit	Short to Ground	High Resistance	Open	Short to Voltage	Signal Performance
Ignition Voltage	P0102	P0101	P0102	-	P0101, P0103
Signal	P0102	P0102	P0102	P0102	P0101, P0103, P1101
Ground	-	P0102	P0102	-	P0102

Typical Scan Tool Data

MAF Sensor

Circuit	Short to Ground	Open	Short to Voltage
Operating Conditions: Engine running at various operating conditions **Parameter Normal Range:** 1,500-10,000 Hz			
Ignition Voltage	0 Hz	0 Hz	-
Signal	0 Hz	0 Hz	0 Hz
Ground	-	0 Hz	-

Circuit Description

The manifold absolute pressure (MAP) sensor measures the pressure inside the intake manifold. Pressure in the intake manifold is affected by engine speed, throttle opening, air temperature, and barometric pressure (BARO). A diaphragm within the MAP sensor is displaced by the pressure changes that occur from the varying load and operating conditions of the engine. The sensor translates this action into electrical resistance. The MAP sensor wiring includes 3 circuits. The engine control module (ECM) supplies a regulated 5 volts to the sensor on a 5 V reference circuit. The ECM supplies a ground on a low reference circuit. The MAP sensor provides a signal voltage to the ECM, relative to the pressure changes, on the MAP sensor signal circuit. The ECM converts the signal voltage input to a pressure value.

Under normal operation the greatest pressure that can exist in the intake manifold is at ignition ON, engine OFF, which is equal to the BARO. When the vehicle is operated at wide-open throttle (WOT), the pressure in the intake manifold is close to BARO. The lowest manifold pressure occurs when the vehicle is idling or decelerating. The ECM monitors the MAP sensor signal for pressure outside of the normal range.

Conditions for Running the DTCs

- DTCs P0102, P0103, P0107, P0108, P0111, P0112, P0113, P0116, P0117, P0118, P0128, P0335 or P0336 are not set.
- The engine speed is between 500-6,400 RPM
- The engine coolant temperature (ECT) is between -7 and +125°C (+19 and +257°F).
- The intake air temperature (IAT) is between -20 and +125°C (-4 and +257°F).
- The DTC runs continuously when the above conditions are met.

Conditions for Setting the DTC

The engine control module (ECM) detects that the actual measured airflow from the MAF, MAP, and throttle position sensors is not within range of the calculated airflow that is derived from the system of models for greater than 2 s.

Action Taken When the DTC Sets

DTC P0101 is a Type B DTC.

Conditions for Clearing the MIL/DTC

DTC P0101 is a Type B DTC.

Diagnostic Aids

- Certain aftermarket air filters may cause this DTC to set.
- Certain aftermarket air induction systems may cause this DTC to set.
- Modifications to the air induction system may cause this DTC to set.

Reference Information

Schematic Reference

Engine Controls Schematics

Connector End View Reference

COMPONENT CONNECTOR END VIEWS - INDEX

Electrical Information Reference

- **Circuit Testing**
- **Connector Repairs**
- **Testing for Intermittent Conditions and Poor Connections**
- **Wiring Repairs**

Powertrain Component Views

Powertrain Component Views

DTC Type Reference

Powertrain Diagnostic Trouble Code (DTC) Type Definitions

Scan Tool Reference

Control Module References for scan tool information

Special Tools

EL-38522-A Variable Signal Generator

For equivalent regional tools, refer to **Special Tools (Diagnostic Tools)** , **Special Tools (Mechanical Tools)** .

Circuit/System Verification

1. Ignition ON.
2. Verify that DTC P0641, P0651, P0697, or P06A3 is not set.
    - **If any of the DTCs are set**

      Refer to **DTC P0641, P0651, P0697, or P06A3 (ECM)** for further diagnosis.

- **If none of the DTCs are set**

3. If you were sent here from DTC P0068, P0106, P0121, or P1101; refer to Circuit/System Testing.
4. Ignition ON, verify the scan tool TB Idle Airflow Compensation parameter is less than 90 %.
   - **90 % or greater**

     Refer to **Throttle Body Cleaning** .

   - **If less than 90 %**
5. Verify the scan tool TP Sensors 1 and 2 Agree/Disagree parameter displays Agree while performing the Throttle Sweep Test with a scan tool.
   - **If Disagree**

     Refer to **DTC P0121-P0123, P0222, P0223, P16A0-P16A2, or P2135** for further diagnosis.

   - **If Agree**
6. Determine the current vehicle testing altitude.
7. Verify the scan tool MAP Sensor pressure parameter is within the range specified in the **Altitude Versus Barometric Pressure** table.
   - **If the MAP Sensor parameter is not in range**

     Refer to **Altitude Versus Barometric Pressure** for further diagnosis.

   - **If the MAP Sensor parameter is within range**
8. Engine idling, verify the scan tool MAP Sensor pressure parameter is between 26-52 kPa (3.8-7.5 PSI) and changes with accelerator pedal input.
   - **If not between 26-52 kPa (3.8-7.5 PSI) or does not change**

     Refer to **DTC P0106** for further diagnosis.

   - **If between 26-52 kPa (3.8-7.5 PSI) and changes**
9. Verify the scan tool MAF Sensor g/s parameter changes smoothly and gradually as the engine speed is increased and decreased while performing the actions listed below.
   1. Engine idling
   2. Perform the scan tool snapshot function.
   3. Increase the engine speed slowly to 3,000 RPM and then back to idle.
   4. Exit from the scan tool snapshot and review the data.
   5. Observe the MAF Sensor parameter frame by frame with a scan tool.
   - **If the MAF Sensor parameter does not change smoothly and gradually**

     Refer to Circuit/System Testing.

   - **If the MAF Sensor parameter changes smoothly and gradually**
10. Operate the vehicle within the Conditions for Running the DTC. You may also operate the vehicle within the conditions that you observed from the Freeze Frame/Failure Records data.
11. Verify a DTC does not set.

- **If any DTC sets**

  Refer to **Diagnostic Trouble Code (DTC) List - Vehicle** for further diagnosis.

- **If no DTCs set**

12. All OK

Circuit/System Testing

NOTE: You must perform the Circuit/System Verification before proceeding with Circuit/System Testing.

1. Verify the integrity of the entire air induction system by verifying that none of the following conditions exist:
   - Any damaged components
   - Improperly installed components
   - Collapsed, restricted, or damaged components
   - Loose clamps, cracks, or other damage
   - An air flow restriction
   - Restricted air filter
   - Splits, kinks, leaks, or improper connections at the vacuum hoses
   - Vacuum leaks at the intake manifold, MAP sensor, and throttle body
   - Water intrusion
   - Any snow or ice buildup, in cold climates
   - Contamination of the Mass Air Flow/Intake Air Temperature sensor element
   - **If a condition is found**

     If a condition is found, repair or replace component as appropriate.

   - **If no condition is found**
2. Ignition OFF, disconnect the harness connector at the B75B Mass Air Flow/Intake Air Temperature sensor.
3. Ignition OFF and all systems OFF. It may take up to for 2 minutes for all vehicle systems to power down. Test for less than 2 ohms between the ground circuit terminal B and ground.
   - **If 2 ohms or greater**
     1. Ignition OFF, disconnect the sensor chassis ground.

        Test for less than 2 ohms in the ground circuit end to end.

        - If 2 ohms or greater, repair the open/high resistance in the circuit.
        - If less than 2 ohms, repair the open/high resistance in the ground connection.
   - **If less than 2 ohms**
4. Ignition ON, verify that a test lamp illuminates between the ignition circuit terminal C and ground.
   - **If the test lamp does not illuminate and the circuit fuse is good**

1. Ignition OFF, remove the test lamp and remove the fuse for the ignition voltage circuit.
2. Test for less than 2 ohms in the ignition voltage circuit end to end.
   - If 2 ohms or greater, repair the open/high resistance in the circuit.
   - If less than 2 ohms, verify the fuse is not open and there is voltage at the fuse.
- **If the test lamp does not illuminate and the circuit fuse is open**
1. Ignition OFF, remove the test lamp and remove the fuse for the ignition voltage circuit.
2. Test for infinite resistance between the ignition voltage circuit and ground.
   - If less than infinite resistance, repair the short to ground on the circuit.
   - If infinite resistance
3. Test for greater than 2 ohms between the ignition voltage circuit terminal C and ground.
   - If less than 2 ohms, repair the short to ground on the circuit.
   - If greater than 2 ohms, test all the components connected to the circuit and repair or replace as necessary.
- **If a test lamp illuminates**

5. Ignition ON, test for 4.8-5.2 V between the signal circuit terminal A and ground.
   - **If less than 4.8 V**
   1. Ignition OFF, disconnect the harness connector at the K20 Engine Control Module.
   2. Test for infinite resistance between the signal circuit and ground.
      - If less than infinite resistance, repair the short to ground on the circuit.
      - If infinite resistance
   3. Test for less than 2 ohms in the signal circuit end to end.
      - If 2 ohms or greater, repair the open/high resistance in the circuit.
      - If less than 2 ohms, replace the K20 Engine Control Module.
   - **If greater than 5.2 V**
   1. Ignition OFF, disconnect the harness connector at the K20 Engine Control Module.
   2. Ignition ON, test for less than 1 V between the signal circuit and ground.
      - If 1 V or greater, repair the short to voltage on the circuit.
      - If less than 1 V, replace the K20 Engine Control Module.
   - **If between 4.8-5.2 V**
6. Determine if **EL-38522-A** Variable Signal Generator or equivalent is available.
   - **EL-38522-A, Variable Signal Generator; or equivalent is not available**
   1. Test or replace the B75C Multifunction Intake Air sensor
   2. Operate the vehicle within the Conditions for Running the DTC. You may also operate the vehicle within the conditions that you observed from the freeze frame/failure records data.
   3. Verify the DTC does not set.
      - **If the DTC sets**

        Replace the K20 Engine Control Module.

      - **If no DTCs set**
   4. All OK.

- **EL-38522-A, Variable Signal Generator; or equivalent is available**

7. Ignition OFF, connect the leads of the **EL-38522-A** Variable Signal Generator as follows:
   - Red lead to the signal circuit terminal A at the harness connector
   - Black leads to ground
   - Battery voltage supply lead to B+
8. Set the **EL-38522-A** Variable Signal Generator to the following specifications.
   - Signal switch to 5 V
   - Frequency switch to 5 kHz
   - Duty Cycle switch to 50 % (Normal)
9. Engine idling, verify the scan tool MAF Sensor parameter is between 4,950-5,050 Hz.
   - **If not between 4,950-5,050 Hz.**

     Replace the K20 Engine Control Module.

   - **If between 4,950-5,050 Hz.**
10. Circuits and ECM test OK. Test or replace the B75B Mass Air Flow/Intake Air Temperature sensor.

Repair Instructions

Perform the **Diagnostic Repair Verification** after completing the repair.

- **Mass Airflow Sensor with Intake Air Temperature Sensor Replacement**
- **Control Module References** for engine control module replacement, programming, and setup

DTC P0102 OR P0103 (WITH LEA)

Diagnostic Instructions

- Perform the **Diagnostic System Check - Vehicle** prior to using this diagnostic procedure.
- Review **Strategy Based Diagnosis** for an overview of the diagnostic approach.
- **Diagnostic Procedure Instructions** provides an overview of each diagnostic category.

DTC Descriptors

DTC P0102

Mass Air Flow (MAF) Sensor Circuit Low Frequency

DTC P0103

Mass Air Flow (MAF) Sensor Circuit High Frequency

Diagnostic Fault Information

Circuit	Short to Ground	High Resistance	Open	Short to Voltage	Signal Performance

Ignition Voltage	P0102	P0101	P0102	P0690	P0101, P0103
Signal	P0102	P0102	P0102	P0102	P0101, P0103, P1101
Ground	-	P0102	P0102	-	P0102

Typical Scan Tool Data

MAF Sensor

Circuit	Short to Ground	Open	Short to Voltage
Operating Conditions: Engine running at various operating conditions **Parameter Normal Range:** 1,500-10,000 Hz			
Ignition Voltage	0 Hz	0 Hz	-
Signal	0 Hz	0 Hz	0 Hz
Ground	-	0 Hz	-

Circuit/System Description

The mass air flow (MAF) sensor is integrated with the multifunction intake air sensor. The MAF sensor is an air flow meter that measures the amount of air in the sensor bore. The engine control module (ECM) uses the MAF sensor signal to provide the correct fuel delivery for all engine speeds and loads. A small quantity of air entering the engine indicates a deceleration or idle condition. A large quantity of air entering the engine indicates an acceleration or high load condition.

The ECM applies 5 V to the MAF sensor on the MAF sensor signal circuit. The sensor uses the voltage to produce a variable frequency signal based on the inlet air flow through the sensor bore. The signal varies with engine load and is displayed by the scan tool as Hertz (Hz) and grams per second (g/s). Ignition voltage and ground circuits are also supplied to the multifunction intake air sensor's internal circuits for these sensors:

- Intake Air Temperature (IAT) sensor 2
- Humidity sensor
- MAF sensor

The multifunction intake air sensor houses the following:

- IAT sensor 1
- IAT sensor 2
- Humidity sensor
- MAF sensor
- BARO pressure sensor

Conditions for Running the DTC

- The engine is running for at least 1 s.
- The engine speed is at least 300 RPM.
- The ignition signal is at least 8 V.
- The above conditions are met for at least 1 s.

- The DTC runs continuously when the above conditions are met.

Conditions for Setting the DTC

P0102

The ECM detects that the MAF Sensor signal parameter is less than 100 Hz (about 0.15 g/s) for at least 500 cylinder firing events.

P0103

The ECM detects that the MAF Sensor signal parameter is at least 14,500 Hz (about 270.2 g/s) for at least 500 cylinder firing events.

Action Taken When the DTCs Set

DTCs P0102 and P0103 are Type B DTCs.

Conditions for Clearing the MIL/DTCs

DTCs P0102 and P0103 are Type B DTCs.

Reference Information

Schematic Reference

Engine Controls Schematics

Connector End View Reference

COMPONENT CONNECTOR END VIEWS - INDEX

Electrical Information Reference

- **Circuit Testing**
- **Connector Repairs**
- **Testing for Intermittent Conditions and Poor Connections**
- **Wiring Repairs**

Powertrain Component Views

Powertrain Component Views

DTC Type Reference

Powertrain Diagnostic Trouble Code (DTC) Type Definitions

Scan Tool Reference

Control Module References for scan tool information

Special Tools

EL-38522-A Variable Signal Generator

For equivalent regional tools, refer to **Special Tools (Diagnostic Tools)** , **Special Tools (Mechanical Tools)** .

Circuit/System Verification

1. Engine idling, observe the scan tool MAF Sensor parameter. The reading should be between 2.5-5.5 g/s.
   - **If not between 2.5-5.5 g/s**

     Refer to .

   - **If between 2.5-5.5 g/s**
2. Verify the scan tool MAF Sensor g/s parameter changes smoothly and gradually as the engine speed is increased and decreased while performing the actions listed below.
   1. Engine idling
   2. Perform the scan tool snapshot function.
   3. Increase the engine speed slowly to 3,000 RPM and then back to idle.
   4. Exit from the scan tool snapshot and review the data.
   5. Observe the MAF Sensor parameter frame by frame with a scan tool.
   - **The MAF Sensor parameter does not change smoothly and gradually**

     Refer to .

   - **The MAF Sensor parameter changes smoothly and gradually**
3. Operate the vehicle within the Conditions for Running the DTC to verify the DTC does not reset. You may also operate the vehicle within the conditions that you observed from the Freeze Frame/Failure Records data.
4. Verify the DTC does not set.
   - **If the DTC sets**

     Refer to for further diagnosis.

   - **If the DTC does not set**
5. All OK

Circuit/System Testing

NOTE: You must perform the Circuit/System Verification before proceeding with Circuit/System Testing.

1. Ignition OFF, disconnect the harness connector at the B75C Multifunction Intake Air sensor.

2. Ignition OFF and all vehicle systems OFF. It may take up to 2 minutes for all vehicle systems to power down. Test for less than 2 ohms between the ground circuit terminal 7 and ground.
    - **If 2 ohms or greater**
    1. Ignition OFF. Disconnect the sensor chassis ground.
    2. Test for less than 2 ohms in the ground circuit end to end.
        - If 2 ohms or greater, repair the open/high resistance in the circuit.
        - If less than 2 ohms, repair the open/high resistance in the chassis ground connection.
    - **If less than 2 ohms**
3. Ignition ON, verify that a test lamp illuminates between the ignition circuit terminal 5 and ground.
    - **If the test lamp does not illuminate and the circuit fuse is good**
    1. Ignition OFF, remove the test lamp and remove the fuse for the ignition voltage circuit.
    2. Test for less than 2 ohms in the ignition voltage circuit end to end.
        - If 2 ohms or greater, repair the open/high resistance in the circuit.
        - If less than 2 ohms, verify the fuse is not open and there is voltage at the fuse.
    - **If the test lamp does not illuminate and the circuit fuse is open**
    1. Ignition OFF, remove the test lamp and remove the fuse for the ignition voltage circuit.
    2. Test for infinite resistance between the ignition voltage circuit and ground.
        - If less than infinite resistance, repair the short to ground on the circuit.
        - If infinite resistance
    3. Test for greater than 2 ohms between the ignition voltage circuit terminal 5 and ground.
        - If less than 2 ohms, repair the short to ground on the circuit.
        - If greater than 2 ohms, test all the components connected to the circuit and repair or replace as necessary.
    - If 2 ohms or greater, repair the open or high resistance in the circuit.
    - If the circuit tests normal and the fuse is open, test all the components connected to the circuit and repair or replace as necessary.
    - **If a test lamp illuminates**
4. Ignition ON, test for 4.8-5.2 V between the signal circuit terminal 6 and ground.
    - **If less than 4.8 V**
    1. Ignition OFF, disconnect the harness connector at the K20 Engine Control Module.
    2. Test for infinite resistance between the signal circuit and ground.
        - If less than infinite resistance, repair the short to ground on the circuit.
        - If infinite resistance
    3. Test for less than 2 ohms in the signal circuit end to end.
        - If 2 ohms or greater, repair the open/high resistance in the circuit.
        - If less than 2 ohms, replace the K20 Engine Control Module.
    - **If greater than 5.2 V**
    1. Ignition OFF, disconnect the harness connector at the K20 Engine Control Module.
    2. Ignition ON, test for less than 1 V between the signal circuit and ground.
        - If 1 V or greater, repair the short to voltage on the circuit.
        - If less than 1 V, replace the K20 Engine Control Module.

- **If between 4.8-5.2 V**

5. Determine if **EL-38522-A** Variable Signal Generator or equivalent is available.
   - **EL-38522-A, Variable Signal Generator; or equivalent is not available**
     1. Test or replace the B75C Multifunction Intake Air sensor
     2. Operate the vehicle within the Conditions for Running the DTC. You may also operate the vehicle within the conditions that you observed from the freeze frame/failure records data.
     3. Verify the DTC does not set.
        - **If the DTC sets**

          Replace the K20 Engine Control Module.

        - **If no DTCs set**
     4. All OK.
   - **EL-38522-A, Variable Signal Generator; or equivalent is available**
6. Ignition OFF, connect the leads of the **EL-38522-A** Variable Signal Generator as follows:
   - Red lead to the signal circuit terminal 3 at the harness connector
   - Black leads to ground
   - Battery voltage supply lead to B+
7. Set the **EL-38522-A** Variable Signal Generator to the following specifications.
   - Signal switch to 5 V
   - Frequency switch to 5 kHz
   - Duty Cycle switch to 50 % (Normal)
8. Engine idling, verify the scan tool MAF Sensor parameter is between 4,950-5,050 Hz.
   - **If not between 4,950-5,050 Hz.**

     Replace the K20 Engine Control Module.

   - **If between 4,950-5,050 Hz.**
9. Test or replace the B75C Multifunction Intake Air sensor.

Repair Instructions

Perform the **Diagnostic Repair Verification** after completing the repair.

- **Mass Airflow Sensor with Intake Air Temperature Sensor Replacement** for multifunction intake air sensor replacement.
- **Control Module References** for engine control module replacement, programming, and setup

DTC P0102 OR P0103 (WITH LUK)

Diagnostic Instructions

- Perform the **Diagnostic System Check - Vehicle** prior to using this diagnostic procedure.
- Review **Strategy Based Diagnosis** for an overview of the diagnostic approach.
- **Diagnostic Procedure Instructions** provides an overview of each diagnostic category.

DTC Descriptors

DTC P0102

Mass Air Flow (MAF) Sensor Circuit Low Frequency

DTC P0103

Mass Air Flow (MAF) Sensor Circuit High Frequency

Diagnostic Fault Information

Circuit	Short to Ground	High Resistance	Open	Short to Voltage	Signal Performance
Ignition Voltage	P0102	P0101	P0102	P0690	P0101, P0103
Signal	P0102	P0102	P0102	P0102	P0101, P0103, P1101
Ground	-	P0102	P0102	-	P0102

Typical Scan Tool Data

MAF Sensor

Circuit	Short to Ground	Open	Short to Voltage
Operating Conditions: Engine running at various operating conditions **Parameter Normal Range:** 1,500-10,000 Hz			
Ignition Voltage	0 Hz	0 Hz	-
Signal	0 Hz	0 Hz	0 Hz
Ground	-	0 Hz	-

Circuit/System Description

The mass air flow (MAF) sensor is integrated with the intake air temperature (IAT) sensor. The MAF sensor is an air flow meter that measures the amount of air in the sensor bore. The engine control module (ECM) uses the MAF sensor signal to provide the correct fuel delivery for all engine speeds and loads. A small quantity of air entering the engine indicates a deceleration or idle condition. A large quantity of air entering the engine indicates an acceleration or high load condition.

The ECM applies 5 V to the MAF sensor on the MAF sensor signal circuit. The sensor uses the voltage to produce a variable frequency signal based on the inlet air flow through the sensor bore. The signal varies with engine load and is displayed by the scan tool as Hertz (Hz) and grams per second (g/s). Ignition voltage and ground circuits are also supplied to the sensor's internal circuits.

Conditions for Running the DTC

- The engine is running for at least 1 s.
- The engine speed is at least 300 RPM.
- The ignition signal is at least 8 V.
- The above conditions are met for at least 1 s.

- The DTC runs continuously when the above conditions are met.

Conditions for Setting the DTC

P0102

The ECM detects that the MAF Sensor signal parameter is less than 100 Hz (about 0.15 g/s) for at least 500 cylinder firing events.

P0103

The ECM detects that the MAF Sensor signal parameter is at least 14,500 Hz (about 270.2 g/s) for at least 500 cylinder firing events.

Action Taken When the DTCs Set

DTCs P0102 and P0103 are Type B DTCs.

Conditions for Clearing the MIL/DTCs

DTCs P0102 and P0103 are Type B DTCs.

Reference Information

Schematic Reference

Engine Controls Schematics

Connector End View Reference

COMPONENT CONNECTOR END VIEWS - INDEX

Electrical Information Reference

- **Circuit Testing**
- **Connector Repairs**
- **Testing for Intermittent Conditions and Poor Connections**
- **Wiring Repairs**

Powertrain Component Views

Powertrain Component Views

DTC Type Reference

Powertrain Diagnostic Trouble Code (DTC) Type Definitions

Scan Tool Reference

Control Module References for scan tool information

Special Tools

EL-38522-A Variable Signal Generator

For equivalent regional tools, refer to **Special Tools (Diagnostic Tools)** , **Special Tools (Mechanical Tools)** .

Circuit/System Verification

1. Engine idling, observe the scan tool MAF Sensor parameter. The reading should be between 2.5-5.5 g/s.
   - **If not between 2.5-5.5 g/s**

     Refer to Circuit/System Testing.

   - **If between 2.5-5.5 g/s**
2. Verify the scan tool MAF Sensor g/s parameter changes smoothly and gradually as the engine speed is increased and decreased while performing the actions listed below.
   1. Engine idling
   2. Perform the scan tool snapshot function.
   3. Increase the engine speed slowly to 3,000 RPM and then back to idle.
   4. Exit from the scan tool snapshot and review the data.
   5. Observe the MAF Sensor parameter frame by frame with a scan tool.
   - **The MAF Sensor parameter does not change smoothly and gradually**

     Refer to Circuit/System Testing.

   - **The MAF Sensor parameter changes smoothly and gradually**
3. Operate the vehicle within the Conditions for Running the DTC to verify the DTC does not reset. You may also operate the vehicle within the conditions that you observed from the Freeze Frame/Failure Records data.
4. Verify a DTC does not set.
   - **If any DTC sets**

     Refer to **Diagnostic Trouble Code (DTC) List - Vehicle** for further diagnosis.

   - **If no DTCs set**
5. All OK

Circuit/System Testing

NOTE: You must perform the Circuit/System Verification before proceeding with .

1. Ignition OFF, disconnect the harness connector at the B75B Mass Air Flow/Intake Air Temperature sensor.

2. Ignition OFF and all vehicle systems OFF. It may take up to 2 minutes for all vehicle systems to power down. Test for less than 2 ohms between the ground circuit terminal B and ground.
    - **If 2 ohms or greater**
    1. Ignition OFF. Disconnect the sensor chassis ground.
    2. Test for less than 2 ohms in the ground circuit end to end.
        - If 2 ohms or greater, repair the open/high resistance in the circuit.
        - If less than 2 ohms, repair the open/high resistance in the chassis ground connection.
    - **If less than 2 ohms**
3. Ignition ON, verify that a test lamp illuminates between the ignition circuit terminal C and ground.
    - **If the test lamp does not illuminate and the circuit fuse is good**
    1. Ignition OFF, remove the test lamp and remove the fuse for the ignition voltage circuit.
    2. Test for less than 2 ohms in the ignition voltage circuit end to end.
        - If 2 ohms or greater, repair the open/high resistance in the circuit.
        - If less than 2 ohms, verify the fuse is not open and there is voltage at the fuse.
    - **If the test lamp does not illuminate and the circuit fuse is open**
    1. Ignition OFF, remove the test lamp and remove the fuse for the ignition voltage circuit.
    2. Test for infinite resistance between the ignition voltage circuit and ground.
        - If less than infinite resistance, repair the short to ground on the circuit.
        - If infinite resistance
    3. Test for greater than 2 ohms between the ignition voltage circuit terminal C and ground.
        - If less than 2 ohms, repair the short to ground on the circuit.
        - If greater than 2 ohms, test all the components connected to the circuit and repair or replace as necessary.
    - If 2 ohms or greater, repair the open or high resistance in the circuit.
    - If the circuit tests normal and the fuse is open, test all the components connected to the circuit and repair or replace as necessary.
    - **If a test lamp illuminates**
4. Ignition ON, test for 4.8-5.2 V between the signal circuit terminal A and ground.
    - **If less than 4.8 V**
    1. Ignition OFF, disconnect the harness connector at the K20 Engine Control Module.
    2. Test for infinite resistance between the signal circuit and ground.
        - If less than infinite resistance, repair the short to ground on the circuit.
        - If infinite resistance
    3. Test for less than 2 ohms in the signal circuit end to end.
        - If 2 ohms or greater, repair the open/high resistance in the circuit.
        - If less than 2 ohms, replace the K20 Engine Control Module.
    - **If greater than 5.2 V**
    1. Ignition OFF, disconnect the harness connector at the K20 Engine Control Module.
    2. Ignition ON, test for less than 1 V between the signal circuit and ground.
        - If 1 V or greater, repair the short to voltage on the circuit.
        - If less than 1 V, replace the K20 Engine Control Module.

- **If between 4.8-5.2 V**

5. Determine if **EL-38522-A** Variable Signal Generator or equivalent is available.
   - **EL-38522-A, Variable Signal Generator; or equivalent is not available**
     1. Test or replace the B75B Mass Air Flow/Intake Air Temperature sensor.
     2. Operate the vehicle within the Conditions for Running the DTC. You may also operate the vehicle within the conditions that you observed from the freeze frame/failure records data.
     3. Verify the DTC does not set.
        - **If the DTC sets**

          Replace the K20 Engine Control Module.

        - **If no DTCs set**
     4. All OK.
   - **EL-38522-A, Variable Signal Generator; or equivalent is available**
6. Ignition OFF, connect the leads of the **EL-38522-A** Variable Signal Generator as follows:
   - Red lead to the signal circuit terminal A at the harness connector
   - Black leads to ground
   - Battery voltage supply lead to B+
7. Set the **EL-38522-A** Variable Signal Generator to the following specifications.
   - Signal switch to 5 V
   - Frequency switch to 5 kHz
   - Duty Cycle switch to 50 % (Normal)
8. Engine idling, verify the scan tool MAF Sensor parameter is between 4,950-5,050 Hz.
   - **If not between 4,950-5,050 Hz.**

     Replace the K20 Engine Control Module.

   - **If between 4,950-5,050 Hz.**
9. Circuits and ECM test OK. Test or replace the B75B Mass Air Flow/Intake Air Temperature sensor.

Repair Instructions

Perform the **Diagnostic Repair Verification** after completing the repair.

- **Mass Airflow Sensor with Intake Air Temperature Sensor Replacement**
- **Control Module References** for engine control module replacement, programming, and setup

DTC P0106

Diagnostic Instructions

- Perform the **Diagnostic System Check - Vehicle** prior to using this diagnostic procedure.
- Review **Strategy Based Diagnosis** for an overview of the diagnostic approach.
- **Diagnostic Procedure Instructions** provides an overview of each diagnostic category.

DTC Descriptor

DTC P0106

Manifold Absolute Pressure (MAP) Sensor Performance

Diagnostic Fault Information

Circuit	Short to Ground	Open/High Resistance	Short to Voltage	Signal Performance
5 V Reference	P0107, P0697	P0106, P0107	P0108, P0697	P0106
Signal	P0107	P0106, P0107	P0108*	P0106
Low Reference	-	P0106, P0108	-	P0106
* Internal ECM or sensor damage may occur if the circuit is shorted to B+.				

Typical Scan Tool Data

MAP Sensor

Circuit	Short to Ground	Open	Short to Voltage
Operating Conditions: Engine operating in closed loop, idling, and accessories OFF **Parameter Normal Range:** 26-52 kPa (3.8-7.6 PSI) (varies with altitude)			
5V Reference	0 kPa (0 PSI)	0 kPa (0 PSI)	127 kPa (18.4 PSI)
Signal	10 kPa (1.5 PSI)	0 kPa (0 PSI)	127 kPa (18.4 PSI)*
Low Reference	-	127 kPa (18.4 PSI)	-
* Internal ECM or sensor damage may occur if the circuit is shorted to B+.			

Circuit/System Description

The manifold absolute pressure (MAP) sensor measures the pressure inside the intake manifold. Pressure in the intake manifold is affected by engine speed, throttle opening, air temperature, barometric pressure (BARO) and if equipped, turbocharger output. A diaphragm within the MAP sensor is displaced by the pressure changes that occur from the varying load and operating conditions of the engine. The sensor translates this action into electrical resistance.

The MAP sensor wiring includes 3 circuits. The engine control module (ECM) supplies a regulated 5 volts to the sensor on a 5 V reference circuit. The ECM supplies a ground on a low reference circuit. The MAP sensor provides a signal voltage to the ECM, relative to the pressure changes, on the MAP sensor signal circuit. The ECM converts the signal voltage input to a pressure value.

Under normal operation the greatest pressure that can exist in the intake manifold is at ignition ON, engine OFF, which is equal to the BARO. If equipped, a turbocharger can increase the pressure above BARO, when the vehicle is operated at wide-open throttle (WOT). The lowest manifold pressure occurs when the vehicle is idling or decelerating. The ECM monitors the MAP sensor signal for pressure outside of the normal range.

Conditions for Running the DTC

- DTCs P0107, P0108, P0111, P0112, P0113, P0114, P0116, P0117, P0118, P0119, P0128, P0335, P0336 are not set.

- The engine speed is between 575-6600 RPM.
- The engine coolant temperature (ECT) sensor is between -7 to +125°C (19.4-257°F).
- The intake air temperature (IAT) sensor is between -20 to +125°C (-4 to +257°F).
- This DTC runs continuously when the above conditions are met.

Conditions for Setting the DTC

The ECM detects that the MAP Sensor pressure is not within range of the calculated pressure that is derived from the system of models for more than 0.5 s.

Action Taken When the DTC Sets

DTC P0106 is a Type B DTC.

Conditions for Clearing the DTC

DTC P0106 is a Type B DTC.

Reference Information

Schematic Reference

Engine Controls Schematics

Connector End View Reference

COMPONENT CONNECTOR END VIEWS - INDEX

Electrical Information Reference

- **Circuit Testing**
- **Connector Repairs**
- **Testing for Intermittent Conditions and Poor Connections**
- **Wiring Repairs**

DTC Type Reference

Powertrain Diagnostic Trouble Code (DTC) Type Definitions

Scan Tool Reference

Control Module References for scan tool information

Special Tools

GE-23738-A Vacuum Pump

For equivalent regional tools, refer to **Special Tools (Diagnostic Tools)** , **Special Tools (Mechanical Tools)** .

Circuit/System Verification

1. Ignition ON.
2. Verify that DTC P0641, P0651, P0697, or P06A3 is not set.
   - **If any of the DTCs are set**

     Refer to **DTC P0641, P0651, P0697, or P06A3 (ECM)** for further diagnosis.

   - **If none of the DTCs are set**
3. If you were sent here from DTC P0068, P0101, P0121, or P1101; refer to Circuit/System Testing.
4. Ignition ON.
5. Verify the scan tool Throttle Body Idle Airflow Compensation parameter is less than 90%.
   - **If 90% or greater**

     Refer to **Throttle Body Cleaning** .

   - **If less than 90%**
6. Verify the scan tool Throttle Body Sensors 1 and 2 Agree/Disagree parameter displays Agree while performing the Throttle Sweep Test with a scan tool.
   - **If Disagree**

     Refer to **DTC P0121-P0123, P0222, P0223, P16A0-P16A2, or P2135** for further diagnosis.

   - **If Agree**
7. Determine the current vehicle testing altitude.
8. Verify the scan tool MAP Sensor pressure parameter is within the range specified in the **Altitude Versus Barometric Pressure** table.
   - **If the MAP Sensor parameter is not in range**

     Refer to Circuit/System Testing.

   - **If the MAP Sensor parameter is in range**
9. Engine idling, verify the scan tool MAP Sensor pressure parameter is between 26-52 kPa (3.8-7.5 PSI) and changes with accelerator pedal input.
   - **If not between 26-52 kPa (3.8-7.5 PSI) or does not change**

     Refer to Circuit/System Testing.

   - **If between 26-52 kPa (3.8-7.5 PSI) and changes**
10. Verify the scan tool MAF Sensor g/s parameter changes smoothly and gradually as the engine speed is increased and decreased while performing the actions listed below.
    1. Engine idling
    2. Perform the scan tool snapshot function.
    3. Increase the engine speed slowly to 3000 RPM and then back to idle.
    4. Exit from the scan tool snapshot and review the data.

5. Observe the MAF Sensor parameter frame by frame with a scan tool.
   - **The MAF Sensor parameter does not change smoothly and gradually**

     Refer to **DTC P0101 (With LEA)**, **DTC P0101 (With LUK)**.

   - **The MAF Sensor parameter changes smoothly and gradually**
11. Operate the vehicle within the Conditions for Running the DTC. You may also operate the vehicle within the conditions that you observed from the Freeze Frame/Failure Records data.
12. Verify a DTC does not set.
    - **If the DTC sets**

      Refer to Circuit/System Testing.

    - **If the DTC does not set**
13. All OK.

Circuit/System Testing

1. Verify the integrity of the entire air induction system and verify that none of the following conditions exist:
   - Any damaged components
   - An air flow restriction
   - Any vacuum leak
   - Improperly routed vacuum hoses
   - A restriction in the MAP Sensor port or the BARO port
   - Proper operation of the Positive Crankcase Ventilation (PCV) system
   - Missing, restricted or leaking exhaust components. Refer to **Symptoms - Engine Exhaust** .
   - Engine mechanical condition; for example: low compression or incorrect timing chain installation. Refer to **Symptoms - Engine Mechanical** .
   - **If a condition is found**

     If a condition is found, repair or replace the component as appropriate.

   - **If no condition is found**
2. Ignition OFF, and all vehicle systems OFF. It may take up to 2 min for all vehicle systems to power down. Disconnect the harness connector at the B74 Manifold Absolute Pressure Sensor.
3. Test for less than 2 ohms between the low reference circuit terminal 2 and ground.
   - **If 2 ohms or greater**
     1. Ignition OFF, disconnect the harness connector at the K20 Engine Control Module.
     2. Test for less than 2 ohms in the low reference circuit end to end.
        - If 2 ohms or greater, repair the open/high resistance in the circuit.
        - If less than 2 ohms, replace the K20 Engine Control Module.
   - **If less than 2 ohms**
4. Ignition ON.

5. Test for 4.8-5.2 V between the 5 V reference circuit terminal 1 and ground.
   - **If less than 4.8 V**
   1. Ignition OFF, disconnect the harness connector at the K20 Engine Control Module.
   2. Test for infinite resistance between the 5 V reference circuit and ground.
      - If less than infinite resistance, repair the short to ground on the circuit.
      - If infinite resistance
   3. Test for less than 2 ohms in the 5 V reference circuit end to end.
      - If 2 ohms or greater, repair the open/high resistance in the circuit.
      - If less than 2 ohms, replace the K20 Engine Control Module.

   NOTE: If the signal circuit is shorted to a voltage the ECM or the MAP Sensor may be damaged.

   -
   - **If greater than 5.2 V**
   1. Ignition OFF, disconnect the harness connector at the K20 Engine Control Module.
   2. Ignition ON, test for less than 1 V between the 5 V reference circuit and ground.
      - If 1 V or greater, repair the short to voltage on the circuit.
      - If less than 1 V, replace the K20 Engine Control Module.
   - **If between 4.8-5.2 V**
6. Ignition ON, verify the scan tool MAP Sensor parameter is less than 0.5 V.
   - **If 0.5 V or greater**
   1. Ignition OFF, disconnect the harness connector at the K20 Engine Control Module.
   2. Ignition ON, test for less than 1 V between the signal circuit terminal 3 and ground.
      - If 1 V or greater, repair the short to voltage on the circuit.
      - If less than 1 V, replace the K20 Engine Control Module.
   - **If less than 0.5 V**
7. Ignition OFF, install a 3 A fused jumper wire between the signal circuit terminal 3 and the 5 V reference circuit terminal 1.
8. Ignition ON, verify the scan tool MAP Sensor voltage parameter is greater than 4.5 V.
   - **If 4.5 V or less**
   1. Ignition OFF, disconnect the harness connector at the K20 Engine Control Module.
   2. Remove the jumper wire, test for infinite resistance between the signal circuit terminal 3 and ground.
      - If less than infinite resistance, repair the short to ground on the circuit.
      - If infinite resistance
   3. Test for less than 2 ohms in the signal circuit end to end.
      - If 2 ohms or greater, repair the open or high resistance in the circuit.
      - If less than 2 ohms, replace the K20 Engine Control Module.
   - **If greater than 4.5 V**
9. Test or replace the B74 Manifold Absolute Pressure Sensor.

Component Testing

NOTE: You must perform the Circuit/System Testing in order to verify the integrity of the MAP Sensor circuits before proceeding with the Component Testing.

Skewed Sensor Test

1. Ignition OFF, remove the B74 Manifold Absolute Pressure Sensor from the engine. Connect the harness to the sensor, if disconnected.
2. Ignition ON, apply 17 kPa (5.0 in Hg) of vacuum to the B74 Manifold Absolute Pressure Sensor, with the **GE-23738-A** . Verify the scan tool MAP Sensor pressure parameter decreases between 13-21 kPa (1.8-3.0 PSI).
   - **If the parameter does not decrease between 13-21 kPa (1.8-3.0 PSI)**

     Replace the B74 Manifold Absolute Pressure Sensor.

   - **If the parameter does decrease between 13-21 kPa (1.8-3.0 PSI)**
3. Apply 34 kPa (10.0 in Hg) of vacuum to the B74 Manifold Absolute Pressure Sensor, with the **GE-23738-A** . Verify the scan tool MAP Sensor pressure parameter decreases between 30-38 kPa (4.4-5.5 PSI).
   - **If the parameter does not decrease between 30-38 kPa (4.4-5.5 PSI)**

     Replace the B74 Manifold Absolute Pressure Sensor.

   - **If the parameter does decrease between 30-38 kPa (4.4-5.5 PSI)**
4. All OK.

Erratic Signal Test

1. Ignition OFF, remove the B74 Manifold Absolute Pressure Sensor and disconnect the harness.
2. Install a 3 A fused jumper wire between the 5 V reference circuit terminal 1 of the sensor and the sensor harness.
3. Install a jumper wire between the low reference circuit terminal 2 of the sensor and ground.
4. Install a jumper wire to the signal circuit terminal 3 of the sensor.
5. Connect a DMM between the jumper wire and ground.
6. Ignition ON, observe the DC voltage on the DMM. Slowly apply between 0-15 kPa (0-4.4 in Hg) of vacuum to the sensor with the **GE-23738-A** . Verify the voltage changes, without any spikes or dropouts, between 0.2-4.9 V.
   - **If not between 0.2-4.9 V or has spikes or dropouts**

     Replace the B74 Manifold Absolute Pressure Sensor.

   - **If between 0.2-4.9 V and there are no spikes or dropouts**
7. All OK.

Repair Instructions

Perform the **Diagnostic Repair Verification** after completing the repair.

- **Manifold Absolute Pressure Sensor Replacement**
- **Control Module References** for ECM replacement, programming, and setup

DTC P0107 OR P0108

Diagnostic Instructions

- Perform the **Diagnostic System Check - Vehicle** prior to using this diagnostic procedure.
- Review **Strategy Based Diagnosis** for an overview of the diagnostic approach.
- **Diagnostic Procedure Instructions** provides an overview of each diagnostic category.

DTC Descriptors

DTC P0107

Manifold Absolute Pressure (MAP) Sensor Circuit Low Voltage

DTC P0108

Manifold Absolute Pressure (MAP) Sensor Circuit High Voltage

Diagnostic Fault Information

Circuit	Short to Ground	Open/High Resistance	Short to Voltage	Signal Performance
5 V Reference	P0107, P0697	P0106, P0107	P0108, P0697	P0106
Signal	P0107	P0106, P0107	P0108*	P0106
Low Reference	-	P0106, P0108	-	P0106
* Internal ECM or sensor damage may occur if the circuit is shorted to B+.				

Typical Scan Tool Data

MAP Sensor

Circuit	Short to Ground	Open	Short to Voltage
Operating Conditions: Engine operating in closed loop, idling, and accessories OFF. **Parameter Normal Range:** 26-52 kPa (3.8 to 7.6 PSI) (Varies with altitude)			
5 V Reference	0 kPa (0 PSI)	0 kPa (0 PSI)	127 kPa (18.4 PSI)
Signal	10 kPa (1.5 PSI)	0 kPa (0 PSI)	127 kPa (18.4 PSI)*
Low Reference	-	127 kPa (18.4 PSI)	-
* Internal ECM or sensor damage may occur if the circuit is shorted to B+.			

Circuit/System Description

The manifold absolute pressure (MAP) sensor measures the pressure inside the intake manifold. Pressure in the intake manifold is affected by engine speed, throttle opening, air temperature, barometric pressure (BARO) and if equipped turbocharger output. A diaphragm within the MAP sensor is displaced by the

pressure changes that occur from the varying load and operating conditions of the engine. The sensor translates this action into electrical resistance.

The MAP sensor wiring includes 3 circuits. The engine control module (ECM) supplies a regulated 5 volts to the sensor on a 5 V reference circuit. The ECM supplies a ground on a low reference circuit. The MAP sensor provides a signal voltage to the ECM, relative to the pressure changes, on the MAP sensor signal circuit. The ECM converts the signal voltage input to a pressure value.

Under normal operation the greatest pressure that can exist in the intake manifold is at ignition ON, engine OFF, which is equal to the BARO. If equipped, a turbocharger can increase the pressure above BARO, when the vehicle is operated at wide-open throttle (WOT). The lowest manifold pressure occurs when the vehicle is idling or decelerating. The ECM monitors the MAP sensor signal for pressure outside of the normal range.

Conditions for Running the DTC

P0107

This DTC runs continuously.

P0108

This DTC runs continuously.

Conditions for Setting the DTC

P0107

The ECM detects that the MAP Sensor voltage is less than 0.05 V for greater than 5 s.

P0108

The ECM detects that the MAP Sensor voltage is more than 4.9 V for greater than 5 s.

Action Taken When the DTC Sets

DTCs P0107 and P0108 are Type B DTCs.

Conditions for Clearing the DTC

DTCs P0107 and P0108 are Type B DTCs.

Reference Information

Schematic Reference

Engine Controls Schematics

Connector End View Reference

COMPONENT CONNECTOR END VIEWS - INDEX

Electrical Information Reference

- **Circuit Testing**
- **Connector Repairs**
- **Testing for Intermittent Conditions and Poor Connections**
- **Wiring Repairs**

DTC Type Reference

Powertrain Diagnostic Trouble Code (DTC) Type Definitions

Scan Tool Reference

Control Module References for scan tool information

Special Tools

GE-23738-A Vacuum Pump

For equivalent regional tools, refer to **Special Tools (Diagnostic Tools)** , **Special Tools (Mechanical Tools)** .

Circuit/System Verification

1. Ignition ON.
2. Verify that DTC P0641, P0651, P0697, or P06A3 is not set.
   - **If any of the DTCs are set**

     Refer to **DTC P0641, P0651, P0697, or P06A3 (ECM)** for further diagnosis.

   - **If none of the DTCs are set**
3. Determine the current vehicle testing altitude.
4. Verify the scan tool MAP Sensor parameter is within the range specified in the **Altitude Versus Barometric Pressure** table.
   - **If the MAP Sensor parameter is not in range**

     Refer to Circuit/System Testing for further diagnosis.

   - **If the MAP Sensor parameter is within range**
5. Engine idling, verify the scan tool MAP Sensor voltage parameter is between 0.3-4.8 V and changes with accelerator pedal input.
   - **If not between 0.3-4.8 V or does not change**

     Refer to Circuit/System Testing.

   - **If between 0.3-4.8 V and changes**
6. Operate the vehicle within the Conditions for Running the DTC. You may also operate the vehicle

within the conditions that you observed in the Freeze Frame/Failure Records data.

7. Verify the DTC does not set.
   - **If any DTC sets**

     Refer to Circuit/System Testing.

   - **If no DTC sets**
8. All OK.

Circuit/System Testing

1. Ignition OFF, disconnect the harness connector at the B74 Manifold Absolute Pressure Sensor.
2. Ignition OFF and all vehicle systems OFF. It may take up to 2 min for all vehicle systems to power down. Test for less than 2 ohms between the low reference circuit terminal 2 and ground.
   - **If 2 ohms or greater**
     1. Ignition OFF, disconnect the harness connector at the K20 Engine Control Module.
     2. Test for less than 2 ohms in the low reference circuit end to end.
        - If 2 ohms or greater, repair the open/high resistance in the circuit.
        - If less than 2 ohms, replace the K20 Engine Control Module.
   - **If less than 2 ohms**
3. Ignition ON.
4. Test for 4.8-5.2 V between the 5 V reference circuit terminal 1 and ground.
   - **If less than 4.8 V**
     1. Ignition OFF, disconnect the harness connector at the K20 Engine Control Module.
     2. Test for infinite resistance between the 5 V reference circuit and ground.
        - If less than infinite resistance, repair the short to ground on the circuit.
        - If infinite resistance
     3. Test for less than 2 ohms in the 5 V reference circuit end to end.
        - If 2 ohms or greater, repair the open/high resistance in the circuit.
        - If less than 2 ohms, replace the K20 Engine Control Module.

     NOTE: If the signal circuit is shorted to a voltage the engine control module or the sensor may be damaged.

     -
   - **If greater than 5.2 V**
     1. Ignition OFF, disconnect the harness connector at the K20 Engine Control Module.
     2. Ignition ON, test for less than 1 V between the 5 V reference circuit and ground.
        - If 1 V or greater, repair the short to voltage on the circuit.
        - If less than 1 V, replace the K20 Engine Control Module.
   - **If between 4.8-5.2 V**
5. Ignition ON, verify the scan tool MAP Sensor parameter is less than 0.5 V.
   - **If 0.5 V or greater**

1. Ignition OFF, disconnect the harness connector at the K20 Engine Control Module.
2. Ignition ON, test for less than 1 V between the signal circuit terminal 3 and ground.
   - If 1 V or greater, repair the short to voltage on the circuit.
   - If less than 1 V, replace the K20 Engine Control Module.

- **If less than 0.5 V**

6. Ignition OFF, install a 3 A fused jumper wire between the signal circuit terminal 3 and the 5 V reference circuit terminal 1.
7. Ignition ON, verify the scan tool MAP voltage parameter is greater than 4.5 V.

- **If 4.5 V or less**

1. Ignition OFF, disconnect the harness connector at the K20 Engine Control Module.
2. Remove the jumper wire, test for infinite resistance between the signal circuit terminal 3 and ground.
   - If less than infinite resistance, repair the short to ground on the circuit.
   - If infinite resistance
3. Test for less than 2 ohms in the signal circuit end to end.
   - If 2 ohms or greater, repair the open or high resistance in the circuit.
   - If less than 2 ohms, replace the K20 Engine Control Module.

- **If greater than 4.5 V**

8. Test or replace the B74 Manifold Absolute Pressure Sensor.

Component Testing

NOTE: You must perform the Circuit/System Testing in order to verify the integrity of the MAP Sensor circuits before proceeding with the Component Testing.

Skewed Sensor Test

1. Ignition OFF, remove the B74 Manifold Absolute Pressure Sensor from the engine. Connect the harness to the sensor, if disconnected.
2. Ignition ON, apply 17 kPa (5.0 in Hg) of vacuum to the B74 Manifold Absolute Pressure Sensor, with the **GE-23738-A** . Verify the scan tool MAP Sensor pressure parameter decreases between 13-21 kPa (1.8-3.0 PSI).

   - **If the parameter does not decrease between 13-21 kPa (1.8-3.0 PSI)**

     Replace the B74 Manifold Absolute Pressure Sensor.

   - **If the parameter does decrease between 13-21 kPa (1.8-3.0 PSI)**

3. Apply 34 kPa (10.0 in Hg) of vacuum to the B74 Manifold Absolute Pressure Sensor, with the **GE-23738-A** . Verify the scan tool MAP Sensor pressure parameter decreases between 30-38 kPa (4.4-5.5 PSI).

   - **If the parameter does not decrease between 30-38 kPa (4.4-5.5 PSI)**

     Replace the B74 Manifold Absolute Pressure Sensor.

   - **If the parameter does decrease between 30-38 kPa (4.4-5.5 PSI)**

4. All OK.

Erratic Signal Test

1. Ignition OFF, remove the B74 Manifold Absolute Pressure Sensor and disconnect the harness.
2. Install a 3 A fused jumper wire between the 5 V reference circuit terminal 1 of the sensor and the sensor harness.
3. Install a jumper wire between the low reference circuit terminal 2 of the sensor and ground.
4. Install a jumper wire to the signal circuit terminal 3 of the sensor.
5. Connect a DMM between the jumper wire and ground.
6. Ignition ON, observe the DC voltage on the DMM. Slowly apply between 0-15 kPa (0-4.4 in Hg) of vacuum to the sensor with the **GE-23738-A** . Verify the voltage changes, without any spikes or dropouts, between 0.2-4.9 V.
   - **If not between 0.2-4.9 V or has spikes or dropouts**

     Replace the B74 Manifold Absolute Pressure Sensor.

   - **If between 0.2-4.9 V and there are no spikes or dropouts**
7. All OK.

Repair Instructions

Perform the **Diagnostic Repair Verification** after completing the repair.

- **Manifold Absolute Pressure Sensor Replacement**
- **Control Module References** for ECM replacement, programming, and setup

DTC P0111 (WITH LUK)

Diagnostic Instructions

- Perform the **Diagnostic System Check - Vehicle** prior to using this diagnostic procedure.
- Review **Strategy Based Diagnosis** for an overview of the diagnostic approach.
- **Diagnostic Procedure Instructions** provides an overview of each diagnostic category.

DTC Descriptor

DTC P0111

Intake Air Temperature (IAT) Sensor Performance

Diagnostic Fault Information

IAT Sensor

Circuit	Short to Ground	Open/High Resistance	Short to Voltage	Signal Performance
Signal	P0112, P0114	P0111, P0113,	P0113*, P0114	P0111

		P0114		
Low Reference	-	P0111, P0113, P0114	P0113*, P0114	-
*Internal ECM or sensor damage may occur if the circuit is shorted to B+.				

Typical Scan Tool Data

IAT Sensor

Circuit	Short to Ground	Open or High Resistance	Short to Voltage
Operating Conditions: Engine Running **Parameter Normal Range:** Varies with ambient temperature			
Signal	150°C (302°F)	-40°C (-40°F)	-40°C (-40°F)*
Low Reference	-	-40°C (-40°F)	-40°C (-40°F)*
*Internal ECM or sensor damage may occur if the circuit is shorted to B+			

Circuit/System Description

The intake air temperature (IAT) sensor is a variable resistor that measures the temperature of the air in the sensor bore. The IAT is integrated with the mass air flow (MAF) sensor. The engine control module (ECM) supplies 5 V to the IAT sensor signal circuit and a ground for the IAT sensor low reference circuit. The signal varies with inlet air temperature and is displayed by the scan tool as °C (°F).

IAT Sensor - Temperature, Resistance, Voltage Table

IAT Sensor	IAT Sensor Resistance	IAT Sensor Signal Voltage
Cold	High	High
Warm	Low	Low

Conditions for Running the DTC

- DTCs P0112, P0113, P0117, P0118, P0119, or P1682 are not set.
- The vehicle has been OFF at least 8 hours.
- Ignition 1 voltage is at least 11 V.
- The ignition is ON, or the engine is running.
- The DTCs run continuously when the above conditions are met.

Conditions for Setting the DTC

- The absolute difference between ECT start-up temperature and the IAT sensor start-up temperature is greater than 60°C (108°F).
- This DTC runs once per ignition cycle when the enabling conditions are met.

Action Taken When the DTCs Set

DTC P0111 is a Type B DTC.

Conditions for Clearing the DTCs

DTC P0111 is a Type B DTC.

Diagnostic Aids

With the ignition ON, the engine OFF, if the engine is cold, a properly functioning IAT sensor will gradually increase the scan tool IAT Sensor parameter. This is due to the heat that is generated by the MAF sensor heating elements.

Reference Information

Schematic Reference

Engine Controls Schematics

Connector End View Reference

COMPONENT CONNECTOR END VIEWS - INDEX

Electrical Information Reference

- **Circuit Testing**
- **Connector Repairs**
- **Testing for Intermittent Conditions and Poor Connections**
- **Wiring Repairs**

Powertrain Component Views

Powertrain Component Views

DTC Type Reference

Powertrain Diagnostic Trouble Code (DTC) Type Definitions

Scan Tool Reference

Control Module References for scan tool information

Circuit/System Verification

NOTE: To minimize the effects of residual engine heat and sensor internal heating elements, perform Steps 1 and 2 of this verification procedure only if the ignition has been OFF for 8 hours or more.

1. Ignition ON.
2. Verify the following scan tool parameters are within 60°C (108°F) of each other.
   - Start-Up IAT Sensor
   - Start-Up ECT
   - **If not within 60°C (108°F)**

Refer to Circuit/System Testing.

- **If within 60°C (108°F)**

3. Engine idling, verify the following scan tool parameters are between: -38 and +149°C (-36 and +300° F).
   - IAT Sensor
   - ECT
   - **If not between: -38 and +149°C (-36 and +300°F)**

     Refer to Circuit/System Testing.

   - **If between: -38 and +149°C (-36 and +300°F)**
4. Operate the vehicle within the conditions for running the DTC. You may also operate the vehicle within the conditions that you observed from the freeze frame/failure records data.
5. Verify the DTC does not set.
   - **If the DTC sets**

     Refer to Circuit/System Testing.

   - **If the DTC does not set**
6. All OK

Circuit/System Testing

NOTE: You must perform the Circuit/System Verification before proceeding with Circuit/System Testing.

1. Verify none of the following conditions exist:
   - A restricted, collapsed, misaligned, or damaged air intake duct
   - An intake manifold leak
   - A MAP sensor seal that is leaking, missing, or damaged
   - Any water intrusion in the induction system
   - An Intake Manifold Resonator with a leaking seal, or a cracked or broken housing
   - **If a condition exists**

     Repair or replace component as appropriate.

   - **If no condition exists**
2. Ignition OFF, disconnect the harness connector at the B75B Mass Air Flow/Intake Air Temperature sensor.
3. Ignition OFF, and all systems OFF, it may take up to for 2 minutes for all vehicle systems to power down. Test for less than 2 ohms between the low reference circuit terminal D and ground.
   - **If 2 ohms or greater**
   1. Ignition OFF, disconnect the harness connector at the K20 Engine Control Module.
   2. Test for less than 2 ohms in the low reference circuit end to end.

- If 2 ohms or greater, repair the open or high resistance in the circuit.
- If less than 2 ohms replace the K20 Engine Control Module.

- **If less than 2 ohms**

4. Ignition OFF, all vehicle systems OFF, test for less than 2 ohms between the ground circuit terminal B and ground.
   - **If 2 ohms or greater**
   1. Ignition OFF. Disconnect the sensor chassis ground.
   2. Test for less than 2 ohms in the ground circuit end to end.
      - If 2 ohms or greater, repair the open or high resistance in the circuit.
      - If less than 2 ohms, repair the open/high resistance in the ground connection.
   - **If less than 2 ohms**
5. Ignition ON, verify that a test lamp illuminates between the ignition circuit terminal C and ground.
   - **If the test lamp does not illuminate and the circuit fuse is good**
   1. Ignition OFF, remove the test lamp and remove the fuse for the ignition voltage circuit.
   2. Test for less than 2 ohms in the ignition voltage circuit end to end.
      - If 2 ohms or greater, repair the open/high resistance in the circuit.
      - If less than 2 ohms, verify the fuse is not open and there is voltage at the fuse.
   - **If the test lamp does not illuminate and the circuit fuse is open**
   1. Ignition OFF, remove the test lamp and remove the fuse for the ignition voltage circuit.
   2. Test for infinite resistance between the ignition voltage circuit and ground.
      - If less than infinite resistance, repair the short to ground on the circuit.
      - If infinite resistance
   3. Test for greater than 2 ohms between the ignition voltage circuit terminal C and ground.
      - If less than 2 ohms, repair the short to ground on the circuit.
      - If greater than 2 ohms, test all the components connected to the circuit and repair or replace as necessary.
   - **If a test lamp illuminates**
6. Ignition ON, test for 4.8-5.2 V between the intake air temperature signal circuit terminal E and ground.
   - **If less than 4.8 V**
   1. Ignition OFF, disconnect the harness connector at the K20 Engine Control Module.
   2. Test for infinite resistance between the signal circuit and ground.
      - If less than infinite resistance, repair the short to ground on the circuit.
      - If infinite resistance
   3. Test for less than 2 ohms in the signal circuit end to end.
      - If 2 ohms or greater, repair the open/high resistance in the circuit.
      - If less than 2 ohms, replace the K20 Engine Control Module.
   - **If greater than 5.2 V**

NOTE: **If the signal circuit is shorted to a voltage the engine control module or the sensor may be damaged.**

1. Ignition OFF, disconnect the harness connector at the K20 Engine Control Module.
2. Ignition ON, test for less than 1 V between the signal circuit and ground.
   - If 1 V or greater, repair the short to voltage on the circuit.
   - If less than 1 V, replace the K20 Engine Control Module.

- **If between 4.8-5.2 V**

7. Ignition ON, verify the scan tool IAT Sensor parameter is colder than -39°C (-38°F).
   - **If warmer than -39°C (-38°F).**
   1. Ignition OFF, disconnect the harness connector at the K20 Engine Control Module.
   2. Test for infinite resistance between the signal circuit terminal E and ground.
      - If less than infinite resistance, repair the short to ground on the circuit.
      - If infinite resistance
   3. Test for less than 2 ohms in the signal circuit end to end.
      - If 2 ohms or greater, repair the open/high resistance in the circuit.
      - If less than 2 ohms, replace the K20 Engine Control Module.
   - **If colder than -39°C (-38°F).**
8. Ignition OFF, install a 3 A fused jumper wire between the signal circuit terminal E and the low reference circuit terminal D.
9. Verify the scan tool IAT Sensor parameter is warmer than 148°C (298°F).
   - **If colder than 148°C (298°F).**
   1. Ignition OFF, remove the jumper wire, disconnect the harness connector at the K20 Engine Control Module, ignition ON.
   2. Test for less than 1 V between the signal circuit and ground.
      - If 1 V or greater, repair the short to voltage on the circuit.
      - If less than 1 V
   3. Ignition OFF.
   4. Test for less than 2 ohms in the signal circuit end to end.
      - If 2 ohms or greater, repair the open/high resistance in the circuit.
      - If less than 2 ohms, replace the K20 Engine Control Module.
   - **If warmer than 148°C (298°F).**
10. Test or replace the B75B Mass Air Flow/Intake Air Temperature sensor.

Component Testing

Mass Air Flow/Intake Air Temperature

1. Ignition OFF, disconnect the harness connector at the B75B Mass Air Flow/Intake Air Temperature sensor.

NOTE: A thermometer can be used to test the sensor off the vehicle.

2. Test the IAT sensor by varying the sensor temperature while monitoring the sensor resistance. Compare the readings with the **Temperature Versus Resistance - Intake Air Temperature Sensor (Hitachi Sensor)** table for Hitachi Sensors. The resistance values should be in range of the table

values.

- **If the values are not with in range of the table values.**

  Replace the B75B Mass Air Flow/Intake Air Temperature sensor.

- **If the values are within range of the table values.**

3. All OK.

Repair Instructions

Perform the **Diagnostic Repair Verification** after completing the repair.

- **Mass Airflow Sensor with Intake Air Temperature Sensor Replacement**
- **Control Module References** for engine control module replacement, programming, and setup.

DTC P0112, P0113, OR P0114 (WITH LEA)

Diagnostic Instructions

- Perform the **Diagnostic System Check - Vehicle** prior to using this diagnostic procedure.
- Review **Strategy Based Diagnosis** for an overview of the diagnostic approach.
- **Diagnostic Procedure Instructions** provides an overview of each diagnostic category.

DTC Descriptors

DTC P0112

Intake Air Temperature (IAT) Sensor 1 Circuit Low Voltage

DTC P0113

Intake Air Temperature (IAT) Sensor 1 Circuit High Voltage

DTC P0114

Intake Air Temperature (IAT) Sensor 1 Circuit Intermittent

Diagnostic Fault Information

Circuit	Short to Ground	Open/High Resistance	Short to Voltage	Signal Performance
Signal	P0112	P0113	P0113*	P0111, P0114
Low Reference	-	P0113	P0113, P0114*	P0111, P0114
*Internal ECM or sensor damage may occur if the circuit is shorted to B+				

Typical Scan Tool Data

IAT Sensor

Circuit	Short to Ground	Open	Short to Voltage
Operating Conditions: Engine running **Parameter Normal Range:** Varies with ambient temperature			
Signal	150°C (302°F)	-40°C (-40°F)	-40°C (-40°F)*
Low Reference	-	-40°C (-40°F)	-40°C (-40°F)*
*Internal ECM or sensor damage may occur if the circuit is shorted to B+			

Circuit/System Description

The intake air temperature (IAT) sensor 1 is a variable resistor that measures the temperature of the air in the sensor bore. The engine control module (ECM) supplies 5 V to the IAT sensor 1 signal circuit and a ground for the IAT sensor 1 low reference circuit. The signal varies with inlet air temperature and is displayed by the scan tool as °C (°F).

The multifunction intake air sensor houses the following:

- IAT sensor 1
- IAT sensor 2
- Humidity sensor
- Mass Air Flow (MAF) sensor
- BARO pressure sensor

IAT Sensor 1	IAT Sensor 1 Resistance	IAT Sensor 1 Signal Voltage
Cold	High	High
Warm	Low	Low

Conditions for Running the DTCs

P0112, P0113, and P0114

- The ignition is ON, or the engine is running.
- The DTCs run continuously when the above conditions are met.

Conditions for Setting the DTC

NOTE: The scan tool display range is between -40 and +150°C (-40 and +302°F).

P0112

The ECM detects that the IAT sensor signal is warmer than 150°C (302°F) for at least 5 s.

P0113

The ECM detects that the IAT sensor signal is colder than -60°C (-76°F) for at least 5 s.

P0114

The ECM monitors the IAT sensor signal every 0.1 s, to determine if the signal has changed more than 80°C (176°F). The DTC fails when the condition exists for longer than 4 s.

Action Taken When the DTCs Set

- DTCs P0112, P0113, and P0114 are Type B DTCs.
- The ECM commands the cooling fans ON.

Conditions for Clearing the DTCs

DTCs P0112, P0113, and P0114 are Type B DTCs.

Diagnostic Aids

With the ignition ON, the engine OFF, if the engine is cold, a properly functioning IAT sensor 1 will gradually increase the scan tool IAT Sensor 1 parameter. This is due to the heat that is generated by the MAF sensor heating elements.

Reference Information

Schematic Reference

Engine Controls Schematics

Connector End View Reference

COMPONENT CONNECTOR END VIEWS - INDEX

Electrical Information Reference

- **Circuit Testing**
- **Connector Repairs**
- **Testing for Intermittent Conditions and Poor Connections**
- **Wiring Repairs**

Powertrain Component Views

Powertrain Component Views

DTC Type Reference

Powertrain Diagnostic Trouble Code (DTC) Type Definitions

Scan Tool Reference

Control Module References for scan tool information

Circuit/System Verification

NOTE: **To minimize the effects of residual engine heat and sensor internal heating elements, perform Steps 1 and 2 of this verification procedure only if the ignition has been OFF for 8 hours or more.**

1. Ignition ON.
2. Verify the following scan tool parameters are within 55°C (99°F) of each other.
   - Start-Up IAT Sensor 1
   - IAT Sensor 2
   - Start-Up ECT
   - **If not within 55°C (99°F)**

     Refer to Circuit/System Testing.

   - **If within 55°C (99°F)**
3. Engine idling, verify the following scan tool parameters are between: -38 and +149°C (-36 and +300°F).
   - IAT Sensor 1
   - IAT Sensor 2
   - ECT Sensor
   - **If not between: -38 and +149°C (-36 and +300°F)**

     Refer to Circuit/System Testing.

   - **If between: -38 and +149°C (-36 and +300°F)**
4. Operate the vehicle within the conditions for running the DTC to verify that the DTC does not reset. You may also operate the vehicle within the conditions that you observed from the freeze frame/failure records data.
5. Verify the DTC does not set.
   - **If the DTC sets**

     Refer to Circuit/System Testing.

   - **If the DTC does not set**
6. All OK

Circuit/System Testing

1. Ignition OFF, and all vehicle systems OFF, it may take up to 2 min. for all vehicle systems to power down. Disconnect the harness connector at the B75C Multifunction Intake Air sensor.
2. Test for less than 2 ohms between the low reference circuit terminal 3 and ground.
   - **If 2 ohms or greater**
   1. Ignition OFF, disconnect the harness connector at the K20 engine control module.
   2. Test for less than 2 ohms in the low reference circuit end to end.
      - If 2 ohms or greater, repair the open or high resistance in the circuit.
      - If less than 2 ohms replace the K20 engine control module.

- **If less than 2 ohms**

3. Ignition ON, test for 4.8-5.2 V between the intake air temperature sensor 1 signal circuit terminal 1 and ground.
   - **If less than 4.8 V**
   1. Ignition OFF, disconnect the harness connector at the K20 engine control module.
   2. Test for infinite resistance between the signal circuit and ground.
      - If less than infinite resistance, repair the short to ground on the circuit.
      - If infinite resistance
   3. Test for less than 2 ohms in the signal circuit end to end.
      - If 2 ohms or greater, repair the open/high resistance in the circuit.
      - If less than 2 ohms, replace the K20 engine control module.
   - **If greater than 5.2 V**

NOTE: If the signal circuit is shorted to a voltage the engine control module or the sensor may be damaged.

   1. Ignition OFF, disconnect the harness connector at the K20 engine control module.
   2. Ignition ON, test for less than 1 V between the signal circuit and ground.
      - If 1 V or greater, repair the short to voltage on the circuit.
      - If less than 1 V, replace the K20 engine control module.
   - **If between 4.8-5.2 V**
4. Ignition ON, verify the scan tool IAT Sensor parameter is colder than -39°C (-38°F).
   - **If warmer than -39°C (-38°F).**
   1. Ignition OFF, disconnect the harness connector at the K20 Engine Control Module.
   2. Test for infinite resistance between the signal circuit terminal 1 and ground.
      - If less than infinite resistance, repair the short to ground on the circuit.
      - If infinite resistance
   3. Test for less than 2 ohms in the signal circuit end to end.
      - If 2 ohms or greater, repair the open/high resistance in the circuit.
      - If less than 2 ohms, replace the K20 Engine Control Module.
   - **If colder than -39°C (-38°F).**
5. Ignition OFF, install a 3 A fused jumper wire between the signal circuit terminal 1 and the low reference circuit terminal 3.
6. Verify the scan tool IAT Sensor parameter is warmer than 148°C (298°F).
   - **If colder than 148°C (298°F).**
   1. Ignition OFF, remove the jumper wire, disconnect the harness connector at the K20 Engine Control Module, ignition ON.
   2. Test for less than 1 V between the signal circuit and ground.
      - If 1 V or greater, repair the short to voltage on the circuit.
      - If less than 1 V
   3. Ignition OFF.

4. Test for less than 2 ohms in the signal circuit end to end.
   - If 2 ohms or greater, repair the open/high resistance in the circuit.
   - If less than 2 ohms, replace the K20 Engine Control Module.
- **If warmer than 148°C (298°F).**

7. Test or replace the B75C Multifunction Intake Air sensor.

Component Testing

Multifunction Intake Air Sensor

1. Ignition OFF, disconnect the harness connector at the B75C Multifunction Intake Air sensor.

NOTE: A thermometer can be used to test the sensor off the vehicle.

2. Test the IAT sensor 1 by varying the sensor temperature while monitoring the sensor resistance. Compare the readings with the **Temperature Versus Resistance - Intake Air Temperature Sensor (Hitachi Sensor)** table for Hitachi Sensors. The resistance values should be in range of the table values.
   - If not within the specified range, replace the B75C Multifunction Intake Air sensor.

Repair Instructions

Perform the **Diagnostic Repair Verification** after completing the repair.

- **Mass Airflow Sensor with Intake Air Temperature Sensor Replacement** for multifunction intake air sensor replacement
- **Control Module References** for engine control module replacement, programming, and setup.

DTC P0112, P0113, OR P0114 (WITH LUK)

Diagnostic Instructions

- Perform the **Diagnostic System Check - Vehicle** prior to using this diagnostic procedure.
- Review **Strategy Based Diagnosis** for an overview of the diagnostic approach.
- **Diagnostic Procedure Instructions** provides an overview of each diagnostic category.

DTC Descriptors

DTC P0112

Intake Air Temperature (IAT) Sensor Circuit Low Voltage

DTC P0113

Intake Air Temperature (IAT) Sensor Circuit High Voltage

DTC P0114

Intake Air Temperature (IAT) Sensor Circuit Intermittent

Diagnostic Fault Information

Circuit	Short to Ground	Open/High Resistance	Short to Voltage	Signal Performance
Signal	P0112	P0113	P0113	P0114
Low Reference	-	P0113	P0113, P0114	P0114

Typical Scan Tool Data

IAT Sensor

Circuit	Short to Ground	Open	Short to Voltage
Operating Conditions: Engine running **Parameter Normal Range:** Varies with ambient temperature			
Signal	150°C (302°F)	-40°C (-40°F)	-40°C (-40°F)*
Low Reference	-	-40°C (-40°F)	-40°C (-40°F)*
*Internal ECM or sensor damage may occur if the circuit is shorted to B+			

Circuit/System Description

The intake air temperature (IAT) sensor 1 is a variable resistor that measures the temperature of the air in the Mass Air Flow (MAF) sensor bore. The engine control module (ECM) supplies 5 V to the IAT sensor 1 signal circuit and a ground for the IAT sensor 1 low reference circuit. The signal varies with inlet air temperature and is displayed by the scan tool as °C (°F).

IAT Sensor 1	IAT Sensor 1 Resistance	IAT Sensor 1 Signal Voltage
Cold	High	High
Warm	Low	Low

Conditions for Running the DTCs

P0112, P0113, and P0114

- The ignition is ON, or the engine is running.
- The DTCs run continuously when the above conditions are met.

Conditions for Setting the DTC

P0112

NOTE: The scan tool display range is between -40 and +150°C (-40 and +302°F).

The ECM detects that the IAT sensor signal is warmer than 150°C (302°F) for at least 5 s.

P0113

NOTE: The scan tool display range is between -40 and +150°C (-40 and +302°F).

The ECM detects that the IAT sensor signal is colder than -60°C (-76°F) for at least 5 s.

P0114

The ECM monitors the IAT sensor signal every 0.1 s, to determine if the signal has changed more than 80°C (176°F). The DTC fails when the condition exists for longer than 4 s.

Action Taken When the DTCs Set

- DTCs P0112, P0113, and P0114 are Type B DTCs.
- The ECM commands the cooling fans ON.

Conditions for Clearing the DTCs

DTCs P0112, P0113, and P0114 are Type B DTCs.

Diagnostic Aids

With the ignition ON, the engine OFF, if the engine is cold, a properly functioning IAT sensor 1 will gradually increase the scan tool IAT Sensor 1 parameter. This is due to the heat that is generated by the MAF sensor heating elements.

Reference Information

Schematic Reference

Engine Controls Schematics

Connector End View Reference

COMPONENT CONNECTOR END VIEWS - INDEX

Electrical Information Reference

- **Circuit Testing**
- **Connector Repairs**
- **Testing for Intermittent Conditions and Poor Connections**
- **Wiring Repairs**

Powertrain Component Views

Powertrain Component Views

DTC Type Reference

Powertrain Diagnostic Trouble Code (DTC) Type Definitions

Scan Tool Reference

Control Module References for scan tool information

Circuit/System Verification

NOTE: To minimize the effects of residual engine heat and sensor internal heating elements, perform Steps 1 and 2 of this verification procedure only if the ignition has been OFF for 8 hours or more.

1. Ignition ON.
2. Verify the following scan tool parameters are within 55°C (99°F) of each other.
   - Start-Up IAT Sensor 1
   - Start-Up ECT
   - **If not within 55°C (99°F)**

     Refer to Circuit/System Testing.

   - **If within 55°C (99°F)**
3. Engine idling, verify the following scan tool parameters are between: -38 and +149°C (-36 and +300° F).
   - IAT Sensor 1
   - Start-Up ECT
   - **If not between: -38 and +149°C (-36 and +300°F)**

     Refer to Circuit/System Testing.

   - **If between: -38 and +149°C (-36 and +300°F)**
4. Operate the vehicle within the conditions for running the DTC. You may also operate the vehicle within the conditions that you observed from the freeze frame/failure records data.
5. Verify the DTC does not set.
   - **If the DTC sets**

     Refer to Circuit/System Testing.

   - **If the DTC does not set**
6. All OK

Circuit/System Testing

1. Ignition OFF, disconnect the harness connector at the B75B Mass Air Flow/Intake Air Temperature sensor.
2. Ignition OFF, and all systems OFF, it may take up to for 2 minutes for all vehicle systems to power down. Test for less than 2 ohms between the low reference circuit terminal D and ground.
   - **If 2 ohms or greater**
   1. Ignition OFF, disconnect the harness connector at the K20 engine control module.
   2. Test for less than 2 ohms in the low reference circuit end to end.
      - If 2 ohms or greater, repair the open or high resistance in the circuit.

- If less than 2 ohms replace the K20 engine control module.
- **If less than 2 ohms**

3. Ignition ON, test for 4.8-5.2 V between the intake air temperature sensor 1 signal circuit terminal E and ground.
   - **If less than 4.8 V**
   1. Ignition OFF, disconnect the harness connector at the K20 engine control module.
   2. Test for infinite resistance between the signal circuit and ground.
      - If less than infinite resistance, repair the short to ground on the circuit.
      - If infinite resistance
   3. Test for less than 2 ohms in the signal circuit end to end.
      - If 2 ohms or greater, repair the open/high resistance in the circuit.
      - If less than 2 ohms, replace the K20 engine control module.
   - **If greater than 5.2 V**

NOTE: If the signal circuit is shorted to a voltage the engine control module or the sensor may be damaged.

   1. Ignition OFF, disconnect the harness connector at the K20 engine control module.
   2. Ignition ON, test for less than 1 V between the signal circuit and ground.
      - If 1 V or greater, repair the short to voltage on the circuit.
      - If less than 1 V, replace the K20 engine control module.
   - **If between 4.8-5.2 V**
4. Ignition ON, verify the scan tool IAT Sensor parameter is colder than -39°C (-38°F).
   - **If warmer than -39°C (-38°F).**
   1. Ignition OFF, disconnect the harness connector at the K20 Engine Control Module.
   2. Test for infinite resistance between the signal circuit terminal E and ground.
      - If less than infinite resistance, repair the short to ground on the circuit.
      - If infinite resistance
   3. Test for less than 2 ohms in the signal circuit end to end.
      - If 2 ohms or greater, repair the open/high resistance in the circuit.
      - If less than 2 ohms, replace the K20 Engine Control Module.
   - **If colder than -39°C (-38°F).**
5. Ignition OFF, install a 3 A fused jumper wire between the signal circuit terminal E and the low reference circuit terminal D.
6. Verify the scan tool IAT Sensor parameter is warmer than 148°C (298°F).
   - **If colder than 148°C (298°F).**
   1. Ignition OFF, remove the jumper wire, disconnect the harness connector at the K20 Engine Control Module, ignition ON.
   2. Test for less than 1 V between the signal circuit and ground.
      - If 1 V or greater, repair the short to voltage on the circuit.
      - If less than 1 V

3. Ignition OFF.
4. Test for less than 2 ohms in the signal circuit end to end.
   - If 2 ohms or greater, repair the open/high resistance in the circuit.
   - If less than 2 ohms, replace the K20 Engine Control Module.
- **If warmer than 148°C (298°F).**

7. Test or replace the B75B Mass Air Flow/Intake Air Temperature sensor.

Component Testing

Mass Air Flow/Intake Air Temperature

1. Ignition OFF, disconnect the harness connector at the B75B Mass Air Flow/Intake Air Temperature sensor.

NOTE: A thermometer can be used to test the sensor off the vehicle.

2. Test the IAT sensor by varying the sensor temperature while monitoring the sensor resistance. Compare the readings with the **Temperature Versus Resistance - Intake Air Temperature Sensor (Hitachi Sensor)** table for Hitachi Sensors. The resistance values should be in range of the table values.
   - **If the values are not with in range of the table values.**

     Replace the B75B Mass Air Flow/Intake Air Temperature sensor.

   - **If the values are within range of the table values.**
3. All OK.

Repair Instructions

Perform the **Diagnostic Repair Verification** after completing the repair.

- **Mass Airflow Sensor with Intake Air Temperature Sensor Replacement**
- **Control Module References** for engine control module replacement, programming, and setup.

DTC P0116 (LEA)

Diagnostic Instructions

- Perform the **Diagnostic System Check - Vehicle** prior to using this diagnostic procedure.
- Review **Strategy Based Diagnosis** for an overview of the diagnostic approach.
- **Diagnostic Procedure Instructions** provide an overview of each diagnostic category.

DTC Descriptor

DTC P0116

Engine Coolant Temperature (ECT) Sensor Performance

Diagnostic Fault Information

Circuit	Short to Ground	High Resistance	Open	Short to Voltage	Signal Performance
ECT Sensor Signal	P0117	P0118	P0118	P0118	P0116, P0128
Low Reference	-	P0118	P0118	P0118	P0128

Typical Scan Tool Data

ECT Sensor

Circuit	Short to Ground	Open	Short to Voltage
Operating Conditions: Engine running at various operating conditions **Parameter Normal Range:** Varies with coolant temperature			
ECT Sensor	150°C (302°F)	-40°C (-40°F)	-40°C (-40°F)
Low Reference	-	-40°C (-40°F)	-40°C (-40°F)

Circuit/System Description

The engine coolant temperature (ECT) sensor is a variable resistor that measures the temperature of the engine coolant. The engine control module (ECM) supplies 5 V to the ECT sensor signal circuit and a ground for the low reference circuit.

The ECM uses this high side coolant rationality diagnostic to determine if the input from the ECT sensor is skewed warmer than normal. The internal clock of the ECM will record the amount of time the ignition is OFF. If the calibrated ignition OFF time is met at start-up, the ECM will compare the temperature difference between the ECT and the intake air temperature (IAT) to determine if the temperatures are within an acceptable operating range of each other.

Conditions for Running the DTC

- DTC P0112, P0113, P0117, P0118, P0128, P0502, P0503, P0601, P1621, or P2610 is not set.
- The vehicle has had a minimum ignition OFF time of 8 h.
- The ignition is ON.
- The start-up IAT is warmer than -7°C (+19°F).
- The Fuel Level Sensor parameter is greater than 2.5%.
- This DTC runs once per ignition cycle within the enabling conditions.

Conditions for Setting the DTC

- The ECM detects a temperature difference at power-up that indicates that the ECT sensor is 30°C (54° F) warmer than the IAT sensor.

  OR

- The ECM detects a temperature difference at power-up that indicates that the ECT sensor is 16°C (29° F) warmer than the IAT sensor, and the time spent cranking the engine is greater than 30 s when the fuel level is greater than 2.5%.

OR

- The ECM detects a temperature difference at power-up that indicates that the ECT sensor is 16°C (29° F) warmer than the IAT sensor. Then the vehicle must be driven for greater than 6 min and 40 s at greater than 24 km/h (15 mph). If the IAT sensor then decreases greater than 5°C (9°F), an engine block heater was detected and the test is aborted. If the IAT sensor does not decrease, an engine block heater was not detected and DTC P0116 will set.

Action Taken When the DTC Sets

DTC P0116 is a Type B DTC.

Conditions for Clearing the MIL/DTC

DTC P0116 is a Type B DTC.

Diagnostic Aids

- Engine coolant that is leaking through the sensor will create a high resistance short to ground. This condition results in less voltage on the ECT sensor signal circuit, which is interpreted by the ECM as a warmer ECT.
- An IAT sensor that is skewed colder at various ambient temperatures due to greater resistance than is normal will increase the range between these two sensors. Measure and record the resistance of the IAT sensor at various ambient temperatures, then compare those measurements to the **Temperature Versus Resistance (Engine Coolant Temperature Sensor)** table.
- A slight to moderate resistance in the IAT sensor signal circuit or low reference circuit will increase the range between these two sensors. This condition results in a greater voltage on the IAT sensor signal circuit, which is interpreted by the ECM as a colder IAT.

Reference Information

Schematic Reference

Engine Controls Schematics

Connector End View Reference

COMPONENT CONNECTOR END VIEWS - INDEX

Electrical Information Reference

- **Circuit Testing**
- **Connector Repairs**
- **Testing for Intermittent Conditions and Poor Connections**
- **Wiring Repairs**

DTC Type Reference

Powertrain Diagnostic Trouble Code (DTC) Type Definitions

Scan Tool Reference

Control Module References for scan tool information

Circuit/System Verification

1. Ignition OFF, inspect the cooling system surge tank for the proper coolant level. Refer to **Cooling System Leak Testing** , and **Cooling System Draining and Filling (Static Fill)** , **Cooling System Draining and Filling (GE 47716)** .
2. Ignition OFF for 8 h or greater.
3. Ignition ON, observe the scan tool ECT Sensor and IAT Sensor parameters. The ECT, IAT, and ambient temperature should be within 15°C (27°F) of each other.
4. Operate the vehicle within the Conditions for Running the DTC to verify the DTC does not reset. You may also operate the vehicle within the conditions that you observed from the Freeze Frame/Failure Records data.

Circuit/System Testing

1. Ignition OFF and all vehicle systems OFF, disconnect the harness connector at the B34 engine coolant temperature sensor. It may take up to 2 minutes for all vehicle systems to power down.
2. Test for less than 5 ohms between the low reference circuit terminal A and ground.
   - If greater than the specified range, test the low reference circuit for an open/high resistance. If the circuit tests normal, replace the K20 engine control module.
3. Ignition ON, verify the scan tool ECT Sensor parameter is colder than -39°C (-38°F).
   - If warmer than the specified range, test the signal circuit terminal B for a short to ground. If the circuit tests normal, replace the K20 engine control module.
4. Install a 3 A fused jumper wire between the signal circuit terminal B and the low reference circuit terminal A. Verify the scan tool ECT Sensor parameter is warmer than 149°C (300°F).
   - If colder than the specified range, test the signal circuit for a short to voltage or an open/high resistance. If the circuit tests normal, replace the K20 engine control module.
5. If the circuits test normal, test or replace the B34 engine coolant temperature sensor.

Component Testing

Measure and record the resistance of the ECT sensor at various ambient temperatures, then compare those measurements to the **Temperature Versus Resistance (Engine Coolant Temperature Sensor)** table.

Repair Instructions

Perform the **Diagnostic Repair Verification** after completing the diagnostic procedure.

- **Engine Coolant Temperature Sensor Replacement**
- **Control Module References** for ECM replacement, setup, and programming

DTC P0116 (LUK)

Diagnostic Instructions

- Perform the **Diagnostic System Check - Vehicle** prior to using this diagnostic procedure.
- Review **Strategy Based Diagnosis** for an overview of the diagnostic approach.
- **Diagnostic Procedure Instructions** provide an overview of each diagnostic category.

DTC Descriptor

DTC P0116

Engine Coolant Temperature (ECT) Sensor Performance

Diagnostic Fault Information

Circuit	Short to Ground	Open/High Resistance	Short to Voltage	Signal Performance
ECT Sensor Signal	P0117, P0119	P0118	P0118	P0116, P0119, P0128
Low Reference	-	P0118, P0119	P0118	P0119, P0128

Typical Scan Tool Data

ECT Sensor

Circuit	Short to Ground	Open	Short to Voltage
Operating Conditions: Engine running at various operating conditions **Parameter Normal Range:** Varies with coolant temperature			
ECT Sensor	150°C (302°F)	-40°C (-40°F)	-40°C (-40°F)
Low Reference	-	-40°C (-40°F)	-40°C (-40°F)

Circuit/System Description

The engine coolant temperature (ECT) sensor is a variable resistor that measures the temperature of the engine coolant. The engine control module (ECM) supplies 5 V to the ECT sensor signal circuit and a ground for the low reference circuit.

The ECM uses this high side coolant rationality diagnostic to determine if the input from the ECT sensor is skewed warmer than normal. The internal clock of the ECM will record the amount of time the ignition is OFF. If the calibrated ignition OFF time is met at start-up, the ECM will compare the temperature difference between the ECT and the intake air temperature (IAT) to determine if the temperatures are within an acceptable operating range of each other.

Conditions for Running the DTC

- DTC P0112, P0113, P0117, P0118, P0128, P0502, P0503, P0601, P1621, or P2610 is not set.
- The vehicle has had a minimum ignition OFF time of 7 h.
- The ignition is ON.
- The start-up IAT is warmer than -7°C (+19°F).
- Propulsion system OFF time greater than 0 s.
- The Fuel Level Sensor parameter is greater than 2.5%.

- This DTC runs once per ignition cycle within the enabling conditions.

Conditions for Setting the DTC

- The ECM detects a temperature difference at power-up that indicates that the ECT sensor is 30°C (54° F) warmer than the IAT sensor.

  OR

- The ECM detects a temperature difference at power-up that indicates that the ECT sensor is 16°C (29° F) warmer than the IAT sensor, and a block heater has not been detected.

  OR

- The ECM detects a temperature difference at power-up that indicates that the ECT sensor is 16°C (29° F) warmer than the IAT sensor. And the time spent cranking the engine without starting is greater than 10 s. Then the vehicle must be driven for greater than 7 min and at greater than 24 km/h (15 mph). If the IAT sensor then decreases greater than 5°C (9°F), an engine block heater was detected and the test is aborted. If the IAT sensor does not decrease, an engine block heater was not detected DTC P0116 will set.

Action Taken When the DTC Sets

DTC P0116 is a Type B DTC.

Conditions for Clearing the MIL/DTC

DTC P0116 is a Type B DTC.

Diagnostic Aids

- An IAT sensor that is skewed colder at various ambient temperatures due to greater resistance than is normal will increase the range between these two sensors. Measure and record the resistance of the IAT sensor at various ambient temperatures, then compare those measurements to the **Temperature Versus Resistance (Engine Coolant Temperature Sensor)** table.
- A slight to moderate resistance in the IAT sensor signal circuit or low reference circuit will increase the range between these two sensors. This condition results in a greater voltage on the IAT sensor signal circuit, which is interpreted by the ECM as a colder IAT.

Reference Information

Schematic Reference

Engine Controls Schematics

Connector End View Reference

COMPONENT CONNECTOR END VIEWS - INDEX

Electrical Information Reference

- **Circuit Testing**
- **Connector Repairs**
- **Testing for Intermittent Conditions and Poor Connections**
- **Wiring Repairs**

DTC Type Reference

Powertrain Diagnostic Trouble Code (DTC) Type Definitions

Scan Tool Reference

Control Module References for scan tool information

Circuit/System Verification

1. Ignition OFF, inspect the cooling system surge tank for the proper coolant level. Refer to **Cooling System Leak Testing** , and **Cooling System Draining and Filling (Static Fill)** , **Cooling System Draining and Filling (GE 47716)** .
2. Ignition OFF for 7 h or greater.
3. Ignition ON, observe the scan tool ECT Sensor and IAT Sensor parameters. The ECT, IAT, and ambient temperature should be within 15°C (27°F) of each other.
4. Operate the vehicle within the Conditions for Running the DTC to verify the DTC does not reset. You may also operate the vehicle within the conditions that you observed from the Freeze Frame/Failure Records data.

Circuit/System Testing

1. Ignition OFF and all vehicle systems OFF, disconnect the B34 engine coolant temperature sensor harness connector at the sensor. It may take up to 2 minutes for all vehicle systems to power down. Test for less than 5 ohms between the low reference circuit terminal A and ground.
   - If greater than the specified range, test the low reference circuit for an open/high resistance. If the circuit tests normal, replace the K20 engine control module.
2. Ignition ON, verify the scan tool ECT Sensor parameter is colder than -39°C (-38°F).
   - If warmer than the specified range, test the signal circuit terminal B for a short to ground. If the circuit tests normal, replace the K20 engine control module.
3. Install a 3 A fused jumper wire between the signal circuit terminal B and the low reference circuit terminal A. Verify the scan tool ECT Sensor parameter is warmer than 149°C (300°F).
   - If colder than the specified range, test the signal circuit for a short to voltage or an open/high resistance. If the circuit tests normal, replace the K20 engine control module.
4. If the circuits test normal, test or replace the B34 engine coolant temperature sensor.

Component Testing

Static Test

1. Ignition off, remove the B34 engine coolant temperature sensor.

NOTE: A thermometer can be used to test the sensor off vehicle.

2. Test the B34 engine coolant temperature sensor by varying the sensor temperature while monitoring the sensor resistance. Compare the readings with the **Temperature Versus Resistance (Engine Coolant Temperature Sensor)** table and verify that the resistance is within 5% of the specification.
   - If not within the specified range, replace the B34 engine coolant temperature sensor.

Repair Instructions

Perform the **Diagnostic Repair Verification** after completing the diagnostic procedure.

- **Engine Coolant Temperature Sensor Replacement**
- **Control Module References** for ECM replacement, programming and setup

DTC P0117 OR P0118 (LUK)

Diagnostic Instructions

- Perform the **Diagnostic System Check - Vehicle** prior to using this diagnostic procedure.
- Review **Strategy Based Diagnosis** for an overview of the diagnostic approach.
- **Diagnostic Procedure Instructions** provides an overview of each diagnostic category.

DTC Descriptors

DTC P0117

Engine Coolant Temperature (ECT) Sensor Circuit Low Voltage

DTC P0118

Engine Coolant Temperature (ECT) Sensor Circuit High Voltage

DTC P0119

Engine Coolant Temperature (ECT) Sensor Circuit Intermittent

Diagnostic Fault Information

Circuit	Short to Ground	Open/High Resistance	Short to Voltage	Signal Performance
Signal	P0117	P0118, P0119	P0118*, P0119	P0116, P0128
Low Reference	-	P0118, P0119	-	P0128
*ECM or sensor damage may occur if the circuit is shorted to B+.				

Typical Scan Tool Data

ECT Sensor

Circuit	Short to Ground	Open	Short to Voltage

Operating Conditions: Engine running at various operating conditions **Parameter Normal Range:** Varies with coolant temperature			
Signal	140°C (284°F)	-40°C (-40°F)	-40°C (-40°F)
Low Reference	-	-40°C (-40°F)	-

Circuit/System Description

The engine coolant temperature (ECT) sensor is a variable resistor that measures the temperature of the engine coolant. The engine control module (ECM) supplies 5 V to the ECT sensor signal circuit and a ground for the low reference circuit. This diagnostic checks for an open, short to ground or an intermittent circuit condition between the ECM and ECT sensor.

Conditions for Running the DTC

P0117

- The ignition is ON.

  OR

- The engine is running for greater than 10 s.

  OR

- The engine run time is less than 10 s when the intake air temperature (IAT) is colder than 50°C (122° F).
- This DTC runs continuously within the enabling conditions.

P0118

- The ignition is ON.

  OR

- The engine is running for greater than 10 s.

  OR

- The engine run time is less than 10 s when the IAT is warmer than 0°C (32°F).
- This DTC runs continuously within the enabling conditions.

P0119

- This DTC runs continuously within the enabling conditions.

Conditions for Setting the DTC

P0117

The ECM detects that the ECT is warmer than 149°C (300°F) for greater than 5 s.

P0118

The ECM detects that the ECT is colder than -39°C (-38°F) for greater than 5 s.

P0119

The ECM detects that the ECT is intermittent or has abruptly changed for greater than 4 seconds.

Action Taken When the DTC Sets

- DTC P0117, P0118 or P0119 are a Type B DTC.
- The cooling fans will be commanded ON.
- The Engine Coolant Temperature Gauge is inoperative.

Conditions for Clearing the DTC

DTC P0117, P0118 or P0119 are a Type B DTC.

Reference Information

Schematic Reference

Engine Controls Schematics

Connector End View Reference

COMPONENT CONNECTOR END VIEWS - INDEX

Electrical Information Reference

- **Circuit Testing**
- **Connector Repairs**
- **Testing for Intermittent Conditions and Poor Connections**
- **Wiring Repairs**

DTC Type Reference

Powertrain Diagnostic Trouble Code (DTC) Type Definitions

Scan Tool Reference

Control Module References for scan tool information

Circuit/System Verification

1. Ignition ON.
2. Verify the scan tool ECT Sensor parameter is between -39 to + 120°C (-38 to +248°F) and changes

with engine run time.

- **If not between -39 to + 120°C (-38 to +248°F) or does not change**

  Refer to Circuit/System Testing.

- **If between -39 to + 120°C (-38 to +248°F) and changes**

3. Operate the vehicle within the Conditions for Running the DTC. You may also operate the vehicle within the conditions that you observed from the Freeze Frame/Failure Records data.
4. Verify the DTC does not set.
   - **If the DTC sets**

     Refer to Circuit/System Testing.

   - **If the DTC does not set**
5. All OK.

Circuit/System Testing

1. Ignition OFF and all vehicle systems OFF, disconnect the B34 Engine Coolant Temperature sensor harness connector at the sensor. It may take up to 2 minutes for all vehicle systems to power down.
2. Test for less than 5 ohms between the low reference circuit terminal A and ground.
   - **If 5 ohms or greater**
     1. Ignition OFF, disconnect the harness connector at the K20 Engine Control Module.
     2. Test for less than 2 ohms in the low reference circuit end to end.
        - If 2 ohms or greater, repair the open/high resistance in the circuit.
        - If less than 2 ohms, replace the K20 Engine Control Module.
   - **If less than 5 ohms**
3. Ignition ON.
4. Verify the scan tool ECT Sensor parameter is colder than -39°C (-38°F).
   - **If warmer than -39°C (-38°F)**
     1. Ignition OFF, disconnect the harness connector at the K20 Engine Control Module.
     2. Test for infinite resistance between the signal circuit terminal B and ground.
        - If less than infinite resistance, repair the short to ground on the circuit.
        - If infinite resistance, replace the K20 Engine Control Module.
   - **If colder than -39°C (-38°F)**
5. Install a 3 A fused jumper wire between the signal circuit terminal B and the low reference circuit terminal A.
6. Verify the scan tool ECT sensor parameter is warmer than 149°C (300°F).
   - **If colder than the 149°C (300°F)**
     1. Ignition OFF, remove the jumper wire, disconnect the harness connector at the K20 Engine Control Module, ignition ON.
     2. Test for less than 1 V between the signal circuit and ground.
        - If 1 V or greater, repair the short to voltage on the circuit.
        - If less than 1 V

3. Ignition OFF
4. Test for less than 2 ohms in the signal circuit end to end.
   - If 2 ohms or greater, repair the open/high resistance in the circuit.
   - If less than 2 ohms, replace the K20 Engine Control Module.
- **If warmer than 149°C (300°F)**

7. Test or replace the B34 Engine Coolant Temperature Sensor.

Component Testing

1. Ignition OFF, disconnect the harness connector at the B34 Engine Coolant Temperature Sensor.
2. Test the ECT sensor by varying the sensor temperature while monitoring the sensor resistance. Compare the readings with the **Temperature Versus Resistance (Engine Coolant Temperature Sensor)** table. The resistance values should be in range of the table values.
   - **If not within the specified range**
   - Replace the B34 Engine Coolant Temperature Sensor.
   - **If within the specified range**
3. Test for infinite resistance between each terminal and the sensor housing.
   - **If less than infinite resistance**

     Replace the B34 Engine Coolant Temperature Sensor.

   - **If infinite resistance**
4. All OK.

Repair Instructions

Perform the **Diagnostic Repair Verification** after completing the diagnostic procedure.

- **Engine Coolant Temperature Sensor Replacement**
- **Control Module References** engine control module replacement, programming, and setup

DTC P0117 OR P0118 (LEA)

Diagnostic Instructions

- Perform the **Diagnostic System Check - Vehicle** prior to using this diagnostic procedure.
- Review **Strategy Based Diagnosis** for an overview of the diagnostic approach.
- **Diagnostic Procedure Instructions** provides an overview of each diagnostic category.

DTC Descriptors

DTC P0117

Engine Coolant Temperature (ECT) Sensor Circuit Low Voltage

DTC P0118

Engine Coolant Temperature (ECT) Sensor Circuit High Voltage

DTC P0119

Engine Coolant Temperature (ECT) Sensor Circuit Intermittent

Diagnostic Fault Information

Circuit	Short to Ground	High Resistance	Open	Short to Voltage	Signal Performance
Signal	P0117, P0119	P0118, P0119	P0118, P0119	P0118	P0116, P0128
Low Reference	-	P0118, P0119	P0118, P0119	-	-

Typical Scan Tool Data

ECT Sensor

Circuit	Short to Ground	Open	Short to Voltage
Operating Conditions: Engine running at various operating conditions **Parameter Normal Range:** Varies with coolant temperature			
ECT Sensor	150°C (302°F)	-40°C (-40°F)	-40°C (-40°F)
Low Reference	-	-40°C (-40°F)	-

Circuit/System Description

The engine coolant temperature (ECT) sensor is a variable resistor that measures the temperature of the engine coolant. The engine control module (ECM) supplies 5 V to the ECT sensor signal circuit and a ground for the low reference circuit. This diagnostic checks for an open, short to ground or an intermittent circuit condition between the ECM and ECT sensor.

Conditions for Running the DTC

P0117

- The ignition is ON.

  OR

- The engine is running for greater than 10 s.

  OR

- The engine run time is less than 10 s when the intake air temperature (IAT) is colder than 50°C (122° F).
- This DTC runs continuously within the enabling conditions.

P0118

- The ignition is ON.

  OR

- The engine is running for greater than 10 s.

  OR

- The engine run time is less than 10 s when the IAT is warmer than 0°C (32°F).
- This DTC runs continuously within the enabling conditions.

P0119

- This DTC runs continuously within the enabling conditions.

Conditions for Setting the DTC

P0117

The ECM detects that the ECT is warmer than 149°C (300°F) for greater than 5 s.

P0118

The ECM detects that the ECT is colder than -39°C (-38°F) for greater than 5 s.

P0119

The ECM detects that the ECT is intermittent or has abruptly changed for greater than 4 seconds.

Action Taken When the DTC Sets

- DTCs P0117, P0118 and P0119 are Type B DTCs.
- The cooling fans will be commanded ON.
- The Engine Coolant Temperature Gauge is inoperative.
- The AC compressor will be commanded OFF.

Conditions for Clearing the MIL/DTC

DTCs P0117, P0118 and P0119 are Type B DTCs.

Reference Information

Schematic Reference

Engine Controls Schematics

Connector End View Reference

COMPONENT CONNECTOR END VIEWS - INDEX

Electrical Information Reference

- **Circuit Testing**
- **Connector Repairs**
- **Testing for Intermittent Conditions and Poor Connections**
- **Wiring Repairs**

DTC Type Reference

Powertrain Diagnostic Trouble Code (DTC) Type Definitions

Scan Tool Reference

Control Module References for scan tool information

Circuit/System Verification

1. Ignition ON.
2. Verify the scan tool ECT Sensor parameter is between -39 to + 120°C (-38 to +248°F) and changes with engine run time.
   - **If not between -39 to + 120°C (-38 to +248°F) or does not change**

     Refer to Circuit/System Testing.

   - **If between -39 to + 120°C (-38 to +248°F) and changes**
3. Operate the vehicle within the Conditions for Running the DTC. You may also operate the vehicle within the conditions that you observed from the Freeze Frame/Failure Records data.
4. Verify the DTC does not set.
   - **If the DTC sets**

     Refer to Circuit/System Testing.

   - **If the DTC does not set**
5. All OK.

Circuit/System Testing

1. Ignition OFF and all vehicle systems OFF, disconnect the harness connector at the B34 Engine Coolant Temperature Sensor. It may take up to 2 minutes for all vehicle systems to power down.
2. Test for less than 5 ohms between the low reference terminal A and ground.
   - **If 5 ohms or greater**
     1. Ignition OFF, disconnect the harness connector at the K20 Engine Control Module.
     2. Test for less than 2 ohms in the low reference circuit end to end.
        - If 2 ohms or greater, repair the open/high resistance in the circuit.
        - If less than 2 ohms, replace the K20 Engine Control Module.
   - **If less than 5 ohms**

3. Ignition ON.
4. Verify the scan tool ECT Sensor parameter is colder than -39°C (-38°F).
   - **If warmer than -39°C (-38°F)**
   1. Ignition OFF, disconnect the harness connector at the K20 Engine Control Module.
   2. Test for infinite resistance between the signal circuit terminal B and ground.
      - If less than infinite resistance, repair the short to ground on the circuit.
      - If infinite resistance, replace the K20 Engine Control Module.
   - **If colder than -39°C (-38°F)**
5. Install a 3 A fused jumper wire between the signal circuit terminal B and the low reference circuit terminal A.
6. Verify the scan tool ECT sensor parameter is warmer than 149°C (300°F).
   - **If colder than the 149°C (300°F)**
   1. Ignition OFF, remove the jumper wire, disconnect the harness connector at the K20 Engine Control Module, ignition ON.
   2. Test for less than 1 V between the signal circuit and ground.
      - If 1 V or greater, repair the short to voltage on the circuit.
      - If less than 1 V
   3. Ignition OFF.
   4. Test for less than 2 ohms in the signal circuit end to end.
      - If 2 ohms or greater, repair the open/high resistance in the circuit.
      - If less than 2 ohms, replace the K20 Engine Control Module.
   - **If warmer than 149°C (300°F)**
7. Test or replace the B34 Engine Coolant Temperature Sensor.

Component Testing

1. Ignition OFF, disconnect the harness connector at the B34 Engine Coolant Temperature Sensor.
2. Test the ECT sensor by varying the sensor temperature while monitoring the sensor resistance. Compare the readings with the **Temperature Versus Resistance (Engine Coolant Temperature Sensor)** table. The resistance values should be in range of the table values.
   - **If not within the specified range**
   - Replace the B34 Engine Coolant Temperature Sensor.
   - **If within the specified range**
3. Test for infinite resistance between each terminal and the sensor housing.
   - **If less than infinite resistance**

     Replace the B34 Engine Coolant Temperature Sensor.

   - **If infinite resistance**
4. All OK.

Repair Instructions

Perform the **Diagnostic Repair Verification** after completing the diagnostic procedure.

- **Engine Coolant Temperature Sensor Replacement**
- **Control Module References** for ECM replacement, setup and programming

DTC P0119

Diagnostic Instructions

- Perform the **Diagnostic System Check - Vehicle** prior to using this diagnostic procedure.
- Review **Strategy Based Diagnosis** for an overview of the diagnostic approach.
- **Diagnostic Procedure Instructions** provides an overview of each diagnostic category.

DTC Descriptor

DTC P0119

Engine Coolant Temperature (ECT) Sensor Circuit Intermittent

Diagnostic Fault Information

Circuit	Short to Ground	Open/High Resistance	Short to Voltage	Signal Performance
ECT Sensor Signal	P0117, P0119	P0116, P0118, P0119	P0118*	P0116, P0128
Low Reference	-	P0116, P0118, P0119	P0118*	P0128
* Internal ECM or sensor damage may occur if the circuit is shorted to B+				

Typical Scan Tool Data

ECT Sensor

Circuit	Short to Ground	Open	Short to Voltage
Operating Conditions: Engine operating in Closed Loop **Parameter Normal Range:** -39 to +142°C (-38 to +288°F) Varies with coolant temperature.			
ECT Sensor Signal	143°C (289°F)	-40°C (-40°F)	-40°C (-40°F)*
Low Reference	-	-40°C (-40°F)	-40°C (-40°F)*
* Internal ECM or ECT sensor damage may occur if the circuit is shorted to B+			

Circuit Description

The engine coolant temperature (ECT) sensor is a variable resistor that measures the temperature of the engine coolant. The engine control module (ECM) supplies 5 volts to the ECT signal circuit and supplies a ground to the low reference circuit. The ECM monitors the performance of the ECT sensor. If the ECM detects excessive noise or rapid fluctuations in the ECT signal, this DTC sets.

The following table illustrates the difference between temperature, resistance, and voltage:

ECT	ECT Resistance	ECT Signal Voltage
Cold	High	High
Warm	Low	Low

Conditions for Running the DTC

- DTC P0117 or P0118 is not set.
- The ignition is ON or the engine is operating.
- DTC P0119 runs continuously once the above conditions are met.

Conditions for Setting the DTC

- The ECM detects an abrupt ECT positive temperature change or negative temperature change ±10°C (±18°F) greater than the expected value.
- The condition exists for approximately 4-6 seconds.

Action Taken When the DTC Sets

DTC P0119 is a Type B DTC.

Conditions for Clearing the MIL/DTC

DTC P0119 is a Type B DTC.

Diagnostic Aids

- Test the ECT sensor at various temperature levels in order to evaluate the possibility of a skewed sensor. A skewed sensor can result in a DTC or a driveability condition. Refer to **Temperature Versus Resistance (Engine Coolant Temperature Sensor)** .
- If the vehicle has sat overnight, the IAT sensor and the ECT sensor values should display within 5°C (41°F).
- After starting a cold engine, the ECT sensor temperature should rise steadily, then stabilize after the thermostat opens.
- Intermittent High resistance on either the ECT sensor signal circuit or the ECT sensor low reference circuit could set a DTC.

Reference Information

Schematic Reference

Engine Controls Schematics

Connector End View Reference

COMPONENT CONNECTOR END VIEWS - INDEX

Electrical Information Reference

- **Circuit Testing**

- **Connector Repairs**
- **Testing for Intermittent Conditions and Poor Connections**
- **Wiring Repairs**

DTC Type Reference

Powertrain Diagnostic Trouble Code (DTC) Type Definitions

Scan Tool Reference

Control Module References for scan tool information

Circuit/System Verification

1. Observe the scan tool engine coolant temperature (ECT) sensor parameter, while moving the ECT sensor connector and the K20 ECM connector. The ECT sensor parameter should not fluctuate while moving the related harnesses and connectors.
   - Repair the suspected harness or connection if the ECT parameter fluctuates greater than 3°C (5° F) while moving the related harnesses and connectors.
2. Operate the vehicle within the Conditions for Running the DTC to verify the DTC does not reset. You may also operate the vehicle within the conditions that you observed from the Freeze Frame/Failure Records data.

Circuit/System Testing

1. Ignition OFF, disconnect the harness connector at the B34 engine coolant temperature sensor.
2. Ignition OFF, all vehicle systems OFF, this may take up to 2 minutes, test for less than 5 ohms between the low reference circuit terminal A and ground.
   - If greater than the specified range, test the low reference circuit for an open/high resistance. If the circuit tests normal, replace the K20 engine control module.
3. Ignition ON, verify the scan tool ECT Sensor parameter is colder than -40°C (-40°F).
   - If warmer than the specified value, test the signal circuit terminal 1 for a short to ground. If the circuit tests normal, replace the K20 engine control module.
4. Install a 3 A fused jumper wire between the signal circuit terminal B and the low reference circuit terminal A. Verify the scan tool ECT Sensor parameter is warmer than 150°C (302°F).
   - If less than the specified range, test the signal circuit for a short to voltage or an open/high resistance. If the circuit tests normal, replace the K20 engine control module.
5. If all circuits test normal, test or replace the B34 engine coolant temperature sensor.

Component Testing

1. Ignition OFF, disconnect the harness connector at the B34 engine coolant temperature sensor.

   NOTE: A thermometer can be used to test the sensor off the vehicle.

2. Test the ECT sensor by varying the sensor temperature while monitoring the sensor resistance. Compare the readings with the **Temperature Versus Resistance (Engine Coolant Temperature**

Sensor) table and verify that the resistance is within 5 percent of the specification.
- If not within the specified range, replace the B34 engine coolant temperature sensor.

Repair Instructions

Perform the **Diagnostic Repair Verification** after completing the diagnostic procedure.

- **Engine Coolant Temperature Sensor Replacement**
- **Control Module References** for ECM replacement, setup, and programming

DTC P0121-P0123, P0222, P0223, P16A0-P16A2, OR P2135

Diagnostic Instructions

- Perform the **Diagnostic System Check - Vehicle** prior to using this diagnostic procedure.
- Review **Strategy Based Diagnosis** for an overview of the diagnostic approach.
- **Diagnostic Procedure Instructions** provides an overview of each diagnostic category.

DTC Descriptors

DTC P0121

Throttle Position Sensor 1 Performance

DTC P0122

Throttle Position Sensor 1 Circuit Low Voltage

DTC P0123

Throttle Position Sensor 1 Circuit High Voltage

DTC P0222

Throttle Position Sensor 2 Circuit Low Voltage

DTC P0223

Throttle Position Sensor 2 Circuit High Voltage

DTC P16A0

Sensor Communication Circuit Low Voltage

DTC P16A1

Sensor Communication Circuit High Voltage

DTC P16A2

Sensor Communication Circuit Performance

DTC P2135

Throttle Position Sensors 1-2 Not Plausible

Diagnostic Fault Information

Circuit	Short to Ground	Open/High Resistance	Short to Voltage	Signal Performance
5 V Reference	P06A3	P0122*, P0222*, P16A0	P06A3	P0121*, P16A2, P2135*
Signal	P0122*, P0222*, P16A0	P0122*, P0222*, P16A1	P0123*, P0223*, P16A0**, P16A1**, P16A2**	P0121*, P16A2, P2135*
Low Reference	-	P0123*, P0223*, P16A1	-	P0121*, P16A2, P2135*
* This DTC set indicates an internal throttle body condition. ** A short to voltage causes P16A1 to set. If DTC P16A0, P16A1, and P16A2 set at the same time, an intermittent circuit condition exists.				

Typical Scan Tool Data

Throttle Position Sensor 1

Circuit	Short to Ground	Open	Short to Voltage
Operating Conditions: The engine is operating with the throttle closed. All accessories OFF. **Parameter Normal Range:** Throttle Position Sensor 1 3.75-4.75 V			
5 V Reference	0.0 V	5.0 V	5.0 V
Signal	0.0 V	0.0 V	0.0 V
Low Reference	-	0.0 V	-

Throttle Position Sensor 2

Circuit	Short to Ground	Open	Short to Voltage
Operating Conditions: The engine is operating with the throttle closed. All accessories OFF. **Parameter Normal Range:** Throttle Position Sensor 2 0.45-0.90 V			
5 V Reference	0.0 V	0.0 V	0.0 V
Signal	5.0 V	5.0 V	5.0 V
Low Reference	-	5.0 V	-

Circuit/System Description

The throttle body assembly contains a contact-less inductive throttle position sensing element that is managed by a customized integrated circuit. The throttle position sensor is mounted within the throttle body assembly and is not serviceable. The Engine Control Module (ECM) supplies the throttle body with a 5 V reference circuit, a low reference circuit, an H-bridge motor directional control circuit, and an asynchronous signal/serial data circuit. The asynchronous signal means communication is only going from the throttle

body to the ECM. The throttle body cannot receive data from the ECM over the signal/serial data circuit. The throttle position sensor provides a signal voltage that changes relative to throttle blade angle. The customized integrated circuit translates the voltage based position information into serial data using the Society of Automotive Engineers (SAE) J2716 Single Edge Nibble Transmission (SENT) protocol. The throttle position sensor information is transmitted between the throttle body and the ECM on the signal/serial data circuit. The ECM decodes the serial data signal into separate voltages which are displayed on a scan tool as the voltage inputs from TP sensors 1 and 2.

Conditions for Running the DTC

P0121

- DTCs P0102, P0103, P0107, P0108, P0112, P0113, P0117, P0118, P0335, or P0336 is not set.
- The engine speed is between 575-6,600 RPM.
- The engine coolant temperature (ECT) is between -7 to +125°C (19-257°F).
- The intake air temperature (IAT) is between -20 to +125°C (-4 to +257°F).
- The DTC runs continuously when the above conditions are met.

P0122, P0123, P0222, P0223

- DTC P06A3 is not set.
- The ignition is ON or the engine is running.
- The run/crank or powertrain relay voltage is greater than 6.41 V and reduced power is not active.
- The DTCs run continuously when the above condition are met.

P16A0, P16A1, or P16A2

- DTC P06A3 is not set.
- The ignition is ON or the engine is operating.
- The run/crank voltage is greater than 6.41 V.
- The DTCs run continuously once the above conditions are met for greater than 1 s.

P2135

- DTCs P0122, P0123, P0222, P0223, or P06A3 are not set.
- The ignition is ON or the engine is running.
- The run/crank or powertrain relay voltage is greater than 6.41 V and reduced power is not active.
- The DTC runs continuously when the above conditions are met.

Conditions for Setting the DTC

P0121

The ECM detects that the throttle position sensor 1 voltage is stuck within normal operating range for greater than 1 s.

P0122

The ECM detects the throttle position sensor 1 signal voltage is less than 0.32 V for greater than 1 s.

P0123

The ECM detects the throttle position sensor 1 signal voltage is greater than 4.75 V for greater than 1 s.

P0222

The ECM detects the throttle position sensor 2 signal voltage is less than 0.25 V for greater than 1 s.

P0223

The ECM detects the throttle position sensor 2 signal voltage is greater than 4.59 V for greater than 1 s.

P16A0

The ECM detects a low voltage circuit condition on the throttle position sensor signal circuit for greater than 1 s.

P16A1

The ECM detects a high voltage circuit condition on the throttle position sensor signal circuit for greater than 1 s.

P16A2

The ECM detects an incorrect message was received over the throttle position sensor signal circuit for greater than 1 s.

P2135

The ECM detects that throttle position sensor 1 and 2 disagree greater than 7-10 percent for greater than 1 s.

Action Taken When the DTC Sets

- DTCs P0121 is a Type B DTC.
- DTCs P0122, P0123, P0222, P0223, P16A0, P16A1, P16A2, and P2135 are Type A DTCs.
- The ECM commands the throttle actuator control (TAC) system to operate in a Reduced Engine Power mode.
- A message center or an indicator displays Reduced Engine Power.
- Under certain conditions, the ECM commands the engine OFF.

Conditions for Clearing the DTC

- DTCs P0121 is a Type B DTC.
- DTCs P0122, P0123, P0222, P0223, P16A0, P16A1, P16A2, and P2135 are Type A DTCs.

Diagnostic Aids

- A high resistance condition on the throttle position and throttle actuator control circuits could cause a DTC to set.
- If the accelerator pedal is pressed to the wide open throttle position, the throttle blade angle or Throttle Position angle is limited to less than 40 percent.

Reference Information

Schematic Reference

Engine Controls Schematics

Connector End View Reference

COMPONENT CONNECTOR END VIEWS - INDEX

Description and Operation

Throttle Actuator Control (TAC) System Description

Electrical Information Reference

- **Circuit Testing**
- **Connector Repairs**
- **Testing for Intermittent Conditions and Poor Connections**
- **Wiring Repairs**

DTC Type Reference

Powertrain Diagnostic Trouble Code (DTC) Type Definitions

Scan Tool Reference

Control Module References for scan tool information

Circuit/System Verification

1. Ignition ON,
2. Verify that DTC P0601-P0606, P06A3, and P16F3 is not set.
   - **If a DTC is set**

     Refer to **Diagnostic Trouble Code (DTC) List - Vehicle** for further diagnosis.

   - **If a DTC is not set**
3. Verify the scan tool Throttle Body Idle Air flow Compensation parameter is less than 90 %.
   - **If 90 % or greater**

     Refer to **Throttle Body Cleaning** .

- **If less than 90 %**

4. Verify that DTC P0122, P0123, P0222, P0223, P16A0, P16A1, P16A2, or P2135 are not set.
   - **If DTC P0122, P0123, P0222, P0223, or P2135 are the only DTCs set**

     Test or replace the Q38 Throttle Body Assembly.

   - **If any of the DTCs are set**

     Refer to Circuit/System Testing.

   - **If none of the DTCs are set**
5. Verify the Throttle Position Sensors 1 and 2 Agree/Disagree parameter displays Agree while performing the Throttle Sweep Test with a scan tool.
   - **If Agree is not displayed**

     Test or replace the Q38 Throttle Body Assembly.

   - **If Agree is displayed**
6. Verify DTC P0121, P0122, P0123, P0222, P0223, P16A0, P16A1, P16A2, and P2135 is not set.
   - **If a DTC is set**

     Refer to Circuit/System Testing.

   - **If a DTC is not set**
7. Determine the current vehicle testing altitude.
8. Verify the scan tool MAP Sensor pressure parameter is within range specified in the **Altitude Versus Barometric Pressure** table.
   - **If the MAP Sensor pressure is not in range**

     Refer to **DTC P0106**.

   - **If the MAP Sensor pressure is within range**
9. Engine idling.
10. Verify the scan tool MAP Sensor pressure parameter is between 26-52 kPa (3.8-7.5 psi) and changes with accelerator pedal input.
    - **If not between 26-52 kPa (3.8-7.5 psi) or does not change**

      Refer to **DTC P0106**.

    - **If between 26-52 kPa (3.8-7.5 psi) and changes**
11. Verify the scan tool MAF Sensor g/s parameter changes smoothly and gradually as the engine speed is increased and decreased while performing the actions listed below.
    1. Engine idling
    2. Perform the scan tool snapshot function.
    3. Increase the engine speed slowly to 3,000 RPM and then back to idle.
    4. Exit from the scan tool snapshot and review the data

5. Observe the MAF Sensor parameter frame by frame with a scan tool.
   - **If the MAF Sensor parameter does not change smoothly and gradually**

     Refer to **DTC P0101 (With LEA)**, **DTC P0101 (With LUK)**.

   - **If the MAF Sensor parameter changes smoothly and gradually**
12. Operate the vehicle within the Conditions for Running the DTC. You may also operate the vehicle within the conditions that you observed from the Freeze Frame/Failure Records data.
13. Verify the DTC does not set.
    - **If the DTC sets**

      Refer to Circuit/System Testing.

    - **If the DTC does not set**
14. All OK.

Circuit/System Testing

NOTE: Disconnecting the throttle body harness connector causes additional DTCs to set.

1. Ignition OFF, and all vehicle systems OFF, disconnect the harness connector at Q38 Throttle Body Assembly. It may take up to 2 minutes for all vehicle systems to power down.
2. Test for less than 5 ohms between the low reference circuit terminal 4 and ground.
   - **If 5 ohms or greater**
   1. Ignition OFF, disconnect the harness connector at the K20 Engine Control Module.
   2. Test for less than 2 ohms in the low reference circuit end to end.
      - If 2 ohms or greater, repair the open/high resistance in the circuit.
      - If less than 2 ohms, replace the K20 Engine Control Module.
   - **If less than 5 ohms**
3. Ignition ON.
4. Test for 4.8-5.2 V between the 5 V reference circuit terminal 5 and ground.
   - **If less than 4.8 V**
   1. Ignition OFF, disconnect the harness connector at the K20 Engine Control Module.
   2. Test for infinite resistance between the 5 V reference circuit and ground.
      - If less than infinite resistance, repair the short to ground on the circuit.
      - If infinite resistance
   3. Test for less than 2 ohms in the 5 V reference circuit end to end.
      - If 2 ohms or greater, repair the open/high resistance in the circuit.
      - If less than 2 ohms, replace the K20 Engine Control Module.
   - **If greater than 5.2 V**
   1. Ignition OFF, disconnect the harness connector at the K20 Engine Control Module, ignition ON.

2. Test for less than 1 V between the 5 V reference circuit and ground.
    - If 1 V or greater, repair the short to voltage on the circuit.
    - If less than 1 V, replace the K20 Engine Control Module.
- **If between 4.8-5.2 V**

5. Ignition ON.
6. Test for 4.8-5.2 V between the signal circuit terminal 3 and ground.
    - **If less than 4.8 V**
    1. Ignition OFF, disconnect the harness connector at the K20 Engine Control Module.
    2. Test for infinite resistance between the signal circuit and ground.
        - If less than infinite resistance, repair the short to ground on the circuit.
        - If infinite resistance
    3. Test for less than 2 ohms in the signal circuit end to end.
        - If 2 ohms or greater, repair the open/high resistance in the circuit.
        - If less than 2 ohms, replace the K20 Engine Control Module.
    - **If greater than 5.2 V**
    1. Ignition OFF, disconnect the harness connector at the K20 Engine Control Module, ignition ON.
    2. Test for less than 1 V between the signal circuit and ground.
        - If 1 V or greater, repair the short to voltage on the circuit.
        - If less than 1 V, replace the K20 Engine Control Module.
    - **If between 4.8-5.2 V**
7. Test or replace the Q38 Throttle Body Assembly.

Repair Instructions

- **Throttle Body Assembly Replacement**
- **Control Module References** for Engine Control Module replacement, programming, and setup

Repair Verification

1. Install any components that have been removed or replaced during diagnosis.
2. Perform any adjustments, programming or setup procedures that are required when a component is removed or replaced.
3. Clear the DTCs with a scan tool.
4. Ignition OFF and all vehicle systems OFF. It may take up to 2 minutes for all vehicle systems to power down.
5. Ignition ON.
6. Verify the Throttle Position Sensors 1 and 2 Agree/Disagree parameter displays Agree while performing the Throttle Sweep Test with a scan tool.
    - **If Agree is not displayed**

      Test or replace the Q38 Throttle Body Assembly.

- **If Agree is displayed**

7. If the repair was related to a DTC, duplicate the Conditions for Running the DTC and use the Freeze Frame/Failure Records, if applicable, in order to verify the DTC does not set.
   - **If DTC sets**

     Refer to **Diagnostic Trouble Code (DTC) List - Vehicle** for further diagnosis.

   - **If DTC does not set**
8. All OK.

DTC P0128

Diagnostic Instructions

- Perform the **Diagnostic System Check - Vehicle** prior to using this diagnostic procedure.
- Review **Strategy Based Diagnosis** for an overview of the diagnostic approach.
- **Diagnostic Procedure Instructions** provides an overview of each diagnostic category.

DTC Descriptor

DTC P0128

Engine Coolant Temperature (ECT) Below Thermostat Regulating Temperature

Diagnostic Fault Information

Circuit	Short to Ground	Open/High Resistance	Short to Voltage	Signal Performance
ECT Sensor Signal	P0117, P0119	P0118	P0118	P0116, P0119, P0128
Low Reference	-	P0118, P0119	-	P0119, P0128

Typical Scan Tool Data

ECT Sensor

Circuit	Short to Ground	Open	Short to Voltage
Operating Conditions: The ignition is ON, or the engine is running **Parameter Normal Range:** Varies with ambient temperature, within a range of -39 to +120°C (-38 to +248°F)			
ECT Sensor Signal	140°C (284°F)	-40°C (-40°F)	-40°C (-40°F)
Low Reference	-	-40°C (-40°F)	-40°C (-40°F)

Circuit/System Description

The engine coolant temperature (ECT) sensor is a variable resistor that measures the temperature of the engine coolant. The engine control module (ECM) supplies 5 V to the ECT sensor signal circuit and a ground for the low reference circuit.

The purpose of this diagnostic is to analyze the performance of the thermostat by comparing the measured ECT to a modeled ECT using information from the following inputs:

- ECT
- Engine load
- Intake air temperature (IAT)
- Mass air flow (MAF)
- Vehicle speed (VS)

The ECM uses the start-up ECT and the start-up intake air temperature (IAT) to begin the diagnostic calculation. The air flow into the engine is accumulated, and vehicle speed, distance, engine load, and engine run time are also factored in to determine if the ECT does increase normally and then maintains that temperature within a calibrated range of the modeled ECT.

Conditions for Running the DTC

- DTC P0102, P0103, P0111, P0112, P0113, P0114, P0116, P0117, P0118, P0119, P0121, P0122, P0123, P0221, P0222, P0223, P0335, P0336, or P0501 is not set.
- The decrease in ECT after engine start is within a calibrated range.
- The decrease in IAT after engine start is within a calibrated range.
- The engine idle time is less than 40 %.
- The engine run time is greater than 8 s.
- The engine run time at minimum load is less than 50 %.
- The engine run time at maximum load is less than 90 %.
- The ignition voltage is greater than 10 V.
- The start-up ECT is between -10 and +75°C (14-167°F).
- The start-up IAT is warmer than -10°C (14°F).
- The DTC runs once per drive cycle within the enabling conditions.

Conditions for Setting the DTC

The ECM determines that the modeled ECT has met the calibrated target of 92°C (198°F) and the measured ECT is less than 81°C (178°F) for greater than 2 s.

Action Taken When the DTC Sets

- DTC P0128 is a Type B DTC.
- The Engine Coolant Temperature Gauge is inoperative.
- The cooling fans will be commanded ON.
- The AC compressor will be commanded OFF.

Conditions for Clearing the MIL/DTC

DTC P0128 is a Type B DTC.

Diagnostic Aids

- DTC P0128 occurring with insufficient vehicle interior heating is an indication of improper thermostat operation.
- Corrosion on the ECT sensor terminals or the ECT harness connector results in a greater voltage on the ECT sensor signal circuit, which is interpreted by the ECM as a colder ECT.
- A slight to moderate resistance in the ECT sensor signal circuit or low reference circuit will affect this diagnostic. This condition results in a greater voltage on the ECT sensor signal circuit, which is interpreted by the ECM as a colder ECT.

Reference Information

DTC Type Reference

Powertrain Diagnostic Trouble Code (DTC) Type Definitions

Scan Tool Reference

Control Module References for scan tool information.

Circuit/System Verification

1. Verify the cooling system is filled to the correct coolant level. Refer to **Cooling System Leak Testing** , and **Cooling System Draining and Filling (Static Fill)** , **Cooling System Draining and Filling (GE 47716)** .
   - **If the coolant level is not correct**

     Repair as necessary

   - **If the coolant level is correct**

NOTE: **A critical analysis of the operation of the thermostat is necessary to properly diagnose this DTC.**

2. Verify the proper heat range and the operation of the thermostat. Refer to **Thermostat Diagnosis** .
   - **If a condition is found**

     Replace the Thermostat.

   - **If a condition is not found**
3. Operate the vehicle within the Conditions for Running the DTC. You may also operate the vehicle within the conditions that you observed from the Freeze Frame/Failure Records data.
4. Verify the DTC does not set.
   - **If the DTC sets**

     Refer to Step 1.

   - **If the DTC does not set**
5. All OK.

Repair Instructions

Perform the **Diagnostic Repair Verification** after completing the diagnostic procedure.

- **Engine Coolant Thermostat Replacement (LUK)**
- **Control Module References** for ECM replacement, setup and programming

DTC P0131, P0132, P0134, P0137, P0138, P0140, OR P2A00

Diagnostic Instructions

- Perform the **Diagnostic System Check - Vehicle** prior to using this diagnostic procedure.
- Review **Strategy Based Diagnosis** for an overview of the diagnostic approach.
- **Diagnostic Procedure Instructions** provides an overview of each diagnostic category.

DTC Descriptors

DTC P0131

HO2S Circuit Low Voltage Sensor 1

DTC P0132

HO2S Circuit High Voltage Sensor 1

DTC P0134

HO2S Circuit Insufficient Activity Sensor 1

DTC P0137

HO2S Circuit Low Voltage Sensor 2

DTC P0138

HO2S Circuit High Voltage Sensor 2

DTC P0140

HO2S Circuit Insufficient Activity Sensor 2

DTC P2A00

HO2S Performance Sensor 1

Diagnostic Fault Information

Circuit	Short to Ground	High Resistance	Open	Short to Voltage	Signal Performance

HO2S High Signal	P0131, P0137	P0132, P0134, P0138, P0140	P0132, P0134, P0138, P0140	P0132, P0134, P0138, P0140, P2A00	P0133, P013A, P013B, P013E, P013F, P015A, P015B, P1133
HO2S Low Signal	P0131, P0137	P0132, P0134, P0138, P0140	P0132, P0134, P0138, P0140	P0132, P0134, P0138, P0140, P2A00	P0133, P013A, P013B, P013E, P013F, P015A, P015B, P1133

Typical Scan Tool Data

HO2S 1 or 2 Voltage

Circuit	Short to Ground	Open	Short to Voltage
HO2S High Signal	0 V	1700-2100 mV	1700-2100 mV
HO2S Low Signal	0 V	1700-2100 mV	1700-2100 mV

Circuit/System Description

The heated oxygen sensors (HO2S) are used for fuel control and catalyst monitoring. Each HO2S compares the oxygen content of the surrounding air with the oxygen content of the exhaust stream. When the engine is started, the control module operates in an Open Loop mode, ignoring the HO2S signal voltage while calculating the air-to-fuel ratio. While the engine runs, the HO2S heats up and begins to generate a voltage within a range of 0-1,275 mV. Once sufficient HO2S voltage fluctuation is observed by the control module, Closed Loop is entered. The control module uses the HO2S voltage to determine the air-to-fuel ratio. An HO2S voltage that increases toward 1,000 mV indicates a rich fuel mixture. An HO2S voltage that decreases toward 0 mV indicates a lean fuel mixture.

The heating elements inside each HO2S heat the sensor to bring the sensor up to operating conditions faster. This allows the system to enter Closed Loop earlier and the control module to calculate the air-to-fuel ratio sooner.

Conditions for Running the DTC

P0131 and P0137

- DTCs P0106, P0107, P0108, P0201, P0202, P0203, P0204, P0411, P0412, P0418, P0442, P0443, P0446, P0449, P0451, P0452, P0453, P0454, P0455, P0496 are not set.
- The engine is operating in Closed Loop .
- The Ignition voltage is between 10-32 V.
- The fuel level is greater than 10 percent.
- The ethanol content is less than 87 percent.
- Device controls are not active.
- Decel fuel cut-off is not active.
- DTC P0131 runs when the above conditions are met for 5 s.

P0132

- DTCs P0101, P0102, P0103, P0106, P0107, P0108, P0201, P0202, P0203, P0204, P0442, P0443, P0446, P0449, P0451, P0452, P0453, P0454, P0455, P0496 are not set.
- The engine is operating in Closed Loop .
- The Ignition voltage is between 10-32 V.
- The fuel level is greater than 10 percent.
- Engine run time is greater than 195 s.
- The ethanol content is less than 87 percent.
- Fuel control state is not in power enrichment.
- DTC P0132 runs when the above conditions are met for 5 s.

P0134 and P0140

- DTCs P0068, P0101, P0102, P0103, P0120, P0121, P0122, P0123, P0220, P0222, P0223, P1516, P2101, P2119, P2135, P2176 are not set.
- The Ignition voltage is between 10-32 V.
- The engine run time is greater than 150 s.
- The fuel composition is less than 87 percent ethanol.
- DTCs P0134 and P0140 run continuously when the above conditions are met.

P0138

- DTCs P0101, P0102, P0103, P0106, P0107, P0108, P0201, P0202, P0203, P0204, P0442, P0443, P0446, P0449, P0451, P0452, P0453, P0454, P0455, P0496 are not set.
- The engine is operating in Closed Loop .
- The Ignition voltage is between 10-32 V.
- The fuel level is greater than 10 percent.
- Engine run time is greater than 110 s.
- Ethanol content is less than 87 percent.
- Fuel control state is not in power enrichment.
- DTC P0138 runs when the above conditions are met for 5 s.

P2A00

- DTCs P0068, P0106, P0107, P0108, P0116, P0117, P0118, P0120, P0121, P0122, P0123, P0128, P0131, P0201, P0202, P0203, P0204, P0220, P0222, P0223, P1516, P2101, P2119, P2135, P2176 are not set.
- The engine run time is greater than 100 s.
- The engine speed is between 500-3,400 RPM.
- The Ignition voltage is between 10-32 V.
- The Mass Airflow (MAF) is between 3.2-30 g/s.
- The ECT is hotter than 70°C (158°F).
- DTC P2A00 runs continuously when the above conditions are met for 5 s.

Conditions for Setting the DTC

P0131

- The ECM detects that the HO2S 1 voltage parameter is less than 50 mV.
- DTC P0131 sets within 50 s when the above condition is met.

P0132

- The ECM detects that the HO2S 1 voltage parameter is more than 1,050 mV.
- DTC P0132 sets within 15 s when the above condition is met.

P0134

- The ECM detects that the HO2S 1 voltage is greater than 1,700 mV.
- DTC P0134 sets within 100 s when the above conditions are met.

P0137

- The ECM detects that the HO2S 2 voltage parameter is less than 50 mV.
- DTC P0137 sets within 50 s when the above condition is met.

P0138

- The ECM detects that the HO2S 2 voltage parameter is more than 1,050 mV.
- DTC P0138 sets within 15 s when the above condition is met.

P0140

- The ECM detects that the HO2S 2 voltage is greater than 1,700 mV.
- DTC P0140 sets within 25 s when the above conditions are met.

P2A00

- The ECM detects that the engine is operating in Open Loop.
- DTC P2A00 sets within 50 s when the above condition is met.

Action Taken When the DTC Sets

DTCs P0131, P0132, P0134, P0137, P0138, P0140, and P2A00 are Type B DTCs.

Conditions for Clearing the MIL/DTC

DTCs P0131, P0132, P0134, P0137, P0138, P0140, and P2A00 are Type B DTCs.

Reference Information

Schematic Reference

Engine Controls Schematics

Connector End View Reference

COMPONENT CONNECTOR END VIEWS - INDEX

Electrical Information Reference

- **Circuit Testing**
- **Connector Repairs**
- **Testing for Intermittent Conditions and Poor Connections**
- **Wiring Repairs**

Scan Tool Reference

Control Module References for scan tool information

Circuit/System Verification

1. Ignition ON
2. Verify no HO2S heater DTCs are set.
   - **If a DTC is set**

     Refer to **Diagnostic Trouble Code (DTC) List - Vehicle** .

   - **If a DTC is not set**
3. Engine running.
4. Verify the scan tool HO2S 1 or 2 parameters are between 50-1,050 mV.
   - **If not between 50-1,050 mV**

     Refer to Circuit/System Testing.

   - **If between 50-1,050 mV**
5. Operate the vehicle within the Conditions for Running the DTC. You may also operate the vehicle within the conditions that you observed from the Freeze Frame/Failure Records data.
6. Verify the DTC does not set.
   - **If the DTC sets**

     Refer to Circuit/System Testing.

   - **If the DTC does not set**
7. All OK.

Circuit/System Testing

1. Ignition OFF and all vehicle systems OFF, disconnect the appropriate B52 Heated Oxygen Sensor harness connector. It may take up to 2 minutes for all vehicle systems to power down. Ignition ON.
2. Test for 1.7-3.0 V between the high signal circuit terminal B and ground.
   - **If less than 1.7 V**

1. Ignition OFF, disconnect the harness connector at the K20 Engine Control Module.
2. Test for infinite resistance between the high signal circuit and ground.
   - If less than infinite resistance, repair the short to ground on the circuit.
   - If infinite resistance
3. Test for less than 2 ohms in the high signal circuit end to end.
   - If 2 ohms or greater, repair the open/high resistance in the circuit.
   - If less than 2 ohms, replace the K20 Engine Control Module.

- **If greater than 3.0 V**

1. Ignition OFF, disconnect the harness connector at the K20 Engine Control Module. Ignition ON.
2. Test for less than 1 V between the high signal circuit and ground.
   - If 1 V or greater, repair the short to voltage on the circuit.
   - If less than 1 V, replace the K20 Engine Control Module.

- **If between 1.7-3.0 V**

3. Verify the scan tool HO2S 1 or 2 parameter is between 1.7-2.1 V.
   - **If less than 1.7 V**
   1. Ignition OFF, disconnect the harness connector at the K20 Engine Control Module.
   2. Test for infinite resistance between the low signal circuit terminal A and ground.
   - If less than infinite resistance, repair the short to ground on the circuit.
   - If infinite resistance, replace the K20 Engine Control Module.
   - **If between 1.7-2.1 V**
4. Connect a 3 A fused jumper wire between the high signal circuit terminal B and the low signal circuit terminal A.

NOTE: **The low signal circuit is tied to a pull-up circuit within the engine control module. A voltage of 0.0-1.10 V on the low signal circuit is normal.**

5. Verify the scan tool HO2S 1 or 2 parameter displays 0.0 V.
   - **If greater than 0.0 V**
   1. Ignition OFF, disconnect the harness connector at the K20 Engine Control Module. Ignition ON.
   2. Test for less than 2 ohms in the low signal circuit end to end.
      - If 2 ohms or greater, repair the open/high resistance in the circuit.
      - If less than 2 ohms
   3. Test for less than 1 V between the low signal circuit terminal A and ground.
      - If 1 V or greater, repair the short to voltage on the circuit.
      - If less than 1 V, replace the K20 Engine Control Module.
   - **If 0.0 V**
6. Verify none of the following conditions exist:
   - Water intrusion in the B52 HO2S harness connector
   - Low or high fuel system pressure-Refer to **Fuel System Diagnosis** .

- Fuel that is contaminated-Refer to **Alcohol/Contaminants-in-Fuel Diagnosis** .
- Fuel saturation of the evaporative emission (EVAP) canister
- Exhaust leaks
- Engine vacuum leaks
- **If any of the conditions exist**

  Repair as necessary.

- **If none of the conditions exist**

7. Test or replace the B52 Heated Oxygen Sensor.

Repair Instructions

Perform the **Diagnostic Repair Verification** after completing the repair.

- **Heated Oxygen Sensor Replacement - Sensor 1**
- **Heated Oxygen Sensor Replacement - Sensor 2**
- Perform the scan tool Heated Oxygen Sensor Resistance Learn Reset after replacing a HO2S.
- **Control Module References** for ECM replacement, programming and setup

DTC P0133, P013A, P013B, P013E, P013F, P015A, P015B, P2270, OR P2271

Diagnostic Instructions

- Perform the **Diagnostic System Check - Vehicle** prior to using this diagnostic procedure.
- Review **Strategy Based Diagnosis** for an overview of the diagnostic approach.
- **Diagnostic Procedure Instructions** provides an overview of each diagnostic category.

DTC Descriptors

DTC P0133

HO2S Slow Response Sensor 1

DTC P013A

HO2S Slow Response Rich to Lean Sensor 2

DTC P013B

HO2S Slow Response Lean to Rich Sensor 2

DTC P013E

HO2S Delayed Response Rich to Lean Sensor 2

DTC P013F

HO2S Delayed Response Lean to Rich Sensor 2

DTC P015A

HO2S Delayed Response Rich to Lean Sensor 1

DTC P015B

HO2S Delayed Response Lean to Rich Sensor 1

DTC P2270

HO2S Signal Stuck Lean Sensor 2

DTC P2271

HO2S Signal Stuck Rich Sensor 2

Diagnostic Fault Information

Circuit	Short to Ground	Open/High Resistance	Short to Voltage	Signal Performance
HO2S High Signal	P0131, P0137	P0132, P0134, P0138, P0140	P0132, P0134, P0138, P0140	P0133, P013A, P013B, P013E, P013F, P015A, P015B, P2A00
HO2S Low Signal	P0131, P0137	P0132, P0134, P0138, P0140	P0132, P0134, P0138, P0140	P0133, P013A, P013B, P013E, P013F, P015A, P015B, P2A00

Typical Scan Tool Data

HO2S 1 or 2 Voltage

Circuit	Short to Ground	Open	Short to Voltage
HO2S High Signal	0 V	1700-2100 mV	1700-2100 mV
HO2S Low Signal	0 V	1700-2100 mV	1700-2100 mV

Circuit/System Description

The heated oxygen sensors (HO2S) are used for fuel control and catalyst monitoring. Each HO2S compares the oxygen content of the surrounding air with the oxygen content of the exhaust stream. When the engine is started, the control module operates in an Open Loop mode, ignoring the HO2S signal voltage while calculating the air-to-fuel ratio. While the engine runs, the HO2S heats up and begins to generate a voltage within a range of 0-1,275 mV. Once sufficient HO2S voltage fluctuation is observed by the control module, Closed Loop is entered. The control module uses the HO2S voltage to determine the air-to-fuel ratio. An HO2S voltage that increases toward 1,000 mV indicates a rich fuel mixture. An HO2S voltage that decreases toward 0 mV indicates a lean fuel mixture.

The heating elements inside each HO2S heat the sensor to bring the sensor up to operating conditions faster. This allows the system to enter Closed Loop earlier and the control module to calculate the air-to-fuel ratio sooner.

Conditions for Running the DTC

P0133

- DTCs P0101, P0102, P0103, P0106, P0107, P0108, P0116, P0117, P0118, P0128, P0131, P0132, P0134, P0201, P0202, P0203, P0204, P0300, P0411, P0412, P0418, P0442, P0443, P0446, P0449, P0451, P0452, P0453, P0454, P0455, P0496 are not set.
- The engine coolant temperature (ECT) is hotter than 70°C (158°F).
- The Ignition voltage is between 10-32 V.
- The fuel level is greater than 10 percent.
- The engine run time is greater than 120 s.
- The engine speed is between 1,000-3,500 RPM.
- The device controls are not active.
- The HO2S heaters have been ON for greater than 40 s.
- The intake air temperature (IAT) is hotter than -40°C (-40°F).
- The fuel composition is less than 87 percent ethanol.
- The barometric pressure is greater than 70 kPa.
- The fuel control is not in power enrichment.
- Decel fuel cut-off is not active.
- The Mass Airflow (MAF) Sensor parameter is between 14-40 g/s.
- The fuel state is in Closed Loop.
- DTCs P0133 runs once per drive cycle when the above conditions are met for 3 s.

P013A

- DTCs P0068, P0101, P0102, P0103, P0106, P0107, P0108, P0112, P0113, P0116, P0117, P0118, P0120, P0121, P0122, P0123, P0128, P013B, P013E, P013F, P0171, P0172, P0201, P0202, P0203, P0204, P0220, P0222, P0223, P0300, P0411, P0412, P0418, P1174, P1516, P2101, P2119, P2135, P2176, P2270, P2271 are not set.
- The ignition voltage is between 10-32 V.
- The fuel level is greater than 10 percent.
- Engine run time is equal to or more than 40 s.
- DTCs P013E and P2270 have run and passed.

  THEN

- DFCO is active.
- The accelerator pedal position (APP) is stable.
- This DTC runs once per trip.

P013B and P013F

- DTCs P0068, P0101, P0102, P0103, P0106, P0107, P0108, P0112, P0113, P0116, P0117, P0118, P0120, P0121, P0122, P0123, P0128, P013A, P013E, P013F, P0171, P0172, P0201, P0202, P0203, P0204, P0220, P0222, P0223, P0300, P0411, P0412, P0418, P1174, P1516, P2101, P2119, P2135, P2176, P2270, P2271 are not set.
- The ignition voltage is between 10-32 V.
- The fuel level is greater than 10 percent.
- DTCs P013A, P013E, P013F, P2270, and P2271 have run and passed.
- DTCs P013B and P013F run once per trip.

P013E

- DTCs P0068, P0101, P0102, P0103, P0106, P0107, P0108, P0112, P0113, P0116, P0117, P0118, P0120, P0121, P0122, P0123, P0128, P013A, P013B, P013F, P0171, P0172, P0201, P0202, P0203, P0204, P0220, P0222, P0223, P0300, P0411, P0412, P0418, P1174, P1516, P2101, P2119, P2135, P2176, P2270, P2271 are not set.
- The ignition voltage is between 10-32 V.
- The fuel level is greater than 10 percent.
- DTC P2270 has run and passed.

THEN

- DFCO is active.
- The APP is stable.
- This DTC runs once per trip.

P015A and P015B

- DTCs P0068, P0101, P0102, P0103, P0106, P0107, P0108, P0112, P0113, P0116, P0117, P0118, P0120, P0121, P0122, P0123, P0128, P0201, P0202, P0203, P0204, P0205, P0206, P0207, P0208, P0220, P0222, P0223, P0442, P0443, P0446, P0449, P0455, P0496, P1516, P2101, P2119, P2135, P2176 are not set.
- The Ignition voltage is between 10-32 V.
- The engine coolant temperature (ECT) is hotter than 70°C (158°F).
- The intake air temperature (IAT) is hotter than -40°C (-40°F).
- The HO2S heater is on for greater than 180 s.
- The fuel level is greater than 10 percent.
- The engine run time is greater than 120 s.
- The engine speed is between 1,000-2,300 RPM.
- The vehicle speed is between 51-120 kph (31.7-74.6 mph).
- The mass airflow (MAF) is between 3-12 g/s.
- The device controls are not active.
- The evaporative emission (EVAP) diagnostics are not in control of purge.
- The predicted catalytic converter temperature is between 600-900°C (1,112-1,652°F).
- The fuel system is in Closed Loop.

- The DTCs run once per drive cycle when the above conditions are met.

P2270

- DTCs P0068, P0101, P0102, P0103, P0106, P0107, P0108, P0112, P0113, P0116, P0117, P0118, P0120, P0121, P0122, P0123, P0128, P013A, P013B, P013E, P013F, P0171, P0172, P0201, P0202, P0203, P0204, P0220, P0222, P0223, P0300, P0411, P0412, P0418, P1174, P1516, P2101, P2119, P2135, P2176, P2270, P2271 are not set.
- The ignition voltage is between 10-32 V.
- The fuel level is greater than 10 percent.
- The pedal position is less than 4 percent.
- The engine speed is between 1,250-2,300 RPM.
- The engine airflow is equal to or greater than 3 g/s and equal to or less than 12 g/s.
- The vehicle speed is equal to or greater than 55 km/h (34.2 mph) and equal to or less than 120 km/h (74.6 mph).
- The fuel state is in Closed Loop.
- The evaporative emission (EVAP) diagnostics are not in control of purge.
- The HO2S heaters are ON for more than 180 s.
- The predicted catalytic converter temperature is between 600-900°C (1,112-1,652°F).
- This DTC runs once per trip when all of the above conditions have been met for 1 s.

P2271

- DTCs P0068, P0101, P0102, P0103, P0106, P0107, P0108, P0112, P0113, P0116, P0117, P0118, P0120, P0121, P0122, P0123, P0128, P013A, P013B, P013E, P013F, P0171, P0172, P0201, P0202, P0203, P0204, P0220, P0222, P0223, P0300, P0411, P0412, P0418, P1174, P1516, P2101, P2119, P2135, P2176, P2270 are not set.
- The ignition voltage is between 10-32 V.
- The fuel level is greater than 10 percent.
- The engine speed is 1,250-2,300 RPM.
- The engine air flow is between 3-12 g/s.
- The vehicle speed is between 55-120 kph (34.2-74.6 mph).
- The fuel state is in Closed Loop.
- The EVAP is not in control of purge.
- Power take-off is not active.
- The HO2S heaters have been on greater than 180 s.
- The predicted catalyst temperature is between 600-900°C (1,112-1,652°F).
- DTCs P013A, P013E, and P2270 have run and passed.

  THEN

- DFCO is active.
- The APP is stable.
- This DTC runs once per trip when the above conditions are met for 3 s.

Conditions for Setting the DTC

P0133

- The ECM detects that the HO2S 1 average response time is greater than a calculated value.
- DTC P0133 sets within 60 s when the above condition is met.

P013A

The ECM detects that the accumulated mass air flow monitored during rich-to-lean transitions between 450-150 mV is greater than a calibrated value.

P013B

The ECM detects that the accumulated mass air flow monitored during lean-to-rich transitions between 300-600 mV is greater than a calibrated value.

P013E

The ECM detects that the O2 sensor cannot achieve voltage below 450 mV within a calibrated value of accumulated air flow.

P013F

The ECM detects that the O2 sensor cannot achieve voltage above 300 mV within a calibrated value of accumulated air flow.

P015A

- The ECM detects that the length of time to change from rich to lean is greater than a calibrated value.
- DTC P015A sets within 60 s when the above condition is met.

P015B

- The ECM detects that the length of time to change from lean to rich is greater than a calibrated value.
- DTC P015B sets within 60 s when the above condition is met.

P2270

- The ECM detects that the O2 sensor cannot achieve voltage equal to or more than 775 mV.

  AND

- The ECM detects that the accumulated mass air flow monitored during the Stuck Lean Voltage Test is more than a calibrated value.

P2271

- The ECM detects that the O2 sensor cannot achieve voltage equal to or less than 100 mV.

AND

- The ECM detects that the accumulated mass air flow monitored during the Stuck Rich Voltage Test is more than a calibrated value.

Action Taken When the DTC Sets

- DTCs P0133, P013E, P013F, P2270, and P2271 are Type B DTCs.
- DTCs P013A, P013B, P015A, and P015B are Type A DTCs.

Conditions for Clearing the MIL/DTC

- DTCs P0133, P013E, P013F, P2270, and P2271 are Type B DTCs.
- DTCs P013A, P013B, P015A, and P015B are Type A DTCs.

Reference Information

Schematic Reference

Engine Controls Schematics

Connector End View Reference

COMPONENT CONNECTOR END VIEWS - INDEX

Electrical Information Reference

- **Circuit Testing**
- **Connector Repairs**
- **Testing for Intermittent Conditions and Poor Connections**
- **Wiring Repairs**

Scan Tool Reference

Control Module References for scan tool information

Circuit/System Verification

1. Ignition ON.
2. Verify no HO2S heater DTCs are set
   - **If a DTC is set**

     Refer to **Diagnostic Trouble Code (DTC) List - Vehicle** .

   - **If a DTC is not set**
3. Verify none of the conditions listed below exist:
   - Lean or rich fuel injectors-Refer to **Fuel Injector Solenoid Coil Test** .
   - Water intrusion in the HO2S harness connector

- Low or high fuel system pressure-Refer to **Fuel System Diagnosis** .
- Fuel that is contaminated-Refer to **Alcohol/Contaminants-in-Fuel Diagnosis** .
- Fuel saturation of the evaporative emission (EVAP) canister
- Exhaust leaks-Refer to **Exhaust Leakage** .
- Engine vacuum leaks
- Engine oil consumption
- Engine coolant consumption-Refer to **Loss of Coolant** .
- **If any of the conditions exist**

  Repair as necessary.

- **If none of the conditions exist**

4. Operate the vehicle within the Conditions for Running the DTC. You may also operate the vehicle within the conditions that you observed from the Freeze Frame/Failure Records data.
5. Verify the DTC does not reset.
   - **If the DTC sets**

     Test or replace the appropriate B52 Heated Oxygen Sensor.

   - **If the DTC does not set**
6. All OK.

Repair Instructions

Perform the **Diagnostic Repair Verification** after completing the repair.

- **Heated Oxygen Sensor Replacement - Sensor 1**
- **Heated Oxygen Sensor Replacement - Sensor 2**
- Perform the scan tool Heated Oxygen Sensor Resistance Learn Reset after replacing a HO2S.
- **Control Module References** for ECM replacement, programming and setup

DTC P0171 OR P0172

Diagnostic Instructions

- Perform the **Diagnostic System Check - Vehicle** prior to using this diagnostic procedure.
- Review **Strategy Based Diagnosis** for an overview of the diagnostic approach.
- **Diagnostic Procedure Instructions** provides an overview of each diagnostic category.

DTC Descriptors

DTC P0171

Fuel Trim System Lean

DTC P0172

Fuel Trim System Rich

Circuit/System Description

The engine control module (ECM) controls a Closed Loop air/fuel metering system in order to provide the best possible combination of driveability, fuel economy, and emission control. The ECM monitors the heated oxygen sensor (HO2S) signal voltage, and adjusts the fuel delivery based on the signal voltage while in Closed Loop. A change made to the fuel delivery changes the long and short term fuel trim values. The short term fuel trim values change rapidly in response to the HO2S signal voltages. These changes fine tune the engine fueling. The long term fuel trim values change in response to trends in the short term fuel trim The long term fuel trim makes coarse adjustments to fueling in order to re-center and restore control to short term fuel trim. The ideal fuel trim values are around 0 %. A positive fuel trim value indicates that the ECM is adding fuel in order to compensate for a lean condition. A negative fuel trim value indicates that the ECM is reducing the amount of fuel in order to compensate for a rich condition.

Conditions for Running the DTC

- DTCs P0030, P0053, P0101, P0102, P0103, P0106, P0107, P0108, P0131-P0135, P015A, P015B, P0178, P0179, P0201-P0204, P0261, P0262, P0264, P0265, P0267, P0268, P0270, P0271, P0300-P0304, P0411, P0442, P0455, P0458, P0496, P0506, P0507, P1248, P1249, P124A, P124B, P2147, P2148, P2150, P2151, P2153, P2154, P2156, P2157, P2227, P2228, P2229, P2230, P2269, P2440, P2444, or P2A00 are not set.
- The engine is in Closed Loop status.
- The catalyst monitor diagnostic intrusive test, post 02 diagnostic intrusive test, device control, and evaporative emission leak test are not active.
- The engine coolant temperature (ECT) is between -20 and +130°C (-4 and +266°F).
- The intake air temperature (IAT) is between -20 and +150°C (-4 and +302°F).
- The manifold absolute pressure (MAP) is between 15-255 kPa (2.2-37 psi).
- The engine speed is between 400-6,600 RPM.
- The mass air flow (MAF) is between 1-512 g/s.
- The barometric pressure (BARO) is greater than 70 kPa (10.2 psi).
- The fuel level is greater than 10 %.
- This diagnostic runs continuously when the above conditions have been met.

Conditions for Setting the DTC

- The average long term fuel trim weighted average value is greater or less than a calibrated value.
- The above condition is present for approximately 3 min after the Conditions for Running the DTC have been met.

Action Taken When the DTC Sets

DTCs P0171 and P0172 are Type B DTCs.

Conditions for Clearing the MIL/DTC

DTCs P0171 and P0172 are Type B DTCs.

Diagnostic Aids

- Allow the engine to reach operating temperature. With the engine running, observe the HO2S parameter with a scan tool. The HO2S value should vary from approximately 40 mV to approximately 900 mV, and respond to fueling changes.
- The normal Short Term Fuel Trim and Long Term Fuel Trim parameters should be between +10 and -10 % with 0 % the optimum, with the engine running at operating temperature.
- Any un-metered air into the engine causes this DTC to set. Thoroughly inspect all areas of the engine for vacuum leaks.
- A MAF sensor condition can cause this DTC without setting a MAF DTC. If there is a MAF sensor condition, the MAF sensor parameters will appear to be within range.
- Inspect the air filter for being the correct one for this application. Make sure that the engine oil fill cap is in place and that it is tight. Verify that the engine oil dip stick is fully seated.
- Certain aftermarket air filters may cause a DTC to set.
- Certain aftermarket air induction systems or modifications to the air induction system may cause a DTC to set.
- Certain aftermarket exhaust system components may cause a DTC to set.

Reference Information

Component View Reference

Powertrain Component Views

Electrical Information Reference

- **Circuit Testing**
- **Connector Repairs**
- **Testing for Intermittent Conditions and Poor Connections**
- **Wiring Repairs**

DTC Type Reference

Powertrain Diagnostic Trouble Code (DTC) Type Definitions

Scan Tool Reference

Control Module References for scan tool information

Circuit/System Verification

1. Ignition ON.
2. Verify no other DTCs are set.
    - **If any other DTCs are set**

      Refer to **Diagnostic Trouble Code (DTC) List - Vehicle** for further diagnosis.

- **If no other DTCs are set**

3. Verify DTC P0171 or P0172 is not set.
   - **If a DTC is set**

     Refer to Circuit/System Testing.

   - **If no DTC is set**
4. Operate the vehicle within the Conditions for Running the DTC. You may also operate the vehicle within the conditions that you observed in the Freeze Frame/Failure Records data.
5. Verify DTC P0171 or P0172 is not set.
   - **If any of the DTCs set**

     Refer to Circuit/System Testing.

   - **If none of the DTCs set**
6. All OK.

Circuit/System Testing

1. Ignition ON.
2. Verify the manifold absolute pressure sensor is within the range specified for your altitude. Refer to **Altitude Versus Barometric Pressure** .
   - **If not within the specified range**

     Refer to **DTC P0106**.

   - **If within the specified range**
3. Engine running at the operating temperature.
4. Verify the Long Term Fuel Trim parameter is between -21 % and +38.5 %.
   - **If greater than +38.5 %**
   1. Ignition OFF.
   2. Inspect for the conditions listed below:
      - Mass air flow (MAF) sensor signal skewed-If the Short Term Fuel Trim parameter changes greater than 20 % when the MAF sensor is disconnected, refer to **DTC P0101 (With LEA)**, **DTC P0101 (With LUK)**, or **DTC P0102 or P0103 (With LEA)**, **DTC P0102 or P0103 (With LUK)**.
      - Fuel contamination. Refer to **Alcohol/Contaminants-in-Fuel Diagnosis** .
      - Missing, restricted, or leaking exhaust components. Refer to **Symptoms - Engine Exhaust** .
      - Malfunctioning fuel injectors. Refer to **Fuel Injector Solenoid Coil Test** .
      - Vacuum hoses for splits, kinks, and improper connections.
      - Insufficient fuel in the tank.
      - Low fuel pressure. Refer to **Fuel System Diagnosis** .
      - Vacuum leaks at the intake manifold, the throttle body, and the injector O-rings.
      - Leaks in the air induction system and the air intake ducts.

- Leaks in the components of the vacuum operated engine mount system.
- Missing air filter element.
- Cracked evaporative emissions system canister.
- Evaporative pipes obstructed or leaking.
- The crankcase ventilation system for leaks. Refer to **Crankcase Ventilation System Inspection/Diagnosis (Without Turbocharger)** .
  - If a condition is found, repair as necessary.
  - If no condition is found, inspect the engine for a mechanical condition. Refer to **Symptoms - Engine Mechanical** .

- **If less than -21 %**

1. Ignition OFF.
2. Inspect for the conditions listed below:
   - Mass air flow (MAF) sensor signal skewed-If the Short Term Fuel Trim parameters for both banks changes greater than 20 % when the MAF sensor is disconnected, refer to **DTC P0101 (With LEA)**, **DTC P0101 (With LUK)**, or **DTC P0102 or P0103 (With LEA)**, **DTC P0102 or P0103 (With LUK)**.
   - Fuel contamination. Refer to **Alcohol/Contaminants-in-Fuel Diagnosis** .
   - Missing, restricted, or leaking exhaust components. Refer to **Symptoms - Engine Exhaust** .
   - Malfunctioning fuel injectors. Refer to **Fuel Injector Solenoid Coil Test** .
   - Collapsed or restricted air intake duct.
   - Excessive fuel pressure. Refer to **Fuel System Diagnosis** .
   - Dirty or restricted air filter.
   - Objects blocking the throttle body.
   - Improper operation of the evaporative emissions control system.

     Excessive fuel in the crankcase. Change the engine oil as necessary.

   - If a condition is found, repair as necessary.
   - If no condition is found, inspect the engine for a mechanical condition. Refer to **Symptoms - Engine Mechanical** .
   - **If between -21 % and +38.5 %**
5. All OK.

Repair Instructions

Perform the **Diagnostic Repair Verification** after completing the repair.

Reset the fuel trim after completing the repair.

DTC P018B-P018D (CHASSIS CONTROL MODULE)

Diagnostic Instructions

- Perform the **Diagnostic System Check - Vehicle** prior to using this diagnostic procedure.

- Review **Strategy Based Diagnosis** for an overview of the diagnostic approach.
- **Diagnostic Procedure Instructions** provides an overview of each diagnostic category.

DTC Descriptors

DTC P018B

Fuel Pressure Sensor Performance

DTC P018C

Fuel Pressure Sensor Circuit Low Voltage

DTC P018D

Fuel Pressure Sensor Circuit High Voltage

Diagnostic Fault Information

Circuit	Short to Ground	Open/High Resistance	Short to Voltage	Signal Performance
5 V Reference	P018C, P0641, P06A6	P018C	P018D	P06A6
Signal	P018C	P018C	P018D	P018B
Low Reference	-	P018D	-	P06A6

Circuit/System Description

The fuel pressure sensor is located on the fuel line. The fuel pressure sensor monitors the fuel pressure in the fuel line. The chassis control module monitors the voltage signal from the fuel pressure sensor.

Conditions for Running the DTC

- The engine is running.
- DTC P018C, P018D, P0231, P0232, P023F, P064A, P1255 or P06A6 are not active.
- DTC P0641 has not failed this ignition cycle.
- Fuel pump control is enabled and the fuel pump control state is normal.
- The engine has been running for at least 5 seconds.

Conditions for Setting the DTC

The chassis control module does not detect a change in the fuel pressure of at least 30 kPa (4.4 psi) when the fuel pump is operating. The fuel pressure sensor performance diagnostic provides a means to detect fuel pressure sensor output that is stuck within the normal operating range of the sensor.

Action Taken When the DTC Sets

DTC P018B, P018C and P018D are Type A DTCs.

Conditions for Clearing the DTC

DTC P018B, P018C and P018D are Type A DTCs.

Diagnostic Aids

- Using the Failure Records data may help locate an intermittent condition. If you cannot duplicate the DTC, the information in the Failure Records can help determine how many miles since the DTC set. The Fail Counter and Pass Counter can help determine how many ignition cycles that the diagnostic test reported a pass and/or a fail.
- Verify that the fuel tank is not empty. Only perform this diagnostic if there is at least 2 gallons of fuel in the fuel tank. Clear the DTC, and start and run the engine. Verify that the DTC resets before proceeding with the circuit system testing. If the DTC does not reset, refer to diagnostic aids.

Reference Information

Schematic Reference

Engine Controls Schematics

Connector End View Reference

COMPONENT CONNECTOR END VIEWS - INDEX

Description and Operation

Fuel System Description

Electrical Information Reference

- **Circuit Testing**
- **Testing for Intermittent Conditions and Poor Connections**
- **Connector Repairs**
- **Wiring Repairs**

DTC Type Reference

Powertrain Diagnostic Trouble Code (DTC) Type Definitions

Scan Tool Reference

Control Module References for scan tool information

Circuit/System Verification

1. Engine running.
2. Verify the scan tool Fuel Pressure Sensor Voltage parameter is between 0.2-4.8 V.
    - **If not between 0.2-4.8 V**

Refer to Circuit/System Testing.

- **If between 0.2-4.8 V**

3. All OK.

Circuit/System Testing

NOTE: Verify that the fuel tank is not empty. Only perform this diagnostic if there is at least 2 gallons of fuel in the fuel tank. Clear the DTC, and start and run the engine. Verify that the DTC resets before proceeding with the circuit system testing. If the DTC does not reset, refer to diagnostic aids.

1. Ignition OFF and all vehicle systems OFF, disconnect the harness connector at the B47 Fuel Pressure Sensor. It may take up to 2 minutes for all vehicle systems to power down.
2. Test for less than 10 ohms between the low reference circuit terminal 2 and ground.
   - **If 10 ohms or greater**
     1. Ignition OFF, disconnect the harness connector at the K38 Chassis Control Module.
     2. Test for less than 2 ohms in the low reference circuit end to end.
        - If 2 ohms or greater, repair the open/high resistance in the circuit.
        - If less than 2 ohms, replace the K38 Chassis Control Module.
   - **If less than 10 ohms**
3. Ignition ON.
4. Test for 4.8-5.2 V between the 5 V reference circuit terminal 3 and ground.
   - **If less than 4.8 V**
     1. Ignition OFF, disconnect the harness connector at the K38 Chassis Control Module.
     2. Test for infinite resistance between the 5 V reference circuit and ground.
        - If less than infinite resistance, repair the short to ground on the circuit.
        - If infinite resistance
     3. Test for less than 2 ohms in the 5 V reference circuit end to end.
        - If 2 ohms or greater, repair the open/high resistance in the circuit.
        - If less than 2 ohms, replace the K38 Chassis Control Module.
   - **If greater than 5.2 V**
     1. Ignition OFF, disconnect the harness connector at the K38 Chassis Control Module, ignition ON.
     2. Test for less than 1 V between the 5 V reference circuit and ground.
        - If 1 V or greater, repair the short to voltage on the circuit.
        - If less than 1 V, replace the K38 Chassis Control Module.
   - **If between 4.8-5.2 V**
5. Verify the scan tool Fuel Pressure Sensor Voltage parameter is less than 1 V.
   - **If 1 V or greater**
     1. Ignition OFF, disconnect the harness connector at the K38 Chassis Control Module, ignition ON.
     2. Test for less than 1 V between the signal circuit terminal 1 and ground.

        - If 1 V or greater, repair the short to voltage on the circuit.
        - If less than 1 V, replace the K38 Chassis Control Module.
    - **If less than 1 V**
6. Install a 3 A fused jumper wire between the signal circuit terminal 1 and the 5 V reference circuit terminal 3, wait 15 seconds.
7. Verify the scan tool Fuel Pressure Sensor Voltage parameter is greater than 4.8 V.
    - **If 4.8 V or less**
    1. Ignition OFF, disconnect the harness connector at the K38 Chassis Control Module.
    2. Test for infinite resistance between the signal circuit terminal 1 and ground.
        - If less than infinite resistance, repair the short to ground on the circuit.
        - If infinite resistance
    3. Test for less than 2 ohms in the signal circuit end to end.
        - If 2 ohms or greater, repair the open/high resistance in the circuit.
        - If less than 2 ohms, replace the K38 Chassis Control Module.
    - **If greater than 4.8 V**
8. Test or replace the B47 Fuel Pressure Sensor.

Repair Instructions

Perform the **Diagnostic Repair Verification** after completing the repair.

Control Module References for chassis control module replacement, programming, and setup.

DTC P018B-P018D (FUEL PUMP POWER CONTROL MODULE)

Diagnostic Instructions

- Perform the **Diagnostic System Check - Vehicle** prior to using this diagnostic procedure.
- Review **Strategy Based Diagnosis** for an overview of the diagnostic approach.
- **Diagnostic Procedure Instructions** provides an overview of each diagnostic category.

DTC Descriptors

DTC P018B

Fuel Pressure Sensor Performance

DTC P018C

Fuel Pressure Sensor Circuit Low Voltage

DTC P018D

Fuel Pressure Sensor Circuit High Voltage

Diagnostic Fault Information

Circuit	Short to Ground	Open/High Resistance	Short to Voltage	Signal Performance
5 V Reference	P018C, P0192, P0532, P0641, P2228	P018C	P018D, P0193, P0523, P0641, P2227	P018B
Signal	P018C	P018C	P018D	P018B
Low Reference	-	P018D	P018D	P018B

Circuit/System Description

The fuel pressure sensor is located on the fuel pipe. The fuel pressure sensor monitors the fuel pressure in the fuel line. The engine control module (ECM) monitors the voltage signal from the fuel pressure sensor. The sensor provides a fuel pressure signal to the ECM, which is used to provide Closed Loop fuel pressure control.

Conditions for Running the DTC

P018B

- DTC P018C, P018D, P0231, P0232, P023F, P0606, P0641, or P1255 is not set.
- The engine is running for greater than 5 s.
- The fuel pump enable circuit is commanded ON.
- Low fuel level warning not present.
- The DTC runs continuously when the conditions above are met.

P018C or P018D

- The engine is cranking or running.
- The DTCs run continuously when the condition above is met.

Conditions for Setting the DTC

P018B

The engine control module does not detect a normal fuel pressure change when the fuel pump is operating. The fuel pressure sensor performance diagnostic provides a means to detect fuel pressure sensor output that is stuck within the normal operating range of the sensor.

P018C

The engine control module detects that the fuel pressure sensor voltage is less than 0.2 V for 1 s.

P018D

The engine control module detects that the fuel pressure sensor voltage is greater than 4.8 V for 1 s.

Action Taken When the DTC Sets

DTC P018B, P018C and P018D are Type A DTCs.

Conditions for Clearing the DTC

DTC P018B, P018C and P018D are Type A DTCs.

Diagnostic Aids

Using the Failure Records data may help locate an intermittent condition. If you cannot duplicate the DTC, the information in the Failure Records can help determine how many miles since the DTC set. The Fail Counter and Pass Counter can help determine how many ignition cycles that the diagnostic test reported a pass and/or a fail.

Reference Information

Schematic Reference

Engine Controls Schematics

Connector End View Reference

COMPONENT CONNECTOR END VIEWS - INDEX

Description and Operation

Fuel System Description

Electrical Information Reference

- **Circuit Testing**
- **Testing for Intermittent Conditions and Poor Connections**
- **Connector Repairs**
- **Wiring Repairs**

DTC Type Reference

Powertrain Diagnostic Trouble Code (DTC) Type Definitions

Scan Tool Reference

Control Module References for scan tool information

Circuit/System Verification

1. Engine running.
2. Verify the scan tool Fuel Pressure Sensor voltage parameter is between 0.2-4.8 V.
   - **If not between 0.2-4.8 V**

     Refer to Circuit/System Testing.

   - **If between 0.2-4.8 V**

3. All OK.

Circuit/System Testing

1. Ignition OFF and all vehicle systems OFF, disconnect the harness connector at the B47 fuel pressure sensor. It may take up to 2 minutes for all vehicle systems to power down.
2. Test for less than 5 ohms between the low reference circuit terminal 2 and ground.
   - **If 5 ohms or greater**
     1. Ignition OFF, disconnect the harness connector at the K20 ECM.
     2. Test for less than 2 ohms in the low reference circuit end to end.
        - If 2 ohms or greater, repair the open/high resistance in the circuit.
        - If less than 2 ohms, replace the K20 ECM.
   - **If less than 5 ohms**
3. Ignition ON.
4. Test for 4.8-5.2 V between the 5 V reference circuit terminal 3 and ground.
   - **If less than 4.8 V**
     1. Ignition OFF, disconnect the harness connector at the K20 ECM.
     2. Test for infinite resistance between the 5 V reference circuit and ground.
        - If less than infinite resistance, repair the short to ground on the circuit.
        - If infinite resistance
     3. Test for less than 2 ohms in the 5 V reference circuit end to end.
        - If 2 ohms or greater, repair the open/high resistance in the circuit.
        - If less than 2 ohms, replace the K20 ECM.
   - **If greater than 5.2 V**
     1. Ignition OFF, disconnect the harness connector at the K20 ECM.
     2. Test for less than 1 V between the 5 V reference circuit and ground.
        - If 1 V or greater, repair the short to voltage on the circuit.
        - If less than 1 V, replace the K20 ECM.
   - **If between 4.8-5.2 V**
5. Verify the scan tool Fuel Pressure Sensor voltage parameter is less than 1 V.
   - **If 1 V or greater**
     1. Ignition OFF, disconnect the harness connector at the K20 ECM, ignition ON.
     2. Test for less than 1 V between the signal circuit terminal 1 and ground.
        - If 1 V or greater, repair the short to voltage on the circuit.
        - If less than 1 V, replace the K20 ECM.
   - **If less than 1 V**
6. Install a 3 A fused jumper wire between the signal circuit terminal 1 and the 5 V reference circuit terminal 3, wait 15 seconds.
7. Verify the scan tool Fuel Pressure Sensor voltage parameter is greater than 4.8 V.
   - **If 4.8 V or less**
     1. Ignition OFF, disconnect the harness connector at the K20 ECM.

2. Test for infinite resistance between the signal circuit terminal 1 and ground.
   - If less than infinite resistance, repair the short to ground on the circuit.
   - If infinite resistance
3. Test for less than 2 ohms in the signal circuit end to end.
   - If 2 ohms or greater, repair the open/high resistance in the circuit.
   - If less than 2 ohms, replace the K20 ECM.

- **If greater than 4.8 V**

8. Replace the B47 fuel pressure sensor.

Repair Instructions

Perform the **Diagnostic Repair Verification** after completing the repair.

- **Fuel Pressure Sensor Replacement - Fuel Feed Pipe**
- **Control Module References** for ECM replacement, programming and setup

DTC P0191

Diagnostic Instructions

- Perform the **Diagnostic System Check - Vehicle** prior to using this diagnostic procedure.
- Review **Strategy Based Diagnosis** for an overview of the diagnostic approach.
- **Diagnostic Procedure Instructions** provides an overview of each diagnostic category.

DTC Descriptors

DTC P0191

Fuel Rail Pressure Sensor Performance

Diagnostic Fault Information

Circuit	Short to Ground	Open/High Resistance	Short to Voltage	Signal Performance
5 V Reference Voltage	P0192, P0193, P0641	P0192	P0641	P0191
Fuel Rail Pressure Sensor Signal	P0192	P0192	P0193	P0191
Low Reference	-	P0193, P0506	-	P0191

Circuit/System Description

The fuel rail fuel pressure sensor detects fuel pressure within the fuel rail. The engine control module (ECM) provides a 5 V reference voltage on the 5 V reference circuit and ground on the low reference circuit. The ECM receives a varying signal voltage on the signal circuit. The ECM monitors the voltage on the fuel rail fuel pressure sensor circuits. When the fuel pressure is high, the signal voltage is high. When the fuel pressure is low, the signal voltage is low.

Conditions for Running the DTC

Condition 1

- DTC P0016, P0017, P0068, P0090, P0091, P0092, P00C8, P00C9, P00CA, P0101, P0102, P0103, P0106, P0107, P0108, P0112, P0113, P0117, P0118, P0121, P0122, P0123, P0128, P0192, P0193, P0201, P0202, P0203, P0204, P0222, P0223, P0261, P0262, P0264, P0265, P0267, P0268, P0270, P0271, P0300, P0301, P0302, P0303, P0304, P0335, P0336, P0340, P0341, P0351-P0354, P0365, P0366, P0506, P0507, P0627, P0628, P0629, P0722, P0723, P1248, P1249, P124A, P124B, P1682, P16F3, P2101, P2122, P2123, P2127, P2128, P2135, P2147, P2148, P2150, P2151, P2153, P2154, P2156, P2157 is not set.
- The engine is not cranking.
- The ignition voltage is greater than 11 V.
- The vehicle speed is less than or equal to 1 km/h (0.62 mph).
- The low side fuel pressure is greater than or equal to 275 kPa (40 psi).
- The Accelerator Pedal Position is 0 percent for 12.5 s.
- DTC P0191 runs continuously when the above conditions have been met.

Condition 2 and 3

- DTC P0016, P0017, P0068, P0090, P0091, P0092, P00C8, P00C9, P00CA, P0101, P0102, P0103, P0106, P0107, P0108, P0112, P0113, P0117, P0118, P0121, P0122, P0123, P0128, P0192, P0193, P0201, P0202, P0203, P0204, P0222, P0223, P0261, P0262, P0264, P0265, P0267, P0268, P0270, P0271, P0300, P0301, P0302, P0303, P0304, P0335, P0336, P0340, P0341, P0351-P0354, P0365, P0366, P0506, P0507, P0627, P0628, P0629, P0722, P0723, P1248, P1249, P124A, P124B, P1682, P16F3, P2101, P2122, P2123, P2127, P2128, P2135, P2147, P2148, P2150, P2151, P2153, P2154, P2156, P2157 is not set.
- The engine is not cranking.
- The ignition voltage is greater than 11 V.
- The engine speed is between 1,000-2,200 RPM.
- The vehicle speed is greater than or equal to 45 km/h (27.96 mph).
- The low side fuel pressure is greater than or equal to 275 kPa (40 psi).
- The Desired Fuel Rail Pressure is between 7-8 MPa (1,015-1,160 psi).
- DTC P0191 runs continuously when the above conditions have been met.

Condition 4

- DTC P0016, P0017, P0068, P0090, P0091, P0092, P00C8, P00C9, P00CA, P0101, P0102, P0103, P0106, P0107, P0108, P0112, P0113, P0117, P0118, P0121, P0122, P0123, P0128, P0192, P0193, P0201, P0202, P0203, P0204, P0222, P0223, P0261, P0262, P0264, P0265, P0267, P0268, P0270, P0271, P0300, P0301, P0302, P0303, P0304, P0335, P0336, P0340, P0341, P0351-P0354, P0365, P0366, P0506, P0507, P0627, P0628, P0629, P0722, P0723, P1248, P1249, P124A, P124B, P1682, P16F3, P2101, P2122, P2123, P2127, P2128, P2135, P2147, P2148, P2150, P2151, P2153, P2154, P2156, P2157 is not set.
- The engine is not cranking.
- The vehicle speed is greater than or equal to 30 km/h (18.64 mph).
- The engine speed is greater than or equal to 2,000 RPM.

- DTC P0191 runs continuously when the above conditions have been met.

Conditions for Setting the DTC

Condition 1

The difference between the low side fuel pressure and the high side fuel pressure is less than or equal to -0.65 MPa (-94 psi) or greater than or equal to 0.6 MPa (87 psi) with the high pressure fuel pump actuator commanded OFF. The condition exists for greater than 3 s.

Condition 2

The difference between the relief pressure and the measured high pressure is less than or equal to -5 MPa (-725 psi) with the high pressure fuel pump actuator commanded ON. The condition exists for greater than 2 s.

Condition 3

The difference between the commanded high pressure and the measured high pressure is greater than or equal to 3 MPa (435 psi) and the modeled injection pressure is greater than or equal to 3 MPa (435 psi) with the high pressure fuel pump actuator commanded ON. The condition exists for greater than 3 s.

Condition 4

The difference between the measured maximum high pressure and the measured minimum high pressure is less than or equal to 0.1 MPa (14.5 psi) with the high pressure fuel pump actuator commanded ON. The condition exists for greater than 60 s.

Action Taken When the DTC Sets

- DTC P0191 is a Type A DTC.
- A message center or an indicator may display Reduced Engine Power.

Conditions for Clearing the DTC

DTC P0191 is a Type A DTC.

Diagnostic Aids

A condition with the fuel tank fuel pump module or the fuel pump control module may set this DTC.

Reference Information

Schematic Reference

Engine Controls Schematics

Connector End View Reference

COMPONENT CONNECTOR END VIEWS - INDEX

Description and Operation

Fuel System Description

Electrical Information Reference

- **Circuit Testing**
- **Connector Repairs**
- **Testing for Intermittent Conditions and Poor Connections**
- **Wiring Repairs**

DTC Type Reference

Powertrain Diagnostic Trouble Code (DTC) Type Definitions

Scan Tool Reference

Control Module References for scan tool information

Circuit/System Verification

1. Observe the scan tool DTC information, verify DTC P0627, P0628, P0629, P0641, P069E or U0109 is not set.
   - If any of the DTCs are set, refer to **Diagnostic Trouble Code (DTC) List - Vehicle** .
2. Engine idling, observe the scan tool Fuel Rail Pressure Sensor parameter. The pressure should be approximately 2.96-3.24 MPa (429-470 psi).
3. Engine idling, the scan tool Fuel Rail Pressure Sensor should be close to the scan tool Desired Fuel Rail Pressure. As the engine speed increases, the Desired Fuel Rail Pressure and the Fuel Rail Pressure Sensor should closely match each other.
4. Move related harnesses/connectors of the B47B fuel rail fuel pressure sensor and verify the engine does not stumble, stall, or change engine speed.
   - If the engine stumbles, stalls, or changes engine speed, test or repair the suspected harness or connection.
5. Observe the DTC information with a scan tool, DTC P0191 should not set.
6. Operate the vehicle within the Conditions for Running the DTC to verify the DTC does not reset. You may also operate the vehicle within the conditions that you observed from the Freeze Frame/Failure Records data.

Circuit/System Testing

1. Ignition OFF, disconnect the fuel injector multi-way harness connector X160.

NOTE: **Testing for steps 2 through 5 is performed on the ECM side of the multi-way harness connector.**

2. Ignition OFF and all vehicle systems OFF. It may take up to 2 minutes for all vehicle systems to power down. Test for less than 5 ohms between the low reference circuit terminal 5 and ground.

- If greater than the specified range, test the low reference circuit for an open/high resistance. If the circuit tests normal, replace the K20 ECM.

3. Ignition ON, test for 4.8-5.2 V between the 5 V reference circuit terminal 11 and ground.
   - If less than the specified range, test the 5 V reference circuit for a short to ground or an open/high resistance. If the circuit tests normal, replace the K20 ECM.
   - If greater than the specified range, test the 5 V reference circuit for a short to voltage. If the circuit tests normal, replace the K20 ECM.
4. Ignition ON, verify the scan tool Fuel Rail Pressure Sensor voltage parameter is less than 0.02 V.
   - If greater than the specified value, test the signal circuit for a short to voltage. If the circuit tests normal, replace the K20 ECM.
5. Connect a 3 A fused jumper wire between the signal circuit terminal 12 and the 5 V reference circuit terminal 11. Verify the scan tool Fuel Rail Pressure Sensor Voltage parameter is greater than 4.96 V.
   - If less than the specified value, test the signal circuit for an open/high resistance or a short to ground. If the circuit tests normal, replace the K20 ECM.
6. Ignition OFF, remove the intake manifold.
7. Connect the fuel injector multi-way harness connector X160.

NOTE: Testing for steps 9 through 12 is performed at the fuel rail fuel pressure sensor connector.

8. Disconnect the B47B fuel rail fuel pressure sensor connector.
9. Ignition OFF, test for less than 5 ohms between the low reference circuit terminal C and ground.
   - If greater than the specified range, test the low reference circuit for an open/high resistance.
10. Ignition ON, test for 4.8-5.2 V between the 5 V reference circuit terminal A and ground.
    - If less than the specified range, test the 5 V reference circuit for a short to ground or an open/high resistance.
    - If greater than the specified range, test the 5 V reference circuit for a short to voltage.
11. Ignition ON, verify the scan tool Fuel Rail Pressure Sensor voltage parameter is less than 0.02 V.
    - If greater than the specified value, test the signal circuit for a short to voltage.
12. Connect a 3 A fused jumper wire between the signal circuit terminal B and the 5 V reference circuit terminal A. Verify the scan tool Fuel Rail Pressure Sensor voltage parameter is greater than 4.96 V.
    - If less than the specified value, test the signal circuit for an open/high resistance or a short to ground.
13. If all circuits test normal, replace the B47B fuel rail fuel pressure sensor.

Repair Instructions

Perform the **Diagnostic Repair Verification** after completing the diagnostic procedure.

- **Fuel Injection Fuel Rail Fuel Pressure Sensor Replacement**
- **Control Module References** for ECM replacement, setup, and programming

DTC P0192 OR P0193

Diagnostic Instructions

- Perform the **Diagnostic System Check - Vehicle** prior to using this diagnostic procedure.
- Review **Strategy Based Diagnosis** for an overview of the diagnostic approach.
- **Diagnostic Procedure Instructions** provides an overview of each diagnostic category.

DTC Descriptors

DTC P0192

Fuel Rail Pressure Sensor Circuit Low Voltage

DTC P0193

Fuel Rail Pressure Sensor Circuit High Voltage

Diagnostic Fault Information

Circuit	Short to Ground	Open/High Resistance	Short to Voltage	Signal Performance
5 V Reference Voltage	P0192, P0193, P0641	P0192	P0641	P0191
Fuel Rail Pressure Sensor Signal	P0192	P0192	P0193	P0191
Low Reference	-	P0193, P0506	-	P0191

Circuit/System Description

The fuel rail fuel pressure sensor detects fuel pressure within the fuel rail. The engine control module (ECM) provides a 5 V reference voltage on the 5 V reference circuit and ground on the reference ground circuit. The ECM receives a varying signal voltage on the signal circuit. The ECM monitors the voltage on the fuel rail fuel pressure sensor circuits. When the fuel pressure is high, the signal voltage is high. When the fuel pressure is low, the signal voltage is low.

Conditions for Running the DTC

- The engine is running.
- The ignition voltage is greater than 11 V.
- The DTCs run continuously within the enabling conditions.

Conditions for Setting the DTC

P0192

The ECM detects that the fuel rail fuel pressure sensor signal voltage is low for greater than 6 s.

P0193

The ECM detects that the fuel rail fuel pressure sensor signal voltage is high for greater than 6 s.

Action Taken When the DTC Sets

- DTCs P0192 and P0193 are Type A DTCs.
- A message center or an indicator may display Reduced Engine Power.

Conditions for Clearing the DTC

DTCs P0192 and P0193 are Type A DTCs.

Reference Information

Schematic Reference

Engine Controls Schematics

Connector End View Reference

COMPONENT CONNECTOR END VIEWS - INDEX

Description and Operation

Fuel System Description

Electrical Information Reference

- **Circuit Testing**
- **Connector Repairs**
- **Testing for Intermittent Conditions and Poor Connections**
- **Wiring Repairs**

DTC Type Reference

Powertrain Diagnostic Trouble Code (DTC) Type Definitions

Scan Tool Reference

Control Module References for scan tool information

Circuit/System Verification

1. Ignition ON, observe the DTC information with a scan tool, DTC P0641 should not be set.
   - If a DTC is set, refer to **DTC P0641, P0651, P0697, or P06A3 (ECM)** .
2. Engine idling, observe the DTC information with a scan tool. DTC P0192 or P0193 should not set.
3. Operate the vehicle within the Conditions for Running the DTC to verify the DTC does not reset. You may also operate the vehicle within the conditions that you observed from the Freeze Frame/Failure Records data.

Circuit/System Testing

1. Ignition OFF, disconnect the fuel injector multi-way harness connector X160.

NOTE: Testing for steps 2 through 5 is performed on the ECM side of the multi-way harness connector.

2. Ignition OFF and all vehicle systems OFF. It may take up to 2 minutes for all vehicle systems to power down. Test for less than 5 ohms between the low reference circuit terminal 5 and ground.
   - If greater than the specified range, test the low reference circuit for an open/high resistance. If the circuit tests normal, replace the K20 ECM.
3. Ignition ON, test for 4.8-5.2 V between the 5 V reference circuit terminal 11 and ground.
   - If less than the specified range, test the 5 V reference circuit for a short to ground or an open/high resistance. If the circuit tests normal, replace the K20 ECM.
   - If greater than the specified range, test the 5 V reference circuit for a short to voltage. If the circuit tests normal, replace the K20 ECM.
4. Ignition ON, verify the scan tool Fuel Rail Pressure Sensor voltage parameter is less than 0.02 V.
   - If greater than the specified value, test the signal circuit for a short to voltage. If the circuit tests normal, replace the K20 ECM.
5. Connect a 3 A fused jumper wire between the signal circuit terminal 12 and the 5 V reference circuit terminal 11. Verify the scan tool Fuel Rail Pressure Sensor voltage parameter is greater than 4.96 V.
   - If less than the specified value, test the signal circuit for an open/high resistance or a short to ground. If the circuit tests normal, replace the K20 ECM.
6. Ignition OFF, remove the intake manifold.
7. Connect the fuel injector multi-way harness connector X160.

NOTE: Testing for steps 9 through 12 is performed at the fuel rail fuel pressure sensor connector.

8. Disconnect the B47B fuel rail fuel pressure sensor connector.
9. Ignition OFF, test for less than 5 ohms between the low reference circuit terminal C and ground.
   - If greater than the specified range, test the low reference circuit for an open/high resistance.
10. Ignition ON, test for 4.8-5.2 V between the 5 V reference circuit terminal A and ground.
    - If less than the specified range, test the 5 V reference circuit for a short to ground or an open/high resistance.
    - If greater than the specified range, test the 5 V reference circuit for a short to voltage.
11. Ignition ON, verify the scan tool Fuel Rail Pressure Sensor voltage parameter is less than 0.02 V.
    - If greater than the specified value, test the signal circuit for a short to voltage.
12. Connect a 3 A fused jumper wire between the signal circuit terminal B and the 5 V reference circuit terminal A. Verify the scan tool Fuel Rail Pressure Sensor voltage parameter is greater than 4.96 V.
    - If less than the specified value, test the signal circuit for an open/high resistance or a short to ground.
13. If all circuits test normal, replace the B47B fuel rail fuel pressure sensor.

Repair Instructions

Perform the **Diagnostic Repair Verification** after completing the diagnostic procedure.

- **Fuel Injection Fuel Rail Fuel Pressure Sensor Replacement**

- **Control Module References** for ECM replacement, setup, and programming

DTC P0201-P0204, P0261, P0262, P0264, P0265, P0267, P0268, P0270, P0271, P1248, P1249, P124A, P124B, P2147, P2148, P2150, P2151, P2153, P2154, P2156, OR P2157

Diagnostic Instructions

- Perform the **Diagnostic System Check - Vehicle** prior to using this diagnostic procedure.
- Review **Strategy Based Diagnosis** for an overview of the diagnostic approach.
- **Diagnostic Procedure Instructions** provides an overview of each diagnostic category.

DTC Descriptors

DTC P0201

Cylinder 1 Injector Control Circuit

DTC P0202

Cylinder 2 Injector Control Circuit

DTC P0203

Cylinder 3 Injector Control Circuit

DTC P0204

Cylinder 4 Injector Control Circuit

DTC P0261

Cylinder 1 Injector Control Circuit Low Voltage

DTC P0262

Cylinder 1 Injector Control Circuit High Voltage

DTC P0264

Cylinder 2 Injector Control Circuit Low Voltage

DTC P0265

Cylinder 2 Injector Control Circuit High Voltage

DTC P0267

Cylinder 3 Injector Control Circuit Low Voltage

DTC P0268

Cylinder 3 Injector Control Circuit High Voltage

DTC P0270

Cylinder 4 Injector Control Circuit Low Voltage

DTC P0271

Cylinder 4 Injector Control Circuit High Voltage

DTC P1248

Cylinder 1 Injector High Control Circuit Shorted to Control Circuit

DTC P1249

Cylinder 2 Injector High Control Circuit Shorted to Control Circuit

DTC P124A

Cylinder 3 Injector High Control Circuit Shorted to Control Circuit

DTC P124B

Cylinder 4 Injector High Control Circuit Shorted to Control Circuit

DTC P2147

Cylinder 1 Injector High Control Circuit Low Voltage

DTC P2148

Cylinder 1 Injector High Control Circuit High Voltage

DTC P2150

Cylinder 2 Injector High Control Circuit Low Voltage

DTC P2151

Cylinder 2 Injector High Control Circuit High Voltage

DTC P2153

Cylinder 3 Injector High Control Circuit Low Voltage

DTC P2154

Cylinder 3 Injector High Control Circuit High Voltage

DTC P2156

Cylinder 4 Injector High Control Circuit Low Voltage

DTC P2157

Cylinder 4 Injector High Control Circuit High Voltage

Diagnostic Fault Information

Circuit	Short to Ground	Open/High Resistance	Short to Voltage	Short from Supply Circuit to Control Circuit
Direct Fuel Injector High Voltage Supply Cylinder 1	P2147	P0201	P2148	P1248
Direct Fuel Injector High Voltage Control Cylinder 1	P0261	P0201	P0262, P2148	P1248
Direct Fuel Injector High Voltage Supply Cylinder 2	P2150	P0202	P2151	P1249
Direct Fuel Injector High Voltage Control Cylinder 2	P0264	P0202	P0265, P2151	P1249
Direct Fuel Injector High Voltage Supply Cylinder 3	P2153	P0203	P2154	P124A
Direct Fuel Injector High Voltage Control Cylinder 3	P0267	P0203	P0268, P2154	P124A
Direct Fuel Injector High Voltage Supply Cylinder 4	P2156	P0204	P2157	P124B
Direct Fuel Injector High Voltage Control Cylinder 4	P0270	P0204	P0271, P2157	P124B

Circuit/System Description

The engine control module (ECM) supplies voltage to each fuel injector on the injector high voltage supply circuits. The ECM energizes each fuel injector by grounding the high voltage control circuit of the fuel injector. The ECM monitors the status of the injector high voltage supply circuits and the fuel injector high voltage control circuits. When a fuel injector circuit condition is detected by the ECM, the affected fuel injector(s) is disabled.

Conditions for Running the DTC

- DTC P062B is not set.
- The engine is running for greater than 5 s.
- The ignition voltage is greater than 11 V.
- The DTCs run continuously once the above conditions are met.

Conditions for Setting the DTC

P0201, P0202, P0203, or P0204

The ECM detects the injector high voltage supply circuit or the injector high voltage control circuit is open for greater than 2 s.

P0261, P0264, P0267, or P0270

The ECM detects the injector high voltage control circuit is shorted to ground for greater than 2 s.

P0262, P0265, P0268, or P0271

The ECM detects the injector high voltage control circuit is shorted to voltage for greater than 2 s.

P1248, P1249, P124A, or P124B

The ECM detects the injector high voltage supply circuit is shorted to the injector high voltage control circuit for greater than 2 s.

P2147, P2150, P2153, or P2156

The ECM detects the injector high voltage supply circuit is shorted to ground for greater than 2 s.

P2148, P2151, P2154, or P2157

The ECM detects the injector high voltage supply circuit is shorted to voltage for greater than 2 s.

Action Taken When the DTC Sets

DTCs P0201, P0202, P0203, P0204, P0261, P0262, P0264, P0265, P0267, P0268, P0270, P0271, P1248, P1249, P124A, P124B, P2147, P2148, P2150, P2151, P2153, P2154, P2156, and P2157 are Type A DTCs.

Conditions for Clearing the DTC

DTCs P0201, P0202, P0203, P0204, P0261, P0262, P0264, P0265, P0267, P0268, P0270, P0271, P1248, P1249, P124A, P124B, P2147, P2148, P2150, P2151, P2153, P2154, P2156, and P2157 are Type A DTCs.

Diagnostic Aids

- Performing the fuel injector coil test may help isolate an intermittent condition. Refer to **Fuel Injector Solenoid Coil Test** .
- If the condition is intermittent, move the related harnesses and connectors, with the engine operating, while monitoring the scan tool Injector Control Circuit Status parameters. An Injector Control Circuit Status parameter will change from OK or Not Run to Fault if there is a condition with the circuit or a connection.

Reference Information

Schematic Reference

Engine Controls Schematics

Connector End View Reference

COMPONENT CONNECTOR END VIEWS - INDEX

Description and Operation

Fuel System Description

Electrical Information Reference

- **Circuit Testing**
- **Connector Repairs**
- **Testing for Intermittent Conditions and Poor Connections**
- **Wiring Repairs**

DTC Type Reference

Powertrain Diagnostic Trouble Code (DTC) Type Definitions

Scan Tool Reference

Control Module References for scan tool information

Circuit/System Verification

1. Observe the DTC information with a scan tool. DTC P0685 or P1682 should not set.
   - If a DTC is set, refer to **Diagnostic Trouble Code (DTC) List - Vehicle** .
2. Engine operating, observe the DTC information with a scan tool. DTC P0201, P0202, P0203, P0204, P0261, P0262, P0264, P0265, P0267, P0268, P0270, P0271, P1248, P1249, P124A, P124B, P2147, P2148, P2150, P2151, P2153, P2154, P2156, or P2157 should not set.
3. Observe the scan tool Current Misfire Counter parameters. The Current Misfire Counters should not increment.
4. Ignition ON, observe the scan tool Cylinder 1-4 Injector Control Circuit Status parameters. Verify the Injector Control Circuit Status parameters display OK.
5. Operate the vehicle within the Conditions for Running the DTC to verify the DTC does not reset. You may also operate the vehicle within the conditions that you observed from the Freeze Frame/Failure Records data.

Circuit/System Testing

1. Ignition OFF, disconnect the fuel injector multi-way harness connector X160.
2. Ignition ON, observe the appropriate scan tool Cylinder 1-4 Injector Control Circuit Status. The parameter should display Open.
   - If not the specified value, test the appropriate high voltage supply circuit, ECM side, for a short to ground or the appropriate high voltage control circuit, ECM side, for a short to voltage. If the circuits test normal, replace the K20 ECM.
3. Ignition ON, connect a test lamp between the appropriate high voltage supply circuit and the high voltage control circuit. The Injector Control Circuit Status should transition from Open to OK.

- If not the specified value, test for the following conditions in the ECM side of the harness:
- An open/high resistance in the high voltage supply circuit
- An open/high resistance in the high voltage control circuit
- A short to ground in the high voltage control circuit
- A short to voltage in the high voltage supply circuit
- If the circuits test normal, replace the K20 ECM.

NOTE: **Testing for the following steps is performed on the fuel injector side of the multi-way harness connector. It may be necessary to remove the intake manifold to isolate the condition.**

4. Ignition OFF, measure the resistance between the appropriate high voltage supply circuit and ground. The DMM should display OL ohms.
   - If less than the specified range, test the high voltage supply circuit and the high voltage control circuit for a short to ground. If the circuits/connections test normal, test or replace the appropriate Q17 fuel injector(s).
5. Test for 2-3 ohms between the appropriate high voltage supply circuit and high voltage control circuit.
   - If less than the specified range, test for a short between the high voltage supply circuit and high voltage control circuit. If the circuits/connections test normal, test or replace the appropriate Q17 fuel injector(s).
   - If greater than the specified range, test the high voltage supply circuit and high voltage control circuit for an open/high resistance. If the circuits/connections test normal, test or replace the appropriate Q17 fuel injector.

Component Testing

- **Fuel Injector Solenoid Coil Test**
- **Fuel Injector Balance Test**

Repair Instructions

Perform the **Diagnostic Repair Verification** after completing the diagnostic procedure.

- **Direct Fuel Injector Replacement**
- **Control Module References** for ECM replacement, setup, and programming

DTC P0231, P0232, OR P023F (CHASSIS CONTROL MODULE)

Diagnostic Instructions

- Perform the **Diagnostic System Check - Vehicle** prior to using this diagnostic procedure.
- Review **Strategy Based Diagnosis** for an overview of the diagnostic approach.
- **Diagnostic Procedure Instructions** provides an overview of each diagnostic category.

DTC Descriptors

DTC P0231

Fuel Pump Control Circuit Low Voltage

DTC P0232

Fuel Pump Control Circuit High Voltage

DTC P023F

Fuel Pump Control Circuit

Diagnostic Fault Information

Circuit	Short to Ground	Open/High Resistance	Short to Voltage	Signal Performance
Control	P0231	P023F	P0232	P023F, P2635
Low Reference	-	P023F	-	P023F, P2635

Circuit/System Description

The engine control module (ECM) supplies voltage to the chassis control module when the ECM detects that the ignition is on. The voltage from the ECM to the chassis control module remains active for 2 seconds, unless the engine is in crank or run. While this voltage is being received, the chassis control module supplies a varying voltage to the fuel tank pump module in order to maintain the desired fuel line pressure.

Conditions for Running the DTC

P0231, P023F

The ignition voltage is between 9-18 V.

P0232

The control enable voltage signal supplied for the ECM to the chassis control module is inactive for 4 seconds after engine has been shut off.

Conditions for Setting the DTC

The Chassis Control Module detects a fault on the fuel pump voltage circuit that is less than 11 V or greater than 18 V.

Action Taken When the DTC Sets

DTCs P0231, P0232, and P023F are Type A DTCs.

Conditions for Clearing the DTC

DTCs P0231, P0232, and P023F are Type A DTCs.

Diagnostic Aids

Using the Failure Records data may help locate an intermittent condition. If you cannot duplicate the DTC, the information in the Failure Records can help determine how many miles since the DTC set. The Fail Counter and Pass Counter can help determine how many ignition cycles that the diagnostic test reported a pass and/or a fail.

On vehicles equipped with a high pressure mechanical pump on Direct Fuel Injection engines, the vehicle may continue to run even though the pump in the fuel tank is not operating.

Reference Information

Schematic Reference

Engine Controls Schematics

Connector End View Reference

COMPONENT CONNECTOR END VIEWS - INDEX

Description and Operation

Fuel System Description

Electrical Information Reference

- **Circuit Testing**
- **Connector Repairs**
- **Testing for Intermittent Conditions and Poor Connections**
- **Wiring Repairs**

DTC Type Reference

Powertrain Diagnostic Trouble Code (DTC) Type Definitions

Scan Tool Reference

Control Module References for scan tool information

Circuit/System Testing

1. Ignition OFF and all vehicle systems OFF, disconnect the harness connector at the A7 Fuel Pump and Level Sensor. It may take up to 2 minutes for all vehicle systems to power down.
2. Test for less than 10 ohms between the low reference circuit terminal 2 and ground.
   - **If 10 ohms or greater**
     1. Ignition OFF, disconnect the harness connector at the K38 Chassis Control Module.
     2. Test for less than 2 ohms in the low reference circuit end to end.
        - If 2 ohms or greater, repair the open/high resistance in the circuit.
        - If less than 2 ohms, replace the K38 Chassis Control Module.
   - **If less than 10 ohms**

3. Connect a test lamp between the control circuit terminal 1 and the low reference circuit terminal 2.
4. Ignition ON.
5. Verify the test lamp turns ON and OFF when commanding the fuel pump ON and OFF using the scan tool ECM fuel pump enable control function.
   - **If the test lamp is always OFF**
   1. Ignition OFF, disconnect the harness connector at the K38 Chassis Control Module.
   2. Test for infinite resistance between the control circuit and ground.
      - If less than infinite resistance, repair the short to ground on the circuit.
      - If infinite resistance
   3. Test for less than 2 ohms in the control circuit end to end.
      - If 2 ohms or greater, repair the open/high resistance in the circuit.
      - If less than 2 ohms, replace the K38 Chassis Control Module.
   - **If the test lamp is always ON**
   1. Ignition OFF, disconnect the harness connector at the K38 Chassis Control Module, ignition ON.
   2. Test for less than 1 V between the control circuit and ground.
      - If 1 V or greater, repair the short to voltage on the circuit.
      - If less than 1 V, replace the K38 Chassis Control Module.
   - **If the test lamp turns ON and OFF**
6. Replace the A7 Fuel Pump and Level Sensor.

Repair Instructions

Perform the **Diagnostic Repair Verification** after completing the repair.

Control Module References for chassis control module replacement, programming and setup.

DTC P0231, P0232, OR P023F (FUEL PUMP POWER CONTROL MODULE)

Diagnostic Instructions

- Perform the **Diagnostic System Check - Vehicle** prior to using this diagnostic procedure.
- Review **Strategy Based Diagnosis** for an overview of the diagnostic approach.
- **Diagnostic Procedure Instructions** provides an overview of each diagnostic category.

DTC Descriptors

DTC P0231

Fuel Pump Control Circuit Low Voltage

DTC P0232

Fuel Pump Control Circuit High Voltage

DTC P023F

Fuel Pump Control Circuit

Diagnostic Fault Information

Circuit	Short to Ground	Open/High Resistance	Short to Voltage	Signal Performance
Supply Voltage	P0171, P0232, P023F	P0171, P0232, P023F	P0171, P0232, P023F	P023F, P2635
Low Reference	-	P0232, P023F, P0506	P0232, P023F, P0506	P023F, P2635

Circuit/System Description

The engine control module (ECM) supplies voltage to the fuel pump power control module when the ECM detects that the ignition is on. The voltage from the ECM to the fuel pump power control module remains active for 2 seconds, unless the engine is in crank or run. While this voltage is being received, the fuel pump power control module supplies a varying voltage to the fuel tank fuel pump module in order to maintain the desired fuel line pressure.

Conditions for Running the DTC

P0231

- The ignition voltage is greater than 7 V.
- The engine is cranking or running.
- The fuel pump enable circuit is commanded ON.
- The DTC runs continuously when the conditions above are met.

P0232

- The ignition voltage is greater than 7 V.
- The fuel pump enable circuit is commanded ON.
- The DTC runs continuously when the conditions above are met.

P023F

- The ignition voltage is greater than 11 V.
- The commanded duty cycle is greater than a calibrated threshold, 50 percent.
- The DTC runs continuously when the conditions above are met.

Conditions for Setting the DTC

P0231

The fuel pump power control module detects that the fuel pump current is greater than 14.48 A for 1 s.

P0232

The fuel pump power control module detects that the fuel pump output circuit voltage is greater than 4.5 V for 0.5 s when the voltage should be 0 V.

P023F

The fuel pump power control module detects that the fuel pump current is less than 1 A and the fuel pump duty cycle is greater than a calibrated threshold, 50 percent, for 1 s.

Action Taken When the DTC Sets

DTCs P0231, P0232, and P023F are Type A DTCs.

Conditions for Clearing the DTC

DTCs P0231, P0232, and P023F are Type A DTCs.

Diagnostic Aids

Using the Failure Records data may help locate an intermittent condition. If you cannot duplicate the DTC, the information in the Failure Records can help determine how many miles since the DTC set. The Fail Counter and Pass Counter can help determine how many ignition cycles that the diagnostic test reported a pass and/or a fail.

On vehicles equipped with a high pressure mechanical pump on Direct Fuel Injection engines, the vehicle may continue to run even though the pump in the fuel tank is not operating.

Reference Information

Schematic Reference

Engine Controls Schematics

Connector End View Reference

COMPONENT CONNECTOR END VIEWS - INDEX

Description and Operation

Fuel System Description

Electrical Information Reference

- **Circuit Testing**
- **Connector Repairs**
- **Testing for Intermittent Conditions and Poor Connections**
- **Wiring Repairs**

DTC Type Reference

Powertrain Diagnostic Trouble Code (DTC) Type Definitions

Scan Tool Reference

Control Module References for scan tool information

Circuit/System Verification

1. Ignition ON.
2. Verify the fuel pump turns ON and OFF when commanding the Fuel Pump Enable On and Off with a scan tool.
   - **If the fuel pump does not turn ON and OFF**

     Refer to Circuit/System Testing.

   - **If the fuel pump turns ON and OFF**
3. Operate the vehicle within the Conditions for Running the DTC. You may also operate the vehicle within the conditions that you observed from the Freeze Frame/Failure Records data.
4. Verify the DTC does not set.
   - **If the DTC sets**

     Refer to Circuit/System Testing.

   - **If the DTC does not set**
5. All OK.

Circuit/System Testing

1. Ignition OFF and all vehicle systems OFF, disconnect the harness connector at the G12 Fuel Pump and at the K111 Fuel Pump Power Control Module.
2. Test for less than 2 ohms in the low reference circuit end to end.
   - **If 2 ohms or greater**

     Repair the open/high resistance in the circuit.

   - **If less than 2 ohms**
3. Connect the harness connector at the K111 Fuel Pump Power Control Module.
4. Connect a test lamp between the supply voltage circuit terminal 1 and the low reference circuit terminal 2 of the harness connector at the G12 Fuel Pump.
5. Ignition ON.
6. Verify the test lamp turns ON and OFF when commanding the fuel pump ON and OFF using the scan tool ECM Fuel Pump Enable control function.
   - **If the test lamp is always OFF**
   1. Ignition OFF, disconnect the harness connector at the K111 Fuel Pump Power Control Module.
   2. Test for infinite resistance between the supply voltage circuit and ground.
      - If less than infinite resistance, repair the short to ground on the circuit.

    - If infinite resistance
  3. Test for less than 2 ohms in the supply voltage circuit end to end.
    - If 2 ohms or greater, repair the open/high resistance in the circuit.
    - If less than 2 ohms, test or replace the K111 Fuel Pump Power Control Module.
  - **If the test lamp is always ON**
  1. Ignition OFF, disconnect the harness connector at the K111 Fuel Pump Power Control Module, ignition ON.
  2. Test for less than 1 V between the supply voltage circuit and ground.
    - If 1 V or greater, repair the short to voltage on the circuit.
    - If less than 1 V, test or replace the K111 Fuel Pump Power Control Module.
  - **If the test lamp turns ON and OFF**
7. Replace the G12 Fuel Pump.

Component Testing

Static Test

1. Ignition OFF, disconnect the harness connector at the K111 Fuel Pump Power Control Module.
2. Connect a DMM, set on the diode setting, with the positive lead at terminal 16 and the negative lead at terminal 9 of the K111 Fuel Pump Power Control Module
3. Test for 0.4-0.8 V between terminal 16 and terminal 9.
  - **If not between 0.4-0.8 V**

    Replace the K111 Fuel Pump Power Control Module.

  - **If between 0.4-0.8 V**
4. Connect a DMM, set on the diode setting, with the positive lead at terminal 9 and the negative lead at terminal 16 of the K111 Fuel Pump Power Control Module
5. Test for OL between terminal 9 and terminal 16.
  - **If not OL**

    Replace the K111 Fuel Pump Power Control Module.

  - **If OL**
6. All OK

Repair Instructions

Perform the **Diagnostic Repair Verification** after completing the repair.

- **Fuel Pump Power Control Module Replacement**
- **Fuel Tank Fuel Pump Module Replacement (NU6)** , **Fuel Tank Fuel Pump Module Replacement (NT7)**

DTC P025A (CHASSIS CONTROL MODULE)

Diagnostic Instructions

- Perform the **Diagnostic System Check - Vehicle** prior to using this diagnostic procedure.
- Review **Strategy Based Diagnosis** for an overview of the diagnostic approach.
- **Diagnostic Procedure Instructions** provides an overview of each diagnostic category.

DTC Descriptor

DTC P025A

Fuel Pump Control Module Enable Circuit

Diagnostic Fault Information

Circuit	Short to Ground	Open/High Resistance	Short to Voltage	Signal Performance
Control	P025A	P025A	-	P025A

Circuit/System Description

The engine control module (ECM) supplies voltage to the chassis control module when the ECM detects that the ignition is on. The voltage from the ECM to the chassis control module remains active for 2 seconds, unless the engine is in crank or run. While this voltage is being received, the chassis control module supplies a varying voltage to the fuel tank pump module in order to maintain the desired fuel line pressure.

Conditions for Running the DTC

The ignition is ON.

Conditions for Setting the DTC

The serial data message from the ECM to the chassis control module does not agree with the state of the control enable voltage signal supplied from the ECM to the chassis control module for more than 2 seconds.

Action Taken When the DTC Sets

DTC P025A is a Type A DTC.

Conditions for Clearing the DTC

DTC P025A is a Type A DTC.

Diagnostic Aids

Beginning in the 2014 model year the K27 Fuel Pump Control Module (FPCM) will now be called the chassis control module (CCM). The component code for the chassis control module will be K38. The chassis control module name will be used in Service Information, the Global Diagnostic System and the Service Programming System.

Reference Information

Schematic Reference

Engine Controls Schematics

Connector End View Reference

COMPONENT CONNECTOR END VIEWS - INDEX

Description and Operation

Fuel System Description

Electrical Information Reference

- **Circuit Testing**
- **Connector Repairs**
- **Testing for Intermittent Conditions and Poor Connections**
- **Wiring Repairs**

DTC Type Reference

Powertrain Diagnostic Trouble Code (DTC) Type Definitions

Scan Tool Reference

Control Module References for scan tool information

Circuit/System Testing

NOTE: **Verify that the fuel tank is not empty. Only perform this diagnostic if there is at least 2 gallons of fuel in the fuel tank. Clear the DTC, and start and run the engine. Verify that the DTC resets before proceeding with the circuit system testing. If the DTC does not reset, refer to diagnostic aids.**

1. Ignition OFF and all vehicle systems OFF, disconnect the harness connector at the K38 Chassis Control Module, ignition ON.
2. Connect a test lamp between the control circuit terminal 20 and ground.
3. Verify the test lamp turns ON and OFF when commanding the G12 Fuel Pump ON and OFF using the scan tool ECM Fuel Pump Enable control function.
   - **If the test lamp is always OFF**
   1. Ignition OFF, disconnect the harness connector at the K20 Engine Control Module.
   2. Test for infinite resistance between the control circuit and ground.
      - If less than infinite resistance, repair the short to ground on the circuit.
      - If infinite resistance
   3. Test for less than 2 ohms in the control circuit end to end.

    - If 2 ohms or greater, repair the open/high resistance in the circuit.
    - If less than 2 ohms, replace the K20 Engine Control Module.
  - **If the test lamp is always ON**
  1. Ignition OFF, disconnect the harness connector at the K20 Engine Control Module, ignition ON.
  2. Test for less than 1 V between the control circuit and ground.
    - If 1 V or greater, repair the short to voltage on the circuit.
    - If less than 1 V, replace the K20 Engine Control Module.
  - **If the test lamp turns ON and OFF**
4. Test or replace the K38 Chassis Control Module.

Repair Instructions

Perform the **Diagnostic Repair Verification** after completing the repair.

Control Module References for ECM or chassis control module replacement, programming and setup.

DTC P0300-P0304

Diagnostic Instructions

- Perform the **Diagnostic System Check - Vehicle** prior to using this diagnostic procedure.
- Review **Strategy Based Diagnosis** for an overview of the diagnostic approach.
- **Diagnostic Procedure Instructions** provides an overview of each diagnostic category.

DTC Descriptors

DTC P0300

Engine Misfire Detected

DTC P0301

Cylinder 1 Misfire Detected

DTC P0302

Cylinder 2 Misfire Detected

DTC P0303

Cylinder 3 Misfire Detected

DTC P0304

Cylinder 4 Misfire Detected

Circuit/System Description

The engine control module (ECM) uses information from the crankshaft position sensor and the camshaft position sensors in order to determine when an engine misfire is occurring. By monitoring variations in the crankshaft rotation speed for each cylinder, the ECM is able to detect individual misfire events. A misfire rate that is high enough can cause 3-way catalytic converter damage. The malfunction indicator lamp (MIL) will flash ON and OFF when the conditions for catalytic converter damage are present. DTCs P0301 through P0304 correspond to cylinders 1 through 4. If the ECM is able to determine that a specific cylinder is misfiring, the DTC for that cylinder will set, and the corresponding fuel injector is disabled. The ECM will re-enable the fuel injector after 3 crankshaft revolutions when the misfire is not current. The ECM will re-enable the fuel injector after 6 crankshaft revolutions when the misfire is not current, if the vehicle is equipped with a manual transmission.

Conditions for Running the DTC

- DTC P0010, P0011, P0013, P0014, P0016, P0017, P0068, P00C8, P00C9, P0101, P0102, P0103, P0106, P0107, P0108, P0111, P0112, P0113, P0114, P0117, P0118, P0119, P0121, P0122, P0123, P0191, P0192, P0193, P0222, P0223, P0335, P0336, P0340, P0341, P0365, P0366, P0606, P0651, P16F3, P2100, P2101, or P2135 is not set.
- The engine speed is less than 1,000 RPM and DTC P0315 is set.
- The engine coolant temperature (ECT) is between -7 and +127°C (19 and 261°F).
- If the ECT is colder than -7°C (+19°F) at start-up, this diagnostic will not run until the ECT is between 21 and 127°C (69 and 261°F).
- The ignition voltage is between 9 and 32 V.
- The evaporative emissions (EVAP) leak detection is not active.
- The ECM is not detecting rough road signal.
- The fuel level is at least 11 %.
- The ECM is not in fuel cut-off or decel fuel cut-off mode.
- DTCs P0300 through P0304 run continuously when the above conditions exist.

Conditions for Setting the DTC

P0300

The ECM detects a crankshaft rotation speed variation indicating a misfire rate sufficient to cause emissions levels to exceed a predetermined value or a misfire rate high enough to cause catalyst damage.

P0301, P0302, P0303, P0304

The ECM detects a crankshaft rotation speed variation indicating a single cylinder misfire rate sufficient to cause emissions levels to exceed mandated standards.

Action Taken When the DTC Sets

- DTCs P0300-P0304 are Type B DTCs.
- The ECM disables the fuel injector of the misfiring cylinder when a misfire is present.

Conditions for Clearing the DTC

DTCs P0300-P0304 are Type B DTCs.

Diagnostic Aids

- A misfire DTC could be caused by an excessive vibration from sources other than the engine. Inspect for the following possible sources:
  - A tire or wheel that is out of round or out of balance
  - Variable thickness brake rotors
  - An unbalanced drive shaft
  - Certain rough road conditions
  - Transmission operation
  - Broken or weak valve spring
  - Cracked Spark Plug Insulators
  - A damaged accessory drive component or belt ; remove the belt and safely operate the engine to evaluate if misfire counts go away.
- High resistance in the circuits of the injectors may set a misfire DTC without setting an injector DTC. Test the injector circuits of the affected cylinder(s) for a high resistance if you suspect a condition.
- If the condition is intermittent, observing the scan tool IC Circuit Test and Fuel Injector Circuit Test Status parameters may help isolate the condition. The circuit test status parameters will change from OK or Not Run to Fault/Malfunction if a condition exists.
- A condition in the heated O2 sensor (HO2S) heater control circuits may set a DTC P0300.

Reference Information

Schematic Reference

Engine Controls Schematics

Connector End View Reference

COMPONENT CONNECTOR END VIEWS - INDEX

Electrical Information Reference

- **Circuit Testing**
- **Connector Repairs**
- **Testing for Intermittent Conditions and Poor Connections**
- **Wiring Repairs**
- **Powertrain Component Views**

DTC Type Reference

Powertrain Diagnostic Trouble Code (DTC) Type Definitions

Scan Tool Reference

Control Module References for scan tool information

Special Tools

J 26792 HEI Spark Tester

For equivalent regional tools, refer to **Special Tools (Diagnostic Tools)** , **Special Tools (Mechanical Tools)** .

Circuit/System Verification

NOTE: **Before starting vehicle, review freeze frame data to determine if misfire sets during cold start or warmed up operation. If the vehicle has a cold start problem and the vehicle is started, the vehicle will require a soak of many hours before next attempt to operate the vehicle within the fail conditions.**

1. Engine idling at the normal operating temperature. Verify there is no abnormal engine noise.
2. Observe there is no abnormal engine noise.
   - If there is an abnormal engine noise, refer to **Symptoms - Engine Mechanical** .
3. Verify no DTCs other than P0300-P0304 are set.
   - **If any DTCs other than P0300-P0304 are set**

     Refer to **Diagnostic Trouble Code (DTC) List - Vehicle** .

   - **If only DTCs P0300-P0304 are set**

     Refer to Circuit/System Testing

   - **If no DTCs are set**
4. Observe the scan tool Cylinder 1-4 Current Misfire Counter parameters. The Misfire Current Counters should not be incrementing.
   - **If Misfire Current Counters are incrementing**

     Refer to Circuit/System Testing

   - **If Misfire Current Counters are not incrementing**
5. Engine idling, perform the Cylinder Power Balance Test with a scan tool to isolate the misfiring cylinder. The engine speed should change when each injector is disabled.
   - **If engine speed does not change when each injector is disabled**

     Refer to Circuit/System Testing

   - **If engine speed does change when each injector is disabled**
6. Operate the vehicle within the Conditions for Running the DTC. You may also operate the vehicle within the conditions that you observed from the Freeze Frame/Failure Records data.
7. Verify the DTCs are not set.
   - **If any of the DTCs set**

     Refer to Circuit/System Testing

   - **If none of the DTCs set**

8. All OK

Circuit/System Testing

1. Perform the **Crankshaft Position System Variation Learn** procedure. The scan tool should display Learned Successful.
   - If the Crankshaft Position System Variation Learn Procedure cannot be performed successfully, inspect for the following conditions and repair as necessary:
   - Worn crankshaft main bearings
   - A damaged or misaligned reluctor wheel
   - Excessive crankshaft runout
   - Interference in the signal circuit of the crankshaft position sensor
   - The ignition switch is in the ON position until there is insufficient system voltage.
   - An ECM power disconnect with the ignition ON that may have erased the crankshaft position system variation values and set DTC P0315
   - Debris between the crankshaft position sensor and the reluctor wheel
   - **If a condition is found**

     Repair or replace component as appropriate.

   - **If no condition is found**
2. Verify the Learn Procedure is successful.
   - If the engine control module is unable to complete the learn procedure, replace the K20 Engine Control Module..
3. Verify that the following conditions do not exist:
   - Vacuum hose splits, kinks, and incorrect connections
   - Engine vacuum leaks
   - Crankcase ventilation system for vacuum leaks
   - Fuel pressure that is too low or too high-Refer to **Fuel System Diagnosis** .
   - Contaminated fuel-Refer to **Alcohol/Contaminants-in-Fuel Diagnosis** .
   - Exhaust system restrictions
     - If you find any of the above conditions, repair as necessary.
     - **If a condition is found**

       Repair or replace component as appropriate.

     - **If no condition is found**
4. Ignition OFF, remove the T8 ignition coil of the misfiring cylinder, but leave the electrical connector connected.

   NOTE: An erratic or weak spark is considered a no spark condition.

5. Attempt to start the engine and observe the **J 26792 (EL 26792)** HEI Spark Tester . The spark tester should spark.

- **If there is no spark**

  Refer to **Electronic Ignition System Diagnosis** for diagnosis of the ignition coil.

- **If there is spark**

6. Inspect the ignition coil boot for the following conditions:
   - Holes
   - Tears
   - Carbon tracking
   - Oil contamination
   - Water intrusion
     - If you find any of the above conditions, repair as necessary.
   - **If a condition is found**

     Replace the spark plug.

   - **If no condition is found**
7. Exchange the suspected spark plug with another cylinder that is operating correctly.
8. Engine idling, observe the scan tool Misfire Current Counter parameters. The misfire should not follow the spark plug exchange.
   - **If the misfire does follow the spark plug exchange**

     Replace the spark plug.

   - **If the misfire does not follow the spark plug exchange**
9. If all conditions test normal, test or inspect for the following:
   - A lean or rich Q17 fuel injector-Refer to **Fuel Injector Balance Test** .
   - An engine mechanical condition-Refer to **Symptoms - Engine Mechanical** .

Repair Instructions

- **Ignition Coil Replacement**
- **Spark Plug Replacement**

Repair Verification

1. Install any components or connectors that have been removed or replaced during diagnosis.
2. Perform any adjustment, programming or setup procedures that are required when a component or module is removed or replaced.
3. Clear the DTCs.
4. Turn OFF the ignition for 60 s.
5. If the repair was related to a DTC, duplicate the Conditions for Running the DTC and use the Freeze Frame/Failure Records, if applicable, in order to verify the DTC does not reset. If the DTC resets or another DTC is present, refer to the **Diagnostic Trouble Code (DTC) List - Vehicle** and perform the appropriate diagnostic procedure.

6. Engine idling, observe the Misfire Current Cyl. 1-4 parameters with a scan tool. The misfire counter parameters should not be incrementing.
    - If the misfire counter parameters are incrementing, a misfire still exists.
7. To verify that the performance of the catalytic converter has not been affected by the condition that set this DTC, perform the Repair Verification for DTC P0420. Refer to **Diagnostic Trouble Code (DTC) List - Vehicle** .

DTC P0315

Diagnostic Instructions

- Perform the **Diagnostic System Check - Vehicle** prior to using this diagnostic procedure.
- Review **Strategy Based Diagnosis** for an overview of the diagnostic approach.
- **Diagnostic Procedure Instructions** provides an overview of each diagnostic category.

DTC Descriptor

DTC P0315

Crankshaft Position System Variation Not Learned

Circuit/System Description

The crankshaft position system variation learn feature is used to calculate reference period errors caused by slight tolerance variations in the crankshaft, and the crankshaft position sensor. The calculated error allows the engine control module (ECM) to accurately compensate for reference period variations. This enhances the ability of the ECM to detect misfire events over a wider range of engine speed and load conditions.

The crankshaft position system variation compensating values are stored in ECM memory after a learn procedure has been performed and the ignition switch is turned to the OFF position for at least 30 s. If the actual variation is not within the crankshaft position system variation compensating values stored in the ECM, DTC P0300 may set.

If the crankshaft position system variation values are not stored in the ECM memory or a proper ECM power down does not occur after completing the Crankshaft Position Learn Procedure, DTC P0315 sets.

Conditions for Running the DTC

DTC P0315 runs continuously.

Conditions for Setting the DTC

The ECM detects that the crankshaft position system variation values are not stored in memory.

Action Taken When the DTC Sets

DTC P0315 is a Type A DTC.

Conditions for Clearing the MIL/DTC

DTC P0315 is a Type A DTC.

Diagnostic Aids

This test procedure requires that the vehicle battery has passed a load test and is completely charged. Refer to **Battery Inspection/Test** .

Reference Information

Schematic Reference

Engine Controls Schematics

Connector End Views

COMPONENT CONNECTOR END VIEWS - INDEX

DTC Type Reference

Powertrain Diagnostic Trouble Code (DTC) Type Definitions

Scan Tool Reference

Control Module References for scan tool information

Circuit/System Testing

NOTE: The Crankshaft Position System Variation Learn Procedure may have to be repeated up to 5 times before the procedure is successful.

1. Perform the **Crankshaft Position System Variation Learn** procedure. The scan tool should display Learned Successful.
   - **If, after 5 Crankshaft Position System Variation Learn Procedure attempts, the scan tool did not display Learned Successful;** inspect for the following conditions:
   - Worn crankshaft main bearings
   - A damaged or misaligned reluctor wheel
   - Excessive crankshaft runout
   - A damaged crankshaft-Refer to **Crankshaft and Bearing Cleaning and Inspection** .
   - Interference in the signal circuit of the crankshaft position sensor
   - The ignition switch is in the ON position until there is insufficient system voltage.
   - An ECM power disconnect with the ignition ON that may have erased the crankshaft position system variation values and set DTC P0315
   - Debris between the crankshaft position sensor and the reluctor wheel
   - **If a condition exists**
   - Repair or replace the affected component as necessary.
   - Perform the Crankshaft Position System Variation Learn Procedure.
   - **If no conditions exist**

- Replace the K20 Engine Control Module.
- Perform the Crankshaft Position System Variation Learn Procedure.

2. Operate the vehicle within the Conditions for Running the DTC. You may also operate the vehicle within the conditions that you observed in the Freeze Frame/Failure Records data.
3. Verify the DTC is not set.
   - **If any of DTC sets**

     Refer to **Diagnostic Trouble Code (DTC) List - Vehicle**

   - **If none of the DTCs set**
4. All OK.

Repair Instructions

Perform the **Diagnostic Repair Verification** after completing the repair.

Control Module References for engine control module replacement, programming, and setup

DTC P0324, P0326, OR P06B6

Diagnostic Instructions

- Perform the **Diagnostic System Check - Vehicle** prior to using this diagnostic procedure.
- Review **Strategy Based Diagnosis** for an overview of the diagnostic approach.
- **Diagnostic Procedure Instructions** provides an overview of each diagnostic category.

DTC Descriptors

DTC P0324

Knock Sensor System Performance

DTC P0326

Knock Sensor Performance

DTC P06B6

Control Module Knock Sensor Processor Performance

Diagnostic Fault Information

Circuit	Short to Ground	Open/High Resistance	Short to Voltage	Signal Performance
Signal	P0327, P06B6	P0325	P0328, P06B6	P0326
Low Reference	P0327	-	P0328	-

Circuit/System Description

The knock sensor system enables the engine control module (ECM) to control the ignition timing for the best possible performance while protecting the engine from potentially damaging levels of detonation. The knock sensor produces an AC voltage signal that varies depending on the vibration level during engine operation. The ECM adjusts the spark timing based on the amplitude and the frequency of the knock sensor signal. The ECM receives the knock sensor signal through 2 isolated signal circuits. The ECM learns a minimum knock sensor noise level for all of the RPM range. The ECM monitors for a normal knock sensor signal. The ECM generates a 20 KHz signal on the output circuit and monitors that it is sent back and detected on the return circuit. The ECM processes the return signal to verify the internal knock sensor processor.

Conditions for Running the DTCs

P0324 and P0326-Condition 1

- Engine speed is between 400-8,500 RPM.
- Engine is running for greater than 2 s.
- The engine coolant temperature (ECT) is warmer than -40°C (-40°F).
- The intake air temperature (IAT) is warmer than -40°C (-40°F).
- The DTCs run continuously when the above conditions are met.

P0326-Condition 2

- Engine speed is between 2,200-8,500 RPM.
- Engine is running for greater than 2 s.
- The ECT is greater than -40°C (-40°F).
- The IAT is greater than -40°C (-40°F).
- The DTCs run continuously when the above conditions are met.

P06B6

- Engine speed is between 400-3,500 RPM.
- Engine is running for greater than 2 s.
- The engine coolant temperature (ECT) is warmer than -40°C (-40°F).
- The intake air temperature (IAT) is warmer than -40°C (-40°F).
- The DTC runs continuously when the above conditions are met.

Conditions for Setting the DTCs

P0324

The ECM detects that the knock sensor signal's performance is out of the normal expected range due to an excessive engine knock, or abnormal noise, or a flat signal; for greater than 10 s for at least 1 single cylinder.

P0326

- The ECM detects that the knock sensor signal indicates the harness is connected, but the sensor is not

properly bolted to the engine.
- The above condition exist for greater than 10 s.

OR

- The ECM detects that the knock sensor signal indicates an excessive engine knock is present.
- The above condition exist for greater than 10 s.

P06B6

The ECM has detected an internal knock sensor processor fault.

Action Taken When the DTC Sets

- DTCs P0324, P0326, P0328, and P06B6 are Type B DTCs.
- The ignition timing is retarded to reduce the potential of engine damaging spark knock.

Conditions for Clearing the DTC

DTCs P0324, P0326, P0328, and P06B6 are Type B DTCs.

Reference Information

Schematic Reference

Engine Controls Schematics

Connector End View Reference

COMPONENT CONNECTOR END VIEWS - INDEX

Description and Operation

DESCRIPTION AND OPERATION

Electrical Information Reference

- **Circuit Testing**
- **Connector Repairs**
- **Testing for Intermittent Conditions and Poor Connections**
- **Wiring Repairs**

DTC Type Reference

Powertrain Diagnostic Trouble Code (DTC) Type Definitions

Scan Tool Reference

Control Module References for scan tool information

Circuit/System Verification

1. Engine running
2. Verify DTC P0325, P0327, P0328 or P06B6 is not set.
   - **IF DTC P0325, P0327, or P0328 is set with P06B6**

     Refer to **DTC P0325, P0327, or P0328** for further diagnosis.

   - **If only DTC P06B6 is set**

     Verify that no external knock sensor circuit issues exist, then; replace the K20 Engine Control Module.

   - **If none of the DTCs is set**
3. Vehicle OFF, inspect for the following:
   - The affected B68 Knock Sensor for physical damage. A sensor that is dropped or damaged may cause a DTC to set
   - The sensor for proper installation. A sensor that is loose or not at the correct torque may cause a DTC to set. Refer to **Symptoms - Engine Mechanical** .
   - The sensor mounting surface for burrs, casting flash, and foreign material
   - The sensor must be clear of hoses, brackets, and engine electrical wiring
   - Loose brackets
   - Loose or broken accessory drive belts, brackets, components
   - An engine mechanical condition-Refer to **Symptoms - Engine Mechanical**
   - **If a condition exists**

     Repair or replace component as appropriate.

   - **If no conditions exist**
4. Operate the vehicle within the conditions for running the DTC. You may also operate the vehicle within the conditions that you observed from the Freeze Frame/Failure Records data.
   - **If any of the DTCs set**

     Test or replace the B68 Knock Sensor.

   - **If none of the DTCs set**
5. All OK.

Repair Instructions

Perform the **Diagnostic Repair Verification** after completing the repair.

- **Knock Sensor Replacement**
- **Control Module References** for engine control module replacement, programming, and setup.

DTC P0325, P0327, OR P0328

Diagnostic Instructions

- Perform the **Diagnostic System Check - Vehicle** prior to using this diagnostic procedure.
- Review **Strategy Based Diagnosis** for an overview of the diagnostic approach.
- **Diagnostic Procedure Instructions** provides an overview of each diagnostic category.

DTC Descriptors

DTC P0325

Knock Sensor Circuit

DTC P0327

Knock Sensor Circuit Low Voltage

DTC P0328

Knock Sensor Circuit High Voltage

Diagnostic Fault Information

Circuit	Short to Ground	Open/High Resistance	Short to Voltage	Signal Performance
Sensor 1 Signal	P0327, P06B6	P0325	P0328, P06B6	P0326
Low Reference	P0327	-	P0328	-

Circuit/System Description

The knock sensor system enables the engine control module (ECM) to control the ignition timing for the best possible performance while protecting the engine from potentially damaging levels of detonation. The knock sensor produces an AC voltage signal that varies depending on the vibration level during engine operation. The ECM adjusts the spark timing based on the amplitude and the frequency of the knock sensor signal. The ECM receives the knock sensor signal through 2 isolated signal circuits. The ECM learns a minimum knock sensor noise level for all of the RPM range. The ECM monitors for a normal knock sensor signal. The ECM generates a 20 KHz signal on the output circuit and monitors that it is sent back and detected on the return circuit. The ECM processes the return signal to verify the internal knock sensor processor.

Conditions for Running the DTCs

P0325

- Engine speed is between 400-8,500 RPM.
- Engine is running at least 2 s.
- The engine coolant temperature (ECT) is warmer than -40°C (-40°F).
- The intake air temperature (IAT) is warmer than -40°C (-40°F).
- The DTC runs continuously when the above conditions are met.

P0327 and P0328

- Engine speed is less than 8,500 RPM.
- The DTCs run continuously when the above condition is met.

Conditions for Setting the DTCs

P0325

The knock sensor signal circuits are open for least 6 s.

P0327

The knock sensor signal circuits are shorted to ground for least 6 s.

P0328

The knock sensor signal circuits are shorted to voltage for least 6 s.

Action Taken When the DTCs Set

- DTCs P0325, P0327, and P0328 are Type B DTCs.
- The ignition timing is retarded to reduce the potential of engine damaging spark knock.

Conditions for Clearing the DTCs

DTCs P0325, P0327, and P0328 are Type B DTCs.

Diagnostic Aids

- Inspect the knock sensor for physical damage. A knock sensor that is dropped or damaged may cause a DTC to set.
- Inspect the knock sensor for proper installation. A knock sensor that is loose or over torqued may cause a DTC to set. The knock sensor should be free of thread sealant.
- The knock sensor mounting surface should be free of burrs, casting flash, and foreign material.

Reference Information

Schematic Reference

Engine Controls Schematics

Connector End View Reference

COMPONENT CONNECTOR END VIEWS - INDEX

Description and Operation

Electronic Ignition System Description

Electrical Information Reference

- **Circuit Testing**
- **Connector Repairs**
- **Testing for Intermittent Conditions and Poor Connections**
- **Wiring Repairs**

DTC Type Reference

Powertrain Diagnostic Trouble Code (DTC) Type Definitions

Scan Tool Reference

Control Module References for scan tool information

Circuit/System Verification

1. Engine Running.
2. Verify DTC P0325, P0327, P0328, P0330, P0332, or P0333 is not set.
   - **If the DTC is set**

     Refer to Circuit/System Testing.

   - **If the DTC is not set**
3. Verify the appropriate B68 Knock Sensor is properly tightened. Refer to **Fastener Tightening Specifications** .
4. Verify the scan tool parameters below display NO while moving the related harnesses and connectors for the appropriate B68 Knock Sensor.
   - Cylinder 1 Knock Detected
   - Cylinder 2 Knock Detected
   - Cylinder 3 Knock Detected
   - Cylinder 4 Knock Detected
     - **If NO is not displayed**

       Refer to Circuit/System Testing.

   - **If NO is displayed**
5. Operate the vehicle within the conditions for running the DTC. You may also operate the vehicle within the conditions that you observed from the freeze frame/failure Records data.
   - **If the DTC is set**

     Refer to Circuit/System Testing.

   - **If the DTC is not set**
6. All OK.

Circuit/System Testing

1. Ignition OFF and all vehicle systems OFF, disconnect the harness connector at the appropriate B68 Knock Sensor. It may take up to 2 min for all vehicle systems to power down.
2. Test for less than 10 ohms between the low reference circuit terminal B or 2 and ground.
   - **If 10 ohms or greater**
   1. Ignition OFF, disconnect the X2 harness connector at the K20 Engine Control Module.
   2. Test for less than 2 ohms in the low reference circuit end to end.
      - If 2 ohms or greater, repair the open/high resistance in the circuit.
      - If less than 2 ohms, replace the K20 Engine Control Module.
   - **If less than 10 ohms**
3. Test for 1-4 V between the signal circuit terminal A or 1 and ground.
   - **If greater than 4 V**
   1. Ignition OFF, disconnect the X2 harness connector at the K20 Engine Control Module, ignition ON.
   2. Test for less than 1 V between the signal circuit and ground.
      - If 1 V or greater, repair the short to voltage on the circuit.
      - If less than 1 V, replace the K20 Engine Control Module.
   - **If less than 1 V**
   1. Ignition OFF, disconnect the X2 harness connector at the K20 Engine Control Module.
   2. Test for infinite resistance between the signal circuit and ground.
      - If less than infinite resistance, repair the short to ground on the circuit.
      - If infinite resistance
   3. Test for less than 2 ohms in the signal circuit end to end.
      - If 2 ohms or greater, repair the open/high resistance in the circuit.
      - If less than 2 ohms, replace the K20 Engine Control Module.
   - **If between 1-4 V**
4. Replace the B68 Knock Sensor.

Repair Instructions

Perform the **Diagnostic Repair Verification** after completing the repair.

- **Knock Sensor Replacement**
- **Control Module References** for engine control module replacement, programming, and setup.

DTC P0335 OR P0336

Diagnostic Instructions

- Perform the **Diagnostic System Check - Vehicle** prior to using this diagnostic procedure.
- Review **Strategy Based Diagnosis** for an overview of the diagnostic approach.
- **Diagnostic Procedure Instructions** provides an overview of each diagnostic category.

DTC Descriptors

DTC P0335

Crankshaft Position Sensor Circuit

DTC P0336

Crankshaft Position Sensor Performance

Diagnostic Fault Information

Circuit	Short to Ground	Open/High Resistance	Short to Voltage	Signal Performance
5 V Reference	P057C, P0335, P0651	P0335	P0651	P0336
Signal	P0335, P0506	P0335	P0335	P0336
Low Reference	-	P0335	-	P0336

Circuit/System Description

The crankshaft position sensor circuits consist of an engine control module (ECM) supplied 5 V reference circuit, low reference circuit, and an output signal circuit. The crankshaft position sensor is an internally magnetic biased digital output integrated circuit sensing device. The sensor detects magnetic flux changes of the teeth and slots of a 58-tooth reluctor wheel on the crankshaft. Each tooth on the reluctor wheel is spaced at 60-tooth spacing, with 2 missing teeth for the reference gap. The crankshaft position sensor produces an ON/OFF DC voltage of varying frequency, with 58 output pulses per crankshaft revolution. The frequency of the crankshaft position sensor output depends on the velocity of the crankshaft. The crankshaft position sensor sends a digital signal, which represents an image of the crankshaft reluctor wheel, to the ECM as each tooth on the wheel rotates past the crankshaft position sensor. The ECM uses each crankshaft position signal pulse to determine crankshaft speed and decodes the crankshaft reluctor wheel reference gap to identify crankshaft position. This information is then used to determine the optimum ignition and injection points of the engine. The ECM also uses crankshaft position sensor output information to determine the camshaft relative position to the crankshaft, to control camshaft phasing, and to detect cylinder misfire.

Conditions for Running the DTC

P0335 Condition 1

- The starter is engaged and the engine control module detects camshaft position (CMP) sensor pulses.

  Or

- DTCs P0101, P0102 and P0103 are not set.

  And

- The airflow into the engine is greater than 3 g/s.

Condition 2

- The engine is running and the starter is not engaged.
- DTC P0651 is not set.

Condition 3

- The engine is running or the starter is engaged.
- DTCs P0365, P0366, P0641, and P0651 are not set.

P0336 Condition 1

- The airflow into the engine is greater than 3 g/s.
- Engine speed is greater than 450 RPM.
- DTCs P0335 or P0651 are not set.

Condition 2

- The engine is running and the starter is not engaged.
- DTC P0651 is not set.

Condition 3

- The starter is engaged and the engine control module detects camshaft position (CMP) sensor pulses.

  Or

- DTCs P0101, P0102, and P0103 are not set.
- The airflow into the engine is greater than 3 g/s.

Condition 4

- The engine is running or the starter is engaged.
- DTCs P0365, P0366, P0641, and P0651, are not set.

The DTCs run continuously once the above conditions are met.

Conditions for Setting the DTC

P0335 Condition 1

The ECM does not detect a crankshaft position sensor pulse for greater than 4 s.

Condition 2

The ECM does not detect a crankshaft position sensor pulse for greater than 1.0 s.

Condition 3

The ECM does not detect a crankshaft position sensor pulse for 2 out of 10 engine revolutions.

P0336 Condition 1

The ECM detects that 10 or more crankshaft resynchronization have occurred within 10.0 s.

Condition 2

The ECM does not detect the synchronization gap on the reluctor wheel for greater than 0.4 s.

Condition 3

The ECM does not detect the synchronization gap on the reluctor wheel for 1.5 s after the starter was engaged.

Condition 4

The ECM detects less than 51 or greater than 65 crankshaft position sensor pulses during 1 engine revolution for 8 out of 10 engine revolutions.

Action Taken When the DTC Sets

- DTCs P0335 and P0336 are Type B DTCs.
- An engine driveability issue occurs after the first failure.
- The camshaft position sensor is used to determine engine position.
- The camshaft actuators are commanded to the parked position.

Conditions for Clearing the DTC

DTCs P0335 and P0336 are Type B DTCs.

Reference Information

Schematic Reference

Engine Controls Schematics

Connector End View Reference

COMPONENT CONNECTOR END VIEWS - INDEX

Description and Operation

Electronic Ignition System Description

Electrical Information Reference

- **Circuit Testing**
- **Connector Repairs**
- **Testing for Intermittent Conditions and Poor Connections**
- **Wiring Repairs**

DTC Type Reference

Powertrain Diagnostic Trouble Code (DTC) Type Definitions

Scan Tool Reference

Control Module References for scan tool information

Circuit/System Verification

1. Ignition ON.
2. Verify DTC P0651 is not set.
   - **If the DTC is set**

     Refer to **DTC P0641, P0651, P0697, or P06A3 (ECM)** .

   - **If the DTC is not set**
3. Engine running.
4. Verify the scan tool Crankshaft Position Active Counter parameter increments.
   - **If the counter does not increment**

     Refer to Circuit/System Testing.

   - **If the counter increments**
5. Verify the scan tool Crankshaft Position Resync Counter parameter displays 0 counts and the engine does not stumble or stall while moving the related harness/connectors of the B26 Crankshaft Position Sensor.
   - **If greater than 0 counts and the engine stumbles or stalls**

     Refer to Circuit/System Testing.

   - **If 0 counts and the engine does not stumble or stall**
6. Operate the vehicle within the Conditions for Running the DTC. You may also operate the vehicle within the conditions that you observed from the Freeze Frame/Failure Records data.
7. Verify the DTC does not set.
   - **If the DTC sets**

     Refer to Circuit/System Testing.

   - **If the DTC does not set**
8. All OK.

Circuit/System Testing

1. Ignition OFF and all vehicle systems OFF, disconnect the harness connector at the B26 Crankshaft Position Sensor. It may take up to 2 minutes for all vehicle systems to power down.
2. Test for less than 5 ohms between the low reference circuit terminal 2 and ground.

- **If 5 ohms or greater**
  1. Ignition OFF, disconnect the X3 harness connector at the K20 Engine Control Module.
  2. Test for less than 2 ohms in the low reference circuit end to end.
     - If 2 ohms or greater, repair the open/high resistance in the circuit.
     - If 2 ohms or less, replace the K20 Engine Control Module.
- **If less than 5 ohms**

3. Ignition ON.
4. Test for 4.8-5.2 V between the 5 V reference circuit terminal 1 and ground.
   - **If less than 4.8 V**
     1. Ignition OFF, disconnect the X3 harness connector at the K20 Engine Control Module.
     2. Test for infinite resistance between the 5 V reference circuit and ground.
        - If less than infinite resistance, repair the short to ground on the circuit.
        - If infinite resistance
     3. Test for less than 2 ohms in the 5 V reference circuit end to end.
        - If 2 ohms or greater, repair the open/high resistance in the circuit.
        - If less than 2 ohms, replace the K20 Engine Control Module.
   - **If greater than 5.2 V**
     1. Ignition OFF, disconnect the X3 harness connector at the K20 Engine Control Module, ignition ON.
     2. Test for less than 1 V between the 5 V reference and ground.
        - If 1 V or greater, repair the short to voltage on the circuit.
        - If less than 1 V, replace the K20 Engine Control Module.
   - **If between 4.8-5.2 V**
5. Test for 4.8-5.2 V between the signal circuit terminal 3 and ground.
   - **If less than 4.8 V**
     1. Ignition OFF, disconnect the X3 harness connector at the K20 Engine Control Module.
     2. Test for infinite resistance between the signal circuit and ground.
        - If less than infinite resistance, repair the short to ground on the circuit.
        - If infinite resistance.
     3. Test for less than 2 ohms in the signal circuit end to end.
        - If 2 ohms or greater, repair the open/high resistance in the circuit.
        - If less than 2 ohms, replace the K20 Engine Control Module.
   - **If greater than 5.2 V**
     1. Ignition OFF, disconnect the X3 harness connector at the K20 Engine Control Module, ignition ON.
     2. Test for less than 1 V between the signal circuit and ground.
        - If 1 V or greater, repair the short to voltage on the circuit.
        - If less than 1 V, replace the K20 Engine Control Module.
   - **If between 4.8-5.2 V**
6. Ignition OFF, connect a 3 A fused jumper wire to the signal circuit terminal 3, ignition ON.

NOTE: Additional DTCs may set when performing this test.

7. Verify the scan tool Crankshaft Position Sensor Active Counter parameter increments while rapidly tapping the fused jumper wire end to ground.
   - **If the counter does not increment**

     Replace the K20 Engine Control Module.

   - **If the counter increments**
8. Verify DTC P0336 is not set.
   - **If the DTC is set**

     Inspect for the conditions listed below:

   - Excessive play or looseness of the B26 Crankshaft Position Sensor or the reluctor wheel
   - Improper installation of the B26 Crankshaft Position Sensor
   - Foreign material passing between the B26 Crankshaft Position Sensor and the reluctor wheel
   - Damaged reluctor wheel
   - Excessive air gap between the B26 Crankshaft Position Sensor and the reluctor wheel
   - Engine oil for debris
   - Timing chain, tensioner, and sprockets for wear or damage
   - If any of the conditions above are found, repair as necessary.
   - If all components test normal, test or replace the B26 Crankshaft Position Sensor.
   - **If the DTC is not set**
9. Test or replace the B26 Crankshaft Position Sensor.

Repair Instructions

Perform the **Diagnostic Repair Verification** after completing the repair.

- **Crankshaft Position Sensor Replacement**
- **Control Module References** for engine control module replacement, programming, and setup

DTC P0340, P0341, P0365, OR P0366

Diagnostic Instructions

- Perform the **Diagnostic System Check - Vehicle** prior to using this diagnostic procedure.
- Review **Strategy Based Diagnosis** for an overview of the diagnostic approach.
- **Diagnostic Procedure Instructions** provides an overview of each diagnostic category.

DTC Descriptors

DTC P0340

Intake Camshaft Position Sensor Circuit

DTC P0341

Intake Camshaft Position Sensor Performance

DTC P0365

Exhaust Camshaft Position Sensor Circuit

DTC P0366

Exhaust Camshaft Position Sensor Performance

Diagnostic Fault Information

Circuit	Short to Ground	Open/High Resistance	Short to Voltage	Signal Performance
5 V Reference	P0107, P0452, P0532, P0641	P0340, P0365	P0641	-
Signal	P0340, P0365	P0340, P0365	P0340, P0365	P0341, P0366
Low Reference	-	P0340, P0365	P0340, P0365	-

Circuit/System Description

The camshaft position sensors each have 3 circuits consisting of an engine control module (ECM) supplied 5 V reference circuit, low reference circuit, and an output signal circuit. The camshaft position sensor is an internally magnetic biased digital output integrated circuit sensing device. The sensor detects magnetic flux changes of the teeth and slots of a 4-tooth reluctor wheel attached to the camshaft. As each reluctor wheel tooth rotates past the camshaft position sensor, the resulting change in the magnetic field is used by the sensor electronics to produce a digital output pulse. The sensor returns a digital ON/OFF DC voltage pulse of varying frequency with 4 varying width output pulses per camshaft revolution that represent an image of the camshaft reluctor wheel. The frequency of the camshaft position sensor output depends on the velocity of the camshaft. The ECM decodes the narrow and wide tooth pattern to identify camshaft position. This information is then used to determine the optimum ignition and injection points of the engine. The ECM uses the cylinder 1 exhaust camshaft position sensor to determine injector and ignition system synchronization. The intake and exhaust camshaft position sensors are also used to determine camshaft to crankshaft relationship. The ECM also uses camshaft position sensor output information to determine the camshaft relative position to the crankshaft to control camshaft phasing and limp-home operation.

Conditions for Running the DTC

P0340 or P0365 Condition 1

- The starter is engaged and the engine control module detects camshaft position sensor pulses.

  OR

- DTCs P0101, P0102, and P0103 are not set.
- The airflow into the engine is greater than 3 g/s.

Condition 2

- The engine is running and the starter is not engaged.
- DTC P0651 is not set.

Condition 3

- The crankshaft is synchronized.
- The starter is engaged.
- DTC P0335, P0336, P0641, or P0651 are not set.

Condition 4

- The crankshaft is synchronized.
- DTC P0335, P0336, P0641, or P0651 are not set.

P0341 or P0366 Condition 1

- The crankshaft is synchronized.
- The starter is engaged.
- DTC P0335, P0336, P0641, or P0651 are not set.

Condition 2

- The crankshaft is synchronized.
- DTC P0335, P0336, P0641, or P0651 are not set.

The DTCs run continuously once the above conditions are met.

Conditions for Setting the DTC

P0340 or P0365 Condition 1

- The ECM does not detect a camshaft position sensor pulse for greater than 5.5 s.

  OR

- The ECM does not detect a camshaft position sensor pulse for greater than 4.0 s since the time the starter has been engaged.

Condition 2

The ECM detects less than 4 camshaft position sensor pulse for greater than 3.0 s.

Condition 3

The ECM does not detect a camshaft position sensor pulse during the first 2 engine revolutions.

Condition 4

The ECM does not detect a camshaft position sensor pulse during 200 engine revolutions.

P0341 or P0366 Condition 1

- The ECM detects less than 4 camshaft position sensor pulses during 2 engine revolutions.

  OR

- The ECM detects greater than 10 camshaft position sensor pulses during 2 engine revolutions.

Contion 2

The ECM detects less than 398 or greater than 402 camshaft position sensor pulses during 200 engine revolutions.

Action Taken When the DTC Sets

- DTCs P0340, P0341, P0365, and P0366 are Type B DTCs.
- The camshaft position actuator is commanded to the Home or Parked position.
- The ignition system defaults to a failed camshaft position sensor limp home mode.
- With a DTC set, the engine may crank for an extended period of time at start-up.

Conditions for Clearing the MIL/DTC

DTCs P0340, P0341, P0365, and P0366 are Type B DTCs.

Diagnostic Aids

- With a DTC set, the engine may crank for an extended period of time at start-up
- The exhaust camshaft position sensor is used for injector and ignition system synchronization. A stalling condition will occur if the camshaft position sensor signal is intermittent and a DTC may not set. Inspect the intake and exhaust camshaft position sensor circuits for poor connections.

Reference Information

Schematic Reference

Engine Controls Schematics

Connector End View Reference

COMPONENT CONNECTOR END VIEWS - INDEX

Description and Operation

Electronic Ignition System Description

Electrical Information Reference

- **Circuit Testing**
- **Connector Repairs**
- **Testing for Intermittent Conditions and Poor Connections**
- **Wiring Repairs**

DTC Type Reference

Powertrain Diagnostic Trouble Code (DTC) Type Definitions

Scan Tool Reference

Control Module References for scan tool information

Circuit/System Verification

1. Ignition ON.
2. Verify DTC P0641 or P0651 is not set.
   - **If any of the DTCs are set**

     Refer to **DTC P0641, P0651, P0697, or P06A3 (ECM)** .

   - **If none of the DTCs are set**
3. Engine running.
4. Verify the scan tool parameters listed below increment:
   - Exhaust Camshaft Position Active Counter
   - Intake Camshaft Position Active Counter
   - **If any counter does not increment**

     Refer to Circuit/System Testing.

   - **If all counters increment**
5. Operate the vehicle within the Conditions for Running the DTC. You may also operate the vehicle within the conditions that you observed from the Freeze Frame/Failure Records data.
6. Verify the DTC does not set.
   - **If the DTC sets**

     Refer to Circuit/System Testing.

   - **If the DTC does not set**
7. All OK.

Circuit/System Testing

1. Ignition OFF and all vehicle systems OFF, disconnect the harness connector at the appropriate B23 Camshaft Position Sensor. It may take up to 2 minutes for all vehicle systems to power down.
2. Test for less than 5 ohms between the low reference circuit terminal B and ground.

- **If 5 ohms or greater**
  1. Ignition OFF, disconnect the X3 harness connector at the K20 Engine Control Module.
  2. Test for less than 2 ohms in the low reference circuit end to end.
     - If 2 ohms or greater, repair the open/high resistance in the circuit.
     - If 2 ohms or less, replace the K20 Engine Control Module.
- **If less than 5 ohms**

3. Ignition ON.
4. Test for 4.8-5.2 V between the 5 V reference circuit terminal A and ground.
   - **If less than 4.8 V**
     1. Ignition OFF, disconnect the X3 harness connector at the K20 Engine Control Module.
     2. Test for infinite resistance between the 5 V reference circuit and ground.
        - If less than infinite resistance, repair the short to ground on the circuit.
        - If infinite resistance.
     3. Test for less than 2 ohms in the 5 V reference circuit end to end.
        - If 2 ohms or greater, repair the open/high resistance in the circuit.
        - If less than 2 ohms , replace the K20 Engine Control Module.
   - **If greater than 5.2 V**
     1. Ignition OFF, disconnect the X3 harness connector at the K20 Engine Control Module, ignition ON.
     2. Test for less than 1 V between the 5 V reference circuit and ground.
        - If 1 V or greater, repair the short to voltage on the circuit.
        - If less than 1 V, replace the K20 Engine Control Module.
   - **If between 4.8-5.2 V**
5. Test for 4.8-5.2 V between the signal circuit terminal C and ground.
   - **If less than 4.8 V**
     1. Ignition OFF, disconnect the X3 harness connector at the K20 Engine Control Module.
     2. Test for infinite resistance between the signal circuit and ground.
        - If less than infinite resistance, repair the short to ground on the circuit.
        - If infinite resistance.
     3. Test for less than 2 ohms in the signal circuit end to end.
        - If 2 ohms or greater, repair the open/high resistance in the circuit.
        - If less than 2 ohms, replace the K20 Engine Control Module.
   - **If greater than 5.2 V**
     1. Ignition OFF, disconnect the X3 harness connector at the K20 Engine Control Module, ignition ON.
     2. Test for less than 1 V between the signal circuit and ground.
        - If 1 V or greater, repair the short to voltage on the circuit.
        - If less than 1 V, replace the K20 Engine Control Module.
   - **If between 4.8-5.2 V**
6. Verify DTC P0341 or P0366 is not set.

- **If any of the DTCs are set**

  Inspect for the conditions listed below:

- Excessive play or looseness of the B23 Camshaft Position Sensor or the reluctor wheel
- Improper installation of the B23 Camshaft Position Sensor
- Foreign material passing between the B23 Camshaft Position Sensor and the reluctor wheel
- Damaged reluctor wheel
- Excessive air gap between the B23 Camshaft Position Sensor and the reluctor wheel
- Engine oil for debris
- Timing chain, tensioner, and sprockets for wear or damage
- If any of the conditions above are found, repair as necessary.
- If all components test normal, test or replace the B23 Camshaft Position Sensor.
- **If none of the DTCs are set**

7. Test or replace the B23 Camshaft Position Sensor.

Repair Instructions

Perform the **Diagnostic Repair Verification** after completing the repair.

- **Camshaft Position Sensor Replacement - Exhaust**
- **Camshaft Position Sensor Replacement - Intake**
- **Control Module References** for engine control module replacement, programming, and setup

DTC P0351-P0354, P2300, P2301, P2303, P2304, P2306, P2307, P2309, OR P2310

Diagnostic Instructions

- Perform the **Diagnostic System Check - Vehicle** prior to using this diagnostic procedure.
- Review **Strategy Based Diagnosis** for an overview of the diagnostic approach.
- **Diagnostic Procedure Instructions** provides an overview of each diagnostic category.

DTC Descriptors

DTC P0351

Ignition Coil 1 Control Circuit

DTC P0352

Ignition Coil 2 Control Circuit

DTC P0353

Ignition Coil 3 Control Circuit

DTC P0354

Ignition Coil 4 Control Circuit

DTC P2300

Ignition Coil 1 Control Circuit Low Voltage

DTC P2301

Ignition Coil 1 Control Circuit High Voltage

DTC P2303

Ignition Coil 2 Control Circuit Low Voltage

DTC P2304

Ignition Coil 2 Control Circuit High Voltage

DTC P2306

Ignition Coil 3 Control Circuit Low Voltage

DTC P2307

Ignition Coil 3 Control Circuit High Voltage

DTC P2309

Ignition Coil 4 Control Circuit Low Voltage

DTC P2310

Ignition Coil 4 Control Circuit High Voltage

Diagnostic Fault Information

Circuit	Short to Ground	Open/High Resistance	Short to Voltage	Signal Performance
Ignition Coil 1 Control	P0300, P2300	P0300, P0351	P0300, P2301	P0300, P0351
Ignition Coil 2 Control	P0300, P2303	P0300, P0352	P0300, P2304	P0300, P0352
Ignition Coil 3 Control	P0300, P2306	P0300, P0353	P0300, P2307	P0300, P0353
Ignition Coil 4 Control	P0300, P2309	P0300, P0354	P0300, P2310	P0300, P0354

Circuit/System Description

The ignition system on this engine uses an individual coil for each cylinder. The engine control module (ECM) controls the spark event for each cylinder through the individual ignition coil control circuits. When

the ECM commands the ignition control circuit ON, electrical current will flow through the primary winding of the ignition coil, creating a magnetic field. When a spark event is requested, the ECM will command the ignition control circuit OFF, interrupting current flow through the primary winding. The magnetic field created by the primary winding will collapse across the secondary coil windings, producing a high voltage across the spark plug electrodes. The ECM uses information from the crankshaft position sensor, and the camshaft position sensor for sequencing and timing of the spark events. The ECM monitors each ignition control circuit for improper voltage levels.

Conditions for Running the DTC

- The engine is cranking or running.
- Ignition voltage greater than 5 V.

The DTCs run continuously when the above condition are met.

Conditions for Setting the DTC

The engine control module detects that the voltage command state of the driver and the actual state of the control circuit do not match.

Action Taken When the DTC Sets

DTCs P0351, P0352, P0353, P0354, P2300, P2301, P2303, P2304, P2306, P2307, P2309, and P2310 are Type B DTCs.

Conditions for Clearing the MIL/DTC

DTCs P0351, P0352, P0353, P0354, P2300, P2301, P2303, P2304, P2306, P2307, P2309, and P2310 are Type B DTCs.

Reference Information

Schematic Reference

Engine Controls Schematics

Connector End View Reference

COMPONENT CONNECTOR END VIEWS - INDEX

Description and Operation

Electronic Ignition System Description

Electrical Information Reference

- **Circuit Testing**
- **Connector Repairs**
- **Testing for Intermittent Conditions and Poor Connections**
- **Wiring Repairs**

DTC Type Reference

Powertrain Diagnostic Trouble Code (DTC) Type Definitions

Scan Tool Reference

Control Module References for scan tool information

Special Tools

EL 26792 HEI Spark Tester

For equivalent regional tools, refer to **Special Tools (Diagnostic Tools)** , **Special Tools (Mechanical Tools)** .

Circuit/System Verification

1. Engine Running.
2. Verify the scan tool parameters listed below do not display Malfunction:
   - Ignition Coil 1-4 Control Circuit High Voltage Test Status
   - Ignition Coil 1-4 Control Circuit Low Voltage Test Status
   - Ignition Coil 1-4 Control Circuit Open Test Status
   - **If Malfunction is displayed**

     Refer to Circuit/System Testing.

   - **If Malfunction is not displayed**
3. Operate the vehicle within the Conditions for Running the DTC. You may also operate the vehicle within the conditions that you observed from the Freeze Frame/Failure Records data.
4. Verify the DTC does not set.
   - **If the DTCs sets**

     Refer to Circuit/System Testing.

   - **If the DTC does not set**
5. All OK.

Circuit/System Testing

1. Ignition OFF, disconnect the harness connector at the appropriate T8 Ignition Coil.
2. Engine Running.
3. Verify the appropriate scan tool Ignition Coil Control Circuit Low Voltage Test Status does not display Malfunction.
   - **If Malfunction is displayed**
   1. Ignition OFF, disconnect the X3 harness connector at the K20 Engine Control Module.
   2. Test for infinite resistance between the control circuit and ground.

        - If less than infinite resistance, repair the short to ground on the control circuit.
        - If infinite resistance, replace the K20 Engine Control Module.
    - **If Malfunction is not displayed**
4. Verify the appropriate scan tool Ignition Coil Control Circuit High Voltage Test Status does not display Malfunction.
    - **If Malfunction is displayed**
    1. Ignition OFF, disconnect the X3 harness connector at the K20 Engine Control Module.
    2. Test for less than 1 V between the control circuit and ground.
        - If 1 V or greater, repair the short to voltage in the circuit.
        - If less than 1 V, replace the K20 Engine Control Module.
    - **If Malfunction is not displayed**
5. Ignition OFF, install a 3 A fused jumper wire between the control circuit terminal C and ground, engine Running.
6. Verify the appropriate scan tool Ignition Coil Control Circuit Low Voltage Test Status displays Malfunction.
    - **If Malfunction is not displayed**
    1. Ignition OFF, remove the fused jumper, and disconnect the X3 harness connector at the K20 Engine Control Module.
    2. Test for less than 2 ohms in the control circuit end to end.
        - If 2 ohms or greater, repair the open/high resistance in the circuit.
        - If less than 2 ohms, replace the K20 Engine Control Module.
    - **If Malfunction is displayed**
7. Test or replace the T8 Ignition Coil.

Component Test

NOTE: You must perform the Circuit/System Testing before proceeding with Component Testing.

1. Ignition OFF, connect the **EL 26792** HEI Spark Tester to the appropriate T8 Ignition Coil.
2. Engine Running.
3. Verify the spark output of the T8 Ignition Coil.
    - **If no output or the output is weak**

      Replace the T8 Ignition Coil.

    - **If the output is normal**
4. All OK.

Repair Instructions

Perform the **Diagnostic Repair Verification** after completing the repair.

- **Ignition Coil Replacement**

- **Control Module References** for engine control module replacement, programming, and setup

DTC P0411

Diagnostic Instructions

- Perform the **Diagnostic System Check - Vehicle** prior to using this diagnostic procedure.
- Review **Strategy Based Diagnosis** for an overview of the diagnostic approach.
- **Diagnostic Procedure Instructions** provides an overview of each diagnostic category.

DTC Descriptor

DTC P0411

Secondary Air Injection System Incorrect Air Flow Detected

Circuit/System Description

The secondary air injection system aids in the reduction of hydrocarbon emissions during a cold start. The electric air pump forces fresh air into the exhaust stream in order to accelerate the catalyst operation. A pressure sensor in each shutoff/check valve is used to monitor the air flow from the secondary air injection pump. The engine control module (ECM) supplies voltage to the 5-volt reference circuits and supplies a ground to the low reference circuits. The sensors provide a signal voltage to the ECM relative to the pressure changes within the secondary air injection system.

Ignition voltage is supplied to the secondary air injection pump and air injection shutoff/check valve relays. The ECM controls the relays by grounding the control circuits, which activates the relays. When the relay contacts close, voltage is supplied to the pump and the valves, which turns the pump on and opens the valves.

The diagnostic uses 3 phases to test the secondary air injection system:

- DTCs P0411, P2430 and P2435 run during Phase 1
- DTCs P2430, P2435 and P2440 run during Phase 2
- DTC P2444 runs during Phase 3

During phase 1, the secondary air injection pump and both secondary air injection shutoff and check valves are activated. Normal secondary air function occurs. Expected system pressure is 5-11 kPa (0.7-1.6 psi) above BARO. Relatively high magnitude of pressure pulses are expected due to exhaust pulses. Low magnitude pressure pulses indicate a blockage or disconnect downstream of the valve.

During phase 2, only the secondary air injection pump is activated. The shutoff and check valves are closed. Pressure sensor performance and shutoff and check valve deactivation are tested. Expected system pressure is 14-22 kPa (2.0-3.2 psi) above BARO.

During phase 3, neither the secondary air injection pump nor the secondary air injection shutoff and check valves are activated. Secondary air injection pump deactivation is tested. Expected system pressure equals BARO.

Conditions for Running the DTC

- DTC P0101, P0102, P0103, P0107, P0108, P0111, P0112, P0113, P0114, P0116, P0117, P0118, P0128, P0201-P0204, P0261, P0262, P0264, P0265, P0267, P0268, P0270, P0271, P0300, P0351, P0352, P0353, P0354, P0412, P0418, P0420, P0606, P0641, P0651, P124A, P124B, P2147, P2148, P2150, P2151, P2153, P2154, P2156, P2157, P2430, P2431, P2432, P2433, P2435, P2436, P2437, or P2438 is not set.
- Greater than 60 min has elapsed since the last cold start.
- Ignition voltage is between 10-32 V.
- Engine speed is less than 5,000 RPM.
- Intake air temperature (IAT) is greater than -10°C (+14°F).
- Engine coolant temperature (ECT) is between -10 and +56°C (14-133°F).
- Barometric pressure (BARO) is greater than 74 kPa (10.7 psi).
- Manifold absolute pressure (MAP) sensor is greater than 20 kPa (2.9 psi).
- Mass air flow (MAF) is less than 50 g/s.
- Secondary air injection pump is commanded ON.
- DTC P0411 runs once per ignition cycle when the above conditions are met for greater than 7 s.

Conditions for Setting the DTC

- The actual system pressure at either shutoff/check valve is at least 7 kPa (1.0 psi) greater or 7 kPa (1.0 psi) less than the predicted system pressure for greater than 7 s.

  OR

- The difference between the predicted magnitude of pressure pulsations and the actual magnitude of pressure pulsations, at either shutoff/check valve over a specific length of time, exceeds a calibrated threshold.

Action Taken When the DTC Sets

DTC P0411 is a Type B DTC.

Conditions for Clearing the MIL/DTC

DTC P0411 is a Type B DTC.

Diagnostic Aids

Ice buildup due to condensation/water in the air passages or pump may cause this DTC to set.

Reference Information

Schematic Reference

Engine Controls Schematics

Connector End View Reference

COMPONENT CONNECTOR END VIEWS - INDEX

Description and Operation

Secondary Air Injection System Description

Electrical Information Reference

- **Circuit Testing**
- **Connector Repairs**
- **Testing for Intermittent Conditions and Poor Connections**
- **Wiring Repairs**

DTC Type Reference

Powertrain Diagnostic Trouble Code (DTC) Type Definitions

Scan Tool Reference

Control Module References for scan tool information

Special Tools

J-36169-HD Fused Jumper

Circuit/System Verification

NOTE: **Verify the battery is fully charged before proceeding with this diagnostic procedure. The secondary air injection pump output will vary with system voltage.**

1. Ignition ON
2. Verify that DTC P0412, P0418, P2430, P2431, P2432, P2433, P2235, P2236, P2237, P2238, P2440, or P2444 is not set.
   - **If any of the DTCs are set**

     Refer to **Diagnostic Trouble Code (DTC) List - Vehicle** .

   - **If none of the DTCs are set.**
3. Verify the scan tool BARO pressure parameter is within the range specified in the **Altitude Versus Barometric Pressure** table.
   - **If not within the specified range**

     Refer to **DTC P0106**.

   - **If within the specified range**

NOTE: **Engine coolant temperature must be greater than 5°C (41°F) to enable**

scan tool device control. Repeat multiple times to verify secondary air injection shutoff and check valve operation.

4. Verify the secondary air injection shutoff and check valves turn ON and OFF when commanding the Secondary Air Injection Solenoid Valve between ON and OFF with a scan tool.
   - **If the valves do not operate as specified**

     Refer to Circuit/System Testing-Secondary Air Injection Shutoff and Check Valve Malfunction.

   - **If the valves operate as specified**

NOTE: **To prevent the secondary air injection pump from overheating, do not operate the pump consecutively for greater than 2 minutes. The pump is provided with a thermal protector that will automatically reset when allowed to cool.**

5. Verify the G21 Secondary Air Injection Pump turns ON and OFF when commanding the Secondary Air Injection Pump Relay between ON and OFF with a scan tool.
   - **If the pump does not operate as specified**

     Refer to Circuit/System Testing-Secondary Air Injection Pump Malfunction.

   - **If the pump operates as specified**
6. Verify the scan tool Secondary Air Injection Pressure Sensor Bank 1 (left hand), Bank 2 (right hand) and the BARO pressure parameters are within 3 kPa (0.4 psi).
   - **If not within the specified range**

     Refer to Circuit/System Testing-Secondary Air Injection System Pressure Not In Range.

   - **If within the specified range**
7. Engine running
8. Verify the scan tool Secondary Air Injection Pressure Sensor Bank 1 (left hand) and Bank 2 (right hand) parameters increase between 14-22 kPa (2.0-3.2 psi), greater than BARO, when the Secondary Air Injection Pump Relay is commanded ON with a scan tool.
   - **If not within the specified range**

     Refer to Circuit/System Testing-Secondary Air Injection System Pressure Not In Range.

   - **If within the specified range**
9. Verify the scan tool Secondary Air Injection Pressure Sensor Bank 1 (left hand) and Bank 2 (right hand) parameters increase between 5-11 kPa (0.7-1.6 psi), greater than BARO, when the Secondary Air Injection System is commanded ON with a scan tool.
   - **If not within the specified range**

     Refer to Circuit/System Testing-Secondary Air Injection System Pressure Not In Range.

   - **If within the specified range**

10. Operate the vehicle within the Conditions for Running the DTC. You may also operate the vehicle within the conditions that you observed from the Freeze Frame/Failure Records data.
11. Verify the DTC does not set.
    - **If the DTC sets**

      Refer to Circuit/System Testing.

    - **If the DTC does not set**
12. All OK

Circuit/System Testing

Secondary Air Injection Shutoff and Check Valve Malfunction

1. Ignition OFF, disconnect the KR26 Secondary Air Injection Solenoid Valve Relay.
2. Verify a test lamp illuminates between the B+ circuit terminal 87 and ground.
    - **If the test lamp does not illuminate and the circuit fuse is good**
    1. Test for less than 2 ohms in the B+ circuit end to end.
        - If 2 ohms or greater, repair the open/high resistance in the circuit.
        - If less than 2 ohms, verify the fuse is not open and there is voltage at the fuse.
    - **If the test lamp does not illuminate and the circuit fuse is open**
    1. Ignition OFF
    2. Test for infinite resistance between the B+ circuit and ground.
        - If less than infinite resistance, repair the short to ground on the circuit.
        - If infinite resistance
    3. Disconnect the harness connector at the appropriate Q29 Secondary Air Injection Solenoid Valve.
    4. Test for infinite resistance between the control circuit terminal 5 and ground.
        - If less than infinite resistance, repair the short to ground on the circuit.
        - If infinite resistance
    5. Test or replace the Q29 Secondary Air Injection Solenoid Valve.
    - **If the test lamp illuminates**
3. Disconnect the harness connector at the appropriate Q29 Secondary Air Injection Solenoid Valve.
4. Ignition OFF and all vehicle systems OFF, it may take up to 2 minutes for all vehicle systems to power down. Test for less than 10 ohms between the Q29 Secondary Air Injection Solenoid Valve ground circuit terminal 4 and ground.
    - **If 10 ohms or greater**
    1. Ignition OFF.
    2. Test for less than 2 ohms in the ground circuit end to end.
        - If 2 ohms or greater, repair the open/high resistance in the circuit.
        - If less than 2 ohms, repair the open/high resistance in the ground connection.
    - **If less than 10 ohms**
5. Connect the harness connector at the Q29 Secondary Air Injection Solenoid Valve.

6. Connect a 10 A fused jumper wire between the B+ circuit terminal 87 and the control circuit terminal 30.
7. Verify the Q29 Secondary Air Injection Solenoid Valves are activated.
   - **If a Q29 Secondary Air Injection Solenoid Valve does not activate**
   1. Ignition OFF, disconnect the harness connector at the appropriate Q29 Secondary Air Injection Solenoid Valve.
   2. Test for less than 2 ohms in the control circuit end to end.
      - If 2 ohms or greater, repair the open/high resistance in the circuit.
      - If less than 2 ohms, test or replace the Q29 Secondary Air Injection Solenoid Valve.
   - **If the Q29 Secondary Air Injection Solenoid Valves activate**
8. Test or replace the KR26 Secondary Air Injection Solenoid Valve Relay.

Secondary Air Injection Pump Malfunction

1. Ignition OFF, disconnect the KR25 Secondary Air Injection Pump Relay.
2. Verify a test lamp illuminates between the B+ circuit terminal 87 and ground.
   - **If the test lamp does not illuminate and the circuit fuse is good**
   1. Ignition OFF
   2. Test for less than 2 ohms in the B+ circuit end to end.
      - If 2 ohms or greater, repair the open/high resistance in the circuit.
      - If less than 2 ohms, verify the fuse is not open and there is voltage at the fuse.
   - **If the test lamp does not illuminate and the circuit fuse is open**
   1. Ignition OFF
   2. Test for infinite resistance between the B+ circuit and ground.
      - If less than infinite resistance, repair the short to ground on the circuit.
      - If infinite resistance
   3. Disconnect the harness connector at the G21 Secondary Air Injection Pump.
   4. Test for infinite resistance between the control circuit terminal A and ground.
      - If less than infinite resistance, repair the short to ground on the circuit.
      - If infinite resistance
   5. Test or replace the G21 Secondary Air Injection Pump.
   - **If the test lamp illuminates**
3. Disconnect the harness connector at the G21 Secondary Air Injection Pump.
4. Ignition OFF and all vehicle systems OFF, it may take up to 2 minutes for all vehicle systems to power down. Test for less than 10 ohms between the G21 Secondary Air Injection Pump ground circuit terminal B and ground.
   - **If 10 ohms or greater**
   1. Ignition OFF.
   2. Test for less than 2 ohms in the ground circuit end to end.
      - If 2 ohms or greater, repair the open/high resistance in the circuit.
      - If less than 2 ohms, repair the open/high resistance in the ground connection.
   - **If less than 10 ohms**

5. Connect the harness connector at the G21 Secondary Air Injection Pump.
6. Connect a 50 A fused jumper wire between the B+ circuit terminal 87 and the control circuit terminal 30.

NOTE: **To prevent the secondary air injection pump from overheating, do not operate the pump consecutively for greater than 2 minutes. The pump is provided with a thermal protector that will automatically reset when allowed to cool.**

7. Verify the G21 Secondary Air Injection Pump is activated.
   - **If the G21 Secondary Air Injection Pump does not activate**
   1. Ignition OFF, disconnect the harness connector at the G21 Secondary Air Injection Pump.
   2. Test for less than 2 ohms in the control circuit end to end.
      - If 2 ohms or greater, repair the open/high resistance in the circuit.
      - If less than 2 ohms,
   3. Test or replace the G21 Secondary Air Injection Pump.
   - **If the G21 Secondary Air Injection Pump activates**
8. Test or replace the KR25 Secondary Air Injection Pump Relay.

Secondary Air Injection System Pressure Not In Range

NOTE: **The exhaust manifold and exhaust manifold gasket are provided with openings, at the secondary air injection check valve adapter interfaces, which are used to regulate the system pressure and flow. Any damage or restriction to these openings may cause a DTC to set.**

1. Verify the following conditions do not exist with the appropriate secondary air injection shutoff and check valve:
   - Hoses/pipes/adapters restricted or blocked
   - Hoses/pipes/adapters leaking or disconnected
   - Plugged secondary air injection pressure sensor port (integral to shutoff and check valve)
   - Damaged secondary air injection shutoff and check valve
   - Restricted or blocked cylinder head secondary air injection inlet ports and passages
   - Damaged or restricted secondary air injection check valve adapter air flow openings in exhaust manifold or gasket. Refer to **Secondary Air Injection Check Valve Pipe Adapter Replacement - Left Side (LUK)**
   - **If a condition is located**

     Repair or replace the affected component as necessary.

   - **If all components test normal**
2. Disconnect the secondary air injection hoses/pipes from the Q29 Secondary Air Injection Solenoid Valves.
3. Ignition ON, command the Secondary Air Injection Pump Relay ON with a scan tool.
4. Verify airflow to the Q29 Secondary Air Injection Solenoid Valves.

- **If no airflow**

  Replace the G21 Secondary Air Injection Pump.

- **If airflow**

5. Replace the appropriate Q29 Secondary Air Injection Solenoid Valve or valves.

Component Testing

Relay Test

1. Ignition OFF, disconnect the appropriate relay.
2. Test for the following resistance between terminals 85-86.
   - 50-75 ohms-KR25 Secondary Air Injection Pump Relay
   - 70-110 ohms-KR26 Secondary Air Injection Solenoid Valve Relay
   - **If not within the specified range**

     Replace the relay.

   - **If within the specified range**
3. Test for infinite resistance between the terminals listed below:
   - 30 and 86
   - 30 and 87
   - 30 and 85
   - 85 and 87
   - **If less than infinite resistance**

     Replace the relay.

   - **If infinite resistance**
4. Install a 15 A fused jumper wire between relay terminal 85 and 12 V. Install a jumper wire between relay terminal 86 and ground.
5. Test for less than 2 ohms between terminals 30 and 87.
   - **If 2 ohms or greater**

     Replace the relay.

   - **If less than 2 ohms**
6. All OK

Repair Instructions

Perform the **Diagnostic Repair Verification** after completing the repair.

- **Relay Replacement (Within an Electrical Center)** , **Relay Replacement (Attached to Wire Harness)**

- **Secondary Air Injection Check Valve Replacement - Left Side (LUK)** for secondary air injection shutoff and check valve and pressure sensor - Left Side replacement
- **Secondary Air Injection Check Valve Replacement - Right Side (LUK)** for secondary air injection shutoff and check valve and pressure sensor - Right Side replacement
- **Secondary Air Injection Pump Replacement (LEA, LUK)**

2014 Engine

Engine Controls/Fuel - 2.4L (LEA, LUK) - Diagnostic Information and Procedures - Regal

DIAGNOSTIC INFORMATION AND PROCEDURES

DTC P0412, P041F, OR P044F

Diagnostic Instructions

- Perform the **Diagnostic System Check - Vehicle** prior to using this diagnostic procedure.
- Review **Strategy Based Diagnosis** for an overview of the diagnostic approach.
- **Diagnostic Procedure Instructions** provides an overview of each diagnostic category.

DTC Descriptors

DTC P0412

Secondary Air Injection Valve Control Circuit

DTC P041F

Secondary Air Injection Valve Control Circuit Low Voltage

DTC P044F

Secondary Air Injection Valve Control Circuit High Voltage

Diagnostic Fault Information

Circuit	Short to Ground	Open/High Resistance	Short to Voltage	Signal Performance
Secondary Air Injection Valve Control Circuit Voltage Supply	P0412, P041F*	P0412, P041F	P0690	-
Air Injection Reaction Solenoid Relay Coil Control	P0412, P041F	P0412, P041F	P044F, P0690	-
* Supply fuse opens				

Circuit/System Description

The secondary air injection system aids in the reduction of hydrocarbon emissions during a cold start. The electric air pump forces fresh air into the exhaust stream in order to accelerate the catalyst operation. Ignition voltage is supplied directly to the secondary air injection pump relay and secondary air solenoid valve relay. The engine control module (ECM) controls the relays by grounding the control circuit with a solid state device called a driver. The ECM monitors the control circuits for open, short to ground, or short to voltage conditions.

Conditions for Running the DTC

- The ignition voltage is at least 11 V.
- The DTCs run continuously once the above conditions are met.

Conditions for Setting the DTC

P0412

The ECM detects an open circuit condition of the low side driver circuit for greater than 6 s.

P041F

The ECM detects a short to ground on the low side driver circuit for greater than 6 s.

P044F

The ECM detects a short to voltage on the low side driver circuit for greater than 6 s.

Action Taken When the DTC Sets

DTC P0412, P041F and P044F are Type B DTCs.

Conditions for Clearing the DTC

DTC P0412, P041F and P044F are Type B DTCs.

Diagnostic Aids

If the condition is intermittent, move the related harnesses and connectors, with the engine operating, while monitoring the scan tool Secondary Air Injection Solenoid Valve Control Circuit status parameters. The circuit status parameter changes from OK or Not Run to Malfunction if there is a condition with the circuit or a connection.

Reference Information

Schematic Reference

Engine Controls Schematics

Connector End View Reference

COMPONENT CONNECTOR END VIEWS - INDEX

Description and Operation

Secondary Air Injection System Description

Electrical Information Reference

- **Circuit Testing**
- **Connector Repairs**

- **Testing for Intermittent Conditions and Poor Connections**
- **Wiring Repairs**

DTC Type Reference

Powertrain Diagnostic Trouble Code (DTC) Type Definitions

Scan Tool Reference

Control Module References for scan tool information

Circuit/System Verification

1. Ignition ON
2. Verify a click is heard or felt from the KR26 Secondary Air Injection Solenoid Valve Relay when commanding the Secondary Air Injection Solenoid Valve ON and OFF with a scan tool.
   - **If a click is not heard or felt**

     Refer to Circuit/System Testing

   - **If a click is heard or felt**
3. Verify the circuit status parameters listed below do not display Malfunction when commanding the Secondary Air Injection Solenoid Valve ON and OFF with a scan tool:
   - Secondary Air Injection Solenoid Valve Control Circuit Low Voltage Test Status
   - Secondary Air Injection Solenoid Valve Control Circuit Open Test Status
   - Secondary Air Injection Solenoid Valve Control Circuit High Voltage Test Status
   - **If Malfunction is displayed**

     Refer to Circuit/System Testing

   - **If Malfunction is not displayed**
4. Operate the vehicle within the Conditions for Running the DTC. You may also operate the vehicle within the conditions that you observed from the Freeze Frame/Failure Records data.
5. Verify a DTC does not set.
   - **If a DTC sets**

     Refer to Circuit/System Testing

   - **If a DTC does not set**
6. All OK

Circuit/System Testing

1. Ignition OFF, disconnect the KR26 Secondary Air Injection Solenoid Valve Relay. Ignition ON.
2. Verify a test lamp illuminates between the relay coil ignition circuit terminal 86 and ground.
   - **If the test lamp does not illuminate and the circuit fuse is good**

1. Ignition OFF.
2. Test for less than 2 ohms in the ignition circuit end to end.
    - If 2 ohms or greater, repair the open/high resistance in the circuit.
    - If less than 2 ohms, verify the fuse is not open and there is voltage at the fuse.

- **If the test lamp does not illuminate and the circuit fuse is open**

1. Ignition OFF.
2. Test for infinite resistance between the ignition circuit and ground.
    - If less than infinite resistance, repair the short to ground on the circuit.
    - If infinite resistance, test or replace the KR26 Secondary Air Injection Solenoid Valve Relay

- **If the test lamp illuminates**

3. Connect a DMM, set on the diode setting, between the control circuit terminal 85 and ground.
4. Verify the DMM reading is greater than 2.5 V or displays O.L. when commanding the Secondary Air Injection Solenoid Valve Closed with a scan tool.
    - **If 2.5 V or less**

    1. Ignition OFF, disconnect the harness connector at the K20 Engine Control Module
    2. Test for less than 1 V between the control circuit and ground.
        - If 1 V or greater, repair the short to voltage on the circuit.
        - If less than 1 V
    3. Ignition OFF.
    4. Test for infinite resistance between the control circuit and ground.
        - If less than infinite resistance, repair the short to ground on the circuit.
        - If infinite resistance, test or replace the K20 Engine Control Module

    - **If greater than 2.5 V or displays O.L.**

5. Verify the DMM reading is less than 1 V when commanding the Secondary Air Injection Solenoid Valve Open with a scan tool.
    - **If 1 V or greater**

    1. Ignition OFF, disconnect the harness connector at the K20 Engine Control Module.
    2. Test for less than 2 ohms in the control circuit end to end.
        - If 2 ohms or greater, repair the open/high resistance in the circuit.
        - If less than 2 ohms, replace the K20 Engine Control Module.

    - **If less than 1 V**

6. Test or replace the KR26 Secondary Air Injection Solenoid Valve Relay.

Component Testing

Relay Test

1. Ignition OFF, disconnect the KR26 Secondary Air Injection Solenoid Valve Relay.
2. Test for 70-110 ohms between terminals 85-86.
    - **If less than 70 ohms or greater than 110 ohms**

Replace the KR26 Secondary Air Injection Solenoid Valve Relay.

- **If between 70-110 ohms**

3. Test for infinite resistance between the terminals listed below:
   - 30 and 86
   - 30 and 87
   - 30 and 85
   - 85 and 87
   - **If less than infinite resistance**

     Replace the KR26 Secondary Air Injection Solenoid Valve Relay.

   - **If infinite resistance**
4. Install a 15 A fused jumper wire between relay terminal 86 and 12 V. Install a jumper wire between relay terminal 85 and ground.
5. Test for less than 2 ohms between terminals 30 and 87.
   - **If 2 ohms or greater**

     Replace the KR26 Secondary Air Injection Solenoid Valve Relay.

   - **If less than 2 ohms**
6. All OK.

Repair Instructions

Perform the **Diagnostic Repair Verification** after completing the repair.

- **Relay Replacement (Within an Electrical Center)** , **Relay Replacement (Attached to Wire Harness)**
- **Control Module References** for Engine Control Module replacement, programming and setup.

DTC P0418, P2257, OR P2258

Diagnostic Instructions

- Perform the **Diagnostic System Check - Vehicle** prior to using this diagnostic procedure.
- Review **Strategy Based Diagnosis** for an overview of the diagnostic approach.
- **Diagnostic Procedure Instructions** provides an overview of each diagnostic category.

DTC Descriptors

DTC P0418

Secondary Air Injection Pump Relay Control Circuit

DTC P2257

Secondary Air Pump Relay Control Circuit Low Voltage

DTC P2258

Secondary Air Injection Pump Relay Circuit High Voltage

Diagnostic Fault Information

Circuit	Short to Ground	Open/High Resistance	Short to Voltage	Signal Performance
Secondary Air Injection Pump Relay Coil Voltage Supply	-	P0418, P2257	P0690	-
Secondary Air Injection Pump Relay Coil Control	P0418	P0418, P2257	P0690, P2258	-

Circuit/System Description

The secondary air injection system aids in the reduction of hydrocarbon emissions during a cold start. The electric air pump forces fresh air into the exhaust stream in order to accelerate the catalyst operation. Ignition voltage is supplied directly to the secondary air injection pump relay and secondary air solenoid valve relay. The engine control module (ECM) controls the relays by grounding the control circuit with a solid state device called a driver. The ECM monitors the control circuits for open, short to ground, or short to voltage conditions.

Conditions for Running the DTC

- The ignition voltage is at least 11 V.
- The DTCs run continuously once the above conditions are met.

Conditions for Setting the DTC

P0418

The ECM detects an open circuit condition of the low side driver circuit for greater than 6 s.

P2257

The ECM detects a short to ground on the low side driver circuit for greater than 6 s.

P2258

The ECM detects a short to voltage on the low side driver circuit for greater than 6 s.

Action Taken When the DTC Sets

DTC P0418, P2257 and P2258 are Type B DTCs.

Conditions for Clearing the DTC

DTC P0418, P2257 and P2258 are Type B DTCs.

Diagnostic Aids

If the condition is intermittent, move the related harnesses and connectors, with the engine operating, while monitoring the scan tool Secondary Air Injection Pump Relay Control Circuit status parameters. The circuit status parameter changes from OK or Not Run to Malfunction if there is a condition with the circuit or a connection.

Reference Information

Schematic Reference

Engine Controls Schematics

Connector End View Reference

COMPONENT CONNECTOR END VIEWS - INDEX

Description and Operation

Secondary Air Injection System Description

Electrical Information Reference

- **Circuit Testing**
- **Connector Repairs**
- **Testing for Intermittent Conditions and Poor Connections**
- **Wiring Repairs**

DTC Type Reference

Powertrain Diagnostic Trouble Code (DTC) Type Definitions

Scan Tool Reference

Control Module References for scan tool information.

Circuit/System Verification

1. Ignition ON
2. Verify a click is heard or felt from the KR25 Secondary Air Injection Pump Relay when commanding the Secondary Air Injection Pump Relay ON and OFF with a scan tool.
   - **If a click is not heard or felt**

     Refer to Circuit/System Testing

   - **If a click is heard or felt**
3. Verify the circuit status parameters listed below do not display Malfunction when commanding the Secondary Air Injection Pump Relay ON and OFF with a scan tool:
   - Secondary Air Injection Pump Relay Control Circuit Low Voltage Test Status

- Secondary Air Injection Pump Relay Control Circuit Open Test Status
- Secondary Air Injection Pump Relay Control Circuit High Voltage Test Status
  - **If Malfunction is displayed**

    Refer to Circuit/System Testing

  - **If Malfunction is not displayed**

4. Operate the vehicle within the Conditions for Running the DTC. You may also operate the vehicle within the conditions that you observed from the Freeze Frame/Failure Records data.
5. Verify a DTC does not set.
   - **If a DTC sets**

     Refer to Circuit/System Testing

   - **If a DTC does not set**
6. All OK

Circuit/System Testing

1. Ignition OFF, disconnect the KR25 Secondary Air Injection Pump Relay. Ignition ON.
2. Verify a test lamp illuminates between the relay coil ignition circuit terminal 86 and ground.
   - **If the test lamp does not illuminate**
     1. Ignition OFF.
     2. Test for less than 2 ohms in the ignition circuit end to end.
        - If 2 ohms or greater, repair the open/high resistance in the circuit.
   - **If the test lamp illuminates**
3. Connect a DMM, set on the diode setting, between the control circuit terminal 85 and ground.
4. Verify the DMM reading is greater than 2.5 V or displays O.L. when commanding the Secondary Air Injection Pump Relay OFF with a scan tool.
   - **If 2.5 V or less**
     1. Ignition OFF, disconnect the harness connector at the K20 Engine Control Module
     2. Test for less than 1 V between the control circuit and ground.
        - If 1 V or greater, repair the short to voltage on the circuit.
        - If less than 1 V
     3. Ignition OFF.
     4. Test for infinite resistance between the control circuit and ground.
        - If less than infinite resistance, repair the short to ground on the circuit.
        - If infinite resistance, test or replace the K20 Engine Control Module
   - **If greater than 2.5 V or displays O.L.**
5. Verify the DMM reading is less than 1 V when commanding the Secondary Air Injection Pump Relay ON with a scan tool.
   - **If 1 V or greater**
     1. Ignition OFF, disconnect the harness connector at the K20 Engine Control Module.

2. Test for less than 2 ohms in the control circuit end to end.
    - If 2 ohms or greater, repair the open/high resistance in the circuit.
    - If less than 2 ohms, replace the K20 Engine Control Module.
- **If less than 1 V**

6. Test or replace the KR25 Secondary Air Injection Pump Relay.

Component Testing

Relay Test

1. Ignition OFF, disconnect the KR25 Secondary Air Injection Pump Relay.
2. Test for 50-75 ohms between terminals 85-86.
    - **If less than 70 ohms or greater than 110 ohms**

      Replace the KR25 Secondary Air Injection Pump Relay.

    - **If between 70-110 ohms**
3. Test for infinite resistance between the terminals listed below:
    - 30 and 86
    - 30 and 87
    - 30 and 85
    - 85 and 87
    - **If less than infinite resistance**

      Replace the KR25 Secondary Air Injection Pump Relay.

    - **If infinite resistance**
4. Install a 15 A fused jumper wire between relay terminal 85 and 12 V. Install a jumper wire between relay terminal 86 and ground.
5. Test for less than 2 ohms between terminals 30 and 87.
    - **If 2 ohms or greater**

      Replace the KR25 Secondary Air Injection Pump Relay.

    - **If less than 2 ohms**
6. All OK.

Repair Instructions

Perform the **Diagnostic Repair Verification** after completing the repair.

- **Relay Replacement (Within an Electrical Center)** , **Relay Replacement (Attached to Wire Harness)**
- **Control Module References** for Engine Control Module replacement, programming and setup.

DTC P0420 (LUK)

Diagnostic Instructions

- Perform the **Diagnostic System Check - Vehicle** prior to using this diagnostic procedure.
- Review **Strategy Based Diagnosis** for an overview of the diagnostic approach.
- **Diagnostic Procedure Instructions** provides an overview of each diagnostic category.

DTC Descriptor

DTC P0420

Catalyst System Low Efficiency

Circuit/System Description

A 3-way catalyst controls emissions of hydrocarbons, carbon monoxide (CO) and nitrogen oxide (NOx). The catalyst within the converter promotes a chemical reaction, which oxidizes the hydrocarbons and the CO that are present in the exhaust gas. This process converts the hydrocarbons and the CO into water vapor and carbon dioxide (CO2), and reduces the NOx, converting the NOx into nitrogen. The catalyst also stores oxygen. The engine control module (ECM) monitors this process by using heated oxygen sensors (HO2S) that are in the exhaust stream before and after the 3- way catalyst. The HO2S produces an output signal that the ECM uses to calculate the oxygen storage capacity of the catalyst. This indicates the ability of the catalyst to convert the exhaust emissions efficiently. The ECM monitors the efficiency of the catalyst by monitoring the HO2S during an off-idle, decel fuel cut off (DFCO) event. When the catalyst is functioning properly, the post catalyst HO2S response to the fuel conditions during the DFCO event is slow compared to the response of the pre catalyst HO2S. When the post HO2S response is near that of the pre HO2S, the oxygen storage capability and efficiency of the catalyst may be degraded below an acceptable threshold.

Conditions for Running the DTC

- DTC P0030, P0031, P0032, P0036, P0037, P0038, P0050, P0051, P0052, P0053, P0054, P0056, P0057, P0058, P0059, P0060, P0068, P0101, P0102, P0103, P0106, P0107, P0108, P0111, P0116, P0117, P0118, P0119, P0121, P0122, P0123, P0128, P0131, P0132, P0133, P0135, P0137, P0138, P013A, P013B, P013C, P013D, P013E, P013F, P0141, P014A, P014B, P0151, P0152, P0153, P0155, P0157, P0158, P015A, P015B, P015C, P015D, P0161, P0171, P0172, P0174, P0175, P0201, P0202, P0203, P0204, P0205, P0206, P0207, P0208, P0222, P0223, P0261, P0262, P0264, P0265, P0267, P0268, P0270, P0271, P0273, P0274, P0276, P0277, P0279, P0280, P0282, P0283, P0300, P0301, P0302, P0303, P0304, P0305, P0306, P0307, P0308, P1248, P1249, P124A, P124B, P124C, P124D, P16F3, P2101, P2135, P2147, P2148, P2150, P2151, P2153, P2154, P2156, P2157, P216C, P216E, P216F, P2270, P2271, P2272, or P2273 is not set.
- The engine speed is between 1,250-2,500 RPM to enable the catalyst diagnostic. Once the engine speed is in range, the engine speed must be between 1,100-2,450 RPM to keep the test enabled.
- The accelerator pedal position is at most 100 %.
- Ethanol estimation is not active.
- The evaporative emission (EVAP) purge is not active.
- The post HO2S heater is ON for greater than 180 s.
- The mass air flow (MAF) is between 2-12 g/s.
- The system voltage is between 10-32 V.
- The vehicle speed is between 67-120 km/h (42-75 MPH) to enable the catalyst diagnostic. To keep the test enabled the vehicle speed is between 60-120 km/h (37-75 MPH).

- The catalyst calculated temperature is between 600-900°C (1,112-1,652°F).
- The engine is operating in closed loop.
- The engine is operating in Decel Fuel Cut Off (DFCO).

This diagnostic attempts one test during each valid OFF-idle period once the above conditions have been met. This diagnostic attempts up to 3 tests during each drive cycle.

Conditions for Setting the DTC

The ECM determines that the efficiency of the catalyst has degraded below a calibrated threshold.

Action Taken When the DTC Sets

DTC P0420 is a Type A DTC.

Conditions for Clearing the DTC

DTC P0420 is a Type A DTC.

Diagnostic Aids

Inspect for the following conditions, which may cause a catalytic converter to degrade:

- An engine misfire
- High engine oil or high coolant consumption
- Retarded spark timing
- A weak or poor spark
- A lean fuel mixture
- A rich fuel mixture
- A damaged oxygen sensor or wiring harness

Reference Information

DTC Type Reference

Powertrain Diagnostic Trouble Code (DTC) Type Definitions

Scan Tool Reference

Control Module References for scan tool information

Circuit/System Verification

1. Ignition ON.
2. Verify there are no other DTCs set.
    - **If a DTC is set**

      Refer to **Diagnostic Trouble Code (DTC) List - Vehicle** .

- **If a DTC is not set**

3. Operate the vehicle within the Conditions for Running the DTC.
4. Verify the scan tool Catalyst Monitor Not At Idle Test Conditions Met parameter changes to Yes.
   - **If Yes is not displayed**

     Refer to step 3.

   - **If Yes is displayed**
5. Monitor the scan tool Catalyst Monitor Test State parameter. When the parameter indicates Active, the Catalyst Monitor Test is running.

   NOTE: When the test has completed, the Catalyst Monitor Test Counter parameter will increment by one and the Catalyst Monitor Test Result parameter will indicate Passed, Failed or No Result.

6. Continue to monitor the parameter. When the parameter indicates Inactive, the Catalyst Monitor Test has completed.
   - **If the Catalyst Monitor Test Result parameter indicates No Result**

     Repeat steps 3-6 until the Test Result parameter indicates Passed or Failed

   - **If the Catalyst Monitor Test Result parameter indicates Failed**

     Refer to Circuit /System Testing

   - **If the Catalyst Monitor Test Result parameter indicates Pass**
7. All OK.

Circuit/System Testing

1. Verify the conditions listed below do not exist with the catalytic converter:
   - Dents
   - Severe discoloration caused by excessive temperatures
   - Road damage
   - Internal rattles caused by damaged catalyst substrate
   - Restrictions
     - **If a condition is found**

       Replace the catalytic converter.

   - **If no condition is found**
2. Verify the conditions listed below do not exist with the exhaust system:
   - Leaks
   - Physical damage
   - Loose or missing hardware

- **If a condition is found**

  Repair or replace the component as necessary.

- **If no condition is found**

3. Verify the conditions listed below do not exist with the B52B heated oxygen sensor 2:
   - Incorrect torque
   - Damage
     - **If a condition is found**

       Replace the B52B heated oxygen sensor 2 or repair the condition as necessary.

     - **If no condition is found**
4. Test or replace the catalytic converter.

Repair Instructions

- **Exhaust Leakage**
- **Restricted Exhaust**
- **Heated Oxygen Sensor Replacement - Sensor 2**
- **Catalytic Converter Replacement (LUK)**

Repair Verification

1. Install any components that have been removed or replaced during diagnosis.
2. Perform any adjustments, programming or setup procedures that are required when a component is removed or replaced.
3. Clear the DTCs with a scan tool.
4. Turn OFF the ignition for 60 s
5. Operate the vehicle within the Conditions for Running the DTC.
6. Verify the scan tool Catalyst Monitor Not At Idle Test Conditions Met parameter changes to Yes.
   - **If Yes is not displayed**

     Refer to step 5.

   - **If Yes is displayed**
7. Monitor the scan tool Catalyst Monitor Test State parameter. When the parameter indicates Active, the Catalyst Monitor Test is running.

   NOTE: When the test has completed, the Catalyst Monitor Test Counter parameter will increment by one and the Catalyst Monitor Test Result parameter will indicate Passed, Failed or No Result.

8. Continue to monitor the parameter. When the parameter indicates Inactive, the Catalyst Monitor Test has completed.
   - **If the Catalyst Monitor Test Result parameter indicates No Result**

Repeat steps 5-8 until the Test Result parameter indicates Passed or Failed

- **If the Catalyst Monitor Test Result parameter indicates Failed**

  Refer to Circuit /System Testing

- **If the Catalyst Monitor Test Result parameter indicates Pass**

9. All OK.

DTC P0420 (LEA)

Diagnostic Instructions

- Perform the **Diagnostic System Check - Vehicle** prior to using this diagnostic procedure.
- Review **Strategy Based Diagnosis** for an overview of the diagnostic approach.
- **Diagnostic Procedure Instructions** provides an overview of each diagnostic category.

DTC Descriptor

DTC P0420

Catalyst System Low Efficiency

Circuit/System Description

A 3-way catalytic converter controls emissions of hydrocarbons, carbon monoxide (CO) and nitrogen oxide (NOx). The catalyst within the converter promotes a chemical reaction, which oxidizes the hydrocarbons and the CO that are present in the exhaust gas. This process converts the hydrocarbons and the CO into water vapor and CO2, and reduces the NOx, by converting the NOx into nitrogen. The catalytic converter also stores oxygen. The engine control module (ECM) monitors this process by using a heated oxygen sensor (HO2S) that is in the exhaust stream after the 3-way catalytic converter. The HO2S 2 produces an output signal that the ECM uses to calculate the oxygen storage capacity of the catalyst. This indicates the ability of the catalyst to convert the exhaust emissions efficiently. The ECM monitors the efficiency of the catalyst by allowing the catalyst to heat, then wait for a stabilization period while the engine is idling. The ECM then adds and removes fuel while monitoring the HO2S 2. When the catalyst is functioning properly, the HO2S 2 response to the extra fuel is slow compared to the response of the HO2S 1, which is located before the 3-way catalytic converter. When the HO2S 2 response is near that of the HO2S 1, the oxygen storage capability and efficiency of the catalyst may be degraded below an acceptable threshold.

Conditions for Running the DTC

- DTC P0010, P0011, P0013, P0014, P0016, P0017, P0030, P0036, P0101, P0102, P0103, P0112, P0113, P0116, P0117, P0118, P0121, P0122, P0123, P0128, P0131, P0132, P0133, P0134, P0135, P0137, P0138, P013A, P013B, P013C, P013E, P013F, P0140, P0141, P0171, P0172, P0220, P0223, P0300, P0301-P0304, P0443, P0449, P0455, P0496, P0506, P0507, P1101, P1133, P2100, P2102, P2103, P2122, P2123, P2127, P2128, P2135, P2138, P219A, P2232, P2235, P2270, or P2271 is not set.
- Before the ECM performs the idle test, the vehicle must be driven under the following conditions:
  - Engine speed is greater than 915 RPM

  - Engine run time is greater than a calibrated value
  - Both conditions exist for greater than 15 s
- Throttle is in the rest position.
- Intake air temperature (IAT) is between -20 to +250°C (-4 to +482°F).
- Ignition voltage is greater than 11 V.
- Engine coolant temperature (ECT) is between 40-127°C (104-261°F).
- Barometric pressure (BARO) is greater than 70 kPa.
- Engine has been idling less than 50 s.
- Vehicle speed is less than 2 km/h (1 mph).
- Short term fuel trim is learned.
- Mass air flow (MAF) is between 3-13 g/s.
- Evaporative emissions (EVAP) purge concentration is learned.
- Catalytic converter calculated temperature is between 450-950°C (842-1,742°F).
- Engine is operating in Closed Loop.
- Transmission is not in P/N (automatic transmission only).

This diagnostic attempts one test during each valid idle period once the above conditions have been met. This diagnostic attempts up to 8 tests during each drive cycle.

Conditions for Setting the DTC

The ECM determines that the efficiency of the catalyst has degraded below a calibrated threshold.

Action Taken When the DTC Sets

DTC P0420 is a Type A DTC.

Conditions for Clearing the DTC

DTC P0420 is a Type A DTC.

Diagnostic Aids

Inspect for the conditions listed below, which may cause a catalyst to degrade:

- Engine misfire
- High engine oil or high coolant consumption
- Retarded spark timing
- Weak or poor spark
- Lean fuel mixture
- Rich fuel mixture
- Damaged oxygen sensor or wiring harness

Reference Information

DTC Type Reference

Powertrain Diagnostic Trouble Code (DTC) Type Definitions

Scan Tool Reference

Control Module References for scan tool information

Circuit/System Verification

1. Ignition ON.
2. Verify there are no other DTCs set.
   - **If a DTC is set**

     Refer to **Diagnostic Trouble Code (DTC) List - Vehicle** .

   - **If a DTC is not set**
3. Operate the vehicle within the Conditions for Running the DTC.
4. Verify the scan tool Catalyst Monitor Not At Idle Test Conditions Met parameter changes to Yes.
   - **If Yes is not displayed**

     Refer to step 3.

   - **If Yes is displayed**
5. When the conditions are safe, stop and idle the vehicle in gear (If equipped with automatic transmission) or neutral (If equipped with manual transmission).
6. Verify the Catalyst Monitor Test Result parameter displays Pass when performing the steps listed below:
   1. Apply the service brake.
   2. Monitor the scan tool Catalyst Monitor Test State parameter. When the parameter indicates Active, the Catalyst Monitor Test is running.

      NOTE: When the test has completed, the Catalyst Monitor Test Counter parameter will increment by one and the Catalyst Monitor Test Result parameter will indicate Passed, Failed or No Result.

   3. Continue to monitor the parameter. When the parameter indicates Inactive, the Catalyst Monitor Test has completed.
   - **If the Catalyst Monitor Test Result parameter indicates No Result**

     Repeat steps 3-6 until the Test Result parameter indicates Passed or Failed

   - **If the Catalyst Monitor Test Result parameter indicates Failed**

     Refer to Circuit /System Testing

   - **If the Catalyst Monitor Test Result parameter indicates Pass**

7. All OK.

Circuit/System Testing

1. Verify the conditions listed below do not exist with the catalytic converter:
   - Dents
   - Severe discoloration caused by excessive temperatures
   - Road damage
   - Internal rattles caused by damaged catalyst substrate
   - Restrictions
     - **If a condition is found**

       Replace the catalytic converter.

     - **If no condition is found**
2. Verify the conditions listed below do not exist with the exhaust system:
   - Leaks
   - Physical damage
   - Loose or missing hardware
     - **If a condition is found**

       Repair or replace the component as necessary.

     - **If no condition is found**
3. Verify the conditions listed below do not exist with the B52B heated oxygen sensor 2:
   - Incorrect torque
   - Damage
   - **If a condition is found**

     Replace the B52B heated oxygen sensor 2 or repair the condition as necessary.

   - **If no condition is found**
4. Test or replace the catalytic converter.

Repair Instructions

NOTE: **A new converter with less than 100 miles on it may set DTC P0420 or P0430 due to out-gassing of the internal matting. Operating the vehicle at highway speeds for approximately 1 hour may correct the condition.**

- **Catalytic Converter Replacement (LUK)**
- **Exhaust Leakage**
- **Heated Oxygen Sensor Replacement - Sensor 2**
- Perform the HO2S Heater Learn procedure with a scan tool after replacing a heated oxygen sensor.
- **Restricted Exhaust**

Repair Verification

1. Install any components that have been removed or replaced during diagnosis.
2. Perform any adjustments, programming or setup procedures that are required when a component is removed or replaced.
3. Clear the DTCs with a scan tool.
4. Turn OFF the ignition for 60 s
5. Operate the vehicle within the Conditions for Running the DTC.
6. Verify the scan tool Catalyst Monitor Not At Idle Test Conditions Met parameter changes to Yes.
   - **If Yes is not displayed**

     Refer to step 5.

   - **If Yes is displayed**
7. When the conditions are safe, stop and idle the vehicle in gear (If equipped with automatic transmission) or neutral (If equipped with manual transmission).
8. Verify the Catalyst Monitor Test Result parameter displays Pass when performing the steps listed below:
   1. Apply the service brake.
   2. Monitor the scan tool Catalyst Monitor Test State parameter. When the parameter indicates Active, the Catalyst Monitor Test is running.

      NOTE: When the test has completed, the Catalyst Monitor Test Counter parameter will increment by one and the Catalyst Monitor Test Result parameter will indicate Passed, Failed or No Result.

   3. Continue to monitor the parameter. When the parameter indicates Inactive, the Catalyst Monitor Test has completed.
   - **If the Catalyst Monitor Test Result parameter indicates No Result**

     Repeat steps 5-8 until the Test Result parameter indicates Passed or Failed

   - **If the Catalyst Monitor Test Result parameter indicates Failed**

     Refer to Circuit /System Testing

   - **If the Catalyst Monitor Test Result parameter indicates Pass**
9. All OK.

DTC P0442

Diagnostic Instructions

- Perform the **Diagnostic System Check - Vehicle** prior to using this diagnostic procedure.
- Review **Strategy Based Diagnosis** for an overview of the diagnostic approach.
- **Diagnostic Procedure Instructions** provides an overview of each diagnostic category.

DTC Descriptor

DTC P0442

Evaporative Emission (EVAP) System Small Leak Detected

Circuit/System Description

The engine off natural vacuum (EONV) test is the small leak detection diagnostic for the evaporative emission (EVAP) system. This diagnostic tests the EVAP system for a small leak when the key is turned OFF and the correct conditions are met. Heat from the exhaust system is transferred into the fuel tank while the vehicle is operating. When the vehicle is turned OFF and the EVAP system is sealed a change in the fuel tank vapor temperature occurs which results in a corresponding pressure change in the fuel tank vapor space. This change is monitored by the engine control module (ECM) using the fuel tank pressure (FTP) sensor input. With a leak in the system, the amount of pressure change will be less than that of a sealed system.

Conditions for Running the DTC

- DTCs P010C, P010D, P0101, P0102, P0103, P0106, P0107, P0108, P0111, P0112, P0113, P0114, P0116, P0117, P0118, P0125, P0128, P0443, P0446, P0449, P0452, P0453, P0455, P0496, P0461, P0462, P0463, P0464, P0496, P0502, P0503, P0722, P0723, P2227, P2228, P2229, P2230, P2610. are not set.
- The barometric pressure (BARO) is greater than 70 kPa.
- The engine coolant sensor (ECT) is greater than 63°C (145°F)
- No fuel filling during the EONV test period.
- The fuel level is between 10-90 %.
- The start-up engine coolant temperature (ECT) and the start-up intake air temperature (IAT) are within 8°C (46°F).
- The engine run time before shut-off was greater than 10 min.
- The drive distance before engine shut-off was more than 5 km (3 mi).
- The ambient air temperature at the end of the drive cycle is between 0-34°C (32-93°F).
- DTC P0442 runs once per drive cycle during the hot soak period after the ignition is turned OFF and may require up to 40 min to complete. The controller will not make more than 2 test attempts per day. The time since the last completed EONV test must be at least 17 h.

Conditions for Setting the DTC

- The ECM detects a leak in the EVAP system that is greater than a calibrated amount.
- The ECM must complete several EONV tests before the diagnostic can turn the MIL on or off.

Action Taken When the DTC Sets

DTC P0442 is a Type A DTC.

Conditions for Clearing the DTC

DTC P0442 is a Type A DTC.

Diagnostic Aids

- The EVAP system can be filled with smoke more quickly and completely by opening the system opposite the end where the smoke is injected. When injecting smoke at the service port tool temporarily leave the EVAP Vent Solenoid Valve open until smoke is observed then close the system and continue testing.
- To help locate intermittent leaks using the **GE 41413-A** , move all EVAP components while observing smoke with the **GE 41413-SPT** .
- Individual components can be isolated and tested using adapters in the **GE 41413-300** .
- When servicing the EVAP system, test pressure must not exceed 13 in H20 (0.5 PSI) as pressure in excess of this could cause system components to perform inaccurately.
- A condition may exist where a leak in the EVAP system only exists under a vacuum condition. This type of leak may be detected by using the scan tool Purge/Seal function to create a vacuum in the EVAP system and then observe the FTP Sensor parameter for vacuum decay.

Reference Information

Schematic Reference

Engine Controls Schematics

Connector End View Reference

COMPONENT CONNECTOR END VIEWS - INDEX

Description and Operation

Evaporative Emission Control System Description

Electrical Information Reference

- **Circuit Testing**
- **Connector Repairs**
- **Testing for Intermittent Conditions and Poor Connections**
- **Wiring Repairs**

DTC Type Reference

Powertrain Diagnostic Trouble Code (DTC) Type Definitions

Scan Tool Reference

Control Module References for scan tool information

Special Tools

- **CH 48096** EVAP Service Port Access Tool
- **GE 41413-A** Evaporative Emissions System Tester (EEST)

- **GE 41413-300** EVAP Cap and Plug Kit
- **GE 41413-SPT** High Intensity White Light

For equivalent regional tools, refer to **Special Tools (Diagnostic Tools)** , **Special Tools (Mechanical Tools)** .

Circuit/System Testing

NOTE:

- **Refer to the GE 41413-A operation manual for detailed instructions in Evaporative Emission System Diagnosis .**
- **Larger volume fuel tanks and/or those with lower fuel levels may require several minutes for the floating indicator to stabilize or produce smoke from a leak.**
- **Ensure that the underbody temperature of the vehicle and the tester are similar.**

1. Disconnect the purge tube at the quick connector on the EVAP canister side of the Q12 Evaporative Emission Canister Purge Solenoid Valve and install the **CH 48096** .
2. Connect the **GE 41413-A** to the **CH 48096** .
3. Command the EVAP Purge/Seal function to System Seal with a scan tool to seal the EVAP system.
4. Use the flow meter on the **GE 41413-A** calibrated to 0.51 mm (0.020 in) to determine if there is a leak.
   - **If a leak is detected**
   1. Use the **GE 41413-A** to apply smoke to the EVAP system at the purge tube service port until the leak is located using the **GE 41413-SPT** .
      - If leak is detected, repair or replace the affected component as necessary.
   - **If no leak is detected**
5. All OK.

Repair Instructions

Perform the **Diagnostic Repair Verification** after completing the repair.

DTC P0443, P0458, OR P0459

Diagnostic Instructions

- Perform the **Diagnostic System Check - Vehicle** prior to using this diagnostic procedure.
- Review **Strategy Based Diagnosis** for an overview of the diagnostic approach.
- **Diagnostic Procedure Instructions** provides an overview of each diagnostic category.

DTC Descriptors

DTC P0443

Evaporative Emission (EVAP) Purge Solenoid Valve Control Circuit

DTC P0458

Evaporative Emission (EVAP) Purge Solenoid Valve Control Circuit Low Voltage

DTC P0459

Evaporative Emission (EVAP) Purge Solenoid Valve Control Circuit High Voltage

Diagnostic Fault Information

Circuit	Short to Ground	Open/High Resistance	Short to Voltage
Ignition	P0443, P0458	P0443	P0690
Control	P0443, P0458	P0443	P0459, P0690

Circuit/System Description

The evaporative emission (EVAP) purge solenoid valve is used to purge fuel vapor from the EVAP canister to the intake manifold. The EVAP purge solenoid valve is pulse width modulated (PWM). Ignition voltage is supplied directly to the EVAP purge solenoid valve. The engine control module (ECM) controls the solenoid valve by grounding the control circuit with a solid state device called a driver. The driver is equipped with a feedback circuit that is pulled-up to a voltage. The ECM can determine if the control circuit is open, shorted to ground, or shorted to a voltage by monitoring the feedback voltage. A scan tool will display the amount of ON time as a percentage.

Conditions for Running the DTC

- The ignition voltage is greater than 11 V.
- The DTCs run continuously once the above conditions are met.

Conditions for Setting the DTC

P0443

The ECM detects the EVAP Purge Solenoid Valve control circuit is open within 0.25 s.

P0458

The ECM detects the EVAP Purge Solenoid Valve control circuit is shorted to ground within 0.25 s.

P0459

The ECM detects the EVAP Purge Solenoid Valve control circuit is shorted to voltage within 0.25 s.

Action Taken When the DTC Sets

DTC P0443, P0458 and P0459 are Type B DTCs.

Conditions for Clearing the DTC

DTC P0443, P0458 and P0459 are Type B DTCs.

Reference Information

Schematic Reference

Engine Controls Schematics

Connector End View Reference

COMPONENT CONNECTOR END VIEWS - INDEX

Description and Operation

Evaporative Emission Control System Description

Electrical Information Reference

- **Circuit Testing**
- **Connector Repairs**
- **Testing for Intermittent Conditions and Poor Connections**
- **Wiring Repairs**

DTC Type Reference

Powertrain Diagnostic Trouble Code (DTC) Type Definitions

Scan Tool Reference

Control Module References for scan tool information

Circuit/System Verification

NOTE: **The audible clicking intensity will vary depending on mounting locations and interference with the fuel injectors clicking. You may also feel a change in the frequency of clicking.**

1. Ignition ON, verify DTC P0690 is not set.
   - **If the DTC is set**

     Refer to **DTC P0685-P0687, P0689, P0690, or P1682** for further diagnosis.

   - **If the DTC is not set**
2. Command the EVAP Purge Solenoid Valve from 0 to 50% and back to 0% with a scan tool while observing the following control circuit status parameters:
   - EVAP Purge Solenoid Valve Control Circuit Open Test Status
   - EVAP Purge Solenoid Valve Control Circuit Low Voltage Test Status
   - EVAP Purge Solenoid Valve Control Circuit High Voltage Test Status

- **If Malfunction is displayed**

  Refer to Circuit/System Testing

- **If Malfunction is not displayed**

3. Verify the EVAP Purge Solenoid Valve control circuit parameters above do not display Malfunction when moving the related harnesses and connectors of the Q12 Evaporative Emission Purge Solenoid Valve.
   - **If Malfunction is displayed**

     Refer to Circuit/System Testing

   - **If Malfunction is not displayed**
4. Operate the vehicle within the Conditions for Running the DTC. You may also operate the vehicle within the conditions that you observed from the Freeze Frame/Failure Records data.
5. Verify the DTC does not set.
   - **If the DTC sets**

     Refer to Circuit/System Testing

   - **If the DTC does not set**
6. All OK.

Circuit/System Testing

1. Ignition OFF, disconnect the harness connector at the Q12 Evaporative Emission Purge Solenoid Valve. Ignition ON,
2. Verify that a test lamp illuminates between the ignition voltage circuit terminal A or 1 and ground.
   - **If the test lamp does not illuminate and the circuit fuse is good**
     1. Ignition OFF, remove the test lamp.
     2. Test for less than 2 ohms in the ignition circuit end to end.
        - If 2 ohms or greater, repair the open/high resistance in the circuit.
        - If less than 2 ohms, verify the fuse is not open and there is voltage at the fuse
   - **If the test lamp does not illuminate and the circuit fuse is open**
     1. Ignition OFF, remove the test lamp.
     2. Test for infinite resistance between the ignition circuit and ground
        - If less than infinite resistance, repair the short to ground on the circuit.
        - If infinite resistance, test all components connected to the ignition voltage circuit for a short and replace as necessary.
   - **If the test lamp illuminates**
3. Verify that a test lamp does not illuminate between the ignition circuit terminal A or 1 and the control circuit terminal B or 2.
   - **If the test lamp illuminates**
     1. Ignition OFF, remove the test lamp, disconnect the harness connector at the K20 Engine Control Module.

2. Test for infinite resistance between the control circuit and ground.
    - If less than infinite resistance, repair the short to ground on the circuit.
    - If infinite resistance, replace the K20 Engine Control Module.
- **If the test lamp does not illuminate**

4. Remove the test lamp.
5. Verify the scan tool EVAP Purge Solenoid Valve Control Circuit High Voltage Test Status parameter is OK when commanding the EVAP Purge Solenoid Valve to 50% with a scan tool.
    - **If OK is not displayed**
    1. Ignition OFF, disconnect the harness connector at the K20 Engine Control Module, Ignition ON.
    2. Test for less than 1 V between the control circuit and ground.
        - If 1 V or greater, repair the short to voltage on the circuit.
        - If less than 1 V, replace the K20 Engine Control Module.
    - **If OK is displayed**
6. Install a 3 A fused jumper wire between the control circuit terminal B or 2 and the ignition circuit terminal A or 1.
7. Verify the scan tool EVAP Purge Solenoid Valve Control Circuit High Voltage Test Status parameter is Malfunction when commanding the EVAP Purge Solenoid Valve to 50% with a scan tool.
    - **If Malfunction is not displayed**
    1. Ignition OFF, remove the jumper wire, disconnect the harness connector at the K20 Engine Control Module.
    2. Test for less than 2 ohms in the control circuit end to end.
        - If 2 ohms or greater, repair the open/high resistance in the circuit.
        - If less than 2 ohms replace the K20 Engine Control Module.
    - **If Malfunction is displayed**
8. Test or replace the Q12 Evaporative Emission Purge Solenoid Valve.

Component Testing

Static Test

1. Ignition OFF, disconnect the harness connector at the Q12 Evaporative Emission Purge Solenoid Valve.
2. Test for 10-30 ohms between the control terminal B or 2 and the ignition circuit terminal A or 1.
    - **If not between 10-30 ohms**

      Replace the Q12 Evaporative Emission Purge Solenoid Valve.

    - **If between 10-30 ohms**
3. All OK.

Dynamic Test

1. Ignition OFF, disconnect the harness connector at the Q12 Evaporative Emission Purge Solenoid

Valve.

2. Install a 3 A fused jumper wire between the ignition, terminal A or 1 and 12 V. Install a jumper wire between the control terminal B or 2 and ground.
3. Verify the Evaporative Emission Purge Solenoid Valve turns on & off/clicks and flows vacuum.
   - **If it does not turn on & off/click or flow vacuum.**

     Replace the Q12 Evaporative Emission Purge Solenoid Valve.

   - **If it does turns on & off/clicks and flows vacuum.**
4. All OK

Repair Instructions

Perform the **Diagnostic Repair Verification** after completing the repair.

- **Evaporative Emission Canister Purge Solenoid Valve Replacement**
- **Control Module References** for ECM replacement, programming and setup

DTC P0446

Diagnostic Instructions

- Perform the **Diagnostic System Check - Vehicle** prior to using this diagnostic procedure.
- Review **Strategy Based Diagnosis** for an overview of the diagnostic approach.
- **Diagnostic Procedure Instructions** provides an overview of each diagnostic category.

DTC Descriptor

DTC P0446

Evaporative Emission (EVAP) Vent System Performance

Typical Scan Tool Data

Fuel Tank Pressure Sensor Signal Voltage	Fuel Tank Pressure
1.5 V	Atmospheric Pressure / BARO
Less than 1.5 V	Positive Pressure
More than 1.5 V	Negative Pressure / Vacuum

Circuit/System Description

This DTC tests the evaporative emission (EVAP) system for a restricted or blocked EVAP vent path that would cause excess amounts of vacuum to be developed in the EVAP system. The engine control module (ECM) uses the fuel tank pressure (FTP) sensor to monitor EVAP system vacuum. With the purge and vent solenoid valves open, if the EVAP system vacuum goes above a calibrated threshold, P0446 will set.

The following table illustrates the relationship between the ON and OFF states, and the OPEN or CLOSED states of the EVAP purge and vent solenoid valves.

ECM Command	EVAP Purge Solenoid Valve	EVAP Vent Solenoid Valve
ON	Open	Closed
OFF	Closed	Open

Conditions for Running the DTC

- DTCs P0068, P00C8, P00C9, P0101, P0102, P0103, P0106, P0107, P0108, P0111, P0112, P0113, P0114, P0116, P0117, P0118, P0121, P0122, P0123, P0128, P0191, P0192, P0193, P0222, P0223, P0443, P0601, P0604, P0606, P16A0, P16A1, P16A2, P16F3, P2101, P2135, P2176, are not set.
- The ignition voltage is between 11-32 V.
- The barometric pressure (BARO) is more than 70 kPa.
- The fuel level is between 10-90%.
- The startup engine coolant temperature (ECT) is less than 35°C (95°F).
- The startup intake air temperature (IAT) is between 4-30°C (39-86°F)
- This test runs once per cold start, for up to 17 min, when the above conditions are met.

Conditions for Setting the DTC

NOTE: There are two stages to setting this DTC. Stage one, prep test, then stage two test.

- If fuel tank pressure sensor reading is greater than 2.5 in H2O of pressure or less than -5 in H2O of vacuum for 60 s.

  OR

- If fuel tank pressure sensor reading is less than -12 in H2O of vacuum for 5 s before 10 L (2.6 gal) of purge volume.
- After setting the DTC for the first time, 2 L (0.5 gal) of fuel must be consumed before setting the DTC for the second time.

Action Taken When the DTC Sets

DTC P0446 is a Type B DTC.

Conditions for Clearing the MIL/DTC

DTC P0446 is a Type B DTC.

Diagnostic Aids

- An intermittent condition could be caused by a damaged EVAP vent housing, a temporary blockage at the EVAP vent solenoid valve inlet, or a pinched vent hose. A blockage in the vent system may also cause a poor fuel fill condition.
- An EVAP canister filter that is restricted can cause this DTC to set.

Reference Information

Schematic Reference

Engine Controls Schematics

Connector End View Reference

COMPONENT CONNECTOR END VIEWS - INDEX

Description and Operation

Evaporative Emission Control System Description

Electrical Information Reference

- **Circuit Testing**
- **Connector Repairs**
- **Testing for Intermittent Conditions and Poor Connections**
- **Wiring Repairs**

DTC Type Reference

Powertrain Diagnostic Trouble Code (DTC) Type Definitions

Scan Tool Reference

Control Module References for scan tool information

Special Tools

- CH 41415-30 Fuel Tank Cap Adapter
- GE 41413-A Evaporative Emissions System Tester (EEST)

For equivalent regional tools, refer to **Special Tools (Diagnostic Tools)** , **Special Tools (Mechanical Tools)**

Circuit/System Verification

1. Ignition ON.
2. Verify DTC P0443 is not set.
   - **If the DTC is set**

     Refer to **DTC P0443, P0458, or P0459** for further diagnosis.

   - **If the DTC is not set**
3. Ignition OFF, remove the fuel tank filler cap. Ignition ON.
4. Verify the scan tool Fuel Tank Pressure Sensor voltage parameter is within 1.3-1.7 V.
   - **If not between the 1.3-1.7 V**

Refer to P0452, P0453 within **DTC P0451-P0454** for further diagnosis.

- **If between the 1.3-1.7 V**

5. Install the fuel tank filler cap. Engine idling at operating temperature for 5 min,
6. Verify the scan tool Fuel Tank Pressure Sensor parameter does not increase to greater than 2.5 V when commanding the EVAP Purge Solenoid Valve to 50%.
   - **If greater than 2.5 V**

     Refer to Circuit System Testing.

   - **If 2.5 V or less**
7. Operate the vehicle within the Conditions for Running the DTC. You may also operate the vehicle within the conditions that you observed from the Freeze Frame/Failure Records data.
   - **If the DTC sets**

     Refer to Circuit System Testing.

   - **If the DTC does not set**
8. All OK.

Circuit/System Testing

NOTE: Perform the Circuit/System Verification before proceeding with the Circuit/System Testing.

1. Test for a blockage or restrictions in the EVAP system components listed below and repair as necessary.
   - Evaporative Emission Vent System Hoses
   - Evaporative Emission Canister
   - Q13 Evaporative Emission Vent Solenoid Valve
   - Evaporative Emission Vent Filter
2. Reconnect all previously disconnected EVAP hardware.

NOTE: Refer to the GE-41413-A operation manual for detailed instructions in Evaporative Emission System Diagnosis

3. Remove the fuel fill cap and connect the CH 41415-30 to the fuel tank filler neck. Connect the GE 41413-A to the CH 41415-30.
4. Command the EVAP Purge/Seal function to System Seal with a scan tool to seal the EVAP system.
5. Turn the nitrogen/smoke valve on the GE 41413-A to nitrogen.

NOTE: DO NOT exceed the specified value in this step. Exceeding the specified value may produce incorrect test results.

6. Use the remote switch to activate the GE 41413-A and pressurize the fuel tank to 5.0 in H20.
7. Verify the scan tool Fuel Tank Pressure Sensor parameter is 0 in H20 when commanding the EVAP

Vent Solenoid Valve to OFF.

- **If not 0 in H20**

  Test for a blockage or a restriction in the EVAP vent hose or inlet. If the inlet or hose test normal, replace the Q13 Evaporative Emission Vent Solenoid Valve.

- **If 0 in H20**

8. Operate the vehicle within the Conditions for Running the DTC. You may also operate the vehicle within the conditions that you observed from the Freeze Frame/Failure Records data.
   - **If the DTC sets**

     Refer to step 1 above.

   - **If the DTC does not set**
9. All OK.

Repair Instructions

Perform the **Diagnostic Repair Verification** after completing the repair.

- **Evaporative Emission Canister Replacement**
- **Fuel Tank Pressure Sensor Replacement (NU6)** , **Fuel Tank Pressure Sensor Replacement (NT7)**

DTC P0449, P0498, OR P0499

Diagnostic Instructions

- Perform the **Diagnostic System Check - Vehicle** prior to using this diagnostic procedure.
- Review **Strategy Based Diagnosis** for an overview of the diagnostic approach.
- **Diagnostic Procedure Instructions** provides an overview of each diagnostic category.

DTC Descriptors

DTC P0449

Evaporative Emission (EVAP) Vent Solenoid Valve Control Circuit

DTC P0498

Evaporative Emission (EVAP) Vent Solenoid Valve Control Circuit Low Voltage

DTC P0499

Evaporative Emission (EVAP) Vent Solenoid Valve Control Circuit High Voltage

Diagnostic Fault Information

Circuit	Short to Ground	Open/High Resistance	Short to Voltage
B+	P0449, P0498	P0449	-
Control	P0449, P0498	P0449	P0499

Circuit/System Description

Battery voltage is supplied to the evaporative emission (EVAP) vent solenoid valve through a fuse. The engine control module (ECM) grounds the EVAP vent solenoid valve control circuit through an internal switch called a driver. The ECM monitors the status of the driver. A scan tool will display the commanded state of the EVAP vent solenoid valve as ON (Not Venting) or OFF (Venting).

Conditions for Running the DTC

The DTCs run continuously.

Conditions for Setting the DTC

P0449

The ECM detects the EVAP Vent Solenoid Valve control circuit is open within 0.25 s.

P0498

The ECM detects the EVAP Vent Solenoid Valve control circuit is shorted to ground within 0.25 s.

P0499

The ECM detects the EVAP Vent Solenoid Valve control circuit is shorted to voltage within 0.25 s.

Action Taken When the DTC Sets

DTC P0449, P0498 and P0499 are Type B DTCs.

Conditions for Clearing the DTC

DTC P0449, P0498 and P0499 are Type B DTCs.

Reference Information

Schematic Reference

Engine Controls Schematics

Connector End View Reference

COMPONENT CONNECTOR END VIEWS - INDEX

Description and Operation

Evaporative Emission Control System Description

Electrical Information Reference

- **Circuit Testing**
- **Connector Repairs**
- **Testing for Intermittent Conditions and Poor Connections**
- **Wiring Repairs**

DTC Type Reference

Powertrain Diagnostic Trouble Code (DTC) Type Definitions

Scan Tool Reference

Control Module References for scan tool information

Circuit/System Verification

NOTE: An audible click may be heard when performing step 2 below.

1. Ignition ON.
2. Command the EVAP Vent Solenoid Valve to ON (Not Venting) and OFF (Venting) with a scan tool while observing the following control circuit status parameters:
   - EVAP Vent Solenoid Valve Control Circuit Open Test Status
   - EVAP Vent Solenoid Valve Control Circuit Low Voltage Test Status
   - EVAP Vent Solenoid Valve Control Circuit High Voltage Test Status
   - **If Malfunction is displayed**

     Refer to Circuit/System Testing

   - **If Malfunction is not displayed**
3. Verify the EVAP Vent Solenoid Valve control circuit parameters above do not display Malfunction when moving the related harnesses and connectors of the Q13 Evaporative Emission Vent Solenoid Valve.
   - **If Malfunction is displayed**

     Refer to Circuit/System Testing

   - **If Malfunction is not displayed**
4. Operate the vehicle within the Conditions for Running the DTC. You may also operate the vehicle within the conditions that you observed from the Freeze Frame/Failure Records data.
5. Verify the DTC does not set.
   - **If the DTC sets**

     Refer to Circuit/System Testing

- **If the DTC does not set**

6. All OK.

Circuit/System Testing

1. Ignition OFF, disconnect the harness connector at the Q13 Evaporative Emission Vent Solenoid Valve, Ignition ON,
2. Verify that a test lamp illuminates between the B+ circuit terminal B or 2 and ground.
   - **If the test lamp does not illuminate and the circuit fuse is good**
     1. Ignition OFF, remove the test lamp.
     2. Test for less than 2 ohms in the B+ circuit end to end.
        - If 2 ohms or greater, repair the open/high resistance in the circuit.
        - If less than 2 ohms, verify the fuse is not open and there is voltage at the fuse.
   - **If the test lamp does not illuminate and the circuit fuse is open**
     1. Ignition OFF, remove the test lamp.
     2. Test for infinite resistance between the B+ circuit and ground.
        - If less than infinite resistance, repair the short to ground on the circuit.
        - If infinite resistance, test all components connected to the B+ circuit for a short and replace as necessary.
   - **If the test lamp illuminates**
3. Verify that a test lamp does not illuminate between the B+ circuit terminal B or 2 and the control circuit terminal A or 1.
   - **If the test lamp illuminates**
     1. Ignition OFF, remove the test lamp, disconnect the harness connector at the K20 Engine Control Module.
     2. Test for infinite resistance between the control circuit and ground.
        - If less than infinite resistance, repair the short to ground on the circuit.
        - If infinite resistance, replace the K20 Engine Control Module.
   - **If the test lamp does not illuminate**
4. Remove the test lamp.
5. Verify the scan tool EVAP Vent Solenoid Valve Control Circuit High Voltage Test Status parameter is OK when commanding the EVAP Vent Solenoid Valve to ON (Not Venting) with a scan tool.
   - **If OK is not displayed**
     1. Ignition OFF, disconnect the harness connector at the K20 Engine Control Module, Ignition ON.
     2. Test for less than 1 V between the control circuit and ground.
        - If 1 V or greater, repair the short to voltage on the circuit.
        - If less than 1 V, replace the K20 Engine Control Module.
   - **If OK is displayed**
6. Install a 3 A fused jumper wire between the control circuit terminal A or 1 and the B+ circuit terminal B or 2.
7. Verify the scan tool EVAP Vent Solenoid Valve Control Circuit High Voltage Test Status parameter is Malfunction when commanding the EVAP Vent Solenoid Valve to ON (Not Venting) with a scan

tool.

- **If Malfunction is not displayed**

1. Ignition OFF, remove the jumper wire, disconnect the harness connector at the K20 Engine Control Module.
2. Test for less than 2 ohms in the control circuit end to end.
   - If 2 ohms or greater, repair the open/high resistance in the circuit.
   - If less than 2 ohms replace the K20 Engine Control Module.

- **If Malfunction is displayed**

8. Test or replace the Q13 Evaporative Emission Vent Solenoid Valve.

Component Testing

1. Ignition OFF, disconnect the harness connector at the Q13 Evaporative Emission Vent Solenoid Valve.
2. Test for 10-30 ohms between the control terminal A or 1 and the B+ circuit terminal B or 2.
   - **If not between 10-30 ohms**

     Replace the Q13 Evaporative Emission Vent Solenoid Valve.

   - **If between 10-30 ohms**
3. All OK.

Repair Instructions

Perform the **Diagnostic Repair Verification** after completing the repair.

- **Control Module References** for ECM replacement, programming and setup

DTC P0451-P0454

Diagnostic Instructions

- Perform the **Diagnostic System Check - Vehicle** prior to using this diagnostic procedure.
- Review **Strategy Based Diagnosis** for an overview of the diagnostic approach.
- **Diagnostic Procedure Instructions** provides an overview of each diagnostic category.

DTC Descriptors

DTC P0451

Fuel Tank Pressure Sensor Performance

DTC P0452

Fuel Tank Pressure Sensor Circuit Low Voltage

DTC P0453

Fuel Tank Pressure Sensor Circuit High Voltage

DTC P0454

Fuel Tank Pressure Sensor Circuit Intermittent

Diagnostic Fault Information

Circuit	Short to Ground	High Resistance	Open	Short to Voltage	Signal Performance
FTP Sensor 5 V Reference	P018C, P0192, P0452, P0522, P0532, P0641, P2227, P2228	P0451	P0446, P0452	P018D, P0193, P0453, P0523, P0641, P2227	-
FTP Sensor Signal	P0452	P0451	P0452, P0453	P0453	P0451, P0454
FTP Sensor Low Reference	-	P0446, P0451	P0446, P0453, P0463	-	P0451

Typical Scan Tool Data

FTP Sensor Voltage

Circuit	Short to Ground	Open	Short to Voltage
Operating Conditions: Ignition ON, Engine OFF **Parameter Normal Range:** 1.3-1.7 V			
FTP Sensor 5 V Reference	0 V	0 V	4.2-5 V
FTP Sensor Signal	0 V	0 V	5 V
FTP Sensor Low Reference	-	4.5 V	-

Circuit/System Description

The Fuel Tank Pressure (FTP) sensor measures air pressure or vacuum in the evaporative emission (EVAP) system. The engine control module (ECM) supplies a 5 V reference and a low reference circuit to the FTP sensor. The FTP sensor signal voltage varies depending on EVAP system pressure or vacuum. The controller also uses this FTP signal to determine atmospheric pressure for use in the engine-off small leak test, DTC P0442. Before using this signal as an atmospheric reference it must first be re-zeroed.

Conditions for Running the DTC

P0451

- DTC P0451 runs only when the engine-off natural vacuum small leak test, P0442, executes.
- The number of times this test runs can range from 0-2 per engine-off period. The length of the test can be up to 10 min.

P0452 and P0453

DTC P0452 and P0453 run continuously when the ignition is ON.

P0454

- DTC P0454 runs only when the engine-off natural vacuum small leak test, P0442, executes.
- This test can run once per engine-off period. The length of the test can be up to 10 min.
- A refueling event is not detected. A refueling event is confirmed if the fuel level has a persistent change of 10 % for 30 s.

Conditions for Setting the DTC

P0451

This DTC will set if the controller is unable to re-zero the FTP sensor voltage within a calibrated range during the engine-off small leak test, P0442.

P0452

The FTP sensor voltage is less than 0.15 V for more than 10 s.

P0453

The FTP sensor voltage is more than 4.9 V for more than 10 s.

P0454

If, during the engine-off natural vacuum small leak test, P0442, the ECM detects an abrupt FTP signal change, other than a refueling event, this DTC will set. An abrupt change is defined as a change of 0.45 in H2O in the span of 1 s but less than 1 in H2O in 12.5 ms.

Action Taken When the DTC Sets

- DTCs P0451 and P0454 are Type A DTCs.
- DTCs P0452 and P0453 are Type B DTCs.

Conditions for Clearing the MIL/DTC

- DTCs P0451 and P0454 are Type A DTCs.
- DTCs P0452 and P0453 are Type B DTCs.

Diagnostic Aids

P0451 and P0454

- A restriction in the EVAP canister or vent lines could prevent fuel vapor pressure from bleeding off fast enough. If the vent system cannot bleed off pressure fast enough, the re-zero procedure may not complete successfully, which could cause this code to set.

- Ensure that the reference port on the FTP sensor is unobstructed.
- An FTP sensor that is skewed or does not have a linear transition from low to high may cause this code to set. Scan tool output controls, snapshot, and plot functions can help detect erratic sensor response. To test the sensor signal under vacuum conditions, use the Quick Snapshot and the Purge/Seal functions to capture data while commanding purge to 20 %, then plot the data to look for erratic sensor operation. A similar test can be done for the pressure side of the sensor operation by applying pressure with the **GE 41413-A** Evaporative Emission System Tester (EEST) while taking a snapshot.

Reference Information

Schematic Reference

Engine Controls Schematics

Connector End View Reference

COMPONENT CONNECTOR END VIEWS - INDEX

Description and Operation

Evaporative Emission Control System Description

Electrical Information Reference

- **Circuit Testing**
- **Connector Repairs**
- **Testing for Intermittent Conditions and Poor Connections**
- **Wiring Repairs**

DTC Type Reference

Powertrain Diagnostic Trouble Code (DTC) Type Definitions

Scan Tool Reference

Control Module References for scan tool information

Special Tools

GE 41413-A Evaporative Emission System Tester (EEST)

For equivalent regional tools, refer to **Special Tools (Diagnostic Tools)** , **Special Tools (Mechanical Tools)** .

Circuit/System Verification

1. Remove the fuel cap.
2. Ignition ON, engine OFF.

3. Verify the scan tool Fuel Tank Pressure sensor parameter is between 1.3 and 1.7 V.
   - **If not between 1.3-1.7 V**

     Refer to Circuit/System Testing.

   - **If between 1.3-1.7 V**
4. All OK.

Circuit/System Testing

1. Ignition OFF, all vehicle systems OFF, this may take up to 2 min, for all vehicle systems to power down. Disconnect the harness connector at the B150 Fuel Tank Pressure Sensor.
2. Test for less than 5 ohms of resistance between the low reference circuit terminal 2 and ground.
   - **If 5 ohms or greater**
   1. Ignition OFF, disconnect the harness connector at the K20 Engine Control Module.
   2. Test for less than 2 ohms in the low reference circuit end to end.
      - If 2 ohms or greater, repair the open/high resistance in the circuit.
      - If less than 2 ohms, replace the K20 Engine Control Module.
   - **If less than 5 ohms**
3. Ignition ON.
4. Test for 4.8-5.2 V between the 5 V reference circuit terminal 3 and ground.
   - **If less than 4.8 V**
   1. Ignition OFF, disconnect the harness connector at the K20 Engine Control Module.
   2. Test for infinite resistance between the 5 V reference circuit and ground.
      - If less than infinite resistance, repair the short to ground on the circuit.
      - If infinite resistance
   3. Test for less than 2 ohms in the 5 V reference circuit end to end.
      - If 2 ohms or greater, repair the open/high resistance in the circuit.
      - If less than 2 ohms, replace the K20 Engine Control Module.
   - **If greater than 5.2 V**
   1. Ignition OFF, disconnect the harness connector at the K20 Engine Control Module, ignition ON.
   2. Test for less than 1 V between the 5 V reference circuit and ground.
   - If 1 V or greater, repair the short to voltage on the circuit.
   - If less than 1 V, replace the K20 Engine Control Module.
   - **If between 4.8-5.2 V**
5. Verify the scan tool Fuel Tank Pressure parameter is less than 0.2 V.
   - **If 0.2 V or greater**
   1. Ignition OFF, disconnect the harness connector at the K20 Engine Control Module, ignition ON
   2. Test for less than 1 V between the signal circuit terminal 1 and ground.
   - If 1 V or greater, repair the short to voltage on the circuit.
   - If less than 1 V, replace the K20 Engine Control Module.

- **If less than 0.2 V**

6. Install a 3 A fused jumper wire between the signal circuit terminal 1 and the 5 V reference circuit terminal 3.
7. Verify the scan tool Fuel Tank Pressure sensor parameter is greater than 4.7 V.
   - **If 4.7 V or less**
   1. Ignition OFF, disconnect the harness connector at the K20 Engine Control Module.
   2. Test for infinite resistance between the signal circuit terminal 1 and ground.
      - If less than infinite resistance, repair the short to ground on the circuit.
      - If infinite resistance
   3. Test for less than 2 ohms in the signal circuit end to end.
   - If 2 ohms or greater, repair the open/high resistance in the circuit.
   - If less than 2 ohms, replace the K20 Engine Control Module.
   - **If greater than 4.7 V**
8. Test or replace the B150 Fuel Tank Pressure Sensor.

Repair Instructions

Perform the **Diagnostic Repair Verification** after completing the repair.

- **Fuel Tank Pressure Sensor Replacement (FWD)**
- **Control Module References** for ECM replacement, setup, and programming

DTC P0455

Diagnostic Instructions

- Perform the **Diagnostic System Check - Vehicle** prior to using this diagnostic procedure.
- Review **Strategy Based Diagnosis** for an overview of the diagnostic approach.
- **Diagnostic Procedure Instructions** provides an overview of each diagnostic category.

DTC Descriptor

DTC P0455

Evaporative Emission (EVAP) System Large Leak Detected

Circuit/System Description

The engine control module (ECM) tests the evaporative emission (EVAP) system for a large leak or restrictions to the purge path in the EVAP system. When the enabling criteria has been met, the ECM commands the EVAP vent solenoid valve and purge solenoid valve ON, allowing vacuum into the EVAP system. The ECM monitors the fuel tank pressure (FTP) sensor voltage to verify that the system is able to reach a predetermined level of vacuum within a set amount of time.

Conditions for Running the DTC

- DTCs P00C8, P00C9, P010C, P010D, P16A0, P16A1, P16A2, P160E, P160D, P16F3, P0068, P0101,

P0102, P0103, P0111, P0112, P0113, P0114 P0116, P0117, P0118, P0122, P0123, P0125, P0128, P0191, P0192, P0193, P0222, P0223, P0443, P0449, P0452, P0453, P0454, P0502, P0503, P0601, P0604, P0606, P0722, P0723, P1104, P1682, P2100, P2101, P2102, P2103, P2135, P2176, P2227, P2228, P2229, P2230 are not set.

- The ignition voltage is between 11-32 V.
- The barometric pressure (BARO) is greater than 70 kPa.
- The fuel level is between 10-90 %.
- The cold startup engine coolant temperature (ECT) and the startup intake air temperature (IAT) are within 8°C (46°F).
- The startup engine coolant temperature (ECT) is less than 35°C (95°F).
- The startup intake air temperature (IAT) is between 4-30°C (39-86°F).
- DTC P0455 runs once per cold start, for up to 17 min, when the above conditions are met.

Conditions for Setting the DTC

- The EVAP system is not able to achieve or maintain a calibrated level of vacuum within a set amount of time.
- After setting the DTC for the first time, 2 L (0.5 gal) of fuel must be consumed before setting the DTC for the second time.
- With a DTC P0455 detected a weak vacuum follow-up test (fuel cap replacement test) will run and pass if tank vacuum is greater than 2.74 kPa (11 in H2O). This test will run for a maximum of 21 min. This test runs until it passes.

Action Taken When the DTC Sets

DTC P0455 is a Type B DTC.

Conditions for Clearing the MIL/DTC

DTC P0455 is a Type B DTC.

Diagnostic Aids

- Inspect for a loose, missing, damaged, or incorrect fuel fill cap.
- Inspect for a damaged fuel filler neck seal surface.
- A blockage or restriction in the EVAP purge solenoid valve, purge pipe, EVAP canister, or vapor pipe, can cause this DTC to set.
- The EVAP system can be filled with smoke more quickly and completely by opening the system opposite the end where the smoke is injected. For example, when injecting smoke at the service port remove the fuel fill cap, or temporarily leave the vent open, until smoke is observed, then close the system and continue testing. If using a fuel cap adapter at the filler neck, use the **J 41413-VLV** at the service port to allow the system to fill faster.
- To help locate intermittent leaks using the **GE 41413-A** move all EVAP components while observing smoke with the **GE 41413-SPT** .
- Individual components can be isolated and tested using adapters in the **J 41413-300** .
- When servicing the EVAP system, test pressure must not exceed 13 in H20 (0.5 PSI) as pressure in excess of this could cause system components to perform inaccurately.

- A condition may exist where a leak in the EVAP system only exists under a vacuum condition. This type of leak may be detected by using the scan tool Purge/Seal function to create a vacuum in the EVAP system and then observe the FTP Sensor parameter for vacuum decay.

Reference Information

Schematic Reference

Engine Controls Schematics

Connector End View Reference

COMPONENT CONNECTOR END VIEWS - INDEX

Description and Operation

Evaporative Emission Control System Description

Electrical Information Reference

- **Circuit Testing**
- **Connector Repairs**
- **Testing for Intermittent Conditions and Poor Connections**
- **Wiring Repairs**

DTC Type Reference

Powertrain Diagnostic Trouble Code (DTC) Type Definitions

Scan Tool Reference

Control Module References for scan tool information

Special Tools

- **CH 48096** EVAP Service Access Port Tool
- **GE 41415-30** Fuel Tank Cap Adapter
- **GE 41413-A** Evaporative Emissions System Tester (EEST)
- **J 41413-300** EVAP Cap and Plug Kit
- **GE 41413-SPT** High Intensity White Light
- **J 41413-311** EVAP Plug (Brass Nozzle)
- **J 41413-VLV** EVAP Service Port Vent Fitting

For equivalent regional tools, refer to **Special Tools (Diagnostic Tools)** , **Special Tools (Mechanical Tools)**

Circuit/System Testing

NOTE:

- **Larger volume fuel tanks and/or those with lower fuel levels may require several minutes for the floating indicator to stabilize or produce smoke from a leak.**
- **Refer to the GE 41413-A operation manual for detailed instructions in Evaporative Emission System Diagnosis .**

1. Disconnect the purge tube at the quick connector on the EVAP canister side of the purge solenoid valve and install the **CH 48096** .
2. Connect the **GE 41413-A** to the vehicle EVAP service port adapter.
3. Command the EVAP Purge/Seal function to System Seal with a scan tool to seal the EVAP system.
4. Verify that there is no leak in the EVAP system using the flow meter on the **GE 41413-A** , calibrated to 0.51 mm (0.020 in).
   - **If a leak is detected**
     1. Apply smoke to the EVAP system at the service access port adapter with the **GE 41413-A** .
     2. Locate the leak using the **GE 41413-SPT** .
        - When the leak is located, repair or replace the affected component as necessary.
   - **If no leak detected**

NOTE: **The steps below test for a restriction in the purge path.**

5. Connect the **GE 41413-A** nitrogen/smoke hose to the **J 41413-311** .
6. Disconnect the hose at the fuel cap end of the **GE 41415-30** and connect to the **J 41413-311** .
7. Install the **GE 41415-30** , filler neck end only, to the vehicle.
8. Engine idling, command the Purge/Seal function to System Seal with a scan tool to seal the system.
9. Command the EVAP Purge Solenoid Valve to 30 % with a scan tool.
10. Verify the vacuum/pressure gauge on the **GE 41413-A** and the scan tool Fuel Tank Pressure Sensor parameter both show vacuum.
    - **If the vacuum/pressure gauge shows vacuum, and the Fuel Tank Pressure Sensor parameter does not show vacuum**

      Replace the B150 Fuel Tank Pressure Sensor.

    - **If both the Fuel Tank Pressure Sensor parameter and the vacuum/pressure gauge do not show vacuum**

      Repair the restriction in the purge path.

11. Verify that the Fuel Tank Pressure Sensor parameter increases to greater than 3.2 V, and the pressure values are similar between the scan tool Fuel Tank Pressure Sensor and the vacuum/pressure gauge on the **GE 41413-A** .
    - **If not within the specified range**

      Replace the B150 Fuel Tank Pressure Sensor.

    - **If within the specified range**

12. All OK

Repair Instructions

Perform the **Diagnostic Repair Verification** after completing the repair.

- **Fuel Tank Pressure Sensor Replacement (FWD)**
- **Control Module References** for ECM replacement, programming and setup

DTC P0496

Diagnostic Instructions

- Perform the **Diagnostic System Check - Vehicle** prior to using this diagnostic procedure.
- Review **Strategy Based Diagnosis** for an overview of the diagnostic approach.
- **Diagnostic Procedure Instructions** provides an overview of each diagnostic category.

DTC Descriptor

DTC P0496

Evaporative Emission (EVAP) System Flow During Non-Purge

Circuit/System Description

This DTC tests for undesired intake manifold vacuum flow to the evaporative emission (EVAP) system. The engine control module (ECM) seals the EVAP system by commanding the EVAP purge solenoid valve OFF and the vent solenoid valve ON. The ECM monitors the fuel tank pressure (FTP) sensor to determine if a vacuum is being drawn on the EVAP system. If vacuum in the EVAP system is more than a predetermined value within a predetermined time, this DTC sets.

The following table illustrates the relationship between the ON and OFF states, and the Open or Closed states of the EVAP purge and vent solenoid valves.

ECM Command	EVAP Purge Solenoid Valve	EVAP Vent Solenoid Valve
ON	Open	Closed
OFF	Closed	Open

Conditions for Running the DTC

- DTCs P00C8, P00C9, P010C, P010D, P16A0, P16A1, P16A2, P160E, P160D, P16F3, P0068, P0101, P0102, P0103, P0111, P0112, P0113, P0114 P0116, P0117, P0118, P0122, P0123, P0125, P0128, P0191, P0192, P0193, P0222, P0223, P0443, P0449, P0452, P0453, P0454, P0502, P0503, P0601, P0604, P0606, P0722, P0723, P1104, P1682, P2100, P2101, P2102, P2103, P2135, P2176, P2227, P2228, P2229, P2230 are not set.
- The ignition voltage is between 11-32 V.
- The engine OFF time is greater than 8 h,
- The barometric pressure (BARO) is greater than 70 kPa.

- The fuel level is between 10-90 %.
- The startup engine coolant temperature (ECT) is less than 35°C (95°F).
- The startup intake air temperature (IAT) is between 4-30°C (39-86°F).
- DTC P0496 runs once per cold start, for up to 17 min, when the above conditions are met.

Conditions for Setting the DTC

The ECM detects more than 10 in H2O vacuum for 5 s during a non-purge condition.

Action Taken When the DTC Sets

DTC P0496 is a Type B DTC.

Conditions for Clearing the MIL/DTC

DTC P0496 is a Type B DTC.

Diagnostic Aids

An intermittent condition could be caused by an improperly installed or damaged EVAP purge solenoid valve or by a temporary blockage or restriction in the EVAP purge solenoid valve.

Reference Information

Schematic Reference

Engine Controls Schematics

Connector End View Reference

COMPONENT CONNECTOR END VIEWS - INDEX

Description and Operation

Evaporative Emission Control System Description

Electrical Information Reference

- **Circuit Testing**
- **Connector Repairs**
- **Testing for Intermittent Conditions and Poor Connections**
- **Wiring Repairs**

DTC Type Reference

Powertrain Diagnostic Trouble Code (DTC) Type Definitions

Scan Tool Reference

Control Module References for scan tool information

Circuit/System Verification

1. Operate the vehicle within the conditions for running the DTC. You may also operate the vehicle within the conditions that you observed from the freeze frame/failure records data.
2. Verify the DTC does not set.
   - **If the DTC sets**

     Refer to Circuit/System Testing

   - **If the DTC does not set**
3. All OK

Circuit/System Testing

1. Ignition ON, engine OFF.
2. Seal the EVAP system using the Purge/Seal function with a scan tool.
3. Start the engine.
4. Observe the FTP sensor with a scan tool. The FTP sensor parameter should be less than 1.7 V after 90 s.
   - **If not within specifications**

     Replace the Q12 Evaporative Emission Purge Solenoid Valve

   - **If within Specifications**
5. All OK

Repair Instructions

Perform the **Diagnostic Repair Verification** after completing the diagnostic procedure.

Evaporative Emission Canister Purge Solenoid Valve Replacement

DTC P0506 OR P0507

Diagnostic Instructions

- Perform the **Diagnostic System Check - Vehicle** prior to using this diagnostic procedure.
- Review **Strategy Based Diagnosis** for an overview of the diagnostic approach.
- **Diagnostic Procedure Instructions** provides an overview of each diagnostic category.

DTC Descriptors

DTC P0506

Idle Speed Low

DTC P0507

Idle Speed High

Circuit/System Description

The throttle actuator control (TAC) motor is a DC motor that is part of the throttle body assembly. The TAC motor drives the throttle valve. The engine control module (ECM) controls the TAC motor based on throttle position sensor input. The idle speed is controlled by the ECM based on various inputs. The ECM commands the TAC motor to open or close the throttle valve in order to maintain the desired idle speed.

Conditions for Running the DTC

- DTCs P0068, P0101, P0102, P0103, P0112, P0113, P0117, P0118, P0121, P0122, P0123, P0171, P0172, P0201-P204, P0222, P0223, P0261, P0262, P0264, P0265, P0267, P0268. P0270, P0271, P0300-P0304, P0351-P0354, P0461-P0464, P0496, P0627, P0628, P0629, P0722, P1248, P1249, P124A, P124B, P1516, P2066-P2068, P2147, P2148, P2150, P2151, P2153, P2154, P2156, or P2157 are not set.
- The barometric pressure (BARO) is greater than 70 kPa.
- The engine coolant temperature (ECT) is greater than 60°C (140°F).
- The engine run time is greater than 60 s.
- The ignition voltage is greater than 11 V but less than 18 V.
- The transmission is not changing gears.
- The torque converter clutch (TCC) is not changing states.
- The intake air temperature (IAT) is warmer than -20°C (-4°F).
- The vehicle speed is less than 3 km/h (2 mph).
- The commanded engine speed is steady within 25 RPM.
- The engine is idling for greater than 10 s.
- The DTCs run when the above conditions are met.

Conditions for Setting the DTC

P0506

The actual engine speed is 100 RPM less than the desired idle speed for 10 s.

P0507

The actual engine speed is 200 RPM greater than the desired idle speed for 10 s.

Action Taken When the DTC Sets

DTCs P0506 and P0507 are Type B DTCs.

Conditions for Clearing the DTC

DTCs P0506 and P0507 are Type B DTCs.

Reference Information

Schematic Reference

Engine Controls Schematics

Connector End View Reference

COMPONENT CONNECTOR END VIEWS - INDEX

Description and Operation

Throttle Actuator Control (TAC) System Description

Electrical Information Reference

- **Circuit Testing**
- **Connector Repairs**
- **Testing for Intermittent Conditions and Poor Connections**
- **Wiring Repairs**

DTC Type Reference

Powertrain Diagnostic Trouble Code (DTC) Type Definitions

Scan Tool Reference

Control Module References for scan tool information

Circuit/System Verification

1. Ignition ON.
2. Verify no other DTCs set.
   - **If any other DTC is set**

     Refer to **Diagnostic Trouble Code (DTC) List - Vehicle** for further diagnosis.

   - **If no other DTC is set**
3. Verify the scan tool Throttle Body Idle Airflow Compensation parameter is less than 90 %.
   - **90 % or greater**

     Refer to **Throttle Body Cleaning** .

   - **If less than 90 %**
4. Engine Idling at the normal operating temperature.
5. Verify the actual Engine Speed is not 100 RPM less than the Desired Idle Speed.
   - **If 100 RPM less than the Desired Idle Speed**

Refer to Circuit/System Testing.

- **If 100 RPM greater than the Desired Idle Speed**

6. Verify the actual Engine Speed is not 200 RPM greater than the Desired Idle Speed.
   - **If 200 RPM greater than the Desired Idle Speed**

     Refer to Circuit/System Testing.

   - **If 200 RPM less than the Desired Idle Speed**
7. Operate the vehicle within the Conditions for Running the DTC. You may also operate the vehicle within the conditions that you observed from the Freeze Frame/Failure Records data.
8. Verify the DTC does not set.
   - **If the DTC sets**

     Refer to Circuit/System Testing.

   - **If the DTC does not set**
9. All OK

Circuit/System Testing

P0506

1. Verify the conditions listed below do not exist.
   - Restricted exhaust
   - Mechanical conditions that limits engine speed
   - Parasitic load on the engine-For example, a transmission condition, a belt driven accessory condition.
   - **If a condition is found**

     Repair as necessary.

   - **If a condition is not found**
2. All OK.

P0507

1. Verify the conditions listed below do not exist.
   - Vacuum leaks
   - A throttle valve that does not close correctly
   - Verify the correct operation of the crankcase ventilation system. Inspect for the conditions listed below:
     - Improper routing of the positive crankcase ventilation (PCV) system
     - Vacuum leaks in the PCV system-Refer to **Crankcase Ventilation System Inspection/Diagnosis (Without Turbocharger)** .
   - **If a condition is found**

Repair as necessary.

- **If a condition is not found**

2. All OK.

Repair Instructions

Perform the **Diagnostic Repair Verification** after completing the repair.

Throttle Body Assembly Replacement

DTC P050D

Diagnostic Instructions

- Perform the **Diagnostic System Check - Vehicle** prior to using this diagnostic procedure.
- Review **Strategy Based Diagnosis** for an overview of the diagnostic approach.
- **Diagnostic Procedure Instructions** provides an overview of each diagnostic category.

DTC Descriptor

DTC P050D

Cold Start Rough Idle

Circuit/System Description

During a cold start, the engine control module (ECM) commands dual-pulse mode during Open Loop operation to improve cold start emissions. In dual-pulse mode, the injectors are energized twice during each injection event. As with misfire diagnosis, in dual-pulse mode the ECM monitors the crankshaft position sensor and the camshaft position sensors to calculate crankshaft rotation speed. In normal operation, optimum fuel delivery during dual-pulse mode produces a steady crankshaft rotation speed. If the variations exceed a calibrated value, the code will be set.

Conditions for Running the DTC

- DTCs P0010, P0011, P0013, P0014, P0090, P0091, P0092, P00C8, P00C9, P00CA, P0101-P0103, P0106-P0108, P0112, P0113, P0116-P0118, P0122, P0123, P0128, P0171, P0172, P0192, P0193, P0201- P0204, P0222, P0223, P0261, P0262, P0264, P0265, P0267, P0268, P0270, P0271, P0300, P0301-P0304, P0335, P0336, P0351-P0354, P0506, P0507, P0627-P0629, P0722, P0723, P1248, P1249, P124A, P124B, P2122, P2123, P2127, P2128, P2135, P2147, P2148, P2150, P2151, P2153, P2154, P2156, P2157 are not set.
- The catalyst temperature is less than 500°C (932°F).
- The engine coolant temperature is warmer than -10°C (14°F).
- The barometric pressure is greater than 60 kPa.
- The engine speed is between 250-1900 RPM.
- The engine is running and a cold start has been detected.
- DTC P050D runs once per cold start.

Conditions for Setting the DTC

This DTC will set if the ECM detects variations in crankshaft rotation speed caused by the lack of adequate fuel delivery during dual-pulse mode.

Action Taken When the DTC Sets

- DTC P050D is a Type B DTC.
- The ECM disables dual pulse mode and energizes the fuel injector as it would for a warm engine.

Conditions for Clearing the DTC

DTC P050D is a Type B DTC.

Diagnostic Aids

- This DTC may be set with a misfire DTC, however the existence of this DTC is a higher priority and indicates the condition to diagnose is related to fuel and/or injectors, not the ignition/spark system.
- A restricted fuel injector may cause this DTC to set.
- High resistance in the circuits of the injectors could set this DTC without setting an injector DTC. Test the injector circuits of the affected cylinders for a high resistance if you suspect a condition.
- A drop in system voltage during cold start may set this DTC.

Reference Information

Schematic Reference

Engine Controls Schematics

Connector End View Reference

COMPONENT CONNECTOR END VIEWS - INDEX

Electrical Information Reference

- **Circuit Testing**
- **Connector Repairs**
- **Testing for Intermittent Conditions and Poor Connections**
- **Wiring Repairs**

DTC Type Reference

Powertrain Diagnostic Trouble Code (DTC) Type Definitions

Scan Tool Reference

Control Module References for scan tool information

Circuit/System Testing

NOTE: Circuit/System Testing requires cold start. Do not start vehicle prior to connecting scan tool and preparing to evaluate the condition during engine crank.

1. Start the engine and observe the Cylinder 1-4 Current Misfire Counters during first 500 engine cycles. The Cylinder 1-4 Current Misfire Counters should not be incrementing.
   - If the misfire counters are incrementing on one or more cylinders, verify that the following conditions do not exist:
   - Fuel pressure that is too low or too high-Refer to **Fuel System Diagnosis**.
   - Contaminated fuel-Refer to **Alcohol/Contaminants-in-Fuel Diagnosis**.
2. If all conditions test normal, replace fuel injectors as indicated by high misfire counts.

Repair Instructions

Direct Fuel Injector Replacement

Repair Verification

NOTE: Repair Verification requires cold start.

1. Ignition ON, engine OFF, clear the DTCs with a scan tool.
2. Start the engine.
3. Verify the DTC does not reset.

DTC P057B-P057D

Diagnostic Instructions

- Perform the **Diagnostic System Check - Vehicle** prior to using this diagnostic procedure.
- Review **Strategy Based Diagnosis** for an overview of the diagnostic approach.
- **Diagnostic Procedure Instructions** provides an overview of each diagnostic category.

DTC Descriptors

DTC P057B

Brake Pedal Position Sensor Performance

DTC P057C

Brake Pedal Position Sensor Circuit Low Voltage

DTC P057D

Brake Pedal Position Sensor Circuit High Voltage

Diagnostic Fault Information

Circuit	Short to Ground	Open/High Resistance	Short to Voltage	Signal Performance
Signal	P057C	P057C	P057D	P057B
5 V Reference	P057C P0651	P057C	P057D, P0651	-
Low Reference	-	P057D	P057D	-

Typical Scan Tool Data

Brake Pedal Position Sensor

Circuit	Short to Ground	Open	Short to Voltage
Operating Conditions: Ignition ON. **Brake Pedal Position Sensor Parameter Normal Range:** 0.25-4.75 V			
5 V Reference	0 V	0 V	-
Signal	0 V	0 V	5 V
Low Reference	-	5 V	-

Circuit/System Description

The brake pedal position (BPP) sensor is part of the engine brake pedal override feature. The engine control module (ECM) continuously monitors the vehicle speed and the position of the brake pedal. These two main inputs, along with other ECM inputs are used to determine if the vehicle is decelerating at the proper speed and rate with the brake pedal applied. When the engine brake pedal override system is active, the ECM reduces engine torque to assist in reducing vehicle speed.

The BPP sensor is a six wire sensor, and is part of a dual brake position sensor. One BPP Sensor is used for the stop lamps and the other BPP Sensor is used for the engine brake pedal override feature. The BPP Sensor for engine brake pedal override communicates with the ECM. The ECM supplies a 5 V reference circuit, low reference circuit, and signal circuit to the BPP sensor. The BPP sensor sends a voltage signal to the ECM on the signal circuit. The voltage on the signal circuit will vary from a voltage greater than 0.25 V when the brake pedal is released to a voltage less than 4.75 V when the brake pedal is fully applied.

For information on the Stop Lamps side of the BPP Sensor, refer to **Exterior Lighting Systems Description and Operation** .

Conditions for Running the DTC

- Ignition voltage is greater than 10 V.
- DTC runs continuously when above condition is met.

Conditions for Setting the DTC

P057B

ECM detects the BPP sensor signal is stuck in a range.

P057C

ECM detects the BPP sensor voltage is less than 0.25 V for 1 s.

P057D

ECM detects the BPP sensor voltage is greater than 4.75 V for 1 s.

Action Taken When the DTC Sets

- P057B, P057C, and P057D are Type A DTCs.
- Engine torque is reduced to 50% of available engine torque during brake torque management.
- Brake torque management is active at 25 kPa (3.7 PSI) of brake apply pressure.

Conditions for Clearing the DTC

P057B, P057C, and P057D are Type A DTCs

Reference Information

Schematic Reference

- **Engine Controls Schematics**
- **Exterior Lights Schematics**

Connector End View Reference

- **COMPONENT CONNECTOR END VIEWS - INDEX**
- **INLINE HARNESS CONNECTOR END VIEWS - INDEX**

Electrical Information Reference

- **Circuit Testing**
- **Connector Repairs**
- **Testing for Intermittent Conditions and Poor Connections**
- **Wiring Repairs**

DTC Type Reference

Powertrain Diagnostic Trouble Code (DTC) Type Definitions

Scan Tool Reference

Control Module References for scan tool information

Circuit/System Verification

1. Verify DTC P0641, P0651, P0697, or P06A3 is not set.
    - **If any of the DTCs are set**

Refer to **Diagnostic Trouble Code (DTC) List - Vehicle** .

- **If none of the DTCs are set**

2. Ignition ON, transmission in Park, and service brake pedal released.
3. Verify the scan tool Brake Pedal Position Sensor parameter in the ECM displays greater than 0.25 V.
   - **If 0.25 V or less**

     Refer to Circuit/System Testing.

   - **If greater than 0.25 V**
4. Verify the scan tool Brake Pedal Position Sensor parameter voltage changes as the brake pedal is applied and displays less than 4.75 V when the brake pedal is fully applied.
   - **If the voltage does not change, or is greater than 4.74 V**

     Refer to Circuit/System Testing.

   - **If the voltage changes and less than 4.75 V**
5. Verify the scan tool Brake Pedal Position Sensor Learned Release Position parameter is within 0.1 V of the Brake Pedal Position Sensor parameter when the brake pedal is fully released.
   - **If difference is greater than 0.1 V**

     Perform the **Brake Pedal Position Sensor Learn** .

   - **If difference is 0.1 V or less**
6. Verify the Brake Pedal Position Sensor parameter transitions smoothly without any spikes or dropouts when slowly applying and releasing the brake pedal.
   - **If parameter does not transition smoothly or has spikes or dropouts**

     Refer to Circuit/System Testing.

   - **If parameter transitions smoothly and there are no spikes or dropouts**
7. Operate the vehicle within the Conditions for Running the DTC. You may also operate the vehicle within the conditions that you observed from the Freeze Frame/Failure Records data.
8. Verify the DTC does not set.
   - **If the DTC sets**

     Refer to Circuit/System Testing.

   - **If the DTC does not set**
9. All OK.

Circuit/System Testing

NOTE: You must perform the Circuit/System Verification first.

1. Ignition OFF and all vehicle systems OFF, disconnect the harness connector at the B22 Brake Pedal Position Sensor. It may take up to 2 minutes for all vehicle systems to power down.

NOTE: **All terminal references are for the vehicle harness brake pedal position sensor connector.**

2. Test for less than 10 ohms between the low reference circuit terminal 5 and ground.
   - **If 10 ohms or greater**
   1. Disconnect the harness connector at the K20 Engine Control Module.
   2. Test for less than 2 ohms in the low reference circuit end to end.
      - If 2 ohms or greater, repair the open/high resistance in the circuit.
      - If less than 2 ohms, replace the K20 Engine Control Module.
   - **If less than 10 ohms**
3. Ignition ON.
4. Test for 4.8-5.2 V between the 5 V reference circuit terminal 6 and ground.
   - **If less than 4.8 V**
   1. Ignition OFF, disconnect the harness connector at the K20 Engine Control Module.
   2. Test for infinite resistance between the 5 V reference circuit and ground.
      - If less than infinite resistance, repair the short to ground on the circuit.
      - If infinite resistance.
   3. Test for less than 2 ohms in the 5 V reference circuit end to end.
      - If 2 ohms or greater, repair the open/high resistance in the circuit.
      - If less than 2 ohms, replace the K20 Engine Control Module.
   - **If greater than 5.2 V**
   1. Ignition OFF, disconnect the harness connector at the K20 Engine Control Module, ignition ON.
   2. Test for less than 1 V between the 5 V reference circuit and ground.
      - If 1 V or greater, repair the short to voltage on the circuit.
      - If less than 1 V, replace the K20 Engine Control Module.
   - **If between 4.8-5.2 V**
5. Verify the scan tool Brake Pedal Position Sensor parameter is less than 0.25 V.
   - **If 0.25 V or greater**
   1. Ignition OFF, disconnect the harness connector at the K20 Engine Control Module, ignition ON.
   2. Test for less than 0.25 V between the signal circuit terminal 4 and ground.
      - If 0.25 V or greater, repair the short to voltage on the circuit.
      - If less than 0.25 V, replace the K20 Engine Control Module.
   - **If less than 0.25 V**
6. Install a 3 A fused jumper wire between the signal circuit terminal 4 and the 5 V reference circuit terminal 6.
7. Verify the scan tool Brake Pedal Position Sensor parameter is greater than 4.8 V.
   - **If 4.8 V or less**
   1. Ignition OFF, remove the jumper wire, and disconnect the harness connector at the K20 Engine Control Module.

2. Test for infinite resistance between the signal circuit terminal 4 and ground.
   - If less than infinite resistance, repair the short to ground on the circuit.
   - If infinite resistance.
3. Test for less than 2 ohms in the signal circuit end to end.
   - If 2 ohms or greater, repair the open/high resistance in the circuit.
   - If less than 2 ohms, replace the K20 Engine Control Module.
   - **If greater than 4.8 V**

8. Replace the B22 Brake Pedal Position Sensor.

Repair Instructions

Perform the **Diagnostic Repair Verification** after completing the repair.

- **Brake Pedal Position Sensor Replacement**
- Perform the **Brake Pedal Position Sensor Learn** following the replacement of the ECM or BPP sensor, or any repair that effects the BPP sensor alignment.
- **Control Module References** for Engine Control Module replacement, programming and setup.

DTC P0601-P0604, P0606, P062B, P062F, P0630, P16F3, OR P262B (ECM)

Diagnostic Instructions

- Perform the **Diagnostic System Check - Vehicle** prior to using this diagnostic procedure.
- Review **Strategy Based Diagnosis** for an overview of the diagnostic approach.
- **Diagnostic Procedure Instructions** provides an overview of each of the diagnostic category.

DTC Descriptors

DTC P0601

Control Module Read Only Memory Performance

DTC P0602

Control Module Not Programmed

DTC P0603

Control Module Long Term Memory Reset

DTC P0604

Control Module Random Access Memory Performance

DTC P0606

Control Module Processor Performance

DTC P062B

Control Module Fuel Injector Control Performance

DTC P062F

Control Module Long Term Memory Performance

DTC P0630

VIN Not Programmed or Mismatched - Engine Control Module (ECM)

DTC P16F3

Control Module Redundant Memory Performance

DTC P262B

Control Module Power Off Timer Performance

Circuit/System Description

This diagnostic applies to internal microprocessor integrity conditions within the engine control module (ECM). This diagnostic also addresses if the ECM is not programmed.

Conditions for Running the DTCs

P0601, P0602, P0630

These DTCs run continuously when the ignition is in ON.

P0603, P062F

These DTCs run during ECM power up.

P0604

DTC P0604 runs continuously when the ignition is ON for greater than 30 s.

P0606, P062B

These DTCs run continuously when Ignition 1 Signal voltage is greater than 11 V.

P16F3

- The engine speed is greater than 625 RPM.
- DTCs P0101, P0102, P0103, P0106, P0107, P0108, P2227, P2228, P2229, or P2230 are not set.
- DTC P16F3 runs continuously when the above conditions are met.

P262B

DTC P262B runs during ECM power down.

Conditions for Setting the DTCs

The ECM detects an internal failure or incomplete programming for more than 10 s.

Actions Taken When the DTC Sets

- DTCs P0601, P0602, P0603, P0604, P0606, P062B, P0630, and P16F3 are Type A DTCs.
- DTCs P062F and P262B are Type B DTCs.

Conditions for Clearing the MIL/DTC

- DTCs P0601, P0602, P0603, P0604, P0606, P062B, P0630, and P16F3 are Type A DTCs.
- DTCs P062F and P262B are Type B DTCs.

Diagnostic Aids

Low voltage or a momentary loss of power or ground to the ECM may cause a DTC to set. Verify the following:

- The battery cables are clean and tight, and the battery is fully charged. Refer to **Battery Inspection/Test** .
- The ECM ground circuits do not have an open or high resistance.
- The ECM power circuits do not have an open, short to ground, or high resistance.

Reference Information

Schematic Reference

Engine Controls Schematics

Connector End View Reference

COMPONENT CONNECTOR END VIEWS - INDEX

Component View Reference

Powertrain Component Views

Electrical Information Reference

- **Circuit Testing**
- **Connector Repairs**
- **Testing for Intermittent Conditions and Poor Connections**
- **Wiring Repairs**

DTC Type Reference

Powertrain Diagnostic Trouble Code (DTC) Type Definitions

Scan Tool Reference

Control Module References for scan tool information

Circuit/System Verification

1. Ignition ON, clear the DTC information with a scan tool. Observe the DTC information with a scan tool.
2. Verify that DTC P0641, P0651, P0697, or P06A3 does not set.
   - **If any of the DTCs are set**

     Refer to **DTC P0641, P0651, P0697, or P06A3 (ECM)** for further diagnosis.

   - **If none of the DTCs are set**
3. Observe the DTC information with a scan tool. Verify DTC P0602 or P0630 is not set.
   - **If any of the DTCs are set**
     1. Program the K20 Engine Control Module. Refer to **Control Module References** .
     2. Verify DTC P0602 or P0630 is not set.
        - If any of the DTCs are set, replace the K20 Engine Control Module.
        - If none of the DTCs are set
     3. All OK.
   - **If none of the DTCs are set**
4. Verify DTC P0601, P0603, P0604, P0606, P062B, P062F, P16F3, or P262B is not set.
   - **If any of the DTCs are set**

     Replace the K20 Engine Control Module.

   - **If none of the DTCs are set**
5. All OK.

Repair Instructions

Perform the **Diagnostic Repair Verification** after completing the repair.

Control Module References for engine control module replacement, programming and setup.

DTC P0601-P0606, P060A, P062F, OR P262B (CHASSIS CONTROL MODULE)

Diagnostic Instructions

- Perform the **Diagnostic System Check - Vehicle** prior to using this diagnostic procedure.
- Review **Strategy Based Diagnosis** for an overview of the diagnostic approach.
- **Diagnostic Procedure Instructions** provides an overview of each diagnostic category.

DTC Descriptors

DTC P0601

Control Module Read Only Memory Performance

DTC P0602

Control Module Not Programmed

DTC P0603

Control Module Long Term Memory Reset

DTC P0604

Control Module Random Access Memory Performance

DTC P0606

Control Module Processor Performance

DTC P062F

Control Module Long Term Memory Performance

Circuit/System Description

The internal fault detection is handled inside the chassis control module. No external circuits are involved.

Conditions for Running the DTC

The chassis control module runs the program to detect an internal fault when power up is commanded. The only requirements are voltage and ground. This program runs even if the voltage is out of the valid operating range.

Conditions for Setting the DTC

The chassis control module has detected an internal malfunction.

Action Taken When the DTC Sets

DTC P0601, P0602, P0603, P0604, P0606 and P062F are type A DTCs.

Conditions for Clearing the DTC

DTC P0601, P0602, P0603, P0604, P0606 and P062F are type A DTCs.

Reference Information

Description and Operation

Engine Controls Schematics

Electrical Information Reference

- **Circuit Testing**
- **Connector Repairs**
- **Testing for Intermittent Conditions and Poor Connections**
- **Wiring Repairs**

DTC Type Reference

Powertrain Diagnostic Trouble Code (DTC) Type Definitions

Circuit/System Verification

NOTE: **This DTC may be stored as a history DTC without affecting the operation of the module. If stored only as a history DTC and not retrieved as a current DTC, do not replace the K38 Chassis Control Module.**

1. Ignition ON.
2. Verify DTC P0602 is not set.
   - **If DTC P0602 is set**
   1. Program the K38 Chassis Control Module.
   2. Verify the DTC does not set.
      - If the DTC sets, replace the K38 Chassis Control Module.
      - If the DTC does not set.
   3. All OK.
   - **If DTC P0602 is not set**
3. Verify DTCs P0601, P0603, P0604, P0606, and P062F are not set.
   - **If any of the DTCs are set**
   1. Program the K38 Chassis Control Module.
   2. Verify the DTC does not set.
      - If the DTC sets, replace the K38 Chassis Control Module.
      - If the DTC does not set.
   3. All OK.
   - **If none of the DTCs are set**
4. All OK

Repair Instructions

Perform the **Diagnostic Repair Verification** after completing the repair.

Control Module References for chassis control module replacement, programming and setup.

DTC P0628 (LEA)

Diagnostic Instructions

- Perform the **Diagnostic System Check - Vehicle** prior to using this diagnostic procedure.
- Review **Strategy Based Diagnosis** for an overview of the diagnostic approach.
- **Diagnostic Procedure Instructions** provides an overview of each diagnostic category.

DTC Descriptor

DTC P0628

Fuel Pump Enable Circuit Low Voltage

Diagnostic Fault Information

Circuit	Short to Ground	Open/High Resistance	Short to Voltage	Signal Performance
Control	P0171, P0506, P0628, P12A6	P0171, P0506, P12A6	-	P12A6

Circuit/System Description

The engine control module (ECM) provides ignition voltage to the fuel pump power control module whenever the engine is cranking or running. The control module enables the fuel pump power control module as long as the engine is cranking or running, and ignition system reference pulses are received. While this enable voltage is being received, the fuel pump power control module supplies a varying voltage to the in-tank fuel pump module in order to maintain the desired fuel line pressure.

Conditions for Running the DTC

- The engine speed is greater than 0 RPM.
- The ignition voltage is greater than 11 V.
- The fuel pump enable circuit is commanded ON.
- The DTC runs continuously when the conditions above are met.

Conditions for Setting the DTC

The ECM detects that the commanded state of the driver and the actual state of the control circuit do not match for greater than 2 s.

Action Taken When the DTC Sets

DTC P0628 is a Type B DTC.

Conditions for Clearing the DTC

DTC P0628 is a Type B DTC.

Reference Information

Schematic Reference

Engine Controls Schematics

Connector End View Reference

COMPONENT CONNECTOR END VIEWS - INDEX

Description and Operation

Fuel System Description

Electrical Information Reference

- **Circuit Testing**
- **Connector Repairs**
- **Testing for Intermittent Conditions and Poor Connections**
- **Wiring Repairs**

DTC Type Reference

Powertrain Diagnostic Trouble Code (DTC) Type Definitions

Scan Tool Reference

Control Module References for scan tool information

Circuit/System Verification

1. Ignition ON.
2. Verify that DTC P0628 is not set.
   - **If a DTC is set**

     Refer to Circuit/System Testing.

   - **If a DTC is not set**
3. Verify the parameters listed below do not display Malfunction when commanding the Fuel Pump Enable On and Off with a scan tool.
   - Fuel Pump Enable Circuit Low Voltage Test Status
   - Fuel Pump Enable Circuit Open Test Status
   - Fuel Pump Enable Circuit High Voltage Test Status
   - **If Malfunction is displayed**

     Refer to Circuit/System Testing.

   - **If Malfunction is not displayed**
4. Operate the vehicle within the Conditions for Running the DTC. You may also operate the vehicle

within the conditions that you observed from the Freeze Frame/Failure Records data.

5. Verify the DTC does not set.
   - **If the DTC sets**

     Refer to Circuit/System Testing.

   - **If the DTC does not set**
6. All OK.

Circuit/System Testing

1. Ignition OFF, disconnect the Fuel Pump Power Control Module harness connector.
2. Ignition ON for 10 s.
3. Verify that a test lamp does not illuminate between the control circuit terminal 2 and ground.
   - **If the test lamp illuminates**
   1. Ignition OFF, remove the test lamp, disconnect the harness connector at the K20 Engine Control Module, ignition ON.
   2. Test for less than 1 V between the control circuit and ground.
      - If 1 V or greater, repair the short to voltage on the circuit.
      - If less than 1 V, replace the K20 Engine Control Module.
   - **If the test lamp does not illuminate**
4. Remove the test lamp.
5. Verify the scan tool Fuel Pump Enable Circuit Low Voltage Test Status parameter is OK when commanding the Fuel Pump Enable On with a scan tool.
   - **If OK is not displayed**
   1. Ignition OFF, disconnect the harness connector at the K20 Engine Control Module.
   2. Test for infinite resistance between the control circuit and ground.
      - If less than infinite resistance, repair the short to ground on the circuit.
      - If infinite resistance, replace the K20 Engine Control Module.
   - **If OK is displayed**
6. Install a 3 A fused jumper wire between the control circuit terminal 2 and ground.
7. Verify the scan tool Fuel Pump Enable Circuit Low Voltage Test Status parameter is Malfunction when commanding the Fuel Pump Enable On with a scan tool.
   - **If Malfunction is not displayed**
   1. Ignition OFF, remove the jumper wire, disconnect the harness connector at the K20 Engine Control Module.
   2. Test for less than 2 ohms in the control circuit end to end.
      - If 2 ohms or greater, repair the open/high resistance in the circuit.
      - If less than 2 ohms, replace the K20 Engine Control Module.
   - **If Malfunction is displayed**
8. Replace the Fuel Pump Power Control Module.

Repair Instructions

Perform the **Diagnostic Repair Verification** after completing the diagnostic procedure.

- **Fuel Pump Power Control Module Replacement**
- **Control Module References** for Engine Control Module replacement, setup, and programming

DTC P0628 (LUK)

Diagnostic Instructions

- Perform the **Diagnostic System Check - Vehicle** prior to using this diagnostic procedure.
- Review **Strategy Based Diagnosis** for an overview of the diagnostic approach.
- **Diagnostic Procedure Instructions** provides an overview of each diagnostic category.

DTC Descriptor

DTC P0628

Fuel Pump Enable Circuit Low Voltage

Diagnostic Fault Information

Circuit	Short to Ground	Open/High Resistance	Short to Voltage	Signal Performance
Fuel Pump Enable	P025A, P0628, P069E	P025A, P069E	P025A, P069E	-

Circuit/System Description

The engine control module (ECM) provides ignition voltage to the chassis control module whenever the engine is cranking or running. The control module enables the chassis control module as long as the engine is cranking or running, and ignition system reference pulses are received. While this enable voltage is being received, the chassis control module supplies a varying voltage to the in-tank fuel pump module in order to maintain the desired fuel line pressure.

Conditions for Running the DTC

- The engine speed is greater than 0 RPM.
- The ignition voltage is greater than 11 V.
- The DTC runs continuously when the conditions above are met.

Conditions for Setting the DTC

- The ECM detects that the commanded state of the driver and the actual state of the control circuit do not match.
- The above condition is met for a minimum of 2.5 s.

Action Taken When the DTC Sets

DTC P0628 is a Type B DTC.

Conditions for Clearing the DTC

DTC P0628 is a Type B DTC.

Reference Information

Schematic Reference

Engine Controls Schematics

Connector End View Reference

COMPONENT CONNECTOR END VIEWS - INDEX

Electrical Information Reference

- **Circuit Testing**
- **Connector Repairs**
- **Testing for Intermittent Conditions and Poor Connections**
- **Wiring Repairs**

DTC Type Reference

Powertrain Diagnostic Trouble Code (DTC) Type Definitions

Scan Tool Reference

Control Module References for scan tool information

Circuit/System Verification

1. Attempt to start the engine. Observe the DTC information with a scan tool. DTC P0628 should not set.
2. Ignition ON, command the Fuel Pump Enable ON and OFF with a scan tool while observing the following control circuit status parameters:
   - Fuel Pump Enable Circuit Low Voltage Test Status
   - Fuel Pump Enable Circuit Open Test Status
   - Fuel Pump Enable Circuit High Voltage Test Status

     Each parameter should toggle between OK and Not Run or Not Run and OK.
3. Operate the vehicle within the Conditions for Running the DTC to verify the DTC does not reset. You may also operate the vehicle within the conditions that you observed from the Freeze Frame/Failure Records data.

Circuit/System Testing

1. Ignition OFF, disconnect the K38 chassis control module harness connector.

2. Ignition OFF, and all vehicle systems OFF. It may take up to 2 minutes for all vehicle systems to power down. Test for 0 V on the enable circuit terminal 20 of the chassis control module.
   - If greater than the specified value, test for a short to voltage on the enable circuit. If the circuit/connections test normal, replace the K20 ECM.
3. Ignition ON, command the Fuel Pump Enable ON with a scan tool. Test for B+ on the enable circuit terminal 20 of the chassis control module.
   - If less than the specified range, test for a short to ground or an open/high resistance on the enable circuit. If the circuit/connections test normal, replace the K20 ECM.
4. If all circuits/connections test normal, replace the K38 chassis control module.

Repair Instructions

Perform the **Diagnostic Repair Verification** after completing the diagnostic procedure.

Control Module References for ECM or chassis control module replacement, setup, and programming

DTC P0641, P0651, P0697, OR P06A3 (ECM)

Diagnostic Instructions

- Perform the **Diagnostic System Check - Vehicle** prior to using this diagnostic procedure.
- Review **Strategy Based Diagnosis** for an overview of the diagnostic approach.
- **Diagnostic Procedure Instructions** provides an overview of each diagnostic category.

DTC Descriptors

DTC P0641

5V Reference 1 Circuit

DTC P0651

5V Reference 2 Circuit

DTC P0697

5V Reference 3 Circuit

DTC P06A3

5V Reference 4 Circuit

Circuit/System Description

The engine control module (ECM) has 4 internal 5V reference circuits. Each internal reference circuit provides external 5V reference circuits for more than one sensor. A short to ground or short to voltage on one external 5V reference circuit can affect all the components connected the same internal 5V reference circuit.

Conditions for Running the DTC

These DTCs run continuously when the ignition voltage is greater than 6.4 V.

Conditions for Setting the DTC

The ECM detects a short to ground or voltage on any of the 5V reference circuits for greater than 0.5 s.

Action Taken When the DTC Sets

DTCs P0641, P0651, P0697, and P06A3 are Type A DTCs.

Conditions for Clearing the DTC

DTCs P0641, P0651, P0697, and P06A3 are Type A DTCs.

Diagnostic Aids

DTC P0641

The 5V reference 1 circuit provides 5 V to the sensors listed below:

- Fuel tank pressure sensor
- Fuel rail pressure sensor
- A/C refrigerant pressure sensor
- Exhaust camshaft position sensor
- Intake camshaft position sensor

DTC P0651

The 5V reference 2 circuit provides 5 V to the sensors listed below:

- Crankshaft position sensor
- Secondary air injection check valves, if equipped

DTC P0697

The 5V reference 3 circuit provides 5 V to the sensors listed below:

- Manifold absolute pressure sensor
- Accelerator pedal position sensor 2

DTC P06A3

The 5V reference 4 circuit provides 5 V to the sensors listed below:

- Throttle position sensor
- Accelerator pedal position sensor 1

Disconnecting one component at a time from the affected 5V reference circuit while observing the scan tool 5V Reference Circuit Status parameter may help locate the fault. The scan tool parameter will change from Malfunction to OK when the source of the fault is disconnected. If all 5V reference components have been disconnected and a fault is still indicated, the fault may exist in the wiring harness.

Reference Information

Schematic Reference

Engine Controls Schematics

Connector End View Reference

COMPONENT CONNECTOR END VIEWS - INDEX

Component View Reference

Powertrain Component Views

Electrical Information Reference

- **Circuit Testing**
- **Connector Repairs**
- **Testing for Intermittent Conditions and Poor Connections**
- **Wiring Repairs**

DTC Type Reference

Powertrain Diagnostic Trouble Code (DTC) Type Definitions

Scan Tool Reference

Control Module References for scan tool information

Circuit/System Verification

1. Ignition ON, observe the DTC information with a scan tool. DTC P0641, P0651, P0697, or P06A3 should not set.
2. Observe the circuit status parameters listed below:
   - 5V Reference 1 Circuit Status
   - 5V Reference 2 Circuit Status
   - 5V Reference 3 Circuit Status
   - 5V Reference 4 Circuit Status

   Each parameter should display OK.

3. Operate the vehicle within the Conditions for Running the DTC to verify the DTC does not reset. You may also operate the vehicle within the conditions that you observed from the Freeze Frame/Failure

Records data.

Circuit/System Testing

NOTE: Additional DTCs will set when disconnecting the components.

1. Ignition OFF, disconnect the harness connector of all appropriate sensors for the applicable DTC. Refer to Diagnostic Aids.
2. Ignition ON, test for 4.8-5.2 V between one of the affected 5V reference circuits and ground.
   - If less than the specified range, test for a short to ground on the 5V reference circuit for each of the affected components. If all circuits test normal, replace the K20 Engine Control Module.
   - If greater than the specified range, test for a short to voltage on the 5V reference circuit for each of the affected components. If all circuits test normal, replace the K20 Engine Control Module.

NOTE: A short to voltage on the signal circuit of certain components may cause this DTC to set.

3. Connect each component associated with the affected 5V reference circuit one at a time while monitoring the appropriate scan tool 5V Reference 1, 2, 3, or 4 Voltage parameter. The voltage should display 4.8-5.2 V.
   - If not within the specified range when a component is connected, test the signal circuit of that component for a short to voltage. If the circuit tests normal, replace the component.

Repair Instructions

Perform the **Diagnostic Repair Verification** after completing the repair.

- **Accelerator Pedal with Position Sensor Assembly Replacement**
- **Air Conditioning (A/C) Refrigerant Pressure Sensor Replacement**
- **Camshaft Position Sensor Replacement - Intake**
- **Camshaft Position Sensor Replacement - Exhaust**
- **Crankshaft Position Sensor Replacement**
- **Fuel Injection Fuel Rail Fuel Pressure Sensor Replacement**
- **Fuel Tank Pressure Sensor Replacement (NU6)** , **Fuel Tank Pressure Sensor Replacement (NT7)**
- **Manifold Absolute Pressure Sensor Replacement**
- **Secondary Air Injection Check Valve Replacement - Left Side (LUK)**
- **Secondary Air Injection Check Valve Replacement - Right Side (LUK)**
- **Throttle Body Assembly Replacement**
- **Control Module References** for engine control module replacement, programming, and setup.

DTC P0641 OR P06A6 (CHASSIS CONTROL MODULE)

Diagnostic Instructions

- Perform the **Diagnostic System Check - Vehicle** prior to using this diagnostic procedure.

- Review **Strategy Based Diagnosis** for an overview of the diagnostic approach.
- **Diagnostic Procedure Instructions** provides an overview of each diagnostic category.

DTC Descriptors

DTC P0641

5 V Reference Circuit

DTC P06A6

5 V Reference 1 Performance

Diagnostic Fault Information

Circuit	Short to Ground	Open/High Resistance	Short to Voltage	Signal Performance
5 V Reference	P018C, P0641, P06A6	P018C	P018D, P0641, P06A6	P06A6
Signal	P018C	P018B, P018C	P018D	P018B
Low Reference	-	P0641, P06A6	-	P06A6

Circuit/System Description

The fuel pressure sensor is located on the fuel line. The fuel pressure sensor monitors the fuel pressure in the fuel line. The chassis control module monitors the voltage signal from the fuel pressure sensor.

Conditions for Running the DTC

The ignition is ON.

Conditions for Setting the DTC

The chassis control module detects that the fuel pressure 5 V reference is above or below a predetermined voltage threshold.

Action Taken When the DTC Sets

DTCs P0641 and P06A6 are Type A DTCs.

Conditions for Clearing the DTC

DTCs P0641 and P06A6 are Type A DTCs.

Diagnostic Aids

Using the Failure Records data may help locate an intermittent condition. If you cannot duplicate the DTC, the information in the Failure Records can help determine how many miles since the DTC set. The Fail Counter and Pass Counter can help determine how many ignition cycles that the diagnostic test reported a pass and/or a fail.

Reference Information

Schematic Reference

Engine Controls Schematics

Connector End View Reference

COMPONENT CONNECTOR END VIEWS - INDEX

Description and Operation

Fuel System Description

Electrical Information Reference

- **Circuit Testing**
- **Connector Repairs**
- **Testing for Intermittent Conditions and Poor Connections**
- **Wiring Repairs**

DTC Type Reference

Powertrain Diagnostic Trouble Code (DTC) Type Definitions

Scan Tool Reference

Control Module References for scan tool information

Circuit/System Testing

1. Ignition OFF and all vehicle systems OFF, disconnect the harness connector at the B47 Fuel Pressure Sensor. It may take up to 2 minutes for all vehicle systems to power down.
2. Test for less than 10 ohms between the low reference circuit terminal 2 and ground.
   - **If 10 ohms or greater**
     1. Ignition OFF, disconnect the harness connector at the K38 Chassis Control Module.
     2. Test for less than 2 ohms in the low reference circuit end to end.
        - If 2 ohms or greater, repair the open/high resistance in the circuit.
        - If less than 2 ohms, replace the K38 Chassis Control Module.
   - **If less than 10 ohms**
3. Ignition ON.
4. Test for 4.8-5.2 V between the 5 V reference circuit terminal 3 and ground.
   - **If less than 4.8 V**
     1. Ignition OFF, disconnect the harness connector at the K38 Chassis Control Module.
     2. Test for infinite resistance between the 5 V reference circuit and ground.
        - If less than infinite resistance, repair the short to ground on the circuit.

- If infinite resistance

3. Test for less than 2 ohms in the 5 V reference circuit end to end.
   - If 2 ohms or greater, repair the open/high resistance in the circuit.
   - If less than 2 ohms, replace the K38 Chassis Control Module.

- **If greater than 5.2 V**

1. Ignition OFF, disconnect the harness connector at the K38 Chassis Control Module, ignition ON.
2. Test for less than 1 V between the 5 V reference circuit and ground.
   - If 1 V or greater, repair the short to voltage on the circuit.
   - If less than 1 V, replace the K38 Chassis Control Module.

- **If between 4.8-5.2 V**

5. Verify the scan tool Fuel Pressure Sensor Voltage parameter is less than 1 V.
   - **If 1 V or greater**

   1. Ignition OFF, disconnect the harness connector at the K38 Chassis Control Module, ignition ON.
   2. Test for less than 1 V between the signal circuit terminal 1 and ground.
      - If 1 V or greater, repair the short to voltage on the circuit.
      - If less than 1 V, replace the K38 Chassis Control Module.

   - **If less than 1 V**

6. Install a 3 A fused jumper wire between the signal circuit terminal 1 and the 5 V reference circuit terminal 3, wait 15 seconds.
7. Verify the scan tool Fuel Pressure Sensor Voltage parameter is greater than 4.8 V.
   - **If 4.8 V or less**

   1. Ignition OFF, disconnect the harness connector at the K38 Chassis Control Module.
   2. Test for infinite resistance between the signal circuit terminal 1 and ground.
      - If less than infinite resistance, repair the short to ground on the circuit.
      - If infinite resistance
   3. Test for less than 2 ohms in the signal circuit end to end.
      - If 2 ohms or greater, repair the open/high resistance in the circuit.
      - If less than 2 ohms, replace the K38 Chassis Control Module.

   - **If greater than 4.8 V**

8. Test or replace the B47 Fuel Pressure Sensor.

Repair Instructions

Perform the **Diagnostic Repair Verification** after completing the repair.

Control Module References for chassis control module replacement, programming and setup.

DTC P0650, P263A, OR P263B

Diagnostic Instructions

- Perform the **Diagnostic System Check - Vehicle** prior to using this diagnostic procedure.
- Review **Strategy Based Diagnosis** for an overview of the diagnostic approach.
- **Diagnostic Procedure Instructions** provides an overview of each diagnostic category.

DTC Descriptor

DTC P0650

Malfunction Indicator Lamp (MIL) Control Circuit

DTC P263A

Malfunction Indicator Lamp (MIL) Control Circuit Low Voltage

DTC P263B

Malfunction Indicator Lamp (MIL) Control Circuit High Voltage

Diagnostic Fault Information

Circuit	Short to Ground	Open/High Resistance	Short to Voltage	Signal Performance
Ignition Voltage	P0650	P0650	-	-
MIL Control	P0650, P263A*	P0650, P263A	P0650, P263B	-
* The MIL remains ON				

Circuit/System Description

The malfunction indicator lamp (MIL) illuminates to inform the driver that an emission system fault has occurred and the engine control system requires service. Ignition voltage is supplied directly to the MIL. The engine control module (ECM) turns the MIL ON by grounding the MIL control circuit when the emission system fault occurs. Under normal operating conditions, the MIL should be ON only when the ignition is ON and the engine is OFF.

Conditions for Running the DTC

- The engine speed is greater than 80 RPM.
- The ignition voltage is between 11-32 V.
- Remote vehicle start is not active
- The DTCs run continuously when the above conditions are met .

Conditions for Setting the DTC

DTC P0650

The ECM detects low voltage during the MIL control circuit driver OFF state. This indicates an open MIL control circuit.

DTC P263A

The ECM detects low voltage during the MIL control circuit driver OFF state. This indicates a shorted to ground MIL control circuit.

DTC P263B

The ECM detects high voltage on the MIL control circuit during the driver ON state. This indicates a shorted to voltage MIL control circuit.

Action Taken When the DTC Sets

DTC P0650, P263A, and P263B are Type B DTCs.

Conditions for Clearing the DTC

DTC P0650, P263A, and P263B are Type B DTCs.

Diagnostic Aids

- If the condition is intermittent, move the related harnesses and connectors while monitoring the scan tool MIL control circuit status parameters. Perform this test with the ignition ON and the engine OFF, and with the engine running. The MIL control circuit status parameters change from OK or Not Run to Fault if there is a condition with a circuit or a connection.
- If the ECM detects low voltage on the MIL control circuit during the control circuit driver OFF state, DTCs P0650 and DTC P263A may set simultaneously.

Reference Information

Schematic Reference

- **Engine Controls Schematics**
- **Instrument Cluster Schematics**

Connector End View Reference

COMPONENT CONNECTOR END VIEWS - INDEX

Electrical Information Reference

- **Circuit Testing**
- **Connector Repairs**
- **Testing for Intermittent Conditions and Poor Connections**
- **Wiring Repairs**

DTC Type Reference

Powertrain Diagnostic Trouble Code (DTC) Type Definitions

Scan Tool Reference

Control Module References for scan tool information

Circuit/System Verification

1. Ignition ON.
2. Verify the parameters listed below do not display Malfunction when commanding the malfunction indicator lamp ON and OFF with a scan tool.
   - The MIL Control Circuit Low Voltage Test Status
   - The MIL Control Circuit Open Test Status
   - The MIL Control Circuit High Voltage Test Status
   - **If Malfunction is displayed**

     Refer to Circuit/System Testing.

   - **If Malfunction is not displayed**
3. Engine running.
4. Verify the parameters listed below do not display Malfunction when commanding the malfunction indicator lamp ON and OFF with a scan tool.
   - The MIL Control Circuit Low Voltage Test Status
   - The MIL Control Circuit Open Test Status
   - The MIL Control Circuit High Voltage Test Status
   - **If Malfunction is displayed**

     Refer to Circuit/System Testing.

   - **If Malfunction is not displayed**
5. Verify the malfunction indicator lamp turns ON and OFF when commanding the malfunction indicator lamp ON and OFF with a scan tool.
   - **If the malfunction indicator lamp does not turn ON and OFF**

     Refer to Circuit/System Testing.

   - **If the malfunction indicator lamp turns ON and OFF**
6. Operate the vehicle within the Conditions for Running the DTC. You may also operate the vehicle within the conditions that you observed from the Freeze Frame/Failure Records data.
   - **If any DTC sets**

     Refer to **Diagnostic Trouble Code (DTC) List - Vehicle** for further diagnosis.

   - **If a DTC does not set**
7. All OK.

Circuit/System Testing

1. Ignition OFF.
2. Disconnect the X1 harness connector at the K20 Engine Control Module.
3. Ignition ON, verify the malfunction indicator lamp does not illuminate.
   - **If the malfunction indicator lamp illuminates**
   1. Test for infinite resistance between the malfunction indicator lamp control circuit terminal X1 46 and ground.
      - If less than infinite resistance, repair the short to ground in the circuit.
      - If infinite resistance, replace the P16 instrument cluster.
   - **If the malfunction indicator lamp does not illuminate**
4. Connect a 3 A fused jumper wire between the malfunction indicator lamp control circuit terminal X1 46 and ground.
5. Verify the malfunction indicator lamp illuminates.
   - **If the malfunction indicator lamp illuminates**

     Replace the K20 Engine Control Module.

   - **If the malfunction indicator lamp does not illuminate**
   1. Test for less than 1 V between the malfunction indicator lamp control circuit terminal X1 46 and ground.
      - If 1 V or greater, repair the short to voltage on the circuit.
      - If less than 1 V
   2. Ignition OFF.
   3. Test for less than 2 ohms in the malfunction indicator lamp control circuit end to end.
      - If 2 ohms or greater, repair the open/high resistance in the circuit.
      - If less than 2 ohms.
6. Ignition OFF, disconnect the harness connector at the instrument cluster.
7. Ignition ON, verify a test lamp illuminates between the ignition voltage circuit terminal 31 and ground.
   - **If the test lamp does not illuminate and the circuit fuse is open**
   1. Ignition OFF.
   2. Test for infinite resistance between the ignition voltage circuit and ground.
      - If less than infinite resistance, repair the short to ground on the circuit.
   - **If the test lamp does not illuminate and the circuit fuse is good**
   1. Ignition OFF.
   2. Test for less than 2 ohms in the ignition voltage circuit end to end.
      - If 2 ohms or greater, repair the open/high resistance in the circuit.
   - **If the test lamp illuminates**
8. All OK.

Repair Instructions

Perform the **Diagnostic Repair Verification** after completing the repair.

- **Instrument Cluster Replacement**
- **Control Module References** for engine control module replacement, programming, and setup.

DTC P0685-P0687, P0689, P0690, OR P1682

Diagnostic Instructions

- Perform the **Diagnostic System Check - Vehicle** prior to using this diagnostic procedure.
- Review **Strategy Based Diagnosis** for an overview of the diagnostic approach.
- **Diagnostic Procedure Instructions** provides an overview of each diagnostic category.

DTC Descriptors

DTC P0685

Engine Controls Ignition Relay Control Circuit

DTC P0686

Engine Controls Ignition Relay Control Circuit Low Voltage

DTC P0687

Engine Controls Ignition Relay Control Circuit High Voltage

DTC P0689

Engine Controls Ignition Relay Feedback Circuit Low Voltage

DTC P0690

Engine Controls Ignition Relay Feedback Circuit High Voltage

DTC P1682

Ignition 1 Switch Circuit 2

Diagnostic Fault Information

Engine Controls Ignition Relay

Circuit	Short to Ground	Open/High Resistance	Short to Voltage
Relay Coil Supply Voltage	-	P0685, P0689, P1682	-
Relay Control Circuit	P0686, P0690	P0686, P1682	P0685, P0687, P0689, P1682
Relay Feedback Circuit	P0689, P1682	P0689, P1682	P0690

Typical Scan Tool Data

Engine Controls Ignition Relay Control Circuit Low Voltage, Open, and High Voltage Test Status - Component Commanded OFF

Circuit	Short to Ground	Open	Short to Voltage
Operating Conditions: Component commanded OFF **Parameter Normal Range:** The following illustrates the normal parameter state with no circuit conditions: • Component OFF - OK for Open/Low Voltage test and Not Run for High Voltage test • Component ON - Not Run for Open/Low Voltage test and OK for High Voltage test			
B+	Malfunction	Malfunction	-
Control	Malfunction	Malfunction	Not Run

Engine Controls Ignition Relay Control Circuit Low Voltage, Open, and High Voltage Test Status - Component Commanded ON

Circuit	Short to Ground	Open	Short to Voltage
Operating Conditions: Component commanded ON **Parameter Normal Range:** The following illustrates the normal parameter state with no circuit conditions: • Component OFF - OK for Open/Low Voltage test and Not Run for High Voltage test • Component ON - Not Run for Open/Low Voltage test and OK for High Voltage test			
B+	Not Run	Not Run	-
Control	Not Run	Not Run	Malfunction

Circuit/System Description

There are 2 ignition voltage circuits supplied to the engine control module (ECM). One is supplied by the engine controls ignition relay and the other is supplied by the ignition main relay. The ECM monitors and compares the ignition voltage supplied by the two relays.

Conditions for Running the DTC

P0685, P0686, P0687

The DTC runs continuously when the ignition voltage is greater than 11 V.

P0689

- The engine controls ignition relay is commanded ON.
- The ignition voltage is greater than 11 V.
- DTCs P0685, P0686, or P0687 are not set.
- The DTC runs continuously when the above conditions are met.

P0690

- The engine controls ignition relay is commanded OFF.
- DTCs P0685, P0686, or P0687 are not set.

- The DTC runs continuously when the above conditions are met.

P1682

- The engine controls ignition relay is commanded ON.
- The ignition voltage is greater than 5.5 V.
- The DTC runs continuously when the above conditions are met.

Conditions for Setting the DTC

P0685

The ECM detects that the commanded state of the driver and the actual state of the control circuit do not match for greater than 2 s.

P0686

The ECM detects a short to ground on the control circuit for greater than 2 s.

P0687

The ECM detects a short to voltage on the control circuit for greater than 2 s.

P0689

The engine controls ignition relay voltage is less than 5 volts for greater than 5 s.

P0690

The ECM detects the engine controls ignition relay feedback circuit is greater than 4 V for greater than 5 s.

P1682

The ECM detects that there is greater than 3 V difference between the ignition main relay signal and the engine controls ignition relay signal circuits for greater than 1 s.

Action Taken When the DTC Sets

- DTCs P0685, P0686, P0687, and P0690 are Type B DTCs.
- DTC P0689 is a Type C DTC.
- DTC P1682 is a Type A DTC.

Conditions for Clearing the DTC

- DTCs P0685, P0686, P0687, and P0690 are Type B DTCs.
- DTC P0689 is a Type C DTC.
- DTC P1682 is a Type A DTC.

Diagnostic Aids

The engine controls ignition relay may also be labeled the powertrain relay, the engine control module relay, or the main relay. The ignition main relay may also be labeled the run/crank relay, the ignition 1 relay, the ignition run relay, or the ignition relay.

Reference Information

Schematic Reference

- **Engine Controls Schematics**
- **Power Distribution Schematics**

Connector End View Reference

COMPONENT CONNECTOR END VIEWS - INDEX

Component View Reference

Powertrain Component Views

Electrical Information Reference

- **Circuit Testing**
- **Connector Repairs**
- **Electrical Center Identification Views**
- **Testing for Intermittent Conditions and Poor Connections**
- **Wiring Repairs**

DTC Type Reference

Powertrain Diagnostic Trouble Code (DTC) Type Definitions

Scan Tool Reference

Control Module References for scan tool information

Circuit/System Verification

NOTE:

- **A short to voltage on other components may cause DTC P0690 to set. If any other DTC is set, diagnose that DTC first.**
- **If you were sent here from Engine Cranks But Does Not Run, proceed to Circuit/System Testing.**

1. Ignition ON, observe the scan tool DTC information. Verify DTC P0685, P0686, P0687, P0689, P0690, or P1682 is not set.
   - **If any of the DTCs are set**

     Refer to Circuit/System Testing.

- **If none of the DTCs are set**

2. Operate the vehicle within the Conditions for Running the DTC. You may also operate the vehicle within the conditions that you observed from the Freeze Frame/Failure Records data.
   - **If any of the DTCs are set**

     Refer to Circuit/System Testing.

   - **If none of the DTCs are set**
3. All OK.

Circuit/System Testing

NOTE: **You must perform the Circuit/System Verification before proceeding with Circuit/System Testing unless sent here from Engine Cranks But Does Not Run.**

1. Ignition OFF, disconnect the KR75 Engine Controls Ignition Relay.
2. Verify a test lamp illuminates between ground and the relay circuit terminals listed below:
   - Terminal 85
   - Terminal 30
   - **If the test lamp does not illuminate**

     Replace the front compartment fuse block.

   - **If the test lamp illuminates**

     NOTE:
     - **High resistance in the circuit/underhood fuse block for either the KR75 Engine Controls Ignition Relay or the KR73 Ignition Main Relay can cause DTC P1682 to set.**
     - **A short to voltage on any of the circuits supplied by the engine controls ignition relay can cause DTC P0690 to set.**

3. Ignition ON.
4. Verify that a test lamp does not illuminate between the ignition voltage circuit terminal 87 and ground.
   - **If the test lamp illuminates**
     1. Ignition OFF, disconnect the X1 harness connector at the K20 Engine Control Module.
     2. Ignition ON.
     3. Test for less than 1 V between ground and connector terminals 73.
        - If 1 V or greater, repair the short to voltage in the circuit.
        - If less than 1 V, replace the K20 Engine Control Module.
   - **If the test lamp does not illuminate**
5. Ignition OFF, connect a 20 A fused jumper wire between the relay switch B+ circuit terminal 30 and the relay switch ignition voltage circuit terminal 87.
6. Ignition ON.

7. Verify the scan tool Engine Controls Ignition Relay Feedback Signal parameter displays B+.
    - **If B+ is not displayed**
    1. Ignition OFF, disconnect the X1 harness connector at the K20 Engine Control Module
    2. Test for less than 2 ohms in the relay switch ignition voltage circuit end to end.
        - If 2 ohms or greater, repair the open/high resistance in the circuit.
        - If less than 2 ohms
    3. Test for infinite resistance between the relay switch ignition voltage circuit and ground.
        - If less than infinite resistance, repair the short to ground on the circuit.
        - If infinite resistance, replace the K20 Engine Control Module.
    - **If B+ is displayed**
8. Ignition OFF, connect a DMM, set to the diode setting, between control circuit terminal 86 and ground.
9. Verify the DMM displays OL.
    - **If OL is not displayed**
    1. Disconnect the X1 harness connector at the K20 Engine Control Module.
    2. Test for infinite resistance between ground and the relay control circuit.
        - If less than infinite resistance, repair the short to ground in the circuit.
        - If infinite resistance, replace the K20 Engine Control Module.
    - **If OL is displayed**
10. Ignition ON.
11. Verify the DMM displays less than 1 V.
    - **If 1 V or greater**
    1. Ignition OFF, disconnect the X1 connector at the K20 Engine Control Module.
    2. Ignition ON.
    3. Test for less than 1 V on the relay control circuit.
        - If 1 V or greater, repair the short to voltage on the circuit.
        - If less than 1 V
    4. Test for less than 2 ohms in the control circuit end to end.
        - If 2 ohms or greater, repair the open/high resistance in the circuit.
        - if less than 2 ohms, replace the K20 Engine Control Module.
    - **If less than 1 V**
12. Test or replace the KR75 Engine Controls Ignition Relay.

Component Testing

Relay Test

1. Ignition OFF, disconnect the KR75 Engine Controls Ignition Relay.
2. Test for 70-110 ohms between terminals 85 and 86:
    - **If less than 70 ohms or greater than 110 ohms**

      Replace the relay.

- **If between 70-110 ohms**

3. Test for infinite resistance between the terminals listed below:
   - 30 and 86
   - 30 and 87
   - 30 and 85
   - 85 and 87
   - **If less than infinite resistance**

     Replace the relay.

   - **If infinite resistance**
4. Install a 20 A fused jumper wire between relay terminal 85 and 12 V. Install a jumper wire between relay terminal 86 and ground.
5. Test for less than 2 ohms between terminals 30 and 87.
   - **If 2 ohms or greater**

     Replace the relay.

   - **If less than 2 ohms**
6. All OK.

Repair Instructions

Perform the **Diagnostic Repair Verification** after completing the repair.

- **Underhood Electrical Center or Junction Block Replacement**
- **Relay Replacement (Within an Electrical Center)** , **Relay Replacement (Attached to Wire Harness)**
- **Control Module References** for engine control module replacement, programming, and setup.

DTC P069E

Diagnostic Instructions

- Perform the **Diagnostic System Check - Vehicle** Prior to using this diagnostic procedure.
- Review **Strategy Based Diagnosis** for an overview of the diagnostic approach.
- **Diagnostic Procedure Instructions** provides an overview of each diagnostic category.

DTC Descriptor

DTC P069E

Fuel Pump Control Module Requested MIL Illumination

Circuit/System Description

The fuel pump control module constantly monitors the fuel pump control system for any condition which

may adversely affect vehicle emissions. If a condition is detected, the fuel pump control module sets a DTC and sends a serial data message to the engine control module (ECM). The ECM sets DTC P069E to inform the technician that the fuel pump control module has set the emission related DTC. The serial data message sent by the fuel pump control module also contains a request for the ECM to illuminate the malfunction indicator lamp (MIL).

The technician can observe the DTC that was set by the fuel pump control module by reviewing the ECM Freeze Frame records on the scan tool. The ECM Freeze Frame records also contain the engine operating conditions present when the fuel pump control module DTC set.

Conditions for Running the DTC

The ignition is ON, or the engine is running for greater than 3 s.

Conditions for Setting the DTC

The ECM receives a serial data message from the fuel pump control module indicating that an emission related DTC has set in the fuel pump control module.

Action Taken When the DTC Sets

- DTC P069E is a Type A DTC.
- DTC P069E will continue to be current or active as long as the fuel pump control module is requesting MIL illumination.

Conditions for Clearing the DTC

DTC P069E is a Type A DTC.

Diagnostic Aids

Communication codes, U-codes, as well as powertrain codes, P-codes, set in the fuel pump control module will cause the fuel pump control module to request DTC P069E to be set in the ECM.

Reference Information

DTC Type Reference

Powertrain Diagnostic Trouble Code (DTC) Type Definitions

Scan Tool Reference

Control Module References for scan tool information

Circuit/System Verification

NOTE:

- **Do not replace the engine control module for this DTC. DTC P069E is an informational DTC.**
- **Correct any engine control and communication DTCs before diagnosing fuel pump control module DTCs.**

1. Verify there are no engine control or communication DTCs set.
   - **If a DTC is set**

     Refer to **Diagnostic Trouble Code (DTC) List - Vehicle** .

   - **If a DTC is not set**
2. Verify there are no fuel pump control module DTCs set.
   - **If a DTC is set**

     Refer to **Diagnostic Trouble Code (DTC) List - Vehicle** .

   - **If a DTC is not set**
3. Operate the vehicle within the Conditions for Running the DTC. You may also operate the vehicle within the conditions that you observed from the Freeze Frame/Failure Records data.
4. Verify the DTC does not set.
   - **If the DTC sets**

     Refer to **Diagnostic Trouble Code (DTC) List - Vehicle** .

   - **If the DTC does not set**
5. All OK.

Repair Instructions

Perform the **Diagnostic Repair Verification** after completing the repair.

DTC P0700

Diagnostic Instructions

- Perform the **Diagnostic System Check - Vehicle** prior to using this diagnostic procedure.
- Review **Strategy Based Diagnosis** for an overview of the diagnostic approach.
- **Diagnostic Procedure Instructions** provides an overview of each of the diagnostic category.

DTC Descriptor

DTC P0700

Transmission Control Module Requested MIL Illumination

Circuit/System Description

The transmission control module (TCM) constantly monitors the transmission system for any condition which may adversely affect vehicle emissions. If a condition is detected, the TCM sets a DTC and sends a serial data message to the engine control module (ECM). The ECM sets DTC P0700 to inform the technician that the TCM has set the emission related DTC. The serial data message sent by the TCM also contains a request for the ECM to illuminate the malfunction indicator lamp (MIL).

The technician can observe the DTC that was set by the TCM by reviewing the ECM Freeze Frame records on the scan tool. The ECM Freeze Frame records also contain the engine operating conditions present when the transmission DTC set.

Conditions for Running the DTC

- The ignition is ON or the engine is operating.
- DTC P0700 runs continuously.

Conditions for Setting the DTC

The ECM receives a serial data message from the TCM indicating that an emission related DTC has set in the TCM.

Action Taken When the DTC Sets

DTC P0700 is a Type A DTC.

Conditions for Clearing the MIL/DTC

DTC P0700 is a Type A DTC.

Diagnostic Aids

Communication codes, U-codes, as well as powertrain codes, P-codes, set in the TCM can cause the TCM to request DTC P0700 to be set in the ECM.

Reference Information

DTC Type Reference

Powertrain Diagnostic Trouble Code (DTC) Type Definitions

Scan Tool Reference

Control Module References for scan tool information

Circuit/System Verification

NOTE:

- **Do not replace the engine control module for this DTC. DTC P0700 is an informational DTC.**
- **Correct any engine controls and communication DTCs before diagnosing transmission control module DTCs.**

1. Verify there are no engine control or communication DTCs set.
   - **If a DTC is set**

     Refer to **Diagnostic Trouble Code (DTC) List - Vehicle** .

- **If a DTC is not set**

2. Verify there are no transmission control module DTCs set.
   - **If a DTC is set**

     Refer to **Diagnostic Trouble Code (DTC) List - Vehicle** .

   - **If a DTC is not set**
3. Operate the vehicle within the Conditions for Running the DTC. You may also operate the vehicle within the conditions that you observed from the Freeze Frame/Failure Records data.
4. Verify the DTC does not set.
   - **If the DTC sets**

     Refer to **Diagnostic Trouble Code (DTC) List - Vehicle** .

   - **If the DTC does not set**
5. All OK.

Repair Instructions

Perform the **Diagnostic Repair Verification** after completing the repair.

DTC P0AC4

Diagnostic Instructions

- Perform the **Diagnostic System Check - Vehicle** prior to using this diagnostic procedure.
- Review **Strategy Based Diagnosis** for an overview of the diagnostic approach.
- **Diagnostic Procedure Instructions** provides an overview of each diagnostic category.

DTC Descriptor

DTC P0AC4

Hybrid/EV Powertrain Control Module Requested MIL Illumination

Circuit/System Description

DTC P0AC4 is an informational DTC that indicates that the hybrid powertrain control module has set an emission related hybrid powertrain DTC. The engine control module (ECM) turns ON the malfunction indicator lamp (MIL) when the hybrid powertrain control module sends a serial data message requesting MIL illumination. When the ECM receives the message, DTC P0AC4 will set. The DTC information for the ECM will only display DTC P0AC4, but the freeze frame/failure records data may display the hybrid powertrain DTC that set.

Conditions for Running the DTC

- The ignition is ON for greater than 3 s.
- This DTC runs continuously when the above condition is met.

Conditions for Setting the DTC

The hybrid powertrain control module has set an emission related DTC.

Action Taken When the DTC Sets

DTC P0AC4 is a Type A DTC.

Conditions for Clearing the DTC

DTC P0AC4 is a Type A DTC.

Reference Information

Description and Operation

Hybrid Modes of Operation Description

DTC Type Reference

Powertrain Diagnostic Trouble Code (DTC) Type Definitions

Scan Tool Reference

Control Module References for scan tool information

Circuit/System Verification

NOTE: Correct any engine control DTCs before diagnosing hybrid powertrain control module DTCs.

1. Verify there are no engine control or communication DTCs set.
   - **If a DTC is set**

     Refer to **Diagnostic Trouble Code (DTC) List - Vehicle** .

   - **If a DTC is not set**
2. Verify there are no hybrid/EV powertrain control module DTCs set.
   - **If a DTC is set**

     Refer to **Diagnostic Trouble Code (DTC) List - Vehicle** .

   - **If a DTC is not set**
3. Operate the vehicle within the Conditions for Running the DTC. You may also operate the vehicle within the conditions that you observed from the Freeze Frame/Failure Records data.
4. Verify the DTCs does not set.
   - **If the DTC sets**

     Refer to **Diagnostic Trouble Code (DTC) List - Vehicle** .

- **If the DTC does not set**

5. All OK.

Repair Instructions

Perform the **Diagnostic Repair Verification** after completing the repair.

DTC P11C2-P11C4 (WITH LEA)

Diagnostic Instructions

- Perform the **Diagnostic System Check - Vehicle** prior to using this diagnostic procedure.
- Review **Strategy Based Diagnosis** for an overview of the diagnostic approach.
- **Diagnostic Procedure Instructions** provides an overview of each diagnostic category.

DTC Descriptors

DTC P11C2

Intake Air Humidity Sensor Circuit Low Voltage

DTC P11C3

Intake Air Humidity Sensor Circuit High Voltage

DTC P11C4

Intake Air Humidity Sensor Circuit Erratic

Diagnostic Fault Information

Circuit	Short to Ground	Open/High Resistance	Short to Voltage	Signal Performance
Ignition Voltage	P0096, P0097, P0102, P11C2, P2199	P0096, P0097, P0102, P11C2, P2199	-	P0096
Signal	P0096, P0097, P11C3, P2199	P0096, P0097, P11C2, P2199	P0096*, P0097, P11C2, P2199	P0096
Ground	-	P0096, P0097, P0102, P11C2, P2199	-	P0096
*Internal ECM or sensor damage may occur if the circuit is shorted to B+.				

Typical Scan Tool Data

Intake Air Humidity

	Short to	Open or High	Short to

Circuit	Ground	Resistance	Voltage
Operating Conditions: Engine Running **Parameter Normal Range:** Varies with ambient humidity and temperature; and engine bay conditions			
Ignition Voltage	0 %	0 %	-
Signal	100 %	0 %	0 %*
Ground	-	0 %	-
*Internal ECM or sensor damage may occur if the circuit is shorted to B+			

Circuit/System Description

The humidity sensor measures the ambient humidity of the air in the sensor bore. The signal varies with intake air humidity and is displayed by the scan tool as duty cycle %. The ECM applies 5 V to the circuit. The signal circuit is shared by the humidity sensor and the intake air temperature (IAT) sensor 2. Ignition voltage and ground circuits are also supplied to the multifunction intake air sensor's internal circuits for these sensors:

- IAT sensor 2
- Humidity sensor
- MAF sensor

The multifunction intake air sensor houses the following:

- IAT sensor 1
- IAT sensor 2
- Humidity sensor
- MAF sensor
- BARO pressure sensor

Conditions for Running the DTCs

P11C2, P11C3, and P11C4

- The ignition is ON.
- The Ignition 1 voltage is at least 11 V for longer than 0.9 s.
- These DTCs run continuously within the enabling conditions.

Conditions for Setting the DTCs

P11C2

The ECM detects that the humidity sensor signal is less than or equal to 5 % for greater than 5 s.

P11C3

The ECM detects that the humidity sensor signal is greater than or equal to 95 % for greater than 5 s.

P11C4

The ECM monitors the humidity sensor signal every 0.1 s, to determine if the signal has changed more than 80 %. The DTC fails when the condition exists for longer than 4 s.

Action Taken When the DTC Sets

DTCs P11C2, P11C3, P11C4 are Type B DTCs.

Conditions for Clearing the MIL/DTC

DTCs P11C2, P11C3, P11C4 are Type B DTCs.

Diagnostic Aids

- The Intake Air Humidity Signal parameter displays the measured humidity within the air intake system and may differ from atmospheric humidity measured outside the air intake system.
- The humidity sensor and the IAT sensor 2 signals are sent to the ECM on the same circuit. If the Intake Air Humidity parameter displays the value: 0 % or 100 %, and there are also IAT Sensor 2 DTCs, check for a circuit problem.

Reference Information

Schematic Reference

Engine Controls Schematics

Connector End View Reference

COMPONENT CONNECTOR END VIEWS - INDEX

Electrical Information Reference

- **Circuit Testing**
- **Connector Repairs**
- **Testing for Intermittent Conditions and Poor Connections**
- **Wiring Repairs**

Powertrain Component Views

Powertrain Component Views

DTC Type Reference

Powertrain Diagnostic Trouble Code (DTC) Type Definitions

Scan Tool Reference

Control Module References for scan tool information

Special Tools

EL-38522-A Variable Signal Generator

For equivalent regional tools, refer to **Special Tools (Diagnostic Tools)** , **Special Tools (Mechanical Tools)** .

Circuit/System Verification

NOTE: **To minimize the effects of residual engine heat and sensor internal heating elements, perform Steps 1 and 2 of this verification procedure only if the ignition has been OFF for 8 hours or more.**

1. Ignition ON.
2. Verify the following scan tool parameters are within 55°C (99°F) of each other.
   - Start-Up IAT Sensor 1
   - IAT Sensor 2
   - Start-Up ECT
   - **If not within 55°C (99°F)**

     Refer to Circuit/System Testing.

   - **If within 55°C (99°F)**
3. Engine idling, verify the scan tool Intake Air Humidity parameter is between 5 and 90 %.
   - **If not between 5 and 90 %**

     Refer to Circuit/System Testing.

   - **If between 5 and 90 %**
4. Operate the vehicle within the conditions for running the DTC. You may also operate the vehicle within the conditions that you observed from the freeze frame/failure records data.
5. Verify the DTC does not set.
   - **If the DTC sets**

     Refer to Circuit/System Testing.

   - **If the DTC does not set**
6. All OK

Circuit/System Testing

1. Ignition OFF, disconnect the harness connector at the B75C Multifunction Intake Air sensor.
2. Ignition OFF, all systems OFF. It may take up to for 2 minutes for all vehicle systems to power down. Test for less than 2 ohms between the low reference circuit terminal 3 and ground.
   - **If 2 ohms or greater**
     1. Ignition OFF, disconnect the harness connector at the K20 Engine Control Module.

2. Test for less than 2 ohms in the low reference circuit end to end.
    - If 2 ohms or greater, repair the open or high resistance in the circuit.
    - If less than 2 ohms replace the K20 Engine Control Module.
- **If less than 2 ohms**

3. Ignition OFF, all vehicle systems OFF, test for less than 2 ohms between the ground circuit terminal 7 and ground.
    - **If 2 ohms or greater**
    1. Ignition OFF. Disconnect the sensor chassis ground.
    2. Test for less than 2 ohms in the ground circuit end to end.
        - If 2 ohms or greater, repair the open or high resistance in the circuit.
        - If less than 2 ohms, repair the open/high resistance in the ground connection.
    - **If less than 2 ohms**
4. Ignition ON, verify that a test lamp illuminates between the ignition circuit terminal 5 and ground.
    - **If the test lamp does not illuminate and the circuit fuse is good**
    1. Ignition OFF, remove the test lamp and remove the fuse for the ignition voltage circuit.
    2. Test for less than 2 ohms in the ignition voltage circuit end to end.
        - If 2 ohms or greater, repair the open/high resistance in the circuit.
        - If less than 2 ohms, verify the fuse is not open and there is voltage at the fuse.
    - **If the test lamp does not illuminate and the circuit fuse is open**
    1. Ignition OFF, remove the test lamp and remove the fuse for the ignition voltage circuit.
    2. Test for infinite resistance between the ignition voltage circuit and ground.
        - If less than infinite resistance, repair the short to ground on the circuit.
        - If infinite resistance
    3. Test for greater than 2 ohms between the ignition voltage circuit terminal 5 and ground.
        - If less than 2 ohms, repair the short to ground on the circuit.
        - If greater than 2 ohms, test all the components connected to the circuit and repair or replace as necessary.
    - **If a test lamp illuminates**
5. Ignition ON, test for 4.8-5.2 V between the humidity signal circuit terminal 8 and ground.
    - **If less than 4.8 V**
    1. Ignition OFF, disconnect the harness connector at the K20 Engine Control Module.
    2. Test for infinite resistance between the signal circuit and ground.
        - If less than infinite resistance, repair the short to ground on the circuit.
        - If infinite resistance
    3. Test for less than 2 ohms in the signal circuit end to end.
        - If 2 ohms or greater, repair the open/high resistance in the circuit.
        - If less than 2 ohms, replace the K20 Engine Control Module.
    - **If greater than 5.2 V**

NOTE: **If the signal circuit is shorted to a voltage the engine control module or the sensor may be damaged.**

1. Ignition OFF, disconnect the harness connector at the K20 Engine Control Module.
2. Ignition ON, test for less than 1 V between the signal circuit and ground.
   - If 1 V or greater, repair the short to voltage on the circuit.
   - If less than 1 V, replace the K20 Engine Control Module.

- **If between 4.8-5.2 V**

6. Determine if **EL-38522-A** Variable Signal Generator or equivalent is available.
   - **EL-38522-A, Variable Signal Generator; or equivalent is not available**
   1. Test or replace the B75C Multifunction Intake Air sensor.
   2. Operate the vehicle within the Conditions for Running the DTC. You may also operate the vehicle within the conditions that you observed from the freeze frame/failure records data.
   3. Verify the DTC does not set.
      - **If the DTC sets**

        Replace the K20 Engine Control Module.

      - **If no DTCs set**
   4. All OK.
   - **EL-38522-A, Variable Signal Generator; or equivalent is available**
7. Ignition OFF, connect the leads of the **EL-38522-A** Variable Signal Generator as follows:
   - Red lead to the signal circuit terminal 8 at the harness connector
   - Black leads to ground
   - Battery voltage supply lead to B+
8. Set the **EL-38522-A** Variable Signal Generator to the following specifications.
   - Signal switch to 5 V
   - Frequency switch to 250 Hz
   - Duty Cycle switch to 50 % (Normal)
9. Ignition ON, observe the scan tool Intake Air Humidity parameter. The scan tool parameter should be between 45-55 %.
   - **If not between 45-55 %.**

     Replace the K20 Engine Control Module.

   - **If between 45-55 %.**
10. Test or replace the B75C Multifunction Intake Air sensor.

Component Testing

Multifunction Intake Air Sensor

1. Ignition OFF, disconnect the harness connector at the B75C Multifunction Intake Air sensor.
2. Test the Intake Air Humidity Sensor by varying the air humidity in the intake duct near the sensor, while observing the scan tool Intake Air Humidity Sensor parameter. The parameter should change and be within 5-95%.
   - **If the parameter does not change or is not within 5-95%.**

Replace the B75C Multifunction Intake Air sensor.

- **If the parameter changes and is within 5-95%.**

3. All OK.

Repair Instructions

Perform the **Diagnostic Repair Verification** after completing the repair.

- **Mass Airflow Sensor with Intake Air Temperature Sensor Replacement** for multifunction intake air sensor replacement.
- **Control Module References** for engine control module replacement, programming, and setup

DTC P1255 (FUEL PUMP POWER CONTROL MODULE)

Diagnostic Instructions

- Perform the **Diagnostic System Check - Vehicle** prior to using this diagnostic procedure.
- Review **Strategy Based Diagnosis** for an overview of the diagnostic approach.
- **Diagnostic Procedure Instructions** provides an overview of each diagnostic category.

DTC Descriptors

DTC P1255

Fuel Pump Control Module Driver Over Temperature

Circuit/System Description

The engine control module (ECM) supplies voltage to the fuel pump power control module when the ECM detects that the ignition is on. The voltage from the ECM to the fuel pump power control module remains active for 2 seconds, unless the engine is in crank or run. While this voltage is being received, the fuel pump power control module supplies a varying voltage to the fuel tank fuel pump module in order to maintain the desired fuel pressure.

Conditions for Running the DTC

- The ignition voltage is greater than 9 V.
- The engine is cranking or running.
- The fuel pump enable circuit is commanded ON.
- The DTC runs continuously when the conditions above are met.

Conditions for Setting the DTC

The fuel pump power control module detects a driver temperature greater than 302°F (150°C) for less than 0.5 s.

Action Taken When the DTC Sets

DTC P1255 is a Type A DTC.

Conditions for Clearing the DTC

DTC P1255 is a Type A DTC.

Diagnostic Aids

Using the Failure Records data may help locate an intermittent condition. If you cannot duplicate the DTC, the information in the Failure Records can help determine how many miles since the DTC set. The Fail Counter and Pass Counter can help determine how many ignition cycles that the diagnostic test reported a pass and/or a fail.

Reference Information

Schematic Reference

Engine Controls Schematics

Connector End View Reference

COMPONENT CONNECTOR END VIEWS - INDEX

Description and Operation

Fuel System Description

Electrical Information Reference

- **Circuit Testing**
- **Connector Repairs**
- **Testing for Intermittent Conditions and Poor Connections**
- **Wiring Repairs**

DTC Type Reference

Powertrain Diagnostic Trouble Code (DTC) Type Definitions

Scan Tool Reference

Control Module References for scan tool information

Circuit/System Verification

1. Ignition ON.
2. Verify DTC P0231, P0232, or P023F is not set.
    - **If any of the DTCs are set**

      Refer to **Diagnostic Trouble Code (DTC) List - Vehicle** .

- **If none of the DTCs are set**

3. Verify that the area where the K111 Fuel Pump Power Control Module is located is free of debris, clutter, or any insulating material that would cause the fuel pump power control module to overheat.
   - **If any debris, clutter, or other material is found**
     1. Clear the area where the fuel pump power control module is located.
     2. Clear the DTC and test drive the vehicle.
     3. Verify DTC P1255 is not set.
        - If DTC P1255 is set, replace the fuel pump power control module.
        - If DTC P1255 is not set
     4. All OK.
   - **If no debris, clutter, or other material is found**
4. Clear the DTC and test drive the vehicle.
5. Verify DTC P1255 is not set.
   - **If DTC P1255 is set**

     Replace the K111 Fuel Pump Power Control Module.

   - **If DTC P1255 is not set.**
6. All OK.

Repair Instructions

Perform the **Diagnostic Repair Verification** after completing the repair.

Fuel Pump Power Control Module Replacement

DTC P1255 OR P064A (CHASSIS CONTROL MODULE)

Diagnostic Instructions

- Perform the **Diagnostic System Check - Vehicle** prior to using this diagnostic procedure.
- Review **Strategy Based Diagnosis** for an overview of the diagnostic approach.
- **Diagnostic Procedure Instructions** provides an overview of each diagnostic category.

DTC Descriptors

DTC P064A

Fuel Pump Control Module Performance

DTC P1255

Fuel Pump Control Module Driver High Temperature

Circuit/System Description

The engine control module (ECM) supplies voltage to the chassis control module when the ECM detects that the ignition is on. The voltage from the ECM to the chassis control module remains active for 2 seconds, unless the engine is in crank or run. While this voltage is being received, the chassis control module supplies a varying voltage to the fuel pump in order to maintain the desired fuel line pressure.

Conditions for Running the DTC

The engine is running.

Conditions for Setting the DTC

The chassis control module detects an over-temperature fault.

Action Taken When the DTC Sets

DTCs P064A and P1255 are Type A DTCs.

Conditions for Clearing the DTC

DTCs P064A and P1255 are Type A DTCs.

Diagnostic Aids

Using the Failure Records data may help locate an intermittent condition. If you cannot duplicate the DTC, the information in the Failure Records can help determine how many miles since the DTC set. The Fail Counter and Pass Counter can help determine how many ignition cycles that the diagnostic test reported a pass and/or a fail.

Beginning in the 2014 model year the K27 Fuel Pump Control Module (FPCM) will now be called the chassis control module (CCM). The component code for the chassis control module will be K38. The chassis control module name will be used in Service Information, the Global Diagnostic System and the Service Programming System.

Reference Information

Schematic Reference

Engine Controls Schematics

Connector End View Reference

COMPONENT CONNECTOR END VIEWS - INDEX

Description and Operation

Fuel System Description

Electrical Information Reference

- **Circuit Testing**

- **Connector Repairs**
- **Testing for Intermittent Conditions and Poor Connections**
- **Wiring Repairs**

DTC Type Reference

Powertrain Diagnostic Trouble Code (DTC) Type Definitions

Scan Tool Reference

Control Module References for scan tool information

Circuit/System Verification

1. Ignition ON.
2. Verify DTC P0231, P0232 or P023F is not set.
   - **If any of the DTCs are set**

     Refer to **Diagnostic Trouble Code (DTC) List - Vehicle** .

   - **If none of the DTCs are set**
3. Verify that the area where the K38 Chassis Control Module is located is free of debris, clutter, or any insulating material that would cause the K38 Chassis Control Module to overheat.
   - **If any debris, clutter, or other material is found**
     1. Clear the area where the K38 Chassis Control Module is located.
     2. Clear the DTC and test drive the vehicle.
     3. Verify DTC P1255 or P064A is not set.
        - If DTC P1255 or P064A is set, replace the K38 Chassis Control Module.
        - If DTC P1255 or P064A is not set
     4. All OK.
   - **If no debris, clutter, or other material is found**
4. Clear the DTC and test drive the vehicle.
5. Verify DTC P1255 or P064A is not set.
   - **If DTC P1255 or P064A is set**

     Replace the K38 Chassis Control Module.

   - **If DTC P1255 or P064A is not set.**
6. All OK.

Repair Instructions

Perform the **Diagnostic Repair Verification** after completing the repair.

Control Module References for chassis control module replacement, programming and setup.

DTC P129B OR P129C (FUEL PUMP POWER CONTROL MODULE)

Diagnostic Instructions

- Perform the **Diagnostic System Check - Vehicle** prior to using this diagnostic procedure.
- Review **Strategy Based Diagnosis** for an overview of the diagnostic approach.
- **Diagnostic Procedure Instructions** provides an overview of each diagnostic category.

DTC Descriptors

DTC P129B

Fuel Pump Driver Control Module System Voltage Low Voltage

DTC P129C

Fuel Pump Driver Control Module System Voltage High Voltage

Diagnostic Fault Information

Circuit	Short to Ground	Open/High Resistance	Short to Voltage
Battery Positive Voltage	P018B, P0506, P129B, P2635, U18A2	P018B, P0506, P129B, P2635, U18A2	P129C

Circuit/System Description

The fuel pump power control module monitors the battery positive voltage circuit to verify the voltage is between the normal operating range. The DTC can set for a circuit or system voltage out of range.

Conditions for Running the DTC

P129B

- The engine is running.
- The ignition voltage is greater than 7 V.
- The fuel pump enable circuit is commanded ON.
- The DTC runs continuously when the conditions above are met.

P129C

- The engine is not running.
- The ignition voltage is greater than 7 V.
- The fuel pump enable circuit is commanded ON.
- The DTC runs continuously when the conditions above are met.

Conditions for Setting the DTC

P129B

The fuel pump power control module detects the battery positive voltage is less than 7 V for 1 s.

P129C

The fuel pump power control module detects the battery positive voltage is greater than 18 V for 1 s.

Action Taken When the DTC Sets

DTCs P129B and P129C are Type C DTCs.

Conditions for Clearing the DTC

DTCs P129B and P129C are Type C DTCs.

Reference Information

Schematic Reference

Engine Controls Schematics

Connector End View Reference

COMPONENT CONNECTOR END VIEWS - INDEX

Description and Operation

Fuel System Description

Electrical Information Reference

- **Circuit Testing**
- **Connector Repairs**
- **Electrical Center Identification Views**
- **Testing for Intermittent Conditions and Poor Connections**
- **Wiring Repairs**

DTC Type Reference

Powertrain Diagnostic Trouble Code (DTC) Type Definitions

Scan Tool Reference

Control Module References for scan tool information

Circuit/System Verification

1. Ignition OFF.

2. Test for 12.4-12.8 V at the battery terminals and record the reading. The battery voltage should stabilize after a few minutes of turning the ignition OFF.
   - **If not between 12.4 V-12.8 V**

     Refer to **Battery Inspection/Test**

   - **If between 12.4 V-12.8 V**
3. Engine running, accessories OFF.
4. Test for 13.4-15 V at the battery terminals and record the reading.
   - **If not between 13.4-15 V**

     Refer to **Charging System Test**

   - **If between 13.4-15 V**
5. Verify the engine control module scan tool Ignition 1 Signal voltage parameter is within 1 V of the battery voltage.
   - **If not within 1 V of the battery voltage**

     Refer to Circuit/System Testing

   - **If within 1 V of the battery voltage**
6. All OK.

Circuit/System Testing

1. Ignition OFF and all vehicle systems OFF, disconnect the harness connector at the K111 Fuel Pump Power Control Module. It may take up to 2 minutes for all vehicle systems to power down.
2. Test for less than 5 ohms between the ground circuit terminal 9 and ground.
   - **If 5 ohms or greater**
     1. Ignition OFF.
     2. Test for less than 2 ohms in the ground circuit end to end.
        - If 2 ohms or greater, repair the open/high resistance in the circuit.
        - If less than 2 ohms, repair the open/high resistance in the ground connection.
   - **If less than 5 ohms**
3. Verify a test lamp illuminates between the B+ circuit terminal 1 and ground.
   - **If the test lamp does not illuminate and the circuit fuse is good**
     1. Ignition OFF.
     2. Test for less than 2 ohms in the B+ circuit end to end.
        - If 2 ohms or greater, repair the open/high resistance in the circuit.
        - If less than 2 ohms, verify the fuse is not open and there is voltage at the fuse.
   - **If the test lamp does not illuminate and the circuit fuse is open**
     1. Ignition OFF.
     2. Test for infinite resistance between the B+ circuit and ground.
        - If less than infinite resistance, repair the short to ground on the circuit.

- If infinite resistance, replace the K111 Fuel Pump Power Control Module.
- **If the test lamp illuminates**

4. Replace the K111 Fuel Pump Power Control Module.

Repair Instructions

Perform the **Diagnostic Repair Verification** after completing the diagnostic procedure.

Fuel Pump Power Control Module Replacement

DTC P129D (FUEL PUMP POWER CONTROL MODULE)

Diagnostic Instructions

- Perform the **Diagnostic System Check - Vehicle** prior to using this diagnostic procedure.
- Review **Strategy Based Diagnosis** for an overview of the diagnostic approach.
- **Diagnostic Procedure Instructions** provides an overview of each diagnostic category.

DTC Descriptor

DTC P129D

Fuel Pump Driver Control Module Ignition On/Start Switch Circuit Low Voltage

Diagnostic Fault Information

Circuit	Short to Ground	Open/High Resistance	Short to Voltage	Signal Performance
Ignition 1 Voltage	P129D	P129D	-	-

Circuit/System Description

The fuel pump power control module monitors the ignition voltage circuit in order to determine if the voltage is within the normal operating range.

Conditions for Running the DTC

The DTC runs continuously when the modules are awake.

Conditions for Setting the DTC

The fuel pump power control module Power Mode does not agree with the engine control module (ECM) Power Mode for 1 s.

Action Taken When the DTC Sets

DTC P129D is a Type A DTC.

Conditions for Clearing the DTC

DTC P129D is a Type A DTC.

Reference Information

Schematic Reference

Engine Controls Schematics

Connector End View Reference

COMPONENT CONNECTOR END VIEWS - INDEX

Description and Operation

Fuel System Description

Electrical Information Reference

- **Circuit Testing**
- **Connector Repairs**
- **Testing for Intermittent Conditions and Poor Connections**
- **Wiring Repairs**

DTC Type Reference

Powertrain Diagnostic Trouble Code (DTC) Type Definitions

Scan Tool Reference

Control Module References for scan tool information

Circuit/System Testing

1. Ignition ON.
2. Verify DTC P0562 is not set.
   - **If the DTC is set**

     Refer to **Diagnostic Trouble Code (DTC) List - Vehicle** .

   - **If the DTC is not set**
3. Ignition OFF, disconnect the harness connector at the K111 Fuel Pump Power Control Module, ignition ON.
4. Verify a test lamp illuminates between the ignition circuit terminal 6 and ground.
   - **If the test lamp does not illuminate and the circuit fuse is good**
   1. Ignition OFF.
   2. Test for less than 2 ohms in the ignition circuit end to end.
      - If 2 ohms or greater, repair the open/high resistance in the circuit.

- If less than 2 ohms, verify the fuse is not open and there is voltage at the fuse.
- **If the test lamp does not illuminate and the circuit fuse is open**

1. Ignition OFF.
2. Test for infinite resistance between the ignition circuit and ground.
   - If less than infinite resistance, repair the short to ground on the circuit.
   - If infinite resistance, replace the K111 Fuel Pump Power Control Module.

- **If the test lamp illuminates**

5. Replace the K111 Fuel Pump Power Control Module.

Repair Instructions

Perform the **Diagnostic Repair Verification** after completing the repair .

Fuel Pump Power Control Module Replacement

DTC P12A6 (FUEL PUMP POWER CONTROL MODULE)

Diagnostic Instructions

- Perform the **Diagnostic System Check - Vehicle** prior to using this diagnostic procedure.
- Review **Strategy Based Diagnosis** for an overview of the diagnostic approach.
- **Diagnostic Procedure Instructions** provides an overview of each diagnostic category.

DTC Descriptor

DTC P12A6

Fuel Pump Driver Control Module Enable Circuit Performance

Diagnostic Fault Information

Circuit	Short to Ground	Open/High Resistance	Short to Voltage	Signal Performance
Fuel Pump Enable	P0171, P0506, P0628, P12A6	P0171, P0506, P12A6	-	P12A6

Circuit/System Description

The engine control module (ECM) provides ignition voltage to the fuel pump power control module whenever the engine is cranking or running. The control module enables the fuel pump power control module as long as the engine is cranking or running, and ignition system reference pulses are received. While this enable voltage is being received, the fuel pump power control module supplies a varying voltage to the in-tank fuel pump module in order to maintain the desired fuel line pressure.

Conditions for Running the DTC

- The ignition voltage is greater than 7 V.
- The DTC runs continuously when the condition above is met.

Conditions for Setting the DTC

- The ECM state of the fuel pump enable circuit does not match the state of the fuel pump enable circuit sensed by the fuel pump power control module.
- The above condition is met for 0.5 s.

Action Taken When the DTC Sets

DTC P12A6 is a Type A DTC.

Conditions for Clearing the DTC

DTC P12A6 is a Type A DTC.

Reference Information

Schematic Reference

Engine Controls Schematics

Connector End View Reference

COMPONENT CONNECTOR END VIEWS - INDEX

Description and Operation

Fuel System Description

Electrical Information Reference

- **Circuit Testing**
- **Connector Repairs**
- **Testing for Intermittent Conditions and Poor Connections**
- **Wiring Repairs**

DTC Type Reference

Powertrain Diagnostic Trouble Code (DTC) Type Definitions

Scan Tool Reference

Control Module References for scan tool information

Circuit/System Verification

1. Ignition ON.
2. Verify that DTC P12A6 is not set.
    - **If the DTC is set**

Refer to Circuit/System Testing

- **If the DTC is not set**

3. Command the Fuel Pump Enable ON and OFF with a scan tool.
4. Verify the following scan tool control circuit status parameters display OK:
   - Fuel Pump Enable Circuit Low Voltage Test Status
   - Fuel Pump Enable Circuit Open Test Status
   - Fuel Pump Enable Circuit High Voltage Test Status
   - **If Malfunction is displayed**

     Refer to Circuit/System Testing

   - **If OK is displayed**
5. Operate the vehicle within the Conditions for Running the DTC. You may also operate the vehicle within the conditions that you observed from the Freeze Frame/Failure Records data.
6. Verify the DTC does not set.
   - **If the DTC sets**

     Refer to Circuit/System Testing

   - **If the DTC does not set**
7. All OK.

Circuit/System Testing

1. Disconnect the K111 Fuel Pump Power Control Module harness connector.
2. Ignition OFF, and all vehicle systems OFF. It may take up to 2 minutes for all vehicle systems to power down.
3. Test for 0 V on the enable circuit terminal 2 of the fuel pump power control module.
   - **If greater than 0 V**
     1. Ignition OFF, disconnect the harness connector at the K20 ECM.
     2. Test for less than 1 V between the enable circuit and ground.
        - If 1 V or greater, repair the short to voltage on the circuit.
        - If less than 1 V, replace the K20 ECM.
   - **If 0 V**
4. Ignition ON, command the Fuel Pump Enable ON with a scan tool.
5. Test for B+ on the enable circuit terminal 2 of the fuel pump power control module.
   - **If less than B+**
     1. Ignition OFF, disconnect the harness connector at the K20 ECM.
     2. Test for infinite resistance between the enable circuit and ground.
        - If less than infinite resistance, repair the short to ground on the circuit.
        - If infinite resistance
     3. Test for less than 2 ohms in the enable circuit end to end.

- If 2 ohms or greater, repair the open/high resistance in the circuit.
- If less than 2 ohms, replace the K20 ECM.

- **If B+**

6. Replace the K111 Fuel Pump Power Control Module.

Repair Instructions

Perform the **Diagnostic Repair Verification** after completing the diagnostic procedure.

- **Fuel Pump Power Control Module Replacement**
- **Control Module References** for ECM replacement, setup, and programming

DTC P129E

Diagnostic Instructions

- Perform the **Diagnostic System Check - Vehicle** prior to using this diagnostic procedure.
- Review **Strategy Based Diagnosis** for a overview of the diagnostic approach.
- **Diagnostic Procedure Instructions** provides an overview of each diagnostic category.

DTC Descriptors

DTC P129E

Fuel Pump Driver Control Module Signal Message Counter Incorrect

Circuit/System Description

The fuel pump power control module is constantly sending serial data messages to the ECM regarding the operating state of the fuel pump power control system. These messages are sent in a continuously repeating series of rolling counts with associated password protect samples and each count/sample is assigned a value. When the ECM determines that too many of the counts/samples contain an error value, the ECM sets DTC P129E.

Conditions for Running the DTC

- The ignition voltage is greater than 9 V.
- The DTC runs continuously when the above condition is met.

Conditions for Setting the DTC

The ECM detects that 64 of 80 counts/samples contain an error value.

Action Taken When the DTC Sets

DTC P129E is a Type A DTC.

Conditions for Clearing the DTC

DTC P129E is a Type A DTC.

Diagnostic Aids

An intermittent fault in the CAN circuits will cause the ECM to set DTC P129E.

Reference Information

DTC Type Reference

Powertrain Diagnostic Trouble Code (DTC) Type Definitions

Scan Tool Reference

Control Module References for scan tool information

Circuit/System Verification

NOTE:

- **DTC P129E is an informational DTC.**
- **Diagnose all other engine control module DTCs prior to DTC P129E.**

1. Verify there are no other engine control module or communication DTCs set.
   - **If a DTC is set**

     Refer to **Diagnostic Trouble Code (DTC) List - Vehicle**

   - **If a DTC is not set**
2. Complete the diagnosis by looking for an intermittent CAN circuit fault. Refer to **Scan Tool Does Not Communicate with High Speed GMLAN Device** .
   - **If an intermittent CAN circuit fault is found**

     Refer to Circuit/System Testing.

   - **If an intermittent CAN circuit fault is not found**
3. All OK.

Circuit/System Testing

1. Verify that no other DTCs are set except for DTC P129E.
   - **If any other DTCs are set**

     Refer to **Diagnostic Trouble Code (DTC) List - Vehicle** .

   - **If only DTC P129E is set**
2. Replace the K111 Fuel Pump Power Control Module.
3. Verify the DTC does not set while operating the vehicle within the Conditions for Running the DTC.
   - **If DTC sets**

Replace the K20 Engine Control Module.

- **If DTC does not set**

4. All OK.

Repair Instructions

Perform the **Diagnostic Repair Verification** after completing the repair.

- **Fuel Pump Power Control Module Replacement**
- **Control Module References** for Engine Control Module replacement, programming, and setup.

DTC P12A8

Diagnostic Instructions

- Perform the **Diagnostic System Check - Vehicle** prior to using this diagnostic procedure.
- Review **Strategy Based Diagnosis** for a overview of the diagnostic approach.
- **Diagnostic Procedure Instructions** provides an overview of each diagnostic category.

DTC Descriptors

DTC P12A8

Fuel Pump Control Signal Message Counter Incorrect

Circuit/System Description

The fuel pump power control module is constantly sending serial data messages to the ECM regarding the operating state of the fuel pump power control system. These messages are sent in a continuously repeating series of rolling counts with associated password protect samples and each count/sample is assigned a value. When the ECM determines that too many of the counts/samples contain an error value, the ECM sets DTC P12A8.

Conditions for Running the DTC

- The ignition voltage is greater than 9 V.
- The engine run time is greater than 0.5 s.
- No other CAN errors are present.
- The DTC runs continuously when the above conditions are met.

Conditions for Setting the DTC

The ECM detects that 64 of 80 counts/samples contain an error value.

Action Taken When the DTC Sets

DTC P12A8 is a Type A DTC.

Conditions for Clearing the DTC

DTC P12A8 is a Type A DTC.

Diagnostic Aids

An intermittent fault in the CAN circuits will cause the ECM to set DTC P12A8.

Reference Information

DTC Type Reference

Powertrain Diagnostic Trouble Code (DTC) Type Definitions

Scan Tool Reference

Control Module References for scan tool information

Circuit/System Verification

NOTE:

- **DTC P12A8 is an informational DTC.**
- **Diagnose all other engine control module DTCs prior to DTC P12A8.**

1. Verify there are no other engine control module or communication DTCs set.
   - **If a DTC is set**

     Refer to **Diagnostic Trouble Code (DTC) List - Vehicle**

   - **If a DTC is not set**
2. Complete the diagnosis by looking for an intermittent CAN circuit fault. Refer to **Scan Tool Does Not Communicate with High Speed GMLAN Device** .
   - **If an intermittent CAN circuit fault is found**

     Refer to Circuit/System Testing.

   - **If an intermittent CAN circuit fault is not found**
3. All OK.

Circuit/System Testing

1. Verify that no other DTCs are set except for DTC P12A8.
   - **If any other DTCs are set**

     Refer to **Diagnostic Trouble Code (DTC) List - Vehicle** .

   - **If only DTC P12A8 is set**
2. Replace the K111 Fuel Pump Power Control Module.
3. Verify the DTC does not set while operating the vehicle within the Conditions for Running the DTC.

- **If DTC sets**

  Replace the K20 Engine Control Module.

- **If DTC does not set**

4. All OK.

Repair Instructions

Perform the **Diagnostic Repair Verification** after completing the repair.

- **Fuel Pump Power Control Module Replacement**
- **Control Module References** for Engine Control Module replacement, programming, and setup.

DTC P135A

Diagnostic Instructions

- Perform the **Diagnostic System Check - Vehicle** prior to using this diagnostic procedure.
- Review **Strategy Based Diagnosis** for an overview of the diagnostic approach.
- **Diagnostic Procedure Instructions** provides an overview of each diagnostic category.

DTC Descriptor

DTC P135A

Ignition Coil Supply Voltage Circuit Bank 1

Diagnostic Fault Information

Circuit	Short to Ground	Open/High Resistance	Short to Voltage	Signal Performance
Ignition Voltage	P0201, P0202, P0203, P0204, P0300, P0351, P0352, P0353, P0354, P135A	P0201, P0202, P0203, P0204, P0300, P0351, P0352, P0353, P0354, P135A	-	-

Circuit/System Description

The ignition system uses an individual ignition coil for each cylinder. The engine control module (ECM) monitors the ignition voltage from the fuse to the individual coils.

Conditions for Running the DTC

- The ignition is ON.
- Ignition Run/Crank and PT relay voltages are greater than 11 V

The DTC runs continuously when the above conditions are met.

Conditions for Setting the DTC

The ECM detects less than 2.5 V on the ignition coil supply voltage circuit for greater than 313 ms.

Action Taken When the DTC Sets

DTC P135A is a Type A DTC.

Conditions for Clearing the DTC

DTC P135A is a Type A DTC.

Reference Information

Schematic Reference

Engine Controls Schematics

Connector End View Reference

COMPONENT CONNECTOR END VIEWS - INDEX

Description and Operation

Electronic Ignition System Description

Electrical Information Reference

- **Circuit Testing**
- **Connector Repairs**
- **Testing for Intermittent Conditions and Poor Connections**
- **Wiring Repairs**

Scan Tool Reference

Control Module References

Circuit/System Verification

1. Ignition ON.
2. Verify the scan tool Ignition Coil Supply Voltage parameter displays ON.
   - **If ON is not displayed**

     Refer to Circuit/System Testing.

   - **If ON is displayed**
3. Operate the vehicle within the Conditions for Running the DTC. You may also operate the vehicle within the conditions that you observed from the Freeze Frame/Failure Records data.
4. Verify the DTC does not set.

- **If the DTC sets**

  Refer to Circuit/System Testing.

- **If the DTC does not set**

5. All OK.

Circuit/System Testing

1. Ignition OFF, disconnect the X1 harness connector at the K20 Engine Control Module.
2. Connect a 3 A fused jumper wire between the control circuit terminal 72 and ground, ignition ON.
3. Verify a test lamp illuminates between the ignition circuit terminal 62 and ground.
   - **If the test lamp does not illuminate and the circuit fuse is good**
     1. Ignition OFF, remove the test lamp.
     2. Test for less than 2 ohms in the ignition circuit end to end.
        - If 2 ohms or greater, repair the open/high resistance in the circuit.
        - If less than 2 ohms, verify the fuse is not open and there is voltage at the fuse.
   - **If the test lamp does not illuminate and the circuit fuse is open**

     NOTE: The ignition circuit may supply voltage to other components. Make sure to test all circuits and components for a short to ground that share the ignition circuit.

     1. Ignition OFF, remove the test lamp, and disconnect all components on the circuit.
     2. Test for infinite resistance between the ignition circuit and ground.
        - If less than infinite resistance, repair the short to ground on the circuit.
        - If infinite resistance
     3. Replace the fuse, ignition ON.
     4. Verify the fuse is good after connecting each of the components one at a time.
        - If the fuse opens, replace the component that opens the fuse when connected.
        - If the fuse is good, all OK.
   - **If the test lamp illuminates**
4. Replace the K20 Engine Control Module.

Repair Instructions

Perform the **Diagnostic Repair Verification** after completing the repair.

- **Ignition Coil Replacement**
- **Control Module References** for engine control module replacement, programming, and setup

DTC P1400

Diagnostic Instructions

- Perform the **Diagnostic System Check - Vehicle** prior to using this diagnostic procedure.
- Review **Strategy Based Diagnosis** for an overview of the diagnostic approach.
- **Diagnostic Procedure Instructions** provides an overview of each diagnostic category.

DTC Descriptor

DTC P1400

Cold Start Emission Reduction Control System

Circuit/System Description

The catalytic converter must be warmed to efficiently reduce the emissions. The cold start strategy is to reduce the amount of time it takes to warm the catalytic converter. During a cold start, the engine idle speed is elevated and spark timing is retarded to allow the catalyst to warm quickly. This diagnostic monitors the following to build an exhaust energy model:

- Engine speed
- Spark advance
- Throttle position
- Engine airflow
- Engine coolant temperature
- Engine run time
- Park/Neutral position
- Vehicle speed

The actual model is then compared to the expected exhaust energy model.

Conditions for Running the DTC

- The engine is running, and a cold start has been detected.
- The vehicle speed is less than 2 km/h (1 mph).
- The catalyst temperature is greater than 1,000°C (1,832°F).
- The coolant temperature is greater than 56°C (133°F).
- The engine run time is greater than 18 s.
- The engine is at idle with no input from the accelerator pedal for greater than 5 s.
- DTCs P0101, P0102, P0103, P0106, P0107, P0108, P0112, P0113, P0116, P0117, P0118, P0120, P0121, P0122, P0123, P0220, P0222, P0223, P0201, P0202, P0203, P0204, P0300, P0335, P0336, P0351, P0352, P0353, P0506, P0507, P0601, P0602, P0603, P0604, P0606, P0607, P062F, P0641, P0651, P1516, P1682, P2101, P2119, P2120, P2122, P2123, P2125, P2127, P2128, P2135, P2138, P2176, P2610 are not set.
- This DTC runs within 15 seconds within the first 2 minutes of start-up. This diagnostic runs once per trip when a cold start has been determined.

Conditions for Setting the DTC

The actual exhaust energy model does not match the expected exhaust energy model.

Action Taken When the DTC Sets

DTC P1400 is a Type A DTC.

Conditions for Clearing the MIL/DTC

DTC P1400 is a Type A DTC.

Diagnostic Aids

Any loading of the engine that lowers engine RPM, such as partial application of the clutch, A/C cycling, etc. during the first 120 seconds of the engine run time may set this DTC.

Circuit/System Verification

1. Allow the engine to cool until the catalyst temperature is less than 500°C (932°F) and the engine coolant is greater than -10°C (+14°F).
2. Idle the engine for greater than 2 minutes.
3. Observe the scan tool DTC information. DTC P1400 should not set.
4. Operate the vehicle within the Conditions for Running the DTC. You may also operate the vehicle within the conditions that you observed from the Freeze Frame/Failure Records data.

Circuit/System Testing

1. Inspect the air intake system for the following:
   - Modified, damaged, or restricted
   - Dirty or deteriorating air filter element
   - Crankcase ventilation system for correct operation.
   - Water intrusion
   - Vacuum leak and other unmetered air downstream of the MAF sensor
   - Intake manifold leak
2. Inspect the exhaust system for the following:
   - Water intrusion
   - Exhaust leak
   - Damaged, restricted, modified or enhanced exhaust system.
3. Inspect the engine mechanical for items that could alter the air flow into the combustion chamber.

DTC P150C

Diagnostic Instructions

- Perform the **Diagnostic System Check - Vehicle** prior to using this diagnostic procedure.
- Review **Strategy Based Diagnosis** for an overview of the diagnostic approach.
- **Diagnostic Procedure Instructions** provides an overview of each diagnostic category.

DTC Descriptor

DTC P150C

Transmission Control Module Engine Speed Request Signal Message Counter Incorrect

Circuit/System Description

To improve vehicle shift feel, the transmission control module (TCM) is constantly sending the ECM serial data messages with information regarding its request for modifying engine speed or torque. The ECM sets this code when it detects a discrepancy in the structure of this message causing its integrity to be questioned.

An intermittent fault in the controller area network (CAN) circuits will cause DTC P150C to set.

Conditions for Running the DTC

- DTCs P0506, P0507, or U0101 are not set.
- The engine is running 0.5 s.
- The DTC runs continuously when the above conditions are met.

Conditions for Setting the DTC

The ECM detects that the TCM engine speed request does not match the expected engine speed request.

Action Taken When the DTC Sets

DTC P150C is a Type B DTC.

Conditions for Clearing the DTC

DTC P150C is a Type B DTC.

Reference Information

Description and Operation

Data Link Communications Description and Operation

DTC Type Reference

Powertrain Diagnostic Trouble Code (DTC) Type Definitions

Scan Tool Reference

Control Module References for scan tool information

Circuit/System Verification

NOTE:

- **DTC P150C is an informational DTC.**

- **Diagnose all other engine control module DTCs prior to DTC P150C.**

1. Verify that no other DTCs are set except for DTC P150C.
   - **If any other DTCs are set**

     Refer to **Diagnostic Trouble Code (DTC) List - Vehicle** .

   - **If only DTC P150C is set**
2. Replace the K17 Electronic Brake Control Module.
3. Operate the vehicle within the conditions for running the DTC. You may also operate the vehicle within the conditions that you observed from the freeze frame/failure records data.
4. Verify the DTC does not set.
   - **If the DTC sets**

     Replace the K20 Engine Control Module.

   - **If the DTC does not set**
5. All OK.

Repair Instructions

Perform the **Diagnostic Repair Verification** after completing the repair.

Control Module References for ECM or control solenoid valve assembly replacement, programming, and setup.

DTC P1516, P2101, P2119, OR P2176

Diagnostic Instructions

- Perform the **Diagnostic System Check - Vehicle** prior to using this diagnostic procedure.
- Review **Strategy Based Diagnosis** for an overview of the diagnostic approach.
- **Diagnostic Procedure Instructions** provides an overview of each diagnostic category.

DTC Descriptors

DTC P1516

Throttle Actuator Control (TAC) Module Throttle Actuator Position Performance

DTC P2101

Throttle Actuator Position Performance

DTC P2119

Throttle Closed Position Performance

DTC P2176

Minimum Throttle Position Not Learned

Diagnostic Fault Information

Circuit	Short to Ground	High Resistance	Open	Short to Voltage	Signal Performance
TAC Motor Control Closed	P1516, P2101, P2176	P1516, P2101, P2176	P1516, P2101, P2176	P0690, P1516, P2101, P2176	P1516, P2101, P2176
TAC Motor Control Open	P1516, P2101, P2119, P2176	P1516, P2101, P2176	P1516, P2101, P2176	P0690, P1516, P2101, P2176	P1516, P2101, P2176

Circuit/System Description

The throttle body assembly contains a contact-less inductive throttle position sensing element that is managed by a customized integrated circuit. The throttle position sensor is mounted within the throttle body assembly and is not serviceable. The engine control module (ECM) supplies the throttle body with a 5 V reference circuit, a low reference circuit, an H-bridge motor directional control circuit, and an asynchronous signal/serial data circuit. The asynchronous signal means communication is only going from the throttle body to the ECM. The throttle body cannot receive data from the ECM over the signal/serial data circuit. The throttle position sensor provides a signal voltage that changes relative to throttle blade angle. The customized integrated circuit translates the voltage based position information into serial data using the Society of Automotive Engineers (SAE) J2716 Single Edge Nibble Transmission (SENT) protocol. The throttle position sensor information is transmitted between the throttle body and the ECM on the signal/serial data circuit. The ECM decodes the serial data signal into separate voltages which are displayed on a scan tool as the voltage inputs from TP sensors 1 and 2.

The ECM controls the throttle valve by applying a varying voltage to the control circuits of the throttle actuator control (TAC) motor. The ECM monitors the duty cycle that is required to actuate the throttle valve. The ECM monitors the throttle position sensor signal/serial data circuit to determine the actual throttle valve position.

Conditions for Running the DTC

P1516

- The run/crank or powertrain relay voltage is greater than 6.4 V and reduced power is not active.
- DTC P1516 runs continuously when the above conditions are met.

P2101

- DTC P1682 is not set.
- The run/crank or powertrain relay voltage is greater than 6.4 V and reduced power is not active.
- The engine is running or the following conditions are met:

  - The engine is not running.
  - The ignition voltage is greater than 11 V.
  - The TAC system is not in the Battery Saver mode.
  - The ECM is commanding the throttle.
  - The ECM has learned the minimum throttle position.
- DTC P2101 runs continuously when the above conditions are met.

P2119

- DTCs P0122, P0123, P0222, P0223, or P06A3 is not set.
- The run/crank or powertrain relay voltage is greater than 6.4 V and reduced power is not active.
- The system is not in the Battery Save mode.
- The ECM is not commanding the throttle.
- DTC P2119 runs continuously when the above conditions are met.

P2176

- The run/crank or powertrain relay voltage is greater than 6.4 V and reduced power is not active.
- DTC P2176 runs continuously when the above conditions are met.

Conditions for Setting the DTC

P1516

The ECM detects an unstable throttle position for greater than 1 s.

P2101

- The ECM detects the actual throttle position does not match the predicted throttle position for greater than 1 s.

  OR

- The ECM detects the throttle control is driving the throttle in the incorrect direction or exceed the reduced power limit.

P2119

The ECM determines that the throttle blade did not return to the rest position within 1 s.

P2176

The ECM detects that both throttle position sensors were greater than a predetermined voltage during the minimum throttle learn procedure for greater than 2 s.

Action Taken When the DTC Sets

- DTCs P2101 and P2176 are Type A DTCs.
- DTC P1516 is a Type B DTC.
- DTC P2119 is a Type C DTC.
- The ECM commands the TAC system to operate in the Reduced Engine Power mode.
- A message center or an indicator displays Reduced Engine Power.
- Under certain conditions, the control module commands the engine OFF.

Conditions for Clearing the MIL/DTC

- DTCs P2101 and P2176 are Type A DTCs.
- DTC P1516 is a Type B DTC.
- DTC P2119 is a Type C DTC.

Diagnostic Aids

- Depending on the Start Up ECT, the Desired Throttle Position percentage maybe greater or less than the Throttle Position with the TAC motor at rest. When the ignition is initially turned ON, or when the engine is cranking or running the Desired and Actual Throttle positions should closely match.
- Inspect for a condition in which the throttle valve may have been held open. For example, ice may have formed in the throttle bore causing the throttle valve not to close.
- A high resistance condition on the throttle position and throttle actuator control circuits could cause a DTC to set.
- A low battery condition may cause a DTC to set.

Reference Information

Schematic Reference

Engine Controls Schematics

Connector End View Reference

COMPONENT CONNECTOR END VIEWS - INDEX

Description and Operation

Throttle Actuator Control (TAC) System Description

Electrical Information Reference

- **Circuit Testing**
- **Connector Repairs**
- **Testing for Intermittent Conditions and Poor Connections**
- **Wiring Repairs**

DTC Type Reference

Powertrain Diagnostic Trouble Code (DTC) Type Definitions

Scan Tool Reference

Control Module References for scan tool information

Circuit/System Verification

1. Ignition ON.

   NOTE: **A low battery voltage or charging system condition may cause a DTC to set.**

2. Verify DTC P0121, P0122, P0123, P0222, P0223, P0562, P0621, P0622, or P2135 is not set.
   - **If any of the DTCs are set**

     Refer to **Diagnostic Trouble Code (DTC) List - Vehicle** for further diagnosis.

   - **If none of the DTCs are set**
3. Verify the scan tool Throttle Body Idle Airflow Compensation parameter is less than 90 %.
   - **If 90 % or greater**

     Refer to **Throttle Body Cleaning** .

   - **If less than 90 %**
4. Clear the DTCs with a scan tool.
5. Ignition OFF and all vehicle systems OFF. It may take up to 2 minutes for all vehicle systems to power down.
6. Ignition ON.
7. Verify the scan tool TAC Motor parameter displays Enabled while slowly depressing the accelerator pedal.
   - **If Enabled is Not displayed**

     Refer to Circuit/System Testing.

   - **If Enabled is displayed**
8. Verify DTC P1516, P2101, P2119, or P2176 is not set.
   - **If any of the DTCs are set**

     Refer to Circuit/System Testing

   - **If none of the DTCs are set**

NOTE: **If there is a condition with the throttle body, the TAC Motor Command parameter will go to 99 % for a predetermined amount of time and then a DTC sets. Once a DTC is set, the TAC Motor Command parameter will go to 0 % and the TAC Motor parameter will display Disabled.**

9. Verify the scan tool TAC Motor parameter displays Enabled while performing the Throttle Sweep Test with a scan tool.
   - **If Disabled**

     Test or replace the Q38 Throttle Body assembly.

   - **If Enabled**
10. Operate the vehicle within the Conditions for Running the DTC. You may also operate the vehicle within the conditions that you observed from the Freeze Frame/Failure Records data.
11. Verify the DTC does not set.
    - **If the DTC sets**

      Refer to Circuit/System Testing

    - **If the DTC does not set**
12. All OK

Circuit/System Testing

1. Ignition OFF.

   WARNING: Turn OFF the ignition before inserting fingers into the throttle bore. Unexpected movement of the throttle blade could cause personal injury.

2. Verify the conditions listed below do not exist with the Q38 Throttle Body assembly:

   NOTE:
   - **The rest position is defined as the actual Throttle Position percentage when the ignition is OFF or with the ignition ON for greater than 30 seconds.**
   - **When the ignition is OFF, spring tension should hold the throttle plate in the rest position. You should be able to open the throttle plate to wide open throttle (WOT) or push the throttle plate to the fully closed position. In each case, the throttle plate should return to the rest position without assistance.**

   - A throttle blade that is not in the rest position
   - A throttle blade that is binding open or closed
   - A throttle blade that is free to move open or closed without spring pressure
     - **If a condition is found**

       Test or replace the Q38 Throttle Body assembly.

     - **If a condition is not found**
3. Ignition OFF.

NOTE:

- **Disconnecting the throttle body harness connector may cause additional DTCs to set.**
- **The ignition must be OFF and the ECM completely powered down before testing each circuit.**
- **The Test Lamp must be connected to circuit before turning ignition on or incorrect diagnosis my occur.**

4. Disconnect the harness connector at the Q38 Throttle Body assembly, ignition ON.
5. Verify that a test lamp does not illuminate continuously between each motor control circuit listed below and ground.
   - TAC Motor Control Open circuit terminal 1
   - TAC Motor Control Closed circuit terminal 2
   - **If the test lamp illuminates continuously**
   1. Ignition OFF, disconnect the harness connector at the K20 Engine Control Module, ignition ON
   2. Test for less than 1 V between the control circuit and ground.
      - If 1 V or greater, repair the short to voltage on the circuit.
      - If less than 1 V, replace the K20 Engine Control Module.
   - **If the test lamp is always OFF**
6. Verify that a test lamp does not illuminate between each motor control circuit listed below and B+.
   - TAC Motor Control Open circuit terminal 1
   - TAC Motor Control Closed circuit terminal 2
   - **If the test lamp illuminates**
   1. Ignition OFF, disconnect the harness connector at the K20 Engine Control Module.
   2. Test for infinite resistance between the control circuit and ground.
      - If less than infinite resistance, repair the short to ground on the circuit.
      - If infinite resistance, replace the K20 Engine Control Module.
   - **If the test lamp is always OFF**
7. Ignition OFF, set the DMM to the 40 V scale or higher, select the Min/Max Recording Mode, and set the Peak Min/Max response time to 1 ms or faster.

NOTE:

- **The DMM Min/Max Recording Mode and the response time of 1 ms or faster must be reset after testing each circuit or a lower voltage will be recorded.**
- **The ignition must be OFF and the ECM completely powered down before testing each circuit or a lower voltage will be recorded.**

8. Verify the Max voltage is within 3 V of B+ while using DMM Min/Max Recording Mode function on each control circuit listed below as the ignition is turned ON.
   - TAC Motor Control Open circuit terminal 1
   - TAC Motor Control Closed circuit terminal 2
   - **If not within 3 V of B+**
   1. Ignition OFF, disconnect the harness connector at the K20 Engine Control Module.

2. Test for less than 2 ohms in the control circuit end to end.
    - If 2 ohms or greater, repair the open/high resistance in the circuit.
    - If less than 2 ohms, replace the K20 Engine Control Module.
  - **If within 3 V of B+**
9. Test or replace the Q38 Throttle Body assembly.

Repair Instructions

- **Throttle Body Assembly Replacement**
- **Control Module References** for ECM replacement, programming, and setup

Repair Verification

1. Install any components that have been removed or replaced during diagnosis.
2. Perform any adjustments, programming or setup procedures that are required when a component is removed or replaced.
3. Clear the DTCs with a scan tool.
4. Ignition OFF and all vehicle systems OFF. It may take up to 2 minutes for all vehicle systems to power down.
5. Ignition ON.
6. Verify the scan tool TAC Motor parameter displays Enabled while performing the Throttle Sweep Test with a scan tool.
    - **If Disabled**

      Test or replace the Q38 Throttle Body assembly.

    - **If Enabled**
7. If the repair was related to a DTC, duplicate the Conditions for Running the DTC and use the Freeze Frame/Failure Records, if applicable, in order to verify the DTC does not set.
    - **If DTC sets**

      Refer to **Diagnostic Trouble Code (DTC) List - Vehicle** for further diagnosis.

    - **If DTC does not set**
8. All OK

DTC P15F2

Diagnostic Instructions

- Perform the **Diagnostic System Check - Vehicle** prior to using this diagnostic procedure.
- Review **Strategy Based Diagnosis** for an overview of the diagnostic approach.
- **Diagnostic Procedure Instructions** provides an overview of each diagnostic category.

DTC Descriptor

DTC P15F2

Engine Torque Command Signal Message Counter Incorrect

Circuit/System Description

This diagnostic applies to internal microprocessor integrity conditions within the engine control module (ECM). The hybrid/EV powertrain control module 1 is internal to the power inverter module, often referred to as the drive motor generator power inverter module, and is not serviced separately. The hybrid/EV powertrain control module 1 sends an engine torque requested message to the ECM over the serial data circuits. The ECM monitors the data to verify the indicated engine torque requested calculation is correct. The ECM processor monitors the data to verify that the engine torque command is correct.

Conditions for Running the DTC

- Vehicle is ON.
- The system voltage is 8-18 V.
- DTC U1817 is not set.

Conditions for Setting the DTC

The control module has detected an internal malfunction.

Action Taken When the DTC Sets

- DTC P15F2 is a Type A DTC.
- The hybrid/EV powertrain control module 1 requests the hybrid/EV powertrain control module 2 to open the high voltage contactor relays.

Conditions for Clearing the DTC

DTC P15F2 is a Type A DTC.

Reference Information

DTC Type Reference

Powertrain Diagnostic Trouble Code (DTC) Type Definitions

Circuit/System Verification

NOTE: Diagnose and repair any communication DTCs prior to performing this testing.

1. Vehicle ON.
2. Verify DTC P15F2 is not set.
   - **If the DTC is set**
     1. Program the K20 ECM.
     2. Verify the DTC does not set.

    - If the DTC sets, replace the K20 ECM.
    - If the DTC does not set.
  3. All OK
  - **If the DTC is not set**
3. All OK

Repair Instructions

Perform the **Diagnostic Repair Verification** after completing the repair.

Control Module References for K20 ECM replacement, programming, and setup

DTC P15F9

Diagnostic Instructions

- Perform the **Diagnostic System Check - Vehicle** prior to using this diagnostic procedure.
- Review **Strategy Based Diagnosis** for a overview of the diagnostic approach.
- **Diagnostic Procedure Instructions** provides an overview of each diagnostic category.

DTC Descriptor

DTC P15F9

Hybrid/EV System Engine Speed Control Intervention Request Type Signal Message Counter Incorrect

Circuit/System Description

The hybrid/EV powertrain control module is constantly sending serial data messages to the ECM regarding the operating state of the powertrain propulsion system. These messages are sent in a continuously repeating series of rolling counts with associated password protect samples. Each count/sample is assigned a value. The ECM uses the values, during a propulsion system mode shift, to determine when and at what RPM to idle the internal combustion engine. When the ECM determines that too many of the counts/samples contain an error value, the ECM sets DTC P15F9.

Conditions for Running the DTC

- DTC U1817 is not set.
- The engine run time is greater than 0.5 s.
- No other CAN errors are present.
- The DTC runs continuously when the above conditions are met.

Conditions for Setting the DTC

The ECM detects that 10 of 16 counts/samples contain an error value.

Action Taken When the DTC Sets

DTC P15F9 is a Type B DTC

Conditions for Clearing the DTC

DTC P15F9 is a Type B DTC.

Diagnostic Aids

An intermittent fault in the CAN circuits will cause the ECM to set DTC P15F9.

Reference Information

Description and Operation

Hybrid Modes of Operation Description

DTC Type Reference

Powertrain Diagnostic Trouble Code (DTC) Type Definitions

Scan Tool Reference

Control Module References for scan tool information

Circuit/System Verification

NOTE:

- **Correct any engine control DTCs before diagnosing hybrid/EV powertrain control module DTCs.**
- **DTC P15F9 is an informational DTC.**

1. Verify there are no engine control or communication DTCs set.
   - **If a DTC is set**

     Refer to **Diagnostic Trouble Code (DTC) List - Vehicle** .

   - **If a DTC is not set**
2. Verify there are no hybrid/EV powertrain control module DTCs set.
   - **If a DTC is set**

     Refer to **Diagnostic Trouble Code (DTC) List - Vehicle** .

   - **If a DTC is not set**
3. Operate the vehicle within the Conditions for Running the DTC. You may also operate the vehicle within the conditions that you observed from the Freeze Frame/Failure Records data.
4. Verify the DTC does not set.
   - **If the DTC sets**

     Refer to **Diagnostic Trouble Code (DTC) List - Vehicle** .

- **If the DTC does not set**

5. All OK.

Repair Instructions

Perform the **Diagnostic Repair Verification** after completing the repair.

DTC P15FB

Diagnostic Instructions

- Perform the **Diagnostic System Check - Vehicle** prior to using this diagnostic procedure.
- Review **Strategy Based Diagnosis** for a overview of the diagnostic approach.
- **Diagnostic Procedure Instructions** provides an overview of each diagnostic category.

DTC Descriptor

DTC P15FB

Brake Pedal Position Sensor Signal Message Counter Incorrect

Circuit/System Description

The electronic brake control module (EBCM) monitors the brake pedal position sensor in order to provide emission related brake pedal position information to the engine control module (ECM). The EBCM sends the information, via the serial data circuit, to the ECM in a continuously repeating series of 16 rolling counts, with each count assigned a value. When the ECM determines that too many of the counts have an incorrect value, the ECM sets DTC P15FB.

Conditions for Running the DTC

- The vehicle is ON.
- DTC P15FB runs continuously when the above condition is met.

Conditions for Setting the DTC

The ECM detects that too many of the rolling counts have an incorrect value.

Action Taken When the DTC Sets

- DTC P15FB is a Type B DTC.
- Brake pedal position is defaulted to 0 for as long as the fault is active.

Conditions for Clearing the DTC

DTC P15FB is a Type B DTC.

Reference Information

Description and Operation

Hybrid Modes of Operation Description

DTC Type Reference

Powertrain Diagnostic Trouble Code (DTC) Type Definitions

Scan Tool Reference

Control Module References for scan tool information.

Circuit/System Verification

NOTE:

- **DTC P15FB is an informational DTC.**
- **Diagnose all other engine control module DTCs prior to DTC P15FB.**

1. Verify that no other DTCs are set except for DTC P15FB.
   - **If any other DTCs are set**

     Refer to **Diagnostic Trouble Code (DTC) List - Vehicle** .

   - **If only DTC P15FB is set**
2. Replace the K17 Electronic Brake Control Module.
3. Verify the DTC does not set while operating the vehicle within the Conditions for Running the DTC.
   - **If DTC sets**

     Replace the K20 Engine Control Module.

   - **If DTC does not set**
4. All OK.

Repair Instructions

Perform the **Diagnostic Repair Verification** after completing the diagnostic procedure.

Control Module References for Electronic Brake Control Module and Engine Control Module replacement, programming and setup

DTC P163A

Diagnostic Instructions

- Perform the **Diagnostic System Check - Vehicle** prior to using this diagnostic procedure.
- Review **Strategy Based Diagnosis** for an overview of the diagnostic approach.
- **Diagnostic Procedure Instructions** provides an overview of each diagnostic category.

DTC Descriptor

DTC P163A

Control Module Fuel Pressure Regulator 1 Control System Circuitry Performance

Circuit/System Description

This diagnostic applies to internal microprocessor integrity conditions within the engine control module (ECM) or an out of range high pressure fuel pump actuator current.

Conditions for Running the DTC

- DTCs P0016, P0017, P0090, P0091, P0092, P00C8, P00C9, P00CA, P0112, P0113, P0116, P0117, P0118, P0128, P0192, P0193, P0335, P0336, P0340, P0341, P0365, P0366, P0627-P0629, P1682 are not set.
- The engine is running.
- The ignition voltage is greater than 11 V.
- The low side fuel pressure is greater than 275 kPa (40 psi).
- DTC P163A runs continuously when the conditions are met for greater than 500 mS.

Conditions for Setting the DTC

The ECM detects a condition with the integrated circuits of the high pressure fuel pump actuator driver module or the ECM detects that the current used to drive the high pressure fuel pump actuator is out of range for greater than 4 s.

Action Taken When the DTC Sets

DTC P163A is a Type B DTC.

Conditions for Clearing the DTC

DTC P163A is a Type B DTC.

Reference Information

Schematic Reference

Engine Controls Schematics

Connector End View Reference

COMPONENT CONNECTOR END VIEWS - INDEX

Description and Operation

Engine Control Module Description

Electrical Information Reference

- **Circuit Testing**

- **Connector Repairs**
- **Testing for Intermittent Conditions and Poor Connections**
- **Wiring Repairs**

DTC Type Reference

Powertrain Diagnostic Trouble Code (DTC) Type Definitions

Scan Tool Reference

Control Module References for scan tool information

Circuit/System Testing

1. Ignition OFF, disconnect the harness connector at the G18 high pressure fuel pump.

NOTE: The DMM and test leads must be calibrated to 0 ohms in order to prevent misdiagnosis.

2. Test for 9-11 ohms at 25°C (77°F) between the low control circuit terminal 1 and the high control circuit terminal 2.
   - If not within the specified range, replace the G18 high pressure fuel pump.
3. Measure the resistance between each terminal and the high pressure fuel pump housing. The DMM should display OL.
   - If less than the specified value, replace the G18 high pressure fuel pump.
4. Ignition ON, verify that a test lamp does not illuminate between the high control circuit terminal 2 and ground and the low control circuit terminal 1 and ground.
   - If the test lamp illuminates, test the appropriate control circuit for a short to voltage. If the circuit tests normal, replace the K20 ECM.
5. Verify that a test lamp does not illuminate between the high control circuit terminal 2 and B+ and the low control circuit terminal 1 and B+.
   - If the test lamp illuminates, test the appropriate control circuit for a short to ground. If the circuit tests normal, replace the K20 ECM.
6. Connect a 3 A fused jumper wire between the high control circuit terminal 2 and ground. The Fuel Pressure Regulator High Control Circuit Open Test Status should transition from Malfunction to OK and the Fuel Pressure Regulator High Control Circuit Low Voltage Test Status should transition from OK to Malfunction.
   - If not the specified value, test the high control circuit for an open/high resistance.
7. Connect a 3 A fused jumper wire between the low control circuit terminal 1 and B+. The Fuel Pressure Regulator Control Circuit Open Test Status should transition from Malfunction to OK and the Fuel Pressure Regulator Control Circuit High Voltage Test Status should transition from OK to Malfunction.
   - If not the specified value, test the low control circuit for an open/high resistance.
8. If all circuits and the high pressure fuel pump test normal, replace the K20 ECM.

Repair Instructions

Perform the **Diagnostic Repair Verification** after completing the diagnostic procedure.

- **Fuel Pump Replacement**
- **Control Module References** for engine control module replacement, setup, and programming
- Perform the Fuel Rail Pressure Relief Valve Reset procedure, if supported on the scan tool.

DTC P2096

Diagnostic Instructions

- Perform the **Diagnostic System Check - Vehicle** prior to using this diagnostic procedure.
- Review **Strategy Based Diagnosis** for an overview of the diagnostic approach.
- **Diagnostic Procedure Instructions** provides an overview of each diagnostic category.

DTC Descriptor

DTC P2096

Post Catalyst Fuel Trim System Low Limit Bank 1

Circuit Description

Fuel trim bias is used to keep the post catalyst air/fuel ratio within a predetermined range. This allows optimal catalyst efficiency under various operating conditions. The engine control module (ECM) constantly monitors how lean or rich the fuel trim bias is commanded, to determine if the fuel trim bias is greater than a calibrated amount.

Conditions for Running the DTC

- DTC P0016, P0017, P0030, P0036, P0053, P0054, P0101, P0102, P0103, P0106, P0107, P0108, P0111, P0112, P0113, P0114, P0116, P0117, P0118, P0128, P0131, P0132, P0133, P0134, P0135, P0137, P0138, P013A, P013B, P013E, P013F, P0140, P0141, P015A, P015B, P0178, P0179, P0201, P0202, P0203, P0204, P0261, P0262, P0264, P0265, P0267, P0268, P0270, P0271, P0301, P0302, P0303, P0304, P0340, P0341, P0365, P0366, P0411, P0442, P0443, P0446, P0449, P0452, P0453, P0455, P0458, P0459, P0496, P0498, P0499, P111E, P1133, P1248, P1249, P124A, P124B, P2147, P2148, P2150, P2151, P2153, P2154, P2156, P2157, P219A, P2227, P2228, P2229, P2230, P2269, P2270, P2271, P2440, P2444, or P2A00 is not set.
- The barometric pressure (BARO) is greater than 70 kPa (10.2 PSI).
- The manifold absolute pressure (MAP) is between 0-200 kPa (0-29 PSI).
- The intake air temperature (IAT) is between -20°C and +200°C (-4°F and +392°F).
- The start-up engine coolant temperature is warmer than -20°C (-4°F).
- The engine is in Closed Loop status.
- The fuel control intrusive diagnostics are not active.
- The engine is operating under light acceleration, heavy acceleration, or cruise.
- DTC P2096 runs continuously when the conditions above have been met.

Conditions for Setting the DTC

The lean correction limit for a condition causing a rich air/fuel ratio has been exceeded.

Action Taken when the DTC Sets

- DTCs P2096 is a Type B DTC.
- The ECM records the operating conditions at the time the diagnostic fails. The first time the diagnostic fails, the ECM stores this information in the Failure records. If the diagnostic reports a failure on the second ignition cycle, the ECM records the operating conditions at the time of the failure. The ECM writes the operating conditions to the Freeze Frame and updates the Failure records. The ECM illuminates the malfunction indicator lamp (MIL) when one of the following occurs:
  - The ECM detects the same fuel trim failure during 2 consecutive trips.
  - The ECM detects any fuel trim failure during any subsequent trip if the conditions at the time of failure meet the following criteria:
    - The engine load is within 20 percent of the previous test that failed.
    - The engine speed is within 375 RPM of the previous test that failed.
    - The engine coolant temperature is in the same range of the previous test that failed.

Conditions for Clearing the MIL/DTC

- DTCs P2096 is a Type B DTC.
- The ECM turns OFF the malfunction indicator lamp (MIL) at the beginning of the fourth ignition cycle, after 3 ignition cycles that the diagnostic runs and does not fail.
- A current DTC, Last Test Failed, clears when the diagnostic runs and passes.

Diagnostic Aids

- The post catalyst fuel trim diagnostic is very sensitive to heated oxygen sensor (HO2S) design. A non-OE sensor or an incorrect part number may cause a DTC to set.
- Certain aftermarket air filters may cause a DTC to set.
- Certain aftermarket air induction systems or modifications to the air induction system may cause a DTC to set.
- Certain aftermarket exhaust system components may cause a DTC to set.

Reference Information

Schematic Reference

Engine Controls Schematics

Connector End View Reference

COMPONENT CONNECTOR END VIEWS - INDEX

Component View Reference

Powertrain Component Views

Electrical Information Reference

- **Circuit Testing**
- **Connector Repairs**
- **Testing for Intermittent Conditions and Poor Connections**
- **Wiring Repairs**

DTC Type Reference

Powertrain Diagnostic Trouble Code (DTC) Type Definitions

Scan Tool Reference

Control Module References for scan tool information

Circuit/System Verification

1. Ignition ON.
2. Verify no other HO2S or fuel trim DTC is set.
   - **If any other HO2S or fuel trim DTC is set**

     Refer to **Diagnostic Trouble Code (DTC) List - Vehicle** for further diagnosis.

   - **If no other HO2S or fuel trim DTC is set**
3. Verify DTC P2096 is not set.
   - **If the DTC is set**

     Refer to Circuit/System Testing.

   - **If the DTC is not set**
4. Operate the vehicle within the Conditions for Running the DTC. You may also operate the vehicle within the conditions that you observed in the Freeze Frame/Failure Records data.
5. Verify DTC P2096 is not set.
   - **If the DTC is set**

     Refer to Circuit/System Testing.

   - **If the DTC is not set**
6. All OK.

Circuit/System Testing

Verify none of the conditions listed below exist

- Collapsed or restricted air intake duct.
- Dirty or restricted air filter.
- Objects blocking the throttle body.
- Excessive fuel in the crankcase. Change engine oil as necessary.

- Rich fuel injectors. Refer to **Fuel Injector Solenoid Coil Test**.
- Excessive fuel system pressure. Refer to **Fuel System Diagnosis**.
- Contaminated fuel. Refer to **Alcohol/Contaminants-in-Fuel Diagnosis**.
- Fuel saturation of the evaporative emissions (EVAP) canister
- Stuck open or leaking EVAP purge valve
- Restricted exhaust. Refer to **Symptoms - Engine Exhaust** .
- Incorrect PCV system operation. Refer to **Crankcase Ventilation System Inspection/Diagnosis (Without Turbocharger)** .

- **If a condition is found**

Repair as necessary.

Repair Instructions

Perform the **Diagnostic Repair Verification** after completing the repair.

Reset the fuel trim after completing the repair.

DTC P2097

Diagnostic Instructions

- Perform the **Diagnostic System Check - Vehicle** prior to using this diagnostic procedure.
- Review **Strategy Based Diagnosis** for an overview of the diagnostic approach.
- **Diagnostic Procedure Instructions** provides an overview of each diagnostic category.

DTC Descriptors

DTC P2097

Post Catalyst Fuel Trim System High Limit Bank 1

Circuit Description

Fuel trim bias is used to keep the post catalyst air/fuel ratio within a predetermined range. This allows optimal catalyst efficiency under various operating conditions. The engine control module (ECM) constantly monitors how lean or rich the fuel trim bias is commanded, to determine if the fuel trim bias is greater than a calibrated amount.

Conditions for Running the DTC

- DTC P0016, P0017, P0018, P0019, P0030, P0036, P0050, P0053, P0054, P0056, P0059, P0060, P0101, P0102, P0103, P0106, P0107, P0108, P0111, P0112, P0113, P0114, P0116, P0117, P0118, P0128, P0131, P0132, P0133, P0134, P0135, P0137, P0138, P013A, P013B, P013C, P013D, P013E, P013F, P0140, P0141, P014A, P014B, P0151, P0152, P0153, P0154, P0155, P0157, P0158, P015A, P015B, P015C, P015D, P0160, P0161, P0178, P0179, P0201, P0202, P0203, P0204, P0205, P0206, P0261, P0262, P0264, P0265, P0267, P0268, P0270, P0271, P0273, P0274, P0276, P0277, P0300,

P0301, P0302, P0303, P0304, P0305, P0306, P0340, P0341, P0345, P0346, P0365, P0366, P0390, P0391, P0411, P0442, P0443, P0446, P0449, P0452, P0453, P0455, P0496, P1133, P1153, P1248, P1249, P124A, P124B, P124C, P124D, P2147, P2148, P2150, P2151, P2153, P2154, P2156, P2157, P216B, P216C, P216E, P216F, P219A, P219B, P2227, P2228, P2229, P2230, P2269, P2270, P2271, P2272, P2273, P2440, or P2444 is not set.

- The barometric pressure (BARO) is greater than 70 kPa (10.2 PSI).
- The manifold absolute pressure (MAP) is between 0-200 kPa (0-29 PSI).
- The intake air temperature (IAT) is between -20°C and +200°C (-4°F and +392°F).
- The start-up engine coolant temperature is warmer than -20°C (-4°F).
- The engine is in Closed Loop status.
- The fuel control intrusive diagnostics are not active.
- The engine is operating under light acceleration, heavy acceleration, or cruise.
- DTC P2097 runs continuously when the conditions above have been met.

Conditions for Setting the DTC

The rich correction limit for a condition causing a lean air/fuel ratio has been exceeded.

Action Taken when the DTC Sets

- DTCs P2097 is a Type B DTC.
- The ECM records the operating conditions at the time the diagnostic fails. The first time the diagnostic fails, the ECM stores this information in the Failure records. If the diagnostic reports a failure on the second ignition cycle, the ECM records the operating conditions at the time of the failure. The ECM writes the operating conditions to the Freeze Frame and updates the Failure records. The ECM illuminates the malfunction indicator lamp (MIL) when one of the following occurs:
  - The ECM detects the same fuel trim failure during 2 consecutive trips.
  - The ECM detects any fuel trim failure during any subsequent trip if the conditions at the time of failure meet the following criteria:
    - The engine load is within 20 percent of the previous test that failed.
    - The engine speed is within 375 RPM of the previous test that failed.
    - The engine coolant temperature is in the same range of the previous test that failed.

Conditions for Clearing the MIL/DTC

- DTCs P2097 is a Type B DTC.
- The ECM turns OFF the malfunction indicator lamp (MIL) at the beginning of the fourth ignition cycle, after 3 ignition cycles that the diagnostic runs and does not fail.
- A current DTC, Last Test Failed, clears when the diagnostic runs and passes.

Diagnostic Aids

- The post catalyst fuel trim diagnostic is very sensitive to heated oxygen sensor (HO2S) design. A non-OE sensor or an incorrect part number may cause a DTC to set.
- An exhaust system leak that may not be audible can set this DTC.
- Certain aftermarket air filters may cause a DTC to set.

- Certain aftermarket air induction systems or modifications to the air induction system may cause a DTC to set.
- Certain aftermarket exhaust system components may cause a DTC to set.

Reference Information

Schematic Reference

Engine Controls Schematics

Connector End View Reference

COMPONENT CONNECTOR END VIEWS - INDEX

Component View Reference

Powertrain Component Views

Electrical Information Reference

- **Circuit Testing**
- **Connector Repairs**
- **Testing for Intermittent Conditions and Poor Connections**
- **Wiring Repairs**

DTC Type Reference

Powertrain Diagnostic Trouble Code (DTC) Type Definitions

Scan Tool Reference

Control Module References for scan tool information

Circuit/System Verification

1. Ignition ON.
2. Verify no other HO2S or fuel trim DTC is set.
   - **If any other HO2S or fuel trim DTC is set**

     Refer to **Diagnostic Trouble Code (DTC) List - Vehicle** for further diagnosis.

   - **If no other HO2S or fuel trim DTC is set**
3. Verify DTC P2097 is not set.
   - **If the DTC is set**

     Refer to Circuit/System Testing.

   - **If the DTC is not set**

4. Operate the vehicle within the Conditions for Running the DTC. You may also operate the vehicle within the conditions that you observed in the Freeze Frame/Failure Records data.
5. Verify DTC P2097 is not set.
   - **If the DTC is set**

     Refer to Circuit/System Testing.

   - **If the DTC is not set**
6. All OK.

Circuit/System Testing

Verify none of the conditions listed below exist:

- Exhaust system leaks. Refer to **Symptoms - Engine Exhaust** .
- Split, kinked, or improperly connected vacuum hoses
- Insufficient fuel in the tank
- Leaks in the air induction system or the air intake ducts
- Missing air filter element
- A cracked evaporative canister
- Evaporative pipes plugged, obstructed, or leaking
- Leaks in the crankcase ventilation system. Refer to **Crankcase Ventilation System Inspection/Diagnosis (Without Turbocharger)** .
- Engine vacuum leaks
- Low fuel system pressure. Refer to **Fuel System Diagnosis**.
- Contaminated fuel. Refer to **Alcohol/Contaminants-in-Fuel Diagnosis**.
- Lean fuel injectors. Refer to **Fuel Injector Solenoid Coil Test**.

- **If a condition is found**

Repair as necessary.

Repair Instructions

Perform the **Diagnostic Repair Verification** after completing the repair.

Reset the fuel trim after completing the repair.

DTC P2122, P2123, P2127, P2128, OR P2138

Diagnostic Instructions

- Perform the **Diagnostic System Check - Vehicle** prior to using this diagnostic procedure.
- Review **Strategy Based Diagnosis** for an overview of the diagnostic approach.
- **Diagnostic Procedure Instructions** provides an overview of each diagnostic category.

DTC Descriptors

DTC P2122

Accelerator Pedal Position (APP) Sensor 1 Circuit Low Voltage

DTC P2123

Accelerator Pedal Position (APP) Sensor 1 Circuit High Voltage

DTC P2127

Accelerator Pedal Position (APP) Sensor 2 Circuit Low Voltage

DTC P2128

Accelerator Pedal Position (APP) Sensor 2 Circuit High Voltage

DTC P2138

Accelerator Pedal Position (APP) Sensors 1-2 Not Plausible

Diagnostic Fault Information

Circuit	Short to Ground	High Resistance	Open	Short to Voltage	Signal Performance
Accelerator Pedal Position (APP) Sensor 1 5 V Reference Circuit	P06A3	P2138	P2122	P06A3	P2138
Accelerator Pedal Position (APP) Sensor 2 5 V Reference Circuit	P0108, P0107, P0697	P2138	P2127	P0106, P0108, P0697	P2138
Accelerator Pedal Position (APP) Sensor 1 Signal	P2122	P2138	P2122	P2123, P2138	P2138
Accelerator Pedal Position (APP) Sensor 2 Signal	P2127	P2138	P2127	P2128, P2138	P2138
Accelerator Pedal Position (APP) Sensor 1 Low Reference	-	P2138	P2123	-	P2138
Accelerator Pedal Position (APP) Sensor 2 Low Reference	-	P2138	P2128	-	P2138

Typical Scan Tool Data

APP Sensor 1

Circuit	Short to Ground	Open	Short to Voltage
Operating Conditions: The engine is operating at idle. **Parameter Normal Range:** APP Sensor 1 0.88-1.08 V			

APP Sensor 1 5 V Reference	0.00 V	0.00 V	2-5 V
APP Sensor 1 Signal	0.00 V	0.00 V	4-5 V
APP Sensor 1 Low Reference	-	4-5 V	-

APP Sensor 2

Circuit	Short to Ground	Open	Short to Voltage
Operating Conditions: The engine is operating at idle. **Parameter Normal Range:** APP Sensor 2 0.39-0.59 V			
APP Sensor 2 5 V Reference	0.00 V	0.00 V	1-2 V
APP Sensor 2 Signal	0.00 V	0.00 V	2-5 V
APP Sensor 2 Low Reference	-	4-5 V	-

Circuit/System Description

The accelerator pedal assembly contains 2 accelerator pedal position (APP) sensors. The APP sensors are mounted to the accelerator pedal assembly and are not serviceable. The APP sensors provide a signal voltage that changes relative to pedal position. The engine control module (ECM) supplies each APP sensor with a 5 V reference circuit, a low reference circuit, and a signal circuit.

Both the APP sensors 1 and 2 signal percentages increase as the pedal is depressed, from approximately 0 percent at rest to above 95 percent when fully depressed.

Conditions for Running the DTC

P2122, P2123, P2127, or P2128

- DTC P06A3 or P0697 are not set.
- The ignition is ON or the engine is operating.
- The ignition voltage is greater than 6 V.
- The ECM is not commanding reduced power.
- The DTCs run continuously when the above conditions are met.

P2138

- DTCs P06A3, P0697, P2122, P2123, P2127, or P2128 are not set.
- The ignition is ON or the engine is operating.
- The ignition voltage is greater than 6 V.
- The ECM is not commanding reduced power.
- The DTC runs continuously when the above conditions are met.

Conditions for Setting the DTC

P2122

The ECM detects that the APP sensor 1 voltage is less than 0.46 V for greater than 1 s.

P2123

The ECM detects that the APP sensor 1 voltage is greater than 4.7 V for greater than 1 s.

P2127

The ECM detects that the APP sensor 2 voltage is less than 0.32 V for greater than 1 s.

P2128

The ECM detects that the APP sensor 2 voltage is greater than 2.6 V for greater than 1 s.

P2138

The ECM detects that APP sensor 1 and APP sensor 2 disagree greater than 10 percent for greater than 1 s.

OR

The ECM detects that both APP sensor 1 and APP sensor 2 are 5 percent greater than the learned minimum position for greater than 1 s.

Action Taken When the DTC Sets

- DTCs P2122, P2123, P2127, P2128, and P2138 are type A DTCs.
- The ECM commands the TAC system to operate in a Reduced Engine Power mode.

Conditions for Clearing the DTC

DTCs P2122, P2123, P2127, P2128, and P2138 are type A DTCs.

Diagnostic Aids

- A high resistance condition on the accelerator pedal position circuits could cause a DTC to set.
- Ensure that the in-line harness connector seals are installed correctly. Improper installation could result in water intrusion into the connector and cause a DTC to set.

Reference Information

Schematic Reference

Engine Controls Schematics

Connector End View Reference

COMPONENT CONNECTOR END VIEWS - INDEX

Description and Operation

Throttle Actuator Control (TAC) System Description

Electrical Information Reference

- **Circuit Testing**
- **Connector Repairs**
- **Testing for Intermittent Conditions and Poor Connections**
- **Wiring Repairs**

DTC Type Reference

Powertrain Diagnostic Trouble Code (DTC) Type Definitions

Scan Tool Reference

Control Module References for scan tool information

Circuit/System Verification

1. Ignition ON.
2. Verify DTC P0697 or P06A3 is not set.
   - **If any of the DTCs are set**

     Refer to **DTC P0641, P0651, P0697, or P06A3 (ECM)** for further diagnosis.

   - **If none of the DTCs are set**
3. Verify the APP Sensor 1 Circuit Status and APP Sensor 2 Circuit Status displays OK.
   - **If Malfunction is displayed**

     Refer to Circuit/System Testing

   - **If OK is displayed**
4. Verify the scan tool APP Sensor 1 and 2 Agree/Disagree parameter displays Agree while performing the tests listed below:
   - Rapidly depress the accelerator pedal from the rest position to the wide open throttle position (WOT) and release pedal. Repeat the procedure several times.
   - Slowly depress the accelerator pedal to WOT and then slowly return the pedal to closed throttle. Repeat the procedure several times.
   - **If Disagree**

     Refer to Circuit/System Testing

   - **If Agree**
5. Verify that DTC P2122, P2123, P2127, P2128, or P2138 is not set.
   - **If any of the DTCs are set**

     Refer to Circuit/System Testing

   - **If none of the DTCs set**
6. Operate the vehicle within the Conditions for Running the DTC. You may also operate the vehicle

within the conditions that you observed from the Freeze Frame/Failure Records data.

7. Verify the DTC does not set.
   - **If the DTC sets**

     Refer to Circuit/System Testing

   - **If the DTC does not set**
8. All OK

Circuit/System Testing

1. Ignition OFF and all vehicle systems OFF, disconnect the harness connector at the B107 accelerator pedal assembly. It may take up to 2 minutes for all vehicle systems to power down.
2. Test for less than 5 ohms between each low reference circuit terminal listed below and ground.
   - Low reference circuit terminal 4 or A
   - Low reference circuit terminal 5 or D
   - **If 5 ohms or greater**
     1. Ignition OFF, disconnect the harness connector at the K20 engine control module.
     2. Test for less than 2 ohms in the low reference circuit end to end.
        - If 2 ohms or greater, repair the open/high resistance in the circuit.
        - If less than 2 ohms, replace the K20 engine control module.
   - **If less than 5 ohms**
3. Ignition ON.
4. Test for 4.8-5.2 V between each 5 V reference circuit terminal listed below and ground.
   - 5 V reference circuit terminal 1 or C
   - 5 V reference circuit terminal 2 or F
   - **If less than 4.8 V**
     1. Ignition OFF, disconnect the harness connector at the K20 engine control module.
     2. Test for infinite resistance between the 5 V reference circuit and ground.
        - If less than infinite resistance, repair the short to ground on the circuit.
        - If infinite resistance
     3. Test for less than 2 ohms in the 5 V reference circuit end to end.
        - If 2 ohms or greater, repair the open/high resistance in the circuit.
        - If less than 2 ohms, replace the K20 engine control module.
   - **If greater than 5.2 V**
     1. Ignition OFF, disconnect the harness connector at the K20 engine control module, ignition ON.
     2. Test for less than 1 V between the 5 V reference circuit and ground.
        - If 1 V or greater, repair the short to voltage on the circuit.
        - If less than 1 V, replace the K20 engine control module.
   - **If between 4.8-5.2 V**
5. Verify each APP sensor voltage parameter is less than 0.2 V.
   - **If 0.2 V or greater**

1. Ignition OFF, disconnect the harness connector at the K20 engine control module, ignition ON.
2. Test for less than 1 V between the signal circuit terminal listed below and ground.
   - APP sensor 1 signal circuit terminal 3 or E
   - APP sensor 2 signal circuit terminal 6 or B
   - If 1 V or greater, repair the short to voltage on the circuit.
   - If less than 1 V, replace the K20 engine control module.
   - **If less than 0.2 V**
6. Install a 3 A fused jumper wire between each signal circuit terminal listed below and the 5 V reference circuit terminal 1 or C.
   - APP sensor 1 signal circuit terminal 3 or E
   - APP sensor 2 signal circuit terminal 6 or B
7. Verify the scan tool APP sensor voltage parameter is greater than 4.8 V.
   - **If 4.8 V or less**
   1. Ignition OFF, disconnect the harness connector at the K20 engine control module.
   2. Test for infinite resistance between the signal circuit terminal and ground.
      - If less than infinite resistance, repair the short to ground on the circuit.
      - If infinite resistance
   3. Test for less than 2 ohms in the signal circuit end to end.
      - If 2 ohms or greater, repair the open/high resistance in the circuit.
      - If less than 2 ohms, replace the K20 engine control module.
   - **If greater than 4.8 V**
8. Test or replace the B107 accelerator pedal assembly.

Repair Instructions

Perform the **Diagnostic Repair Verification** after completing the repair.

- **Accelerator Pedal with Position Sensor Assembly Replacement**
- **Control Module References** for ECM replacement, programming, and setup

DTC P2199 (WITH LEA)

Diagnostic Instructions

- Perform the **Diagnostic System Check - Vehicle** prior to using this diagnostic procedure.
- Review **Strategy Based Diagnosis** for an overview of the diagnostic approach.
- **Diagnostic Procedure Instructions** provides an overview of each diagnostic category.

DTC Descriptor

DTC P2199

Intake Air Temperature (IAT) Sensor 1-2 Correlation

Diagnostic Fault Information

IAT Sensor 1

Circuit	Short to Ground	Open/High Resistance	Short to Voltage	Signal Performance
Signal	P0112, P0114, P2199	P0111, P0113, P0114, P2199	P0113, P0114, P2199*	P0111, P2199
Low Reference	-	P0111, P0113, P0114, P2199, P2199	P0113, P0114, P2199, P2227, P2229*	-
*Internal ECM or sensor damage may occur if the circuit is shorted to B+.				

IAT Sensor 2

Circuit	Short to Ground	Open/High Resistance	Short to Voltage	Signal Performance
Ignition Voltage	P0096, P0097, P11C3, P2199	P0096, P0097, P0101, P0102, P11C2, P2199	P0690	P0096, P0101, P0103
Signal	P0096, P0097, P11C3, P2199	P0096, P0097, P11C2, P2199	P0096, P0097, P11C2, P2199*	P0096
Ground	-	P0096, P0097, P0102, P11C2, P2199	-	P0096, P0102
*Internal ECM or sensor damage may occur if the circuit is shorted to B+.				

Typical Scan Tool Data

IAT Sensor 1

Circuit	Short to Ground	Open or High Resistance	Short to Voltage
Operating Conditions: Engine Running **Parameter Normal Range:** Varies with ambient temperature; and engine bay conditions			
Signal	150°C (302°F)	-40°C (-40°F)	-40°C (-40°F)*
Low Reference	-	-40°C (-40°F)	-40°C (-40°F)*
*Internal ECM or sensor damage may occur if the circuit is shorted to B+			

IAT Sensor 2

Circuit	Short to Ground	Open or High Resistance	Short to Voltage
Operating Conditions: Engine Running **Parameter Normal Range:** Varies with ambient humidity and temperature; and engine bay conditions			
Ignition Voltage	-40°C (-40°F)	-40°C (-40°F)	-
Signal	-40°C (-40°F)	-40°C (-40°F)	-40°C (-40°F)*
Ground	-	-40°C (-40°F)	-
*Internal ECM or sensor damage may occur if the circuit is shorted to B+			

Circuit/System Description

The intake air temperature (IAT) sensor 1 is a variable resistor that measures the temperature of the air in the sensor bore. The engine control module (ECM) supplies 5 V to the IAT sensor 1 signal circuit and a ground for the IAT sensor 1 low reference circuit. The signal varies with inlet air temperature and is displayed by the scan tool as °C (°F).

The IAT sensor 2 produces a frequency signal based on the inlet air temperature very close to the humidity sensor within the sensor bore. The signal varies with inlet air temperature and is displayed by the scan tool as °C (°F) and Hertz (Hz). The ECM applies 5 V to the circuit. The signal circuit is shared by the IAT sensor 2 and the humidity sensor. Ignition voltage and ground circuits are also supplied to the multifunction intake air sensor's internal circuits for these sensors:

- IAT sensor 2
- Humidity sensor
- MAF sensor

The multifunction intake air sensor houses the following:

- IAT sensor 1
- IAT sensor 2
- Humidity sensor
- MAF sensor
- BARO pressure sensor

IAT Sensor 1	IAT Sensor 1 Resistance	IAT Sensor 1 Signal Voltage
Cold	High	High
Warm	Low	Low

IAT Sensor 2	IAT Sensor 2 Frequency	IAT Sensor 2 Temperature
Cold	45 Hz	-40°C (-40°F)
Warm	302 Hz	104°C (219°F)

Conditions for Running the DTC

- The ignition is ON.
- Ignition 1 voltage is at least 11 V for at least 0.9 s.
- This DTC runs continuously within the enabling conditions.

Conditions for Setting the DTC

The ECM detects that the absolute difference between the IAT sensor 1 and the IAT sensor 2 temperatures is greater than 55°C (99°F) for longer than 5 s.

Action Taken When the DTC Sets

DTC P2199 is a Type B DTC.

Conditions for Clearing the MIL/DTC

DTC P2199 is a Type B DTC.

Diagnostic Aids

- With the ignition ON, the engine OFF, if the engine is cold, a properly functioning IAT sensor 2 will gradually increase the scan tool IAT Sensor 2 parameter. This is due to the heat that is generated by the multifunction intake air sensor heating elements.
- The humidity sensor and the IAT sensor 2 signals are sent to the ECM on the same circuit. If the IAT Sensor 2 parameter displays the values: 10 Hz; -40°C (-40°F), and there are Humidity Sensor DTCs, check for a circuit problem.

Reference Information

Schematic Reference

Engine Controls Schematics

Connector End View Reference

COMPONENT CONNECTOR END VIEWS - INDEX

Electrical Information Reference

- **Circuit Testing**
- **Connector Repairs**
- **Testing for Intermittent Conditions and Poor Connections**
- **Wiring Repairs**

Powertrain Component Views

Powertrain Component Views

DTC Type Reference

Powertrain Diagnostic Trouble Code (DTC) Type Definitions

Scan Tool Reference

Control Module References for scan tool information

Special Tools

EL-38522-A Variable Signal Generator

For equivalent regional tools, refer to **Special Tools (Diagnostic Tools)** , **Special Tools (Mechanical Tools)** .

Circuit/System Verification

NOTE: **To minimize the effects of residual engine heat and sensor internal heating elements, perform Steps 1 and 2 of this verification procedure only if the ignition has been OFF for 8 hours or more.**

1. Ignition ON.
2. Verify the following scan tool parameters are within 55°C (99°F) of each other.
   - Start-Up IAT Sensor 1
   - IAT Sensor 2
   - Start-Up ECT
   - **If not within 55°C (99°F)**

     Refer to Circuit/System Testing.

   - **If within 55°C (99°F)**
3. Engine idling, verify the following scan tool parameters are between: -38 and +149°C (-36 and +300°F).
   - **If not between: -38 and +149°C (-36 and +300°F)**

     Refer to Circuit System Testing.

   - **If between: -38 and +149°C (-36 and +300°F)**
4. Operate the vehicle within the conditions for running the DTC to verify that the DTC does not reset. You may also operate the vehicle within the conditions that you observed from the freeze frame/failure records data.
5. Verify the DTCs do not set.
   - **If any of the DTCs set**

     Refer to Circuit/System Testing.

   - **If none of the DTCs set**
6. All OK

Circuit/System Testing

NOTE: **You must perform the Circuit/System Verification before proceeding with Circuit/System Testing.**

1. Verify none of the following conditions exist:
   - A restricted or collapsed air intake duct
   - An intake manifold leak
   - A MAP sensor seal that is leaking, missing, or damaged
   - A misaligned or damaged air intake duct
   - Any water intrusion in the induction system

- An Intake Manifold Resonator with a leaking seal, or a cracked or broken housing
  - **If a condition exists**

    Repair or replace the component as appropriate.

  - **If no condition exists**

2. Ignition OFF, disconnect the harness connector at the B75C Multifunction Intake Air sensor.
3. Ignition OFF, all systems OFF. It may take up to for 2 minutes for all vehicle systems to power down. Test for less than 2 ohms between the low reference circuit terminal 3 and ground.
   - **If 2 ohms or greater**
   1. Ignition OFF, disconnect the harness connector at the K20 Engine Control Module.
   2. Test for less than 2 ohms in the low reference circuit end to end.
      - If 2 ohms or greater, repair the open or high resistance in the circuit.
      - If less than 2 ohms replace the K20 Engine Control Module.
   - **If less than 2 ohms**
4. Ignition OFF, all vehicle systems OFF, test for less than 2 ohms between the ground circuit terminal 7 and ground.
   - **If 2 ohms or greater**
   1. Ignition OFF. Disconnect the sensor chassis ground.
   2. Test for less than 2 ohms in the ground circuit end to end.
      - If 2 ohms or greater, repair the open or high resistance in the circuit.
      - If less than 2 ohms, repair the open/high resistance in the ground connection.
   - **If less than 2 ohms**
5. Ignition ON, verify that a test lamp illuminates between the ignition circuit terminal 5 and ground.
   - **If the test lamp does not illuminate and the circuit fuse is good**
   1. Ignition OFF, remove the test lamp and remove the fuse for the ignition voltage circuit.
   2. Test for less than 2 ohms in the ignition voltage circuit end to end.
      - If 2 ohms or greater, repair the open/high resistance in the circuit.
      - If less than 2 ohms, verify the fuse is not open and there is voltage at the fuse.
   - **If the test lamp does not illuminate and the circuit fuse is open**
   1. Ignition OFF, remove the test lamp and remove the fuse for the ignition voltage circuit.
   2. Test for infinite resistance between the ignition voltage circuit and ground.
      - If less than infinite resistance, repair the short to ground on the circuit.
      - If infinite resistance
   3. Test for greater than 2 ohms between the ignition voltage circuit terminal 5 and ground.
      - If less than 2 ohms, repair the short to ground on the circuit.
      - If greater than 2 ohms, test all the components connected to the circuit and repair or replace as necessary.
   - **If a test lamp illuminates**
6. Ignition ON, test for 4.8-5.2 V between the intake air temperature signal 1 circuit terminal 1 and ground.
   - **If less than 4.8 V**

1. Ignition OFF, disconnect the harness connector at the K20 Engine Control Module.
2. Test for infinite resistance between the signal circuit and ground.
   - If less than infinite resistance, repair the short to ground on the circuit.
   - If infinite resistance
3. Test for less than 2 ohms in the signal circuit end to end.
   - If 2 ohms or greater, repair the open/high resistance in the circuit.
   - If less than 2 ohms, replace the K20 Engine Control Module.

- **If greater than 5.2 V**

NOTE: **If the signal circuit is shorted to a voltage the engine control module or the sensor may be damaged.**

1. Ignition OFF, disconnect the harness connector at the K20 Engine Control Module.
2. Ignition ON, test for less than 1 V between the signal circuit and ground.
   - If 1 V or greater, repair the short to voltage on the circuit.
   - If less than 1 V, replace the K20 Engine Control Module.

- **If between 4.8-5.2 V**

7. Ignition ON, test for 4.8-5.2 V between the Intake Air Temperature sensor 2 signal circuit terminal 8 and ground.
   - **If less than 4.8 V**
   1. Ignition OFF, disconnect the harness connector at the K20 Engine Control Module.
   2. Test for infinite resistance between the signal circuit and ground.
      - If less than infinite resistance, repair the short to ground on the circuit.
      - If infinite resistance
   3. Test for less than 2 ohms in the signal circuit end to end.
      - If 2 ohms or greater, repair the open/high resistance in the circuit.
      - If less than 2 ohms, replace the K20 Engine Control Module.
   - **If greater than 5.2 V**

NOTE: **If the signal circuit is shorted to a voltage the engine control module or the sensor may be damaged.**

   1. Ignition OFF, disconnect the harness connector at the K20 Engine Control Module.
   2. Ignition ON, test for less than 1 V between the signal circuit and ground.
      - If 1 V or greater, repair the short to voltage on the circuit.
      - If less than 1 V, replace the K20 Engine Control Module.
   - **If between 4.8-5.2 V**
8. Determine if **EL-38522-A** Variable Signal Generator or equivalent is available.
   - **EL-38522-A, Variable Signal Generator; or equivalent is not available**
   1. Replace the K20 Engine Control Module.
   2. Operate the vehicle within the Conditions for Running the DTC. You may also operate the vehicle within the conditions that you observed from the freeze frame/failure records data.

3. Verify the DTC does not set.
   - **If the DTC sets**

     Test ore replace the B75C Multifunction Intake Air sensor.

   - **If no DTCs set**
4. All OK.
   - **EL-38522-A, Variable Signal Generator; or equivalent is available**

9. Ignition OFF, connect the leads of the **EL-38522-A** Variable Signal Generator as follows:
   - Red lead to the signal circuit terminal 8 at the harness connector
   - Black leads to ground
   - Battery voltage supply lead to B+
10. Set the **EL-38522-A** Variable Signal Generator to the following specifications.
    - Signal switch to 5 V
    - Duty Cycle switch to 50 % (Normal)
    - Frequency switch to 30 Hz
11. Ignition ON, verify the scan tool IAT Sensor 2 parameter is between 28-32 Hz.
    - **If not between 28-32 Hz**

      Replace the K20 Engine Control Module.

    - **If between 28-32 Hz**
12. Test or replace the B75C Multifunction Intake Air sensor.

Component Testing

Multifunction Intake Air Sensor

1. Ignition OFF, disconnect the harness connector at the B75C Multifunction Intake Air sensor.

   NOTE: A thermometer can be used to test the sensor off the vehicle.

2. Test the IAT sensor 1 by varying the sensor temperature while monitoring the sensor resistance. Compare the readings with the **Temperature Versus Resistance - Intake Air Temperature Sensor (Hitachi Sensor)** table for Hitachi Sensors. The resistance values should be in range of the table values.
   - If not within the specified range, replace the B75C Multifunction Intake Air sensor.

Multifunction Intake Air Sensor

- Test the IAT Sensor 2 by varying the sensor temperature while monitoring the air temperature with a thermometer. Compare the readings with the scan tool IAT Sensor 2 parameter. The values should be within 5%.
  - If not within the specified range, replace the B75C Multifunction Intake Air sensor.

Repair Instructions

Perform the **Diagnostic Repair Verification** after completing the repair.

- **Mass Airflow Sensor with Intake Air Temperature Sensor Replacement** for multifunction intake air sensor replacement.
- **Control Module References** for engine control module replacement, programming, and setup

DTC P219A

Diagnostic Instructions

- Perform the **Diagnostic System Check - Vehicle** prior to using this diagnostic procedure.
- Review **Strategy Based Diagnosis** for an overview of the diagnostic approach.
- **Diagnostic Procedure Instructions** provides an overview of each diagnostic category.

DTC Descriptor

DTC P219A

Fuel Trim Cylinder Balance

Circuit/System Description

The Air Fuel Imbalance diagnostic detects a rich or lean cylinder to cylinder air/fuel ratio imbalance. The diagnostic monitors the pre-catalyst heated oxygen sensor (HO2S) signal's frequency and amplitude characteristics by calculating an accumulated voltage over a predetermined sample period. An imbalance is indicated when multiple samples of the accumulated voltage are consistently higher than the desired value.

Conditions for Running the DTC

- DTCs P0016, P0017, P0068, P0101, P0102, P0103, P0106, P0107, P0108, P0116, P0117, P0118, P0122, P0123, P0128, P0201-P0204, P0222, P0223, P0261, P0262, P0264, P0265, P0267, P0268, P0270, P0271, P0300, P0301-P0304, P0340, P0341, P0365, P0366, P0411, P0442, P0455, P0458, P0496, P111E, P1248, P1249, P124A, P124B, P16F3, P2101, P2135, P2147, P2148, P2150. P2151, P2153, P2154, P2156, P2157, P2440, or P2444 are not set.
- The engine overspeed protection is not active.
- The evaporative emissions system intrusive diagnostics or device control is not active
- The engine is in closed loop status.
- The system voltage is greater than 11 V.
- The engine coolant temperature (ECT) is warmer than -20°C (-4°F).
- The engine speed is between 1,250-4,000 RPM.
- The mass air flow is between 0-100 g/s.
- The secondary air injection pump (if equipped) is not ON.
- Engine run time is greater than 30 s.
- Fuel level is greater than 10% and no fuel level sensor fault is present.
- The DTC runs continuously when the above conditions have been met.

Conditions for Setting the DTC

Multiple samples of the pre-catalyst HO2S accumulated voltage are consistently greater than the desired value.

Action Taken When the DTC Sets

DTC P219A is a Type A DTC.

Conditions for Clearing the MIL/DTC

DTC P219A is a Type A DTC.

Diagnostic Aids

- The air fuel imbalance diagnostic is very sensitive to heated oxygen sensor (HO2S) design. A non-OE sensor or an incorrect part number may cause a DTC to set.
- Monitoring the misfire current counters, or misfire graph, may help to isolate the cylinder that is causing the condition.
- Certain aftermarket air filters may cause a DTC to set.
- Certain aftermarket air induction systems or modifications to the air induction system may cause a DTC to set.
- Certain aftermarket exhaust system components may cause a DTC to set.

Reference Information

Schematic Reference

Engine Controls Schematics

Connector End View Reference

COMPONENT CONNECTOR END VIEWS - INDEX

Component View Reference

Powertrain Component Views

Electrical Information Reference

- **Circuit Testing**
- **Troubleshooting with a Test Lamp**
- **Testing for Intermittent Conditions and Poor Connections**
- **Wiring Repairs**
- **Connector Repairs**

DTC Type Reference

Powertrain Diagnostic Trouble Code (DTC) Type Definitions

Scan Tool Reference

Control Module References for scan tool information

Circuit/System Verification

1. Ignition ON.
2. Verify no other DTCs are set.
   - **If any other DTCs are set**

     Refer to **Diagnostic Trouble Code (DTC) List - Vehicle** for further diagnosis.

   - **If no other DTCs are set**
3. Verify DTC P219A is not set.
   - **If a DTC is set**

     Refer to Circuit/System Testing.

   - **If no DTC is set**
4. Operate the vehicle within the Conditions for Running the DTC. You may also operate the vehicle within the conditions that you observed in the Freeze Frame/Failure Records data.
5. Verify DTC P219A is not set.
   - **If a DTC is set**

     Refer to Circuit/System Testing.

   - **If no DTC is set**
6. All OK.

Circuit/System Testing

1. Engine idling, transmission in Park or Neutral, verify the manifold absolute pressure (MAP) sensor parameter is between 20-48 kPa (2.9-7.0 psi).
   - **If not within the specified range**

     Refer to **DTC P0106** .

   - **If within the specified range, inspect for the conditions listed below:**
   - Air induction system for modified, damaged, leaking, or restricted components.
   - Crankcase ventilation system for improper operation. Refer to **Crankcase Ventilation System Inspection/Diagnosis (Without Turbocharger)** .
   - Vacuum hoses for splits, kinks, and improper connections.
   - Vacuum leaks at the intake manifold, the throttle body, and the injector O-rings.
   - Restricted, damaged, leaking, or modified exhaust system from the catalytic converter forward. Refer to **Symptoms - Engine Exhaust** .
   - Fuel injectors for improper operation. Refer to **Fuel Injector Solenoid Coil Test**.

- Fuel contamination. Refer to **Alcohol/Contaminants-in-Fuel Diagnosis**.
- Excessive fuel in the crankcase due to leaking injectors.
- Ignition system for improper operation. Refer to **Electronic Ignition System Diagnosis**.
- **If a condition is found**

  Repair as necessary.

- **If no condition is found**

2. Test the engine for any mechanical conditions such as sticking valves, lifters, etc., which could alter the flow into the combustion chamber. Refer to **Symptoms - Engine Mechanical** .

Repair Instructions

Perform the **Diagnostic Repair Verification** after completing the repair.

Reset the fuel trim after completing the repair.

DTC P2227-P2230

Diagnostic Instructions

- Perform the **Diagnostic System Check - Vehicle** prior to using this diagnostic procedure.
- Review **Strategy Based Diagnosis** for an overview of the diagnostic approach.
- **Diagnostic Procedure Instructions** provides an overview of each diagnostic category.

DTC Descriptors

DTC P2227

Barometric Pressure (BARO) Sensor Performance

DTC P2228

Barometric Pressure (BARO) Sensor Circuit Low Voltage

DTC P2229

Barometric Pressure (BARO) Sensor Circuit High Voltage

DTC P2230

Barometric Pressure (BARO) Sensor Circuit Erratic

Diagnostic Fault Information

Circuit	Short to Ground	Open/High Resistance	Short to Voltage	Signal Performance
5 V Reference	P0641, P2227,	P2228	P0641, P2229	P2227

	P2228			
Signal	P2227, P2228	P2227, P2228	P2227, P2229	P2227
Low Reference	-	P2227, P2229	-	P2227

Typical Scan Tool Data

BARO

Circuit	Short to Ground	Open	Short to Voltage
Operating Conditions: Ignition ON, Engine OFF **Parameter Normal Range:** 56-105 kPa (8.1-15.2 psi), varies with altitude			
5 V Reference	0 kPa (0 psi)	0 kPa (0 psi)	127 kPa (18.4 psi)
Signal	0 kPa (0 psi)	0 kPa (0 psi)	127 kPa (18.4 psi)
Low Reference	-	127 kPa (18.4 psi)	-

Circuit/System Description

The barometric pressure (BARO) sensor is integral to the multifunction intake air sensor and responds to changes in altitude and atmospheric conditions. This gives the engine control module (ECM) an indication of barometric pressure. The ECM uses this information to calculate fuel delivery. The BARO sensor provides a voltage signal to the ECM relative to the atmospheric pressure changes. The ECM monitors the BARO sensor signal for a voltage outside of the normal range.

Conditions for Running the DTC

P2227

- DTC P0068, P0101, P0102, P0103, P0106, P0107, P0108, P0112, P0113, P0117, P0118, P0121, P0122, P0123, P0222, P0223, P1516, P2135, P2228, or P2229 is not set.
- Engine running.

  OR

- DTC P0106, P0107, P0108, P2228, P2229, or P2230 is not set and not pending.
- Ignition ON, engine OFF
- DTC P2227 runs continuously when the above conditions are met.

P2228 or P2229

- Engine running.
- The DTCs run continuously when the above condition is met .

P2230

- DTC P0068, P0101, P0102, P0103, P0106, P0107, P0108, P0112, P0113, P0117, P0118, P0121,

P0122, P0123, P0222, P0223, P1516, P2135, P2228, or P2229 is not set.
- Engine running.
- DTC P2230 runs continuously when the above conditions are met.

Conditions for Setting the DTC

P2227

- Engine running.
- The ECM detects that the difference between the BARO signal and the calculated BARO is greater than 15 kPa (2.2 psi) if the vehicle has traveled at most 0.5 km (0.31 mi) since the last calculated BARO update, or the ECM detects that the difference between the BARO signal and the calculated BARO is greater than 25 kPa (3.6 psi) if the vehicle has traveled greater than 0.5 km (0.31 mi) since the last calculated BARO update.

  OR

- Ignition ON, engine OFF
- The ECM detects that the BARO pressure is less than 50 kPa (7.3 psi) or greater than 115 kPa (16.7 psi).

P2228

The ECM detects that the BARO sensor voltage is less than 1.95 V for greater than 4 s.

P2229

The ECM detects that the BARO sensor voltage is greater than 4.5 V for greater than 4 s.

P2230

The ECM detects that the difference between the current BARO sensor reading and the previous BARO sensor reading is greater than 10 kPa (1.5 psi).

Action Taken When the DTC Sets

DTCs P2227, P2228, P2229, and P2230 are Type B DTCs.

Conditions for Clearing the MIL/DTC

DTCs P2227, P2228, P2229, and P2230 are Type B DTCs.

Diagnostic Aids

Inspect the inlet port on the BARO sensor for moisture or debris and attempt to dry or clean the inlet, if contaminated.

Reference Information

Schematic Reference

Engine Controls Schematics

Connector End View Reference

COMPONENT CONNECTOR END VIEWS - INDEX

Electrical Information Reference

- **Circuit Testing**
- **Connector Repairs**
- **Testing for Intermittent Conditions and Poor Connections**
- **Wiring Repairs**

DTC Type Reference

Powertrain Diagnostic Trouble Code (DTC) Type Definitions

Scan Tool Reference

Control Module References for scan tool information

Circuit/System Verification

1. Ignition ON.
2. Verify DTC P0641 is not set.
   - **If the DTC is set**

     Refer to **DTC P0641, P0651, P0697, or P06A3 (ECM)**.

   - **If the DTC is not set**
3. Verify the scan tool BARO parameter is within range specified in the **Altitude Versus Barometric Pressure** table.
   - **If the BARO is not within the specified range**

     Refer to Circuit/System Testing.

   - **If the BARO is within the specified range**
4. Operate the vehicle within the Conditions for Running the DTC. You may also operate the vehicle within the conditions that you observed in the Freeze Frame/Failure Records data.
5. Verify the DTC does not set.
   - **If the DTC sets**

     Refer to Circuit/System Testing.

   - **If the DTC does not set**
6. All OK.

Circuit/System Testing

1. Verify the conditions listed below do not exist with the B75C Multifunction Intake Air Sensor:
   - Damage
   - Restrictions in the inlet port
   - **If a condition exists**

     Repair or replace the B75C Multifunction Intake Air Sensor as necessary.

   - **If none of the conditions exist**
2. Ignition OFF, and all vehicle systems OFF, it may take up to 2 minutes for all vehicle systems to power down. Disconnect the harness connector at the B75C Multifunction Intake Air Sensor.
3. Test for less than 5 ohms between the low reference circuit terminal 3 and ground.
   - **If 5 ohms or greater**
   1. Ignition OFF, disconnect the harness connector at the K20 Engine Control Module.
   2. Test for less than 2 ohms in the low reference circuit end to end.
      - If greater than the specified value, repair the open or high resistance in the circuit.
      - If 2 ohms or less replace the K20 Engine Control Module.
   - **If less than 5 ohms**
4. Ignition ON.
5. Test for 4.8-5.2 V between the 5 V reference circuit terminal 2 and ground.
   - **If less than 4.8 V**
   1. Ignition OFF, disconnect the harness connector at the K20 Engine Control Module.
   2. Test for infinite resistance between the 5 V reference circuit and ground.
      - If less than infinite resistance, repair the short to ground on the circuit.
      - If infinite resistance
   3. Test for less than 2 ohms in the 5 V reference circuit end to end.
      - If 2 ohms or greater, repair the open/high resistance in the circuit.
      - If less than 2 ohms, replace the K20 Engine Control Module.
   - **If greater than 5.2 V**
   1. Ignition OFF, disconnect the harness connector at the K20 Engine Control Module, ignition ON.
   2. Test for less than 1 V between the 5 V reference circuit and ground.
      - If 1 V or greater, repair the short to voltage on the circuit.
      - If less than 1 V, replace the K20 Engine Control Module.
   - **If between 4.8-5.2 V**
6. Verify the scan tool BARO Sensor parameter is less than 0.2 V.
   - **If 0.2 V or greater**
   1. Ignition OFF, disconnect the harness connector at the K20 Engine Control Module, ignition ON.
   2. Test for less than 1 V between the signal circuit terminal 4 and ground.
      - If 1 V or greater, repair the short to voltage on the circuit.

        - If less than 1 V, replace the K20 Engine Control Module.
    - **If less than 0.2 V**
7. Install a 3 A fused jumper wire between the signal circuit terminal 4 and the 5 V reference circuit terminal 2.
8. Verify the scan tool BARO Sensor parameter is greater than 4.5 V.
    - **If 4.5 V or less**
    1. Ignition OFF, remove the jumper wire, disconnect the harness connector at the K20 Engine Control Module.
    2. Test for infinite resistance between the signal circuit terminal 4 and ground.
        - If less than infinite resistance, repair the short to ground on the circuit.
        - If infinite resistance
    3. Test for less than 2 ohms in the signal circuit end to end.
        - If 2 ohms or greater, repair the open/high resistance in the circuit.
        - If less than 2 ohms, replace the K20 Engine Control Module.
    - **If greater than 4.5 V**
9. Test or replace the B75C Multifunction Intake Air Sensor.

Repair Instructions

Perform the **Diagnostic Repair Verification** after completing the repair.

- **Mass Airflow Sensor with Intake Air Temperature Sensor Replacement** for multifunction intake air sensor replacement
- **Control Module References** for engine control module replacement, programming, and setup.

DTC P2430, P2431, P2435, OR P2436

Diagnostic Instructions

- Perform the **Diagnostic System Check - Vehicle** prior to using this diagnostic procedure.
- Review **Strategy Based Diagnosis** for an overview of the diagnostic approach.
- **Diagnostic Procedure Instructions** provides an overview of each diagnostic category.

DTC Descriptor

DTC P2430

Secondary Air Injection System Pressure Sensor Circuit - Bank 1 (Left Hand)

DTC P2431

Secondary Air Injection System Pressure Sensor Performance - Bank 1 (Left Hand)

DTC P2435

Secondary Air Injection System Pressure Sensor Circuit Bank 2 - (Right Hand)

DTC P2436

Secondary Air Injection System Pressure Sensor Performance Bank 2 - (Right Hand)

Circuit/System Description

The secondary air injection system aids in the reduction of hydrocarbon emissions during a cold start. The electric air pump forces fresh air into the exhaust stream in order to accelerate the catalyst operation. A pressure sensor in each shutoff/check valve is used to monitor the air flow from the secondary air injection pump. The engine control module (ECM) supplies voltage to the 5-volt reference circuits and supplies a ground to the low reference circuits. The sensors provide a signal voltage to the ECM relative to the pressure changes within the secondary air injection system.

Ignition voltage is supplied to the secondary air injection pump and air injection shutoff/check valve relays. The ECM controls the relays by grounding the control circuits, which activates the relays. When the relay contacts close, voltage is supplied to the pump and the valves, which turns the pump on and opens the valves.

The diagnostic uses 3 phases to test the secondary air injection system:

- DTCs P0411, P2430 and P2435 run during Phase 1
- DTCs P2430, P2435 and P2440 run during Phase 2
- DTC P2444 runs during Phase 3

During phase 1, the secondary air injection pump and both secondary air injection shutoff and check valves are activated. Normal secondary air function occurs. Expected system pressure is 5-11 kPa (0.7-1.6 psi) above BARO. Relatively high magnitude of pressure pulses are expected due to exhaust pulses. Low magnitude pressure pulses indicate a blockage or disconnect downstream of the valve.

During phase 2, only the secondary air injection pump is activated. The shutoff and check valves are closed. Pressure sensor performance and shutoff and check valve deactivation are tested. Expected system pressure is 14-22 kPa (2.0-3.2 psi) above BARO.

During phase 3, neither the secondary air injection pump nor the secondary air injection shutoff and check valves are activated. Secondary air injection pump deactivation is tested. Expected system pressure equals BARO.

Conditions for Running the DTC

P2430 and P2435

- DTC P0101, P0102, P0103, P0107, P0108, P0111, P0112, P0113, P0114, P0116, P0117, P0118, P0128, P0201-P0204, P0261, P0262, P0264, P0265, P0267, P0268, P0270, P0271, P0300, P0351, P0352, P0353, P0354, P0411, P0412, P0418, P0420, P0606, P0641, P0651, P124A, P124B, P2147, P2148, P2150, P2151, P2153, P2154, P2156, P2157, P2431, P2432, P2433, P2436, P2437, or P2438 is not set.
- Greater than 60 min has elapsed since the last cold start.
- The ignition voltage is between 10-32 V.
- The engine speed is less than 5,000 RPM.

- The intake air temperature (IAT) is greater than -10°C (+14°F).
- The engine coolant temperature (ECT) is between -10 and +56°C (14-133°F).
- The barometric pressure (BARO) is greater than 74 kPa (10.7 psi).
- The manifold absolute pressure (MAP) sensor is greater than 20 kPa (2.9 psi).
- The mass air flow (MAF) is less than 50 g/s.
- The secondary air injection pump is commanded ON.
- DTC P2430 and P2435 run once per ignition cycle when the above conditions are met.

P2431 and P2436

- DTC P0101, P0102, P0103, P0107, P0108, P0111, P0112, P0113, P0114, P0116, P0117, P0118, P0128, P0201-P0204, P0261, P0262, P0264, P0265, P0267, P0268, P0270, P0271, P0300, P0351, P0352, P0353, P0354, P0411, P0412, P0418, P0420, P0606, P0641, P0651, P124A, P124B, P2147, P2148, P2150, P2151, P2153, P2154, P2156, P2157, P2430, P2432, P2433, P2435, P2437, or P2438 is not set.
- Greater than 60 min has elapsed since the last cold start.
- The ignition voltage is between 10-32 V.
- The engine speed is less than 5,000 RPM.
- The intake air temperature (IAT) is greater than -10°C (+14°F).
- The engine coolant temperature (ECT) is between -10 and +56°C (14-133°F).
- The barometric pressure (BARO) is greater than 74 kPa (10.7 psi).
- The manifold absolute pressure (MAP) sensor is greater than 20 kPa (2.9 psi).
- The mass air flow (MAF) is less than 50 g/s.
- DTC P2431 and P2436 run continuously when the above conditions are met.

Conditions for Setting the DTC

P2430 or P2435

The ECM determines that the pressure sensor value change at either shutoff/check valve is less than 0.5 kPa and the signal variation is less than 0.15 kPa for greater than 5 s when the secondary air injection pump is commanded ON.

P2431 or P2436

- The difference between the actual system pressure at either shutoff/check valve and BARO is greater than 18 kPa (2.6 psi) or less than -10 kPa -1.5 psi) for greater than 5 s when the secondary air injection pump is commanded OFF.

  OR

- The difference between the actual system pressure at either shutoff/check valve and BARO is greater than 50 kPa (7.3 psi) for greater than 5 s when the secondary air injection pump is commanded ON.

Action Taken When the DTC Sets

DTCs P2430, P2431, P2435, and P2436 are Type B DTCs.

Conditions for Clearing the MIL/DTC

DTCs P2430, P2431, P2435, and P2436 are Type B DTCs.

Diagnostic Aids

Ice buildup due to condensation/water in the air passages or pump may cause these DTCs to set.

Reference Information

Schematic Reference

Engine Controls Schematics

Connector End View Reference

COMPONENT CONNECTOR END VIEWS - INDEX

Description and Operation

Secondary Air Injection System Description

Electrical Information Reference

- **Circuit Testing**
- **Connector Repairs**
- **Testing for Intermittent Conditions and Poor Connections**
- **Wiring Repairs**

DTC Type Reference

Powertrain Diagnostic Trouble Code (DTC) Type Definitions

Scan Tool Reference

Control Module References for scan tool information

Special Tools

J-36169-HD Fused Jumper

Circuit/System Verification

NOTE: **Verify the battery is fully charged before proceeding with this diagnostic procedure. The secondary air injection pump output will vary with system voltage.**

1. Ignition ON
2. Verify that DTC P0411, P0412, P0418, P2432, P2433, P2237, P2238, P2440, or P2444 is not set.
   - **If any of the DTCs are set**

     Refer to **Diagnostic Trouble Code (DTC) List - Vehicle** for further diagnosis.

   - **If none of the DTCs are set.**
3. Verify the scan tool BARO pressure parameter is within the range specified in the **Altitude Versus Barometric Pressure** table.
   - **If not within the specified range**

     Refer to **DTC P0106** for further diagnosis.

   - **If within the specified range**

NOTE: **To prevent the secondary air injection pump from overheating, do not operate the pump consecutively for greater than 2 minutes. The pump is provided with a thermal protector that will automatically reset when allowed to cool. Engine coolant temperature must be greater than 5°C (41°F) to enable scan tool device control.**

4. Verify the secondary air injection pump turns ON and OFF when commanding the Secondary Air Injection Pump Relay between ON and OFF with a scan tool.
   - **If the secondary air injection pump does not operate as specified**

     Refer to Circuit/System Testing-Secondary Air Injection Pump Malfunction

   - **If the secondary air injection pump operates as specified**
5. Verify the scan tool Secondary Air Injection Pressure Sensor Bank 1 (left hand), Bank 2 (right hand) and the BARO pressure parameters are within 3 kPa (0.4 psi).
   - **If not within the specified range**

     Refer to Circuit/System Testing-Secondary Air Injection System Pressure Not In Range.

   - **If within the specified range**
6. Engine running
7. Verify the scan tool Secondary Air Injection Pressure Sensor Bank 1 (left hand) and Bank 2 (right hand) parameters increase between 14-22 kPa (2.0-3.2 psi), greater than BARO, when the Secondary Air Injection Pump Relay is commanded ON with a scan tool.
   - **If not within the specified range**

     Refer to Circuit/System Testing-Secondary Air Injection System Pressure Not In Range.

   - **If within the specified range**
8. Verify the scan tool Secondary Air Injection Pressure Sensor Bank 1 (left hand) and Bank 2 (right hand) parameters increase between 5-11 kPa (0.7-1.6 psi), greater than BARO, when the Secondary Air Injection System is commanded ON with a scan tool.

- **If not within the specified range**

  Refer to Circuit/System Testing-Secondary Air Injection System Pressure Not In Range.

- **If within the specified range**

9. Operate the vehicle within the Conditions for Running the DTC. You may also operate the vehicle within the conditions that you observed from the Freeze Frame/Failure Records data.
10. Verify the DTC does not set.
    - **If the DTC sets**

      Refer to Circuit/System Testing

    - **If the DTC does not set**
11. All OK

Circuit/System Testing

Secondary Air Injection Pump Malfunction

1. Ignition OFF, disconnect the KR25 Secondary Air Injection Pump Relay.
2. Verify a test lamp illuminates between the B+ circuit terminal 87 and ground.
   - **If the test lamp does not illuminate and the circuit fuse is good**
   1. Ignition OFF
   2. Test for less than 2 ohms in the B+ circuit end to end.
      - If 2 ohms or greater, repair the open/high resistance in the circuit.
      - If less than 2 ohms, verify the fuse is not open and there is voltage at the fuse.
   - **If the test lamp does not illuminate and the circuit fuse is open**
   1. Ignition OFF
   2. Test for infinite resistance between the B+ circuit and ground.
      - If less than infinite resistance, repair the short to ground on the circuit.
      - If infinite resistance
   3. Disconnect the harness connector at the G21 Secondary Air Injection Pump.
   4. Test for infinite resistance between the control circuit terminal A and ground.
      - If less than infinite resistance, repair the short to ground on the circuit.
      - If infinite resistance
   5. Test or replace the G21 Secondary Air Injection Pump.
   - **If the test lamp illuminates**
3. Disconnect the harness connector at the G21 Secondary Air Injection Pump.
4. Ignition OFF and all vehicle systems OFF, it may take up to 2 minutes for all vehicle systems to power down. Test for less than 10 ohms between the G21 Secondary Air Injection Pump ground circuit terminal B and ground.
   - **If 10 ohms or greater**
   1. Ignition OFF.

2. Test for less than 2 ohms in the ground circuit end to end.
   - If 2 ohms or greater, repair the open/high resistance in the circuit.
   - If less than 2 ohms, repair the open/high resistance in the ground connection.
- **If less than 10 ohms**

5. Connect the harness connector at the G21 Secondary Air Injection Pump.
6. Connect a 50 A fused jumper wire between the B+ circuit terminal 87 and the control circuit terminal 30.

NOTE: **To prevent the secondary air injection pump from overheating, do not operate the pump consecutively for greater than 2 minutes. The pump is provided with a thermal protector that will automatically reset when allowed to cool.**

7. Verify the G21 Secondary Air Injection Pump is activated.
   - **If the G21 Secondary Air Injection Pump does not activate**
   1. Ignition OFF, disconnect the harness connector at the G21 Secondary Air Injection Pump.
   2. Test for less than 2 ohms in the control circuit end to end.
      - If 2 ohms or greater, repair the open/high resistance in the circuit.
      - If less than 2 ohms,
   3. Test or replace the G21 Secondary Air Injection Pump.
   - **If the G21 Secondary Air Injection Pump activates**
8. Test or replace the KR25 Secondary Air Injection Pump Relay.

Secondary Air Injection System Pressure Not In Range

NOTE: **The exhaust manifold and exhaust manifold gasket are provided with openings, at the secondary air injection check valve adapter interfaces, which are used to regulate the system pressure and flow. Any damage or restriction to these openings may cause a DTC to set.**

1. Verify the following conditions do not exist with the appropriate secondary air injection shutoff and check valve:
   - Hoses/pipes/adapters restricted or blocked
   - Hoses/pipes/adapters leaking or disconnected
   - Plugged secondary air injection pressure sensor port (integral to shutoff and check valve)
   - Damaged secondary air injection shutoff and check valve
   - Restricted or blocked cylinder head secondary air injection inlet ports and passages
   - Damaged or restricted secondary air injection check valve pipe adapter air flow openings in exhaust manifold or gasket. Refer to **Secondary Air Injection Check Valve Pipe Adapter Replacement - Left Side (LUK)** , and **Secondary Air Injection Check Valve Pipe Adapter Replacement - Right Side (LUK)** .
   - **If a condition is located**

     Repair or replace the affected component as necessary.

- **If all components test normal**

2. Disconnect the secondary air injection hoses/pipes from the Q29 Secondary Air Injection Solenoid Valves.
3. Ignition ON, command the Secondary Air Injection Pump Relay ON with a scan tool.
4. Verify airflow to the Q29 Secondary Air Injection Solenoid Valves.
   - **If no airflow**

     Replace the G21 Secondary Air Injection Pump.

   - **If airflow**
5. Replace the appropriate Q29 Secondary Air Injection Solenoid Valve or Valves.

Component Testing

Relay Test

1. Ignition OFF, disconnect the KR25 Secondary Air Injection Pump Relay.
2. Test for 50-75 ohms between terminals 85-86.
   - **If not within the specified range**

     Replace the KR25 Secondary Air Injection Pump Relay.

   - **If within the specified range**
3. Test for infinite resistance between the terminals listed below:
   - 30 and 86
   - 30 and 87
   - 30 and 85
   - 85 and 87
   - **If less than infinite resistance**

     Replace the KR25 Secondary Air Injection Pump Relay.

   - **If infinite resistance**
4. Install a 15 A fused jumper wire between relay terminal 85 and 12 V. Install a jumper wire between relay terminal 86 and ground.
5. Test for less than 2 ohms between terminals 30 and 87.
   - **If 2 ohms or greater**

     Replace the KR25 Secondary Air Injection Pump Relay.

   - **If less than 2 ohms**
6. All OK

Repair Instructions

- **Relay Replacement (Within an Electrical Center) , Relay Replacement (Attached to Wire**

Harness)

- **Secondary Air Injection Check Valve Replacement - Left Side (LUK)** for secondary air injection shutoff and check valve and pressure sensor - Left Side replacement
- **Secondary Air Injection Check Valve Replacement - Right Side (LUK)** for secondary air injection shutoff and check valve and pressure sensor - Right Side replacement
- **Secondary Air Injection Check Valve Pipe Adapter Replacement - Left Side (LUK)**
- **Secondary Air Injection Check Valve Pipe Adapter Replacement - Right Side (LUK)**
- **Secondary Air Injection Pump Replacement (LEA, LUK)**
- **Secondary Air Injection Pump Inlet Hose Replacement (LEA, LUK)**

Repair Verification

1. Install any components or connectors that have been removed or replaced during diagnosis.
2. Perform any adjustment, programming or setup procedures that are required when a component or module is removed or replaced.
3. Clear the DTCs with a scan tool.
4. Ignition OFF, all vehicle systems OFF. It may take up to 2 minutes for all vehicle systems to power down.
5. Ignition ON.
6. Verify the scan tool Secondary Air Injection Pressure Sensor Bank 1, Bank 2 and BARO pressure parameters are within 3 kPa (0.4 psi).
   - **If not within the specified range**

     Refer to Circuit/System Verification-step 1

   - **If within the specified range**
7. Engine running.
8. Verify the scan tool Secondary Air Injection Pressure Sensor Bank 1 and Bank 2 parameters increase between 5-11 kPa (0.7-1.6 psi) greater than BARO, when the Secondary Air Injection System is commanded ON with a scan tool.
   - **If not within the specified range**

     Refer to Circuit/System Verification-step 1

   - **If within the specified range**
9. Verify the scan tool Secondary Air Injection Pressure Sensor Bank 1 and Bank 2 parameters increase between 14-22 kPa (2.0-3.2 psi), greater than BARO, when the Secondary Air Injection Pump Relay is commanded ON with a scan tool.
   - **If not within the specified range**

     Refer to Circuit/System Verification-step 1

   - **If within the specified range**
10. If the repair was related to a DTC, duplicate the Conditions for Running the DTC and use the Freeze Frame/Failure Records, if applicable, in order to verify the DTC does not reset.
    - **If any DTC sets**

Refer to **Diagnostic Trouble Code (DTC) List - Vehicle** for further diagnosis.

- **If no DTC sets.**

11. All OK

DTC P2432, P2433, P2437, OR P2438

Diagnostic Instructions

- Perform the **Diagnostic System Check - Vehicle** prior to using this diagnostic procedure.
- Review **Strategy Based Diagnosis** for an overview of the diagnostic approach.
- **Diagnostic Procedure Instructions** provides an overview of each diagnostic category.

DTC Descriptors

DTC P2432

Secondary Air Injection System Pressure Sensor Circuit Low Voltage - Bank 1 (Left Hand)

DTC P2433

Secondary Air Injection System Pressure Sensor Circuit High Voltage - Bank 1 (Left Hand)

DTC P2437

Secondary Air Injection System Pressure Sensor Circuit Low Voltage Bank 2 - (Right Hand)

DTC P2438

Secondary Air Injection System Pressure Sensor Circuit High Voltage Bank 2 - (Right Hand)

Diagnostic Fault Information

Circuit	Short to Ground	Open/High Resistance	Short to Voltage	Signal Performance
Secondary Air Injection Pressure Sensor 5 V Reference Bank 1	P0335, P2432	P2432	P2433*	P2431
Secondary Air Injection Pressure Sensor Signal Bank 1	P2432	P2432	P2433*	P2431
Secondary Air Injection Pressure Sensor Low Reference Bank 1	-	P2433	-	P2431
Secondary Air Injection Pressure Sensor 5 V Reference Bank 2	P0335, P2437	P2437	P2438*	P2436
Secondary Air Injection Pressure Sensor Signal Bank 2	-	P2438	P2438*	P2436
Secondary Air Injection Pressure Sensor Low Reference Bank 2	-	P2438	-	P2436
*Internal ECM or sensor damage may occur if the circuit is shorted to B+.				

Typical Scan Tool Data

Secondary Air Injection Pressure Sensor Bank 1 and Bank 2

Circuit	Short to Ground	Open	Short to Voltage
Parameter Normal Range: BARO **Operating Conditions:** Ignition ON, Engine OFF			
5-Volt Reference	41 kPa (6 psi)	41 kPa (6 psi)	149 kPa (21.6 psi)
Secondary Air Pressure Sensor Signal	40 kPa (5.8 psi)	40 kPa (5.8 psi)	149 kPa (21.6 psi)
Low Reference	-	149 kPa (21.6 psi)	-

Circuit/System Description

The secondary air injection system aids in the reduction of hydrocarbon emissions during a cold start. The electric air pump forces fresh air into the exhaust stream in order to accelerate the catalyst operation. Secondary air injection pressure sensors, which are integral to the shutoff and check valves, are used to monitor the air flow from the secondary air injection pump. The engine control module (ECM) supplies voltage to the 5 V reference circuits and provides a ground for the low reference circuits. The sensors provide a signal voltage to the ECM relative to the pressure changes within the secondary air injection system.

Conditions for Running the DTC

- DTC P0606, P0641, or P0651 is not set.
- The ignition is ON, or the engine is running.
- The DTC runs continuously when the above conditions exist.

Conditions for Setting the DTC

P2432 or P2437

The ECM detects that the corresponding bank 1 or bank 2 secondary air injection pressure sensor signal is less than 0.3 V for greater than 6 s.

P2433 or P2438

The ECM detects that the corresponding bank 1 or bank 2 secondary air injection pressure sensor signal is greater than 4.7 V for greater than 6 s.

Action Taken When the DTC Sets

DTCs P2432, P2433, P2437 and P2438 are Type B DTCs.

Conditions for Clearing the DTC

DTCs P2432, P2433, P2437 and P2438 are Type B DTCs.

Reference Information

Schematic Reference

Engine Controls Schematics

Connector End View Reference

COMPONENT CONNECTOR END VIEWS - INDEX

Description and Operation

Secondary Air Injection System Description

Electrical Information Reference

- **Circuit Testing**
- **Connector Repairs**
- **Testing for Intermittent Conditions and Poor Connections**
- **Wiring Repairs**

DTC Type Reference

Powertrain Diagnostic Trouble Code (DTC) Type Definitions

Scan Tool Reference

Control Module References for scan tool information

Circuit/System Verification

1. Ignition ON, observe the DTC information with a scan tool. Verify that DTC P0651 is not set.
   - If a DTC is set, refer to **Diagnostic Trouble Code (DTC) List - Vehicle** for further diagnosis.
2. Verify the scan tool BARO pressure parameter is within the range specified in the **Altitude Versus Barometric Pressure** table.
3. Verify the scan tool Secondary Air Injection Pressure Sensor Bank 1, Bank 2 and the BARO pressure parameters are within 3 kPa (0.4 psi).
4. Operate the vehicle within the Conditions for Running the DTC to verify the DTC does not reset. You may also operate the vehicle within the conditions that you observed from the Freeze Frame/Failure Records data.

Circuit/System Testing

1. Ignition OFF, disconnect the harness connector at the appropriate, Bank 1 (left hand) or Bank 2 (right hand), Q29 Secondary Air Injection Solenoid Valve.
2. Ignition OFF and all vehicle systems OFF. It may take up to 2 minutes for all vehicle systems to power down. Test for less than 5 ohms between the low reference circuit terminal 3 and ground.
   - If greater than the specified range, test the low reference circuit for an open/high resistance. If the circuit tests normal, replace the K20 Engine Control Module.
3. Ignition ON, test for 4.8-5.2 V between the 5 V reference circuit terminal 1 and ground.
   - If less than the specified range, test the 5 V reference circuit for a short to ground or an open/high resistance. If the circuit tests normal, replace the K20 Engine Control Module.

- If greater than the specified range, test the 5 V reference circuit for a short to voltage. If the circuit tests normal, replace the K20 Engine Control Module.

4. Verify the corresponding scan tool Secondary Air Injection Pressure Sensor Bank 1 or Bank 2 voltage parameter is less than 0.5 V.
   - If greater than the specified range, test the signal circuit terminal 2 for a short to voltage. If the circuit tests normal, replace the K20 Engine Control Module.
5. Install a 3 A fused jumper wire between the signal circuit terminal 2 and the 5 V reference circuit terminal 1. Verify the corresponding scan tool Secondary Air Injection Pressure Sensor Bank 1 or Bank 2 voltage parameter is greater than 4.8 V.
   - If less than the specified range, test the signal circuit for short to ground or an open/high resistance. If the circuit tests normal, replace the K20 Engine Control Module.
6. If all circuits test normal, test or replace the Q29 Secondary Air Injection Solenoid Valve.

Repair Instructions

Perform the **Diagnostic Repair Verification** after completing the repair.

- **Secondary Air Injection Check Valve Replacement - Left Side (LUK)** for secondary air injection shutoff and check valve and pressure sensor - Left Side replacement
- **Secondary Air Injection Check Valve Replacement - Right Side (LUK)** for secondary air injection shutoff and check valve and pressure sensor - Right Side replacement
- **Control Module References** for ECM replacement, programming, and setup

DTC P2440

Diagnostic Instructions

- Perform the **Diagnostic System Check - Vehicle** prior to using this diagnostic procedure.
- Review **Strategy Based Diagnosis** for an overview of the diagnostic approach.
- **Diagnostic Procedure Instructions** provides an overview of each diagnostic category.

DTC Descriptor

DTC P2440

Secondary Air Injection System Cut-Off Valve Stuck Open

Circuit/System Description

The secondary air injection system aids in the reduction of hydrocarbon emissions during a cold start. The electric air pump forces fresh air into the exhaust stream in order to accelerate the catalyst operation. A pressure sensor in each bank is used to monitor the air flow from the secondary air injection pump. The engine control module (ECM) supplies voltage to the 5-volt reference circuits and supplies a ground to the low reference circuits. The sensors provide a signal voltage to the ECM relative to the pressure changes within the secondary air injection system.

Ignition voltage is supplied to the secondary air injection pump and air injection shutoff/check valve relays. The ECM controls the relays by grounding the control circuits, which activates the relays. When the relay

contacts close, voltage is supplied to the pump and the valves, which turns the pump on and opens the valves.

The diagnostic uses 3 phases to test the secondary air injection system:

- DTCs P0411, P2430 and P2435 run during Phase 1
- DTCs P2430, P2435 and P2440 run during Phase 2
- DTC P2444 runs during Phase 3

During phase 1, both the secondary air injection pump and the secondary air injection shutoff and check valves are activated. Normal secondary air function occurs. Expected system pressure is 5-11 kPa (0.7-1.6 psi) above BARO. Relatively high magnitude of pressure pulses are expected due to exhaust pulses. Low magnitude pressure pulses indicate a blockage or disconnect downstream of the valve.

During phase 2, only the secondary air injection pump is activated. The shutoff and check valves are closed. Pressure sensor performance and shutoff and check valve deactivation are tested. Expected system pressure is 14-22 kPa (2.0-3.2 psi) above BARO.

During phase 3, neither the secondary air injection pump nor the secondary air injection shutoff and check valves are activated. Secondary air injection pump deactivation is tested. Expected system pressure equals BARO.

Conditions for Running the DTC

- DTC P0101, P0102, P0103, P0107, P0108, P0111, P0112, P0113, P0114, P0116, P0117, P0118, P0128, P0201-P0204, P0261, P0262, P0264, P0265, P0267, P0268, P0270, P0271, P0300, P0351, P0352, P0353, P0354, P0412, P0418, P0420, P0606, P0641, P0651, P124A, P124B, P2147, P2148, P2150, P2151, P2153, P2154, P2156, P2157, P2430, P2431, P2432, P2433, P2435, P2436, P2437, or P2438 is not set.
- Greater than 60 min has elapsed since the last cold start.
- Ignition voltage is between 10-32 V.
- Engine speed is less than 5,000 RPM.
- Intake air temperature (IAT) is greater than -10°C (+14°F).
- Engine coolant temperature (ECT) is between -10 and +56°C (14-133°F).
- Barometric pressure (BARO) is greater than 74 kPa (10.7 psi).
- Manifold absolute pressure (MAP) sensor is greater than 20 kPa (2.9 psi).
- Mass air flow (MAF) is less than 50 g/s.
- Secondary air injection pump is commanded ON.
- Secondary air injection diagnostic test Phase 1 has run and passed.
- DTC P2440 runs once per ignition cycle when the above conditions are met.

Conditions for Setting the DTC

The ECM detects that average difference between the predicted system pressure and the actual system pressure is less than a calibrated threshold for greater than 8 s.

Action Taken When the DTC Sets

DTC P2440 is a Type B DTC.

Conditions for Clearing the MIL/DTC

DTC P2440 is a Type B DTC.

Diagnostic Aids

Ice buildup due to condensation/water in the air passages or pump may cause this DTC to set.

Reference Information

Schematic Reference

Engine Controls Schematics

Connector End View Reference

COMPONENT CONNECTOR END VIEWS - INDEX

Description and Operation

Secondary Air Injection System Description

Electrical Information Reference

- **Circuit Testing**
- **Connector Repairs**
- **Testing for Intermittent Conditions and Poor Connections**
- **Wiring Repairs**

DTC Type Reference

Powertrain Diagnostic Trouble Code (DTC) Type Definitions

Scan Tool Reference

Control Module References for scan tool information

Circuit/System Verification

1. Ignition ON, verify that DTC P0412, P0418, P2430, P2431, P2432, P2433, P2235, P2236, P2237, or P2238 is not set.
   - If a DTC is set, refer to **Diagnostic Trouble Code (DTC) List - Vehicle** .
2. Ignition ON, verify the scan tool BARO pressure parameter is within the range specified in the **Altitude Versus Barometric Pressure** table.
   - If not within the specified range, refer to **DTC P0106** .
3. Compare the scan tool Secondary Air Pressure Sensor Bank 1 and Bank 2 pressure parameters to the BARO parameter. The readings should be within 3 kPa (0.4 psi).

- If not within the specified range, refer to **DTC P2430, P2431, P2435, or P2436**.

4. Command the Secondary Air Injection Solenoid Valve ON and OFF with a scan tool. You should hear and feel the relay click as the command is changed between ON and OFF.
   - If the relay does not respond to the scan tool commands, refer to .
5. Command the Secondary Air Injection Solenoid Valve ON and OFF with a scan tool. Listen or and feel for secondary air injection shutoff and check valve operation. Both valves should respond to the scan tool commands. Repeat as necessary in order to verify valve operation.
6. Operate the vehicle within the Conditions for Running the DTC to verify the DTC does not reset. You may also operate the vehicle within the conditions that you observed from the Freeze Frame/Failure Records data.

Circuit/System Testing

1. Ignition OFF, disconnect the harness connector at the appropriate, Bank 1 (left hand) or Bank 2 (right hand), Q29 Secondary Air Injection Solenoid Valve
2. Connect a test lamp between the Q29 Secondary Air Injection Solenoid Valve control circuit terminal 5 and ground.
3. Ignition ON, command the Secondary Air Injection Solenoid Valve ON and OFF with a scan tool. The test lamp should respond to the scan tool commands.
   - If the test lamp is always ON, test the control circuit for a short to voltage. If the circuit tests normal, replace the KR26 secondary air injection solenoid valve relay.
4. Verify the following conditions do not exist:
   - Hoses/pipes restricted or blocked upstream of valve
   - Hoses/pipes leaking or disconnected
   - Plugged secondary air injection pressure sensor port
   - Damaged or restricted secondary air injection pump
   - Damaged secondary air injection check valve
   - If a condition is located, repair as necessary.
5. If all components test normal, test or replace the Q29 Secondary Air Injection Solenoid Valve.

Component Testing

1. Ignition OFF, disconnect the harness connector at the appropriate Q29 Secondary Air Injection Solenoid Valve.
2. Test for 8-15 ohms between terminals 4-5 of the Q29 Secondary Air Injection Solenoid Valve.
   - If not within the specified range, replace the Q29 Secondary Air Injection Solenoid Valve.

Repair Instructions

Perform the **Diagnostic Repair Verification** after completing the repair.

- **Secondary Air Injection Check Valve Replacement - Left Side (LUK)** for secondary air injection shutoff and check valve and pressure sensor - Left Side replacement
- **Secondary Air Injection Check Valve Replacement - Right Side (LUK)** for secondary air injection shutoff and check valve and pressure sensor - Right Side replacement

DTC P2444

Diagnostic Instructions

- Perform the **Diagnostic System Check - Vehicle** prior to using this diagnostic procedure.
- Review **Strategy Based Diagnosis** for an overview of the diagnostic approach.
- **Diagnostic Procedure Instructions** provides an overview of each diagnostic category.

DTC Descriptor

DTC P2444

Secondary Air Injection System Pump Stuck On

Circuit/System Description

The secondary air injection system aids in the reduction of hydrocarbon emissions during a cold start. The electric air pump forces fresh air into the exhaust stream in order to accelerate the catalyst operation. A pressure sensor in each bank is used to monitor the air flow from the secondary air injection pump. The engine control module (ECM) supplies voltage to the 5-volt reference circuits and supplies a ground to the low reference circuits. The sensors provide a signal voltage to the ECM relative to the pressure changes within the secondary air injection system.

Ignition voltage is supplied to the secondary air injection pump and air injection shutoff/check valve relays. The ECM controls the relays by grounding the control circuits, which activates the relays. When the relay contacts close, voltage is supplied to the pump and the valves, which turns the pump on and opens the valves.

The diagnostic uses 3 phases to test the secondary air injection system:

- DTCs P0411, P2430 and P2435 run during Phase 1
- DTCs P2430, P2435 and P2440 run during Phase 2
- DTC P2444 runs during Phase 3

During phase 1, both the secondary air injection pump and the secondary air injection shutoff and check valves are activated. Normal secondary air function occurs. Expected system pressure is 5-11 kPa (0.7-1.6 psi) above BARO. Relatively high magnitude of pressure pulses are expected due to exhaust pulses. Low magnitude pressure pulses indicate a blockage or disconnect downstream of the valve.

During phase 2, only the secondary air injection pump is activated. The shutoff and check valves are closed. Pressure sensor performance and shutoff and check valve deactivation are tested. Expected system pressure is 14-22 kPa (2.0-3.2 psi) above BARO.

During phase 3, neither the secondary air injection pump nor the secondary air injection shutoff and check valves are activated. Secondary air injection pump deactivation is tested. Expected system pressure equals BARO.

Conditions for Running the DTC

- DTC P0101, P0102, P0103, P0107, P0108, P0111, P0112, P0113, P0114, P0116, P0117, P0118,

P0128, P0201-P0204, P0261, P0262, P0264, P0265, P0267, P0268, P0270, P0271, P0300, P0351, P0352, P0353, P0354, P0412, P0418, P0420, P0606, P0641, P0651, P124A, P124B, P2147, P2148, P2150, P2151, P2153, P2154, P2156, P2157, P2430, P2431, P2432, P2433, P2435, P2436, P2437, or P2438 is not set.

- Greater than 60 min has elapsed since the last cold start.
- Ignition voltage is between 10-32 V.
- Engine speed is less than 5,000 RPM.
- Intake air temperature (IAT) is greater than -10°C (+14°F).
- Engine coolant temperature (ECT) is between -10 and +56°C (14-133°F).
- Barometric pressure (BARO) is greater than 74 kPa (10.7 psi).
- Manifold absolute pressure (MAP) sensor is greater than 20 kPa (2.9 psi).
- Mass air flow (MAF) is less than 50 g/s.
- Secondary air injection pump is commanded ON.
- Secondary air injection diagnostic test Phase 1 and Phase 2 have run and passed.
- DTC P2444 runs once per ignition cycle when the above conditions are met.

Conditions for Setting the DTC

The ECM detects that average difference between the predicted system pressure and the actual system pressure is greater than or less than calibrated thresholds for greater than 8 s.

Action Taken When the DTC Sets

DTC P2444 is a Type A DTC.

Conditions for Clearing the MIL/DTC

DTC P2444 is a Type A DTC.

Reference Information

Schematic Reference

Engine Controls Schematics

Connector End View Reference

COMPONENT CONNECTOR END VIEWS - INDEX

Description and Operation

Secondary Air Injection System Description

Electrical Information Reference

- **Circuit Testing**
- **Connector Repairs**

- **Testing for Intermittent Conditions and Poor Connections**
- **Wiring Repairs**

DTC Type Reference

Powertrain Diagnostic Trouble Code (DTC) Type Definitions

Scan Tool Reference

Control Module References for scan tool information

Circuit/System Verification

NOTE: **To prevent the secondary air injection pump from overheating, do not operate the pump consecutively for greater than 2 minutes. The pump is provided with a thermal protector that will automatically reset when allowed to cool.**

1. Command the Secondary Air Injection Pump Relay ON and OFF with a scan tool. The secondary air injection pump should turn ON and OFF .
2. Operate the vehicle within the Conditions for Running the DTC to verify the DTC does not reset. You may also operate the vehicle within the conditions that you observed from the Freeze Frame/Failure Records data.

Circuit/System Testing

1. Ignition OFF, disconnect the harness connector at the G21 Secondary Air Injection Pump.
2. Ignition ON, verify that a test lamp does not illuminate between the G21 Secondary Air Injection Pump ignition voltage circuit terminal A and ground.
   - If the test lamp illuminates, test the ignition circuit for a short to voltage.
3. If the circuit tests normal replace the KR25 Secondary Air Injection Pump Relay.

Repair Instructions

Perform the **Diagnostic Repair Verification** after completing the repair.

Relay Replacement (Within an Electrical Center) , **Relay Replacement (Attached to Wire Harness)**

DTC P2534 OR P2535 (CHASSIS CONTROL MODULE)

Diagnostic Instructions

- Perform the **Diagnostic System Check - Vehicle** prior to using this diagnostic procedure.
- Review **Strategy Based Diagnosis** for an overview of the diagnostic approach.
- **Diagnostic Procedure Instructions** provides an overview of each diagnostic category.

DTC Descriptor

DTC P2534

Ignition On/Start Switch Circuit Low Voltage

DTC P2535

Ignition On/Start Switch Circuit High Voltage

Diagnostic Fault Information

Circuit	Short to Ground	Open/High Resistance	Short to Voltage	Signal Performance
Ignition	P2534	P2534	P2535	-

Circuit/System Description

The chassis control module monitors the ignition voltage circuit in order to determine if the voltage is within the normal operating range.

Conditions for Running the DTC

The engine is running.

Conditions for Setting the DTC

The chassis control module detects that the ignition voltage is out of the normal operating range.

Action Taken When the DTC Sets

DTCs P2534 and P2535 are Type A DTCs.

Conditions for Clearing the DTC

DTCs P2534 and P2535 are Type A DTCs.

Reference Information

Schematic Reference

Engine Controls Schematics

Connector End View Reference

COMPONENT CONNECTOR END VIEWS - INDEX

Description and Operation

Fuel System Description

Electrical Information Reference

- **Circuit Testing**
- **Connector Repairs**
- **Testing for Intermittent Conditions and Poor Connections**
- **Wiring Repairs**

DTC Type Reference

Powertrain Diagnostic Trouble Code (DTC) Type Definitions

Scan Tool Reference

Control Module References for scan tool information

Circuit/System Testing

1. Ignition ON.
2. Verify DTC P0562 is not set.
   - **If the DTC is set**

     Refer to **Diagnostic Trouble Code (DTC) List - Vehicle** .

   - **If the DTC is not set**
3. Ignition OFF, disconnect the harness connector at the K38 Chassis Control Module, ignition ON.
4. Verify a test lamp illuminates between the ignition circuit terminal 21 and ground.
   - **If the test lamp does not illuminate and the circuit fuse is good**
     1. Ignition OFF.
     2. Test for less than 2 ohms in the ignition circuit end to end.
        - If 2 ohms or greater, repair the open/high resistance in the circuit.
        - If less than 2 ohms, verify the fuse is not open and there is voltage at the fuse.
   - **If the test lamp does not illuminate and the circuit fuse is open**
     1. Ignition OFF.
     2. Test for infinite resistance between the ignition circuit and ground.
        - If less than infinite resistance, repair the short to ground on the circuit.
        - If infinite resistance, replace the K38 Chassis Control Module.
   - **If the test lamp illuminates**
5. Replace the K38 Chassis Control Module.

Repair Instructions

Perform the **Diagnostic Repair Verification** after completing the repair .

Control Module References for chassis control module replacement, programming and setup.

DTC P2544

Diagnostic Instructions

- Perform the **Diagnostic System Check - Vehicle** prior to using this diagnostic procedure.
- Review **Strategy Based Diagnosis** for a overview of the diagnostic approach.
- **Diagnostic Procedure Instructions** provides an overview of each diagnostic category.

DTC Descriptors

DTC P2544

Transmission Torque Request Signal Message Counter Incorrect

Circuit/System Description

To improve shift feel, the transmission control module (TCM) is constantly sending the engine control module (ECM) serial data messages with information regarding it's request for modifying engine speed or torque. The serial data messages are sent through two circuits which are part of a communication network called the controller area network (CAN). The ECM sets DTC P2544 when it detects a discrepancy in the structure of the message causing the integrity of the message to be questioned.

Conditions for Running the DTC

- The engine run time is greater than 0.5 s.
- No other CAN errors are present.

Conditions for Setting the DTC

The ECM detects that the engine speed and torque modification messages from the TCM are either corrupted or intermittently missing for greater than 4 s.

Action Taken When the DTC Sets

- DTC P2544 is a Type B DTC.
- The TCM commands maximum line pressure during shifts, which results in harsh shifts.
- The TCM freezes adaptive functions.

Conditions for Clearing the DTC

DTC P2544 is a Type B DTC.

Diagnostic Aids

An intermittent fault in the CAN circuits will cause the ECM to set DTC P2544.

Reference Information

DTC Type Reference

Powertrain Diagnostic Trouble Code (DTC) Type Definitions

Circuit/System Verification

NOTE:

- **DTC P2544 is an informational DTC.**
- **Diagnose all other engine control module DTCs prior to DTC P2544.**

1. Verify that no other DTCs are set except for DTC P2544.
   - **If any other DTCs are set**

     Refer to **Diagnostic Trouble Code (DTC) List - Vehicle**

   - **If only DTC P2544 is set**
2. Replace the K71 Transmission Control Module.
3. Operate the vehicle within the conditions for running the DTC. You may also operate the vehicle within the conditions that you observed from the freeze frame/failure records data.
4. Verify the DTC does not set.
   - **If DTC sets**

     Replace the K20 Engine Control Module.

   - **If DTC does not set**
5. All OK.

Repair Instructions

Perform the **Diagnostic Repair Verification** after completing the repair.

Control Module References for ECM or control solenoid valve assembly replacement, programming, and setup.

DTC P2635 (CHASSIS CONTROL MODULE)

Diagnostic Instructions

- Perform the **Diagnostic System Check - Vehicle** prior to using this diagnostic procedure.
- Review **Strategy Based Diagnosis** for an overview of the diagnostic approach.
- **Diagnostic Procedure Instructions** provides an overview of each diagnostic category.

DTC Descriptor

DTC P2635

Fuel Pump Flow Performance

Diagnostic Fault Information

Circuit	Short to Ground	Open/High Resistance	Short to Voltage	Signal Performance

Control	P0231	P023F	P0232	P023F, P2635
Low Reference	-	P023F	-	P023F, P2635

Circuit/System Description

The engine control module (ECM) supplies voltage to the chassis control module when the ECM detects that the ignition is on. The voltage from the ECM to the chassis control module remains active for 2 seconds, unless the engine is in crank or run. While this voltage is being received, the chassis control module closes the ground switch of the fuel pump and also supplies a varying voltage to the fuel tank pump module in order to maintain the desired fuel line pressure.

Conditions for Running the DTC

- DTC P018B, P018C, P018D, P0231, P0232, P023F, P064A, P1255 or P06A6 are not active.
- DTC P0641 has not failed this ignition cycle.
- Fuel pump control is enabled and the fuel pump control state is normal.
- The system voltage is greater than 11 V.
- The engine has been running for more than 30 seconds.
- Low fuel level warning not present.

Conditions for Setting the DTC

This DTC sets when the chassis control module detects a predetermined fuel pressure performance degradation between the desired fuel line pressure and the current fuel line pressure.

Action Taken When the DTC Sets

DTC P2635 is a Type B DTC.

Conditions for Clearing the DTC

DTC P2635 is a Type B DTC.

Diagnostic Aids

Using the Failure Records data may help locate an intermittent condition. If you cannot duplicate the DTC, the information in the Failure Records can help determine how many miles since the DTC set. The Fail Counter and Pass Counter can help determine how many ignition cycles that the diagnostic test reported a pass and/or a fail.

On vehicles equipped with a high pressure mechanical pump on Direct Fuel Injection engines, the vehicle may continue to run even though the pump in the fuel tank is not operating.

Reference Information

Schematic Reference

Engine Controls Schematics

Connector End View Reference

COMPONENT CONNECTOR END VIEWS - INDEX

Description and Operation

Fuel System Description

Electrical Information Reference

- **Circuit Testing**
- **Connector Repairs**
- **Testing for Intermittent Conditions and Poor Connections**
- **Wiring Repairs**

DTC Type Reference

Powertrain Diagnostic Trouble Code (DTC) Type Definitions

Scan Tool Reference

Control Module References for scan tool information

Circuit/System Testing

NOTE: Do not replace the Chassis Control Module based on a history DTC P2635. The DTC P2635 may be stored but that does not indicate a failure of the Chassis Control Module. Refer to Strategy Based Diagnosis for further history DTC diagnostics.

1. Ignition ON.
2. Verify DTCs P018B, P018C, P018D, P0231, P0232 or P023F are not set.
   - **If any of the DTCs are set**

     Refer to **Diagnostic Trouble Code (DTC) List - Vehicle** .

   - **If none of the DTCs are set**
3. Verify the proper fuel system pressure. Perform the fuel system pressure test, refer to **Fuel System Diagnosis**.
   - **If the fuel system pressure test is not normal**

     Replace the A7 Fuel Pump and Level Sensor.

   - **If the fuel system pressure test is normal**
4. Ignition OFF and all vehicle systems OFF, disconnect the harness connector at the A7 Fuel Pump and Level Sensor. It may take up to 2 minutes for all vehicle systems to power down.
5. Test for less than 10 ohms between the low reference circuit terminal 2 and ground.

- **If 10 ohms or greater**
  1. Ignition OFF, disconnect the harness connector at the K38 Chassis Control Module.
  2. Test for less than 2 ohms in the low reference circuit end to end.
     - If 2 ohms or greater, repair the open/high resistance in the circuit.
     - If less than 2 ohms, replace the K38 Chassis Control Module.
- **If less than 10 ohms**

6. Connect a test lamp between the control circuit terminal 1 and the low reference circuit terminal 2.
7. Ignition ON.
8. Verify the test lamp turns ON and OFF when commanding the G12 Fuel Pump ON and OFF using the scan tool ECM fuel pump enable control function.
   - **If the test lamp is always OFF**
     1. Ignition OFF, disconnect the harness connector at the K38 Chassis Control Module.
     2. Test for infinite resistance between the control circuit and ground.
        - If less than infinite resistance, repair the short to ground on the circuit.
        - If infinite resistance
     3. Test for less than 2 ohms in the control circuit end to end.
        - If 2 ohms or greater, repair the open/high resistance in the circuit.
        - If less than 2 ohms, replace the K38 Chassis Control Module.
   - **If the test lamp is always ON**
     1. Ignition OFF, disconnect the harness connector at the K38 Chassis Control Module, ignition ON.
     2. Test for less than 1 V between the control circuit and ground.
        - If 1 V or greater, repair the short to voltage on the circuit.
        - If less than 1 V, replace the K38 Chassis Control Module.
   - **If the test lamp turns ON and OFF**
9. All OK.

Repair Instructions

Perform the **Diagnostic Repair Verification** after completing the repair.

Control Module References for chassis control module replacement, programming and setup.

DTC P2635 (FUEL PUMP POWER CONTROL MODULE)

Diagnostic Instructions

- Perform the **Diagnostic System Check - Vehicle** prior to using this diagnostic procedure.
- Review **Strategy Based Diagnosis** for an overview of the diagnostic approach.
- **Diagnostic Procedure Instructions** provides an overview of each diagnostic category.

DTC Descriptor

DTC P2635

Fuel Pump Flow Performance

Circuit/System Description

The engine control module (ECM) supplies voltage to the fuel pump power control module when the ECM detects that the ignition is on. The voltage from the ECM to the fuel pump power control module remains active for 2 seconds, unless the engine is in crank or run. While this voltage is being received, the fuel pump power control module closes the ground switch of the fuel pump. The fuel pump power control module maintains correct fuel pressure based on the information from the fuel pressure sensor and varying the PWM controlled current to the fuel pump.

Conditions for Running the DTC

- DTC P018B, P018C, P018D, P0231, P0232, P023F, P0641, P064A, P0606, P1255, P129E, or P12A6 are not active.
- Fuel pump control is enabled and the fuel pump control state is normal.
- The ignition voltage is between 11-32 V.
- The engine has been running for more than 30 seconds.
- The engine fuel flow is not 0.
- Low fuel level warning not present.
- The DTC runs continuously when the conditions above are met.

Conditions for Setting the DTC

The fuel pump power control module detects a difference of ± 60 kPa at 400 kPa request or ±45 kPa at 300 kPa request between the desired fuel pressure and the actual fuel pressure for approximately 10 s.

Action Taken When the DTC Sets

DTC P2635 is a Type B DTC.

Conditions for Clearing the DTC

DTC P2635 is a Type B DTC.

Diagnostic Aids

Using the Failure Records data may help locate an intermittent condition. If you cannot duplicate the DTC, the information in the Failure Records can help determine how many miles since the DTC set. The Fail Counter and Pass Counter can help determine how many ignition cycles that the diagnostic test reported a pass and/or a fail.

On vehicles equipped with a high pressure mechanical pump on Direct Fuel Injection engines, the vehicle may continue to run even though the pump in the fuel tank is not operating.

Reference Information

Schematic Reference

Engine Controls Schematics

Connector End View Reference

COMPONENT CONNECTOR END VIEWS - INDEX

Description and Operation

Fuel System Description

Electrical Information Reference

- **Circuit Testing**
- **Connector Repairs**
- **Testing for Intermittent Conditions and Poor Connections**
- **Wiring Repairs**

DTC Type Reference

Powertrain Diagnostic Trouble Code (DTC) Type Definitions

Scan Tool Reference

Control Module References for scan tool information

Circuit/System Verification

1. Ignition ON.
2. Verify that DTC P018B, P018C, P018D, P0231, P0232, or P023F is not set.
   - **If any of the DTCs are set**

     Refer to **Diagnostic Trouble Code (DTC) List - Vehicle** .

   - **If none of the DTCs are set**
3. Verify the scan tool Short Term Fuel Pump Trim and the Long Term Fuel Pump Trim when multiplied together are less than 1.5.
   - **If greater than 1.5**

     Refer to Circuit/System Testing.

   - **If less than 1.5**
4. Verify the scan tool Fuel Pressure Sensor and the Desired Fuel Pressure are within 45 kPa (6.5 psi) at 300 kPa (43.5 psi) request or 60 kPa (8.7 psi) at 400 kPa (58 psi) request of each other while operating the vehicle through varying loads.
   - **If greater than 45 kPa (6.5 psi)/60 kPa (8.7 psi)**

     Refer to Circuit/System Testing.

- **If less than 45 kPa (6.5 psi)/60 kPa (8.7 psi)**

5. Operate the vehicle within the Conditions for Running the DTC to verify the DTC does not reset. You may also operate the vehicle within the conditions that you observed from the Freeze Frame/Failure Records data.
6. Verify the DTC does not set.
   - **If the DTC sets**

     Refer to Circuit/System Testing.

   - **If the DTC does not set**
7. All OK.

Circuit/System Testing

NOTE: **Do not replace the fuel pump power control module based on a history DTC P2635. DTC P2635 may be stored but that does not indicate a failure of the fuel pump power control module. Refer to Strategy Based Diagnosis for further history DTC diagnostics.**

1. Verify the proper fuel system pressure. Refer to **Fuel System Diagnosis**.
   - **If the fuel pressure is not normal**

     Repair the fuel system as necessary.

   - **If the fuel pressure is normal**
2. All OK.

Repair Instructions

Perform the **Diagnostic Repair Verification** after completing the repair.

- **Direct Fuel Injector Replacement**
- **FUEL FEED PIPE REPLACEMENT (ENGINE)** or **FUEL FEED PIPE REPLACEMENT (CHASSIS)**
- **Fuel Tank Fuel Pump Module Replacement (NU6)** , **Fuel Tank Fuel Pump Module Replacement (NT7)**
- Perform the Fuel Pump Trim Reset procedure with a scan tool after the repair.

Repair Verification

1. Install any components that have been removed or replaced during diagnosis.
2. Perform any adjustments, programming or setup procedures that are required when a component is removed or replaced.
3. Clear the DTCs with a scan tool.
4. Turn OFF the ignition for 60 s.
5. Operate the vehicle within the Conditions for Running the DTC.

6. Verify the scan tool Short Term Fuel Pump Trim and the Long Term Fuel Pump Trim when multiplied together are less than 1.5.
   - **If greater than 1.5**

     Refer to Circuit/System Testing.

   - **If less than 1.5**
7. Verify the scan tool Fuel Pressure Sensor and the Desired Fuel Pressure are within 45 kPa (6.5 psi) at 300 kPa (43.5 psi) request or 60 kPa (8.7 psi) at 400 kPa (58 psi) request of each other while operating the vehicle through varying loads.
   - **If greater than 45 kPa (6.5 psi)/60 kPa (8.7 psi)**

     Refer to Circuit/System Testing.

   - **If less than 45 kPa (6.5 psi)/60 kPa (8.7 psi)**
8. All OK.

SYMPTOMS - ENGINE CONTROLS (LUK)

Diagnostic Instructions

- Perform the **Diagnostic System Check - Vehicle** prior to using this diagnostic procedure.
- Review **Strategy Based Diagnosis** for an overview of the diagnostic approach.
- **Diagnostic Procedure Instructions** provides an overview of each diagnostic category.

Symptoms Description

Symptoms covers conditions that are not covered by DTCs. Certain conditions can cause multiple symptoms. These conditions are listed together under Symptoms Testing. Conditions that may only cause specific symptoms are listed separately under Additional Symptoms Testing. Perform the Symptoms Testing before using the Additional Symptoms Testing.

Symptoms Definition

Backfire

The fuel ignites in the intake manifold or in the exhaust system, making a loud popping noise.

Cuts Out, Misses

A steady pulsation or jerking that follows engine speed, which is usually more pronounced as the engine load increases. This condition is not normally felt above 1,500 RPM or 48 km/h (30 mph). The exhaust has a steady spitting sound at idle or at low speed.

Detonation/Spark Knock

A mild to severe ping which usually occurs worse while under acceleration. The engine makes sharp metallic knocks that change with throttle opening.

Dieseling, Run-On

The engine continues to run after the key is turned OFF, but runs very rough.

Engine Control Module (ECM) Commanded Reduced Engine Power

The ECM illuminates the Reduced Engine Power lamp and will limit engine power under potential engine/vehicle damaging or emissions related conditions. A DTC may not be set.

Fuel Odor

A noticeable smell of unburned fuel.

Hard Start

The engine cranks OK, but does not start for a long time. The vehicle does eventually run, or may start but immediately stall.

Hesitation, Sag, Stumble

A momentary lack of response as the accelerator is pushed down. This condition can occur at any vehicle speed. This condition is usually more pronounced when first trying to make the vehicle move, as from a stop. This condition may cause the engine to stall in severe conditions.

Lack of Power, Sluggishness, or Sponginess

The engine delivers less than expected power. Little or no increase in vehicle speed when the accelerator pedal is pushed down part way.

Poor Fuel Economy

Fuel economy, as measured by an actual road test, is noticeably lower than expected. Also, the fuel economy is noticeably lower than it was on this vehicle at one time, as previously shown by an actual road test.

Rough, Unstable, or Incorrect Idle and Stalling

The engine runs unevenly at idle. If severe, the engine or the vehicle may shake. Engine idle speed may vary. Either condition may be severe enough to stall the engine.

Surges/Chuggles

An engine power variation under steady throttle or cruise. Feels like the vehicle speeds up and slows down with no change in the accelerator pedal position.

Symptoms Verification

Before using the Symptom tables, perform the following inspections:

- Verify that the malfunction indicator lamp (MIL) is operating correctly. Use the scan tool to command

the lamp ON and OFF.

- Verify that there are no DTCs that are stored.
- Verify that the scan tool data is within a normal operating range. Refer to **Control Module References** for scan tool information.
- Verify the customer concern.
- Perform the Visual/Physical Inspection in this section. The visual/physical inspection is extremely important, and can lead to correcting a condition without additional testing. It may also help reveal the cause of an intermittent condition.

Identifying Intermittent Conditions

Many intermittent conditions occur with harness or connector movement due to engine torque, rough pavement, vibration or physical movements of a component. Refer to the following for a list of issues that may cause an intermittent condition:

- Moisture and water intrusion in connectors, terminals, and components
- Incomplete connector mating
- Poor terminal contact
- High circuit or component resistance-High resistance can include any resistance, regardless of the amount, which can interrupt the operation of the component.
- Harness that is too short or tight
- Wire insulation that is chaffed or cut
- High or low ambient temperature
- High or low engine coolant temperatures
- High underhood temperatures
- Heat build up in component or circuit due to circuit resistance, poor terminal contact, or high electrical load
- High or low system voltage
- High vehicle load conditions
- Rough road surfaces
- Electro-magnetic interference (EMI)/circuit interference from relays, solenoids or other electrical surge
- Incorrect installation of aftermarket, add on accessories

Visual/Physical Check

- Verify that the control module grounds are clean, tight, and correctly located.
- Verify that the vacuum hoses are not split or kinked, and are properly connected, as shown on the Vehicle Emission Control Information label.
- Verify that the air filter is clean and free from restrictions.
- Verify that there is no water intrusion in connectors terminals and components.
- Inspect the air intake ducts for the following conditions:
    - Collapsed
    - Damaged areas

  - Looseness
  - Incorrect installation
  - Leaking
- Inspect for air leaks at the throttle body mounting area, the mass air flow (MAF) sensor and intake manifold sealing surfaces.
- Inspect the wiring harness for the following conditions:
  - Poor connections
  - Pinches
  - Cuts
- Inspect for loose, damaged, unseated, or missing sensors/components.
- Inspect the terminals for corrosion and correct contact.

Symptoms Testing

Backfire, Cuts Out/Misses, Detonation/Spark Knock, Dieseling/Run-On, Engine Control Module (ECM) Commanded Reduced Engine Power, Hard Start, Hesitation/Sag/Stumble, Lack of Power/Sluggishness/Sponginess, Poor Fuel Economy, Rough, Unstable, or Incorrect Idle and Stalling, or Surges/Chuggles

- Test the fuel system for the following:
  - Correct operation and pressure-Refer to **Fuel System Diagnosis**.
  - Improperly operating fuel injectors-Refer to **Fuel Injector Solenoid Coil Test**.
  - Improper fuel quality condition-Refer to **Alcohol/Contaminants-in-Fuel Diagnosis**.
- Test the ignition system for the following:
  - Spark plugs with incorrect heat range or an abnormal condition-Refer to **Spark Plug Inspection** , and **Ignition System Specifications** .
  - Coolant or oil fouled spark plugs-For diagnosis, refer to **Coolant in Combustion Chamber** , or **Oil Consumption Diagnosis** .
  - Secondary ignition system susceptible to moisture. Engine running, wet down the secondary ignition system with water from a spray bottle to help locate damaged or deteriorated components. Look/listen for arcing or misfiring as the water is applied.
  - Weak spark using the **J 26792** spark tester -Refer to **Electronic Ignition System Diagnosis**.
- Inspect for the following conditions:
  - Improper operation of the transmission torque converter clutch (TCC) - The scan tool should indicate an engine speed drop when the TCC is commanded ON. For Non-Hybrid equipped vehicles, refer to **Torque Converter Diagnosis** .
  - Improper operation of the A/C compressor
  - An engine that runs lean or rich-Observe the Fuel Trim parameters with a scan tool. Refer to **DTC P0171 or P0172** .
  - Slow responding heated oxygen sensors (HO2S). The heated oxygen sensors should respond quickly to different throttle positions. Refer to **DTC P0133, P013A, P013B, P013E, P013F, P015A, P015B, P2270, or P2271** for additional information.

CAUTION: Refer to Heated Oxygen and Oxygen Sensor Caution .

- Water intrusion in the heated oxygen sensors connector

NOTE: **The embossed arrows on the mass air flow (MAF) sensor indicate the direction of the intake air flow. The arrows must point toward the engine.**

- Improper MAF sensor installation. A mass air flow sensor that is improperly installed may cause a hard start. Install the mass air flow in the proper direction. Refer to **Mass Airflow Sensor with Intake Air Temperature Sensor Replacement** .
- Improper mass air flow (MAF) sensor connections.
- Engine oil contaminated by fuel
- Split or kinked vacuum hoses-Verify that the routing and connections are as shown on the Vehicle Emission Control Information label.
- Excessive knock sensor system spark retard activity-Observe the Knock Retard parameter on the scan tool for activity more than 0°.

- Electromagnetic interference (EMI) on the reference circuit, which can cause a misfire condition. You can usually detect electromagnetic interference with a scan tool by monitoring the engine speed parameter. A sudden increase in the engine speed parameter with little change in actual engine speed indicates that electromagnetic interference is present. Inspect the high voltage components near the ignition control circuit if a condition exists.
- A crankshaft position sensor with an intermittent condition-Observe the scan tool Crankshaft Position Resync Counter parameter. The Resync Counter parameter should remain at 0 during all operating conditions, and when moving the related harnesses and connectors between the crankshaft position sensor and the ECM.
- A stuck open evaporative emission (EVAP) canister purge solenoid.
- Improper operation of the crankcase ventilation valve-Refer to **Crankcase Ventilation System Inspection/Diagnosis (Without Turbocharger)** .
- The exhaust system components for the following:
  - Physical damage or possible internal failure
  - Restricted three-way catalytic converters

  For more information, refer to **Symptoms - Engine Exhaust** .

- The engine cooling system for the following conditions:
  - A thermostat with incorrect heat range. Refer to **Thermostat Diagnosis** .
  - Improper engine coolant level-If the level is low, refer to **Loss of Coolant** .
- Inspect the engine for the following mechanical failures:

  Refer to **Symptoms - Engine Mechanical** .

  - Excessive oil in the combustion chamber or leaking valve seals
  - Oil Consumption
  - Incorrect cylinder compression
  - Sticking or leaking valves

  - Worn camshaft lobes
  - Incorrect valve timing
  - Worn rocker arms
  - Broken valve springs
  - Excessive carbon buildup in the combustion chambers-Clean the chambers with top engine cleaner. Follow the instructions on the can.
  - Incorrect engine parts
- If the above conditions do not address the symptom, refer to the additional symptoms tests.

Additional Symptoms Tests

Detonation/Spark Knock

- Verify that the engine coolant temperature (ECT) has not shifted in value. Allow the engine to run and reach operating temperature. Observe the ECT Sensor parameter with a scan tool and compare the reading to that parameter listed on the **K20 Engine Control Module: Scan Tool Information** , list. If the reading is not in the range specified in the list, test the resistance of the engine coolant temperature sensor. Refer to **Temperature Versus Resistance (Engine Coolant Temperature Sensor)** , for resistance specifications. Replace the engine coolant temperature sensor if the resistance is not within specification. Refer to **Engine Coolant Temperature Sensor Replacement** . If the sensor is within the specification, test the engine coolant temperature sensor circuits for high resistance.
- Test for an engine overheating condition. Refer to **Engine Overheating** .
- Inspect for excessive carbon buildup in the combustion chambers. Clean the chambers with Top Engine Cleaner, if necessary. Follow the instructions on the can.
- If there are no engine mechanical faults, fill the fuel tank with a known high quality fuel that meets the vehicle minimum octane requirements.

Engine Control Module (ECM) Commanded Reduced Engine Power

Under certain conditions the engine control module may limit engine power by reducing engine torque and, for some vehicles, fuel pressure as well. For most, but not all of the conditions, the engine control module will illuminate the reduced engine power lamp on the instrument panel cluster, however a DTC may not be set. Observe the scan tool Reduced Engine Power History parameter, if applicable, or refer to **K20 Engine Control Module: Scan Tool Information** to determine the reason for the reduced engine power event.

Verify or inspect for the following:

- Vehicle being operated at sustained high engine speeds, or, towing heavy loads up an incline for an extended period of time, which may cause the engine oil or coolant to overheat. A repair may not be necessary. Inspect the airflow passageways in front of the engine for obstructions and clear away any debris or foreign material that is found. If no obstructions are found, review approved driving habits with the customer. The customer may need to operate the vehicle at a higher engine speed to improve cooling system performance, or, at a slower engine speed to reduce engine load.
- A cooling fan condition which may cause the engine control module to reduce engine power. Refer to **Cooling Fan Description and Operation** , and **Cooling System Description and Operation** to verify correct operation of the cooling fan.
- Temporarily reduced engine power. Under extremely cold ambient temperatures some SIDI equipped vehicles may experience engine control module commanded reduced engine power for a few minutes

during engine warm-up. This would be a normal condition, noticeable only at wide open throttle, and the reduced engine power lamp would not be illuminated.

- If the vehicle is equipped with the OnStar® feature, reduced engine power may be due to OnStar® remote command. Verify the vehicle is not in the OnStar® initiated Stolen Vehicle Slowdown mode. Refer to **OnStar Stolen Vehicle Slowdown Active** , and **Remote Vehicle Speed Limiting Description and Operation** for additional information.
- Excessively high fuel pressure condition. Refer to **Fuel System Diagnosis**, and **Fuel System Description** to verify fuel system operation.
- Maximum recommended engine oil life exceeded. Refer to the Owners Manual for scheduled maintenance recommendations.
- Intake air temperature out of range too high. Engine running, observe the scan tool IAT Sensor parameter. The readings should be between -40°C and +149°C (-40°F and +300°F). Refer to **DTC P0112, P0113, or P0114 (With LEA)** , **DTC P0112, P0113, or P0114 (With LUK)** for additional information.
- Fuel temperature out of range too high.

Fuel Odor

- Inspect for leaking, damaged, or deteriorated fuel lines.
- Inspect for a saturated EVAP canister-Refer to **Evaporative Emission Control System Description** .
- Inspect for a condition with the internal components of the fuel tank assembly-Refer to **Fuel System Description** .

Hard Start

- Observe the scan tool Throttle Body Idle Airflow Compensation parameter. A value greater than 90% may indicate an excessive accumulation of deposits in the throttle bore. Inspect the throttle body and bore and clean, if necessary. Refer to **Throttle Body Cleaning** .
- Test the engine coolant temperature (ECT) sensor. Compare the scan tool ECT Sensor value to the intake air temperature (IAT) sensor value on a cold engine. The ECT and IAT Sensor values should be within 3°C (5°F). If the engine coolant temperature sensor is out of range with the intake air temperature sensor, test the resistance of the engine coolant temperature sensor. Refer to **Temperature Versus Resistance (Engine Coolant Temperature Sensor)** , for resistance specifications. Replace the engine coolant temperature sensor if the resistance is not within specification. Refer to **Engine Coolant Temperature Sensor Replacement** . If the sensor is within the specifications, test the engine coolant temperature sensor circuits for high resistance.
- Verify that the fuel system has adequate pressure for engine start-up. The fuel pump control module should command the fuel pump ON for 2 S when the ignition is turned to ON. Refer to **Fuel System Description** , and **Fuel System Diagnosis** for correct fuel pressure specifications.
- Inspect for excessive crankshaft endplay that will cause the crankshaft position sensor reluctor wheel to move out of alignment with the crankshaft position sensor. Refer to **Crankshaft and Bearing Cleaning and Inspection** .

Hesitation, Sag, Stumble

- Test the fuel pressure. Refer to **Fuel System Diagnosis**.
- Inspect the mass air flow (MAF) sensor for obstruction, contamination, and damage. Refer to **Mass Airflow Sensor with Intake Air Temperature Sensor Replacement** .

- Test the generator. Refer to **Symptoms - Engine Electrical** . Repair the charging system if the generator output voltage is less than 9 V or more than 16 V.
- Test the manifold absolute pressure (MAP) sensor. Refer to **DTC P0106** .
- Inspect for excessive crankshaft endplay that will cause the crankshaft position sensor reluctor wheel to move out of alignment with the crankshaft position sensor. Refer to **Crankshaft and Bearing Cleaning and Inspection** .

NOTE: The following actions may need to be repeated in order to verify an intermittent intake or exhaust camshaft actuator condition.

- Engine warm and idling, verify the correct operation of the camshaft actuator system. Command the intake and exhaust camshaft actuators from 0 degrees to 25 degrees and back to zero while observing the scan tool Intake Camshaft Position Variance and Exhaust Camshaft Position Variance parameters. Each parameter should be less than 2 degrees in each of the commanded states.
  - If any of the parameters is greater than 2 degrees, inspect the suspect camshaft actuator and camshaft actuator solenoid valve and valve bore for contamination, obstruction, and damage. Refer to **Camshaft Actuator System Description** , **Camshaft Position Exhaust Actuator Replacement** , and **Camshaft Position Intake Actuator Replacement** .

Lack of Power, Sluggishness, or Sponginess

- Inspect the engine electrical system for correct operation. Refer to **Symptoms - Engine Electrical** .
- Verify that each injector harness is connected to the correct injector.
- Inspect the mass air flow (MAF) sensor for obstruction, contamination, and damage. Refer to **Mass Airflow Sensor with Intake Air Temperature Sensor Replacement** .

NOTE: The following actions may need to be repeated in order to verify an intermittent intake or exhaust camshaft actuator condition.

- Engine warm and idling, verify the correct operation of the camshaft actuator system. Command the intake and exhaust camshaft actuators from 0 degrees to 25 degrees and back to zero while observing the scan tool Intake Camshaft Position Variance and Exhaust Camshaft Position Variance parameters. Each parameter should be less than 2 degrees in each of the commanded states.
  - If any of the parameters is greater than 2 degrees, inspect the suspect camshaft actuator and camshaft actuator solenoid valve and valve bore for contamination, obstruction, and damage. Refer to **Camshaft Actuator System Description** , **Camshaft Position Exhaust Actuator Replacement** , and **Camshaft Position Intake Actuator Replacement** .

Poor Fuel Economy

- Inspect for heavy loads being carried or towed
- Inspect for acceleration rate too much or too often
- Inspect for incorrect operation of the speedometer.
- Observe the scan tool Throttle Body Idle Airflow Compensation parameter. A value greater than 90% may indicate an excessive accumulation of deposits in the throttle bore. Inspect the throttle body and bore and clean, if necessary. Refer to **Throttle Body Cleaning** .
- Verify that the engine coolant temperature (ECT) has not shifted in value. Allow the engine to run and

reach operating temperature. Observe the ECT Sensor parameter with a scan tool and compare the reading to that parameter listed on the **K20 Engine Control Module: Scan Tool Information** , list. If the reading is not in the range specified in the list, test the resistance of the engine coolant temperature sensor. Refer to **Temperature Versus Resistance (Engine Coolant Temperature Sensor)** , for resistance specifications. Replace the engine coolant temperature sensor if the resistance is not within specification. Refer to **Engine Coolant Temperature Sensor Replacement** . If the sensor is within the specification, test the engine coolant temperature sensor circuits for high resistance.

- Inspect the mass air flow (MAF) sensor for obstruction, contamination, and damage. Refer to **Mass Airflow Sensor with Intake Air Temperature Sensor Replacement** .
- Inspect the brake system for brake drag.

Rough, Unstable, or Incorrect Idle and Stalling

- Observe the scan tool Throttle Body Idle Airflow Compensation parameter. A value greater than 90% may indicate an excessive accumulation of deposits in the throttle bore. Inspect the throttle body and bore and clean, if necessary. Refer to **Throttle Body Cleaning** .
- Inspect the mass air flow (MAF) sensor for obstruction, contamination, and damage. Refer to **Mass Airflow Sensor with Intake Air Temperature Sensor Replacement** .
- Inspect the engine mounts. Refer to **Engine Mount Inspection** .
- Inspect the intake and exhaust manifolds for casting flash.
- An excessively high idle may be due to the floor mat interfering with the accelerator pedal. With this condition present, it may not be possible to shift the transmission into gear. Inspect the accelerator pedal for binding and verify that the floor mat is not interfering with the aceclerator pedal movement.

Surges/Chuggles

- Verify that each injector harness is connected to the correct injector.
- Inspect the mass air flow (MAF) sensor for obstruction, contamination, and damage. Refer to **Mass Airflow Sensor with Intake Air Temperature Sensor Replacement** .
- Inspect for slow responding heated oxygen sensors (HO2S). The heated oxygen sensors should respond quickly to a change in throttle position. If the heated oxygen sensors do not respond to different throttle positions, inspect for contamination from fuel, silicon, or the incorrect use of RTV sealant. The sensors may have a white powdery coating and result in a high, but false, signal voltage, which gives a rich exhaust indication. The engine control module reduces the amount of fuel delivered to the engine, causing a driveability condition. Refer to **DTC P0133, P013A, P013B, P013E, P013F, P015A, P015B, P2270, or P2271** for additional information.

SYMPTOMS - ENGINE CONTROLS (LEA)

Diagnostic Instructions

- Perform the **Diagnostic System Check - Vehicle** prior to using this diagnostic procedure.
- Review **Strategy Based Diagnosis** for an overview of the diagnostic approach.
- **Diagnostic Procedure Instructions** provides an overview of each diagnostic category.

Symptoms Description

Symptoms covers conditions that are not covered by DTCs. Certain conditions can cause multiple

symptoms. These conditions are listed together under Symptoms Testing. Conditions that may only cause specific symptoms are listed separately under Additional Symptoms Testing. Perform the Symptoms Testing before using the Additional Symptoms Testing.

Symptoms Definition

Backfire

The fuel ignites in the intake manifold or in the exhaust system, making a loud popping noise.

Cuts Out, Misses

A steady pulsation or jerking that follows engine speed, which is usually more pronounced as the engine load increases. This condition is not normally felt above 1,500 RPM or 48 km/h (30 mph). The exhaust has a steady spitting sound at idle or at low speed.

Detonation/Spark Knock

A mild to severe ping which usually occurs worse while under acceleration. The engine makes sharp metallic knocks that change with throttle opening.

Dieseling, Run-On

The engine continues to run after the key is turned OFF, but runs very rough.

Engine Control Module (ECM) Commanded Reduced Engine Power

The ECM illuminates the Reduced Engine Power lamp and will limit engine power under potential engine/vehicle damaging or emissions related conditions. A DTC may not be set.

Fuel Odor

A noticeable smell of unburned fuel.

Hard Start

The engine cranks OK, but does not start for a long time. The vehicle does eventually run, or may start but immediately stall.

Hesitation, Sag, Stumble

A momentary lack of response as the accelerator is pushed down. This condition can occur at any vehicle speed. This condition is usually more pronounced when first trying to make the vehicle move, as from a stop. This condition may cause the engine to stall in severe conditions.

Lack of Power, Sluggishness, or Sponginess

The engine delivers less than expected power. Little or no increase in vehicle speed when the accelerator pedal is pushed down part way.

Poor Fuel Economy

Fuel economy, as measured by an actual road test, is noticeably lower than expected. Also, the fuel economy is noticeably lower than it was on this vehicle at one time, as previously shown by an actual road test.

Rough, Unstable, or Incorrect Idle and Stalling

The engine runs unevenly at idle. If severe, the engine or the vehicle may shake. Engine idle speed may vary. Either condition may be severe enough to stall the engine.

Surges/Chuggles

An engine power variation under steady throttle or cruise. Feels like the vehicle speeds up and slows down with no change in the accelerator pedal position.

Symptoms Verification

Before using the Symptom tables, perform the following inspections:

- Verify that the malfunction indicator lamp (MIL) is operating correctly. Use the scan tool to command the lamp ON and OFF.
- Verify that there are no DTCs that are stored.
- Verify that the scan tool data is within a normal operating range. Refer to **Control Module References** for scan tool information.
- Verify the customer concern.
- Perform the Visual/Physical Inspection in this section. The visual/physical inspection is extremely important, and can lead to correcting a condition without additional testing. It may also help reveal the cause of an intermittent condition.

Identifying Intermittent Conditions

Many intermittent conditions occur with harness or connector movement due to engine torque, rough pavement, vibration or physical movements of a component. Refer to the following for a list of issues that may cause an intermittent condition:

- Moisture and water intrusion in connectors, terminals, and components
- Incomplete connector mating
- Poor terminal contact
- High circuit or component resistance-High resistance can include any resistance, regardless of the amount, which can interrupt the operation of the component.
- Harness that is too short or tight
- Wire insulation that is chaffed or cut
- High or low ambient temperature
- High or low engine coolant temperatures
- High underhood temperatures
- Heat build up in component or circuit due to circuit resistance, poor terminal contact, or high

electrical load
- High or low system voltage
- High vehicle load conditions
- Rough road surfaces
- Electro-magnetic interference (EMI)/circuit interference from relays, solenoids or other electrical surge
- Incorrect installation of aftermarket, add on accessories

Visual/Physical Check

- Verify that the control module grounds are clean, tight, and correctly located.
- Verify that the vacuum hoses are not split or kinked, and are properly connected, as shown on the Vehicle Emission Control Information label.
- Verify that the air filter is clean and free from restrictions.
- Verify that there is no water intrusion in connectors terminals and components.
- Inspect the air intake ducts for the following conditions:
  - Collapsed
  - Damaged areas
  - Looseness
  - Incorrect installation
  - Leaking
- Inspect for air leaks at the throttle body mounting area, the mass air flow (MAF) sensor and intake manifold sealing surfaces.
- Inspect the wiring harness for the following conditions:
  - Poor connections
  - Pinches
  - Cuts
- Inspect for loose, damaged, unseated, or missing sensors/components.
- Inspect the terminals for corrosion and correct contact.

Symptoms Testing

Backfire, Cuts Out/Misses, Detonation/Spark Knock, Dieseling/Run-On, Engine Control Module (ECM) Commanded Reduced Engine Power, Hard Start, Hesitation/Sag/Stumble, Lack of Power/Sluggishness/Sponginess, Poor Fuel Economy, Rough, Unstable, or Incorrect Idle and Stalling, or Surges/Chuggles

- Test the fuel system for the following:
  - Correct operation and pressure-Refer to **Fuel System Diagnosis**.
  - Improperly operating fuel injectors-Refer to **Fuel Injector Solenoid Coil Test**.
  - Improper fuel quality condition-Refer to **Alcohol/Contaminants-in-Fuel Diagnosis**.
- Test the ignition system for the following:
  - Spark plugs with incorrect heat range or an abnormal condition-Refer to **Spark Plug Inspection** , and **Ignition System Specifications** .

- Coolant or oil fouled spark plugs-For diagnosis, refer to **Coolant in Combustion Chamber** , or **Oil Consumption Diagnosis** .
- Secondary ignition system susceptible to moisture. Engine running, wet down the secondary ignition system with water from a spray bottle to help locate damaged or deteriorated components. Look/listen for arcing or misfiring as the water is applied.
- Weak spark using the **J 26792** spark tester -Refer to **Electronic Ignition System Diagnosis**.

- Inspect for the following conditions:
  - Improper operation of the transmission torque converter clutch (TCC) - The scan tool should indicate an engine speed drop when the TCC is commanded ON. For Non-Hybrid equipped vehicles, refer to **Torque Converter Diagnosis** .
  - Improper operation of the A/C compressor
  - An engine that runs lean or rich-Observe the Fuel Trim parameters with a scan tool. Refer to **DTC P0171 or P0172** .
  - Slow responding heated oxygen sensors (HO2S). The heated oxygen sensors should respond quickly to different throttle positions. Refer to **DTC P0133, P013A, P013B, P013E, P013F, P015A, P015B, P2270, or P2271** for additional information.

CAUTION: Refer to Heated Oxygen and Oxygen Sensor Caution .

  - Water intrusion in the heated oxygen sensors connector

NOTE: The embossed arrows on the mass air flow (MAF) sensor indicate the direction of the intake air flow. The arrows must point toward the engine.

  - Improper MAF sensor installation. A mass air flow sensor that is improperly installed may cause a hard start. Install the mass air flow in the proper direction. Refer to **Mass Airflow Sensor with Intake Air Temperature Sensor Replacement** .
  - Improper mass air flow (MAF) sensor connections.
  - Engine oil contaminated by fuel
  - Split or kinked vacuum hoses-Verify that the routing and connections are as shown on the Vehicle Emission Control Information label.
  - Excessive knock sensor system spark retard activity-Observe the Knock Retard parameter on the scan tool for activity more than 0°.
- Electromagnetic interference (EMI) on the reference circuit, which can cause a misfire condition. You can usually detect electromagnetic interference with a scan tool by monitoring the engine speed parameter. A sudden increase in the engine speed parameter with little change in actual engine speed indicates that electromagnetic interference is present. Inspect the high voltage components near the ignition control circuit if a condition exists.
- A crankshaft position sensor with an intermittent condition-Observe the scan tool Crankshaft Position Resync Counter parameter. The Resync Counter parameter should remain at 0 during all operating conditions, and when moving the related harnesses and connectors between the crankshaft position sensor and the ECM.
- A stuck open evaporative emission (EVAP) canister purge solenoid.
- Improper operation of the crankcase ventilation valve-Refer to **Crankcase Ventilation System**

Inspection/Diagnosis (Without Turbocharger) .

- The exhaust system components for the following:
  - Physical damage or possible internal failure
  - Restricted three-way catalytic converters

    For more information, refer to **Symptoms - Engine Exhaust** .

- The engine cooling system for the following conditions:
  - A thermostat with incorrect heat range. Refer to **Thermostat Diagnosis** .
  - Improper engine coolant level-If the level is low, refer to **Loss of Coolant** .
- Inspect the engine for the following mechanical failures:

  Refer to **Symptoms - Engine Mechanical** .

  - Excessive oil in the combustion chamber or leaking valve seals
  - Oil Consumption
  - Incorrect cylinder compression
  - Sticking or leaking valves
  - Worn camshaft lobes
  - Incorrect valve timing
  - Worn rocker arms
  - Broken valve springs
  - Excessive carbon buildup in the combustion chambers-Clean the chambers with top engine cleaner. Follow the instructions on the can.
  - Incorrect engine parts
- If the above conditions do not address the symptom, refer to the additional symptoms tests.

Additional Symptoms Tests

Detonation/Spark Knock

- Verify that the engine coolant temperature (ECT) has not shifted in value. Allow the engine to run and reach operating temperature. Observe the ECT Sensor parameter with a scan tool and compare the reading to that parameter listed on the **K20 Engine Control Module: Scan Tool Information** , list. If the reading is not in the range specified in the list, test the resistance of the engine coolant temperature sensor. Refer to **Temperature Versus Resistance (Engine Coolant Temperature Sensor)** , for resistance specifications. Replace the engine coolant temperature sensor if the resistance is not within specification. Refer to **Engine Coolant Temperature Sensor Replacement** . If the sensor is within the specification, test the engine coolant temperature sensor circuits for high resistance.
- Test for an engine overheating condition. Refer to **Engine Overheating** .
- Inspect for excessive carbon buildup in the combustion chambers. Clean the chambers with Top Engine Cleaner, if necessary. Follow the instructions on the can.
- If there are no engine mechanical faults, fill the fuel tank with a known high quality fuel that meets the vehicle minimum octane requirements.

Engine Control Module (ECM) Commanded Reduced Engine Power

Under certain conditions the engine control module may limit engine power by reducing engine torque and, for some vehicles, fuel pressure as well. For most, but not all of the conditions, the engine control module will illuminate the reduced engine power lamp on the instrument panel cluster, however a DTC may not be set. Observe the scan tool Reduced Engine Power History parameter, if applicable, or refer to **K20 Engine Control Module: Scan Tool Information** to determine the reason for the reduced engine power event.

Verify or inspect for the following:

- Vehicle being operated at sustained high engine speeds, or, towing heavy loads up an incline for an extended period of time, which may cause the engine oil or coolant to overheat. A repair may not be necessary. Inspect the airflow passageways in front of the engine for obstructions and clear away any debris or foreign material that is found. If no obstructions are found, review approved driving habits with the customer. The customer may need to operate the vehicle at a higher engine speed to improve cooling system performance, or, at a slower engine speed to reduce engine load.
- A cooling fan condition which may cause the engine control module to reduce engine power. Refer to **Cooling Fan Description and Operation** , and **Cooling System Description and Operation** to verify correct operation of the cooling fan.
- Temporarily reduced engine power. Under extremely cold ambient temperatures some SIDI equipped vehicles may experience engine control module commanded reduced engine power for a few minutes during engine warm-up. This would be a normal condition, noticeable only at wide open throttle, and the reduced engine power lamp would not be illuminated.
- If the vehicle is equipped with the OnStar® feature, reduced engine power may be due to OnStar® remote command. Verify the vehicle is not in the OnStar® initiated Stolen Vehicle Slowdown mode. Refer to **OnStar Stolen Vehicle Slowdown Active** , and **Remote Vehicle Speed Limiting Description and Operation** for additional information.
- Excessively high fuel pressure condition. Refer to **Fuel System Diagnosis**, and **Fuel System Description** to verify fuel system operation.
- Maximum recommended engine oil life exceeded. Refer to the Owners Manual for scheduled maintenance recommendations.
- Intake air temperature out of range too high. Observe the scan tool IAT Sensor 1 and IAT Sensor 2 parameters. The readings should be within 30°C (54°F) of a each other. Refer to **DTC P2199 (With LEA)** for additional information.
- Fuel temperature out of range too high.
- If equipped with automatic transmission, an incorrect learned brake pedal position (BPP) sensor. Verify the following actions have not occurred:
  - An engine control module (ECM) has been replaced
  - A BPP sensor has been replaced
  - A BPP sensor is misaligned or incorrectly installed

    If any of the above actions have occurred, the **Brake Pedal Position Sensor Learn** procedure must be performed.

Fuel Odor

- Inspect for leaking, damaged, or deteriorated fuel lines.
- Inspect for a saturated EVAP canister-Refer to **Evaporative Emission Control System Description** .
- Inspect for a condition with the internal components of the fuel tank assembly-Refer to **Fuel System**

Description .

Hard Start

- Observe the scan tool Throttle Body Idle Airflow Compensation parameter. A value greater than 90% may indicate an excessive accumulation of deposits in the throttle bore. Inspect the throttle body and bore and clean, if necessary. Refer to **Throttle Body Cleaning** .
- Test the engine coolant temperature (ECT) sensor. Compare the scan tool ECT Sensor value to the intake air temperature (IAT) sensor value on a cold engine. The ECT and IAT Sensor values should be within 3°C (5°F). If the engine coolant temperature sensor is out of range with the intake air temperature sensor, test the resistance of the engine coolant temperature sensor. Refer to **Temperature Versus Resistance (Engine Coolant Temperature Sensor)** , for resistance specifications. Replace the engine coolant temperature sensor if the resistance is not within specification. Refer to **Engine Coolant Temperature Sensor Replacement** . If the sensor is within the specifications, test the engine coolant temperature sensor circuits for high resistance.
- Verify that the fuel system has adequate pressure for engine start-up. The fuel pump control module should command the fuel pump ON for 2 S when the ignition is turned to ON. Refer to **Fuel System Description** , and **Fuel System Diagnosis** for correct fuel pressure specifications.
- Inspect for excessive crankshaft endplay that will cause the crankshaft position sensor reluctor wheel to move out of alignment with the crankshaft position sensor. Refer to **Crankshaft and Bearing Cleaning and Inspection** .

Hesitation, Sag, Stumble

- Test the fuel pressure. Refer to **Fuel System Diagnosis**.
- Inspect the mass air flow (MAF) sensor for obstruction, contamination, and damage. Refer to **Mass Airflow Sensor with Intake Air Temperature Sensor Replacement** .
- Test the generator. Refer to **Symptoms - Engine Electrical** . Repair the charging system if the generator output voltage is less than 9 V or more than 16 V.
- Test the manifold absolute pressure (MAP) sensor. Refer to **DTC P0106** .
- Inspect for excessive crankshaft endplay that will cause the crankshaft position sensor reluctor wheel to move out of alignment with the crankshaft position sensor. Refer to **Crankshaft and Bearing Cleaning and Inspection** .

NOTE: **The following actions may need to be repeated in order to verify an intermittent intake or exhaust camshaft actuator condition.**

- Engine warm and idling, verify the correct operation of the camshaft actuator system. Command the intake and exhaust camshaft actuators from 0 degrees to 25 degrees and back to zero while observing the scan tool Intake Camshaft Position Variance and Exhaust Camshaft Position Variance parameters. Each parameter should be less than 2 degrees in each of the commanded states.
  - If any of the parameters is greater than 2 degrees, inspect the suspect camshaft actuator and camshaft actuator solenoid valve and valve bore for contamination, obstruction, and damage. Refer to **Camshaft Actuator System Description** , **Camshaft Position Exhaust Actuator Replacement** , and **Camshaft Position Intake Actuator Replacement** .

Lack of Power, Sluggishness, or Sponginess

- Inspect the engine electrical system for correct operation. Refer to **Symptoms - Engine Electrical** .
- Verify that each injector harness is connected to the correct injector.
- Inspect the mass air flow (MAF) sensor for obstruction, contamination, and damage. Refer to **Mass Airflow Sensor with Intake Air Temperature Sensor Replacement** .

NOTE: The following actions may need to be repeated in order to verify an intermittent intake or exhaust camshaft actuator condition.

- Engine warm and idling, verify the correct operation of the camshaft actuator system. Command the intake and exhaust camshaft actuators from 0 degrees to 25 degrees and back to zero while observing the scan tool Intake Camshaft Position Variance and Exhaust Camshaft Position Variance parameters. Each parameter should be less than 2 degrees in each of the commanded states.
  - If any of the parameters is greater than 2 degrees, inspect the suspect camshaft actuator and camshaft actuator solenoid valve and valve bore for contamination, obstruction, and damage. Refer to **Camshaft Actuator System Description** , **Camshaft Position Exhaust Actuator Replacement** , and **Camshaft Position Intake Actuator Replacement** .

Poor Fuel Economy

- Inspect for heavy loads being carried or towed
- Inspect for acceleration rate too much or too often
- Inspect for incorrect operation of the speedometer.
- Observe the scan tool Throttle Body Idle Airflow Compensation parameter. A value greater than 90% may indicate an excessive accumulation of deposits in the throttle bore. Inspect the throttle body and bore and clean, if necessary. Refer to **Throttle Body Cleaning** .
- Verify that the engine coolant temperature (ECT) has not shifted in value. Allow the engine to run and reach operating temperature. Observe the ECT Sensor parameter with a scan tool and compare the reading to that parameter listed on the **K20 Engine Control Module: Scan Tool Information** , list. If the reading is not in the range specified in the list, test the resistance of the engine coolant temperature sensor. Refer to **Temperature Versus Resistance (Engine Coolant Temperature Sensor)** , for resistance specifications. Replace the engine coolant temperature sensor if the resistance is not within specification. Refer to **Engine Coolant Temperature Sensor Replacement** . If the sensor is within the specification, test the engine coolant temperature sensor circuits for high resistance.
- Inspect the mass air flow (MAF) sensor for obstruction, contamination, and damage. Refer to **Mass Airflow Sensor with Intake Air Temperature Sensor Replacement** .
- Inspect the brake system for brake drag.

Rough, Unstable, or Incorrect Idle and Stalling

- Observe the scan tool Throttle Body Idle Airflow Compensation parameter. A value greater than 90% may indicate an excessive accumulation of deposits in the throttle bore. Inspect the throttle body and bore and clean, if necessary. Refer to **Throttle Body Cleaning** .
- Inspect the mass air flow (MAF) sensor for obstruction, contamination, and damage. Refer to **Mass Airflow Sensor with Intake Air Temperature Sensor Replacement** .
- Inspect the engine mounts. Refer to **Engine Mount Inspection** .
- Inspect the intake and exhaust manifolds for casting flash.
- An excessively high idle may be due to the floor mat interfering with the accelerator pedal. With this

condition present, it may not be possible to shift the transmission into gear. Inspect the accelerator pedal for binding and verify that the floor mat is not interfering with the aceclerator pedal movement.

Surges/Chuggles

- Verify that each injector harness is connected to the correct injector.
- Inspect the mass air flow (MAF) sensor for obstruction, contamination, and damage. Refer to **Mass Airflow Sensor with Intake Air Temperature Sensor Replacement** .
- Inspect for slow responding heated oxygen sensors (HO2S). The heated oxygen sensors should respond quickly to a change in throttle position. If the heated oxygen sensors do not respond to different throttle positions, inspect for contamination from fuel, silicon, or the incorrect use of RTV sealant. The sensors may have a white powdery coating and result in a high, but false, signal voltage, which gives a rich exhaust indication. The engine control module reduces the amount of fuel delivered to the engine, causing a driveability condition. Refer to **DTC P0133, P013A, P013B, P013E, P013F, P015A, P015B, P2270, or P2271** for additional information.

MALFUNCTION INDICATOR LAMP (MIL) DIAGNOSIS

Diagnostic Instructions

- Perform the **Diagnostic System Check - Vehicle** prior to using this diagnostic procedure.
- Review **Strategy Based Diagnosis** for an overview of the diagnostic approach.
- **Diagnostic Procedure Instructions** provides an overview of each diagnostic category.

Circuit/System Description

The malfunction indicator lamp (MIL) illuminates to inform the driver that an emission system fault has occurred and the engine control system requires service. Ignition voltage is supplied directly to the MIL. The engine control module (ECM) turns the MIL ON by grounding the MIL control circuit when the emission system fault occurs. Under normal operating conditions, the MIL should be ON only when the ignition is ON and the engine is OFF.

Diagnostic Aids

If the condition is intermittent, move the related harnesses and connectors while monitoring the scan tool MIL control circuit status parameters. Perform this test with the ignition ON and the engine OFF, and with the engine running. The MIL control circuit status parameters change from OK or Not Run to Fault if there is a condition with a circuit or a connection.

Reference Information

Schematic Reference

- **Engine Controls Schematics**
- **Instrument Cluster Schematics**

Connector End View Reference

COMPONENT CONNECTOR END VIEWS - INDEX

Electrical Information Reference

- **Circuit Testing**
- **Connector Repairs**
- **Testing for Intermittent Conditions and Poor Connections**
- **Wiring Repairs**

Scan Tool Reference

Control Module References for scan tool information

Circuit/System Verification

NOTE: Any MIL requesting DTCs that may be set should be diagnosed first.

1. Ignition ON.
2. Verify the parameters listed below do not display Malfunction when commanding the malfunction indicator lamp ON and OFF with a scan tool.
   - The MIL Control Circuit Low Voltage Test Status
   - The MIL Control Circuit Open Test Status
   - The MIL Control Circuit High Voltage Test Status
   - **If Malfunction is displayed**

     Refer to Circuit/System Testing

   - **If Malfunction is not displayed**
3. Engine running.
4. Verify the parameters listed below do not display Malfunction when commanding the malfunction indicator lamp ON and OFF with a scan tool.
   - The MIL Control Circuit Low Voltage Test Status
   - The MIL Control Circuit Open Test Status
   - The MIL Control Circuit High Voltage Test Status
   - **If Malfunction is displayed**

     Refer to Circuit/System Testing

   - **If Malfunction is not displayed**
5. Verify the malfunction indicator lamp turns ON and OFF when commanding the malfunction indicator lamp ON and OFF with a scan tool.
   - **If the malfunction indicator lamp does not turn ON and OFF**

     Refer to Circuit/System Testing

   - **If the malfunction indicator lamp turns ON and OFF**
6. All OK.

Circuit/System Testing

1. Ignition OFF.
2. Disconnect the X1 harness connector at the K20 Engine Control Module.
3. Ignition ON, verify the malfunction indicator lamp does not illuminate.
   - **If the malfunction indicator lamp illuminates**
   1. Test for infinite resistance between the malfunction indicator lamp control circuit terminal X1 46 and ground.
      - If less than infinite resistance, repair the short to ground in the circuit.
      - If infinite resistance, replace the P16 Instrument Cluster.
   - **If the malfunction indicator lamp does not illuminate**
4. Connect a 3 A fused jumper wire between the malfunction indicator lamp control circuit terminal X1 46 and ground.
5. Verify the malfunction indicator lamp illuminates.
   - **If the malfunction indicator lamp illuminates**

     Replace the K20 Engine Control Module.

   - **If the malfunction indicator lamp does not illuminate**
   1. Test for less than 1 V between the malfunction indicator lamp control circuit terminal X1 46 and ground.
      - If 1 V or greater, repair the short to voltage on the circuit.
      - If less than 1 V
   2. Ignition OFF.
   3. Test for less than 2 ohms in the malfunction indicator lamp control circuit end to end.
      - If 2 ohms or greater, repair the open/high resistance in the circuit.
      - If less than 2 ohms.
6. Ignition OFF, disconnect the harness connector at the instrument cluster.
7. Ignition ON, verify a test lamp illuminates between the ignition voltage circuit terminal 31 and ground.
   - **If the test lamp does not illuminate and the circuit fuse is open**
   1. Ignition OFF.
   2. Test for infinite resistance between the ignition voltage circuit and ground.
      - If less than infinite resistance, repair the short to ground on the circuit.
   - **If the test lamp does not illuminate and the circuit fuse is good**
   1. Ignition OFF.
   2. Test for less than 2 ohms in the ignition voltage circuit end to end.
      - If 2 ohms or greater, repair the open/high resistance in the circuit.
   - **If the test lamp illuminates**
8. All OK.

Repair Instructions

Perform the **Diagnostic Repair Verification** after completing the repair.

- **Instrument Cluster Replacement**
- **Control Module References** for replacement. programming, and setup.

SERVICE BAY TEST

Diagnostic Instructions

- Perform the **Diagnostic System Check - Vehicle** prior to using this diagnostic procedure.
- Review **Strategy Based Diagnosis** for an overview of the diagnostic approach.
- **Diagnostic Procedure Instructions** provides an overview of each diagnostic category.

Description

The purpose of the evaporative emission (EVAP) Service Bay Test is to aid in resetting the EVAP inspection/maintenance system status. For this vehicle that is equipped with the engine off natural vacuum diagnostic, the Service Bay Test uses the scan tool to initiate the engine control module (ECM) regular sequence of EVAP system DTC tests, but with different enable criteria. By using the Service Bay Test the inspection/maintenance indicator can be set without the need for multiple cold soaks.

The scan tool displays for the Service Bay Test are based on the events that occur within the following three categories:

- The engine running portion of the tests-The vehicle must remain at rest, in Park, or in Neutral, during this portion of the test. This test inspects for large leaks, a leaking purge valve and/or vent system restrictions. The scan tool will display test progress or the reason for an abort or failure.
- Drive cycle-The scan tool will display time and distance needed to warm the fuel.
- Ignition OFF-During this portion of the test, the engine controller will remain active for up to 45 minutes when the ignition is turned OFF to allow control of the EVAP canister vent valve and run the engine off natural vacuum test. The engine controller inspects for small leaks during this period by monitoring fuel tank pressure or vacuum. If the system is sealed, there will be a pressure or vacuum change. Pressure or vacuum changes that are less than the calibrated values indicate a leak.

When the EVAP diagnostics are initiated by the Service Bay Test, the scan tool will indicate if the enable conditions listed below are not met, or will display a specific reason if the test aborts. When complete, the display will indicate that the tests passed or failed.

Conditions for Running the Test

The following conditions must be met in order to enable the Service Bay Test:

- The battery voltage is between 11-18V.
- The engine coolant temperature (ECT) is less than 35°C (95°F) at start-up.
- The EVAP inspection/maintenance system status indicator is set to NO.
- The fuel level is 15-85 percent capacity and cannot be refueled during the tests.
- There are no DTCs displayed.
- The vehicle must be driven for the time and distance specified on the scan tool.

- The ambient air temperature is between 0-40°C (32-104°F).
- The ignition must remain OFF during the engine OFF portion of the test, and the vehicle must remain at rest.

Test Procedure

NOTE: If the Service Bay Test aborts or fails, a DTC will NOT be set.

1. Install a scan tool.
2. Select the Service Bay Test with the scan tool.

WARNING: Refer to Road Test Warning .

3. Follow the instructions on the scan tool.
   - If the test aborts, correct the condition for running the test, then retest.
   - If the test fails, repair the vehicle for the condition indicated by the failure message on the scan tool.
4. Verify that the EVAP inspection/maintenance system status is set to YES.

ENGINE CRANKS BUT DOES NOT RUN

Diagnostic Instructions

- Perform the **Diagnostic System Check - Vehicle** prior to using this diagnostic procedure.
- Review **Strategy Based Diagnosis** for an overview of the diagnostic approach.
- **Diagnostic Procedure Instructions** provides an overview of each diagnostic category.

Circuit/System Description

This Engine Cranks but Does Not Run diagnostic is an organized approach to identify a condition which causes the engine to crank but not start. This diagnostic directs the technician to the appropriate system diagnosis.

Diagnostic Aids

Inspect for any of the following conditions:

- When attempting to start the engine, the mechanical portion of the vehicle key must be locked in the fully extended position with the fob parallel to the key. Leaving the key partially retracted or folded over when starting may interrupt transponder authentication and result in an intermittent no-start condition. In such instances, DTC B3055 may also be set. If an intermittent no-start complaint is received, it may be necessary to discuss with the customer their starting habits and verify they are locking the key in the fully extended position, fob parallel to the key, before starting.
- The engine control module (ECM) uses the camshaft position sensors to determine engine speed and position when there is a crankshaft position sensor condition.
- The engine will operate with a crankshaft position sensor condition only if the ECM has stored the

learned reference position of the camshafts in memory. With a crankshaft position sensor condition in the signal circuit, the engine will go into a limp home mode after a hard restart. The ECM then calculates engine speed from one of the camshaft position sensors.

- The fuel pump flow control module controls and monitors the operation of the in-tank fuel pump. If the fuel pump flow control module detects a fault, a DTC sets in the fuel pump flow control module. The fuel pump flow control module will then send a serial data message to the engine control module (ECM) requesting the illumination of the malfunction indicator lamp (MIL).
- Insufficient fuel can cause a no start condition. Thoroughly inspect the fuel delivery system for sufficient fuel volume to the fuel injectors. Inspect the fuel supply components for partial blockage or restrictions.
- The fuel injectors are calibrated to begin operating when the fuel rail pressure reaches 0.7 Mpa (101.5 psi) at 20-32°C (68-90°F). This specification will vary when the temperature is outside of this range.
- Fuel injectors with partially blocked and restricted nozzles, or a malfunctioning solenoid, can cause a no start condition. Refer to **Fuel Injector Solenoid Coil Test**.
- There may be fuel spray at the fuel injectors and the indicated fuel pressure may be correct, yet there may not be enough fuel to start the engine. If the fuel injectors and the injector circuit are OK, and fuel spray is detected, the fuel injector ON time may be inadequate. If the engine control module (ECM) receives incorrect inputs from the various information sensors, the fuel delivered by the fuel injectors may be inadequate to start the engine. Check all the engine data parameters with a scan tool and compare the values indicated with the expected values or the values from a known good vehicle.
- Inspect the engine for good secure electrical grounds.
- Water or foreign material in the fuel can cause a no start or engine will not stay running condition. During freezing weather water can freeze inside the fuel system. The engine may start after 30 min in a heated repair shop. The malfunction may not recur until parked overnight in freezing temperatures. Extreme weather conditions can cause contaminated fuel to prevent the vehicle from starting.
- A vehicle that starts and runs after being brought to the repair shop for a no start condition, may have an ignition system that is susceptible to moisture. Spray water on the ignition system components and the wiring in order to check for an engine starting or will not stay running concern.

Reference Information

Schematic Reference

Engine Controls Schematics

Connector End View Reference

COMPONENT CONNECTOR END VIEWS - INDEX

Electrical Information Reference

- **Circuit Testing**
- **Connector Repairs**
- **Testing for Intermittent Conditions and Poor Connections**
- **Wiring Repairs**

DTC Type Reference

Powertrain Diagnostic Trouble Code (DTC) Type Definitions

Scan Tool Reference

Control Module References for scan tool information

Special Tools

J 26792 HEI Spark Tester

CH-48027 Digital Pressure Gauge

Circuit/System Verification

NOTE: This diagnostic assumes the following:

- **The battery is completely charged.**
- **The engine cranking speed is acceptable.**
- **There is adequate fuel in the fuel tank.**

1. Engine cranking, observe the DTC information with a scan tool. Verify that DTC P0116, P0117, P0335, P0336, P0513, P0601-P0604, P0606, P062B, P0627-P0629, P0633, P069E, P1631, P1649, or U0109 does not set.
   - If any of the listed DTCs are set, refer to **Diagnostic Trouble Code (DTC) List - Vehicle** .
2. Ignition ON, observe the Security Indicator on the instrument cluster. The security indicator should illuminate momentarily.
   - If the security indicator stays ON or is flashing, review the scan tool DTC information for Immobilizer system DTCs-Refer to **Diagnostic Trouble Code (DTC) List - Vehicle** , . For more information concerning the Immobilizer system, refer to **Immobilizer Description and Operation** .
3. Engine cranking, observe the scan tool Engine Speed parameter. The parameter value should indicate an engine speed greater than 0 RPM.
   - If the engine speed is 0 RPM, refer to **DTC P0335 or P0336** for further diagnosis.

NOTE: A mass airflow sensor circuit condition may cause an Engine Cranks But Does Not Run condition without setting a DTC.

4. Engine cranking, observe the scan tool Mass Airflow Sensor parameter. The parameter should display greater than 0 Hz.
   - If the parameter is not the specified value, refer to **DTC P0102 or P0103 (With LEA)** , **DTC P0102 or P0103 (With LUK)** for further diagnosis.
5. Test the ignition system for spark. Refer to **Electronic Ignition System Diagnosis**.
6. Ignition OFF, all accessories OFF, install a **CH-48027** digital pressure gauge -Refer to **Fuel Pressure Gauge Installation and Removal** .

NOTE: If the engine coolant temperature is greater than 60°C (150°F), allow the engine to cool off before performing steps 7 and 8. High fuel pressure

readings may result due to hot soak fuel boiling. With the engine OFF, fuel pressure may increase beyond the pressure relief regulator valve's setting point of 690 kPa (100 psi) ± 5 percent.

7. Ignition ON, engine OFF, command the Fuel Pump Enable ON with a scan tool. Verify the fuel pressure is between 345-690 kPa (50-100 psi) while the fuel pump is running.
   - If the fuel pump does not run or if the pressure is not the specified value, refer to **Fuel System Diagnosis**.
8. Verify the fuel pressure after the pump is turned OFF, decreases to 500-599 kPa (72-87 psi) and does not decrease greater than 34 kPa (5 psi) in 1 minute from that point.
   - If not the specified value, refer to **Fuel System Diagnosis** .
9. Verify that the following conditions do not exist:
   - Collapsed air intake duct to the throttle body
   - Restricted air filter element
   - Gas or coolant fouled spark plugs
   - A skewed engine coolant temperature (ECT) sensor-Refer to **Temperature Versus Resistance (Engine Coolant Temperature Sensor)** .
   - Restricted exhaust system-Refer to **Restricted Exhaust** .
   - Contaminated fuel-Refer to **Alcohol/Contaminants-in-Fuel Diagnosis**.
   - An engine mechanical condition, for example, worn timing chain and gears, low compression-Refer to **Symptoms - Engine Mechanical** .
     - If you find any of the above conditions, repair as necessary.

Repair Instructions

Perform the **Diagnostic Repair Verification** after completing the diagnostic procedure.

FUEL SYSTEM DIAGNOSIS

Diagnostic Instructions

- Perform the **Diagnostic System Check - Vehicle** prior to using this diagnostic procedure.
- Review **Strategy Based Diagnosis** for an overview of the diagnostic approach.
- **Diagnostic Procedure Instructions** provides an overview of each diagnostic category.

Circuit/System Description

The engine control module (ECM) supplies voltage to the chassis control module when the ECM detects that the ignition is ON. The voltage from the ECM to the chassis control module remains active for 2 s, unless the engine is in Crank or Run. While this voltage is being received, the chassis control module closes the ground switch of the fuel pump and also supplies a varying voltage to the fuel tank fuel pump module in order to maintain the desired fuel line pressure.

The fuel system is an electronic returnless on-demand design. A returnless fuel system reduces the internal temperature of the fuel tank by not returning hot fuel from the engine to the fuel tank. Reducing the internal temperature of the fuel tank results in lower evaporative emissions.

An electric turbine style fuel pump attaches to the primary fuel pump module inside the fuel tank. The fuel pump supplies fuel through the fuel feed pipe to the high pressure fuel pump. The high pressure fuel pump supplies fuel to a variable-pressure fuel rail. Fuel enters the combustion chamber through precision multi-hole fuel injectors. The high pressure fuel pump, fuel rail pressure, fuel injection timing, and injection duration are controlled by the engine control module (ECM).

Diagnostic Aids

Observe the Misfire Counters or perform the Fuel Injector Balance Test to help identify a leaking fuel injector.

Reference Information

Description and Operation

Fuel System Description

Electrical Information Reference

- **Circuit Testing**
- **Connector Repairs**
- **Testing for Intermittent Conditions and Poor Connections**
- **Wiring Repairs**

Scan Tool Reference

Control Module References for scan tool information

Special Tools

- **CH 48027** Digital Pressure Gauge
- **EN 37287** Fuel Line Shut-off Adapter

For equivalent regional tools, refer to **Special Tools (Diagnostic Tools)** , **Special Tools (Mechanical Tools)** .

Circuit/System Verification

NOTE:

- **Repair all fuel system related DTCs, except P2635, before performing this diagnostic.**
- **Inspect the fuel system for damage or external leaks before proceeding.**
- **Verify that adequate fuel is in the fuel tank before proceeding.**
- **The Fuel Pump Enable may need to be commanded On a few times in order to obtain the highest possible fuel pressure.**
- **Before proceeding with this test review the User Manual CH 48027-5 for Safety Information and Instructions.**

1. Ignition OFF, all accessories OFF, install a **CH 48027** Gauge.

NOTE: **DO NOT perform the Fuel System Diagnosis if the engine coolant temperature is above 60°C (150°F). High fuel pressure readings may result due to hot soak fuel boiling. With the engine OFF, the fuel pressure may increase beyond the pressure relief regulator valve's setting point of 690 kPa (100 psi) ± 5 percent.**

2. Ignition ON, engine OFF, command the Fuel Pump Enable On several times with a scan tool.
3. Verify the fuel pressure is between 345-650 kPa (50-94 psi) with the fuel pump running.
   - **If less than 345 kPa (50 psi)**

     Refer to Circuit/System Testing - Fuel Pressure Low.

   - **If greater than 650 kPa (94 psi)**

     Replace the G12 Fuel Pump.

   - **If between 345-650 kPa (50-94 psi)**
4. Verify that the fuel pressure decreases to less than 600 kPa (87 psi) after the fuel pump is turned off.
   - **If greater than 600 kPa (87 psi)**

     Replace the G12 Fuel Pump.

   - **If less than 600 kPa (87 psi)**
5. Verify that the fuel pressure does not decrease more than 34 kPa (5 psi) in 1 minute.
   - **If greater than 34 kPa (5 psi)**

     Refer to Circuit/System Testing - Fuel Pressure Leaks Down.

   - **If less than 34 kPa (5 psi)**
6. Relieve the fuel pressure to 69 kPa (10 psi).
7. Verify that the fuel pressure does not decrease more than 14 kPa (2 psi) in 5 min.
   - **If greater than 14 kPa (2 psi)**

     Replace the G12 Fuel Pump.

   - **If less than 14 kPa (2 psi)**
8. Engine idling.
9. Verify the Chassis Control Module Fuel Pressure Sensor parameter is between 300-400 kPa (43-58 psi).
   - **If less than 300 kPa (43 psi)**

     Refer to Circuit/System Testing - Fuel Pressure Low.

   - **If greater than 400 kPa (58 psi)**

     Replace the G12 Fuel Pump.

- **If between 300-400 kPa (43-58 psi)**

10. Verify the scan tool Short Term Fuel Pump Trim and the Long Term Fuel Pump Trim when multiplied together are less than 1.5.
    - **If greater than 1.5**

      Refer to Circuit/System Testing - Fuel Pressure Low.

    - **If less than 1.5**
11. Verify the scan tool Fuel Pressure Sensor and the Desired Fuel Pressure are within 45 kPa (6.5 psi) at 300 kPa (43.5 psi) request or 60 kPa (8.7 psi) at 400 kPa (58 psi) request of each other while operating the vehicle through varying loads.
    - **If greater than 45 kPa (6.5 psi)/60 kPa (8.7 psi)**

      Refer to Circuit/System Testing - Fuel Pressure Drops Off.

    - **If less than 45 kPa (6.5 psi)/60 kPa (8.7 psi)**
12. If the fuel system components test normal, refer to **Symptoms - Engine Controls (LUK)**, **Symptoms - Engine Controls (LEA)**, **Fuel Injector Solenoid Coil Test**, and **Fuel Injector Balance Test**.

Circuit/System Testing

Fuel Pressure Low

1. Verify none of the conditions listed below exist:
   - Restricted fuel feed pipe
   - Inspect the harness connectors and the ground circuits of the fuel pump for poor connections.
   - **If a condition exists**

     Repair as necessary.

   - **If no conditions exist**

     Replace the G12 Fuel Pump.

Fuel Pressure Leaks Down

1. Ignition OFF, relieve the fuel pressure. Refer to **Fuel Pressure Relief** .
2. Install the **EN 37287** Adapter between the chassis fuel feed hose and the engine compartment fuel feed pipe.
3. Open the valve on the **EN 37287** Adapter.
4. Ignition ON, command the Fuel Pump Enable On with a scan tool and bleed the air from the **CH 48027** Gauge.
5. Command the Fuel Pump Enable On and then Off with a scan tool.
6. Close the valve on the **EN 37287** Adapter.
7. Verify that the fuel pressure does not decrease more than 34 kPa (5 psi) in 1 min.
   - **If greater than 34 kPa (5 psi)**

Locate and replace the leaking Q17 Fuel Injector.

- **If less than 34 kPa (5 psi)**

  Replace the G12 Fuel Pump.

Fuel Pressure Drops Off

1. Verify none of the conditions listed below exist:
   - Restricted fuel feed pipe
   - Inspect the harness connectors and the ground circuits of the fuel pump for poor connections.
   - **If a condition exists**

     Repair as necessary.

   - **If no conditions exist**

     Replace the G12 Fuel Pump.

Repair Instructions

Perform the **Diagnostic Repair Verification** after completing the diagnostic procedure.

- **Direct Fuel Injector Replacement**
- **Fuel Feed Pipe Replacement (Engine)** , **Fuel Feed Pipe Replacement (Chassis)**
- **Fuel Tank Fuel Pump Module Replacement (NU6)** , **Fuel Tank Fuel Pump Module Replacement (NT7)**

FUEL INJECTOR SOLENOID COIL TEST

Diagnostic Instructions

- Perform the **Diagnostic System Check - Vehicle** prior to using this diagnostic procedure.
- Review **Strategy Based Diagnosis** for an overview of the diagnostic approach.
- **Diagnostic Procedure Instructions** provides an overview of each diagnostic category.

Circuit/System Description

The engine control module (ECM) supplies a separate high voltage supply circuit and a high voltage control circuit for each fuel injector. The injector high voltage supply circuit and the high voltage control circuit are both controlled by the ECM. The ECM energizes each fuel injector by grounding the control circuit. The ECM controls each fuel injector with 65 V. This is controlled by a boost capacitor in the ECM. During the 65 V boost phase, the capacitor is discharged through the injector high voltage supply circuit, allowing for initial injector opening. The injector is then held open with 12 V. A fuel injector coil winding resistance that is too high or too low will affect the engine driveability. The fuel injector coil windings are affected by temperature. The resistance of the fuel injector coil windings will increase as the temperature of the fuel injector increases.

Reference Information

Schematic Reference

Engine Controls Schematics

Electrical Information Reference

- **Circuit Testing**
- **Connector Repairs**
- **Testing for Intermittent Conditions and Poor Connections**
- **Wiring Repairs**

Component Testing

NOTE:

- **The resistance test must be performed at the fuel injector or mis-diagnosis will occur.**
- **The DMM and test leads must be calibrated to 0 ohms in order to prevent mis-diagnosis.**

1. Remove the intake manifold and disconnect the appropriate Q17 fuel injector.
2. Test for 1.9-2.3 ohms at 20°C (68°F) between the high voltage supply circuit terminal 2 and the high voltage control circuit terminal 1 at the fuel injector.
   - If not within the specified range, replace the Q17 fuel injector.
3. Measure the resistance between each terminal at the Q17 fuel injector and the Q17 fuel injector housing/case. The DMM should display OL ohms.
   - If less than the specified value, replace the Q17 fuel injector.
4. If the injectors measure OK, perform the Fuel Injector Balance Test. Refer to **Fuel Injector Balance Test**.

Repair Instructions

Perform the **Diagnostic Repair Verification** after completing the diagnostic procedure.

Direct Fuel Injector Replacement

FUEL INJECTOR BALANCE TEST

Diagnostic Instructions

- Perform the **Diagnostic System Check - Vehicle** prior to using this diagnostic procedure.
- Review **Strategy Based Diagnosis** for an overview of the diagnostic approach.
- **Diagnostic Procedure Instructions** provides an overview of each diagnostic category.

Circuit/System Description

The fuel injector balance test is performed while the engine is running at idle. The scan tool pressurizes the fuel rail to a predetermined pressure before each injector is pulsed for a precise amount of time allowing a measured amount of the fuel to be injected. This causes a drop in the system fuel pressure that is recorded

and used to compare each injector.

Diagnostic Aids

- Monitoring the Current Misfire Counters may help to isolate the fuel injector that is causing the condition.
- Operating the vehicle over a wide temperature range may help isolate the fuel injector that is causing the condition.

Component Testing

NOTE:

- **DO NOT perform this test if the engine coolant temperature (ECT) is above 60°C (140°F). Irregular fuel pressure readings may result due to hot soak fuel boiling.**
- **Verify that adequate fuel is in the fuel tank before proceeding with this diagnostic.**

Fuel Injector Balance Test

1. Verify the correct low side fuel pressure. Refer to **Fuel System Diagnosis**.
2. Engine idling, observe the Fuel Rail Pressure Sensor parameter with a scan tool. The pressure should be approximately 3 MPa (435 psi).

NOTE: **The engine speed must be between 600-1000 RPM to perform this test.**

3. With a scan tool, select the Fuel Injector Balance function within the Output Controls menu.
4. Select and test an injector. Repeat for each injector in order to obtain a pressure drop value for each injector.
5. After all injectors are tested, record the fuel pressure drops.
6. Add all of the individual pressure drop values except for the injector suspected of being faulty. This is the total pressure drop.
7. Divide the total pressure drop by the number of fuel injectors that were added together. This is the average pressure drop.
8. Multiply the average pressure drop by 0.20. This is the acceptable variance from the average pressure drop, 20 percent.
    - If the difference between any individual pressure drop and the average pressure drop is more than the acceptable variance, replace the fuel injector.

Repair Instructions

Perform the **Diagnostic Repair Verification** after completing the diagnostic procedure.

Direct Fuel Injector Replacement

ALCOHOL/CONTAMINANTS-IN-FUEL DIAGNOSIS

Diagnostic Instructions

- Perform the **Diagnostic System Check - Vehicle** prior to using this diagnostic procedure.
- Review **Strategy Based Diagnosis** for an overview of the diagnostic approach.
- **Diagnostic Procedure Instructions** provides an overview of each diagnostic category.

Test Description

Water contamination in the fuel system may cause driveability conditions such as hesitation, stalling, no start, or misfires in one or more cylinders. Water may collect near a single fuel injector at the lowest point in the fuel injection system and cause a misfire in that cylinder. If the fuel system is contaminated with water, inspect the fuel system components for rust or deterioration.

Ethanol concentrations of greater than 10 percent in nonblended gasoline or greater than 85 percent with E85 blended gasoline for flexible fuel applications can cause driveability conditions such as hesitation, lack of power, stalling, or no start. Excessive concentrations of ethanol used in vehicles not designed for it may cause fuel system corrosion, deterioration of rubber components, and fuel filter restriction.

Reference Information

Special Tools

J 44175 Fuel Composition Tester

System Verification

The fuel sample should be drawn from the bottom of the tank so that any water present in the tank will be detected. The sample should be bright and clear.

- If the sample appears cloudy, or contaminated with water, as indicated by a water layer at the bottom of the sample, perform the Particulate Contaminants in Fuel Testing Procedure.
- If alcohol contamination is suspected, perform the Alcohol in Fuel Testing procedure.

Alcohol in Fuel Testing with Special Tool

1. Test the fuel composition using **J 44175** Tester and Instruction Manual.
2. If water appears in the fuel sample, clean the fuel system.
3. Subtract 50 from the reading on the DMM in order to obtain the percentage of alcohol in the fuel sample.
4. If the nonblended gasoline fuel sample measures more than 15 percent ethanol, or if the E85 blended gasoline fuel sample measures more than 91 percent ethanol, add fresh regular gasoline to the vehicle's fuel tank.
5. Test the fuel composition.
6. If additional testing indicates that the ethanol percentage is still above 15 percent for a nonblended gasoline sample, drain and replace the vehicle's fuel. Refer to **Fuel Tank Draining (Non E-85)** , **Fuel Tank Draining (E-85)** . If additional testing indicates that the E85 blended gasoline sample still measures above 91 percent, continue adding fresh, regular gasoline until the ethanol content is 85 percent or less.

Alcohol in Fuel Testing without Special Tool

1. Using a 100 ml (3.38 oz) specified cylinder with 1 ml (0.034 oz) graduation marks, fill the cylinder with fuel to the 90 ml (3.04 oz) mark.
2. Add 10 ml (0.34 oz) of water in order to bring the total fluid volume to 100 ml (3.38 oz) and install a stopper.
3. Shake the cylinder vigorously for 10-15 seconds.
4. Carefully loosen the stopper in order to release the pressure.
5. Re-install the stopper and shake the cylinder vigorously again for 10-15 seconds.
6. Put the cylinder on a level surface for approximately 5 minutes in order to allow adequate liquid separation. If alcohol is present in the fuel, the volume of the lower layer, which would now contain both alcohol and water, will be more than 10 ml (0.34 oz). For example, if the volume of the lower layer is increased to 15 ml (0.51 oz), this indicates at least 5 percent alcohol in the fuel. The actual amount of alcohol may be somewhat more because this procedure does not extract all of the alcohol from the fuel.

Particulate Contaminants in Fuel Testing Procedure

1. Using an approved fuel container, draw approximately 0.5 liter (0.53 qt) of fuel.
2. Place the container on a level surface for approximately 5 minutes in order to allow settling of the particulate contamination. Particulate contamination will show up in various shapes and colors. Sand will typically be identified by a white or light brown crystals. Rubber will appear as black and irregular particles.
3. Observe the fuel sample. If any physical contaminants or water are present, clean the fuel system.

Repair Instructions

Perform the **Diagnostic Repair Verification** after completing the diagnostic procedure.

- **Fuel System Cleaning**
- **Fuel Tank Draining (Non E-85)** , **Fuel Tank Draining (E-85)**

ELECTRONIC IGNITION SYSTEM DIAGNOSIS

Diagnostic Instructions

- Perform the **Diagnostic System Check - Vehicle** prior to using this diagnostic procedure.
- Review **Strategy Based Diagnosis** for an overview of the diagnostic approach.
- **Diagnostic Procedure Instructions** provides an overview of each diagnostic category.

Circuit/System Description

This ignition system uses individual ignition coil assemblies for each cylinder. The engine control module (ECM) controls the spark events by transmitting the timing pulses on the ignition control (IC) circuits to the individual ignition module/coil assemblies in firing order sequence.

Diagnostic Aids

- An open/high resistance on the low reference circuit to the ignition coil may cause a misfire.
- An erratic or weak spark is considered a no spark condition.

Reference Information

Schematic Reference

Engine Controls Schematics

Connector End View Reference

COMPONENT CONNECTOR END VIEWS - INDEX

Description and Operation

Electronic Ignition System Description

Electrical Information Reference

- **Circuit Testing**
- **Connector Repairs**
- **Testing for Intermittent Conditions and Poor Connections**
- **Wiring Repairs**

Scan Tool Reference

Control Module References

Special Tools

EL 26792 HEI Spark Tester

For equivalent regional tools, refer to **Special Tools (Diagnostic Tools)** , **Special Tools (Mechanical Tools)** .

Circuit/System Testing

NOTE: Do not perform this diagnostic procedure unless you were sent here from a misfire DTC or the Engine Cranks But Does Not Run diagnostic.

1. Ignition OFF and all vehicle systems OFF, disconnect the harness connector at the appropriate T8 Ignition Coil. It may take up to 2 min for all vehicle systems to power down.
2. Test for less than 5 ohms between the ground circuit terminal A and ground.
   - **If 5 ohms or greater**
     1. Ignition OFF.
     2. Test for less than 2 ohms in the ground circuit end to end.
        - If 2 ohms or greater, repair the open/high resistance in the circuit.
        - If less than 2 ohms, repair the open/high resistance in the ground connection.
   - **If less than 5 ohms**
3. Test for less than 5 ohms between the low reference circuit terminal B and ground.

- **If 5 ohms or greater**
  1. Ignition OFF, disconnect the X3 harness connector at the K20 Engine Control Module.
  2. Test for less than 2 ohms in the low reference circuit end to end.
     - If 2 ohms or greater, repair the open/high resistance in the circuit.
     - If less than 2 ohms, replace the K20 Engine Control Module.
- **If less than 5 ohms**

4. Ignition OFF, exchange the suspect T8 Ignition Coil with the T8 Ignition Coil of a known functioning cylinder.
5. Engine Running.
6. Verify the scan tool Ignition Coil Control Circuit Status parameter displays OK for the same cylinder that the suspect T8 Ignition Coil was removed from.
   - **If OK is not displayed**

     Replace the K20 Engine Control Module.

   - **If OK is displayed**

     Test or replace the T8 Ignition Coil.

Component Test

NOTE: You must perform the Circuit/System Testing before proceeding with Component Testing.

1. Ignition OFF, connect the **EL 26792** HEI Spark Tester to the appropriate T8 Ignition Coil.
2. Engine Running.
3. Verify the spark output of the T8 Ignition Coil.
   - **If no output or the output is weak**

     Replace the T8 Ignition Coil.

   - **If the output is normal**
4. All OK.

Repair Instructions

Perform the **Diagnostic Repair Verification** after completing the repair.

- **Ignition Coil Replacement**
- **Control Module References** for engine control module replacement, programming, and setup.

EVAPORATIVE EMISSION SYSTEM DIAGNOSIS

Special Tools

EN 41413-VLV EVAP Service Port Vent Fitting

Operating Instructions for the Evaporative Emission System Tester (EEST)

Vehicle Setup

WARNING: Refer to Fuel and Evaporative Emission Pipe Warning .

CAUTION: Refer to Clean, Dry, Low Pressure Gas Source Caution .

NOTE: When servicing the EVAP system, test pressure must not exceed 13 in H20 (0.5 PSI) as pressure in excess of this could cause system components to perform inaccurately.

NOTE: A large difference between the vehicle temperature and shop temperature will seriously affect the accuracy of the tests. Always allow at least 15 min for the vehicle temperature to adjust to the shop temperature. Refer to Temperature Variation Instructions for more information about vehicle versus shop temperatures.

1. Engine OFF, open the hood. Position a large fan to blow air under the vehicle onto the fuel tank area.
2. Connect the red battery clip from the tester to the positive battery terminal.

NOTE: The vehicle battery must be fully charged for optimum tester performance.

3. Connect the black battery clip from the tester to chassis ground.

Flow Meter Test - Leak Detection

CAUTION: Refer to Fuel and Evaporative Emission Hose/Pipe Connection Cleaning Caution .

1. Open the Nitrogen tank valve and turn the NITROGEN/SMOKE valve on the front control panel to NITROGEN.
2. Connect the hose to the correct test orifice on the bottom front of the tester. For orifice size, refer to the vehicle specific information found in service procedures for DTCs that relate to evaporative emission (EVAP) system leaks.
3. Press and release the remote switch to activate the tester.

NOTE: The tester will time out after about 15 min. You may press the remote switch to reactivate the tester as desired.

4. Position the sliding red flag on the flow meter to align with the floating indicator. When the red flag is set, press and release the remote switch to deactivate the tester.
5. Remove the hose from the test orifice and install the hose onto the vehicle. For proper connection

location, and the special tool numbers for any adapters that may be required, refer to the service procedures for DTCs that relate to EVAP system leaks.

6. Ignition ON, seal the EVAP system per instructions in the service procedures for DTCs that relate to EVAP system leaks. Most systems can be sealed using a scan tool output control for the EVAP Vent Solenoid Valve, other systems require that the vent system be plugged.

NOTE:

- **Larger volume fuel tanks, and/or those with lower fuel levels, may require several minutes to fill with nitrogen.**
- **Static buildup may cause the float indicator to stick. It may be necessary to tap on the flow meter to free up the float.**
- **If fuel level is 90 % or greater it will take longer to fill the system with smoke because the fuel fill tube check valve will be closed and force any smoke to pass through the ORVR pipe and orifice.**

7. Press and release the remote switch to activate the nitrogen flow and fill the system.
8. Compare the stable floating indicator position to the red flag.
   - Below the red flag, the result is acceptable, Pass. Test complete
   - Above the red flag, the result is unacceptable, Fail. Go to the Smoke Procedure
9. Press and release the remote switch to deactivate the tester.

Smoke Procedure - Locate the Leak

NOTE: **It is not recommended to use the tester in an outside repair bay area because wind and sunlight may affect temperature and your ability to see the smoke.**

1. Turn OFF any fans that may cause air movement around or near the vehicle.

NOTE: **Completely unwind the nitrogen/smoke hose from the bracket to optimize the tester's performance.**

2. Connect the nitrogen/smoke hose to the vehicle as directed in the service procedures. Some vehicles require that the nitrogen/smoke hose be connected at the front of the EVAP system at the EVAP service port. An adapter may be necessary. Other vehicles require the connection be made at the rear of the system using an adapter at the fuel fill cap. Consult the service procedures for DTCs that relate to evaporative emission (EVAP) system leaks for vehicle specific instructions regarding connection location and adapters.
3. Open the Nitrogen tank valve and turn the nitrogen/smoke valve on the control panel to smoke.

NOTE: **The remote switch operates on a push ON, push OFF fashion.**

4. Press and release the remote switch to activate the tester and inject smoke into the EVAP system.
5. Verify smoke has filled the EVAP system by opening the system opposite the end where smoke is injected. When injecting smoke at the service port, remove the fuel fill cap until smoke is observed. Then close the system and continue testing. If using a special tool fuel fill cap adapter at the filler neck, vent the system at the service port, with special tool EN 41413-VLV EVAP Service Port Vent Fitting, until smoke is observed then remove the vent fitting tool and close the system to continue

with the test.

NOTE: Inject smoke in less than 2 min cycles for optimum tester performance.

6. Press and release the remote switch to deactivate the tester.

NOTE: For optimum visual smoke performance, deactivate the smoke flow and allow the system pressure to drop. Allowing the smoke to exit small holes at a low flow rate greatly enhances visibility.

7. Introduce smoke into the system for an additional 60 s. Continue introducing smoke at 15 s intervals, as necessary.
8. Using a high-intensity white light, inspect the entire EVAP system path, and look for the source of the leak indicated by the exiting smoke. Introduce smoke at 15 s intervals, as needed, until leak source is identified.

Temperature Variation Instructions

The Concern

Ideal circumstances for conducting the EVAP flow meter test require equal temperatures between the Nitrogen gas and the vehicle EVAP system. Significant differences in temperature between them can result in a flow or pressure change during testing, causing misleading results. Typically, the EEST is stored indoors, approximately 21°C (70°F). Vehicles brought in for diagnosis may have an EVAP system at significantly different temperatures.

For Example

NOTE: With no temperature difference between the Nitrogen gas and EVAP system, the resulting vehicle EVAP system pressure will remain stable at 3.2 kPa, 13 in. H2O (0.5 PSI) once pressurized, providing no leaks are present.

When the EVAP flow meter tests are performed with significant differences in temperature between the Nitrogen gas and the vehicle EVAP system, the following results can occur:

- An increase in flow during the flow meter test can be caused by a vehicle's warm EVAP system cooling down.
- A decrease in flow during the flow meter test can be caused by a vehicle's cool EVAP system warming up.

The Solution

When working on a vehicle with significant temperature differences between the vehicle EVAP system and the Nitrogen gas, allow the vehicle EVAP system temperature to stabilize as close as possible to the temperature of the Nitrogen gas before conducting the Flow Meter Test.

INSPECTION/MAINTENANCE SYSTEM CHECK

Diagnostic Instructions

- Perform the **Diagnostic System Check - Vehicle** prior to using this diagnostic procedure.
- Review **Strategy Based Diagnosis** for an overview of the diagnostic approach.
- **Diagnostic Procedure Instructions** provides an overview of each diagnostic category.

Description

Several states require that a vehicle pass on-board diagnostic (OBD) system tests and the inspection/maintenance (I/M) emission inspection in order to renew license plates. This is accomplished by viewing the I/M System Status display on a scan tool. Using a scan tool, the technician can observe the I/M System Status in order to verify that the vehicle meets the criteria that complies with the local area requirements. While testing in the I/M System Status mode, some DTCs may occur that are called I/M Test DTCs. An I/M Test DTC is defined as a fault code that is currently commanding the MIL ON, and is stored in non-volatile memory. The intended use of this data is to prevent vehicles from passing I/M inspection without proper repair to the vehicle. These fault codes are not erasable from any scan tool command or erasable by disconnecting power to the controller. The I/M Test DTCs will be supported by all emissions related ECUs such as ECMs, TCMs, FPCMs, etc. An I/M Test DTC will not be stored or erased from the ECU except at the end of trip processing which occurs 5 s after ignition OFF.

Conditions for Updating the I/M System Status

Each system requires at least one, and sometimes several, diagnostic tests. The results of these tests are reported by a diagnostic trouble code (DTC). A system monitor is complete when either all of the DTCs comprising the monitor have Run and Passed, or any one of the DTCs comprising the monitor have illuminated the malfunction indicator lamp (MIL) . Once all of the tests are completed, the I/M System Status display will indicate YES in the Completed column.

For example, when the HO2S Heater Monitor indicates YES, either all of the oxygen sensor heater tests have passed or one of the tests has illuminated the MIL. If the vehicle has four heated oxygen sensors, either all four heater circuit tests have passed or one of the heater circuit tests has illuminated the MIL. The I/M System Status will indicate NO under the Completed column when any of the required tests for that system have not run. The following is a list of conditions that would set the I/M System Status indicator to NO:

- The vehicle is new from the factory and has not yet been driven through the necessary drive conditions to complete the tests.
- The battery has been disconnected or discharged below operating voltage.
- The control module power or ground has been interrupted.
- The control module has been reprogrammed.
- The control module DTCs have been cleared as part of a service procedure.

Conditions for Clearing I/M Test DTCs

1. Only the OBD II System can erase the I/M Test DTC. The OBD II system must determine that the malfunction that caused the I/M Test DTC to be stored is no longer present and is not commanding the MIL. Each of the following represents ways to clear an I/M Test DTC:
    - If the MIL goes out due to 3 passing drive cycles, scan tool code clear is not used, the I/M Test DTC is erased at power down of the last drive cycle.
    - If a scan tool code clear is used to turn OFF the MIL, the I/M Test DTC is not erased, the DTC must PASS and not FAIL. The I/M Test DTC is erased at power down of the drive cycle.

- If the controller is reflashed/reprogrammed, all I/M Test DTCs are erased.

2. For the OBD II System to run a single drive cycle for clearing an I/M Test DTC, all of the following conditions must occur:
   - Cumulative time of engine run time is greater than 600 s.
   - Cumulative vehicle operation above 40 km/h (25 mph) for over 300 s.
   - Continuous vehicle idle for greater than 30 s.
   - Turn ignition OFF for 5 s and allow the code to clear.

Monitored Emission Control Systems

The OBD II system monitors all emission control systems that are on-board. Not all vehicles need every possible emission control system. For example, a vehicle may not be equipped with secondary air injection (AIR) or exhaust gas recirculation (EGR). The OBD II regulations require monitoring of the following; if equipped:

- The air conditioning system
- The catalytic converter efficiency
- Comprehensive component monitoring-Emission related inputs and outputs
- The evaporative emission (EVAP) system
- The fuel delivery system
- Heated catalyst monitoring
- Misfire monitoring
- The oxygen sensor system (O2S or HO2S)
- The oxygen sensor heater system (HO2S heater)

For the specific DTCs required for each system, refer to **Inspection/Maintenance (I/M) System DTC Table (LUK)**, **Inspection/Maintenance (I/M) System DTC Table (LEA)**. Systems such as misfire and comprehensive components may not be listed in a system status list. These tests run continuously and do not require an I/M System Status indicator.

Diagnostic Aids

The I/M System Status display provides an indication of when the control module has completed the required tests. This does not necessarily mean that the test has passed, only that a decision was made. If the diagnostic fails, a DTC will indicate the failure. If a failure indication is present for a DTC associated with one of the I/M regulated systems, it may prevent other required tests from running. For example, a DTC for the control circuit of the EVAP purge solenoid may not be listed in the Inspection/Maintenance System DTC Table because it is a continuous test. If this DTC is set, the Active Tests for the EVAP system may not run.

The I/M System Status information may be useful for a technician to determine if diagnostics have run when verifying repairs.

Circuit/System Verification

Review the I/M System Status indicators. All I/M System Status indicators should report YES, and no I/M Test DTCs should be present.

Circuit/System Testing

NOTE: Many DTC related repairs will instruct the technician to clear the DTC information. Clearing the DTC will reset the I/M System Status indicators to NO. Performing the I/M Complete System Set Procedure will set each of the I/M System Status indicators to YES.

1. Observe the Engine DTC information with a scan tool. Verify no DTCs are present.
   - If a DTC is set that would prevent the I/M System Status tests from completing, diagnose that DTC before continuing. Refer to **Diagnostic Trouble Code (DTC) List - Vehicle** .
2. Review applicable service bulletins for software updates that would prevent the I/M System Status tests from completing.
   - If a control module re-program or other repair is required, perform the **Inspection/Maintenance Complete System Set Procedure**.
3. Observe the I/M System Status indicators.
   - If any I/M System Status indicators report NO, perform the **Inspection/Maintenance Complete System Set Procedure**.
4. Observe the I/M Test DTC information with a scan tool. Verify there are no I/M Test DTCs present.
   - If an I/M Test DTC is set and all of the I/M System Status indicators are Yes, there is no need to perform the Complete System Set Procedure. Diagnose the DTC using the **Diagnostic Trouble Code (DTC) List - Vehicle** and refer to Conditions for Clearing the I/M Test DTCs.
   - If an I/M Test DTC is set and the I/M System Status indicators are NO, diagnosis the DTC and perform the **Inspection/Maintenance Complete System Set Procedure**.

INSPECTION/MAINTENANCE COMPLETE SYSTEM SET PROCEDURE

Diagnostic Instructions

- Perform the **Diagnostic System Check - Vehicle** prior to using this diagnostic procedure.
- Review **Strategy Based Diagnosis** for an overview of the diagnostic approach.
- **Diagnostic Procedure Instructions** provides an overview of each diagnostic category.

Description

The purpose of the Inspection/Maintenance Complete System Set Procedure is to satisfy the enable criteria necessary to execute all of the I/M readiness diagnostics and complete the drive cycles for those particular diagnostics. When all I/M monitored diagnostic tests are completed, the I/M System Status indicators are set to YES. Perform the Inspection/Maintenance Complete System Set Procedure if any I/M System Status indicators are set to NO.

Conditions for Meeting a Cold Start

- The ignition voltage between 11-18 V.
- The barometric pressure is more than 75 kPa (10.9 psi).
- The start-up engine coolant temperature (ECT) is between 4-30°C (39-86°F).
- The start-up intake air temperature (IAT) is between 4-30°C (39-86°F).
- The difference between the IAT and the ECT is less than or equal to 6°C (43°F).

- The ambient air temperature is between 4-30°C (39-86°F).
- The fuel level is between 15-85 %.

Circuit/System Verification

Review the inspection/maintenance system status indicators with a scan tool. All I/M system status indicators should report YES, and no I/M Test DTCs should be present.

Inspection/Maintenance System Set Procedure

NOTE: **Whenever the ignition is turned ON, ignition positive voltage is supplied to the heated oxygen sensor (HO2S) heaters. After verifying the enable criteria, turn OFF the ignition for approximately 5 min to allow the sensors to cool before continuing with the test. When the engine is started, DO NOT turn the engine OFF for the remaining portion of the set procedure.**

1. Ensure that the vehicle meets the conditions for a cold start listed above.
2. The evaporative emission inspection/maintenance system status indicator should display YES.
   - If the inspection/maintenance system status indicator displays NO, perform the Service Bay Test, if applicable. If the Service Bay Test is NOT available, it may take up to 6 drive cycles, with up to 17 h between drive cycles, for the inspection/maintenance system status indicator to transition to YES.
3. The O2S Heater inspection/maintenance system status indicator should display YES.
   - If the O2S Heater inspection/maintenance system status indicator displays NO, ensure that the ignition has been turned OFF for at least 10 h.
4. Turn OFF all accessories; HVAC system, other electrical loads, including aftermarket/add-on equipment, etc.
5. Set the vehicle parking brake and ensure the vehicle is in Park for automatic transmission or Neutral for manual transmission.
6. Turn OFF all accessories; HVAC system, other electrical loads, including aftermarket/add-on equipment, etc.
7. Start and idle the engine for at least 2 min and until 65°C (149°F) is achieved.
8. Run the engine for 6.5 min within the following conditions:
   - MAF parameter between 4-30 g/s
   - Engine speed steady between 1,000-3,000 RPM
9. Return the engine to idle for 1 minute.
10. Apply and hold the brake pedal, and shift to Drive for automatic transmission, or apply the clutch pedal for manual transmission and operate the vehicle within the following conditions for 2 min:
    - Depress the accelerator pedal until throttle position sensor angle is more than 2 %.
    - Mass air flow signal between 15-30 g/s
    - RPM steady between 1,200-2,000 RPM

NOTE: **DO NOT touch the accelerator pedal during the idle period. A change in throttle position sensor angle or an increase in engine speed may**

invalidate this portion of the test.

11. Release the accelerator pedal and shift the vehicle to Park for automatic transmission, or Neutral and release the clutch pedal for manual transmission, and allow the engine to idle for 2 min.
12. Quickly depress the accelerator pedal until throttle position sensor angle is more than 8 % and return to idle, repeat 3 times.
13. Allow engine to idle for at least 2 min.

WARNING: Refer to Road Test Warning .

14. Release the parking brake and drive vehicle at 24 km/h (15 mph) or slower for 2 min.
15. Continue to drive the vehicle for at least 5.5 mi between 45-112 km/h (28-70 mph) with the vehicle reaching at least 80 km/h (50 mph).
16. Release the accelerator pedal for at least 2 s. This will allow the vehicle to enter decel fuel cut-off.
17. Depress the accelerator pedal until the throttle position sensor angle is increased 3-20 % and maintain a safe speed for 1 min.
18. Safely stop the vehicle, with the engine in Drive for automatic transmission or in Neutral with the clutch pedal depressed and parking brake applied for manual transmission, idle for 2 min.
19. Shift to Park for automatic and apply the parking brake, or neutral and release clutch pedal for manual.

NOTE: DO NOT disturb the vehicle or turn ON the ignition until told to do so. Disturbing the vehicle may invalidate this portion of the test.

20. Turn OFF the ignition and exit the vehicle. Do NOT disturb the vehicle for 60 min.
21. Observe the Inspection/Maintenance System Status with a scan tool. All of the Inspection/Maintenance System Status indicators should display YES.
    - If the evaporative emission Inspection/Maintenance System Status indicator displays NO, turn OFF the ignition for 17 h, ensure that the vehicle meets the conditions for a cold start, and repeat steps 12-18 six more times, or until the evaporative emission Inspection/Maintenance System Status indicator transitions to YES. If the indicator continues to display NO, refer to the **Inspection/Maintenance (I/M) System DTC Table (LUK)**, **Inspection/Maintenance (I/M) System DTC Table (LEA)** to identify the DTCs that did not run. Follow the Conditions for Running the DTC in order to set the evaporative emission Inspection/Maintenance System Status indicator
    - If any of the Inspection/Maintenance System Status display NO, refer to the **Inspection/Maintenance (I/M) System DTC Table (LUK)**, **Inspection/Maintenance (I/M) System DTC Table (LEA)** for the indicator which did not display YES. The Inspection/Maintenance System DTC Table identifies the DTCs associated with each Inspection/Maintenance System Status Indicator. Follow the Conditions for Running the DTC in order to set the associated status indicator.

NOTE: An I/M Test DTC will not be stored or erased from the ECU except at the end of trip processing which occurs 5 s after ignition OFF.

22. Observe the I/M Test DTC information with a scan tool. Verify there are no I/M Test DTCs present.
    - If an I/M Test DTC is set, diagnose the DTC using the **Diagnostic Trouble Code (DTC) List - Vehicle** , and refer to **Inspection/Maintenance System Check** for clearing I/M Test DTCs.
    - If an I/M Test DTC is set and the I/M System Status indicators are NO, diagnosis the DTC and perform the **Inspection/Maintenance Complete System Set Procedure**.
23. Observe the engine DTC information with a scan tool. Verify no DTCs are present.
    - If a DTC is set, diagnose using the **Diagnostic Trouble Code (DTC) List - Vehicle** , . After repairs, perform the **Inspection/Maintenance Complete System Set Procedure** to verify no further DTCs are set.

INSPECTION/MAINTENANCE (I/M) SYSTEM DTC TABLE (LUK)

Inspection/Maintenance (I/M) System DTC Table (LUK)

System	DTCs Required to Set System Status to YES
If an I/M System Status indicator did NOT update to YES during the **Inspection/Maintenance Complete System Set Procedure** , review each indicator and reference this table to determine each DTC associated with the I/M System Status Indicator. Each DTC listed below has specific conditions that must be met for the diagnostic to run. Included within the conditions are additional DTCs, which if set, may inhibit the DTCs listed below from running. Reviewing and operating the vehicle within the Conditions for Running for each DTC listed below will allow the I/M System Status Indicators to transition to YES.	
AIR	• **DTC P0411** • **DTC P2430, P2431, P2435, or P2436** • **DTC P2440** • **DTC P2444**
Catalyst	**DTC P0420 (LUK)**, **DTC P0420 (LEA)**
EVAP	• **DTC P0442** • **DTC P0446** • **DTC P0455**
Fuel System	**DTC P219A**
Oxygen Sensor	• **DTC P0131, P0132, P0134, P0137, P0138, P0140, or P2A00** • **DTC P0133, P013A, P013B, P013E, P013F, P015A, P015B, P2270, or P2271**
Oxygen Sensor Heater	**DTC P0030-P0032, P0036-P0038, P0053, P0054, P0135, or P0141**
Camshaft System	**DTC P0011 or P0014**

INSPECTION/MAINTENANCE (I/M) SYSTEM DTC TABLE (LEA)

Inspection/Maintenance (I/M) System DTC Table (LEA)

System	DTCs Required to Set System Status to YES
If an I/M System Status indicator did NOT update to YES during the **Inspection/Maintenance Complete System Set Procedure** , review each indicator and reference this table to determine each DTC associated with the I/M System Status Indicator. Each DTC listed below has specific conditions that must be met for the diagnostic to run. Included within the conditions are additional DTCs, which if set, may inhibit the DTCs listed below from running. Reviewing and operating the vehicle within	

the Conditions for Running for each DTC listed below will allow the I/M System Status Indicators to transition to YES.	
Catalyst	**DTC P0420 (LUK), DTC P0420 (LEA)**
EVAP	• **DTC P0442** • **DTC P0446** • **DTC P0455**
Fuel	**DTC P219A**
Oxygen Sensor	**DTC P0133, P013A, P013B, P013E, P013F, P015A, P015B, P2270, or P2271**
Oxygen Sensor Heater	• **DTC P0030-P0032, P0036-P0038, P0053, P0054, P0135, or P0141** • **DTC P0131, P0132, P0134, P0137, P0138, P0140, or P2A00**
Camshaft System	**DTC P0011 or P0014**

POOR FUEL FILL QUALITY

Poor Fuel Fill Quality

Problem	Causes
DEFINITION: During the fueling process a continual, occasional, or no-fuel nozzle shut-off condition has occurred.	
Difficult to fill	• Fuel fill limiter vent valve stuck closed • Evaporative emission (EVAP) canister restricted • EVAP vent valve stuck closed • Hose between canister and canister vent solenoid twisted or kinked if applicable • High fuel temperature • Fuel filler hose is kinked • Faulty dispensing nozzle • Ignition switch ON, vent valve closed
Over fill	• Fill limiter vent valve stuck open or leaking • Fuel inlet check valve stuck open
Pre-mature shut-off of the fuel dispensing nozzle occurs immediately after engaging dispensing nozzle, tank empty	• Restricted vapor lines or fuel fill pipe • High fuel temperature • Inlet check valve at tank stuck closed, fill pipe full of fuel • Fuel tank full, gauge not accurate
Pre-mature shut-off of the fuel dispensing nozzle, more than 1/8 of tank capacity dispensed	• Kinked, pinched or plugged lines in fuel tank vent system • EVAP vent valve stuck closed or restricted • EVAP canister restricted • Fuel limiting vent valve stuck closed or obstruction at top of fuel tank
Fuel Spitback	• Restricted EVAP canister • High fuel temperature

	• Ignition switch ON, EVAP vent valve closed

2014 Engine

Engine Controls/Fuel - 2.4L (LEA, LUK) - Repair Instructions - Regal

REPAIR INSTRUCTIONS

BRAKE PEDAL POSITION SENSOR LEARN

NOTE: **Brake system does not use a brake switch, stoplight switch or brakelight switch. System uses a Brake Pedal Position Sensor to control these functions.**

Calibration Criteria

NOTE: **Do not apply the brake pedal during the brake pedal position sensor calibration procedure. Any movement of the brake pedal during this procedure will cause the calibration procedure to fail. If this occurs, the brake pedal position sensor calibration must be repeated.**

Brake pedal position sensor calibration must be performed after the brake pedal position sensor, body control module (BCM), or engine control module (ECM) have been serviced. The calibration procedure will set the brake pedal position sensor home value. This value is used by the BCM and ECM to determine the action of the driver applying the brake system and to provide this information to the vehicle subsystems via serial data.

Calibration Procedure

1. Apply the parking brake.
2. Ignition ON, engine OFF, place the transmission in the PARK position for automatic transmission or NEUTRAL position for manual transmission.
3. Install a scan tool.
4. Clear all DTCs before proceeding.
5. Navigate to the Configuration/Reset Functions menu of the BCM.
6. Select the Brake Pedal Position Sensor Learn procedure and follow the directions displayed on the screen.
7. Navigate to the Configuration/Reset Functions menu of the ECM.
8. Select the Learn Functions menu.
9. Select the Brake Pedal Position Sensor Learn procedure and follow the directions displayed on the screen.

ENGINE CONTROL MODULE REPLACEMENT

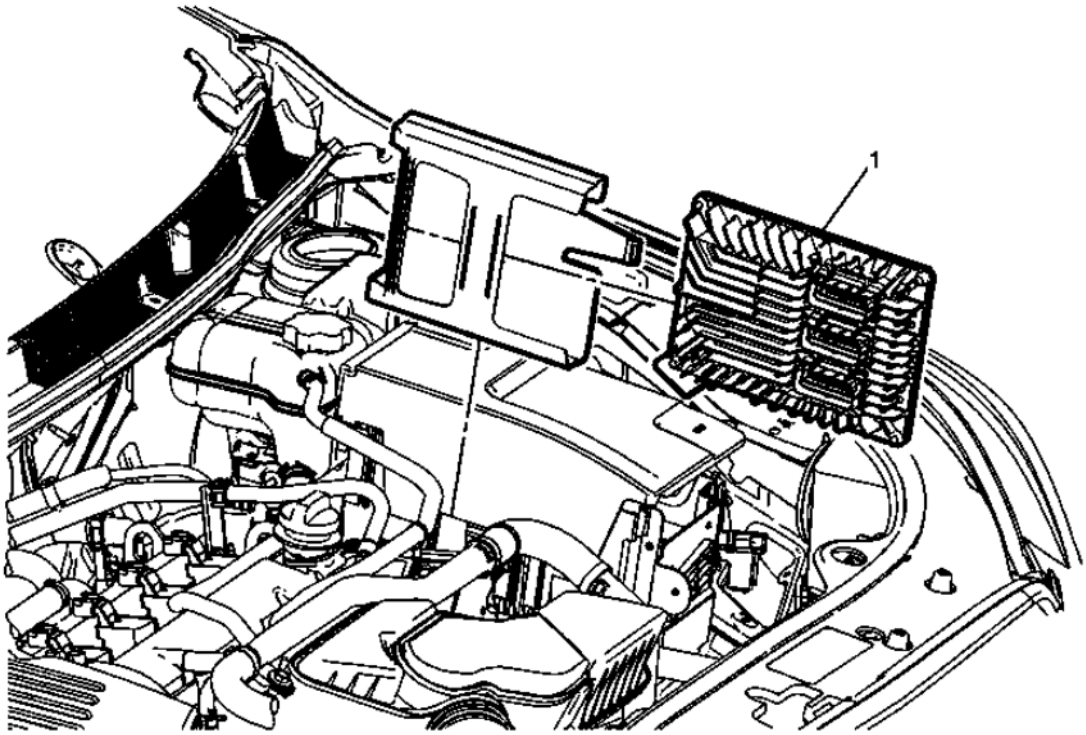

Fig. 1: Engine Control Module
Courtesy of GENERAL MOTORS COMPANY

Engine Control Module Replacement

Callout	Component Name
Preliminary Procedure Disconnect the negative battery cable. Refer to **Battery Negative Cable Disconnection and Connection** .	
1	Electronic Control Module **WARNING:** **Refer to Safety Glasses Warning .** **CAUTION:** **Always turn the ignition off when installing or removing the ECM connectors in order to prevent damage to the components.** **CAUTION:** • **Turn the ignition OFF when installing or removing the control module connectors and disconnecting or reconnecting the power to the control module (battery cable, powertrain control module (PCM)/engine control module (ECM)/transaxle control module (TCM) pigtail, control module fuse, jumper cables, etc.) in order to prevent internal control module damage.** • **Control module damage may result when the metal case contacts battery voltage. DO NOT contact the control module metal case with battery voltage when servicing a control module, using battery booster cables, or when charging the vehicle battery.** • **In order to prevent any possible electrostatic discharge damage to the control**

module, do no touch the connector pins or the soldered components on the circuit board.

- **Remove any debris from around the control module connector surfaces before servicing the control module. Inspect the control module connector gaskets when diagnosing or replacing the control module. Ensure that the gaskets are installed correctly. The gaskets prevent contaminant intrusion into the control module.**
- **The replacement control module must be programmed.**

Procedure

1. Disconnect the electrical connectors.
2. Release the retaining tab.
3. If replacing, program the ECM. Refer to **Control Module References** .

NOTE:
Before removing the engine control module (ECM), record the oil life percentage remaining. Use the scan tool to reset the Engine Oil Life remaining back to the original percentage recorded.

CRANKSHAFT POSITION SYSTEM VARIATION LEARN

NOTE: **The Crankshaft Position Variation Learn procedure is also required when the following service procedures have been performed, regardless of whether DTC P0315 is set:**

- **An engine replacement**
- **An engine control module (ECM) or body control module (BCM) replacement**
- **A crankshaft balancer replacement**
- **A crankshaft removal and/or replacement**
- **A crankshaft position sensor disturbance/removal and/or replacement**
- **Any engine repairs which disturb the crankshaft to crankshaft position sensor relationship.**

NOTE: **The ECM monitors certain component signals to determine if all the conditions are met to continue with the Crankshaft Position Variation Learn procedure.**

1. Ignition ON, observe the DTC information with a scan tool. Verify no other DTCs are set, except DTCs P0300-P0304, or P0315.
   - If DTCs are set, except DTCs P0300-P0304, or P0315, refer to **Diagnostic Trouble Code (DTC) List - Vehicle** for further diagnosis.
2. Select the Crankshaft Position Variation Learn Procedure with a scan tool and follow the on screen instructions:
3. Verify DTC P0315 does not set.
   - **If DTC P0315 set, or another DTC is present** refer to **Diagnostic Trouble Code (DTC) List**

- **- Vehicle** for the applicable DTC that set.
  - **If the DTC does not set**
4. All OK.

Q38 THROTTLE BODY: THROTTLE/IDLE LEARN

Description

The engine control module (ECM) learns the airflow through the throttle body to ensure the correct idle. The learned airflow values are stored within the ECM. These values are learned to adjust for production variation and will continuously learn during the life of the vehicle to compensate for reduced airflow due to throttle body coking. Anytime the throttle body airflow rate changes, for example due to cleaning or replacing, the values must be relearned.

An engine that had a heavily coked throttle body that has been cleaned or replaced may take several drive cycles to learn out the coking. To accelerate the process, the scan tool has the ability to reset all learned values back to zero. A new ECM will also have values set to zero.

The idle may be unstable or a DTC may set if the learned values do not match the actual airflow.

Conditions for Running the Throttle Learn Procedure

Scan tool Idle Learn or Idle Learn Reset Procedure

- DTCs P0068, P0101, P0102, P0103, P0106, P0107, P0108, P0116, P0117, P0118, P0120, P0122, P0123, P0128, P0171, P0172, P0174, P0175, P0201-P0208, P0220, P0222, P0223, P0261, P0262, P0264, P0265, P0267, P0268, P0270, P0271, P0273, P0274, P0276, P0277, P0279, P0280, P0282, P0283, P0300-P0308, P0351-P0358, P0496, P0601, P0604, P0606, P060D, P0641, P0651, P1516, P2101, P2119, P2120, P2122, P2123, P2125, P2127, P2128, P2135, P2138, or P2176 are not set.
- Ignition ON, engine OFF.
- The vehicle speed sensor (VSS) is 0 km/h (0 mph).

Service Bay/On Road Learn Procedure

- DTCs P0068, P0101, P0102, P0103, P0106, P0107, P0108, P0116, P0117, P0118, P0120, P0122, P0123, P0128, P0171, P0172, P0174, P0175, P0201-P0208, P0220, P0222, P0223, P0261, P0262, P0264, P0265, P0267, P0268, P0270, P0271, P0273, P0274, P0276, P0277, P0279, P0280, P0282, P0283, P0300-P0308, P0351-P0358, P0496, P0601, P0604, P0606, P060D, P0641, P0651, P1516, P2101, P2119, P2120, P2122, P2123, P2125, P2127, P2128, P2135, P2138, or P2176 are not set.
- The engine speed is between 450-4,000 RPM.
- The manifold absolute pressure (MAP) is greater than 5 kPa.
- The mass air flow (MAF) is greater than 2 g/s.
- The ignition voltage is greater than 10 volts.

Throttle Learn

Scan Tool Idle Learn or Idle Learn Reset Procedure - Performed after the throttle body is cleaned or replaced

1. Ignition ON, engine OFF, perform the Idle Learn or Idle Learn Reset in Configuration/Reset or Module Setup.
2. Engine idling, observe the scan tool Throttle Body Idle Airflow Compensation parameter. The Throttle Body Idle Airflow Compensation value should equal 0 % and the engine should be idling at a normal idle speed.
3. Clear the DTCs and return to the diagnostic that referred you here.

Service Bay/On Road Idle Learn Procedure - Performed after the ECM is programmed or replaced

NOTE: **Do NOT perform this procedure if DTCs are set. Refer to Diagnostic Trouble Code (DTC) List - Vehicle .**

1. Engine idling for 3 minutes.
2. Observe the scan tool Desired Idle Speed and the actual Engine Speed parameters.
3. The ECM will start to learn the new idle cells and the Desired Idle Speed should start to decrease.
4. Ignition OFF for 60 seconds.
5. Start and idle the engine for 3 minutes.
6. After the 3 minute run time the engine should be idling normal.

NOTE: **During the drive cycle the check engine light may come on with idle speed DTCs. If idle speed codes are set, clear codes so the ECM can continue to learn.**

   - If the engine idle speed has not been learned the vehicle will need to be driven at speeds above 70 km/h (44 mph) with several decelerations and extended idles.
7. After the drive cycle, the engine should be idling normally.
   - If the engine idle speed has not been learned, turn OFF the ignition for 60 seconds and repeat step 6.
8. Once the engine speed has returned to normal, clear DTCs and return to the diagnostic that referred you here.

ENGINE COOLANT TEMPERATURE SENSOR REPLACEMENT

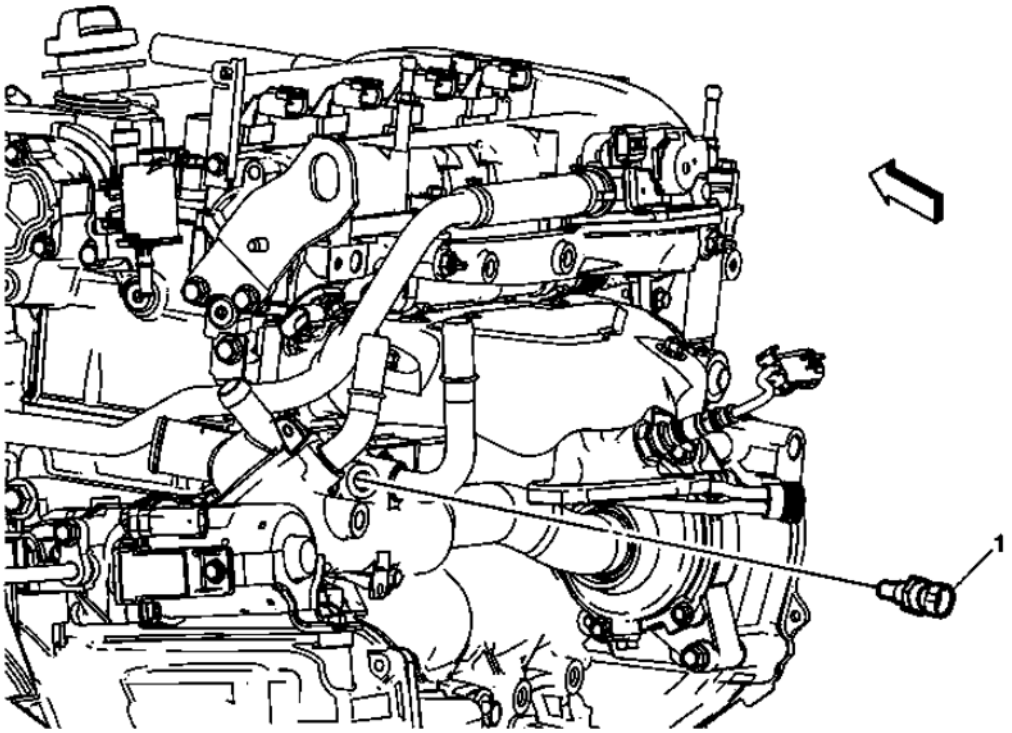

Fig. 2: Engine Coolant Temperature Sensor
Courtesy of GENERAL MOTORS COMPANY

Engine Coolant Temperature Sensor Replacement

Callout	Component Name
1	Engine Coolant Temperature Sensor **CAUTION:** **Refer to Fastener Caution .** **Procedure** Disconnect the electrical connector. **Tighten** 20 N.m (15 lb ft)

MASS AIRFLOW SENSOR WITH INTAKE AIR TEMPERATURE SENSOR REPLACEMENT

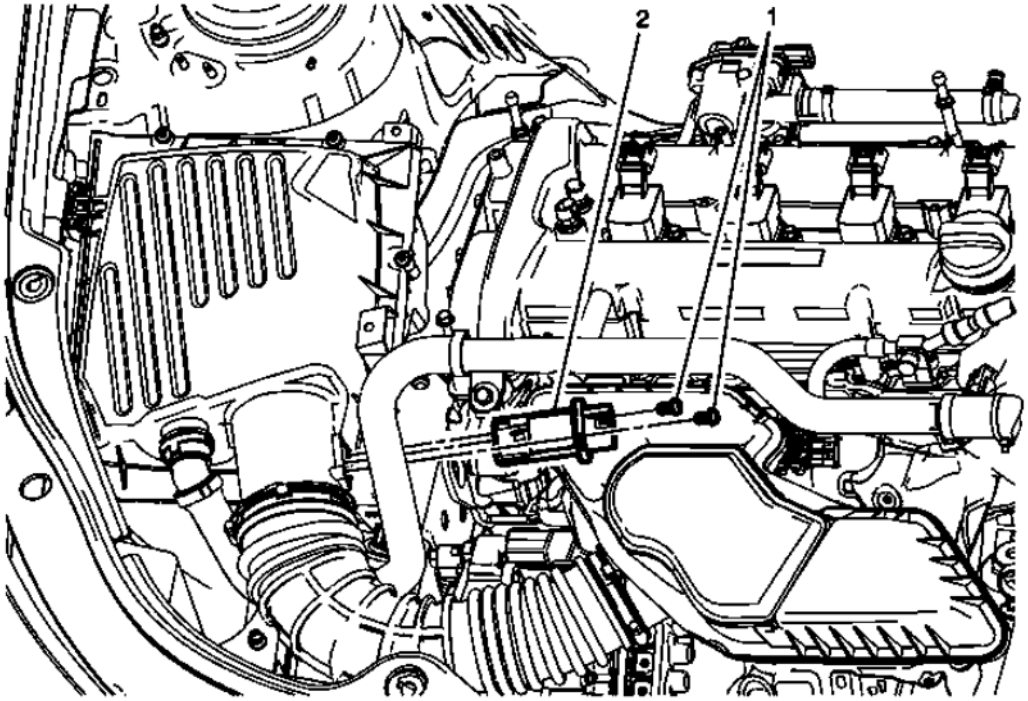

Fig. 3: Mass Airflow Sensor with Intake Air Temperature Sensor
Courtesy of GENERAL MOTORS COMPANY

Mass Airflow Sensor with Intake Air Temperature Sensor Replacement

Callout	Component Name
1	Mass Airflow Sensor Fastener (Qty: 2) **CAUTION:** **Refer to Fastener Caution .** **Tighten** 4 N.m(35 lb in)
2	Mass Airflow Sensor **Procedure** Disconnect the electrical connector.

MANIFOLD ABSOLUTE PRESSURE SENSOR REPLACEMENT

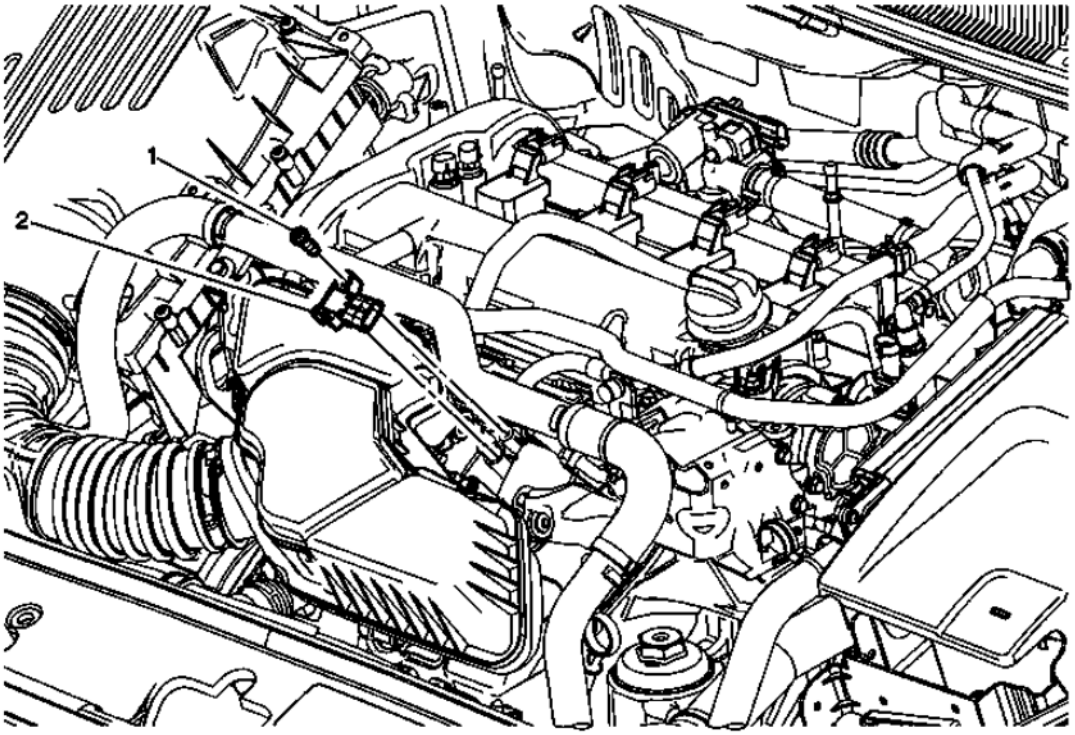

Fig. 4: Manifold Absolute Pressure Sensor & Fastener
Courtesy of GENERAL MOTORS COMPANY

Manifold Absolute Pressure Sensor Replacement

Callout	Component Name
1	Manifold Absolute Pressure Sensor Fastener **CAUTION:** **Refer to Fastener Caution .** **Tighten** 4 N.m(35 lb in)
2	Manifold Absolute Pressure Sensor

HEATED OXYGEN SENSOR REPLACEMENT - SENSOR 1

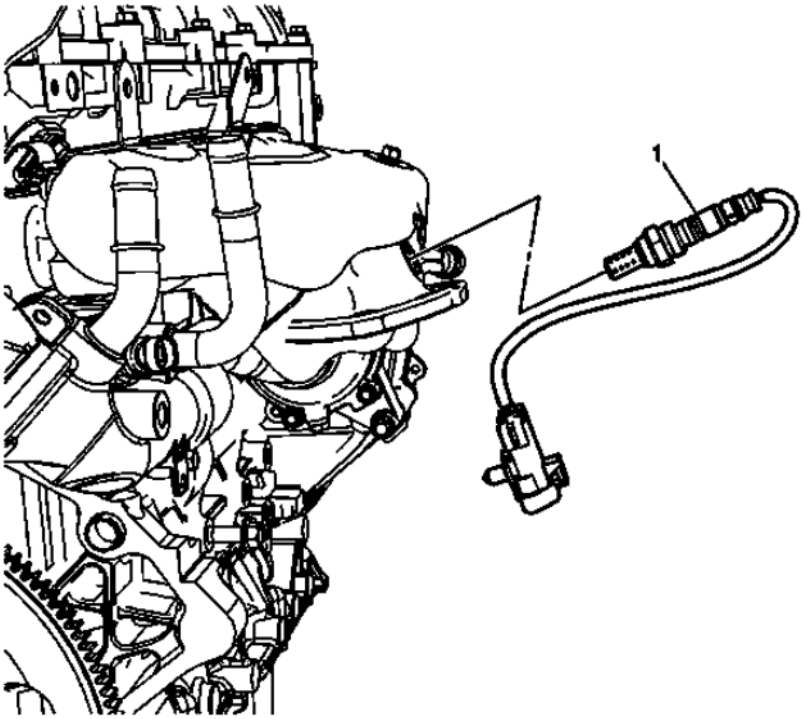

Fig. 5: Heated Oxygen Sensor - Sensor 1
Courtesy of GENERAL MOTORS COMPANY

Heated Oxygen Sensor Replacement - Sensor 1

Callout	Component Name
1	Heated Oxygen Sensor **CAUTION:** **Refer to Heated Oxygen and Oxygen Sensor Caution .** **CAUTION:** **Refer to Fastener Caution .** **Procedure** 1. Disconnect the heated oxygen sensor harness connector. 2. If reinstalling the old sensor, coat the threads with anti-seize compound. Refer to **Adhesives, Fluids, Lubricants, and Sealers** . **NOTE:** **A special anti-seize compound is used in the HO2S threads. The compound consists of liquid graphite and glass beads. The graphite tends to burn away, but the glass beads remain, making the sensor easier to remove. New, or service replacement sensors already have the compound applied to the threads. If the sensor is removed from an exhaust component and if for any reason the sensor is to be reinstalled, the threads must have anti-seize compound applied before reinstallation.**

	Tighten 42 (31 lb ft)

HEATED OXYGEN SENSOR REPLACEMENT - SENSOR 2

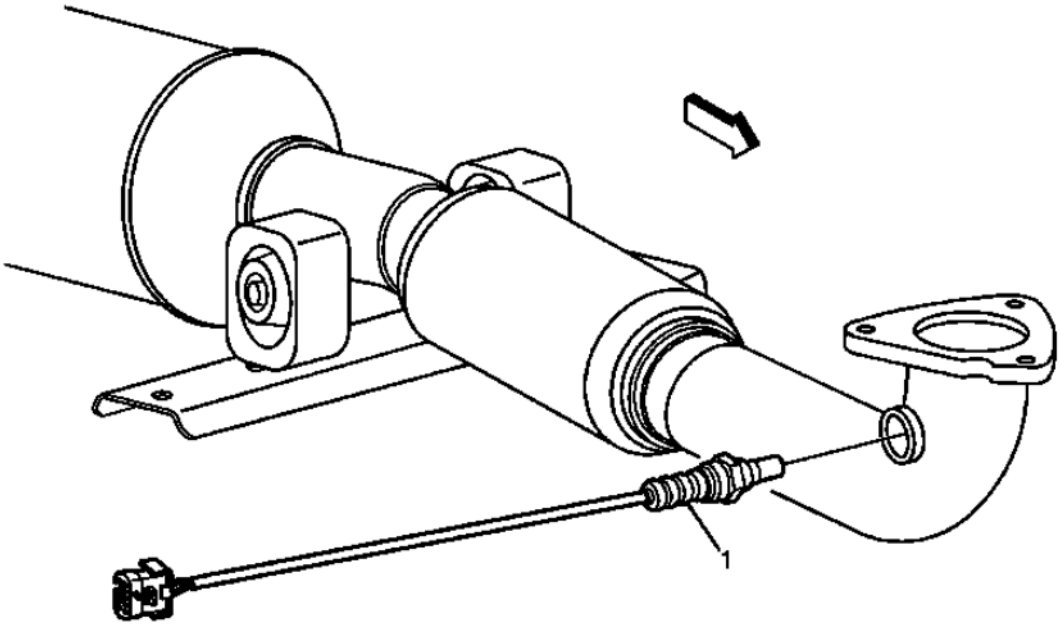

Fig. 6: Heated Oxygen Sensor - Sensor 2
Courtesy of GENERAL MOTORS COMPANY

Heated Oxygen Sensor Replacement - Sensor 2

Callout	Component Name
Preliminary Procedure Raise and support the vehicle. Refer to **Lifting and Jacking the Vehicle** .	
1	Heated Oxygen Sensor **CAUTION:** **Refer to Heated Oxygen and Oxygen Sensor Caution .** **CAUTION:** **Refer to Fastener Caution .** **Procedure** 1. Disconnect the heated oxygen sensor harness connector. 2. If reinstalling the old sensor, coat the threads with anti-seize compound. Refer to **Adhesives, Fluids, Lubricants, and Sealers** .

	TIP: A special anti-seize compound is used in the HO2S threads. The compound consists of liquid graphite and glass beads. The graphite tends to burn away, but the glass beads remain, making the sensor easier to remove. New, or service replacement sensors already have the compound applied to the threads. If the sensor is removed from an exhaust component and if for any reason the sensor is to be reinstalled, the threads must have anti-seize compound applied before reinstallation. **Tighten** 42 N.m (31 lb ft)

ACCELERATOR PEDAL WITH POSITION SENSOR ASSEMBLY REPLACEMENT

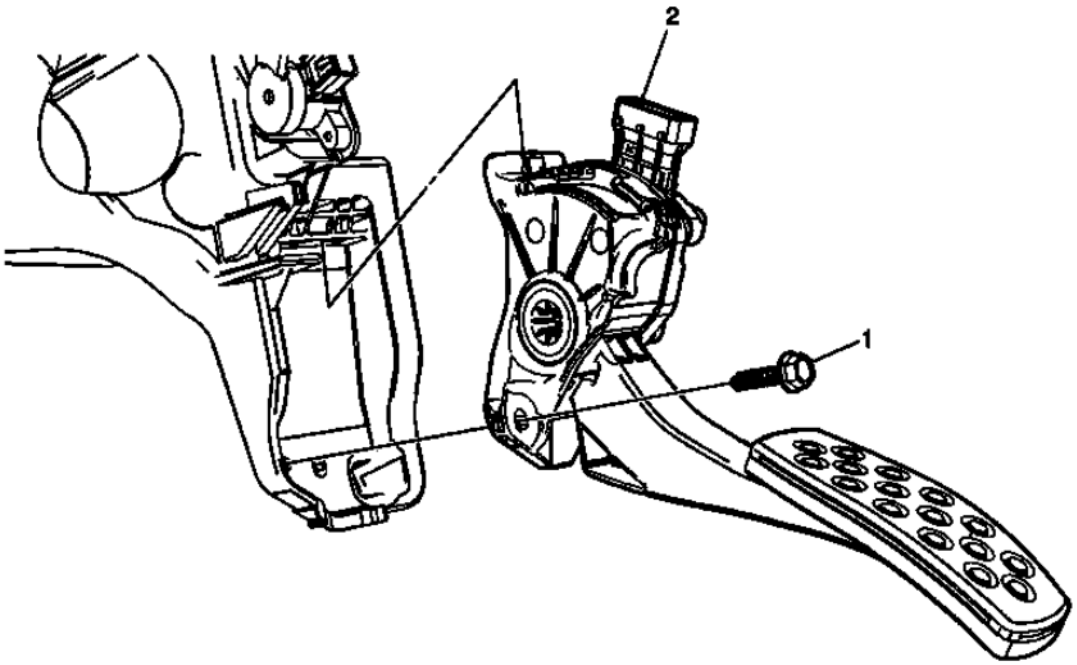

Fig. 7: Identifying Accelerator Pedal With Position Sensor Assembly
Courtesy of GENERAL MOTORS COMPANY

Accelerator Pedal with Position Sensor Assembly Replacement

Callout	Component Name
1	Accelerator Pedal Position Sensor Bolt **CAUTION:** **Refer to Fastener Caution** **Tighten** 9 N.m(80 lb in)
2	Accelerator Pedal Position Sensor

THROTTLE BODY ASSEMBLY REPLACEMENT

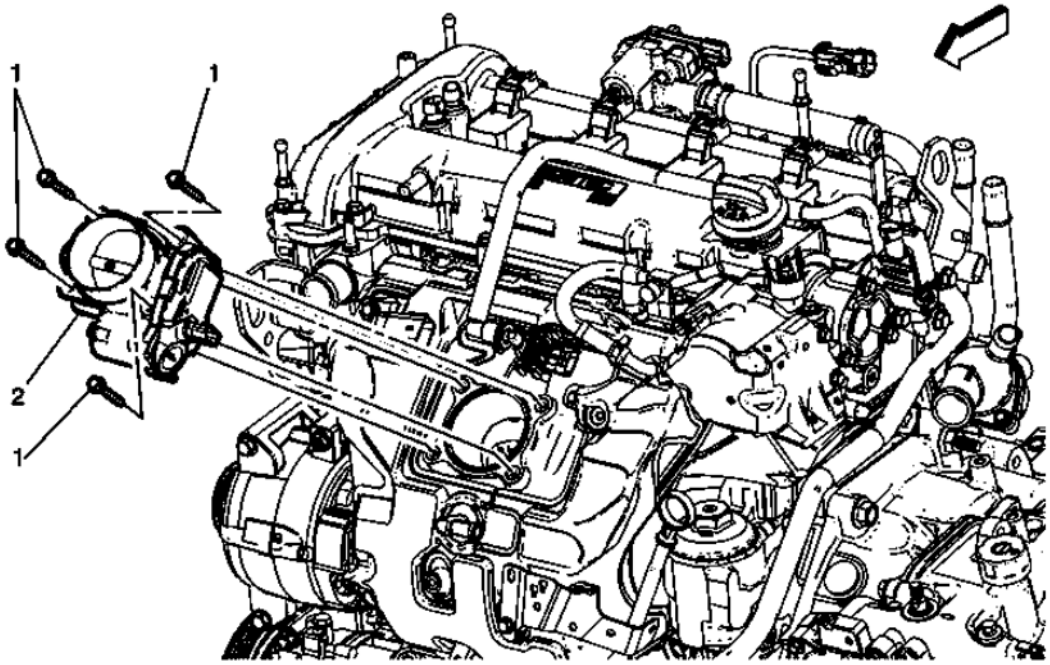

Fig. 8: Throttle Body Assembly & Fasteners
Courtesy of GENERAL MOTORS COMPANY

Throttle Body Assembly Replacement

Callout	Component Name
	Preliminary Procedure **Remove the air cleaner outlet duct. Refer to Air Cleaner Outlet Duct Replacement**
1	Throttle Body Assembly Fastener (Qty: 4) **CAUTION:** **Refer to Fastener Caution .** **Procedure** Disconnect the electrical connector. **Tighten** 10 N.m (89 lb in)
2	Throttle Body Assembly **Procedure** 1. Disconnect the electrical connector. 2. Use a NEW throttle body O-ring. 3. Perform the throttle learn procedure. Refer to **Q38 Throttle Body: Throttle/Idle Learn**.

THROTTLE BODY CLEANING

WARNING: Turn OFF the ignition before inserting fingers into the throttle bore. Unexpected movement of the throttle blade could cause personal injury.

CAUTION: Do not insert any tools into the throttle body bore in order to avoid damage to the throttle valve plate.

CAUTION: Do not use any solvent that contains Methyl Ethyl Ketone (MEK). This solvent may damage fuel system components.

1. Remove the air cleaner outlet duct. Refer to **Air Cleaner Outlet Duct Replacement**.

NOTE: DO NOT prop open the throttle blade with the ignition key in the ON position as it may set a diagnostic trouble code (DTC).

2. Inspect the throttle body bore and the throttle valve plate for deposits. You must open the throttle valve in order to inspect all of the surfaces.
3. Clean the throttle body bore and the throttle valve plate using a clean shop towel with Top Engine Cleaner P/N 1052626 (Canadian P/N 993026), ACDelco® P/N X66, or an equivalent product.
4. Install the air cleaner outlet duct. Refer to **Air Cleaner Outlet Duct Replacement**.
5. Perform the Throttle/Idle Learn procedure. Refer to **Q38 Throttle Body: Throttle/Idle Learn**.

FUEL PRESSURE RELIEF

WARNING: Fuel that flows out at high pressure can cause serious injury to the skin and eyes. ALWAYS depressurize the fuel system before removing components that are under high fuel pressure.

1. Remove the fuel pump control module 20A fuse from the underhood electrical center. Refer to **Electrical Center Identification Views** .
2. Start the vehicle and allow the engine to idle until the engine stops. The engine will stop in approximately 20-30 seconds.
3. Turn the ignition OFF.

FUEL PRESSURE GAUGE INSTALLATION AND REMOVAL

Special Tools

CH-48027 Digital Pressure Gauge

For equivalent regional tools, refer to **Special Tools (Diagnostic Tools)** , **Special Tools (Mechanical Tools)** .

Installation Procedure

WARNING: Refer to Gasoline/Gasoline Vapors Warning .

WARNING: Remove the fuel tank cap and relieve the fuel system pressure before servicing the fuel system in order to reduce the risk of personal injury. After you relieve the fuel system pressure, a small amount of fuel may be released when servicing the fuel lines, the fuel injection pump, or the connections. In order to reduce the risk of personal injury, cover the fuel system components with a shop towel before disconnection. This will catch any fuel that may leak out. Place the towel in an approved container when the disconnection is complete.

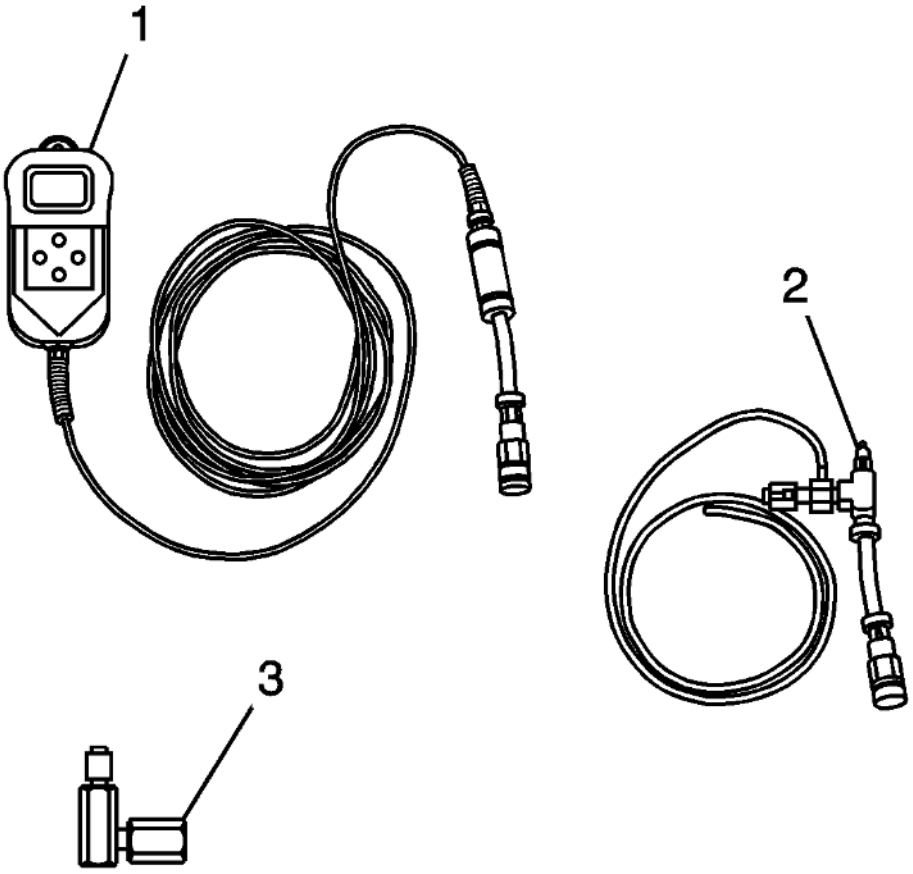

Fig. 9: Digital Fuel Pressure Gauge And Components
Courtesy of GENERAL MOTORS COMPANY

1. Relieve the fuel system pressure. Refer to **Fuel Pressure Relief**.
2. Connect the CH-48027-1 (1) to the CH-48027-2 (2).
3. Remove the shop towel from around the fuel pump feed pipe service port, and place in an approved gasoline container.
4. Perform any tests and/or diagnostics as needed. For the proper usage of the **CH-48027** digital pressure gauge , refer to the manufacture's directions.

Removal Procedure

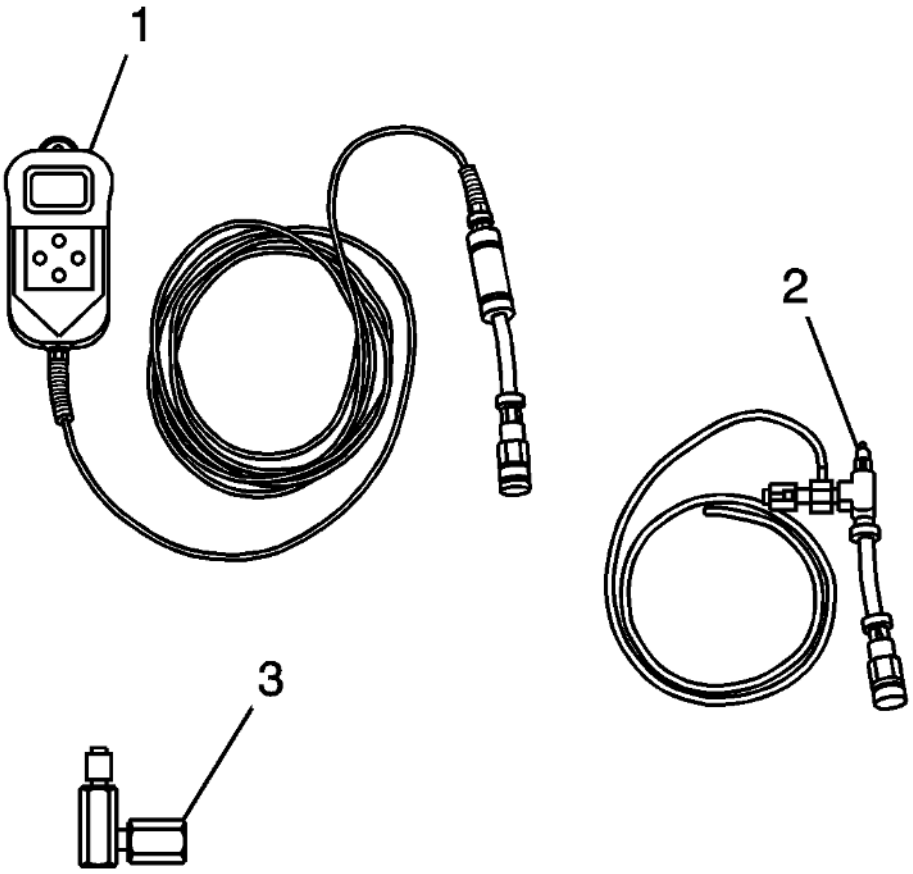

Fig. 10: Digital Fuel Pressure Gauge And Components
Courtesy of GENERAL MOTORS COMPANY

WARNING: Wrap a shop towel around the fuel pressure connection in order to reduce the risk of fire and personal injury. The towel will absorb any fuel leakage that occurs during the connection of the fuel pressure gauge. Place the towel in an approved container when the connection of the fuel pressure gauge is complete.

1. Relieve the fuel system pressure, if required. Perform the following steps:
    1. Wrap a shop towel around the fuel pump feed pipe service port.
    2. Place the hose on the CH-48027-2 (2) into an approved gasoline container.
    3. Open the valve on the CH-48027-2 (2) in order to bleed any fuel from the fuel rail.
    4. Close the valve on the CH-48027-2 (2).
    5. Remove the hose on the CH-48027-2 (2) from the approved gasoline container.
    6. Remove the shop towel from around the fuel rail service port, and place in an approved gasoline container.

CAUTION: Clean all of the following areas before performing any disconnections in order to avoid possible contamination in the system:

- **The fuel pipe connections**
- **The hose connections**
- **The areas surrounding the connections**

2. Disconnect the CH-48027-1 (1) from the CH-48027-2 (2).
3. Disconnect the CH-48027-2 (2) from the CH-48027-3 (3).
4. Disconnect the CH-48027-3 (3) from the fuel Pump feed pipe service port.
5. Install the service port cap.
6. Install the engine cover, if required.
7. Tighten the fuel fill cap.

METAL COLLAR QUICK CONNECT FITTING SERVICE

Special Tool

EN 41769 Fuel Line Disconnect Tool Set

Removal Procedure

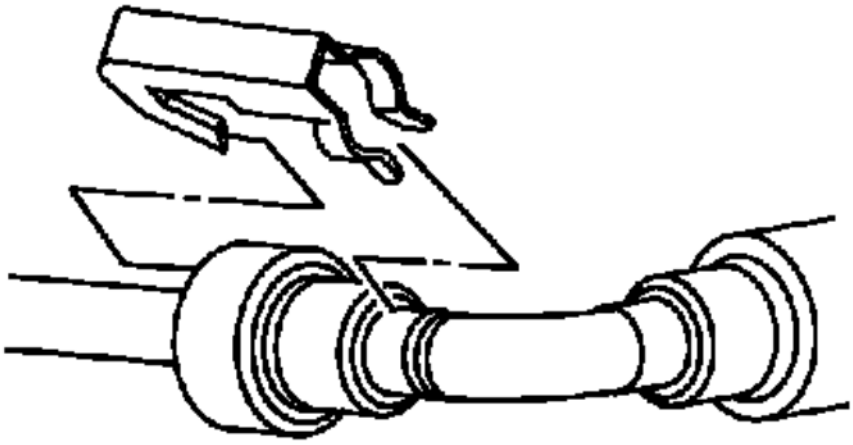

Fig. 11: View Of Quick-Connect Fitting Retainer (Metal Collar)
Courtesy of GENERAL MOTORS COMPANY

1. Relieve the fuel system pressure before servicing any fuel system connection. Refer to the **Fuel Pressure Relief**.
2. Remove the retainer from the quick-connect fitting.

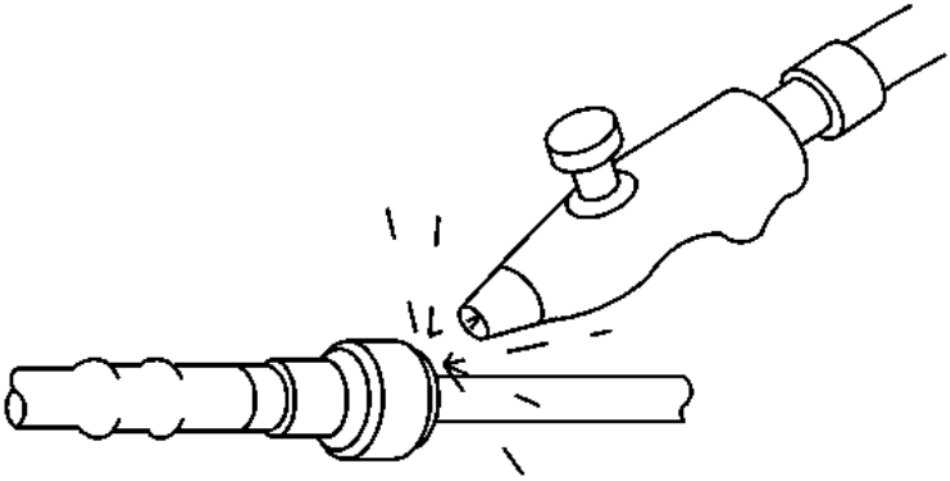

Fig. 12: Blowing Dirt Out Of Fitting (Metal Collar)
Courtesy of GENERAL MOTORS COMPANY

WARNING: **Wear safety glasses when using compressed air, as flying dirt particles may cause eye injury.**

3. Blow dirt out of the fitting using compressed air.

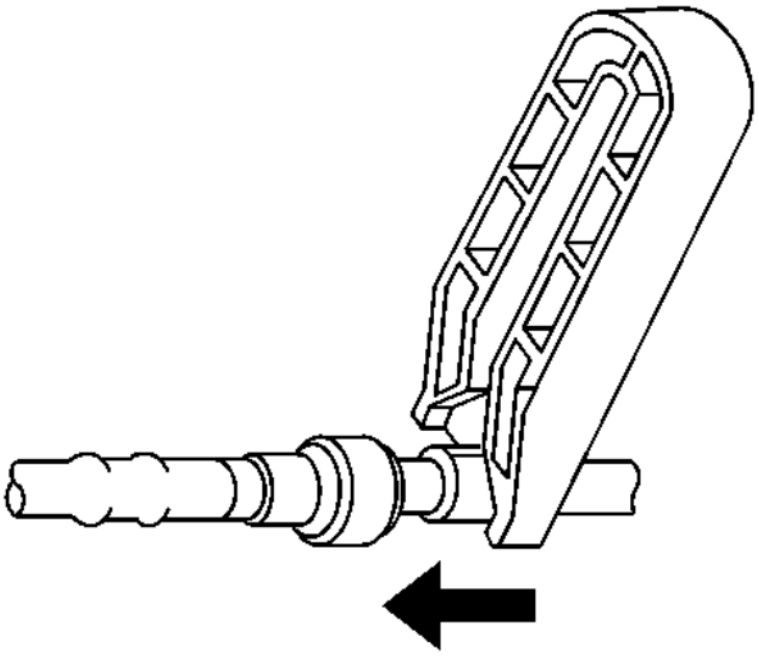

Fig. 13: View Of Quick Connect Locking Tabs (Metal Collar)
Courtesy of GENERAL MOTORS COMPANY

4. Choose the correct tool from the **EN 41769** set for the size of the fitting. Insert the tool into the female connector, then push inward in order to release the locking tabs.

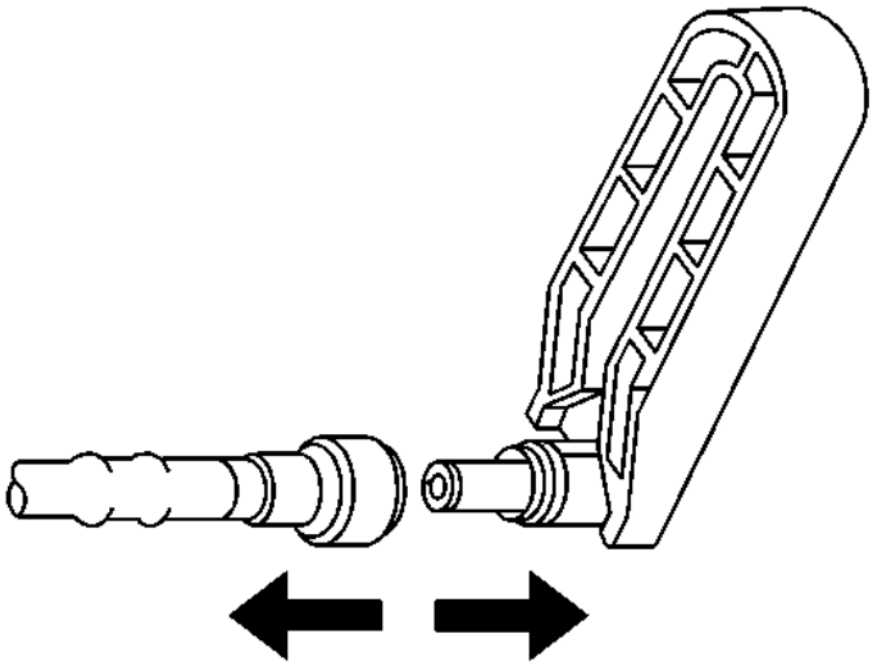

Fig. 14: View Of Quick Connect Locking Tabs (Metal Collar)
Courtesy of GENERAL MOTORS COMPANY

5. Pull the connection apart.

CAUTION: If necessary, remove rust or burrs from the fuel pipes with an emery cloth. Use a radial motion with the fuel pipe end in order to prevent damage to the O-ring sealing surface. Use a clean shop towel in order to wipe off the male tube ends. Inspect all the connections for dirt and burrs. Clean or replace the components and assemblies as required.

6. Use a clean shop towel in order to wipe off the male pipe end.
7. Inspect both ends of the fitting for dirt and burrs. Clean or replace the components as required.

Installation Procedure

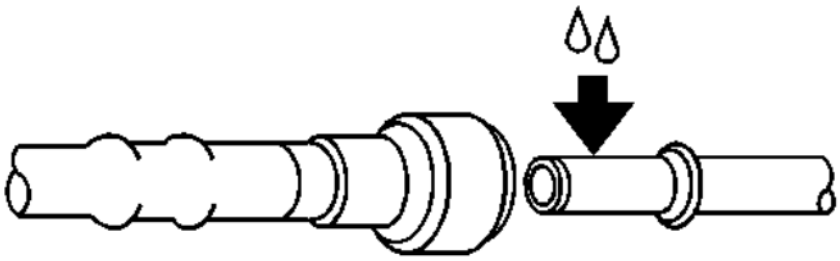

Fig. 15: Oiling Male Pipe Ends (Metal Collar)
Courtesy of GENERAL MOTORS COMPANY

WARNING: In order to reduce the risk of fire and personal injury, before connecting fuel pipe fittings, always apply a few drops of clean engine oil to the male pipe ends.

This will ensure proper reconnection and prevent a possible fuel leak.

During normal operation, the O-rings located in the female connector will swell and may prevent proper reconnection if not lubricated.

1. Apply a few drops of clean engine oil to the male pipe end.

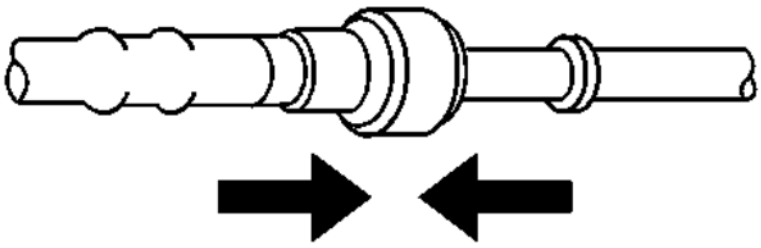

Fig. 16: View Of Connectors (Metal Collar)
Courtesy of GENERAL MOTORS COMPANY

2. Push both sides of the fitting together in order to snap the retaining tabs into place.

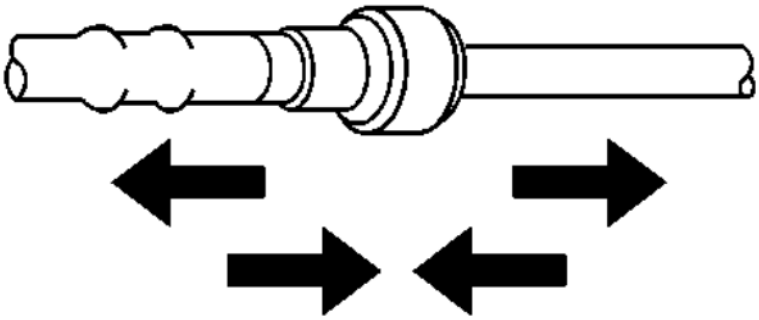

Fig. 17: Ensuring Connection (Metal Collar) Is Secure
Courtesy of GENERAL MOTORS COMPANY

3. Once installed, pull on both sides of the fitting in order to make sure the connection is secure.

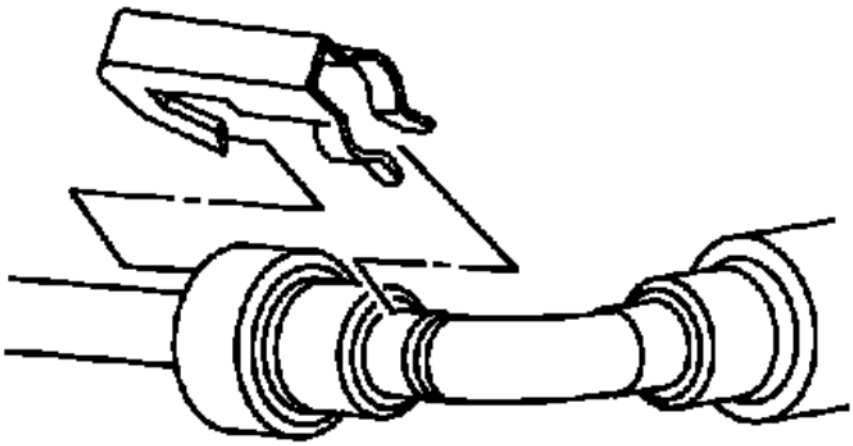

Fig. 18: View Of Quick-Connect Fitting Retainer (Metal Collar)
Courtesy of GENERAL MOTORS COMPANY

4. Install the retainer to the quick-connect fitting.

PLASTIC COLLAR QUICK CONNECT FITTING SERVICE

Removal Procedure

WARNING: Refer to Gasoline/Gasoline Vapors Warning .

NOTE: If servicing a fuel system, insure the fuel pressure has been relieved.

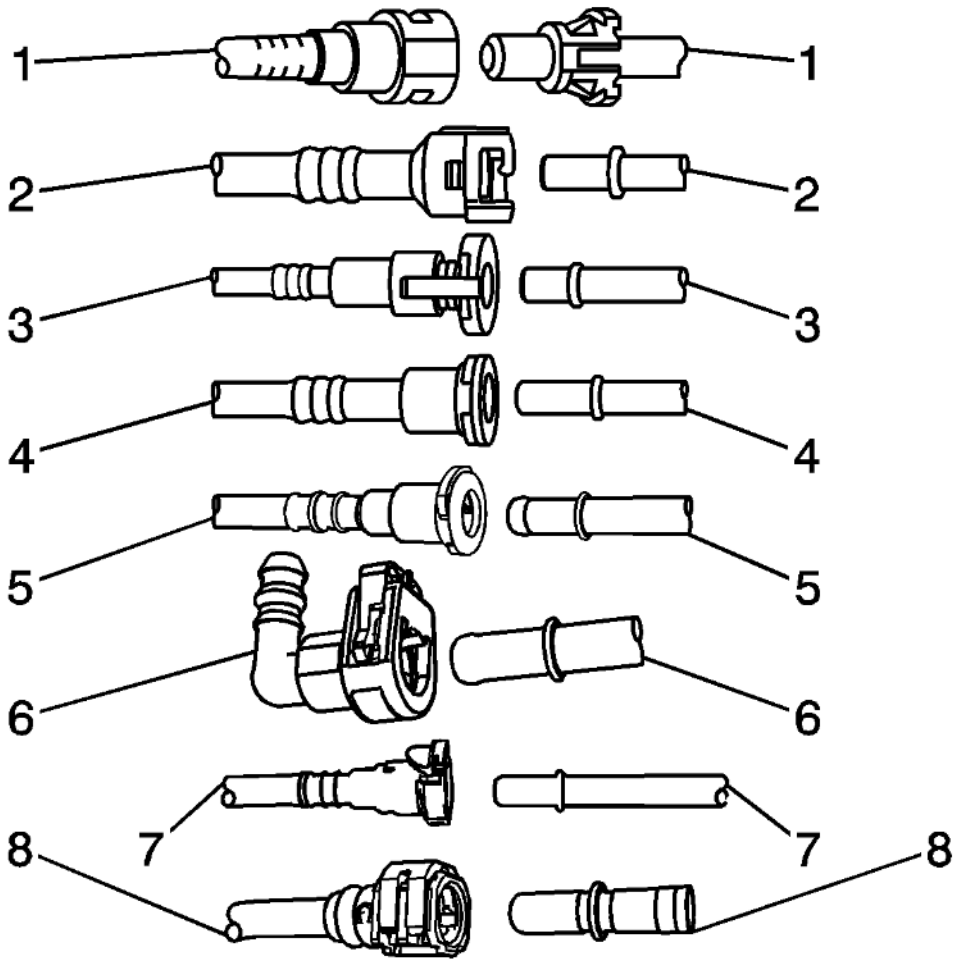

Fig. 19: Plastic Collar Quick Connect Fitting Service
Courtesy of GENERAL MOTORS COMPANY

NOTE: **There are several types of plastic collar fuel and evaporative emission quick connect fittings used on this vehicle.**

- **Bartholomew (1)**
- **Q Release (2)**
- **Squeeze to Release (3)**
- **Sliding Retainer (4)**
- **Global Connect (5)**
- **Tl Loc (6)**
- **Safe Lock (7)**
- **Plastic Connector (8)**

The following instructions apply to all of these types of plastic collar quick connect fittings except where indicated.

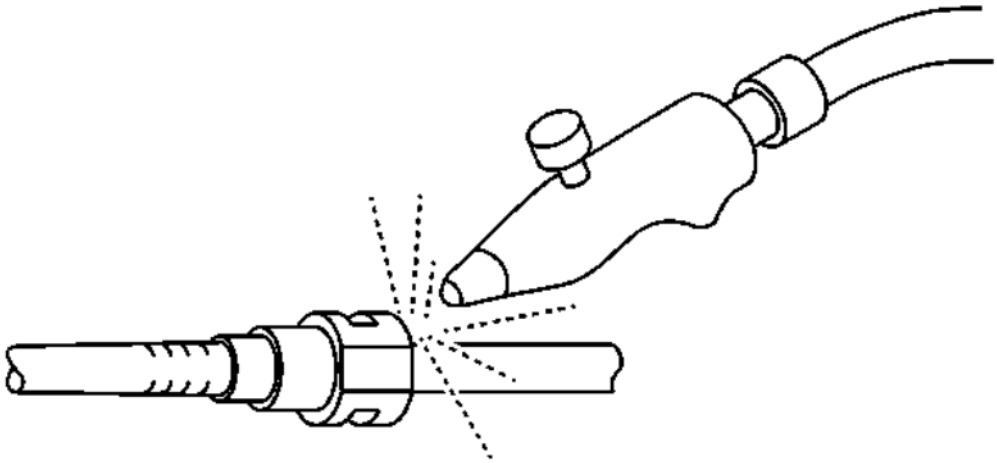

Fig. 20: Blowing Dirt Out Of Fitting (Plastic Collar)
Courtesy of GENERAL MOTORS COMPANY

WARNING: Always apply a few drops of clean engine oil to the male pipe ends before connecting the fuel pipe fittings. This will ensure proper reconnection and prevent a possible fuel leak. Always replace O-rings.

1. Using compressed air, blow any dirt out of the quick-connect fitting.

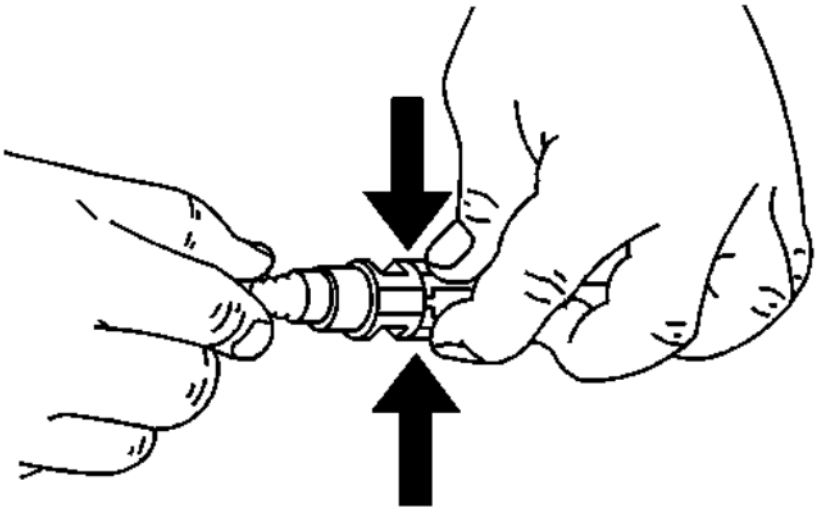

Fig. 21: View Of Quick Connect Fitting Release Tabs (Plastic Collar)
Courtesy of GENERAL MOTORS COMPANY

2. This step applies to Bartholomew style connectors ONLY. Squeeze the plastic quick-connect fitting release tabs.

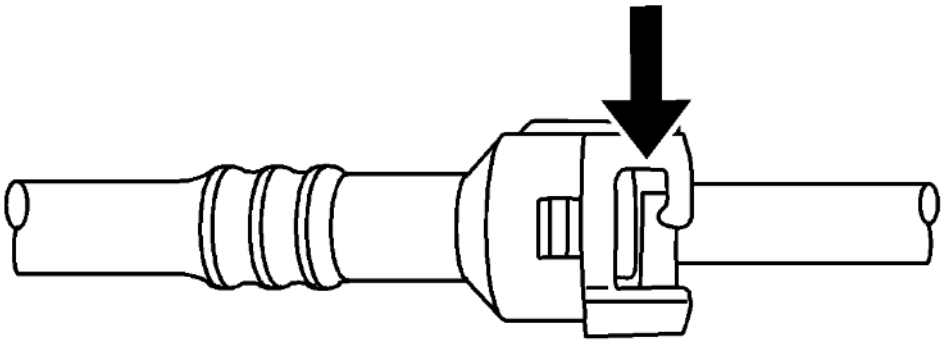

Fig. 22: Releasing Q Release Style Connectors (Plastic Collar)
Courtesy of GENERAL MOTORS COMPANY

3. This step applies to Q Release style connectors ONLY. Release the fitting by Pushing the tab toward the other side of the slot in the fitting.

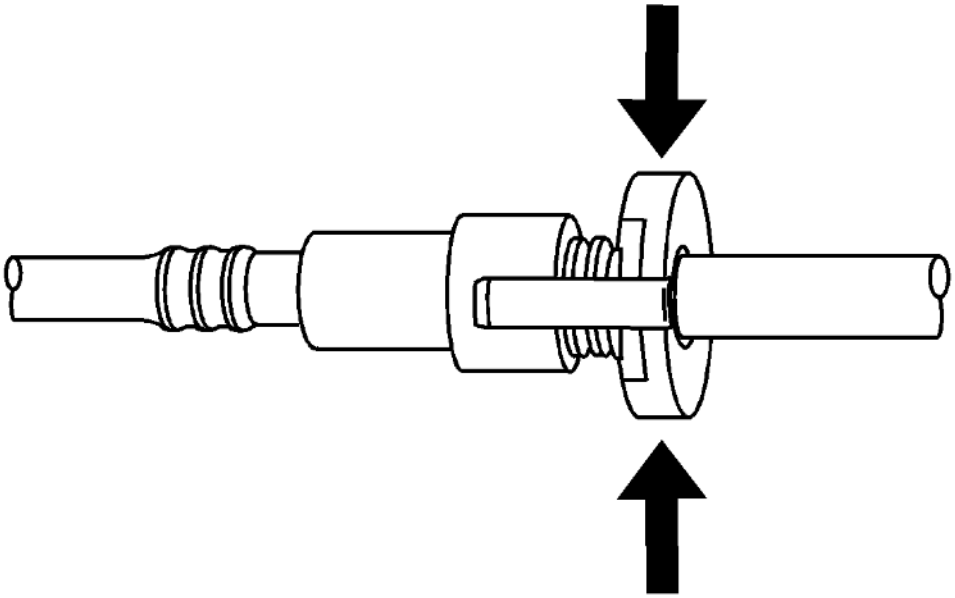

Fig. 23: Disengaging Quick Connect Fitting (Plastic Collar)
Courtesy of GENERAL MOTORS COMPANY

4. This step applies to Squeeze to Release style connectors ONLY. Squeeze where indicated by arrows on both sides of the plastic ring surrounding the quick-connect fitting.

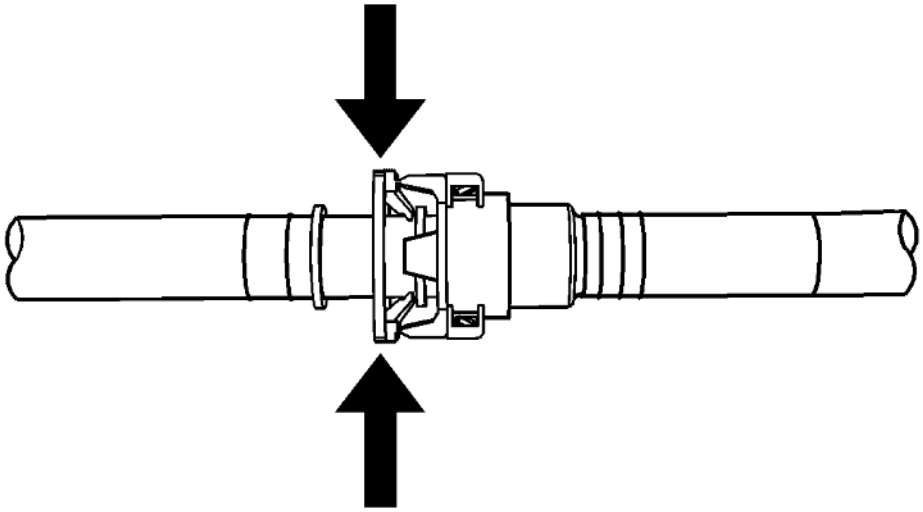

Fig. 24: Pushing In Male Side Of Connector
Courtesy of GENERAL MOTORS COMPANY

5. This step applies to Squeeze to Release style connectors ONLY. Push in the male side slightly in order to slide the retainer away from the retainers, squeeze where indicated by arrows on both sides of the plastic ring surrounding the quick-connect fitting.

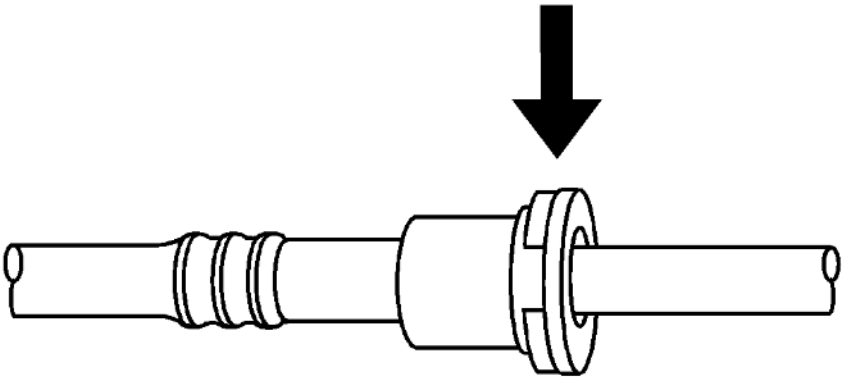

Fig. 25: View Of Sliding Retainer Style Connector
Courtesy of GENERAL MOTORS COMPANY

6. This step applies to Sliding Retainer style connectors ONLY. Release the fitting by pressing on one side of the release tab causing it to push in slightly. If the tab doesn't move try pressing the tab in from the opposite side. The tab will only move in one direction.

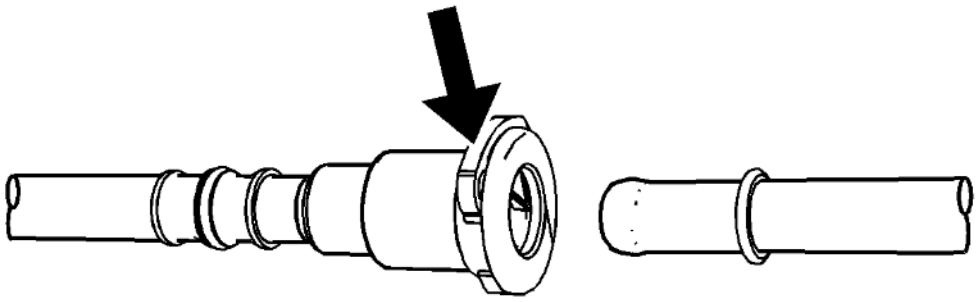

Fig. 26: Global Connector Style
Courtesy of GENERAL MOTORS COMPANY

7. This step applies to the Global Connector style only. Push the connector toward the tube in order to release the pressure. Press and hold down the release mechanism, and pull the connector straight out.

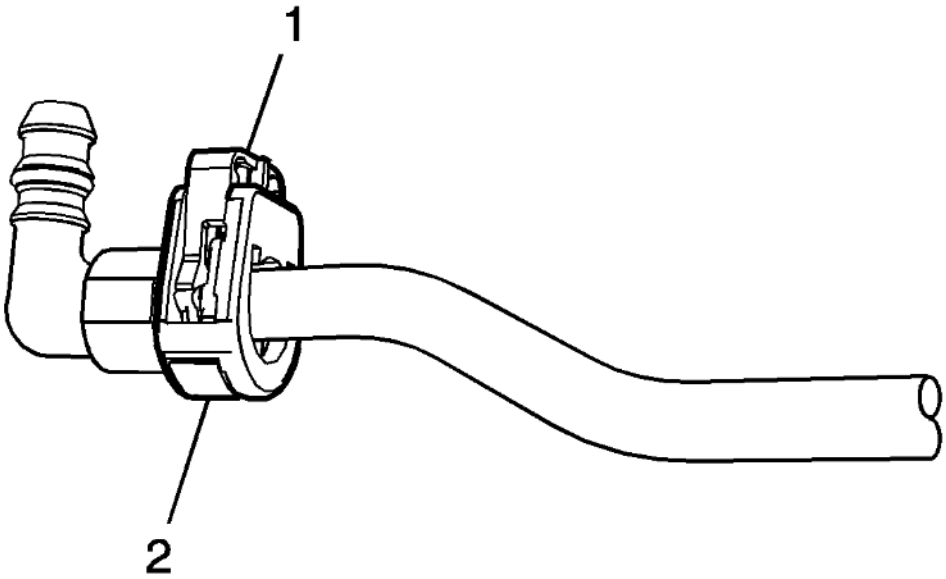

Fig. 27: TI Loc style
Courtesy of GENERAL MOTORS COMPANY

8. This step applies to the TI Loc style only. Push the connector toward the tube in order to release the pressure. Release the redundant latch (1) with two fingers or a flat bladed tool. Then press and hold down the bottom release mechanism (2) and pull the connector straight out.

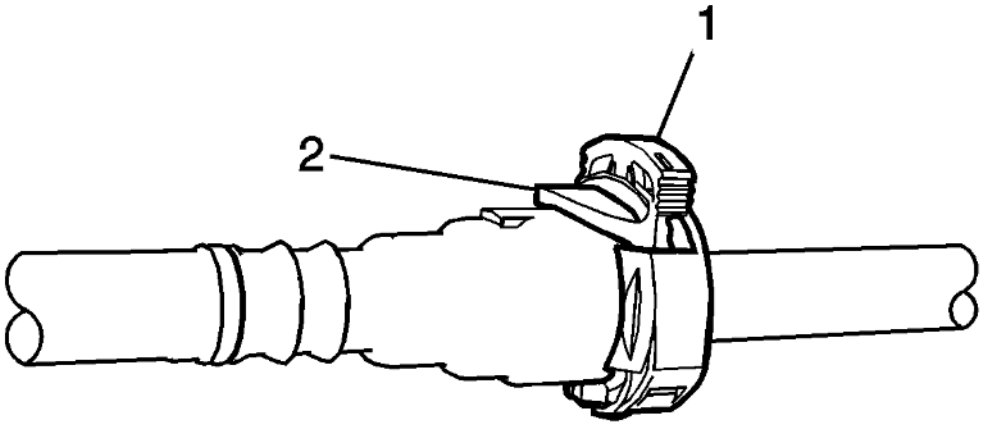

Fig. 28: Safe Lock Style
Courtesy of GENERAL MOTORS COMPANY

WARNING: Refer to Relieving Fuel Pressure Warning .

9. This step applies to the Safe Lock style only. Push the connector toward the tube in order to release the pressure. Release the second latch (1) with two fingers. Then press and hold down the bottom release mechanism (2) and pull the connector straight out.

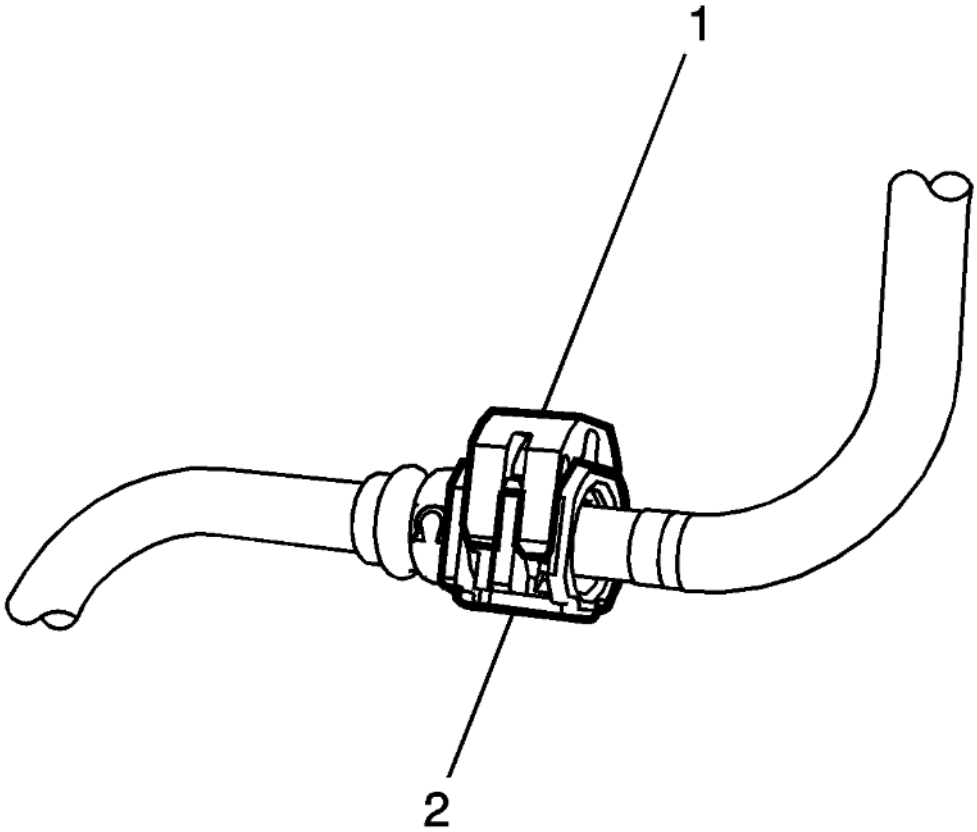

Fig. 29: Releasing Latch And Pulling Connector Straight Out
Courtesy of GENERAL MOTORS COMPANY

10. This step applies to the Plastic Connector style 8, push the connector toward the tube in order to release the pressure. Press the latch (1) inward in order to release the pipe, while pulling the connector (2) straight out.
11. Using a clean shop towel, wipe off the male pipe end.
12. Inspect both ends of the fitting for dirt and burrs.
13. Clean or replace components as necessary.

Installation Procedure

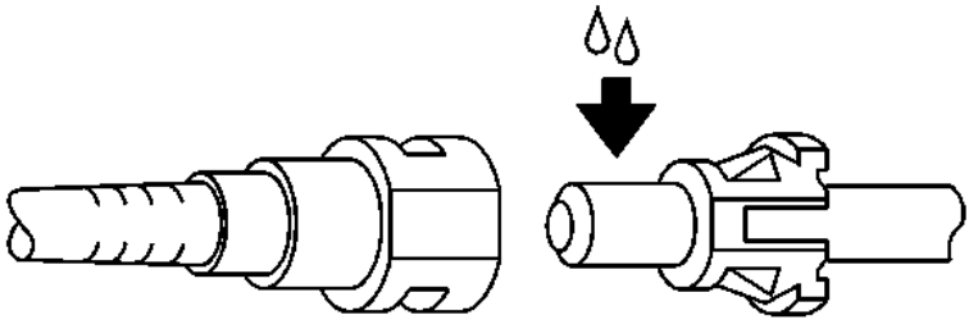

Fig. 30: Lubricating Male Pipe End
Courtesy of GENERAL MOTORS COMPANY

WARNING: Always apply a few drops of clean engine oil to the male pipe ends before connecting the fuel pipe fittings. This will ensure proper reconnection and prevent a possible fuel leak. Always replace O-rings.

1. Apply a few drops of clean engine oil to the male pipe end.

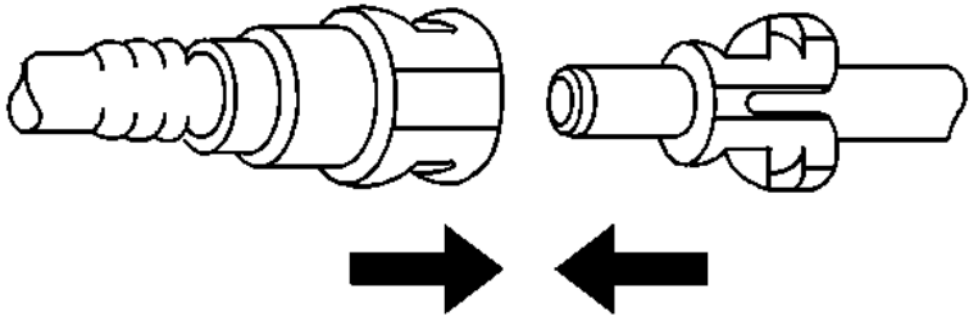

Fig. 31: Connecting Quick-Connect Fittings
Courtesy of GENERAL MOTORS COMPANY

2. Push both sides of the quick-connect fitting together in order to cause the retaining feature to snap into place.

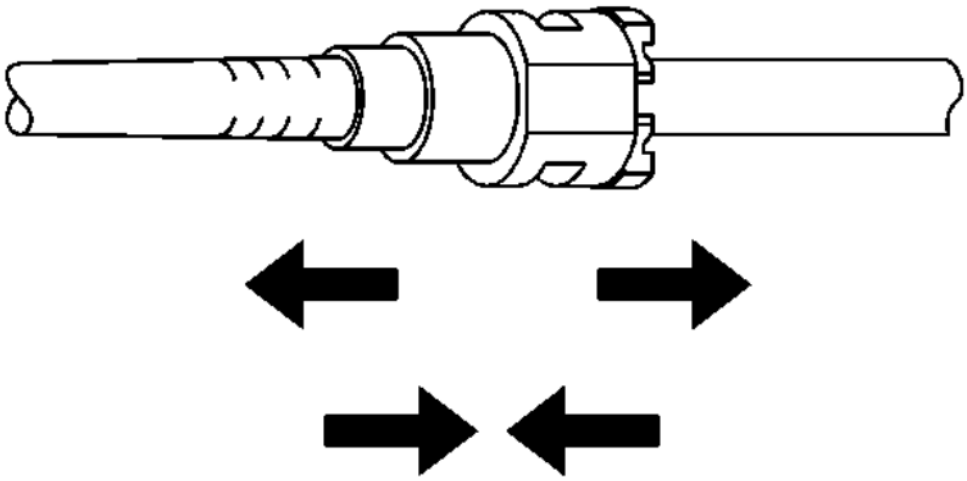

Fig. 32: View Of Quick-Connect Fitting
Courtesy of GENERAL MOTORS COMPANY

3. Pull on both sides of the quick-connect fitting to make sure the connection is secure.

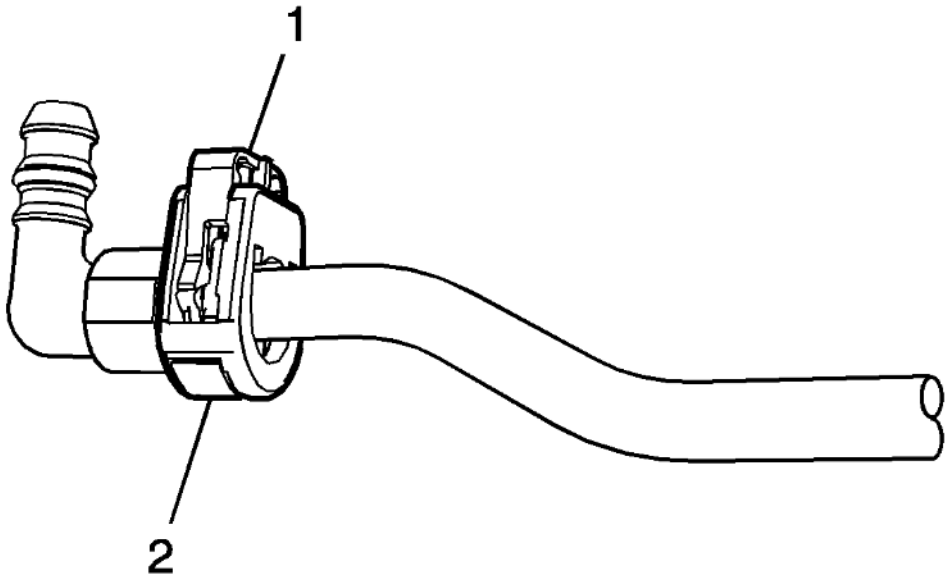

Fig. 33: TI Loc style
Courtesy of GENERAL MOTORS COMPANY

4. Insert the tube in the connector until the retainer snaps in place.
5. Push down on the redundant latch (1) until it is fully engaged and snapped into position.

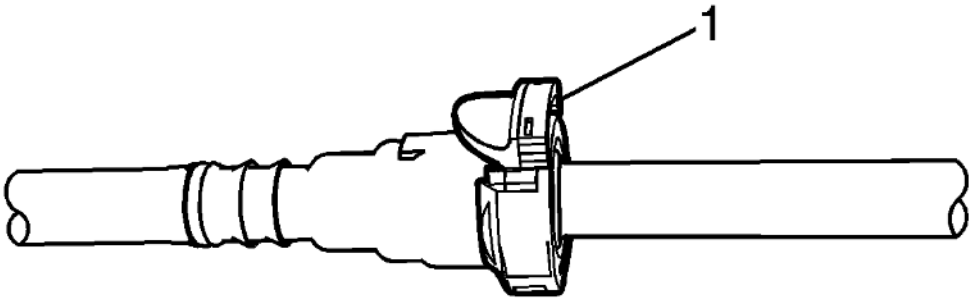

Fig. 34: Push Down On Redundant Latch Until It Is Fully Engaged And Snapped Into Position.
Courtesy of GENERAL MOTORS COMPANY

6. Insert the tube in the connector until the retainer snaps in place.
7. Push down on the second latch (1) in order to secure the connection.

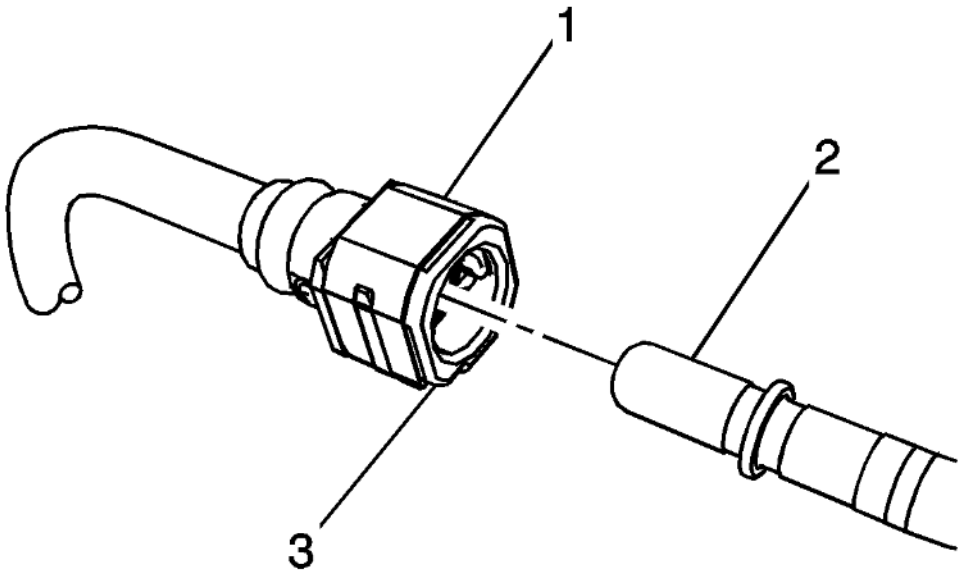

Fig. 35: Latch And Connector
Courtesy of GENERAL MOTORS COMPANY

8. For the plastic connector type 8, depress the latch (1) while inserting the connector (3) on to the pipe (2) .
9. Move the latch (1) upward in order to secure the connection.
10. Inspect for leaks using the following procedure:
    1. Turn the ignition ON, with the engine OFF for 2 seconds.
    2. Turn the ignition OFF, for 10 seconds.
    3. Turn the ignition ON, with the engine OFF for 2 seconds.
    4. Turn the ignition OFF.
    5. Inspect for leaks.

FUEL TANK DRAINING (NON E-85)

Special Tool

CH 45004 Fuel Tank Drain Hose

WARNING: Never drain or store fuel in an open container. Always use an

approved fuel storage container in order to reduce the chance of fire or explosion.

WARNING: Place a dry chemical (Class B) fire extinguisher nearby before performing any on-vehicle service procedures. Failure to follow these precautions may result in personal injury.

1. Remove the fuel fill cap.

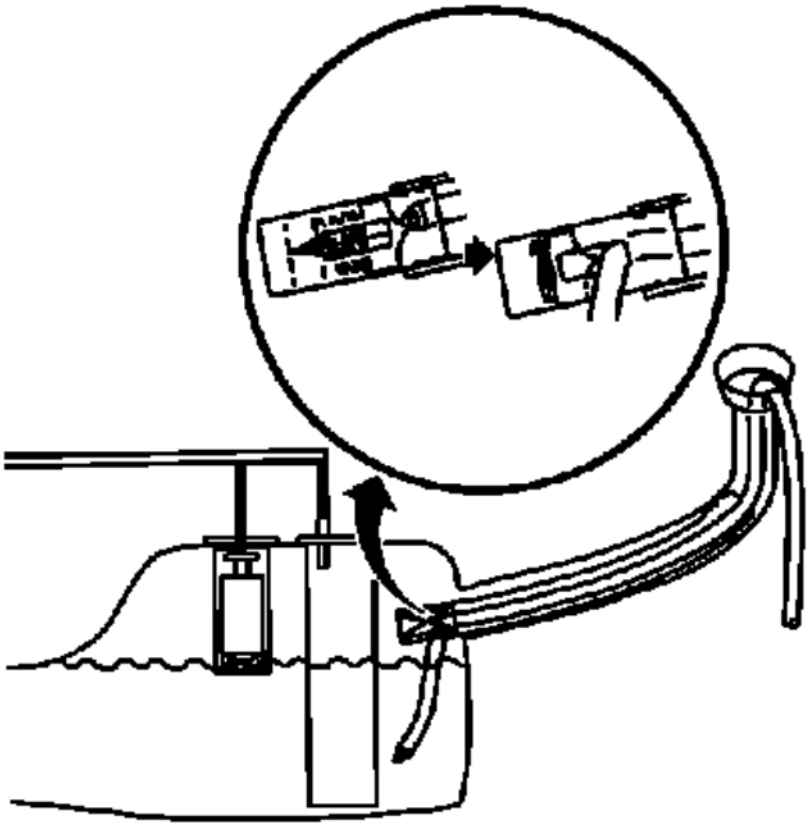

Fig. 36: Draining Fuel Tank
Courtesy of GENERAL MOTORS COMPANY

NOTE: Lubricate the fuel drain hose with Transjel Lubricant or equivalent to aid in hose insertion.

2. Insert the **CH 45004** hose into the fuel tank until the bottom is reached.
3. Use a hand or air operated pump device in order to drain as much fuel through the fuel fill pipe as possible.

FUEL TANK DRAINING (E-85)

Special Tools

- **J 36850** Transjel Lubricant
- **J 45004** Fuel Tank Drain Hose

WARNING: Never drain or store fuel in an open container. Always use an approved fuel storage container in order to reduce the chance of fire or explosion.

WARNING: Place a dry chemical (Class B) fire extinguisher nearby before performing any on-vehicle service procedures. Failure to follow these precautions may result in personal injury.

1. Raise and Support the Vehicle. Refer to **Lifting and Jacking the Vehicle**

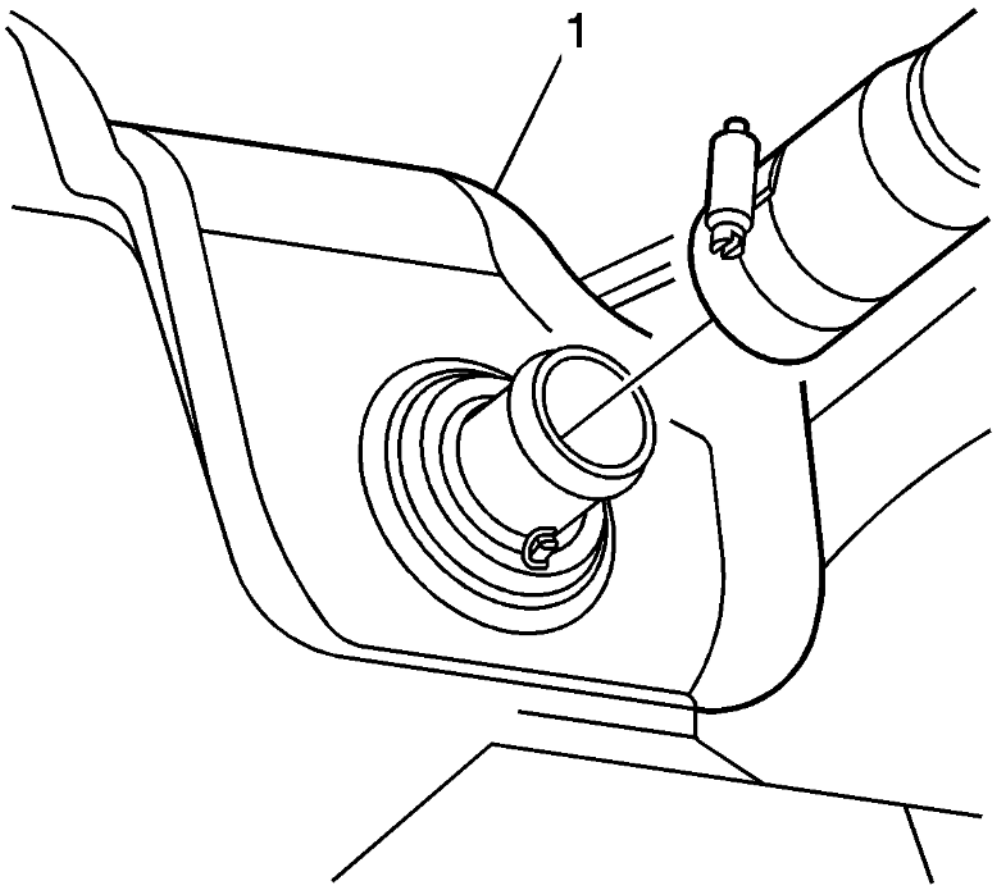

Fig. 37: Fuel Tank & Drain Hose
Courtesy of GENERAL MOTORS COMPANY

NOTE: Lubricate the fuel drain hose with J 36850 transjel lubricant or equivalent to aid in hose insertion. Do not use an unapproved lubricant.

2. Loosen the lower fill hose clamp in order to separate the fill hose from the fuel tank (1).

3. Insert the **J 45004** fuel tank drain hose into the fuel tank (1) until the hose reaches the bottom of the fuel tank.
4. Use a hand or air operated pump device in order to drain as much fuel from the fuel tank as possible.

FUEL TANK PROTECTOR REPLACEMENT

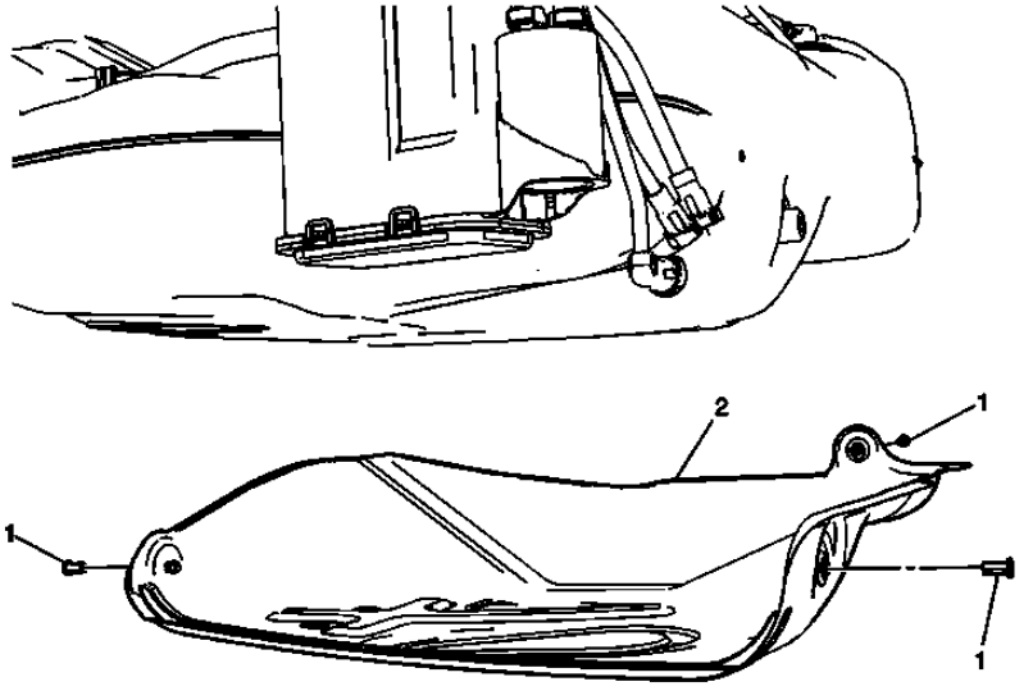

Fig. 38: Fuel Tank Protector & Retainers
Courtesy of GENERAL MOTORS COMPANY

Fuel Tank Protector Replacement

Callout	Component Name
Preliminary Procedure Remove the left fuel tank strap. Refer to **Fuel Tank Replacement**.	
1	Fuel Tank Protector Retainer (Qty: 3)
2	Fuel Tank Protector

FUEL TANK REPLACEMENT

Removal Procedure

WARNING: To avoid any vehicle damage, serious personal injury or death when major components are removed from the vehicle and the vehicle is supported by a hoist, support the vehicle with jack stands at the opposite end from which the components are being removed and strap the vehicle to the hoist.

WARNING: Refer to Gasoline/Gasoline Vapors Warning .

WARNING: Refer to Safety Glasses Warning .

1. Relieve the system fuel pressure. Refer to **Fuel Pressure Relief**.
2. Drain the fuel tank. Refer to **Fuel Tank Draining (Non E-85)**, **Fuel Tank Draining (E-85)**.

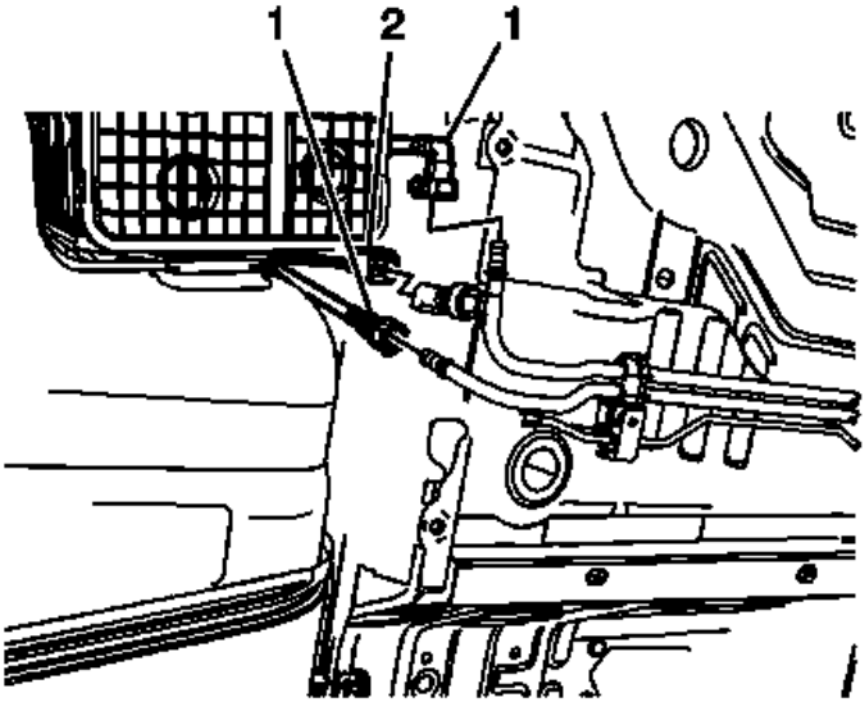

Fig. 39: Evaporative Emission, Fuel Pipes And Fuel Pressure Sensor Electrical Connector
Courtesy of GENERAL MOTORS COMPANY

3. Disconnect the evaporative emission and fuel pipes (1). Refer to **Plastic Collar Quick Connect Fitting Service**.
4. Disconnect the fuel pressure sensor electrical connector (2).

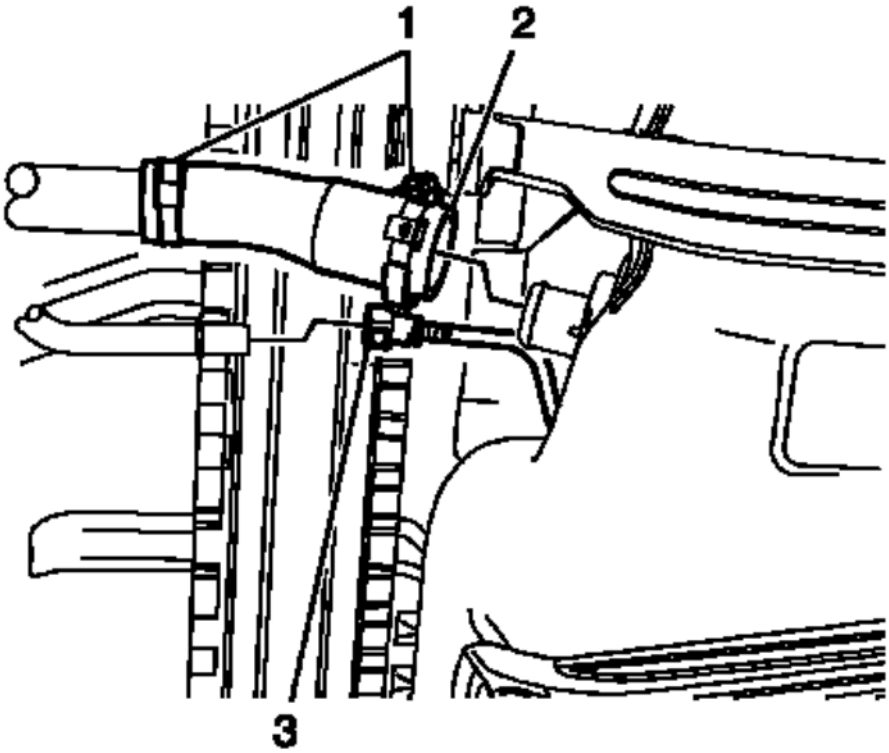

Fig. 40: Hose Clamps & Filler Tube
Courtesy of GENERAL MOTORS COMPANY

5. Loosen the hose clamps (1) and remove the filler tube (2).
6. Disconnect the evaporative emission line (3). Refer to **Plastic Collar Quick Connect Fitting Service**.

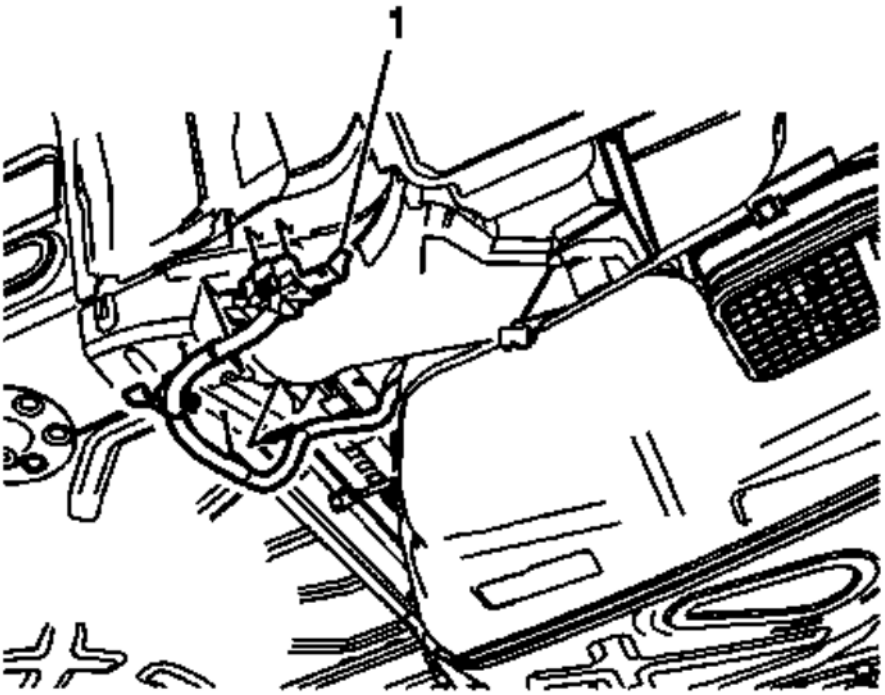

Fig. 41: Fuel Tank Harness Electrical Connector
Courtesy of GENERAL MOTORS COMPANY

7. Disconnect the fuel tank harness electrical connector (1).

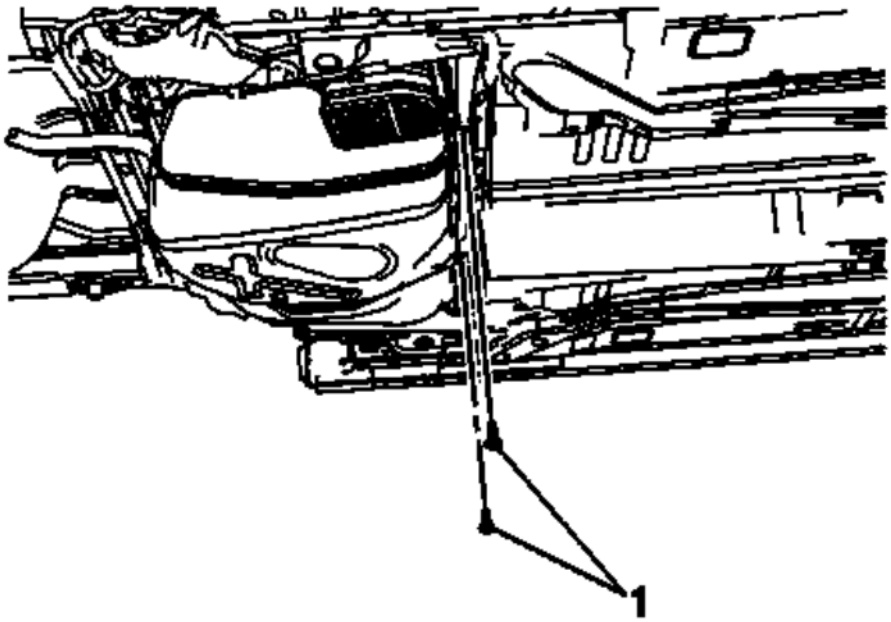

Fig. 42: Fuel Tank Strap Bolts
Courtesy of GENERAL MOTORS COMPANY

8. Support the fuel tank with a suitable jack.
9. Remove the fuel tank strap bolts (1).

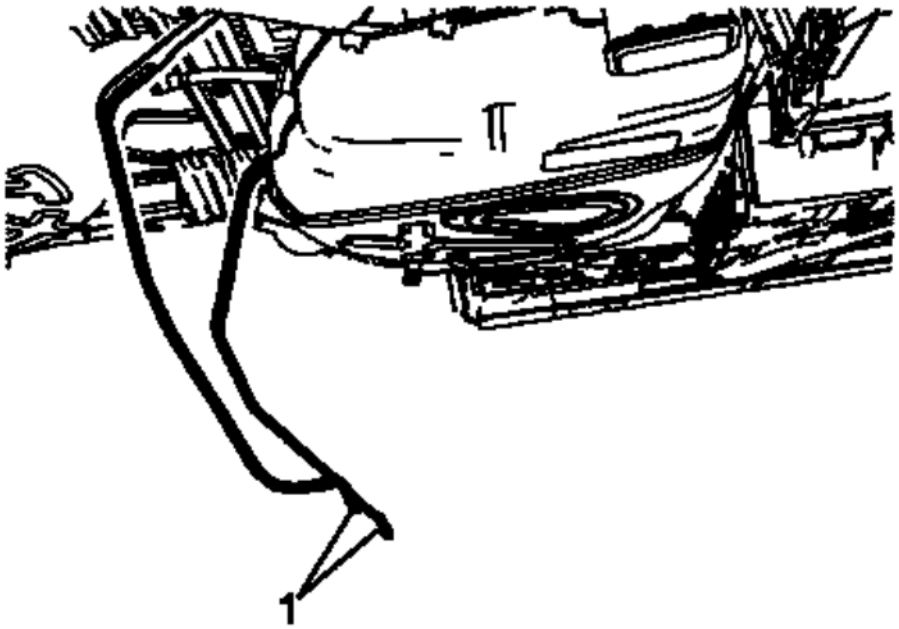

Fig. 43: Fuel Tank Straps
Courtesy of GENERAL MOTORS COMPANY

10. Swing the fuel tank straps (1) out of the way.

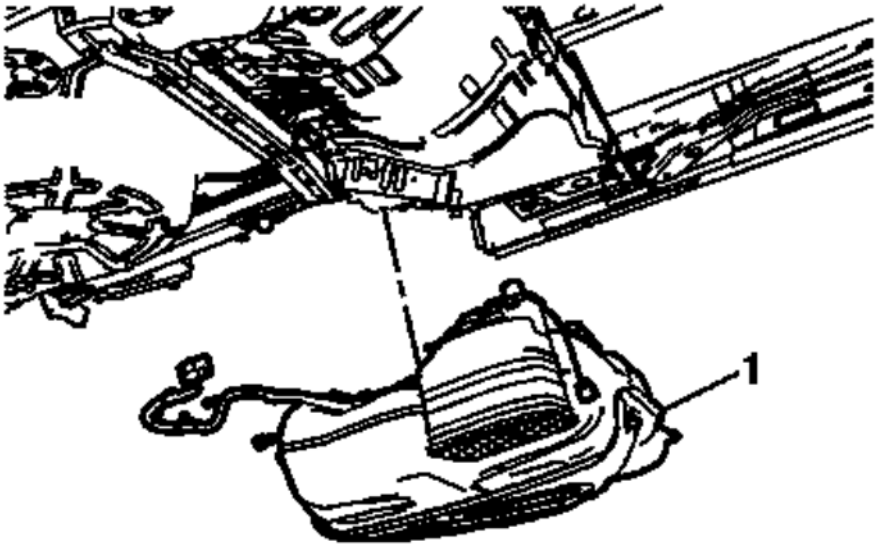

Fig. 44: Fuel Tank
Courtesy of GENERAL MOTORS COMPANY

11. Remove the fuel tank (1).
12. Remove the following components if replacing just the fuel tank.
    1. Fuel tank fuel pump module. Refer to **Fuel Tank Fuel Pump Module Replacement (NU6)**, **Fuel Tank Fuel Pump Module Replacement (NT7)**.
    2. Evaporative emission carbon canister. Refer to **Evaporative Emission Canister Replacement**.
    3. Transfer components as necessary.
    4. Remove the fuel tank protector. Refer to **Fuel Tank Protector Replacement**

Installation Procedure

1. Install the following components if fuel tank replacement was necessary:
    1. Fuel tank fuel pump module. Refer to **Fuel Tank Fuel Pump Module Replacement (NU6)**, **Fuel Tank Fuel Pump Module Replacement (NT7)**.
    2. Evaporative emission carbon canister. Refer to **Evaporative Emission Canister Replacement**.
    3. Install the fuel tank protector. Refer to **Fuel Tank Protector Replacement**

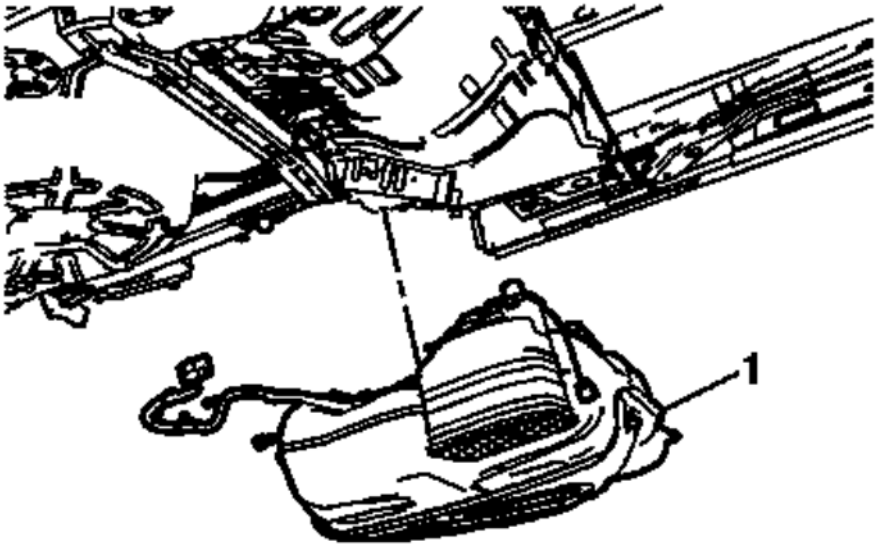

Fig. 45: Fuel Tank
Courtesy of GENERAL MOTORS COMPANY

2. Use a suitable jack and install the fuel tank (1).

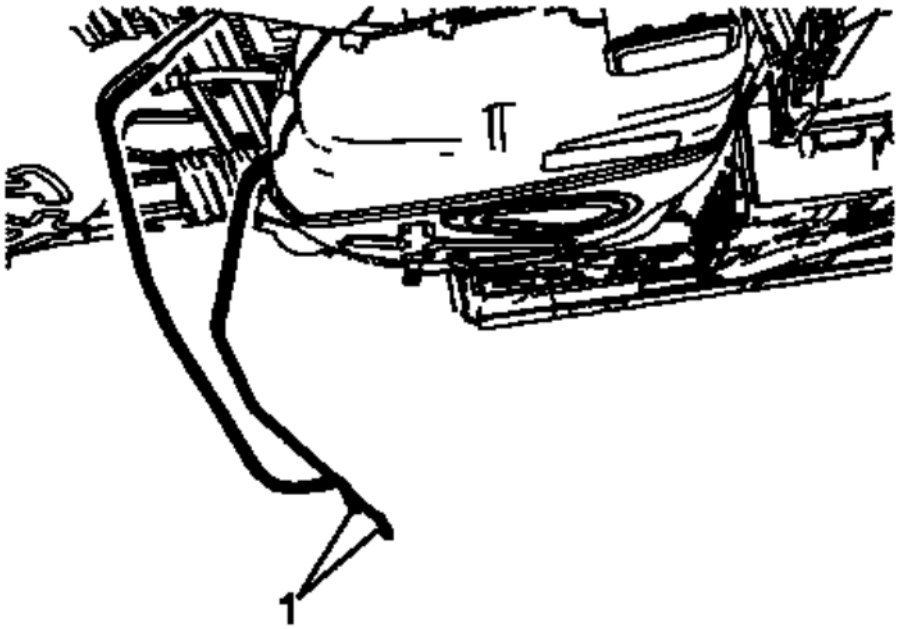

Fig. 46: Fuel Tank Straps
Courtesy of GENERAL MOTORS COMPANY

3. Reposition the fuel tank straps (1).

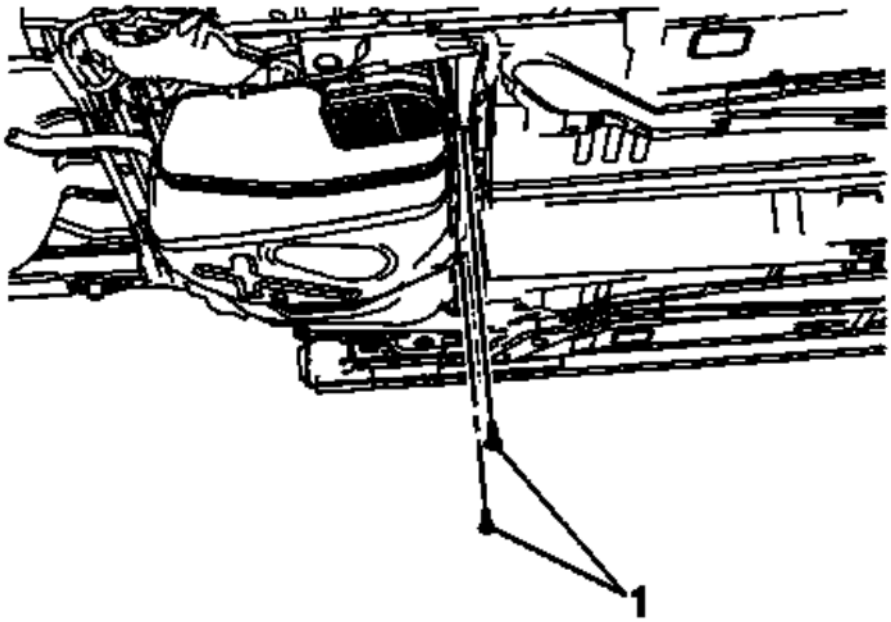

Fig. 47: Fuel Tank Strap Bolts
Courtesy of GENERAL MOTORS COMPANY

CAUTION: Refer to Fastener Caution .

4. Install the fuel tank strap bolts (1) and tighten to 20 N.m (15 lb ft).

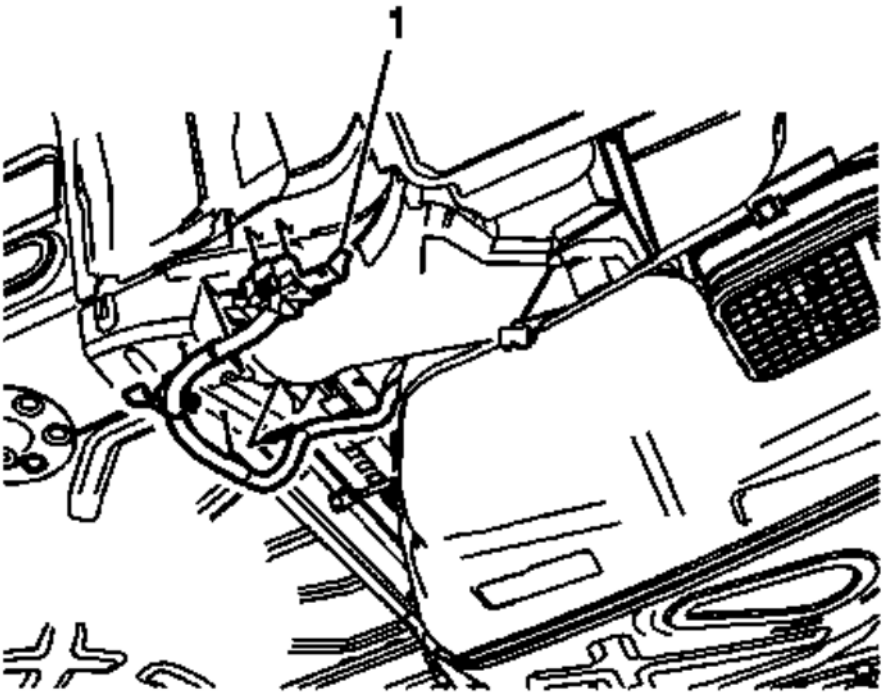

Fig. 48: Fuel Tank Harness Electrical Connector
Courtesy of GENERAL MOTORS COMPANY

5. Connect the fuel tank harness electrical connector (1).

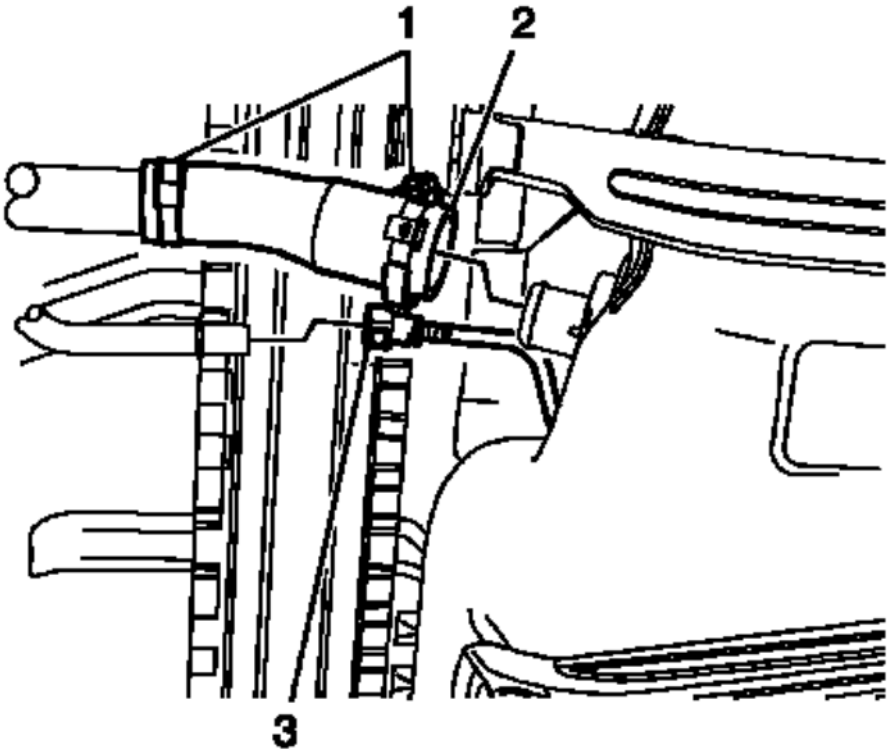

Fig. 49: Hose Clamps & Filler Tube
Courtesy of GENERAL MOTORS COMPANY

6. Install the filler tube (2) and tighten the hose clamps (1) to 4Y(35 lb in).
7. Connect the evaporative emission line (3). Refer to **Plastic Collar Quick Connect Fitting Service**.

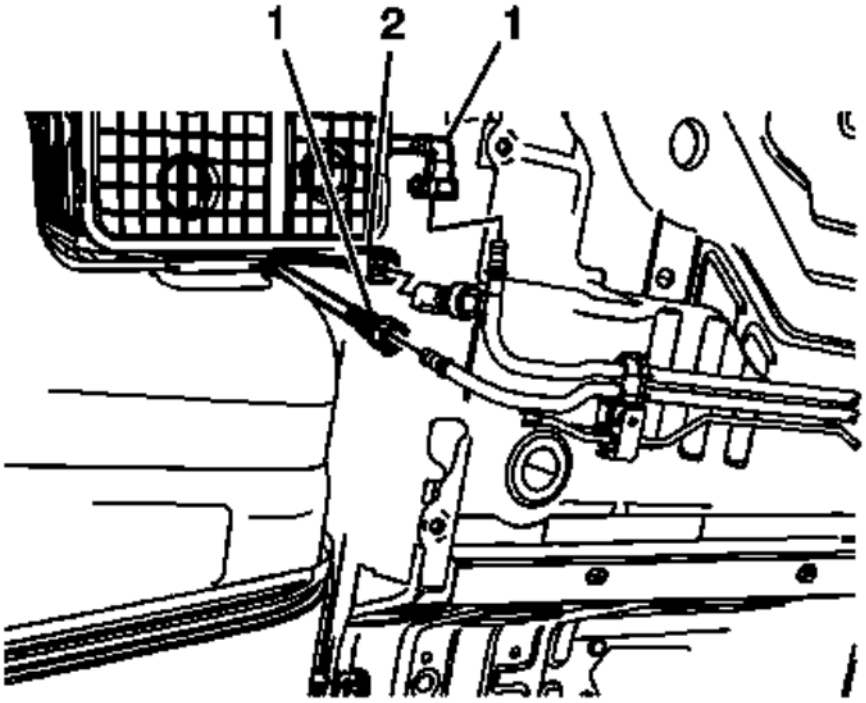

Fig. 50: Evaporative Emission, Fuel Pipes And Fuel Pressure Sensor Electrical Connector
Courtesy of GENERAL MOTORS COMPANY

8. Connect the evaporative emission and fuel pipes (1). Refer to **Plastic Collar Quick Connect Fitting Service**.
9. Connect the fuel pressure sensor electrical connector (2).
10. Install the fuel tank protector. Refer to **Fuel Tank Protector Replacement**
11. Refill the fuel tank.
12. Inspect for fuel leaks.

FUEL SYSTEM CLEANING

1. Remove the fuel tank. Refer to **Fuel Tank Replacement**.
2. Remove the fuel pump module. Refer to **Fuel Tank Fuel Pump Module Replacement (NU6)**, **Fuel Tank Fuel Pump Module Replacement (NT7)**.
3. Inspect the fuel pump module strainer. Replace the pump module assembly if the fuel strainer is contaminated.

NOTE: **When flushing the fuel tank, handle the fuel and water mixture as a hazardous material. Handle the fuel and water in accordance with all applicable local, state, and federal laws and regulations.**

4. Flush the fuel tank with hot water.

5. Pour the water out of the fuel sender assembly opening in the fuel tank. Rock the fuel tank in order to be sure that the removal of the water from the fuel tank is complete.
6. Allow the tank to dry completely before reassembly.
7. Disconnect the fuel feed pipe at the engine fuel rail. Refer to **Metal Collar Quick Connect Fitting Service**.

NOTE: Only use oil-free compressed air to blow out the fuel pipes.

8. Clean the fuel pipes by applying air pressure in the opposite direction of the fuel flow.
9. Connect the fuel feed pipe to the engine fuel rail. Refer to **Metal Collar Quick Connect Fitting Service**.
10. Install the fuel pump module. Refer to **Fuel Tank Fuel Pump Module Replacement (NU6)**, **Fuel Tank Fuel Pump Module Replacement (NT7)**.
11. Install the fuel tank. Refer to **Fuel Tank Replacement**.

FUEL TANK FUEL PUMP MODULE REPLACEMENT (NU6)

Special Tools

J 45722 Fuel Sender Lock Ring Wrench

For equivalent regional tools, refer to **Special Tools (Diagnostic Tools)** , **Special Tools (Mechanical Tools)** .

Removal Procedure

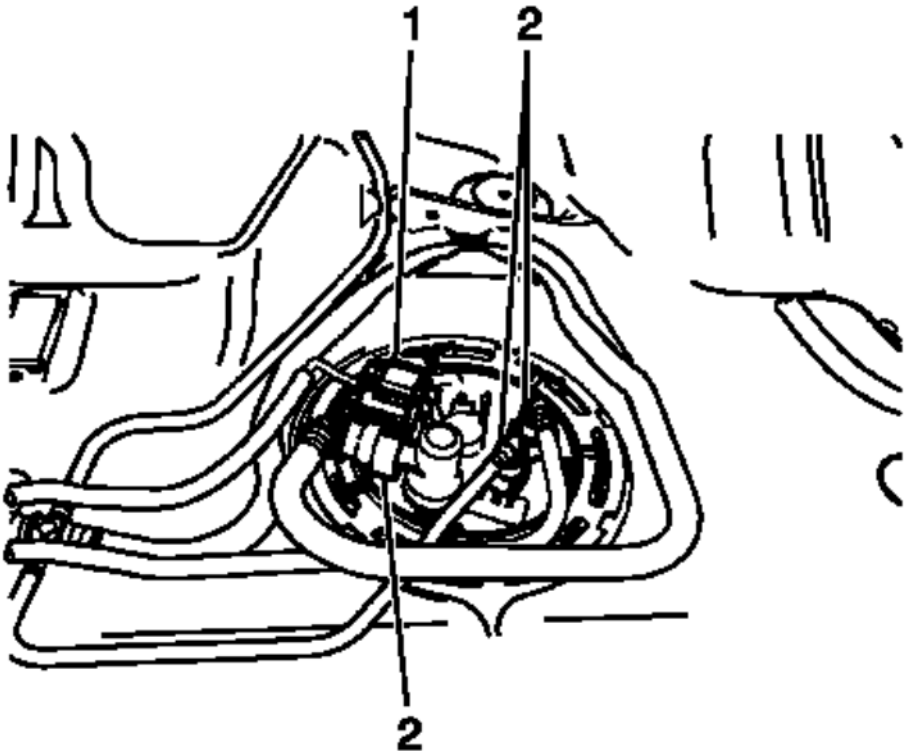

Fig. 51: Fuel Pump Electrical Connector & Quick Connects
Courtesy of GENERAL MOTORS COMPANY

WARNING: Refer to Gasoline/Gasoline Vapors Warning .

1. Remove the fuel tank. Refer to **Fuel Tank Replacement**.
2. Disconnect the fuel pump electrical connector (1) and the quick connects (2). Refer to **Plastic Collar Quick Connect Fitting Service**.

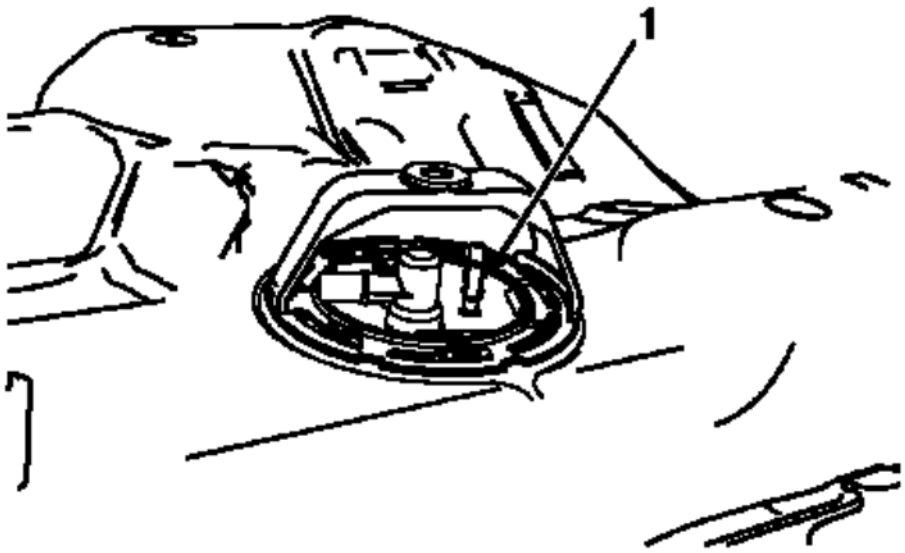

Fig. 52: Lock Ring
Courtesy of GENERAL MOTORS COMPANY

3. Use the **J 45722** fuel sender lock ring wrench and remove the lock ring (1).

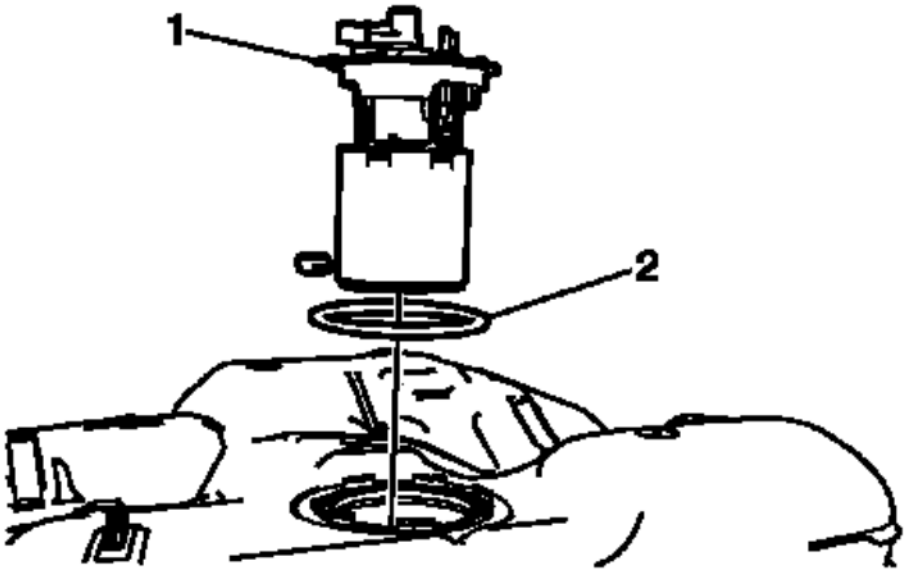

Fig. 53: Fuel Tank Module And O-Ring
Courtesy of GENERAL MOTORS COMPANY

4. Remove the fuel tank module (1) and the O-ring (2).

Installation Procedure

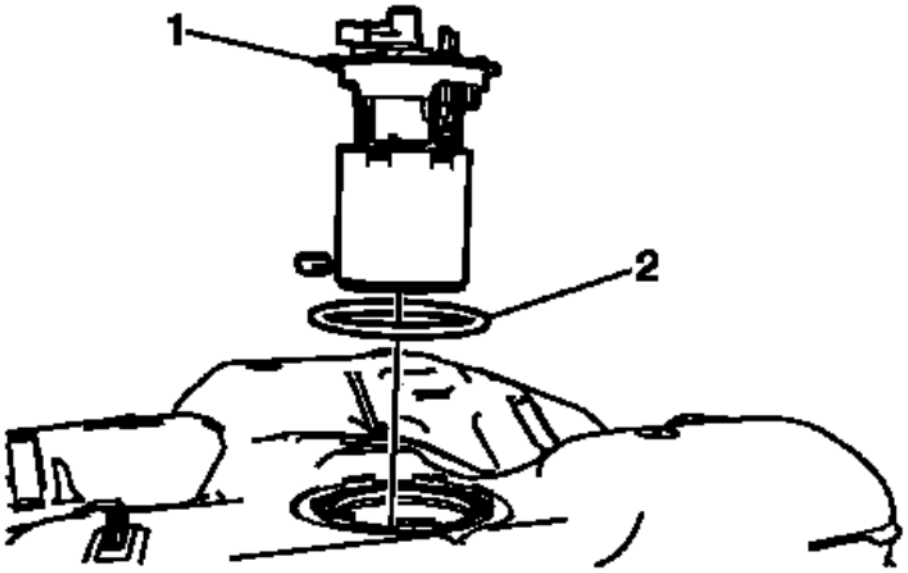

Fig. 54: Fuel Tank Module And O-Ring
Courtesy of GENERAL MOTORS COMPANY

1. Install a NEW seal (2) and the fuel tank module (1).

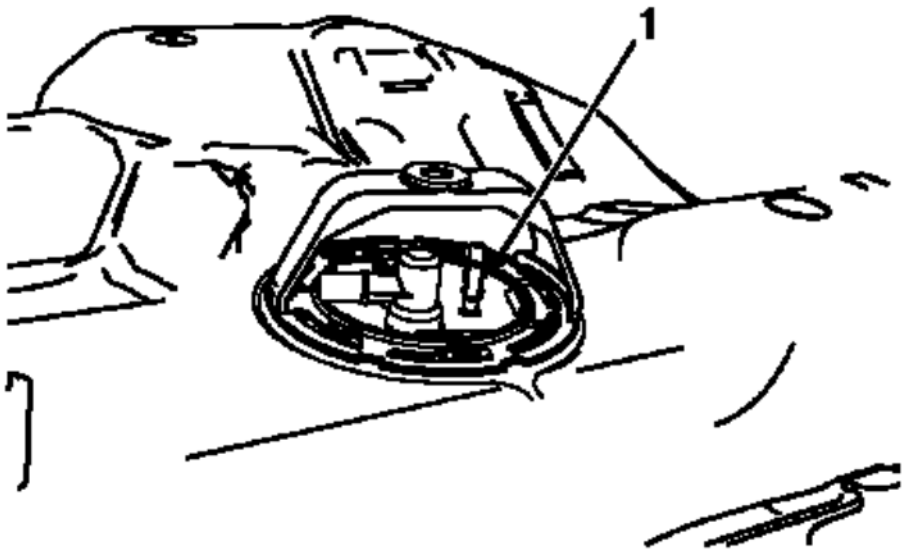

Fig. 55: Lock Ring
Courtesy of GENERAL MOTORS COMPANY

2. Use the **J 45722** fuel sender lock ring wrench and install the lock ring (1).

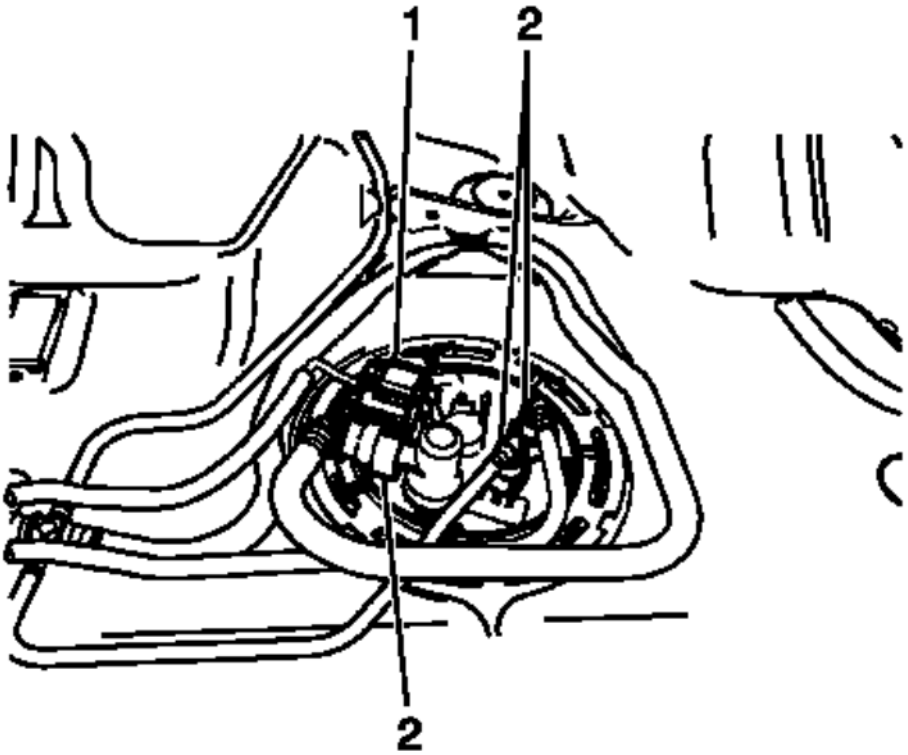

Fig. 56: Fuel Pump Electrical Connector & Quick Connects
Courtesy of GENERAL MOTORS COMPANY

3. Connect the fuel pump electrical connector (1) and the quick connects (2). Refer to **Plastic Collar Quick Connect Fitting Service**.
4. Install the fuel tank. Refer to **Fuel Tank Replacement**.

FUEL TANK FUEL PUMP MODULE REPLACEMENT (NT7)

Special Tools

J 45722 Fuel Sender Lock Ring Wrench

For equivalent regional tools, refer to **Special Tools (Diagnostic Tools)** , **Special Tools (Mechanical Tools)** .

Removal Procedure

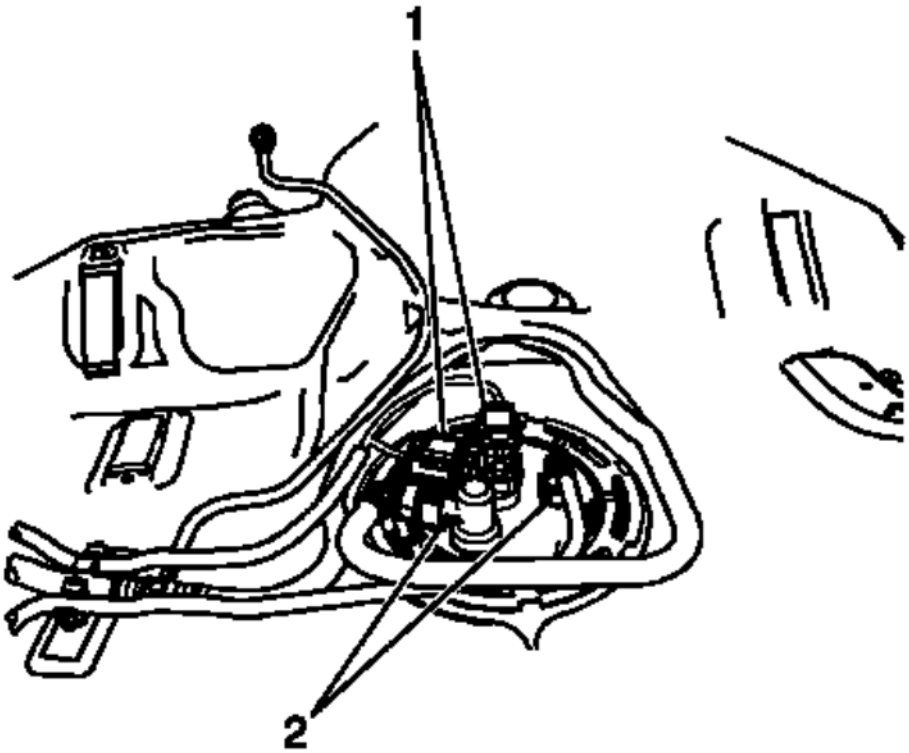

Fig. 57: Fuel Pump Electrical Connector & Quick Connects
Courtesy of GENERAL MOTORS COMPANY

WARNING: Refer to Gasoline/Gasoline Vapors Warning .

1. Remove the fuel tank. Refer to **Fuel Tank Replacement**.
2. Disconnect the fuel pump electrical connector and the fuel tank pressure sensor electrical connector (1) and the quick connects (2). Refer to **Plastic Collar Quick Connect Fitting Service**.

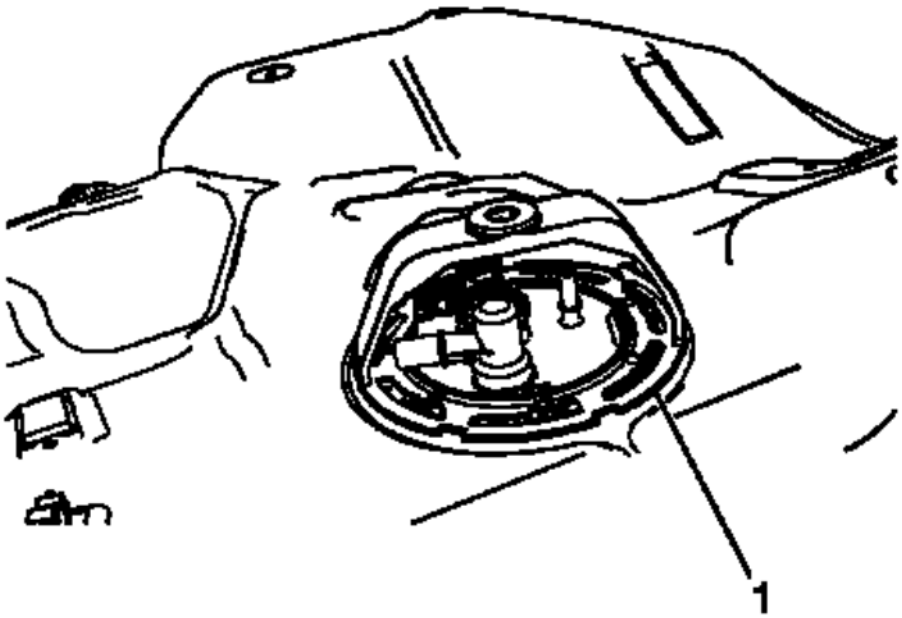

Fig. 58: Lock Ring
Courtesy of GENERAL MOTORS COMPANY

3. Use the **J 45722** fuel sender lock ring wrench and remove the lock ring (1).

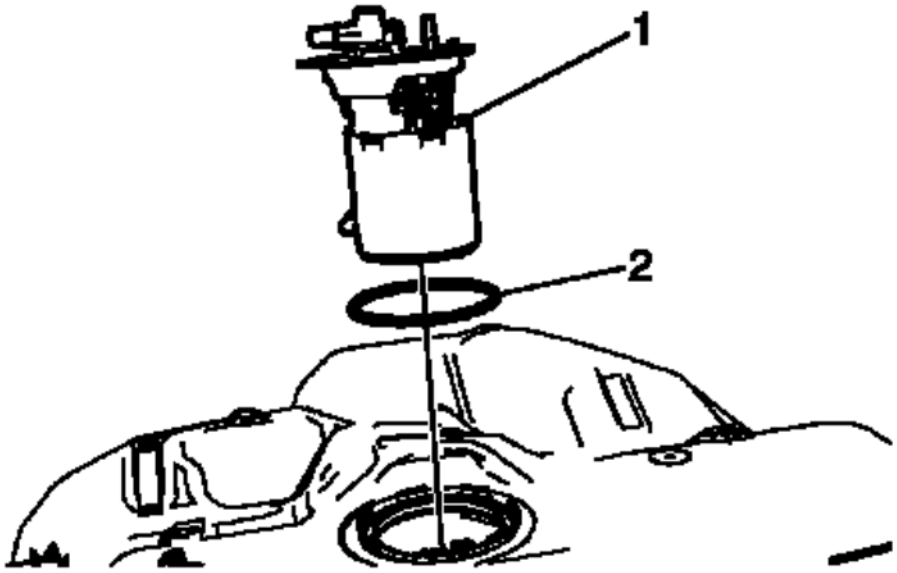

Fig. 59: Fuel Tank Module & O-Ring
Courtesy of GENERAL MOTORS COMPANY

4. Remove the fuel tank module (1) and the O-ring (2).

Installation Procedure

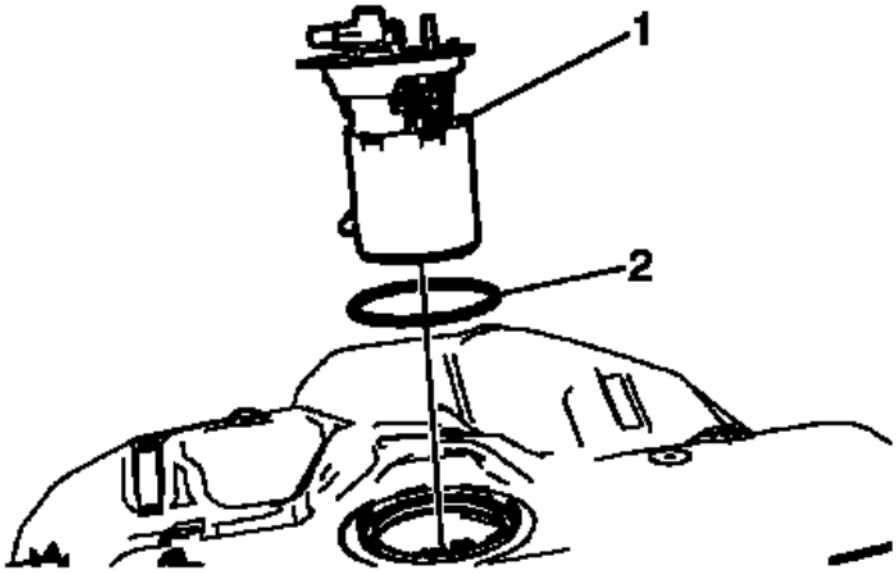

Fig. 60: Fuel Tank Module & O-Ring
Courtesy of GENERAL MOTORS COMPANY

1. Install a NEW seal (2) and the fuel tank module (1).

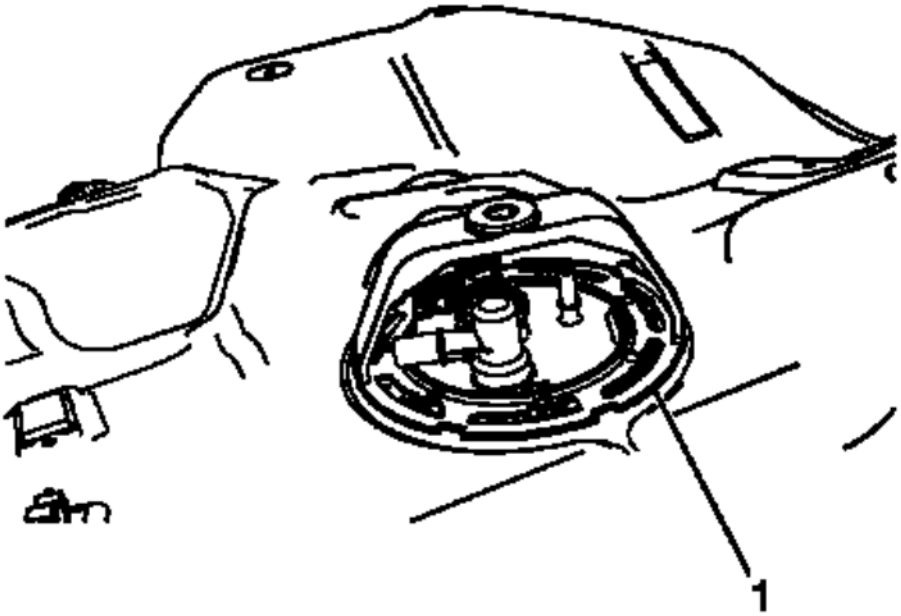

Fig. 61: Lock Ring
Courtesy of GENERAL MOTORS COMPANY

2. Use the **J 45722** fuel sender lock ring wrench and install the lock ring (1).

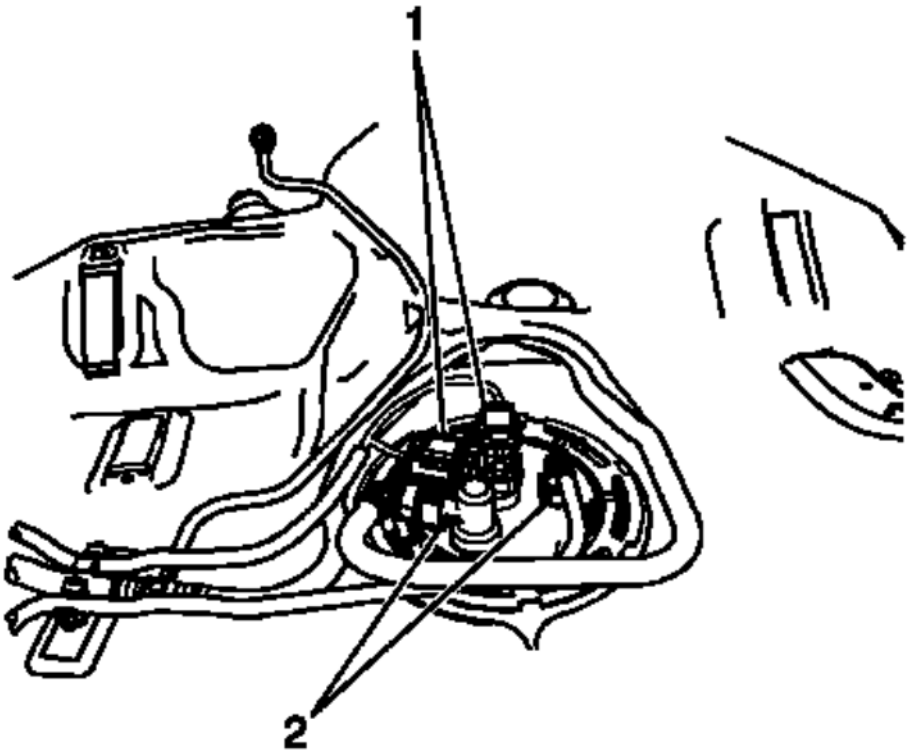

Fig. 62: Fuel Pump Electrical Connector & Quick Connects
Courtesy of GENERAL MOTORS COMPANY

3. Connect the fuel pump electrical connector and the fuel tank pressure sensor electrical connector (1) and the quick connects (2). Refer to **Plastic Collar Quick Connect Fitting Service**.
4. Install the fuel tank. Refer to **Fuel Tank Replacement**.

FUEL PUMP POWER CONTROL MODULE REPLACEMENT

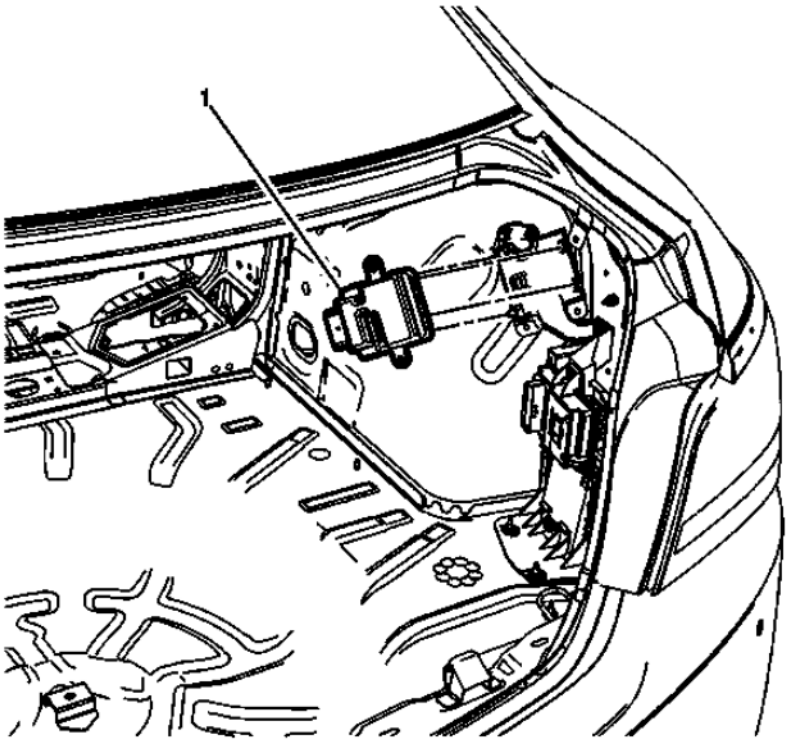

Fig. 63: Fuel Pump Power Control Module
Courtesy of GENERAL MOTORS COMPANY

Fuel Pump Power Control Module Replacement

Callout	Component Name
Preliminary Procedure Remove the passenger rear compartment side trim panel. Refer to **Rear Compartment Side Trim Panel Replacement (without HP6)** , **Rear Compartment Side Trim Panel Replacement (HP6, Left Side)** , **Rear Compartment Side Trim Panel Replacement (HP6, Right Side)** .	
1	Fuel Pump Power Control Module **Procedure** 1. Disconnect the electrical connector. 2. Release the retaining tabs.

CHASSIS CONTROL MODULE REPLACEMENT

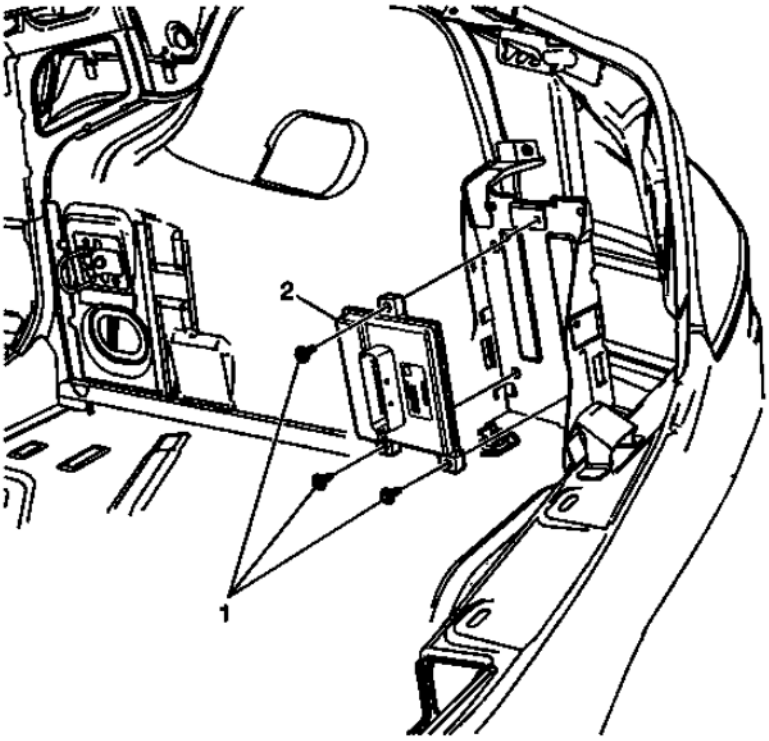

Fig. 64: Chassis Control Module
Courtesy of GENERAL MOTORS COMPANY

NOTE: **Preliminary procedure: Remove the passenger rear side trim panel. Refer to Rear Compartment Side Trim Panel Replacement**

1. Fuel Pump Flow Control Module Fasteners (1). Refer to **Fastener Caution** . Tighten to 9 N.m (80 lb in) when installing.
2. Fuel Pump Flow Control Module (2) procedure:
    1. Disconnect the electrical connector
    2. If replacing, reprogram the module. Refer to **Control Module References**

FUEL PUMP FLOW CONTROL MODULE REPLACEMENT

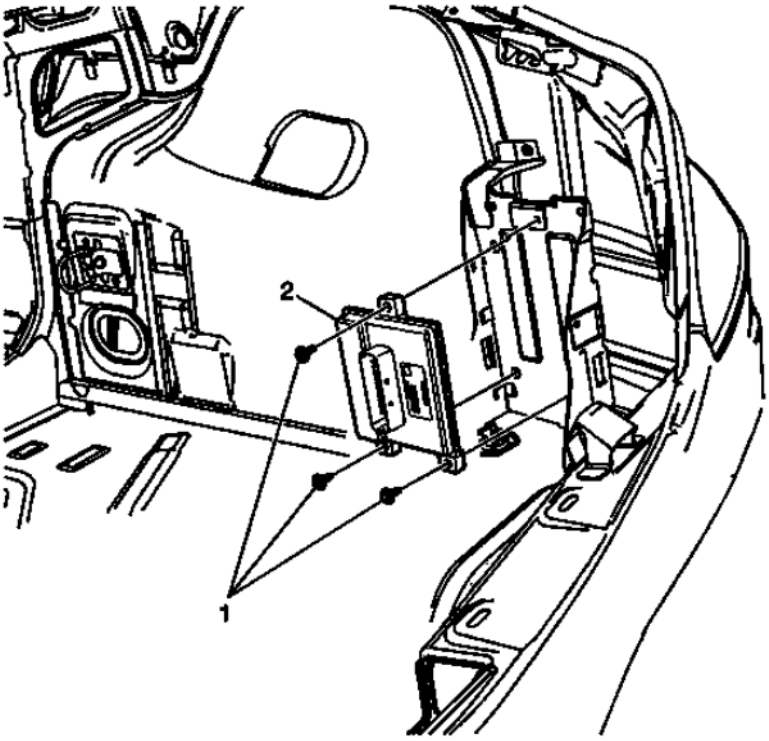

Fig. 65: Fuel Pump Flow Control Module & Fasteners
Courtesy of GENERAL MOTORS COMPANY

Fuel Pump Flow Control Module Replacement

Callout	Component Name
Preliminary Procedure **Remove the passenger rear side trim panel. Refer to Rear Compartment Side Trim Panel Replacement (without HP6) , Rear Compartment Side Trim Panel Replacement (HP6, Left Side) , Rear Compartment Side Trim Panel Replacement (HP6, Right Side) .**	
1	Fuel Pump Flow Control Module Fastener (Qty: 3) **CAUTION:** **Refer to Fastener Caution .** **Tighten** 9 N.m (80 lb in)
2	Fuel Pump Flow Control Module **Procedure** 1. Disconnect the electrical connector. 2. If replacing, reprogram the module. Refer to **Control Module References** .

FUEL TANK PRESSURE SENSOR REPLACEMENT (NT7)

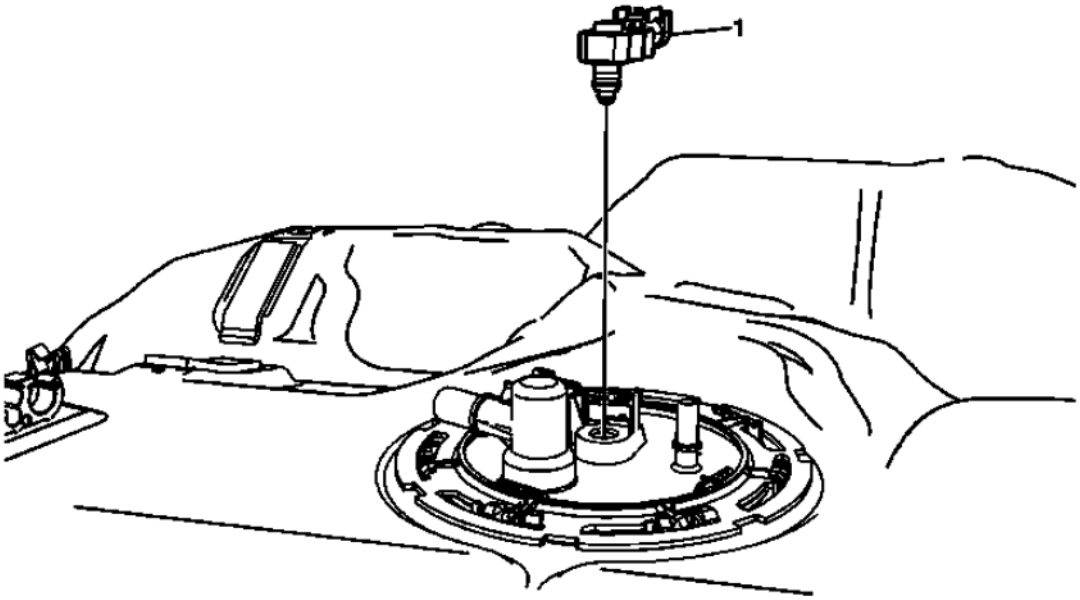

Fig. 66: Fuel Tank Pressure Sensor (NT7)
Courtesy of GENERAL MOTORS COMPANY

Fuel Tank Pressure Sensor Replacement (NT7)

Callout	Component Name
Preliminary Procedure Remove the fuel tank. Refer to **Fuel Tank Replacement**.	
1	Fuel Tank Pressure Sensor **Procedure** 1. Disconnect the electrical connector. 2. Release the retaining tab.

FUEL TANK PRESSURE SENSOR REPLACEMENT (NU6)

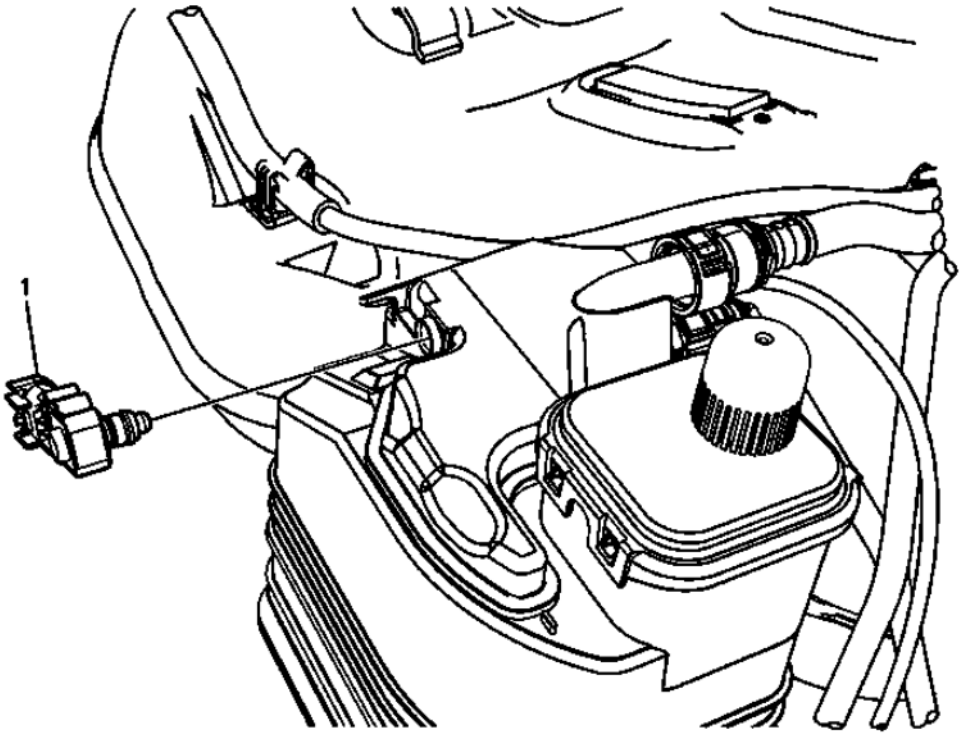

Fig. 67: Fuel Tank Pressure Sensor (NU6)
Courtesy of GENERAL MOTORS COMPANY

Fuel Tank Pressure Sensor Replacement (NU6)

Callout	Component Name
Preliminary Procedure Remove the fuel tank. Refer to **Fuel Tank Replacement**.	
1	Fuel Tank Pressure Sensor **Procedure** 1. Disconnect the electrical connector. 2. Release the retaining tab.

FUEL LEVEL SENSOR REPLACEMENT

Removal Procedure

WARNING: Fuel Vapors can collect while servicing fuel system parts in enclosed areas such as a trunk. To reduce the risk of fire and increased exposure to vapors:

- **Use forced air ventilation such as a fan set outside of the trunk.**
- **Plug or cap any fuel system openings in order to reduce fuel vapor formation.**
- **Clean up any spilled fuel immediately.**
- **Avoid sparks and any source of ignition.**

- **Use signs to alert others in the work area that fuel system work is in process.**

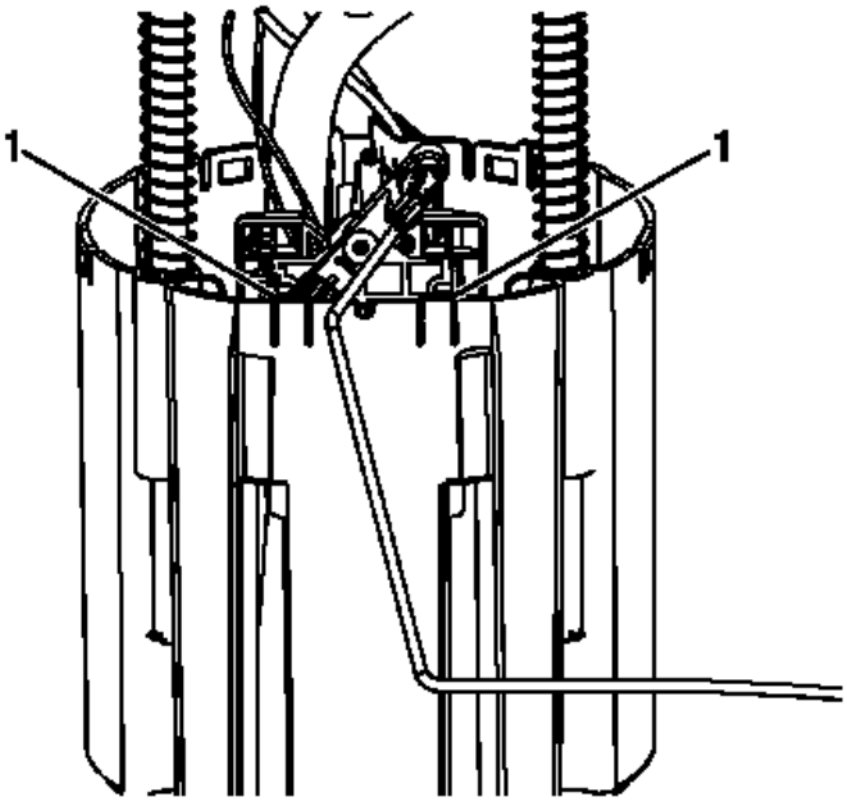

Fig. 68: Identifying Locking Tabs
Courtesy of GENERAL MOTORS COMPANY

1. Remove the fuel tank pump module. Refer to **Fuel Tank Fuel Pump Module Replacement (NU6)**, **Fuel Tank Fuel Pump Module Replacement (NT7)**.
2. Using two flat-bladed tools, carefully pull both locking tabs (1) outward while simultaneously lifting the level sensor.

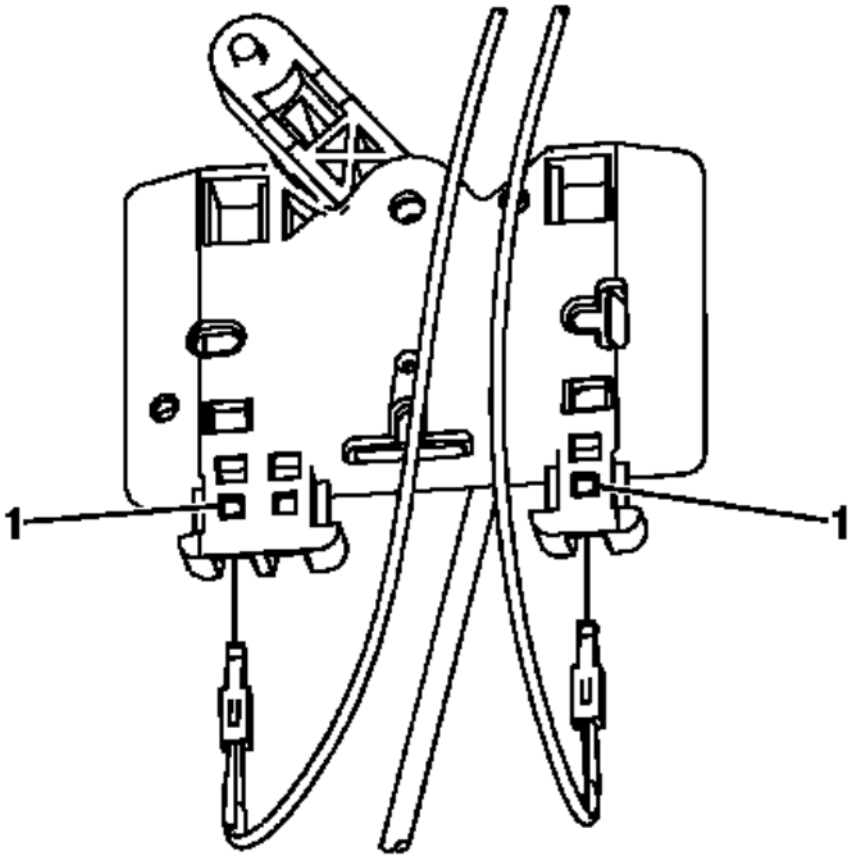

Fig. 69: Identifying Electrical Terminals
Courtesy of GENERAL MOTORS COMPANY

3. Using a small bladed tool, gently release the retaining tabs on the electrical terminals (1) while simultaneously pulling the terminals out.
4. Inspect the terminals for bending and reposition as necessary.

Installation Procedure

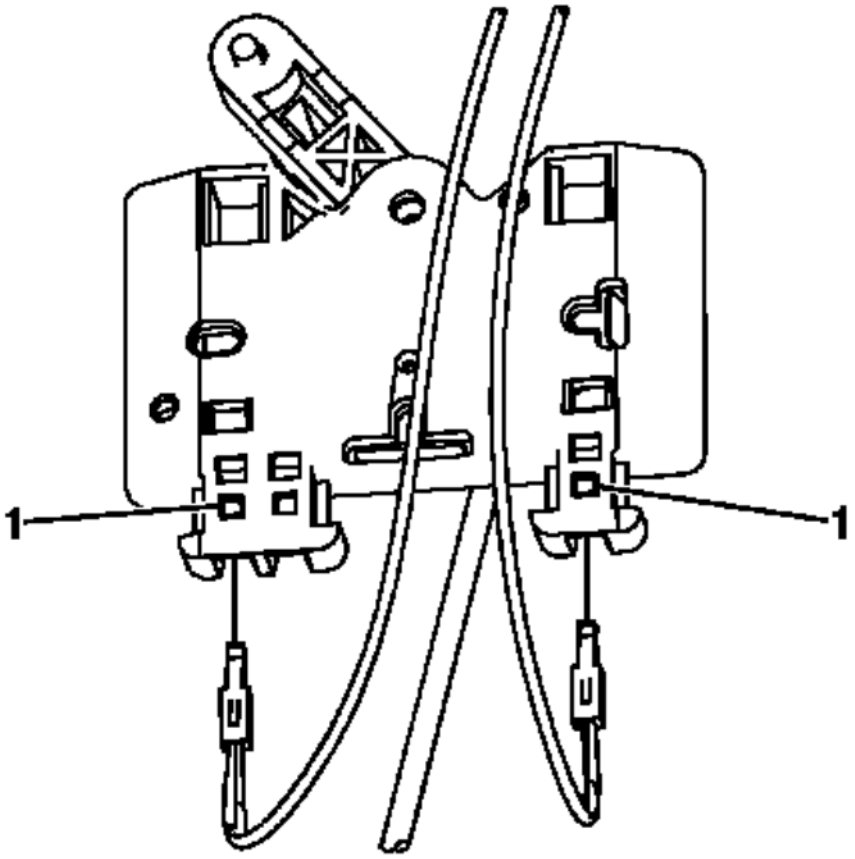

Fig. 70: Identifying Electrical Terminals
Courtesy of GENERAL MOTORS COMPANY

1. Push in the electrical terminals (1) and ensure the terminals are secure.

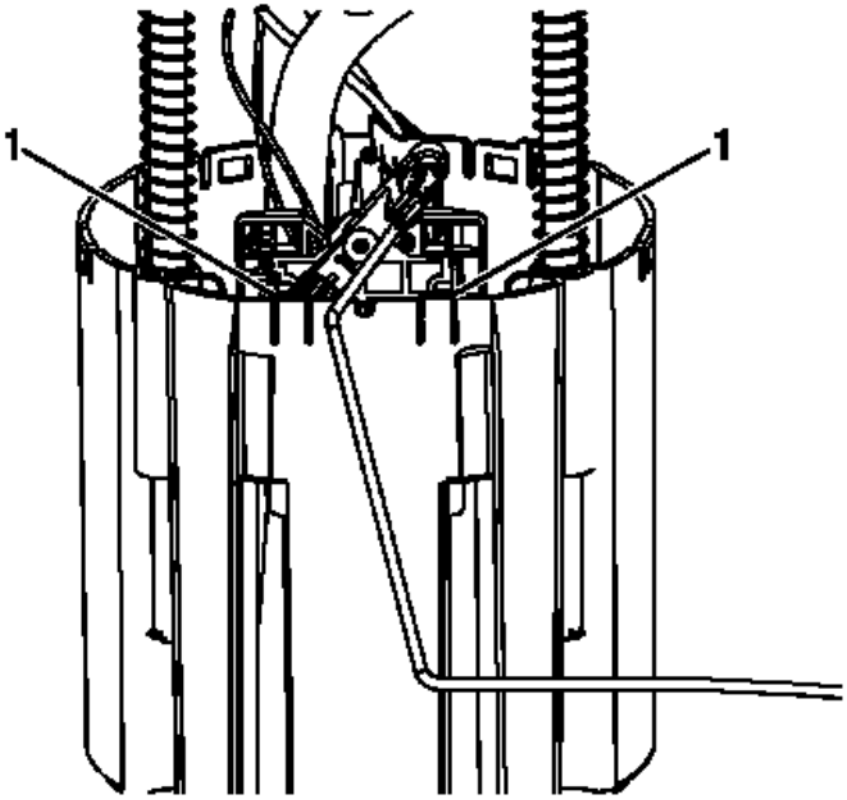

Fig. 71: Identifying Locking Tabs
Courtesy of GENERAL MOTORS COMPANY

2. Carefully insert the level sensor until the locking tabs (1) snap into the locking position.
3. Install the fuel tank pump module. Refer to **Fuel Tank Fuel Pump Module Replacement (NU6)**, **Fuel Tank Fuel Pump Module Replacement (NT7)**.

FUEL TANK FILLER PIPE REPLACEMENT

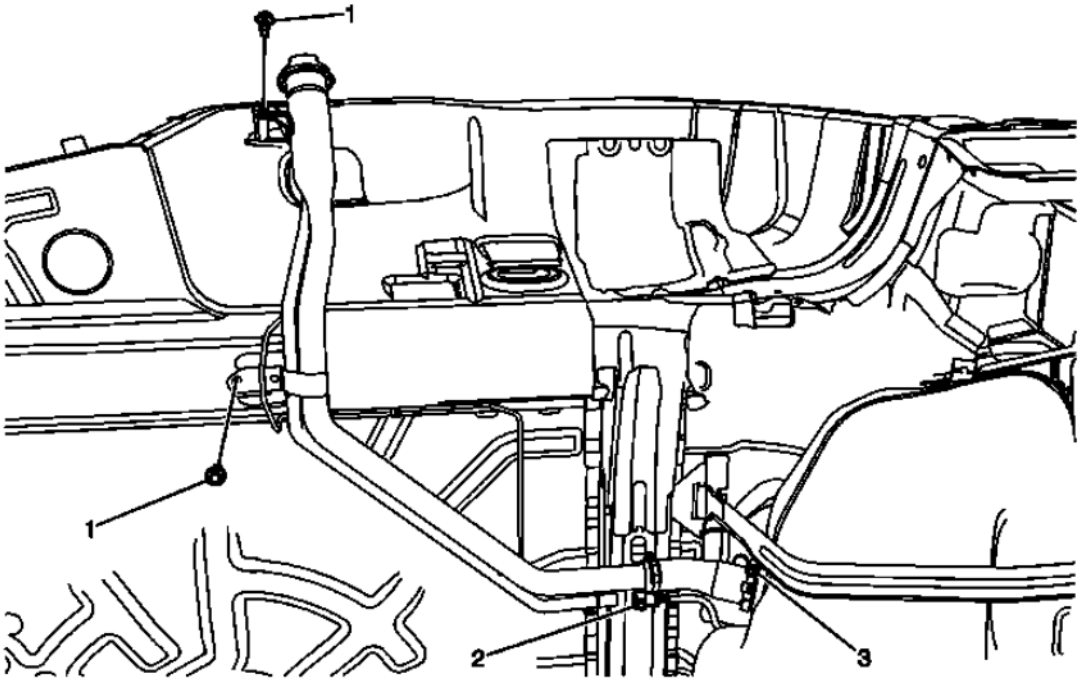

Fig. 72: Fuel Tank Filler Pipe & Fasteners
Courtesy of GENERAL MOTORS COMPANY

Fuel Tank Filler Pipe Replacement

Callout	Component Name
	Preliminary Procedure **Remove the filler pipe housing. Refer to Fuel Tank Filler Pipe Housing Replacement .**
1	Filler Pipe Fastener (Qty: 2) **CAUTION:** **Refer to Fastener Caution .** **Tighten** 9 N.m (80 lb in)
2	Rear Evaporative Emission Pipe **Procedure** Disconnect the quick connect fitting. Refer to **Plastic Collar Quick Connect Fitting Service**.
3	Hose Clamp **Tighten** 4 N.m (35 lb in)

FUEL PUMP COVER REPLACEMENT

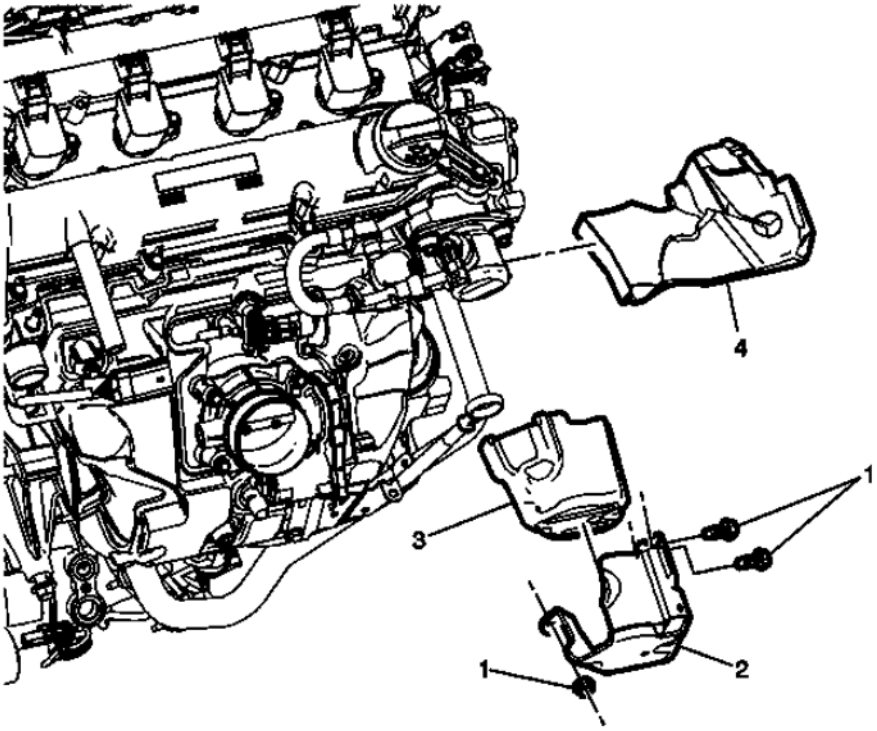

Fig. 73: Fuel Pump Cover
Courtesy of GENERAL MOTORS COMPANY

Fuel Pump Cover Replacement

Callout	Component Name
Preliminary Procedure Disconnect electrical wiring harness from fuel pump cover.	
1	Fuel Pump Cover Fastener **CAUTION:** **Refer to Fastener Caution .** **Tighten** 10 N.m(89 lb in)
2	Fuel Pump Cover
3	Fuel Pump Insulator
4	Fuel Injector Fuel Rail Noise Shield

FUEL FEED PIPE REPLACEMENT (ENGINE)

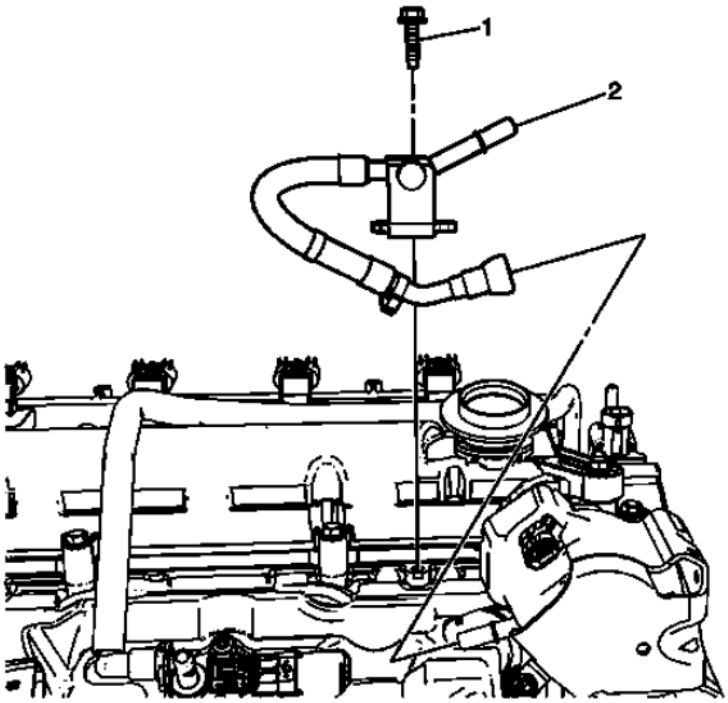

Fig. 74: Fuel Feed Pipe
Courtesy of GENERAL MOTORS COMPANY

Fuel Feed Pipe Replacement (Engine)

Callout	Component Name
Preliminary Procedures 1. Remove the intake manifold cover. Refer to **Intake Manifold Cover Replacement** . 2. Disconnect the fuel lines. Refer to **Metal Collar Quick Connect Fitting Service**.	
1	Fuel Feed Pipe Fastener **CAUTION:** **Refer to Fastener Caution .** **Tighten** 10 N.m (89 lb in)
2	Fuel Feed Pipe

FUEL FEED PIPE REPLACEMENT (CHASSIS)

Removal Procedure

WARNING: Refer to Gasoline/Gasoline Vapors Warning .

WARNING: Refer to Safety Glasses Warning .

1. Relieve the system fuel pressure. Refer to **Fuel Pressure Relief** .
2. Disconnect the engine fuel feed front pipe from the chassis fuel feed front pipe. Refer to **Plastic Collar Quick Connect Fitting Service**.

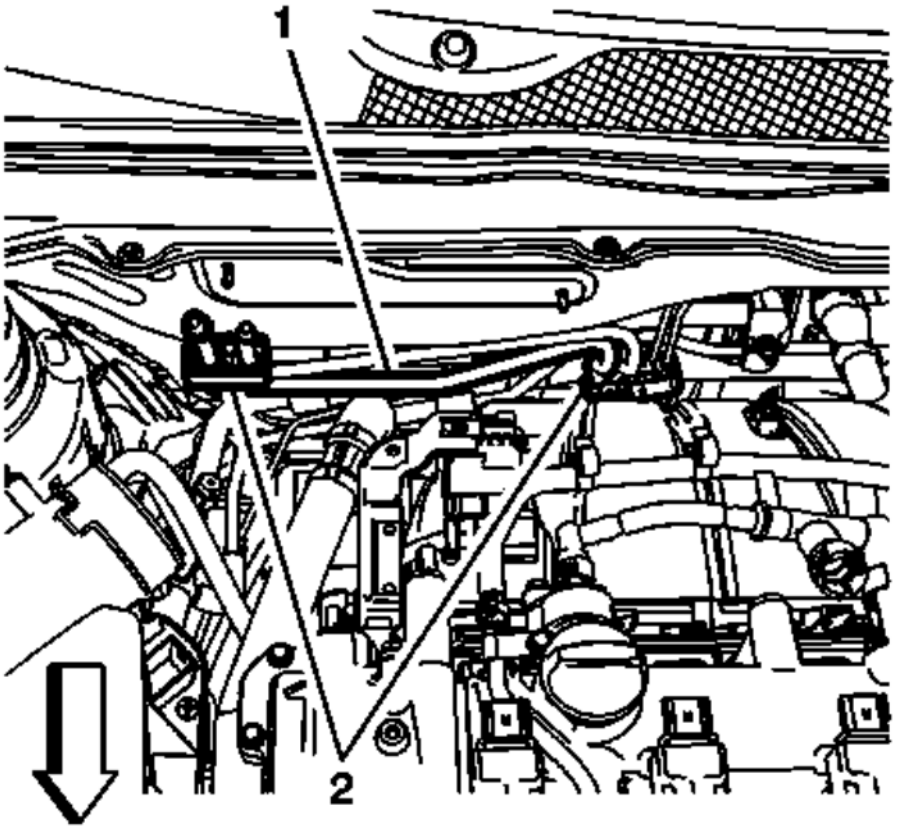

Fig. 75: Fuel Feed Pipe
Courtesy of GENERAL MOTORS COMPANY

3. Remove the fuel feed pipe (1) from the retainers (2).
4. Raise and support the vehicle. Refer to **Lifting and Jacking the Vehicle** .

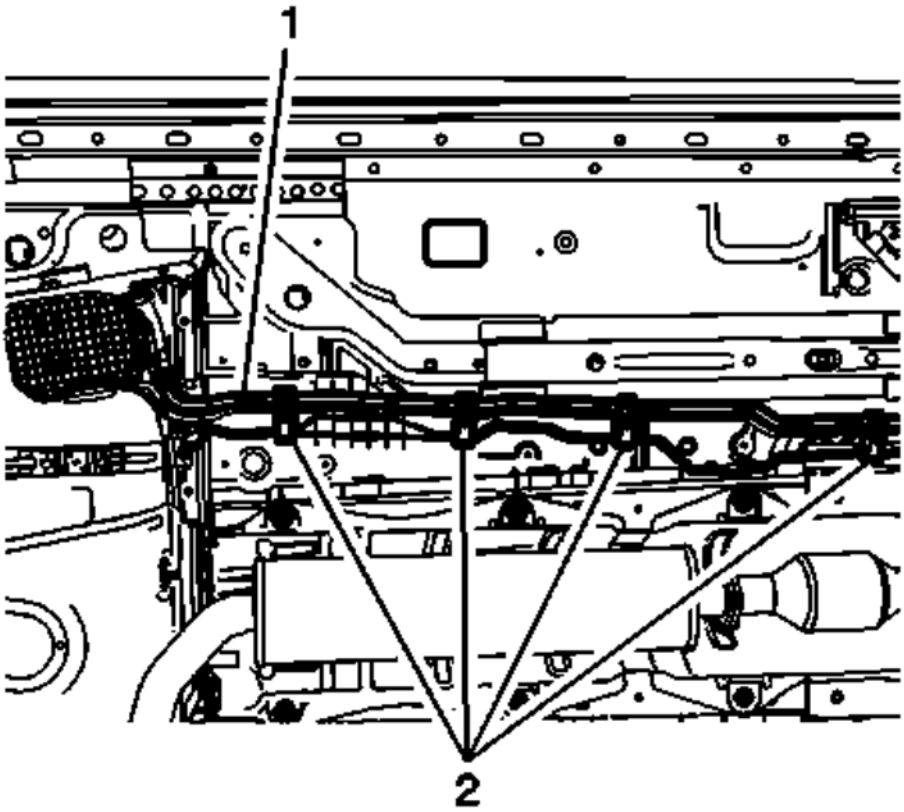

Fig. 76: Fuel Feed Pipe And Retainers
Courtesy of GENERAL MOTORS COMPANY

5. Disconnect the chassis fuel feed pipe (1) from the fuel tank fuel feed pipe. Refer to **Plastic Collar Quick Connect Fitting Service**.
6. Disconnect the fuel pressure sensor connector.
7. Disconnect the chassis fuel feed pipe from the brake bundle retainers (2) and remove the pipe (1) from the vehicle.
8. Transfer parts as necessary.

Installation Procedure

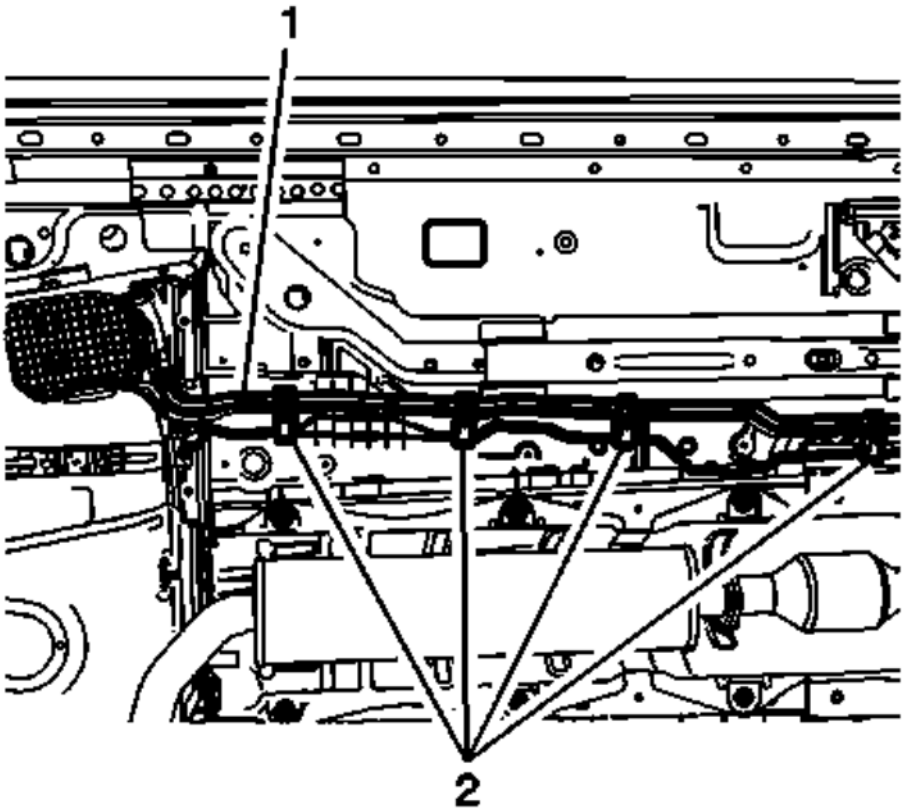

Fig. 77: Fuel Feed Pipe And Retainers
Courtesy of GENERAL MOTORS COMPANY

1. Install the fuel feed pipe (1) to the brake bundle retainers (2).
2. Connect the chassis fuel feed pipe (1) to the fuel tank fuel feed pipe . Refer to **Plastic Collar Quick Connect Fitting Service**.
3. Connect the fuel pressure sensor connector.
4. Lower the vehicle.

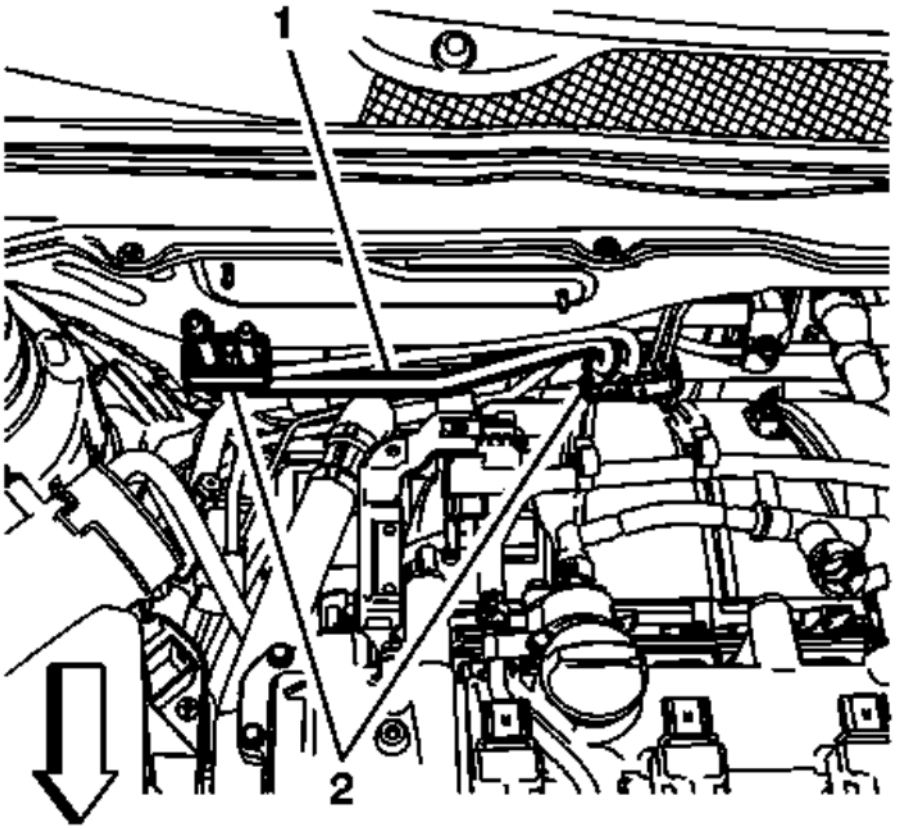

Fig. 78: Fuel Feed Pipe
Courtesy of GENERAL MOTORS COMPANY

5. Install the fuel feed pipe (1) to the retainers (2).
6. Connect the engine fuel feed front pipe to the chassis fuel feed pipe. Refer to **Plastic Collar Quick Connect Fitting Service**.
7. Turn the ignition to the on position and check for fuel leaks.

FUEL FEED HOSE REPLACEMENT (FLEX SENSOR TO FUEL FEED PIPE E-85)

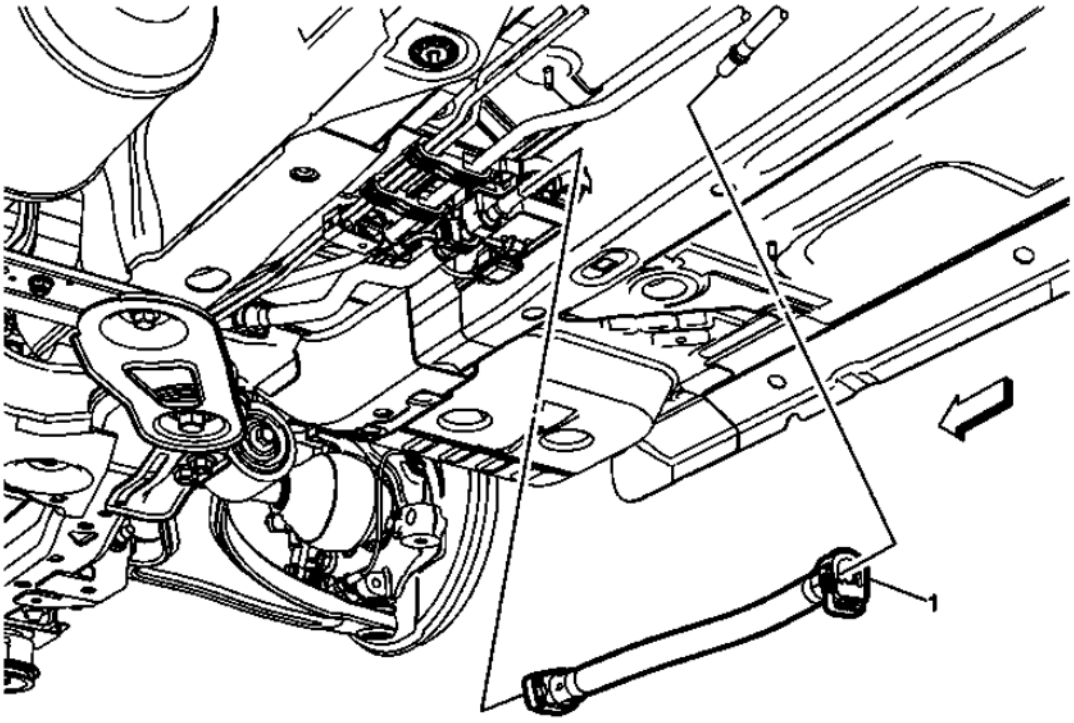

Fig. 79: Fuel Feed Hose (Flex Sensor to Fuel Feed Pipe E-85)
Courtesy of GENERAL MOTORS COMPANY

Fuel Feed Hose Replacement (Flex Sensor to Fuel Feed Pipe E-85)

Callout	Component Name
Preliminary Procedure Raise and support the vehicle. Refer to **Lifting and Jacking the Vehicle** .	
1	Fuel Feed Hose. **Preliminary Procedure** Disconnect the evaporative emission quick connects. Refer to **Plastic Collar Quick Connect Fitting Service**.

FUEL FEED HOSE REPLACEMENT (FLEX SENSOR TO FUEL FEED FRONT PIPE E-85)

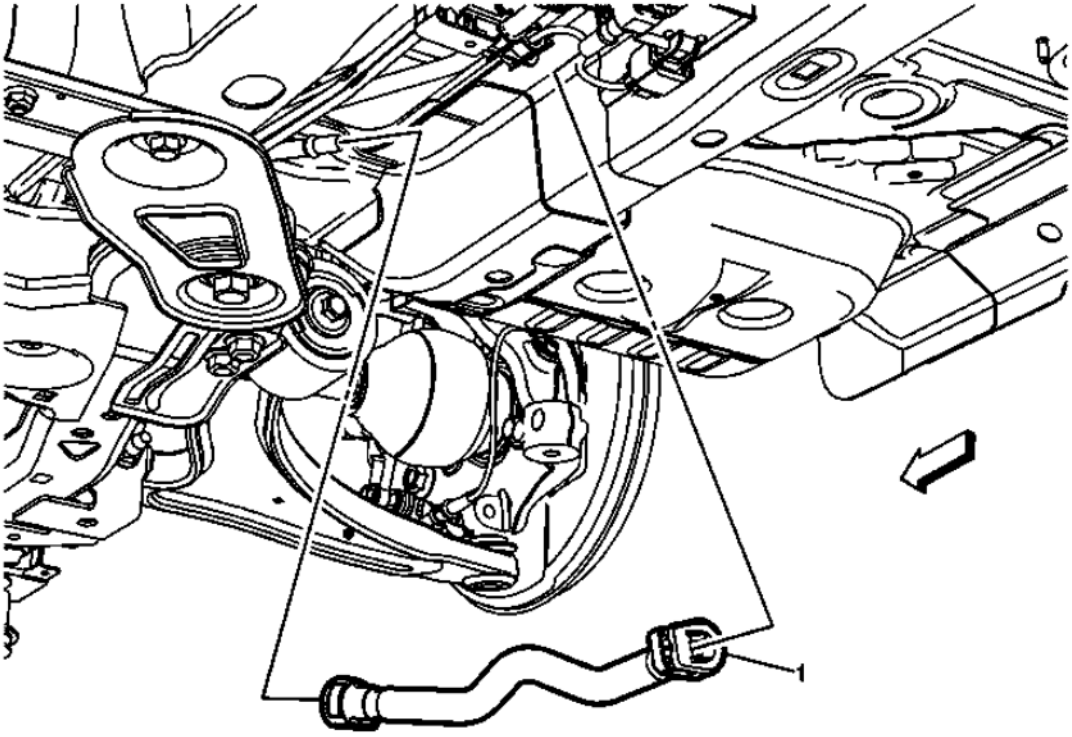

Fig. 80: Fuel Feed Hose (Flex Sensor to Fuel Feed Front Pipe E-85)
Courtesy of GENERAL MOTORS COMPANY

Fuel Feed Hose Replacement (Flex Sensor to Fuel Feed Front Pipe E-85)

Callout	Component Name
Preliminary Procedure Raise and support the vehicle. Refer to **Lifting and Jacking the Vehicle** .	
1	Fuel Feed Hose.. **Preliminary Procedure** Disconnect the evaporative emission quick connects. Refer to **Plastic Collar Quick Connect Fitting Service**.

FUEL PRESSURE SENSOR REPLACEMENT - FUEL FEED PIPE

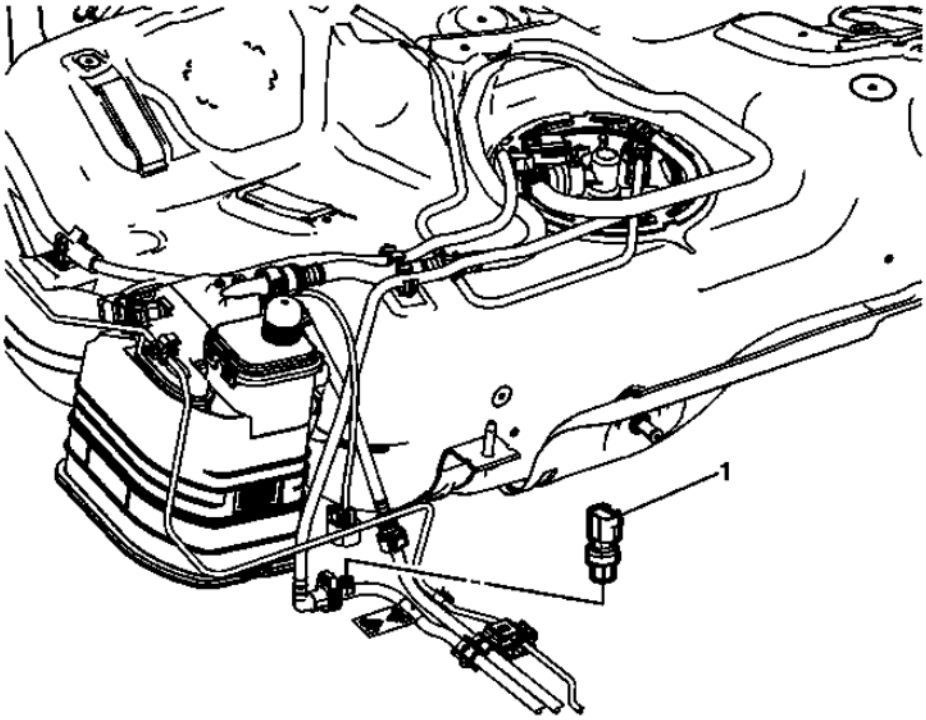

Fig. 81: Fuel Pressure Sensor - Fuel Feed Pipe
Courtesy of GENERAL MOTORS COMPANY

Fuel Pressure Sensor Replacement - Fuel Feed Pipe

Callout	Component Name
Preliminary Procedures 1. Relieve the fuel system pressure. Refer to **Fuel Pressure Relief**. 2. Raise and support the vehicle. Refer to **Lifting and Jacking the Vehicle** .	
1	Fuel Pressure Sensor **CAUTION:** **Refer to Fastener Caution .** **Procedure** 1. Disconnect the electrical connector. 2. Use a NEW O-ring whenever the sensor is removed. **Tighten** 9Y (80 lb in)

FUEL FEED INTERMEDIATE PIPE REPLACEMENT

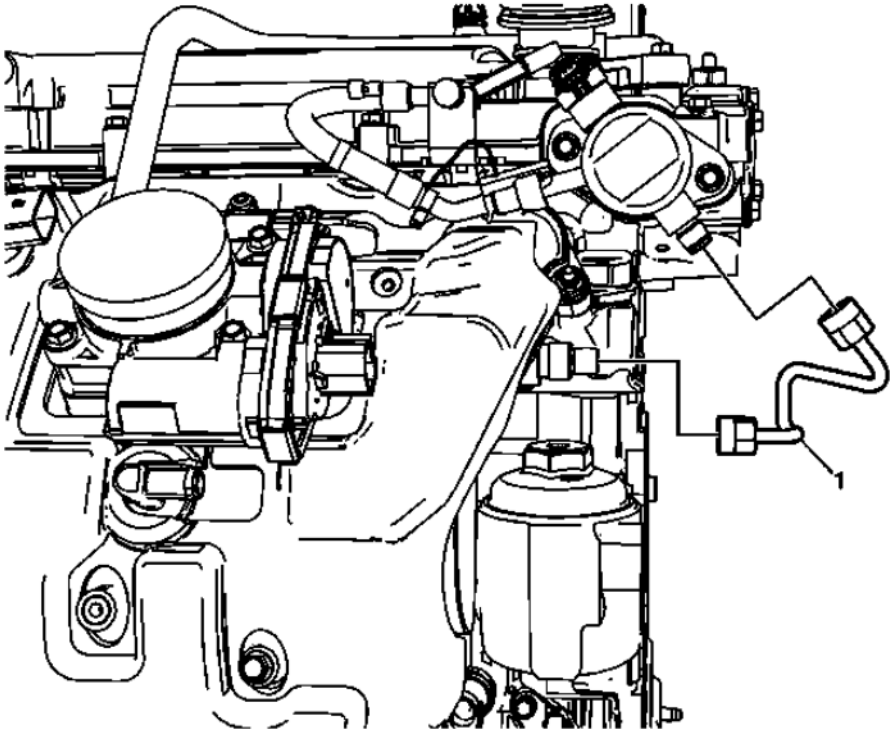

Fig. 82: Fuel Feed Intermediate Pipe
Courtesy of GENERAL MOTORS COMPANY

Fuel Feed Intermediate Pipe Replacement

Callout	Component Name
Preliminary Procedures 1. Relieve the system pressure. Refer to **Fuel Pressure Relief**. 2. Remove the fuel pump cover. Refer to **Fuel Pump Cover Replacement**.	
1	Fuel Feed Intermediate Pipe **CAUTION:** **Refer to Fastener Caution .** **Procedure** 1. DISCARD the pipe when removed, and install a NEW pipe. 2. Lubricate the pipes with silicon free engine oil. Refer to **Adhesives, Fluids, Lubricants, and Sealers** . 3. Pressurize the fuel system and inspect for leaks. **Tighten** 30 N.m (22 lb ft) **NOTE:** **The pipe fittings are a one time use, always install a NEW fuel pump intermediate**

	pipe.

FUEL TANK VENT PIPE REPLACEMENT

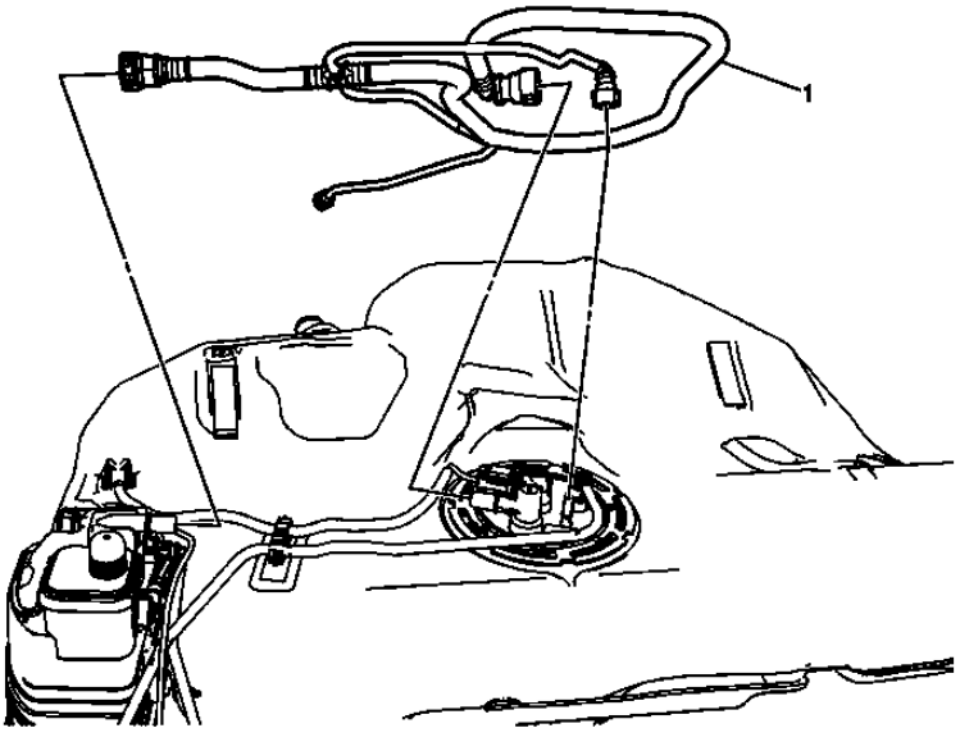

Fig. 83: Fuel Tank Vent Pipe
Courtesy of GENERAL MOTORS COMPANY

Fuel Tank Vent Pipe Replacement

Callout	Component Name
	Preliminary Procedure **Remove the fuel tank. Refer to Fuel Tank Replacement.**
1	Evaporative Emission Canister Vent Front Pipe **Procedure** Disconnect the evaporative emission quick connects. Refer to **Plastic Collar Quick Connect Fitting Service**.

FUEL PUMP REPLACEMENT

Special Tools

EN-48896 High Pressure Fuel Pump Installation Alignment Gauge

For equivalent regional tools, refer to **Special Tools (Diagnostic Tools)** , **Special Tools (Mechanical Tools)** .

Removal Procedure

1. Relieve the low and high side fuel system pressure. Refer to **Fuel Pressure Relief**.

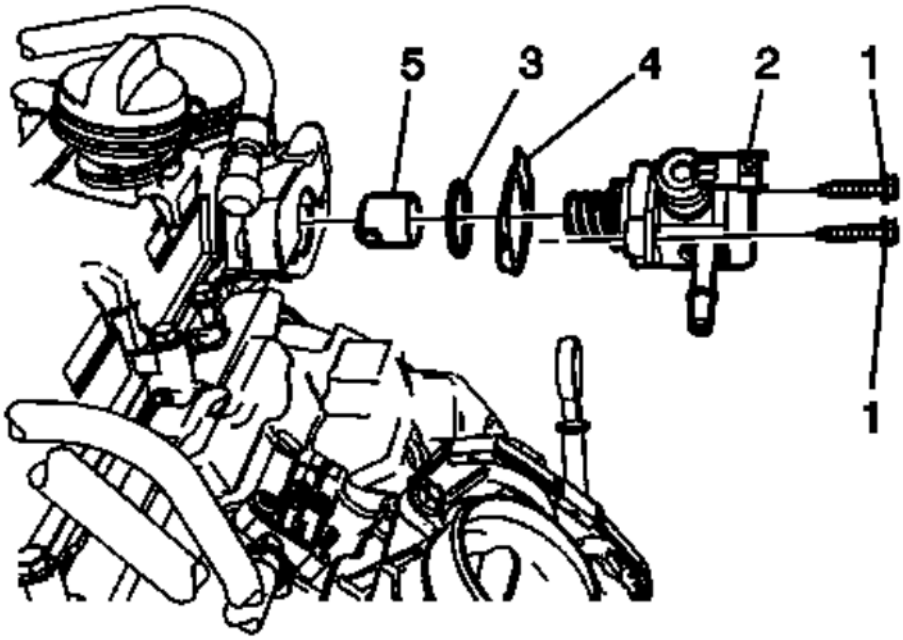

Fig. 84: High Pressure Fuel Pump Components
Courtesy of GENERAL MOTORS COMPANY

2. Disconnect the engine wiring harness electrical connector from the high pressure fuel pump.
3. Remove the low pressure feed pipe. Refer to **Fuel Feed Pipe Replacement (Engine)**, **Fuel Feed Pipe Replacement (Chassis)**.
4. Remove the high pressure pipe. Refer to **Fuel Feed Intermediate Pipe Replacement**. Discard this pipe.
5. Remove and discard the high pressure fuel pump bolts (1).
6. Remove the high pressure fuel pump (2).
7. Remove and discard the high pressure fuel pump O-ring (3).
8. Remove and discard the high pressure fuel pump gasket (4).
9. Remove the high pressure fuel pump roller lifter (5).

Installation Procedure

NOTE: The camshaft must be in the base circle position before the high pressure fuel pump is installed.

1. Use the **EN-48896** alignment gauge to ensure that the camshaft lobe is in the base circle position. At base circle the tool will be flush with the head.
2. Lubricate the high pressure fuel pump cylinder head bore and roller lifter with camshaft prelube or 5W30 engine oil. Refer to **Adhesives, Fluids, Lubricants, and Sealers** .

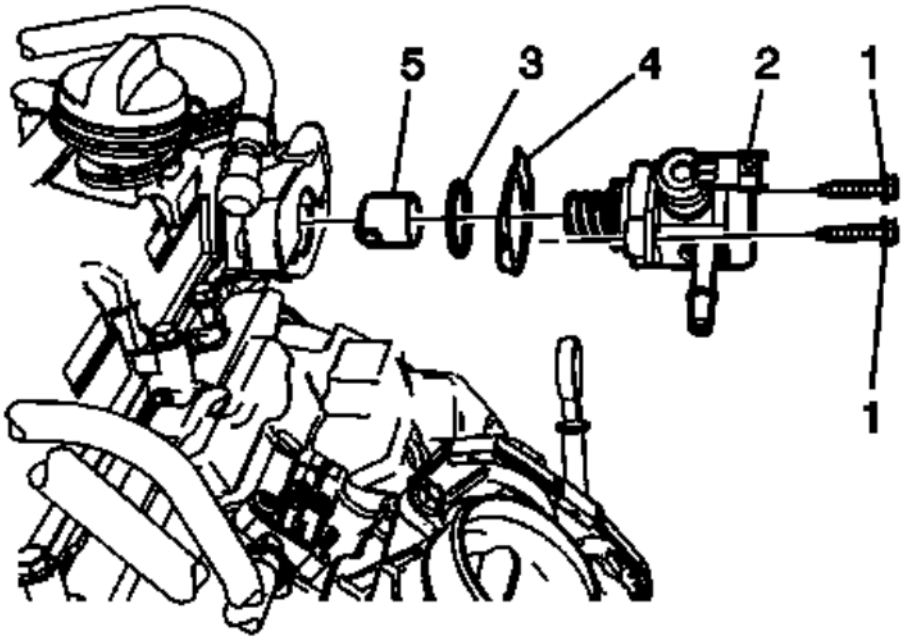

Fig. 85: High Pressure Fuel Pump Components
Courtesy of GENERAL MOTORS COMPANY

NOTE: **The high pressure fuel pump gasket has a retaining feature to hold the pump retaining bolts in place.**

3. Install the high pressure fuel pump roller lifter (5).
4. Install a NEW high pressure fuel pump O-ring (3).
5. Position the NEW high pressure fuel pump gasket (4) and bolts (1) to the fuel pump.
6. Install the high pressure fuel pump (2). Force will be required while hand tightening the bolts.

CAUTION: Refer to Fastener Caution .

7. Tighten the high pressure fuel pump retaining bolts to 15 N.m (11 lb ft).
8. Ensure the high pressure fuel pump and fuel rail fittings are clean prior to assembly.
9. Install a NEW high pressure fuel pipe. Refer to **Fuel Feed Intermediate Pipe Replacement**.
10. Install the fuel feed pipe to the high pressure fuel pump. Refer to **Fuel Feed Pipe Replacement (Engine)**, **Fuel Feed Pipe Replacement (Chassis)**.
11. Connect the high pressure fuel pump wiring harness.
12. Install the fuel tank cap.

NOTE: **If a fuel leak accrues at the fuel rail, the fuel rail will need to be replaced.**

13. Inspect for leaks using the following procedure:
    1. Turn ON the ignition, with the engine OFF for 2 seconds.
    2. Turn OFF the ignition, for 10 seconds.
    3. Turn ON the ignition, with the engine OFF.
    4. Inspect for fuel leaks.
14. Install the pressure relief cap to the fuel feed pipe.
15. Install the high pressure fuel pump cover. Refer to **Fuel Pump Cover Replacement**.

FUEL INJECTION FUEL RAIL ASSEMBLY REPLACEMENT

Special Tools

- **EN-47909** Injector Bore and Sleeve Cleaning Kit
- **EN-49248** Fuel Rail Assembly Remover

For equivalent regional tools, refer to **Special Tools** .

Removal Procedure

1. Relieve the fuel pressure. Refer to **Fuel Pressure Relief**.
2. Remove the intake manifold. Refer to **Intake Manifold Replacement (LEA)** , **Intake Manifold Replacement (LUK)** .
3. Remove and DISCARD the fuel feed pipe. Refer to **Fuel Feed Pipe Replacement (Engine)**, **Fuel Feed Pipe Replacement (Chassis)**.

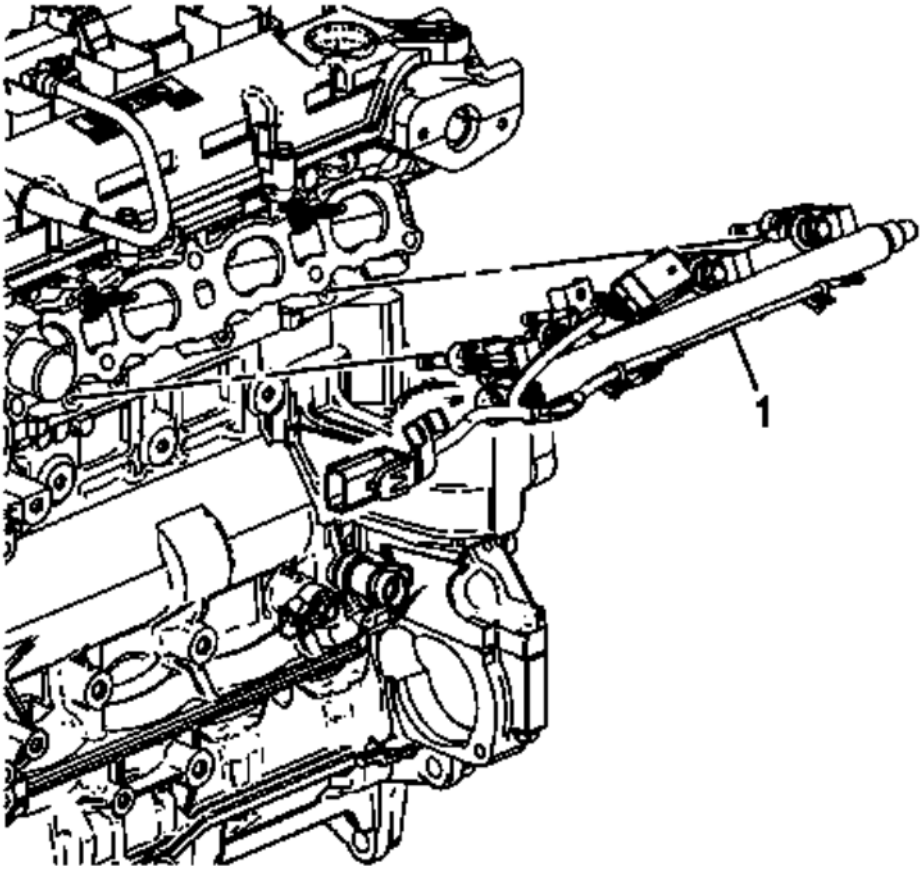

Fig. 86: Fuel Rail
Courtesy of GENERAL MOTORS COMPANY

4. Loosen the fuel injection fuel rail fasteners then remove them from the fuel rail (1).

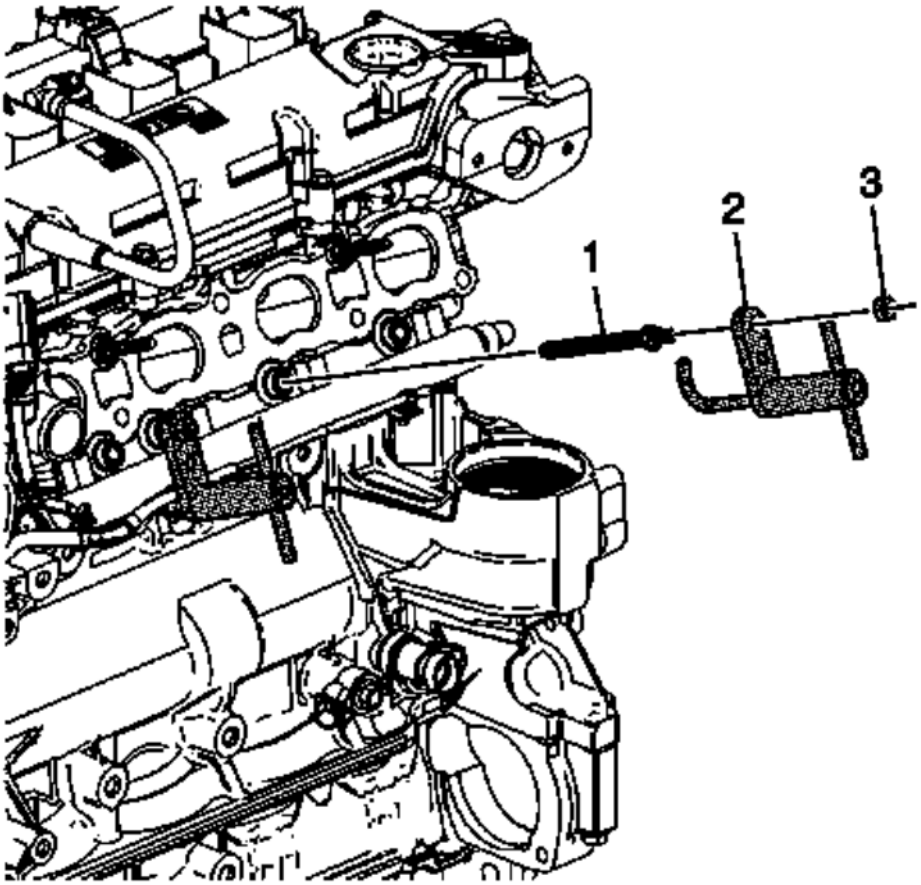

Fig. 87: Electrical Harness And Fuel Rail Harness
Courtesy of GENERAL MOTORS COMPANY

5. Disconnect the electrical harness from the fuel rail harness connection.
6. Disconnect all 4 fuel injector electrical connections.

NOTE: Use care to avoid contact with the fuel rail harness during special tool installation and fuel rail removal.

7. Install **EN-49248** studs (1) into the 2 center fuel rail assembly retaining bolt locations.

CAUTION: Refer to Fastener Caution .

8. Tighten the studs to 22 (16 lb ft)
9. Install **EN-49248** remover (2) onto each stud, and engage the hooks to the fuel rail. Install the nuts (3) retaining the remover onto the studs and tighten until snug.

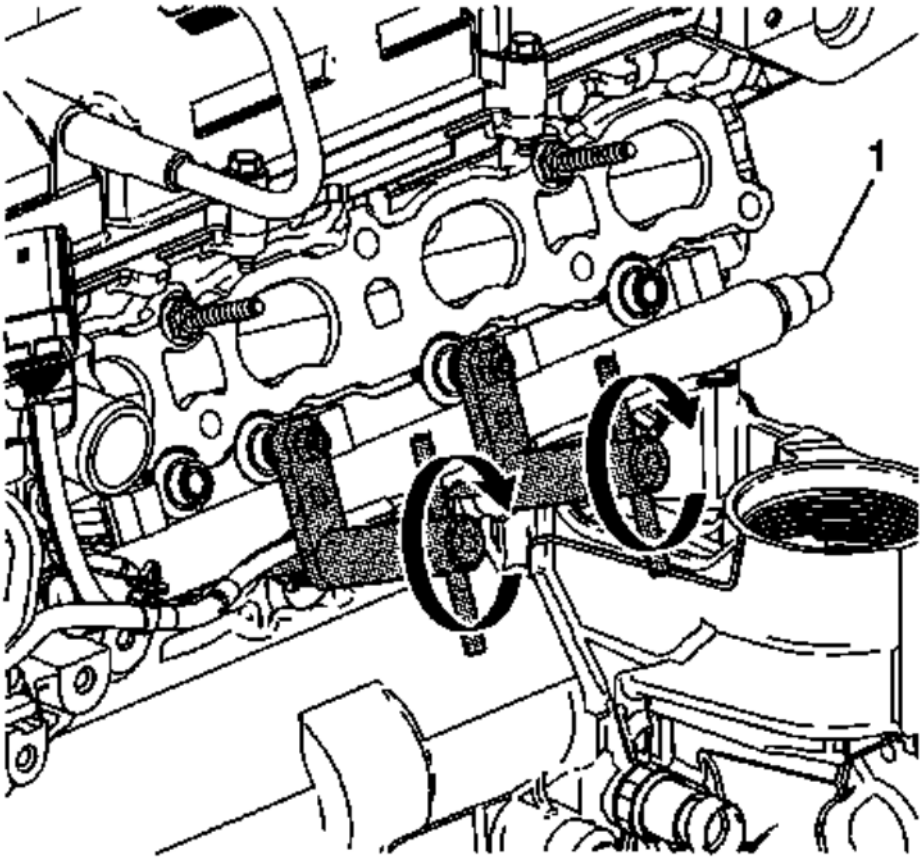

Fig. 88: Removing Fuel Rail Assembly
Courtesy of GENERAL MOTORS COMPANY

NOTE: **EN-49248 will assist in the proper removal of the fuel rail assembly. Ensure that the following conditions are met:**

- **Turn the handles simultaneously in order to pull the fuel rail straight out along the fuel injector axis.**
- **DO NOT twist when pulling out on the fuel rail and injector assembly.**

10. Using **EN-49248** remover , remove the fuel rail assembly (1).

Installation Procedure

1. If necessary, clean the fuel injector bore in the cylinder head using the **EN-47909** kit.

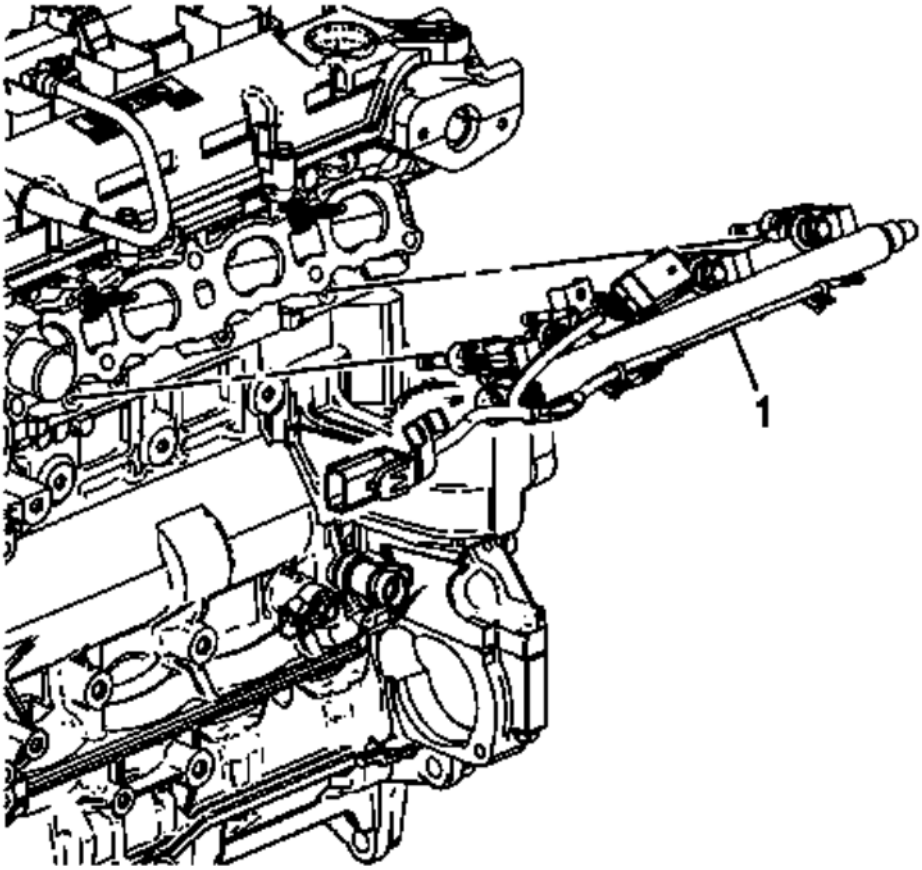

Fig. 89: Fuel Rail
Courtesy of GENERAL MOTORS COMPANY

NOTE: **The fuel injectors must be rebuilt when the rail is removed. Refer to Fuel Rail and Injectors Cleaning and Inspection (LAF, LEA, or LUK) .**

2. Install the fuel rail (1) with injectors into the cylinder head evenly.
3. Hand tighten the 2 outer fuel rail bolts to seat the injector into the injector bores.

CAUTION: Refer to Fastener Caution .

4. Start and hand tighten the remaining 2 fuel rail bolts. Tighten the bolts in sequence to final torque using the following procedure:
   1. Tighten the inner fuel rail fasteners to25 (18 lb ft).
   2. Tighten the outer fuel rail fasteners to25 (18 lb ft).
5. Connect the electrical harness to the fuel rail harness connections.
6. Install the NEW fuel feed pipe. Refer to **Fuel Feed Pipe Replacement (Engine)**, **Fuel Feed Pipe Replacement (Chassis)**.
7. Install the intake manifold. Refer to **Intake Manifold Replacement (LEA)** , **Intake Manifold Replacement (LUK)** .

FUEL INJECTION FUEL RAIL FUEL PRESSURE SENSOR REPLACEMENT

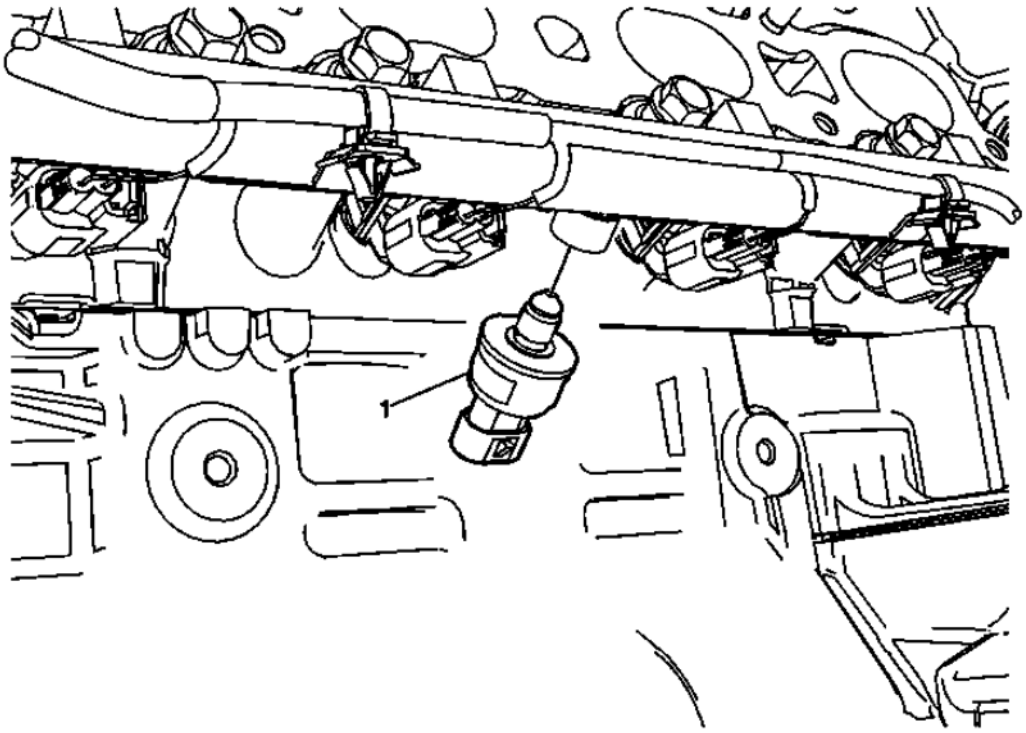

Fig. 90: Fuel Injection Fuel Rail Fuel Pressure Sensor
Courtesy of GENERAL MOTORS COMPANY

Fuel Injection Fuel Rail Fuel Pressure Sensor Replacement

Callout	Component Name
Preliminary Procedures 1. Relieve the fuel system pressure. Refer to **Fuel Pressure Relief**. 2. Remove the intake manifold. Refer to **Intake Manifold Replacement (LEA)** , **Intake Manifold Replacement (LUK)** .	
1	Fuel Pressure Sensor **CAUTION:** **Refer to Fastener Caution .** **Procedure** Disconnect the electrical connector. **Tighten** 32 N.m (24 lb ft)

DIRECT FUEL INJECTOR REPLACEMENT

Removal Procedure

1. Relieve the high side fuel system pressure. Refer to **Fuel Pressure Relief**.

NOTE: **The fuel injectors have an alignment feature, note the position of the injectors alignment for installation.**

2. Remove the fuel injection fuel rail assembly. Refer to **Fuel Injection Fuel Rail Assembly Replacement**.

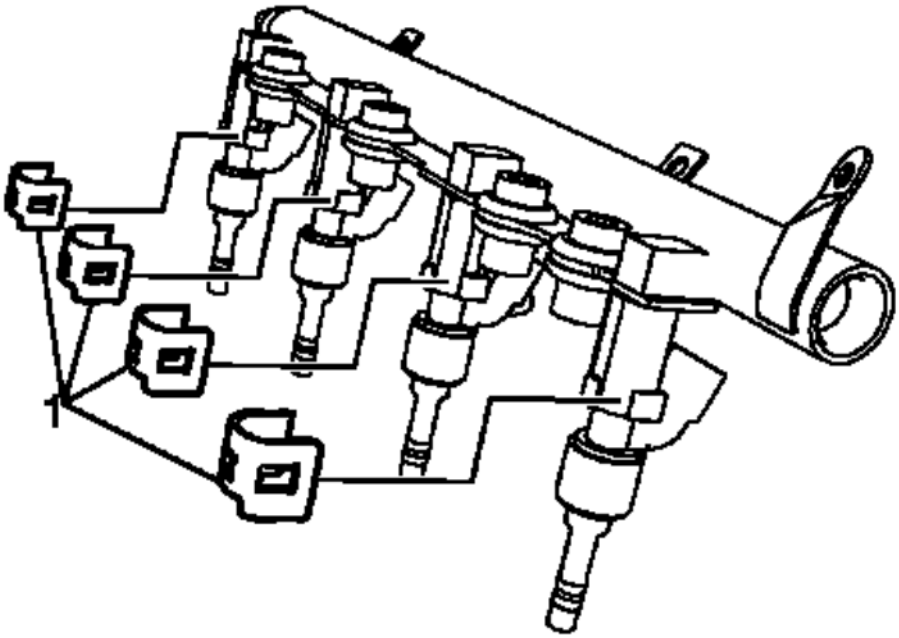

Fig. 91: Fuel Injector Retainers
Courtesy of GENERAL MOTORS COMPANY

3. Remove and discard the fuel injector retainers (1).
4. Clean and inspect the fuel rail and injectors. Refer to **Fuel Rail and Injectors Cleaning and Inspection (LAF, LEA, or LUK)** .

Installation Procedure

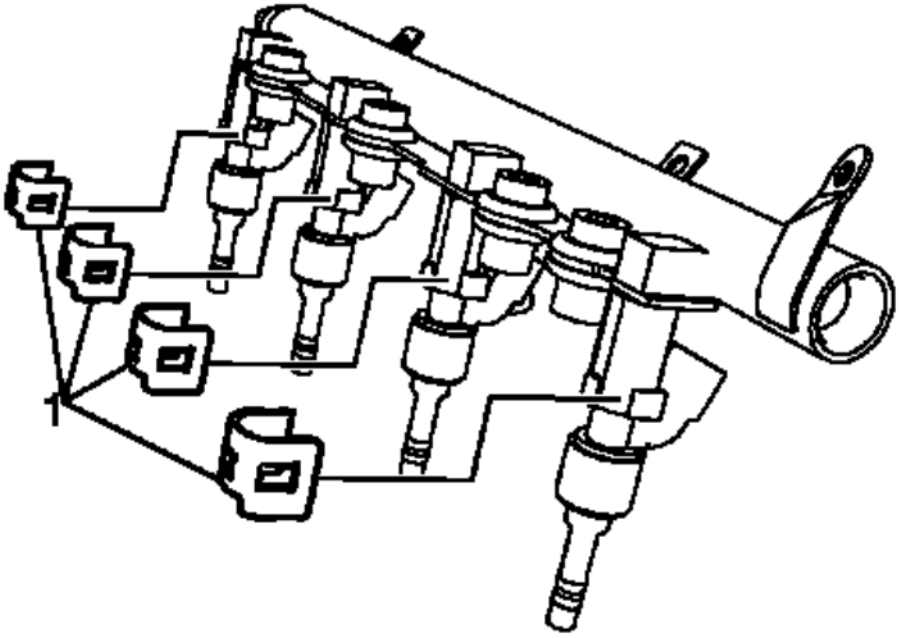

Fig. 92: Fuel Injector Retainers
Courtesy of GENERAL MOTORS COMPANY

1. Install NEW fuel injector retainers (1).

NOTE: **The fuel injectors have an alignment feature and must be reinstalled as noted during removal.**

2. Install the fuel injection fuel rail assembly. Refer to **Fuel Injection Fuel Rail Assembly Replacement**.

EVAPORATIVE EMISSION CANISTER PURGE SOLENOID VALVE REPLACEMENT

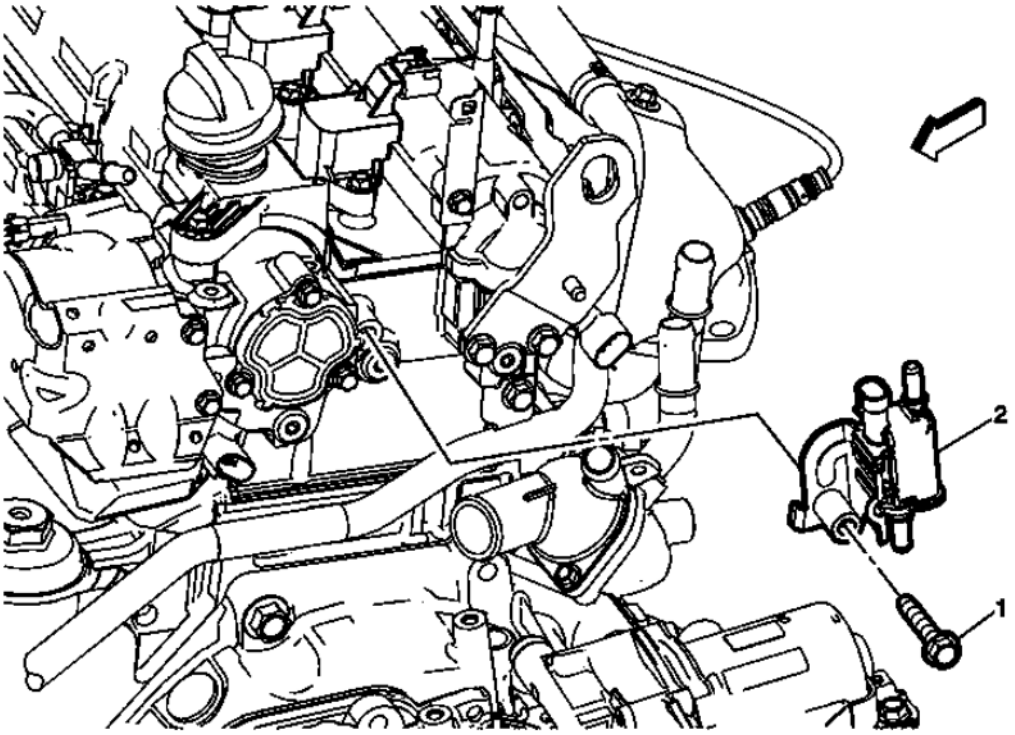

Fig. 93: Evaporative Emission Canister Purge Solenoid Valve
Courtesy of GENERAL MOTORS COMPANY

Evaporative Emission Canister Purge Solenoid Valve Replacement

Callout	Component Name
Preliminary Procedures 1. Remove the intake manifold cover. Refer to **Intake Manifold Cover Replacement** . 2. Disconnect the evaporative emission pipes. Refer to **Plastic Collar Quick Connect Fitting Service**.	
1	Evaporative Emission Canister Purge Solenoid Fastener **CAUTION:** **Refer to Fastener Caution .** **Tighten** 25 N.m(18 lb ft)
2	Evaporative Emission Canister Purge Solenoid **Procedure** Disconnect the electrical connector.

EVAPORATIVE EMISSION CANISTER PURGE PIPE REPLACEMENT

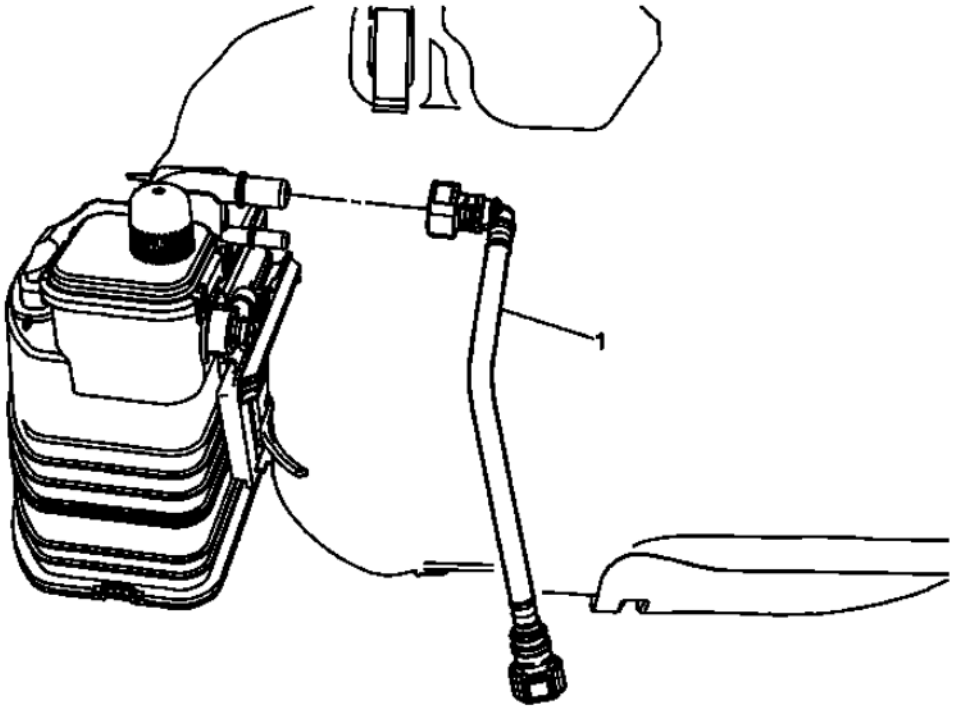

Fig. 94: Evaporative Emission Canister Purge Pipe
Courtesy of GENERAL MOTORS COMPANY

Evaporative Emission Canister Purge Pipe Replacement

Callout	Component Name
	Preliminary Procedure **Remove the fuel tank. Refer to Fuel Tank Replacement.**
1	Evaporative Emission Canister Purge Pipe **Procedure** Disconnect the evaporative emission quick connects. Refer to **Plastic Collar Quick Connect Fitting Service**.

EVAPORATIVE EMISSION CANISTER VENT SOLENOID VALVE REPLACEMENT

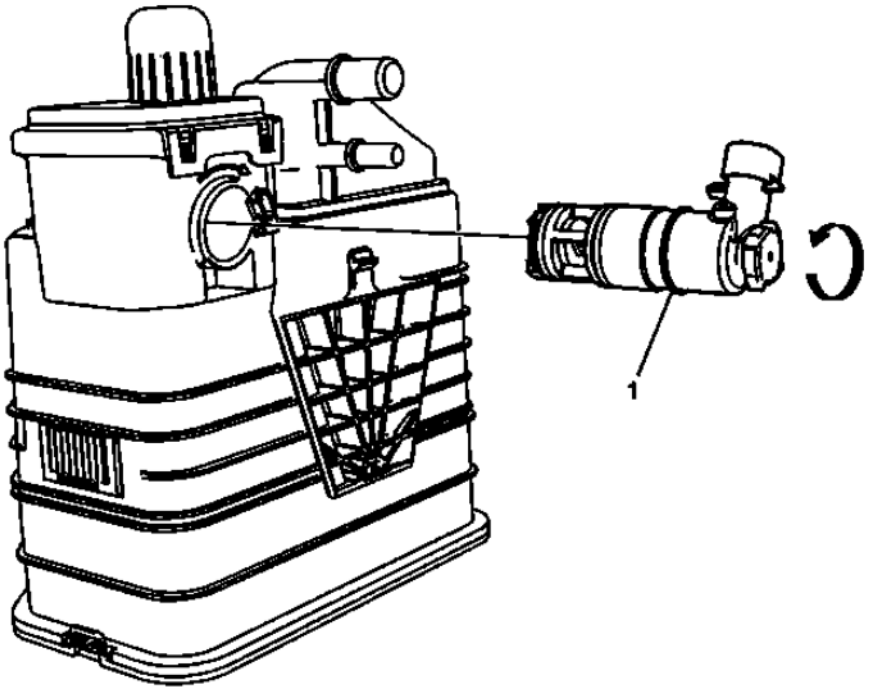

Fig. 95: Evaporative Emission Canister Vent Solenoid Valve
Courtesy of GENERAL MOTORS COMPANY

Evaporative Emission Canister Vent Solenoid Valve Replacement

Callout	Component Name
Preliminary Procedure Remove the carbon canister. Refer to **Evaporative Emission Canister Replacement**.	
1	Evaporative Canister Vent Solenoid Valve **Procedure** Disconnect the electrical connector.

EVAPORATIVE EMISSION CANISTER REPLACEMENT

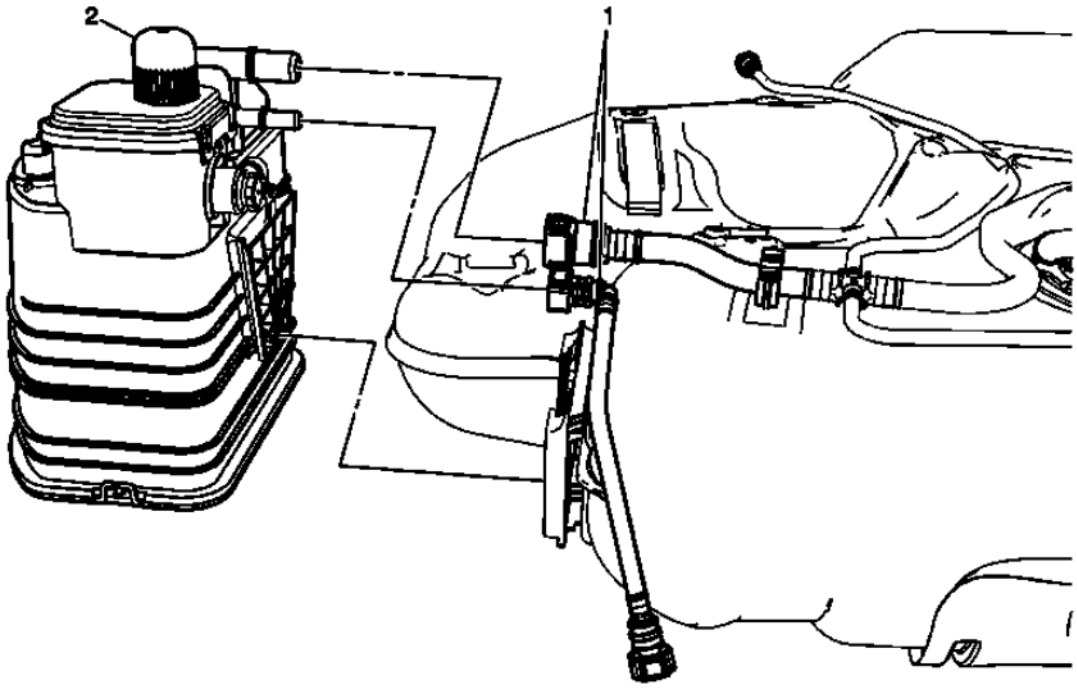

Fig. 96: Evaporative Emission Canister & Hoses
Courtesy of GENERAL MOTORS COMPANY

Evaporative Emission Canister Replacement

Callout	Component Name
Preliminary Procedure Remove the fuel tank. Refer to **Fuel Tank Replacement**.	
1	Evaporative Emission Hose (Qty: 2) **Procedure** Disconnect the quick connects. Refer to **Plastic Collar Quick Connect Fitting Service**.
2	Evaporative Emission Canister **Procedure** 1. Disconnect the electrical connector. 2. Release the retaining tab.

EVAPORATIVE EMISSION SYSTEM CLEANING

Special Tools

J 41413-200 Evaporative Emission System Tester

For equivalent regional tools, refer to **Special Tools (Diagnostic Tools)** , **Special Tools (Mechanical Tools)** .

Inspection Procedure

CAUTION: Use the Evaporative Emission (EVAP) System Tester (EEST) GE 41413-A in order to provide a clean, dry, low pressure nitrogen gas source. Do not substitute any other pressurized source, gas or otherwise. Damage may result to the EVAP system, test equipment or cause a safety risk.

NOTE: Proceed with the following procedure only if referenced by an evaporative emission (EVAP) diagnostic or repair procedure.

1. Turn OFF the ignition.
2. Remove the EVAP canister purge valve. Refer to **Evaporative Emission Canister Purge Solenoid Valve Replacement**.
3. Lightly tap the EVAP canister purge valve on a hard surface.
4. Inspect for carbon particles exiting either of the vacuum ports.
   - If no carbon particles were detected, but a blockage was detected during a diagnostic procedure, install the original EVAP canister purge valve. Continue with the cleaning procedure.
   - If carbon particles are found during the inspection procedure, continue with the cleaning procedure.
   - If a diagnostic procedure directed you to replace the EVAP canister purge valve and no carbon particles were detected, replace the EVAP canister purge valve. Return to the published service procedure.

Cleaning Procedure

1. Raise and support the vehicle. Refer to **Lifting and Jacking the Vehicle** .
2. Remove the EVAP canister. Refer to **Evaporative Emission Canister Replacement**.
3. Turn OFF the main valve on the **J 41413-200** evaporative emission system tester.
4. Disconnect the hose from the diagnostic station pressure regulator.
5. Using a section of vacuum hose, connect one end onto the EVAP pressure/purge diagnostic station pressure regulator.
6. Connect the other end of the vacuum hose to the canister side of the purge pipe.
7. Turn ON the main nitrogen cylinder valve and continue to discharge nitrogen for 15 seconds.
8. If the nitrogen does not clear the blockage, replace the purge pipe.
9. Return the EVAP pressure/purge diagnostic station to the stations original condition.
10. Install a new EVAP canister. Refer to **Evaporative Emission Canister Replacement**.
11. Lower the vehicle.
12. Install a new EVAP canister purge valve. Refer to **Evaporative Emission Canister Purge Solenoid Valve Replacement**.
13. Return to the diagnostic table that sent you here.

IGNITION COIL REPLACEMENT

Removal Procedure

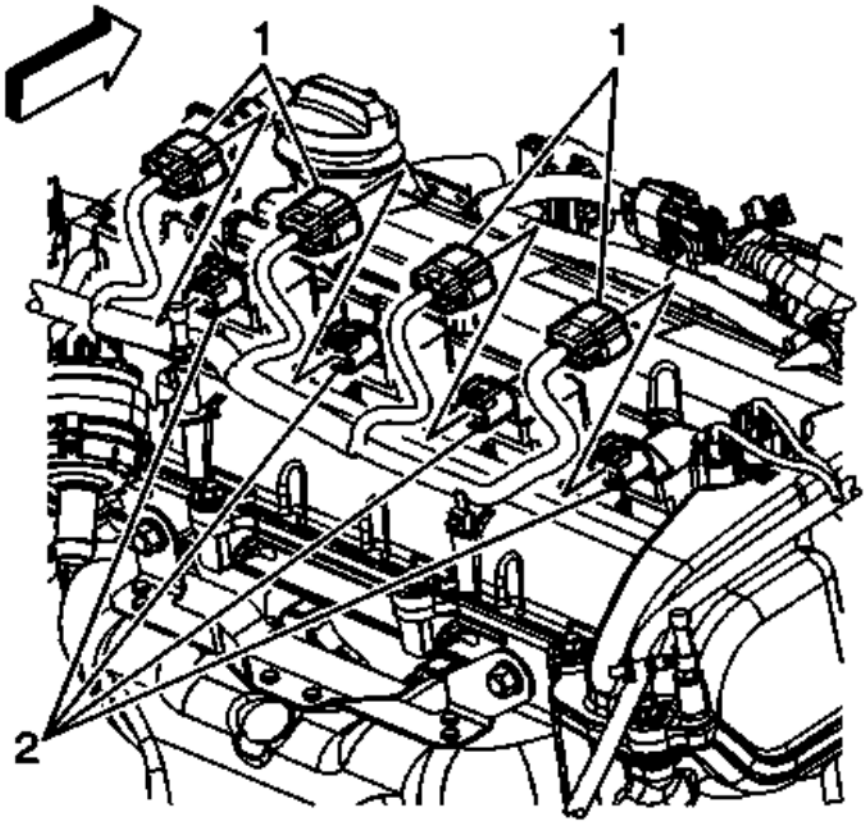

Fig. 97: View Of Ignition Coils & Connectors
Courtesy of GENERAL MOTORS COMPANY

1. Remove the intake manifold cover. Refer to **Intake Manifold Cover Replacement** .
2. Disconnect the engine wiring harness electrical connectors (1) from the ignition coil(s) (2).

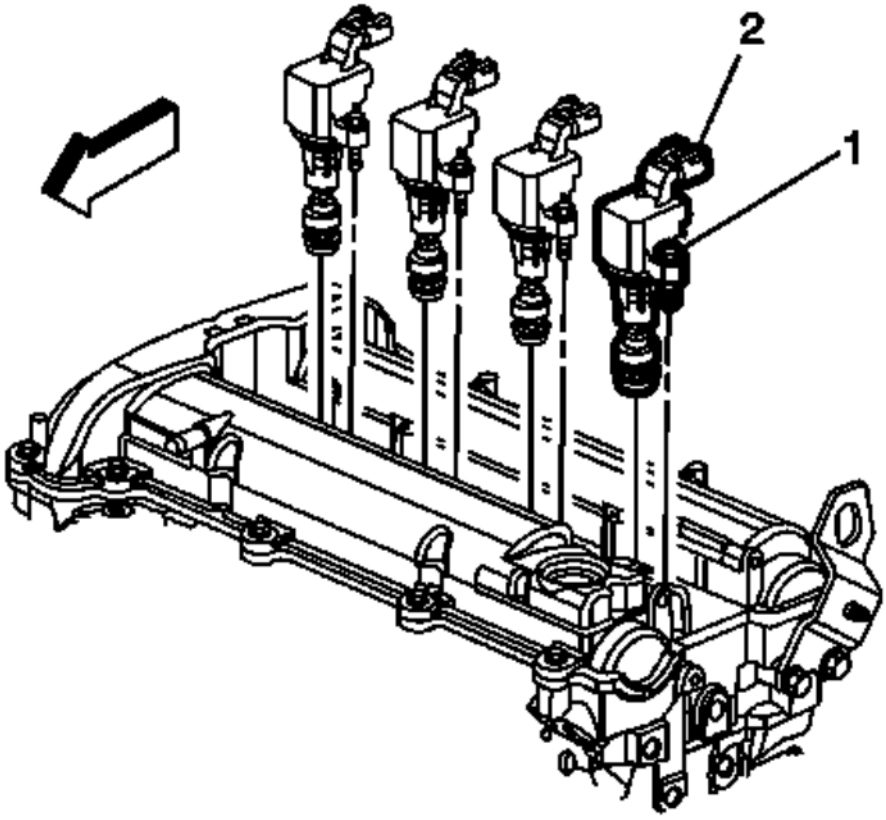

Fig. 98: Ignition Coil Bolts
Courtesy of GENERAL MOTORS COMPANY

3. Remove the ignition coil bolt(s) (1).
4. Remove the ignition coil(s) (2).

Installation Procedure

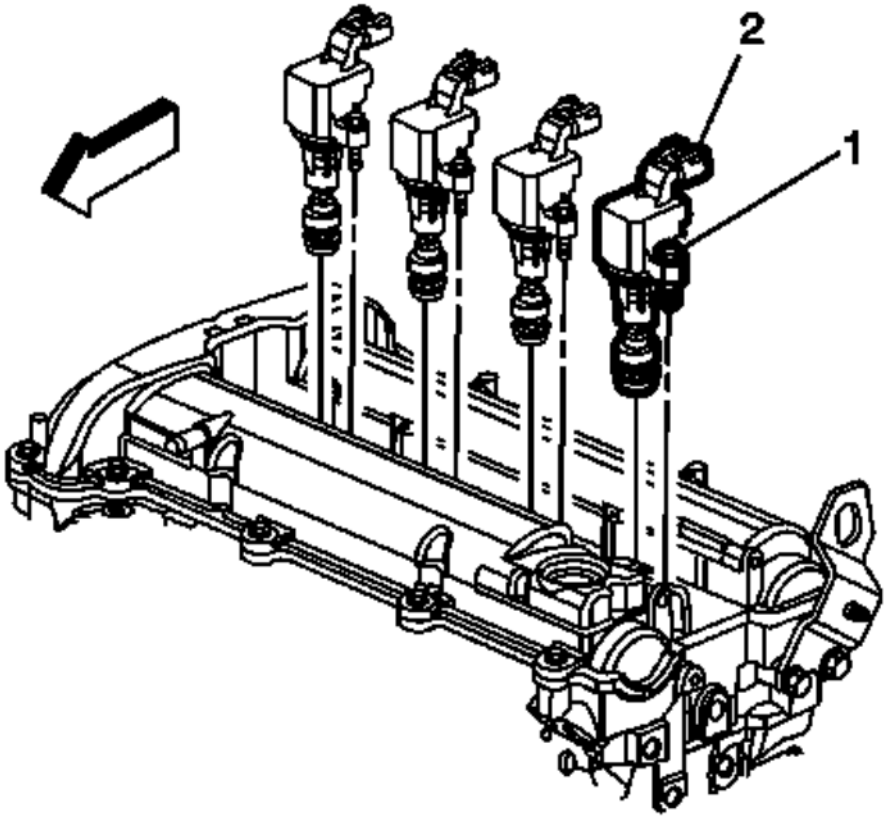

Fig. 99: Ignition Coil Bolts
Courtesy of GENERAL MOTORS COMPANY

1. Install the ignition coil(s) (2).

CAUTION: Refer to Fastener Caution .

2. Install the ignition coil bolt(s) (1) and tighten to 10 N.m (89 lb in).

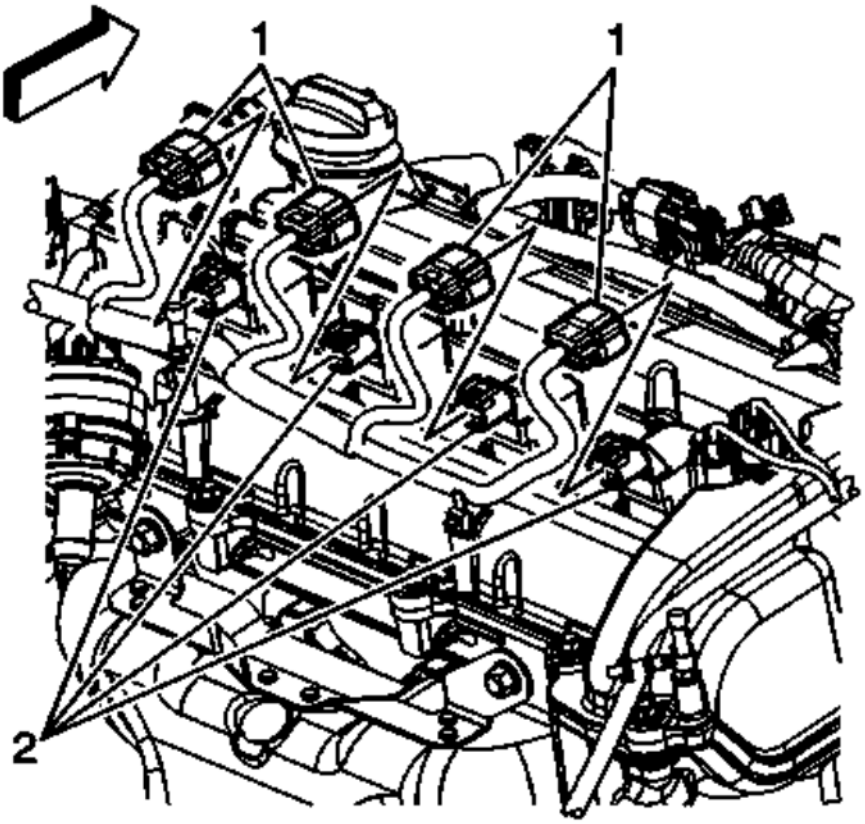

Fig. 100: View Of Ignition Coils & Connectors
Courtesy of GENERAL MOTORS COMPANY

3. Connect the engine wiring harness electrical connector(s) (1) to the ignition coil(s) (2).
4. Install the intake manifold cover. Refer to **Intake Manifold Cover Replacement** .

SPARK PLUG REPLACEMENT

Removal Procedure

CAUTION: This engine has aluminum cylinder heads. Do not remove the spark plugs from a hot engine, allow it to cool first. Removing the spark plugs from a hot engine may cause spark plug thread damage or cylinder head damage.

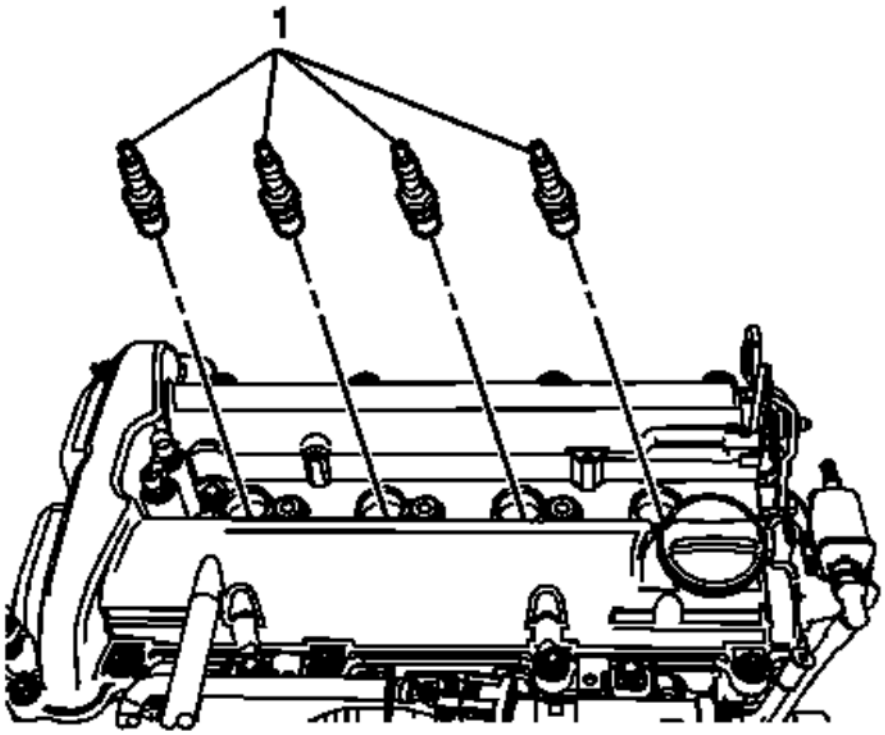

Fig. 101: Spark Plugs
Courtesy of GENERAL MOTORS COMPANY

1. Remove the ignition coil(s). Refer to **Ignition Coil Replacement**.

NOTE: **Make sure that any water and/or debris is blown out of the spark plug holes prior to removing the spark plugs.**

2. Remove the spark plugs (1) using a 5/8 inch spark plug socket.

Installation Procedure

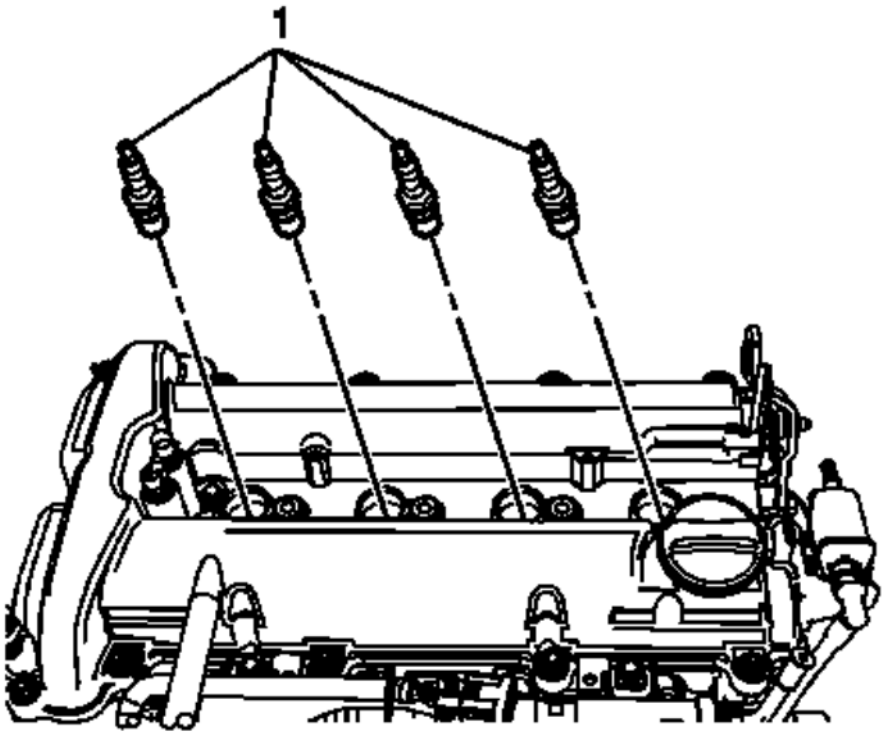

Fig. 102: Spark Plugs
Courtesy of GENERAL MOTORS COMPANY

CAUTION: Refer to Component Fastener Tightening Caution .

CAUTION: Do not coat spark plug threads with anti-seize compound. If anti-seize compound is used and spark plugs are over-torqued, damage to the cylinder head threads may result.

1. Install the spark plugs (1).

   Specification

   The spark plug gap is 1.0 mm (0.040 in).

   Tighten

   Tighten the plugs to 20 (15 lb ft).

2. Install the ignition coil(s). Refer to **Ignition Coil Replacement**.

SPARK PLUG INSPECTION

Spark Plug Usage

Ensure that the correct spark plug is installed. An incorrect spark plug causes driveability conditions. Refer to the Electronic Parts Catalog.

Spark Plug Inspection

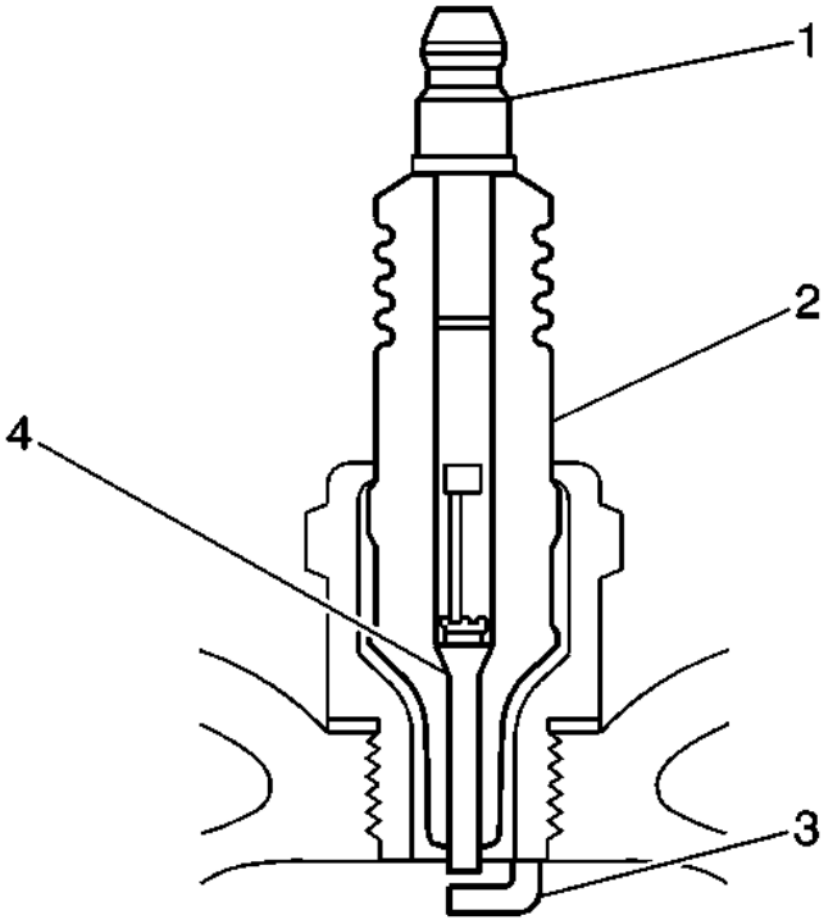

Fig. 103: Cross Sectional View Of Spark Plug
Courtesy of GENERAL MOTORS COMPANY

- Inspect the terminal post (1) for damage.
  - Inspect for a bent or broken terminal post (1).
  - Test for a loose terminal post (1) by twisting and pulling the post. The terminal post (1) should NOT move.
- Inspect the insulator (2) for flashover or carbon tracking, soot. This condition is often mistakenly identified as a cracked insulator. This is caused by the electrical charge traveling across the insulator (2) between the terminal post (1) and ground. Inspect for the following conditions:
  - Inspect the spark plug boot for damage.
  - Inspect the spark plug recess area of the cylinder head for moisture, such as oil, coolant, or water. A spark plug boot that is saturated causes arcing to ground.

- Inspect the insulator (2) for cracks. All or part of the electrical charge may arc through the crack instead of the electrodes (3, 4).
- Inspect for evidence of improper arcing.
  - Measure the gap between the center electrode (4) and the side electrode (3) terminals. This must be done carefully in order to avoid damaging the small diameter Iridium center electrode. Refer to **ENGINE MECHANICAL SPECIFICATIONS (LAF, LEA, OR LUK)** . An excessively wide electrode gap can prevent correct spark plug operation.
  - Inspect for the correct spark plug torque. Refer to **FASTENER TIGHTENING SPECIFICATIONS (LAF, LEA, OR LUK)** . Insufficient torque can prevent correct spark plug operation. An over torqued spark plug, causes the insulator (2) to crack.
  - Inspect for signs of tracking that occurred near the insulator tip instead of the center electrode (4).
  - Inspect for a broken or worn side electrode (3).
  - Inspect for a broken, worn, or loose center electrode (4) by shaking the spark plug.
    - A rattling sound indicates internal damage.
    - A loose center electrode (4) reduces the spark intensity.
  - Inspect for bridged electrodes (3, 4). Deposits on the electrodes (3, 4) reduce or eliminates the gap.
  - Inspect for worn or missing platinum pads on the electrodes (3, 4) If equipped.
  - Inspect for excessive fouling.
- Inspect the spark plug recess area of the cylinder head for debris. Dirty or damaged threads can cause the spark plug not to seat correctly during installation.

Spark Plug Visual Inspection

- Normal operation-Brown to grayish-tan with small amounts of white powdery deposits are normal combustion by-products from fuels with additives. Reddish orange deposits can indicate MMT fuel additive which is still used in some markets around the world (will cause misfire and cannot be burned off). MMT fuel additive use should be avoided.
- Carbon Fouled-Dry, fluffy black carbon, or soot caused by the following conditions:
  - Rich fuel mixtures
    - Leaking fuel injectors
    - Excessive fuel pressure
    - Restricted air filter element
    - Incorrect combustion
  - Reduced ignition system voltage output
    - Weak coils
    - Worn ignition wires
    - Incorrect spark plug gap
  - Excessive idling or slow speeds under light loads can keep spark plug temperatures so low that normal combustion deposits may not burn off.
- Deposit Fouling-Oil, coolant, or additives that include substances such as silicone, very white coating, reduces the spark intensity. Most powdery deposits will not effect spark intensity unless they form into a glazing over the electrode.

CRANKSHAFT POSITION SENSOR REPLACEMENT

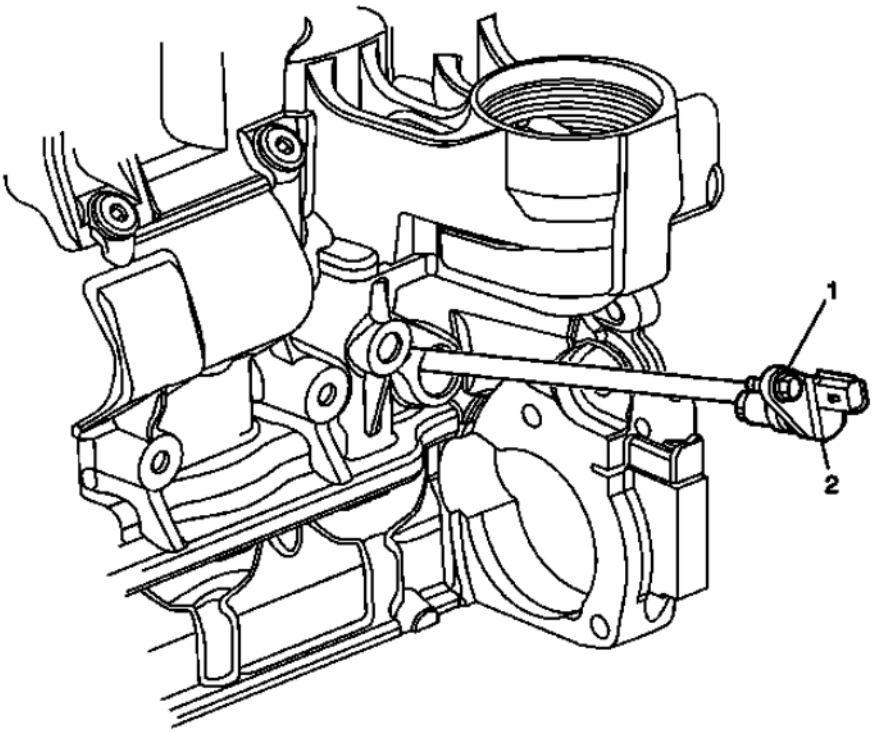

Fig. 104: Crankshaft Position Sensor
Courtesy of GENERAL MOTORS COMPANY

Crankshaft Position Sensor Replacement

Callout	Component Name
1	Crankshaft Position Sensor Fastener **CAUTION:** **Refer to Fastener Caution .** **Tighten** 10 N.m (89 lb in)
2	Crankshaft Position Sensor **Procedure** Disconnect the electrical connector.

CAMSHAFT POSITION SENSOR REPLACEMENT - INTAKE

Removal Procedure

1. Remove the air cleaner outlet duct. Refer to **Air Cleaner Outlet Duct Replacement**.
2. Remove the intake manifold cover. Refer to **Intake Manifold Cover Replacement** .

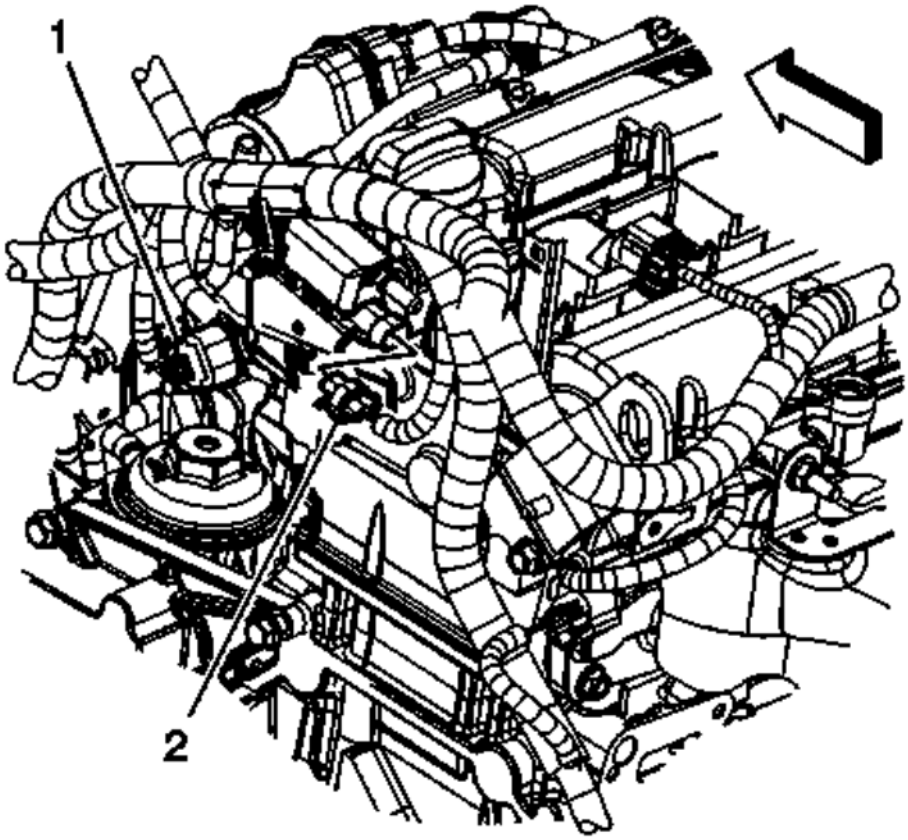

Fig. 105: Locating Intake Camshaft Position (Cmp) Sensor And Intake Camshaft Position (Cmp) Sensor Connectors
Courtesy of GENERAL MOTORS COMPANY

3. Disconnect the engine wiring harness electrical connector (1) from the intake camshaft position (CMP) sensor.

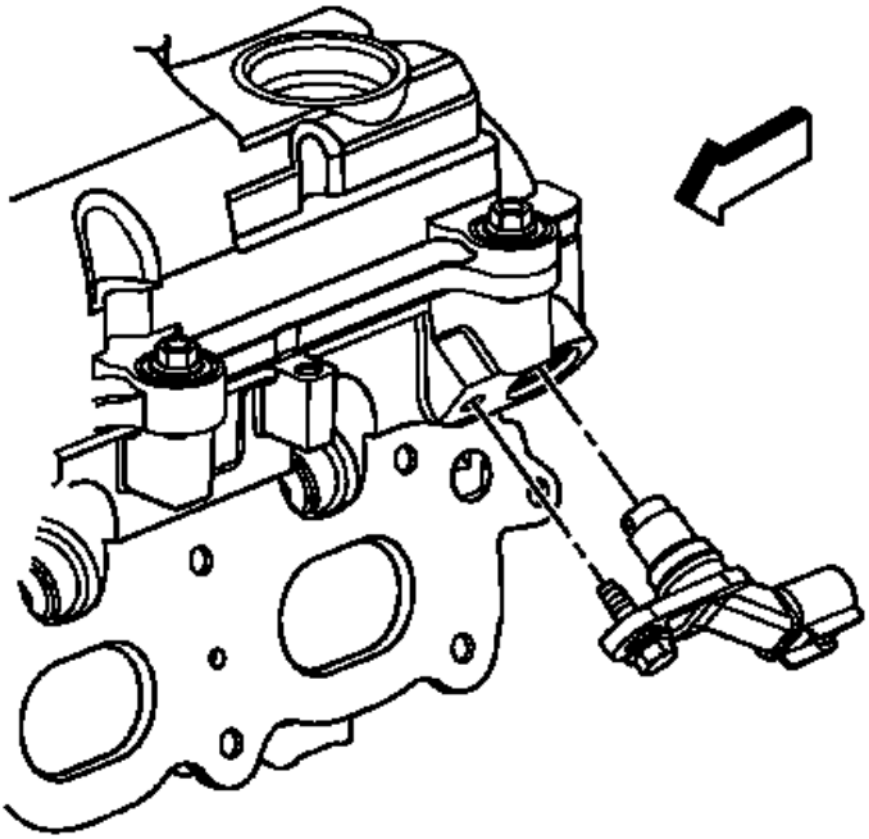

Fig. 106: Identifying CMP Sensor
Courtesy of GENERAL MOTORS COMPANY

4. Remove the intake CMP sensor bolt.
5. Remove the intake CMP sensor.

Installation Procedure

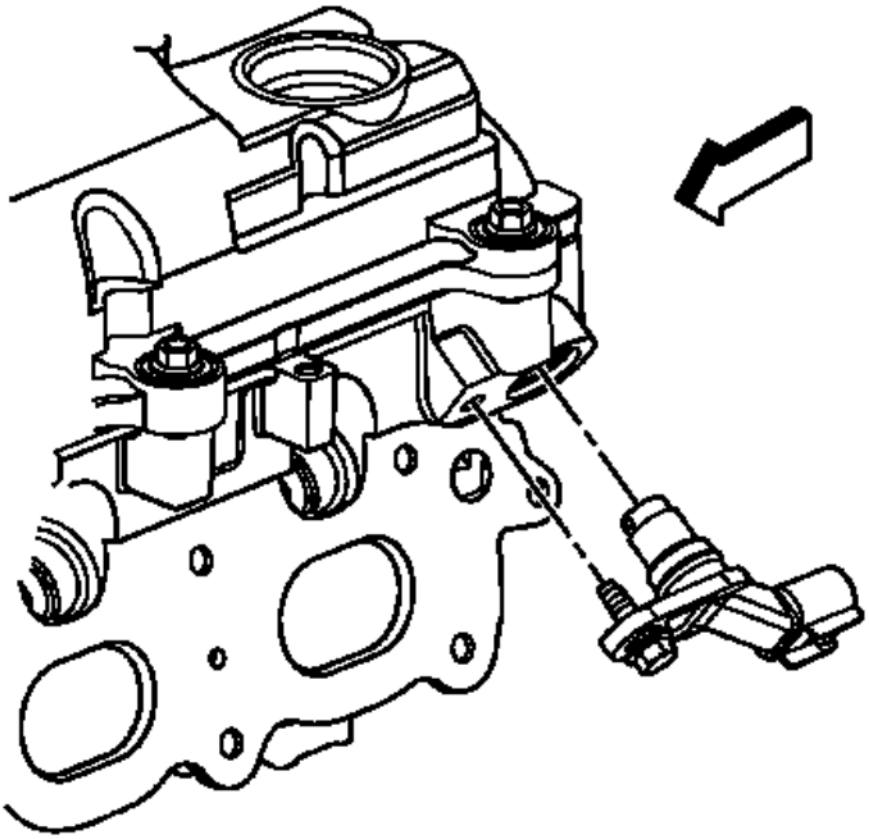

Fig. 107: Identifying CMP Sensor
Courtesy of GENERAL MOTORS COMPANY

NOTE: Inspect the intake CMP sensor for damage, replace as necessary.

1. Lubricate the intake CMP sensor O-ring seal with clean engine oil.
2. Install the intake CMP sensor.

CAUTION: Refer to Fastener Caution .

3. Install the intake CMP sensor bolt.

Tighten

Tighten the bolt to 10 N.m (89 lb in).

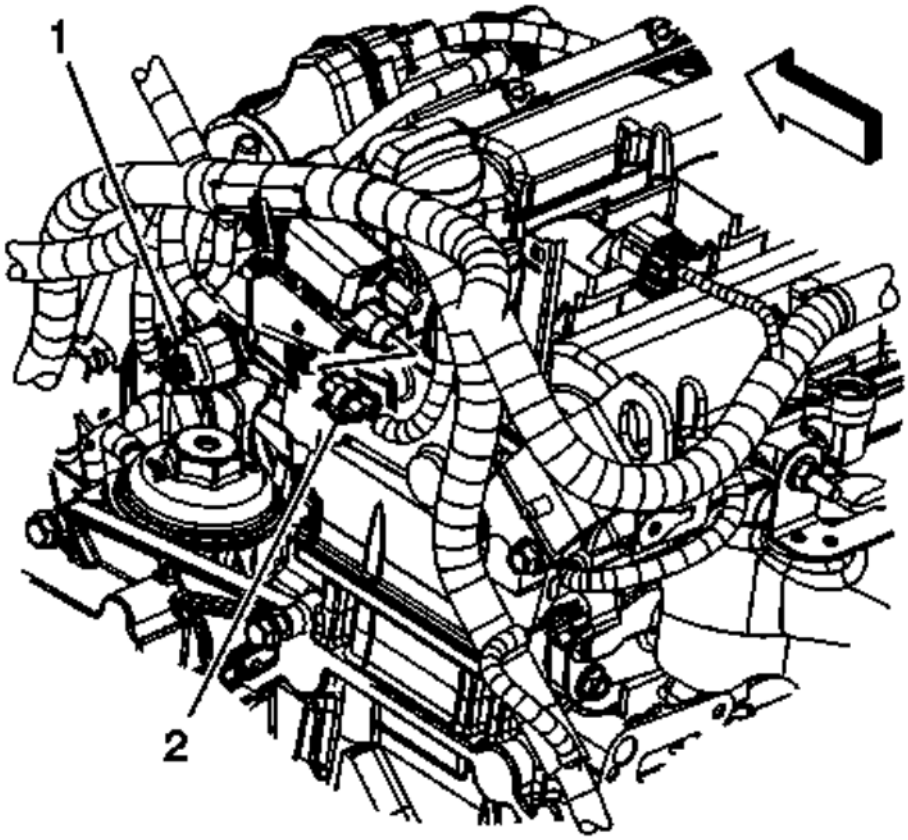

Fig. 108: Locating Intake Camshaft Position (Cmp) Sensor And Intake Camshaft Position (CMP) Sensor Connectors
Courtesy of GENERAL MOTORS COMPANY

4. Connect the engine wiring harness electrical connector (1) to the intake CMP sensor.
5. Install the intake manifold cover. Refer to **Intake Manifold Cover Replacement** .
6. Install the air cleaner outlet duct. Refer to **Air Cleaner Outlet Duct Replacement**.

CAMSHAFT POSITION SENSOR REPLACEMENT - EXHAUST

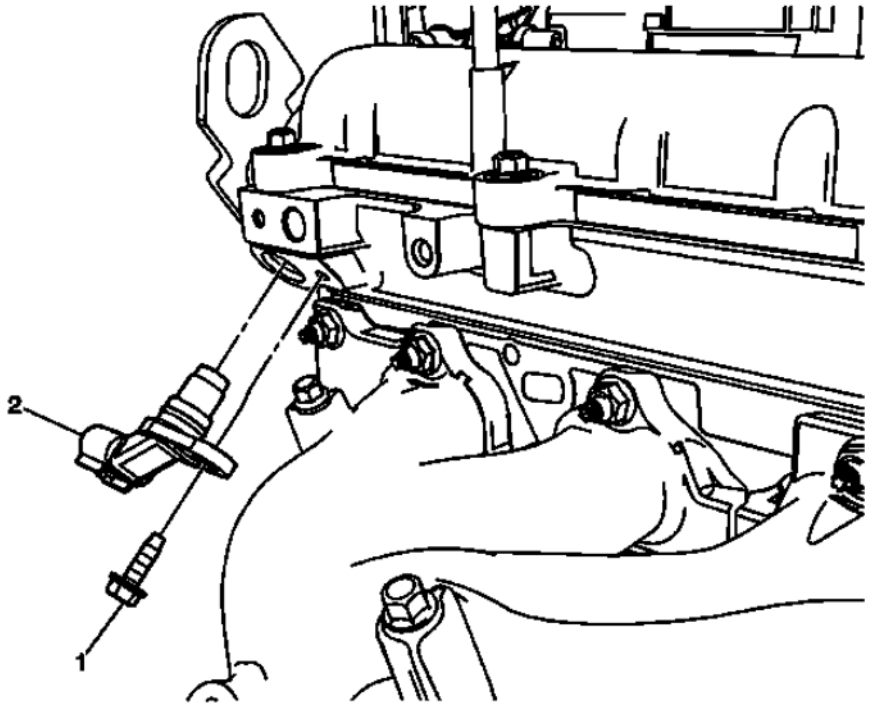

Fig. 109: Camshaft Position Sensor - Exhaust
Courtesy of GENERAL MOTORS COMPANY

Camshaft Position Sensor Replacement - Exhaust

Callout	Component Name
Preliminary Procedure Remove the intake manifold cover. Refer to **Intake Manifold Cover Replacement** .	
1	Camshaft Position Sensor Fastener **CAUTION:** **Refer to Fastener Caution .** **Tighten** 10 N.m(89 lb in)
2	Camshaft Position Sensor - Exhaust **Procedure** 1. Lube the O-ring with clean engine oil. 2. Disconnect the electrical connector.

CAMSHAFT POSITION ACTUATOR EXHAUST SOLENOID VALVE REPLACEMENT

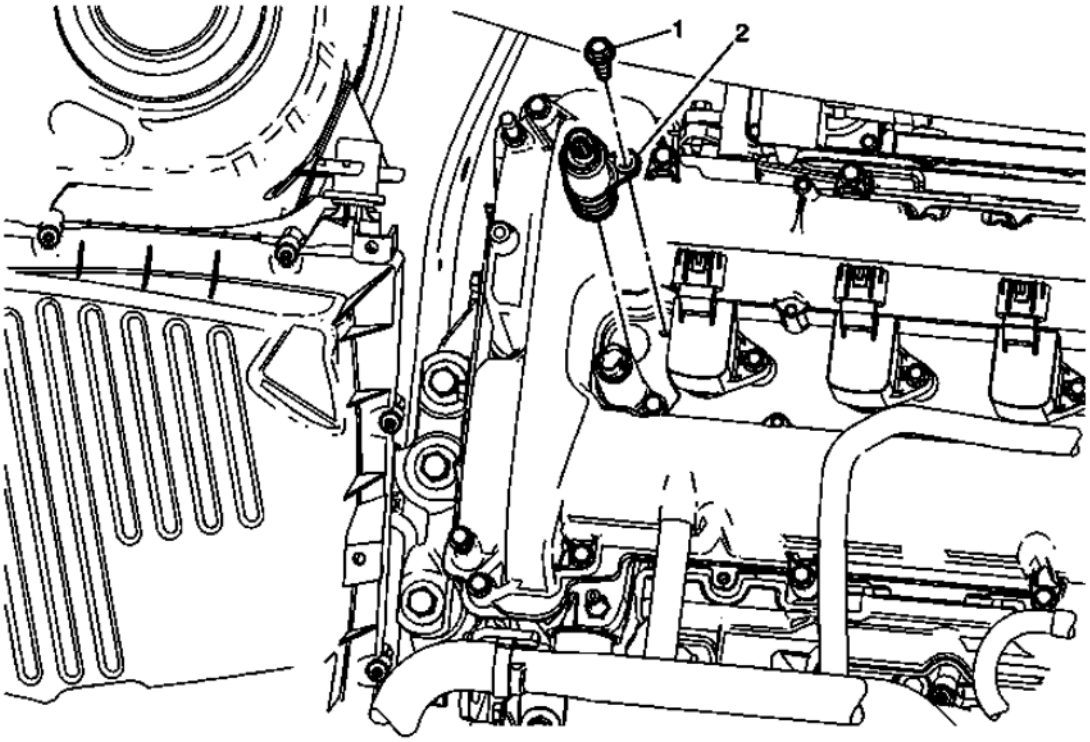

Fig. 110: Camshaft Position Actuator Exhaust Solenoid Valve
Courtesy of GENERAL MOTORS COMPANY

Camshaft Position Actuator Exhaust Solenoid Valve Replacement

Callout	Component Name
Preliminary Procedure Remove the intake manifold cover. Refer to **Intake Manifold Cover Replacement**	
1	Camshaft Position Actuator Exhaust Solenoid Valve Fastener **CAUTION:** **Refer to Fastener Caution** **Tighten** 10 N.m (89 lb in)
2	Camshaft Position Actuator Exhaust Solenoid Valve **Procedure** 1. Disconnect the camshaft position actuator solenoid valve harness connector. 2. Clean the cylinder head mating surfaces before assembly. 3. Lubricate the camshaft position actuator solenoid valve O-ring seals with clean engine oil.

CAMSHAFT POSITION ACTUATOR INTAKE SOLENOID VALVE REPLACEMENT

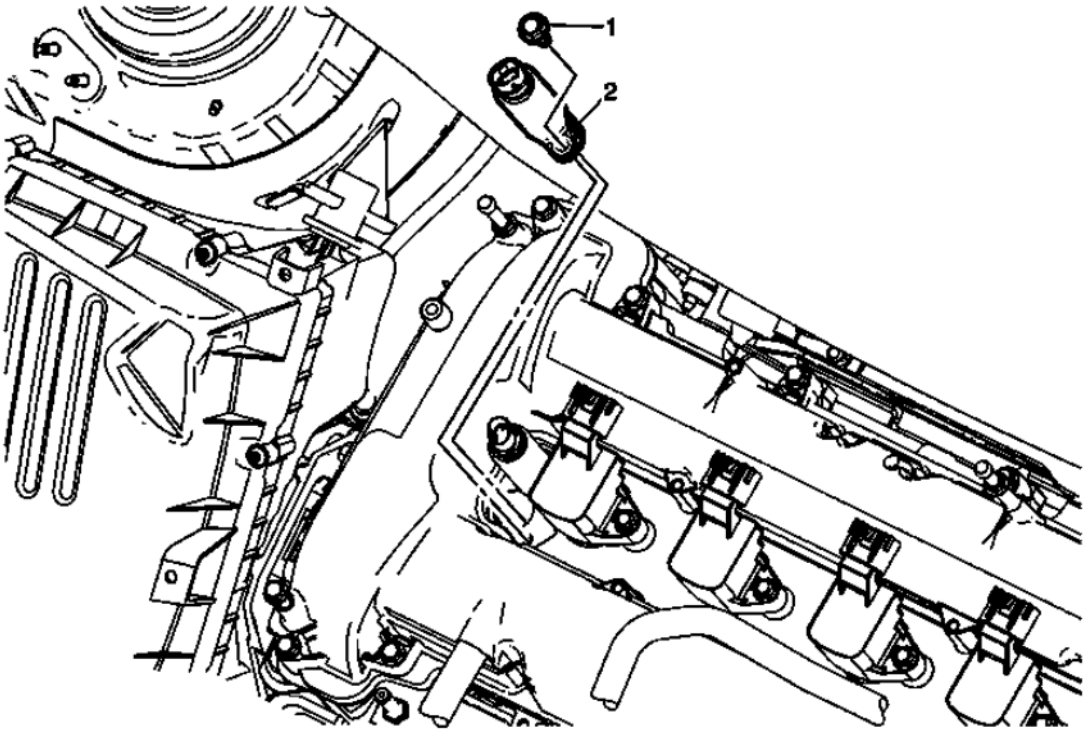

Fig. 111: Camshaft Position Actuator Intake Solenoid Valve
Courtesy of GENERAL MOTORS COMPANY

Camshaft Position Actuator Intake Solenoid Valve Replacement

Callout	Component Name
Preliminary Procedure Remove the intake manifold cover. Refer to **Intake Manifold Cover Replacement**	
1	Camshaft Position Actuator Intake Solenoid Valve Fastener **CAUTION:** **Refer to Fastener Caution** **Tighten** 10 N.m (89 lb in)
2	Camshaft Position Actuator Intake Solenoid Valve **Procedure** 1. Disconnect the camshaft position actuator solenoid valve harness connector. 2. Clean the cylinder head mating surfaces before assembly. 3. Lubricate the camshaft position actuator solenoid valve O-ring seals with clean engine oil.

KNOCK SENSOR REPLACEMENT

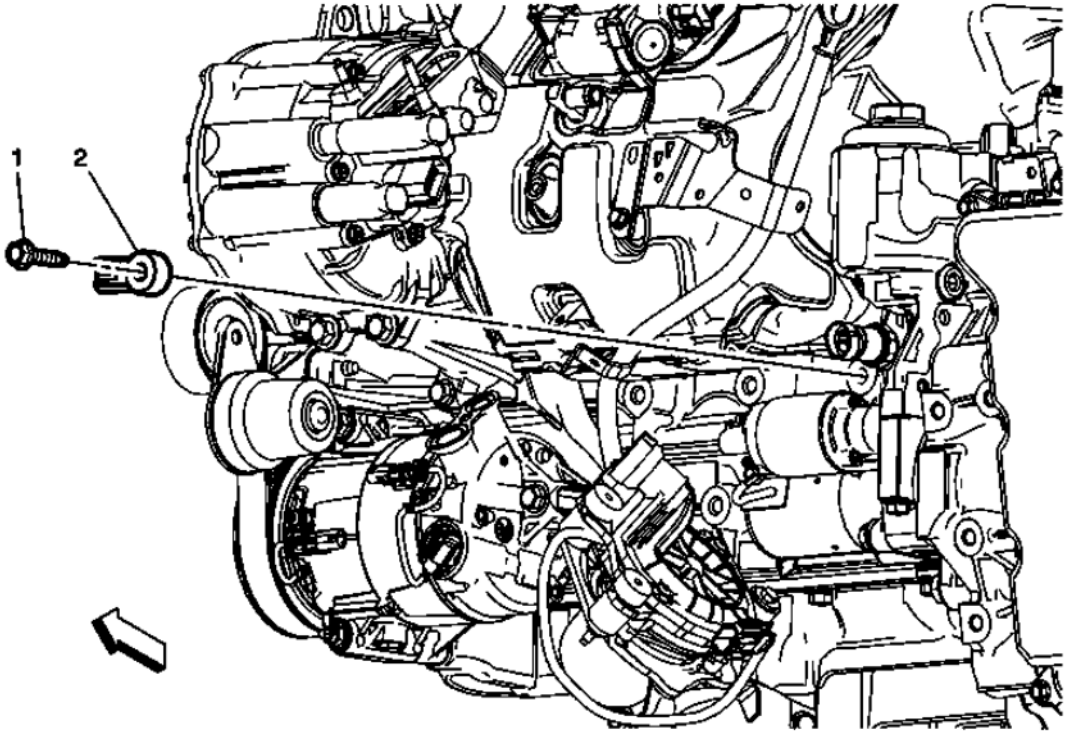

Fig. 112: Knock Sensor & Bolt
Courtesy of GENERAL MOTORS COMPANY

Knock Sensor Replacement

Callout	Component Name
Preliminary Procedure 1. Disconnect the negative battery cable. Refer to **Battery Negative Cable Disconnection and Connection** . 2. Raise and support the vehicle. Refer to **Lifting and Jacking the Vehicle** . 3. Disconnect and reposition the battery positive cable from the starter. Refer to **Starter Replacement (LUK)** .	
1	Knock Sensor Fastener **CAUTION:** **Refer to Fastener Caution .** **Tighten** 28 (21 lb ft)
2	Knock Sensor **Procedure** Disconnect the electrical connector.

FLEXIBLE FUEL SENSOR REPLACEMENT

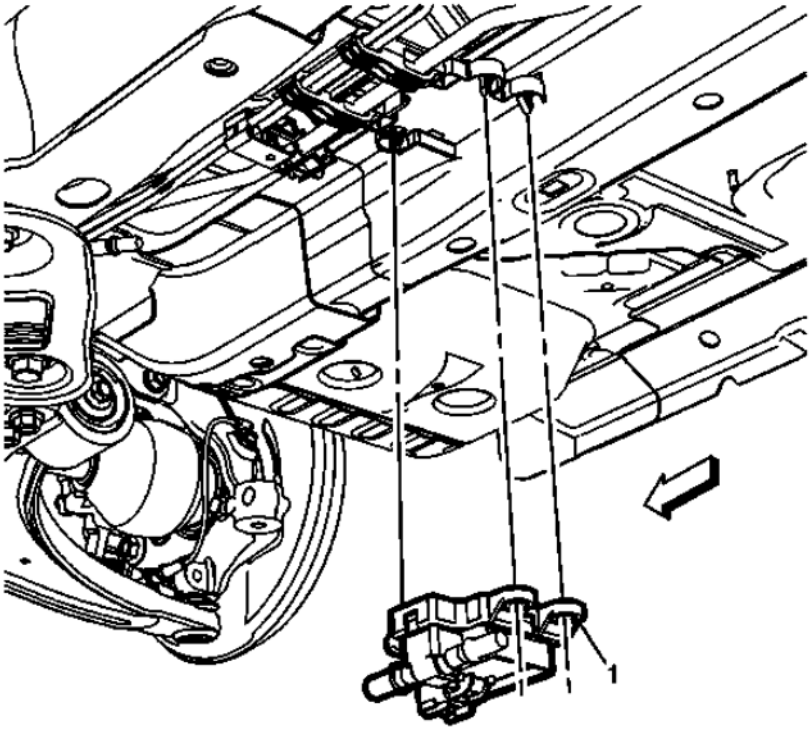

Fig. 113: Flexible Fuel Sensor
Courtesy of GENERAL MOTORS COMPANY

Flexible Fuel Sensor Replacement

Callout	Component Name
Preliminary Procedures 1. Raise and support the vehicle. Refer to **Lifting and Jacking the Vehicle** . 2. Remove fuel feed hose- flex sensor to fuel feed pipe. Refer to **Fuel Feed Hose Replacement (Flex Sensor to Fuel Feed Pipe E-85)**, **Fuel Feed Hose Replacement (Flex Sensor to Fuel Feed Front Pipe E-85)** 3. Remove fuel feed hose- flex sensor to fuel feed front pipe. Refer to **Fuel Feed Hose Replacement (Flex Sensor to Fuel Feed Pipe E-85)**, **Fuel Feed Hose Replacement (Flex Sensor to Fuel Feed Front Pipe E-85)**	
1	Flexible Fuel Sensor. **Procedure** 1. Disconnect the electrical connector. 2. Depress tabs to release sensor.

SECONDARY AIR INJECTION CHECK VALVE REPLACEMENT (LEA)

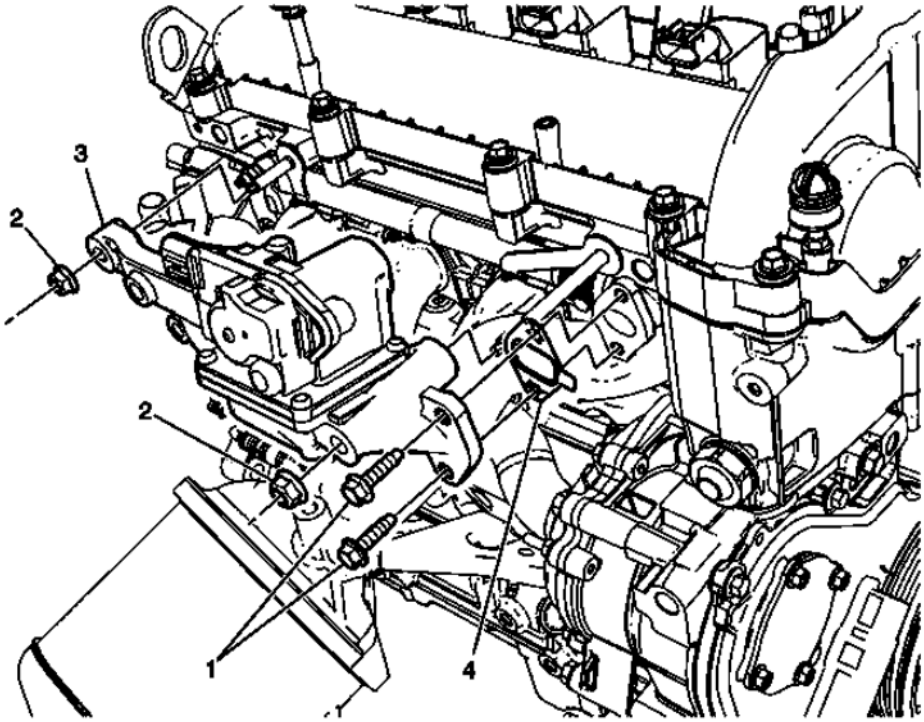

Fig. 114: Identifying Secondary Air Injection Check Valve Pipe Replacement, Bolts & Nuts
Courtesy of GENERAL MOTORS COMPANY

Secondary Air Injection Check Valve Replacement (LEA)

Callout	Component Name
Preliminary Procedure Remove the exhaust manifold heat shield.	
1	Secondary Air Injection Check Valve Bolt (Qty: 2) **CAUTION:** **Refer to Fastener Caution .** **Tighten** 10 N.m (89 lb in)
2	Secondary Air Injection Check Valve Nut (Qty: 2) **Tighten** 25 N.m (18 lb ft)
3	Secondary Air Injection Check Valve **Procedure** Disconnect the electrical connector.
4	Secondary Air Injection Check Valve Gasket

SECONDARY AIR INJECTION CHECK VALVE REPLACEMENT - LEFT SIDE (LUK)

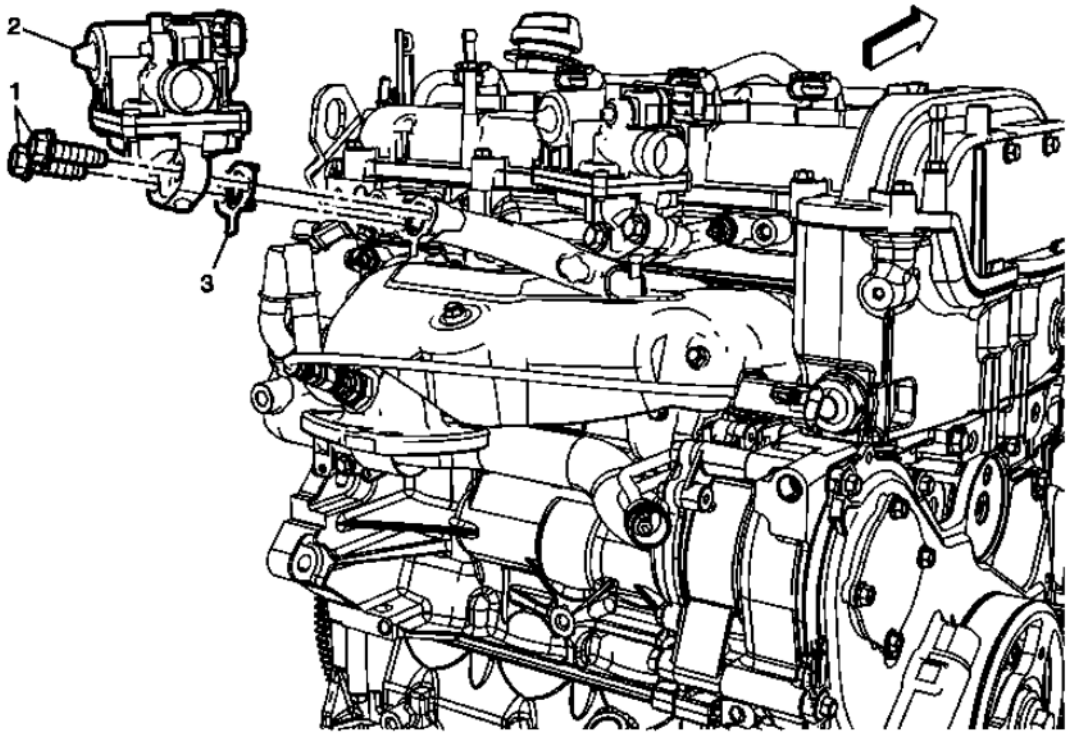

Fig. 115: Secondary Air Injection Check Valve - Left Side
Courtesy of GENERAL MOTORS COMPANY

Secondary Air Injection Check Valve Replacement - Left Side (LUK)

Callout	Component Name
Preliminary Procedure 1. Remove the intake manifold cover. Refer to **Intake Manifold Cover Replacement** . 2. Disconnect the secondary air injection pipe hose from the secondary air injection check valve.	
1	Secondary Air Injection Check Valve Bolt (Qty: 2) **CAUTION:** **Refer to Fastener Caution .** **Tighten** 10 N.m (89 lb in)
2	Secondary Air Injection Check Valve **Procedure** Disconnect the electrical connector.
3	Secondary Air Injection Check Valve Gasket

SECONDARY AIR INJECTION CHECK VALVE REPLACEMENT - RIGHT SIDE (LUK)

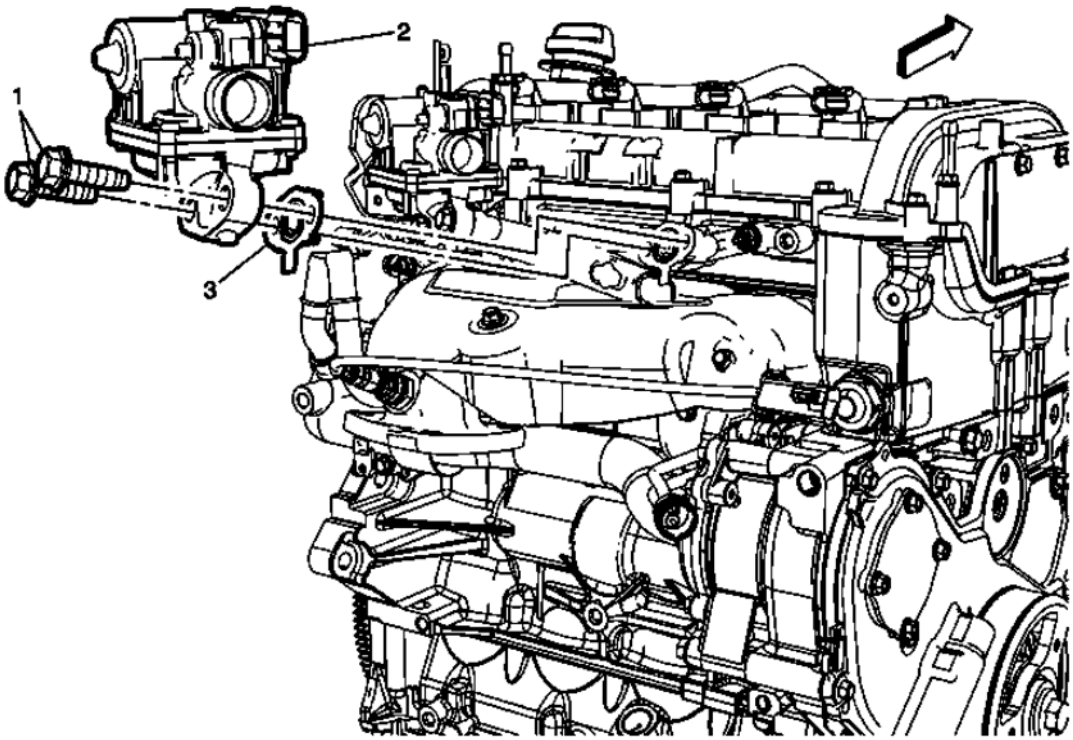

Fig. 116: Secondary Air Injection Check Valve Pipe, Bolts & Nuts - Right Side (LUK)
Courtesy of GENERAL MOTORS COMPANY

Secondary Air Injection Check Valve Replacement - Right Side (LUK)

Callout	Component Name
Preliminary Procedure 1. Remove the intake manifold cover. Refer to **Intake Manifold Cover Replacement** . 2. Disconnect the secondary air injection pipe hose from the secondary air injection check valve.	
1	Secondary Air Injection Check Valve Bolt (Qty: 2) **CAUTION:** **Refer to Fastener Caution .** **Tighten** 10 N.m (89 lb in)
2	Secondary Air Injection Check Valve **Procedure** Disconnect the electrical connector.
3	Secondary Air Injection Check Valve Gasket

SECONDARY AIR INJECTION CHECK VALVE PIPE REPLACEMENT (LEA)

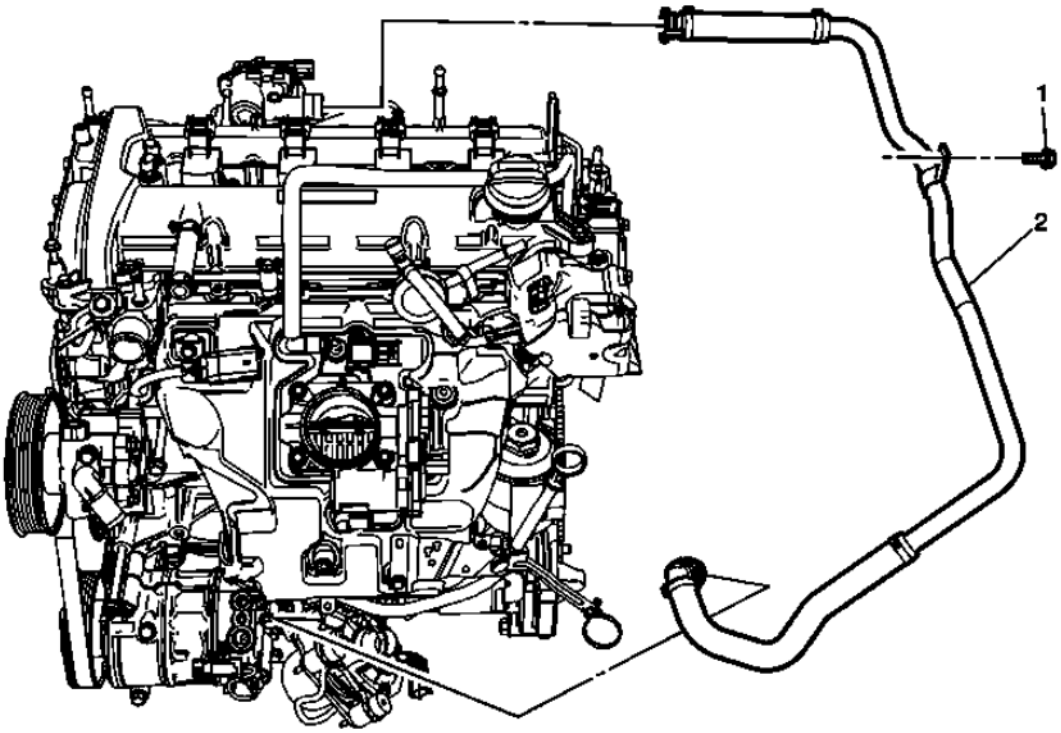

Fig. 117: Secondary Air Injection Check Valve Pipe & Fasteners (LEA)
Courtesy of GENERAL MOTORS COMPANY

Secondary Air Injection Check Valve Pipe Replacement (LEA)

Callout	Component Name
Preliminary Procedure Remove the intake manifold cover. Refer to **Intake Manifold Cover Replacement** .	
1	Secondary Air Injection Check Valve Pipe Fastener **CAUTION:** **Refer to Fastener Caution .** **Tighten** 22 N.m(16 lb ft).
2	Secondary Air Injection Check Valve Pipe **Procedure** Disconnect the quick connect fittings by squeezing both sides.

SECONDARY AIR INJECTION CHECK VALVE PIPE REPLACEMENT (LUK)

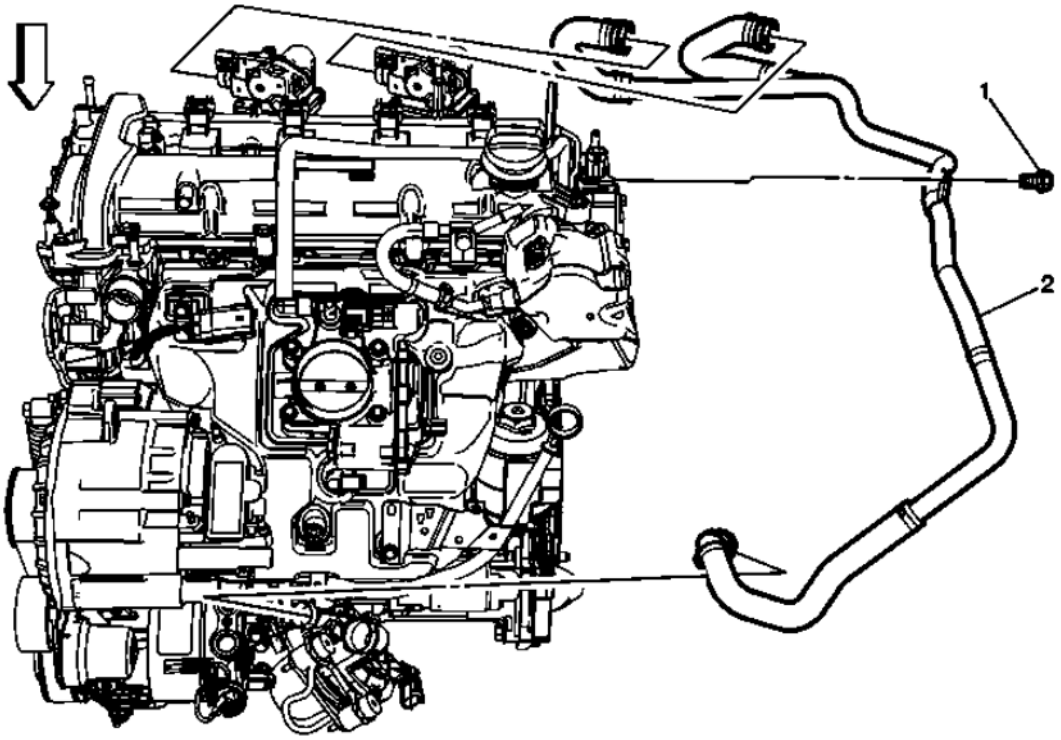

Fig. 118: Secondary Air Injection Check Valve Pipe & Fastener (LUK)
Courtesy of GENERAL MOTORS COMPANY

Secondary Air Injection Check Valve Pipe Replacement (LUK)

Callout	Component Name
Preliminary Procedure Remove the intake manifold cover. Refer to **Intake Manifold Cover Replacement** .	
1	Secondary Air Injection Pipe Fastener **CAUTION:** **Refer to Fastener Caution .** **Tighten** 22 N.m (16 lb ft).
2	Secondary Air Injection Pipe **Procedure** Disconnect the quick connect fittings by squeezing both sides.

SECONDARY AIR INJECTION CHECK VALVE PIPE ADAPTER REPLACEMENT - LEFT SIDE (LUK)

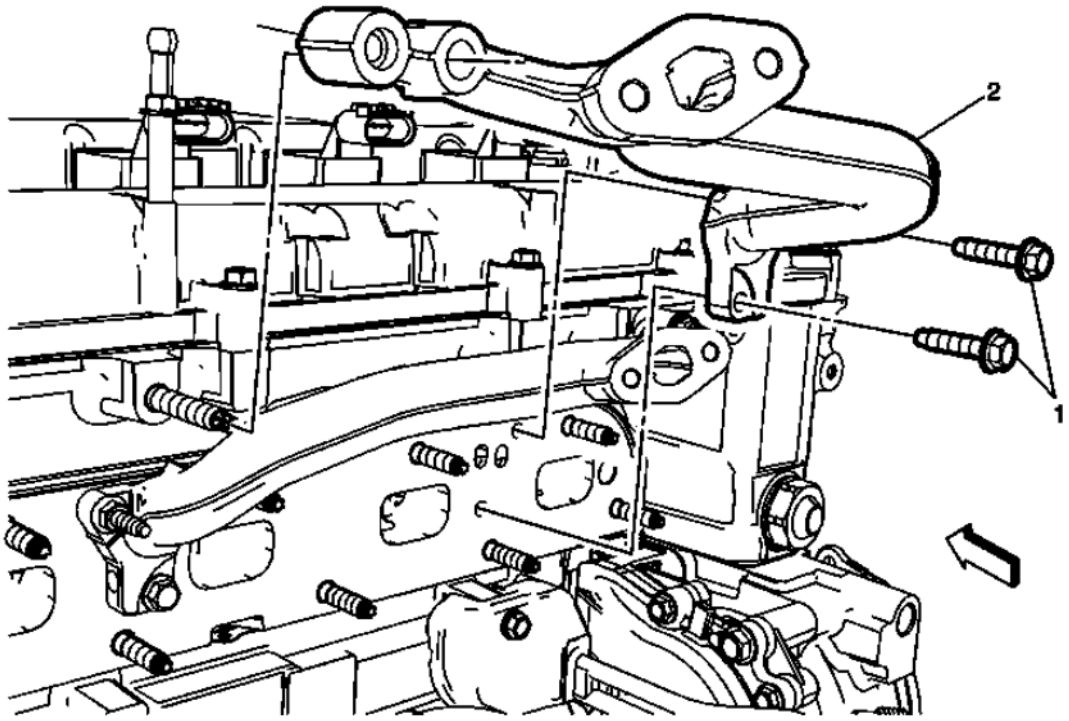

Fig. 119: Secondary Air Injection Check Valve Pipe Adapter - Left Side (LUK)
Courtesy of GENERAL MOTORS COMPANY

Secondary Air Injection Check Valve Pipe Adapter Replacement - Left Side (LUK)

Callout	Component Name
Preliminary Procedure 1. Remove the secondary air injection check valve bracket. Refer to **Secondary Air Injection Check Valve Bracket Replacement (LUK)**. 2. Remove the exhaust manifold. Refer to **Exhaust Manifold Replacement (LUK)**	
1	Secondary Air Injection Check Valve Pipe Adapter Fastener (Qty: 2) **CAUTION:** **Refer to Fastener Caution .** **Tighten** 10 (89 lb in)
2	Secondary Air Injection Check Valve Pipe Adapter **Procedure** 1. Remove the right secondary air injection check valve pipe adaptor. Refer to **Secondary Air Injection Check Valve Pipe Adapter Replacement - Right Side (LUK)** 2. Install a new exhaust manifold gasket.

	NOTE: **The secondary air injection check valve pipe adaptors share the use of the exhaust manifold gasket. Both adaptors must be removed in order to replace the exhaust manifold gasket.**

SECONDARY AIR INJECTION CHECK VALVE PIPE ADAPTER REPLACEMENT - RIGHT SIDE (LUK)

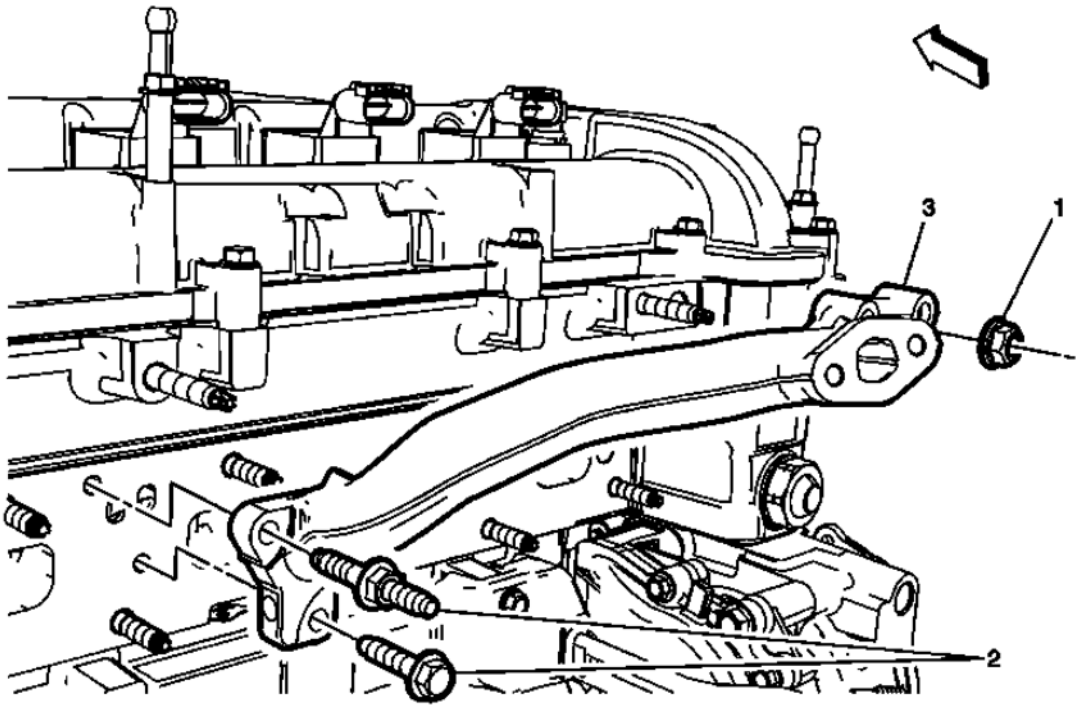

Fig. 120: Secondary Air Injection Check Valve Pipe Adapter - Right Side (LUK)
Courtesy of GENERAL MOTORS COMPANY

Secondary Air Injection Check Valve Pipe Adapter Replacement - Right Side (LUK)

Callout	Component Name
Preliminary Procedure Remove the left secondary air injection check valve pipe adaptor. Refer to **Secondary Air Injection Check Valve Pipe Adapter Replacement - Left Side (LUK)**.	
1	Secondary Air Injection Check Valve Pipe Adapter Fastener **CAUTION:** **Refer to Fastener Caution .** **Tighten** 25 (18 lb ft)
2	Secondary Air Injection Check Valve Pipe Adapter Fastener (Qty: 2) **Tighten** 10 (89 lb in)
	Secondary Air Injection Check Valve Pipe Adapter

3	**Procedure** Install a new exhaust manifold gasket.

SECONDARY AIR INJECTION CHECK VALVE BRACKET REPLACEMENT (LUK)

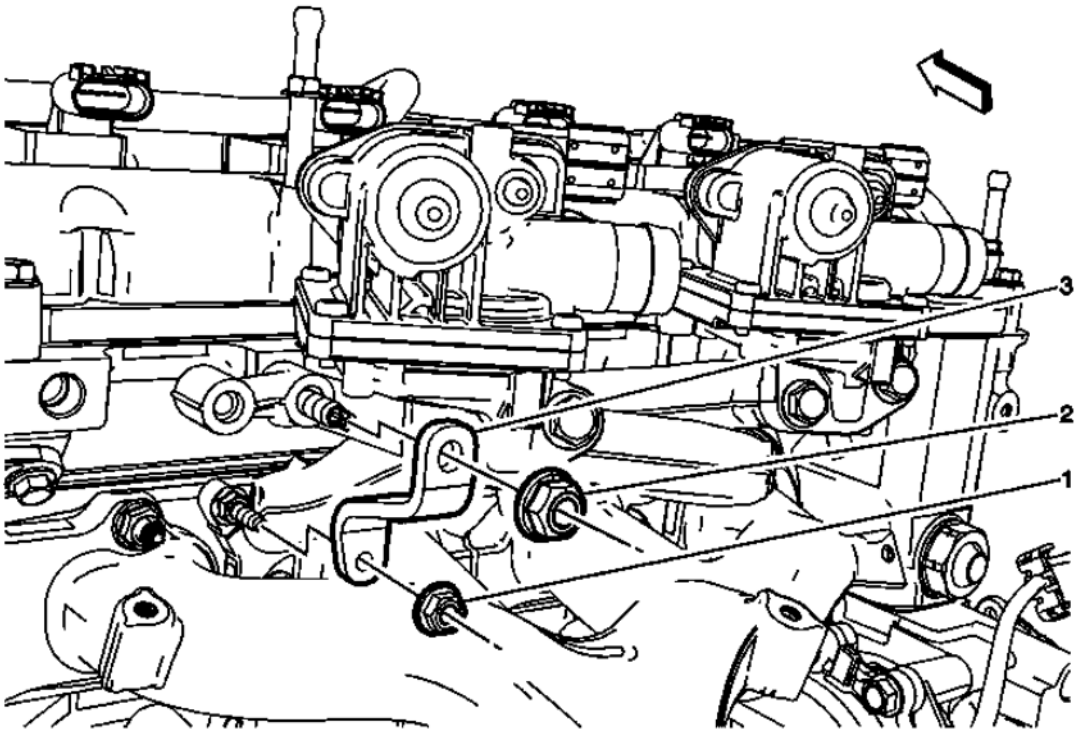

Fig. 121: Secondary Air Injection Check Valve Bracket & Fasteners (LUK)
Courtesy of GENERAL MOTORS COMPANY

Secondary Air Injection Check Valve Bracket Replacement (LUK)

Callout	Component Name
Preliminary Procedure Remove the intake manifold cover. Refer to **Intake Manifold Cover Replacement** .	
1	Secondary Air Injection Check Valve Bracket Upper Fastener **CAUTION:** **Refer to Fastener Caution .** **Tighten** 25 (18 lb ft)
2	Secondary Air Injection Check Valve Bracket Lower Fastener **Tighten** 10 (89 lb in)
3	Secondary Air Injection Check Valve Bracket

SECONDARY AIR INJECTION PIPE REPLACEMENT (LEA)

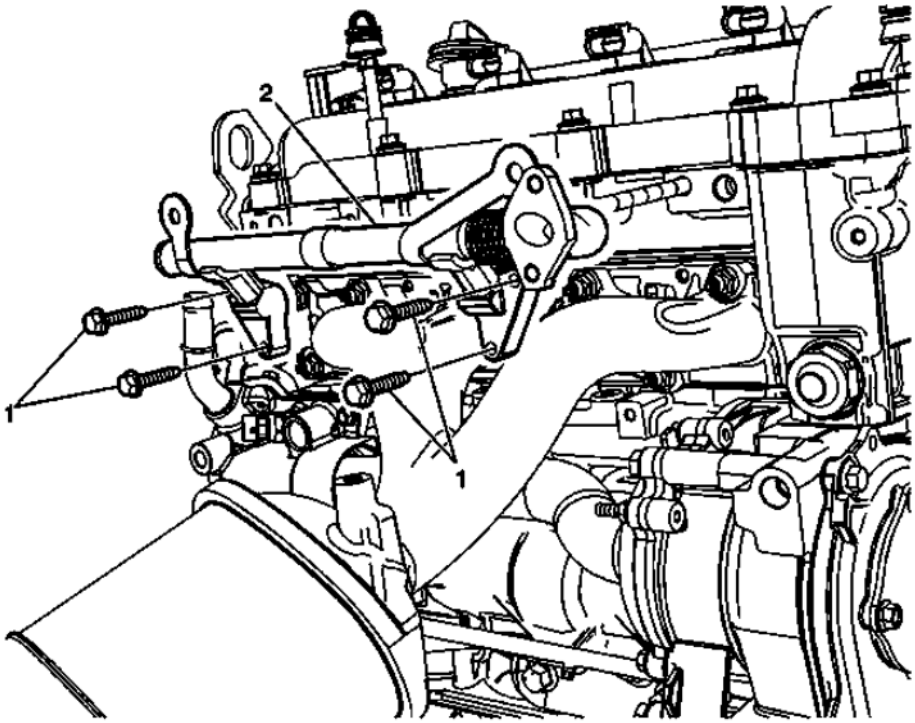

Fig. 122: Secondary Air Injection Pipe & Bolts (LEA)
Courtesy of GENERAL MOTORS COMPANY

Secondary Air Injection Pipe Replacement (LEA)

Callout	Component Name
Preliminary Procedure **Remove the secondary air injection check valve. Refer to Secondary Air Injection Check Valve Replacement (LEA)**	
1	Secondary Air Injection Pipe Bolt (Qty: 4) **CAUTION:** **Refer to Fastener Caution .** **Tighten** 10 N.m(89 lb in).
2	Secondary Air Injection Pipe

SECONDARY AIR INJECTION PUMP INLET HOSE REPLACEMENT (LEA, LUK)

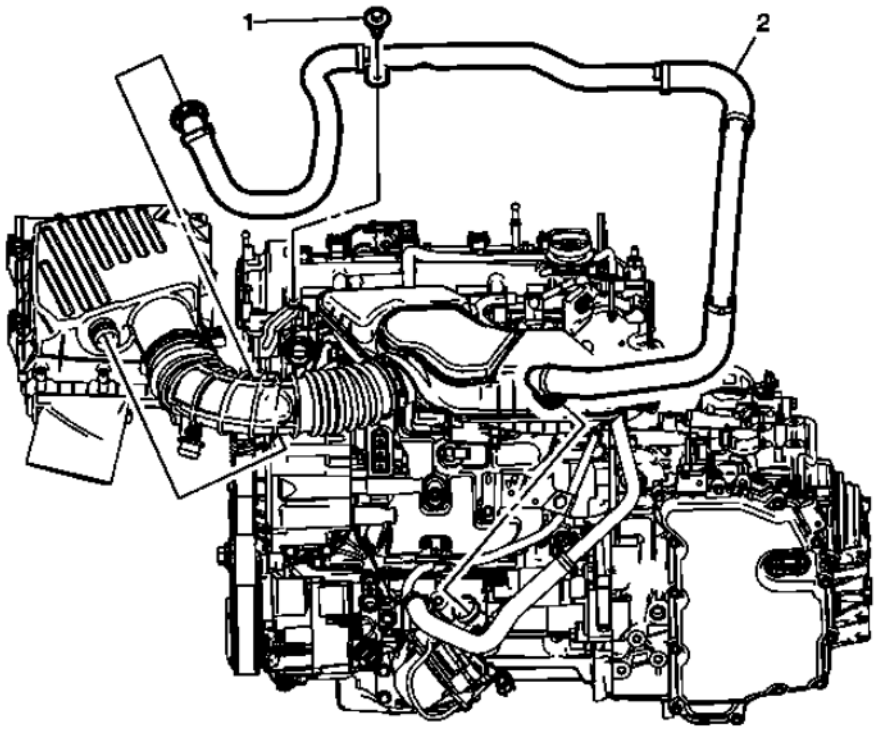

Fig. 123: Secondary Air Injection Pump Inlet Hose & Fastener
Courtesy of GENERAL MOTORS COMPANY

Secondary Air Injection Pump Inlet Hose Replacement (LEA, LUK)

Callout	Component Name
1	Secondary Air Injection Inlet Pump Hose Fastener **CAUTION:** **Refer to Fastener Caution .** **Tighten** 22 N.m(16 lb ft).
2	Secondary Air Injection Inlet Pump Hose **Procedure** Disconnect the quick connect fittings by squeezing both sides.

SECONDARY AIR INJECTION PUMP REPLACEMENT (LEA, LUK)

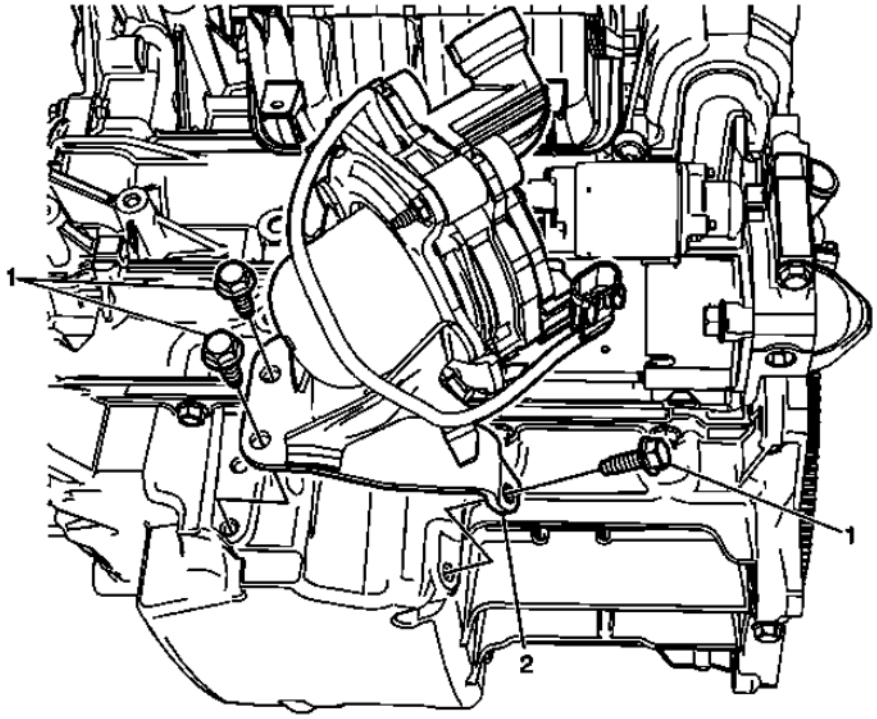

Fig. 124: Secondary Air Injection Pump
Courtesy of GENERAL MOTORS COMPANY

Secondary Air Injection Pump Replacement (LEA, LUK)

Callout	Component Name
	Preliminary Procedure **1. Disconnect the secondary air injection pump inlet hose. Refer to Secondary Air Injection Pump Inlet Hose Replacement (LEA, LUK)** **2. Disconnect the secondary air injection check valve pipe. Refer to Secondary Air Injection Check Valve Pipe Replacement (LEA), Secondary Air Injection Check Valve Pipe Replacement (LUK)**
1	Secondary Air Injection Pump Bolt (Qty: 3) **CAUTION:** **Refer to Fastener Caution .** **Tighten** 30 N.m(22 lb ft).
2	Secondary Air Injection Pump

AIR CLEANER ELEMENT REPLACEMENT

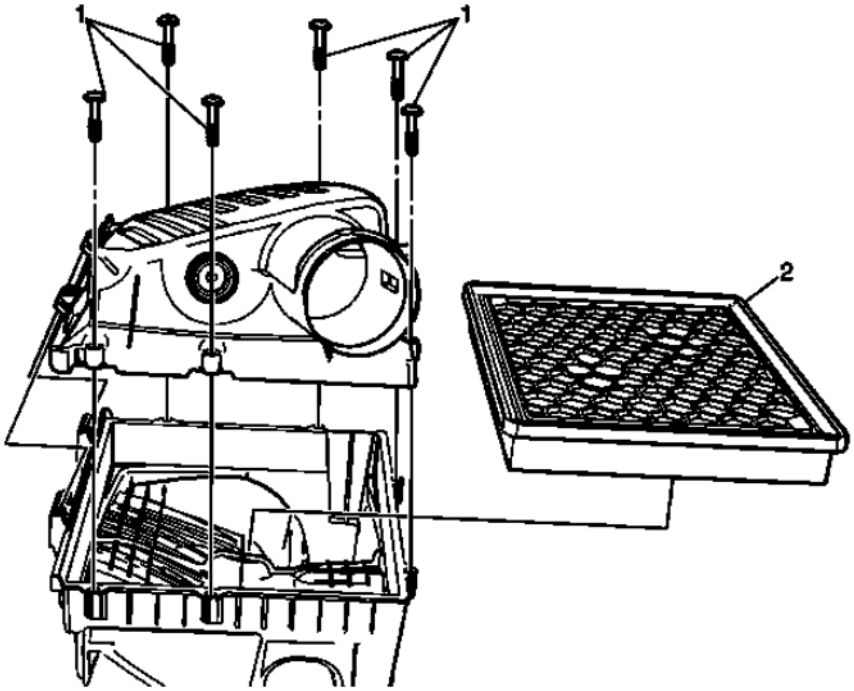

Fig. 125: Air Cleaner Element & Fasteners
Courtesy of GENERAL MOTORS COMPANY

Air Cleaner Element Replacement

Callout	Component Name
1	Air Cleaner Element Fasteners **CAUTION:** **Refer to Fastener Caution .** **Tighten** 5 N.m(44 lb in)
2	Air Cleaner Element **Procedure** Disconnect the mass airflow electrical connector.

AIR CLEANER ASSEMBLY REPLACEMENT

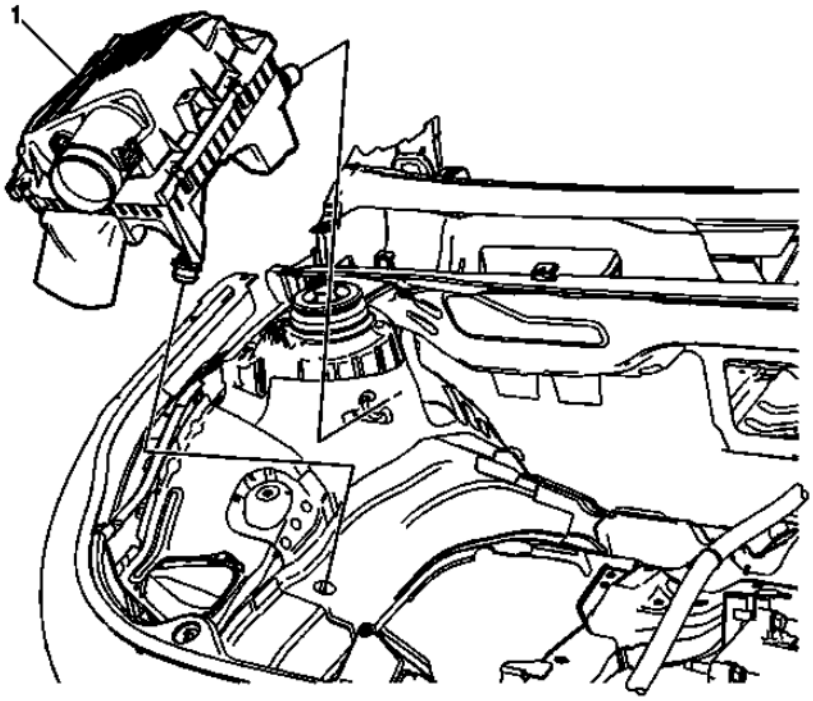

Fig. 126: Air Cleaner Assembly
Courtesy of GENERAL MOTORS COMPANY

Air Cleaner Assembly Replacement

Callout	Component Name
Preliminary Procedure 1. Remove the mass airflow sensor. Refer to **Mass Airflow Sensor with Intake Air Temperature Sensor Replacement**. 2. Disconnect the outlet duct from the air cleaner assembly. Refer to **Air Cleaner Outlet Duct Replacement**.	
1	Air Cleaner Assembly

AIR CLEANER OUTLET DUCT REPLACEMENT

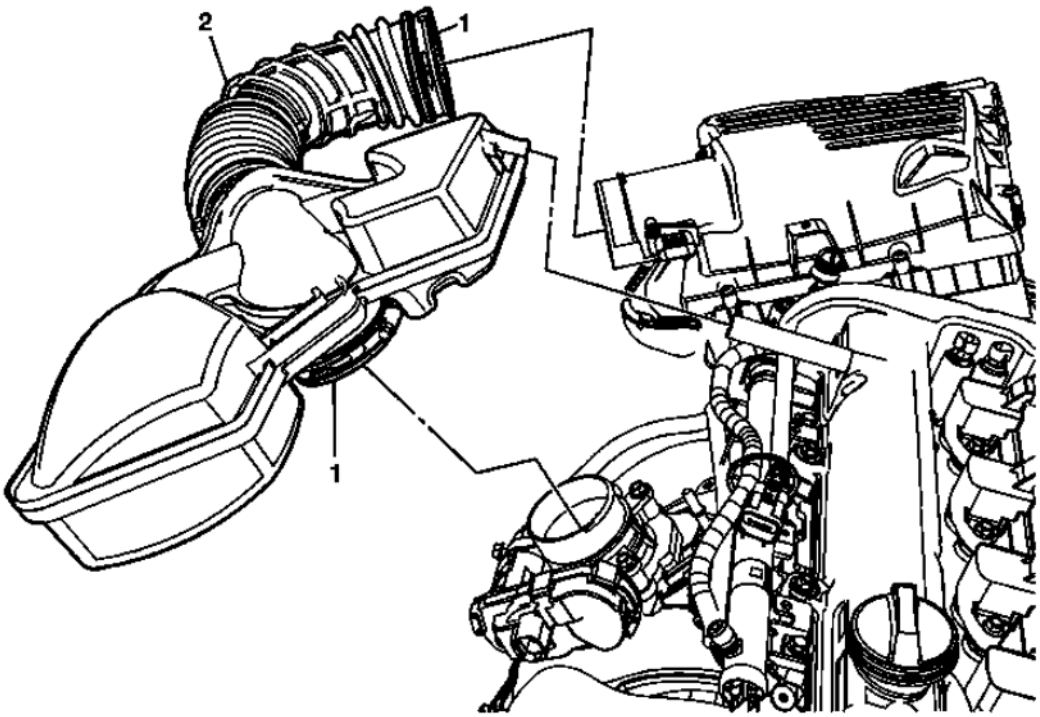

Fig. 127: Air Cleaner Outlet Duct & Fasteners
Courtesy of GENERAL MOTORS COMPANY

Air Cleaner Outlet Duct Replacement

Callout	Component Name
1	Air Cleaner Outlet Duct Fastener (Qty: 2) **CAUTION:** **Refer to Fastener Caution .** **Tighten** 4 N.m (35 lb in)
2	Air Cleaner Outlet Duct with Resonator

AIR CLEANER INLET DUCT REPLACEMENT

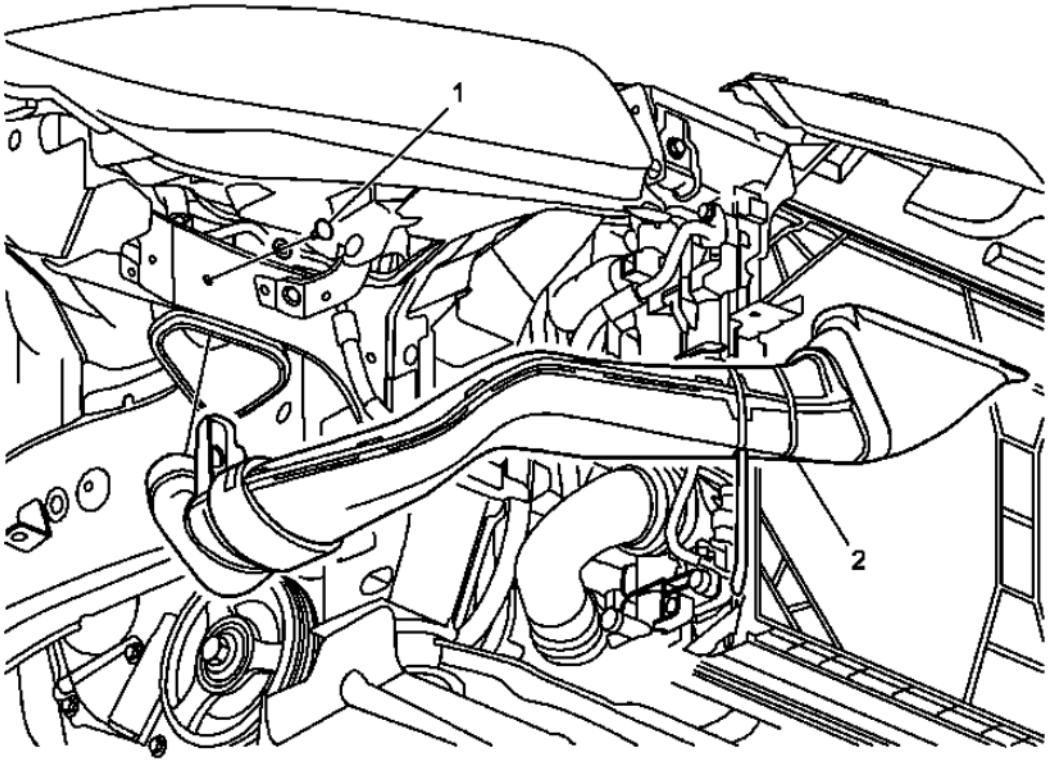

Fig. 128: Air Cleaner Inlet Duct & Retainer
Courtesy of GENERAL MOTORS COMPANY

Air Cleaner Inlet Duct Replacement

Callout	Component Name
Preliminary Procedures Remove the front bumper fascia. Refer to **Front Bumper Fascia Replacement** .	
1	Air Cleaner Inlet Duct Retainer
2	Air Cleaner Inlet Duct

FRONT INTAKE AIR DUCT DEFLECTOR REPLACEMENT

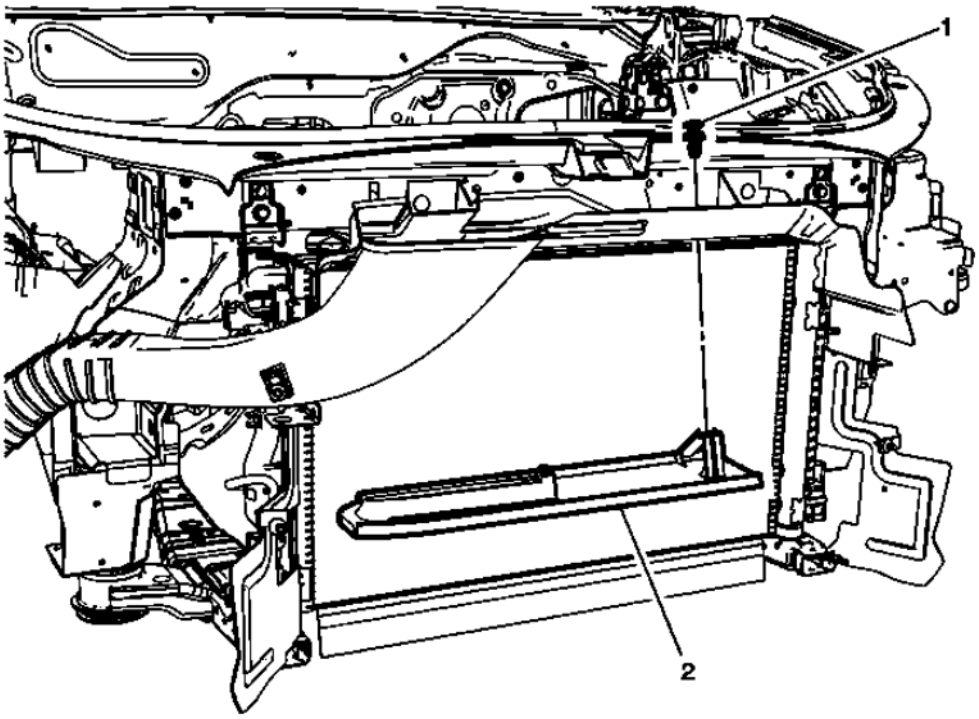

Fig. 129: Front Intake Air Duct Deflector
Courtesy of GENERAL MOTORS COMPANY

Front Intake Air Duct Deflector Replacement

Callout	Component Name
Preliminary Procedure Remove the air cleaner inlet duct. Refer to **Air Cleaner Inlet Duct Replacement**.	
1	Front Intake Air Duct Deflector Retainer
2	Front Intake Air Duct Deflector

2014 Engine

Engine Controls/Fuel - 2.4L (LEA, LUK) - Schematic and Routing Diagrams - Regal

SCHEMATIC WIRING DIAGRAMS

ENGINE CONTROLS WIRING SCHEMATICS

Module Power, Ground, Serial Data, and MIL

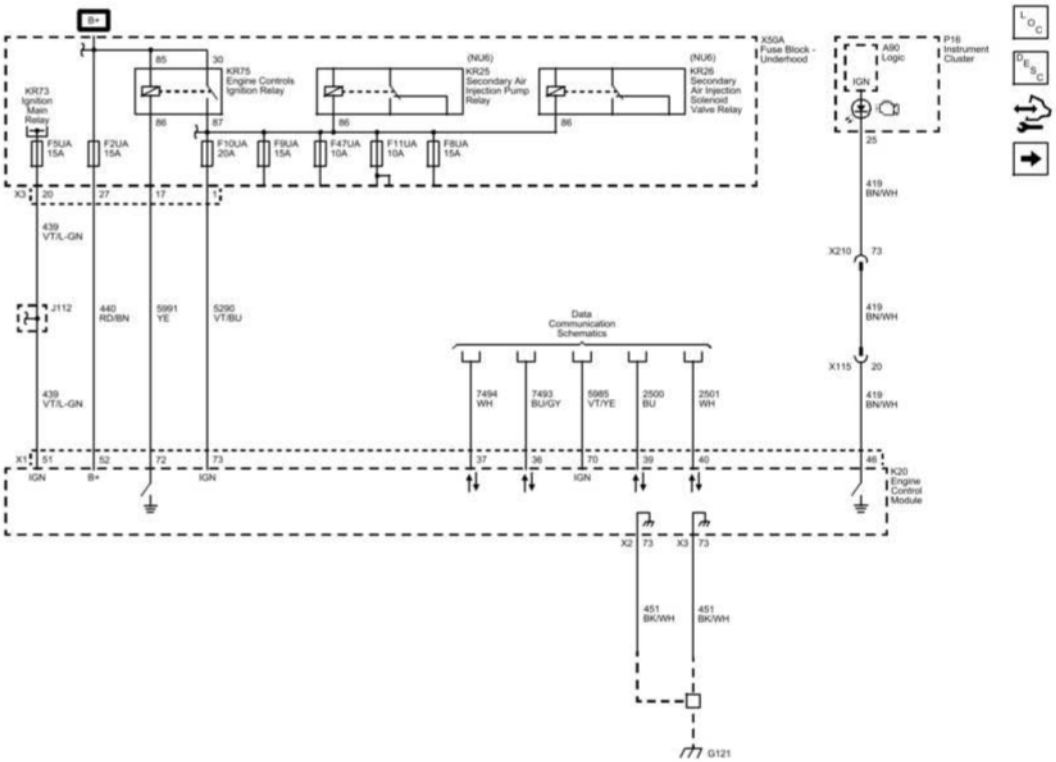

Fig. 1: Module Power, Ground, Serial Data, and MIL
Courtesy of GENERAL MOTORS COMPANY

5V1, and Low Reference Bus (1 of 2)

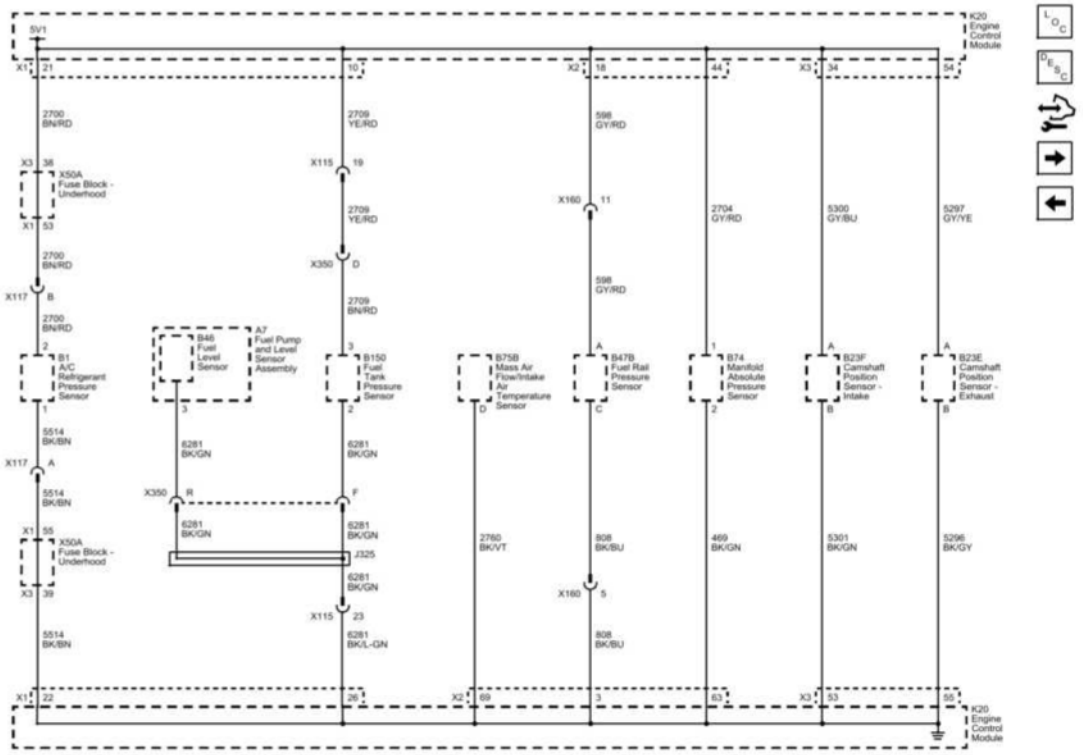

Fig. 2: 5V1, and Low Reference Bus (1 of 2)
Courtesy of GENERAL MOTORS COMPANY

5V2, 5V3, 5V4, and Low Reference Bus (2 of 2)

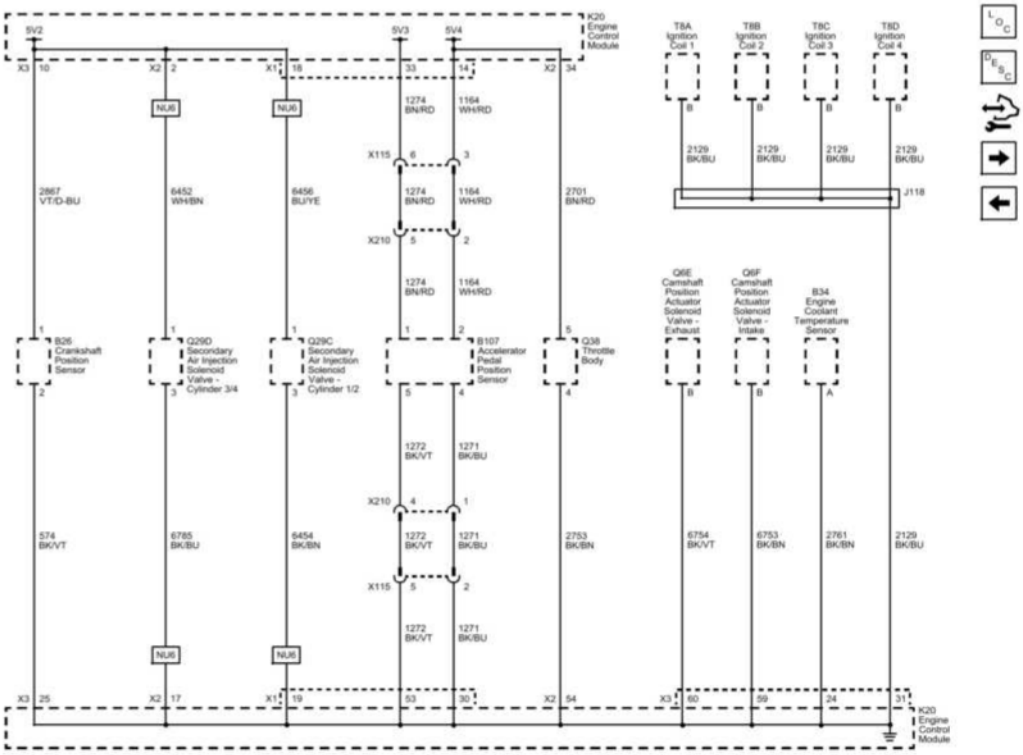

Fig. 3: 5V2, 5V3, 5V4, and Low Reference Bus (2 of 2)
Courtesy of GENERAL MOTORS COMPANY

Engine Data Sensors - Pressure, Temperature, and Throttle Controls

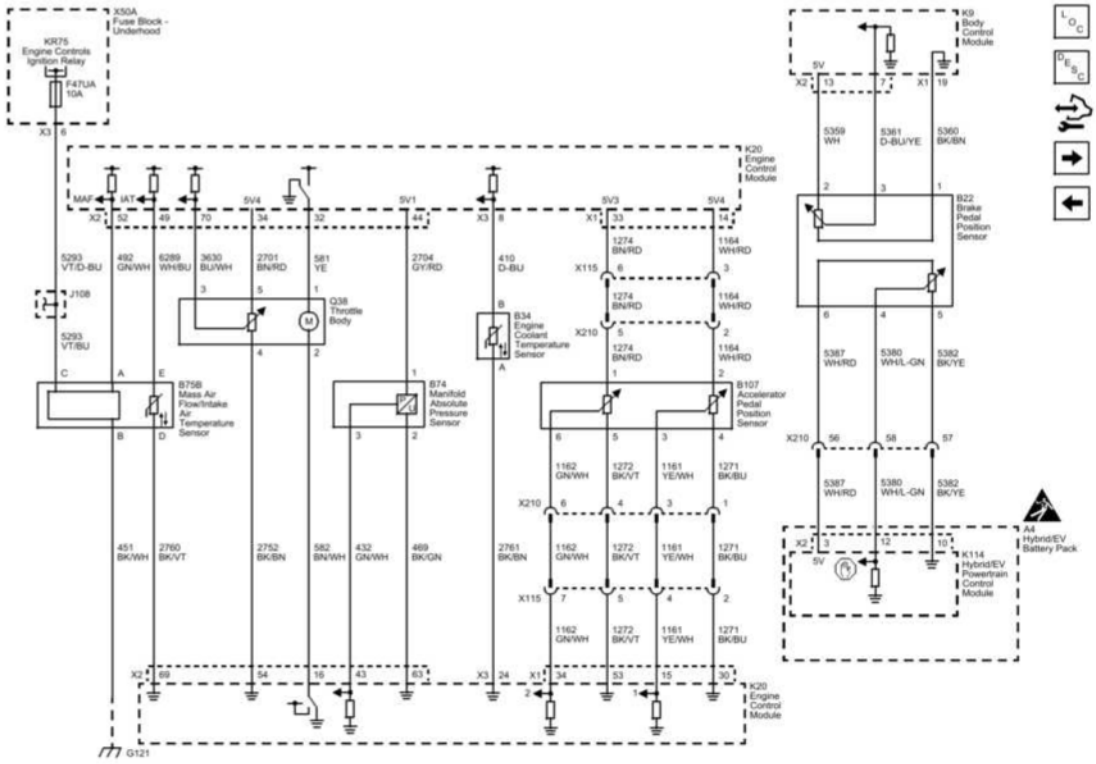

Fig. 4: Engine Data Sensors - Pressure, Temperature, and Throttle Controls
Courtesy of GENERAL MOTORS COMPANY

Engine Data Sensors - Oxygen Sensors

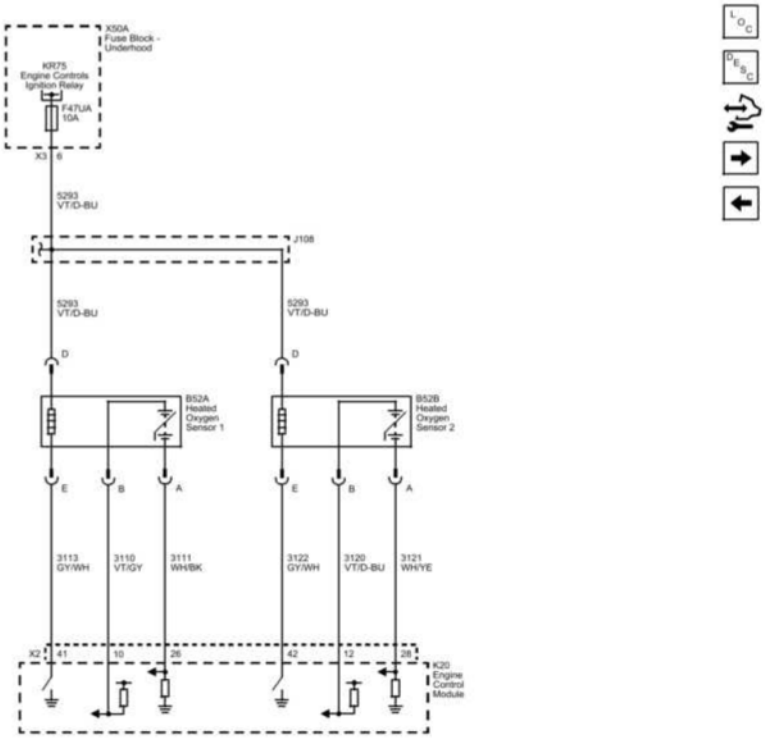

Fig. 5: Engine Data Sensors - Oxygen Sensors
Courtesy of GENERAL MOTORS COMPANY

Ignition Controls - Ignition System

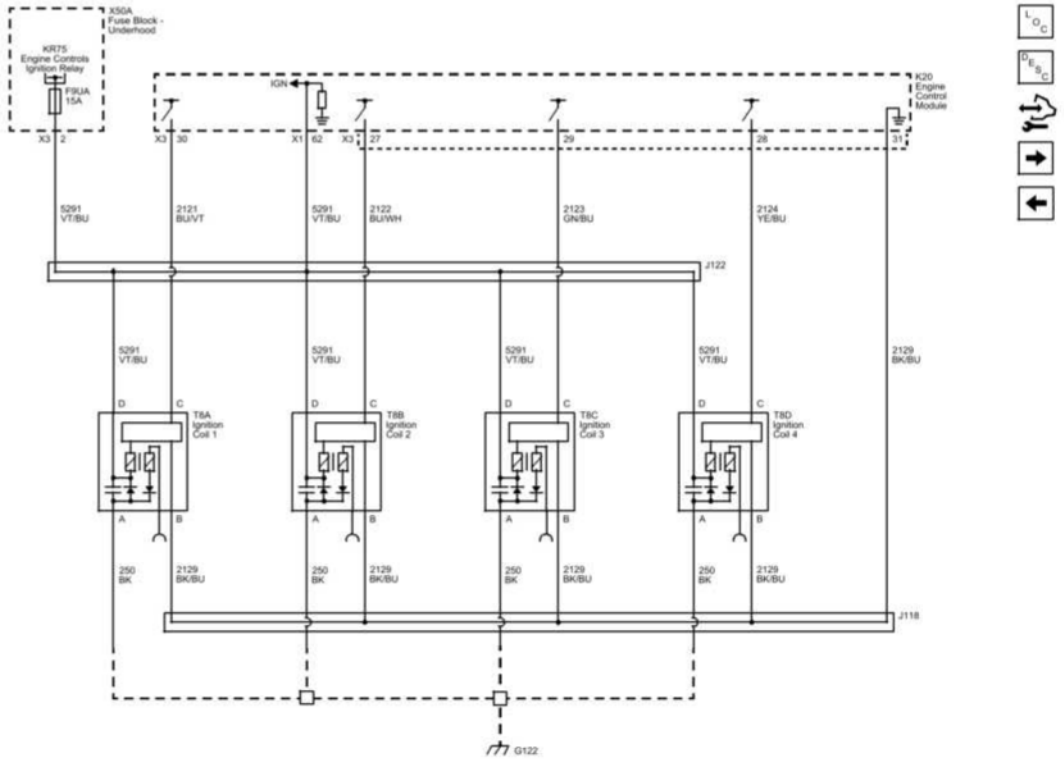

Fig. 6: Ignition Controls - Ignition System
Courtesy of GENERAL MOTORS COMPANY

Ignition Controls - Camshaft, Crankshaft, and Knock Sensors, Camshaft Actuators

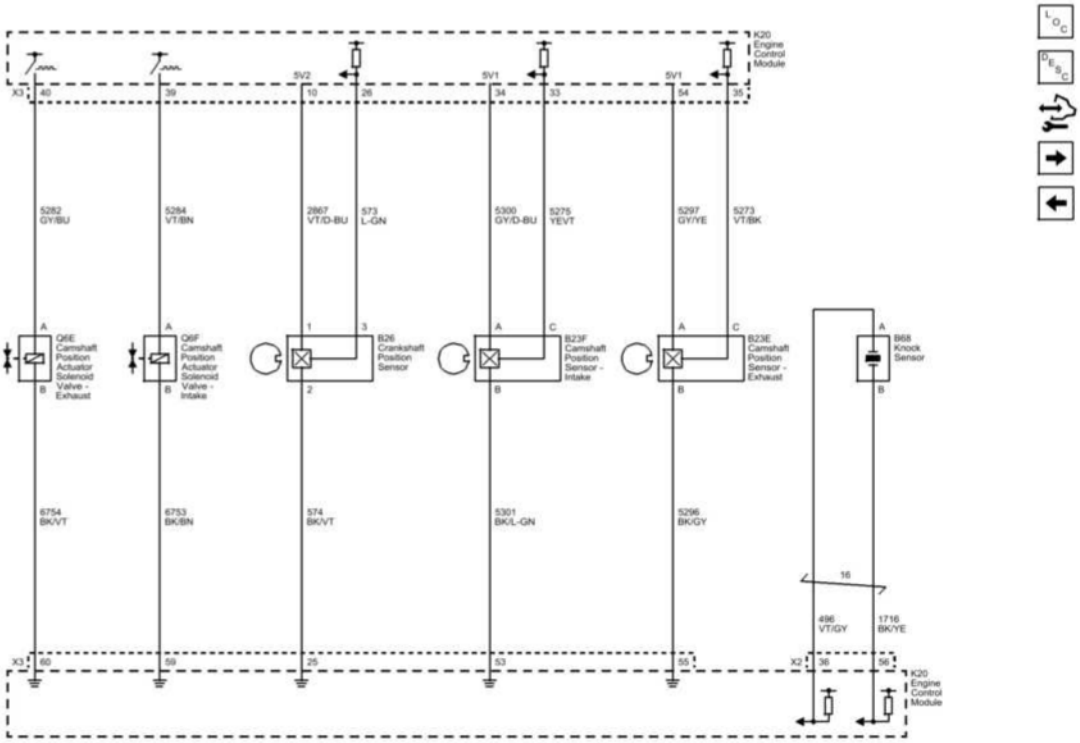

Fig. 7: Ignition Controls - Camshaft, Crankshaft, and Knock Sensors, Camshaft Actuators
Courtesy of GENERAL MOTORS COMPANY

Fuel Controls - Fuel Injectors and High Pressure Controls

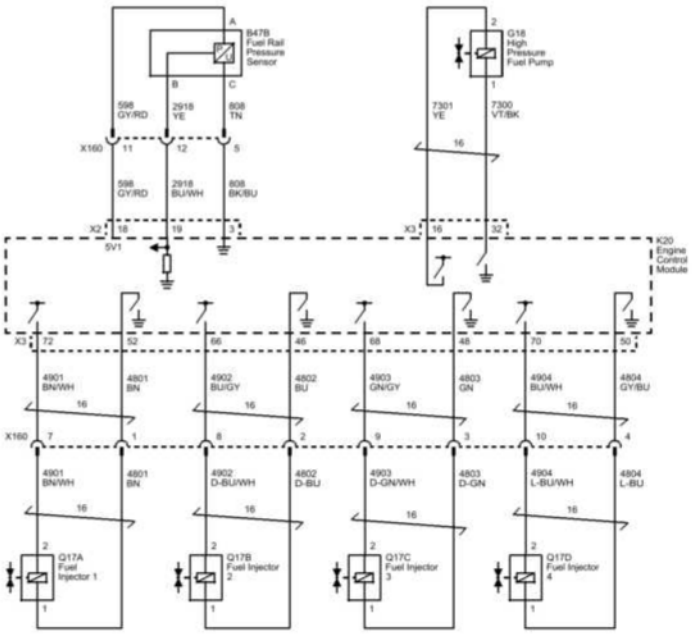

Fig. 8: Fuel Controls - Fuel Injectors and High Pressure Controls
Courtesy of GENERAL MOTORS COMPANY

Fuel Controls - Fuel Pump Controls

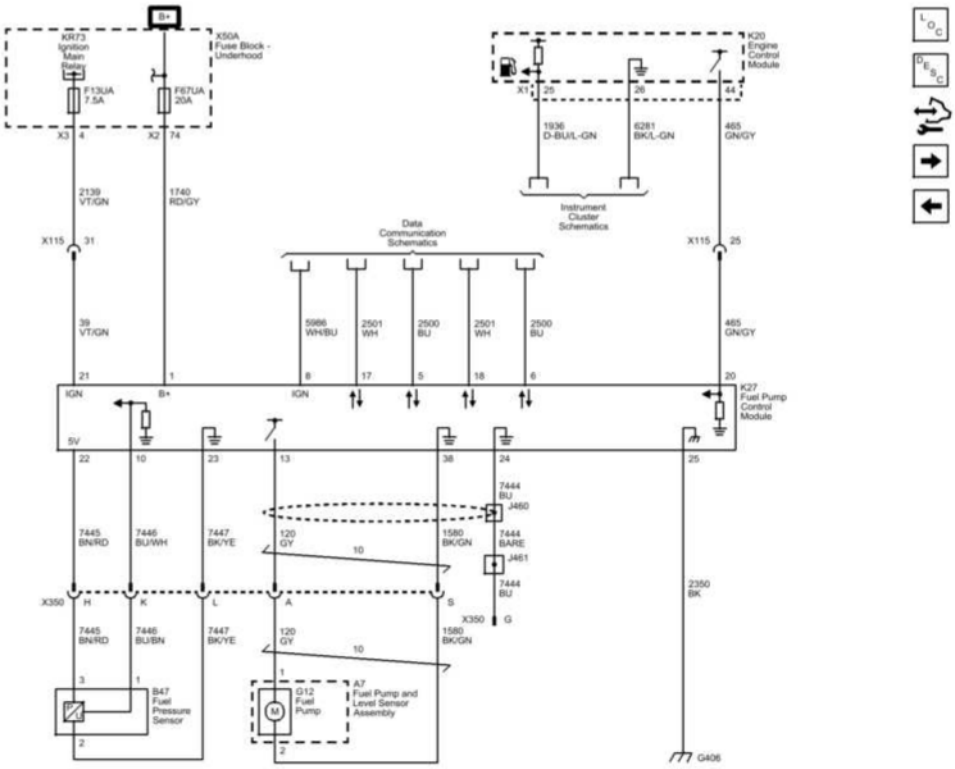

Fig. 9: Fuel Controls - Fuel Pump Controls
Courtesy of GENERAL MOTORS COMPANY

Fuel Controls - Evaporative Emissions Controls

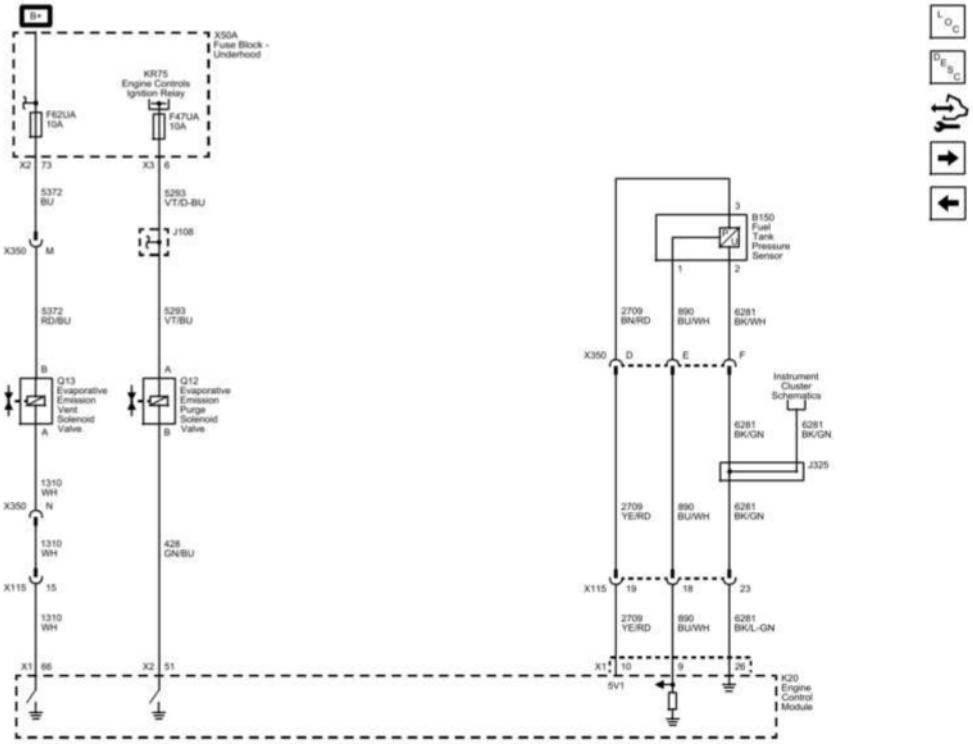

Fig. 10: Fuel Controls - Evaporative Emissions Controls
Courtesy of GENERAL MOTORS COMPANY

Device Controls - Secondary Air Injection (NU6)

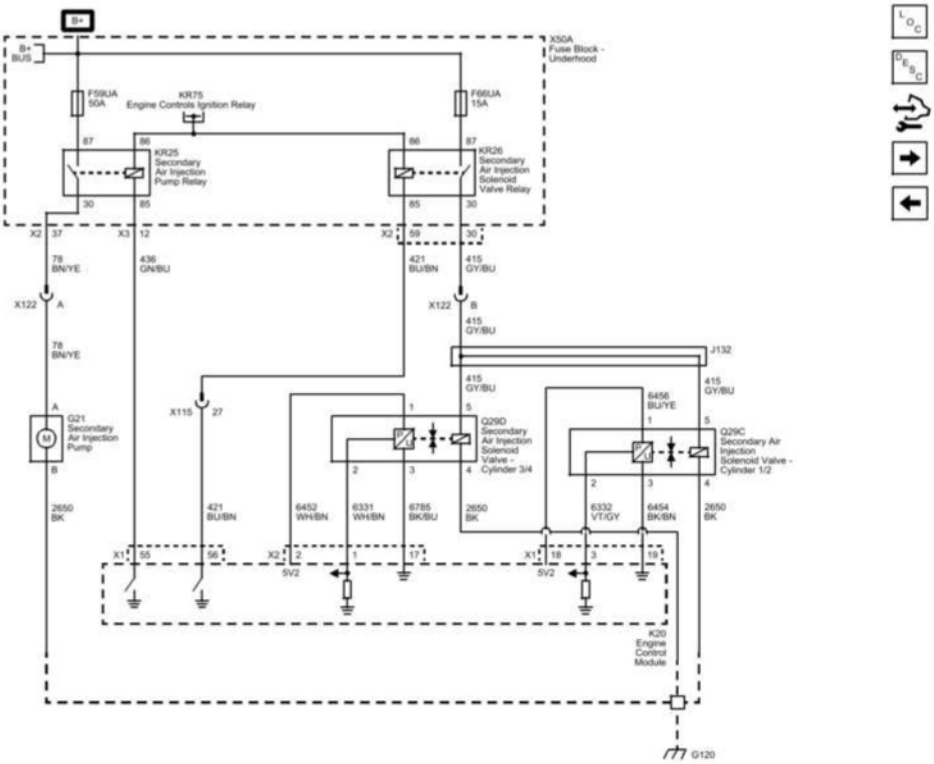

Fig. 11: Device Controls - Secondary Air Injection (NU6)
Courtesy of GENERAL MOTORS COMPANY

Controlled/Monitored Subsystem References

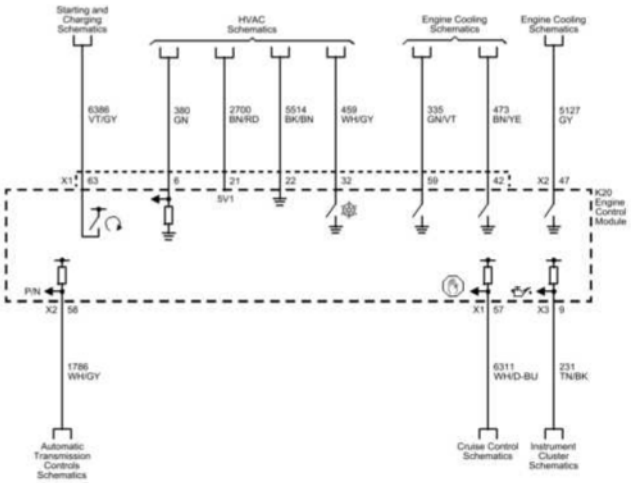

Fig. 12: Controlled/Monitored Subsystem References
Courtesy of GENERAL MOTORS COMPANY

2014 Engine

Engine Controls/Fuel - 2.4L (LEA, LUK) - Special Tools and Equipment - Regal

SPECIAL TOOLS AND EQUIPMENT

SPECIAL TOOLS (DIAGNOSTIC TOOLS)

Illustration	Tool Number/Desc
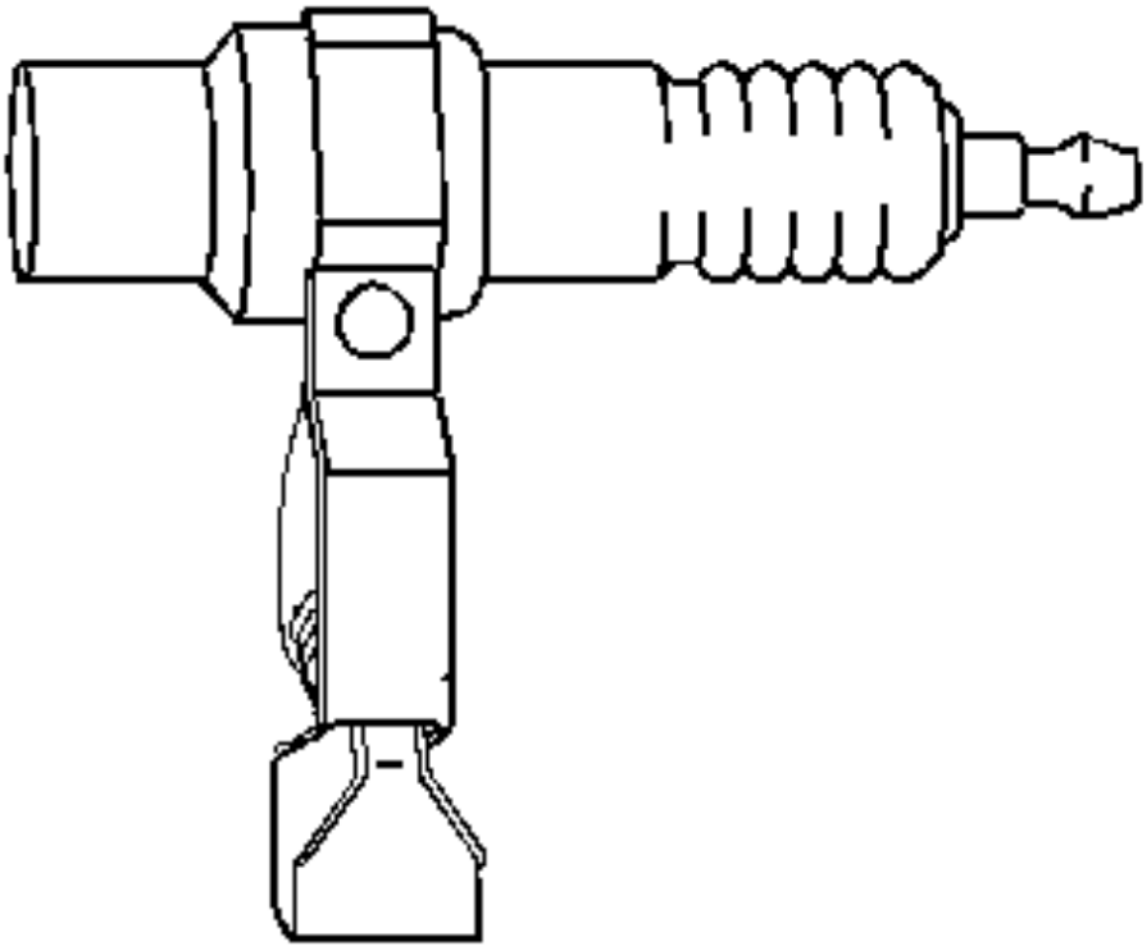	CH-34730 J-34730- Injector Test

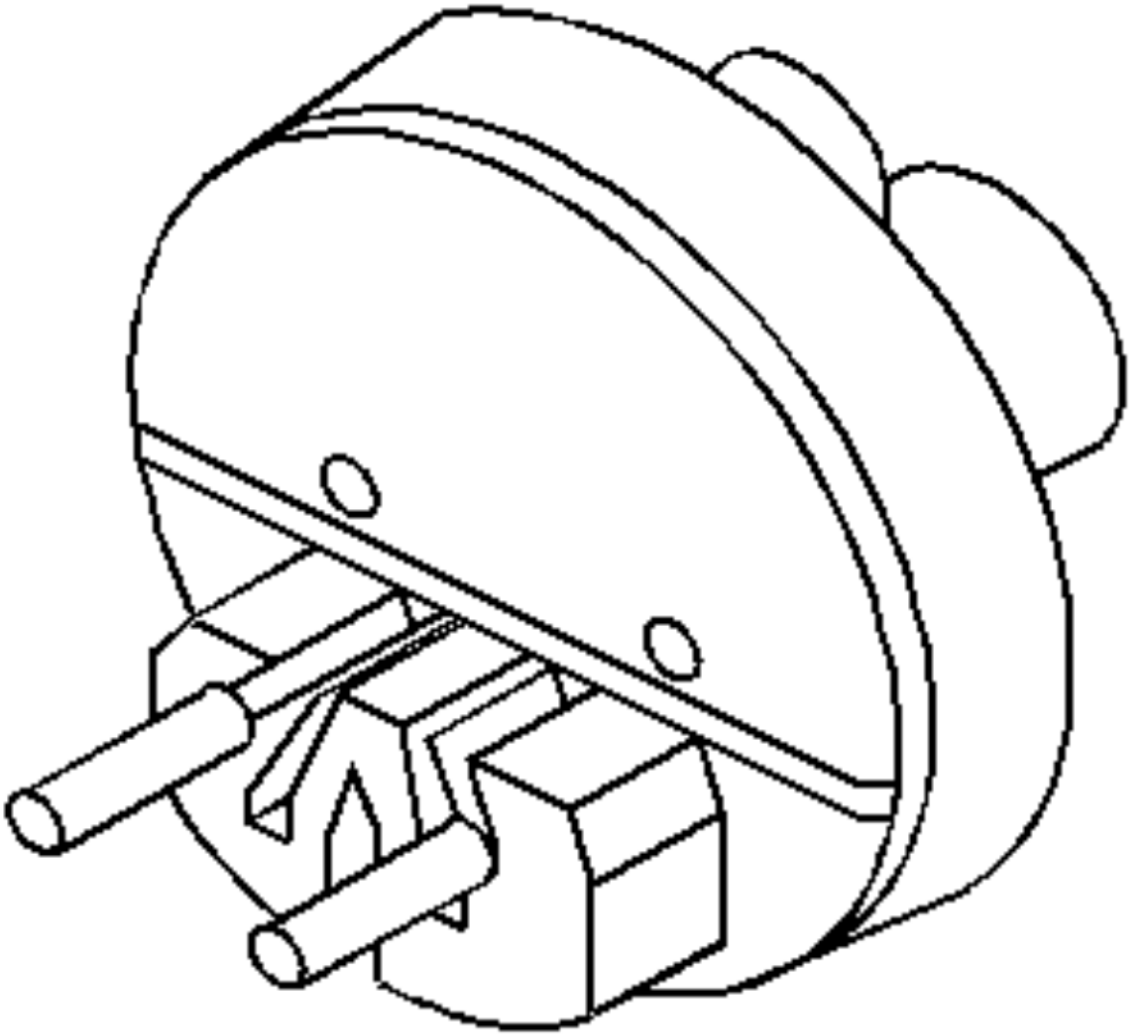

CH-3864
J-38641-
Diesel Fuel C
Tester

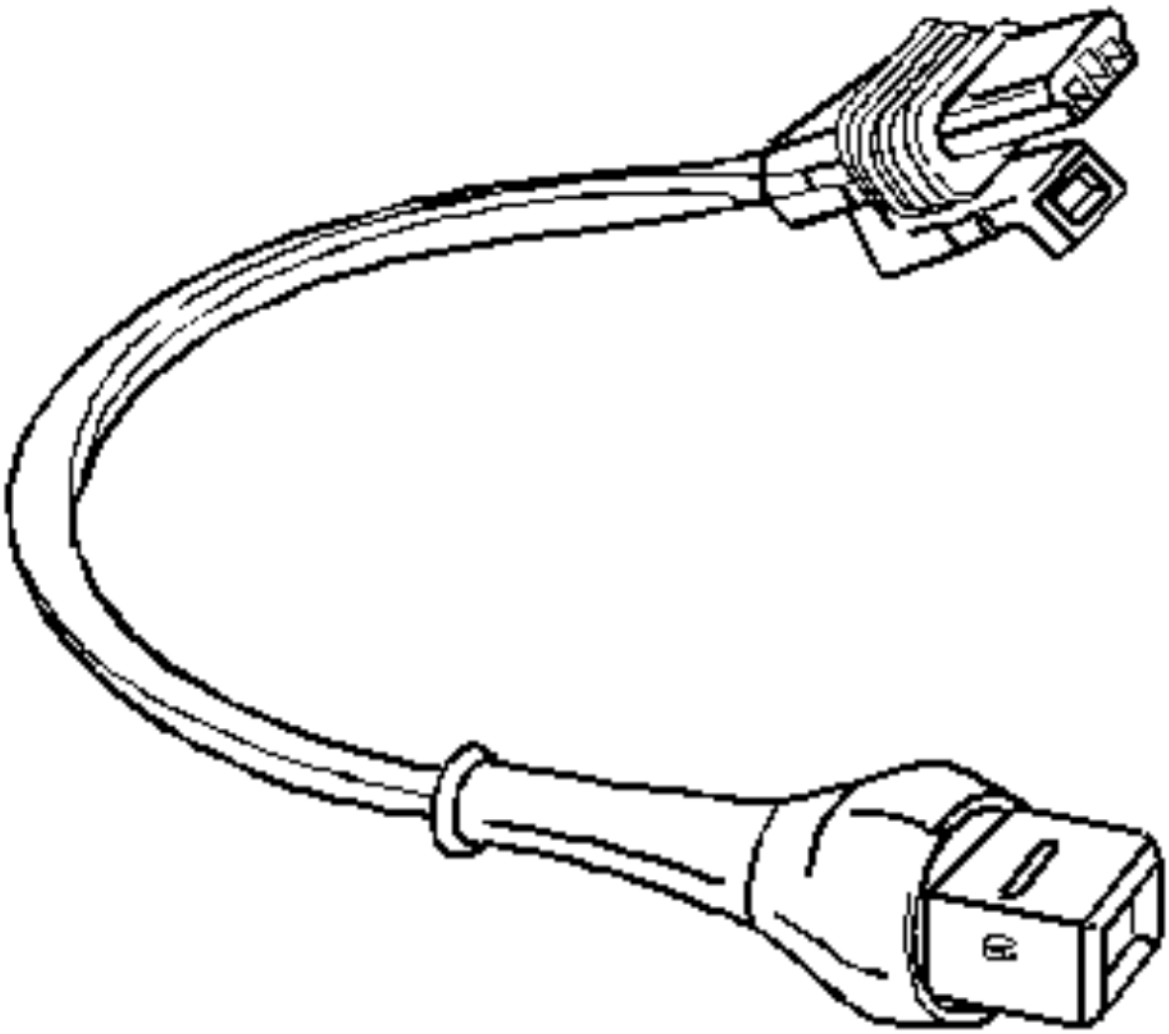

CH-39021-
J-39021-3
Fuel Injector I
Adapte

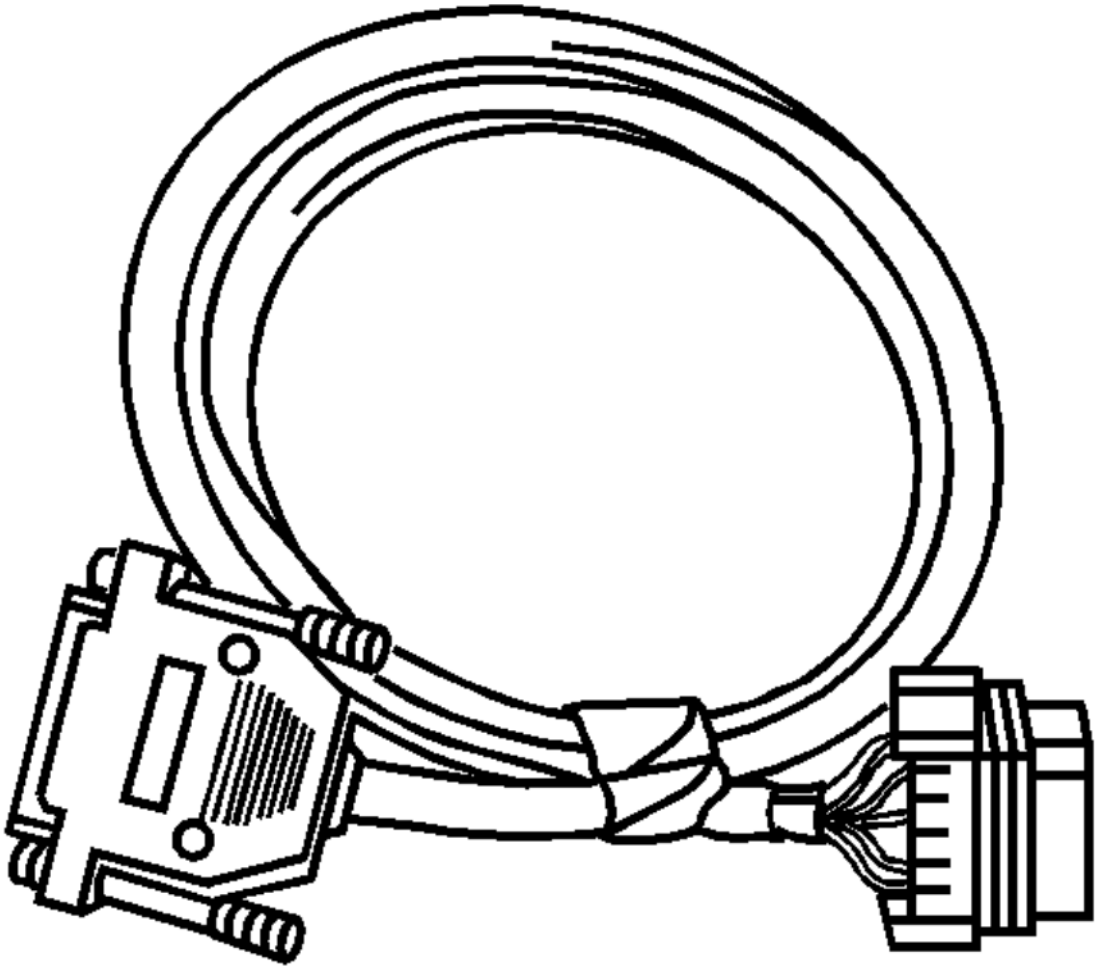

CH-39021-
J-39021-4
Fuel Injecto
Adapte

CH-41415
GE-41415
J-41415-

Fuel Tank
Adapte

CH-4296

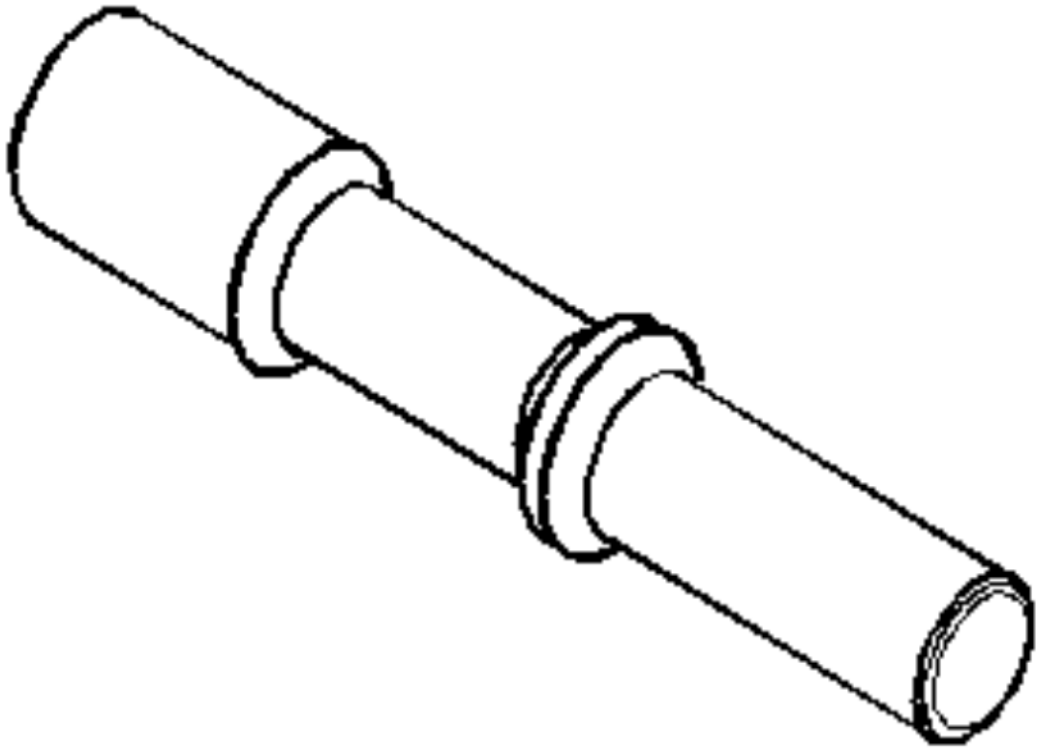

J-42960
Fuel Flapper
Holder

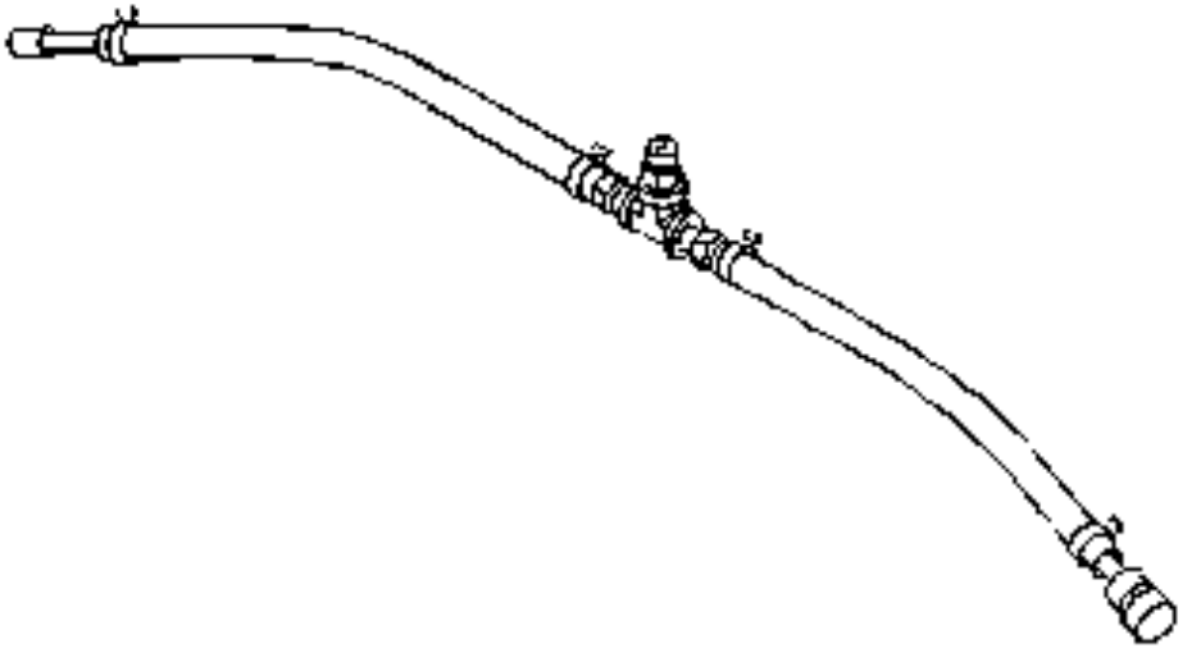

CH-4298
J-4298
Fuel Pressure
Adapte

CH-44175
J-44175-

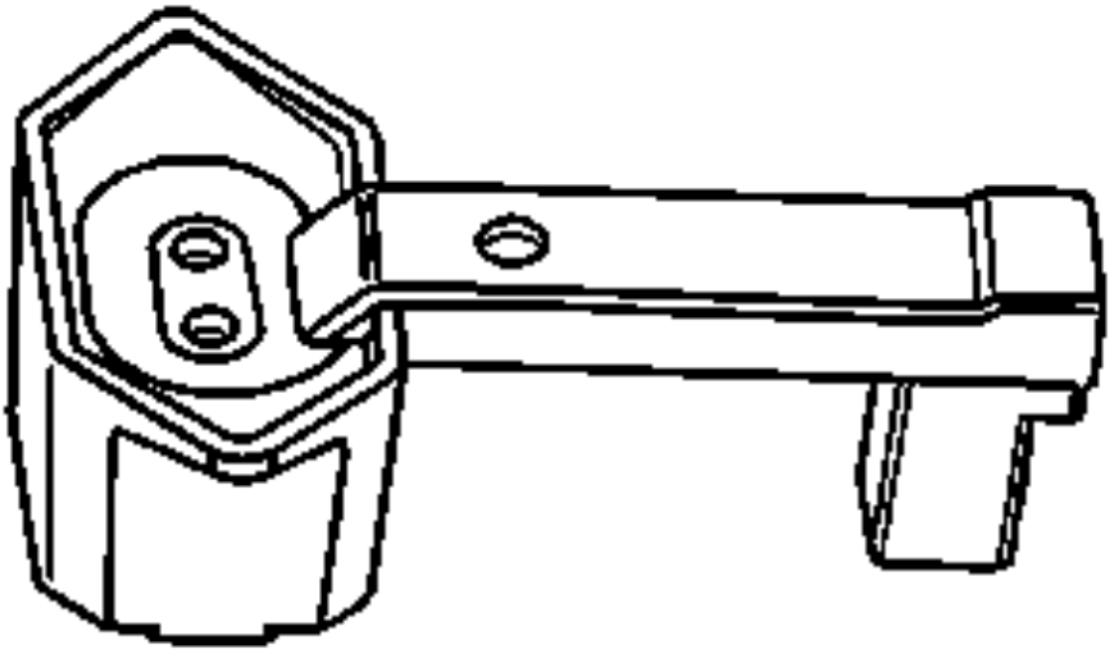

Fuel Compo
Tester

CH-450
J-4500

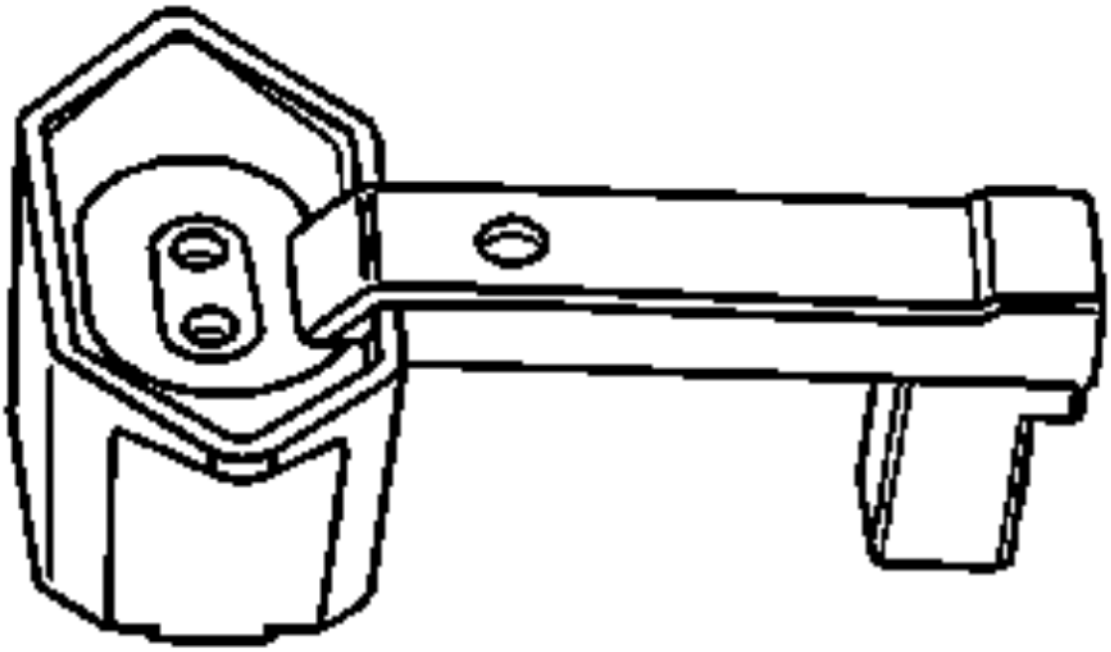

Fuel Tank I
Hose

CH-458
J-4587

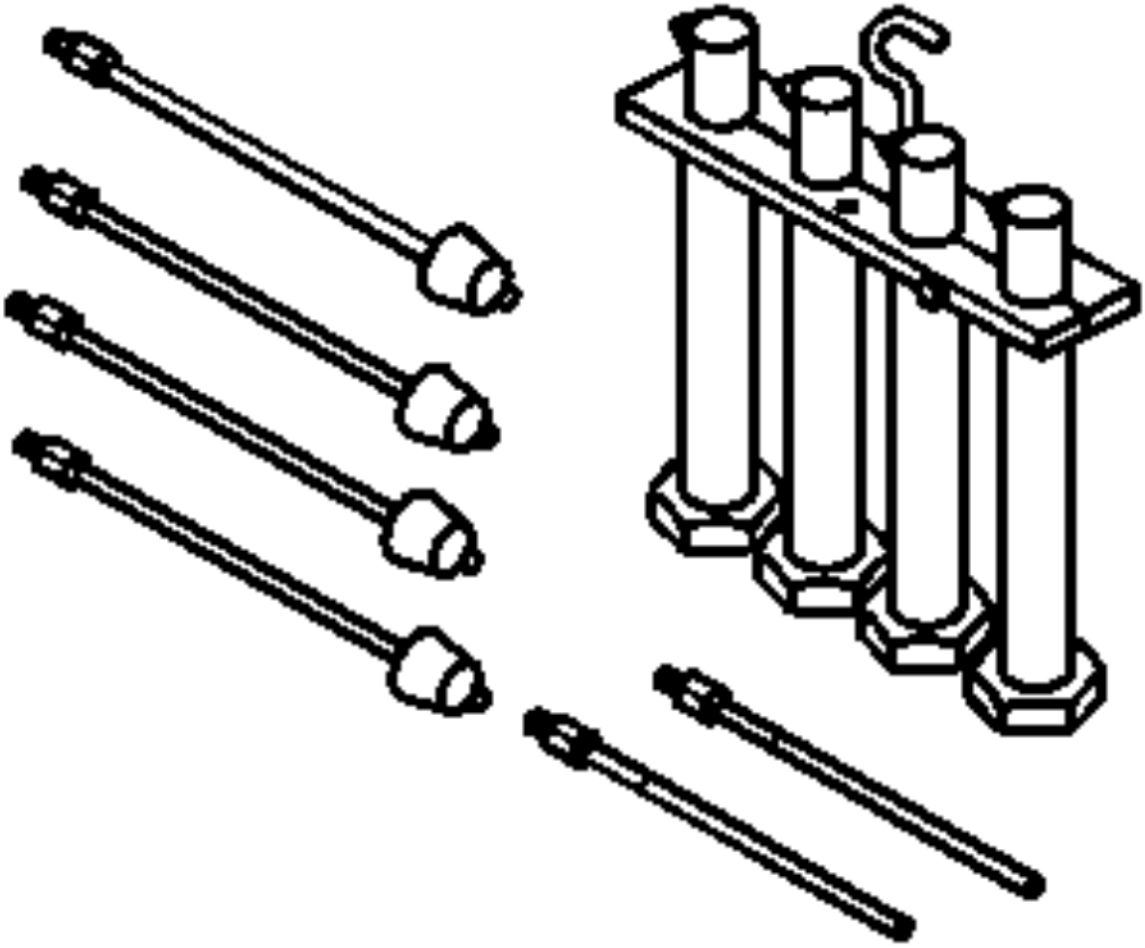

Fuel Return V
Test Ki

CH-479
Active Fuel I

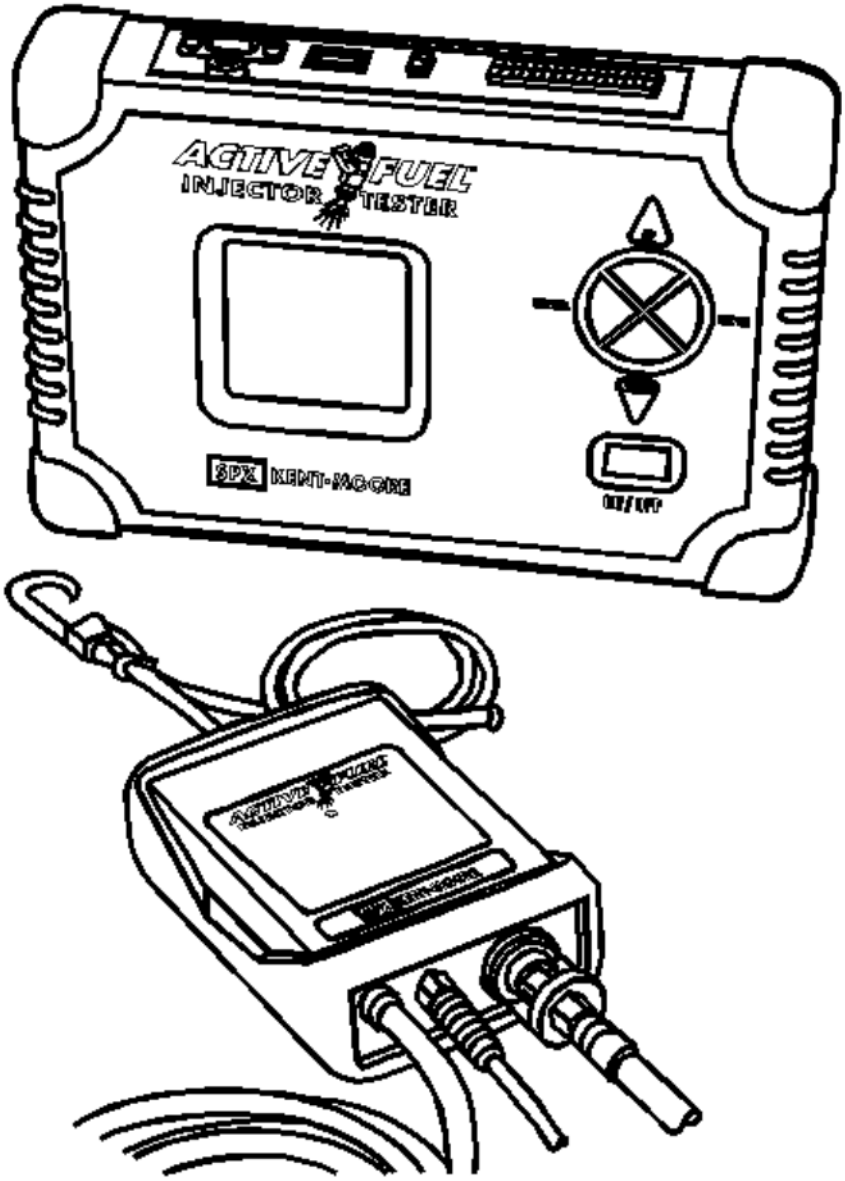

Tester (AF

CH-47976
Fuel Injector I

Adapte

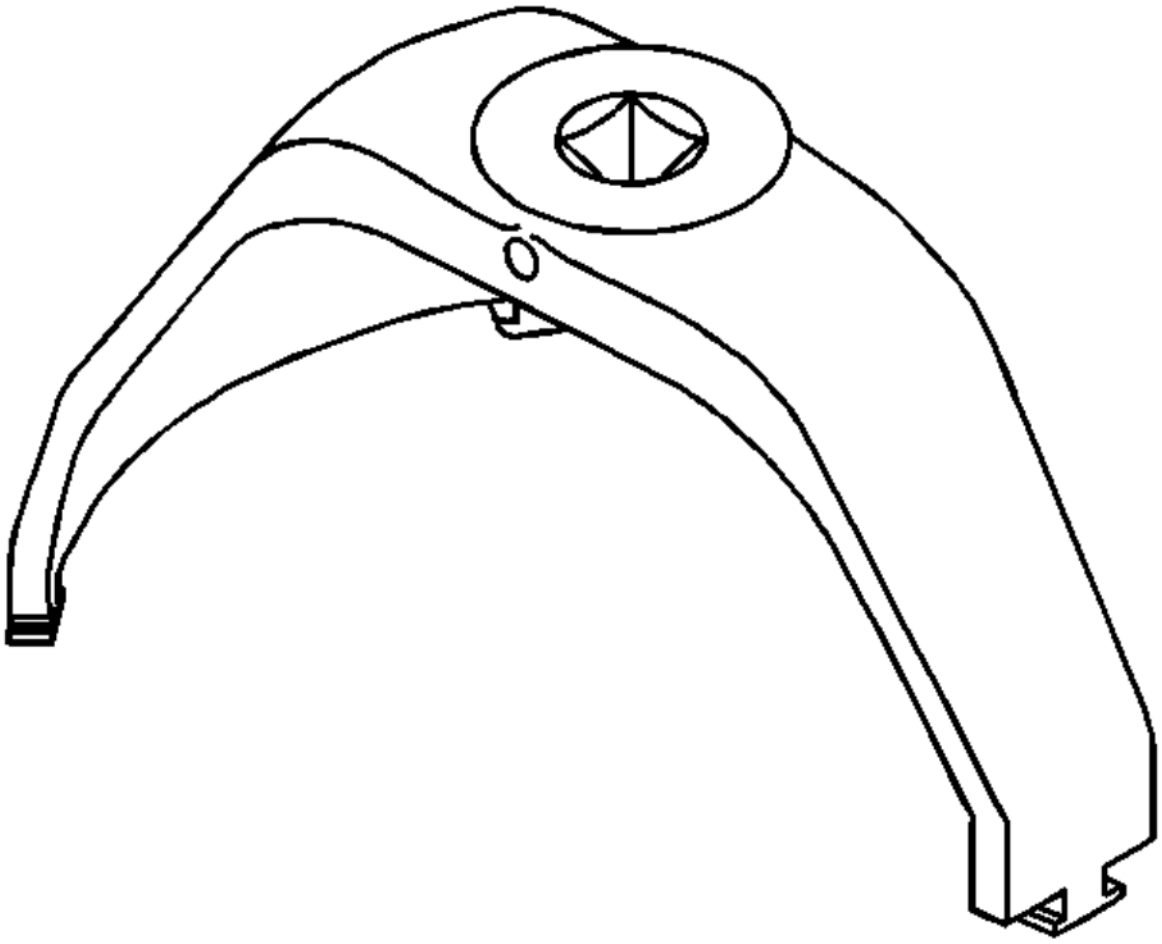

CH-480

Fuel Pressure

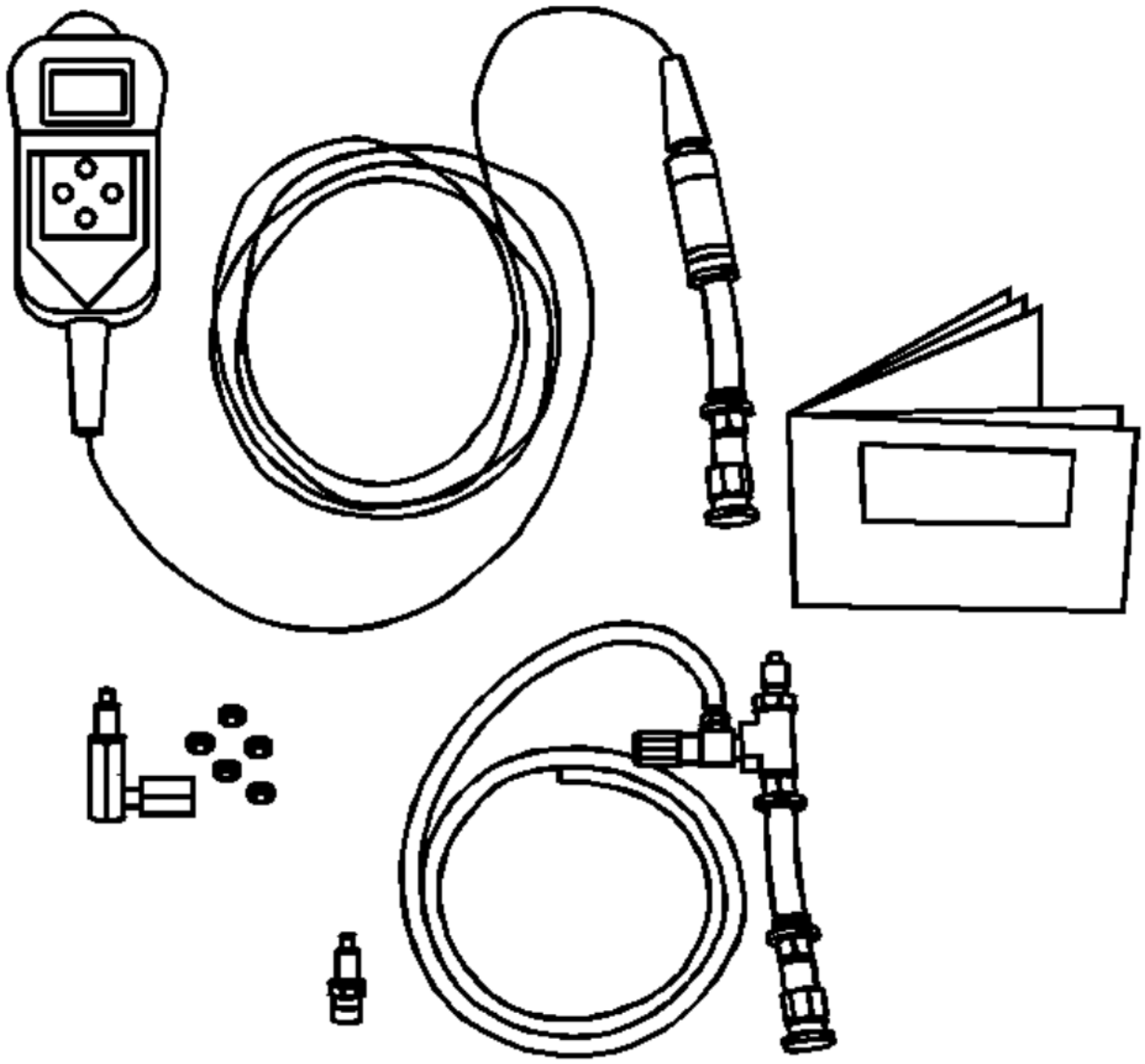

CH-480
EVAP Ser

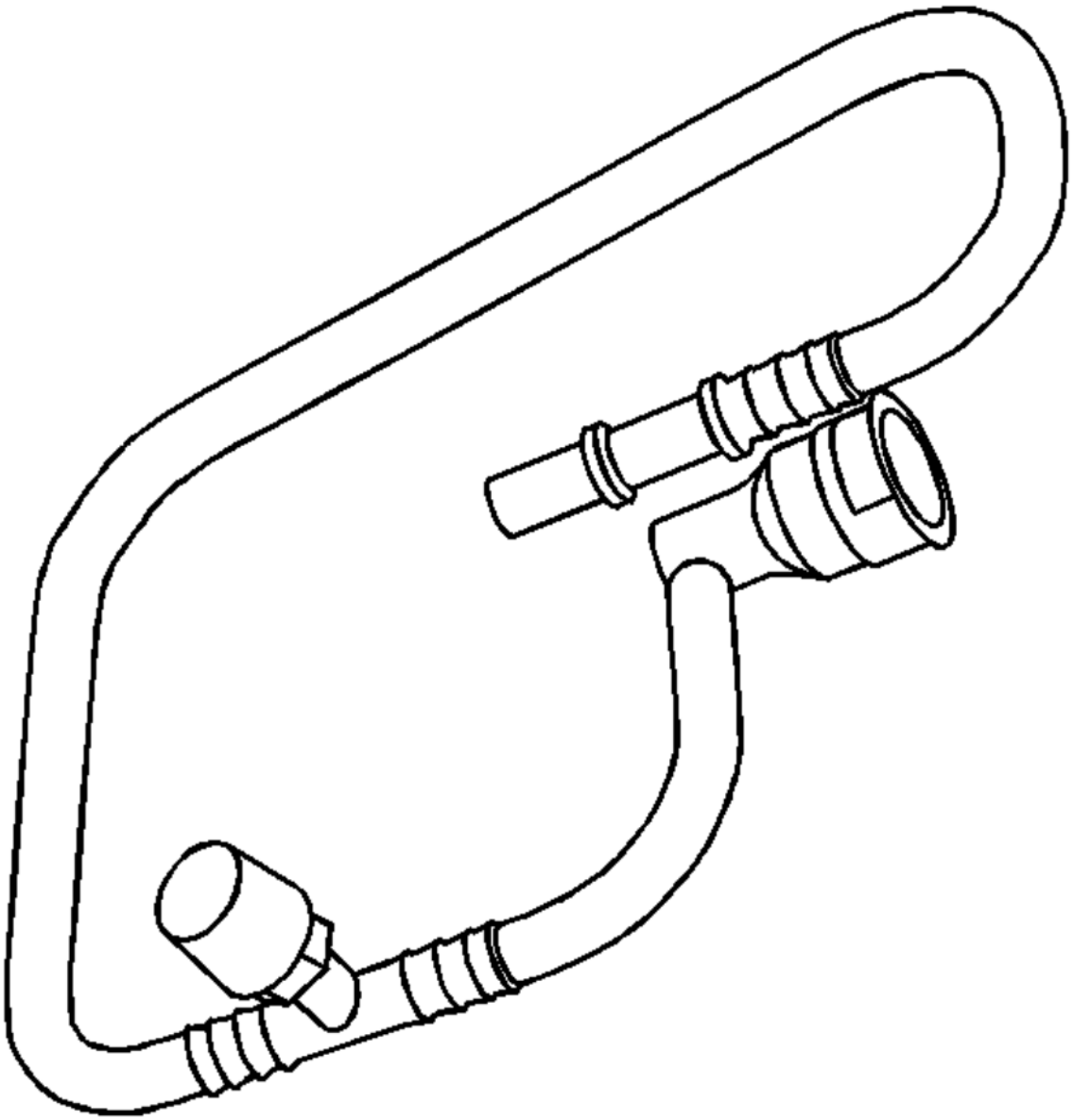

Access Port

CH-503
Diesel Inje

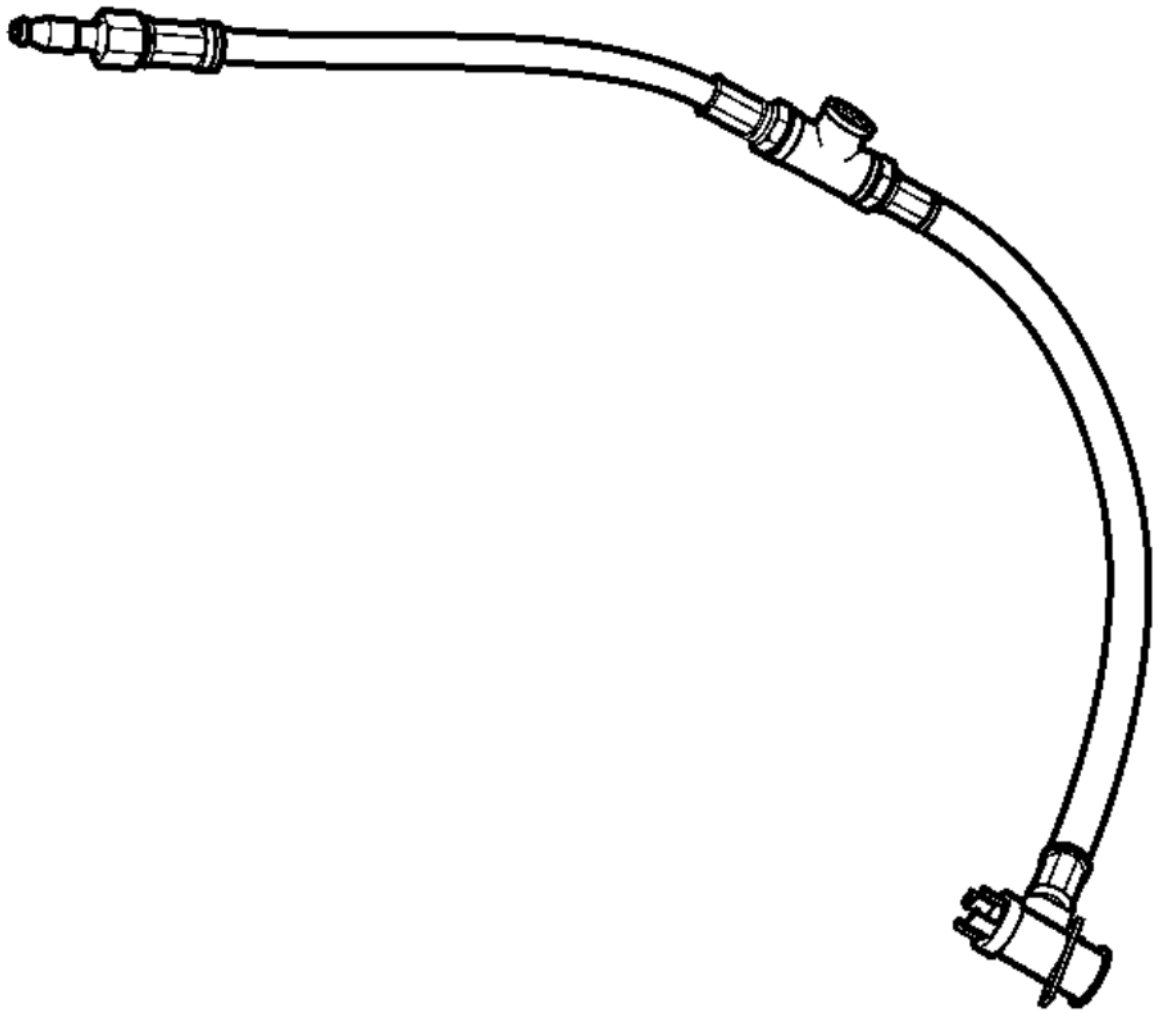

Return Line P
Adapte

CH-5037
Injector Retu

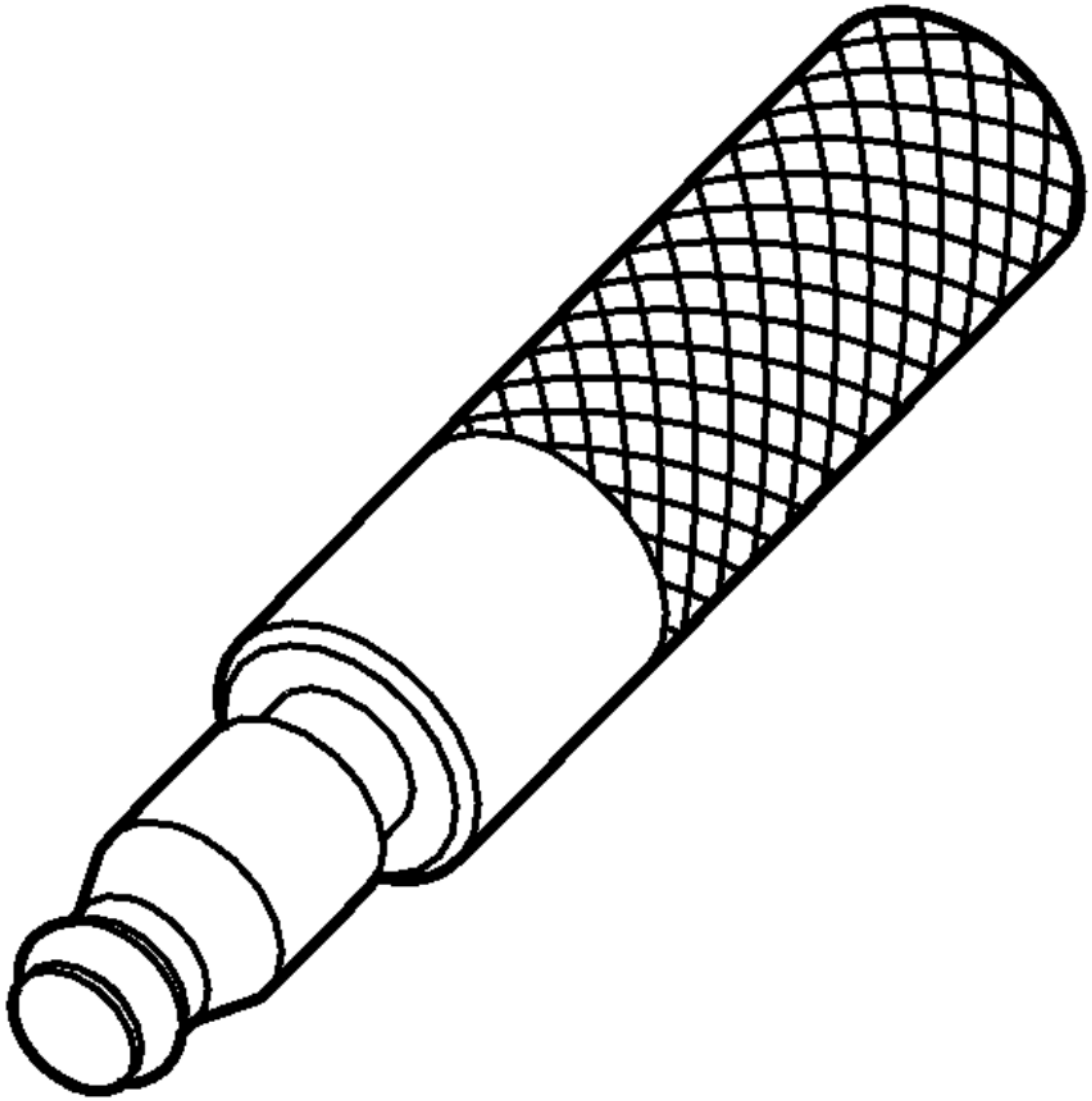

Cap

CH-503
Injector Re

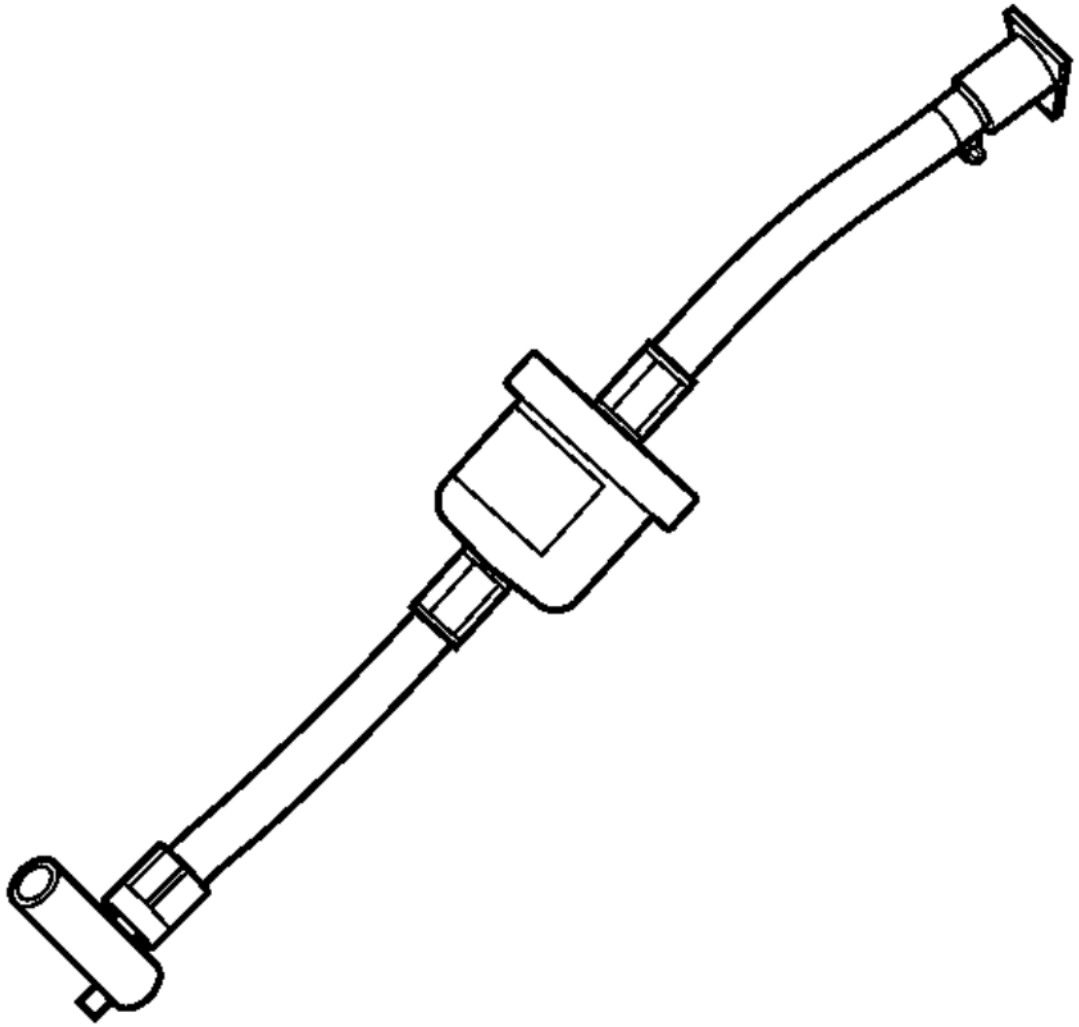

Leakage T
Adapte

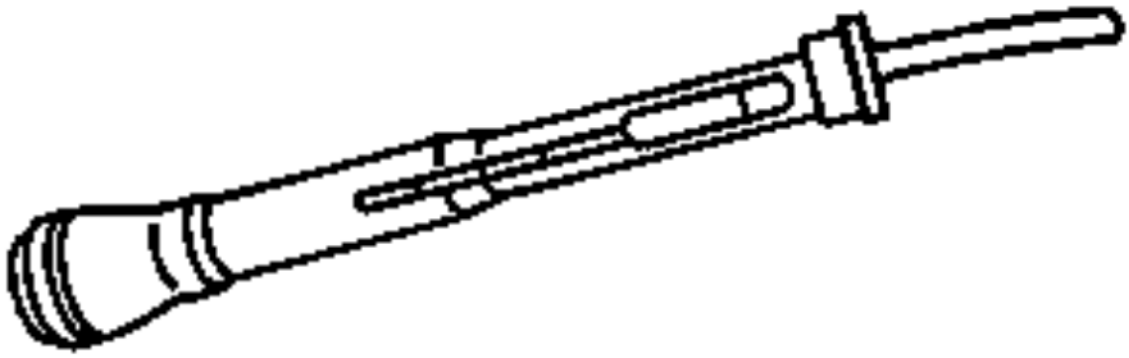

EL-2679
J-2679
HEI Spark T

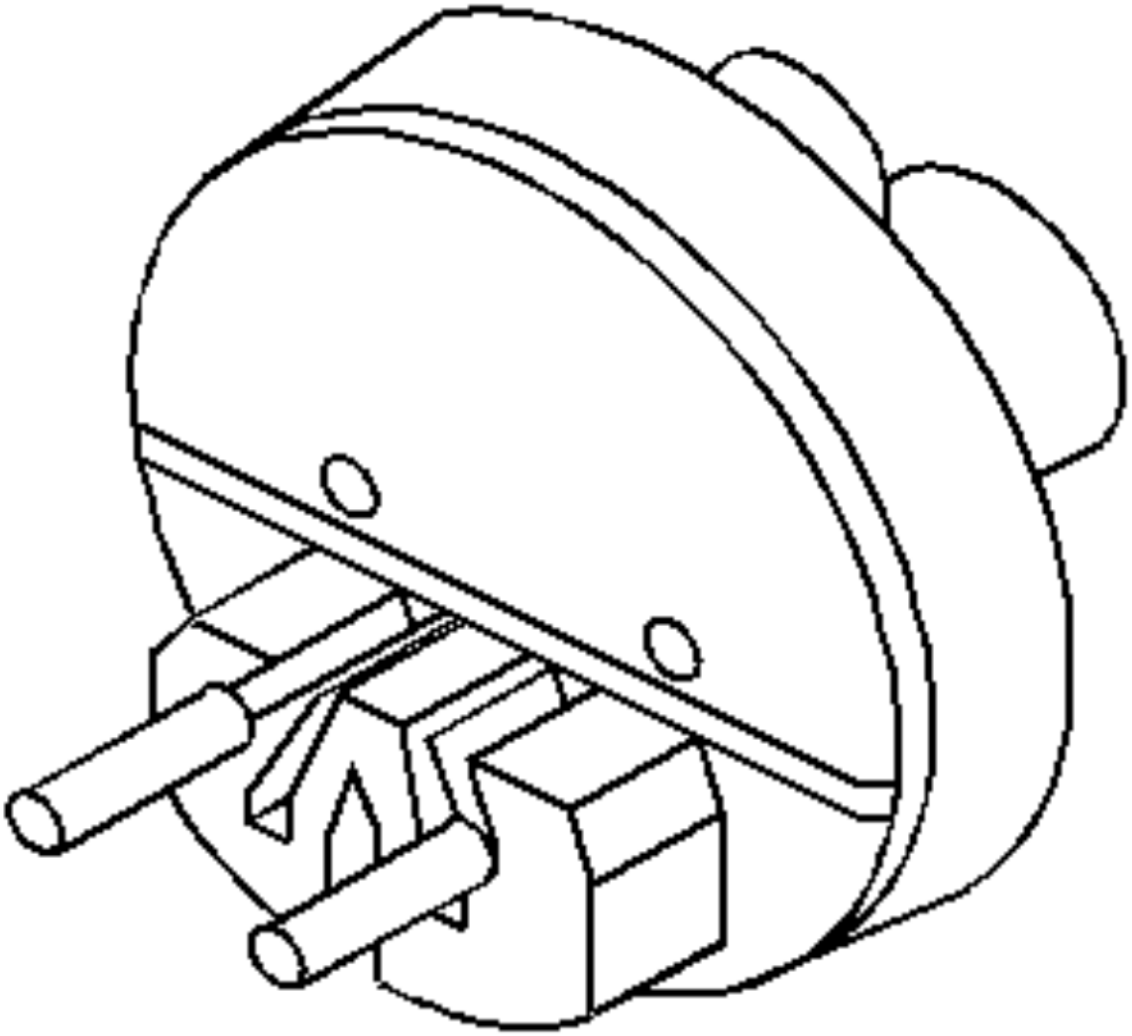

EL-34730-
J-34730-4
Injector Test

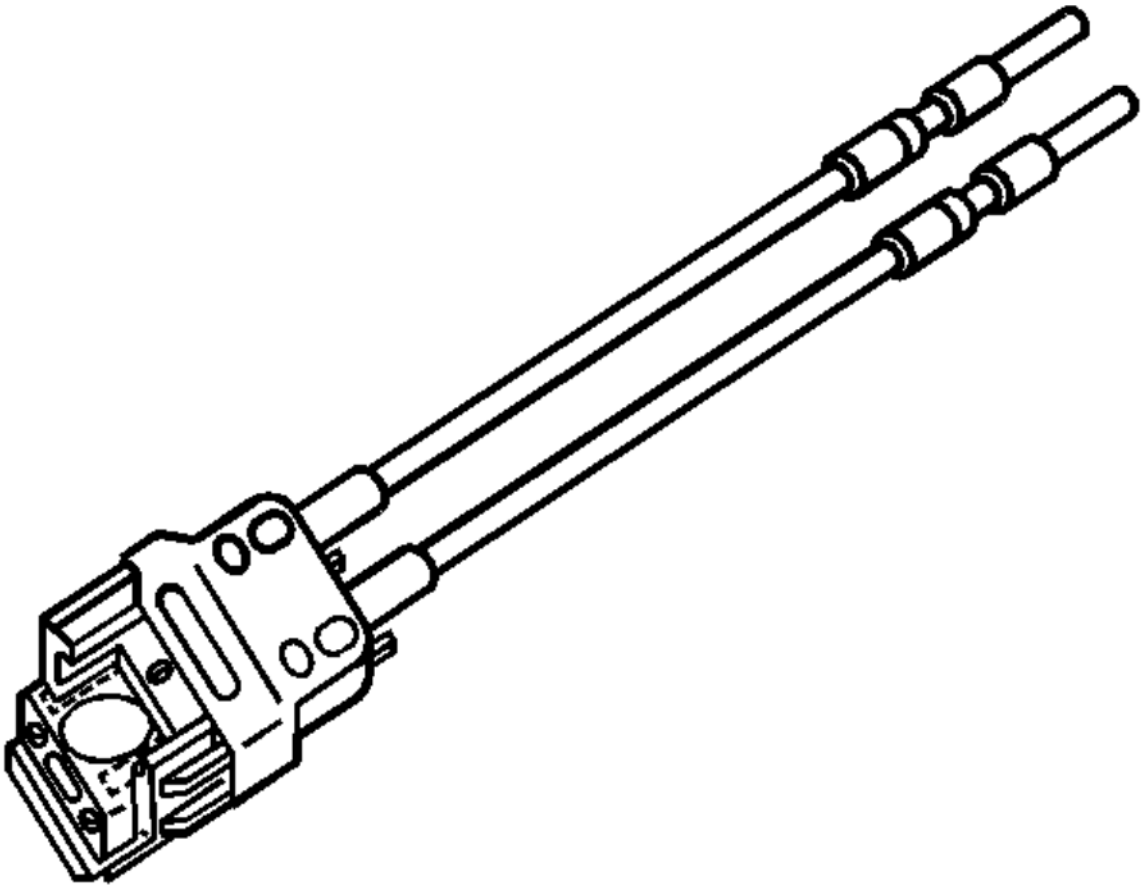

EL-36169-
Heavy Duty
Jumpe

EL-38522

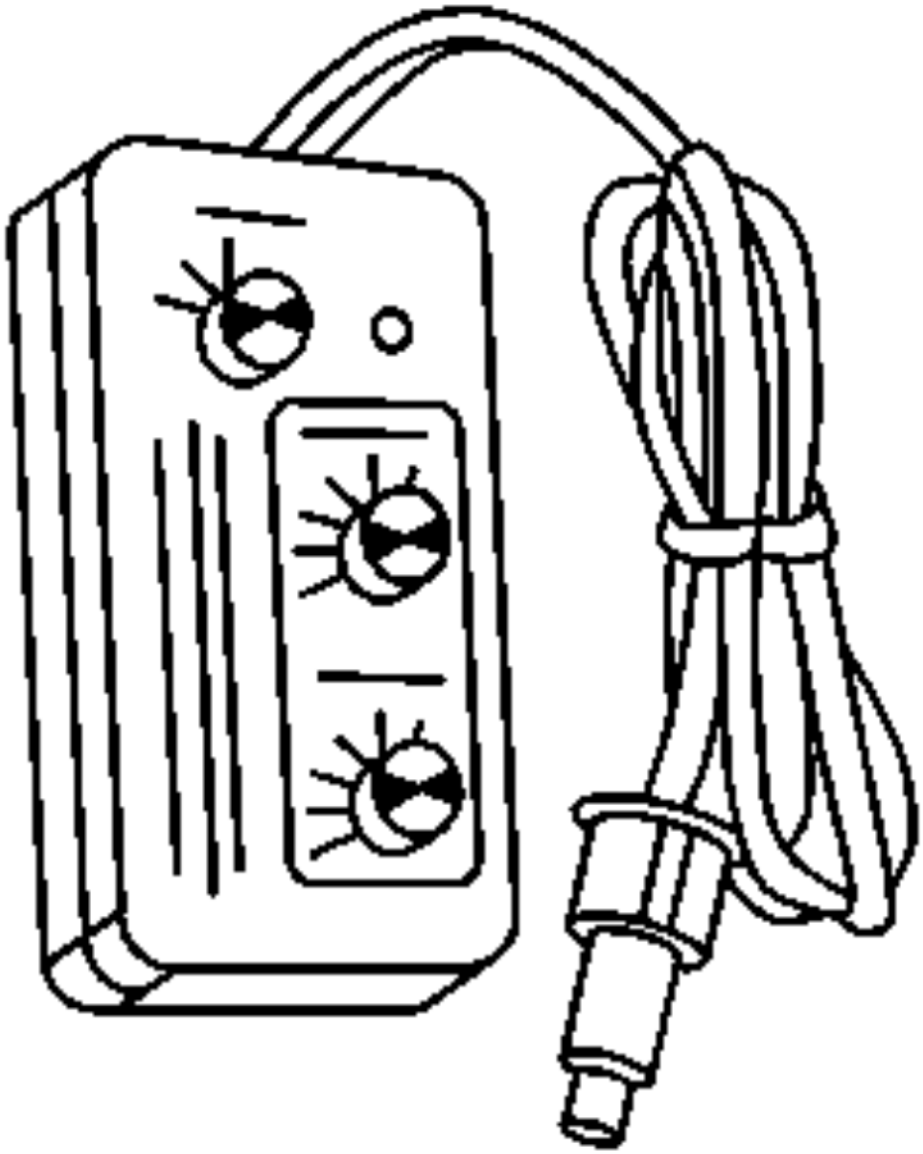

J-38522-
Variable Si
Generat

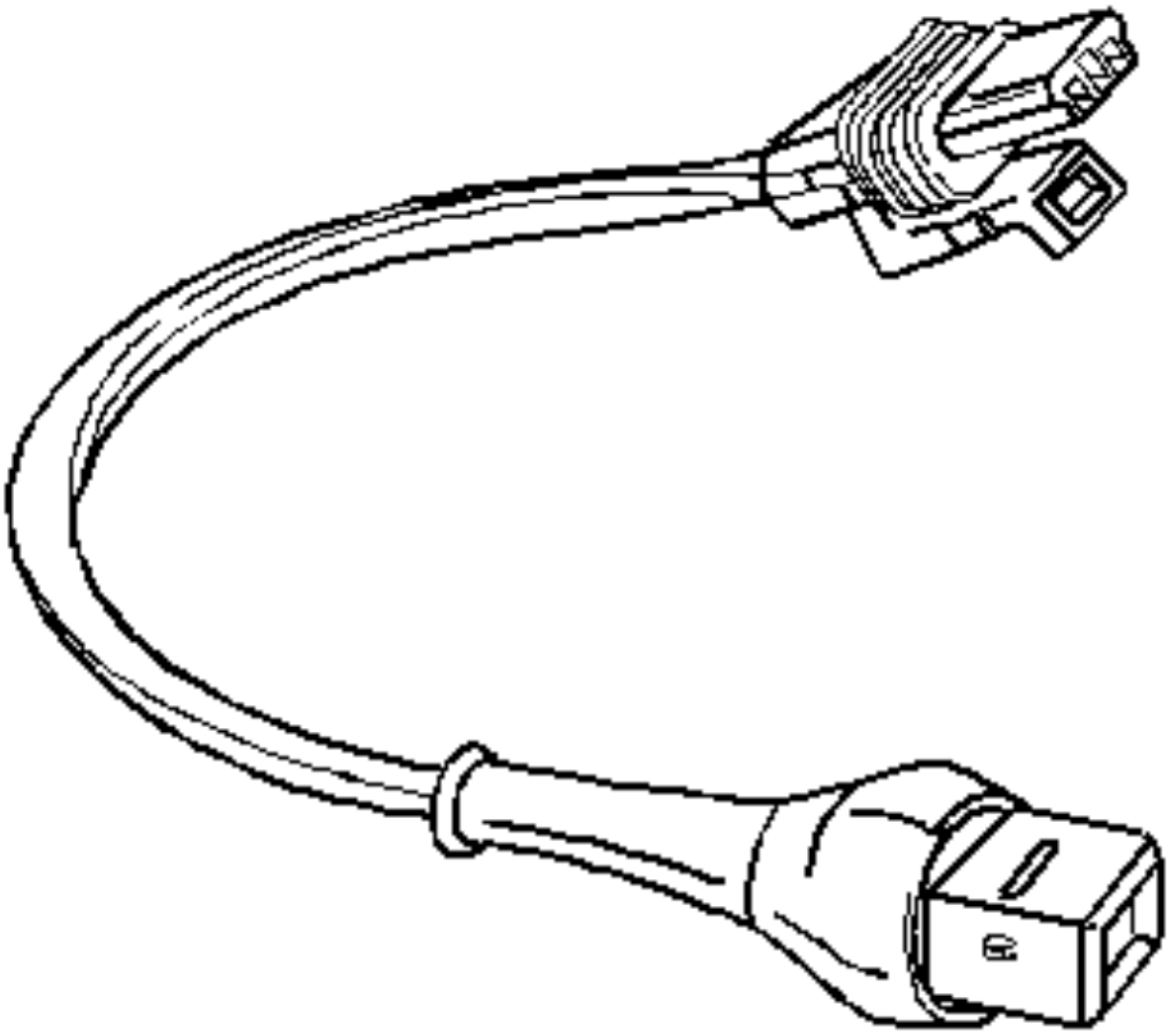

EL-3902
J-3902
Fuel Injecto
Balance Te

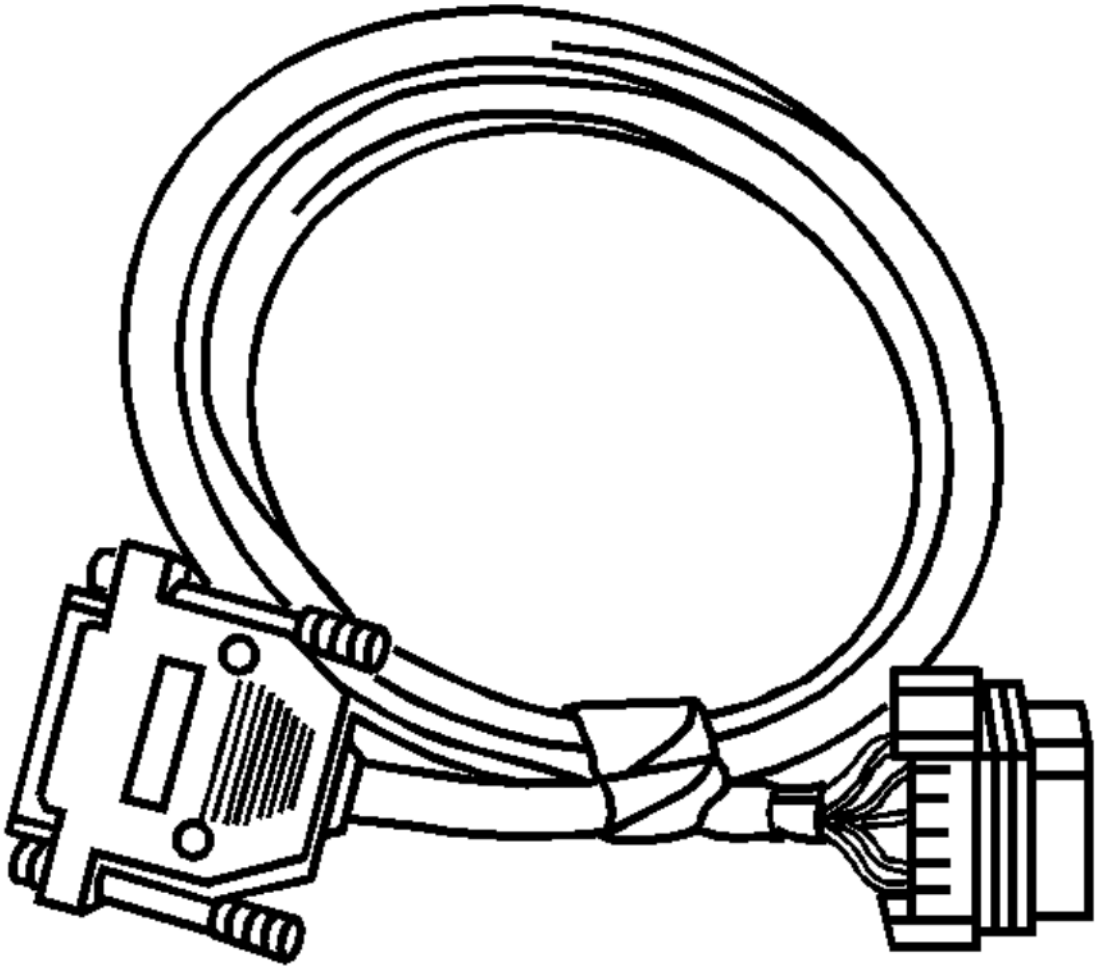

EL-39021-
J-39021-4
Fuel Injecto
Adapte

EL-42598
J-42598-

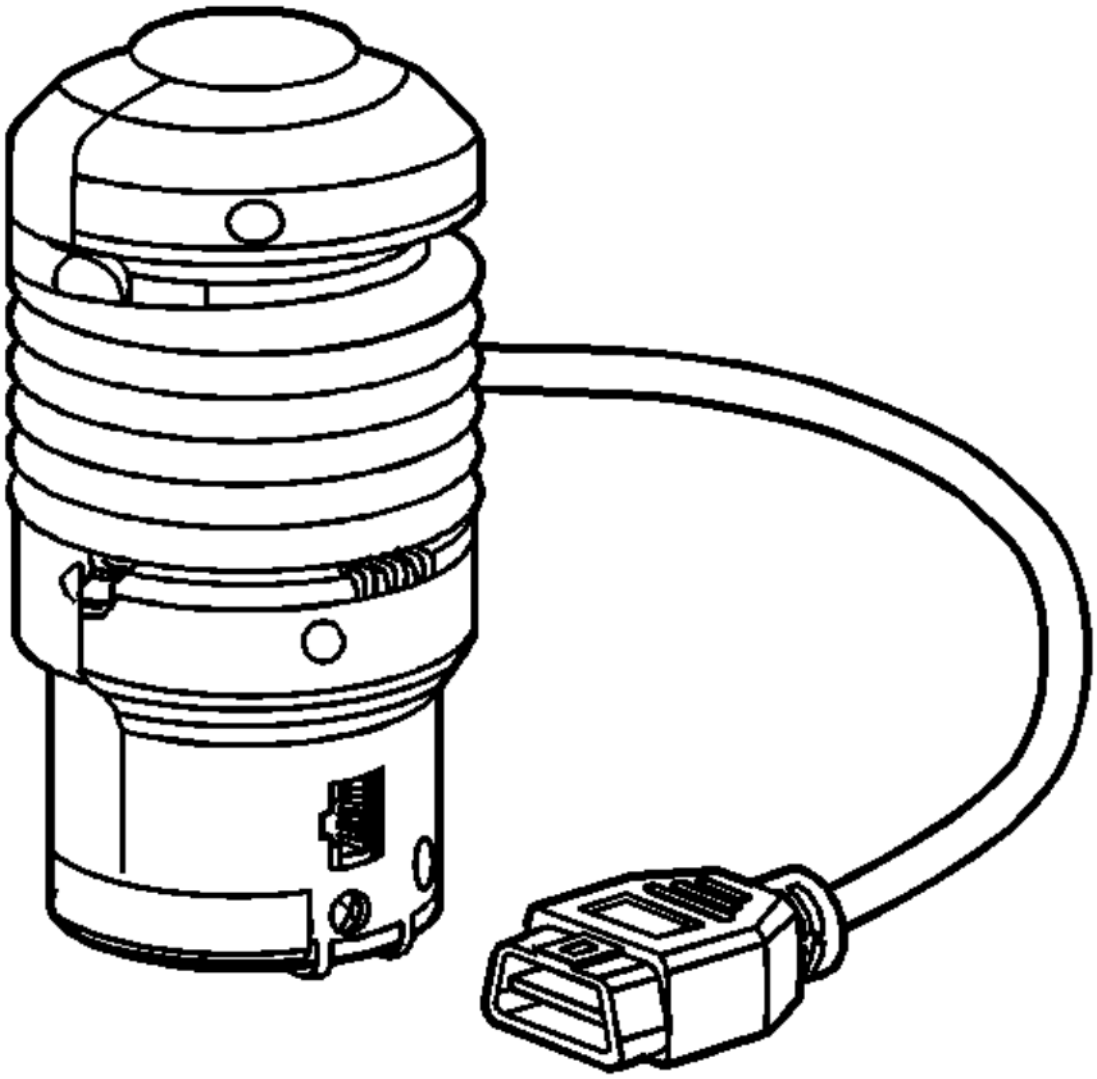

Vehicle D
Recorde

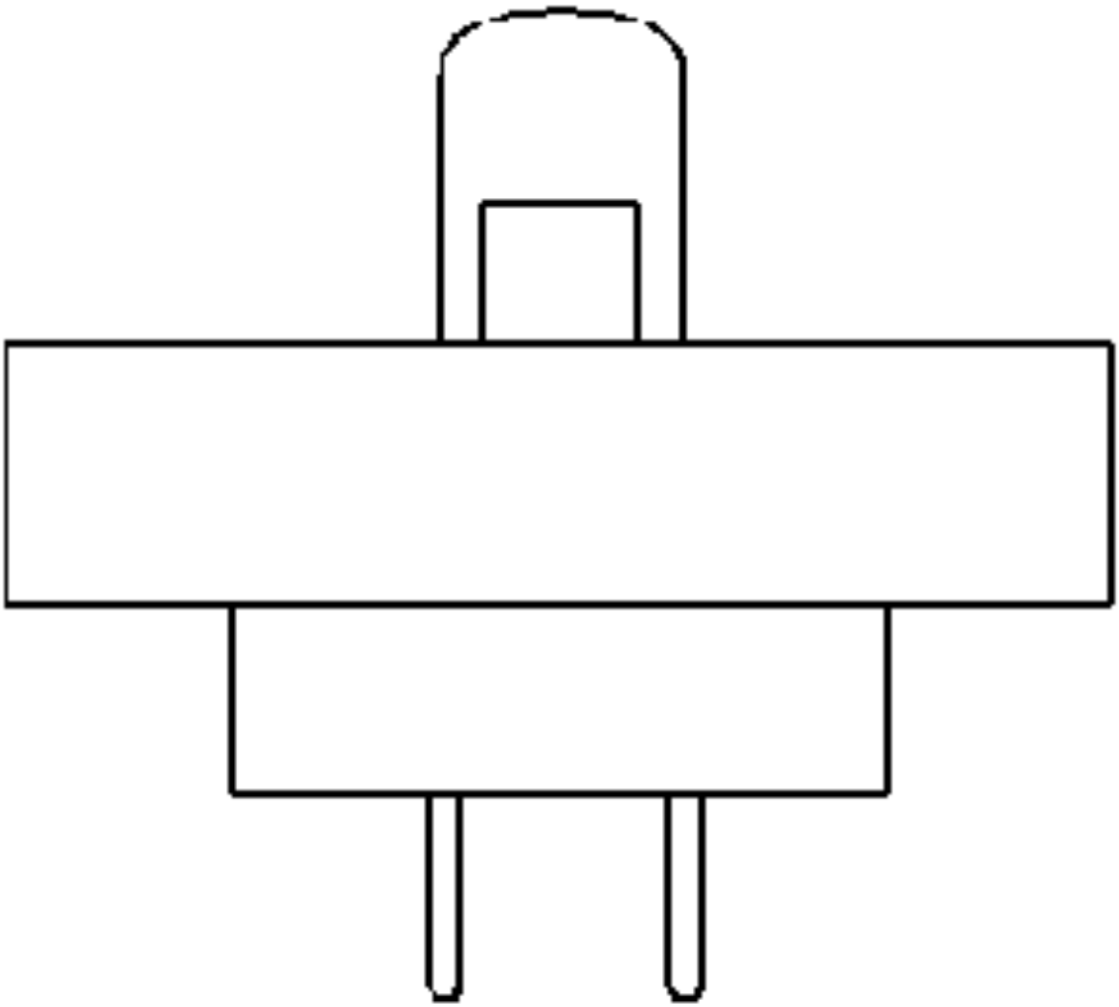

EL-4324
J-4324
Relay Puller

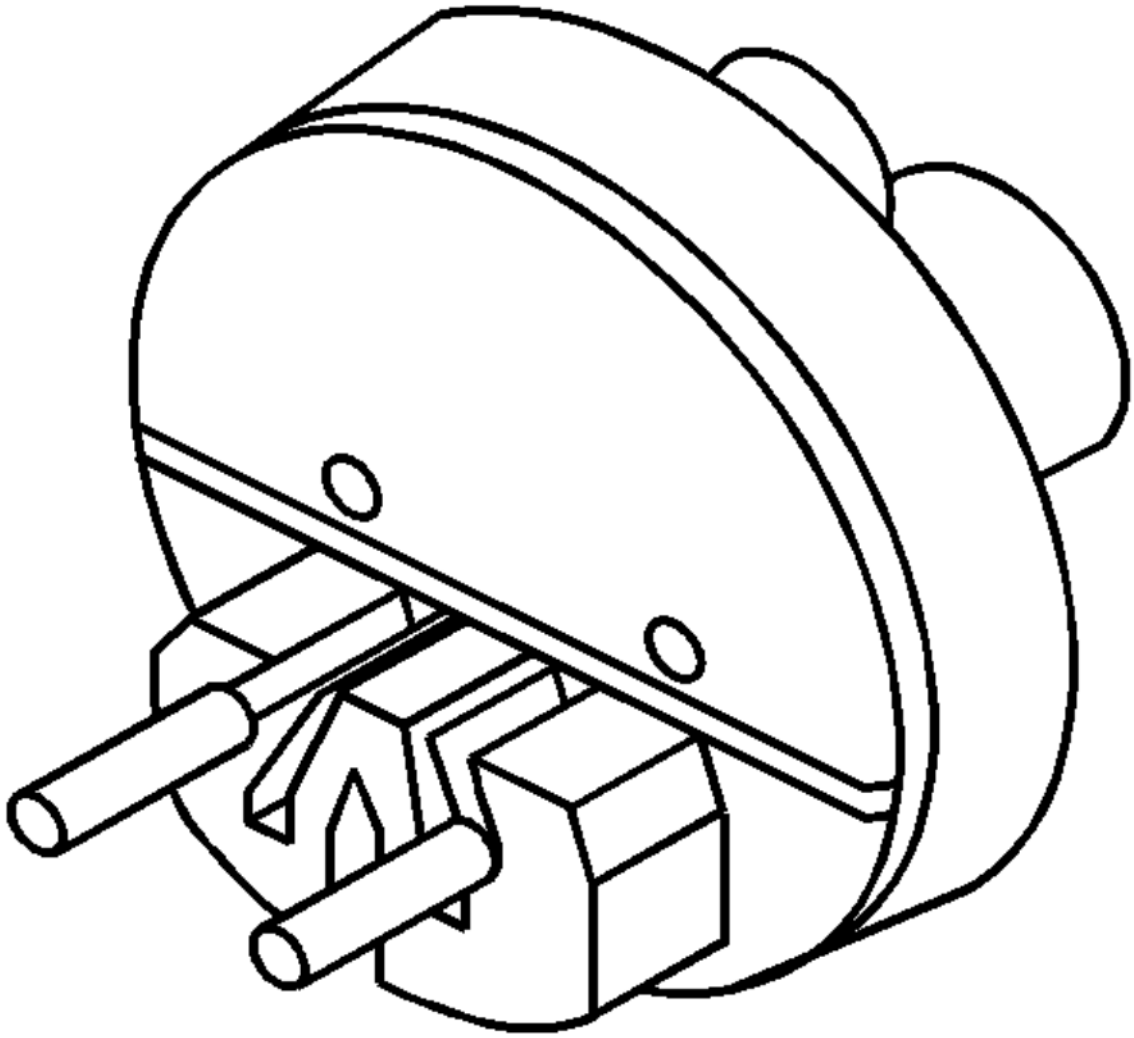

EL-446(
J-4460:
Injector Test

EN-34730
J-34730-

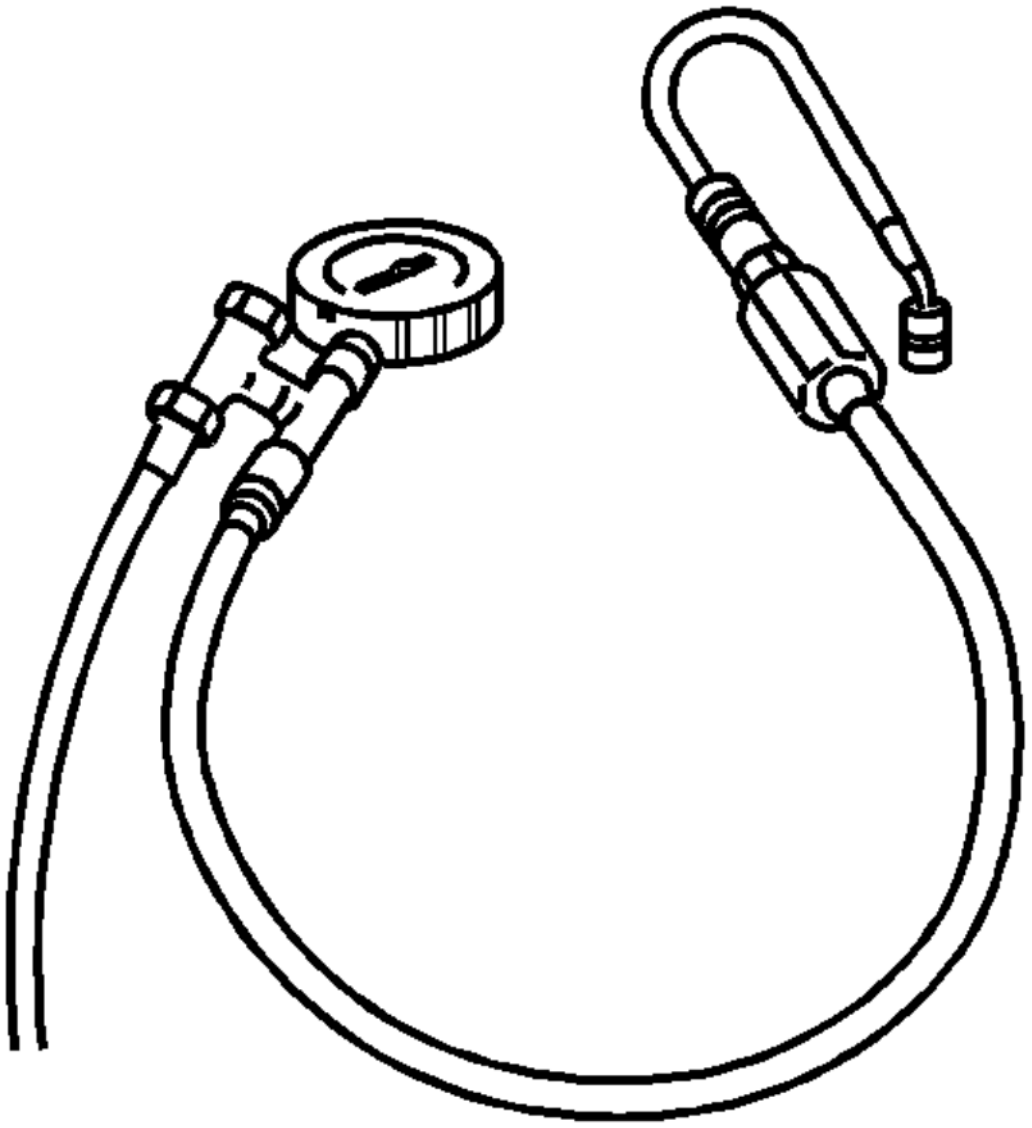

KM-J-3473
Pressure T

EN-36012

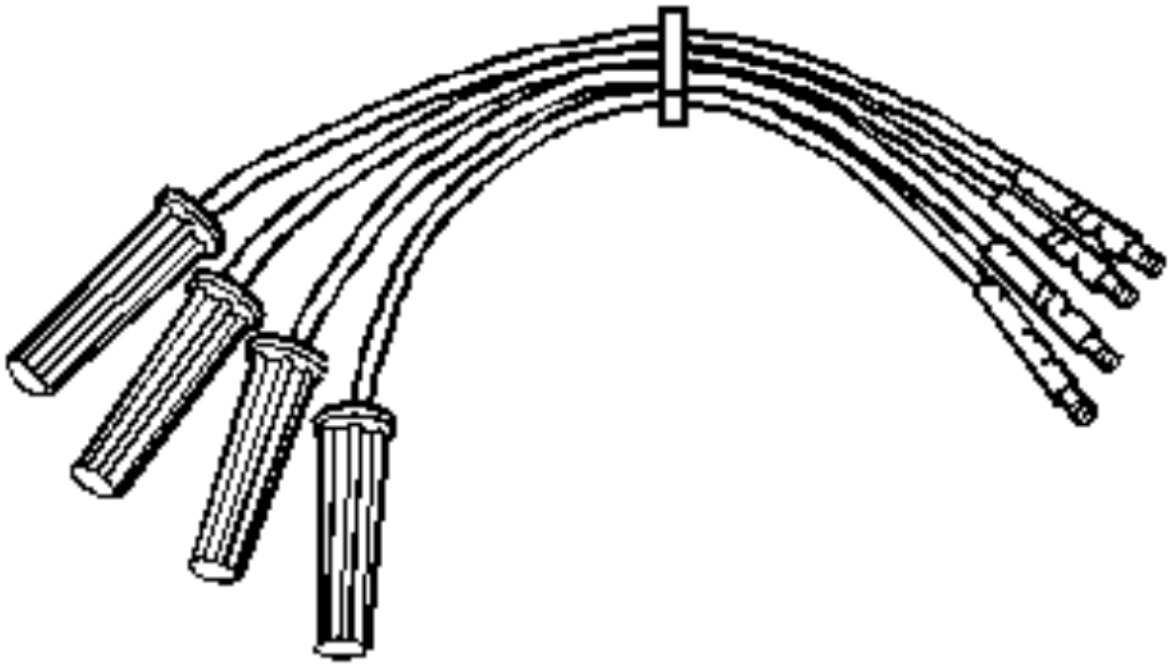

J-36012-
Ignition Sy
Diagnosis H

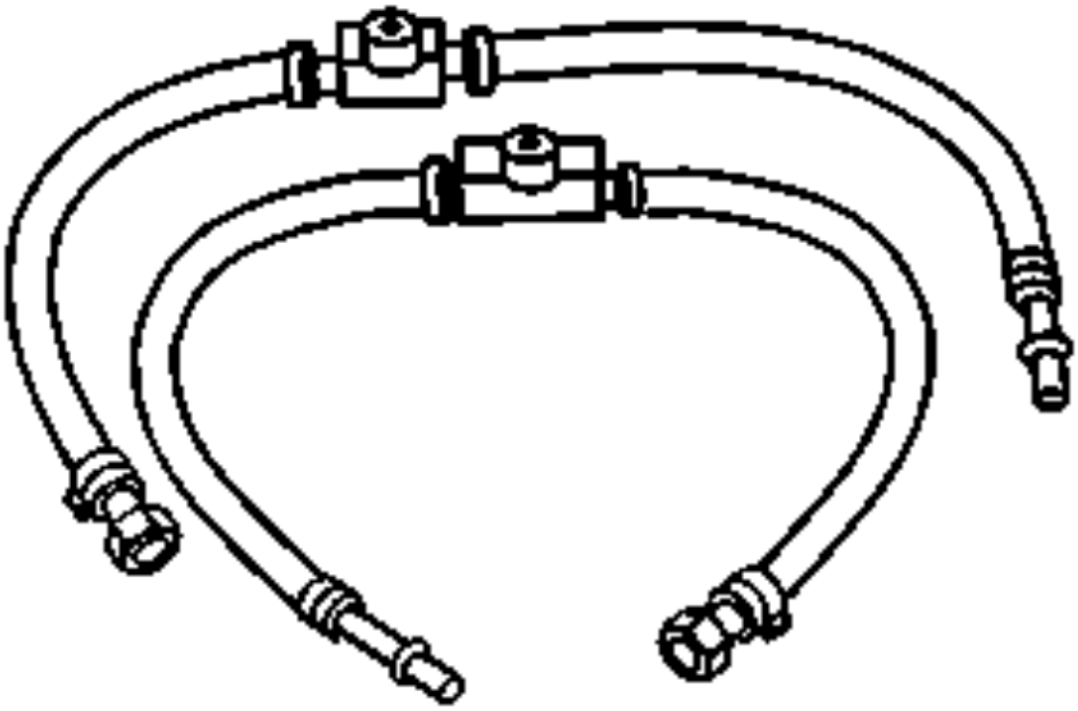

EN-3728
J-3728
Fuel Line Sh
Adapter

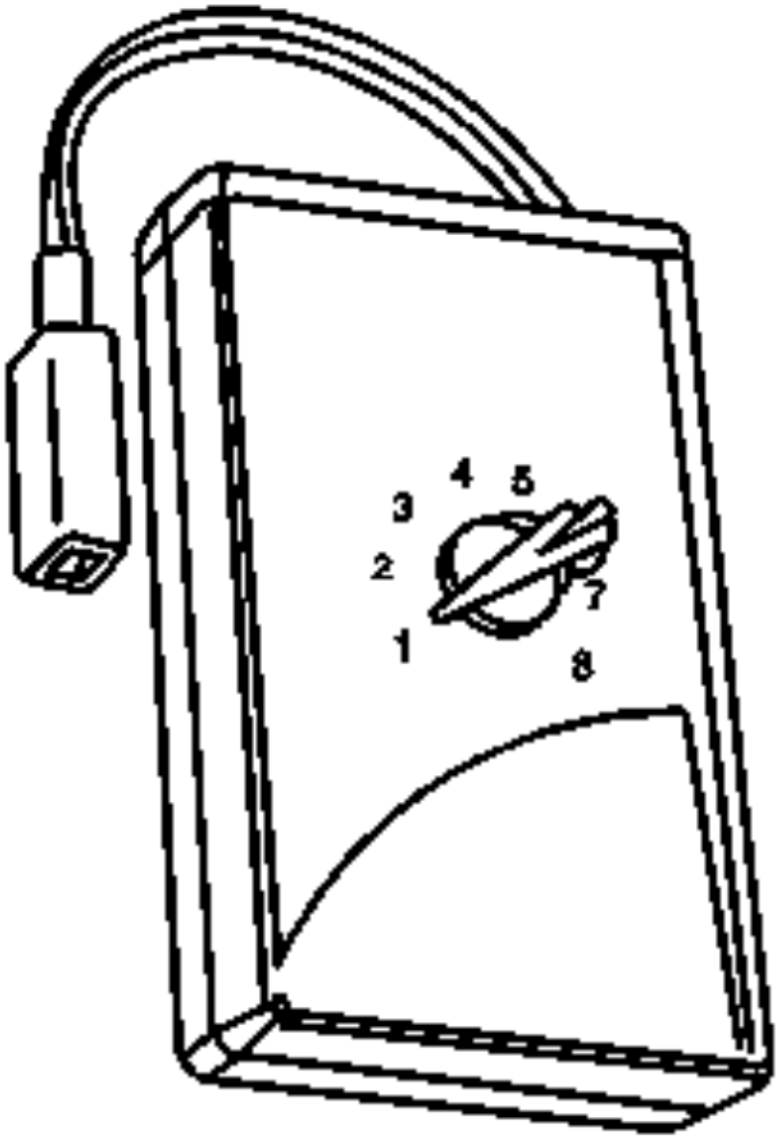

EN-39021-
J-39021-2
Injector Te
Adapter E

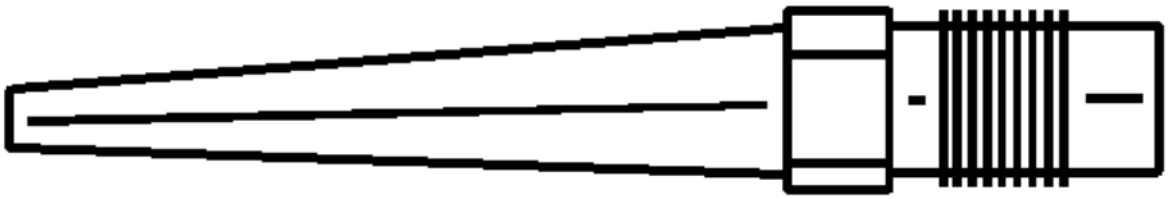

EN-41413-
J-41413-3
EVAP Pl

GE-41413
EN-41413
J-41413-

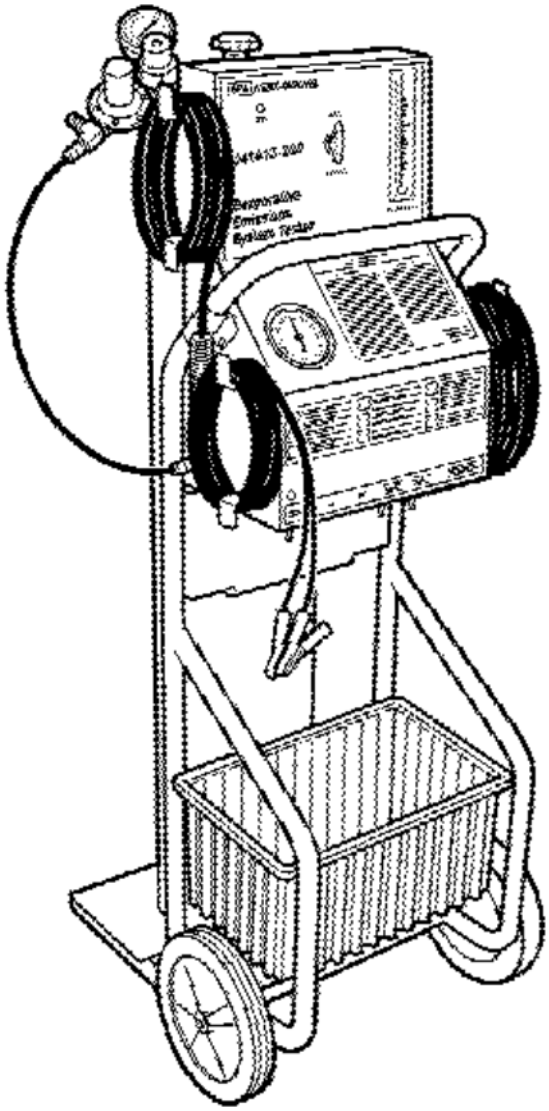

Evaporat
Emissions S
Tester (EE

EN-41413-
J-41413-V

EVAP Servic
Vent Fitti

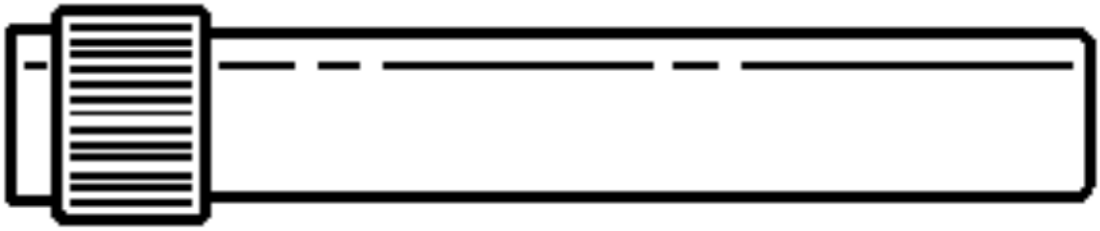

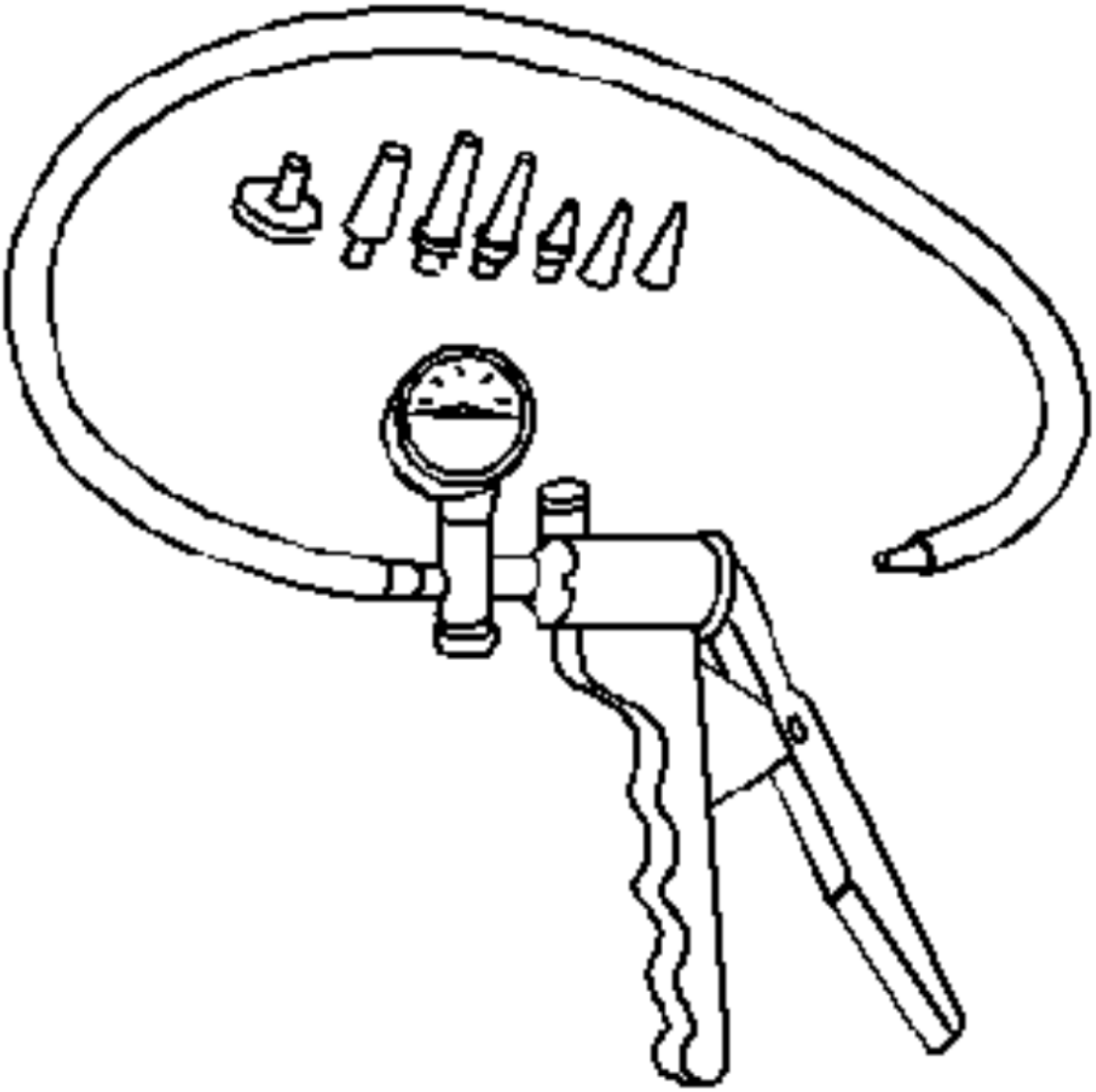

EN-446(
J-4460:
Injector Test /

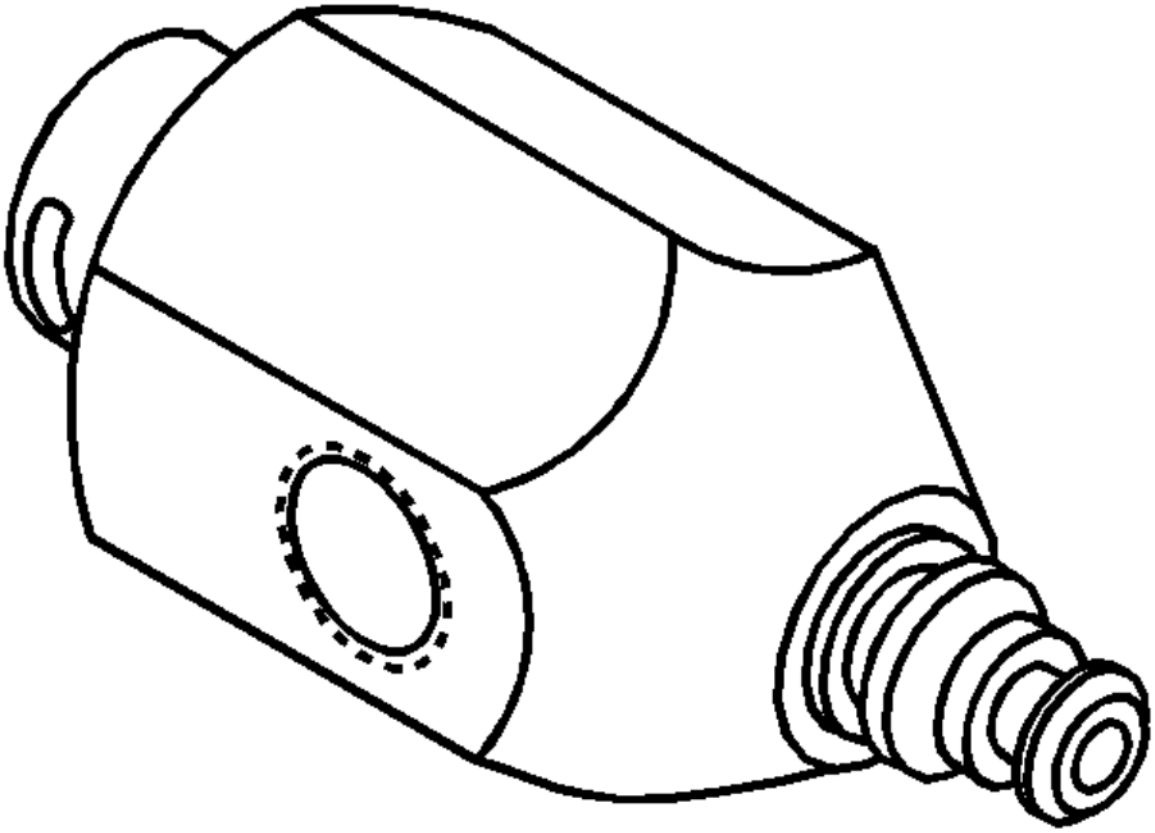

EN-45873
J-45873-
Injector Flov
Adapte

EN-4609
J-4609

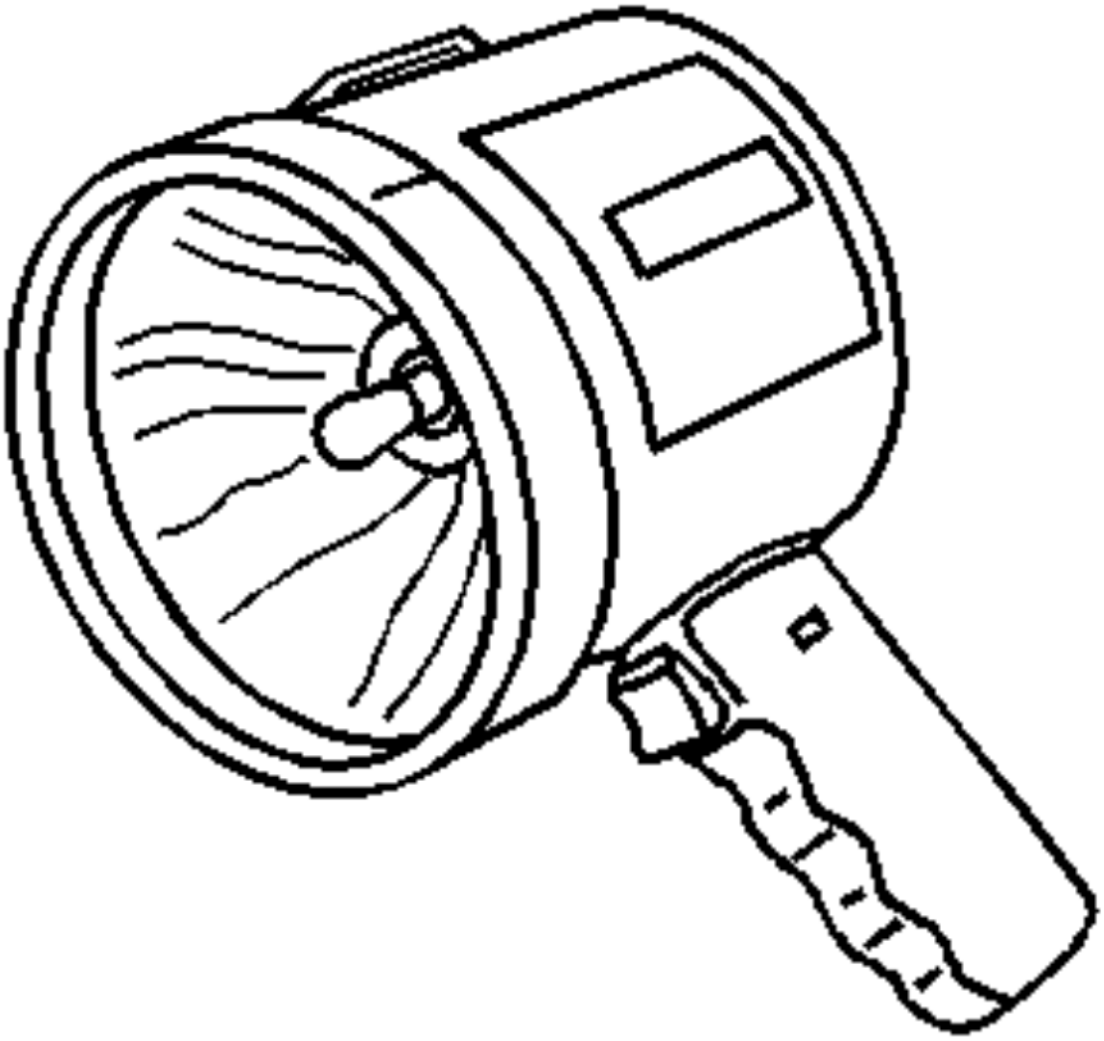

Charge Air C
Tester

EN-46091-
J-46091-1
Diesel Eng

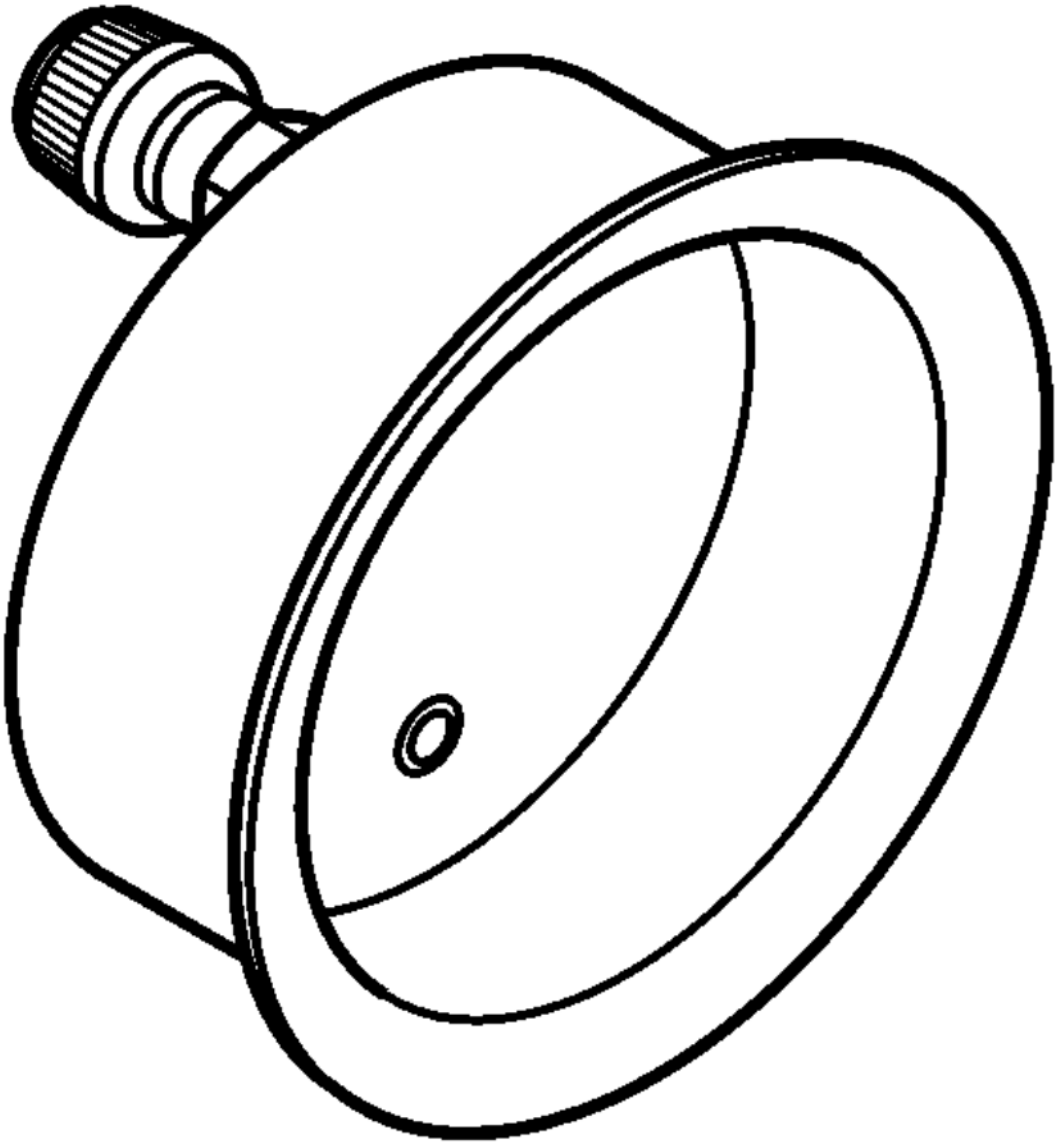

Pressure T
Adapte

EN-4609
J-46091

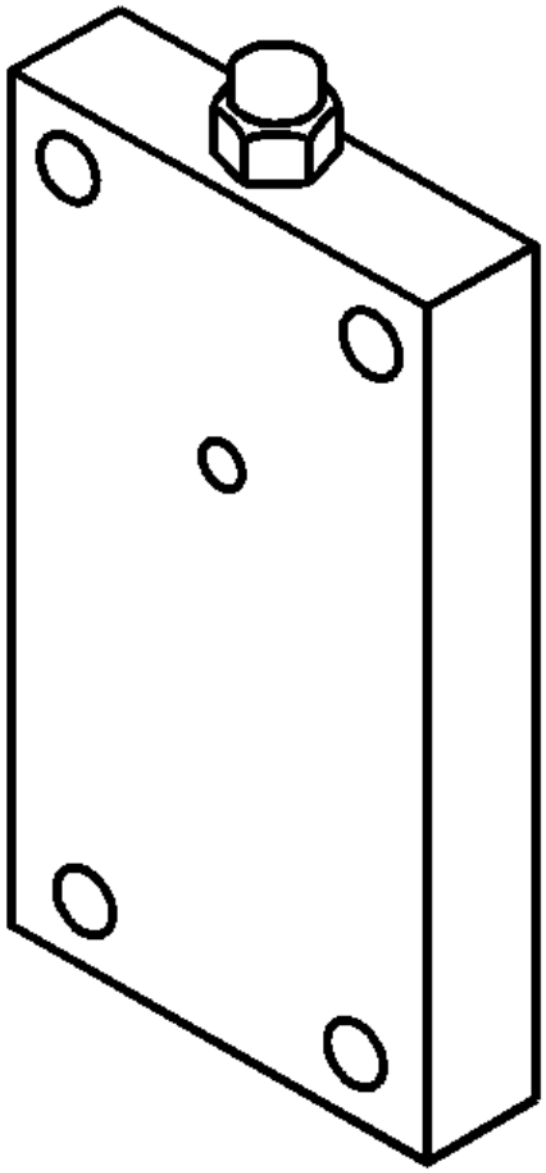

Charge Air C
Tester Ada

EN-469
Displaceme

Demand El
Tool

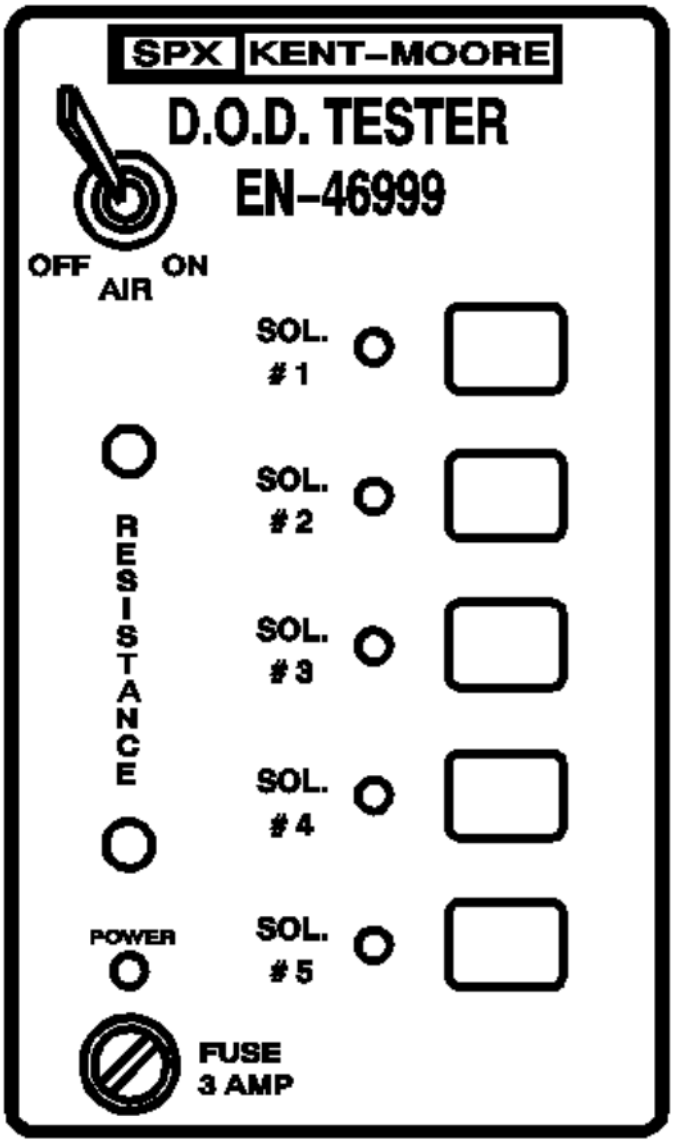

EN-476
Compression

Adapte

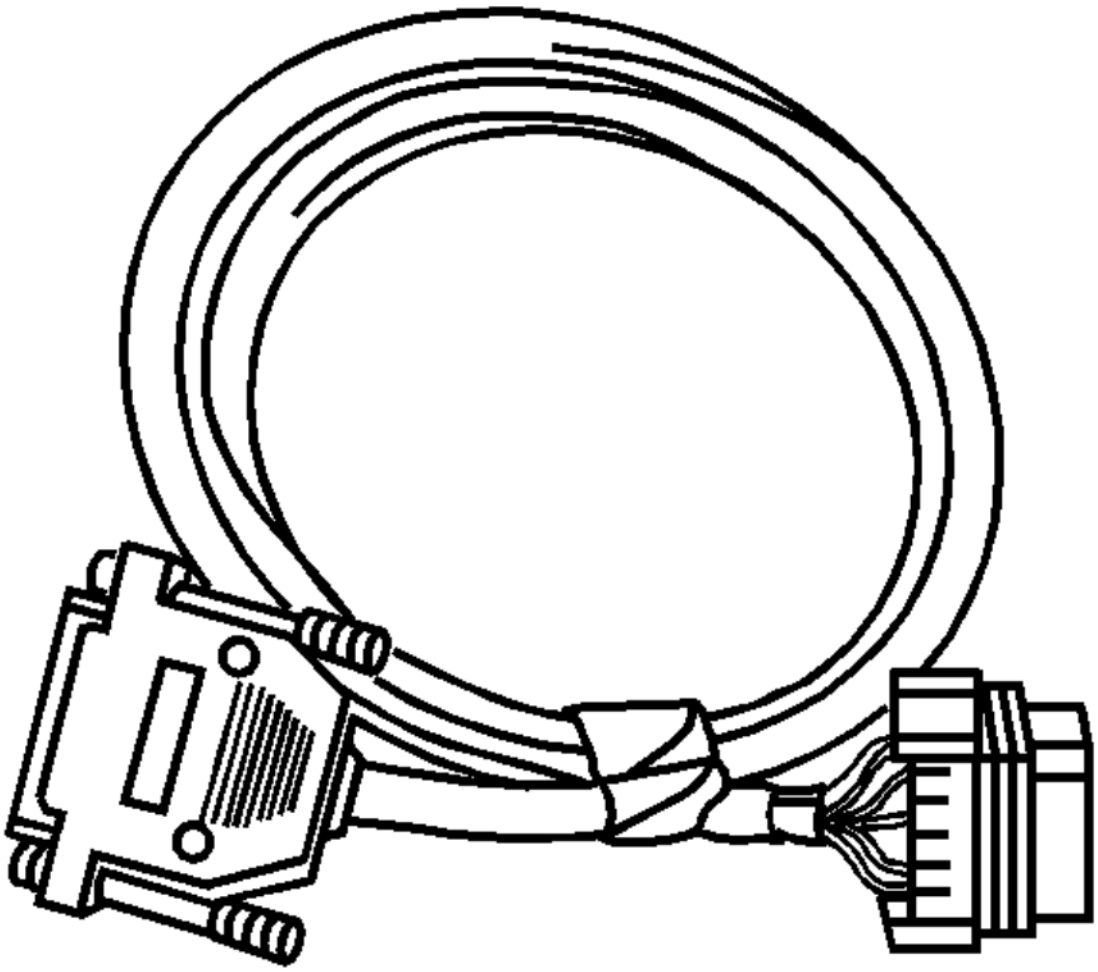

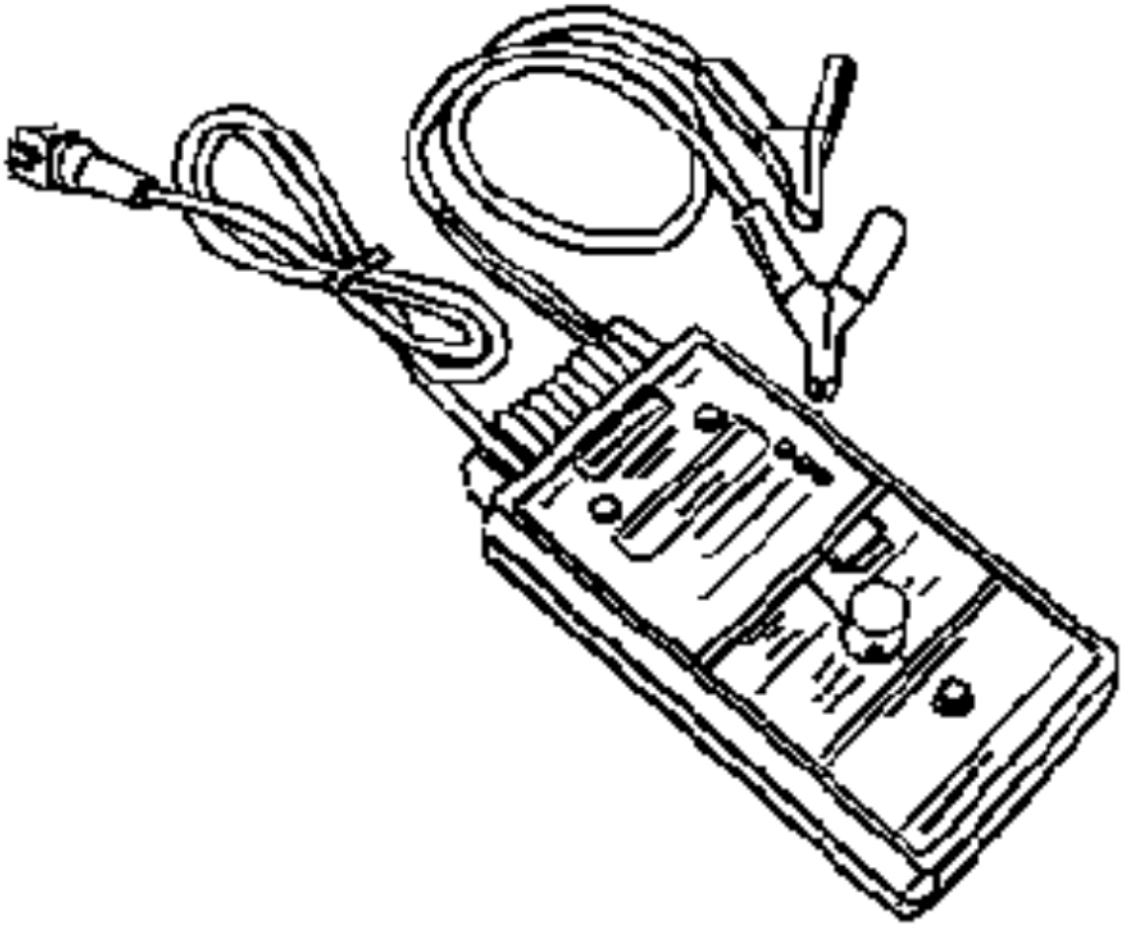

GE-23738
J-23738-
Vacuum P

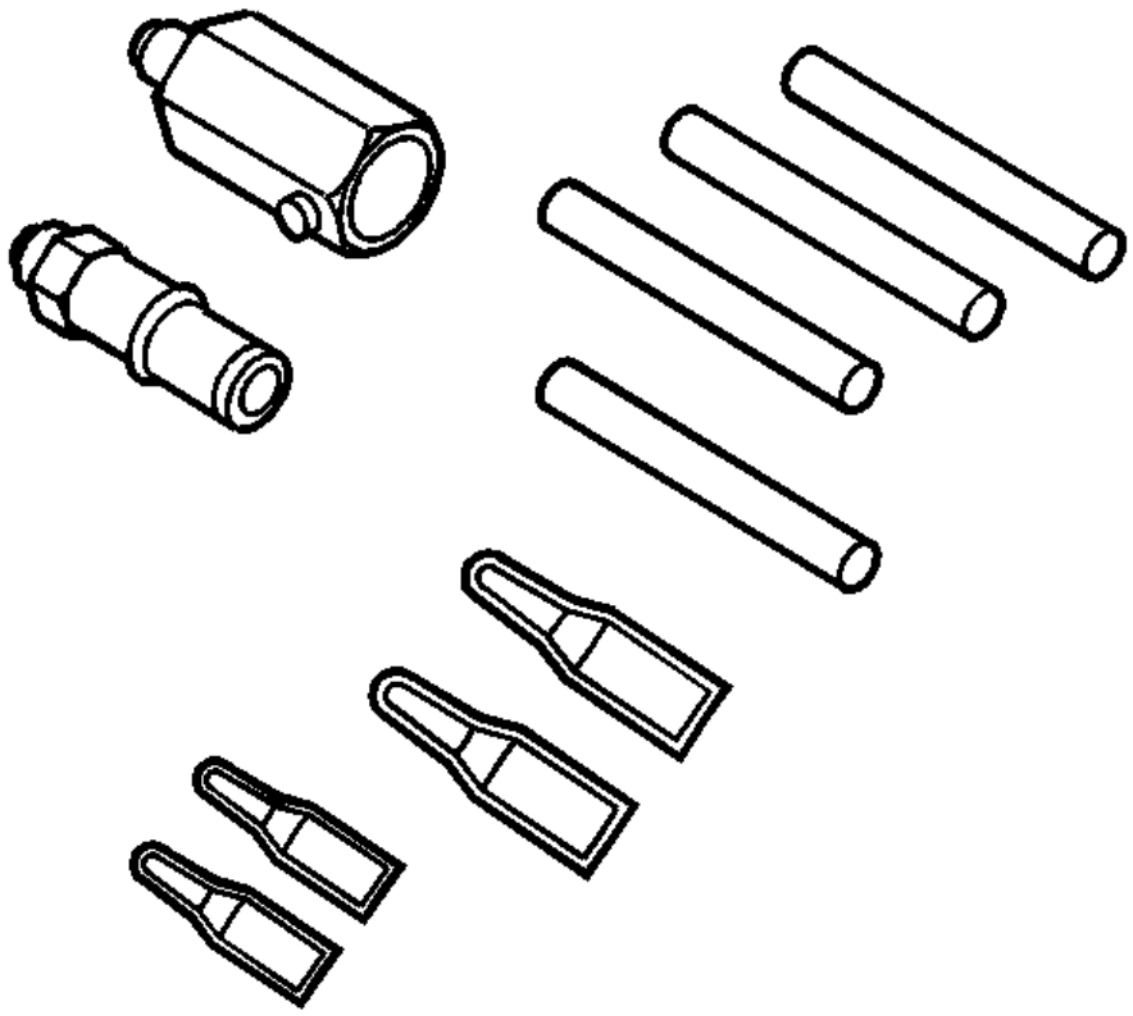

GE-41413-
EN-41413-
J-41413-3
EVAP Cap an
Kit

GE-41413-
J-41413-S

High Intensity Light

GE-41415
J-41415-

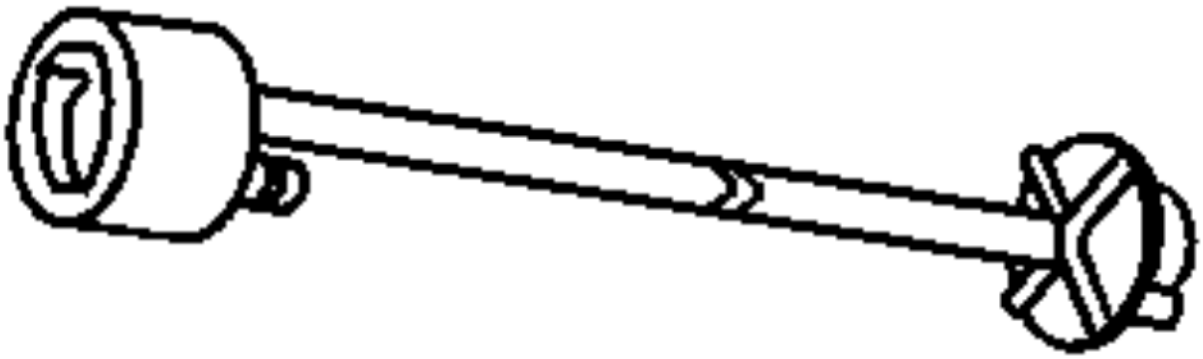

Fuel Tank
Adapte

GE-41415
Engine Indu

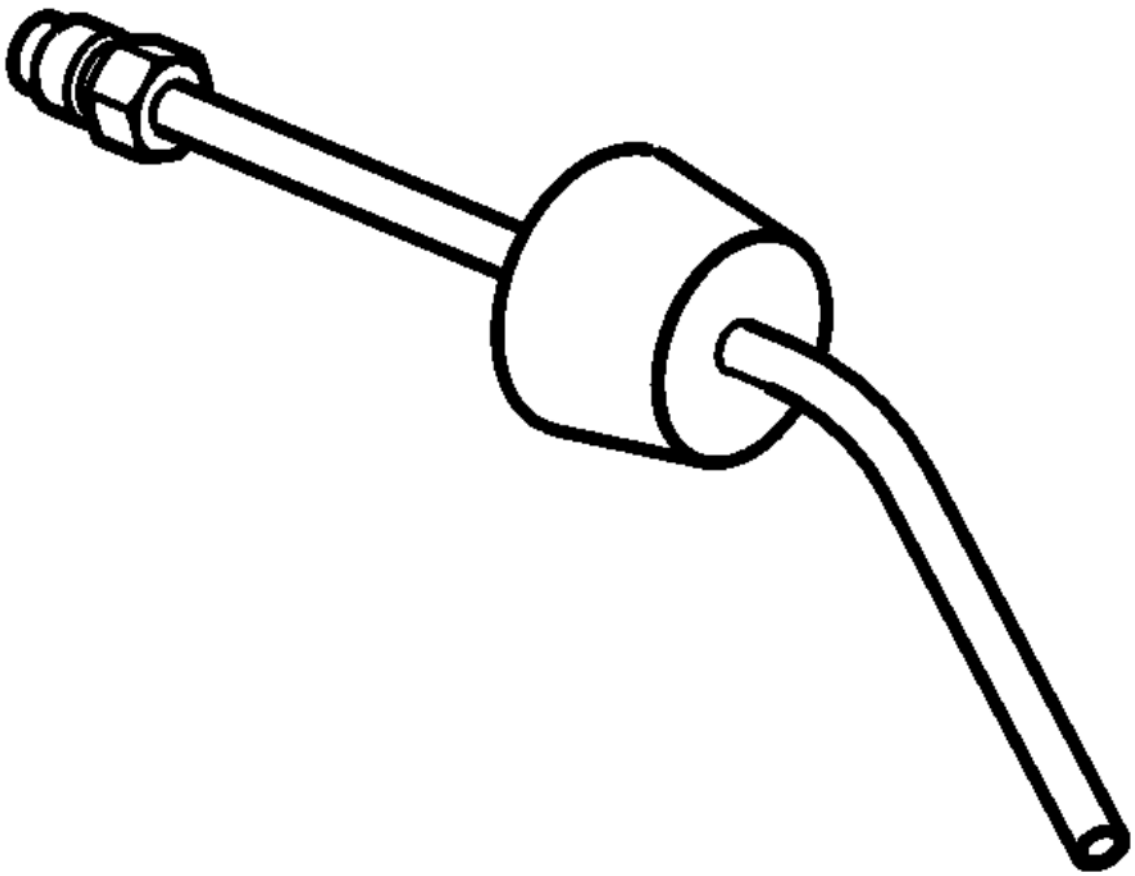

System Leal
Adapte

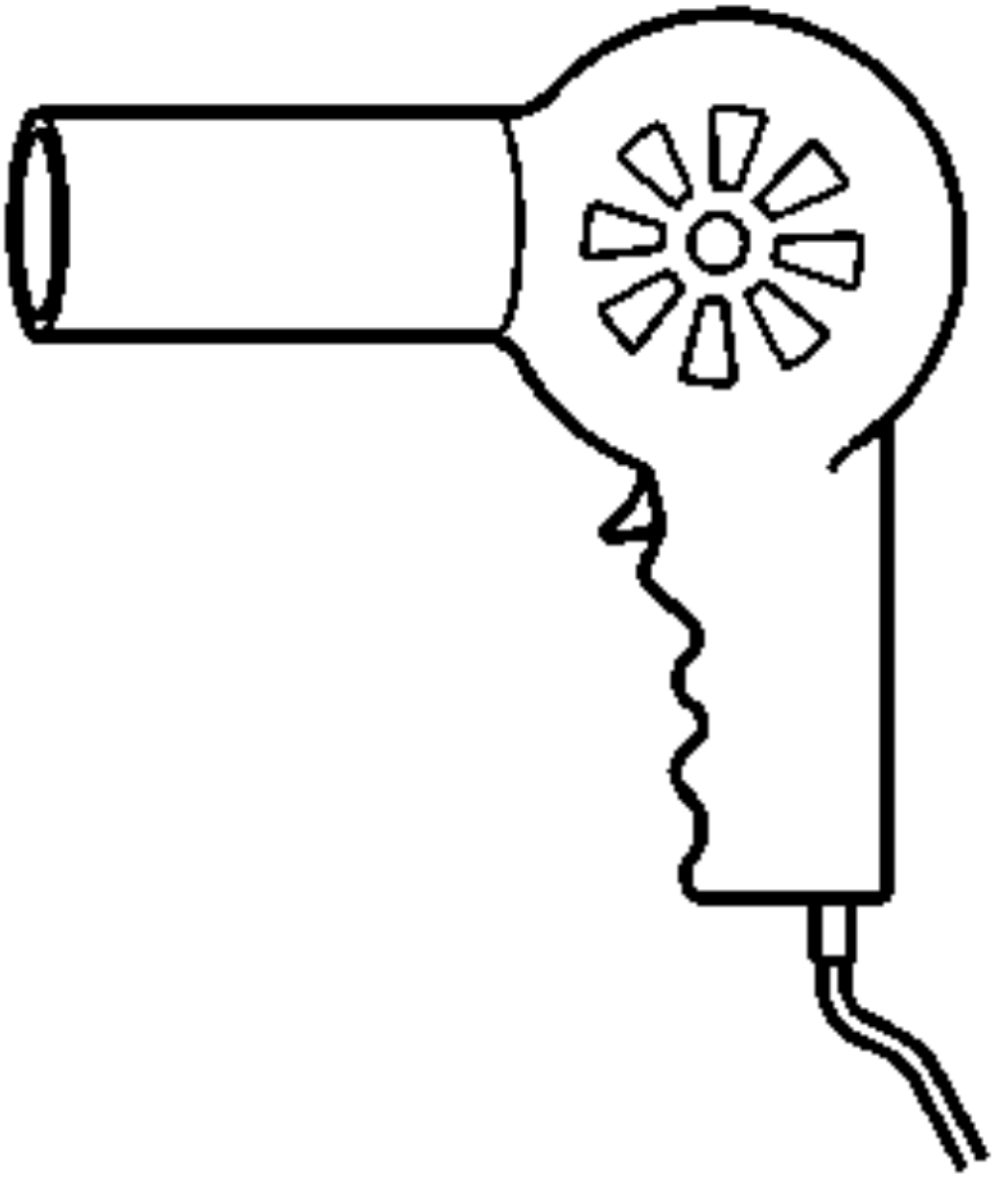

J-2507(
Heat Gun 260
(500-750'

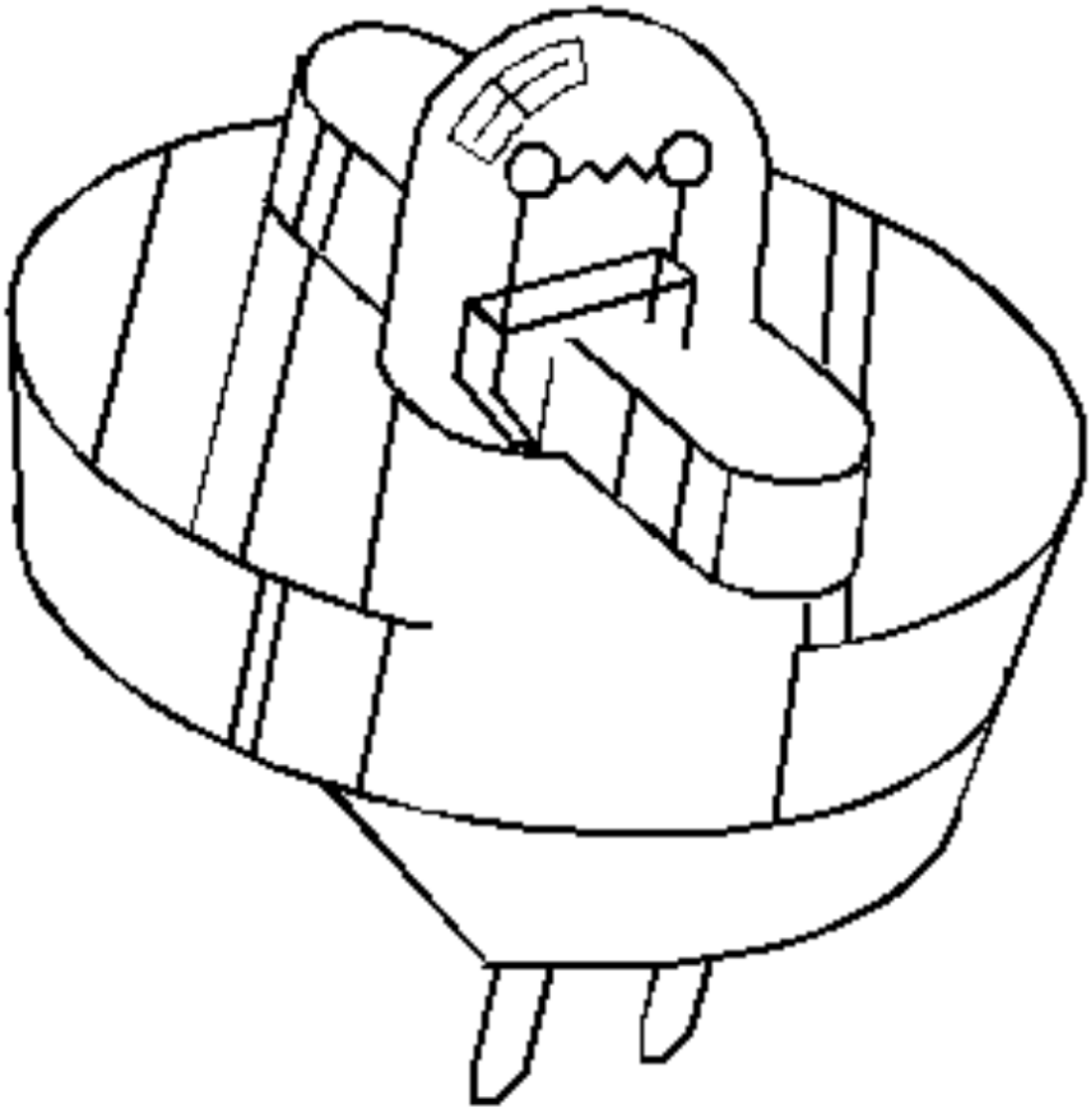

J-34730-3
Injector Test

SPECIAL TOOLS (MECHANICAL TOOLS)

Illustration	Tool Number/Desc

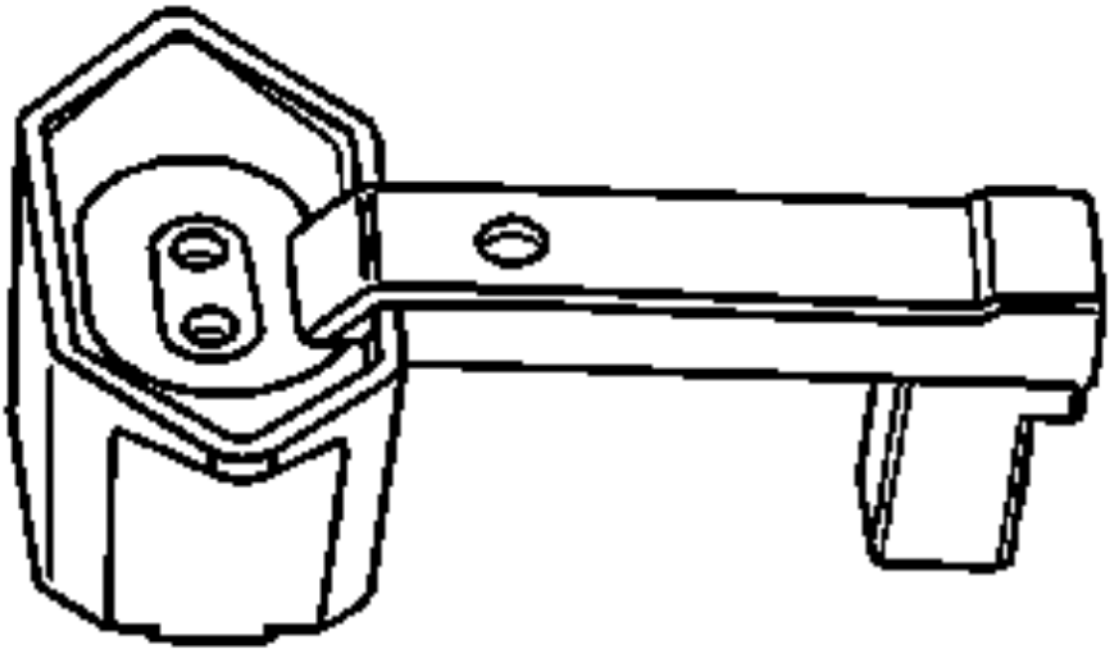

CH-450(
J-4500
Fuel Tank I
Hose
South Americ
Local Equiv

CH-457
Fuel Sender

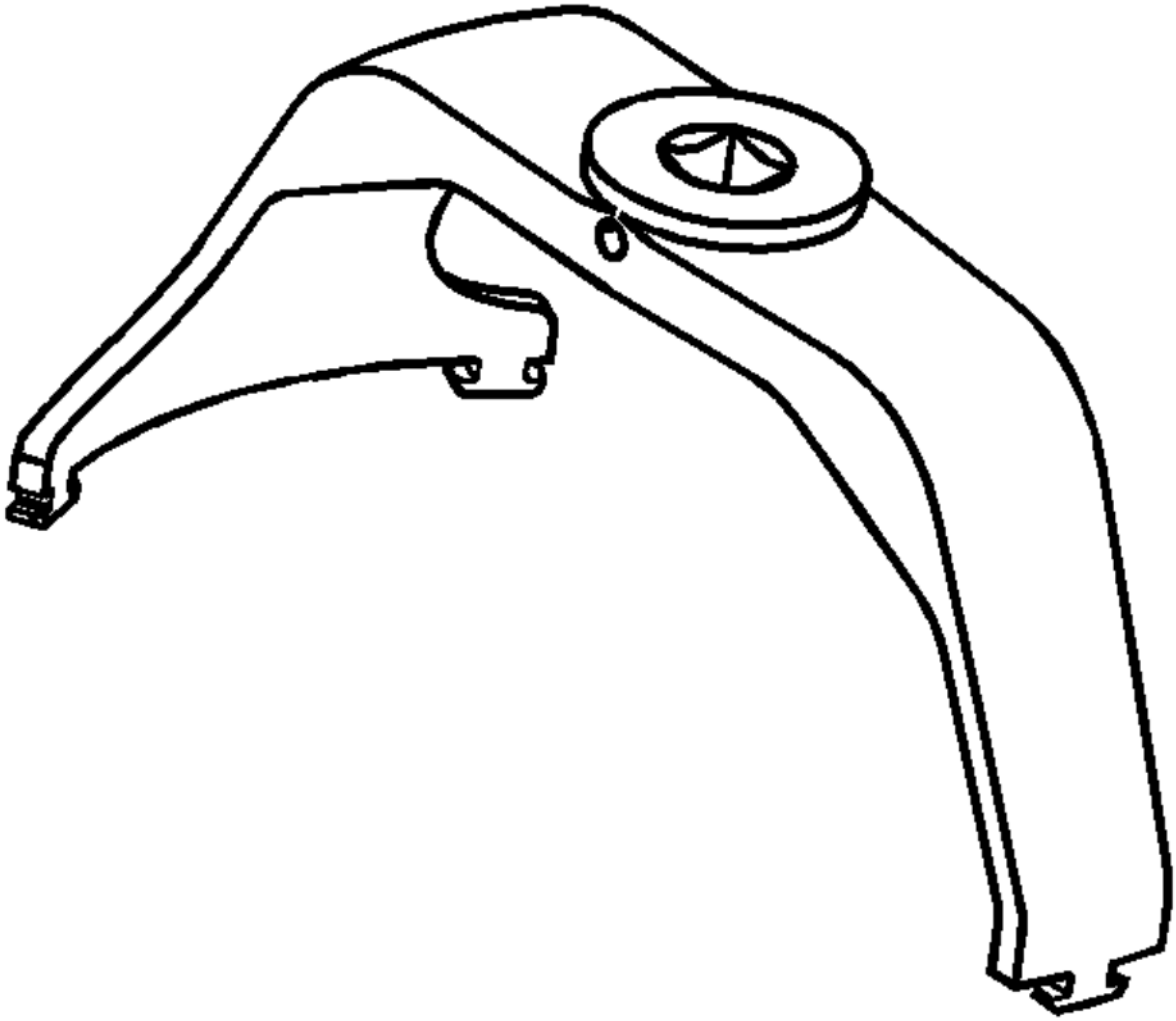

Ring Wre

CH-480
Digital Pre
gauge

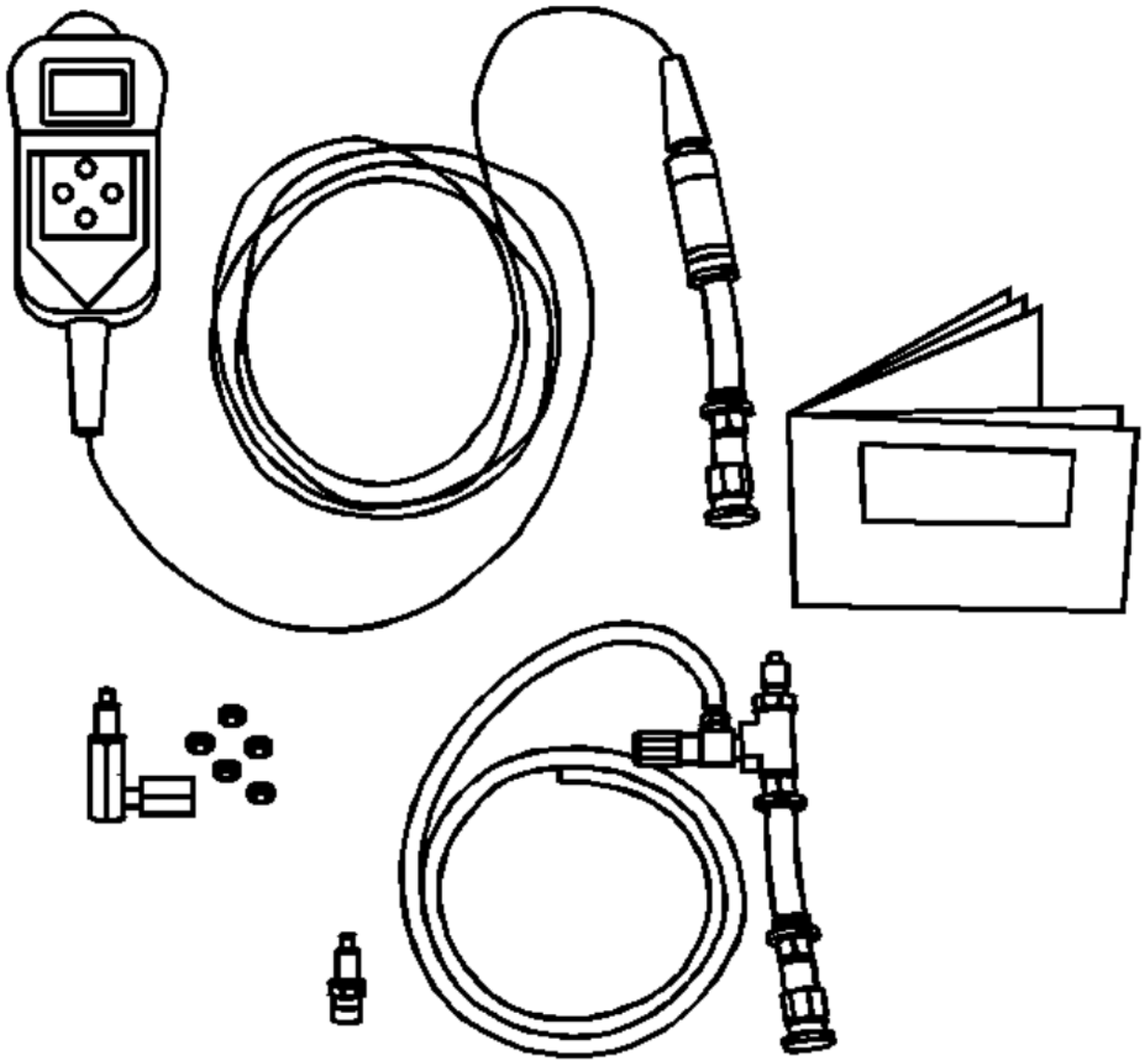

South Americ
Local Equiv

EN-4176
Fuel Line Dis

Tool 3/

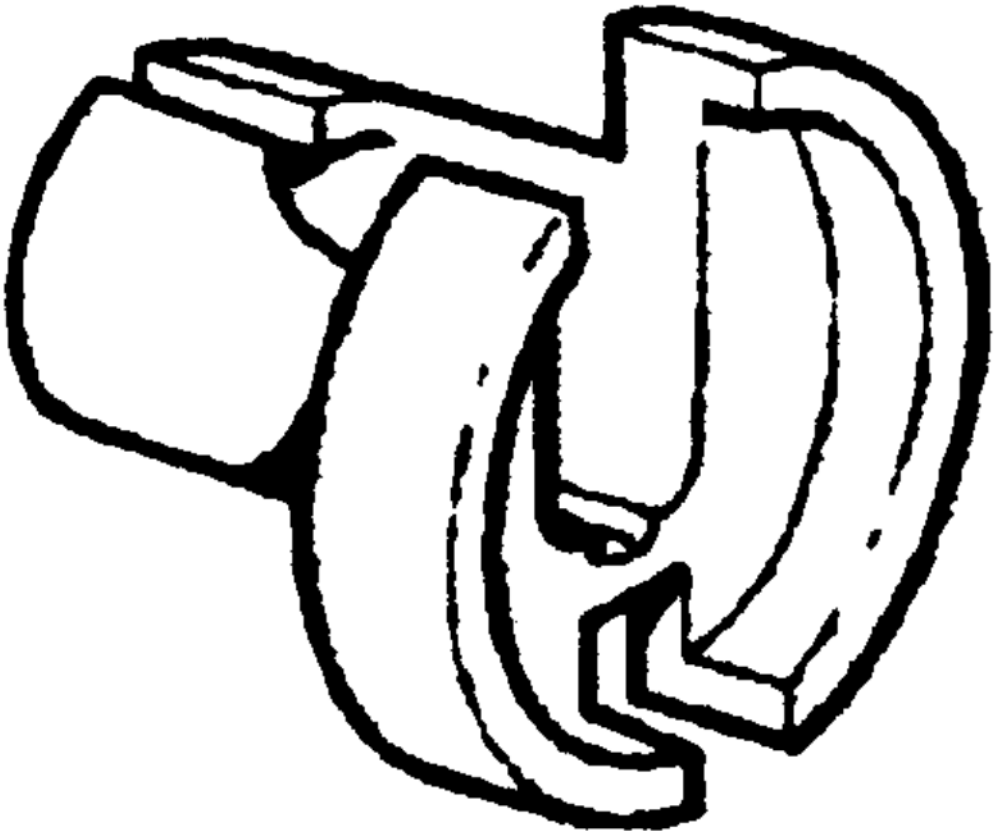

EN-4176
Fuel Line Dis

Tool 5/1

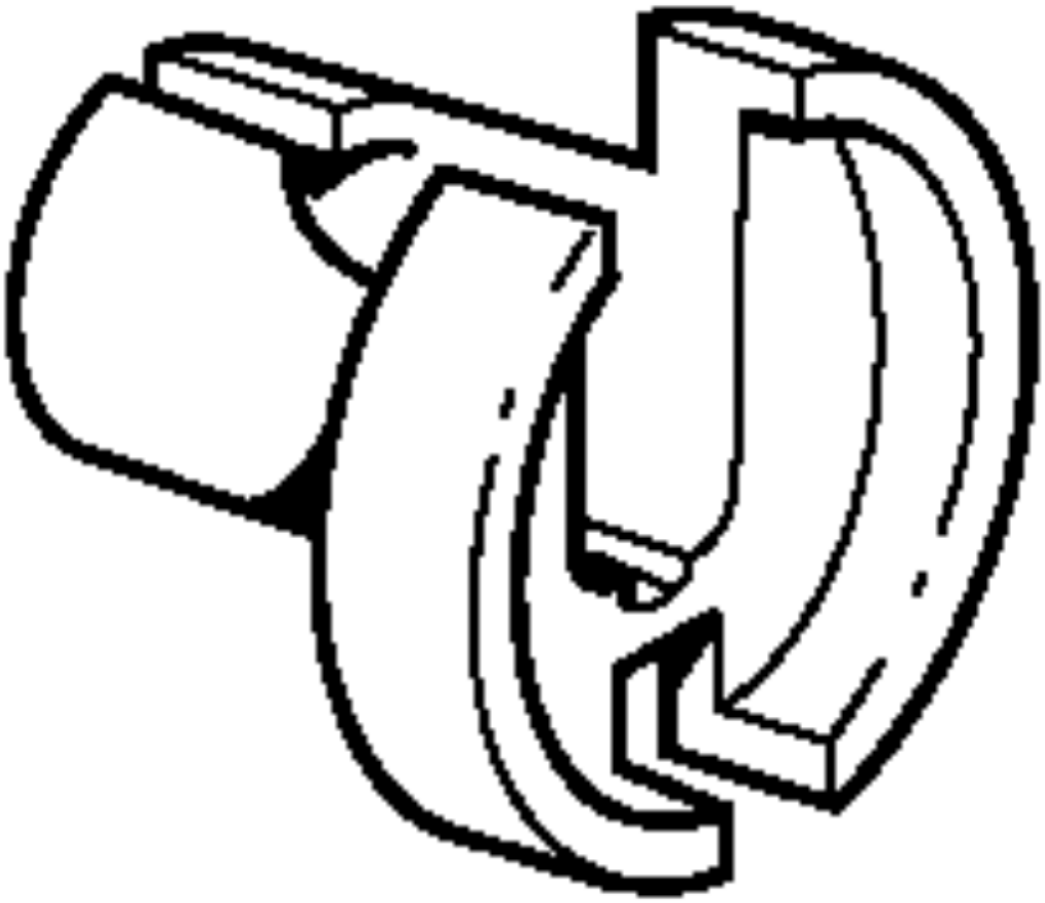

EN-479(
Injector Bor

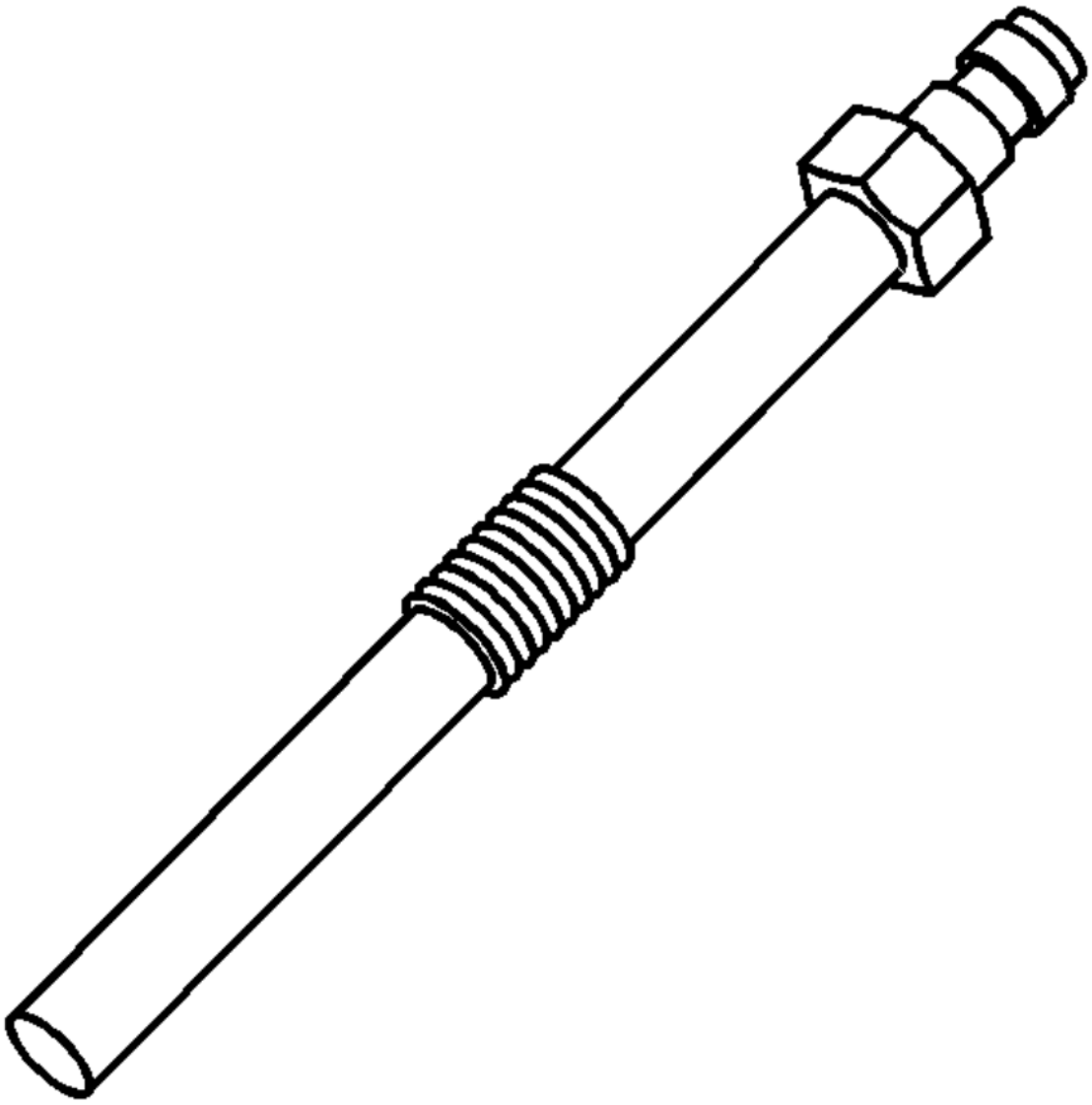

Sleeve Clean

EN-488
High Pressur

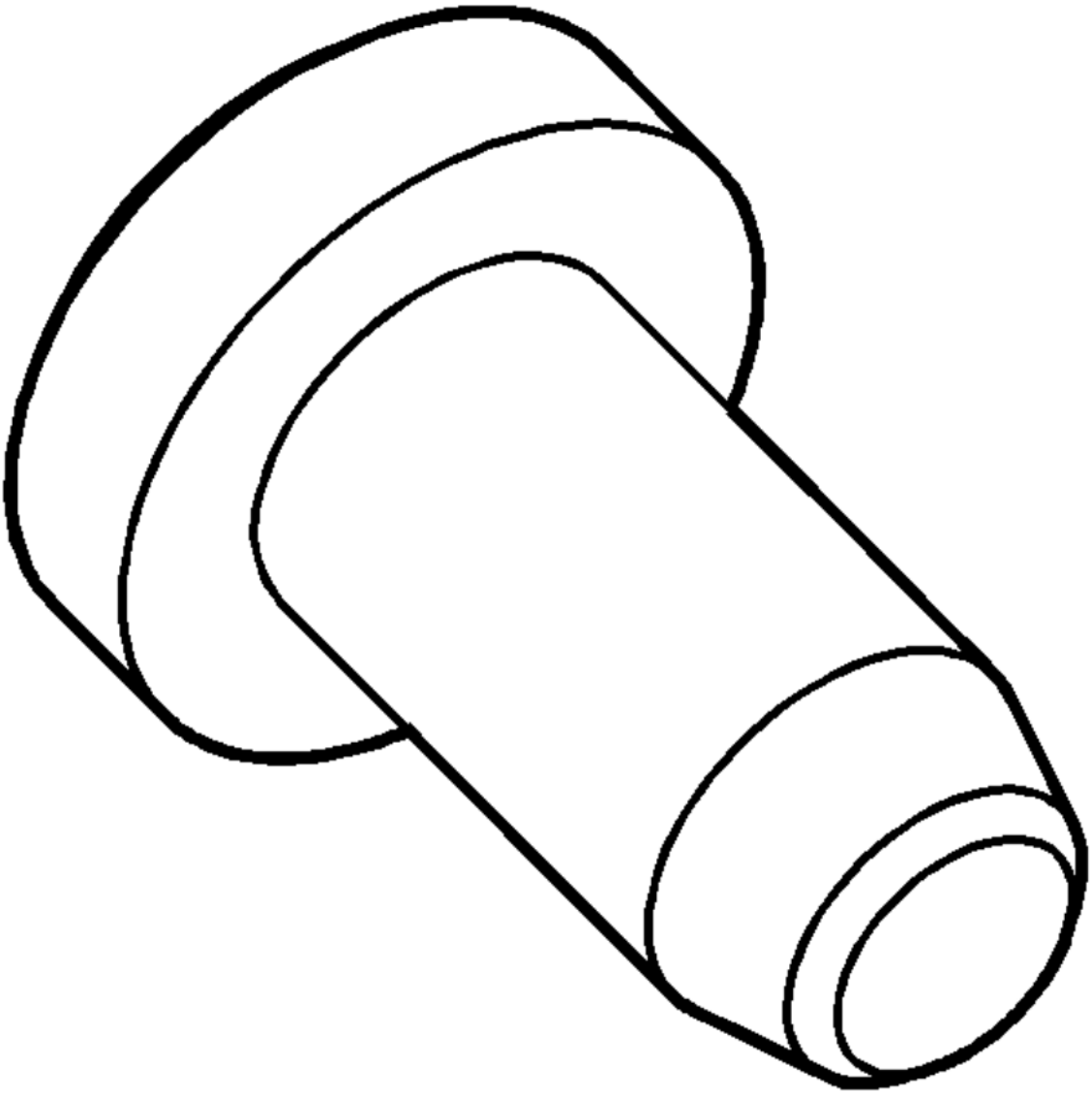

Pump Instal
Alignment C

EN-492
Fuel Rail Ass

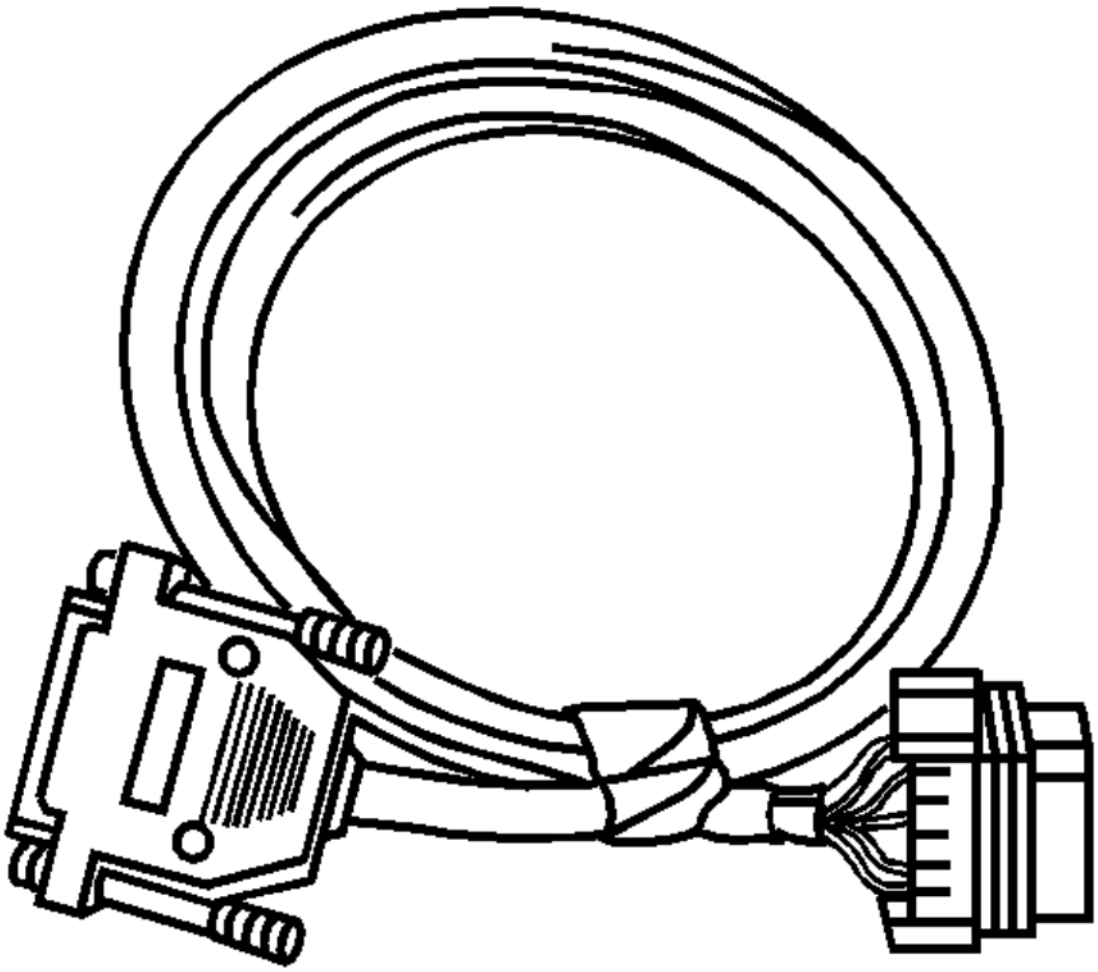

Remove

GE- 41413
Evaporative P

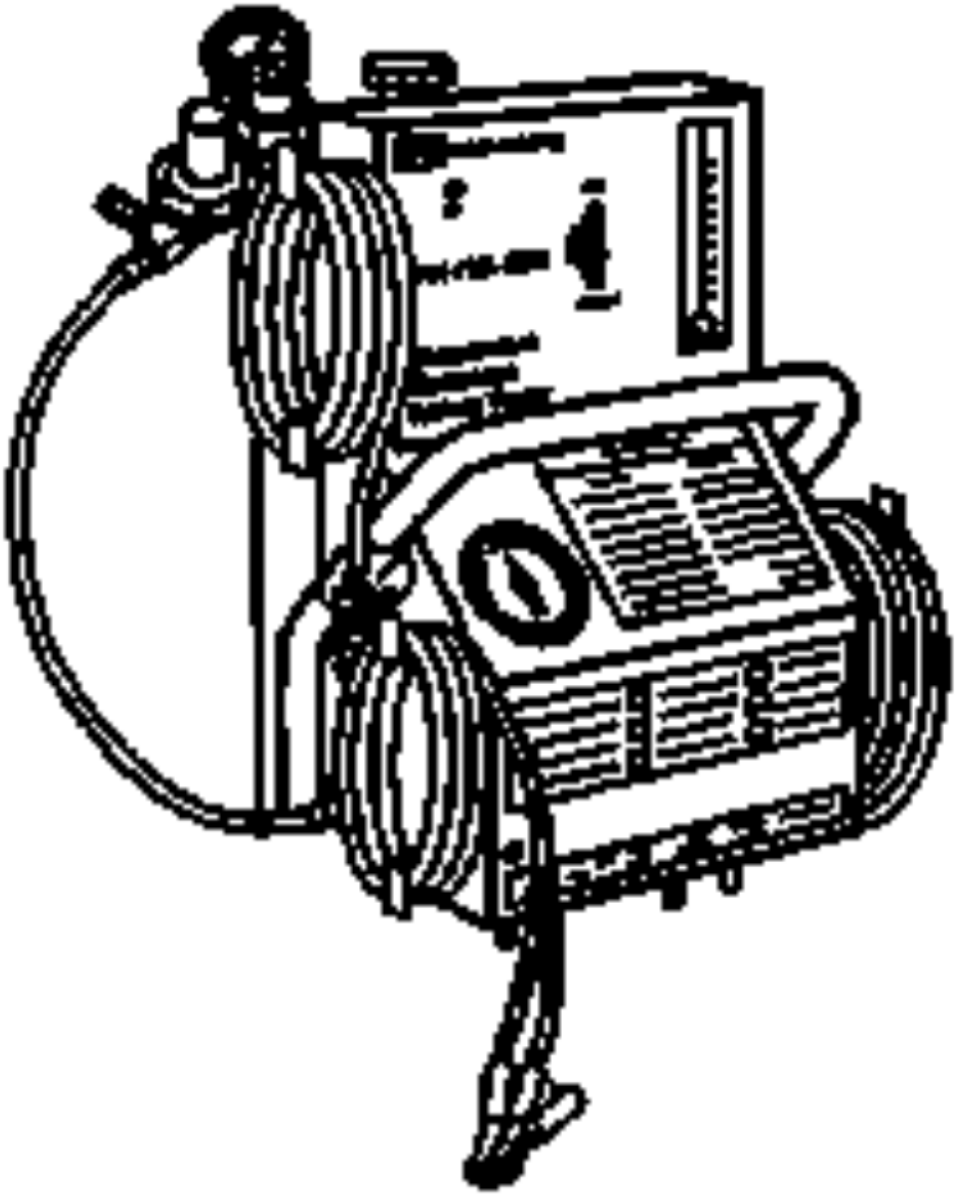

and Pressure
Station

2014 Engine

Engine Controls/Fuel - 2.4L (LEA, LUK) - Specifications - Regal

SPECIFICATIONS

TEMPERATURE VERSUS RESISTANCE (ENGINE COOLANT TEMPERATURE SENSOR)

Temperature Versus Resistance (Engine Coolant Temperature Sensor)

°C	°F	OHMS
Temperature vs Resistance Values (Approximate)		
150	302	47
140	284	60
130	266	77
120	248	100
110	230	132
100	212	177
90	194	241
80	176	332
70	158	467
60	140	667
50	122	973
45	113	1188
40	104	1459
35	95	1802
30	86	2238
25	77	2796
20	68	3520
15	59	4450
10	50	5670
5	41	7280
0	32	9420
-5	23	12300
-10	14	16180
-15	5	21450
-20	-4	28680
-30	-22	52700
-40	-40	100700

TEMPERATURE VERSUS RESISTANCE - INTAKE AIR TEMPERATURE SENSOR (HITACHI SENSOR)

Temperature Versus Resistance - Intake Air Temperature Sensor (Hitachi Sensor)

Temperature C°/F°	Resistance Minimum Ohms	Resistance Maximum Ohms

Hitachi Intake Air Temperature (IAT) Sensor		
-40/-40	37,527	49,882
-20/-4	13,110	16,329
-10/14	8,145	9,851
0/32	5,205	6,122
20/68	2,298	2,570
25/77	1,900	2,100
40/104	1,073	1,226
60/140	537	639
80/176	289	356
100/212	165	210
120/248	99	129
140/284	62	83
150/302	49	67

ALTITUDE VERSUS BAROMETRIC PRESSURE

Altitude Versus Barometric Pressure

Altitude Measured in Meters (m)	Altitude Measured in Feet (ft)	Barometric Pressure Measured in Kilopascals (kPa)	Barometric Pressure Measured in Pounds Per Square Inch (PSI)
Determine your altitude by contacting a local weather station or by using another reference source.			
4,267	14,000	56-64	8.1-9.3
3,962	13,000	58-66	8.4-9.6
3,658	12,000	61-69	8.8-10.0
3,353	11,000	64-72	9.3-10.4
3,048	10,000	66-74	9.6-10.7
2,743	9,000	69-77	10.0-11.2
2,438	8,000	71-79	10.3-11.5
2,134	7,000	74-82	10.7-11.9
1,829	6,000	77-85	11.2-12.3
1,524	5,000	80-88	11.6-12.8
1,219	4,000	83-91	12.0-13.2
914	3,000	87-95	12.6-13.8
610	2,000	90-98	13.1-14.2
305	1,000	94-102	13.6-14.8
0	0 Sea Level	96-104	13.9-15.1
-305	-1,000	101-105	14.6-15.2

IGNITION SYSTEM SPECIFICATIONS

Ignition System Specifications

Application	Specification
Ignition Type	Individual Ignition Coils
Firing Order	1-3-4-2

Spark Plug Torque	Refer to **Fastener Tightening Specifications (LAF, LEA, or LUK)**
Spark Plug Gap	Refer to **Engine Mechanical Specifications (LAF, LEA, or LUK)**
Spark Plug Type	Refer to Electronic Parts Catalog

FASTENER TIGHTENING SPECIFICATIONS

Fastener Tightening Specifications

Application	Specification	
	Metric	English
Accelerator Pedal Position (APP) Sensor Bolt	10 N.m	89 lb in
Air Cleaner Housing Cover Screw	5 N.m	44 lb in
Air Cleaner Outlet Duct Clamp	4 N.m	35 lb in
Camshaft Position Actuator Solenoid Valve Bolt	10 N.m	89 lb in
Camshaft Position (CMP) Sensor Bolt	10 N.m	89 lb in
Charge Air Cooler Clamp	2.7 N.m	24 lb in
Crankshaft Position (CKP) Sensor Bolt	10 N.m	89 lb in
Engine Coolant Temperature (ECT) Sensor	20 N.m	15 lb ft
Evaporative Emission (EVAP) Canister Purge Valve Bracket Bolt	25 N.m	18 lb ft
Front Frame Bolt	100 N.m	73 lb ft + 180 degrees
Fuel Fill Hose Clamp	4 N.m	35 lb in
Fuel Fill Pipe to Upper bracket lBolt	1.5 N.m	13 lb in
Fuel Fill Pipe to Underbody Bolt	10 N.m	89 lb ft
Fuel Rail Bolt	10 N.m	89 lb in
Fuel Tank Strap Bolt	20 N.m	15 lb ft
Heated Oxygen Sensor (HO2S)	41 N.m	30 lb ft
Ignition Coil Bolt	10 N.m	89 lb in
Knock Sensor	25 N.m	18 lb ft
Mass Air Flow (MAF)/Intake Air Temperature (IAT) Sensor Screw	4 N.m	35 lb in
Negative Battery Cable Bolt	17 N.m	13 lb ft
Positive Battery Cable to Starter Solenoid Nut	10 N.m	89 lb in
Side Rail Reinforcement Bolt	50 N.m	37 lb ft
Spark Plug	20 N.m	15 lb ft
Throttle Body Bolt	10 N.m	89 lb in

ADHESIVES, FLUIDS, LUBRICANTS, AND SEALERS

Adhesives, Fluids, Lubricants, and Sealers

Application	Type of Material	GM Part Number
Anti-Seize Compound	Lubricant	GM P/N 88862477 (Canadian P/N 88862478)

Camshaft Gear Access Hole Plug	Sealant	GM P/N 12346004 (Canadian P/N 10953480)
Coolant Temperature Sensor Threads	Sealant	GM P/N 12346004 (Canadian P/N 10953480)
Fuel Injection Fuel Rail Bolts	Sealant	GM P/N 12345382 (Canadian P/N 10953489)
Intake Air Temperature Sensor Threads	Sealant	GM P/N 12346004 (Canadian P/N 10953480)
Top Engine Cleaner	Cleaner	GM P/N 1052626 (Canadian P/N 993026)

2014 ENGINE

Engine Controls/Fuel - Diagnostic Code Index - 2.4L (LEA, LUK) - Regal

DIAGNOSTIC CODE INDEX

DIAGNOSTIC CODE INDEX

DTC	Description
DTC P0010, P0013, or P2088-P2091	DTC P0010 Intake Camshaft Position Actuator Solenoid Valve Control Circuit DTC P0013 Exhaust Camshaft Position Actuator Solenoid Valve Control Circuit DTC P2088 Intake Camshaft Position Actuator Solenoid Control Circuit Low Voltage DTC P2089 Intake Camshaft Position Actuator Solenoid Control Circuit High Voltage DTC P2090 Exhaust Camshaft Position Actuator Solenoid Control Circuit Low Voltage DTC P2091 Exhaust Camshaft Position Actuator Solenoid Control Circuit High Voltage
DTC P0011 or P0014	DTC P0011 Intake Camshaft Position System Performance DTC P0014 Exhaust Camshaft Position System Performance
DTC P0016 or P0017	DTC P0016 Crankshaft Position - Intake Camshaft Position Not Plausible DTC P0017 Crankshaft Position - Exhaust Camshaft Position Not Plausible
DTC P0030-P0032, P0036-P0038, P0053, P0054, P0135, or P0141	DTC P0030 HO2S Heater Control Circuit Sensor 1 DTC P0031 HO2S Heater Control Circuit Low Voltage Sensor 1 DTC P0032 HO2S Heater Control Circuit High Voltage Sensor 1 DTC P0036 HO2S Heater Control Circuit Sensor 2 DTC P0037 HO2S Heater Control Circuit Low Voltage Sensor 2 DTC P0038 HO2S Heater Control Circuit High Voltage Sensor 2 DTC P0053 HO2S Heater Resistance Sensor 1 DTC P0054 HO2S Heater Resistance Sensor 2 DTC P0135 HO2S Heater Performance Sensor 1 DTC P0141 HO2S Heater Performance Sensor 2
DTC P0068 or P1101	DTC P0068 Throttle Body Air Flow Performance DTC P1101 Intake Air Flow System Performance
DTC P0089, P00C6, P228C, or P228D (LUK)	DTC P0089 Fuel Pressure Regulator Performance DTC P00C6 Fuel Rail Pressure Low During Engine Cranking DTC P228C Fuel Pressure Regulator Control Performance - Low Pressure DTC P228D Fuel Pressure Regulator Control Performance - High Pressure
DTC P0089, P00C6, P228C, or P228D (LEA)	DTC P0089 Fuel Pressure Regulator Performance DTC P00C6 Fuel Rail Pressure Low During Engine Cranking DTC P228C Fuel Pressure Regulator Control Performance - Low Pressure DTC P228D Fuel Pressure Regulator Control Performance - High

	Pressure
DTC P0090-P0092, P00C8, P00C9, or P00CA	DTC P0090 Fuel Pressure Regulator Control Circuit DTC P0091 Fuel Pressure Regulator Control Circuit Low Voltage DTC P0092 Fuel Pressure Regulator Control Circuit High Voltage DTC P00C8 Fuel Pressure Regulator High Control Circuit DTC P00C9 Fuel Pressure Regulator High Control Circuit Low Voltage DTC P00CA Fuel Pressure Regulator High Control Circuit High Voltage
DTC P0096 or P0111 (With LEA)	DTC P0096 Intake Air Temperature (IAT) Sensor 2 Performance DTC P0111 Intake Air Temperature (IAT) Sensor 1 Performance
DTC P0097, P0098, or P0099 (With LEA)	DTC P0097 Intake Air Temperature (IAT) Sensor 2 Circuit Low Voltage DTC P0098 Intake Air Temperature (IAT) Sensor 2 Circuit High Voltage DTC P0099 Intake Air Temperature (IAT) Sensor 2 Circuit Intermittent
DTC P0101 (With LEA)	DTC P0101 Mass Air Flow (MAF) Sensor Performance
DTC P0101 (With LUK)	DTC P0101 Mass Air Flow (MAF) Sensor Performance
DTC P0102 or P0103 (With LEA)	DTC P0102 Mass Air Flow (MAF) Sensor Circuit Low Frequency DTC P0103 Mass Air Flow (MAF) Sensor Circuit High Frequency
DTC P0102 or P0103 (With LUK)	DTC P0102 Mass Air Flow (MAF) Sensor Circuit Low Frequency DTC P0103 Mass Air Flow (MAF) Sensor Circuit High Frequency
DTC P0106	DTC P0106 Manifold Absolute Pressure (MAP) Sensor Performance
DTC P0107 or P0108	DTC P0107 Manifold Absolute Pressure (MAP) Sensor Circuit Low Voltage DTC P0108 Manifold Absolute Pressure (MAP) Sensor Circuit High Voltage
DTC P0111 (With LUK)	DTC P0111 Intake Air Temperature (IAT) Sensor Performance
DTC P0112, P0113, or P0114 (With LEA)	DTC P0112 Intake Air Temperature (IAT) Sensor 1 Circuit Low Voltage DTC P0113 Intake Air Temperature (IAT) Sensor 1 Circuit High Voltage DTC P0114 Intake Air Temperature (IAT) Sensor 1 Circuit Intermittent
DTC P0112, P0113, or P0114 (With LUK)	DTC P0112 Intake Air Temperature (IAT) Sensor Circuit Low Voltage DTC P0113 Intake Air Temperature (IAT) Sensor Circuit High Voltage DTC P0114 Intake Air Temperature (IAT) Sensor Circuit Intermittent
DTC P0116 (LEA)	DTC P0116 Engine Coolant Temperature (ECT) Sensor Performance
DTC P0116 (LUK)	DTC P0116 Engine Coolant Temperature (ECT) Sensor Performance
DTC P0117 or P0118 (LUK)	DTC P0117 Engine Coolant Temperature (ECT) Sensor Circuit Low Voltage DTC P0118 Engine Coolant Temperature (ECT) Sensor Circuit High Voltage DTC P0119 Engine Coolant Temperature (ECT) Sensor Circuit Intermittent
DTC P0117 or P0118 (LEA)	DTC P0117 Engine Coolant Temperature (ECT) Sensor Circuit Low Voltage DTC P0118 Engine Coolant Temperature (ECT) Sensor Circuit High Voltage DTC P0119 Engine Coolant Temperature (ECT) Sensor Circuit Intermittent
DTC P0119	DTC P0119 Engine Coolant Temperature (ECT) Sensor Circuit Intermittent
DTC P0121-P0123, P0222, P0223, P16A0-P16A2, or	DTC P0121 Throttle Position Sensor 1 Performance DTC P0122 Throttle Position Sensor 1 Circuit Low Voltage

P2135	DTC P0123 Throttle Position Sensor 1 Circuit High Voltage DTC P0222 Throttle Position Sensor 2 Circuit Low Voltage DTC P0223 Throttle Position Sensor 2 Circuit High Voltage DTC P16A0 Sensor Communication Circuit Low Voltage DTC P16A1 Sensor Communication Circuit High Voltage DTC P16A2 Sensor Communication Circuit Performance DTC P2135 Throttle Position Sensors 1-2 Not Plausible
DTC P0128	DTC P0128 Engine Coolant Temperature (ECT) Below Thermostat Regulating Temperature
DTC P0131, P0132, P0134, P0137, P0138, P0140, or P2A00	DTC P0131 HO2S Circuit Low Voltage Sensor 1 DTC P0132 HO2S Circuit High Voltage Sensor 1 DTC P0134 HO2S Circuit Insufficient Activity Sensor 1 DTC P0137 HO2S Circuit Low Voltage Sensor 2 DTC P0138 HO2S Circuit High Voltage Sensor 2 DTC P0140 HO2S Circuit Insufficient Activity Sensor 2 DTC P2A00 HO2S Performance Sensor 1
DTC P0133, P013A, P013B, P013E, P013F, P015A, P015B, P2270, or P2271	DTC P0133 HO2S Slow Response Sensor 1 DTC P013A HO2S Slow Response Rich to Lean Sensor 2 DTC P013B HO2S Slow Response Lean to Rich Sensor 2 DTC P013E HO2S Delayed Response Rich to Lean Sensor 2 DTC P013F HO2S Delayed Response Lean to Rich Sensor 2 DTC P015A HO2S Delayed Response Rich to Lean Sensor 1 DTC P015B HO2S Delayed Response Lean to Rich Sensor 1 DTC P2270 HO2S Signal Stuck Lean Sensor 2 DTC P2271 HO2S Signal Stuck Rich Sensor 2
DTC P0171 or P0172	DTC P0171 Fuel Trim System Lean DTC P0172 Fuel Trim System Rich
DTC P018B-P018D (Chassis Control Module)	DTC P018B Fuel Pressure Sensor Performance DTC P018C Fuel Pressure Sensor Circuit Low Voltage DTC P018D Fuel Pressure Sensor Circuit High Voltage
DTC P018B-P018D (Fuel Pump Power Control Module)	DTC P018B Fuel Pressure Sensor Performance DTC P018C Fuel Pressure Sensor Circuit Low Voltage DTC P018D Fuel Pressure Sensor Circuit High Voltage
DTC P0191	DTC P0191 Fuel Rail Pressure Sensor Performance
DTC P0192 or P0193	DTC P0192 Fuel Rail Pressure Sensor Circuit Low Voltage DTC P0193 Fuel Rail Pressure Sensor Circuit High Voltage
DTC P0201-P0204, P0261, P0262, P0264, P0265, P0267, P0268, P0270, P0271, P1248, P1249, P124A, P124B, P2147, P2148, P2150, P2151, P2153, P2154, P2156, or P2157	DTC P0201 Cylinder 1 Injector Control Circuit DTC P0202 Cylinder 2 Injector Control Circuit DTC P0203 Cylinder 3 Injector Control Circuit DTC P0204 Cylinder 4 Injector Control Circuit DTC P0261 Cylinder 1 Injector Control Circuit Low Voltage DTC P0262 Cylinder 1 Injector Control Circuit High Voltage DTC P0264 Cylinder 2 Injector Control Circuit Low Voltage DTC P0265 Cylinder 2 Injector Control Circuit High Voltage DTC P0267 Cylinder 3 Injector Control Circuit Low Voltage DTC P0268 Cylinder 3 Injector Control Circuit High Voltage DTC P0270 Cylinder 4 Injector Control Circuit Low Voltage DTC P0271 Cylinder 4 Injector Control Circuit High Voltage DTC P1248 Cylinder 1 Injector High Control Circuit Shorted to Control Circuit

	DTC P1249 Cylinder 2 Injector High Control Circuit Shorted to Control Circuit DTC P124A Cylinder 3 Injector High Control Circuit Shorted to Control Circuit DTC P124B Cylinder 4 Injector High Control Circuit Shorted to Control Circuit DTC P2147 Cylinder 1 Injector High Control Circuit Low Voltage DTC P2148 Cylinder 1 Injector High Control Circuit High Voltage DTC P2150 Cylinder 2 Injector High Control Circuit Low Voltage DTC P2151 Cylinder 2 Injector High Control Circuit High Voltage DTC P2153 Cylinder 3 Injector High Control Circuit Low Voltage DTC P2154 Cylinder 3 Injector High Control Circuit High Voltage DTC P2156 Cylinder 4 Injector High Control Circuit Low Voltage DTC P2157 Cylinder 4 Injector High Control Circuit High Voltage
DTC P0231, P0232, or P023F (Chassis Control Module)	DTC P0231 Fuel Pump Control Circuit Low Voltage DTC P0232 Fuel Pump Control Circuit High Voltage DTC P023F Fuel Pump Control Circuit
DTC P0231, P0232, or P023F (Fuel Pump Power Control Module)	DTC P0231 Fuel Pump Control Circuit Low Voltage DTC P0232 Fuel Pump Control Circuit High Voltage DTC P023F Fuel Pump Control Circuit
DTC P025A (Chassis Control Module)	DTC P025A Fuel Pump Control Module Enable Circuit
DTC P0300-P0304	DTC P0300 Engine Misfire Detected DTC P0301 Cylinder 1 Misfire Detected DTC P0302 Cylinder 2 Misfire Detected DTC P0303 Cylinder 3 Misfire Detected DTC P0304 Cylinder 4 Misfire Detected
DTC P0315	DTC P0315 Crankshaft Position System Variation Not Learned
DTC P0324, P0326, or P06B6	DTC P0324 Knock Sensor System Performance DTC P0326 Knock Sensor Performance DTC P06B6 Control Module Knock Sensor Processor Performance
DTC P0325, P0327, or P0328	DTC P0325 Knock Sensor Circuit DTC P0327 Knock Sensor Circuit Low Voltage DTC P0328 Knock Sensor Circuit High Voltage
DTC P0335 or P0336	DTC P0335 Crankshaft Position Sensor Circuit DTC P0336 Crankshaft Position Sensor Performance
DTC P0340, P0341, P0365, or P0366	DTC P0340 Intake Camshaft Position Sensor Circuit DTC P0341 Intake Camshaft Position Sensor Performance DTC P0365 Exhaust Camshaft Position Sensor Circuit DTC P0366 Exhaust Camshaft Position Sensor Performance
DTC P0351-P0354, P2300, P2301, P2303, P2304, P2306, P2307, P2309, or P2310	DTC P0351 Ignition Coil 1 Control Circuit DTC P0352 Ignition Coil 2 Control Circuit DTC P0353 Ignition Coil 3 Control Circuit DTC P0354 Ignition Coil 4 Control Circuit DTC P2300 Ignition Coil 1 Control Circuit Low Voltage DTC P2301 Ignition Coil 1 Control Circuit High Voltage DTC P2303 Ignition Coil 2 Control Circuit Low Voltage DTC P2304 Ignition Coil 2 Control Circuit High Voltage DTC P2306 Ignition Coil 3 Control Circuit Low Voltage

	DTC P2307 Ignition Coil 3 Control Circuit High Voltage DTC P2309 Ignition Coil 4 Control Circuit Low Voltage DTC P2310 Ignition Coil 4 Control Circuit High Voltage
DTC P0411	DTC P0411 Secondary Air Injection System Incorrect Air Flow Detected
DTC P0412, P041F, or P044F	DTC P0412 Secondary Air Injection Valve Control Circuit DTC P041F Secondary Air Injection Valve Control Circuit Low Voltage DTC P044F Secondary Air Injection Valve Control Circuit High Voltage
DTC P0418, P2257, or P2258	DTC P0418 Secondary Air Injection Pump Relay Control Circuit DTC P2257 Secondary Air Pump Relay Control Circuit Low Voltage DTC P2258 Secondary Air Injection Pump Relay Circuit High Voltage
DTC P0420 (LUK)	DTC P0420 Catalyst System Low Efficiency
DTC P0420 (LEA)	DTC P0420 Catalyst System Low Efficiency
DTC P0442	DTC P0442 Evaporative Emission (EVAP) System Small Leak Detected
DTC P0443, P0458, or P0459	DTC P0443 Evaporative Emission (EVAP) Purge Solenoid Valve Control Circuit DTC P0458 Evaporative Emission (EVAP) Purge Solenoid Valve Control Circuit Low Voltage DTC P0459 Evaporative Emission (EVAP) Purge Solenoid Valve Control Circuit High Voltage
DTC P0446	DTC P0446 Evaporative Emission (EVAP) Vent System Performance
DTC P0449, P0498, or P0499	DTC P0449 Evaporative Emission (EVAP) Vent Solenoid Valve Control Circuit DTC P0498 Evaporative Emission (EVAP) Vent Solenoid Valve Control Circuit Low Voltage DTC P0499 Evaporative Emission (EVAP) Vent Solenoid Valve Control Circuit High Voltage
DTC P0451-P0454	DTC P0451 Fuel Tank Pressure Sensor Performance DTC P0452 Fuel Tank Pressure Sensor Circuit Low Voltage DTC P0453 Fuel Tank Pressure Sensor Circuit High Voltage DTC P0454 Fuel Tank Pressure Sensor Circuit Intermittent
DTC P0455	DTC P0455 Evaporative Emission (EVAP) System Large Leak Detected
DTC P0496	DTC P0496 Evaporative Emission (EVAP) System Flow During Non-Purge
DTC P0506 or P0507	DTC P0506 Idle Speed Low DTC P0507 Idle Speed High
DTC P050D	DTC P050D Cold Start Rough Idle
DTC P057B-P057D	DTC P057B Brake Pedal Position Sensor Performance DTC P057C Brake Pedal Position Sensor Circuit Low Voltage DTC P057D Brake Pedal Position Sensor Circuit High Voltage
DTC P0601-P0604, P0606, P062B, P062F, P0630, P16F3, or P262B (ECM)	DTC P0601 Control Module Read Only Memory Performance DTC P0602 Control Module Not Programmed DTC P0603 Control Module Long Term Memory Reset DTC P0604 Control Module Random Access Memory Performance DTC P0606 Control Module Processor Performance DTC P062B Control Module Fuel Injector Control Performance DTC P062F Control Module Long Term Memory Performance DTC P0630 VIN Not Programmed or Mismatched - Engine Control Module (ECM)

	DTC P16F3 Control Module Redundant Memory Performance DTC P262B Control Module Power Off Timer Performance
DTC P0601-P0606, P060A, P062F, or P262B (Chassis Control Module)	DTC P0601 Control Module Read Only Memory Performance DTC P0602 Control Module Not Programmed DTC P0603 Control Module Long Term Memory Reset DTC P0604 Control Module Random Access Memory Performance DTC P0606 Control Module Processor Performance DTC P062F Control Module Long Term Memory Performance
DTC P0628 (LEA)	DTC P0628 Fuel Pump Enable Circuit Low Voltage
DTC P0628 (LUK)	DTC P0628 Fuel Pump Enable Circuit Low Voltage
DTC P0641, P0651, P0697, or P06A3 (ECM)	DTC P0641 5V Reference 1 Circuit DTC P0651 5V Reference 2 Circuit DTC P0697 5V Reference 3 Circuit DTC P06A3 5V Reference 4 Circuit
DTC P0641 or P06A6 (Chassis Control Module)	DTC P0641 5 V Reference Circuit DTC P06A6 5 V Reference 1 Performance
DTC P0650, P263A, or P263B	DTC P0650 Malfunction Indicator Lamp (MIL) Control Circuit DTC P263A Malfunction Indicator Lamp (MIL) Control Circuit Low Voltage DTC P263B Malfunction Indicator Lamp (MIL) Control Circuit High Voltage
DTC P0685-P0687, P0689, P0690, or P1682	DTC P0685 Engine Controls Ignition Relay Control Circuit DTC P0686 Engine Controls Ignition Relay Control Circuit Low Voltage DTC P0687 Engine Controls Ignition Relay Control Circuit High Voltage DTC P0689 Engine Controls Ignition Relay Feedback Circuit Low Voltage DTC P0690 Engine Controls Ignition Relay Feedback Circuit High Voltage DTC P1682 Ignition 1 Switch Circuit 2
DTC P069E	DTC P069E Fuel Pump Control Module Requested MIL Illumination
DTC P0700	DTC P0700 Transmission Control Module Requested MIL Illumination
DTC P0AC4	DTC P0AC4 Hybrid/EV Powertrain Control Module Requested MIL Illumination
DTC P11C2-P11C4 (With LEA)	DTC P11C2 Intake Air Humidity Sensor Circuit Low Voltage DTC P11C3 Intake Air Humidity Sensor Circuit High Voltage DTC P11C4 Intake Air Humidity Sensor Circuit Erratic
DTC P1255 (Fuel Pump Power Control Module)	DTC P1255 Fuel Pump Control Module Driver Over Temperature
DTC P1255 or P064A (Chassis Control Module)	DTC P064A Fuel Pump Control Module Performance DTC P1255 Fuel Pump Control Module Driver High Temperature
DTC P129B or P129C (Fuel Pump Power Control Module)	DTC P129B Fuel Pump Driver Control Module System Voltage Low Voltage DTC P129C Fuel Pump Driver Control Module System Voltage High Voltage
DTC P129D (Fuel Pump Power Control Module)	DTC P129D Fuel Pump Driver Control Module Ignition On/Start Switch Circuit Low Voltage
DTC P12A6 (Fuel Pump	DTC P12A6 Fuel Pump Driver Control Module Enable Circuit

Power Control Module)	Performance
DTC P129E	DTC P129E Fuel Pump Driver Control Module Signal Message Counter Incorrect
DTC P12A8	DTC P12A8 Fuel Pump Control Signal Message Counter Incorrect
DTC P135A	DTC P135A Ignition Coil Supply Voltage Circuit Bank 1
DTC P1400	DTC P1400 Cold Start Emission Reduction Control System
DTC P150C	DTC P150C Transmission Control Module Engine Speed Request Signal Message Counter Incorrect
DTC P1516, P2101, P2119, or P2176	DTC P1516 Throttle Actuator Control (TAC) Module Throttle Actuator Position Performance DTC P2101 Throttle Actuator Position Performance DTC P2119 Throttle Closed Position Performance DTC P2176 Minimum Throttle Position Not Learned
DTC P15F2	DTC P15F2 Engine Torque Command Signal Message Counter Incorrect
DTC P15F9	DTC P15F9 Hybrid/EV System Engine Speed Control Intervention Request Type Signal Message Counter Incorrect
DTC P15FB	DTC P15FB Brake Pedal Position Sensor Signal Message Counter Incorrect
DTC P163A	DTC P163A Control Module Fuel Pressure Regulator 1 Control System Circuitry Performance
DTC P2096	DTC P2096 Post Catalyst Fuel Trim System Low Limit Bank 1
DTC P2097	DTC P2097 Post Catalyst Fuel Trim System High Limit Bank 1
DTC P2122, P2123, P2127, P2128, or P2138	DTC P2122 Accelerator Pedal Position (APP) Sensor 1 Circuit Low Voltage DTC P2123 Accelerator Pedal Position (APP) Sensor 1 Circuit High Voltage DTC P2127 Accelerator Pedal Position (APP) Sensor 2 Circuit Low Voltage DTC P2128 Accelerator Pedal Position (APP) Sensor 2 Circuit High Voltage DTC P2138 Accelerator Pedal Position (APP) Sensors 1-2 Not Plausible
DTC P2199 (With LEA)	DTC P2199 Intake Air Temperature (IAT) Sensor 1-2 Correlation
DTC P219A	DTC P219A Fuel Trim Cylinder Balance
DTC P2227-P2230	DTC P2227 Barometric Pressure (BARO) Sensor Performance DTC P2228 Barometric Pressure (BARO) Sensor Circuit Low Voltage DTC P2229 Barometric Pressure (BARO) Sensor Circuit High Voltage DTC P2230 Barometric Pressure (BARO) Sensor Circuit Erratic
DTC P2430, P2431, P2435, or P2436	DTC P2430 Secondary Air Injection System Pressure Sensor Circuit - Bank 1 (Left Hand) DTC P2431 Secondary Air Injection System Pressure Sensor Performance - Bank 1 (Left Hand) DTC P2435 Secondary Air Injection System Pressure Sensor Circuit Bank 2 - (Right Hand) DTC P2436 Secondary Air Injection System Pressure Sensor Performance Bank 2 - (Right Hand)
DTC P2432, P2433, P2437, or P2438	DTC P2432 Secondary Air Injection System Pressure Sensor Circuit Low Voltage - Bank 1 (Left Hand) DTC P2433 Secondary Air Injection System Pressure Sensor Circuit

	High Voltage - Bank 1 (Left Hand) DTC P2437 Secondary Air Injection System Pressure Sensor Circuit Low Voltage Bank 2 - (Right Hand) DTC P2438 Secondary Air Injection System Pressure Sensor Circuit High Voltage Bank 2 - (Right Hand)
DTC P2440	DTC P2440 Secondary Air Injection System Cut-Off Valve Stuck Open
DTC P2444	DTC P2444 Secondary Air Injection System Pump Stuck On
DTC P2534 or P2535 (Chassis Control Module)	DTC P2534 Ignition On/Start Switch Circuit Low Voltage DTC P2535 Ignition On/Start Switch Circuit High Voltage
DTC P2544	DTC P2544 Transmission Torque Request Signal Message Counter Incorrect
DTC P2635 (Chassis Control Module)	DTC P2635 Fuel Pump Flow Performance
DTC P2635 (Fuel Pump Power Control Module)	DTC P2635 Fuel Pump Flow Performance