SPECIFICATIONS

FASTENER TIGHTENING SPECIFICATIONS

Fastener Tightening Specifications

Application	Specification	
	Metric	English
A/C Refrigerant Filter Flare Nut	15 N.m	11 lb ft
Accumulator Bracket Clamp Bolt	10 N.m	89 lb in
Accumulator Bracket Mounting Nuts	10 N.m	89 lb in
Accumulator Hose Fitting to Accumulator	41 N.m	30 lb ft
Accumulator Hose to Evaporator Retaining Bolt	16 N.m	12 lb ft
Blower Motor Resistor Retaining Screws	1.6 N.m	14 lb in
Blower Motor Retaining Screws	1.7 N.m	15 lb in
Compressor Drain Plug	20 N.m	15 lb ft
Compressor Drive Belt Idler Pulley Bolt	50 N.m	37 lb ft
Compressor Drive Belt Tensioner Bolt	25 N.m	18 lb ft
Compressor Hose to Accumulator Retaining Bolt	20 N.m	15 lb ft
Compressor Hose to Compressor Retaining Bolt	26 N.m	19 lb ft
Compressor Hose to Condenser Fitting Nut	24 N.m	17 lb ft
Compressor Mounting Bolts	40 N.m	30 lb ft
Compressor Mounting Bracket Bolt	50 N.m	37 lb ft
Compressor Mounting Nut	40 N.m	30 lb ft
Compressor Mounting Stud	9 N.m	80 lb in
Compressor Pressure Relief Valve	9 N.m	80 lb in
Compressor Shaft Nut	17.5 N.m	13 lb ft
Defroster Duct Retaining Screws	10 N.m	89 lb in
Floor Air Outlet Duct Retaining Screws	1.6 N.m	14 lb in
Front Evaporator Tube to Condenser Retaining Bolt	27 N.m	20 lb ft
Front Evaporator Tube to Rear Evaporator Tube Retaining Bolt	25 N.m	18 lb ft
Heater Core Cover Retaining Screws	1.6 N.m	14 lb in
Heater Core Outlet Cover Retaining Screws	1.6 N.m	14 lb in
Heater Core Pipe Retainer Clamp Screw	1.6 N.m	14 lb in
Heater Core Retaining Clamp Screw	1.6 N.m	14 lb in
Heater Pipe Assembly Retaining Bolt	16 N.m	12 lb ft
Heater Pipe Bracket Retaining Nut	10 N.m	89 lb in
HVAC Module Case Half Screws	1.6 N.m	14 lb in

HVAC Module Retaining and Sealing Nuts	10 N.m	89 lb in
HVAC Module Retaining Bolts	10 N.m	89 lb in
Ignition Switch Retaining Bolts	5.5 N.m	49 lb in
IPC to Steering Column Bracket Retaining Screws	3.5 N.m	31 lb in
Negative Battery Cable Bolt	15 N.m	11 lb ft
Refrigerant Pressure Sensor	4.75 N.m	42 lb in
Temperature Actuator Retaining Screws	1.5 N.m	13 lb in
Vacuum Tank Retaining Screws	3.5 N.m	31 lb in
Valve Core	11 N.m	97 lb in

REFRIGERANT SYSTEM CAPACITIES

Refrigerant System Capacities

Application	Specification	
	Metric	**English**
PAG Oil GM P/N 12378526 for United States PAG Oil GM P/N 88900060 for Canada		
Accumulator Replacement	60 ml*	2 oz*
• * Add PAG oil equal to the amount of oil drained from the accumulator plus the specified additional amount.		
Compressor Replacement	60 ml[1]	2 oz[1]
• Delphi Model V-7 service compressor is shipped dry		
Condenser Replacement	60 ml[1]	2 oz[1]
Evaporator Replacement	60 ml[1]	2 oz[1]
• Total System PAG Oil Capacity	266.16 ml	9 oz
R-134a		
• Refrigerant Charge	0.79 kg	1.75 lb
[1] If more than the specified amount of PAG oil was drained from a component, add the equal amount drained.		

DIAGNOSTIC INFORMATION AND PROCEDURES

DIAGNOSTIC STARTING POINT - HEATING, VENTILATION AND AIR CONDITIONING

The heating, ventilation and air conditioning (HVAC) system is divided into two separate sections. The first, heating, ventilation and air conditioning, has all procedures that pertain to a HVAC component or function that is not specifically associated with the automatic control system. The second, HVAC Systems - Automatic, has all procedures specific to the automatic control system.

Begin the system diagnosis with the **Diagnostic System Check - HVAC Systems - Automatic** in HVAC Systems - Automatic.

The Diagnostic System Check will provide the identification of the control modules which command the system.

The use of the Diagnostic System Check will identify the correct procedure for diagnosing the system and where the procedure is located.

Review the description and operation information to help you determine the correct symptom diagnostic procedure when a malfunction exists. Reviewing the description and operation information will also help you determine if the condition described by the customer is normal operation. The HVAC description and operation information is divided into the following:

- **Air Delivery Description and Operation** in HVAC Systems - Automatic
- **Air Temperature Description and Operation** in HVAC Systems - Automatic

The air delivery description and operation contains the following topics:

- HVAC Control Components
- Air Speed
- Air Delivery
- Recirculation Operation
- Automatic Operation

The air temperature description and operation contains the following topics:

- HVAC Control Components
- Heating and A/C Operation
- Automatic Operation
- Steering Wheel Controls
- Engine Coolant
- A/C Cycle

LEAK TESTING

Tools Required

- **J 39400-A** Halogen Leak Detector. See **Special Tools and Equipment** .
- **J 41447** Leak Detection Dye. See **Special Tools and Equipment** .
- **J 42220** Leak Detection Lamp. See **Special Tools and Equipment** .
- **J 43872** Fluorescent Dye Cleaner. See **Special Tools and Equipment** .
- J 46297 A/C Dye Injector Kit
- J 46297-12 Replacement Dye Cartridges

Refrigerant Leak Testing

IMPORTANT: General Motors vehicles are now manufactured with fluorescent dye installed directly into the air conditioning (A/C) system.

The fluorescent dye mixes and flows with the polyalkylene glycol (PAG) oil throughout the refrigerant system.

Verifying some passive leaks may require using the **J 39400-A** , even though the A/C system contains fluorescent dye. See **Special Tools and Equipment** .

The only time that adding additional fluorescent dye is required is after flushing the A/C system.

Fluorescent Leak Detector

Fluorescent dye will assist in locating any leaks in the A/C system.

IMPORTANT: PAG oil is water soluble.

- Condensation on the evaporator core or the refrigerant lines may wash the PAG oil and fluorescent dye away from the actual leak. Condensation may also carry dye through the HVAC module drain.
- Leaks in the A/C system will be indicated in a light green or yellow color when using the leak detection lamp.

  Use the leak detection lamp in the following areas:

  - All fittings or connections that use seal washers or O-rings
  - All of the A/C components
  - The A/C compressor shaft seal
  - The A/C hoses and pressure switches
  - The HVAC module drain tube, if the evaporator core is suspected of leaking
  - The service port sealing caps

    The sealing cap is the primary seal for the service ports.

- Follow the instructions supplied with the **J 42220** . See **Special Tools and Equipment** .
- To prevent false diagnosis in the future, thoroughly clean the residual dye from any area where leaks were found. Use a rag and the approved **J 43872** . See **Special Tools and Equipment** .

Fluorescent Dye Injection

IMPORTANT: Use only fluorescent dye approved by General Motors.

- **J 41447 can be poured directly into a removed A/C component. See Special Tools and Equipment .**
- **J 46297-12 is injected into the low side port using J 46297 .**

- Not all of the fluorescent dyes are compatible with PAG oil. Some types of dye decrease the oil viscosity or may chemically react with the oil.
- R-134A leak detection dye requires time to work. Depending upon the leak rate, a leak may not become visible for between 15 minutes and 7 days.

IMPORTANT: Do NOT overcharge the A/C system with dye. Use only one 7.39 ml (0.25 oz) charge.

- To prevent false diagnosis, thoroughly clean any residual dye from the service port with a rag and the approved fluorescent dye cleaner **J 43872** . See **Special Tools and Equipment** .

Halogen Leak Detector

CAUTION: Do not operate the detector in a combustible atmosphere since its sensor operates at high temperatures or personal injury and/or damage to the equipment may result.

Ensure that the vehicle has at least 0.45 kg (1 lb) of refrigerant in the A/C refrigeration system in order to perform a leak test. Refer to **Refrigerant Recovery and Recharging** for recharging the A/C system.

IMPORTANT: Halogen leak detectors are sensitive to the following items:

- **Windshield washing solutions**
- **Many solvents and cleaners**
- **Some adhesives used in the vehicle**

Clean and dry all surfaces in order to prevent a false warning. Liquids will damage the detector.

IMPORTANT: Follow a continuous path in order to ensure that you will not miss any possible leaks. Test all areas of the system for leaks.

Follow the instructions supplied with the **J 39400-A** . See **Special Tools and Equipment** .

AIR CONDITIONING (A/C) SYSTEM PERFORMANCE TEST

This test measures the operating efficiency of the A/C system under the following conditions:

- The current ambient air temperature
- The current relative humidity
- The high side pressure of the A/C system
- The low side pressure of the A/C system
- The temperature of the air being discharged into the passenger compartment

Test Description

-

The numbers below refer to the step numbers on the diagnostic table.

1: This step determines if the A/C system has at least the minimum refrigerant charge required to operate the system without damage.

2: This step measures the performance of the A/C system.

3: This step is to allow for vehicle variations as well as high ambient temperatures.

Air Conditioning (A/C) System Performance Test

Step	Action	Values	Yes	No
IMPORTANT: • **The ambient air temperature must be at least 16° C (60° F).** • **Do not induce additional air flow across the front of the vehicle during the test.** • **If you were sent here from a DTC diagnostic table, clear the DTC upon completion of this test.**				
1	1. Park the vehicle inside or in the shade. 2. Open the windows in order to ventilate the interior of the vehicle. 3. If the A/C system was operating, allow the A/C system to equalize for about 2 minutes. 4. Turn OFF the ignition. 5. Install the **J 43600** ACR 2000 Air Conditioning Service Center. See **Special Tools and Equipment** . 6. Record the ambient air temperature displayed on the **J 43600** . See **Special Tools and Equipment** . 7. Record the low and high side STATIC pressure readings. Are both the low side and high side pressures within the specified value?	More than 16° C (60° F) - 345 kPa (50 psi) More than 24° C (75° F) - 483 kPa (70 psi) More than 33° C (90° F) - 690 kPa (100 psi)	Go to **Step 2**	Go to **Leak Testing**
	IMPORTANT: **Record the relative humidity and the ambient air temperature at the time of the test.** 1. Close the vehicle doors and windows.			

	2. Open the drivers door window 12.7-15.2 cm (5-6 inches). 3. Select the following HVAC control settings: • The A/C is ON • The coldest temperature setting • The maximum blower speed • Recirculation mode • The IP panel outlet mode • All IP panel outlets are OPEN • The passenger side of a Dual Zone HVAC control module is turned OFF 4. Install the temperature probes of the **J 43600** in the left and right center panel air outlets. See **Special Tools and Equipment** . 5. Apply the parking brake.				
2	6. Place the transmission in one of the following positions: • PARK (Automatic) • NEUTRAL (Manual) 7. Start the engine. 8. Operate the A/C system for 5 minutes. 9. Inspect A/C components for the following conditions: • Abnormal frost areas • Unusual noises **IMPORTANT:** **Press the RESET button, before using the print function of the J 43600 . See Special Tools and Equipment .** 10. Print the following information: • The panel outlet air temperatures	-			

	• The low-side pressure • The high-side pressure 11. Compare the low and high side pressures and the panel output temperatures to the A/C performance table below. Does all the data recorded fall within the specified ranges of the A/C performance table?		Go to **Step 8**	Go to **Step 3**
3	If the pressures and temperatures recorded do not fall within the specified ranges: 1. Continue to operate the A/C system for an additional 5 minutes. 2. RESET the **J 43600** and record the pressures and temperatures again. See **Special Tools and Equipment** . 3. Compare the low and high side pressures and the panel output temperature to the A/C performance table. Does all the data recorded fall within the specified ranges of the A/C performance table?	-	Go to **Step 8**	Go to **Step 4**
4	Do the high and low side pressures fall within the specified ranges, but the panel outlet temperatures do not?	-	Go to **Air Conditioning (A/C) Diagnostics - Pressure Zone A**	Go to **Step 5**
5	Is the low side pressure greater than the specified range, but the high side pressure within or less than the specified range?	-	Go to **Air Conditioning (A/C) Diagnostics - Pressure Zone B**	Go to **Step 6**
6	Are the low and high side pressures both greater than the specified ranges?	-	Go to **Air Conditioning (A/C) Diagnostics - Pressure Zone C**	Go to **Step 7**
7	Is the high side pressure greater than the specified range, but the low side pressure is within or less than the specified range?	-	Go to **Air Conditioning (A/C) Diagnostics - Pressure Zone D**	Go to **Step 8**

8	Operate the system in order to verify the test results. Did you find the same results?	-	System OK	Go to **Symptoms - HVAC Systems - Automatic** in HVAC Systems - Automatic

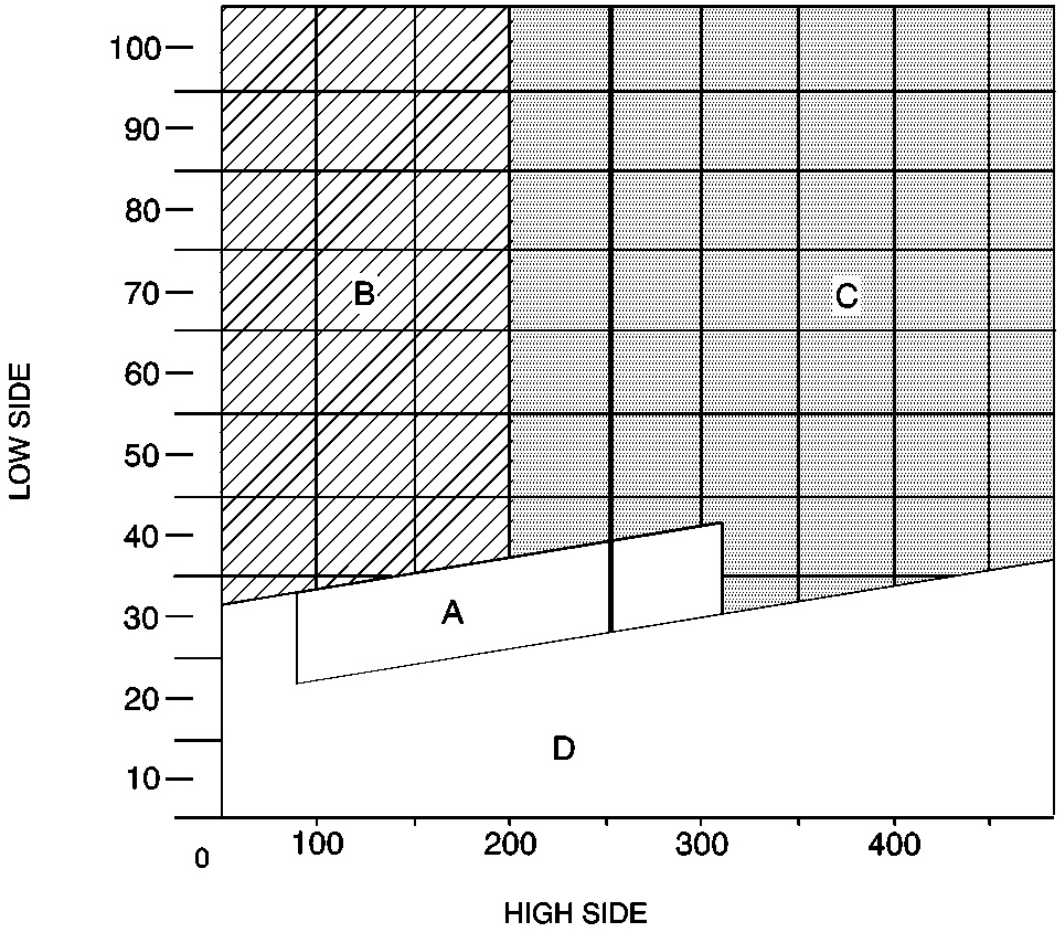

Fig. 1: A/C System Pressure - Zone Classification
Courtesy of GENERAL MOTORS CORP.

A/C Performance Table

Ambient Air Temperature	Relative Humidity	Service Port Pressure		Maximum Left Center Discharge Air Temperature
		Low Side	High Side	
13-18° C (55-65° F)	0-100%	211-241 kPa (31-35 psi)	500-740 kPa (73-107 psi)	8° C (46° F)
19-23° C (66-75° F)	Below 40%	193-223 kPa (28-32 psi)	780-1090 kPa (106-167 psi)	8° C (46° F)

	Above 40%	209-239 kPa (30-35 psi)	730-1050 kPa (106-167 psi)	9° C (48° F)
24-29° C (76-85° F)	Below 35%	172-214 kPa (25-31 psi)	1020-1227 kPa (148-178 psi)	9° C (48° F)
	35-60%	199-229 kPa (29-33 psi)	970-1300 kPa (141-189 psi)	9° C (48° F)
	Above 60%	207-237 kPa (30-34 psi)	1020-1500 kPa (148-218 psi)	10° C (50° F)
30-35° C (86-95° F)	Below 30%	210-240 kPa (31-35 psi)	1130-1520 kPa (164-221 psi)	10° C (50° F)
	30-50%	208-238 kPa (30-35 psi)	1190-1670 kPa (173-242 psi)	11° C (52° F)
	Above 50%	205-235 kPa (30-35 psi)	1280-1910 kPa (186-277 psi)	11° C (52° F)
36-40° C (96-105° F)	Below 20%	226-256 kPa (33-37 psi)	1280-1650 kPa (186-240 psi)	12° C (54° F)
	20-40%	218-248 kPa (32-36 psi)	1360-1870 kPa (197-271 psi)	12° C (54° F)
	Above 40%	211-241 kPa (31-35 psi)	1520-2100 kPa (221-305 psi)	12° C (54° F)
41-46° C (106-115° F)	Below 20%	238-268 kPa (35-39 psi)	1460-1830 kPa (212-267 psi)	13° C (55° F)
	Above 20%	226-256 kPa (33-37 psi)	1570-2100 kPa (228-306 psi)	13° C (55° F)
47-49° C (116-120° F)	Below 30%	238-268 kPa (35-39 psi)	1750-2090 kPa (254-303 psi)	14° C (57° F)

AIR CONDITIONING (A/C) DIAGNOSTICS - PRESSURE ZONE A

Air Conditioning (A/C) Diagnostics - Pressure Zone A

Step	Action	Value	Yes	No
DEFINITION: The high and low side pressures may be normal or slightly less than normal. • Air Delivery Concern • Slight Refrigerant Under Charge • Refrigerant Contamination				
1	Were you sent here from the A/C System Performance Test?	-	Go to **Step 2**	Go to **Air Conditioning (A/C) System Performance Test**
2	Refer to the panel air outlet temperatures recorded during the A/C system performance test. Does the discharge air temperature between the right and left center panel outlets vary by more	-		

	than 1-2° C (2-3° F)?		Go to **Step 7**	Go to **Step 3**
3	Did the customer mention that the A/C system output temperatures are good at first, but then turn warm during extended drives?	-	Go to **Step 4**	Go to **Step 5**
4	Increase engine speed to 2000 RPM. During extended operation of the A/C system, does the low side pressure decrease, possibly accompanied by heavy frost on the liquid line between the expansion device and the evaporator?	-	Go to **Air Conditioning (A/C) Diagnostics - Pressure Zone D**	Go to **Step 5**
5	1. Refer to the pressures recorded during the A/C system performance test. 2. Inspect for the following conditions: **CAUTION:** **Refer to Moving Parts and Hot Surfaces Caution in Cautions and Notices.** • The high side pressure is slightly greater than the specified pressure ranges but still within Zone A on the A/C Pressure-Zone Classification Chart in the A/C System Performance Test. Refer to **Air Conditioning (A/C) System Performance Test** . • The discharge line is hot. • The suction line is cool. Do the listed conditions exist?	-	Go to **Step 7**	Go to **Step 6**
6	1. Refer to the pressures recorded during the A/C system performance test. 2. Inspect for the following conditions: • The low side pressure is slightly lower than the specified pressure ranges but still within Zone A on the A/C Pressure-Zone Classification Chart in the A/C System Performance Test. Refer to **Air Conditioning (A/C) System Performance Test** . • The discharge line is warm-to-hot. • The suction line is cool-to-warm. Do the listed conditions exist?	-	Go to **Step 8**	Go to **Too Hot in Vehicle** in HVAC Systems - Automatic
	The A/C system may be undercharged.			

7	1. Leak test A/C system. Refer to **Leak Testing** . 2. Recharge the A/C system to specifications. Refer to **Refrigerant Recovery and Recharging** . Is the action complete?	-	Go to **Step 14**	-
8	The A/C system may be contaminated. View the information screen on **J 43600** ACR 2000 Air Conditioning Service Center for detection of foreign gases in the A/C system. See **Special Tools and Equipment** . Do foreign gases exist?	-	Go to **Step 9**	Go to **Step 10**
9	1. Evacuate the A/C system to a scavenging tank. Refer to **Refrigerant Recovery and Recharging** . 2. Recharge the A/C system to specifications. Is the action complete?	-	Go to **Step 14**	-
10	The A/C system may contain too much moisture or air. 1. Evacuate and recharge the A/C system to specifications. Refer to **Refrigerant Recovery and Recharging** . 2. Operate the A/C system and inspect the panel outlet air temperatures. Refer to **Air Conditioning (A/C) System Performance Test** . Are the panel outlet temperatures within the specified ranges of the A/C Performance Test Table?	-	Go to **Step 15**	Go to **Step 11**
11	The A/C system may contain too much refrigerant oil. 1. Recover the refrigerant from the A/C system. Refer to **Refrigerant Recovery and Recharging** . 2. Remove the accumulator. Refer to **Accumulator Replacement** . 3. Drain and measure the refrigerant oil from	148 ml (5 oz)		

	the accumulator. Was more than the specified amount of refrigerant oil drained from the accumulator?		Go to **Step 12**	Go to **Step 13**
12	1. Reinstall the accumulator. Refer to **Accumulator Replacement** . 2. Flush the A/C system. Refer to **Flushing** . 3. Recharge the A/C system. Refer to **Refrigerant Recovery and Recharging** . Are the actions complete?	-	Go to **Step 14**	-
13	1. Add the specified amount of refrigerant oil to the accumulator. Refer to **Refrigerant System Capacities** . 2. Install the accumulator. Refer to **Accumulator Replacement** . 3. Recharge the A/C system. Refer to **Refrigerant Recovery and Recharging** . Are the actions complete?	-	Go to **Step 14**	-
14	1. Record the low and high side pressures and the I/P outlet air temperature. 2. Compare the outlet temperatures to those listed in the A/C System Performance Chart. Refer to **Air Conditioning (A/C) System Performance Test** . Are the high and low side pressures and I/P panel outlet temperatures within specifications?	-	Go to **Step 15**	Go to **Air Conditioning (A/C) System Performance Test**
15	Operate the system in order to verify the repair. Did you find and correct the condition?	-	System OK	Go to **Symptoms - HVAC Systems - Automatic** in HVAC Systems - Automatic

AIR CONDITIONING (A/C) DIAGNOSTICS - PRESSURE ZONE B

Air Conditioning (A/C) Diagnostics - Pressure Zone B

Step	Action	Yes	No
DEFINITION: The low side pressure is higher than normal and the high side pressure is lower than normal.			

- Malfunctioning A/C Compressor
- Refrigerant Under Charge

1	Were you sent here from the A/C System Performance Test?	Go to **Step 2**	Go to **Air Conditioning (A/C) System Performance Test**
2	After continued operation of the A/C system, do the low and the high side pressures equalize or become static?	Go to **Step 5**	Go to **Step 3**
3	1. Refer to the pressures recorded during the A/C System Performance Test. 2. Inspect for the following conditions: **CAUTION:** **Refer to Moving Parts and Hot Surfaces Caution in Cautions and Notices.** • The low side pressure is equal to or greater than the specified pressure range of the A/C Performance Table. Refer to **Air Conditioning (A/C) System Performance Test** . • The high side pressure is less than the specified pressure range of the A/C Performance Table. Refer to **Air Conditioning (A/C) System Performance Test** . • The low side refrigerant line at the compressor feels cool-to-warm. • The high side refrigerant line at the compressor feels warm-to-hot. Do the listed conditions exist?	Go to **Step 5**	Go to **Step 4**
4	1. Refer to the pressures recorded during the A/C System Performance Test. 2. Inspect for the following conditions: **CAUTION:** **Refer to Moving Parts and Hot Surfaces Caution in Cautions and Notices.** • The low side pressure is greater than the specified pressure range of the A/C Performance Table. Refer to **Air Conditioning (A/C) System Performance Test** . • The high side pressure is less than the specified pressure range of the A/C Performance Table.		

	Refer to **Air Conditioning (A/C) System Performance Test** . • The low side refrigerant line at the compressor feels warm. • The high side refrigerant line at the compressor feels warm to hot. Do the listed conditions exist ?	Go to **Step 5**	Go to **Air Conditioning (A/C) System Performance Test**
5	The A/C system has a low refrigerant charge. Evacuate and recharge the A/C system. Refer to **Refrigerant Recovery and Recharging** . Is the action complete?	Go to **Step 6**	-
6	1. After you perform the repairs, record the following: • The low and the high side pressures • IP panel outlet air temperature 2. Compare the pressures and the temperature to those listed in the A/C Performance Chart. Refer to **Air Conditioning (A/C) System Performance Test** . Are the readings within the specified ranges found on the A/C Performance Chart?	Go to **Step 13**	Go to **Step 7**
7	The A/C compressor is malfunctioning. Remove the expansion device and inspect for contamination. Refer to **Expansion (Orifice) Tube Replacement** . Did you find metal flakes on the expansion device?	Go to **Step 9**	Go to **Step 8**
8	Inspect the expansion device for a brown, powdery residue indicating desiccant in the A/C system. Is a brown, powdery residue present?	Go to **Step 11**	Go to **Step 12**
9	1. Remove the compressor hose from the compressor. Refer to **Compressor Hose Assembly Replacement** . 2. Inspect for metal flake contamination at the line connections and the compressor ports. Is metal flake contamination present?	Go to **Step 10**	Go to **Step 12**
10	1. Replace the A/C compressor. Refer to **Compressor Replacement** . 2. Install an A/C refrigerant filter. Refer to **Air Conditioning (A/C) Refrigerant Filter Installation** . 3. Replace the orifice tube. Refer to **Expansion (Orifice) Tube Replacement** . 4. Evacuate and recharge the A/C system. Refer to **Refrigerant Recovery and Recharging** .		

	Is the action complete?	Go to **Step 13**	-
11	1. Flush the A/C system. Refer to **Flushing** . 2. Replace the orifice tube. Refer to **Expansion (Orifice) Tube Replacement** . 3. Replace the A/C compressor. Refer to **Compressor Replacement** . 4. Replace the accumulator. Refer to **Accumulator Replacement** . 5. Evacuate and recharge the A/C system. Refer to **Refrigerant Recovery and Recharging** . Is the action complete?	Go to **Step 13**	-
12	1. Replace the A/C compressor. Refer to **Compressor Replacement** . 2. Evacuate and recharge the A/C system. Refer to **Refrigerant Recovery and Recharging** . Is the action complete?	Go to **Step 13**	-
13	Operate the system in order to verify the repair Did you find and correct the condition?	System OK	Go to **Symptoms - HVAC Systems - Automatic** in HVAC Systems - Automatic

AIR CONDITIONING (A/C) DIAGNOSTICS - PRESSURE ZONE C

Air Conditioning (A/C) Diagnostics - Pressure Zone C

Step	Action	Yes	No
DEFINITION: The low and the high side pressures are both higher than normal. • Restricted Condenser Air Flow • Cooling Fan Malfunction • Expansion Device Malfunction			
1	Were you sent here from the A/C System Performance Test?	Go to **Step 2**	Go to **Air Conditioning (A/C) System Performance Test**
2	1. Start the engine. 2. Turn ON the A/C. 3. Inspect for proper cooling fan operation. Refer to **Cooling System Description and Operation** in Engine Cooling. Are the cooling fans ON and operating properly?	Go to **Step 3**	Go to **Step 5**

3	Visually inspect for the following conditions: • Damaged condenser cooling fins • Missing or misaligned air baffles • Restricted air flow Do any of these conditions exist?	Go to **Step 4**	Go to **Step 6**
4	Repair the air flow restriction. Is the action complete?	Go to **Step 9**	-
5	Repair the fault to the cooling fan operation. Refer to **Cooling Fan Inoperative** in Engine Cooling. Is the action complete?	Go to **Step 9**	-
6	**CAUTION:** **Refer to Moving Parts and Hot Surfaces Caution in Cautions and Notices.** Feel the liquid line on both sides of the expansion device.Are the temperatures on both sides of the expansion device similar?	Go to **Step 7**	Go to **Step 8**
7	Replace the damaged or faulty orifice tube. Refer to **Expansion (Orifice) Tube Replacement** . Is the action complete?	Go to **Step 9**	-
8	1. Air is in the refrigerant system, or the system is overcharged. Refer to the view screen on **J 43600** ACR 2000 Air Conditioning Service Center for foreign gas content in the refrigerant. See **Special Tools and Equipment** . 2. Recover and recharge the A/C system. Refer to **Refrigerant Recovery and Recharging** . Is the action complete?	Go to **Step 9**	-
9	1. Record the low and high side pressures and the IP panel outlet air temperature after you have performed the repairs. 2. Compare the pressures and the panel outlet temperature to those listed in the A/C Performance Chart. Refer to **Air Conditioning (A/C) System Performance Test** . Are the readings within the specified ranges listed in the A/C Performance Chart?	Go to **Step 10**	Go to **Air Conditioning (A/C) System Performance Test**
10	Operate the system in order to verify the repair. Did you find and correct the condition?	System	Go to **Symptoms - HVAC Systems - Automatic** in HVAC systems -

		OK	Automatic

AIR CONDITIONING (A/C) DIAGNOSTICS - PRESSURE ZONE D

Air Conditioning (A/C) Diagnostics - Pressure Zone D

Step	Action	Yes	No
DEFINITION: The low side pressure is lower than normal and the high side pressure is higher than normal. • A restriction in the A/C system. • Debris in the system.			
1	Were you sent here from the A/C System Performance Test?	Go to **Step 2**	Go to **Air Conditioning (A/C) System Performance Test**
2	**CAUTION:** **Refer to Moving Parts and Hot Surfaces Caution in Cautions and Notices.** Feel the liquid line before the expansion device.Is the liquid line cold before the expansion device?	Go to **Step 3**	Go to **Step 8**
3	Feel along the surfaces of the following high side components: • The compressor discharge hose • The condenser • The liquid line between the condenser and the expansion device Did you detect an abrupt drop in temperature along the surfaces of any of the listed components?	Go to **Step 7**	Go to **Step 4**
4	1. Feel the liquid line at the expansion device location for extreme cold, possibly accompanied by heavy frost. 2. Feel along the liquid line beyond the expansion device location for warm temperature. Is the liquid line extremely cold at the expansion device location and warm beyond the expansion device location?	Go to **Step 11**	Go to **Step 5**
	Feel along the surfaces of the following low side components: • The evaporator inlet tube between the expansion device and the evaporator core		

5	• The evaporator outlet tube between the evaporator core and the compressor. • The accumulator • The compressor suction hose Did you feel an abrupt temperature change along the surfaces of any of the listed components?	Go to **Step 7**	Go to **Step 6**
6	Feel along the surfaces of the low and the high side components: • The evaporator inlet tube between the expansion device and the evaporator core • The evaporator outlet tube between the evaporator core and the accumulator • The accumulator • The compressor suction hose • The compressor discharge hose • The condenser • The evaporator inlet tube between the condenser and the expansion device Are the temperatures of these components only mildly warm?	Go to **Step 14**	Go to **Step 8**
7	1. Recover the refrigerant. Refer to **Refrigerant Recovery and Recharging** . 2. Remove the restriction from the component, or replace the component which produced an abrupt temperature drop. Is the action complete?	Go to **Step 9**	-
8	1. Recover the refrigerant and evacuate the system. Refer to **Refrigerant Recovery and Recharging** . 2. Record the weight of the recovered refrigerant. 3. Compare the weight of the recovered refrigerant with the system capacity. Refer to **Refrigerant System Capacities** . Is the weight of the recovered refrigerant charge greater than 75% of the total system capacity?	Go to **Step 9**	Go to **Step 10**
	Recharge the A/C system. Refer to **Refrigerant**		

9	**Recovery and Recharging** . Is the cooling performance improved?	Go to **Step 21**	Go to **Step 10**
10	1. Leak test the system. Refer to **Leak Testing** . 2. Repair any leaks. Is the action complete?	Go to **Step 21**	-
11	The expansion device is restricted. 1. Replace the expansion device. Refer to **Expansion (Orifice) Tube Replacement** . 2. If the expansion device was restricted, note the type of debris present. Are metal flakes present?	Go to **Step 12**	Go to **Step 13**
12	1. Remove the compressor hose assembly from the vehicle. Refer to **Compressor Hose Assembly Replacement** . 2. Inspect the hose for debris by blowing shop air through one end of the hose while covering the other end with a shop towel. 3. Observe the amount of debris collected in the shop towel. Did a large amount of debris collect in the shop towel?	Go to **Step 18**	Go to **Step 20**
13	If the expansion device was restricted with a brown or black residue, perform the following procedure: 1. Flush the A/C system. Refer to **Flushing** . 2. Replace the accumulator. Refer to **Accumulator Replacement** . Are the actions complete?	Go to **Step 21**	-
14	1. Recover the refrigerant. Refer to **Refrigerant Recovery and Recharging** . 2. Disconnect the compressor hose from the compressor. Refer to **Compressor Hose Assembly Replacement** . 3. Inspect for the presence of debris in the compressor suction port. Is debris present in the compressor suction port?	Go to **Step 15**	Go to **Step 19**

15	1. Remove the debris from the suction port. 2. Inspect the expansion device for damage or debris. Refer to **Expansion (Orifice) Tube Replacement** . Did you find evidence of damage or debris?	Go to **Step 17**	Go to **Step 16**
16	If the expansion device does not show any signs of damage or debris, perform the following procedure: 1. Remove the compressor hose assembly from the vehicle. Refer to **Compressor Hose Assembly Replacement** . 2. Inspect the hose for debris by blowing shop air through one end of the hose while covering the other end with a shop towel. 3. Observe the amount of debris collected in the shop towel. Did a large amount of debris collect in the shop towel?	Go to **Step 18**	Go to **Step 19**
17	1. Replace the expansion device. Refer to **Expansion (Orifice) Tube Replacement** . 2. If the expansion device was restricted, observe the type of debris present. Are metal flakes present?	Go to **Step 12**	Go to **Step 13**
18	If a large amount of debris was collected in the shop towel from the compressor hose assembly, perform the following procedure: 1. Replace the accumulator. Refer to **Accumulator Replacement** . 2. Install an A/C refrigerant filter. Refer to **Air Conditioning (A/C) Refrigerant Filter Installation** . Is the action complete?	Go to **Step 19**	-
19	Install the compressor hose assembly. Refer to **Compressor Hose Assembly Replacement** . Is the action complete?	Go to **Step 21**	-
	1. Install the compressor hose assembly. Refer to **Compressor Hose Assembly Replacement** . 2. Install an A/C refrigerant filter. Refer to **Air Conditioning (A/C) Refrigerant Filter**		

20	**Installation** . 3. Recharge the A/C system. Refer to **Refrigerant Recovery and Recharging** . Are the actions complete?	Go to **Step 21**	-
21	1. Record the low and the high side pressures and the panel outlet air temperature after you perform the repairs. 2. Compare the pressures and the panel outlet temperature to those listed in the A/C Performance Chart. Refer to **Air Conditioning (A/C) System Performance Test** . Are the readings within the specified ranges as shown on the A/C Performance Chart?	Go to **Step 22**	Go to **Air Conditioning (A/C) System Performance Test**
22	Operate the system in order to verify the repair. Did you find and correct the condition?	System OK	Go to **Symptoms - HVAC Systems - Automatic** in HVAC Systems - Automatic

HEATING PERFORMANCE DIAGNOSTIC

Heating Performance Diagnostic

Step	Action	Yes	No
DEFINITION: Heating system performance.			
1	Were you sent here from Symptoms or another diagnostic table?	Go to **Step 2**	Go to **Symptoms - HVAC Systems - Automatic**
2	1. Start the engine. 2. Allow the engine to idle. Does the engine reach a normal operating temperature?	Go to **Step 3**	Go to **Step 9**
3	**CAUTION:** **Refer to Moving Parts and Hot Surfaces Caution in Cautions and Notices.** 1. Allow the engine to idle. 2. Select the FLOOR mode. 3. Select the minimum blower speed. 4. Select the warmest temperature setting. 5. Feel the temperature of the inlet and outlet heater hoses at the heater core. Does the inlet heater hose feel warmer than the outlet heater	Go to	

	hose?	**Step 7**	Go to **Step 4**
4	1. Install a thermometer into the center I/P PANEL air outlet. 2. Secure a thermometer to the heater core outlet hose. 3. Select the PANEL mode. 4. Select the maximum blower speed. 5. Select the warmest temperature setting. 6. Record the temperature at the following locations: • The center I/P PANEL air outlet • The heater core outlet hose 7. Compare the recorded temperatures. Are the two temperature readings about equal?	Go to **Step 5**	Go to **Step 6**
5	1. Inspect and repair the following areas of the vehicle for cold air leaks: • The cowl • The recirculation door • The HVAC module case 2. Perform the necessary repairs. Are the repairs complete?	Go to **Step 10**	-
6	1. Inspect the temperature door operation. Refer to **Diagnostic System Check - HVAC Systems - Automatic** . 2. Perform any necessary repairs. Are the repairs complete?	Go to **Step 10**	-
7	1. Turn OFF the engine. 2. Backflush the heater core. 3. Start the engine. 4. Select the FLOOR mode. 5. Select the minimum blower speed. 6. Select the warmest temperature setting. 7. Feel the temperature of the inlet and outlet heater hoses at the heater core. Does the inlet heater hose feel warmer than the outlet heater hose?	Go to **Step 8**	Go to **Step 10**
8	Replace the heater core. Refer to **Heater Core Replacement** . Is the repair complete?	Go to **Step 10**	-

9	Repair the low engine temperature concern. Refer to **Engine Fails To Reach Normal Operating Temperature** in Engine Cooling. Is the repair complete?	Go to **Step 10**	-
10	Operate the system in order to verify the repair. Did you find and correct the condition?	System OK	Go to **Step 2**

DEFROSTING INSUFFICIENT

Defrosting Insufficient

Step	Action	Yes	No
DEFINITION: Time required to defrost the windshield is longer than usual.			
1	Were you sent here from Symptoms or another diagnostic table?	Go to **Step 2**	Go to r **Symptoms - HVAC Systems - Automatic**
2	1. Start the engine. 2. Select the DEFROST mode. 3. Select the maximum blower speed. Does sufficient air flow from the defroster outlets?	Go to **Step 3**	Go to **Step 10**
3	Measure the engine operating temperature. Does engine reach a normal operating temperature?	Go to **Step 4**	Go to **Step 8**
4	1. Select the minimum blower speed. 2. Select the warmest temperature setting. **CAUTION:** **Refer to Moving Parts and Hot Surfaces Caution in Cautions and Notices.** 3. Feel the temperature of the inlet and outlet hoses at the heater core. Does the inlet heater hose feel warmer than the outlet heater hose?	Go to **Step 11**	Go to **Step 5**
5	Test the operation of the A/C compressor clutch. Does the A/C compressor clutch engage?	Go to **Step 7**	Go to **Step 6**
6	Repair the A/C compressor clutch. Refer to **HVAC Compressor Clutch Does Not Engage** in HVAC Systems-Automatic. Is the repair complete?	Go to **Step 14**	-
7	Perform the A/C system performance test. Refer to **Air Conditioning (A/C) System Performance Test** . Is the A/C system operating within the specifications?	Go to **Step 9**	Go to **Step 12**

8	Repair the low engine temperature concern. Refer to **Engine Fails To Reach Normal Operating Temperature** in Engine Cooling. Is the repair complete?	Go to **Step 14**	-
9	Inspect for correct operation of the recirculation door. Is the recirculation door operating correctly?	Go to **Step 14**	Go to **Step 13**
10	Repair the air delivery concern. Refer to **Air Delivery Improper** in HVAC Systems - Automatic. Is the repair complete?	Go to **Step 14**	-
11	Repair the heating concern. Refer to **Heating Performance Diagnostic** . Is the repair complete?	Go to **Step 14**	-
12	Repair the A/C performance concern. Refer to **Air Conditioning (A/C) System Performance Test** . Is the repair complete?	Go to **Step 14**	-
13	Repair the recirculation door concern. Refer to **Air Recirculation Malfunction** in HVAC Systems - Automatic. Is the repair complete?	Go to **Step 14**	-
14	Operate the system in order to verify the repair. Did you find and correct the condition?	System OK	Go to **Step 2**

NOISE DIAGNOSIS - BLOWER MOTOR

Noise Diagnosis - Blower Motor

Step	Action	Yes	No
DEFINITION: Noise originating from the blower motor.			
1	Were you sent here from Symptoms or another diagnostic table?	Go to **Step 2**	Go to **Symptoms - HVAC Systems - Automatic**
2	Inspect the air inlet grille for debris. Is debris present?	Go to **Step 8**	Go to **Step 3**
3	1. Sit inside the vehicle. 2. Close the vehicle doors and windows. 3. Turn ON the ignition, with the engine OFF. 4. Cycle the blower motor through all of the speeds and modes in order to determine where and when the noise occurs. Is a noise evident during the blower operation?	Go to **Step 4**	Go to **Step 11**
4	Inspect for excessive vibration at each blower motor speed by feeling the blower case. Is excess vibration present?	Go to **Step 6**	Go to **Step 5**
5	Listen to the blower motor at each speed. Is the blower motor making a squeaking or chirping noise?	Go to **Step 9**	Go to **Step 11**

6	1. Remove the blower motor. Refer to **Blower Motor Replacement** . 2. Inspect the blower motor impeller for deposits of foreign material. 3. Inspect the blower motor for deposits of foreign material. Did you find any foreign material on the blower motor or blower motor impeller?	Go to **Step 8**	Go to **Step 7**
7	Inspect the blower motor for the following conditions: • Cracked blades • A loose impeller retainer • Improper impeller alignment Did you find any of these conditions?	Go to **Step 9**	Go to **Step 10**
8	Remove the foreign material. Is the action complete?	Go to **Step 10**	-
9	Replace the blower motor. Refer to **Blower Motor Replacement** . Is the repair complete?	Go to **Step 11**	-
10	Install the blower motor. Refer to **Blower Motor Replacement** . Is the action complete?	Go to **Step 11**	-
11	Operate the system in order to verify the repair. Did you find and correct the condition?	System OK	Go to **Step 2**

NOISE DIAGNOSIS - AIR CONDITIONING (A/C) SYSTEM

Noise Diagnosis - Air Conditioning (A/C) System

Step	Action	Yes	No
DEFINITION: Noise originating from the A/C compressor, drive belt or the A/C lines.			
1	Were you sent here from Symptoms or another diagnostic table?	Go to **Step 2**	Go to **Symptoms - HVAC Systems - Automatic**
2	1. A/C system noises can be generally categorized into three areas: • Screeching, Squealing, Chirping noises • Moaning noises • Vibration/Rattle noises 2. Start the engine.		

	3. Ensure that the A/C is ON. Is a screeching, squealing noise heard when the A/C is engaged?	Go to **Step 3**	Go to **Step 9**
3	With the engine OFF, inspect the drive belt for excessive wear. Refer to **Drive Belt Excessive Wear Diagnosis** in Engine Mechanical. Is the drive belt excessively worn?	Go to **Step 18**	Go to **Step 4**
4	Inspect the drive belt tension. Refer to **Drive Belt Tensioner Diagnosis** in Engine Mechanical. Is the drive belt tension correct?	Go to **Step 5**	Go to **Step 19**
5	Inspect the drive belt for excessive oil coverage. Is the drive belt covered with oil?	Go to **Step 17**	Go to **Step 6**
6	1. Start the engine. 2. Ensure that the A/C is ON. 3. Inspect the compressor and the clutch. Is the A/C compressor locked up?	Go to **Step 24**	Go to **Step 7**
7	Is the A/C compressor clutch slipping?	Go to **Step 23**	Go to **Step 8**
8	**CAUTION:** **Refer to Moving Parts and Hot Surfaces Caution in Cautions and Notices.** Using a stethoscope, listen to the A/C compressor for any abnormal noises.Is the compressor causing an abnormal noise?	Go to **Step 15**	Go to **Step 10**
9	Does a moaning noise exist when the A/C clutch is engaged?	Go to **Step 10**	Go to **Step 12**
10	Listen to the A/C compressor components and mounting for noise concerns using a stethoscope. Are any of these components loose, damaged or excessively worn?	Go to **Step 20**	Go to **Step 11**
11	1. Idle the engine. 2. Engage the A/C compressor clutch. 3. Using a stethoscope, move around the entire refrigerant plumbing system. Listening for any abnormal noises caused by a component of the A/C system touching another component. Are any of the A/C components grounding out and causing a vibration noise?	Go to **Step 22**	Go to **Step 13**
12	Does a vibration or rattle noise exist when the A/C clutch is engaged?	Go to **Step 13**	Go to **Step 14**
13	Does the noise stop when the A/C clutch is disengaged?	Go to **Step 15**	Go to **Step 25**

14	1. Idle the engine in PARK with the A/C compressor clutch engaged. 2. Using a stethoscope, move around the entire A/C system testing for any abnormal noises caused by a component. Do any of the A/C components cause an abnormal noise?	Go to **Step 21**	Go to **Step 25**
15	Verify that the A/C system is properly charged. Refer to **Refrigerant System Capacities** . Is the A/C system properly charged?	Go to **Step 26**	Go to **Step 16**
16	Recharge the A/C system to specification. Refer to **Refrigerant Recovery and Recharging** . Is the abnormal compressor noise still present?	Go to **Step 24**	Go to **Step 26**
17	Repair the oil leak. Refer to the appropriate repair procedure in Engine Mechanical. Is the repair complete?	Go to **Step 26**	-
18	Replace the A/C drive belt. Refer to **Drive Belt Replacement - Air Conditioning** in Engine Mechanical. Is the repair complete?	Go to **Step 26**	-
19	Replace the A/C drive belt tensioner. Refer to **Drive Belt Tensioner Replacement - Air Conditioning** in Engine Mechanical. Is the repair complete?	Go to **Step 26**	-
20	Repair or replace the A/C compressor mounting component. Is the repair complete?	Go to **Step 26**	-
21	Repair or replace the component which is causing the moaning concern as needed. Is the repair complete?	Go to **Step 26**	-
22	Correctly route or insulate the A/C component. Is the repair complete?	Go to **Step 26**	-
23	Replace the A/C compressor clutch. Refer to **Clutch Rotor and/or Bearing Replacement (V-7)** . Is the repair complete?	Go to **Step 26**	-
24	Replace the A/C compressor. Refer to **Compressor Replacement** . Is the repair complete?	Go to **Step 26**	-
25	The concern may be caused by an engine related component. Refer to **Vibration Analysis - Engine** in Vibration Diagnosis and Correction. Did you find and correct the condition?	Go to **Step 26**	-
26	Operate the system in order to verify the repair. Did you find and correct the condition?	System OK	Go to **Step 2**

NOISE DIAGNOSIS - HVAC MODULE

Noise Diagnosis - HVAC Module

Step	Action	Yes	No
DEFINITION: Noise originating from the HVAC module.			
1	Were you sent here from Symptoms or another diagnostic table?	Go to **Step 2**	Go to **Symptoms - HVAC Systems - Automatic**
2	1. Start the engine. 2. Cycle through all of the following: • Blower motor speeds • HVAC modes • Temperature control settings 3. Determine the type of noise: • Scrape, pop • Tick/click, chirp or groaning • Air rush/whistle Is a scrape or pop noise evident when selecting modes or temperature settings?	Go to **Step 6**	Go to **Step 3**
3	Is a tick/click, chirping, groaning or scraping noise present, but decreases as blower motor speed is decreased?	Go to **Step 6**	Go to **Step 4**
4	Is an air rush/whistle noise evident in all modes but not all temperature settings?	Go to **Step 6**	Go to **Step 5**
5	Is an air rush/whistle noise evident only in defrost or floor mode?	Go to **Step 6**	Go to **Step 6**
6	Remove the I/P Trim Pad. Refer to **Trim Pad Replacement - Instrument Panel (I/P) Upper** in Instrument Panel, Gages and Console. Is the action complete?	Go to **Step 7**	-
7	1. Inspect the air flow doors for proper operation. 2. Inspect the ducts for obstructions or foreign materials. Were any of these conditions found?	Go to **Step 10**	Go to **Step 8**
8	Inspect the mode and temperature doors and seals for warping or cracking. Are the doors in normal condition?	Go to **Step 11**	Go to **Step 9**
9	Replace the appropriate door and/or seals. Is the repair complete?	Go to **Step 11**	-
10	Remove any obstructions or foreign material found. Is the action complete?	Go to **Step 11**	-
11	Install the I/P Trim Pad. Refer to **Trim Pad Replacement - Instrument Panel (I/P) Upper** in Instrument Panel, Gages and Console. Is the action complete?	Go to **Step 12**	-

12	Operate the system to verify the repair. Did you find and correct the condition?	System OK	Go to **Step 2**

ODOR DIAGNOSIS

Odor Diagnosis

Step	Action	Yes	No
DEFINITION: Odor originating or noticed through the HVAC system.			
1	Were you sent here from Symptoms or another diagnostic table?	Go to **Step 2**	Go to **Symptoms - HVAC Systems - Automatic**
2	1. Sit inside the vehicle. 2. Close all of the doors and windows. 3. Start the engine. 4. Allow the engine idle at normal operating temperature. 5. Select the maximum blower speed. 6. Select the PANEL air outlet mode. 7. Select the coldest temperature setting. 8. Cycle through all of the blower speeds, modes and temperatures to define what type of odor is present. • Musty smell • Coolant smell • Oil smell Does the odor have a musty smell?	Go to **Step 3**	Go to **Step 8**
3	Inspect the HVAC filter and the air inlet grille for debris. Is debris present?	Go to **Step 4**	Go to **Step 5**
4	Remove any debris. Is the action complete?	Go to **Step 15**	-
5	Inspect for wet carpeting. Is the carpet wet?	Go to **Step 6**	Go to **Step 14**
6	Inspect for the following conditions: • Water leaks around the windshield • Blockage of the HVAC module drain • Leaks around the door seals Is a leak present?	Go to **Step 7**	Go to **Step 14**
7	Repair the leak as necessary. Is the repair complete?	Go to **Step 15**	-

8	Does the odor have a coolant smell?	Go to **Step 9**	Go to **Step 12**
9	Inspect the cooling system for leaks. Refer to **Loss of Coolant** in Engine Cooling. Is a leak present?	Go to **Step 10**	Go to **Step 12**
10	Inspect for coolant leaking inside the vehicle or for a film build-up on the windshield. Is the condition present?	Go to **Step 11**	Go to **Step 15**
11	Replace the heater core. Refer to **Heater Core Replacement** . Is the repair complete?	Go to **Step 15**	-
12	Does the odor have an oily smell?	Go to **Step 13**	Go to **Step 15**
13	1. Inspect the engine compartment for any leaks. Refer to the following procedures: • **Oil Leak Diagnosis** in Engine Mechanical • **Fluid Leak Diagnosis** in Automatic Transmission • **Power Steering Fluid Leaks** in Power Steering System 2. Repair any oil leaks. Is the repair complete?	Go to **Step 15**	-
14	A musty odor can be caused by mold or mildew build-up on the evaporator or the heater core or inside of the HVAC module. Refer to **Odor Correction** . Is the action complete?	Go to **Step 15**	-
15	Operate the system in order to verify the repair. Did you find and correct the condition?	System OK	Go to **Step 2**

REPAIR INSTRUCTIONS

ODOR CORRECTION

Eliminating Air Conditioning Odor

Odors may be emitted from the air conditioning system primarily at start up in hot, humid climates. The following conditions may cause the odor:

- Debris is present in the HVAC module.
- Microbial growth on the evaporator core

When the blower motor fan is turned on, the microbial growth may release an unpleasant musty odor into the passenger compartment. To remove odors of this type, the microbial growth must be eliminated. Perform the following procedure:

Deodorize the evaporator core using Deodorizing Aerosol Kit.

Perform the following steps in order to deodorize the A/C system:

1. Ensure that the plenum that draws outside air into the HVAC module is clear of debris.
2. Disable the A/C compressor clutch operation by disconnecting the clutch coil electrical connector.
3. Dry the evaporator core by performing the following steps:
    1. Start the engine.
    2. Select the maximum temperature setting.
    3. Select the recirculation mode.
    4. Run the blower motor on high for 10 minutes.
4. Locate an area in the air conditioning duct between the blower motor and the evaporator core downstream of the blower motor.
5. Drill a 3.175 mm (0.125 in) hole where the hole will not interfere with or damage the following components:
    - The blower motor
    - The evaporator core
    - Any other operating part the of system
6. Wear safety goggles and latex gloves in order to perform the following actions:
    1. Select the maximum blower speed.
    2. Insert the deodorizer extension tube into the hole to the mark on the extension tube.
    3. Use short spray bursts and vary the direction of spray for a 2-3 minute period of time.
7. Shut the engine OFF. Allow the vehicle to sit for 3-5 minutes.
8. Seal the 3.175 mm (0.125 in) hole with body sealer or RTV gasket compound.
9. Start the engine.
10. Operate the blower motor on high for 15-20 minutes to dry.
11. Reconnect the A/C compressor clutch coil electrical connector.
12. Verify proper clutch operation.

REFRIGERANT RECOVERY AND RECHARGING

Tools Required

- **J 43600** ACR 2000 Air Conditioning Service Center. See **Special Tools and Equipment** .
- **J 45037** A/C Oil Injector. See **Special Tools and Equipment** .

CAUTION: Avoid breathing the A/C Refrigerant 134a (R-134a) and the lubricant vapor or the mist. Exposure may irritate the eyes, nose, and throat. Work in a well ventilated area. In order to remove R-134a from the A/C system, use service equipment that is certified to meet the requirements of SAE J 2210 (R-134a recycling equipment). If an accidental system discharge occurs,

ventilate the work area before continuing service. Additional health and safety information may be obtained from the refrigerant and lubricant manufacturers.

CAUTION: For personal protection, goggles and gloves should be worn and a clean cloth wrapped around fittings, valves, and connections when doing work that includes opening the refrigerant system. If R-134a comes in contact with any part of the body severe frostbite and personal injury can result. The exposed area should be flushed immediately with cold water and prompt medical help should be obtained.

NOTE: R-134a is the only approved refrigerant for use in this vehicle. The use of any other refrigerant may result in poor system performance or component failure.

NOTE: To avoid system damage use only R-134a dedicated tools when servicing the A/C system.

NOTE: Use only Polyalkylene Glycol Synthetic Refrigerant Oil (PAG) for internal circulation through the R-134a A/C system and only 525 viscosity mineral oil on fitting threads and O-rings. If lubricants other than those specified are used, compressor failure and/or fitting seizure may result.

NOTE: R-12 refrigerant and R-134a refrigerant must never be mixed, even in the smallest of amounts, as they are incompatible with each other. If the refrigerants are mixed, compressor failure is likely to occur. Refer to the manufacturer instructions included with the service equipment before servicing.

The **J 43600** is a complete air conditioning service center for R-134a. See **Special Tools and Equipment** . The ACR 2000 recovers, recycles, evacuates and recharges A/C refrigerant quickly, accurately and automatically. The unit has a display screen that contains the function controls and displays prompts that will lead the technician through the recover, recycle, evacuate and recharge operations. R-134a is recovered into and charged out of an internal storage vessel. The ACR 2000 automatically replenishes this vessel from an external source tank in order to maintain a constant 5.45-6.82 kg (12-15 lbs) of A/C refrigerant.

The ACR 2000 has a built in A/C refrigerant identifier that will test for contamination, prior to recovery and will notify the technician if there are foreign gases present in the A/C system. If foreign gases are present, the ACR 2000 will not recover the refrigerant from the A/C system.

The ACR 2000 also features automatic air purge, single pass recycling and an automatic oil drain.

Refer to the **J 43600** ACR 2000 manual for operation and setup instruction. See **Special Tools and Equipment** . Always recharge the A/C System with the proper amount of R-134a. Refer to **Refrigerant System Capacities** for the correct amount.

A/C Refrigerant System Oil Charge Replenishing

If oil was removed from the A/C system during the recovery process or due to component replacement, the oil must be replenished. Oil can be injected into a charged system using **J 45037** . See **Special Tools and Equipment** . For the proper quantities of oil to add to the A/C refrigerant system, refer to **Refrigerant System Capacities** .

FLUSHING

Tools Required

- **J 41447** R-134A A/C Tracer Dye - Box of 24. See **Special Tools and Equipment** .
- **J 42220** Universal 12V Leak Detection Lamp. See **Special Tools and Equipment** .
- **J 43600** ACR 2000 Air Conditioning Service Center. See **Special Tools and Equipment** .
- **J 45268** A/C Flushing Adapter Kit. See **Special Tools and Equipment** .

IMPORTANT: Flushing with the ACR 2000 is not intended to remove metal from the A/C system.

1. Flushing is intended to remove the following:
   - Contaminated PAG oil
   - Desiccant, following a desiccant bag failure
   - Overcharge of PAG oil
   - Refrigerant contamination

IMPORTANT: Warmer engine or ambient temperature decreases the refrigerant recovery time during the A/C flush procedure.

2. Recover the refrigerant. Refer to **Refrigerant Recovery and Recharging** .
3. Remove the orifice tube. Refer to **Expansion (Orifice) Tube Replacement** .
4. Connect the A/C lines with the orifice tube removed.
5. Remove the A/C compressor. Refer to **Compressor Replacement** .
6. Install the J 45268-3 to the A/C compressor hose assembly.

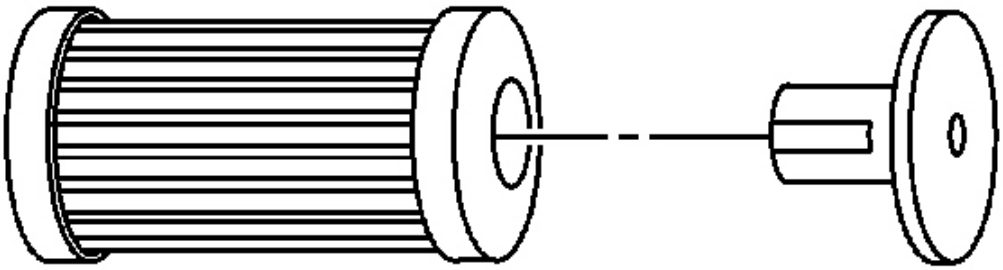

Fig. 2: Removing Check Valve
Courtesy of GENERAL MOTORS CORP.

7. Forward flow refrigerant flushing is recommended for contaminated refrigerant or PAG oil.

   Perform the following procedure:

   IMPORTANT: The filter inside the J 45268-1 is serviceable. Remove and discard the check valve from the filter.

   1. Service the filter with ACDelco P/N GF 470, before each flush.

      Connect the J 45268-1 flush filter to the suction port of the J 45268-3 flush adapter.

   2. Connect the blue hose from the **J 43600** to the J 45268-1 flush filter adapter. See **Special Tools and Equipment** .
   3. Connect the red hose from the **J 43600** to the J 45268-3. See **Special Tools and Equipment** .
8. Reverse flow refrigerant flushing is recommended for desiccant bag failure only.

   Perform the following procedure and replace the accumulator when the flush is complete:

   IMPORTANT: The filter inside the J 45268-1 is serviceable. Remove and discard the check valve from the filter.

   1. Service the filter with ACDelco P/N GF 470, before each flush.

      Connect the J 45268-1 flush filter to the discharge port of the J 45268-3 flush adapter.

   2. Connect the blue hose from the **J 43600** to the J 45268-1 flush filter adapter. See **Special Tools and Equipment** .

3. Connect the red hose from the **J 43600** to the suction port of the J 45268-3. See **Special Tools and Equipment** .

9. Flush the A/C system. Follow the instructions supplied with the **J 43600** . See **Special Tools and Equipment** .

   Close the valve on the external refrigerant tank, before starting the flush process.

10. Remove the J 45268-3 from the A/C compressor hose assembly.
11. Remove the A/C compressor drain plug.
12. Install the A/C compressor drain plug.

    Tighten: Tighten the drain plug to 20 N.m (15 lb ft).

13. If replacing the A/C compressor after flushing the system, perform the following:
    - Determine if the new service compressor is shipped with PAG oil. Refer to **Refrigerant System Capacities** .
    - If the service compressor is shipped with PAG oil, DO NOT DRAIN the new PAG oil from the compressor.
    - Deduct the amount of PAG oil shipped with the service compressor from the amount of PAG oil listed in the capacities table. Refer to **Refrigerant System Capacities** . Add the calculated amount to the compressor, as needed.
    - If the service compressor is shipped dry, no calculation is required. Add the total system capacity of PAG oil to the compressor. Refer to **Refrigerant System Capacities** .

    IMPORTANT: Flushing will remove the fluorescent leak detection dye from the A/C system.

    - Add one bottle of **J 41447** directly to the A/C compressor. See **Special Tools and Equipment** .
14. Install the A/C compressor. Refer to **Compressor Replacement** .
15. Inspect the orifice tube for debris.

    Clean or replace as needed.

16. Install the orifice tube. Refer to **Expansion (Orifice) Tube Replacement** .
17. Evacuate and recharge the A/C system. Refer to **Refrigerant Recovery and Recharging** .

    IMPORTANT: Flushing will remove all the PAG oil from the A/C system.

18. Add the total system capacity of PAG oil to the A/C system. Refer to **Refrigerant System Capacities** .
19. Leak test the fittings using the **J 42220** . See **Special Tools and Equipment** .

COMPRESSOR OIL BALANCING

Draining Procedure

IMPORTANT: Drain and measure as much of the refrigerant oil as possible from the removed compressor.

1. Remove the compressor crankcase oil drain plug and drain the crankcase into a clean, graduated container.

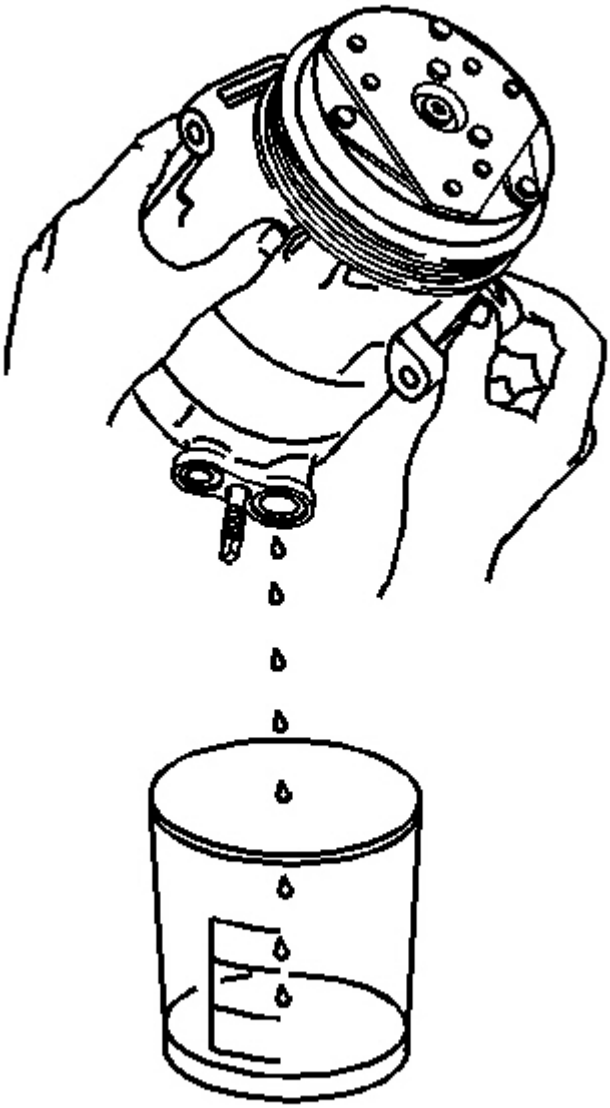

Fig. 3: Draining A/C Compressor Oil
Courtesy of GENERAL MOTORS CORP.

2. Drain the oil from both the suction and discharge ports of the removed compressor into the same container.

   Rotate the compressor shaft to assist in draining the compressor.

3. Measure and record the amount of oil drained from the removed compressor.

   This measurement will be used during installation of the replacement compressor.

4. Properly discard the used refrigerant oil.

Balancing Procedure

IMPORTANT: The refrigerant oil in the A/C system must be balanced during compressor replacement.
Follow the balancing instructions provided with the compressor.

1. The replacement compressor is shipped without refrigerant oil.

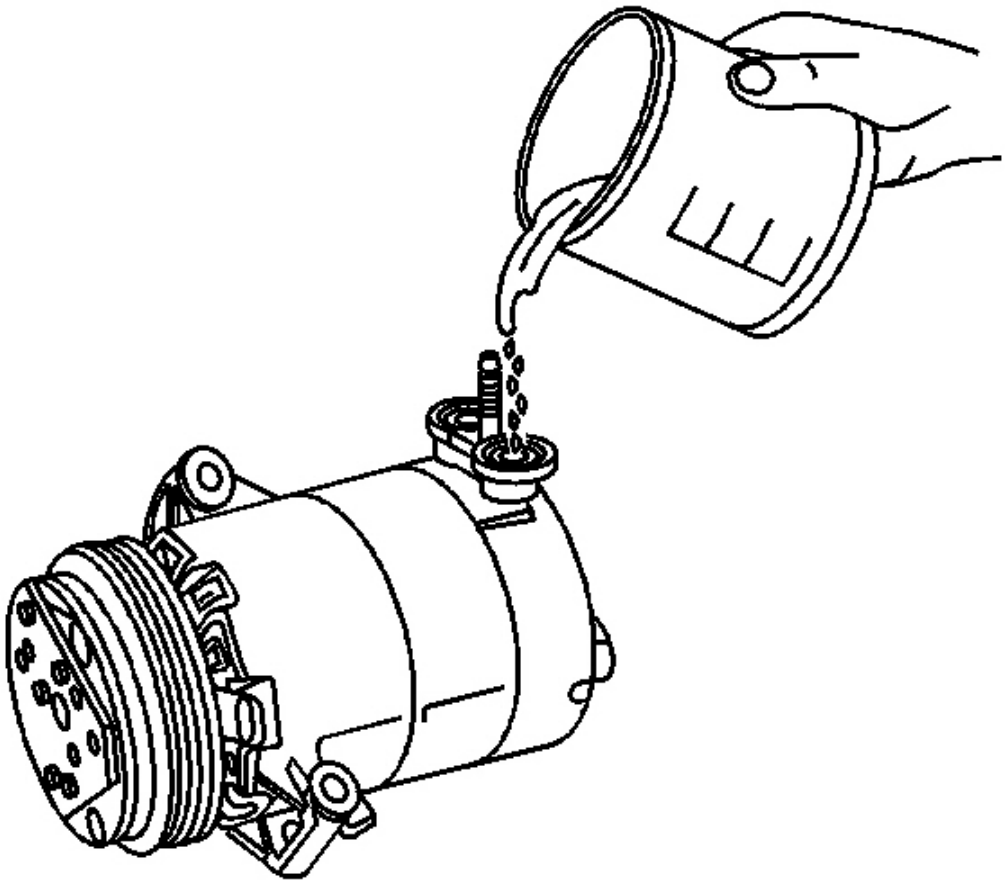

Fig. 4: Adding Measured Compressor Oil
Courtesy of GENERAL MOTORS CORP.

2. Calculate the amount of refrigerant oil required for oil balancing.

   Compare the following refrigerant oil capacities:

   - The amount drained and recorded during compressor removal.
   - The amount recommended for component replacement. Refer to **Refrigerant System Capacities** .
3. Add the greater amount of refrigerant oil to the A/C compressor.

COMPRESSOR REPLACEMENT

Tools Required

J 39400-A Halogen Leak Detector. See **Special Tools and Equipment** .

Removal Procedure

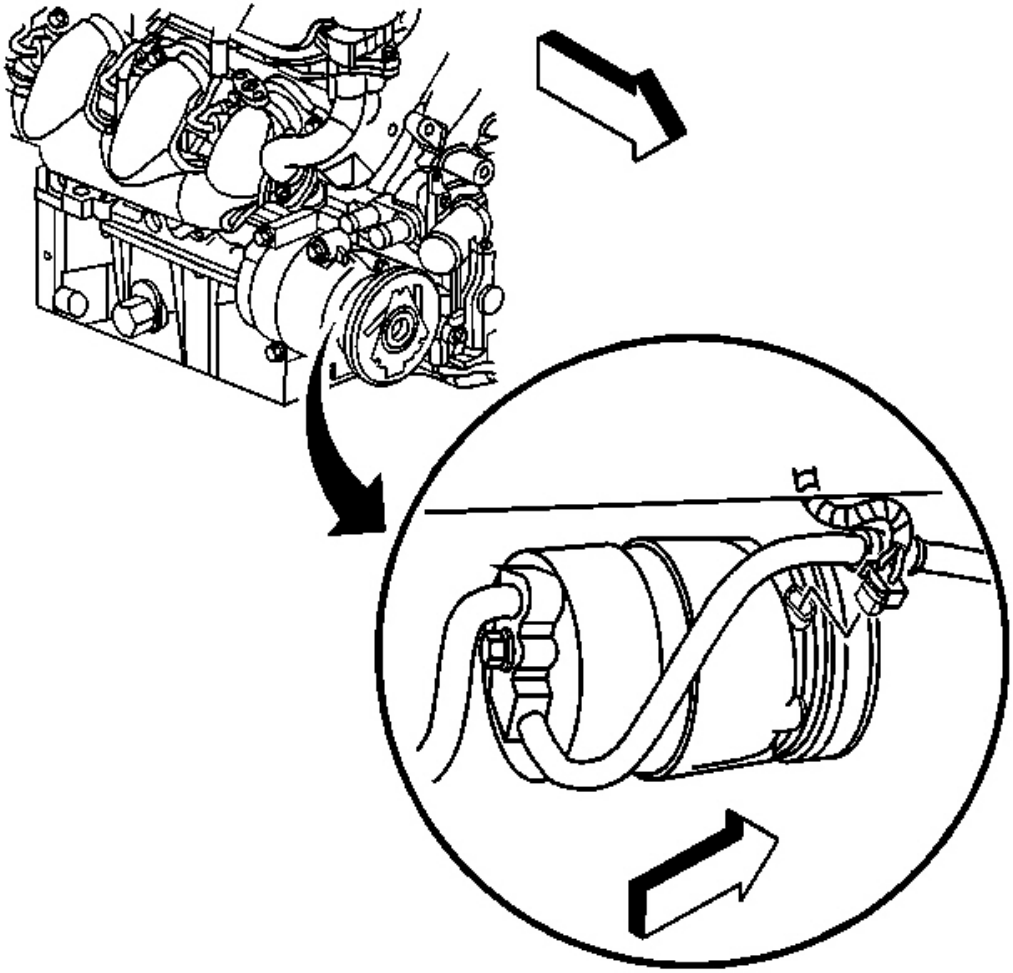

Fig. 5: Compressor Clutch Electrical Connector
Courtesy of GENERAL MOTORS CORP.

1. Recover the refrigerant from the A/C system. Refer to **Refrigerant Recovery and Recharging**
2. Remove the battery heat shield. Refer to **Battery Heat Shield Replacement** in Engine Electrical.
3. Remove the water pump. Refer to **Water Pump Replacement** in Engine Cooling.
4. Remove the compressor drive belt from the compressor clutch. Refer to **Drive Belt Replacement - Air Conditioning** in Engine Mechanical - 5.7L.

5. Remove the RH exhaust manifold heat shield.
6. Disconnect the compressor clutch electrical connector.

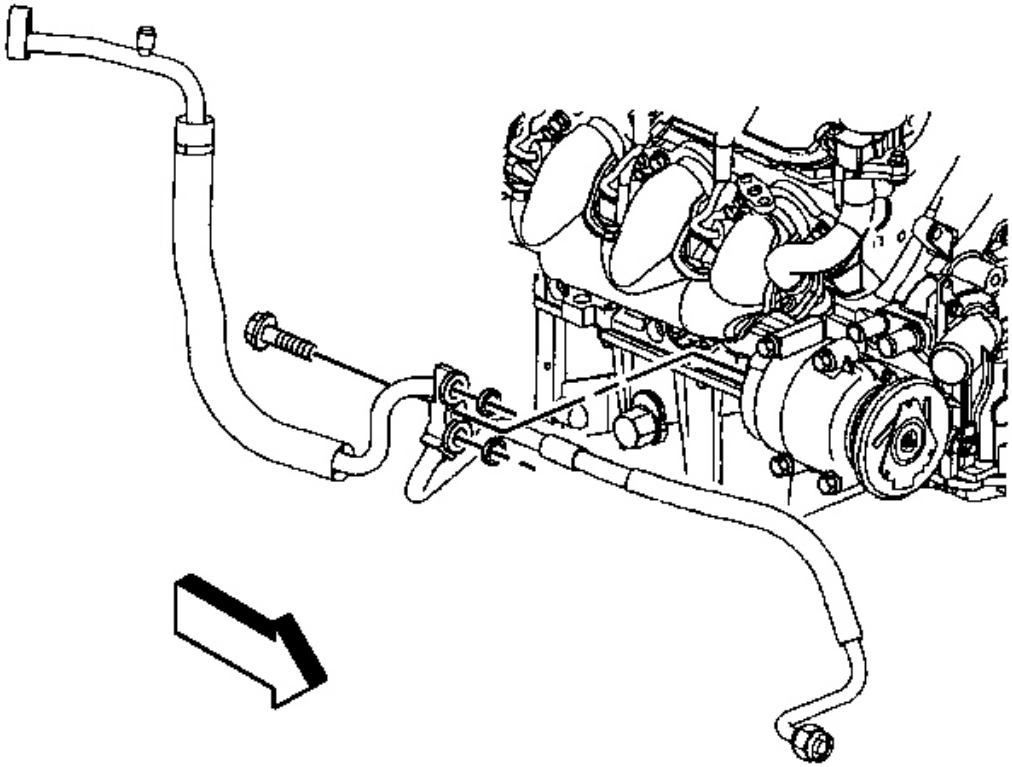

Fig. 6: Compressor Hose Assembly & Retaining Bolt
Courtesy of GENERAL MOTORS CORP.

7. Remove the compressor hose assembly retaining bolt.

IMPORTANT: Cap or tape off the A/C components immediately to prevent system contamination.

8. Disconnect the compressor hose assembly from the compressor.
9. Remove and discard the sealing washers.
10. Cap or tape off the compressor hose assembly.

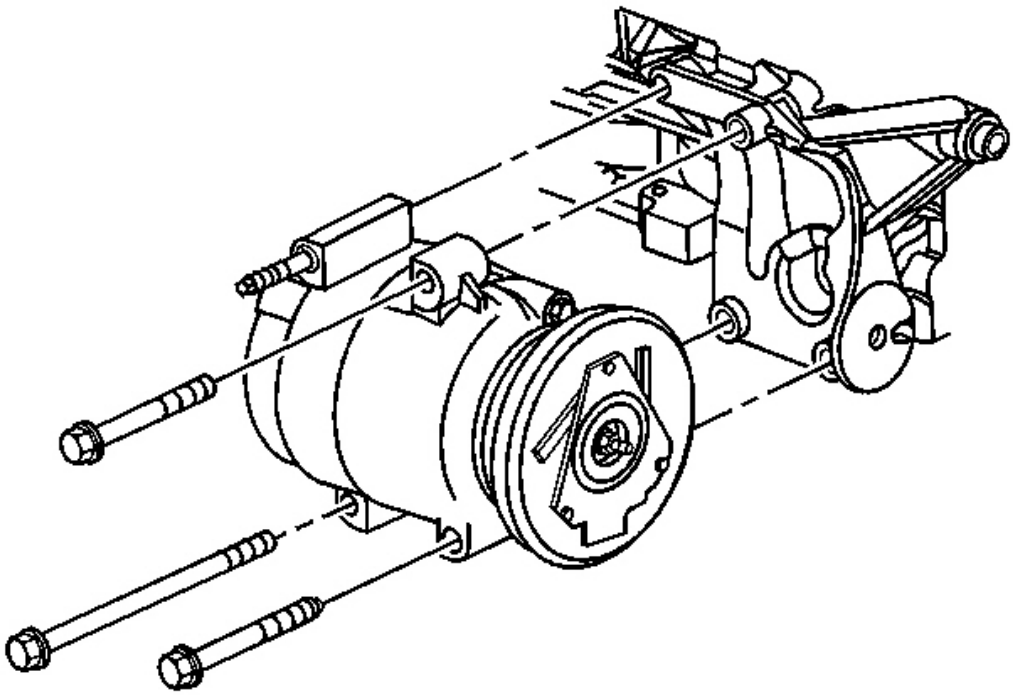

Fig. 7: Lower Compressor Mounting & Bolts
Courtesy of GENERAL MOTORS CORP.

11. Remove the lower compressor mounting bolts.

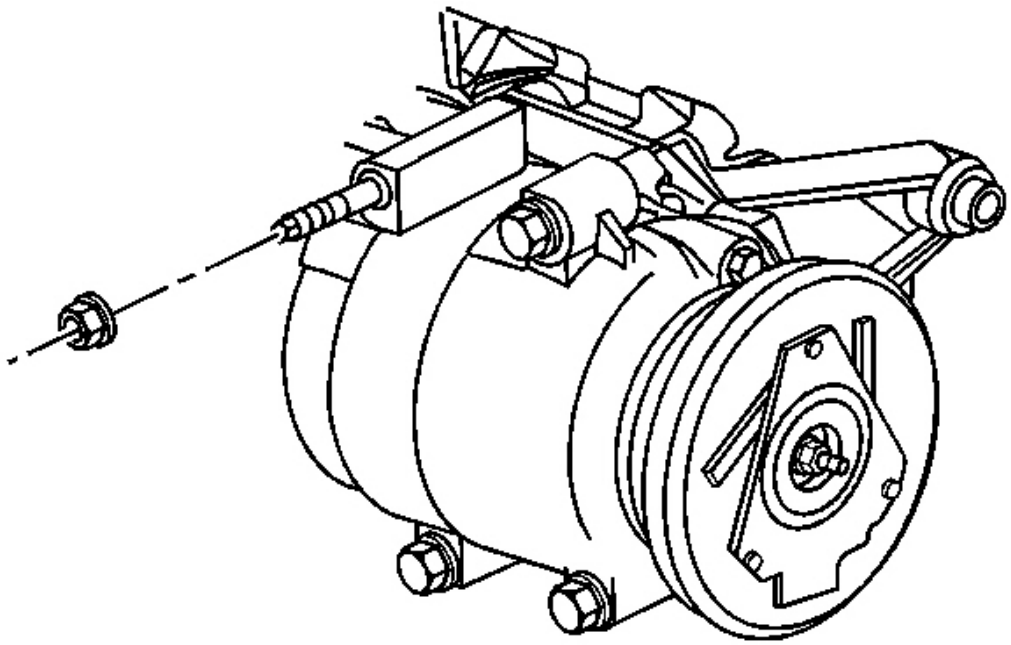

Fig. 8: Compressor Mounting & Stud
Courtesy of GENERAL MOTORS CORP.

12. Remove the compressor mounting nut.
13. Fully loosen the compressor mounting stud.

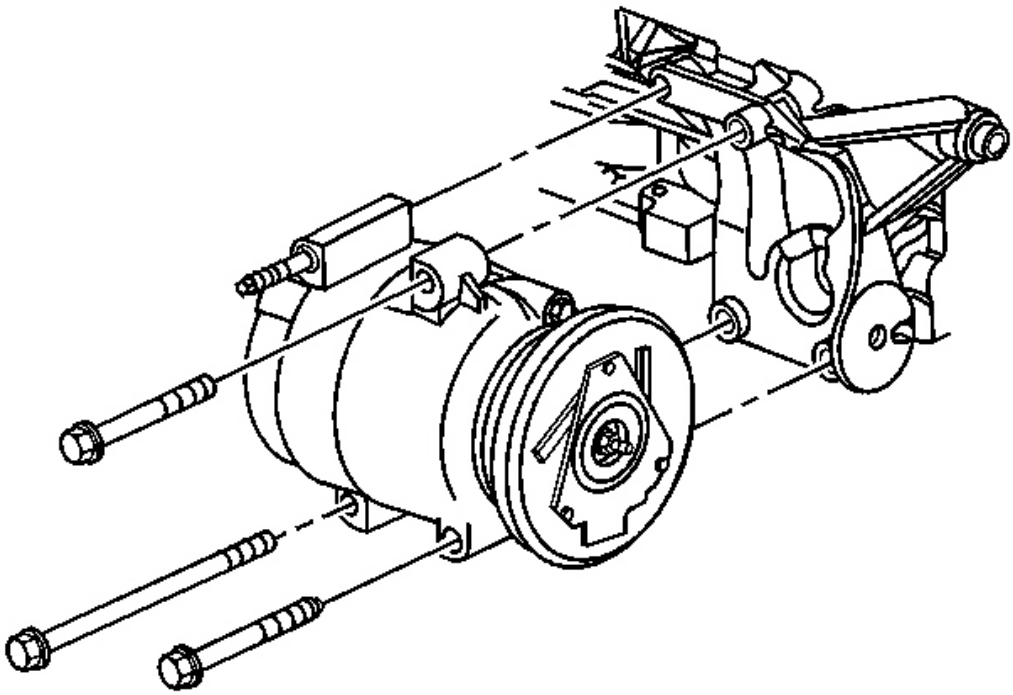

Fig. 9: Lower Compressor Mounting & Bolts
Courtesy of GENERAL MOTORS CORP.

14. Remove the upper compressor mounting bolt.
15. Remove the compressor and the mounting stud from the engine block.
16. Remove the compressor mounting stud from the compressor.
17. If replacing the compressor, refer to **Compressor Oil Balancing** .

Installation Procedure

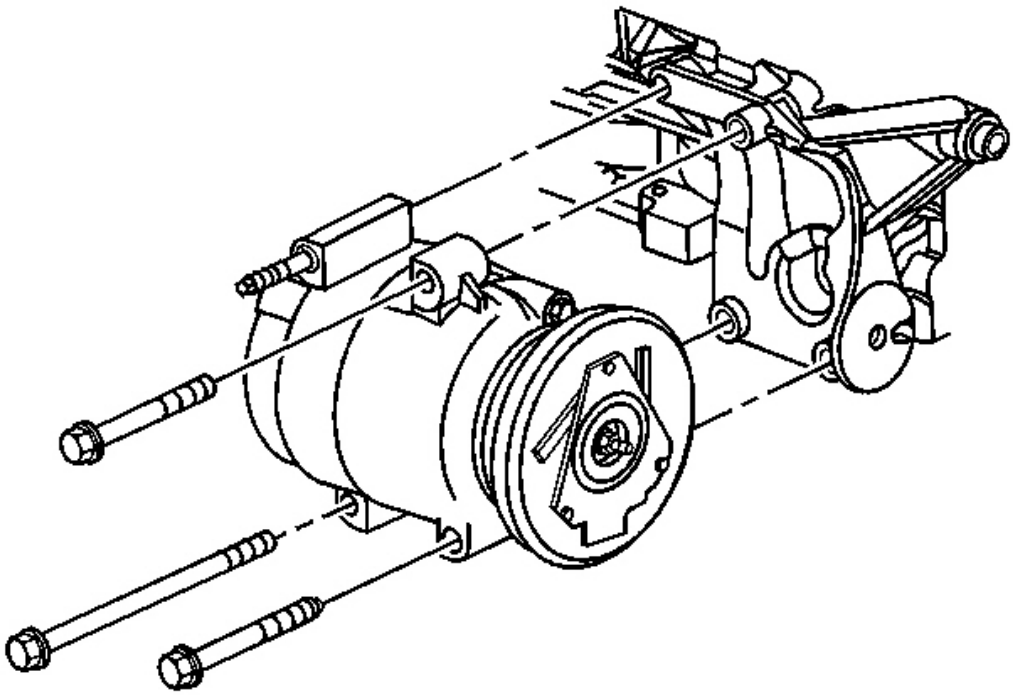

Fig. 10: Lower Compressor Mounting & Bolts
Courtesy of GENERAL MOTORS CORP.

1. Install the compressor mounting stud to the compressor.
2. Install the compressor into position on the compressor mounting bracket.
3. Install the compressor mounting stud to the engine block.
4. Install the upper compressor mounting bolt.
5. Install the lower compressor mounting bolts.

NOTE: Refer to Fastener Notice in Cautions and Notices.

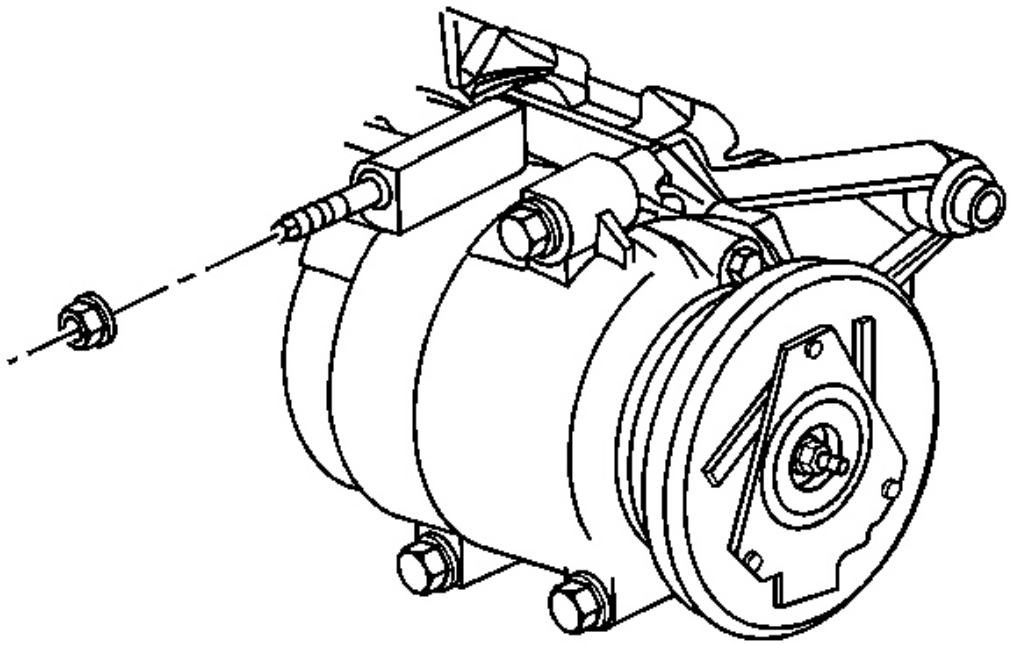

Fig. 11: Compressor Mounting & Stud
Courtesy of GENERAL MOTORS CORP.

6. Tighten the compressor mounting stud.

   Tighten: Tighten the stud to 9 N.m (80 lb in).

7. Install the compressor mounting nut.

IMPORTANT: Tighten the compressor mounting bolts in the following sequence:

1. **Front upper**
2. **Front lower**
3. **Rear lower**

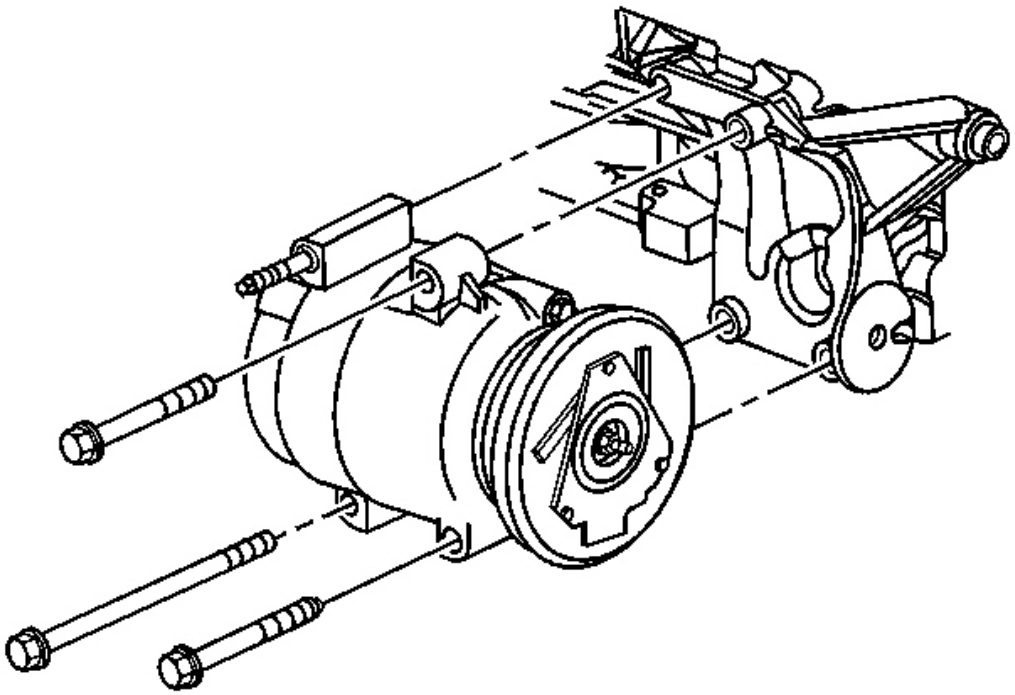

Fig. 12: Lower Compressor Mounting & Bolts
Courtesy of GENERAL MOTORS CORP.

8. Tighten the compressor mounting bolts.

   Tighten: Tighten the bolts to 40 N.m (30 lb ft).

9. Tighten the compressor mounting nut

   Tighten: Tighten the nut to 40 N.m (30 lb ft).

10. Remove the cap or tape from the compressor hose assembly.
11. Install new sealing washers onto the compressor hose assembly. Refer to **Sealing Washer Replacement** .

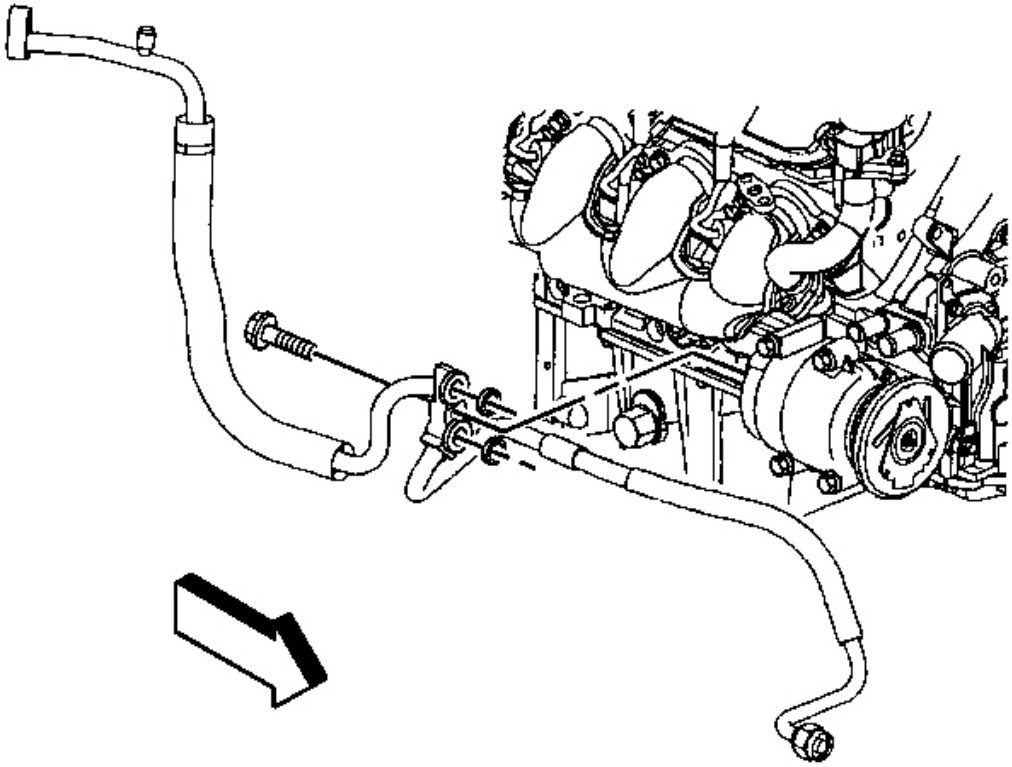

Fig. 13: Compressor Hose Assembly & Retaining Bolt
Courtesy of GENERAL MOTORS CORP.

12. Install the compressor hose assembly to the compressor.
13. Install the compressor hose assembly to compressor retaining bolt.

Tighten: Tighten the bolt to 26 N.m (19 lb ft).

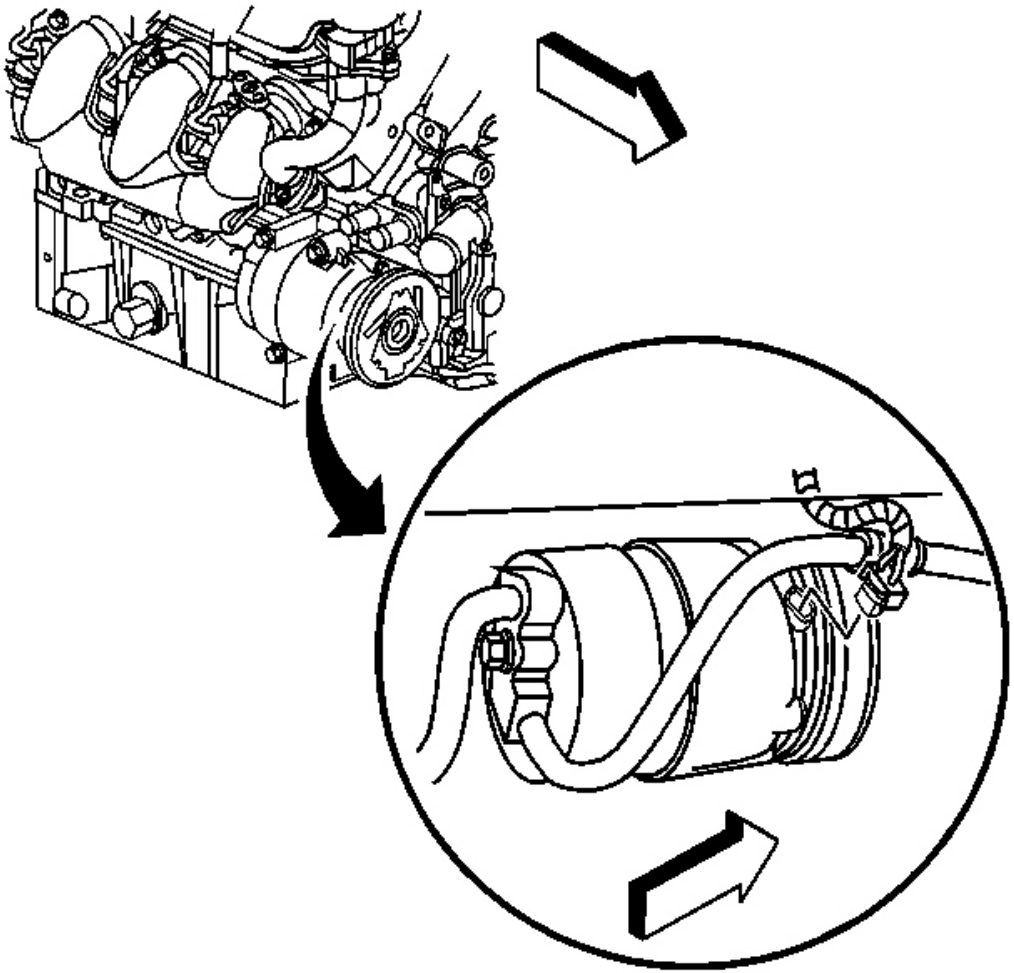

Fig. 14: Compressor Clutch Electrical Connector
Courtesy of GENERAL MOTORS CORP.

14. Connect the compressor clutch electrical connector.
15. Install the RH exhaust manifold heat shield.
16. Install the compressor drive belt. Refer to **Drive Belt Replacement - Air Conditioning** in Engine Mechanical - 5.7L.
17. Install the water pump. Refer to **Water Pump Replacement** in Engine Cooling.
18. Install the battery heat shield. Refer to **Battery Heat Shield Replacement** in Engine Electrical.
19. Evacuate and recharge the A/C system. Refer to **Refrigerant Recovery and Recharging** .
20. Leak test the fittings of the component using **J 39400-A** . See **Special Tools and Equipment** .

COMPRESSOR CLUTCH PLATE AND HUB ASSEMBLY REMOVAL (V7 - DIRECT MOUNT)

Tools Required

- **J 33013-B** Hub and Drive Plate Remover/Installer. See **Special Tools and Equipment** .
- **J 33027-A** Clutch Hub Holding Tool. See **Special Tools and Equipment** .
- **J 41790-A** A/C Compressor Holding Fixture. See **Special Tools and Equipment** .

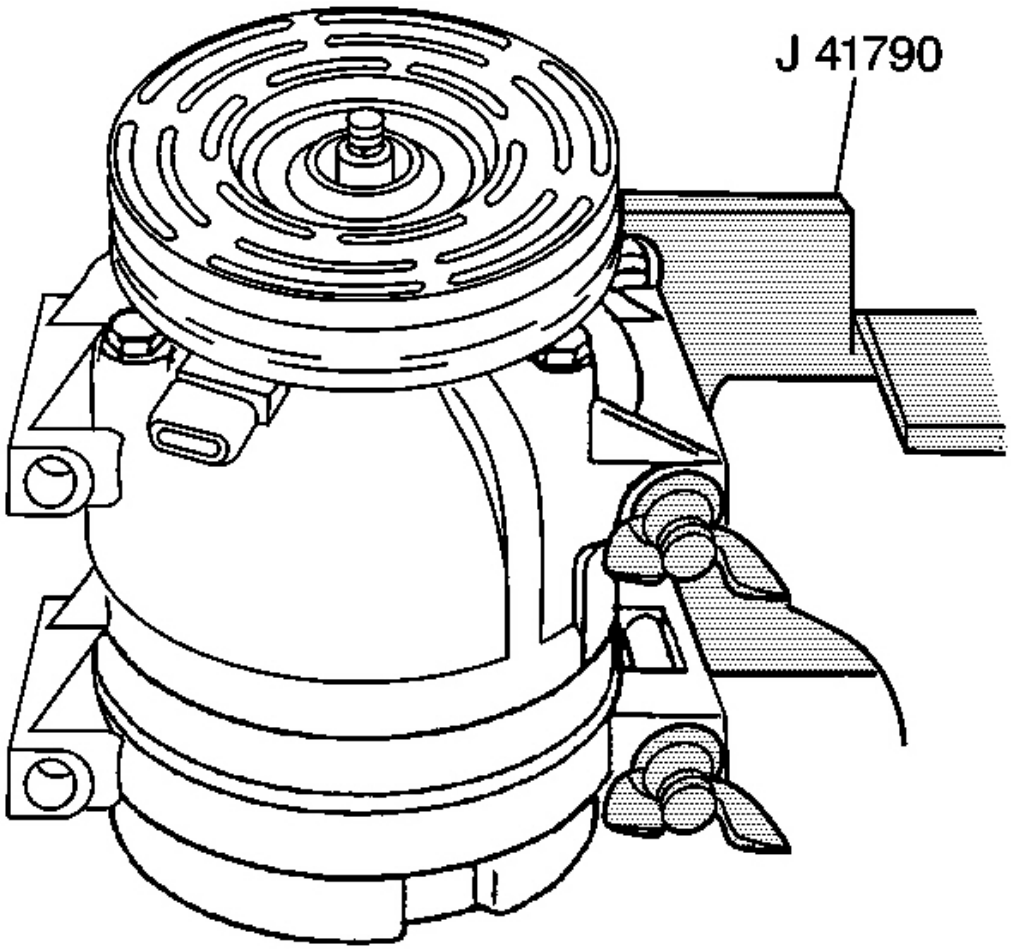

Fig. 15: Compressor Mounting Fixture & J 41790-A
Courtesy of GENERAL MOTORS CORP.

1. Remove the A/C compressor from the vehicle.
2. Clamp the A/C compressor holding fixture, **J 41790-A** in a vise and attach the A/C compressor to the **J**

41790-A . See **Special Tools and Equipment** .

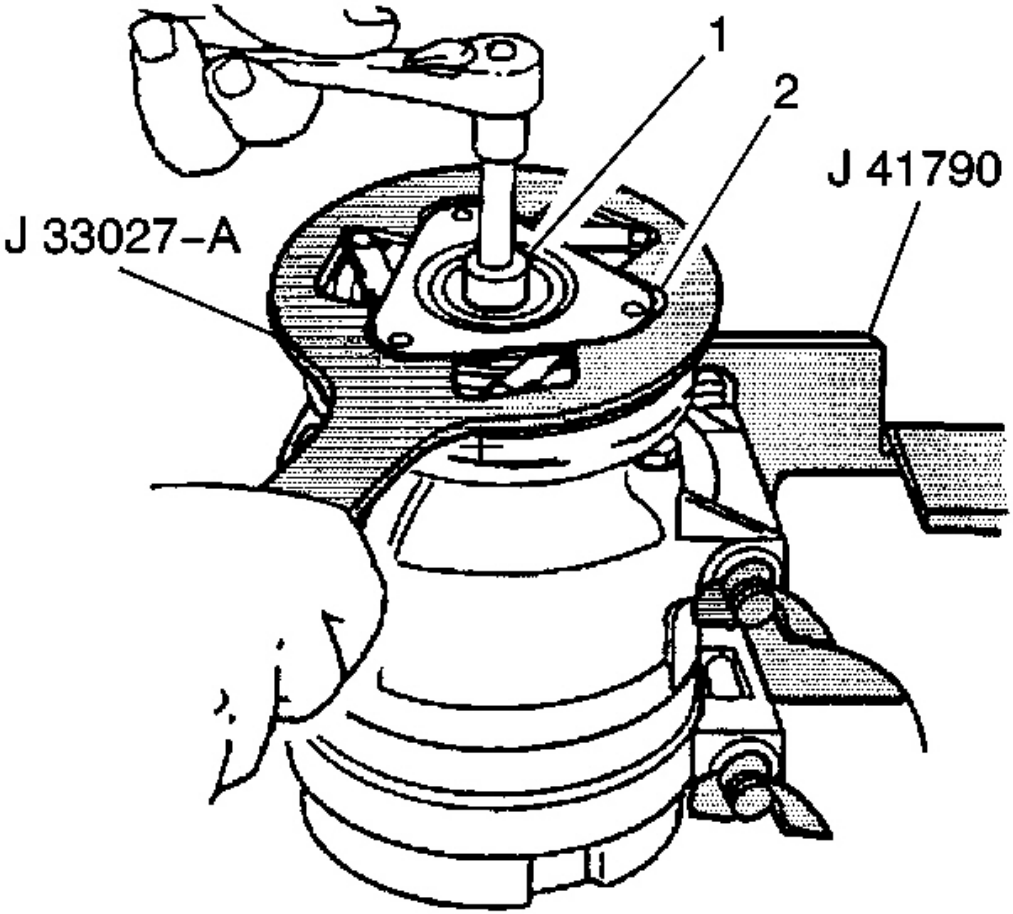

Fig. 16: Clutch Hub, Drive Plate Assembly, & J 41790
Courtesy of GENERAL MOTORS CORP.

3. Hold the clutch hub and drive plate assembly (2) in place using the **J 33027-A** . See **Special Tools and Equipment** .
4. Remove the A/C compressor shaft nut with a 13 mm socket (1).

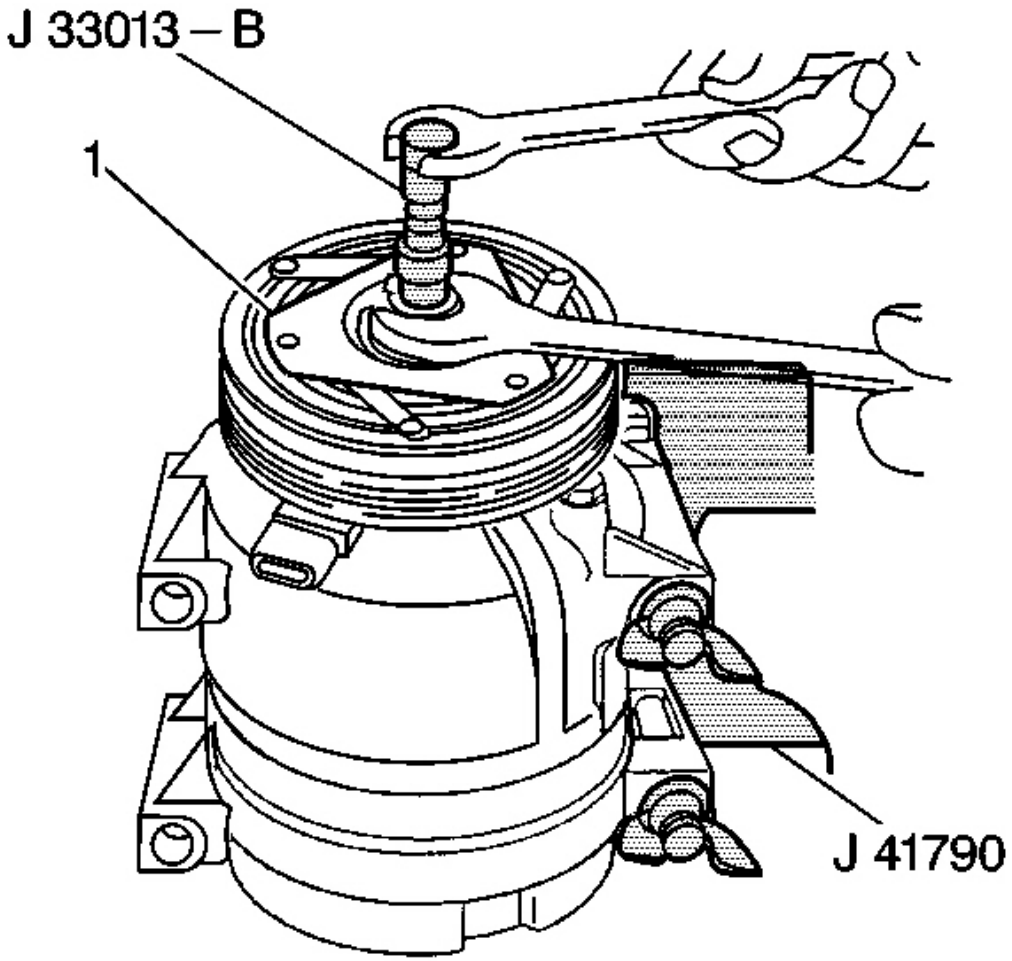

Fig. 17: Clutch Hub, Drive Plate Assembly J 33013-B & J 41790
Courtesy of GENERAL MOTORS CORP.

5. Thread the **J 33013-B** into the hub. See **Special Tools and Equipment** .
6. Remove the hub and drive plate assembly (1) by turning the center screw into the body of the **J 33013-B** and against the A/C compressor shaft. See **Special Tools and Equipment** .
7. Remove the shaft key and retain for reassembly.

CLUTCH ROTOR AND/OR BEARING REMOVAL (V7 - DIRECT MOUNT)

Tools Required

- **J 33023-A** Puller Pilot. See **Special Tools and Equipment** .
- **J 41552** Compressor Pulley Puller. See **Special Tools and Equipment** .
- **J 41790-A** Compressor Holding Fixture. See **Special Tools and Equipment** .

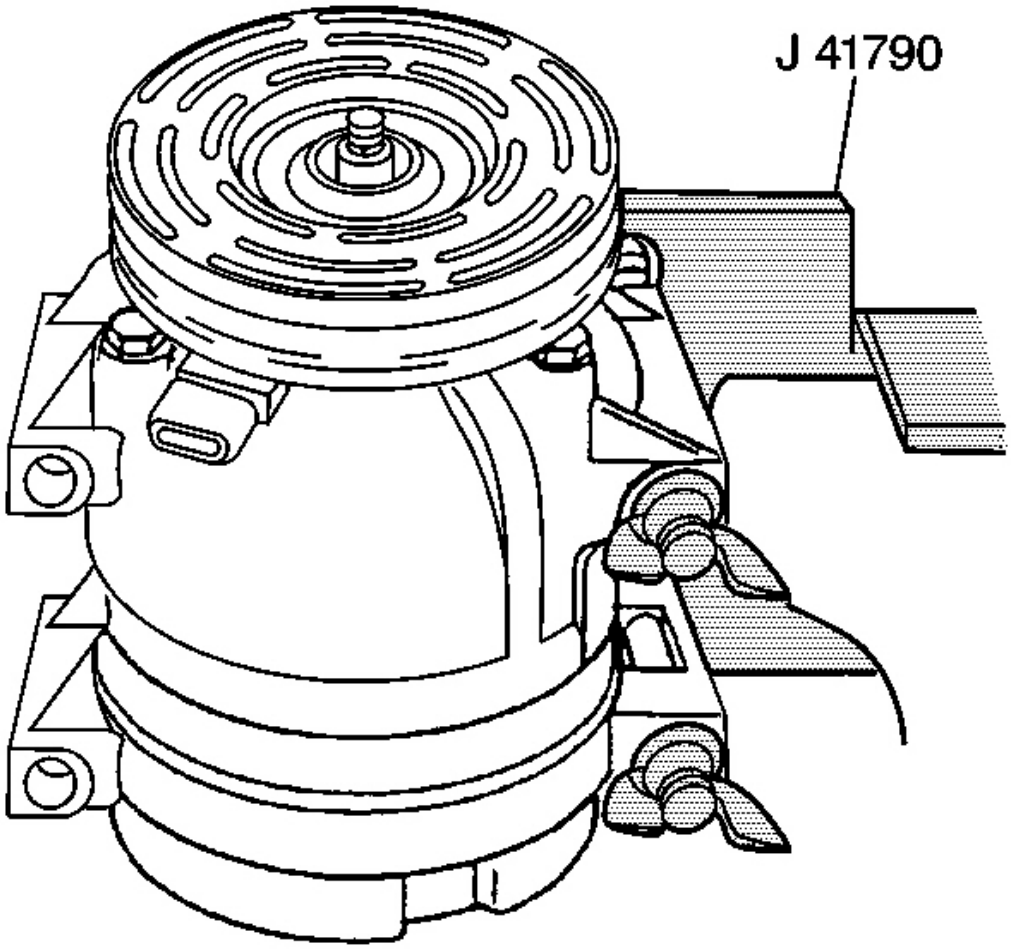

Fig. 18: Compressor Mounting Fixture & J 41790-A
Courtesy of GENERAL MOTORS CORP.

1. Remove the A/C compressor from the vehicle.
2. Clamp **J 41790-A** in a vise and attach the A/C compressor to **J 41790-A** . See **Special Tools and Equipment** .

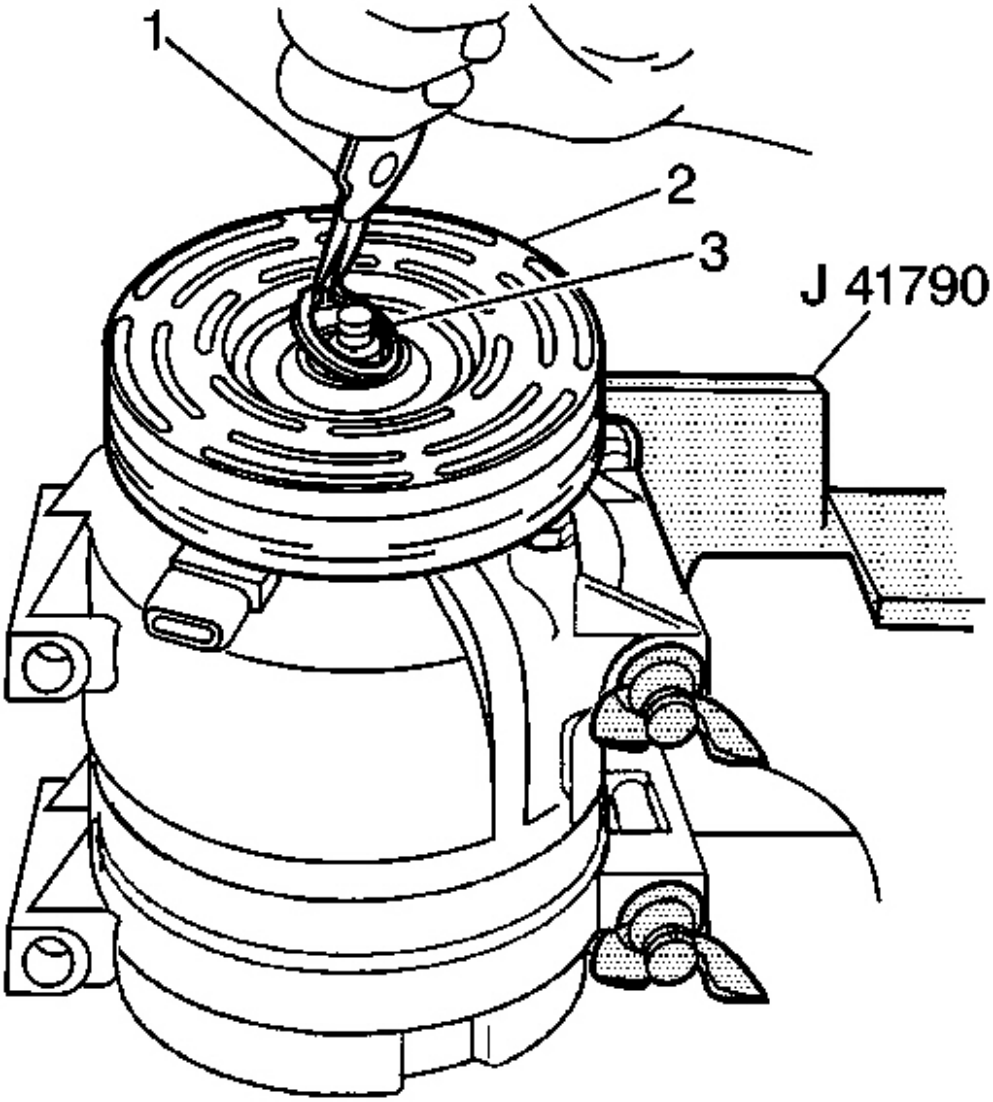

Fig. 19: Clutch Rotor, Bearing & J 41790-A
Courtesy of GENERAL MOTORS CORP.

3. Remove the clutch plate and hub assembly. Refer to **Compressor Clutch Plate and Hub Assembly Removal (V7 - Direct Mount)** .
4. Using external snap ring pliers (1), remove the retaining ring (3) from the clutch rotor and bearing assembly.

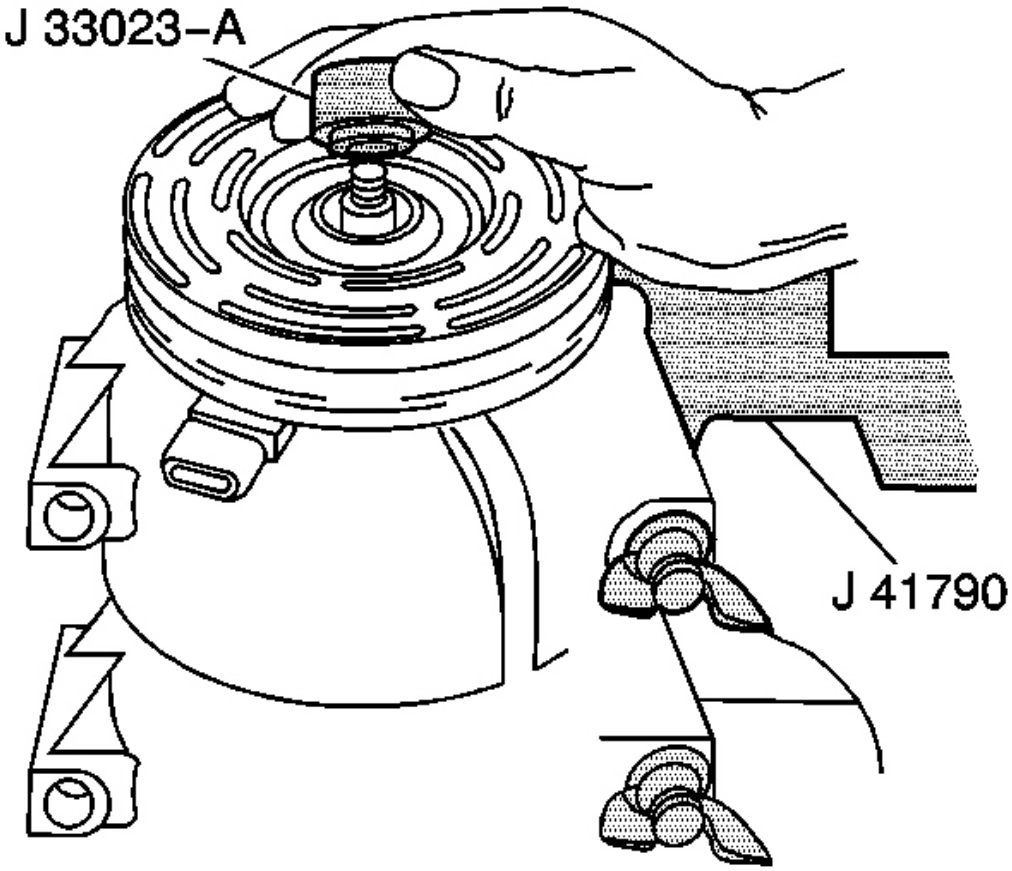

Fig. 20: J 33023-A & Clutch Rotor
Courtesy of GENERAL MOTORS CORP.

5. Place **J 33023-A** on the clutch rotor. See **Special Tools and Equipment** .

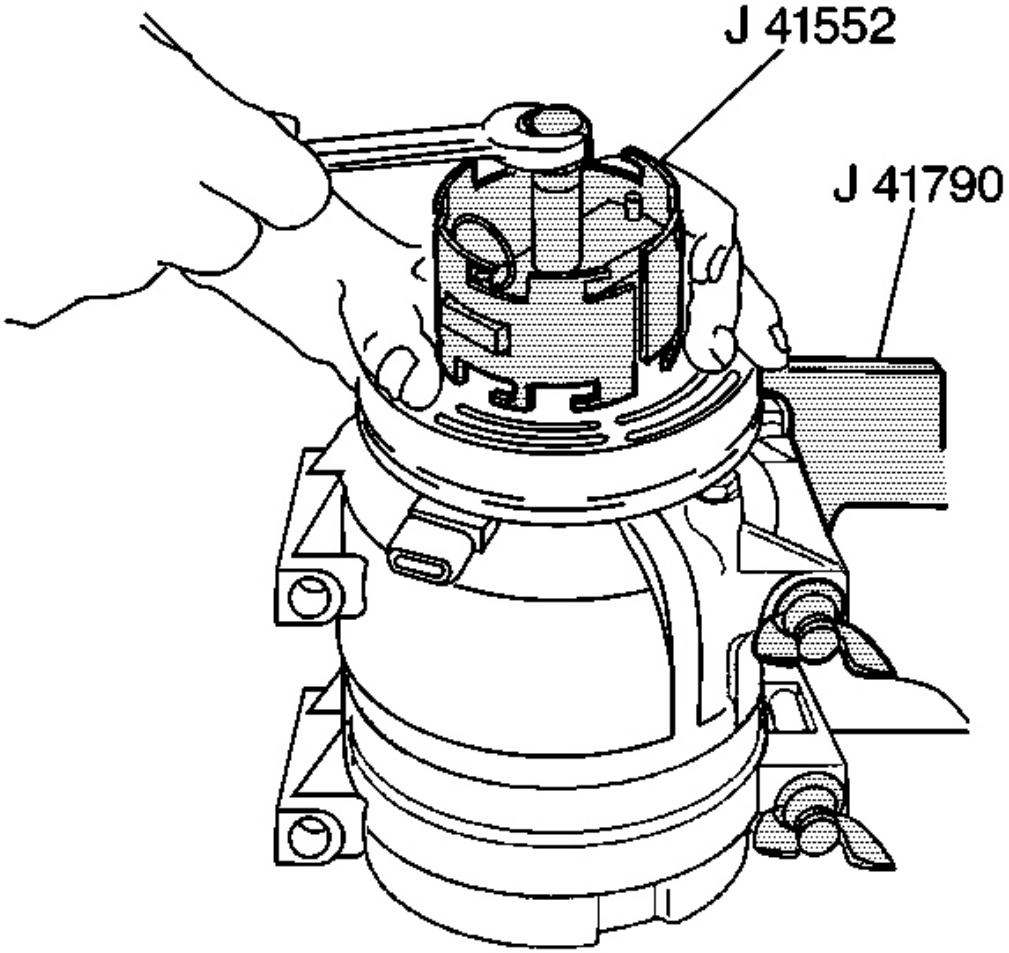

Fig. 21: J 41552 & Inner Circle Slots Of Rotor
Courtesy of GENERAL MOTORS CORP.

6. Install **J 41552** down into the inner circle of slots in the rotor. See **Special Tools and Equipment** . Turn **J 41552** clockwise in the slots to engage the puller tangs with the rotor. See **Special Tools and Equipment** .
7. Hold **J 41552** in place and use a wrench to turn the center forcing screw against **J 33023-A** to remove the clutch rotor and bearing assembly. See **Special Tools and Equipment** .

COMPRESSOR CLUTCH COIL REMOVAL

Tools Required

- **J 8433** A/C Compressor Pulley Puller. See **Special Tools and Equipment** .
- **J 8433-3** Forcing Screw. See **Special Tools and Equipment** .
- **J 33023-A** Puller Pilot. See **Special Tools and Equipment** .
- **J 33025** Clutch Coil Puller Legs. See **Special Tools and Equipment** .
- **J 41790-A** A/C Compressor Holding Fixture. See **Special Tools and Equipment** .

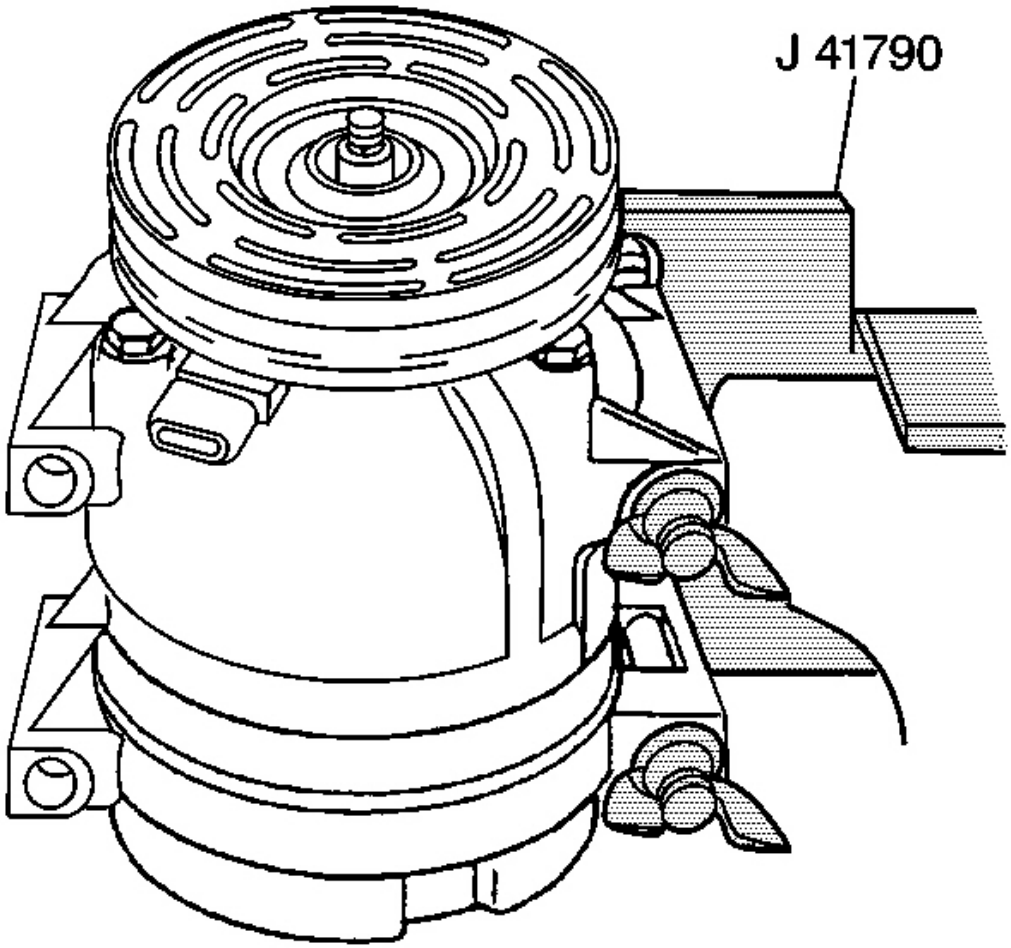

Fig. 22: Compressor Mounting Fixture & J 41790-A
Courtesy of GENERAL MOTORS CORP.

1. Remove the A/C compressor from the vehicle.
2. Clamp the **J 41790-A** in a vise and attach the A/C compressor to the **J 41790-A** . See **Special Tools and Equipment** .

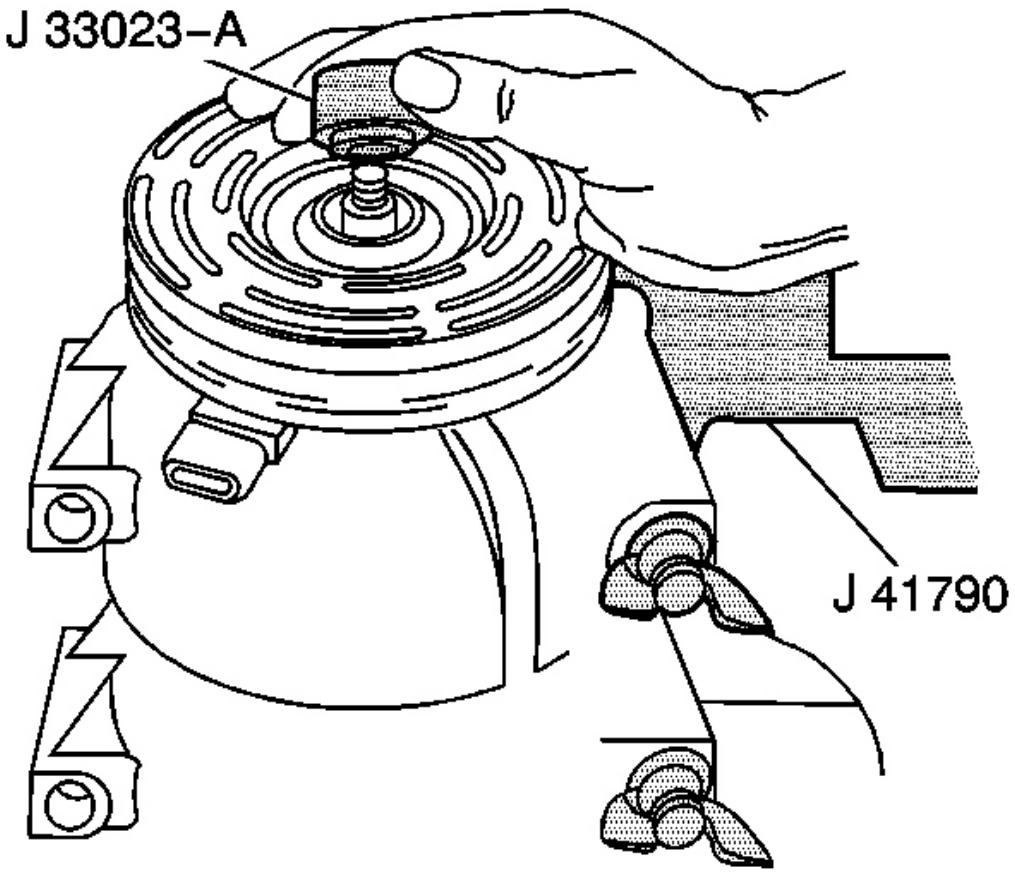

Fig. 23: J 33023-A & Clutch Rotor
Courtesy of GENERAL MOTORS CORP.

3. Remove the A/C compressor clutch plate and hub assembly. Refer to **Compressor Clutch Plate and Hub Assembly Removal (V7 - Direct Mount)** .
4. Install the **J 33023-A** onto the front head of the A/C compressor. See **Special Tools and Equipment** .
5. Remove the A/C compressor rotor and bearing assembly. Refer to **Clutch Rotor and/or Bearing Removal (V7 - Direct Mount)** .

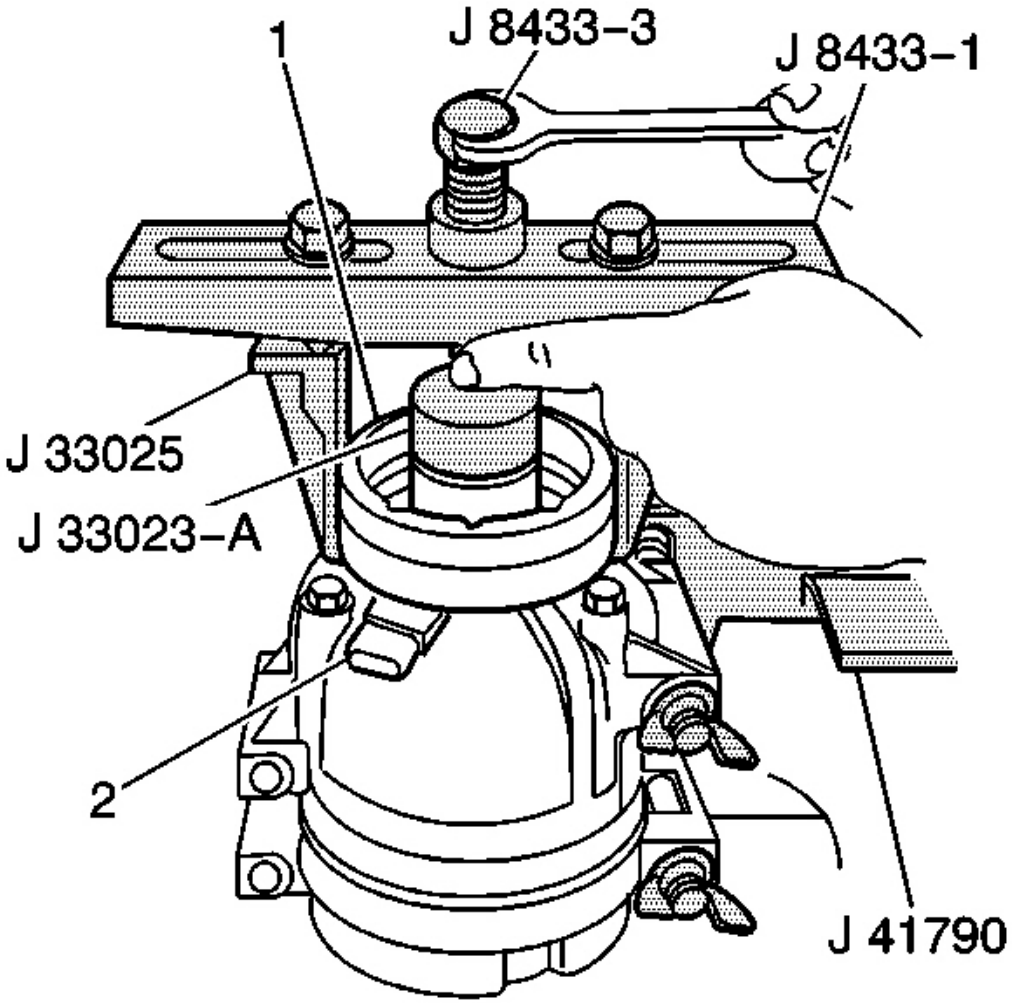

Fig. 24: J 33025, J 8433, J 8433-3, J 33023-A & A/C Compressor Clutch Coil
Courtesy of GENERAL MOTORS CORP.

6. Mark the clutch coil terminal location (2) on the A/C compressor front head.
7. Install the **J 33025** onto the **J 8433** . See **Special Tools and Equipment** .
8. Install the **J 8433** onto the A/C compressor clutch coil (1) and tighten the puller leg bolts. See **Special Tools and Equipment** .
9. Tighten the center forcing screw **J 8433-3** of the **J 8433** against the **J 33023-A** to remove the A/C compressor clutch coil from the A/C compressor. See **Special Tools and Equipment** .
10. Remove the **J 8433-3** , the **J 33023-A** , the **J 33025** and the **J 8433** . See **Special Tools and Equipment** .

COMPRESSOR CONTROL VALVE ASSEMBLY REMOVAL (V7 - DIRECT MOUNT)

Tools Required

J 41790-A A/C Compressor Holding Fixture. See **Special Tools and Equipment** .

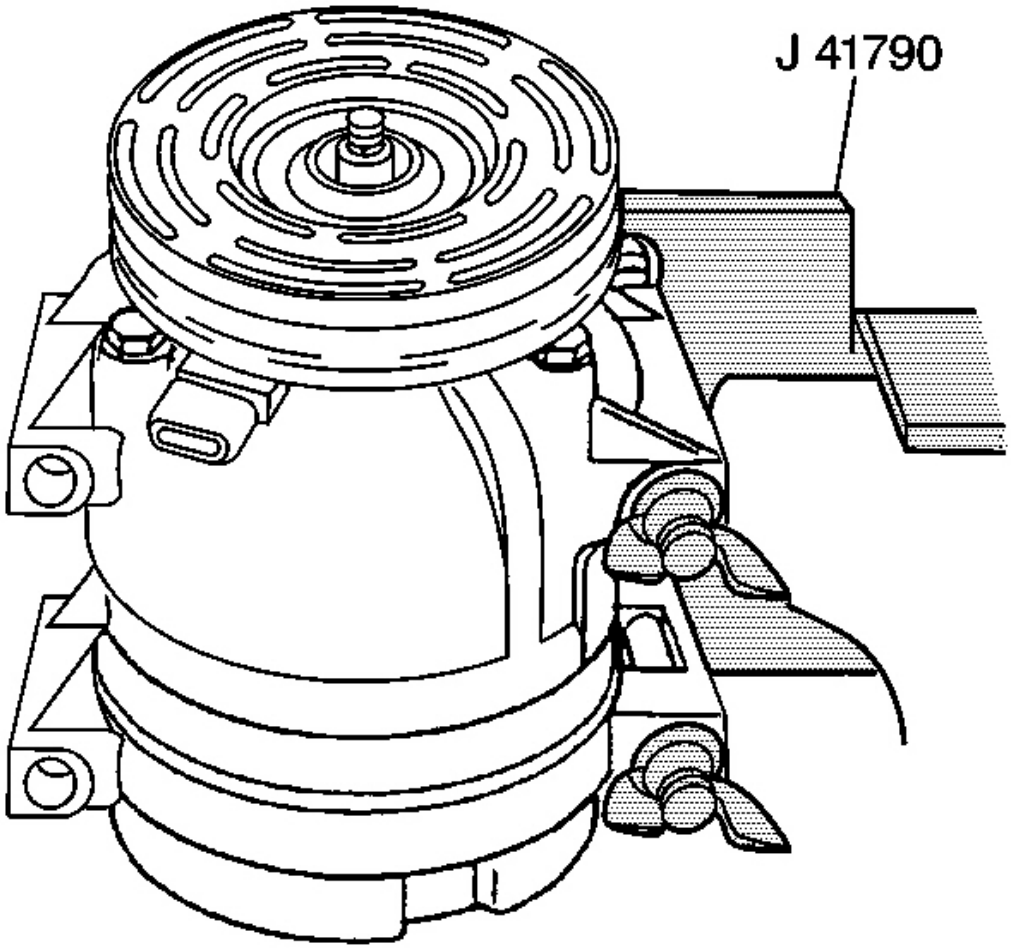

Fig. 25: Compressor Mounting Fixture & J 41790-A
Courtesy of GENERAL MOTORS CORP.

1. Remove the A/C compressor from the vehicle.
2. Clamp the **J 41790-A** in a vise and attach the A/C compressor to the **J 41790-A** . See **Special Tools and Equipment** .

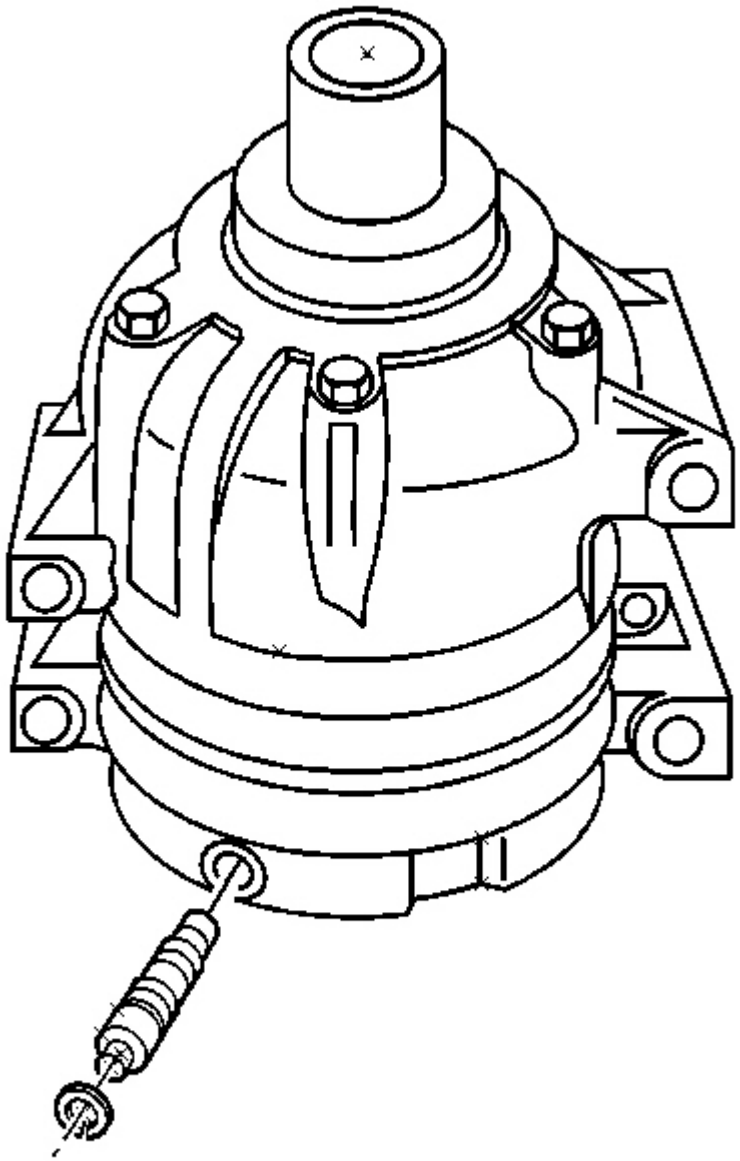

Fig. 26: A/C Compressor Control Valve & Retaining Ring
Courtesy of GENERAL MOTORS CORP.

3. Using internal snap ring pliers, remove the A/C compressor control valve retaining ring.
4. Remove the A/C compressor control valve from the A/C compressor.

COMPRESSOR PRESSURE RELIEF VALVE REMOVAL (V7 - DIRECT MOUNT)

Tools Required

J 41790-A A/C Compressor Holding Fixture. See **Special Tools and Equipment** .

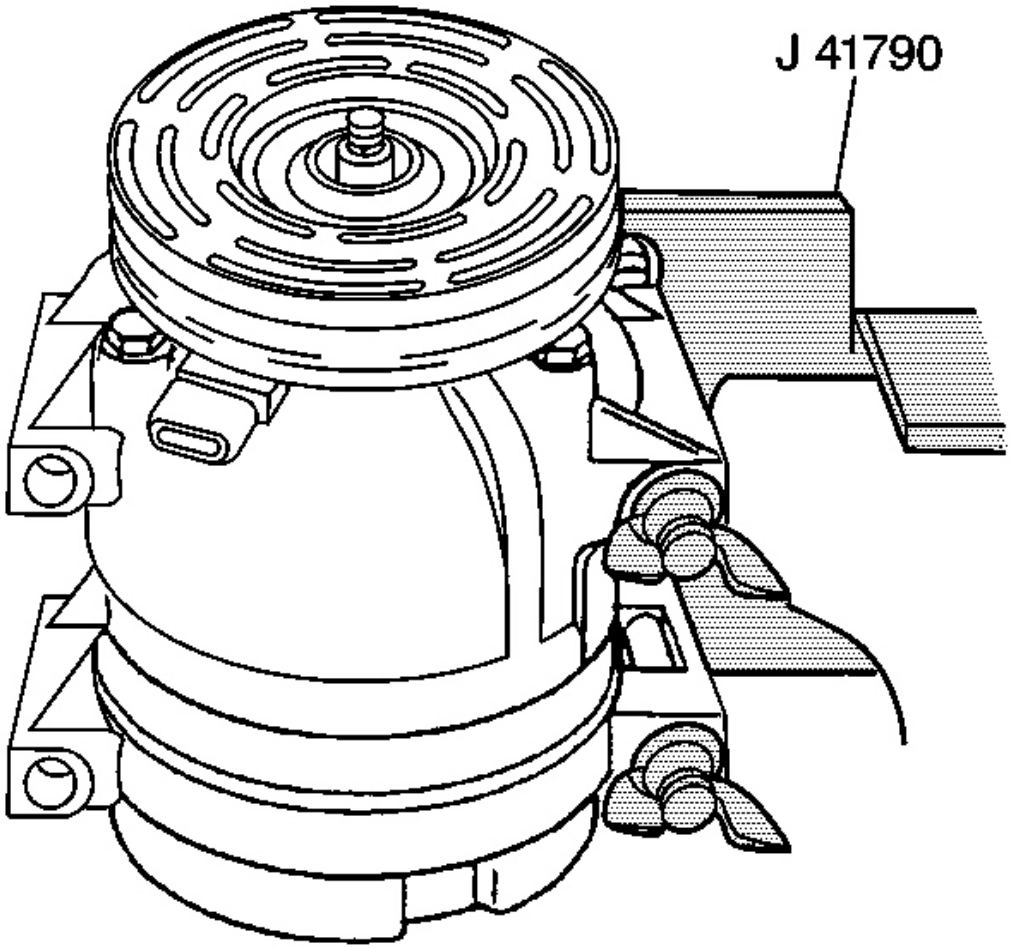

Fig. 27: Compressor Mounting Fixture & J 41790-A
Courtesy of GENERAL MOTORS CORP.

1. Remove the A/C compressor from the vehicle.
2. Clamp the **J 41790-A** in a vise and attach the A/C compressor to the **J 41790-A** . See **Special Tools and Equipment** .

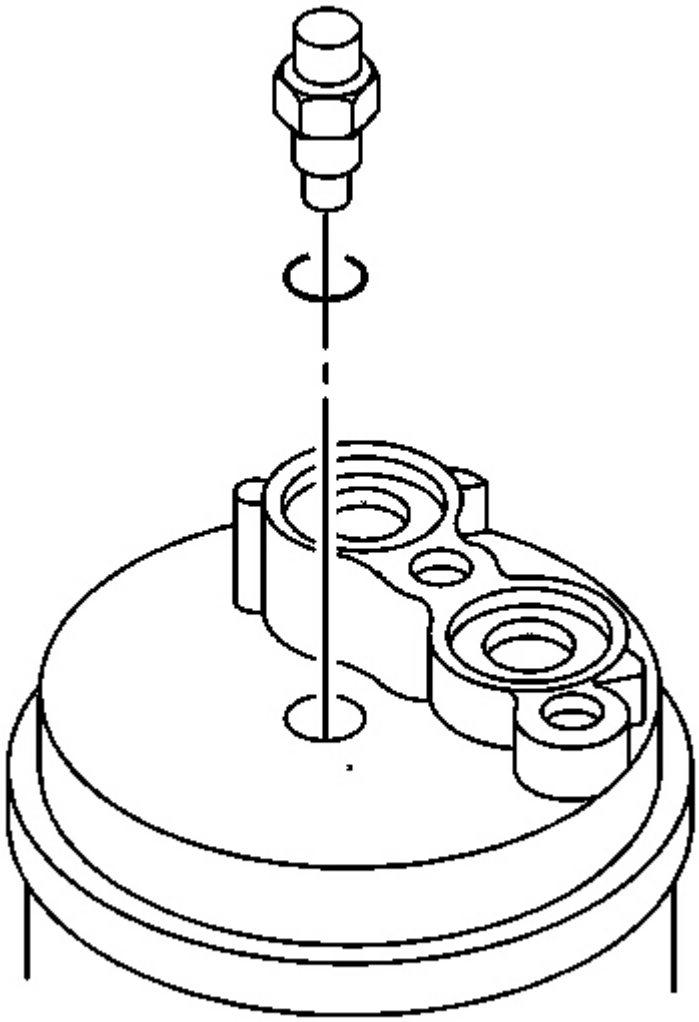

Fig. 28: Rear Head A/C Compressor & Pressure Relief Valve
Courtesy of GENERAL MOTORS CORP.

3. Remove the pressure relief valve from the rear head of the A/C compressor.

COMPRESSOR CONTROL VALVE ASSEMBLY INSTALL (V7 - DIRECT MOUNT)

Tools Required

J 41790-A A/C Compressor Holding Fixture. See **Special Tools and Equipment** .

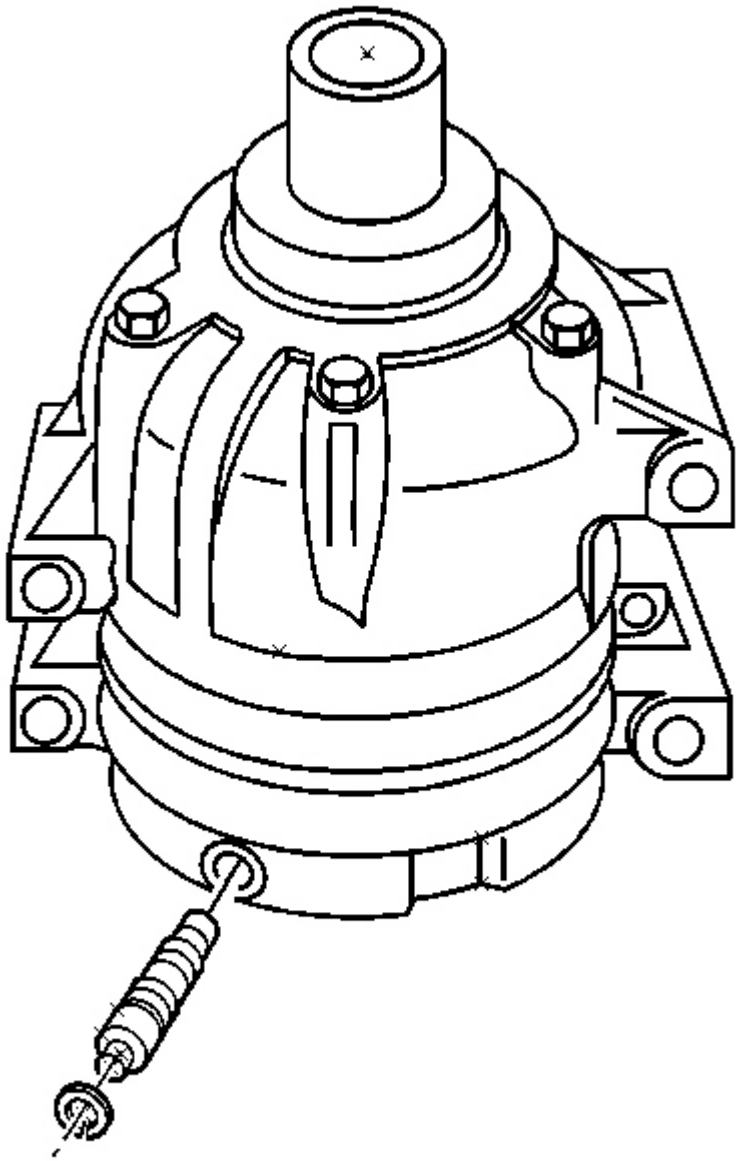

Fig. 29: A/C Compressor Control Valve & Retaining Ring
Courtesy of GENERAL MOTORS CORP.

1. Coat the control valve O-ring with clean 525 viscosity refrigeration oil.
2. Push the A/C compressor control valve into the A/C compressor with thumb pressure.
3. Using internal snap ring pliers, install the A/C compressor control valve retaining ring.

Make sure the retaining ring is properly seated in the ring groove.

4. Remove the A/C compressor from the **J 41790-A** . See **Special Tools and Equipment** .
5. Install the A/C compressor into the vehicle.

COMPRESSOR CLUTCH PLATE/HUB ASSEMBLY INSTALL (V7 - DIRECT MOUNT)

Tools Required

- **J 33013-B** Hub and Drive Plate Remover/Installer. See **Special Tools and Equipment** .
- **J 33017** Pulley and Bearing Assembly Installer. See **Special Tools and Equipment** .
- **J 33027-A** Clutch Hub Holding Tool. See **Special Tools and Equipment** .

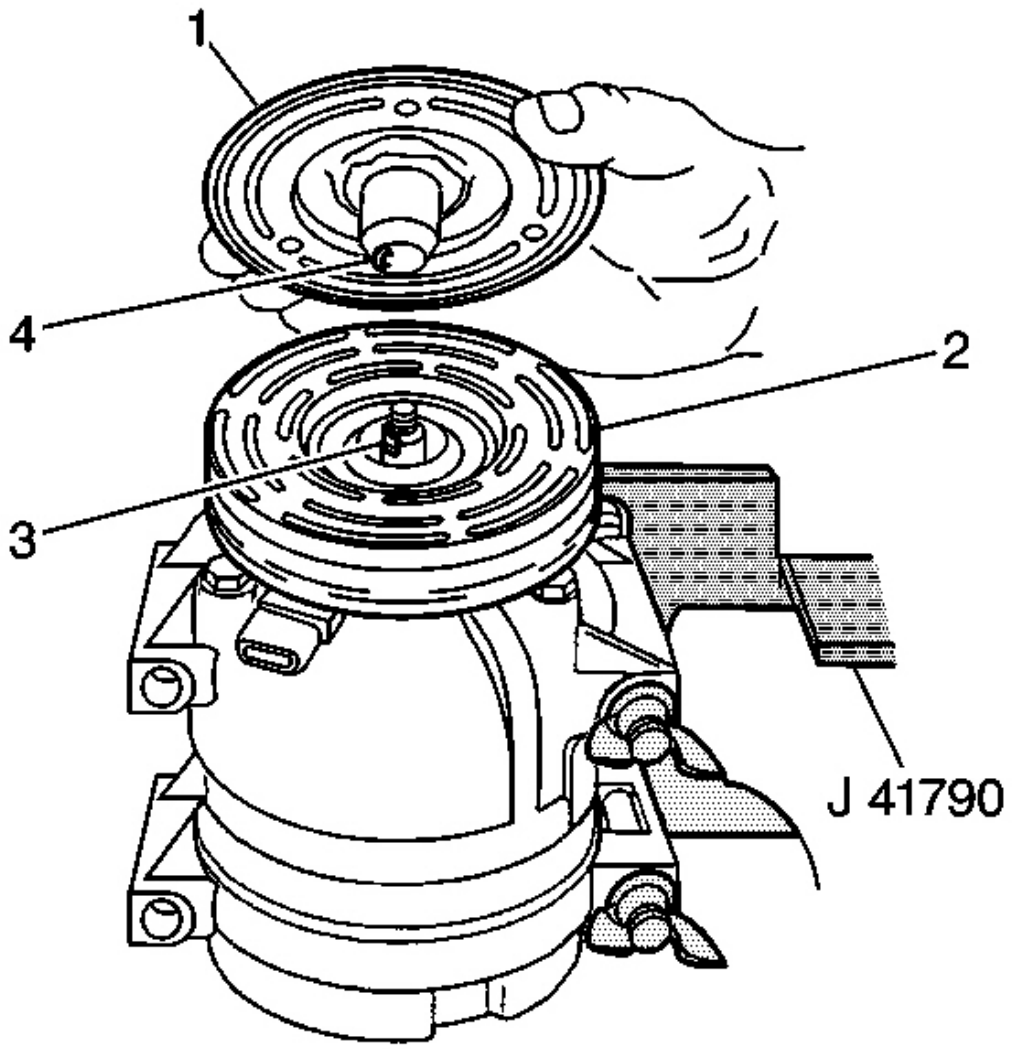

Fig. 30: Hub Key Groove, Clutch Plate, Clutch Rotor & A/C Compressor Shaft
Courtesy of GENERAL MOTORS CORP.

1. Install the shaft key into the hub key groove (4) approximately 3.2 mm (1/8 in) out of the keyway.

   The shaft key is curved slightly to provide an interference fit in the hub key groove.

2. Clean the surfaces of the clutch plate (1) and the clutch rotor (2) before installing the clutch plate and hub assembly.
3. Align the shaft key with the shaft keyway in the clutch plate and the hub assembly and place onto the A/C

compressor shaft (3).

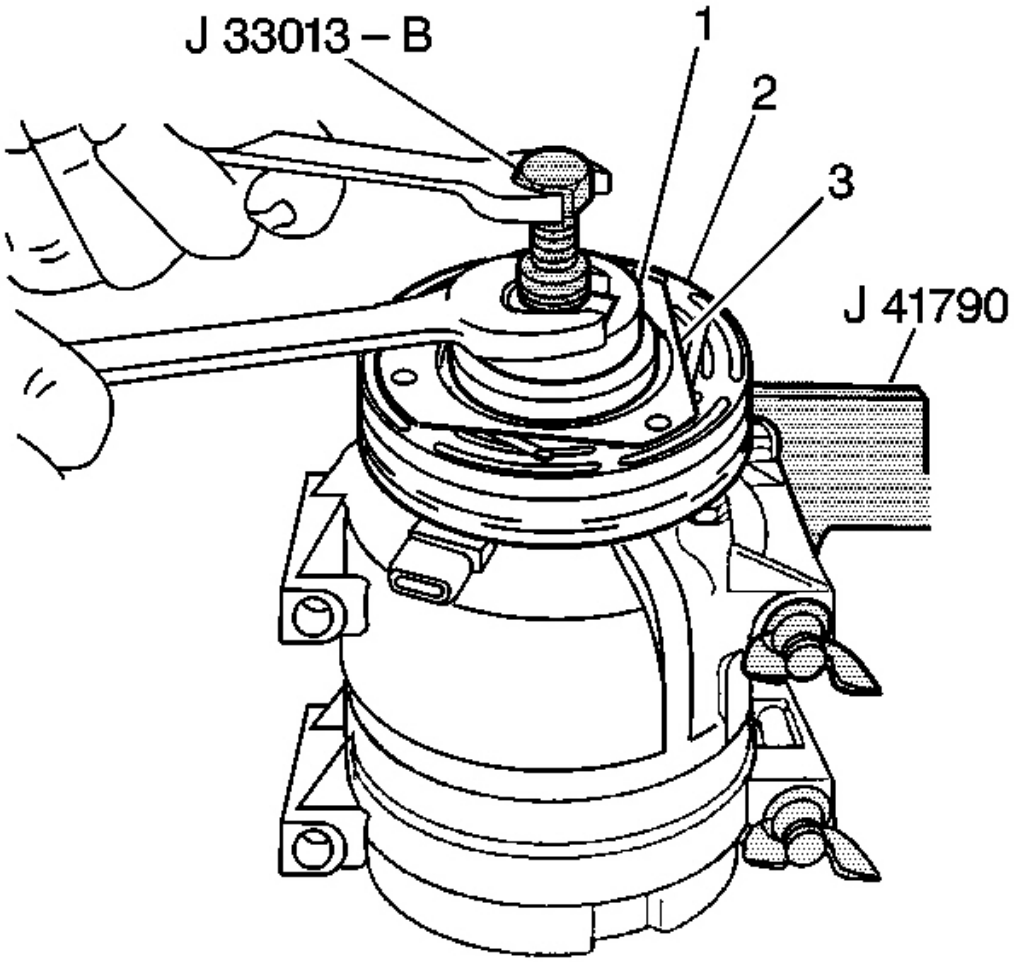

Fig. 31: J 33013-B, Clutch Plate & Hub Assembly
Courtesy of GENERAL MOTORS CORP.

4. Remove the **J 33013-B** . See **Special Tools and Equipment** .
    1. Remove the center screw from the body of the **J 33013-B** . See **Special Tools and Equipment** .
    2. Install the center screw into the opposite end of the **J 33013-B** . See **Special Tools and Equipment** .
5. Install the **J 33013-B** and bearing tools (1) onto the clutch plate (3) and the hub assembly (2). See **Special Tools and Equipment** .
    1. Back the body of the **J 33013-B** off enough to allow the center screw to be threaded onto the end of

the A/C compressor shaft. See **Special Tools and Equipment** .

2. Thread the center screw several turns onto the end of the A/C compressor shaft.

   Do not tighten the center screw on the A/C compressor shaft.

6. Hold the center screw with a wrench.
   1. Tighten the hex portion of the **J 33013-B** body several turns. See **Special Tools and Equipment** .
   2. Remove the **J 33013-B** from the clutch plate and hub. See **Special Tools and Equipment** .
   3. Make sure that the shaft key is still in place in the keyway.
7. Reinstall the **J 33013-B** . See **Special Tools and Equipment** .

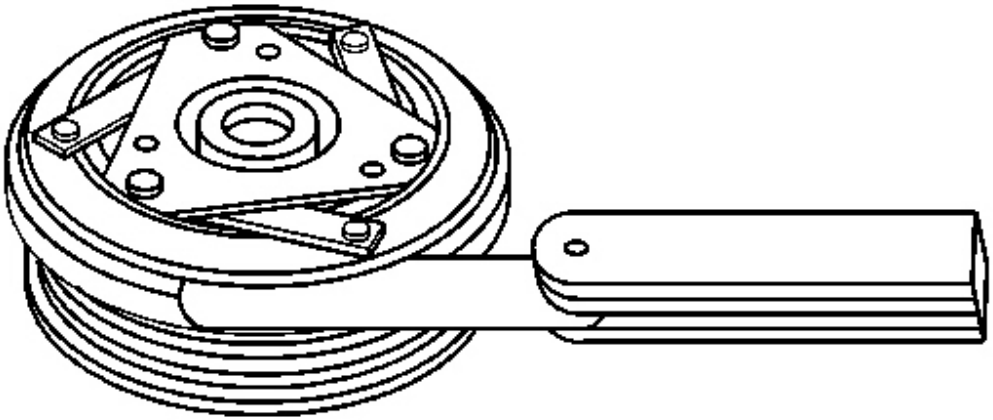

Fig. 32: Placing A Feeler Gage Between Clutch Plate & Clutch Rotor
Courtesy of GENERAL MOTORS CORP.

8. Place a feeler gage between the clutch plate and the clutch rotor.

IMPORTANT: Make sure that the air gap is even all around the clutch plate and hub assembly.

9. Tighten the hex portion of the **J 33013-B** until the air gap between the clutch plate and clutch rotor is 0. See **Special Tools and Equipment** .40 mm (0.015 in).

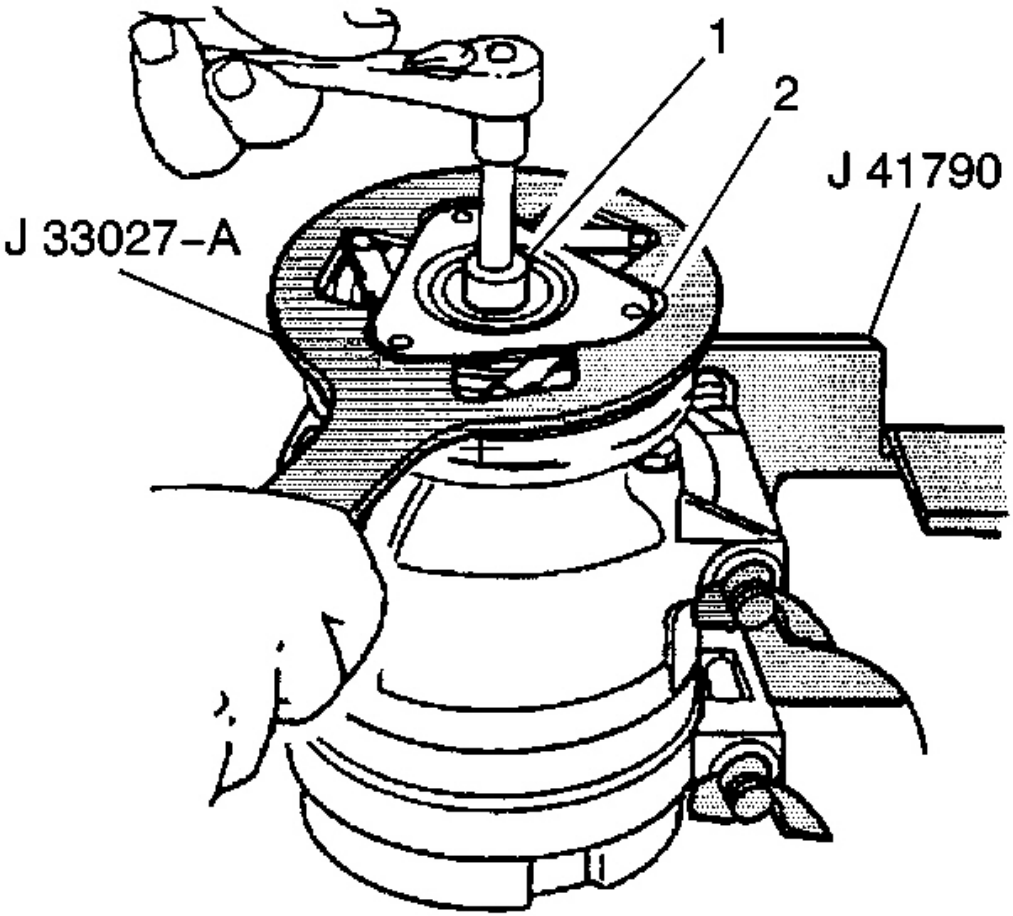

Fig. 33: Clutch Hub, Drive Plate Assembly, J 33027-A & J 41790
Courtesy of GENERAL MOTORS CORP.

10. Remove the **J 33013-B** . See **Special Tools and Equipment** .
11. Hold the clutch plate and hub assembly (2) with the **J 33027-A** . See **Special Tools and Equipment** .

NOTE: **Refer to Fastener Notice in Cautions and Notices.**

12. Install the A/C compressor shaft nut.

    Tighten: Tighten the nut to 17.5 N.m (13 lb ft).

13. Spin the pulley rotor by hand to make sure the rotor is not rubbing against the clutch drive plate.
14. Remove the A/C compressor from the **J 41790-A** . See **Special Tools and Equipment** .

15. Install the A/C compressor into the vehicle.

CLUTCH ROTOR AND/OR BEARING INSTALL (V7 - DIRECT MOUNT)

Tools Required

- **J 33013-B** Hub and Drive Plate Remover/Installer. See **Special Tools and Equipment** .
- **J 33017** Pulley and Bearing Installer. See **Special Tools and Equipment** .
- **J 41790-A** Compressor Holding Fixture. See **Special Tools and Equipment** .

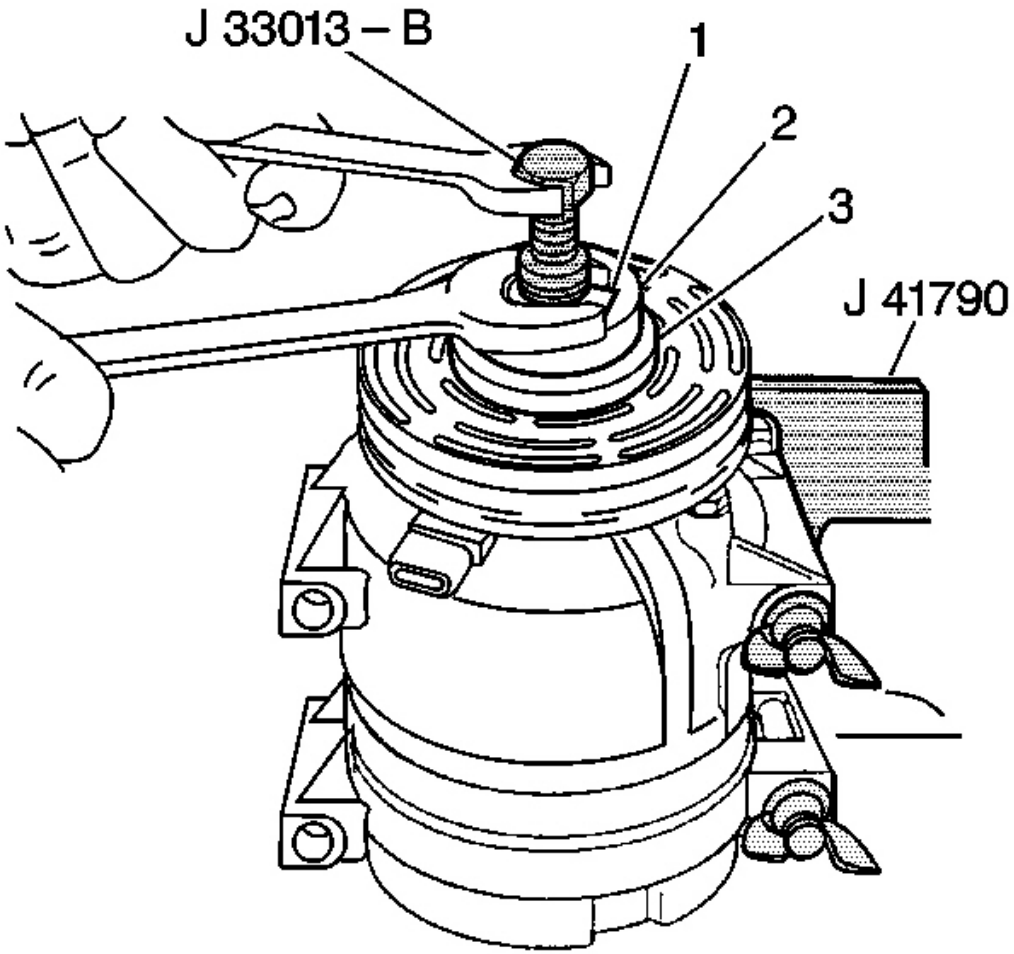

Fig. 34: J 33017, J 33013-B, A/C Compressor Clutch Rotor & Bearing Assembly
Courtesy of GENERAL MOTORS CORP.

1. Position the clutch rotor and bearing assembly (2) onto the A/C compressor.
2. Position **J 33017** and the bearing (1) from **J 33013-B** directly over the inner race of the bearing. See **Special Tools and Equipment** .
3. Place the washer (3) onto the body of **J 33013-B** . See **Special Tools and Equipment** .
4. Remove the center screw from the body of **J 33013-B** . See **Special Tools and Equipment** .
5. Install the center screw into the opposite end of **J 33013-B** . See **Special Tools and Equipment** .
6. Back the body of **J 33013-B** off enough to thread the center screw onto the end of the A/C compressor shaft. See **Special Tools and Equipment** .
7. Thread the center screw several turns onto the end of the A/C compressor shaft. Do NOT tighten the screw.
8. Hold the center screw with a wrench.
9. Tighten the hex portion of the **J 33013-B** body several turns. See **Special Tools and Equipment** .

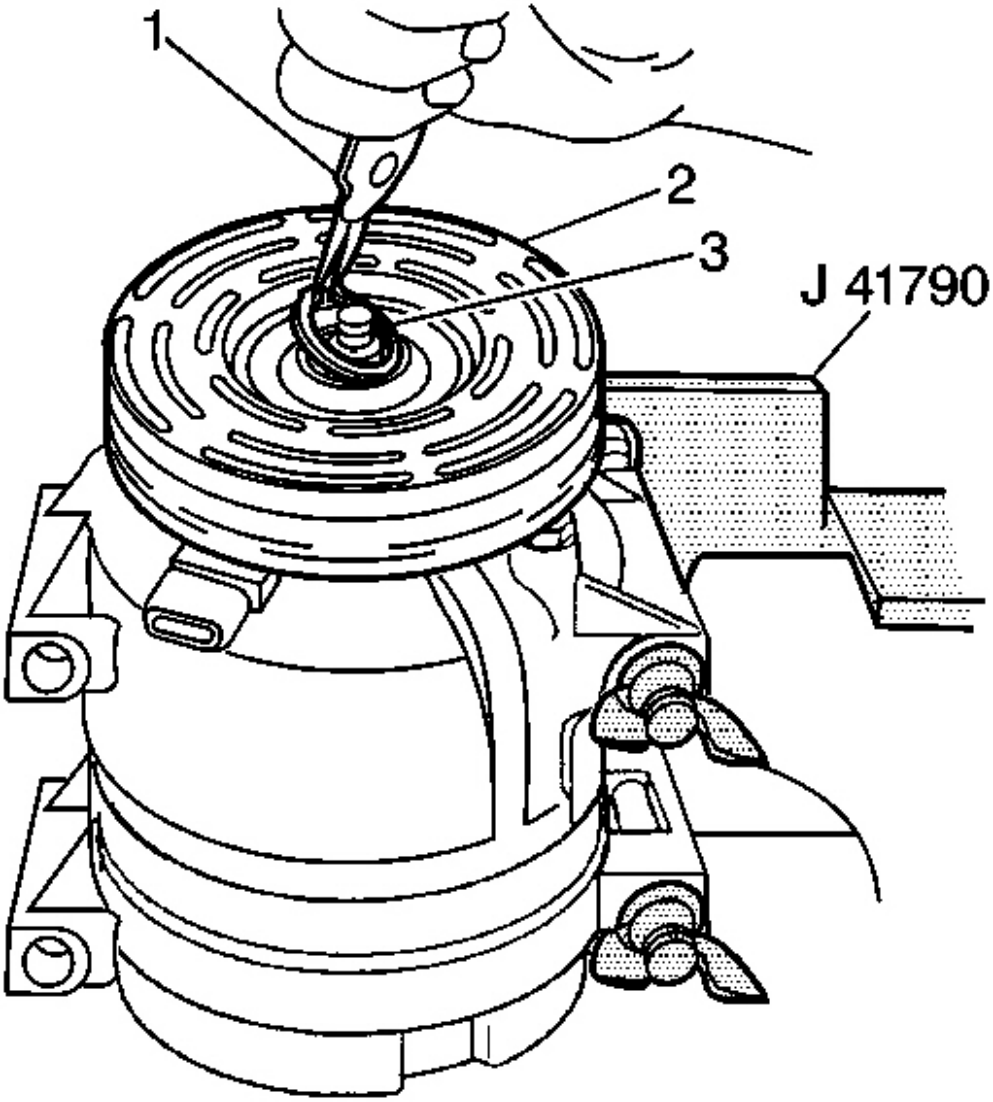

Fig. 35: Clutch Rotor, Bearing & J 41790-A
Courtesy of GENERAL MOTORS CORP.

10. Remove **J 33013-B** from the clutch rotor and bearing assembly. See **Special Tools and Equipment** .
11. Press the clutch rotor and bearing (2) onto the nose of the A/C compressor far enough to clear the groove for the retaining ring.

    If the clutch rotor and bearing does not clear the groove, repeat steps 7, 8 and 9.

12. Install the clutch rotor and bearing retaining ring (3) using external snap ring pliers (1).

    Make sure that the camphor side of the retaining ring is facing up when the retaining ring is being installed.

13. Install the clutch plate and hub assembly. Refer to **Compressor Clutch Plate/Hub Assembly Install (V7 - Direct Mount)** .
14. Remove the A/C compressor from **J 41790-A** . See **Special Tools and Equipment** .
15. Install the A/C compressor into the vehicle.

COMPRESSOR CLUTCH COIL INSTALL

Tools Required

- **J 8433** A/C Compressor Pulley Puller. See **Special Tools and Equipment** .
- **J 8433-3** Forcing Screw. See **Special Tools and Equipment** .
- **J 33024** Clutch Coil Installer Adaptor. See **Special Tools and Equipment** .
- **J 33025** Clutch Coil Puller Legs. See **Special Tools and Equipment** .
- **J 41790-A** A/C Compressor Holding Fixture. See **Special Tools and Equipment** .
- **J 42136** A/C Lip Seal Remover. See **Special Tools and Equipment** .

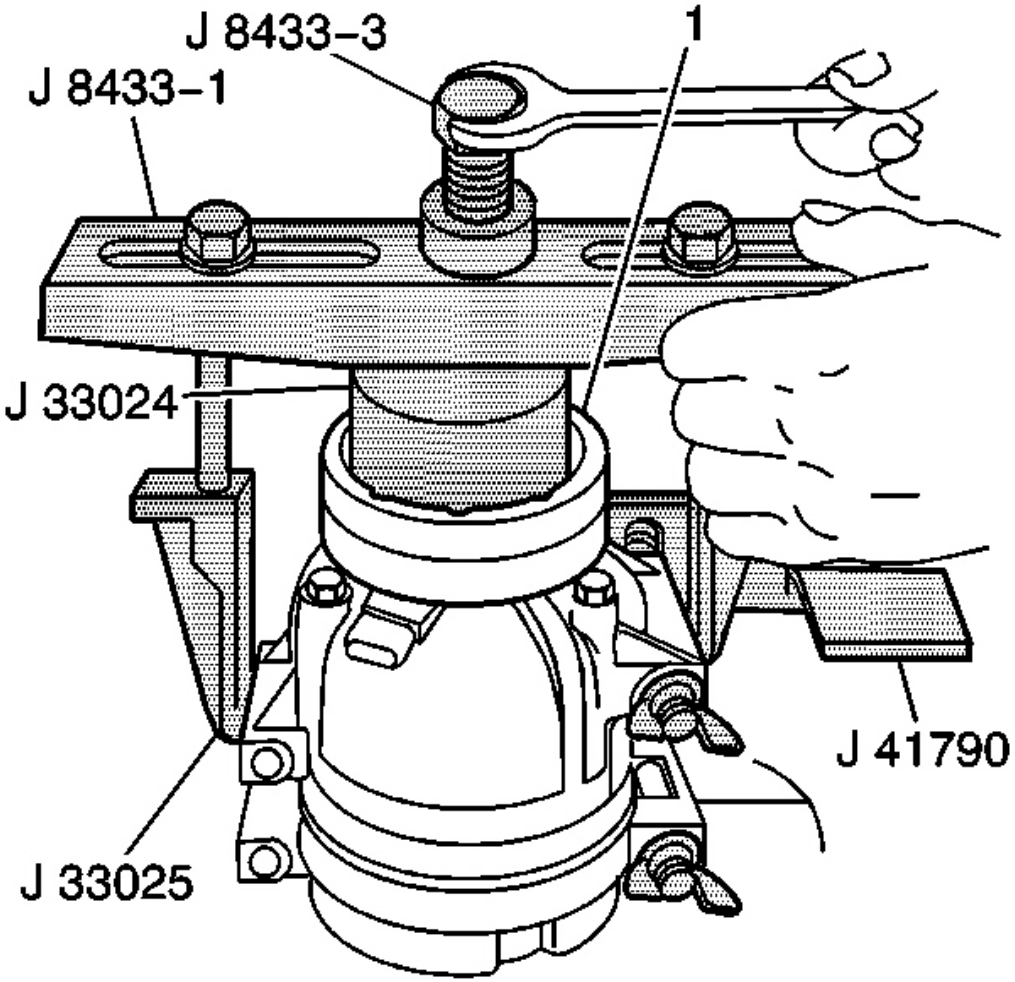

Fig. 36: J 8433-1, J 8433-3, J 33024, J 33025, J 41790-A & A/C Compressor Front Head Clutch Coil Assembly
Courtesy of GENERAL MOTORS CORP.

1. Place the clutch coil assembly (1) on the front head with the clutch coil terminal positioned at the mark made during disassembly.
2. Place the **J 33024** over the internal opening of the clutch coil housing and align installer with the A/C compressor front head. See **Special Tools and Equipment** .
3. Install the **J 8433-3** into the **J 8433** and center the screw in the countersunk center hole of the **J 33024** . See **Special Tools and Equipment** .
4. Install the 4 inch through bolts and washers from the J 42136 tool kit into the **J 33025** and attach them to the A/C compressor mounting bosses. See **Special Tools and Equipment** .

5. Turn the center forcing screw of the **J 8433** to press the clutch coil onto the front head until the clutch coil is fully seated. See **Special Tools and Equipment** .

   Make sure the clutch coil and the **J 33024** stay in-line with each other while pressing the clutch coil onto the A/C compressor. See **Special Tools and Equipment** .

6. Install the A/C compressor clutch rotor and bearing assembly. Refer to **Clutch Rotor and/or Bearing Install (V7 - Direct Mount)** .
7. Install the A/C compressor clutch plate and hub assembly. Refer to **Compressor Clutch Plate/Hub Assembly Install (V7 - Direct Mount)** .
8. Remove the A/C compressor from the **J 41790-A** . See **Special Tools and Equipment** .
9. Install the A/C compressor into the vehicle.

COMPRESSOR PRESSURE RELIEF VALVE INSTALL (V7 - DIRECT MOUNT)

Tools Required

J 41790-A A/C Compressor Holding Fixture. See **Special Tools and Equipment** .

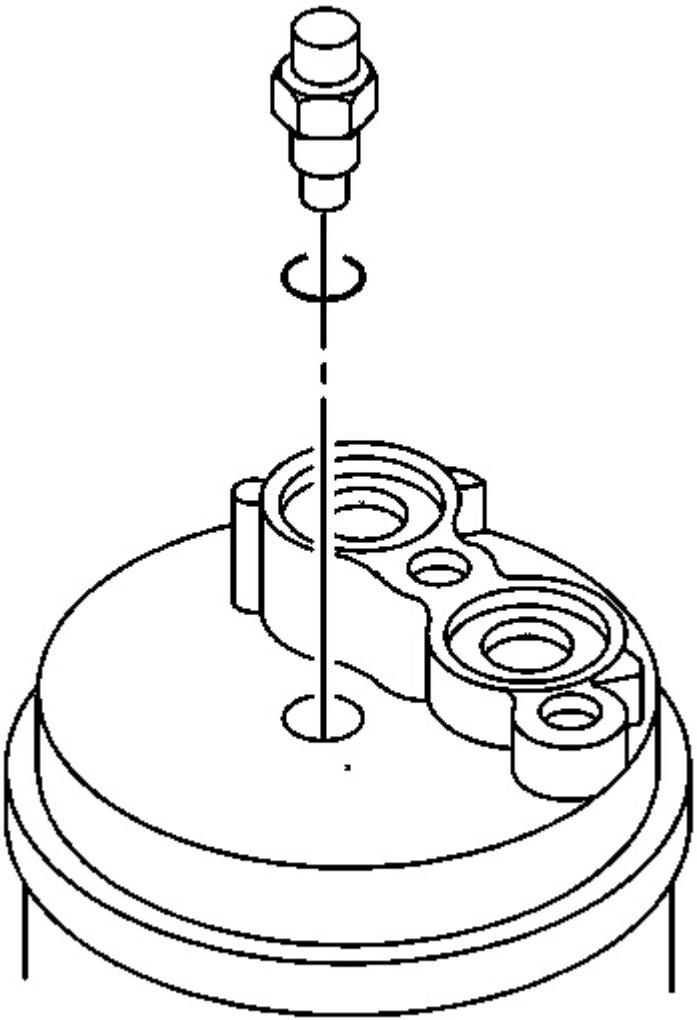

Fig. 37: Rear Head A/C Compressor & Pressure Relief Valve
Courtesy of GENERAL MOTORS CORP.

1. Clean the pressure relief valve seat area of the rear head.
2. Lubricate the O-ring of the new pressure relief valve with clean 525 viscosity refrigerant oil.

NOTE: Refer to Fastener Notice in Cautions and Notices.

3. Install the new pressure relief valve into the A/C compressor.

Tighten: Tighten the valve to 9 N.m (80 lb in).

4. Remove the A/C compressor from the **J 41790-A** . See **Special Tools and Equipment** .
5. Install the A/C compressor into the vehicle.

COMPRESSOR LEAK TESTING (V7 - DIRECT MOUNT)

Tools Required

- **J 39400-A** Halogen Leak Detector. See **Special Tools and Equipment** .
- **J 43600** ACR 2000 Air Conditioning Service Center. See **Special Tools and Equipment** .
- J 39893 Pressure Testing Connector

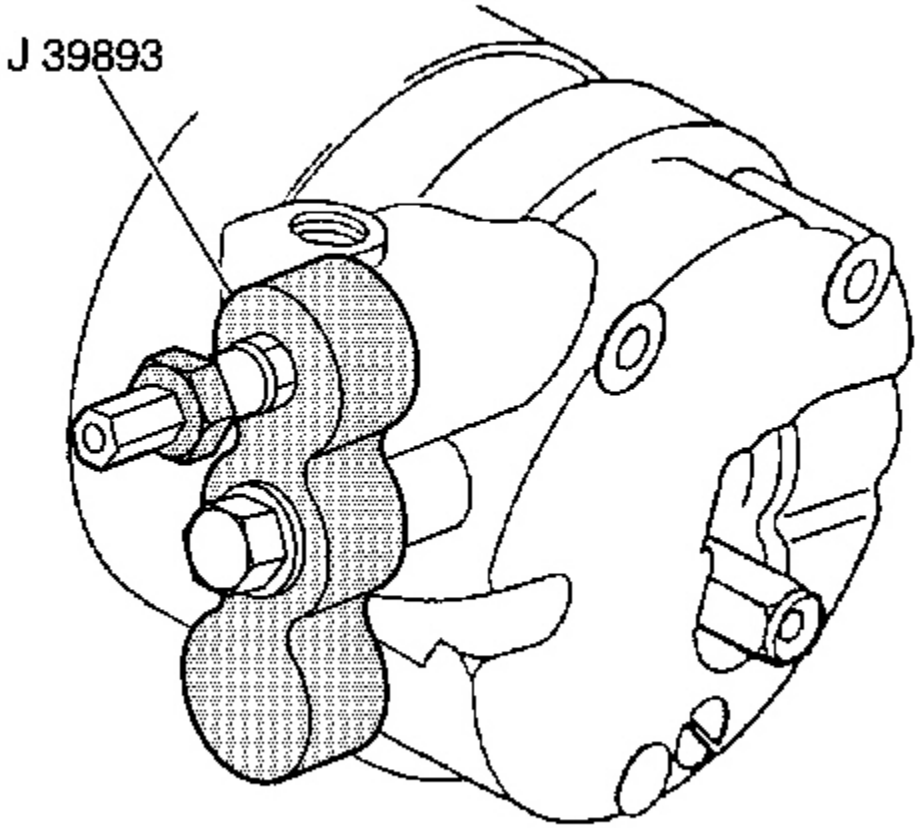

Fig. 38: A/C Compressor Shaft & J 39893
Courtesy of GENERAL MOTORS CORP.

1. With the sealing washers in place, install the J 39893 on the rear head of the A/C compressor.
2. Connect the gage charging lines and the **J 43600** . See **Special Tools and Equipment** .
3. Pressurize the suction and the high-side of the A/C compressor with R-134a refrigerant.
4. With the A/C compressor in a horizontal position, rotate by hand the A/C compressor shaft in the operating direction.
5. Rotate the shaft several times.
6. Using the J 39400 , check for leaks at the following locations:
    1. Pressure relief valve
    2. Rear head switch
    3. Front head seal
    4. Rear head seal
    5. Through bolt head gaskets
    6. A/C compressor shaft seal
7. Perform the measures necessary to correct any external leaks found.
8. Recheck for leaks following any repair.
9. Recover the refrigerant.
10. Disconnect the hoses from the J 39893 .
11. Remove the J 39893 .

CLUTCH ROTOR AND/OR BEARING REPLACEMENT (V-7)

Tools Required

- **J 33023-A** Pilot Puller. See **Special Tools and Equipment** .
- **J 41552** Compressor Pulley Puller. See **Special Tools and Equipment** .
- **J 41790-A** Compressor Holding Fixture. See **Special Tools and Equipment** .
- **J 33013-B** Hub and Drive Plate Remover/Installer. See **Special Tools and Equipment** .
- **J 33017** Pulley and Bearing Installer. See **Special Tools and Equipment** .

Removal Procedure

1. Remove the A/C compressor. Refer to **Compressor Replacement** .

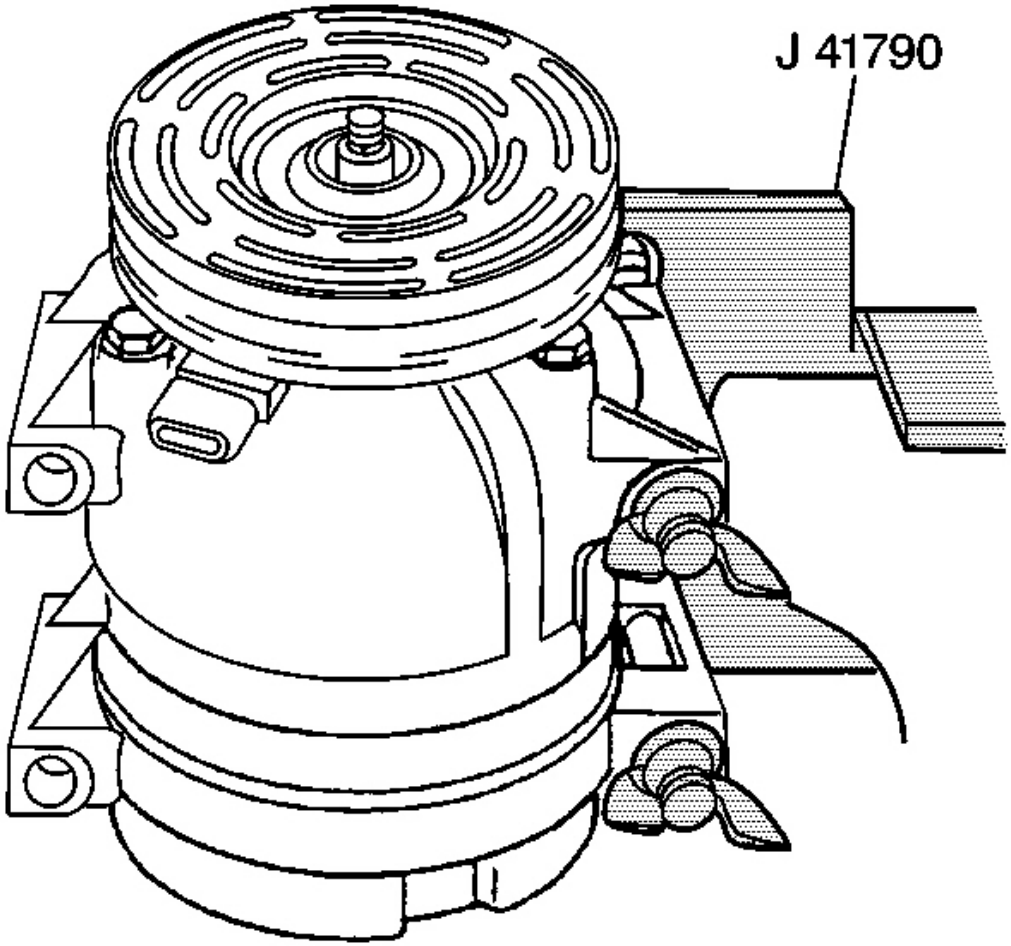

Fig. 39: Compressor Mounting Fixture & J 41790-A
Courtesy of GENERAL MOTORS CORP.

2. Clamp the A/C compressor holding fixture, **J 41790-A** in a vise and attach the A/C compressor to the **J 41790-A** . See **Special Tools and Equipment** .

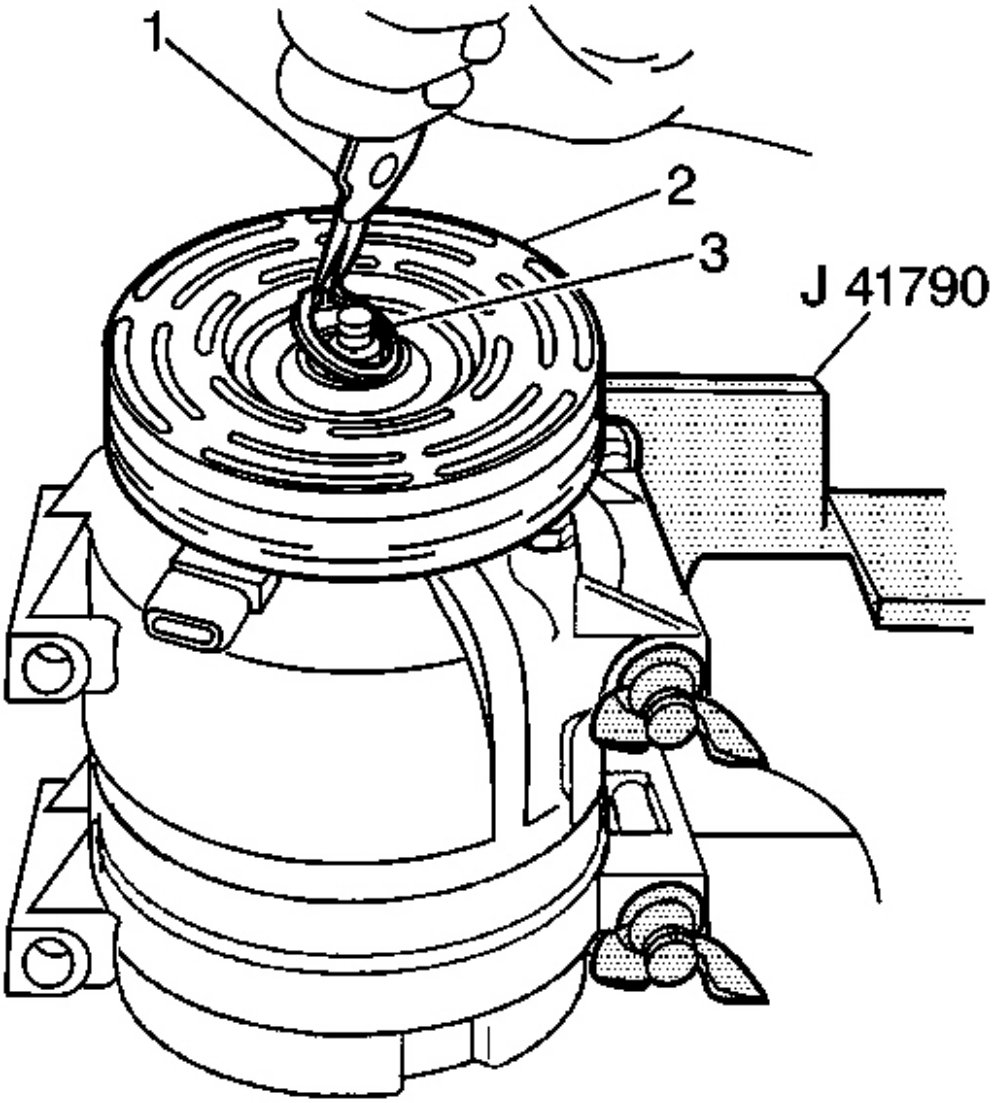

Fig. 40: Clutch Rotor, Bearing & J 41790-A
Courtesy of GENERAL MOTORS CORP.

3. Remove the clutch plate and hub assembly. Refer to **Compressor Clutch Plate and Hub Assembly Removal (V7 - Direct Mount)** .
4. Using external snap ring pliers (1), remove the clutch rotor and bearing assembly retaining ring (3).

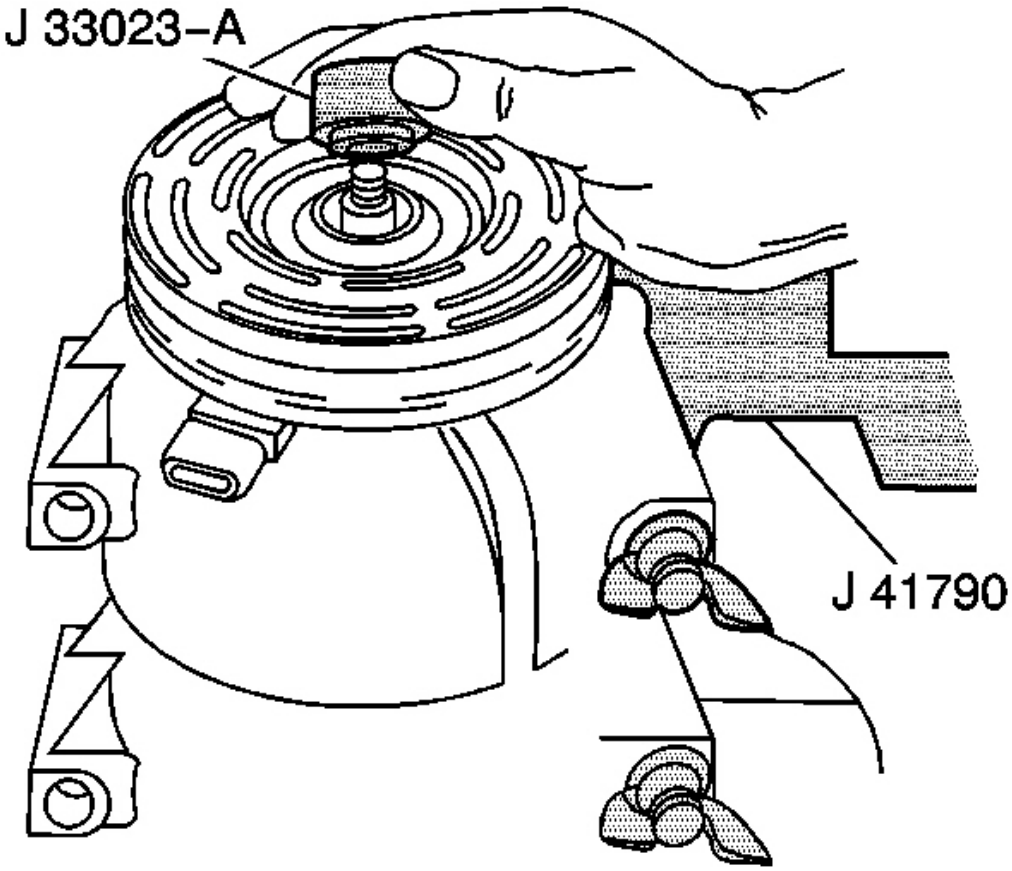

Fig. 41: J 33023-A & Clutch Rotor
Courtesy of GENERAL MOTORS CORP.

5. Place the **J 33023-A** on the clutch rotor. See **Special Tools and Equipment** .

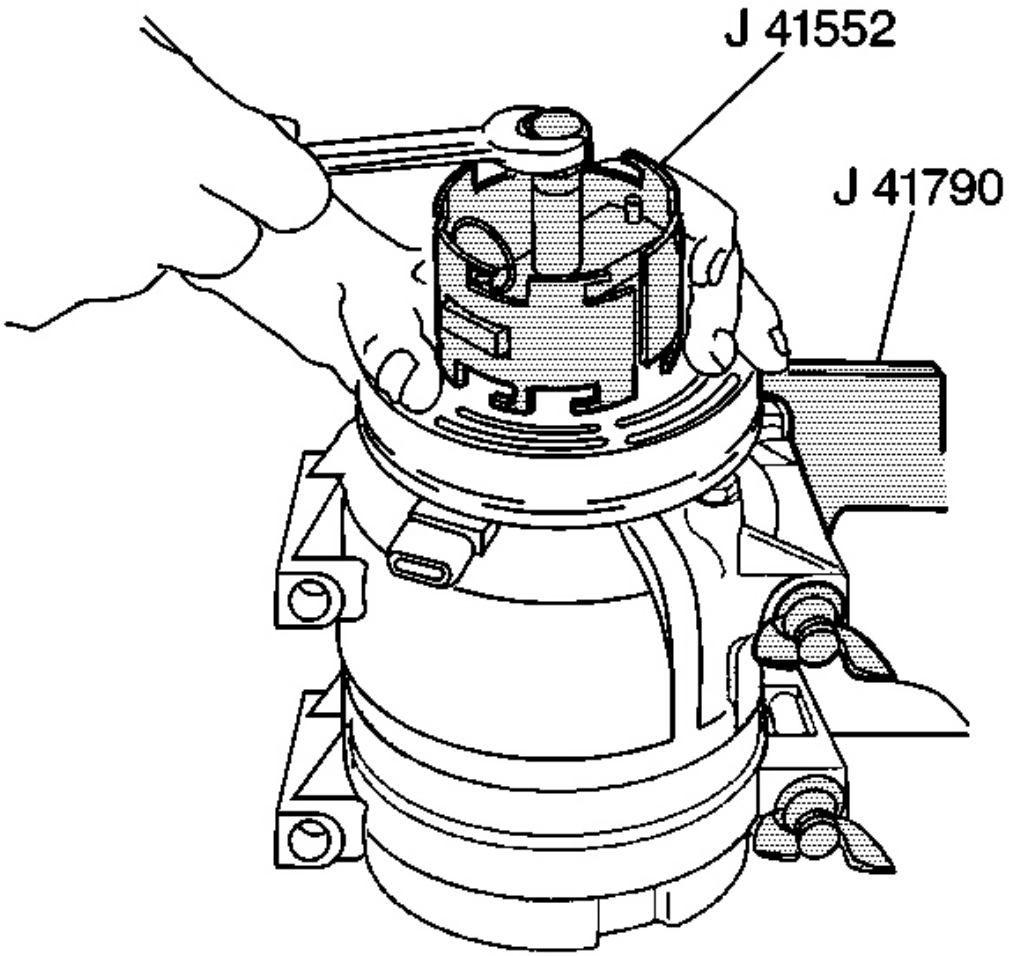

Fig. 42: J 41552 & Inner Circle Slots Of Rotor
Courtesy of GENERAL MOTORS CORP.

6. Install the **J 41552** down into the inner circle of slots in the rotor. See **Special Tools and Equipment** .

   Turn the **J 41552** clockwise in the slots to engage the puller tangs with the rotor. See **Special Tools and Equipment** .

7. Hold the **J 41552** in place and use a wrench to turn the center forcing screw against the **J 33023-A** to remove the clutch rotor and bearing assembly. See **Special Tools and Equipment** .

Installation Procedure

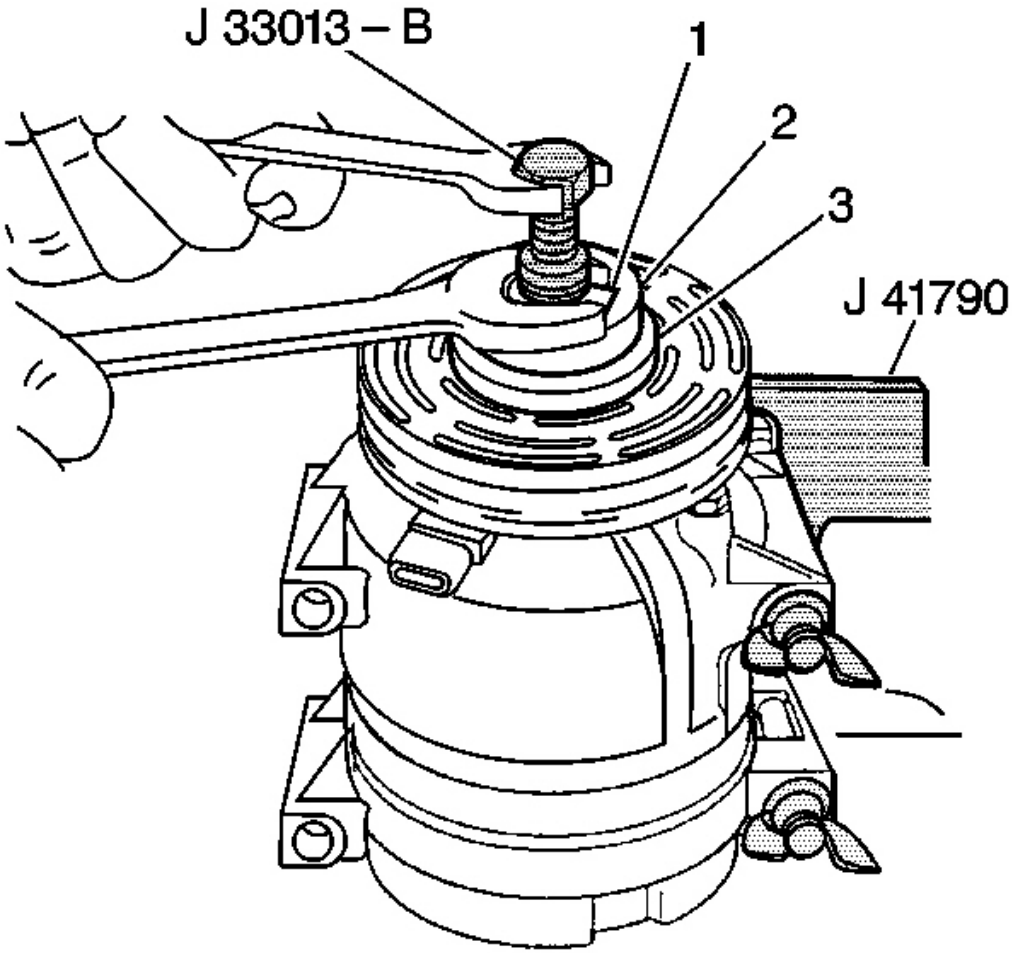

Fig. 43: J 33017, J 33013-B, A/C Compressor Clutch Rotor & Bearing Assembly
Courtesy of GENERAL MOTORS CORP.

1. Position the clutch rotor and bearing assembly (2) onto the A/C compressor.
2. Position the **J 33017** and bearing (1) from the **J 33013-B** directly over the inner race of the bearing. See **Special Tools and Equipment** .
3. Place the washer (3) from the J 42126 tool kit onto the body of the **J 33013-B** . See **Special Tools and Equipment** .
4. Remove the center screw from the body of the **J 33013-B** . See **Special Tools and Equipment** .
5. Install the center screw into the opposite end of the **J 33013-B** . See **Special Tools and Equipment** .
6. Back the body of the **J 33013-B** off enough to allow the center screw to be threaded onto the end of the A/C compressor shaft. See **Special Tools and Equipment** .

7. Thread the center screw several turns onto the end of the A/C compressor shaft.

   Do not tighten the center screw on the A/C compressor shaft.

8. Hold the center screw with a wrench.
9. Tighten the hex portion of the **J 33013-B** body several turns. See **Special Tools and Equipment** .

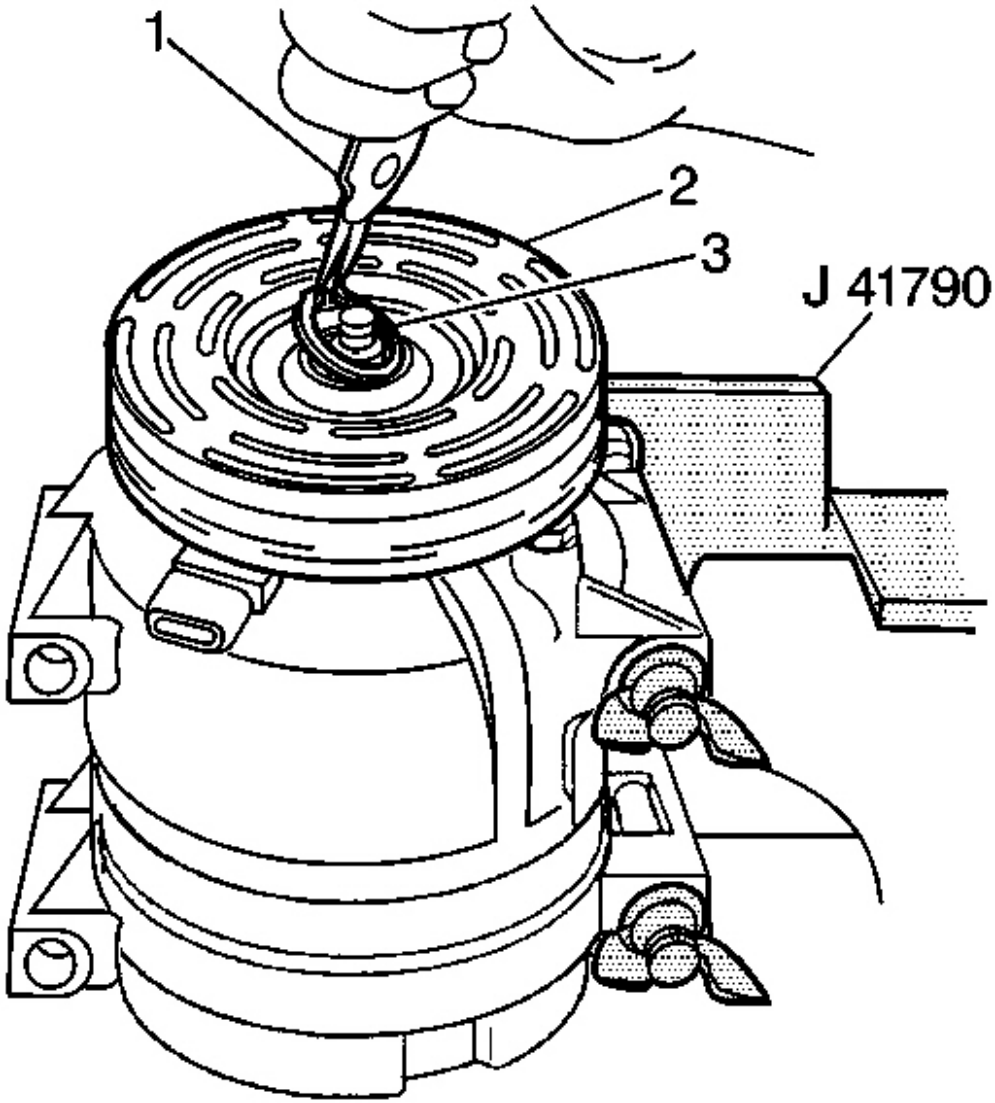

Fig. 44: Clutch Rotor, Bearing & J 41790-A

Courtesy of GENERAL MOTORS CORP.

10. Remove the **J 33013-B** from the clutch rotor and bearing assembly. See **Special Tools and Equipment** .
11. Make sure that the clutch rotor and bearing (2) is pressed onto the nose of the A/C compressor far enough to clear the groove for the retaining ring.

    If the clutch rotor and bearing does not clear the groove, repeat steps 7, 8 and 9.

12. Install the clutch rotor and bearing retaining ring (3) using external snap ring pliers (1).

    Make sure that the camphor side of the retaining ring is facing up when the retaining ring is being installed.

13. Install the clutch plate and hub assembly. Refer to **Compressor Clutch Plate/Hub Assembly Install (V7 - Direct Mount)** .
14. Remove the A/C compressor from the **J 41790-A** . See **Special Tools and Equipment** .
15. Install the A/C compressor. Refer to **Compressor Replacement** .

COMPRESSOR MOUNTING BRACKET REPLACEMENT

Removal Procedure

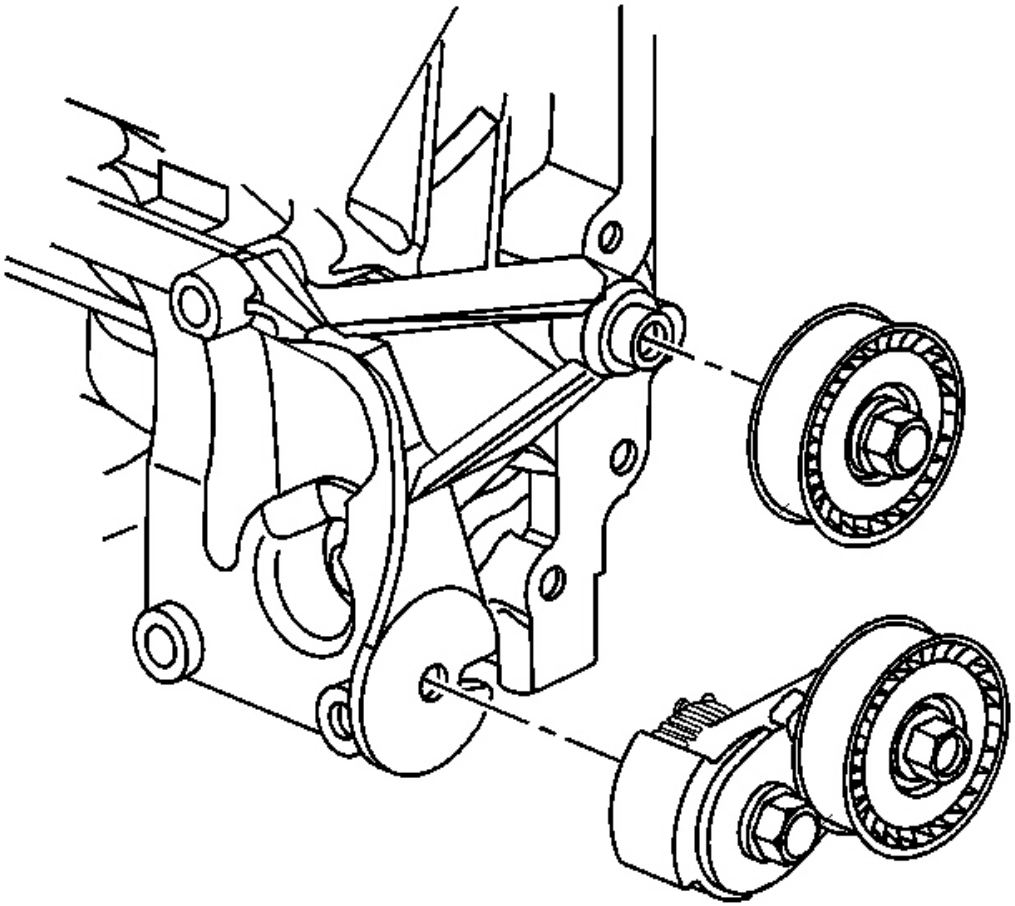

Fig. 45: Compressor Drive Belt Tensioner & Compressor Mounting Bracket
Courtesy of GENERAL MOTORS CORP.

1. Remove the compressor. Refer to **Compressor Replacement** .
2. Remove the compressor drive belt tensioner from the compressor mounting bracket.
3. Remove the compressor drive belt idler pulley from the compressor mounting bracket.

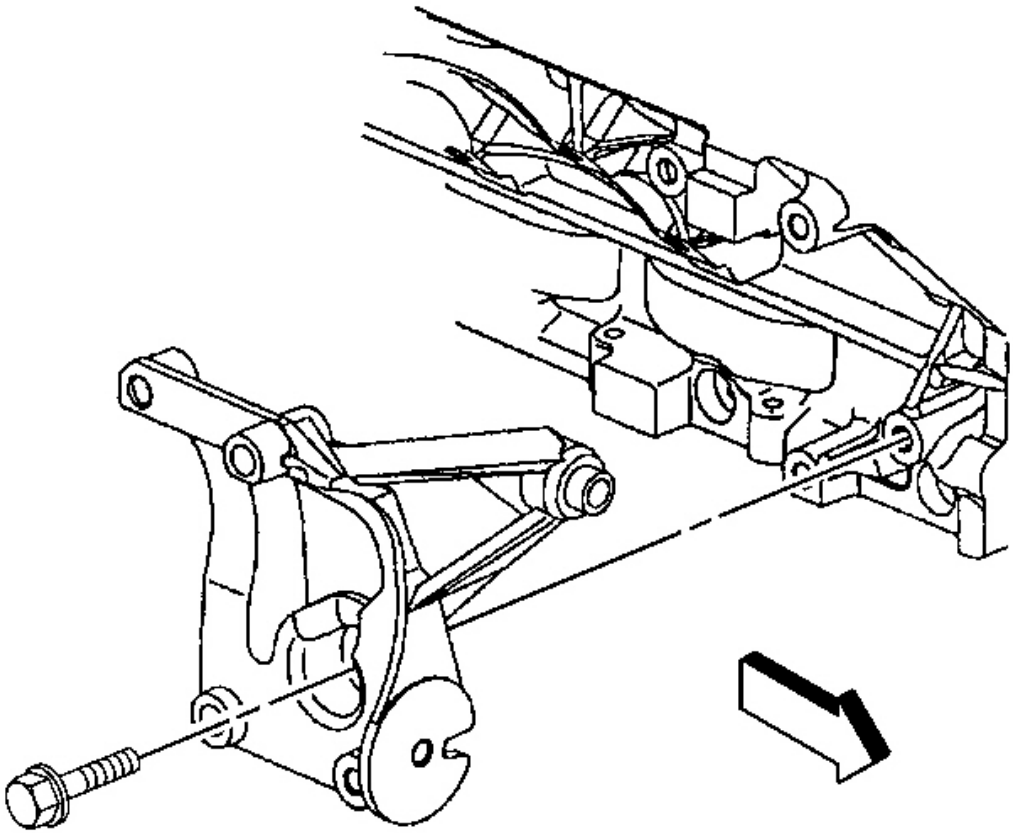

Fig. 46: Compressor Bracket & Mounting Bolt
Courtesy of GENERAL MOTORS CORP.

4. Remove the compressor bracket mounting bolt.
5. Remove the compressor bracket.

Installation Procedure

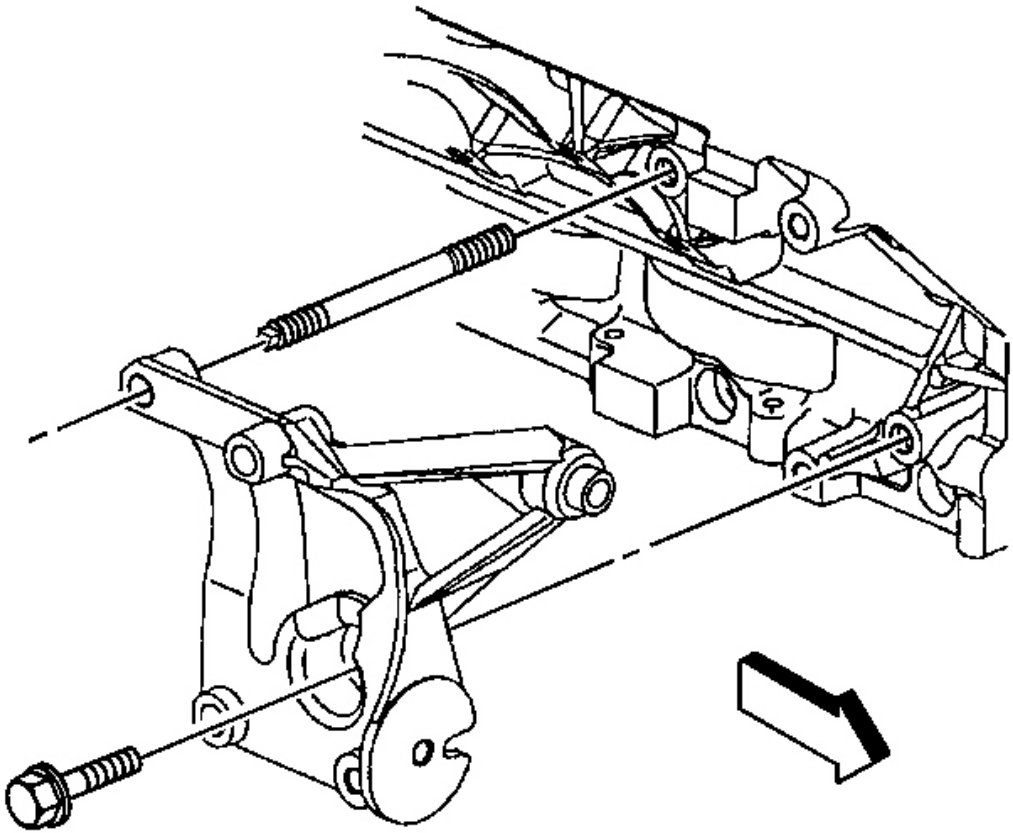

Fig. 47: Engine Block Compressor Mounting Bracket & Stud
Courtesy of GENERAL MOTORS CORP.

1. Install the compressor mounting stud to the engine block.
2. Install the compressor mounting bracket onto the compressor mounting stud.

NOTE: Refer to Fastener Notice in Cautions and Notices.

3. Install the compressor bracket mounting bolt.

   Tighten: Tighten the bolt to 50 N.m (37 lb ft).

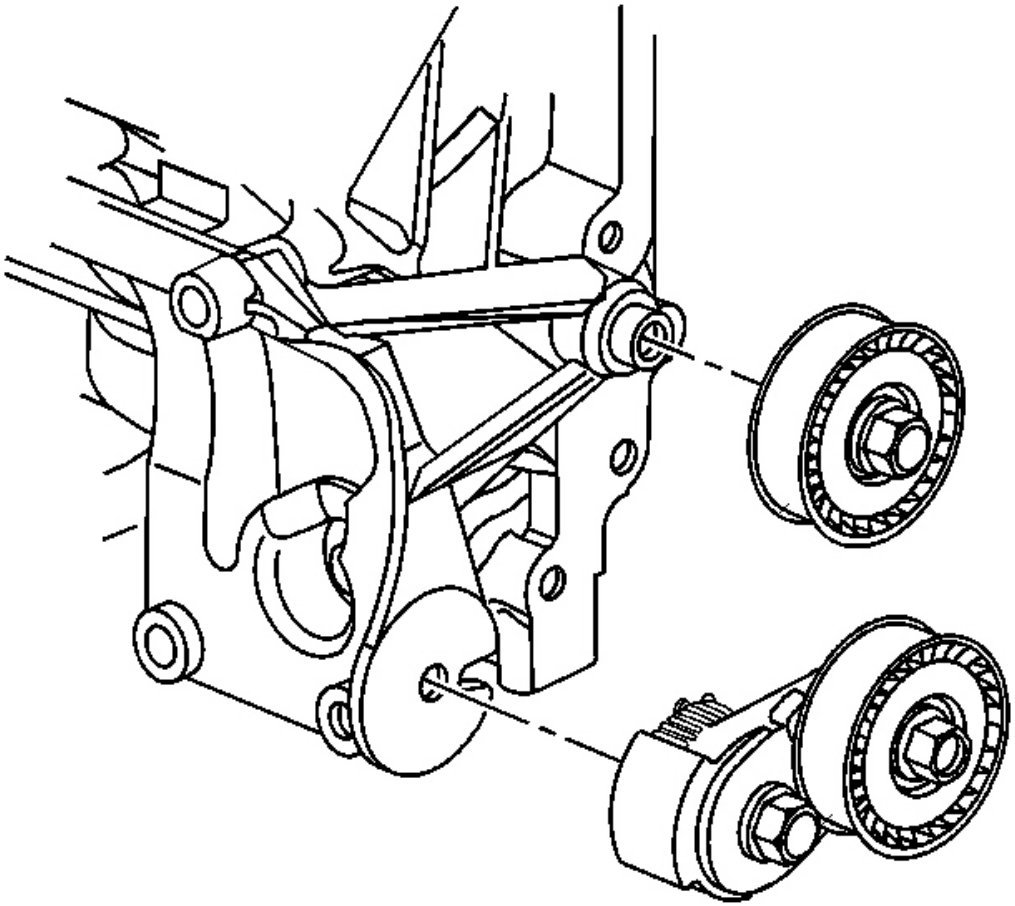

Fig. 48: Compressor Drive Belt Tensioner & Compressor Mounting Bracket
Courtesy of GENERAL MOTORS CORP.

4. Install the compressor drive belt idler pulley to the compressor mounting bracket.

   Tighten: Tighten the compressor drive belt idler pulley to 50 N.m (37 lb ft).

5. Install the compressor drive belt tensioner to the compressor mounting bracket.

   Tighten: Tighten the compressor drive belt tensioner to 25 N.m (18 lb ft).

6. Install the compressor. Refer to **Compressor Replacement** .

SEALING WASHER REPLACEMENT

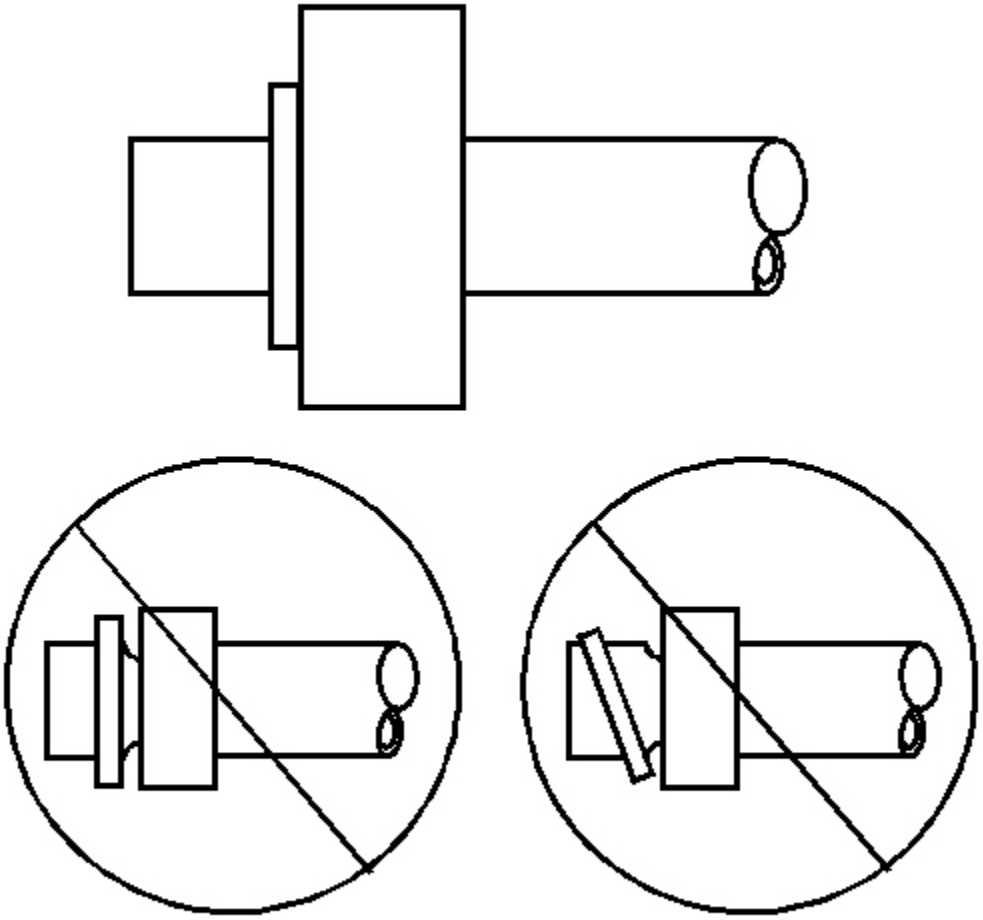

Fig. 49: Inspecting Seal Washer For Damage
Courtesy of GENERAL MOTORS CORP.

1. Remove the seal washer from the A/C refrigerant component.
2. Inspect the seal washer for any signs of damage.
3. Inspect the A/C refrigerant components for damage or burrs. Repair if necessary.

IMPORTANT: DO NOT reuse sealing washer.

4. Discard the sealing washer.

Installation Procedure

IMPORTANT: Flat washer type seals do not require lubrication.

1. Inspect the new seal washer for any signs of cracks, cuts, or damage.

   Do not use a damaged seal washer.

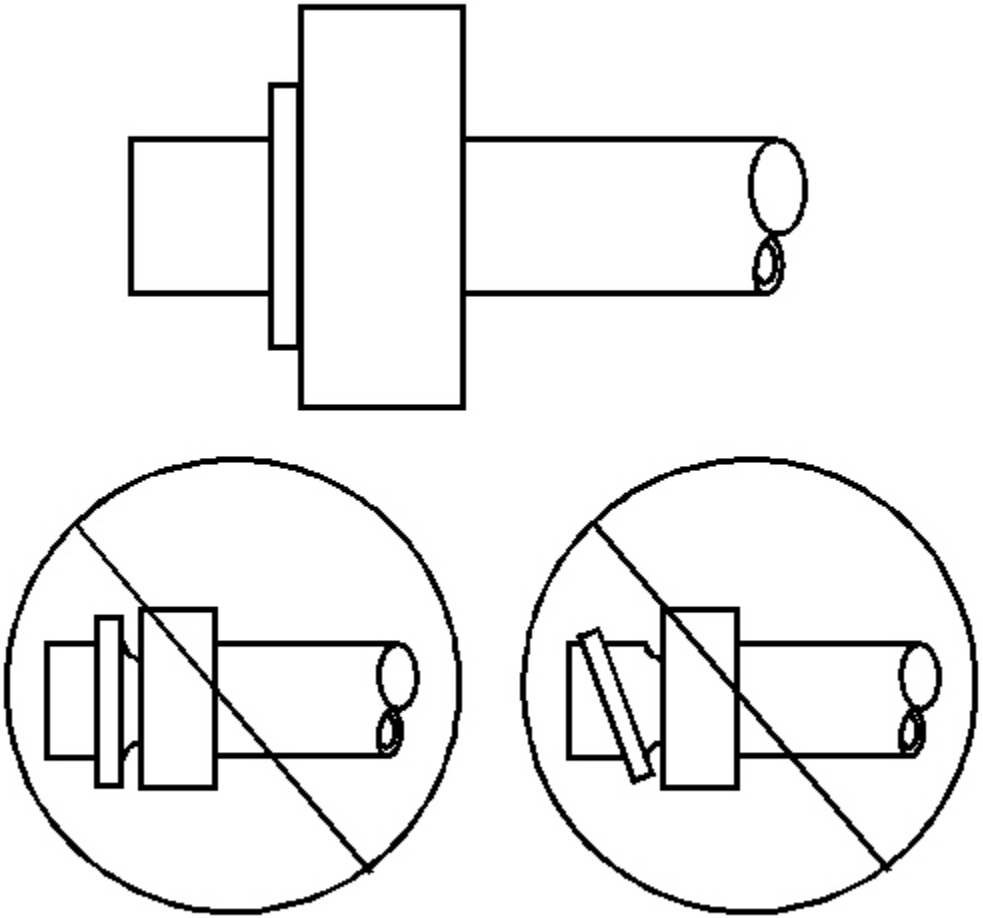

Fig. 50: Inspecting Seal Washer For Damage
Courtesy of GENERAL MOTORS CORP.

2. Using a lint-free clean, dry cloth, clean the sealing surfaces of the A/C refrigerant components.

3. Carefully install the new seal washer onto the A/C refrigerant component.
4. The washer must completely bottom against the surface of the fitting.

IMPORTANT: After tightening the A/C components, there should be a slight sealing washer gap of approximately 1.2 mm (3/64 in) between the A/C line and the A/C component.

5. Assemble the remaining A/C refrigerant components. Refer to the appropriate repair procedure.

O-RING REPLACEMENT

Removal Procedure

1. Disassemble the A/C refrigerant components. Refer to the appropriate repair procedure
2. Remove the O-ring seal from the A/C refrigerant component.
3. Inspect the O-ring seal for signs of damage.
4. Inspect the A/C refrigerant components for damage or burrs. Repair if necessary.
5. Discard the O-ring seal.

Installation Procedure

1. Inspect the new O-ring seal for any sign or cracks, cuts, or damage. Replace if necessary.
2. Using a lint-free clean, dry cloth, carefully clean the sealing surfaces of the A/C refrigerant components.

IMPORTANT: DO NOT allow any of the mineral base 525 viscosity refrigerant oil on the new O-ring seal to enter the refrigerant system.

3. Lightly coat the new O-ring seal with mineral base 525 viscosity refrigerant oil.

IMPORTANT: DO NOT reuse O-ring seals.

4. Carefully slide the new O-ring seal onto the A/C refrigerant component.

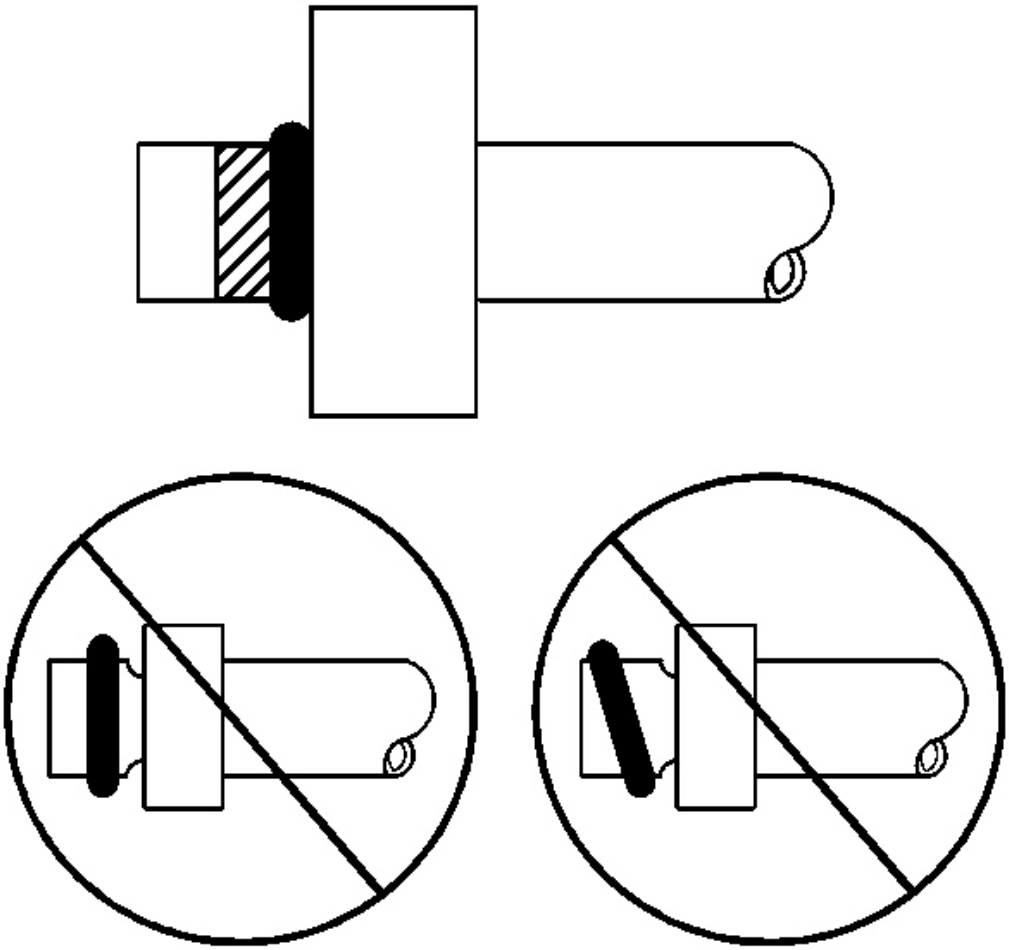

Fig. 51: O-Ring Seal
Courtesy of GENERAL MOTORS CORP.

5. The O-ring seal must be fully seated.
6. Assemble the A/C components.

   Refer to the appropriate repair procedure.

COMPRESSOR HOSE ASSEMBLY REPLACEMENT

Tools Required

J 39400-A Halogen Leak Detector. See **Special Tools and Equipment** .

Removal Procedure

1. Recover the refrigerant from the A/C system. Refer to **Refrigerant Recovery and Recharging** .
2. Remove the battery heat shield. Refer to **Battery Heat Shield Replacement** in Engine Electrical.
3. Remove the compressor drive belt. Refer to **Drive Belt Replacement - Air Conditioning** in Engine Mechanical - 5.7L.
4. Remove the RH exhaust manifold heat shield.

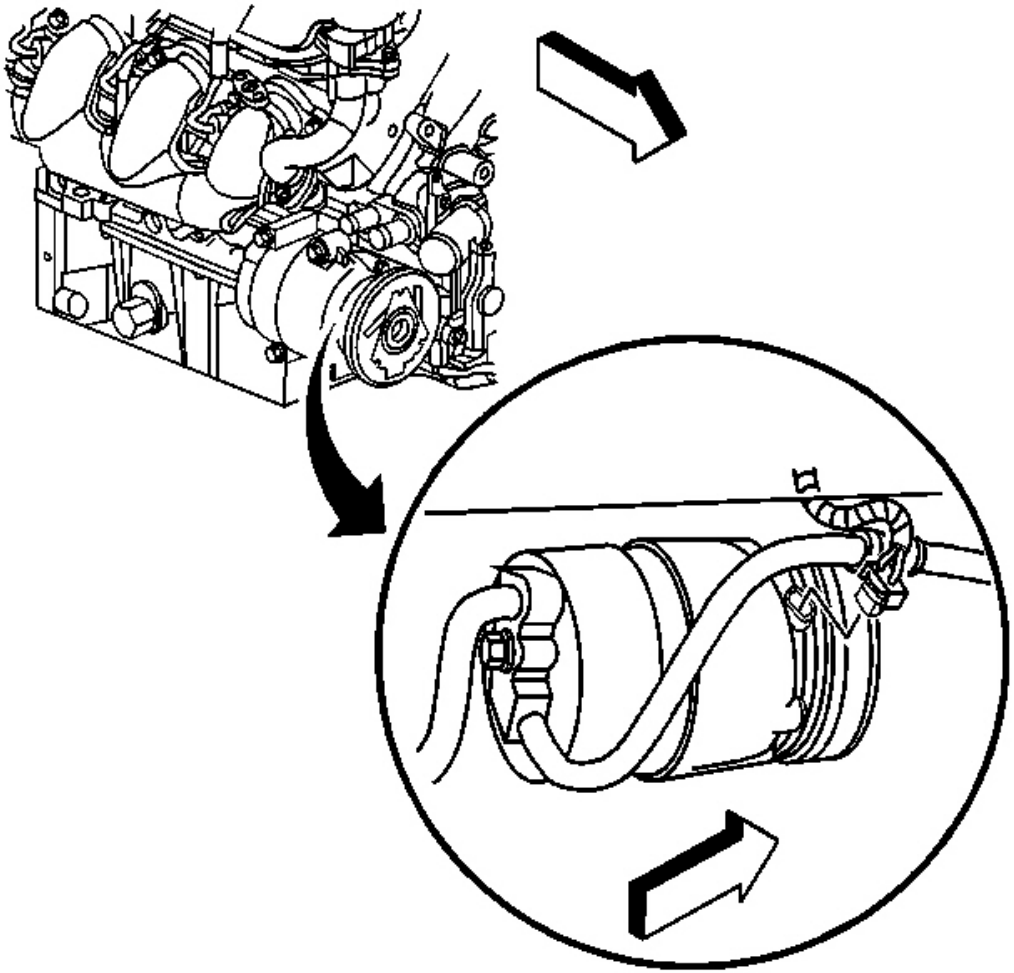

Fig. 52: Compressor Clutch Electrical Connector
Courtesy of GENERAL MOTORS CORP.

5. Disconnect the compressor clutch electrical connector.

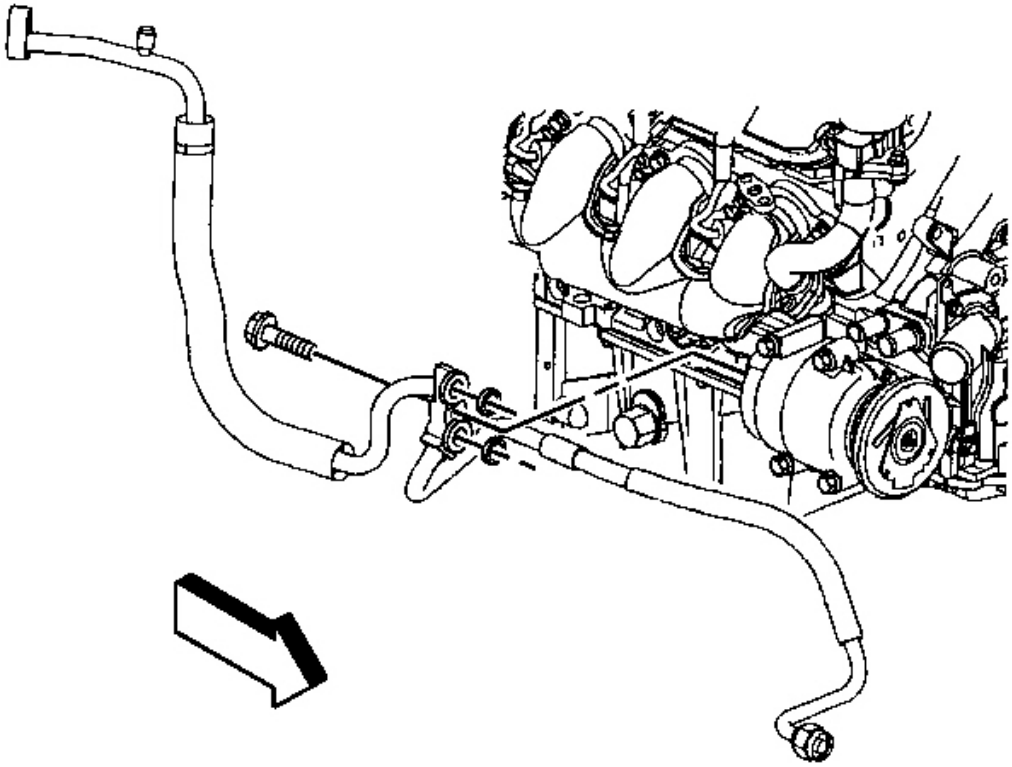

Fig. 53: Compressor Hose Assembly & Retaining Bolt
Courtesy of GENERAL MOTORS CORP.

6. Remove the compressor hose assembly retaining bolt.

IMPORTANT: Cap or tape the compressor hose assembly and the compressor immediately to prevent system contamination.

7. Disconnect the compressor hose assembly from the compressor.
8. Remove and discard sealing washers.
9. Cap or tape the compressor hose assembly and the compressor.
10. Raise and support the vehicle. Refer to **Lifting and Jacking the Vehicle** in General Information.

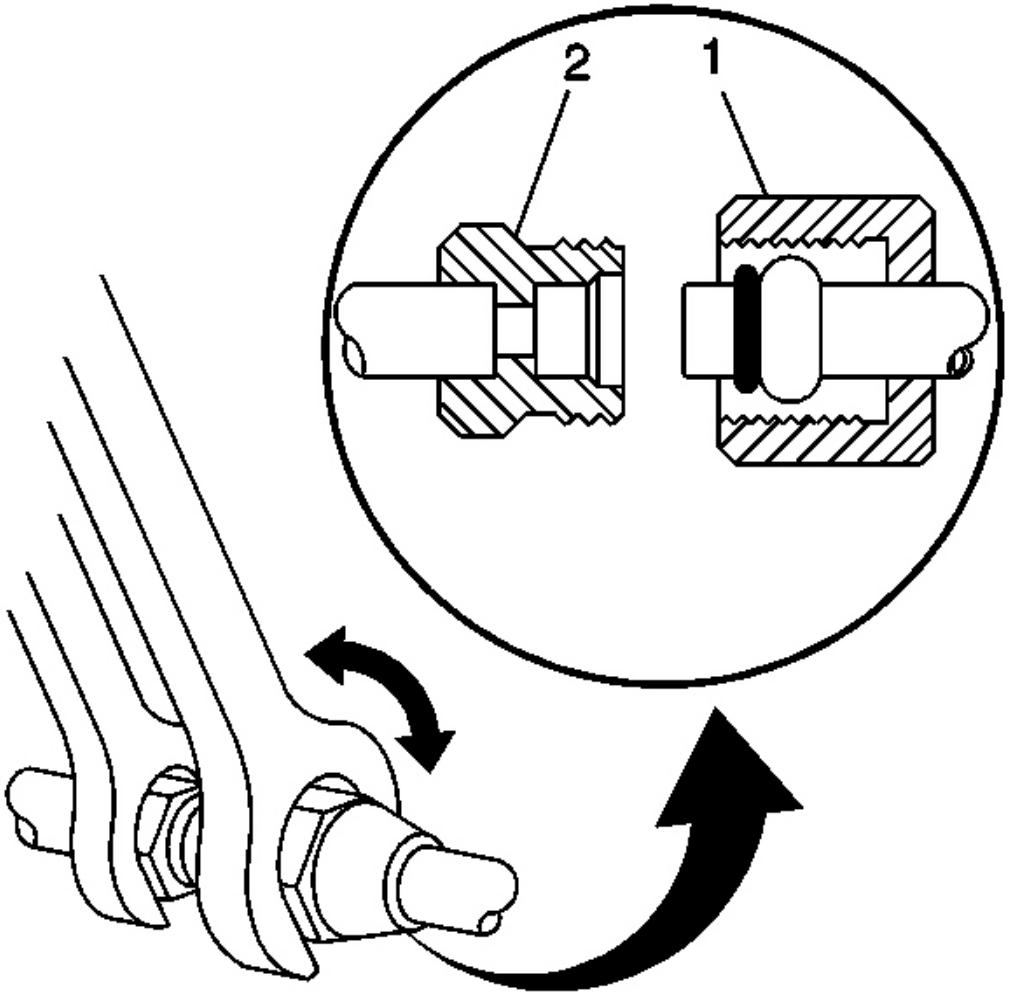

Fig. 54: Condenser Fitting & Compressor Hose Fitting
Courtesy of GENERAL MOTORS CORP.

IMPORTANT: Prior to removal, take note of the compressor hose routing and orientation between the compressor and condenser.

11. Using a back-up wrench on the condenser fitting (2), loosen the compressor hose fitting (1) from the condenser.

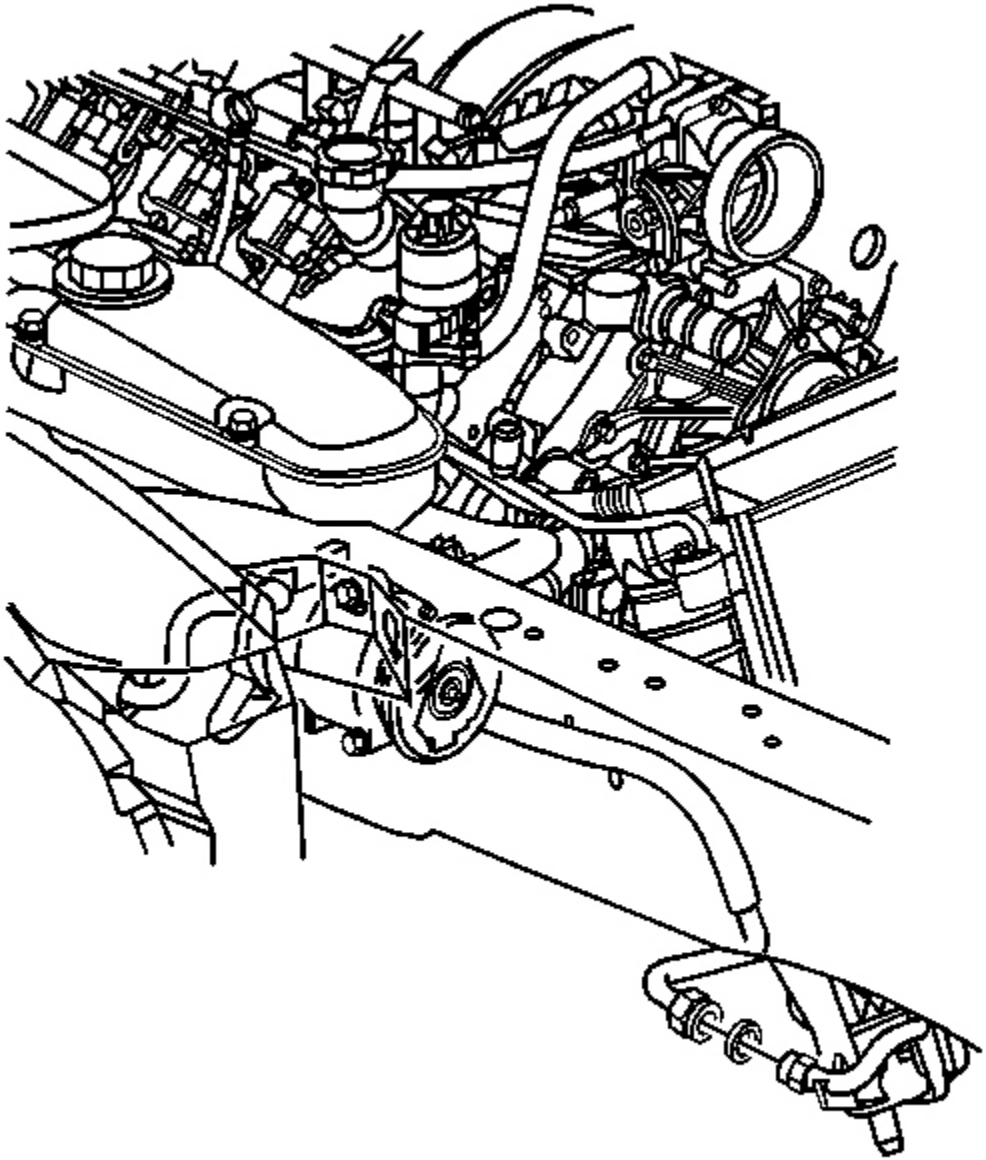

Fig. 55: Condenser Compressor Hose Assembly & Condenser
Courtesy of GENERAL MOTORS CORP.

12. Disconnect the compressor hose assembly from the condenser.
13. Discard the O-ring seal.
14. Cap or tape the compressor hose and the condenser.

15. Lower the vehicle.

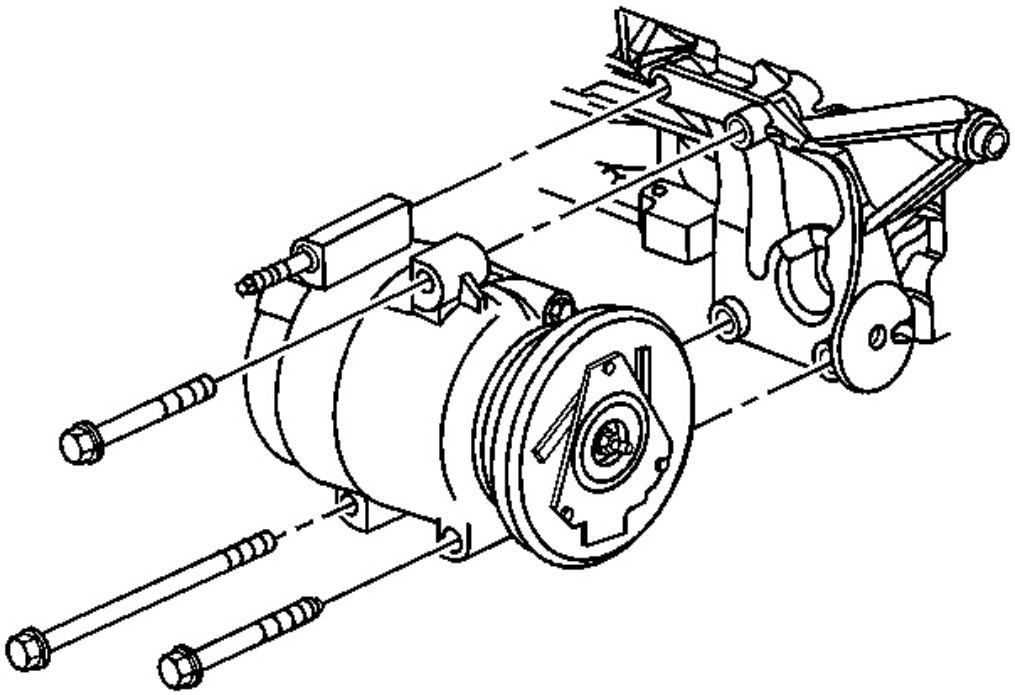

Fig. 56: Lower Compressor Mounting & Bolts
Courtesy of GENERAL MOTORS CORP.

16. Remove the lower compressor mounting bolts.

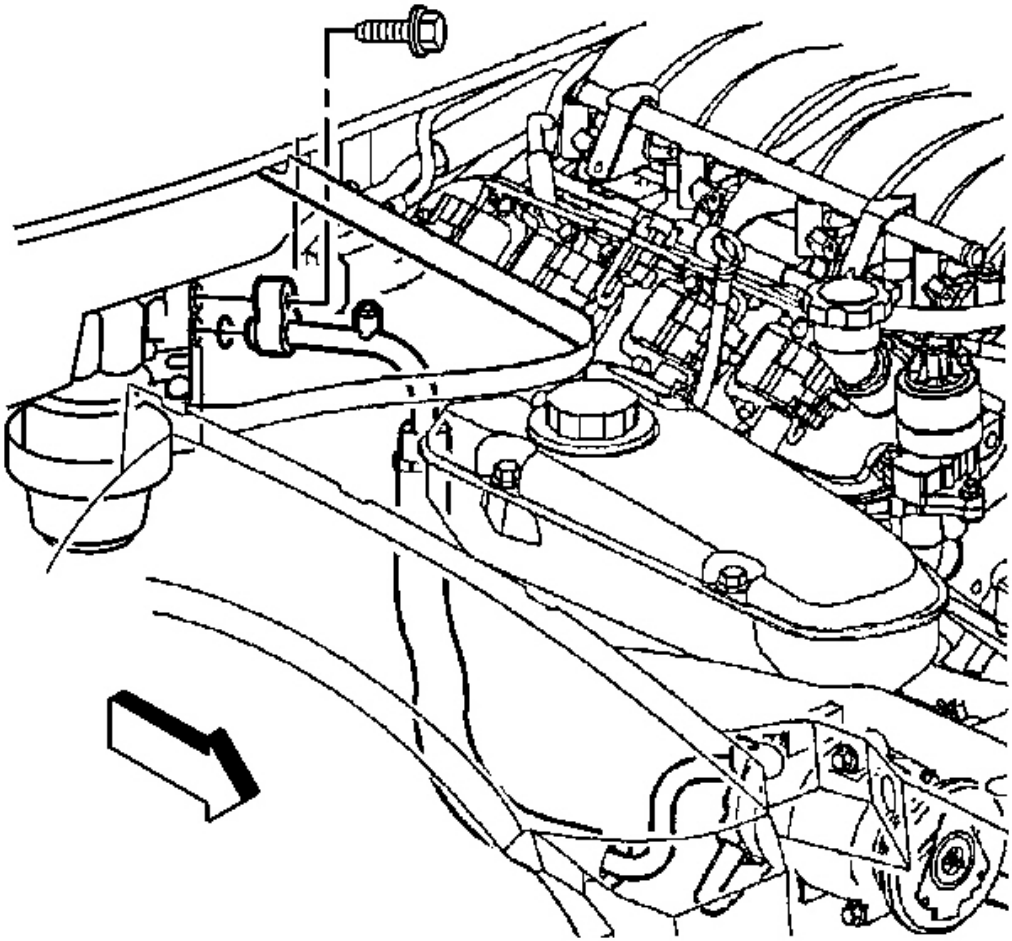

Fig. 57: Accumulator, Retaining Bolt & Compressor Hose Assembly
Courtesy of GENERAL MOTORS CORP.

17. Remove the compressor hose assembly to accumulator retaining bolt.
18. Disconnect the compressor hose assembly from the accumulator.
19. Discard the O-ring seal.
20. Cap or tape the compressor hose and the accumulator.
21. Remove the compressor upper mounting bolt.

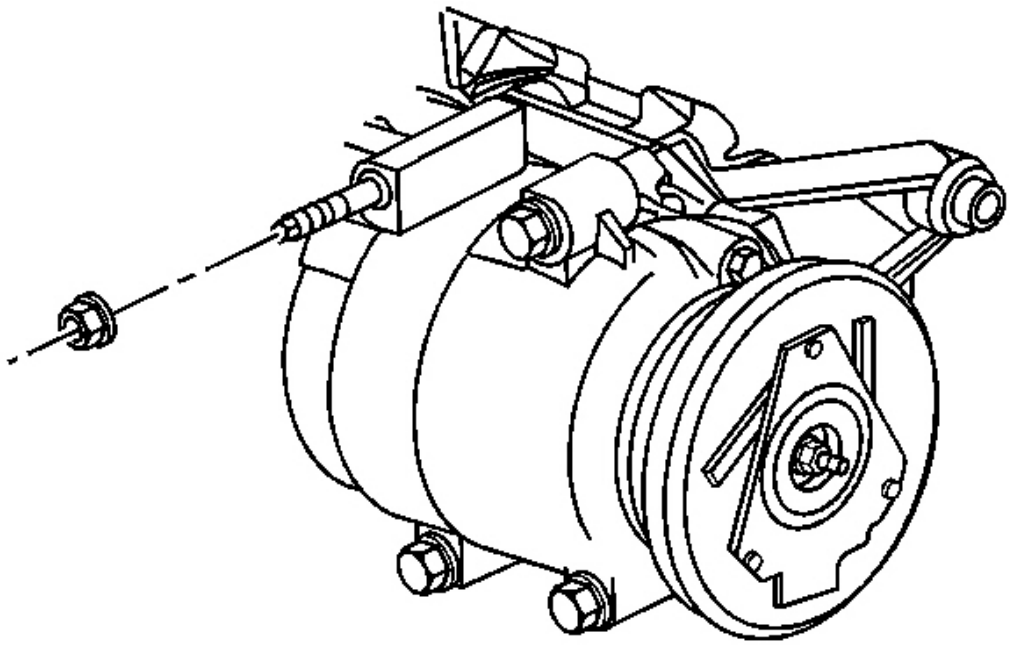

Fig. 58: Compressor Mounting & Stud
Courtesy of GENERAL MOTORS CORP.

22. Remove the compressor mounting nut.
23. Fully loosen the compressor mounting stud.
24. Reposition the A/C compressor forward.
25. Remove the compressor hose assembly from the vehicle.

Installation Procedure

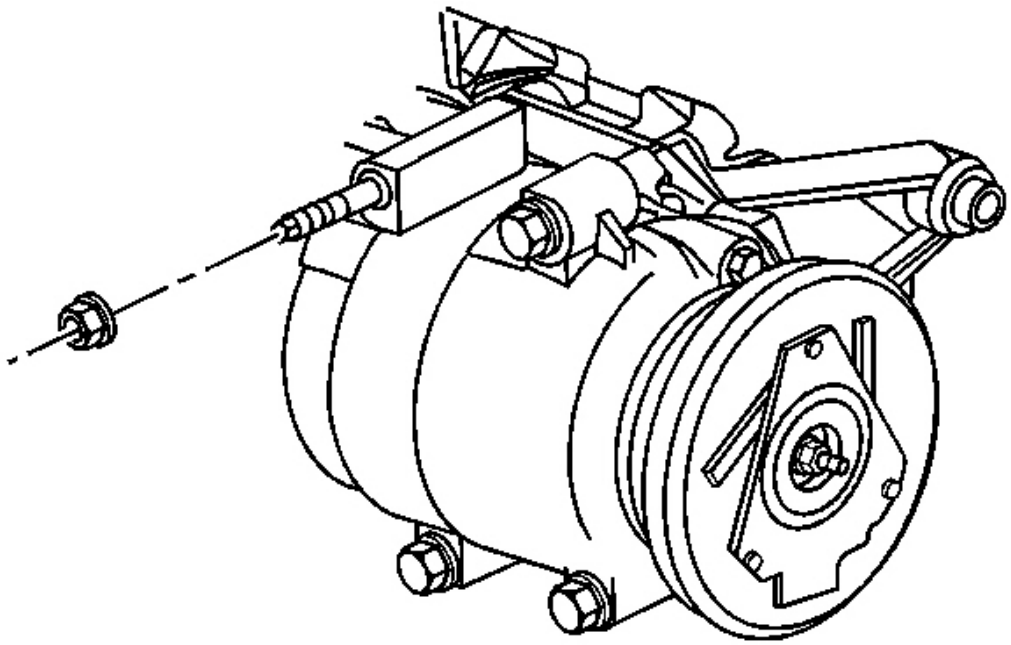

Fig. 59: Compressor Mounting & Stud
Courtesy of GENERAL MOTORS CORP.

1. Install the compressor hose assembly into position in the vehicle.
2. Install the compressor into position on the compressor mounting bracket.
3. Install the compressor mounting stud to the engine block.
4. Install the compressor upper mounting bolt.
5. Remove the cap or tape from the compressor hose assembly and the accumulator.
6. Install the new O-ring to the compressor hose assembly. Refer to **O-Ring Replacement** .

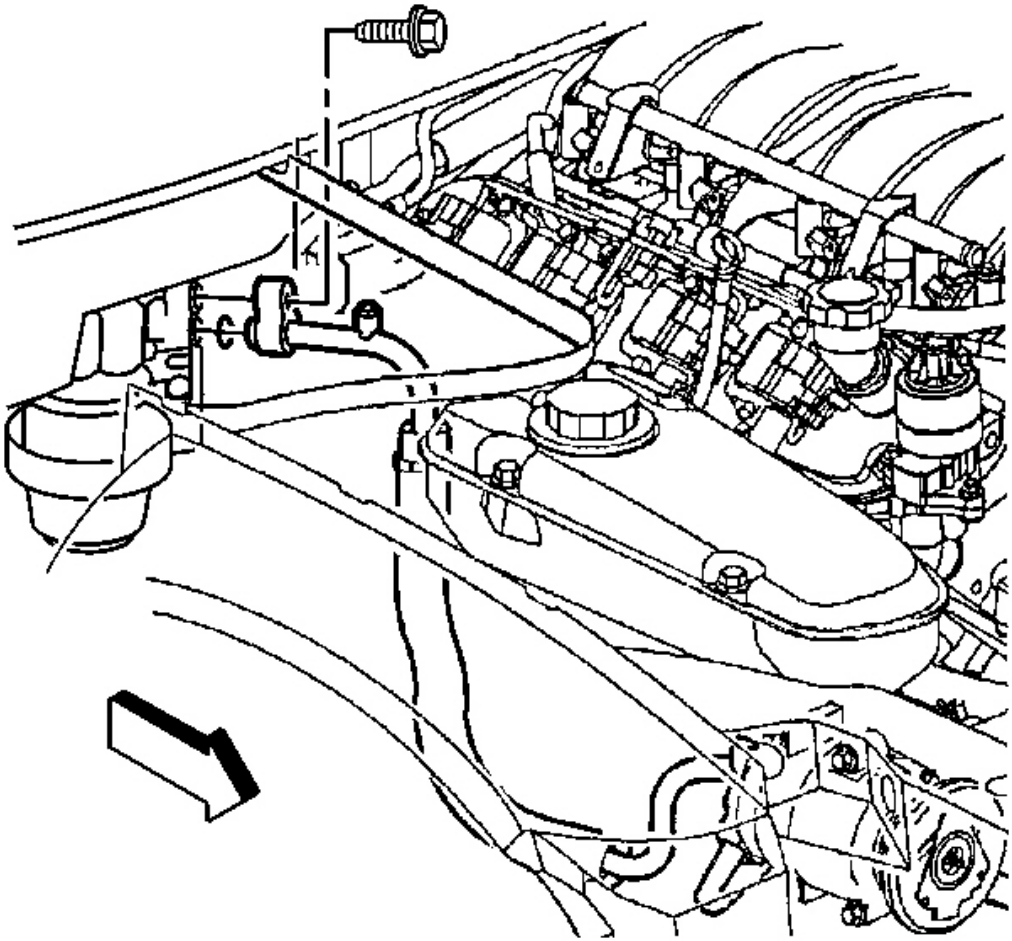

Fig. 60: Accumulator, Retaining Bolt & Compressor Hose Assembly
Courtesy of GENERAL MOTORS CORP.

7. Connect the compressor hose to the accumulator.

NOTE: **Refer to Fastener Notice in Cautions and Notices.**

8. Install the compressor hose assembly to accumulator retaining bolt.

Tighten: Tighten the bolt to 20 N.m (15 lb ft).

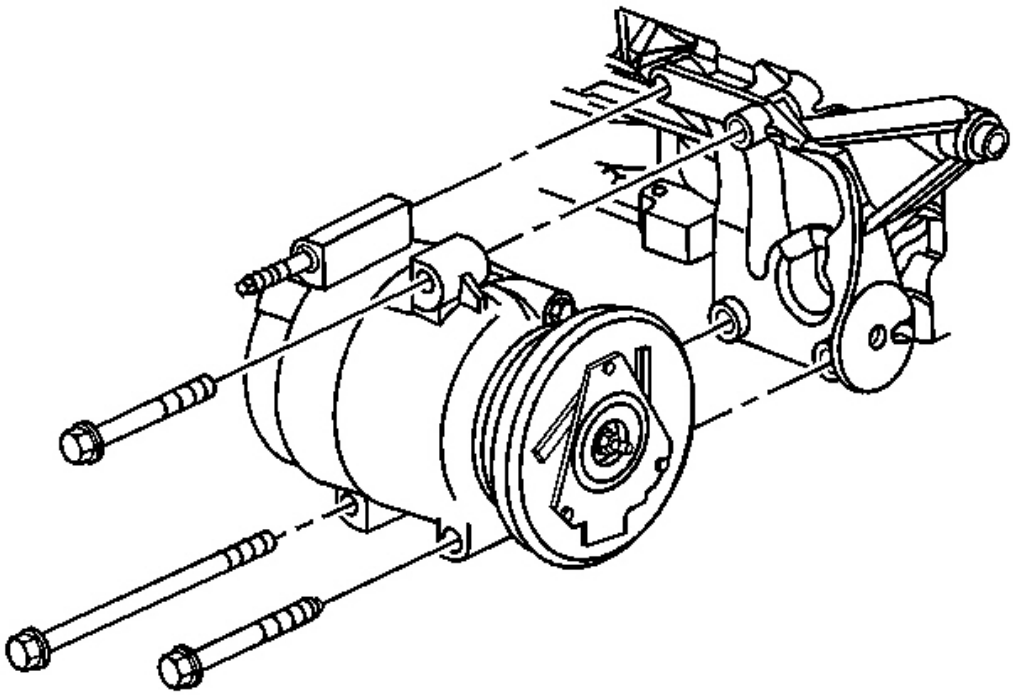

Fig. 61: Lower Compressor Mounting & Bolts
Courtesy of GENERAL MOTORS CORP.

9. Install the lower compressor mounting bolts.
10. Raise and support the vehicle.
11. Remove the cap or tape from the compressor hose assembly and the condenser.
12. Install a new O-ring to the compressor hose assembly. Refer to **O-Ring Replacement** .

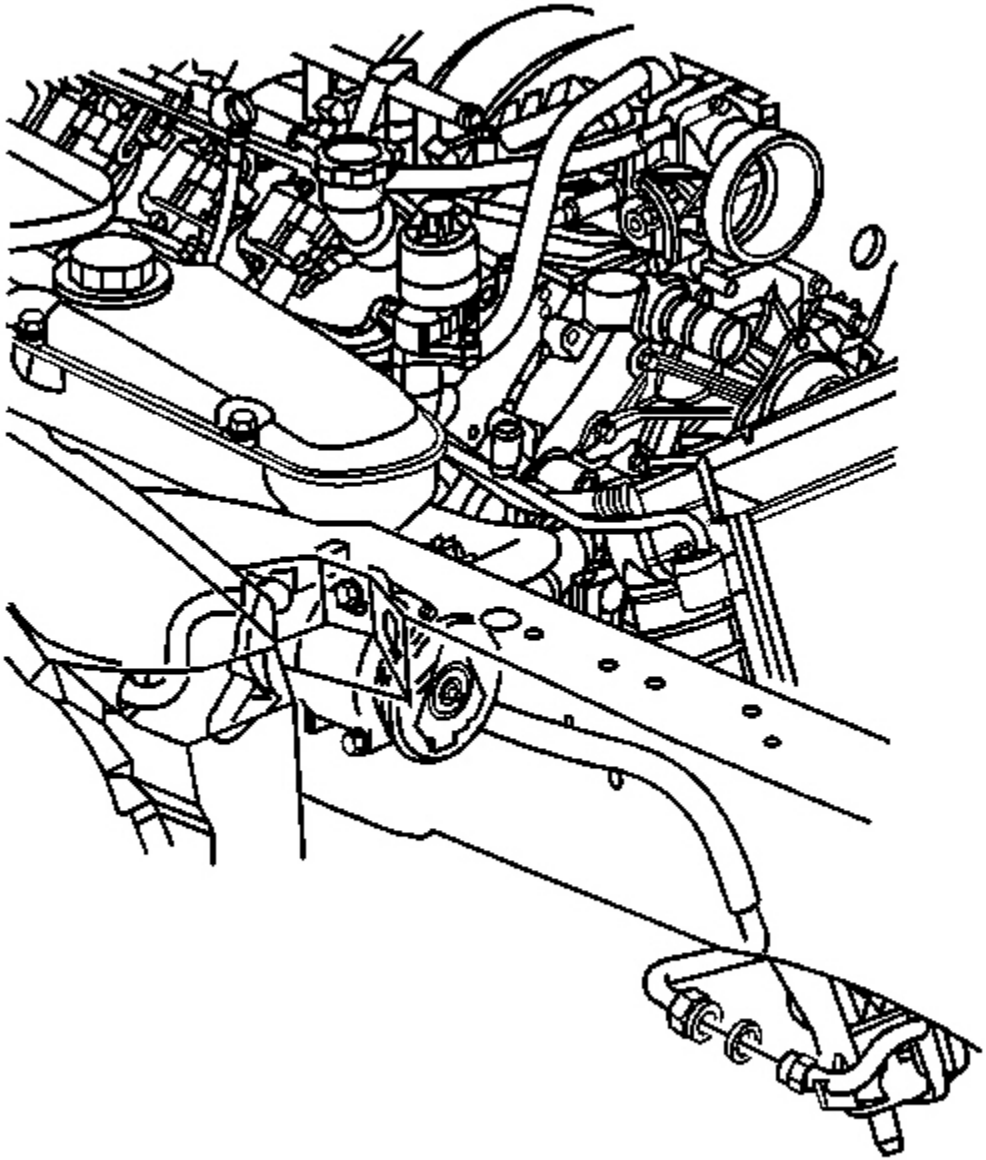

Fig. 62: Condenser Compressor Hose Assembly & Condenser
Courtesy of GENERAL MOTORS CORP.

13. Connect the compressor hose assembly to the condenser.

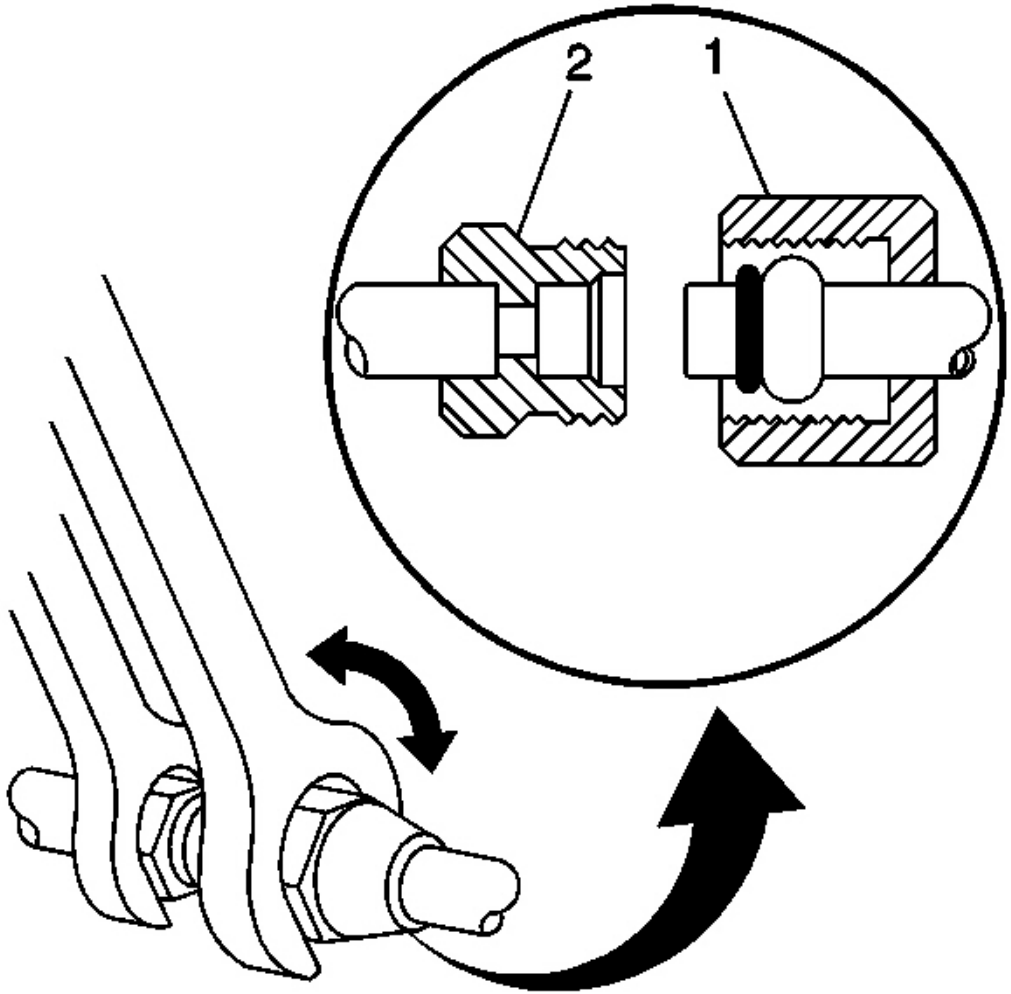

Fig. 63: Condenser Fitting & Compressor Hose Fitting
Courtesy of GENERAL MOTORS CORP.

14. Using a back-up wrench on the condenser fitting (2), secure the compressor hose assembly fitting (1) to the condenser.

    Tighten: Tighten the fitting to 24 N.m (17 lb ft).

15. Lower the vehicle.

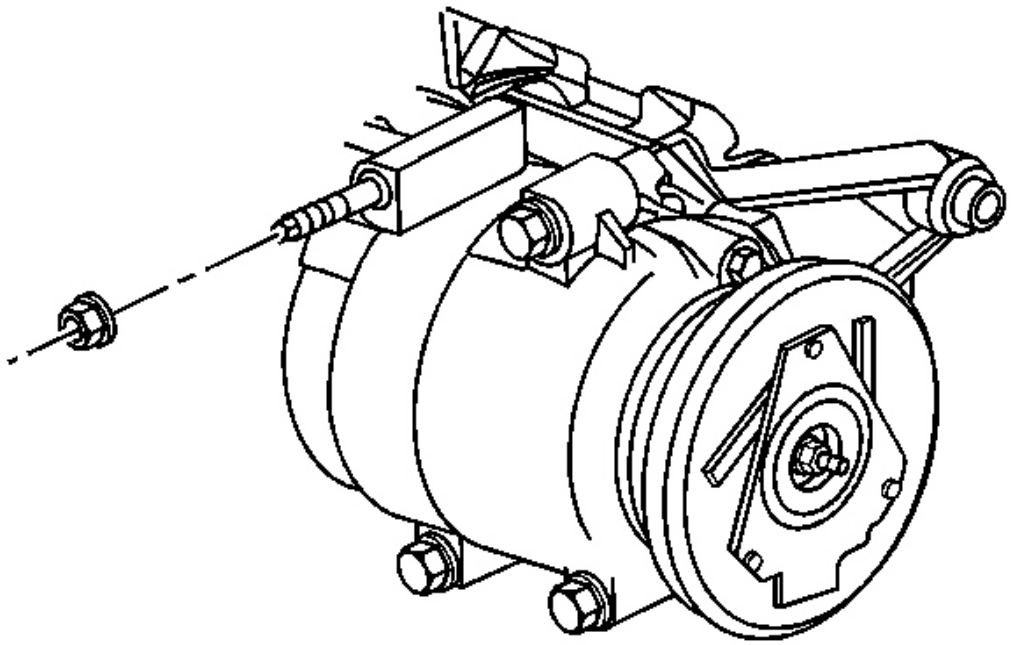

Fig. 64: Compressor Mounting & Stud
Courtesy of GENERAL MOTORS CORP.

16. Tighten the compressor mounting stud.

    Tighten: Tighten the stud to 9 N.m (80 lb in).

17. Install the compressor mounting nut.

IMPORTANT: Tighten the compressor mounting bolts in the following sequence:

1. **Front upper**
2. **Front lower**
3. **Rear lower**

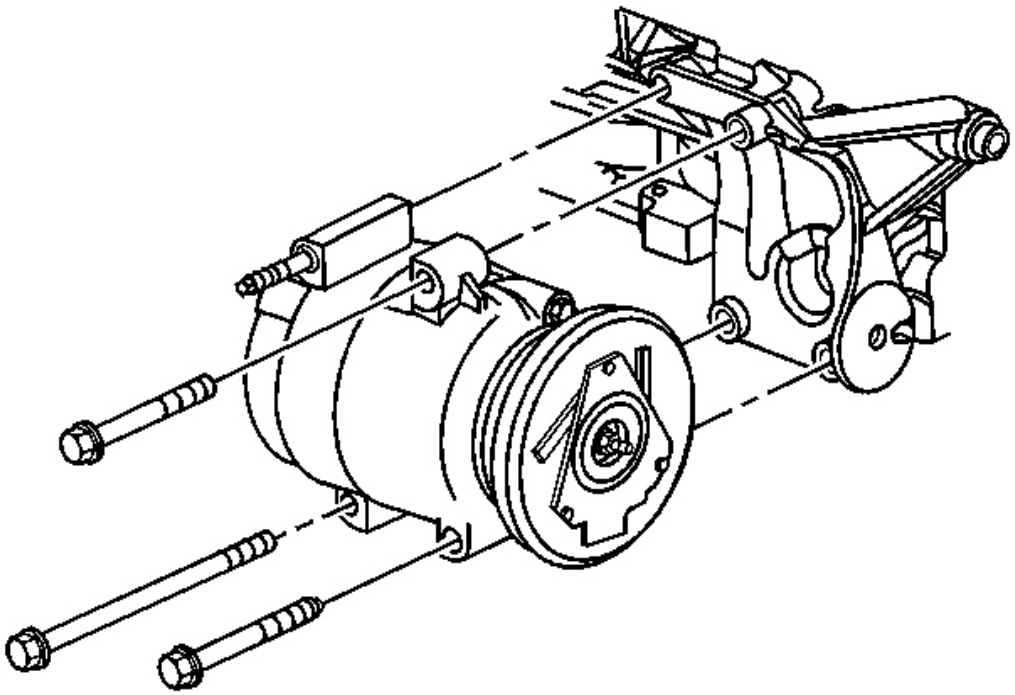

Fig. 65: Lower Compressor Mounting & Bolts
Courtesy of GENERAL MOTORS CORP.

18. Tighten the compressor mounting bolts.

    Tighten: Tighten the bolts to 40 N.m (30 lb ft).

19. Tighten the compressor mounting nut.

    Tighten: Tighten the nut to 40 N.m (30 lb ft).

20. Remove the cap or tape from the compressor hose assembly end and the compressor.
21. Install the new seal washers to the compressor hose assembly. Refer to **Sealing Washer Replacement** .
22. Connect the compressor hose assembly to the compressor.

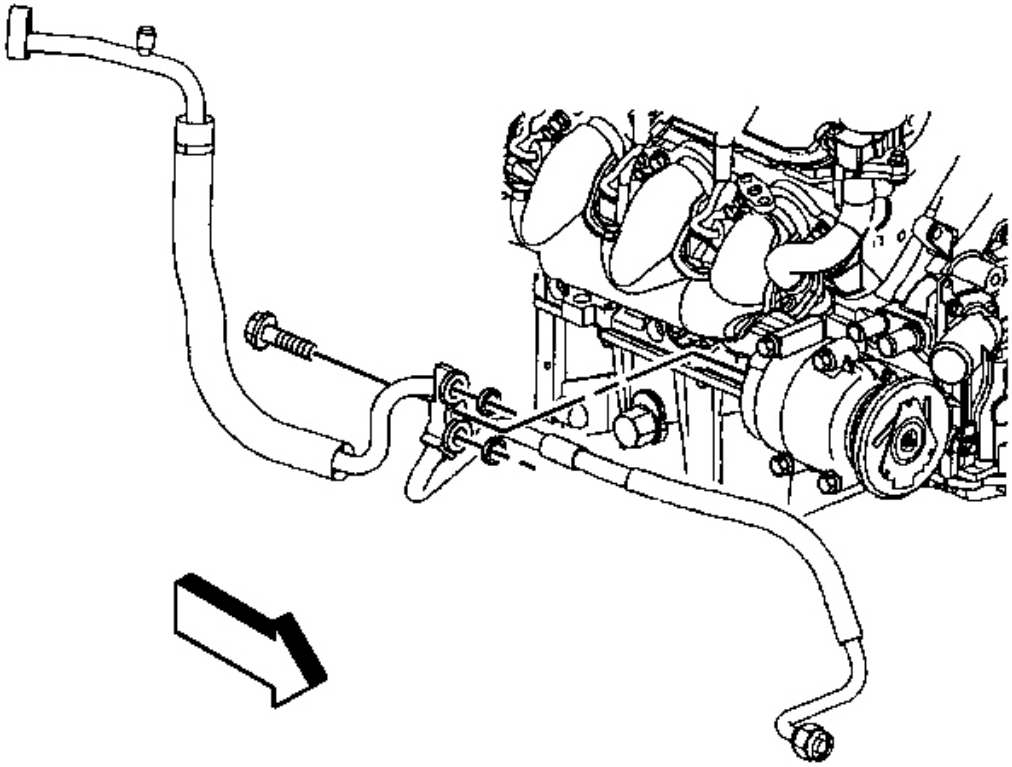

Fig. 66: Compressor Hose Assembly & Retaining Bolt
Courtesy of GENERAL MOTORS CORP.

23. Install the compressor hose assembly retaining bolt.

    Tighten: Tighten the bolt to 26 N.m (19 lb ft).

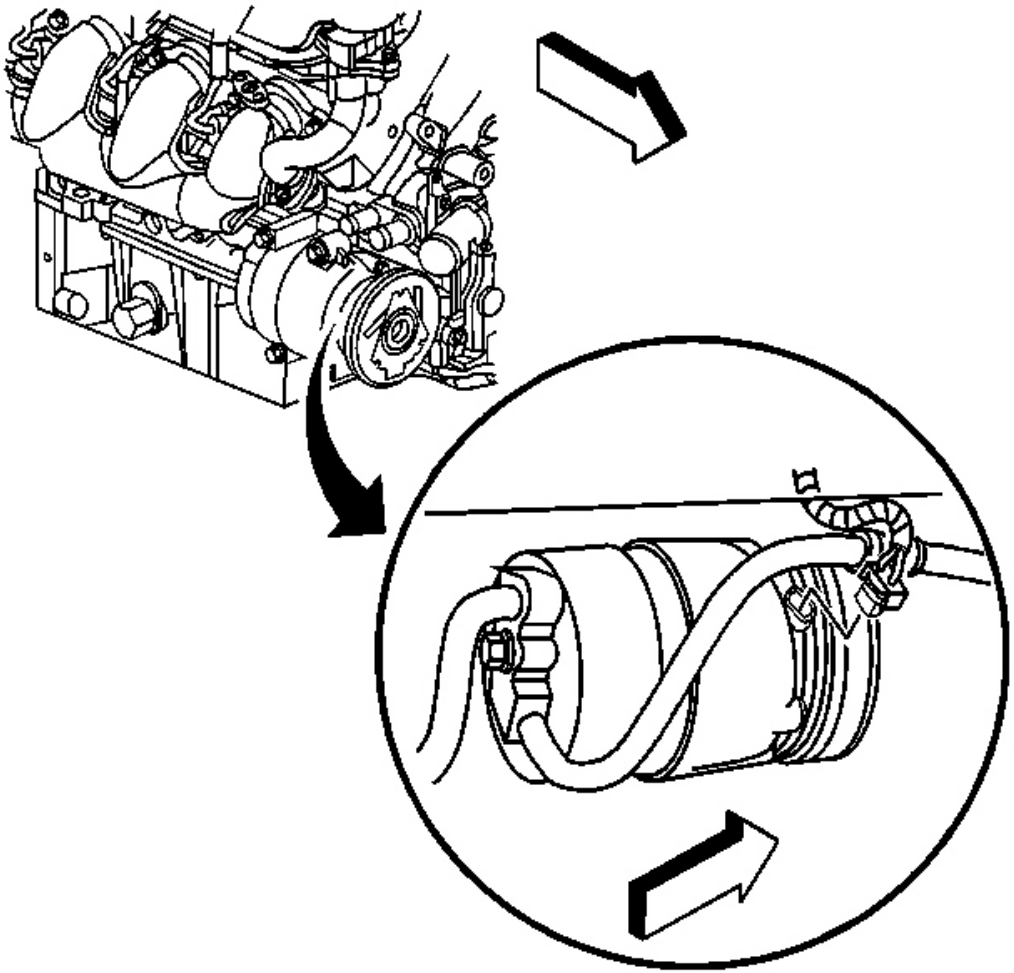

Fig. 67: Compressor Clutch Electrical Connector
Courtesy of GENERAL MOTORS CORP.

24. Connect the compressor clutch electrical connector.
25. Install the RH exhaust manifold heat shield.
26. Install the compressor drive belt. Refer to **Drive Belt Replacement - Air Conditioning** in Engine Mechanical - 5.7L.
27. Install the battery heat shield. Refer to **Battery Heat Shield Replacement** in Engine Electrical.
28. Recharge the A/C system. Refer to **Refrigerant Recovery and Recharging** .
29. Leak test the fittings of the component using **J 39400-A** . See **Special Tools and Equipment** .

EVAPORATOR TUBE REPLACEMENT - FRONT

Tools Required

J 39400-A Halogen Leak Detector. See **Special Tools and Equipment** .

Removal Procedure

1. Recover the refrigerant from the A/C system. Refer to **Refrigerant Recovery and Recharging** .
2. Remove the battery heat shield. Refer to **Battery Heat Shield Replacement** in Engine Electrical.
3. Remove the upper radiator support. Refer to **Radiator Support Replacement** in Engine Cooling.

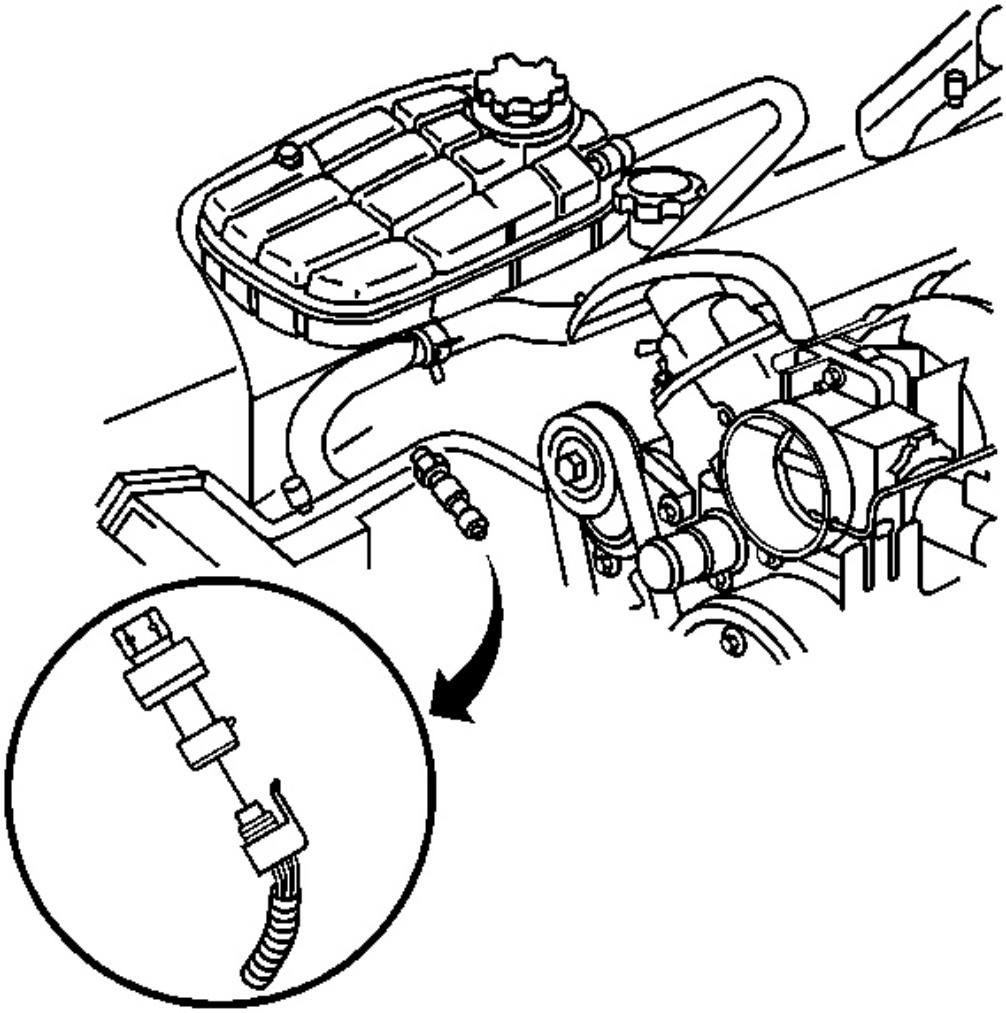

Fig. 68: Refrigerant Pressure Sensor & Electrical Connector

Courtesy of GENERAL MOTORS CORP.

4. Disconnect the electrical connector from the refrigerant pressure sensor.

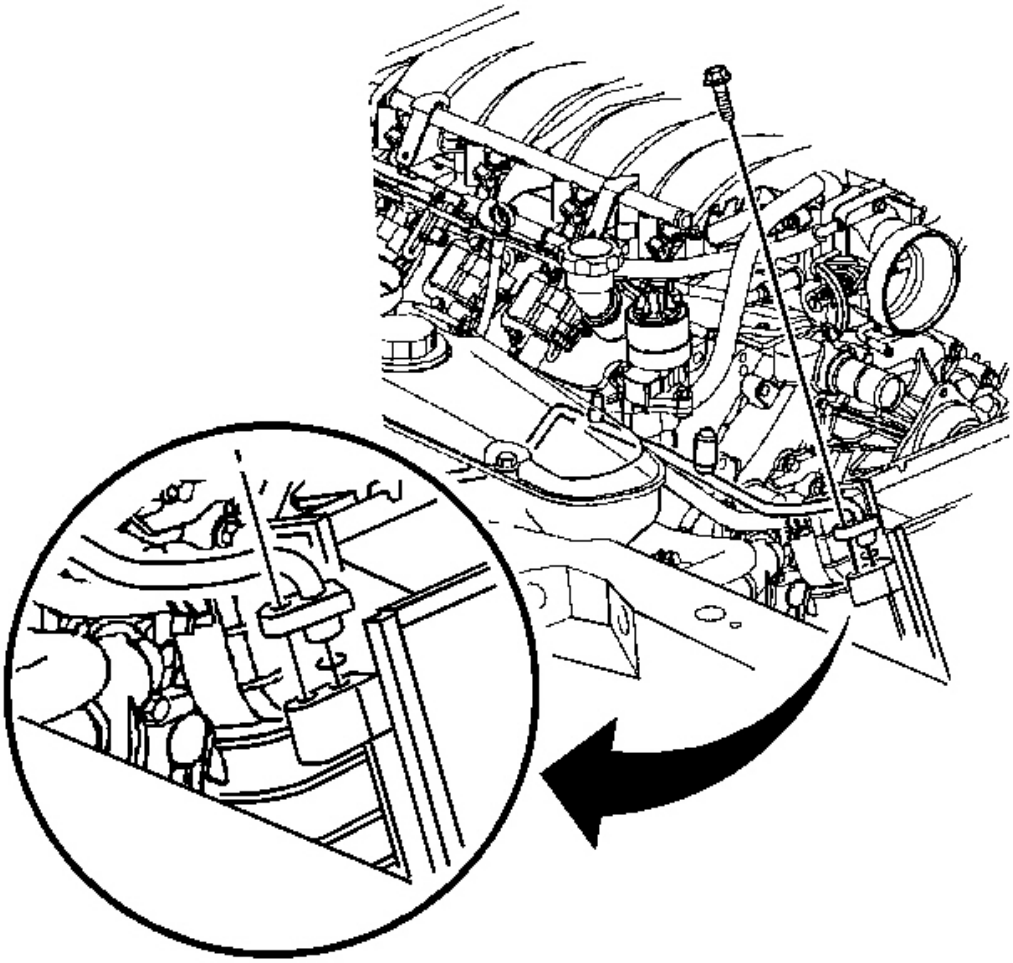

Fig. 69: Condenser Front Evaporator Tube & Bolt
Courtesy of GENERAL MOTORS CORP.

5. Remove the bolt which secures the front evaporator tube to the condenser.

IMPORTANT: Cap or tape the open A/C components immediately to prevent system contamination.

6. Disconnect the front evaporator tube from the condenser.

7. Remove and discard the O-ring.
8. Cap or tape the open front evaporator tube and the condenser.

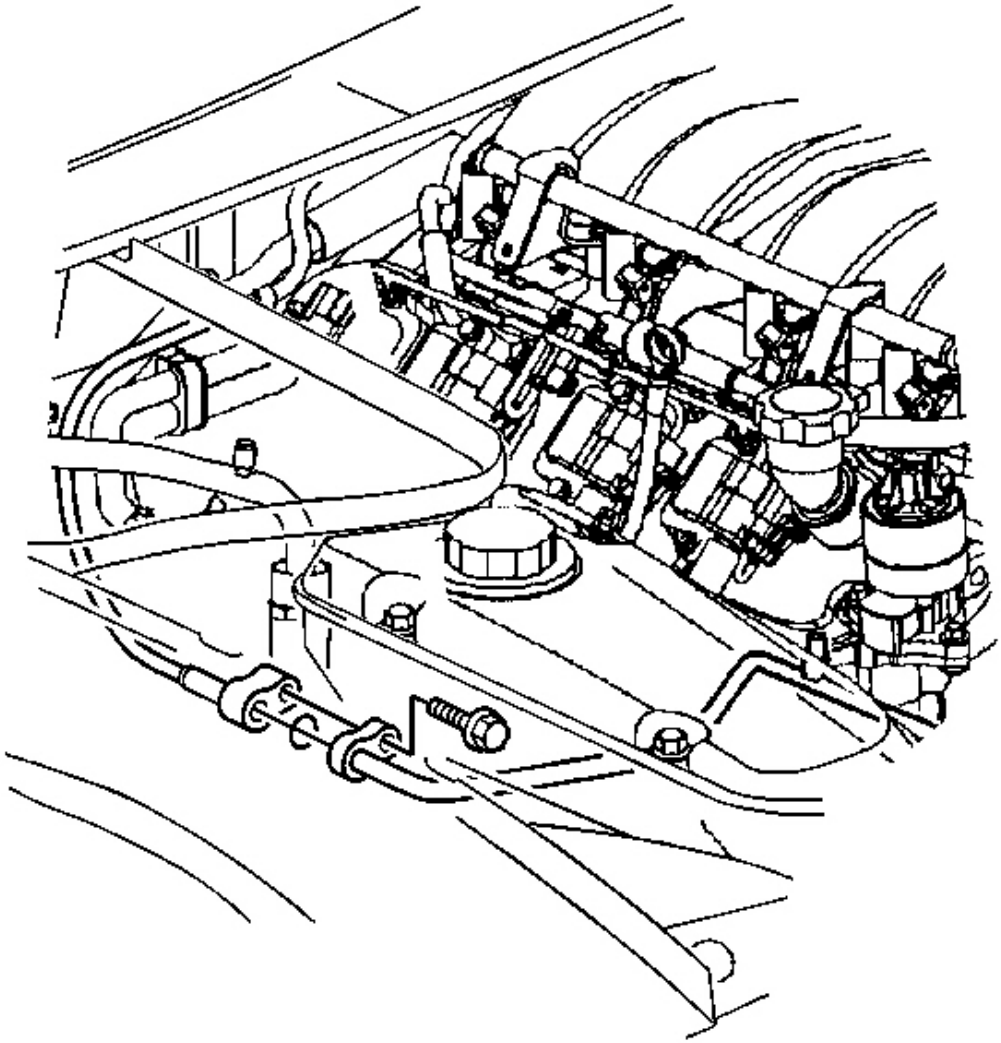

Fig. 70: Front Evaporator Tube & Bolt
Courtesy of GENERAL MOTORS CORP.

9. Remove the bolt which secures the front evaporator tube to the rear evaporator tube.
10. Disconnect the front evaporator tube from the rear evaporator tube.
11. Remove and discard the O-ring.

12. Cap or tape the front and rear evaporator tubes.

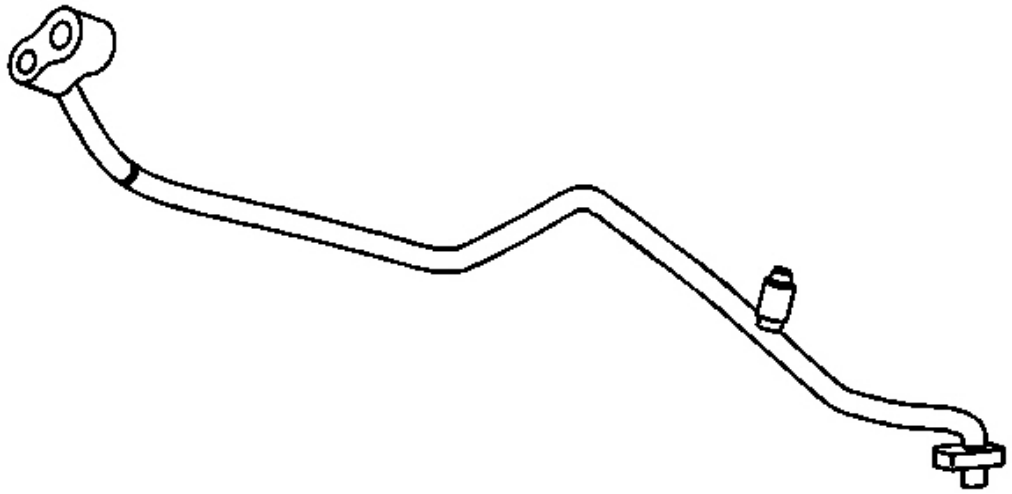

Fig. 71: A/C Refrigerant Pressure Sensor
Courtesy of GENERAL MOTORS CORP.

13. Remove the front evaporator tube from the vehicle.
14. Remove the A/C refrigerant pressure sensor from the evaporator tube.
15. Discard the O-ring.

Installation Procedure

1. Install a new O-ring onto the A/C refrigerant pressure sensor. Refer to **O-Ring Replacement** .

   NOTE: Refer to Fastener Notice in Cautions and Notices.

2. Install the A/C refrigerant pressure sensor to the evaporator tube.

   Tighten: Tighten the sensor to 4.75 N.m (42 lb in).

3. Remove the cap or tape from the evaporator tubes.
4. Install new O-rings onto the front and rear evaporator tubes. Refer to **O-Ring Replacement** .

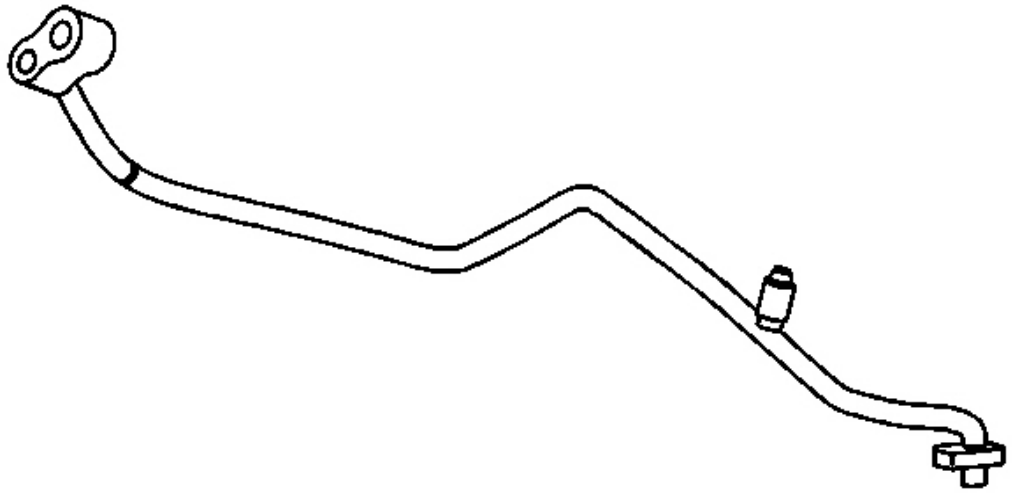

Fig. 72: A/C Refrigerant Pressure Sensor
Courtesy of GENERAL MOTORS CORP.

5. Install the front evaporator tube to the vehicle.

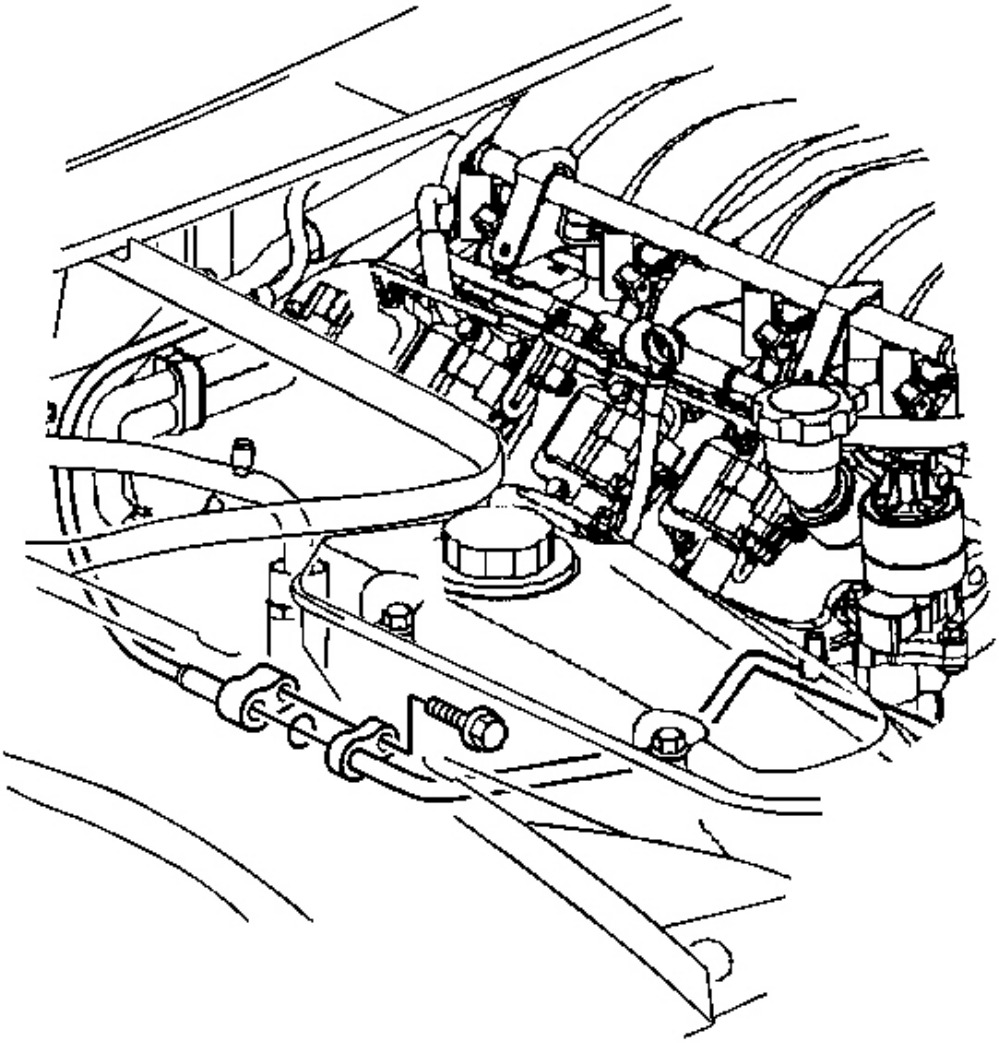

Fig. 73: Front Evaporator Tube & Bolt
Courtesy of GENERAL MOTORS CORP.

6. Connect the front evaporator tube to the rear evaporator tube.
7. Install the bolt which secures the front evaporator tube to the rear evaporator tube.

   Tighten: Tighten the bolt to 25 N.m (18 lb ft).

8. Remove the cap or tape from the condenser.

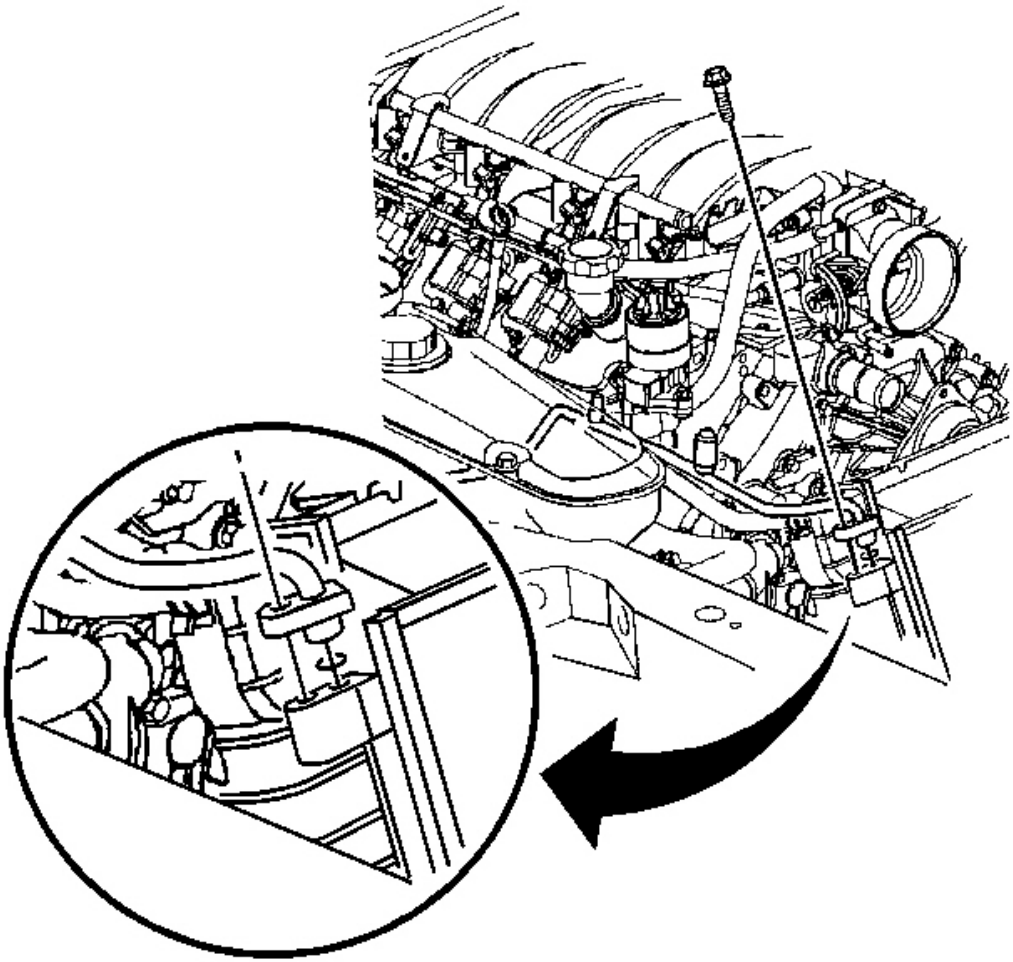

Fig. 74: Condenser Front Evaporator Tube & Bolt
Courtesy of GENERAL MOTORS CORP.

9. Connect the front evaporator tube to the condenser.
10. Install the bolt which secures the front evaporator tube to the condenser.

Tighten: Tighten the bolt to 27 N.m (20 lb ft).

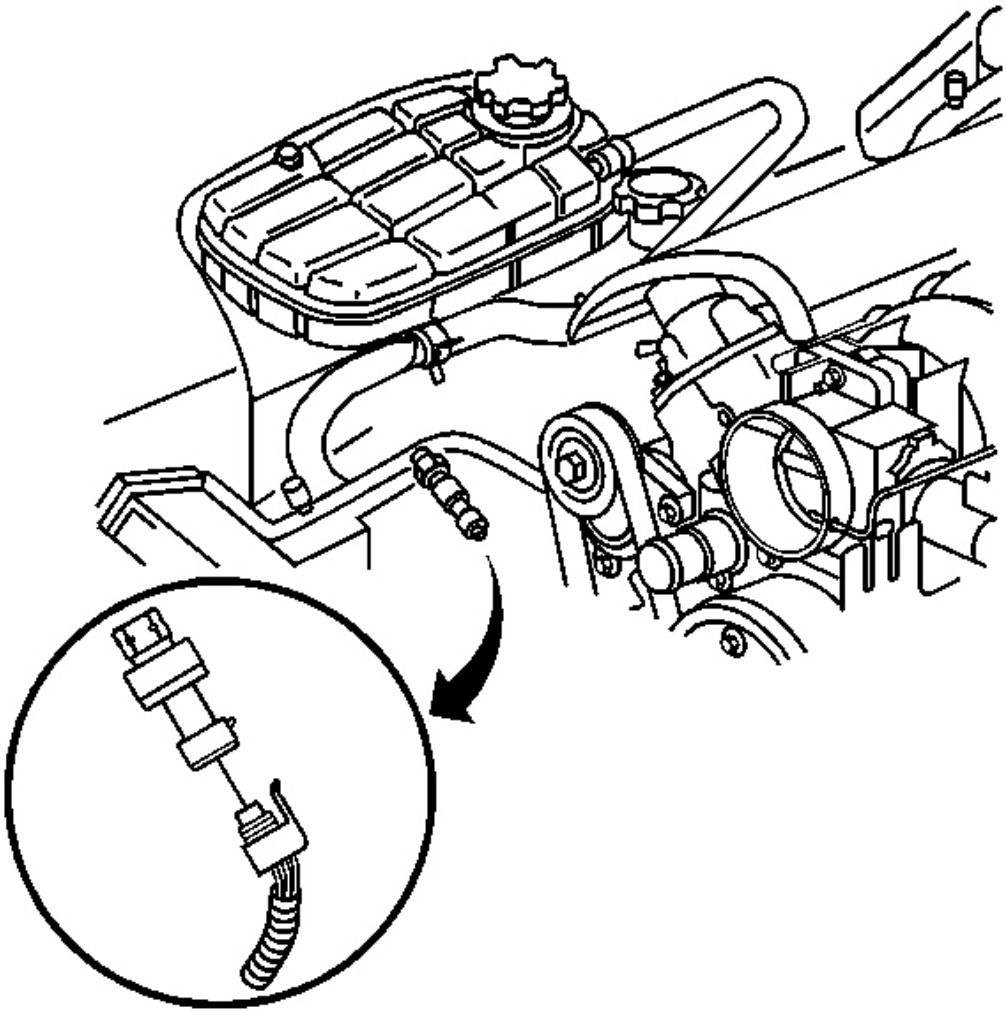

Fig. 75: Refrigerant Pressure Sensor & Electrical Connector
Courtesy of GENERAL MOTORS CORP.

11. Connect the electrical connector to the refrigerant pressure sensor.
12. Install the upper radiator support. Refer to **Radiator Support Replacement** in Engine Cooling.
13. Evacuate and recharge the A/C system. Refer to **Refrigerant Recovery and Recharging** .
14. Install the battery heat shield. Refer to **Battery Heat Shield Replacement** in Engine Electrical.
15. Leak test the fittings of the component using **J 39400-A** . See **Special Tools and Equipment** .

EVAPORATOR TUBE REPLACEMENT - REAR

Tools Required

J 39400-A Halogen Leak Detector. See **Special Tools and Equipment** .

Removal Procedure

1. Recover the refrigerant from the A/C system. Refer to **Refrigerant Recovery and Recharging** .
2. Remove the battery. Refer to **Battery Replacement** in Engine Electrical.
3. Remove the battery heat shield. Refer to **Battery Heat Shield Replacement** in Engine Electrical.
4. Remove the intake manifold. Refer to **Intake Manifold Replacement** in Engine Mechanical.

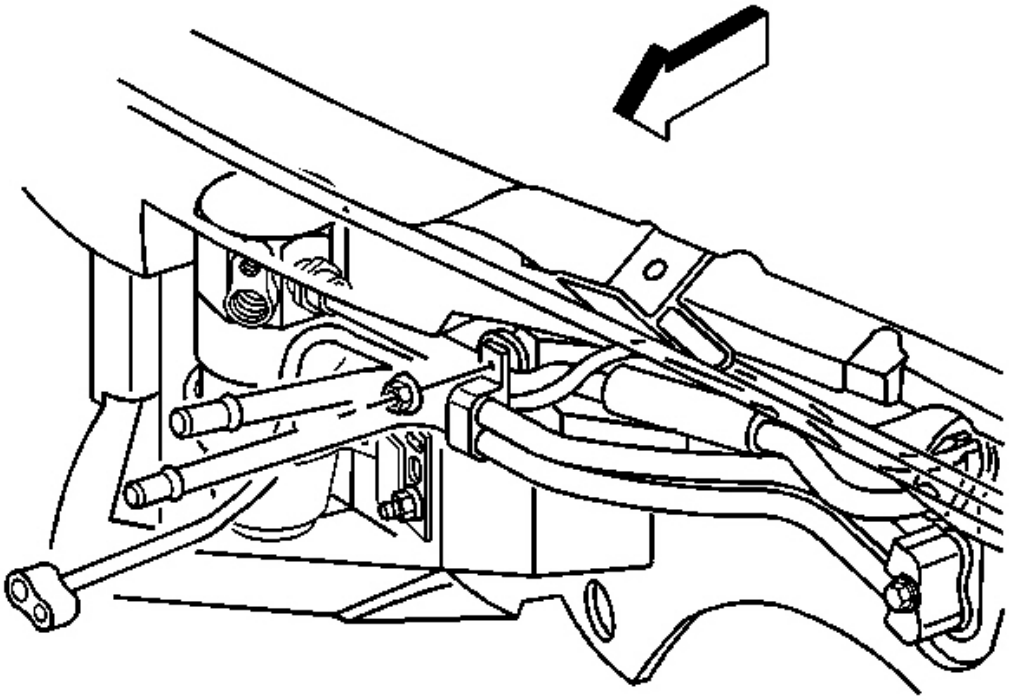

Fig. 76: Heater Pipe Bracket & Cowl
Courtesy of GENERAL MOTORS CORP.

5. Remove the nut retaining the heater pipe bracket to the cowl.
6. Reposition the heater pipe bracket to access the refrigerant lines.

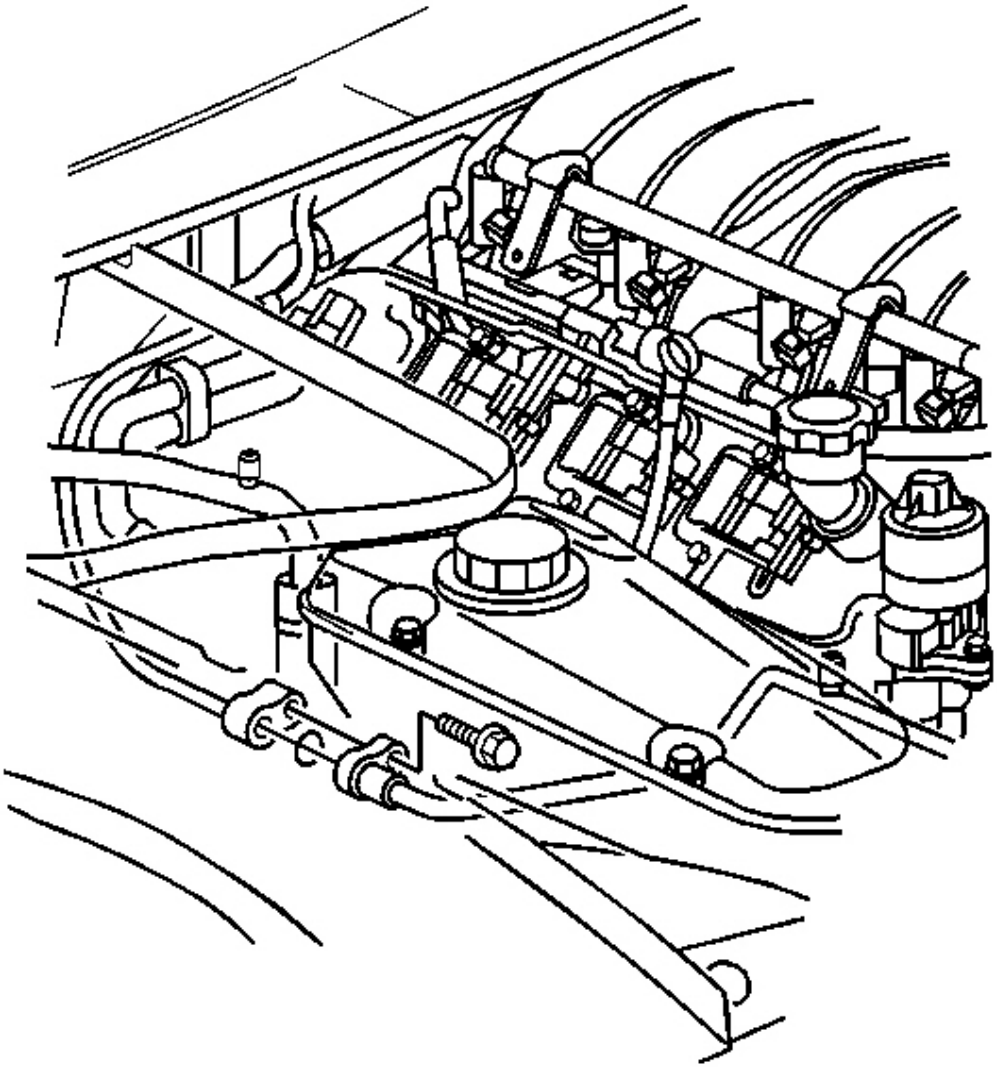

Fig. 77: Rear Evaporator Tube & Bolt
Courtesy of GENERAL MOTORS CORP.

7. Remove the bolt which secures the front evaporator tube to the rear evaporator tube.

IMPORTANT: Cap or tape the open A/C components immediately to prevent system contamination.

8. Disconnect the front and rear evaporator tubes.

9. Remove and discard the O-ring.
10. Cap or tape the front and rear evaporator tubes.

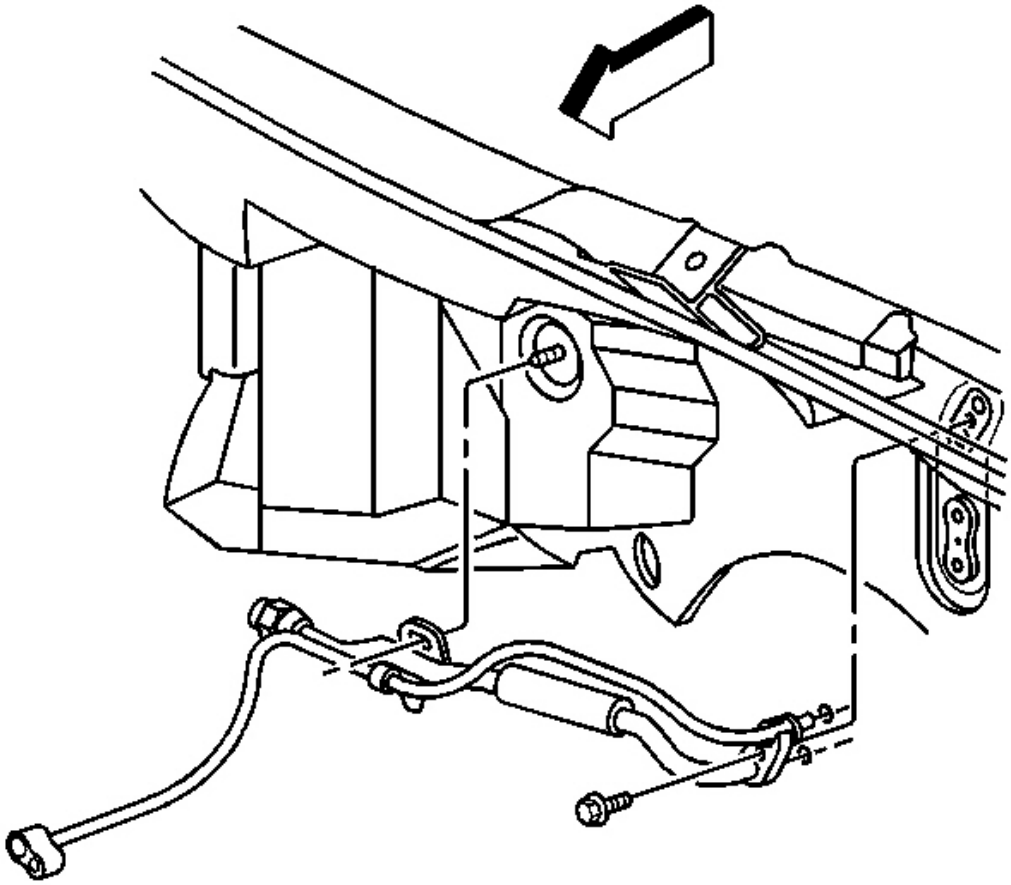

Fig. 78: Accumulator Hose, Evaporator & Bolt
Courtesy of GENERAL MOTORS CORP.

11. Loosen the accumulator hose to evaporator retaining bolt.
12. Disconnect the rear evaporator tube from the accumulator hose bracket at the evaporator.
13. Remove and discard O-ring.
14. Cap or tape the open rear evaporator tube and the evaporator.

Installation Procedure

1. Remove the cap or tape from the rear evaporator tube and evaporator.

2. Install a new O-ring to the evaporator tube. Refer to **O-Ring Replacement** .

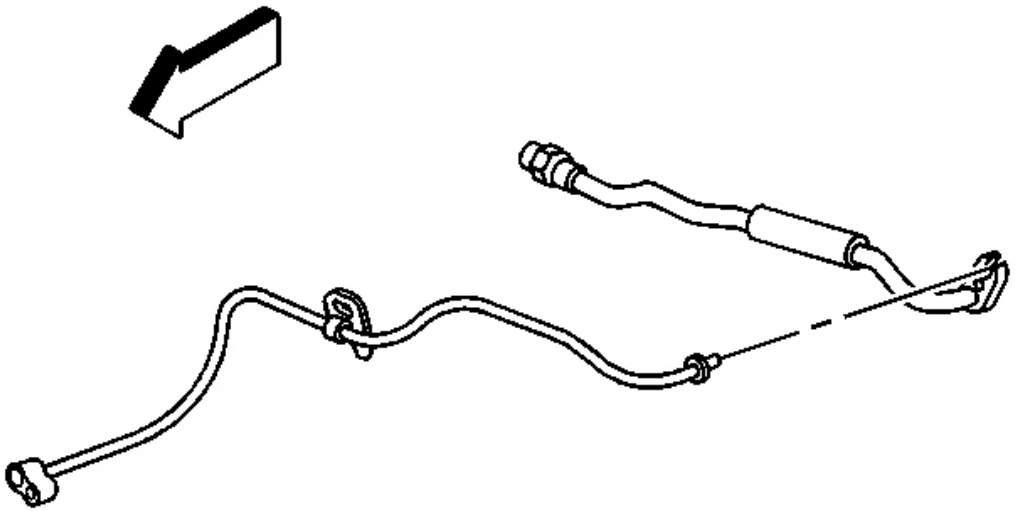

Fig. 79: Accumulator Hose Bracket & Rear Evaporator Tube
Courtesy of GENERAL MOTORS CORP.

3. Position the rear evaporator tube with the accumulator hose bracket and install the assembly to the evaporator.

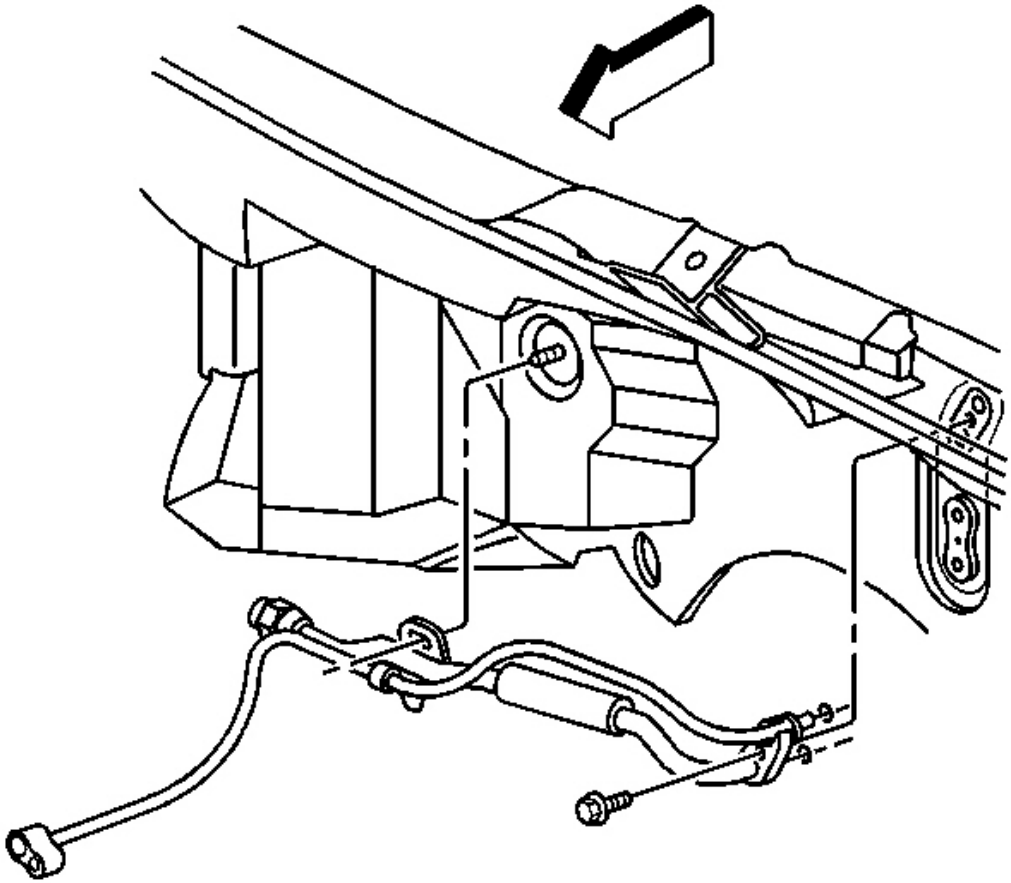

Fig. 80: Accumulator Hose, Evaporator & Bolt
Courtesy of GENERAL MOTORS CORP.

NOTE: Refer to Fastener Notice in Cautions and Notices.

4. Tighten the bolt which secures the accumulator hose to the evaporator.

   Tighten: Tighten the bolt to 16 N.m (12 lb ft).

5. Remove the cap or tape from the front evaporator tube.
6. Install a new O-ring to the evaporator tube. Refer to **O-Ring Replacement** .

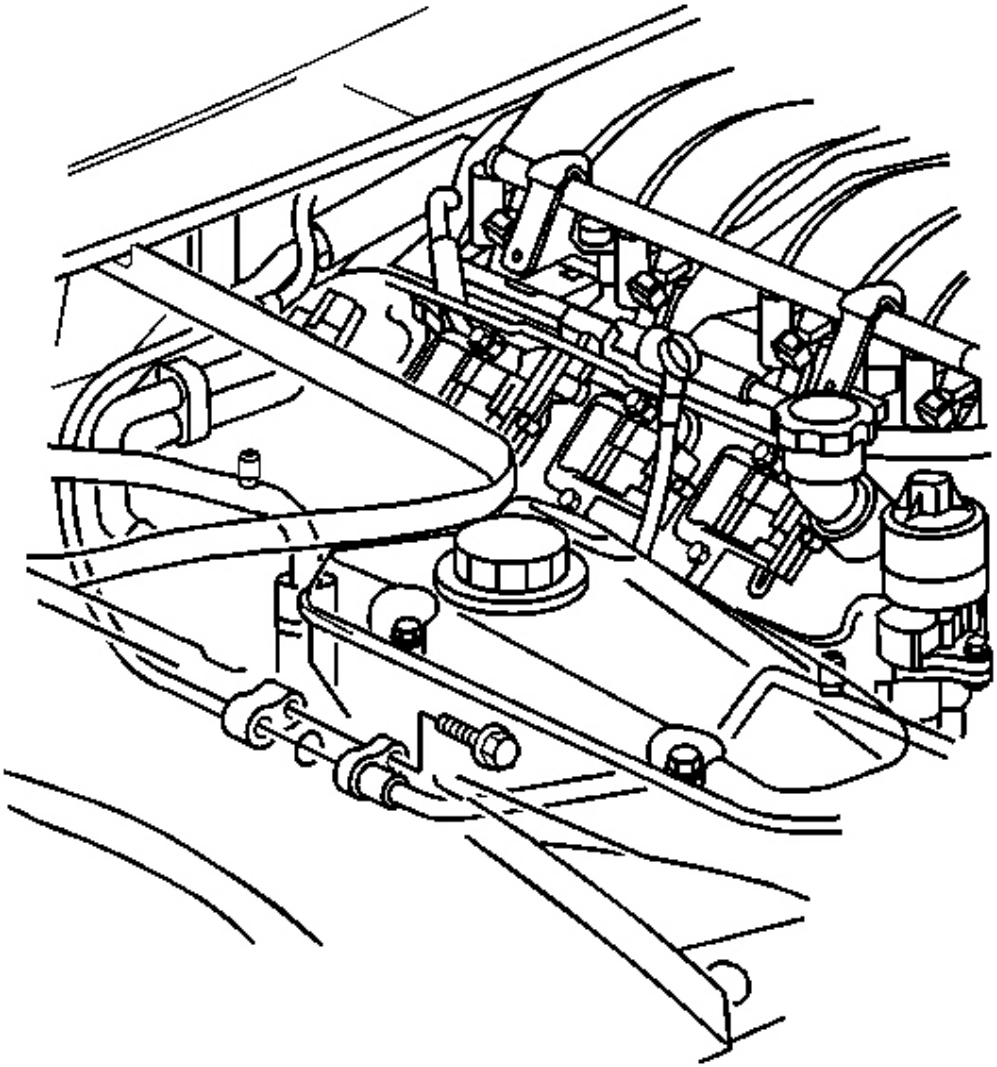

Fig. 81: Rear Evaporator Tube & Bolt
Courtesy of GENERAL MOTORS CORP.

7. Install the bolt which secures the front evaporator tube to the rear evaporator tube.

   Tighten: Tighten the bolt to 25 N.m (18 lb ft).

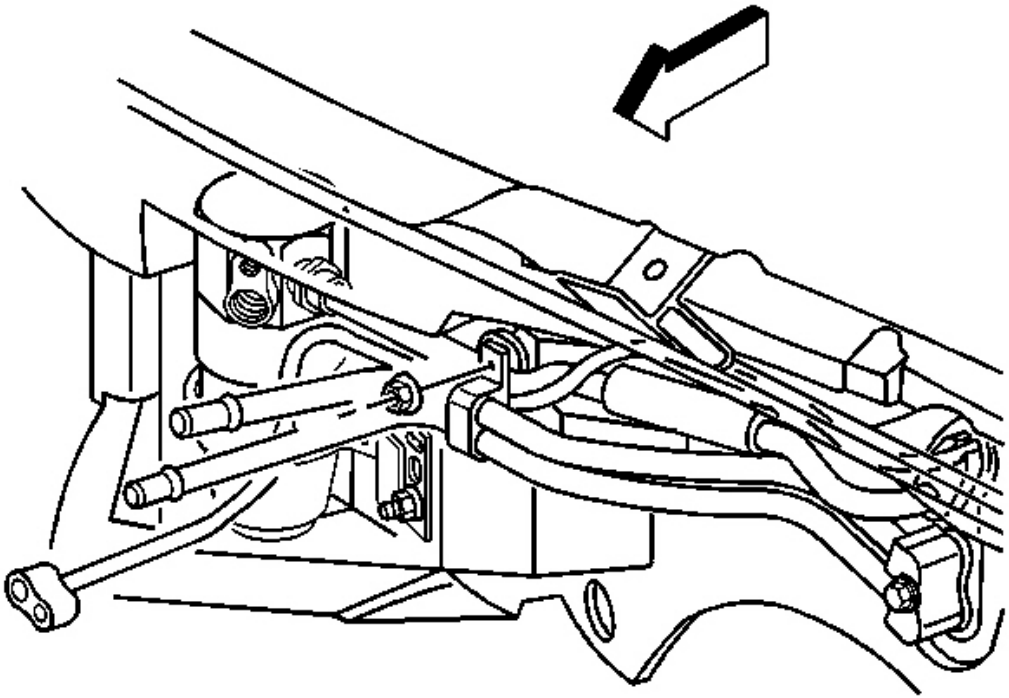

Fig. 82: Heater Pipe Bracket & Cowl
Courtesy of GENERAL MOTORS CORP.

8. Install the heater pipe bracket to the cowl stud.
9. Install the heater pipe bracket retaining nut.

   Tighten: Tighten the nut to 10 N.m (89 lb in).

10. Install the intake manifold. Refer to **Intake Manifold Replacement** in Engine Mechanical.
11. Install the battery heat shield. Refer to **Battery Heat Shield Replacement** in Engine Electrical.
12. Install the battery. Refer to **Battery Replacement** in Engine Electrical.
13. Evacuate and recharge the A/C system. Refer to **Refrigerant Recovery and Recharging** .
14. Leak test the fittings of the component using **J 39400-A** . See **Special Tools and Equipment** .

ACCUMULATOR TUBE REPLACEMENT

Tools Required

J 39400-A Halogen Leak Detector. See **Special Tools and Equipment** .

Removal Procedure

1. Recover the refrigerant from the A/C system. Refer to **Refrigerant Recovery and Recharging** .
2. Remove the battery. Refer to **Battery Replacement** in Engine Electrical.
3. Remove the battery heat shield. Refer to **Battery Heat Shield Replacement** in Engine Electrical.
4. Remove the intake manifold. Refer to **Intake Manifold Replacement** in Engine Mechanical.

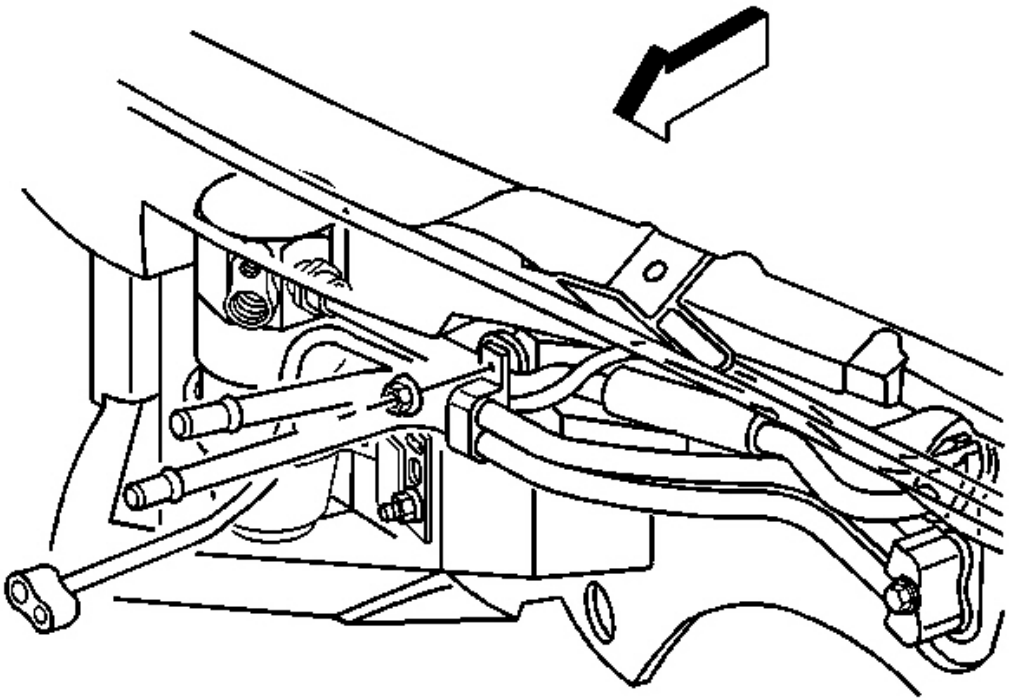

Fig. 83: Heater Pipe Bracket & Cowl
Courtesy of GENERAL MOTORS CORP.

5. Remove the nut retaining the heater pipe bracket to the dash cowl.
6. Reposition the heater pipe bracket to access the refrigerant lines.

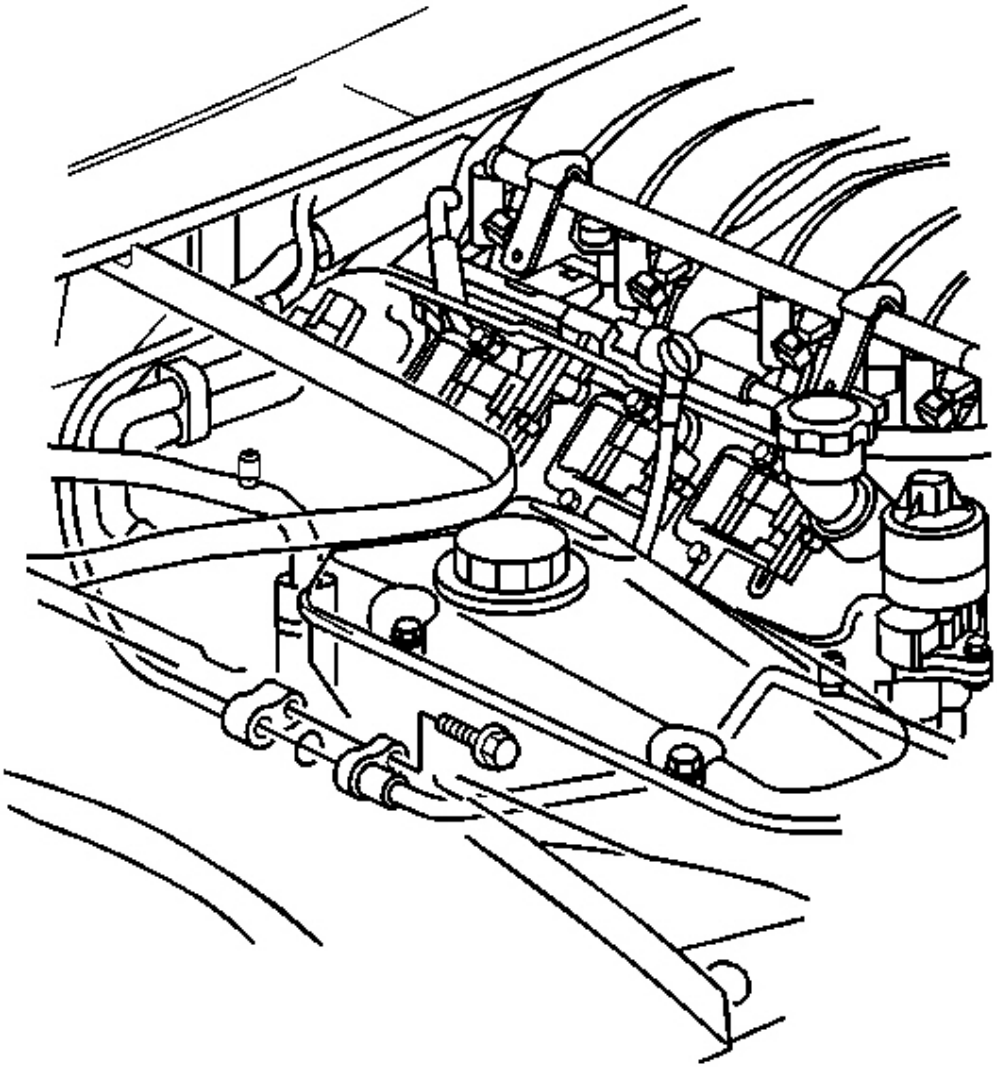

Fig. 84: Rear Evaporator Tube & Bolt
Courtesy of GENERAL MOTORS CORP.

7. Remove the bolt which secures the front evaporator tube to the rear evaporator tube.

IMPORTANT: Cap or tape the open A/C components immediately to prevent system contamination.

8. Disconnect the evaporator tubes.

9. Remove and discard the O-ring.
10. Cap or tape the front and rear evaporator tubes.

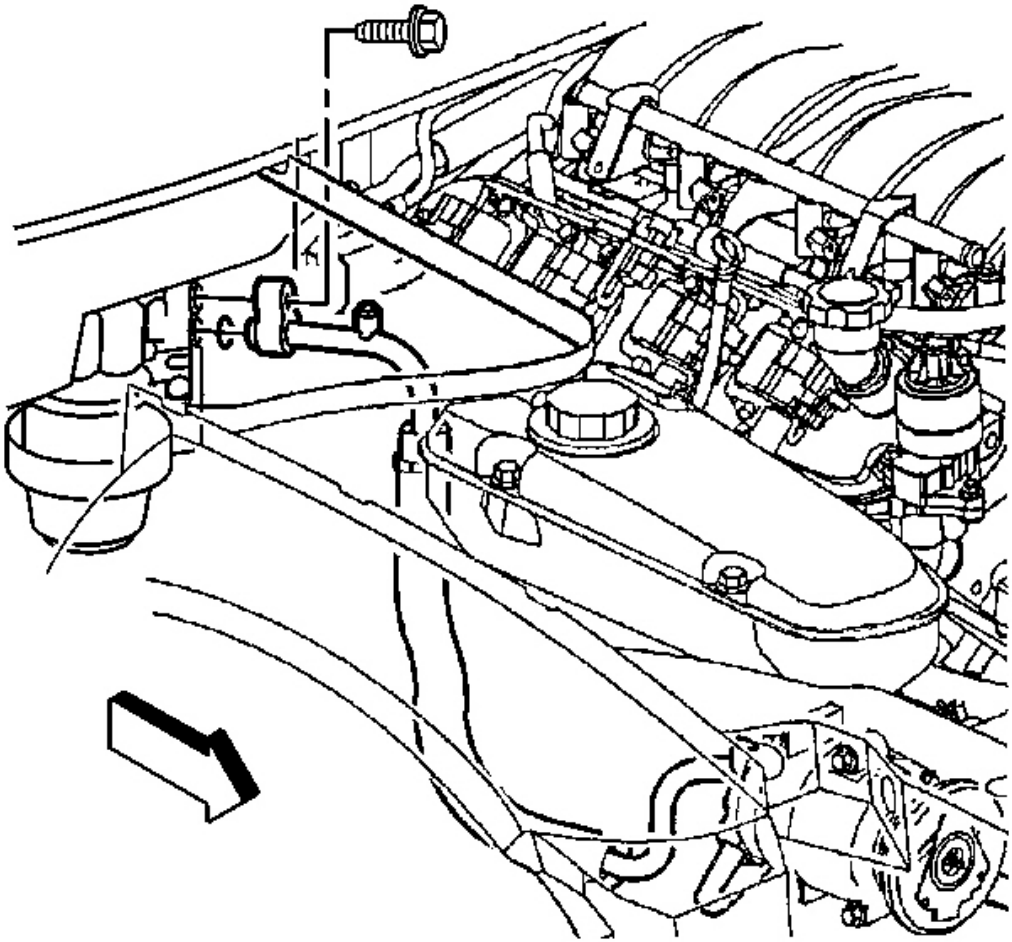

Fig. 85: Accumulator, Retaining Bolt & Compressor Hose Assembly
Courtesy of GENERAL MOTORS CORP.

11. Remove the bolt which secures the compressor hose to the accumulator.
12. Disconnect the compressor hose from the accumulator to access the accumulator hose.
13. Remove and discard the O-ring.
14. Cap or tape the open compressor hose and the accumulator.
15. Reposition the compressor hose end.

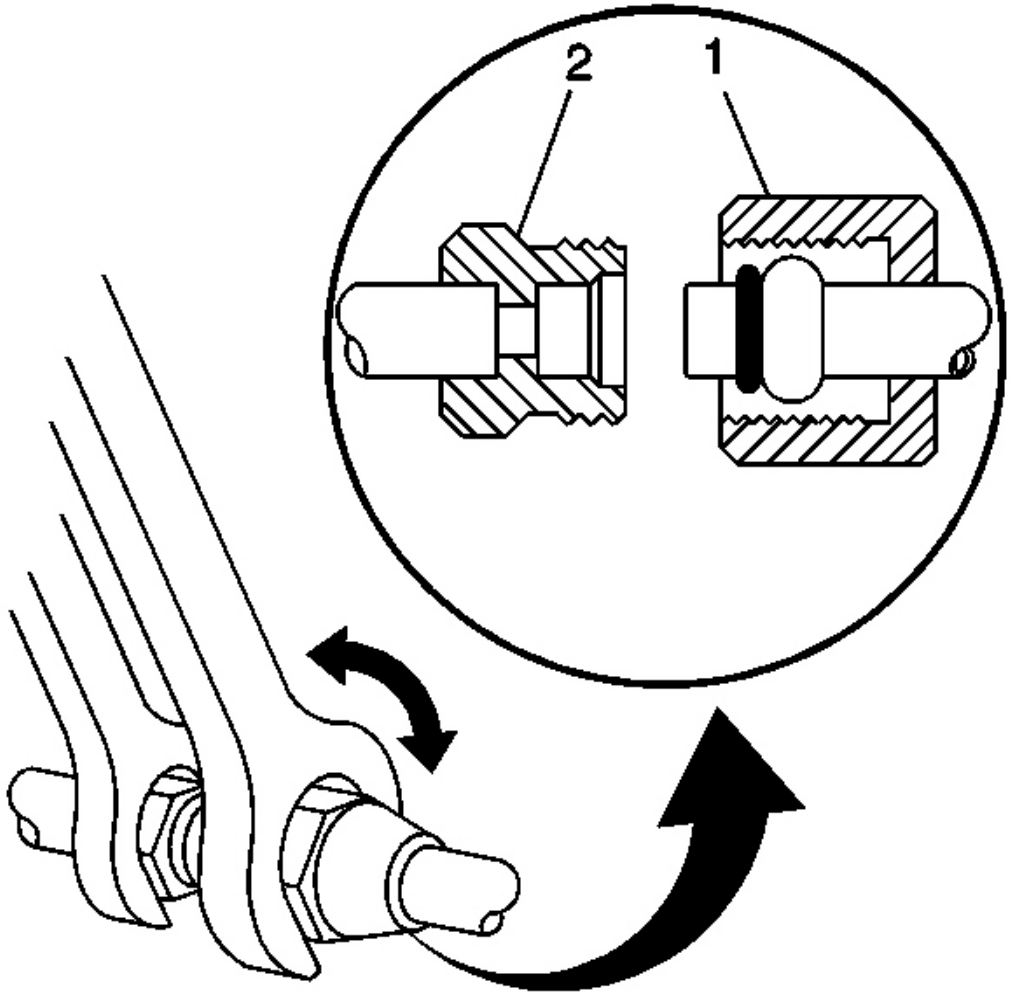

Fig. 86: Condenser Fitting & Compressor Hose Fitting
Courtesy of GENERAL MOTORS CORP.

16. Using a back-up wrench on the accumulator fitting (2). Loosen the accumulator hose fitting (1) from the accumulator.

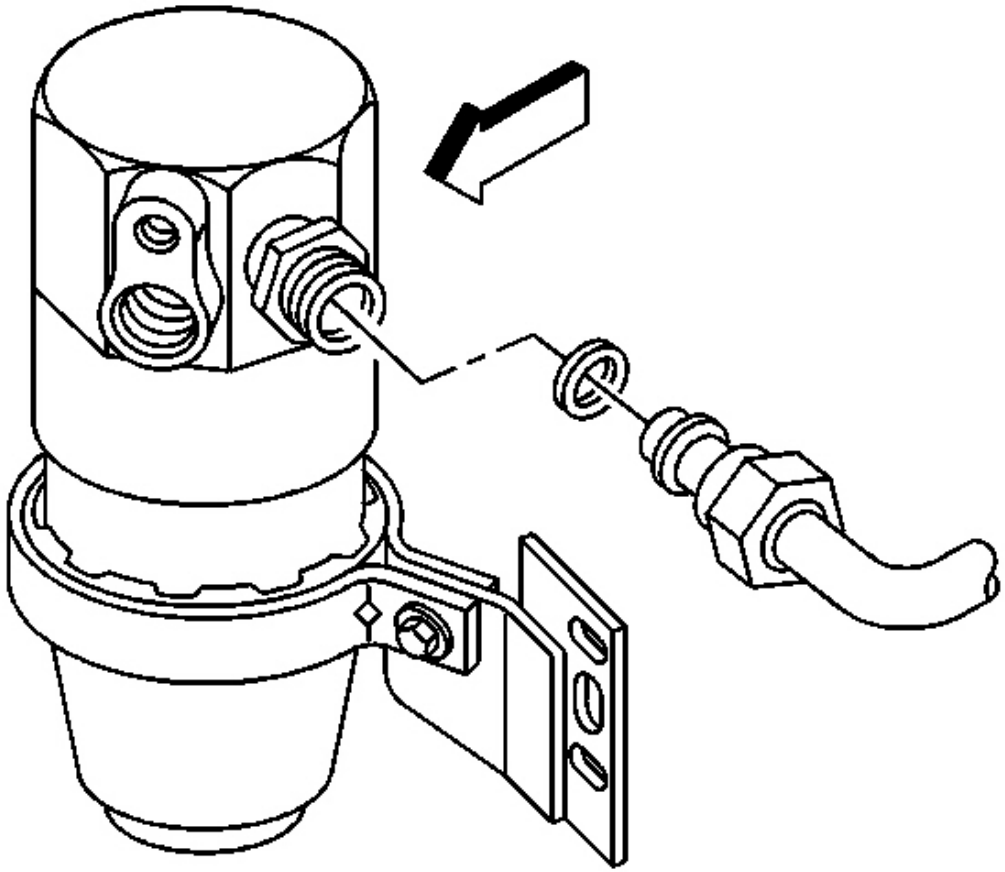

Fig. 87: Accumulator Hose & O-Ring
Courtesy of GENERAL MOTORS CORP.

17. Disconnect the accumulator hose from the accumulator.
18. Remove and discard the O-ring.
19. Cap or tape the open accumulator hose and the accumulator.

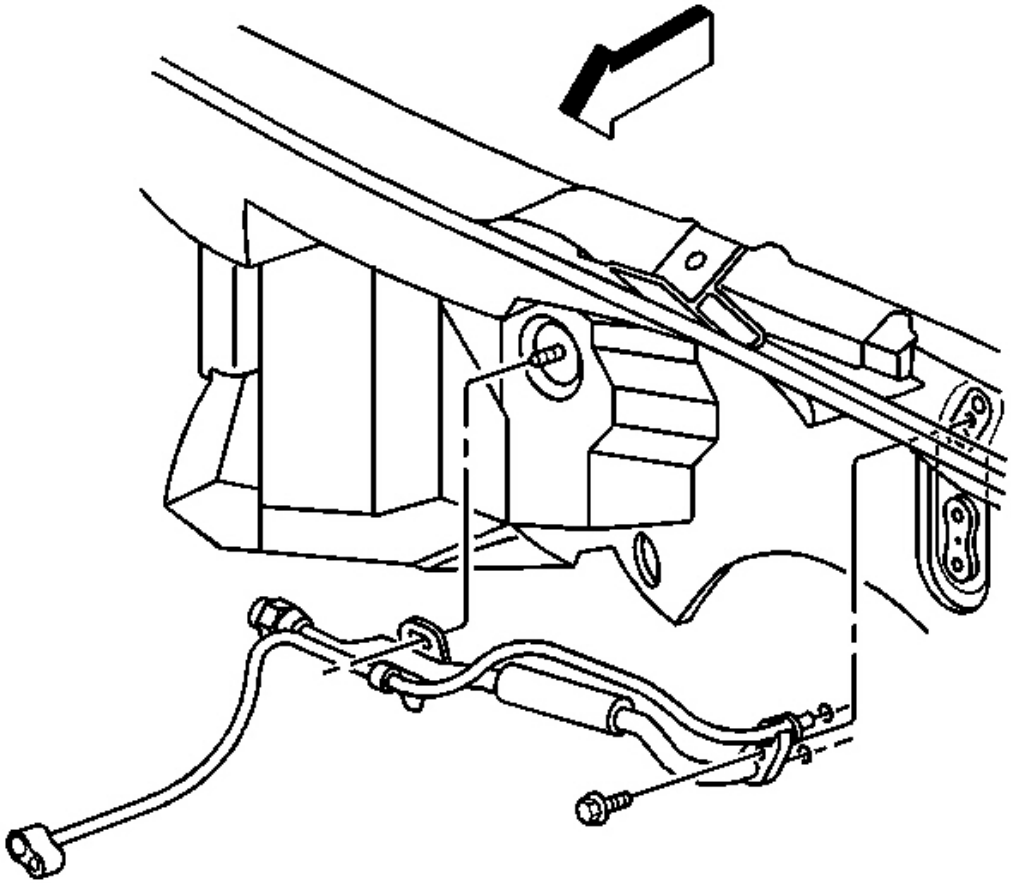

Fig. 88: Accumulator Hose, Evaporator & Bolt
Courtesy of GENERAL MOTORS CORP.

IMPORTANT: Cap or tape the open A/C components immediately to prevent system contamination.

20. Remove the bolt that secures the accumulator hose to the evaporator.
21. Disconnect the accumulator hose from the evaporator.
22. Discard the O-ring.

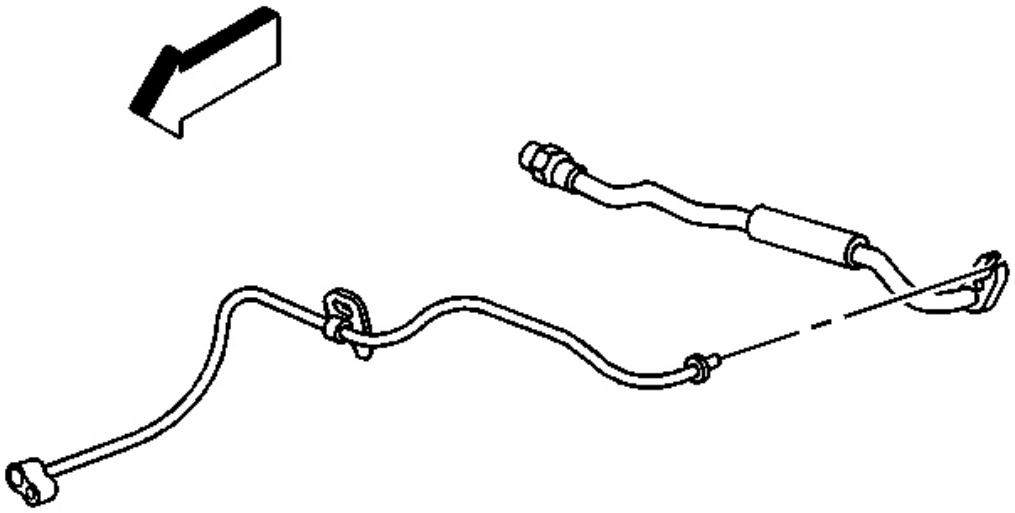

Fig. 89: Accumulator Hose Bracket & Rear Evaporator Tube
Courtesy of GENERAL MOTORS CORP.

23. Carefully remove the accumulator hose. Separate the hose from the rear evaporator tube.
24. Remove and discard the O-ring.
25. Cap or tape the open accumulator hose, the rear evaporator tube and the evaporator core.

Installation Procedure

1. Remove the cap or tape from the accumulator hose, the rear evaporator tube, and the evaporator.
2. Install a new O-ring to the accumulator hose. Refer to **O-Ring Replacement** .

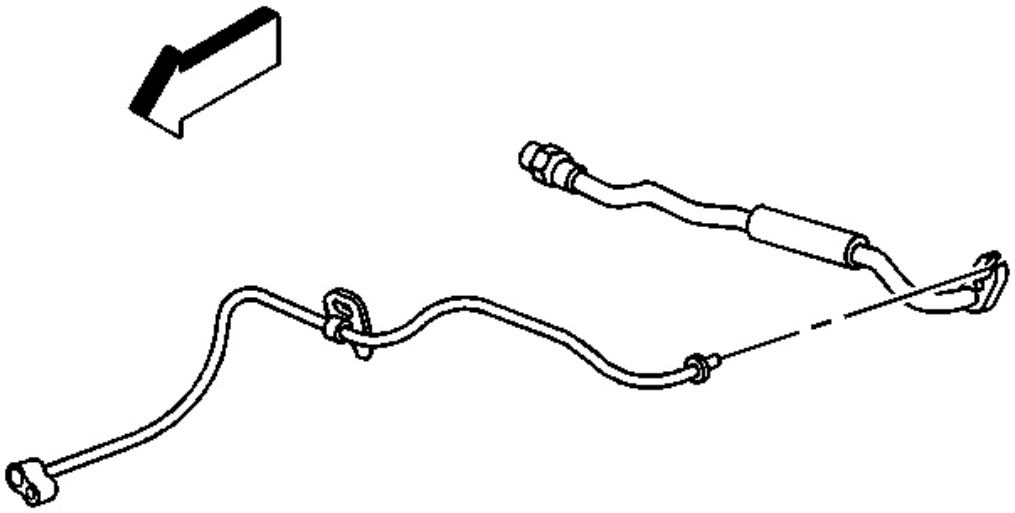

Fig. 90: Accumulator Hose Bracket & Rear Evaporator Tube
Courtesy of GENERAL MOTORS CORP.

3. Position the accumulator hose with the rear evaporator tube and connect the assembly to the evaporator.

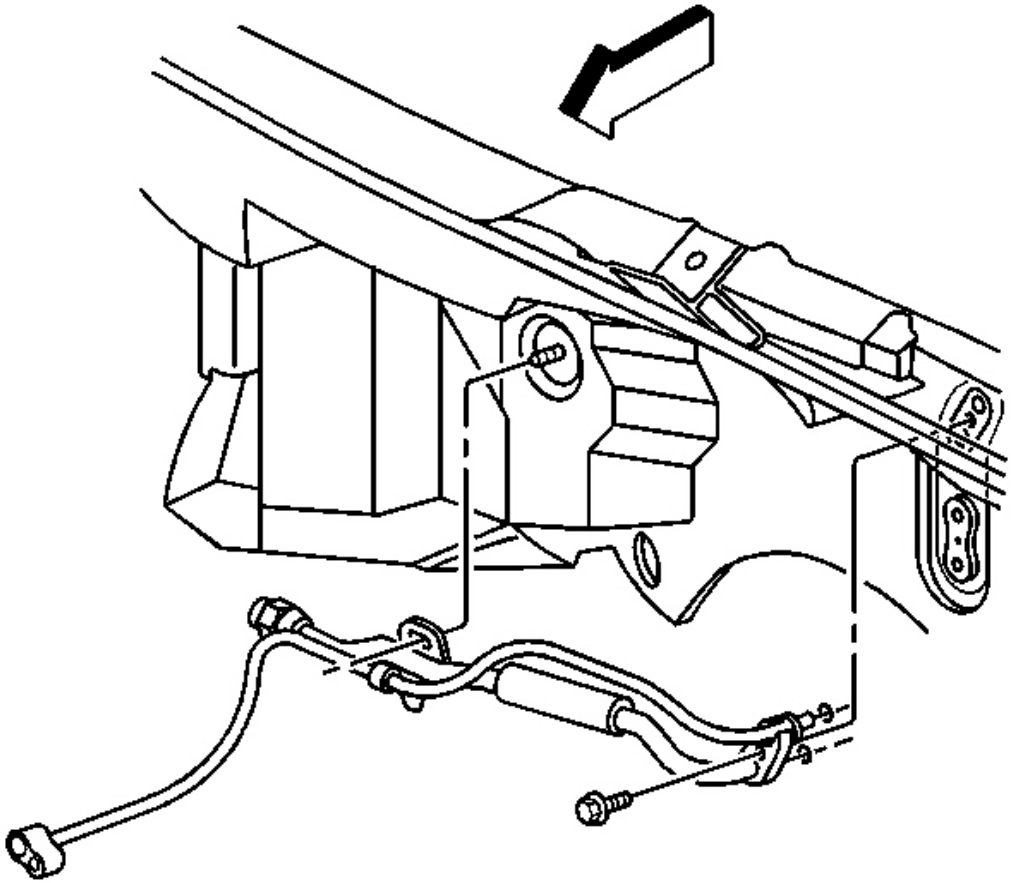

Fig. 91: Accumulator Hose, Evaporator & Bolt
Courtesy of GENERAL MOTORS CORP.

NOTE: Refer to Fastener Notice in Cautions and Notices.

4. Install the bolt which retains the accumulator hose to the evaporator.

   Tighten: Tighten the bolt to 16 N.m (12 lb ft).

5. Remove the cap or tape from the accumulator.

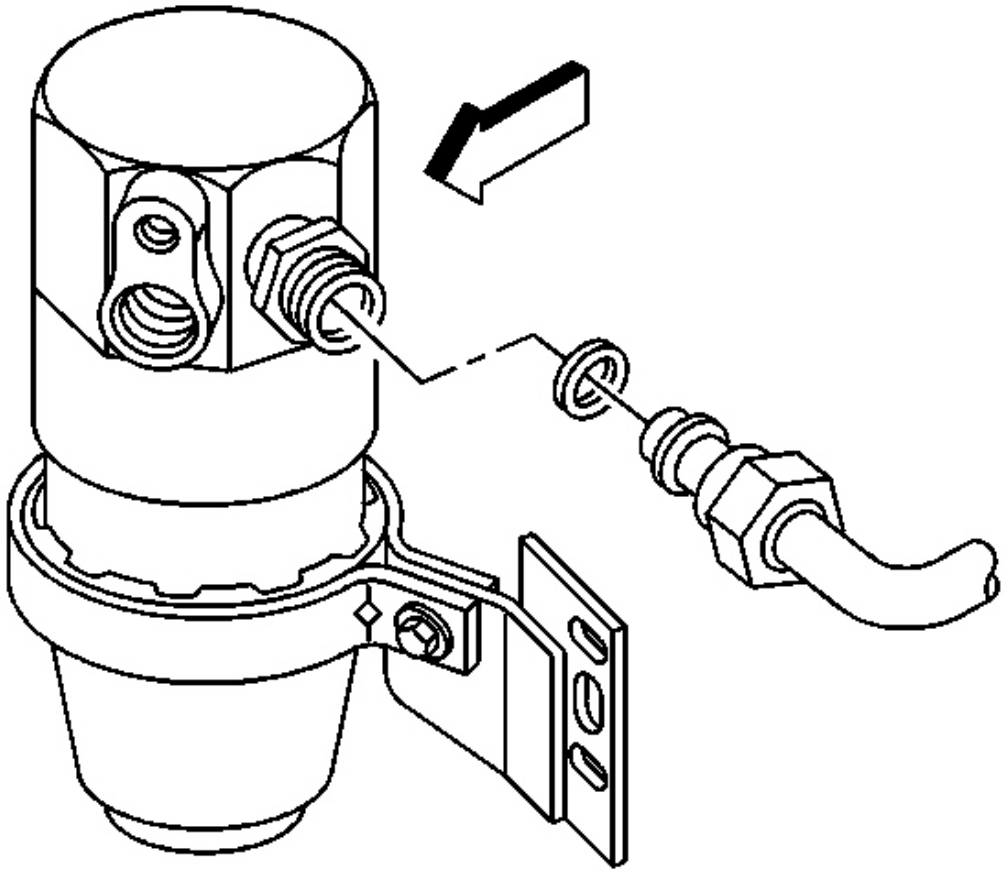

Fig. 92: Accumulator Hose & O-Ring
Courtesy of GENERAL MOTORS CORP.

6. Install a new O-ring to the accumulator hose. Refer to **O-Ring Replacement** .
7. Connect the accumulator hose to the accumulator.

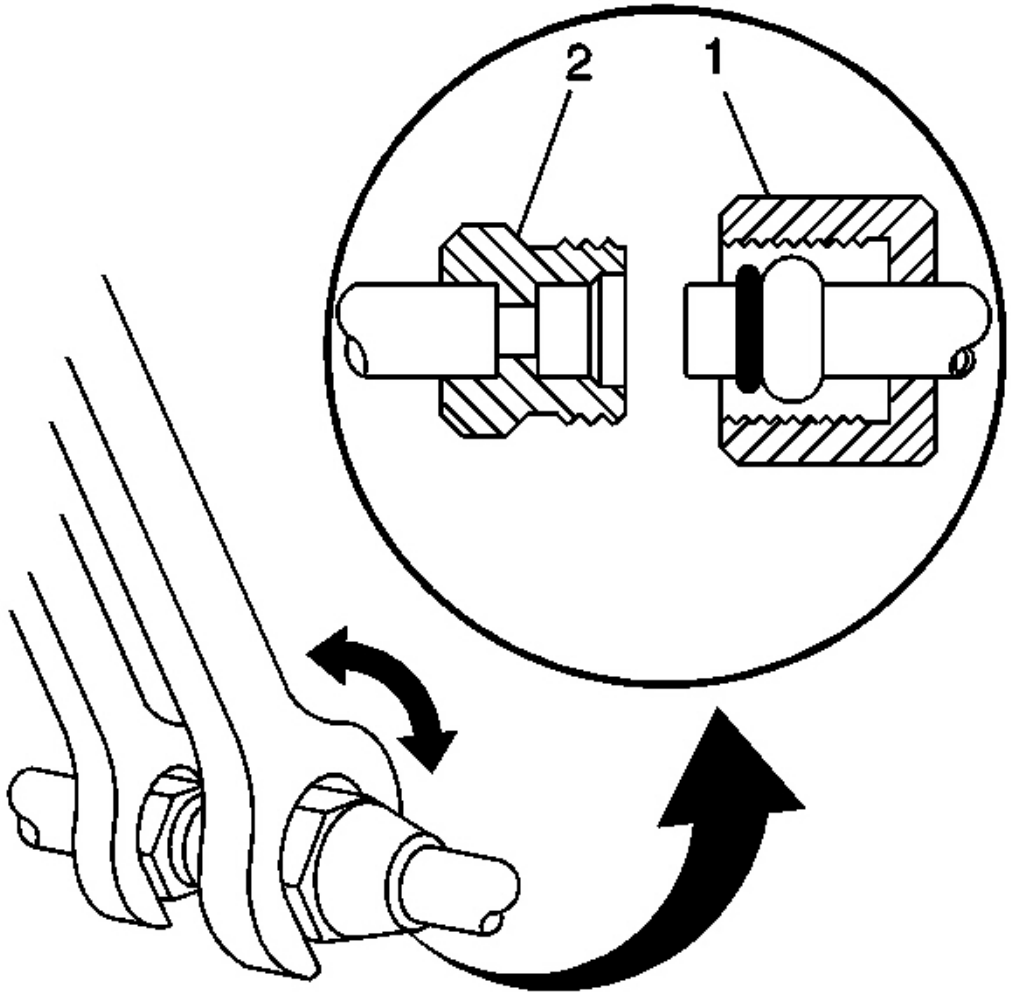

Fig. 93: Condenser Fitting & Compressor Hose Fitting
Courtesy of GENERAL MOTORS CORP.

8. Using a back-up wrench on the accumulator fitting (2), secure the accumulator hose fitting (1) to the accumulator.

   Tighten: Tighten the fitting to 41 N.m (30 lb ft).

9. Remove the cap or tape from the compressor hose.
10. Install a new O-ring to the compressor hose assembly. Refer to **O-Ring Replacement** .

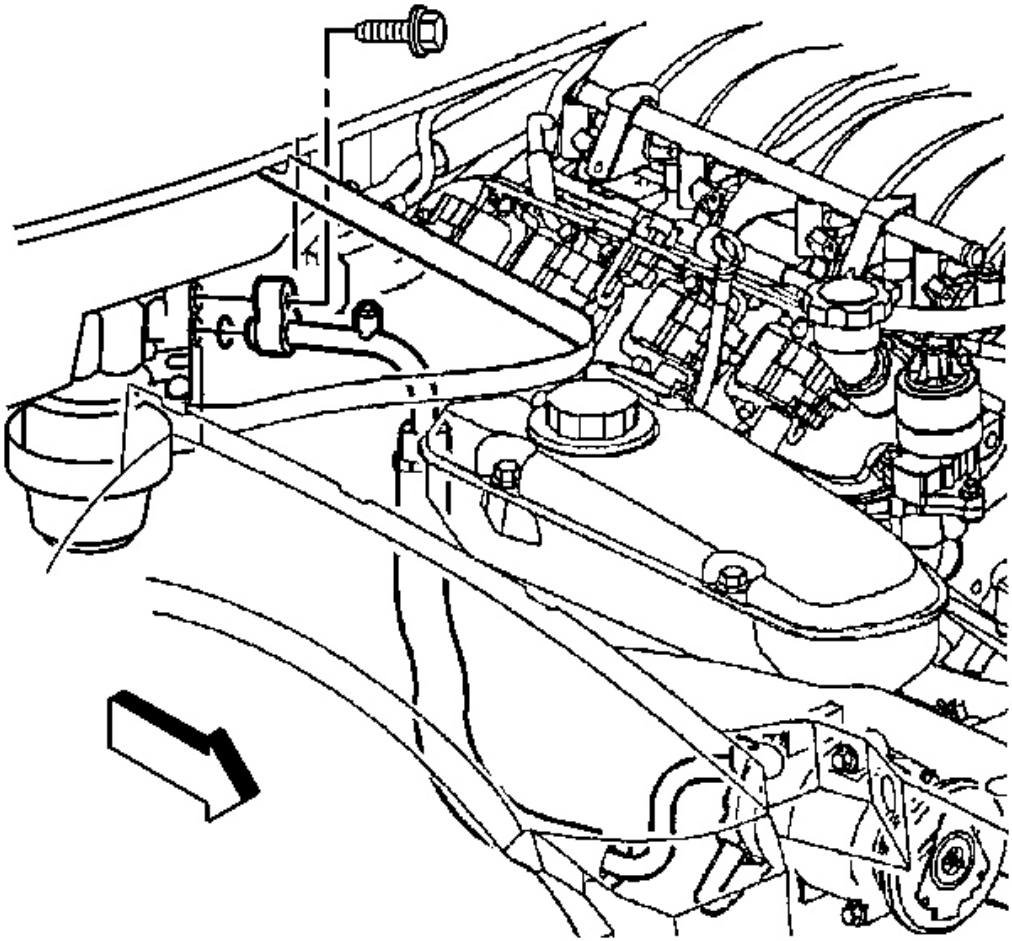

Fig. 94: Accumulator, Retaining Bolt & Compressor Hose Assembly
Courtesy of GENERAL MOTORS CORP.

11. Install the bolt which retains the compressor hose to the accumulator.

    Tighten: Tighten the bolt to 20 N.m (15 lb ft).

12. Remove the cap or tape from the front evaporator tube and the rear evaporator tube.
13. Install new O-rings to the evaporator tube. Refer to **O-Ring Replacement** .

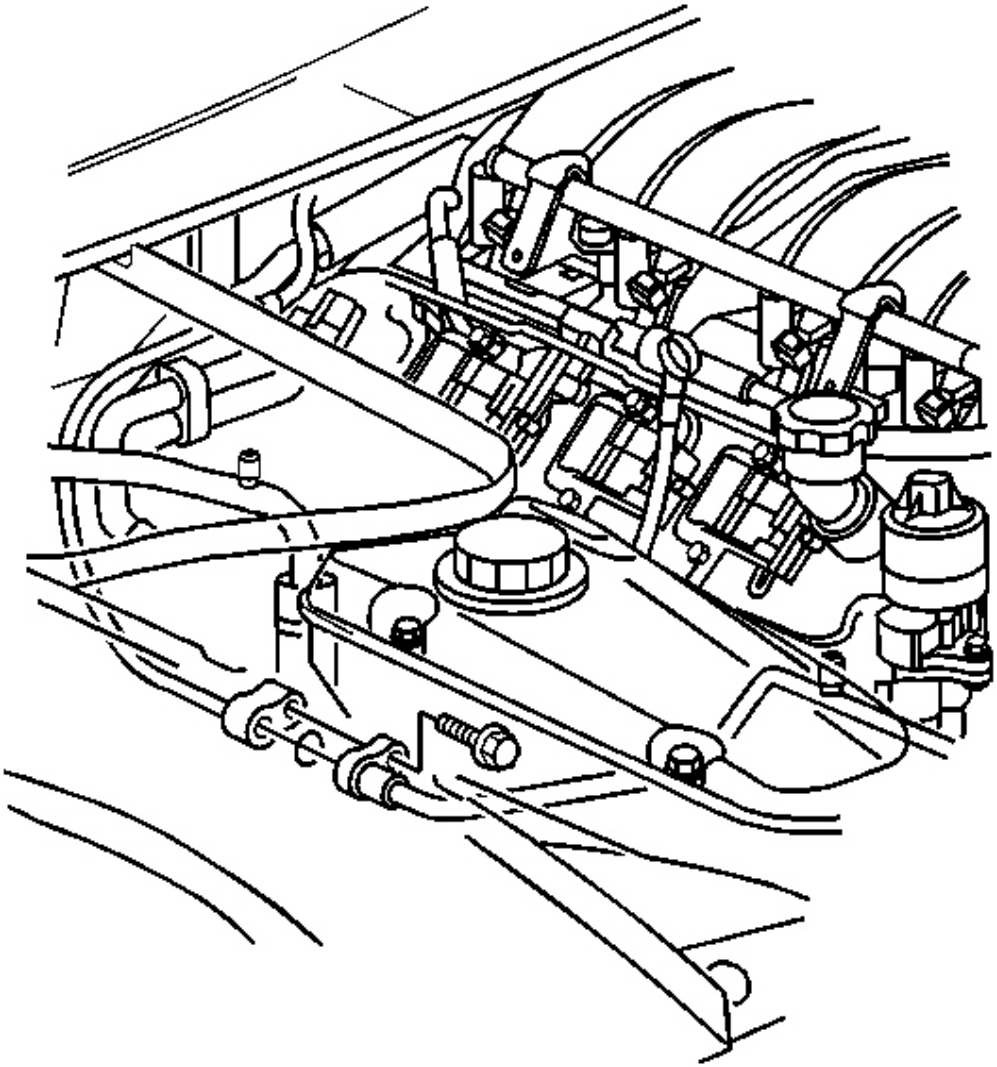

Fig. 95: Rear Evaporator Tube & Bolt
Courtesy of GENERAL MOTORS CORP.

14. Install the front evaporator tube to the rear evaporator tube with the retaining bolt.

    Tighten: Tighten the bolt to 25 N.m (18 lb ft).

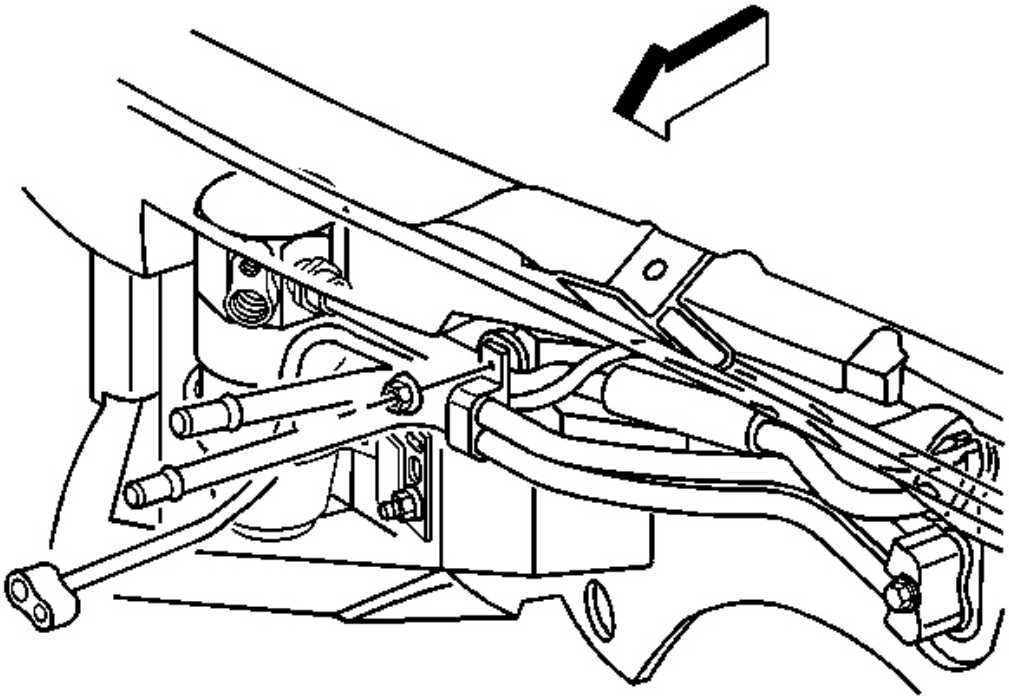

Fig. 96: Heater Pipe Bracket & Cowl
Courtesy of GENERAL MOTORS CORP.

15. Install the heater pipe bracket to the cowl stud.
16. Install the nut which retains the heater pipe bracket.

    Tighten: Tighten the nut to 10 N.m (89 lb in).

17. Install the intake manifold. Refer to **Intake Manifold Replacement** in Engine Mechanical.
18. Install the battery heat shield. Refer to **Battery Heat Shield Replacement** in Engine Electrical.
19. Install the battery. Refer to **Battery Replacement** in Engine Electrical.
20. Evacuate and recharge the A/C system. Refer to **Refrigerant Recovery and Recharging** .
21. Leak test the fittings of the component using **J 39400-A** . See **Special Tools and Equipment** .

AIR CONDITIONING (A/C) REFRIGERANT FILTER INSTALLATION

Tools Required

J 39400-A Halogen Leak Detector. See **Special Tools and Equipment** .

IMPORTANT: The A/C Refrigerant Filter, ACDelco P/N 151697 must be installed to the A/C evaporator tube between the condenser and evaporator. The installation of the A/C Refrigerant Filter eliminates the need for flushing.

1. Recover the refrigerant from the A/C system. Refer to **Refrigerant Recovery and Recharging** .
2. Remove the front evaporator tube. Refer to **Evaporator Tube Replacement - Front** steps 1-9.

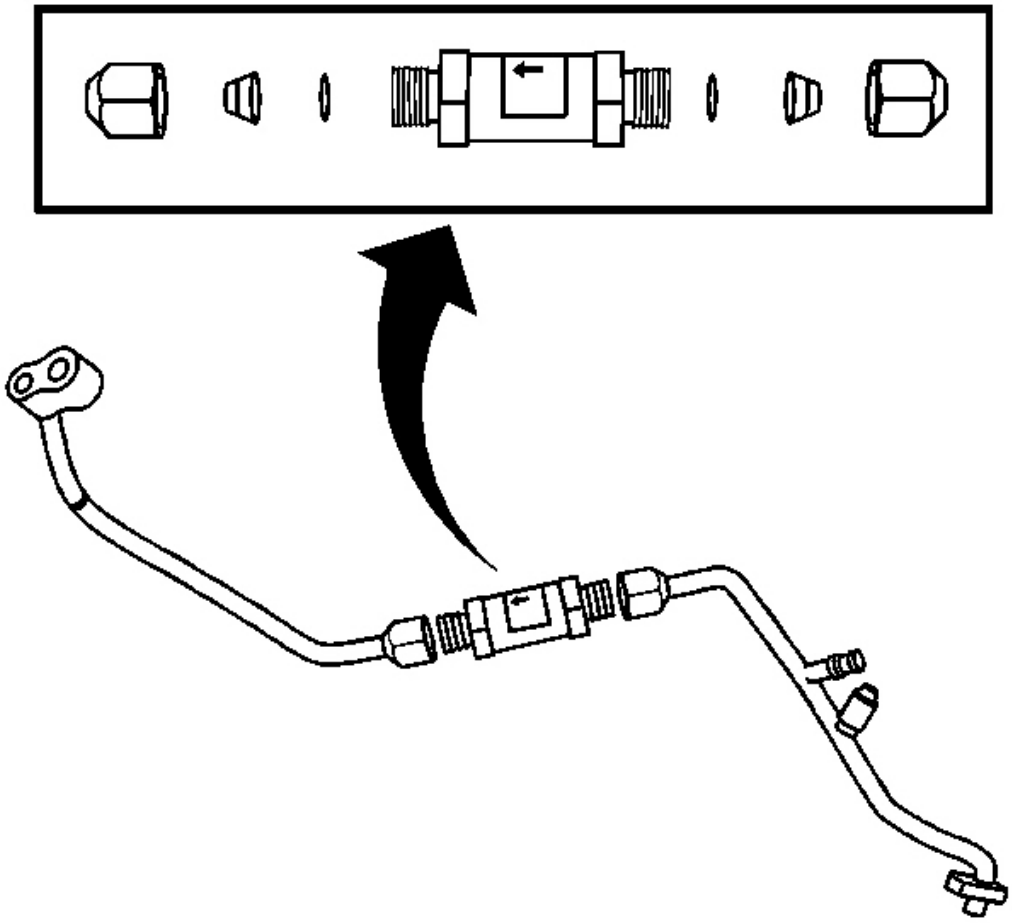

Fig. 97: Evaporator Tube & Condenser End
Courtesy of GENERAL MOTORS CORP.

IMPORTANT: Measure from the condenser end of the evaporator tube. Cut the tube with a tubing cutter.

3. Measure 420 mm (16.5 in). Cut the plastic insulation and remove enough insulation to install the A/C refrigerant filter.
4. Measure 400 mm (15.7 in) and mark the evaporator tube.
5. Measure 450 mm (17.7 in) and mark the evaporator tube.

IMPORTANT: Do not allow metal shavings to enter the evaporator tube during cutting or when removing the burrs.

6. Cut the evaporator tube at each marking.
7. Remove any burrs from the cut ends of the evaporator tube.

IMPORTANT: You must first remove the O-rings from the filter before you seat the ferrules to the evaporator tube.

8. Remove the O-rings from the A/C refrigerant filter.
9. Install one flare nut and one ferrule to the evaporator tube with the tapered end of the ferrule facing the flare nut.

NOTE: Refer to Fastener Notice in Cautions and Notices.

IMPORTANT: Fully seat the A/C refrigerant filter onto the evaporator tube.

10. Install the A/C refrigerant filter to the evaporator tube with the arrow pointing toward the evaporator.

    Tighten: Tighten the flare nut to 15 N.m (11 lb ft).

11. Install one flare nut and one ferrule to the other half of the evaporator tube with the tapered end of the ferrule facing the flare nut.
12. Install the A/C refrigerant filter to the evaporator tube.

    Tighten: Tighten the flare nut to 15 N.m (11 lb ft).

13. Loosen the flare nuts and remove the A/C refrigerant filter from the evaporator tube.
14. Lubricate and install the O-rings to each end of the evaporator tube. Refer to **O-Ring Replacement** .

IMPORTANT: Fully seat the filter to the ferrules in order to ensure that the O-rings seat inside of the filter housing.

15. Install the A/C refrigerant filter to the evaporator tube with the arrow pointing toward the evaporator.

    Tighten: Tighten the flare nuts to 15 N.m (11 lb ft).

16. Install the front evaporator tube. Refer to **Evaporator Tube Replacement - Front** .

17. Evacuate and recharge the A/C system. Refer to **Refrigerant Recovery and Recharging** .
18. Leak test the fittings of the component using **J 39400-A** . See **Special Tools and Equipment** .

AIR CONDITIONING (A/C) REFRIGERANT FILTER REPLACEMENT

Tools Required

J 39400-A Halogen Leak Detector. See **Special Tools and Equipment** .

Removal Procedure

1. Recover the refrigerant from the A/C system. Refer to **Refrigerant Recovery and Recharging** .

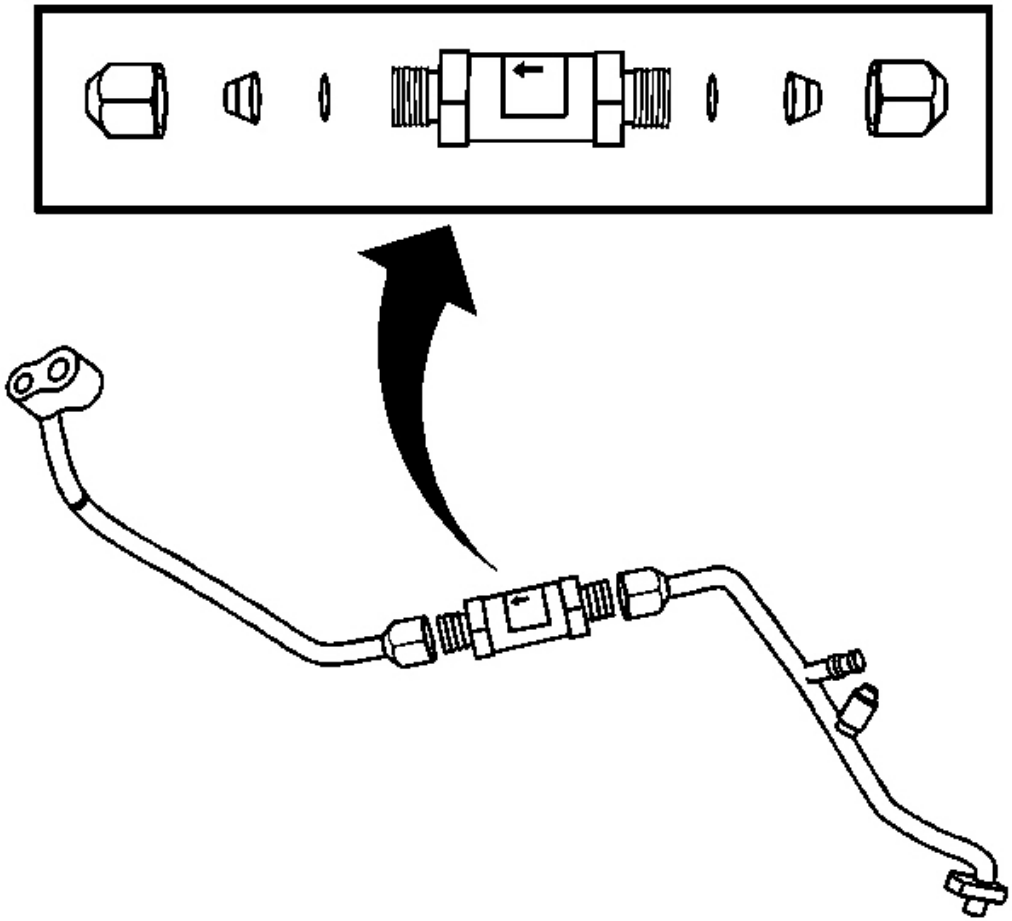

Fig. 98: Evaporator Tube & Condenser End

Courtesy of GENERAL MOTORS CORP.

2. Loosen the A/C refrigerant filter flare nuts.

IMPORTANT: Immediately cap or tape the open front evaporator tube and the condenser in order to prevent contamination.

3. Remove A/C refrigerant filter from the evaporator tube.
4. Discard the O-rings.

Installation Procedure

1. Remove the cap or the tape from the evaporator tubes.

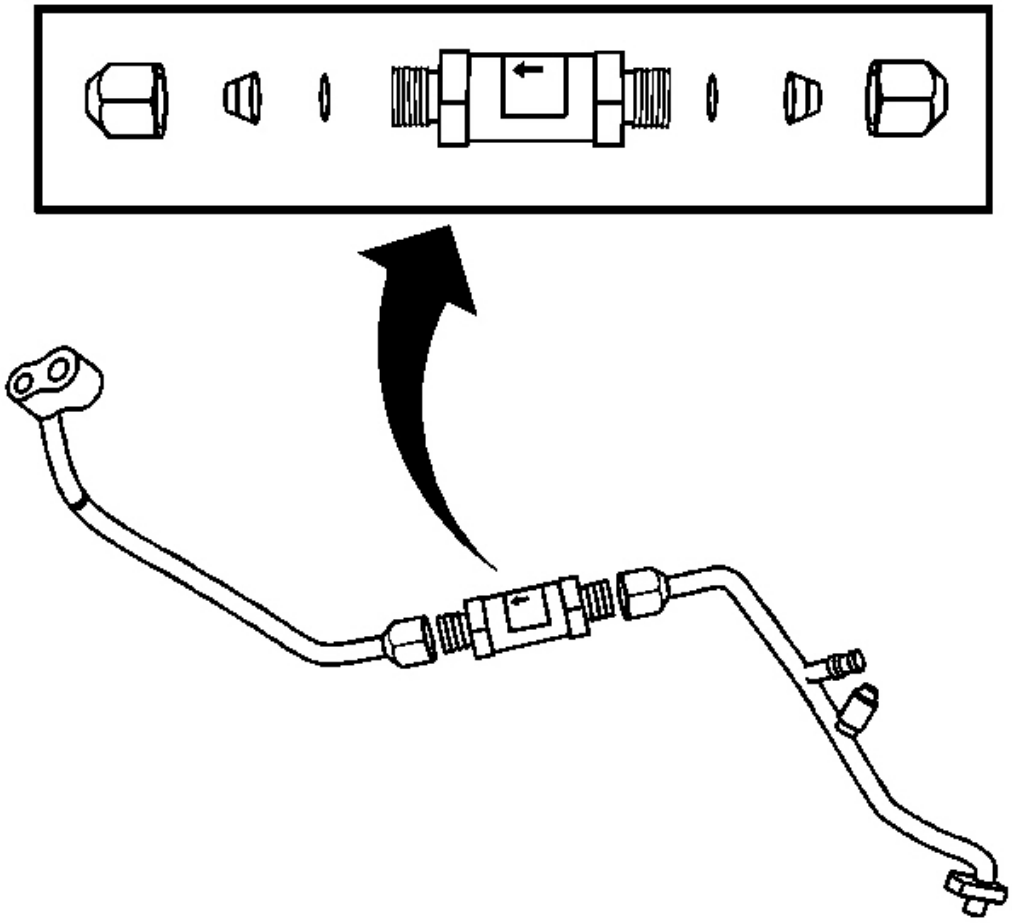

Fig. 99: Evaporator Tube & Condenser End
Courtesy of GENERAL MOTORS CORP.

2. Install new O-rings to each end of the evaporator tube. Refer to **O-Ring Replacement** .

NOTE: **Refer to Fastener Notice in Cautions and Notices.**

IMPORTANT: **Fully seat the A/C filter to the ferrules in order to ensure that the O-rings seat inside the filter housing.**

3. Install the A/C refrigerant filter to the evaporator tube with the arrow pointing toward the evaporator.

   Tighten: Tighten the flare nuts to 15 N.m (11 lb ft).

4. Evacuate and recharge the A/C system. Refer to **Refrigerant Recovery and Recharging** .
5. Leak test the fittings of the component using **J 39400-A** . See **Special Tools and Equipment** .

EXPANSION (ORIFICE) TUBE REPLACEMENT

Tools Required

- **J 26549-E** Orifice Tube Remover. See **Special Tools and Equipment** .
- **J 39400-A** Halogen Leak Detector. See **Special Tools and Equipment** .

Removal Procedure

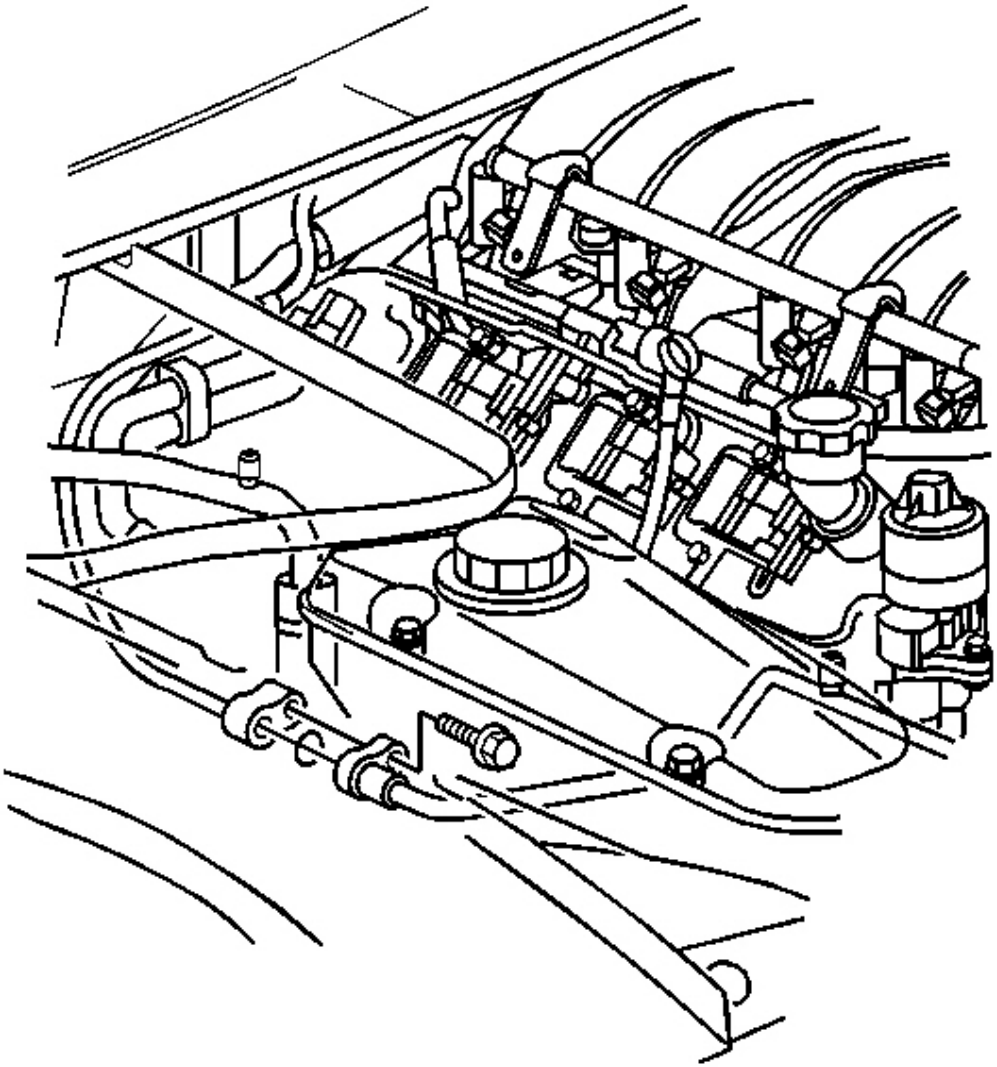

Fig. 100: Rear Evaporator Tube & Bolt
Courtesy of GENERAL MOTORS CORP.

1. Recover the refrigerant from the A/C system. Refer to **Refrigerant Recovery and Recharging** .
2. Remove the front evaporator tube to rear evaporator tube retaining bolt.

IMPORTANT: Cap or tape the open A/C Components immediately to prevent system contamination.

3. Disconnect the front evaporator tube from the rear evaporator tube.
4. Remove and discard the O-ring.
5. Cap or tape the rear evaporator tube.

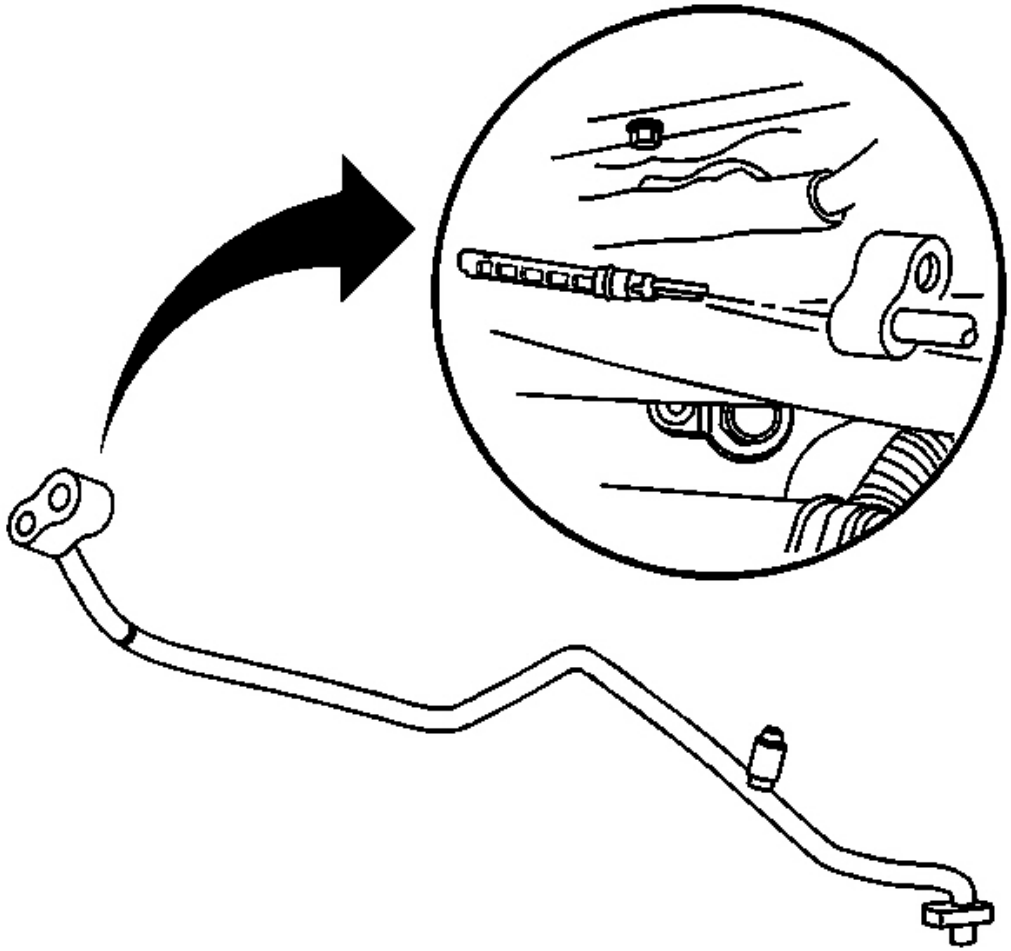

Fig. 101: Front Evaporator Tube & Orifice Tube
Courtesy of GENERAL MOTORS CORP.

6. Using **J 26549-E** remove the orifice tube. See **Special Tools and Equipment** .

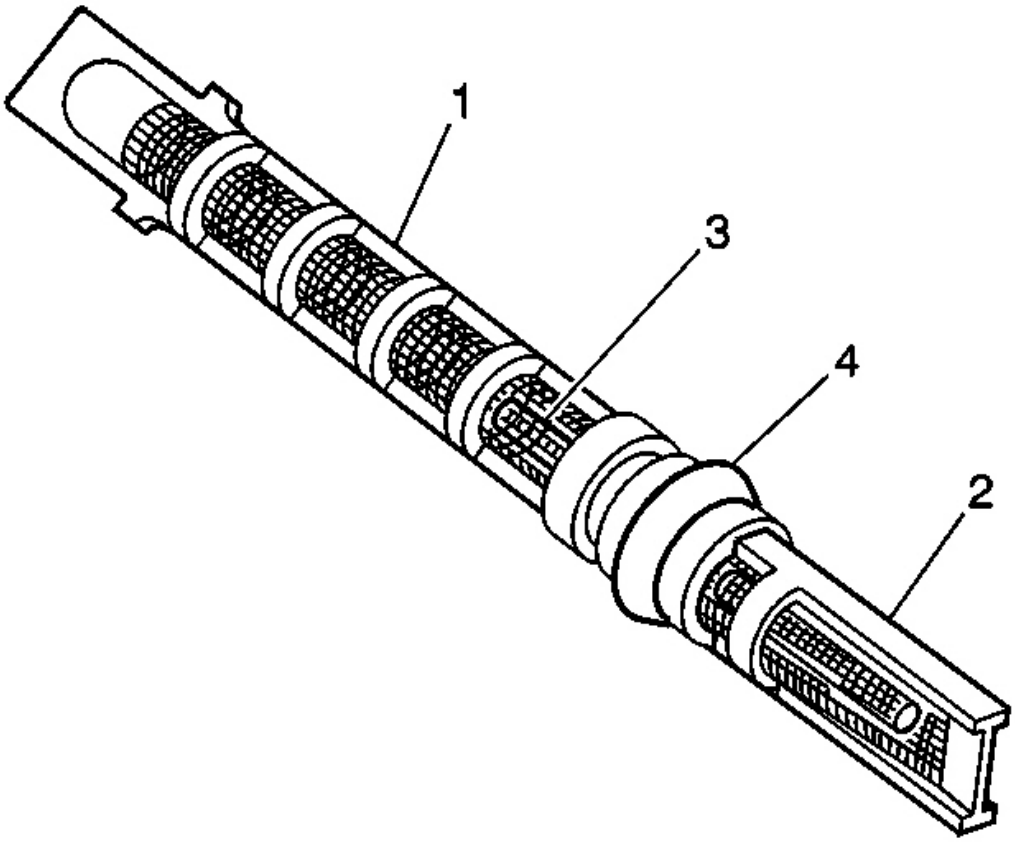

Fig. 102: Inspecting Expansion (Orifice) Tube For Damage
Courtesy of GENERAL MOTORS CORP.

7. Inspect the expansion (orifice) tube for the following conditions and clean or replace with a new tube as indicated:
    - Broken plastic frame; replace the tube
    - Filter screen (1, 2) torn, damaged or plugged with fine gritty material; replace the tube
    - Brass orifice tube (3) damaged or plugged; replace the tube
    - Filter screen (1) coated with metal chips, flakes or slivers; coating may be removed with low pressure shop air and reused if cleaned satisfactorily

    If reusing the orifice tube, install a new O-ring (4)

Installation Procedure

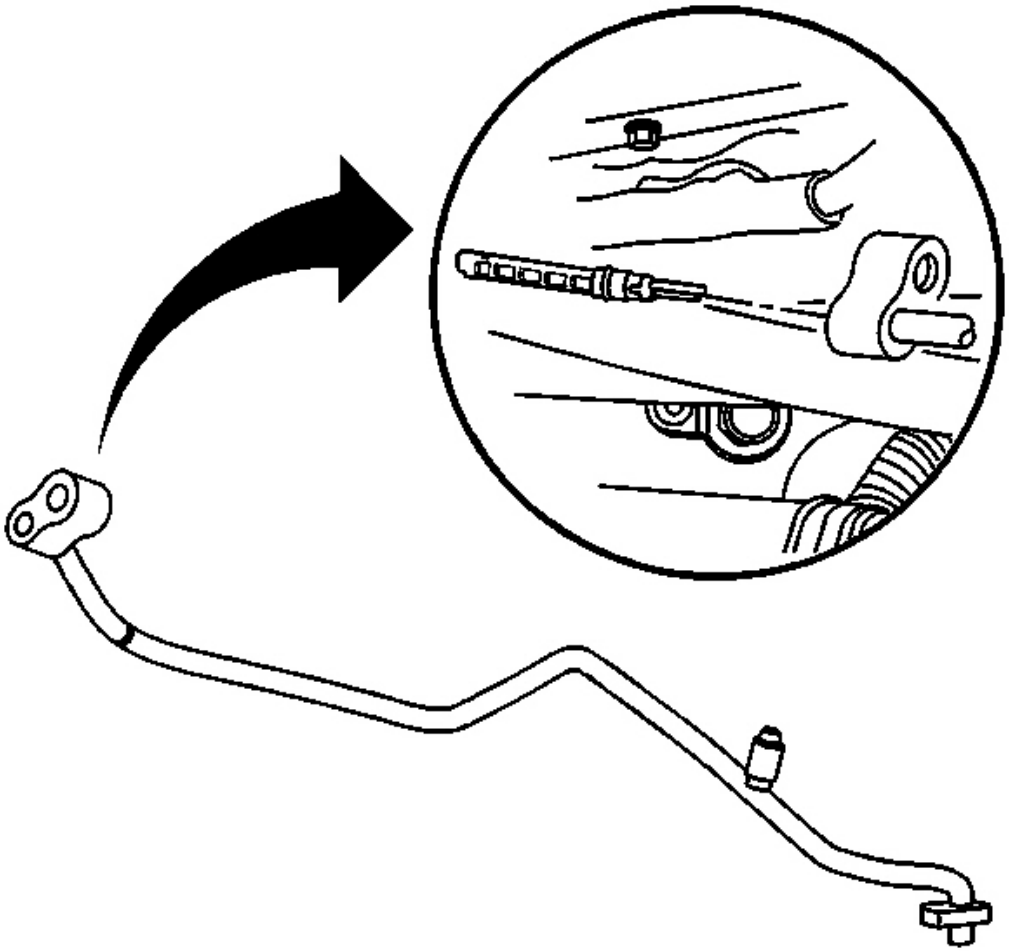

Fig. 103: Front Evaporator Tube & Orifice Tube
Courtesy of GENERAL MOTORS CORP.

1. Remove the cap or tape from the rear evaporator tube.
2. Install the tube (short filter screen outlet side first) fully into the front evaporator tube.
3. Install new O-rings to the expansion tube. Refer to **O-Ring Replacement**

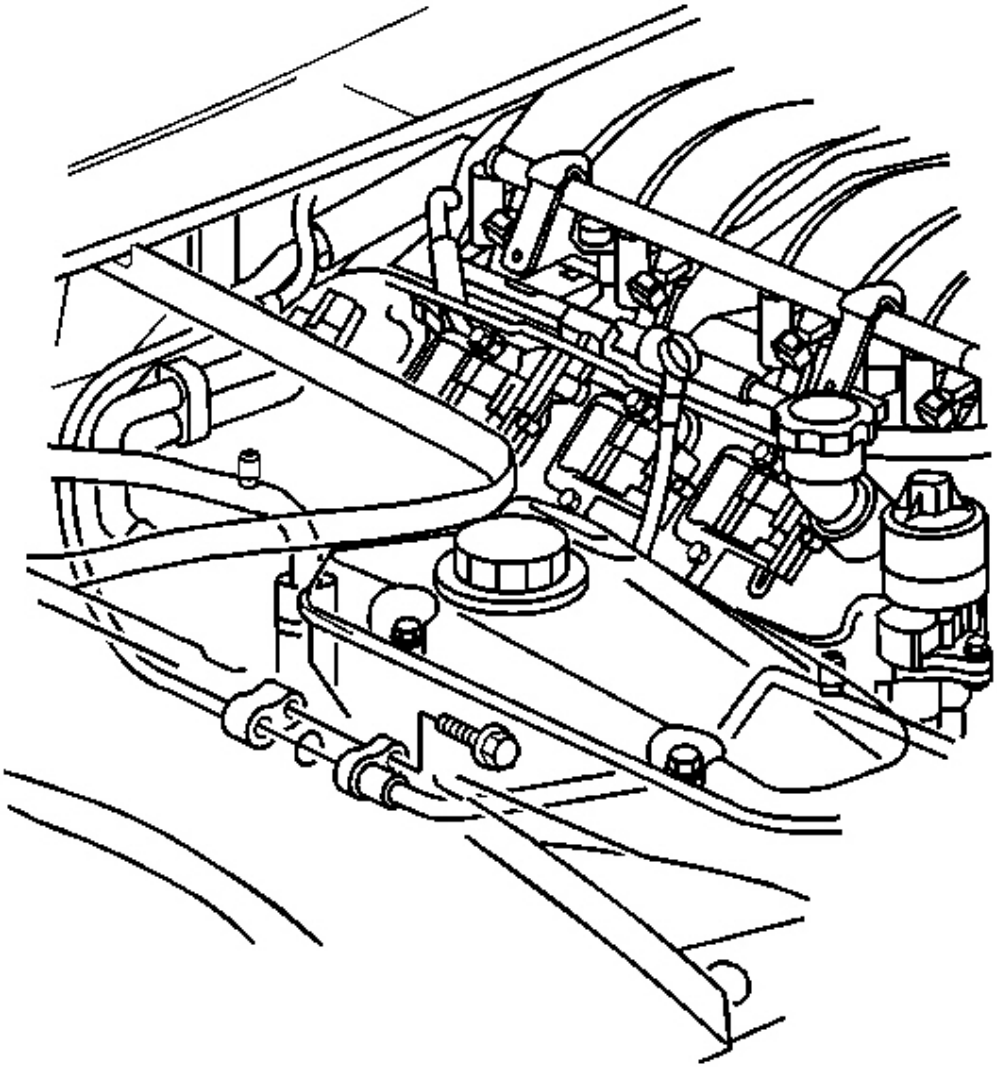

Fig. 104: Rear Evaporator Tube & Bolt
Courtesy of GENERAL MOTORS CORP.

4. Connect the front evaporator tube to the rear evaporator tube.

NOTE: Refer to Fastener Notice in Cautions and Notices.

5. Install the front evaporator tube to rear evaporator tube retaining bolt.

Tighten: Tighten the bolt to 25 N.m (18 lb ft).

6. Evacuate and recharge the A/C system. Refer to **Refrigerant Recovery and Recharging** .
7. Leak test the fittings of the component using **J 39400-A** . See **Special Tools and Equipment** .

COMPRESSOR RELAY REPLACEMENT

Tools Required

J 43244 Relay Puller Pliers

Removal Procedure

1. Remove the electrical center cover.
2. Locate the compressor relay. Refer to **Electrical Center Identification Views** to locate the electrical center where the compressor relay exists.

IMPORTANT:

- **Always note the orientation of the relay.**
- **Make sure the electrical center is secure, as not to put added stress on the wires or terminals.**

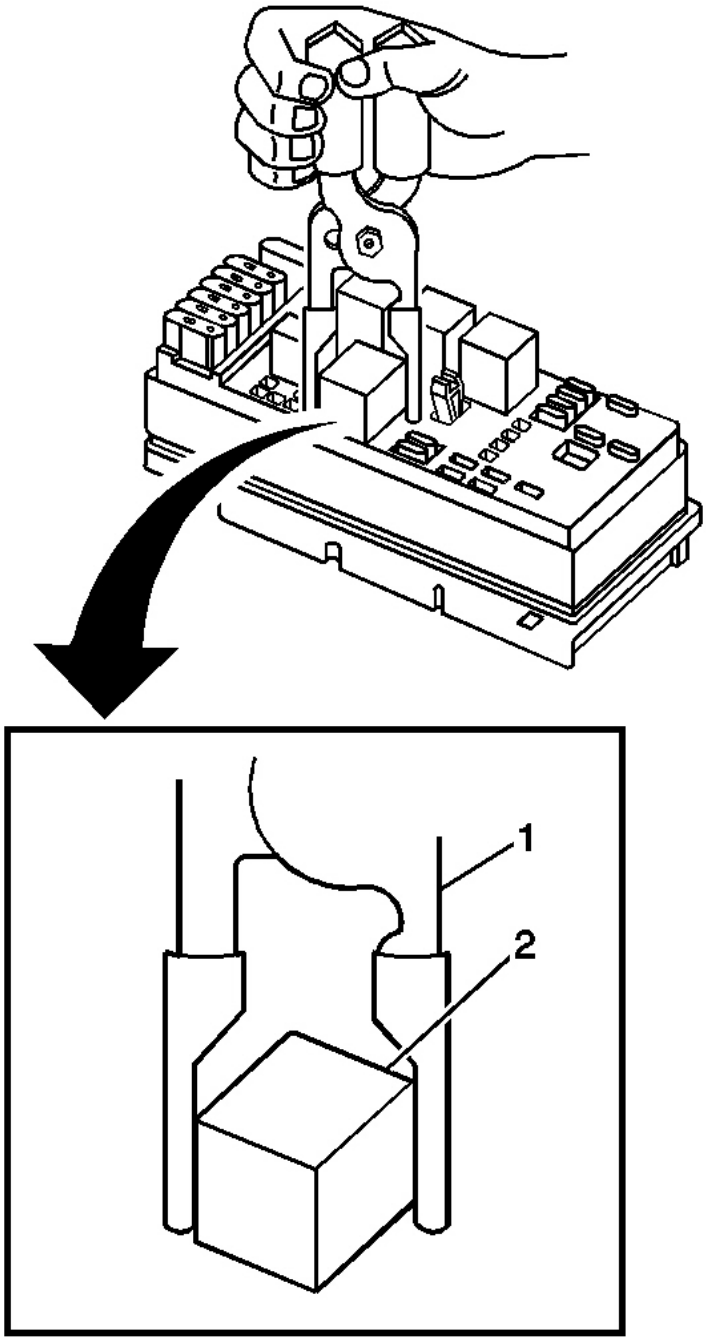

Fig. 105: Removing/Installing Compressor Relay
Courtesy of GENERAL MOTORS CORP.

3. Using the **J 43244** (1) position the tool on opposing corners of the compressor relay (2).

NOTE: **Use J43244 to pull the relay straight out from the electrical center terminals. The use of pliers or a flat bladed tool could damage the electrical center.**

4. Remove the compressor relay (2) from the electrical center.

Installation Procedure

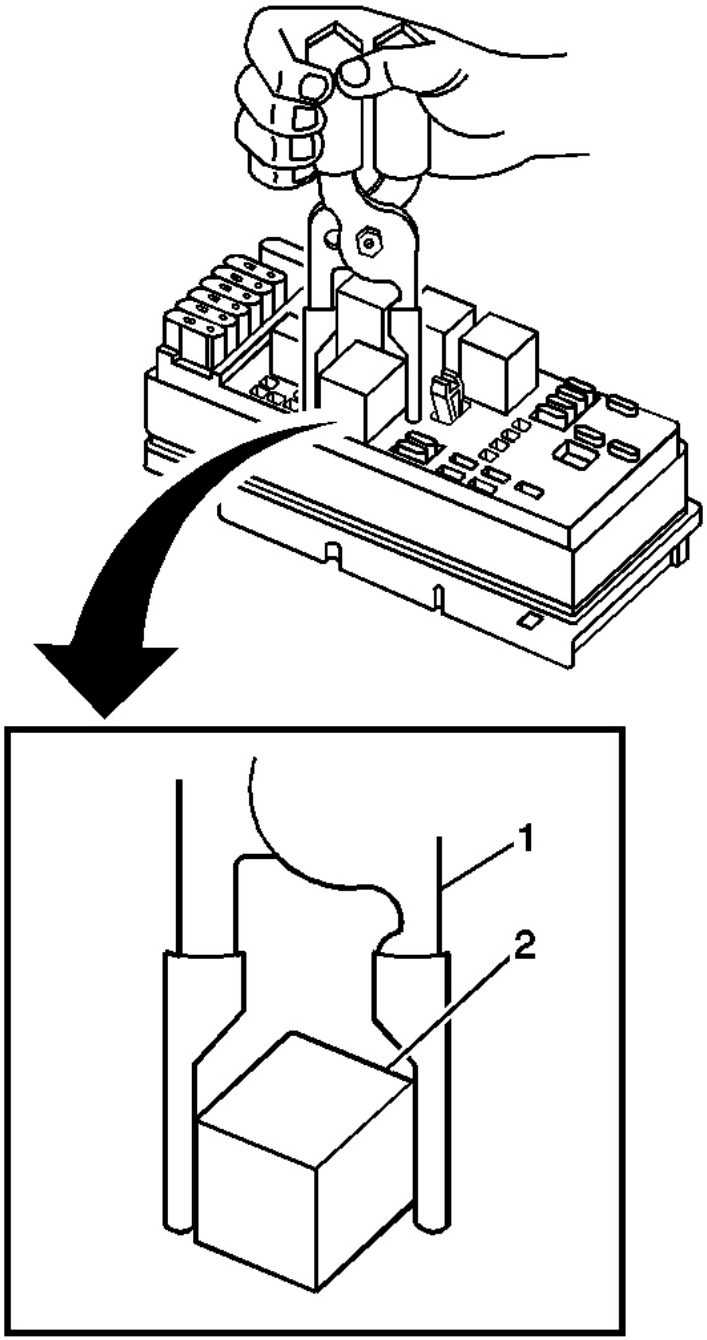

Fig. 106: Removing/Installing Compressor Relay
Courtesy of GENERAL MOTORS CORP.

1. Install the compressor relay (2) in the same position as removed.

2. Install the electrical center cover.

SERVICE PORT VALVE CORE REPLACEMENT

Tools Required

- **J 39400-A** Halogen Leak Detector. See **Special Tools and Equipment** .
- **J 34611-A** A/C Valve Core Remover. See **Special Tools and Equipment** .

Removal Procedure

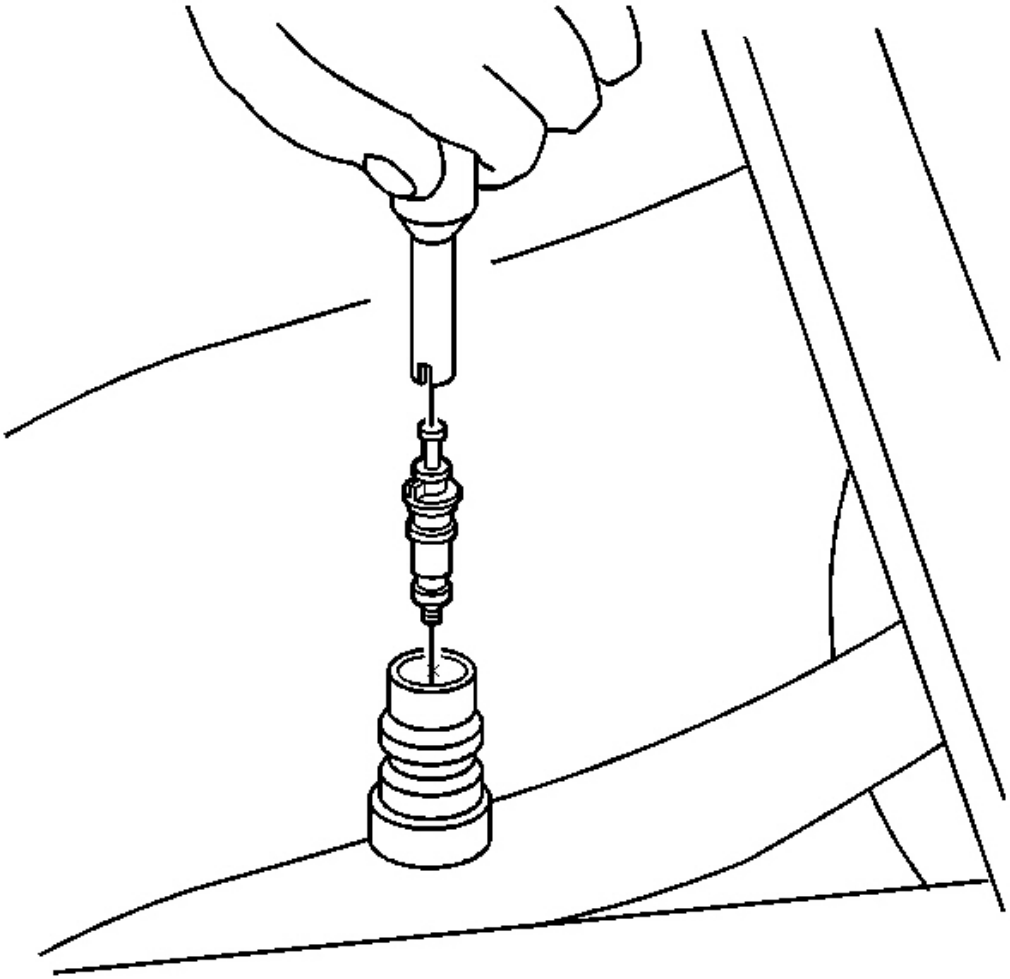

Fig. 107: Service Port Valve Caps

Courtesy of GENERAL MOTORS CORP.

1. Remove the service port valve caps.
2. Recover the refrigerant from the A/C system. Refer to **Refrigerant Recovery and Recharging** .
3. Using **J 34611-A** remove the valve core from the service port. See **Special Tools and Equipment** .

Installation Procedure

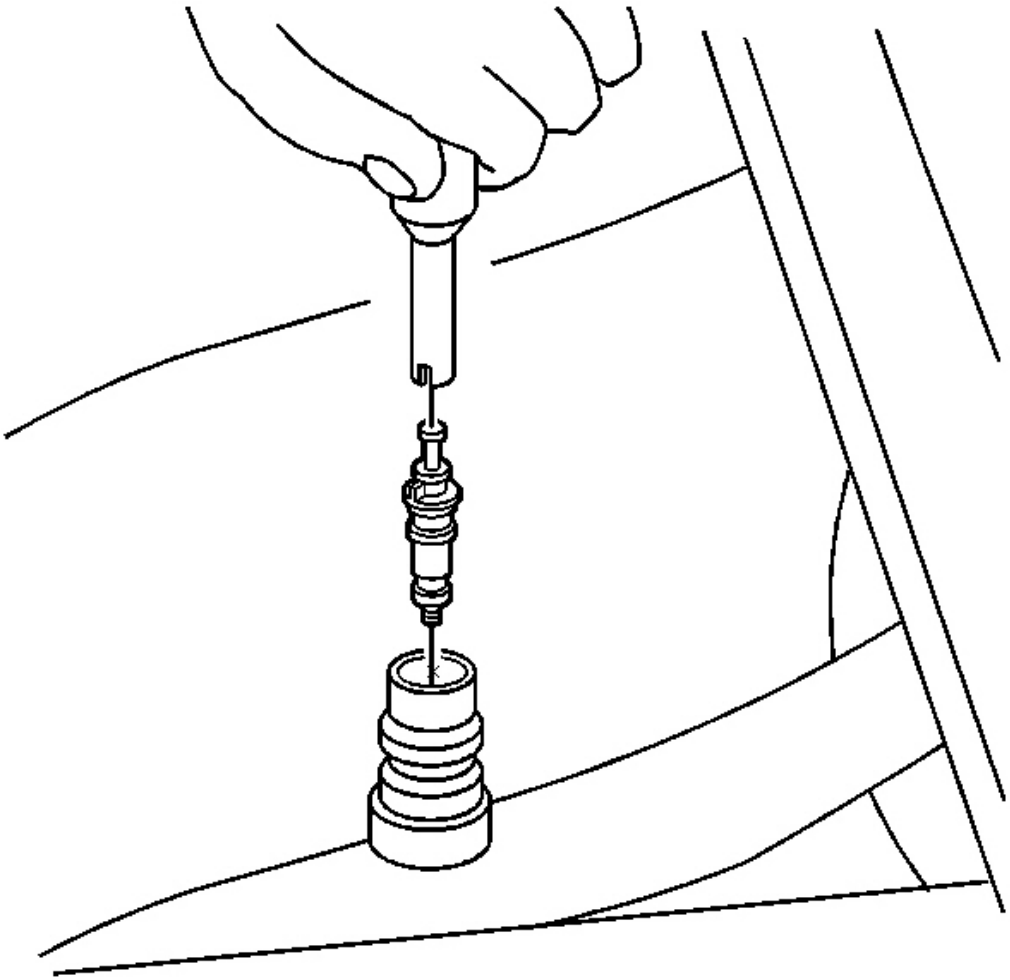

Fig. 108: Service Port Valve Caps
Courtesy of GENERAL MOTORS CORP.

1. Using **J 34611-A** install the new valve core to the service port. See **Special Tools and Equipment** .

NOTE: **Refer to Fastener Notice in Cautions and Notices.**

2. Tighten the valve core.

   Tighten: Tighten the valve core to 11 N.m (97 lb in).

3. Evacuate and recharge the A/C system. Refer to **Refrigerant Recovery and Recharging** .
4. Leak test the fittings of the component using **J 39400-A** . See **Special Tools and Equipment** .
5. Install the service port valve caps.

AIR CONDITIONING (A/C) REFRIGERANT PRESSURE SENSOR REPLACEMENT

Tools Required

J 39400-A Halogen Leak Detector. See **Special Tools and Equipment** .

Removal Procedure

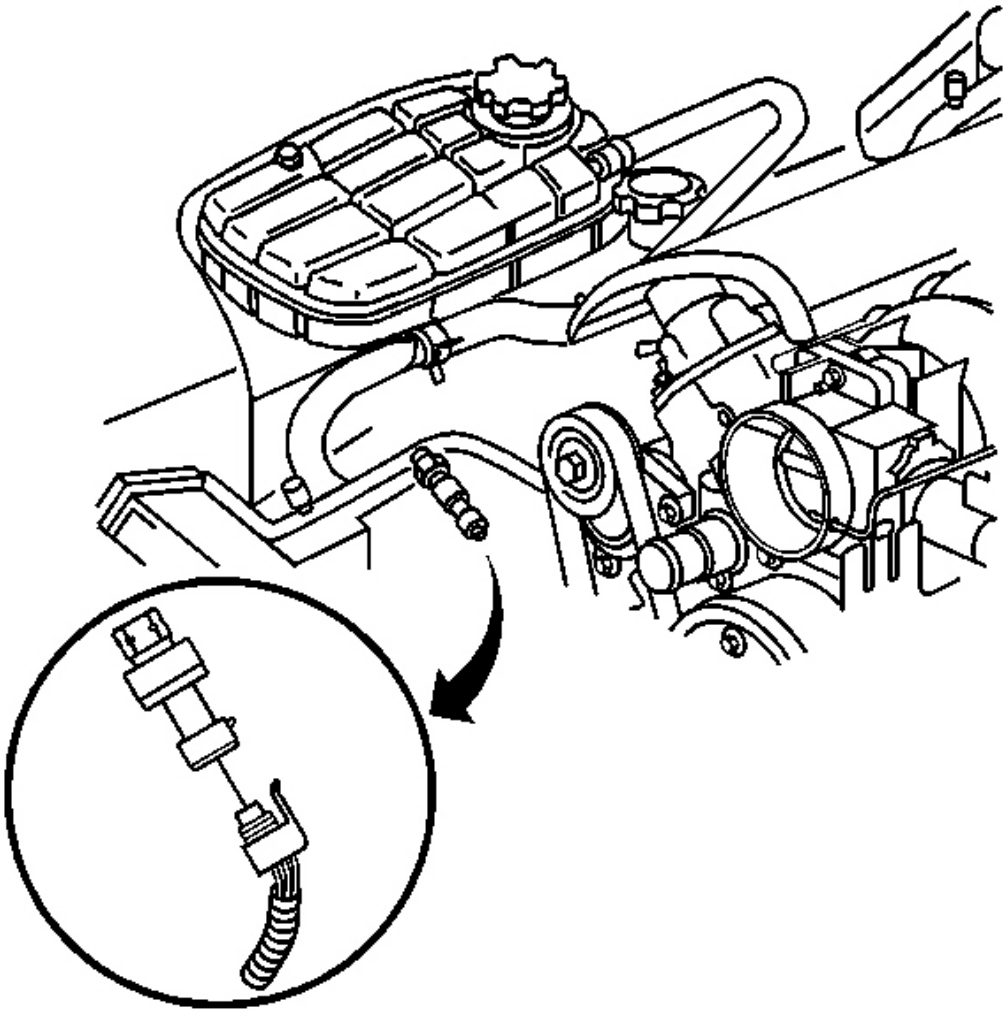

Fig. 109: Refrigerant Pressure Sensor & Electrical Connector
Courtesy of GENERAL MOTORS CORP.

1. Disconnect the refrigerant pressure sensor electrical connector.

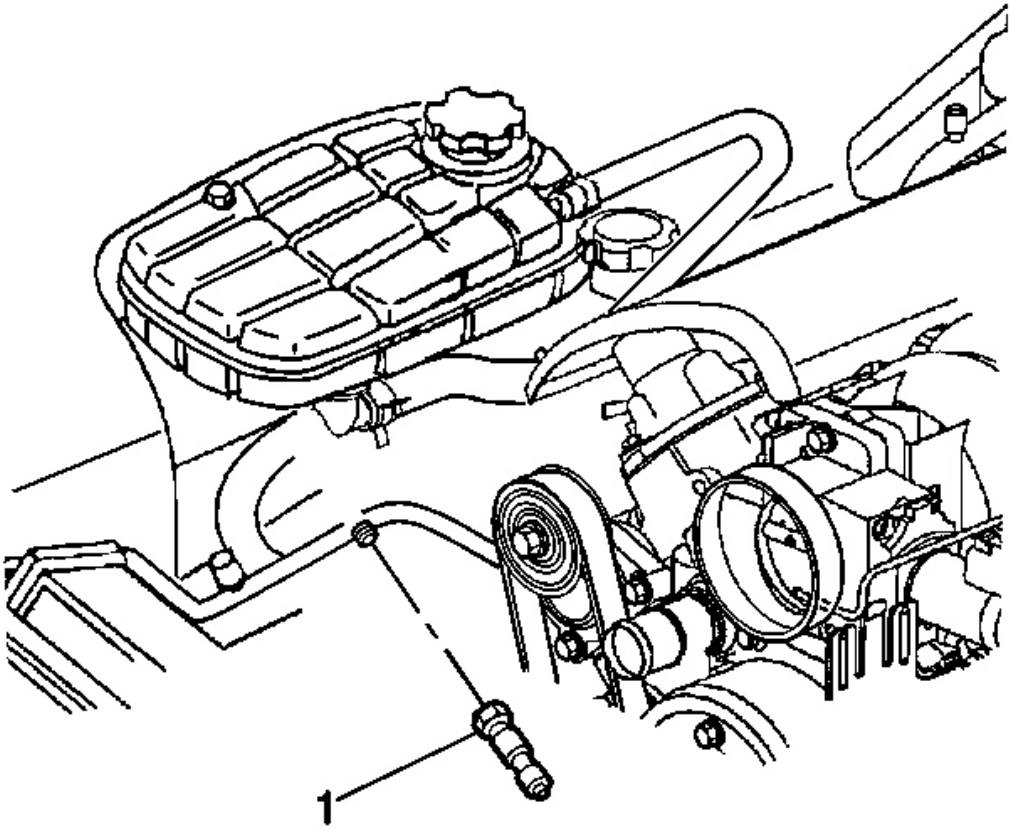

Fig. 110: Front Evaporator Tube & Pressure Sensor
Courtesy of GENERAL MOTORS CORP.

2. Remove the pressure sensor (1) from the evaporator tube - front.
3. Remove and discard the O-ring.

Installation Procedure

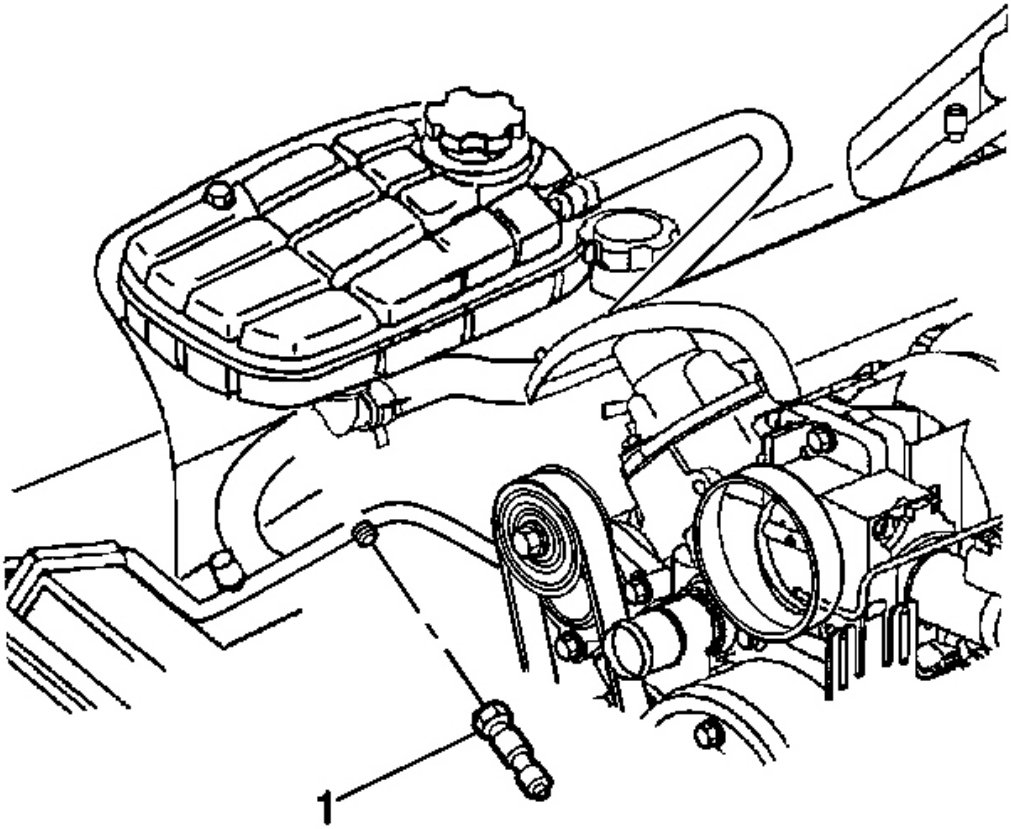

Fig. 111: Front Evaporator Tube & Pressure Sensor
Courtesy of GENERAL MOTORS CORP.

1. Install a new O-ring. Refer to **O-Ring Replacement** .

NOTE: **Refer to Fastener Notice in Cautions and Notices.**

2. Install the pressure sensor (1) to the evaporator tube - front.

   Tighten: Tighten the sensor to 4.75 N.m (42 lb in).

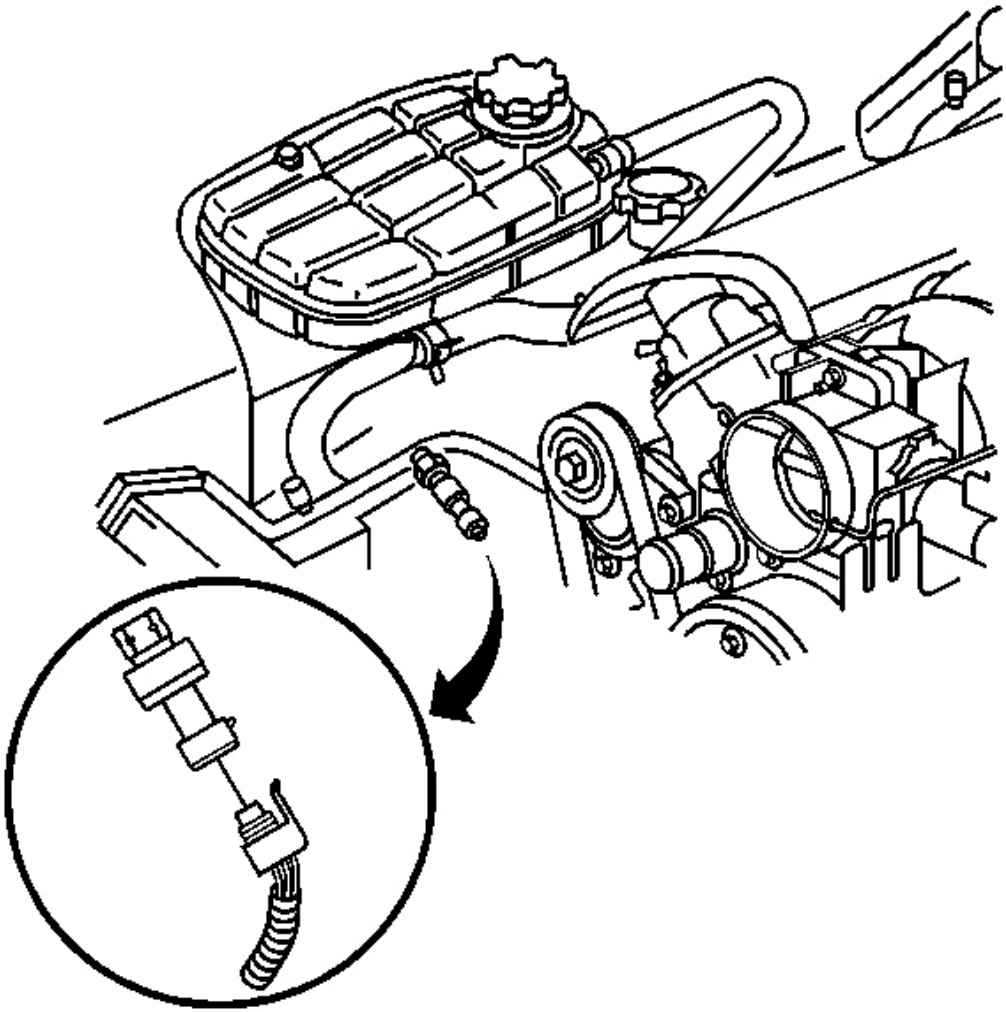

Fig. 112: Refrigerant Pressure Sensor & Electrical Connector
Courtesy of GENERAL MOTORS CORP.

3. Connect the pressure sensor electrical connector.
4. Leak test the fittings of the component using **J 39400-A** . See **Special Tools and Equipment** .

CONDENSER REPLACEMENT

Tools Required

J 39400-A Halogen Leak Detector. See **Special Tools and Equipment** .

Removal Procedure

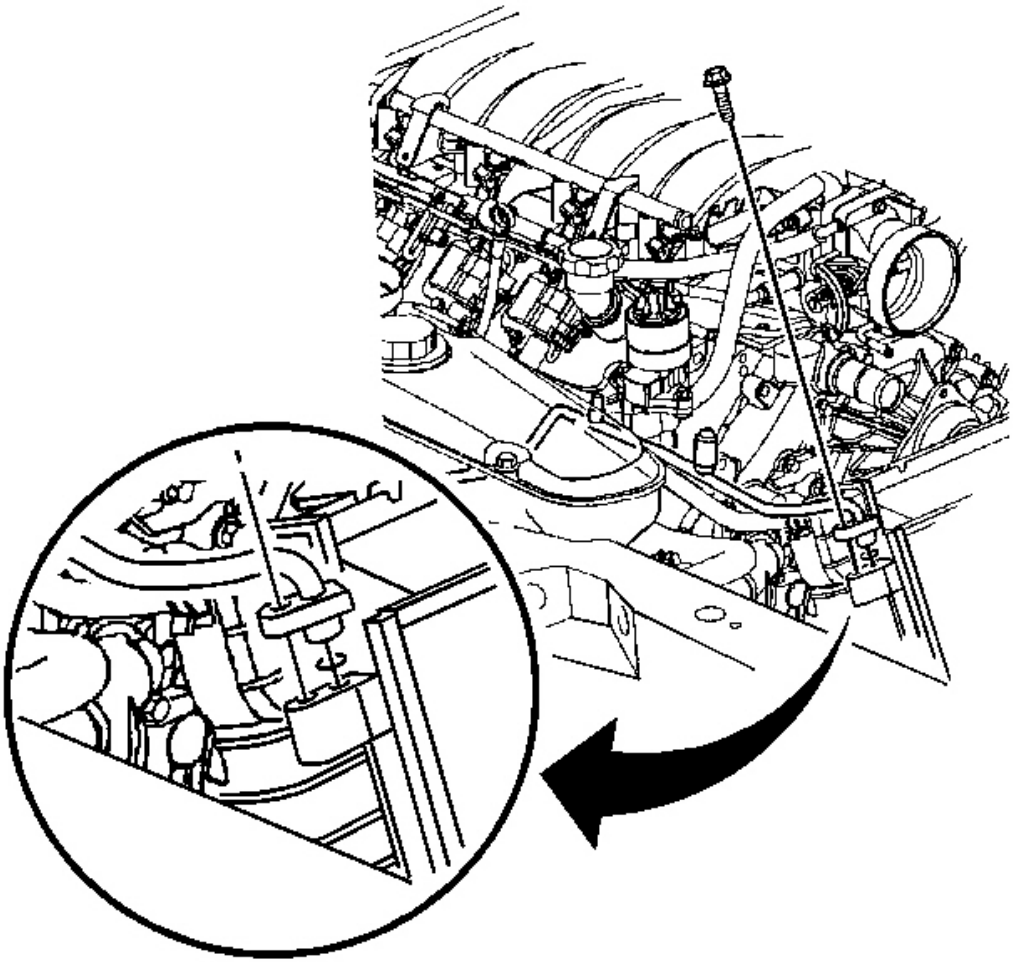

Fig. 113: Condenser Front Evaporator Tube & Bolt
Courtesy of GENERAL MOTORS CORP.

1. Recover the refrigerant from the A/C system. Refer to **Refrigerant Recovery and Recharging** .
2. Remove the upper radiator support. Refer to **Radiator Support Replacement** in Engine Cooling.
3. Remove the front evaporator tube to condenser bolt.

IMPORTANT: Cap or tape off the A/C components immediately to prevent system contamination.

4. Disconnect the front evaporator tube from the condenser.
5. Remove and discard the O-ring.
6. Cap or tape the open evaporator tube and the condenser.
7. Reposition the front evaporator tube.
8. Raise and support the vehicle. Refer to **Lifting and Jacking the Vehicle** in General Information.

IMPORTANT: Prior to removal, take note of the compressor hose routing and orientation between the compressor and condenser.

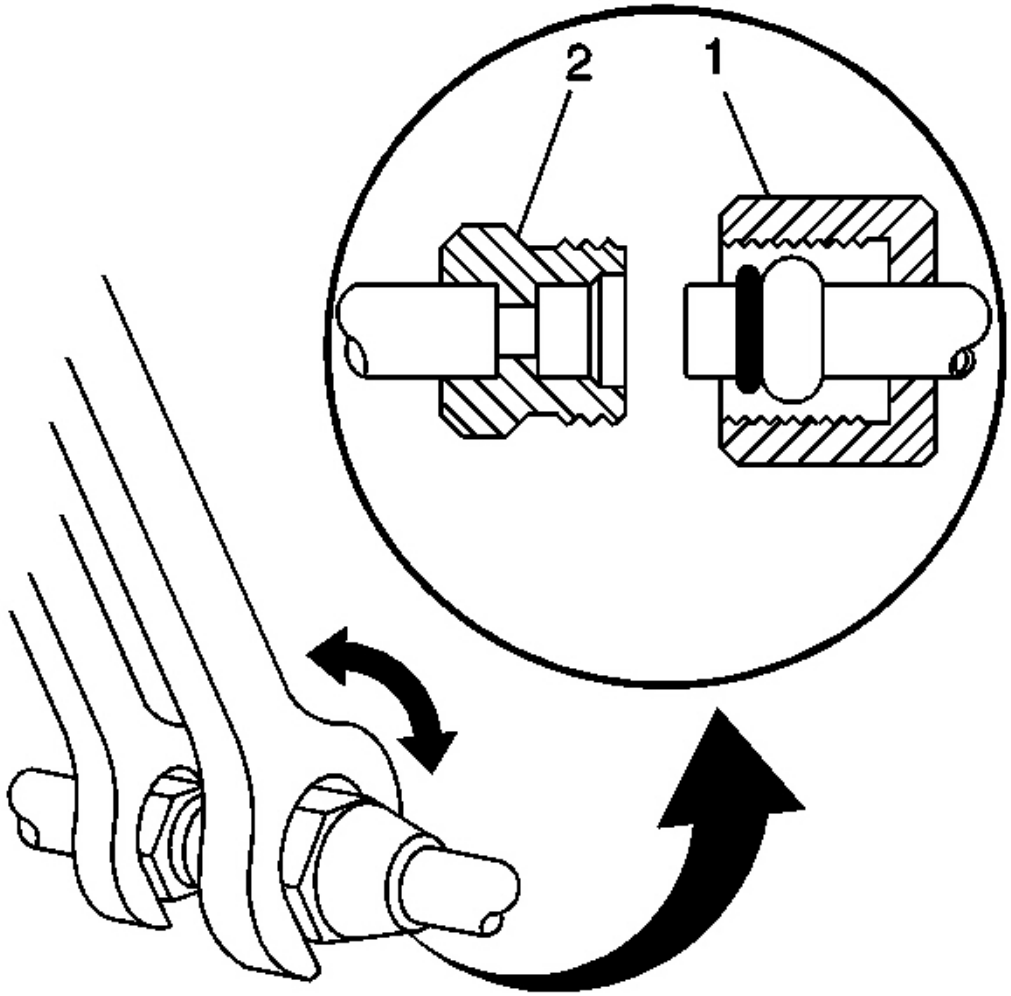

Fig. 114: Condenser Fitting & Compressor Hose Fitting

Courtesy of GENERAL MOTORS CORP.

9. Using a back-up wrench on the condenser fitting (2), loosen the compressor hose fitting (1) from the condenser.
10. Cap or tape the open compressor hose and the condenser.

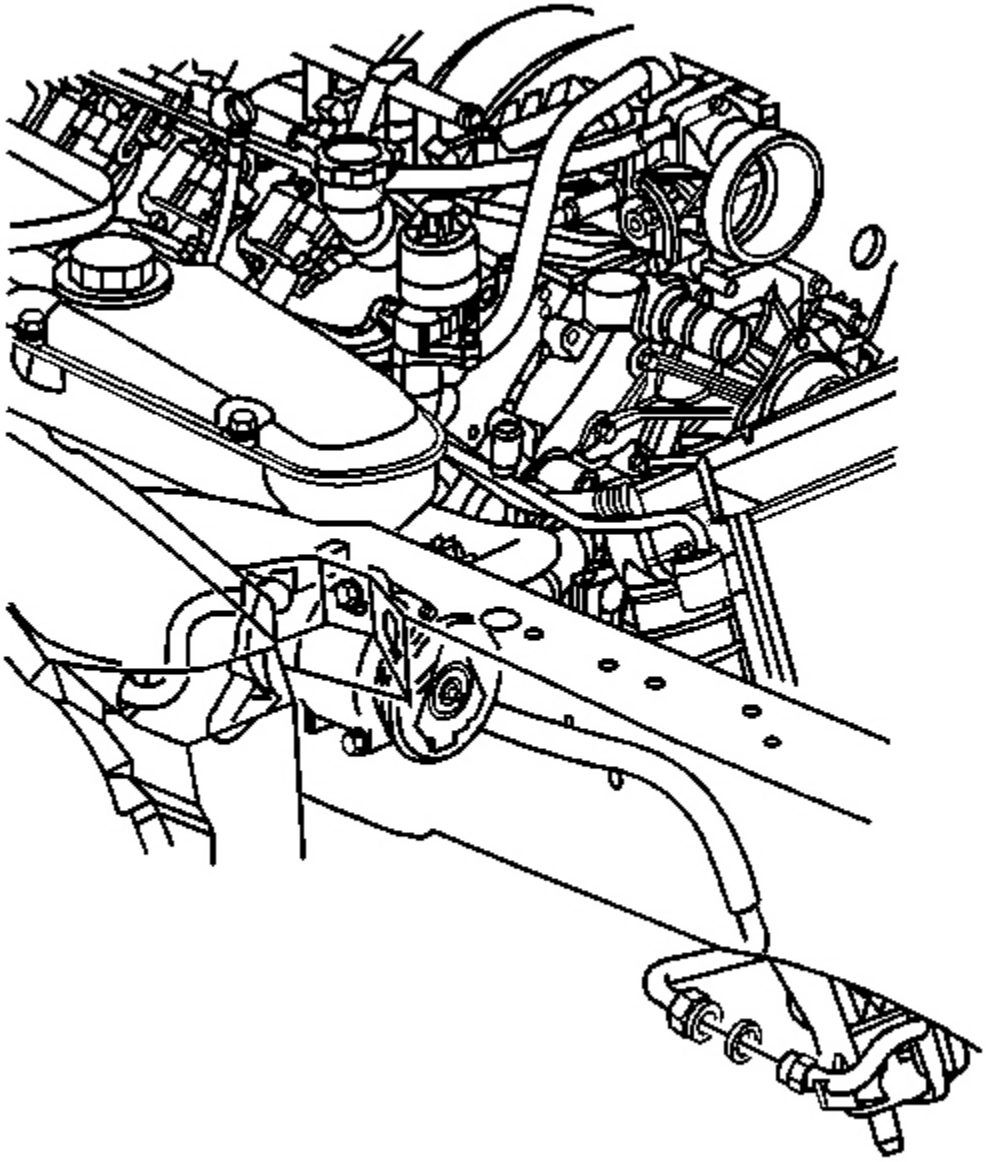

Fig. 115: Condenser Compressor Hose Assembly & Condenser
Courtesy of GENERAL MOTORS CORP.

11. Disconnect the compressor hose from the condenser.
12. Remove and discard the O-ring.

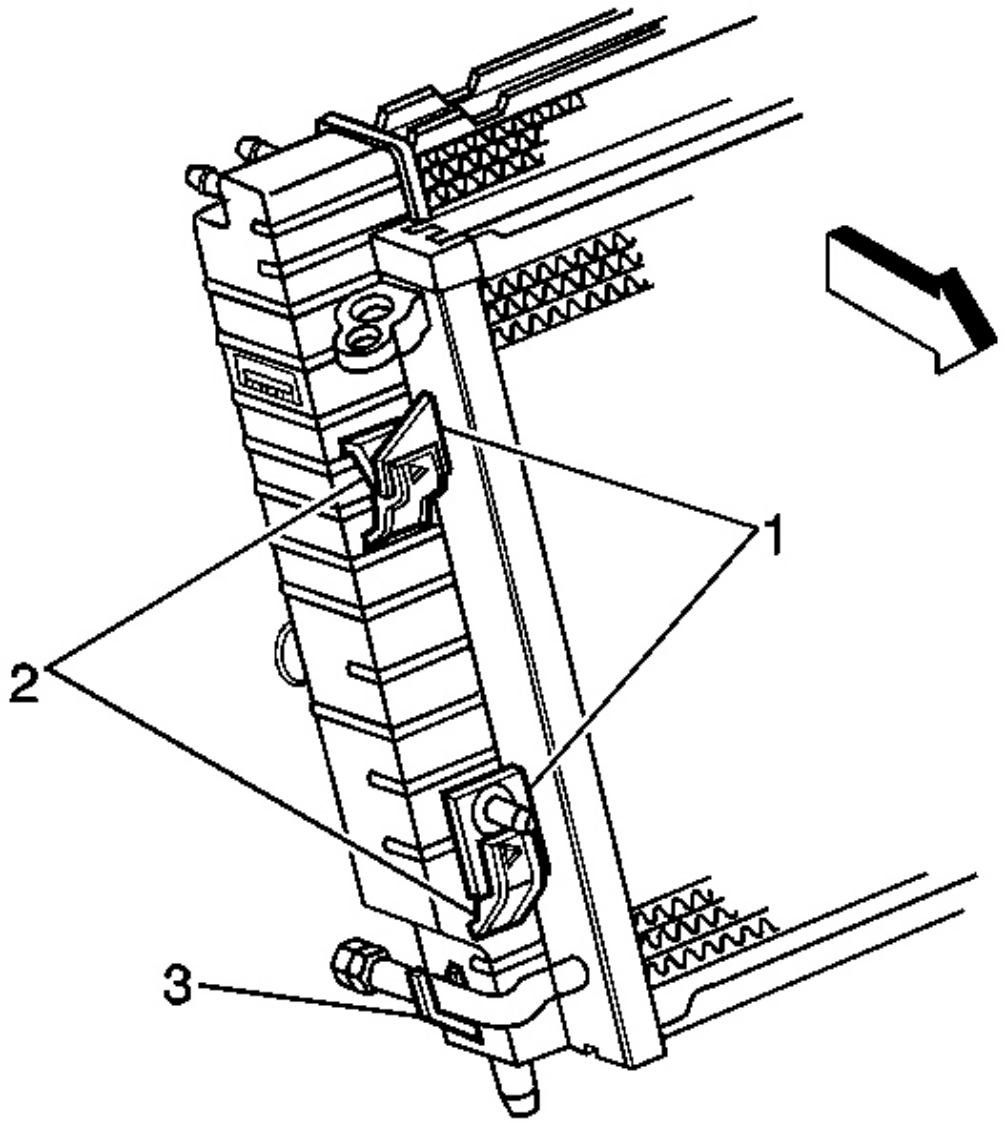

Fig. 116: Radiator Slots & Condenser Tabs
Courtesy of GENERAL MOTORS CORP.

13. Lower the vehicle.
14. Remove the radiator air baffle. Refer to **Radiator Air Baffle Assemblies and Deflectors** in Engine Cooling.
15. Raise the condenser along the radiator to release the condenser tabs (1) from the radiator slots (2).

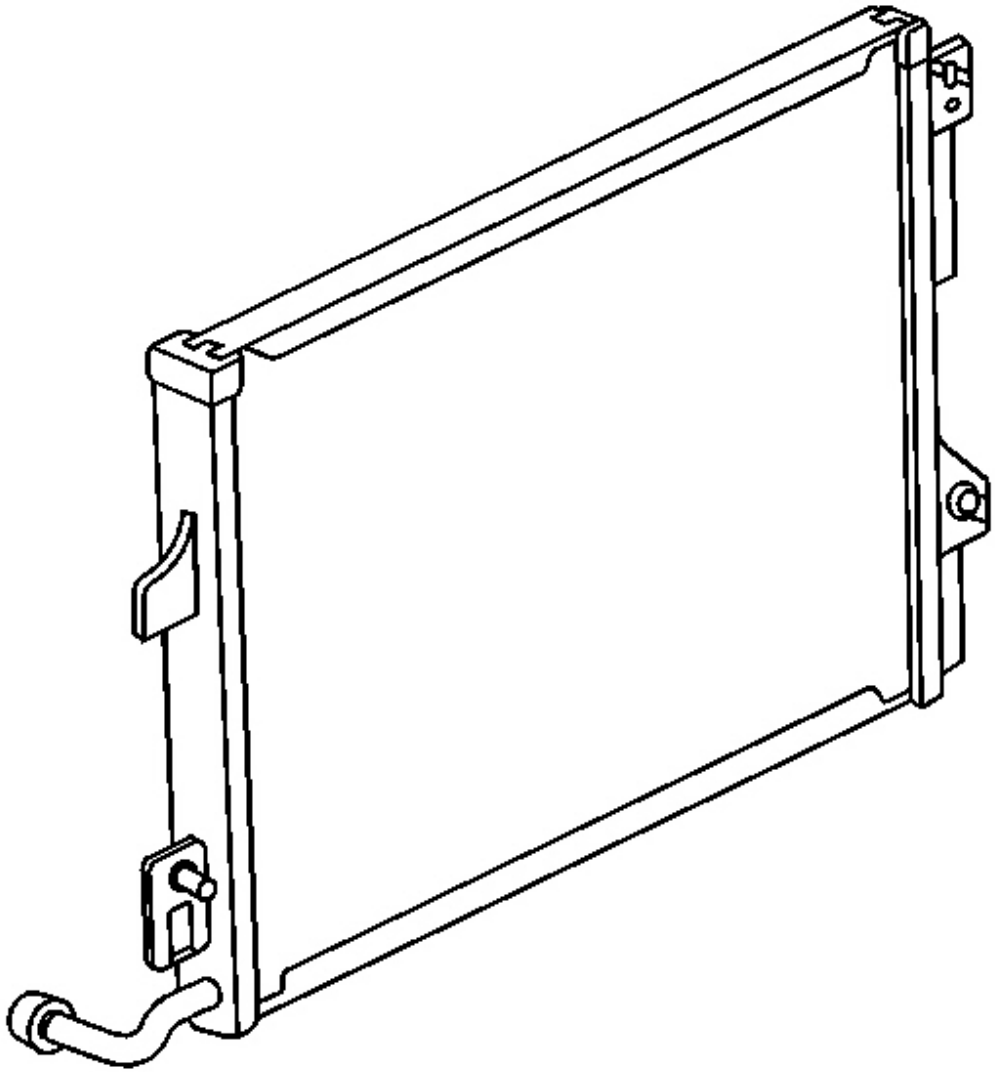

Fig. 117: Inspecting Condenser Insulators At LH & RH Front Edges For Damage
Courtesy of GENERAL MOTORS CORP.

16. Remove the condenser from the vehicle.
17. Inspect the condenser insulators along the LH and RH front edges of the condenser for wear or damage.

Installation Procedure

IMPORTANT: If replacing the condenser, add the refrigerant oil to the condenser. Refer to Refrigerant System Capacities for system capacity information.

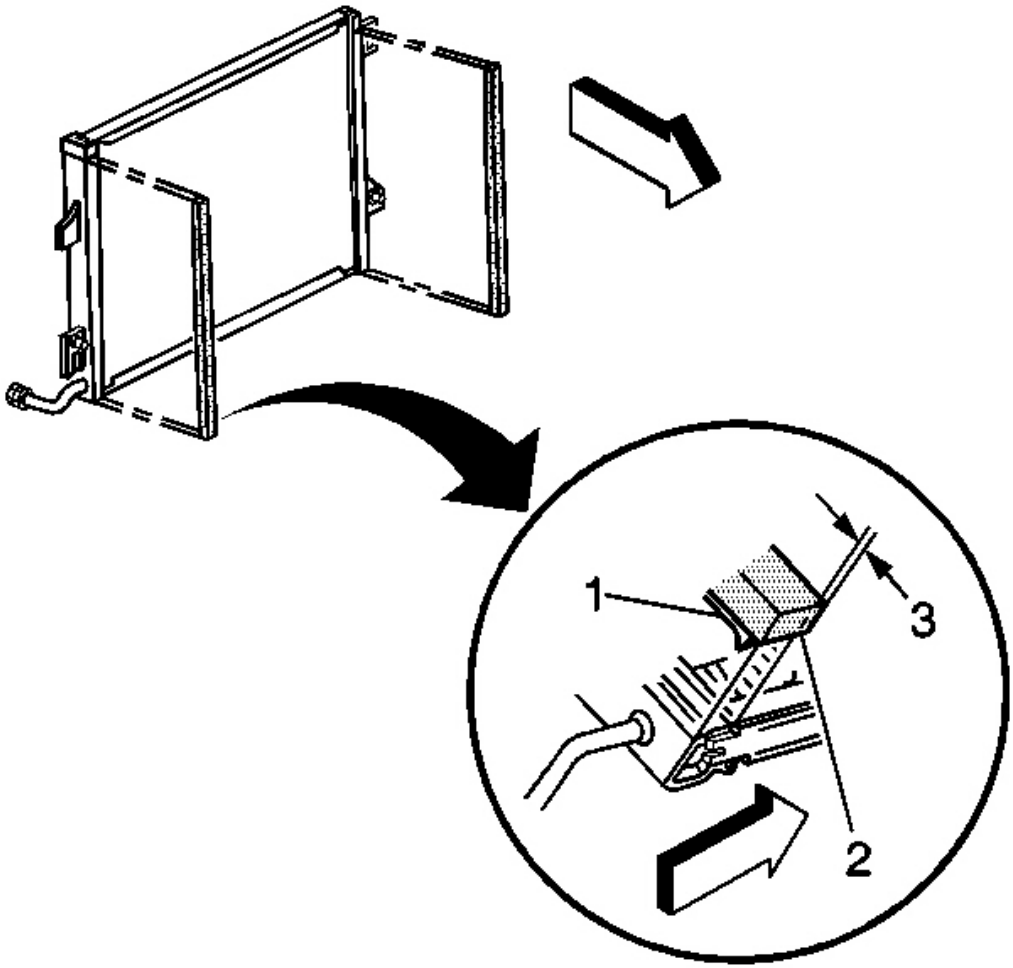

Fig. 118: Condenser Insulators
Courtesy of GENERAL MOTORS CORP.

1. Replace the condenser insulators (2), if necessary:

1. Remove all traces of the old insulators.
2. Using isopropyl alcohol, or equivalent, wipe clean the front surface of the condenser LH and RH edges.
3. Remove the paper backing (1) from the new insulators (2).
4. Align and install the insulators (2) while keeping a gap (3) of 1 mm (0.039 in) between the insulators (2) and the inner edges of the condenser, as shown.

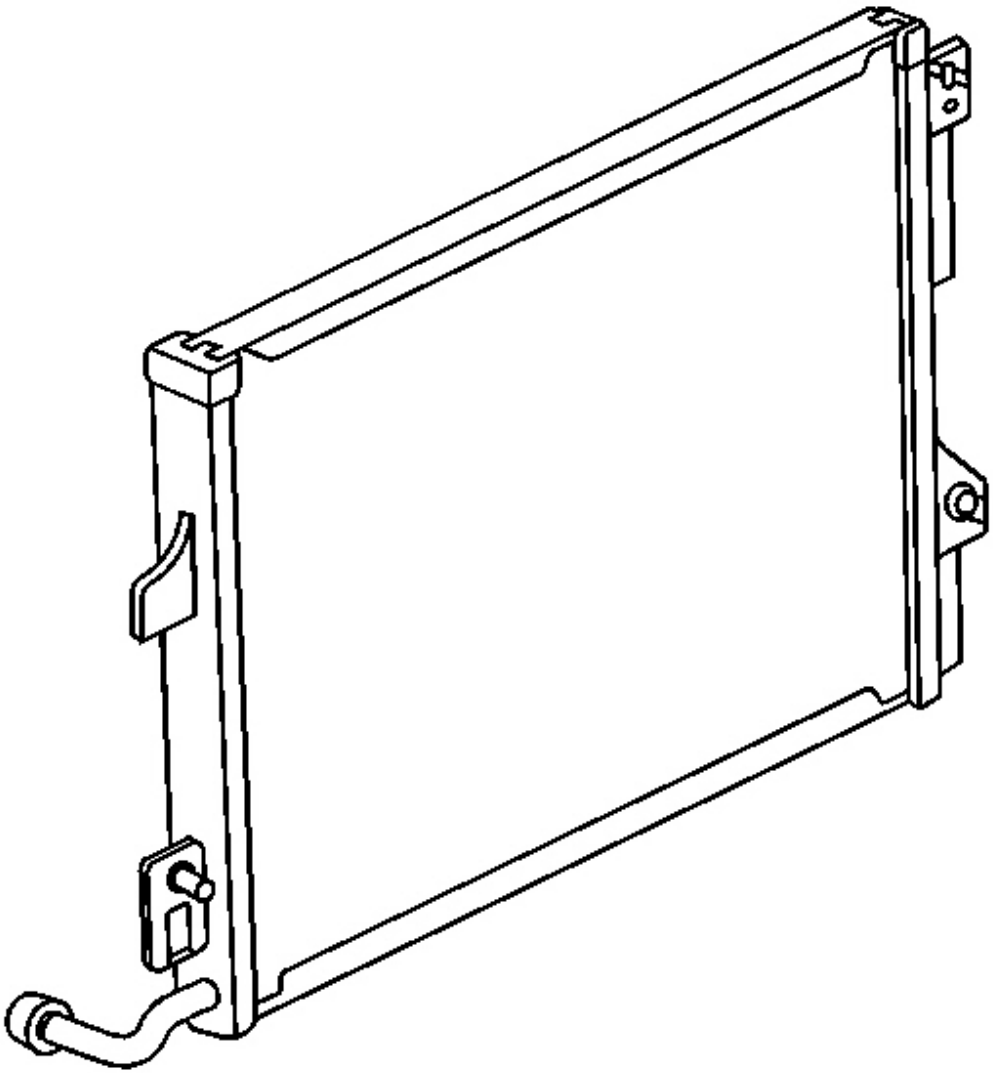

Fig. 119: Inspecting Condenser Insulators At LH & RH Front Edges For Damage

Courtesy of GENERAL MOTORS CORP.

2. Position the condenser into the vehicle.

   Install the condenser to the radiator so that the condenser is above the installed position.

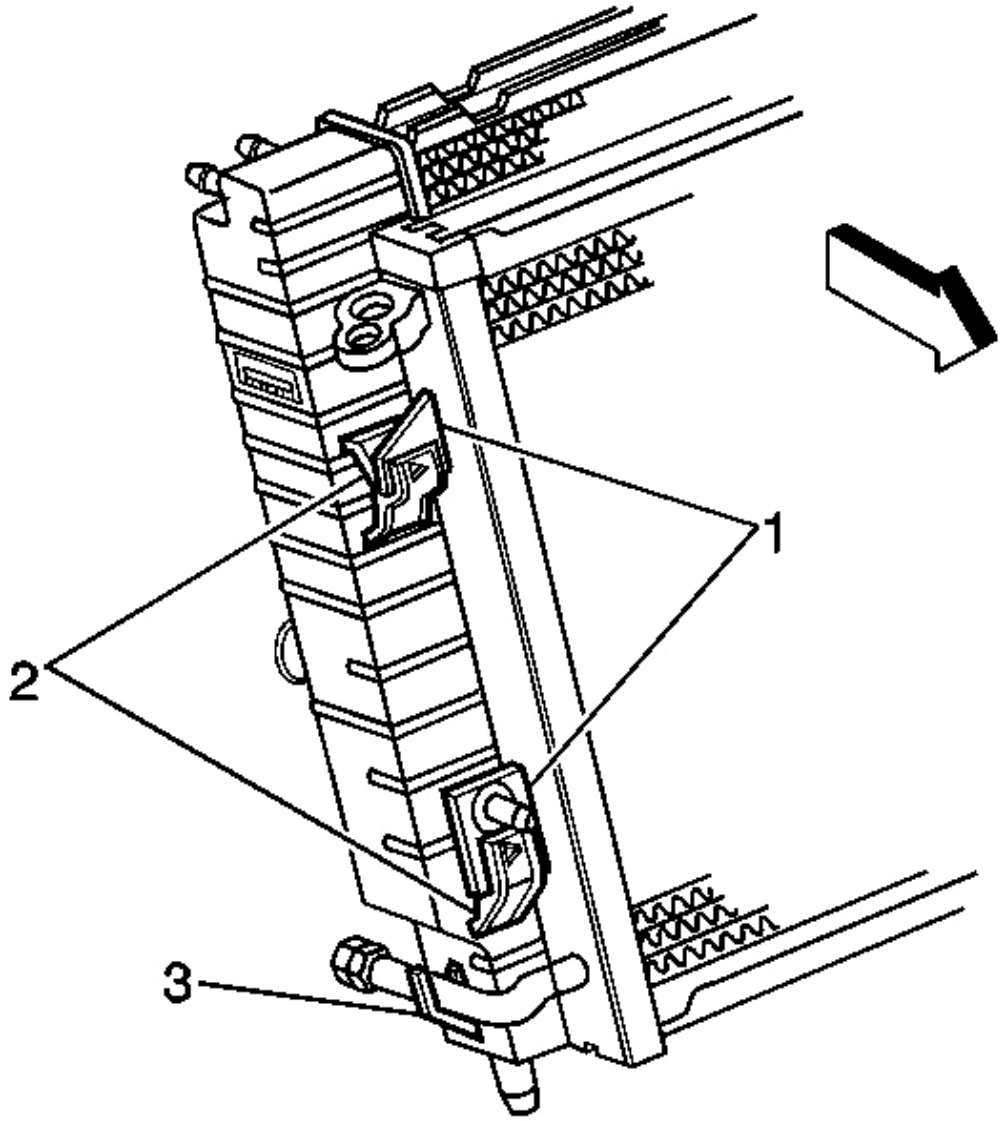

Fig. 120: Radiator Slots & Condenser Tabs
Courtesy of GENERAL MOTORS CORP.

3. Lower the condenser to secure the condenser tabs (1) to the radiator slots (2).
4. Install the radiator air baffle. Refer to **Radiator Air Baffle Assemblies and Deflectors** in Engine Cooling.
5. Raise and support the vehicle.
6. Remove the cap or tape from the compressor hose and the condenser.
7. Install a new O-ring. Refer to **O-Ring Replacement** .

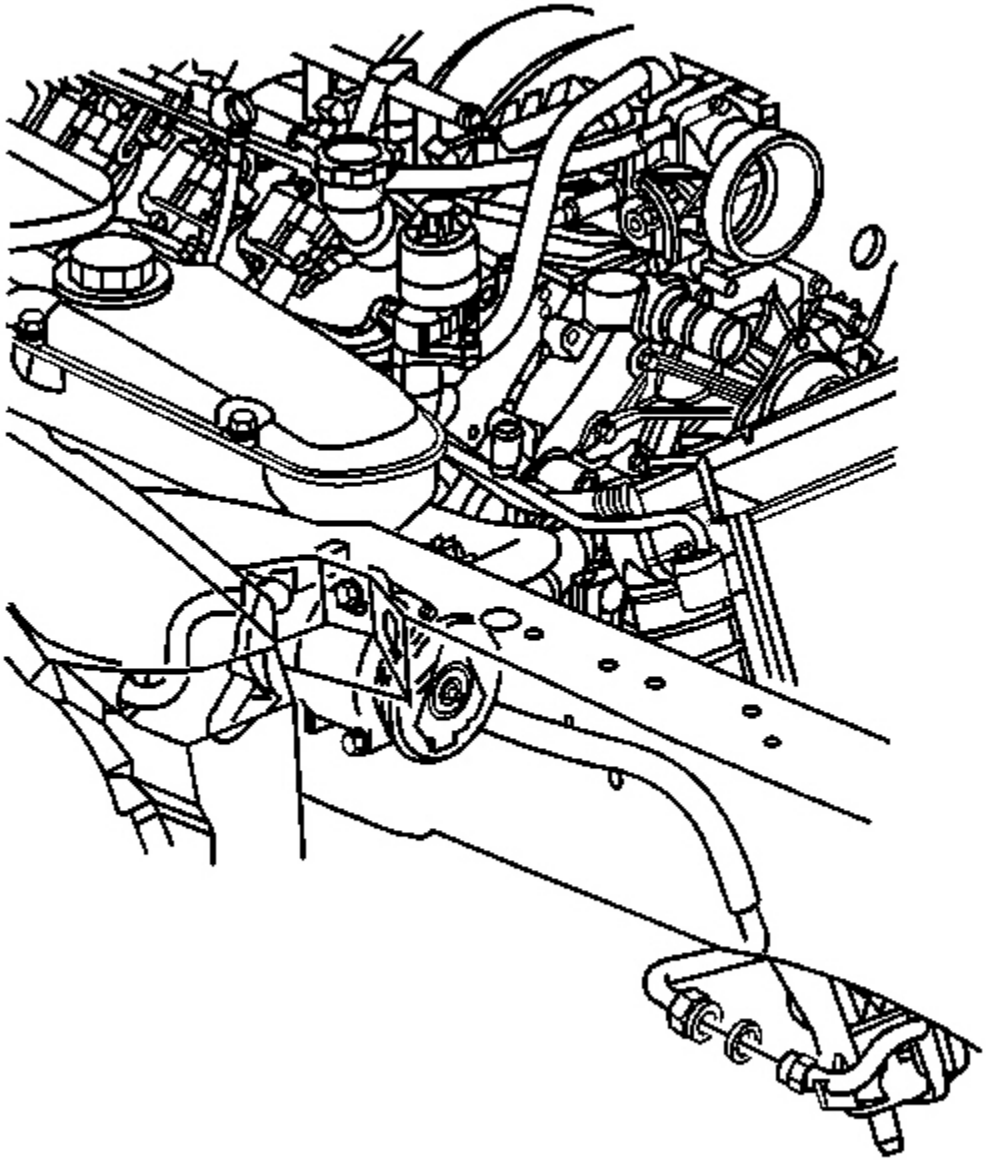

Fig. 121: Condenser Compressor Hose Assembly & Condenser
Courtesy of GENERAL MOTORS CORP.

8. Install the compressor hose to the condenser.

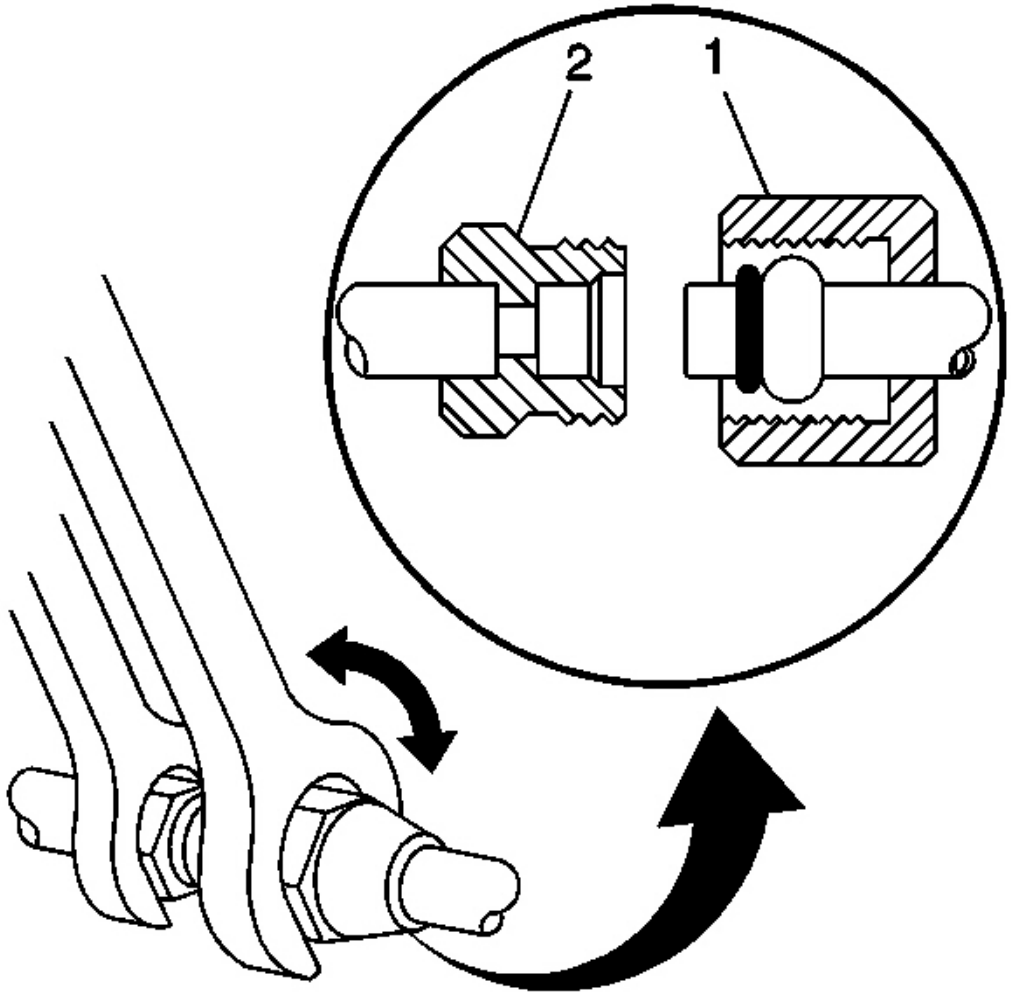

Fig. 122: Condenser Fitting & Compressor Hose Fitting
Courtesy of GENERAL MOTORS CORP.

NOTE: Refer to Fastener Notice in Cautions and Notices.

9. Using a back-up wrench on the condenser fitting (2), secure the compressor hose fitting (1) to the condenser.

   Tighten: Tighten the fitting to 24 N.m (17 lb ft).

10. Lower the vehicle.

11. Remove the cap or tape from the front evaporator tube and the condenser.
12. Install a new O-ring. Refer to **O-Ring Replacement** .

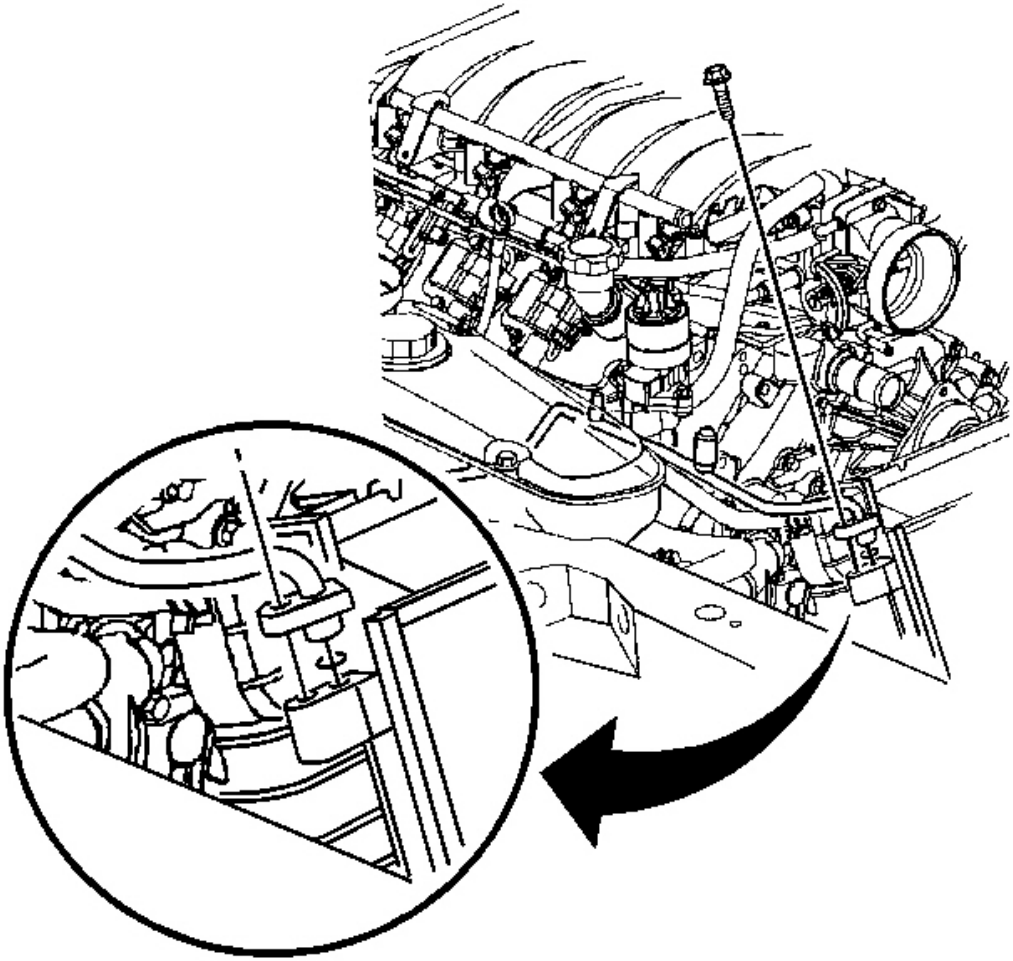

Fig. 123: Condenser Front Evaporator Tube & Bolt
Courtesy of GENERAL MOTORS CORP.

13. Connect the front evaporator tube to the condenser.
14. Install the evaporator tube to condenser bolt.

    Tighten: Tighten the bolt to 27 N.m (20 lb ft).

15. Install the upper radiator support. Refer to **Radiator Support Replacement** in Engine Cooling.

16. Evacuate and recharge the A/C system. Refer to **Refrigerant Recovery and Recharging** .
17. Leak test the fittings of the component using **J 39400-A** . See **Special Tools and Equipment** .

ACCUMULATOR REPLACEMENT

Tools Required

J 39400-A Halogen Leak Detector. See **Special Tools and Equipment** .

Removal Procedure

1. Recover the refrigerant from the A/C system. Refer to **Refrigerant Recovery and Recharging** .
2. Remove the battery. Refer to **Battery Replacement** in Engine Electrical.
3. Remove the battery heat shield. Refer to **Battery Heat Shield Replacement** in Engine Electrical.

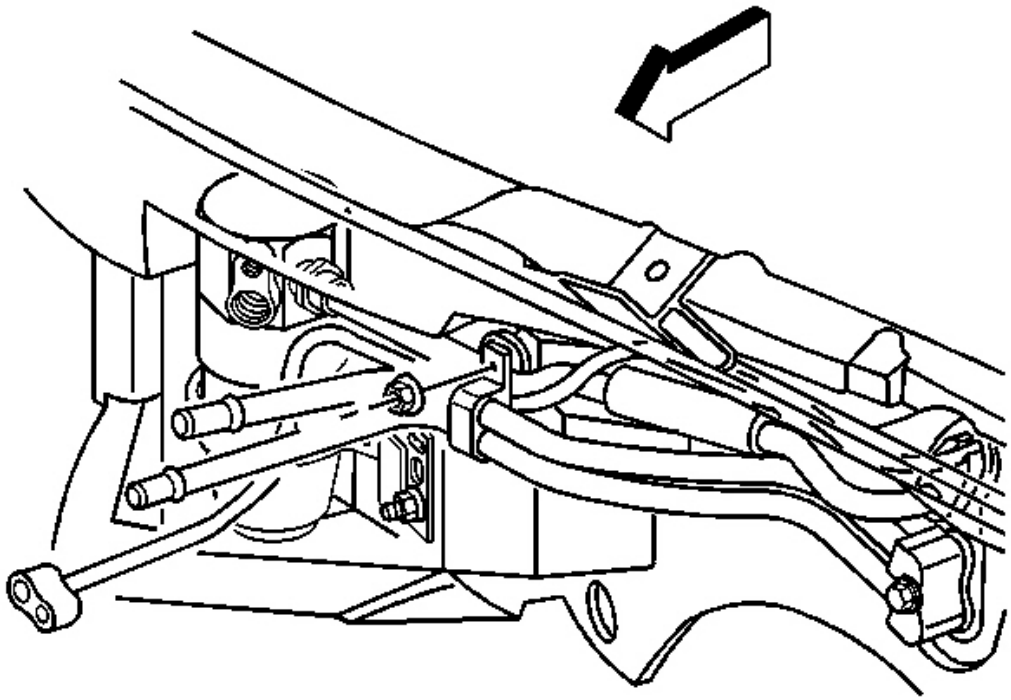

Fig. 124: Heater Pipe Bracket & Cowl
Courtesy of GENERAL MOTORS CORP.

4. Remove the nut retaining the heater pipe bracket to the cowl.

5. Reposition the heater pipe bracket to access the refrigerant lines.

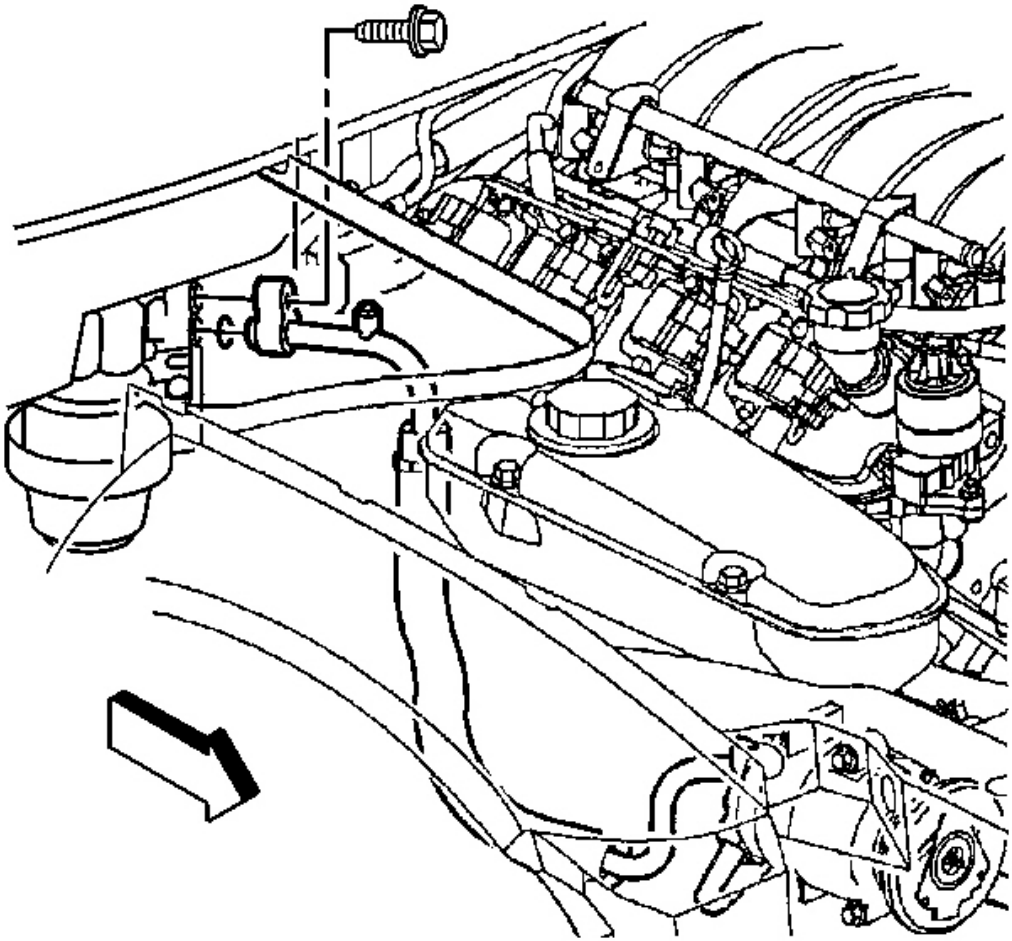

Fig. 125: Accumulator, Retaining Bolt & Compressor Hose Assembly
Courtesy of GENERAL MOTORS CORP.

6. Remove the compressor hose to accumulator retaining bolt.

IMPORTANT: Cap or tape the A/C components immediately to prevent system contamination.

7. Disconnect the compressor hose from the accumulator.
8. Remove and discard the O-ring.
9. Cap or tape the open compressor hose and the accumulator.

10. Reposition the compressor hose end.

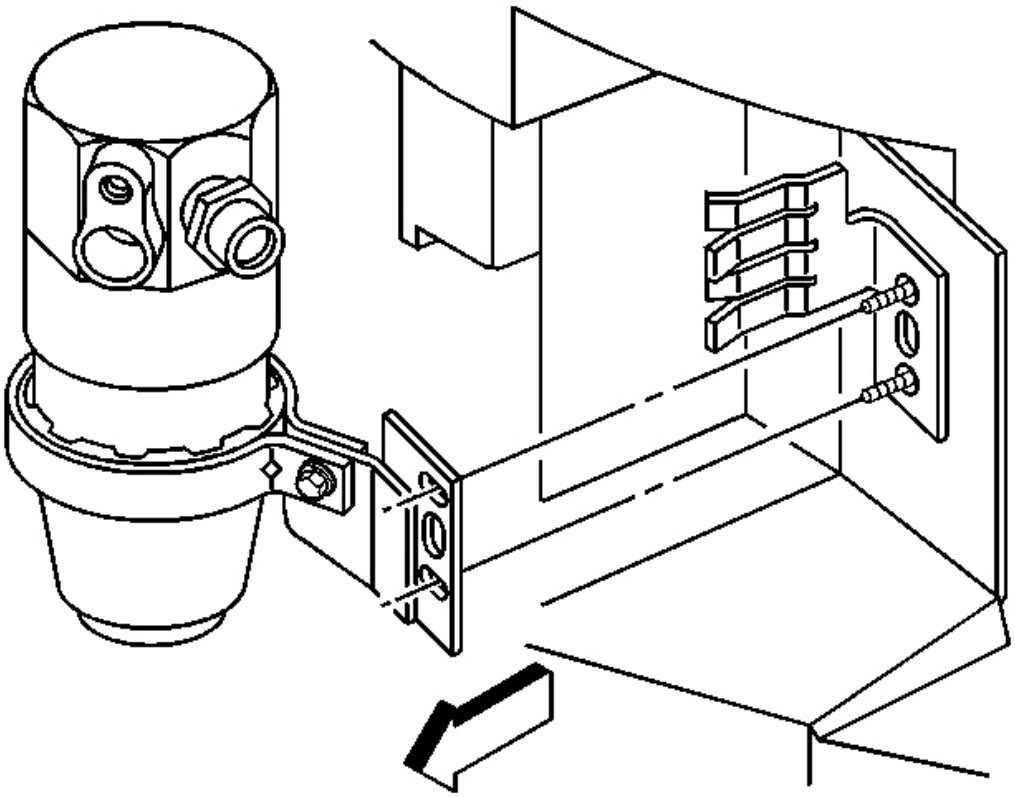

Fig. 126: Accumulator Bracket Mounting Nuts
Courtesy of GENERAL MOTORS CORP.

11. Remove the accumulator bracket mounting nuts.

IMPORTANT: Prior to removal, take note of the accumulator alignment to the accumulator hose and the rear evaporator tube.

12. Reposition the accumulator slightly to access the accumulator hose to accumulator fitting.
13. Cap or tape the open accumulator hose and the accumulator.

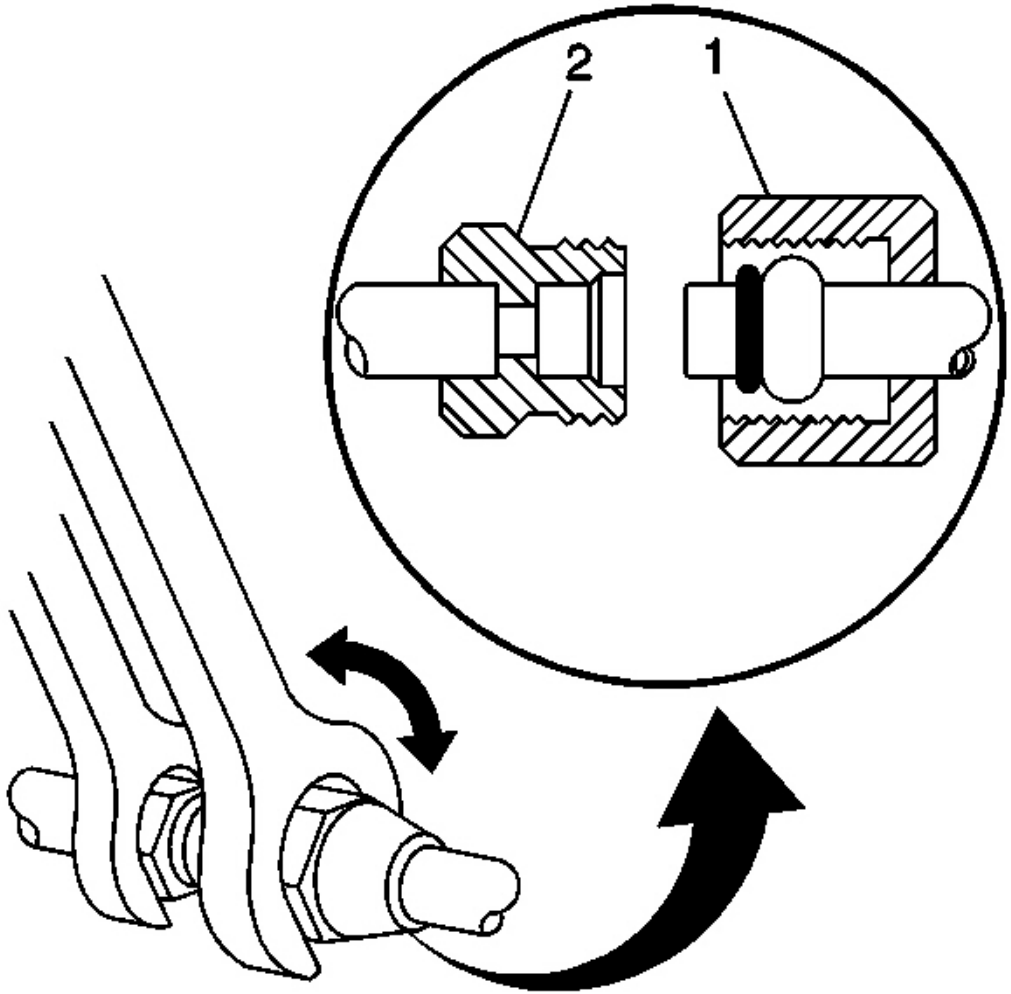

Fig. 127: Condenser Fitting & Compressor Hose Fitting
Courtesy of GENERAL MOTORS CORP.

14. Using a back-up wrench on the accumulator fitting (2), loosen the accumulator hose fitting (1) from the accumulator.

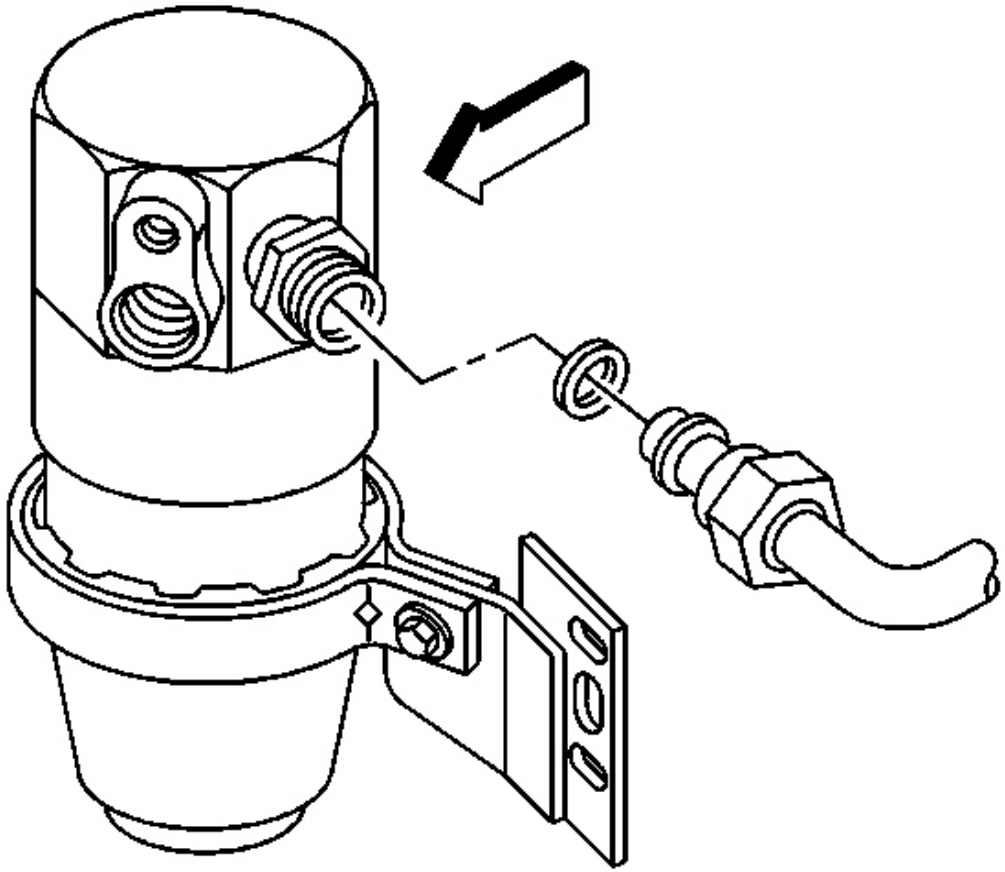

Fig. 128: Accumulator Hose & O-Ring
Courtesy of GENERAL MOTORS CORP.

15. Disconnect the accumulator hose from the accumulator.
16. Remove and discard the O-ring

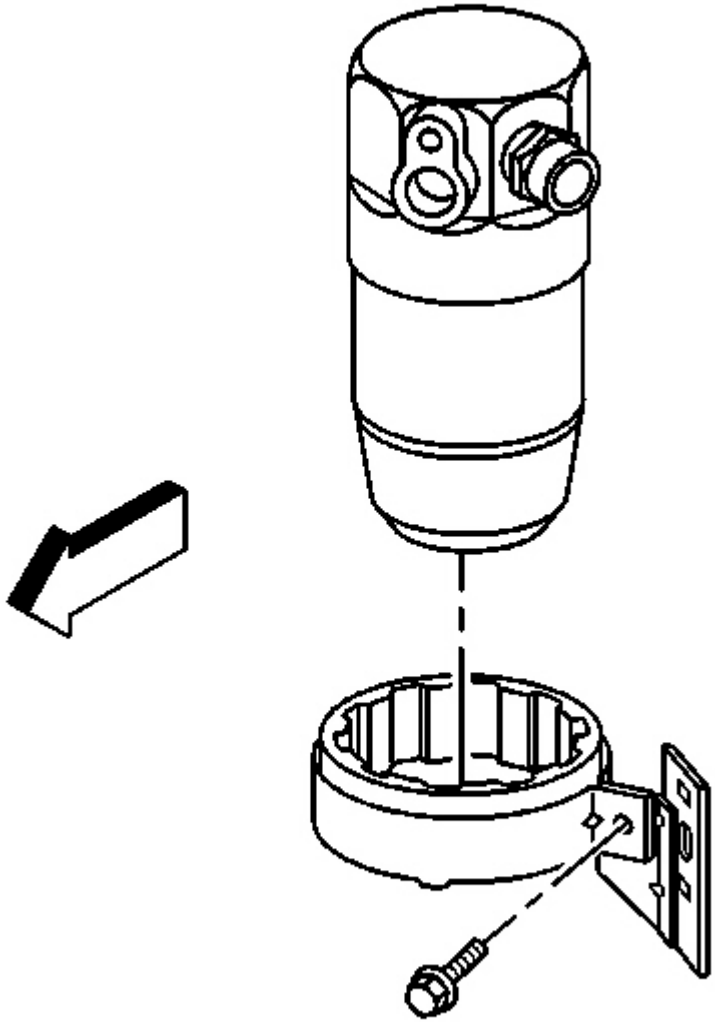

Fig. 129: Accumulator Bracket, Clamp & Bolt
Courtesy of GENERAL MOTORS CORP.

17. Remove the accumulator from the vehicle.
18. Loosen the accumulator bracket clamp bolt.
19. Remove the accumulator from the accumulator bracket.
20. Inspect the accumulator bracket insulator and the accumulator lower insulator for wear or damage.

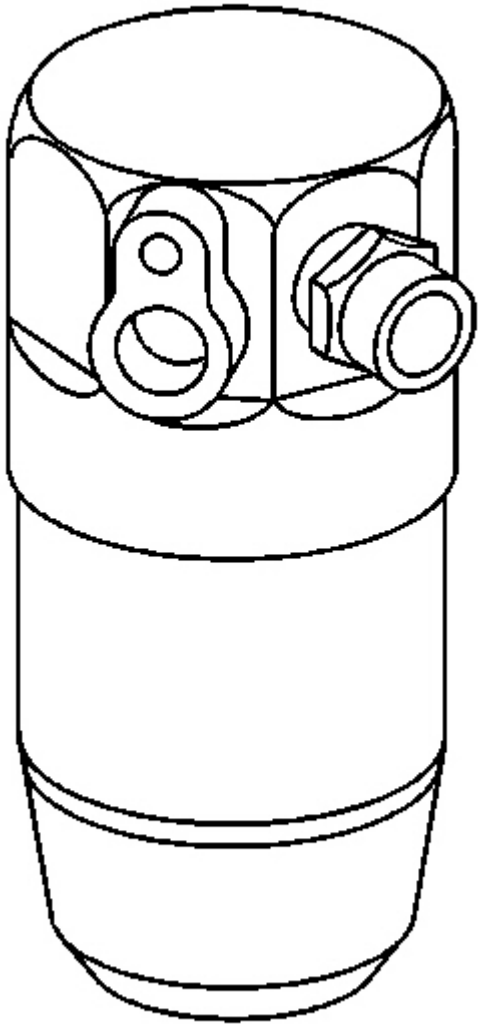

Fig. 130: Accumulator Lower Insulator
Courtesy of GENERAL MOTORS CORP.

21. If replacing the accumulator, drain and measure as much of the oil as possible from the removed accumulator.

    This measurement will be used during installation of the replacement accumulator.

Installation Procedure

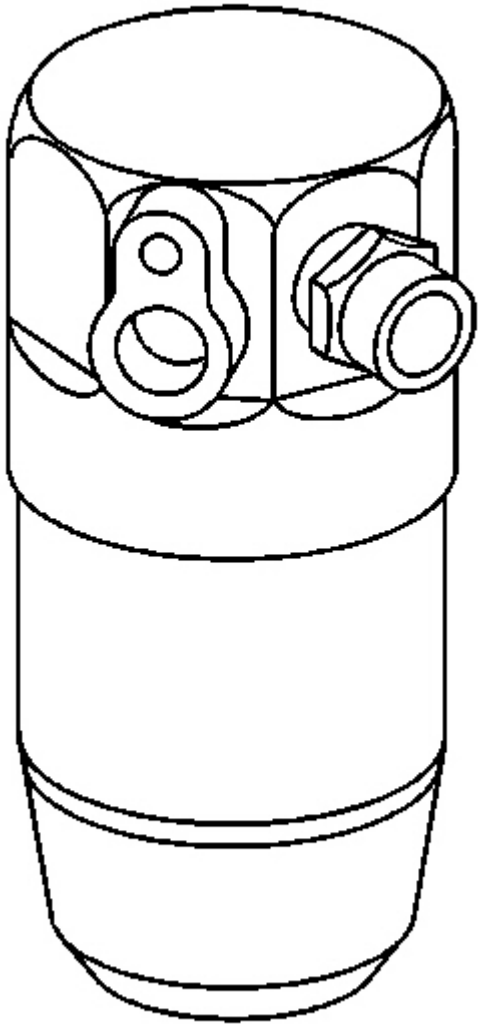

Fig. 131: Accumulator Lower Insulator
Courtesy of GENERAL MOTORS CORP.

1. Add the specified amount of PAG oil to the accumulator. Refer to **Refrigerant System Capacities** .
2. Replace the accumulator lower insulator, if necessary:

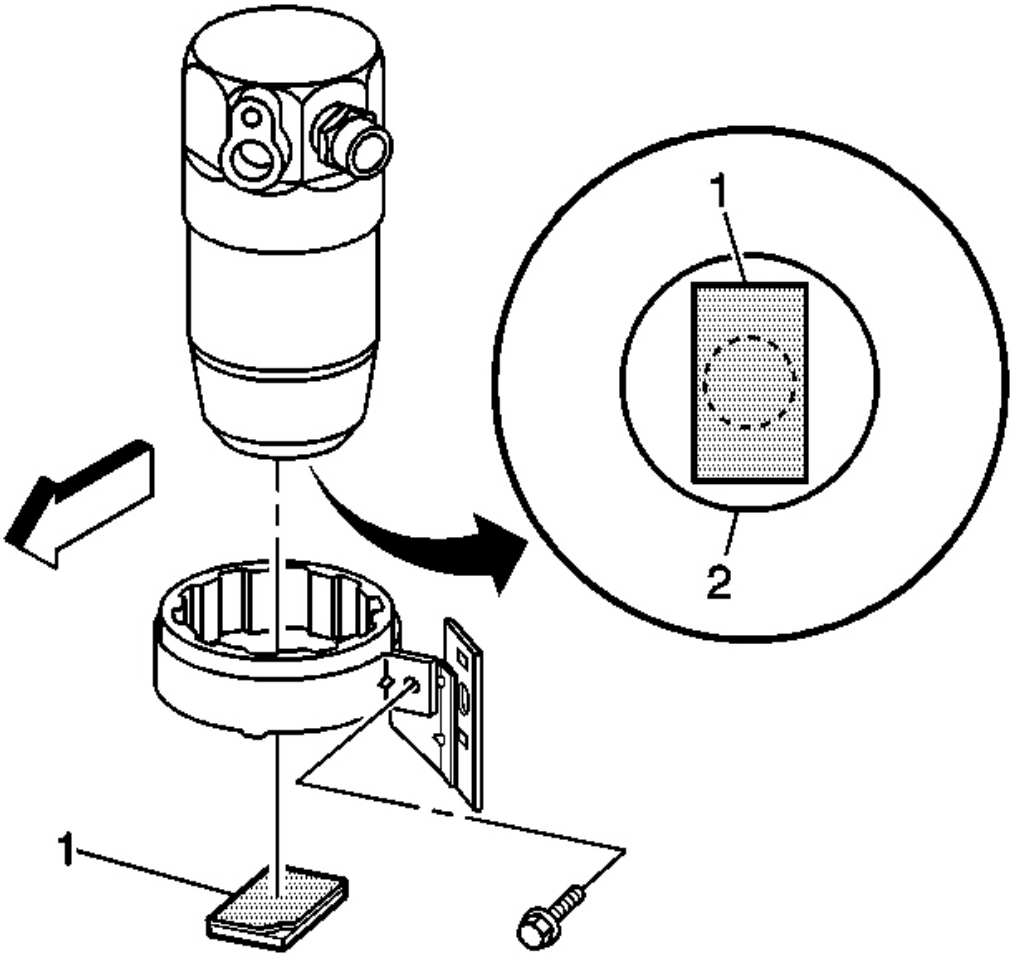

Fig. 132: Lower Insulator & Accumulator
Courtesy of GENERAL MOTORS CORP.

1. Remove the paper backing from the lower insulator (1).
2. Position and install the insulator (1) to the bottom of the accumulator (2) as shown.

3. Install the accumulator to the accumulator bracket.
4. Tighten the accumulator bracket clamp bolt just enough to provide some resistance in rotating the accumulator.
5. Install the accumulator and bracket to the vehicle.
6. Remove the cap or tape from the accumulator hose and the accumulator.
7. Install a new O-ring. Refer to **O-Ring Replacement** .

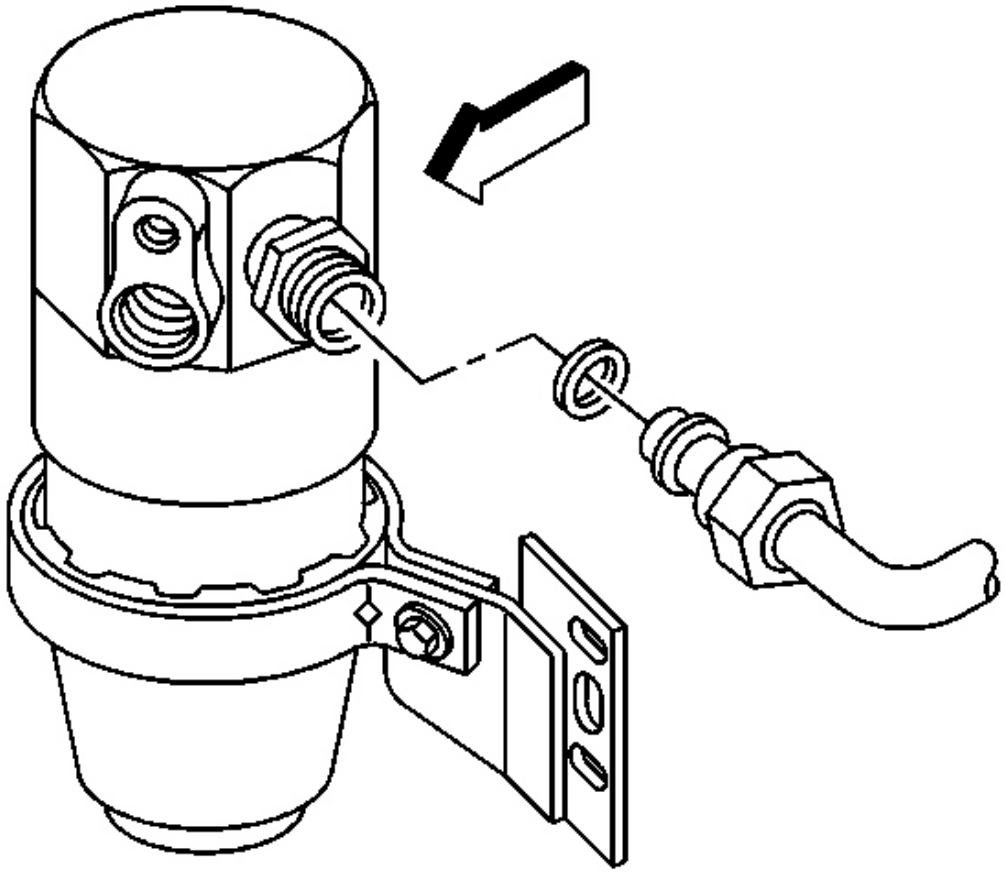

Fig. 133: Accumulator Hose & O-Ring
Courtesy of GENERAL MOTORS CORP.

8. Install the accumulator hose to the accumulator.
9. Align the accumulator to the accumulator hose and the rear evaporator tube as noted prior to removal.

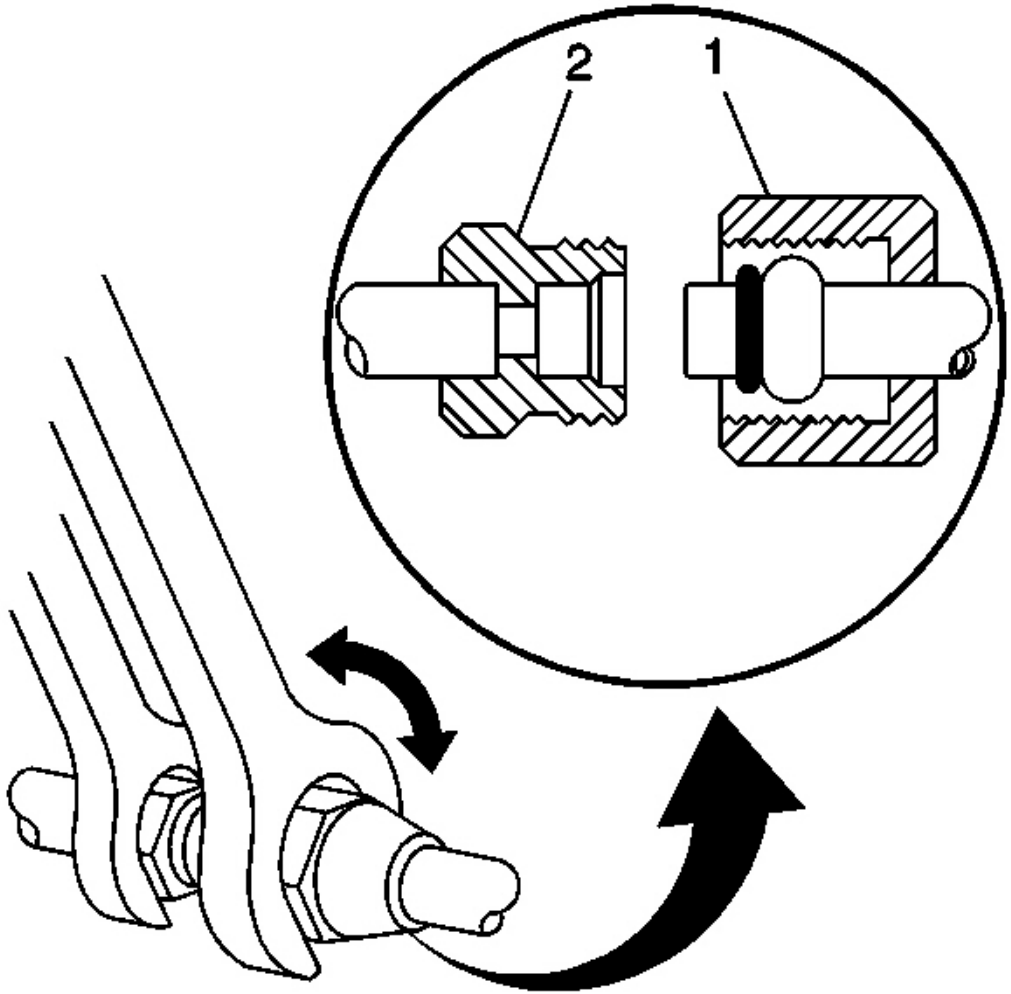

Fig. 134: Condenser Fitting & Compressor Hose Fitting
Courtesy of GENERAL MOTORS CORP.

NOTE: Refer to Fastener Notice in Cautions and Notices.

10. Using a back-up wrench on the accumulator fitting (2), secure the accumulator hose fitting (1) to the accumulator.

    Tighten: Tighten the fitting to 41 N.m (30 lb ft).

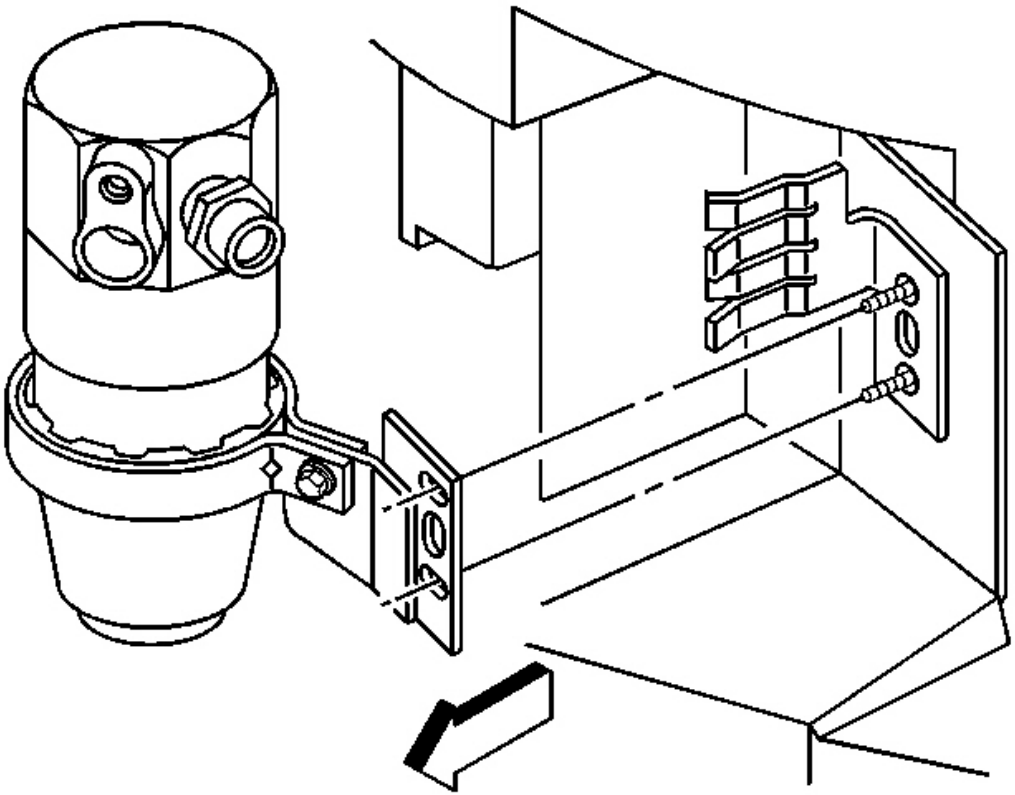

Fig. 135: Accumulator Bracket Mounting Nuts
Courtesy of GENERAL MOTORS CORP.

11. Install the accumulator and bracket into position.
12. Install the accumulator bracket mounting nuts.

    Tighten: Tighten the nuts to 10 N.m (89 lb in).

13. Tighten the accumulator bracket clamp bolt.

    Tighten: Tighten the bolt to 10 N.m (89 lb in).

14. Remove the cap or tape from the compressor hose and the accumulator.
15. Install a new O-ring. Refer to **O-Ring Replacement** .

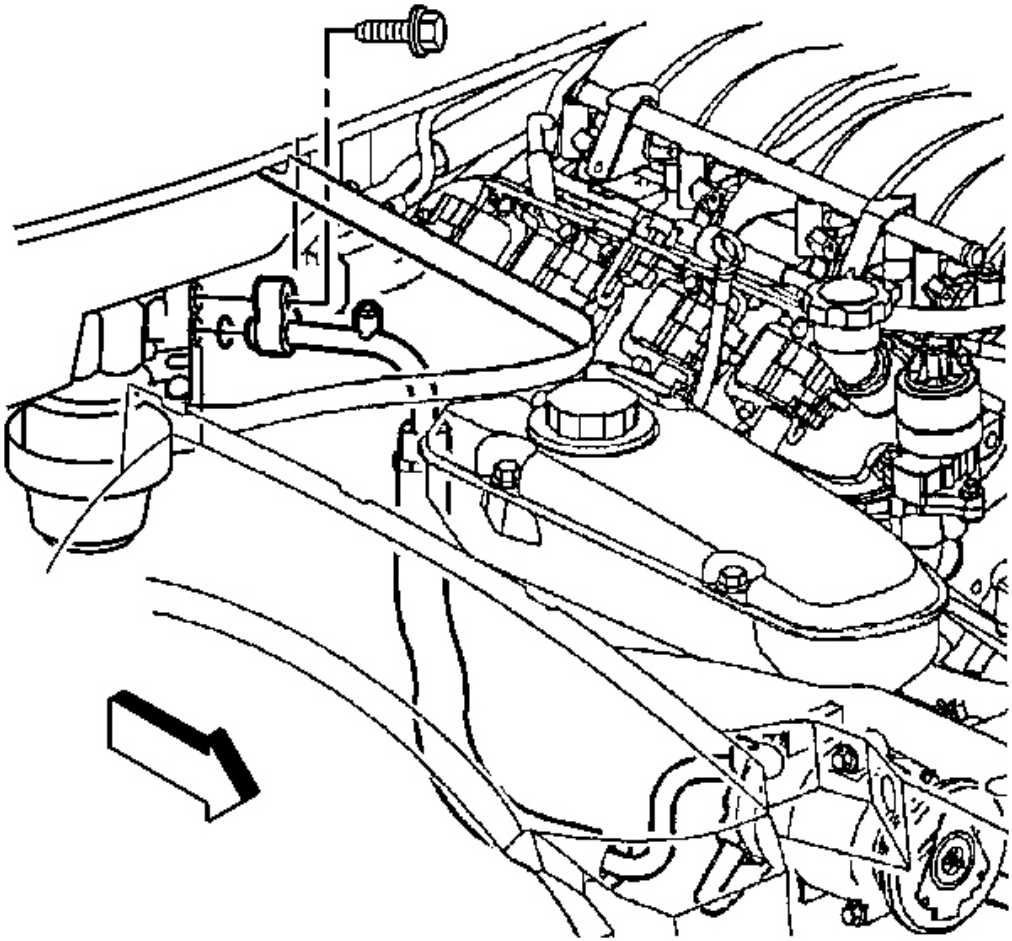

Fig. 136: Accumulator, Retaining Bolt & Compressor Hose Assembly
Courtesy of GENERAL MOTORS CORP.

16. Install the compressor hose to the accumulator.
17. Install the compressor hose to accumulator retaining bolt.

Tighten: Tighten the bolt to 20 N.m (15 lb ft).

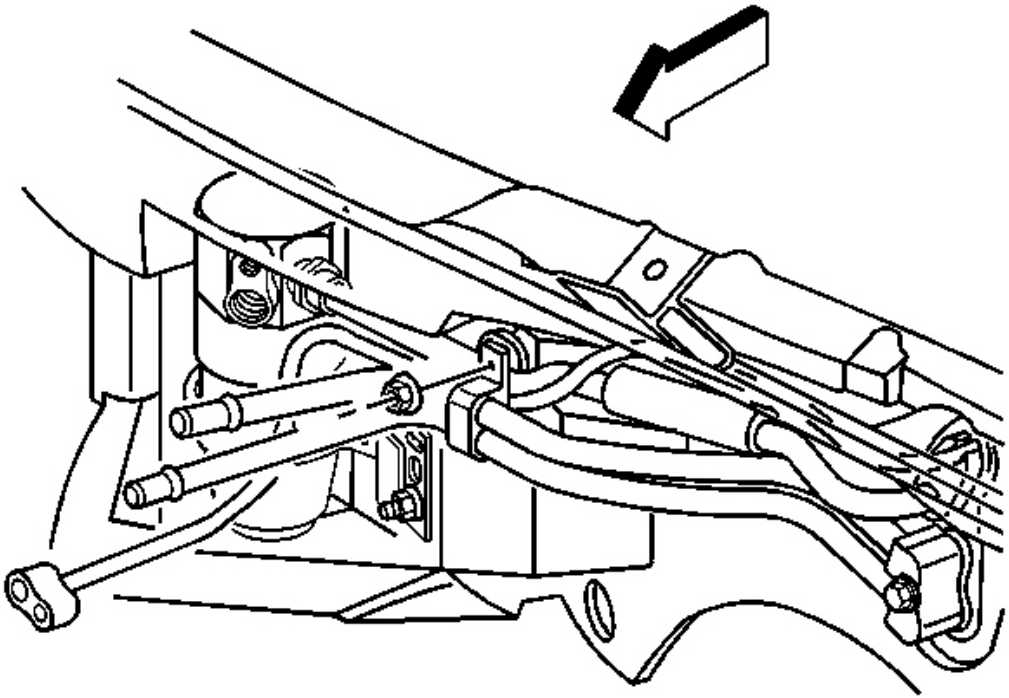

Fig. 137: Heater Pipe Bracket & Cowl
Courtesy of GENERAL MOTORS CORP.

18. Install the heater pipe bracket to the cowl stud.
19. Install the heater pipe bracket retaining nut.

    Tighten: Tighten the nut to 10 N.m (89 lb in).

20. Install the battery heat shield. Refer to **Battery Heat Shield Replacement** in Engine Electrical.
21. Install the battery. Refer to **Battery Replacement** in Engine Electrical.
22. Evacuate and recharge the A/C system. Refer to **Refrigerant Recovery and Recharging** .
23. Leak test the fittings of the component using **J 39400-A** . See **Special Tools and Equipment** .

HVAC MODULE ASSEMBLY REPLACEMENT

Tools Required

J 39400-A Halogen Leak Detector. See **Special Tools and Equipment** .

Removal Procedure

1. Recover the refrigerant from the A/C system. Refer to **Refrigerant Recovery and Recharging** .
2. Remove the battery heat shield. Refer to **Battery Heat Shield Replacement** in Engine Electrical.
3. Remove the intake manifold. Refer to **Intake Manifold Replacement** in Engine Mechanical 5.7-L.
4. Disconnect the hose clamp and hose from the RH air injection check valve. If equipped

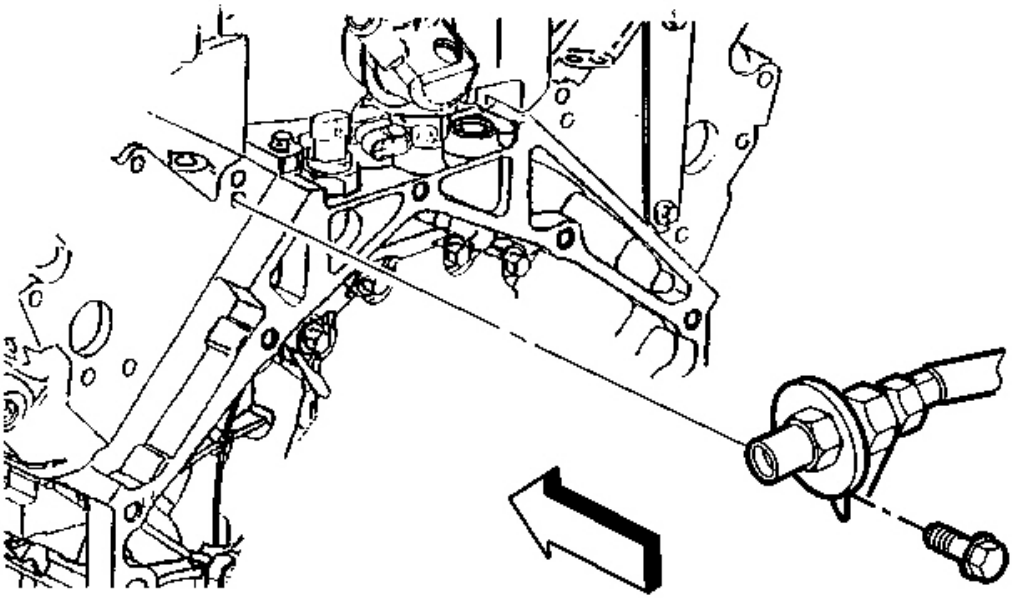

Fig. 138: RH Air Injection Check Valve To RH/LH Cylinder Head & Bolts
Courtesy of GENERAL MOTORS CORP.

5. Remove the RH air injection check valve to LH cylinder head bolt. If equipped
6. Remove the RH air injection check valve to RH cylinder head bolts. If equipped
7. Remove the RH air injection pipe. If equipped

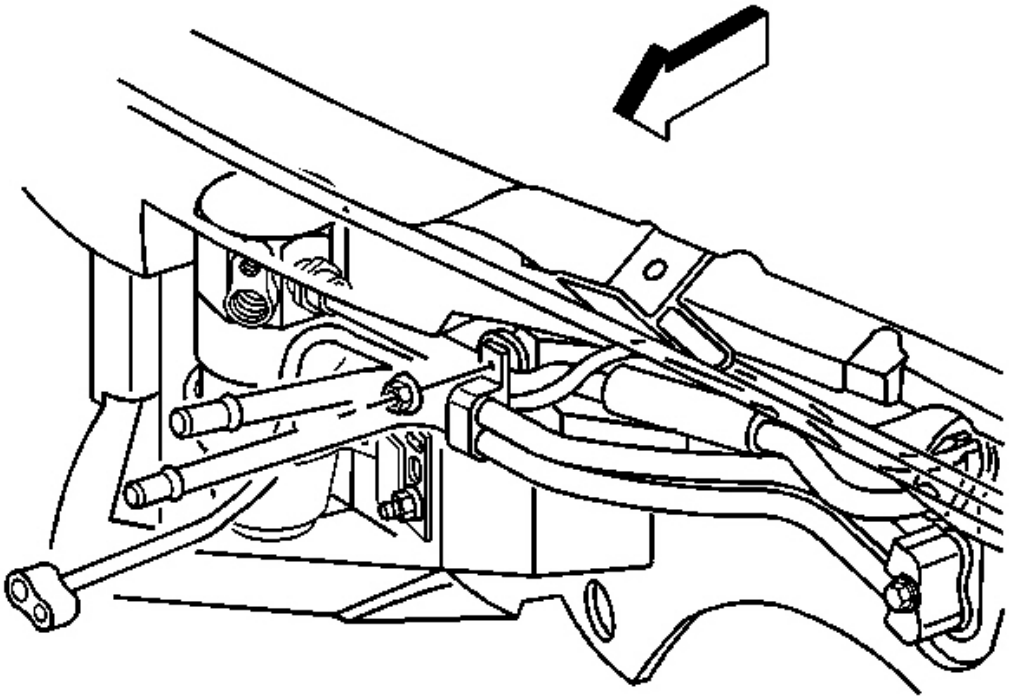

Fig. 139: Heater Pipe Bracket & Cowl
Courtesy of GENERAL MOTORS CORP.

8. Remove the nut retaining the heater pipe bracket to the cowl.
9. Reposition the heater pipe bracket.

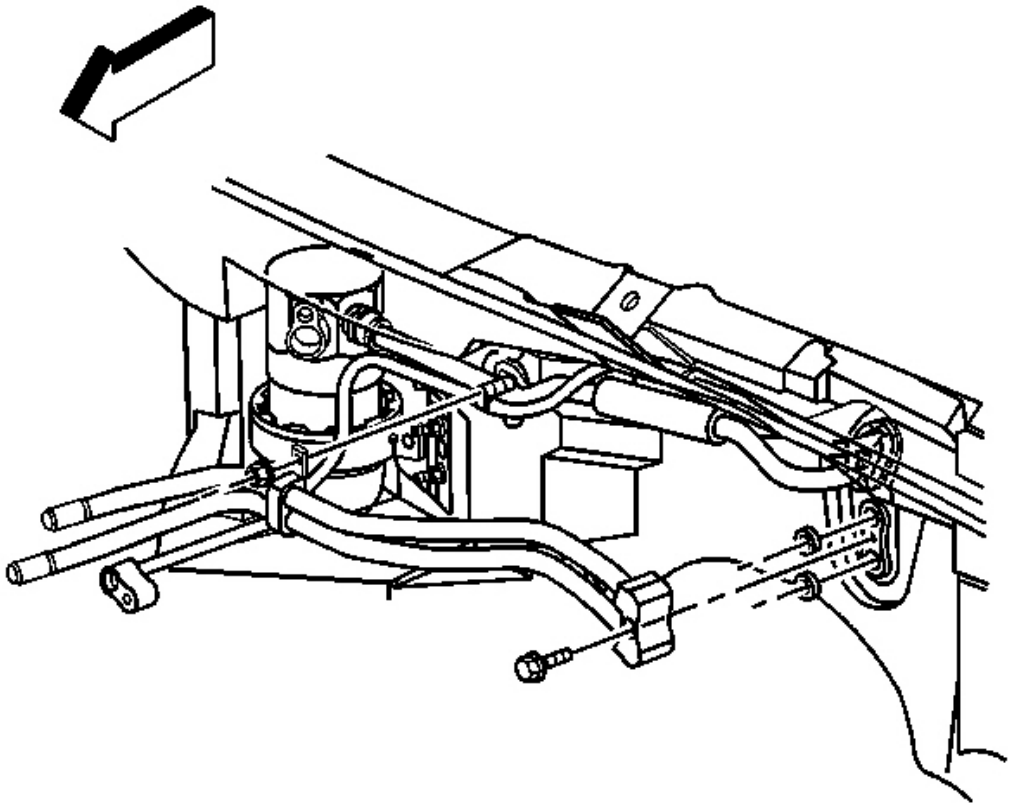

Fig. 140: Heater Core, Retaining Bolt & Heater Pipe
Courtesy of GENERAL MOTORS CORP.

10. Remove the heater pipe to heater core retaining bolt.

IMPORTANT: Cap or plug the open heater pipe assembly and the heater core to prevent system contamination.

11. Disconnect the heater pipe assembly from the heater core.
    - Allow any remaining coolant to drain
    - Remove and discard the sealing washers
    - Cap or plug the heater pipe assembly and the heater core to prevent contamination

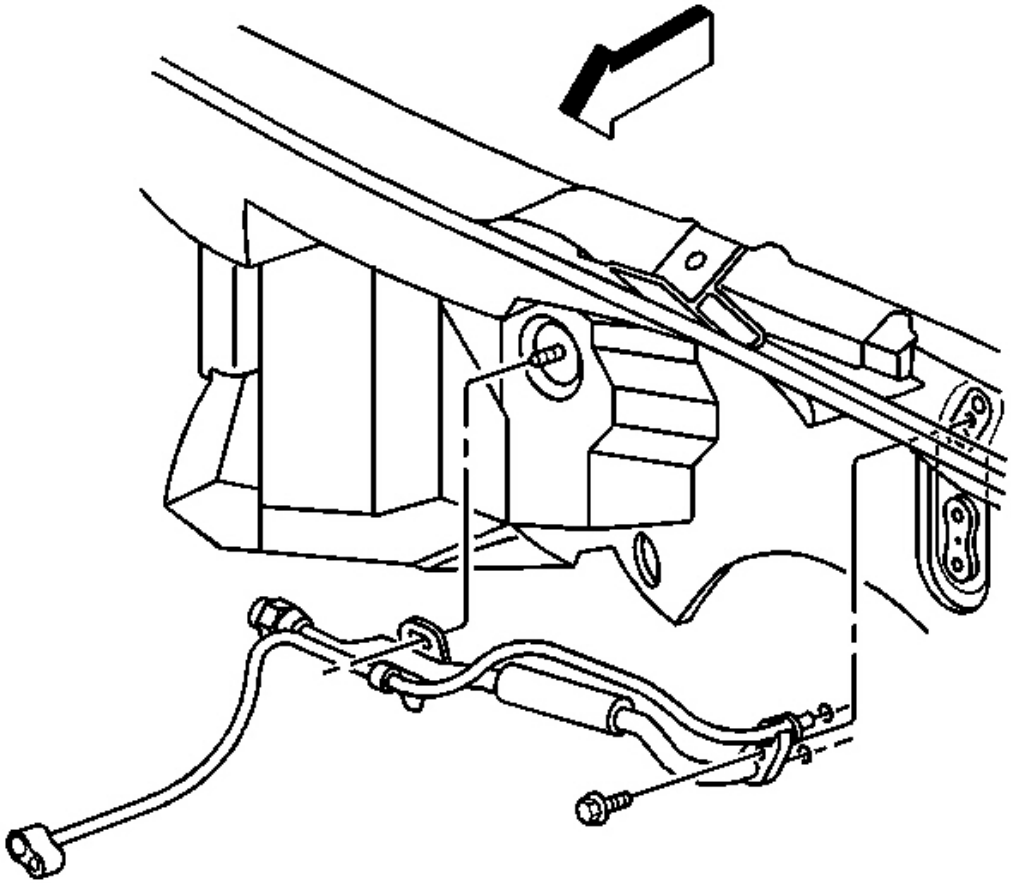

Fig. 141: Accumulator Hose, Evaporator & Bolt
Courtesy of GENERAL MOTORS CORP.

12. Remove the accumulator hose to evaporator retaining bolt.

IMPORTANT: Cap or tape the A/C components immediately to prevent system contamination.

13. Disconnect the accumulator hose and the evaporator tube - rear from the evaporator.
    - Discard the O-ring seals
    - Cap or tape the hose end, the tube end and the evaporator to prevent contamination.

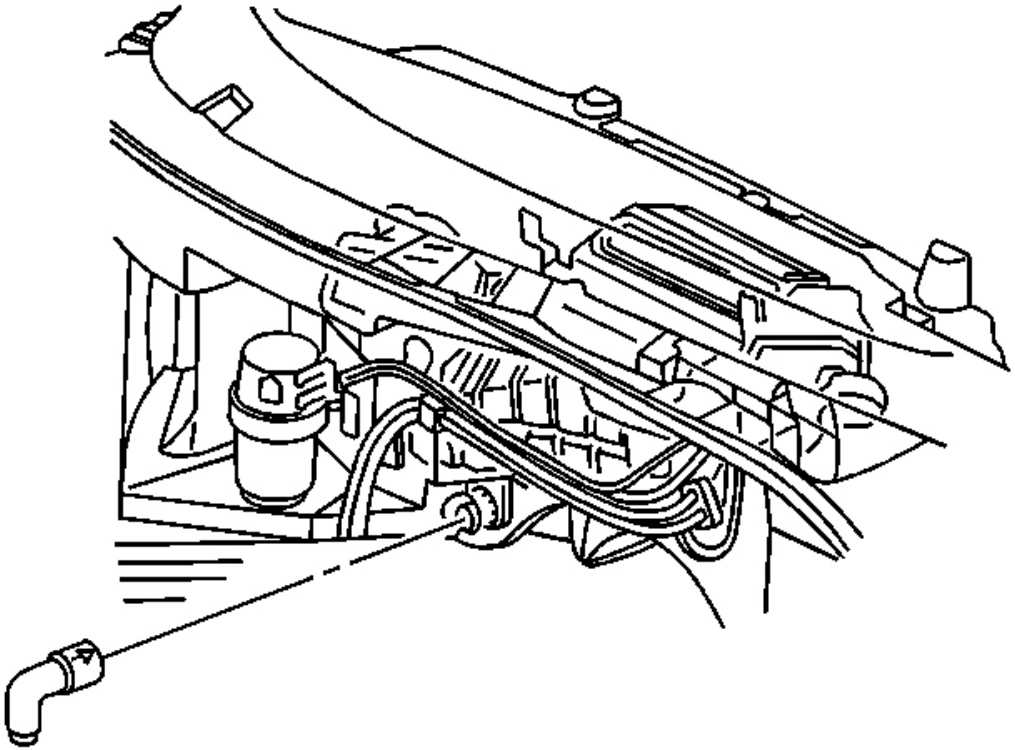

Fig. 142: HVAC Module Drain Tube & I/P Upper Trim Pad
Courtesy of GENERAL MOTORS CORP.

14. Remove the HVAC module drain tube from the HVAC module.
15. Remove the I/P upper trim pad. Refer to **Trim Pad Replacement - Instrument Panel (I/P) Upper** in Instrument Panel, Gages and Console.

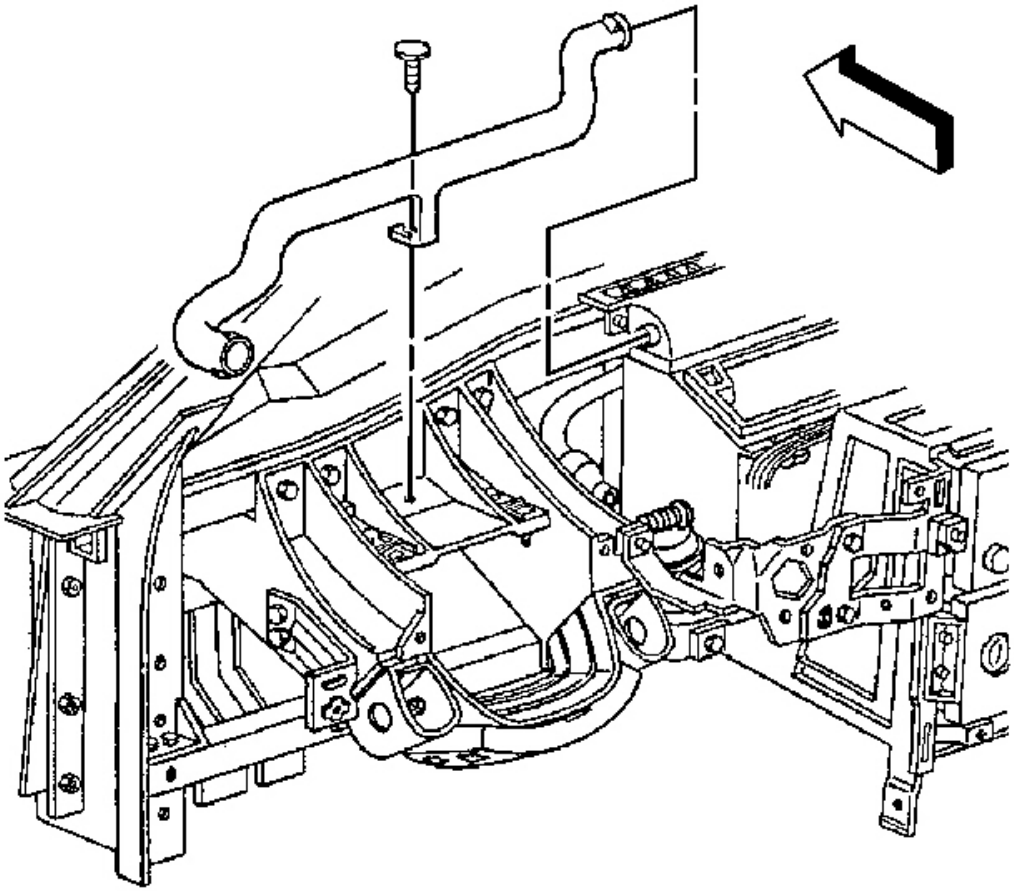

Fig. 143: LH Side Window Defogger & Lower Outlet Duct
Courtesy of GENERAL MOTORS CORP.

16. Remove the LH side window defogger outlet duct - lower.
    1. Remove the push-in retainer.
    2. Use a twisting motion to release the defogger outlet duct - lower from the windshield defroster duct, then from the defogger outlet duct - upper.

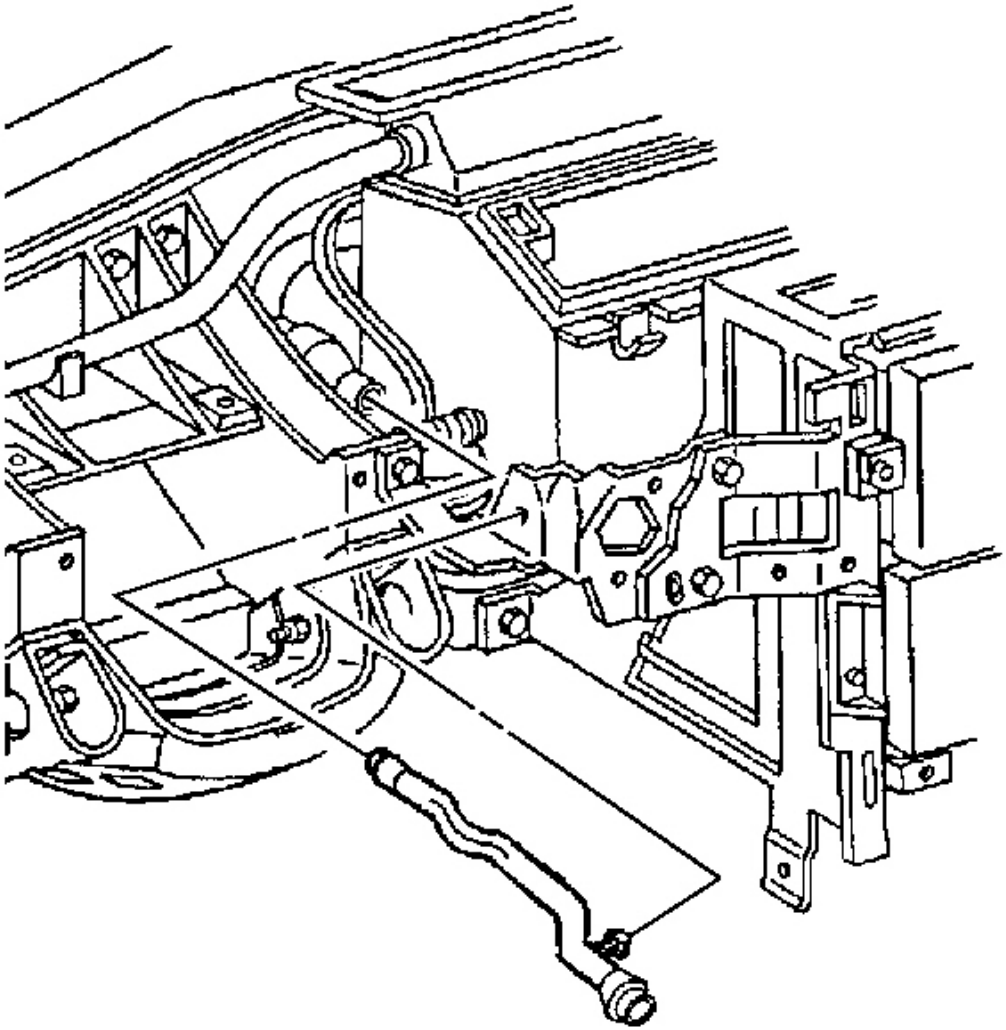

Fig. 144: Inside Air Temperature Sensor Aspirator Duct
Courtesy of GENERAL MOTORS CORP.

17. Remove the inside air temperature sensor aspirator duct.
    1. Depress the duct retaining tab and remove the duct from the ignition switch housing bracket.
    2. Use a twisting motion to release the duct from the duct muffler.

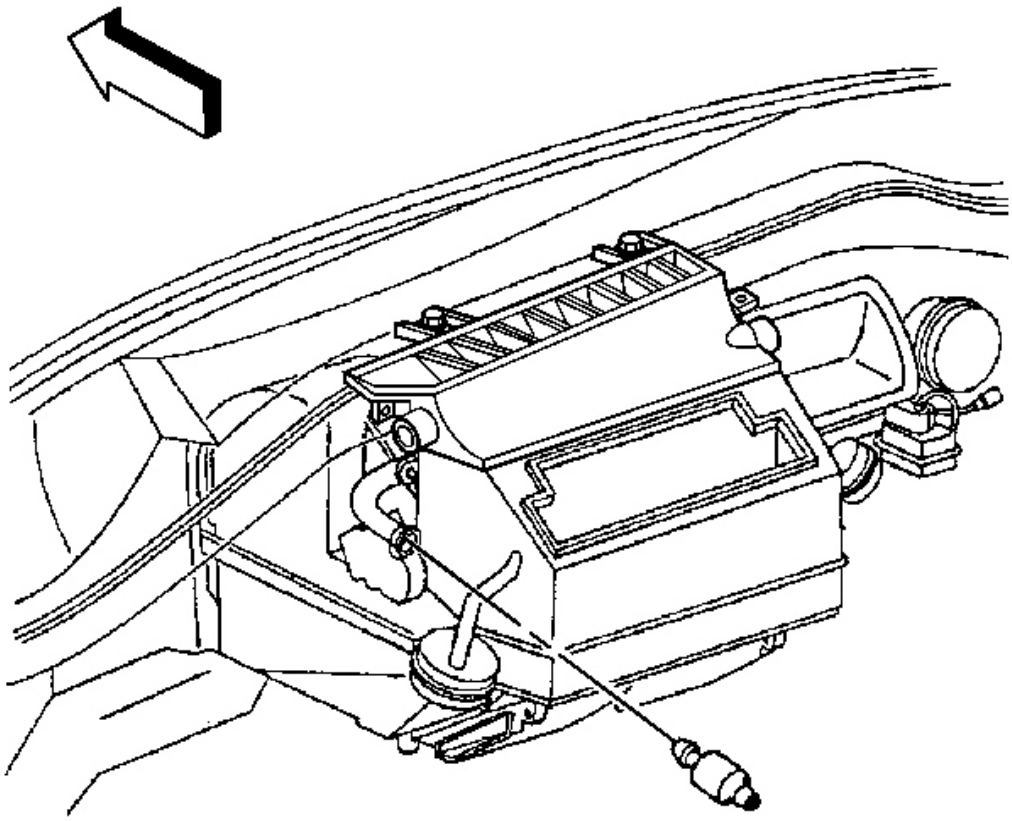

Fig. 145: DRL Sensor Electrical Connector
Courtesy of GENERAL MOTORS CORP.

18. Disconnect the DRL sensor electrical connector, if equipped.

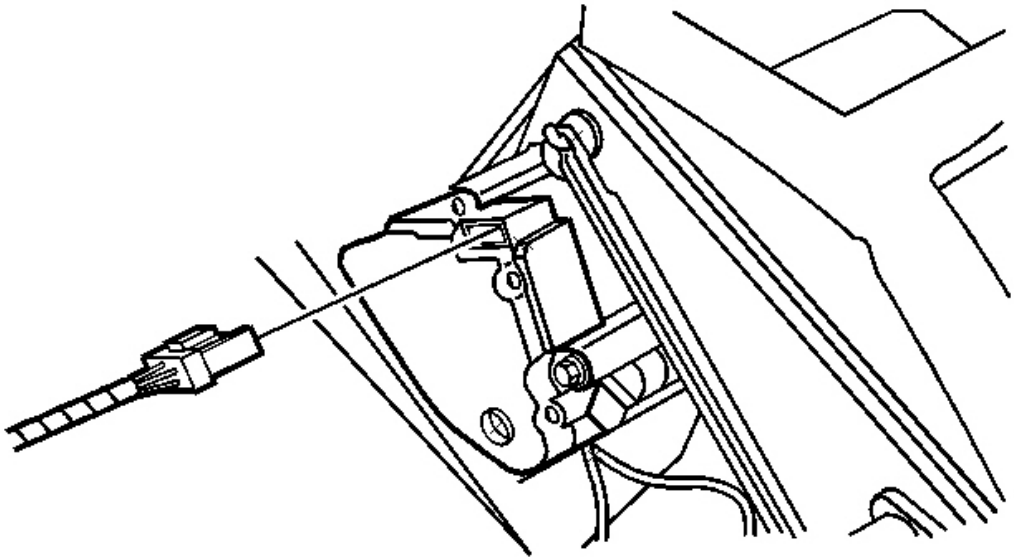

Fig. 146: Electrical Connector & LH Temperature Actuator
Courtesy of GENERAL MOTORS CORP.

19. Disconnect the electrical connector from the LH temperature actuator.

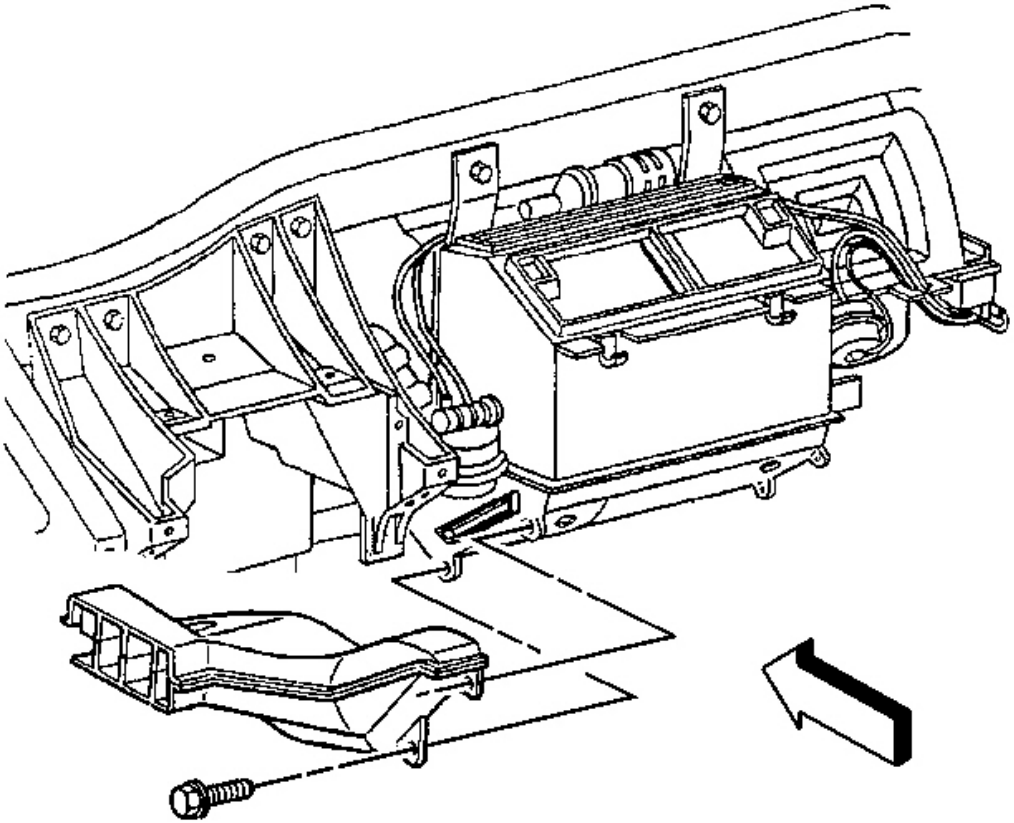

Fig. 147: LH Floor Air Outlet Duct & Retaining Screws
Courtesy of GENERAL MOTORS CORP.

20. Remove the I/P center support bracket and the ignition switch housing bracket. Refer to **Bracket Replacement - Instrument Panel (I/P) Center Support** in Instrument Panel, Gages and Console.
21. Remove the LH floor air outlet duct retaining screws.
22. Remove the LH floor air outlet duct.

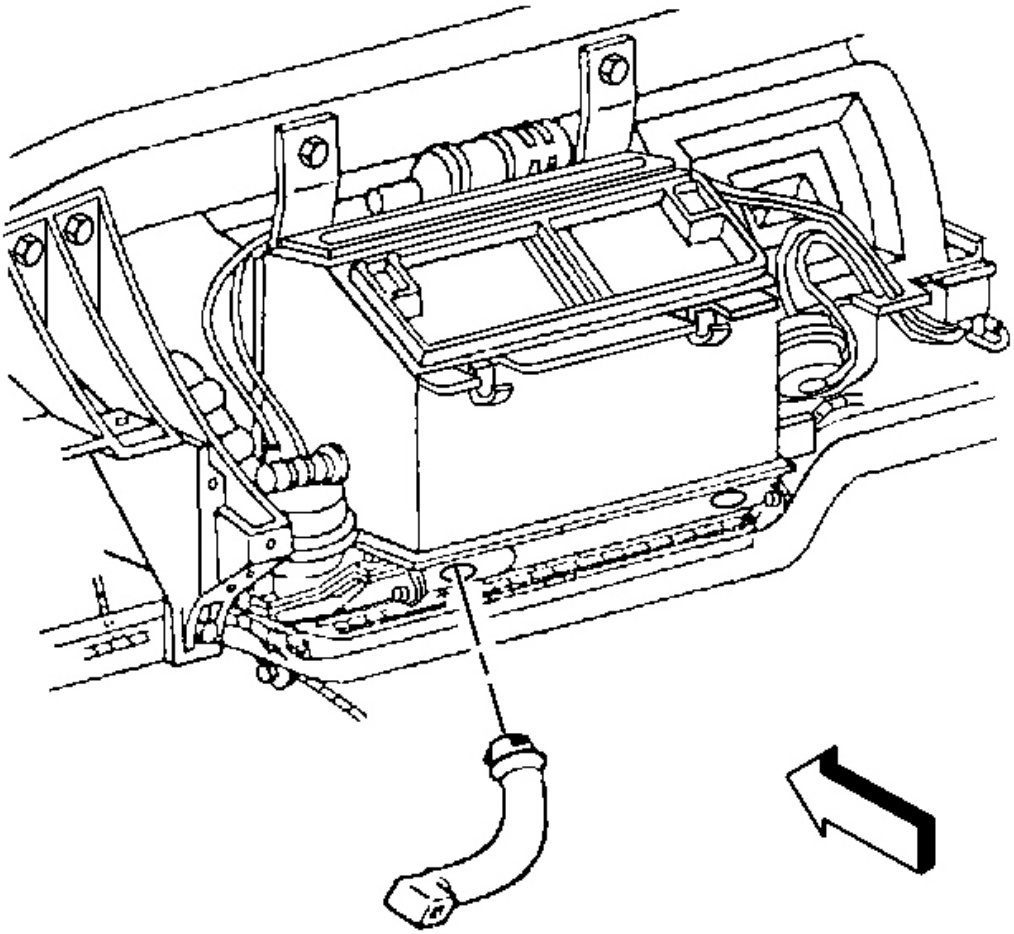

Fig. 148: Rear LH Floor Air Outlet Duct
Courtesy of GENERAL MOTORS CORP.

23. Remove the LH floor air outlet duct - rear.

    Rotate the duct 1/4 turn clockwise to release.

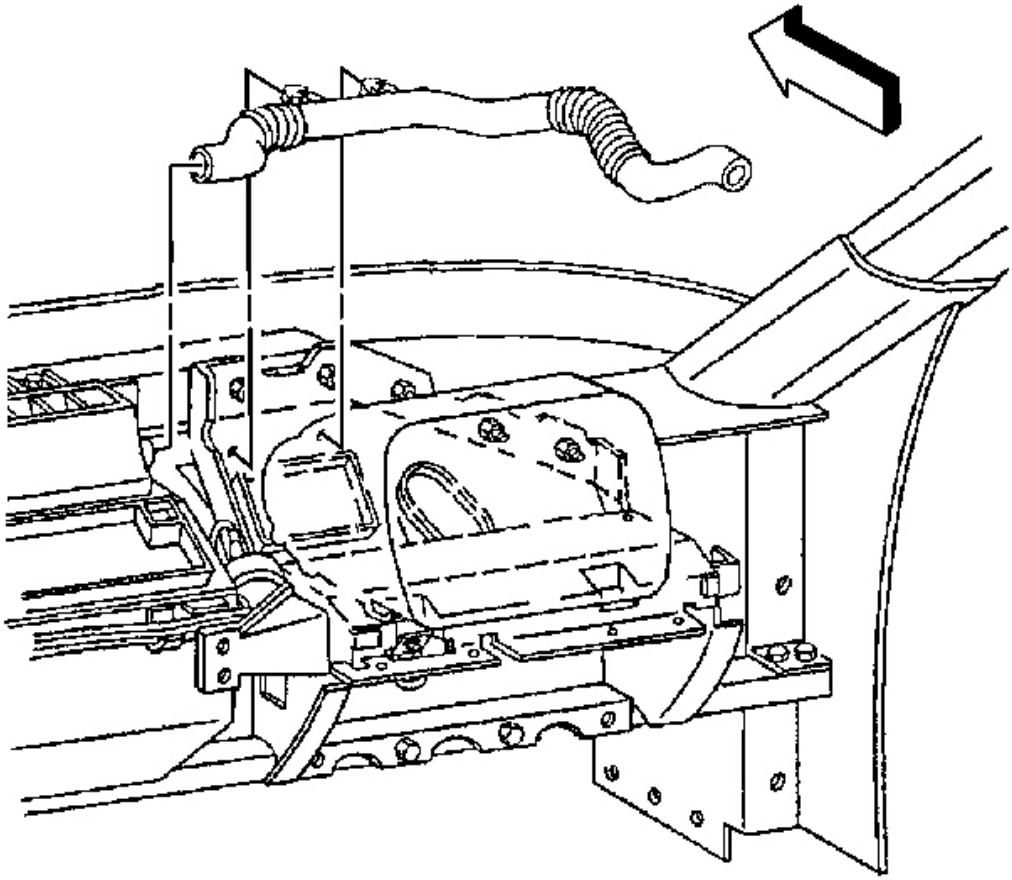

Fig. 149: RH Side Window Defogger & Lower Outlet Duct
Courtesy of GENERAL MOTORS CORP.

24. Remove the RH side window defogger outlet duct - lower.
    1. Depress the defogger outlet duct - lower retaining tabs and release the duct from the passenger SIR bracket.
    2. Use a twisting motion to release the defogger outlet duct - lower from the windshield defroster duct, then from the defogger outlet duct - upper.
25. Remove the passenger SIR bracket and the passenger knee bolster bracket. Refer to **Bracket Replacement - Knee Bolster (Passenger)** or **Bracket Replacement - Knee Bolster (Driver)** or **Bracket Replacement - Knee Bolster (Driver Outer)** in Instrument Panel, Gages and Console.
26. Disconnect the sunload sensor electrical connector.

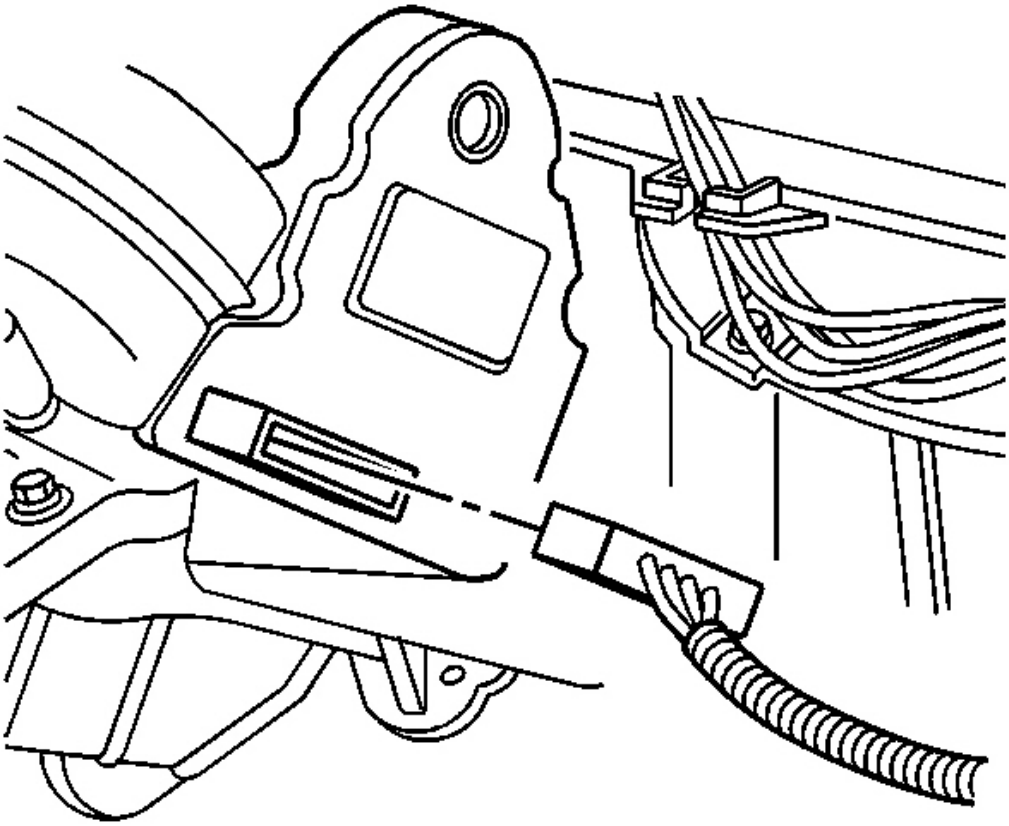

Fig. 150: RH Temperature Actuator & Electrical Connector
Courtesy of GENERAL MOTORS CORP.

27. Disconnect the electrical connector from the RH temperature actuator.

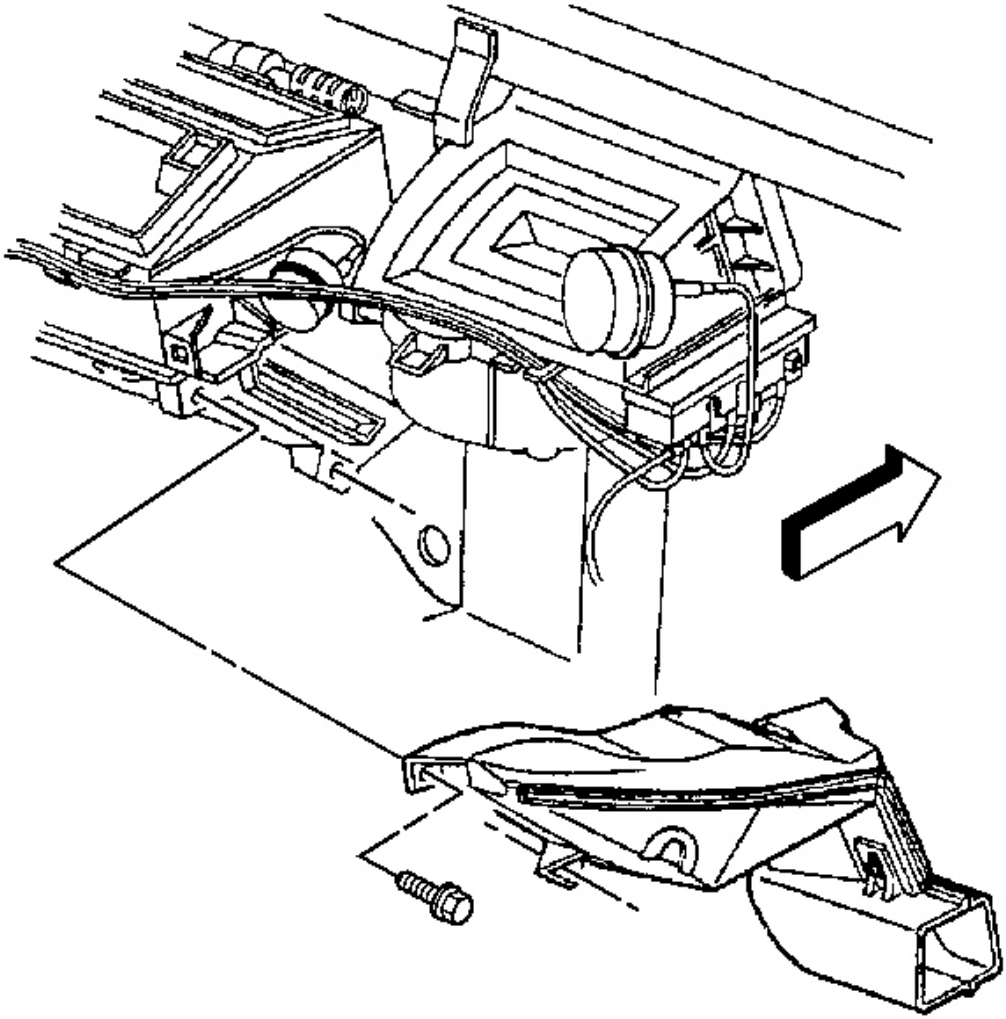

Fig. 151: RH Floor Air Outlet Duct & Screws
Courtesy of GENERAL MOTORS CORP.

28. Remove the RH floor air outlet duct retaining screws.
29. Remove the RH floor air outlet duct.

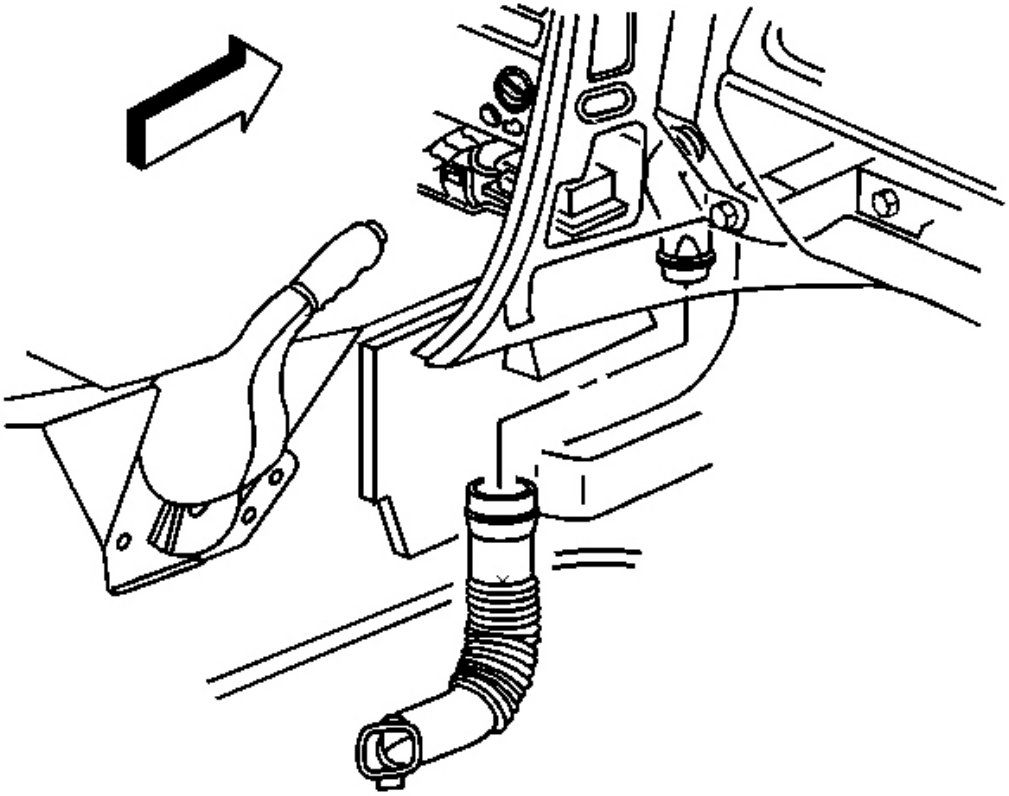

Fig. 152: RH Side Driveline Tunnel & Carpet Air Outlet Duct
Courtesy of GENERAL MOTORS CORP.

30. Reposition the carpet away from the RH side of the driveline tunnel to access the carpet air outlet duct.
31. Use a rotating motion the release the carpet air outlet duct from the floor air outlet duct - rear.

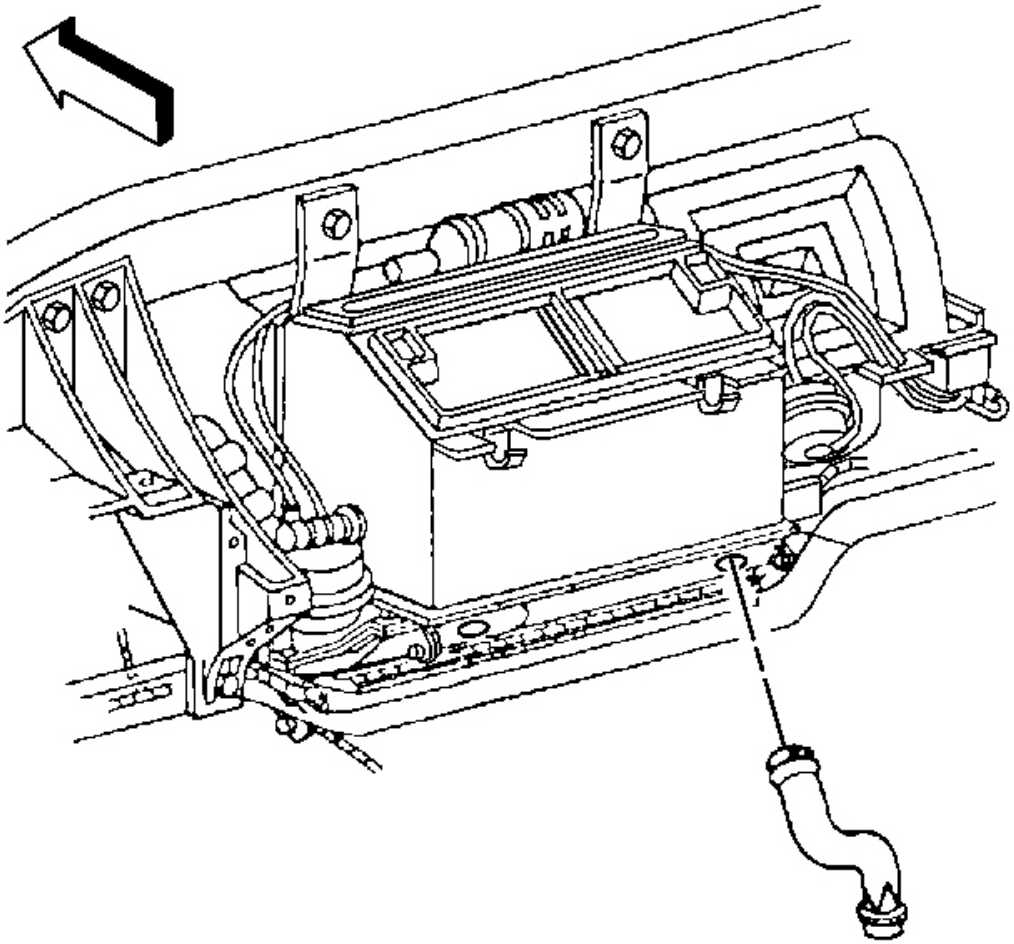

Fig. 153: Rear RH Floor Air Outlet Duct
Courtesy of GENERAL MOTORS CORP.

32. Remove the RH floor air outlet duct - rear.

    Rotate the duct - rear 1/4 turn counterclockwise to release.

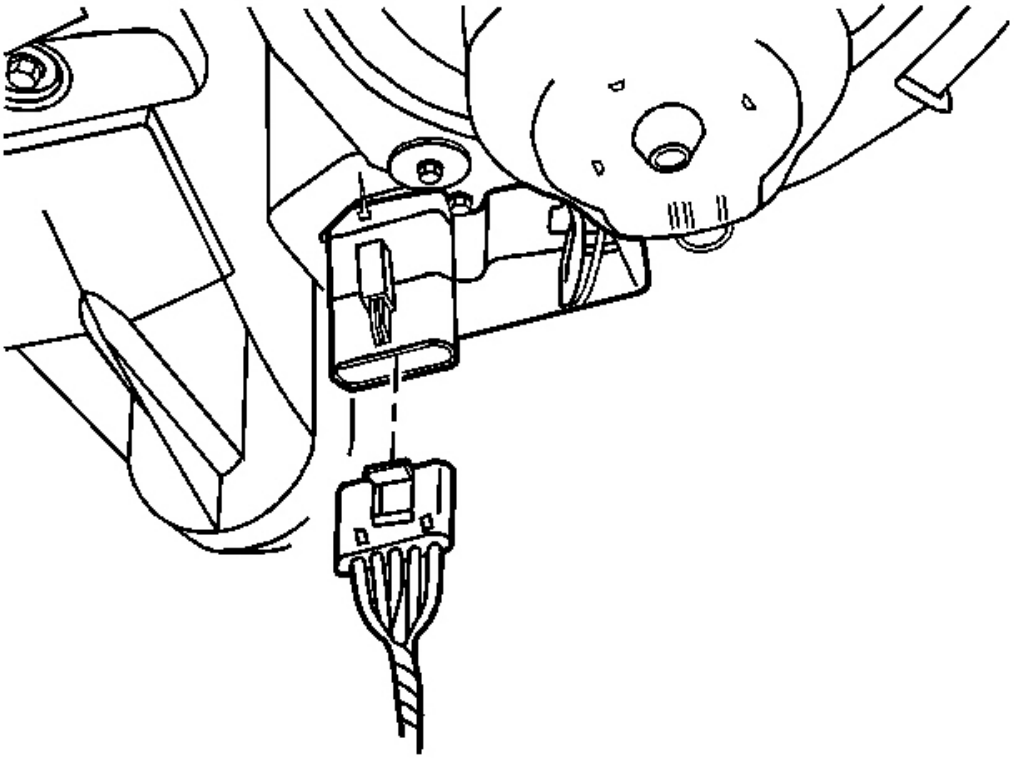

Fig. 154: Blower Motor Control Module & Electrical Connector
Courtesy of GENERAL MOTORS CORP.

33. Disconnect the electrical connector from the blower motor control module.
34. Remove the blower motor. Refer to **Blower Motor Replacement** .

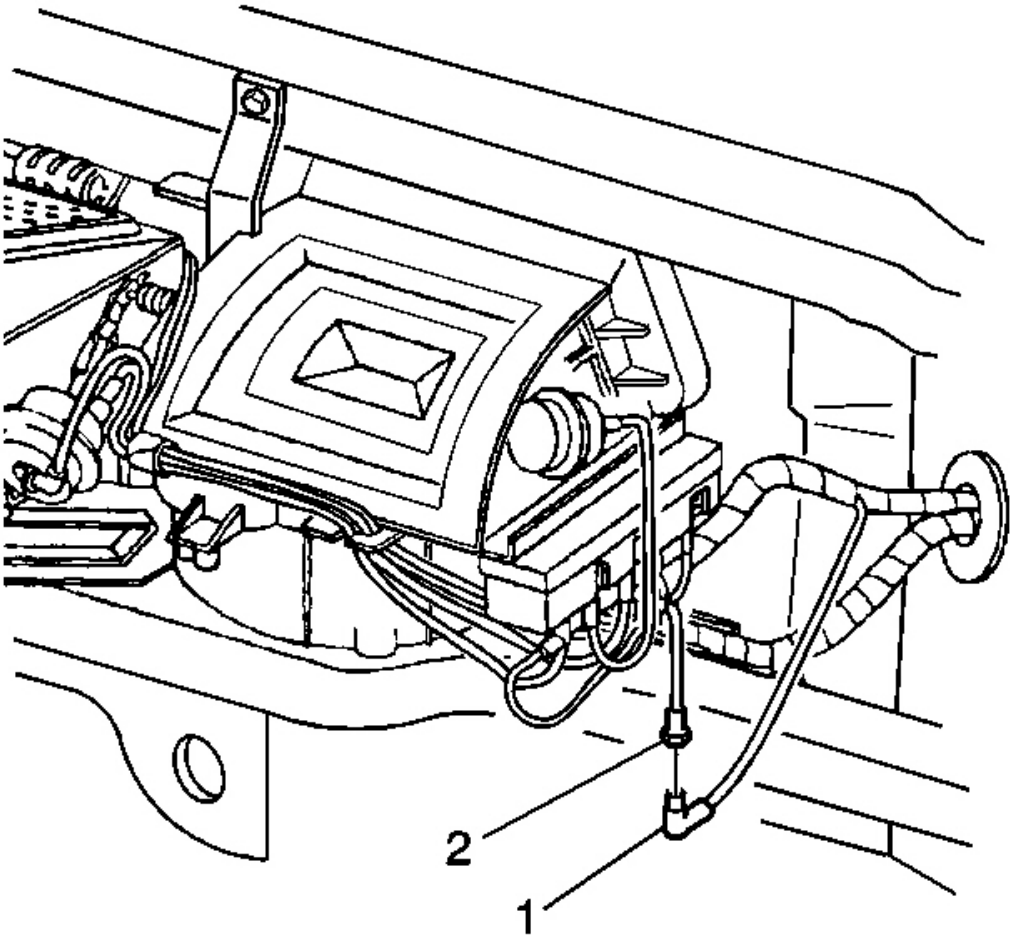

Fig. 155: HVAC Module Vacuum Harness & I/P Harness Vacuum Supply Line
Courtesy of GENERAL MOTORS CORP.

35. Disconnect the I/P harness vacuum supply line (1) from the HVAC module vacuum harness (2).

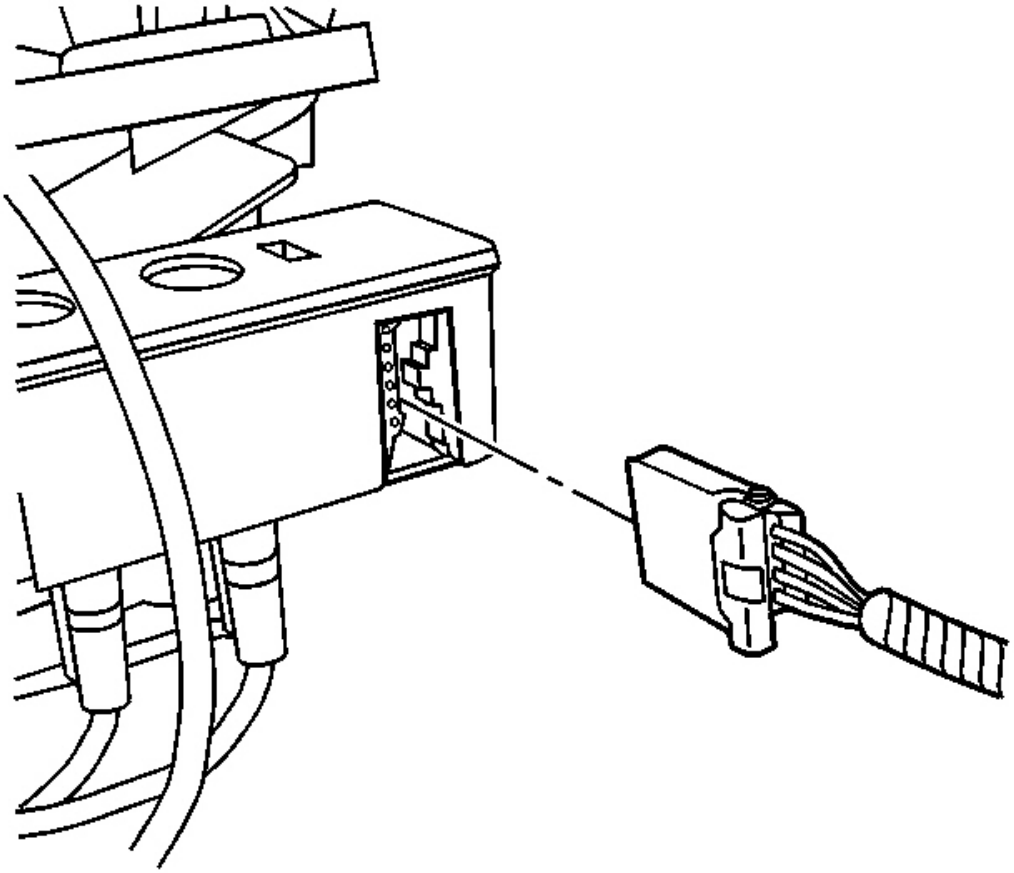

Fig. 156: Vacuum Electric Solenoid & Electrical Connector
Courtesy of GENERAL MOTORS CORP.

36. Disconnect the electrical connector from the vacuum electric solenoid.

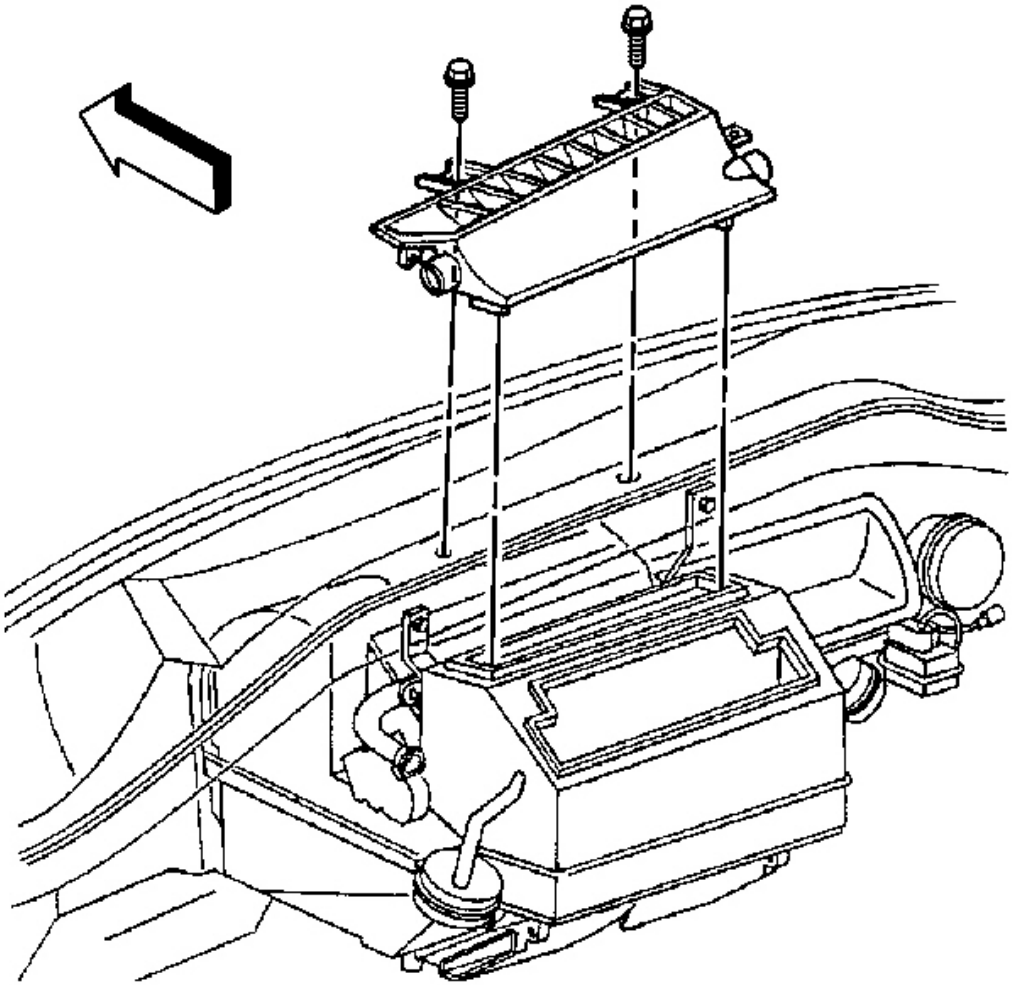

Fig. 157: Windshield Defroster Duct & Screws
Courtesy of GENERAL MOTORS CORP.

37. Remove the windshield defroster duct retaining screws.
38. Remove the windshield defroster duct.

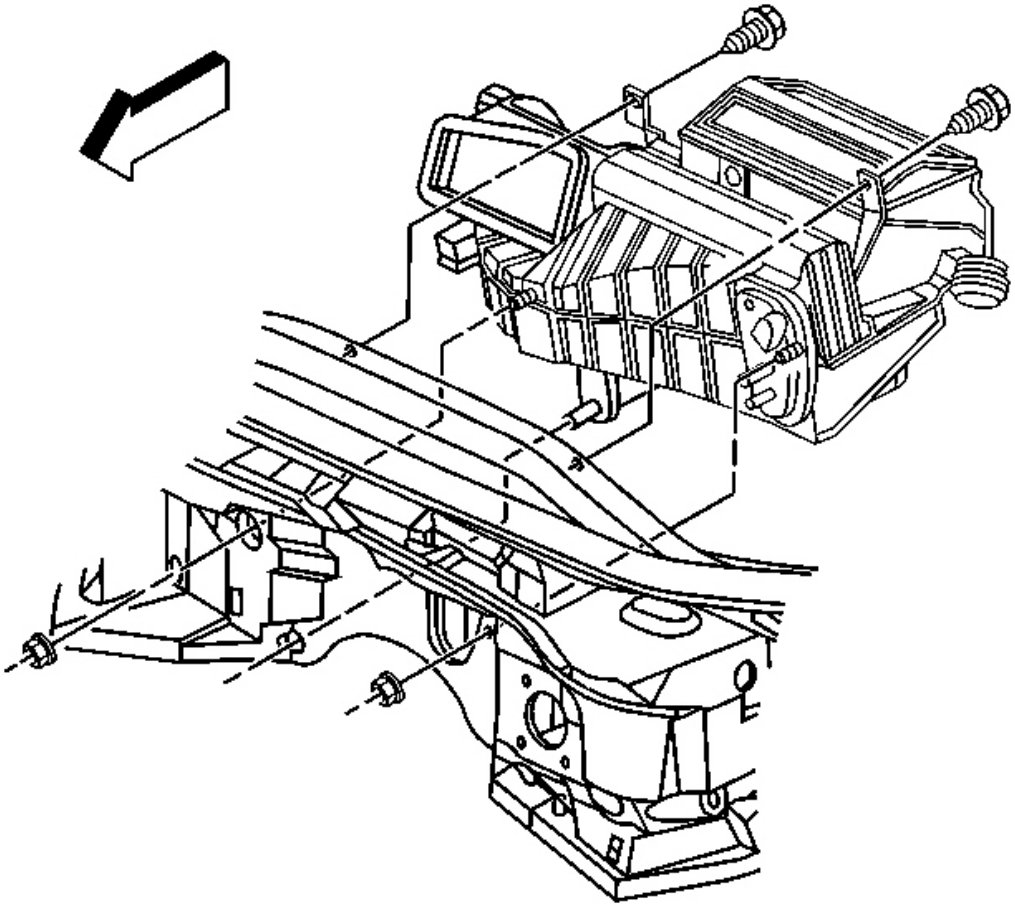

Fig. 158: I/P Upper Support Beam, HVAC Module & Retaining Bolts
Courtesy of GENERAL MOTORS CORP.

39. Remove the HVAC module retaining and sealing nuts from the cowl.

    Reposition the refrigerant lines slightly, if necessary.

40. Remove the HVAC module retaining bolts from the I/P upper support beam.
41. Carefully remove the HVAC module from the vehicle.

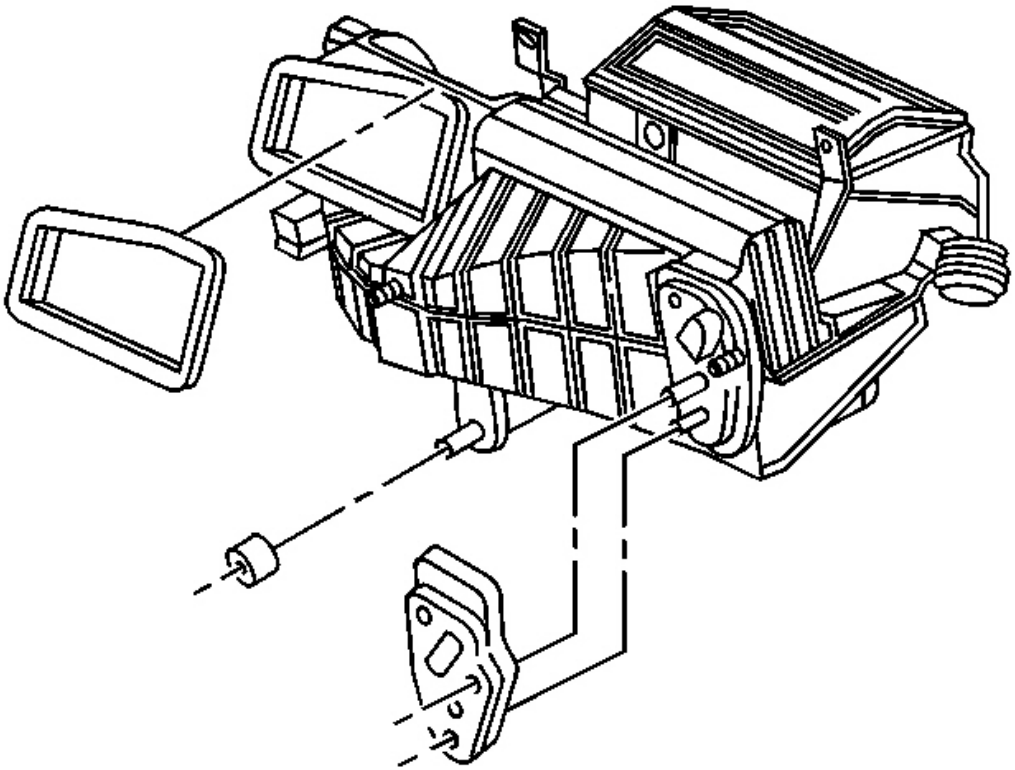

Fig. 159: HVAC Module Air Inlet, Drain & Plumbing Seals
Courtesy of GENERAL MOTORS CORP.

42. Remove and discard the HVAC module air inlet, drain and plumbing seals.

Installation Procedure

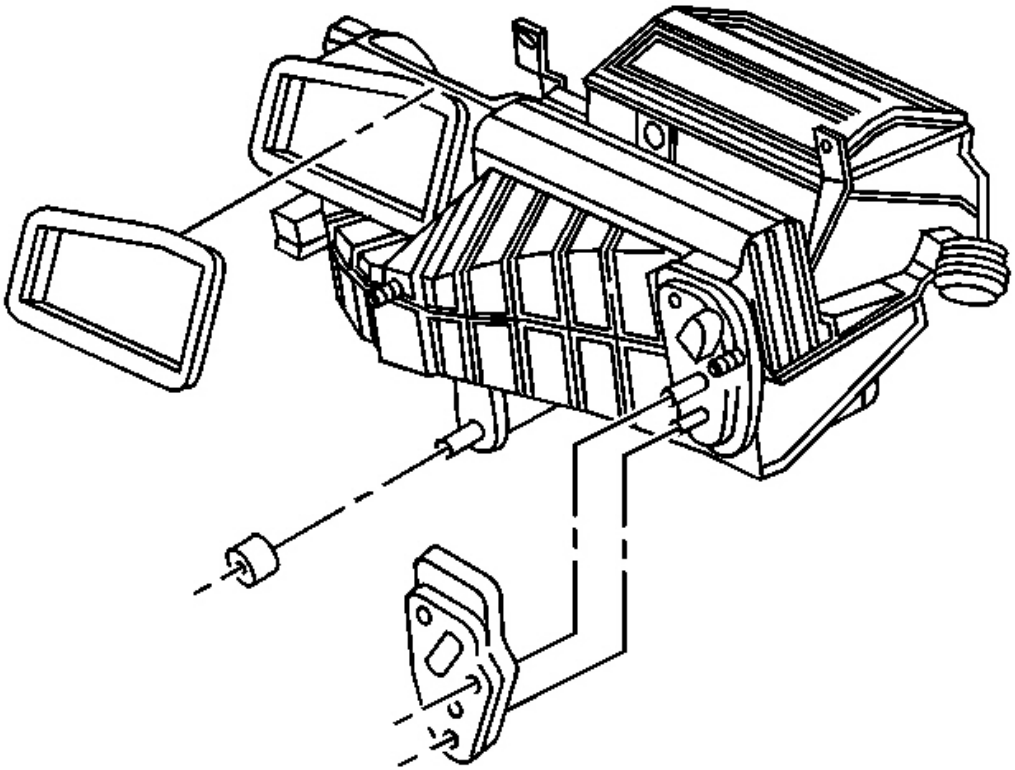

Fig. 160: HVAC Module Air Inlet, Drain & Plumbing Seals
Courtesy of GENERAL MOTORS CORP.

1. Install new air inlet, drain and plumbing seals to the HVAC module.

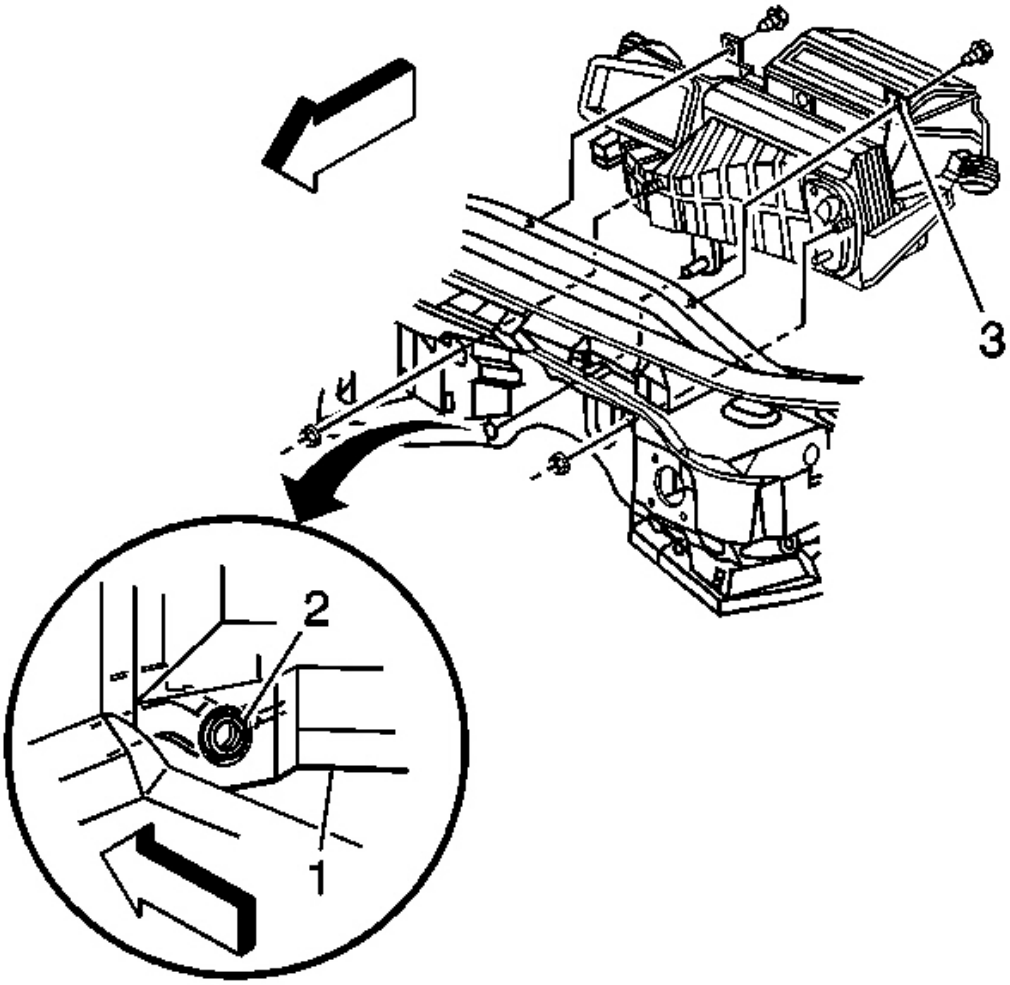

Fig. 161: Dashmat, Module Drain Seal, Hvac Module & LH Retaining Bolt
Courtesy of GENERAL MOTORS CORP.

2. Carefully install the HVAC module to the vehicle in the following SEQUENCE.

IMPORTANT: Ensure that the cut-outs on the dash mat are properly aligned so that the air inlet, drain, and plumbing seals are seated directly against the cowl and not the dashmat.

1. Inspect the dashmat (1) for proper alignment to the cowl. Align if necessary.

   The opening in the dashmat for the HVAC module drain should be aligned so that the drain

opening in the cowl is approximately centered in the dash mat opening; allowing ample room for the module drain seal (2) to fully seat against the cowl.

2. ALIGN the heater core joint fitting, the condenser joint fitting, the HVAC module drain and the HVAC module studs to the corresponding openings on the cowl.
3. INSERT the LH stud into the cowl FIRST, then the module drain, then the RH stud.
4. Install the HVAC module LH retaining bolt to the I/P upper support beam module net locating hole (3).

NOTE: Refer to Fastener Notice in Cautions and Notices.

5. Install the HVAC module RH retaining bolt to the I/P upper support beam.

   Tighten: Tighten the bolts to 10 N.m (89 lb in).

IMPORTANT: To prevent possible water leaks or wind/road noise from entering the vehicle passenger compartment, DO NOT reuse the old HVAC module retaining and sealing nuts.

6. Install the HVAC module new retaining and sealing nuts.
7. Tighten the HVAC module retaining and sealing nuts.

   Tighten: Tighten the nuts to 10 N.m (89 lb in).

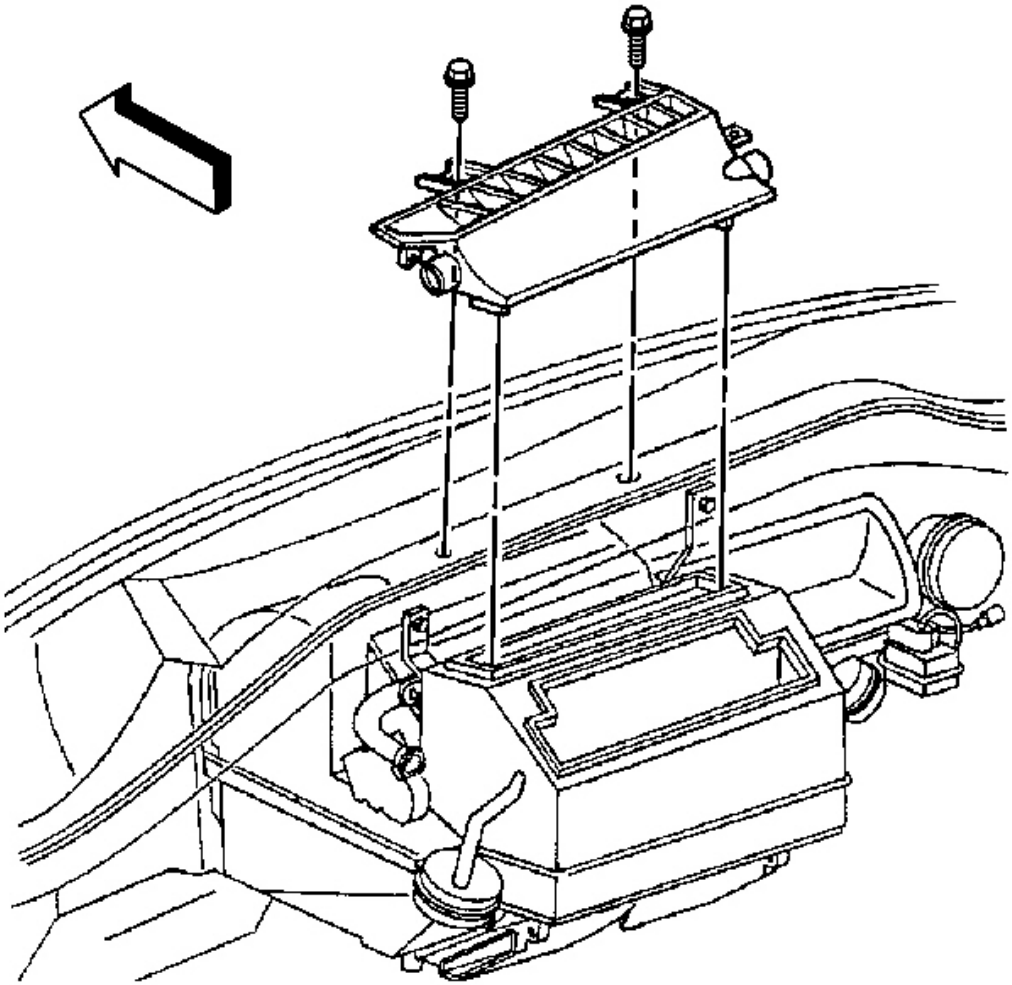

Fig. 162: Windshield Defroster Duct & Screws
Courtesy of GENERAL MOTORS CORP.

3. Install and align the windshield defroster duct to the HVAC module opening and the I/P upper support beam.
4. Install the windshield defroster duct LH retaining screw (net locating hole).
5. Install the windshield defroster duct RH retaining screw.

Tighten: Tighten the screws to 10 N.m (89 lb in).

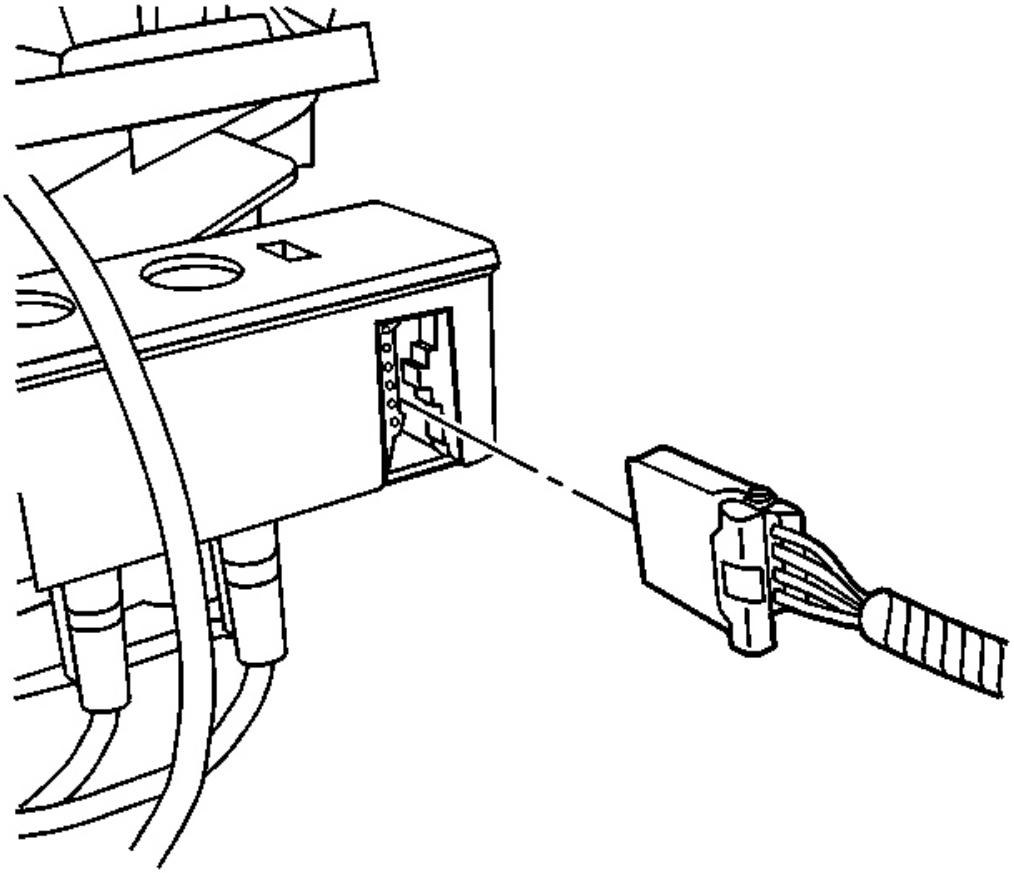

Fig. 163: Vacuum Electric Solenoid & Electrical Connector
Courtesy of GENERAL MOTORS CORP.

6. Connect the electrical connector to the vacuum electric solenoid.

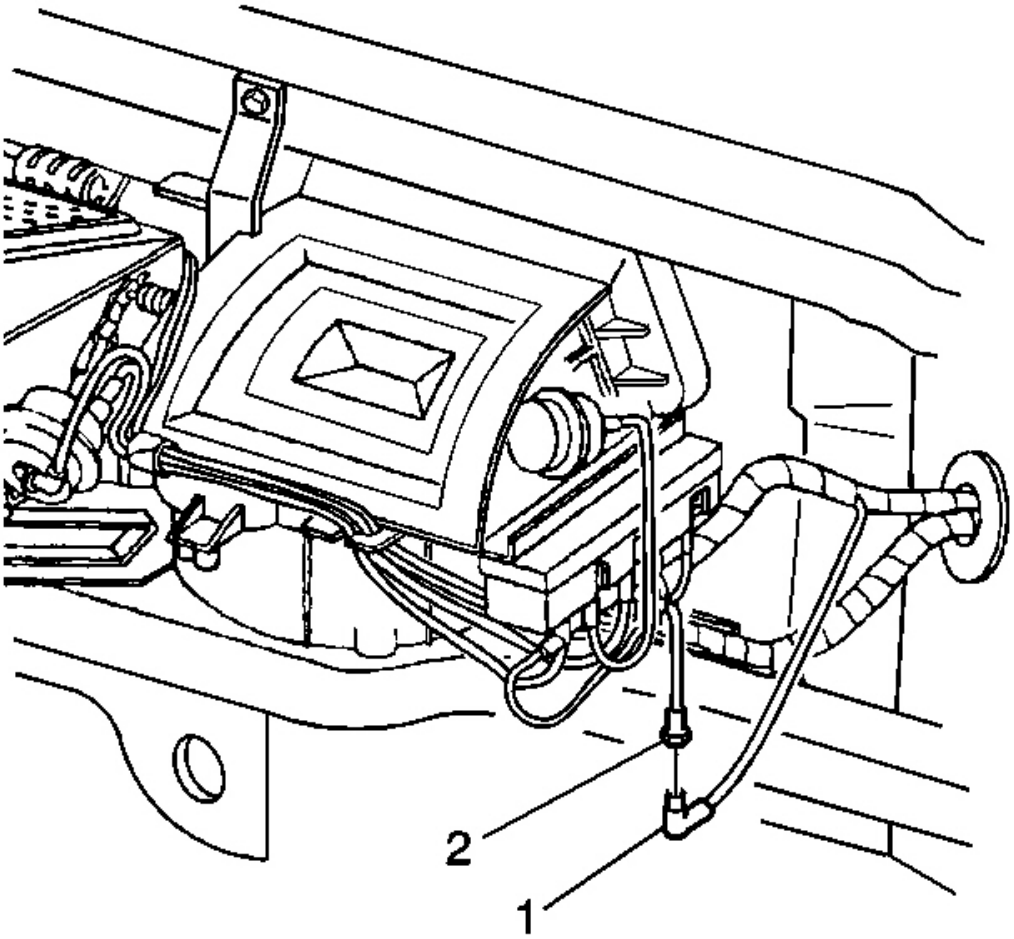

Fig. 164: HVAC Module Vacuum Harness & I/P Harness Vacuum Supply Line
Courtesy of GENERAL MOTORS CORP.

7. Connect the I/P harness vacuum supply line (1) to the HVAC module vacuum harness (2).

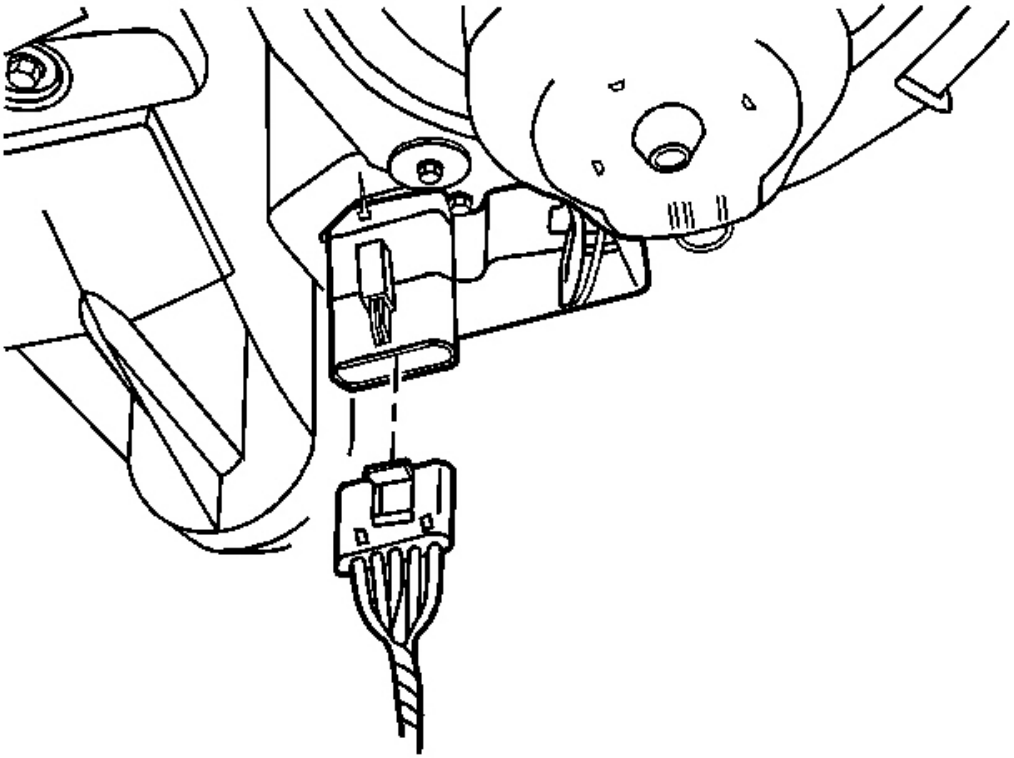

Fig. 165: Blower Motor Control Module & Electrical Connector
Courtesy of GENERAL MOTORS CORP.

8. Install the blower motor. Refer to **Blower Motor Replacement** .
9. Connect the electrical connector to the blower motor control module.

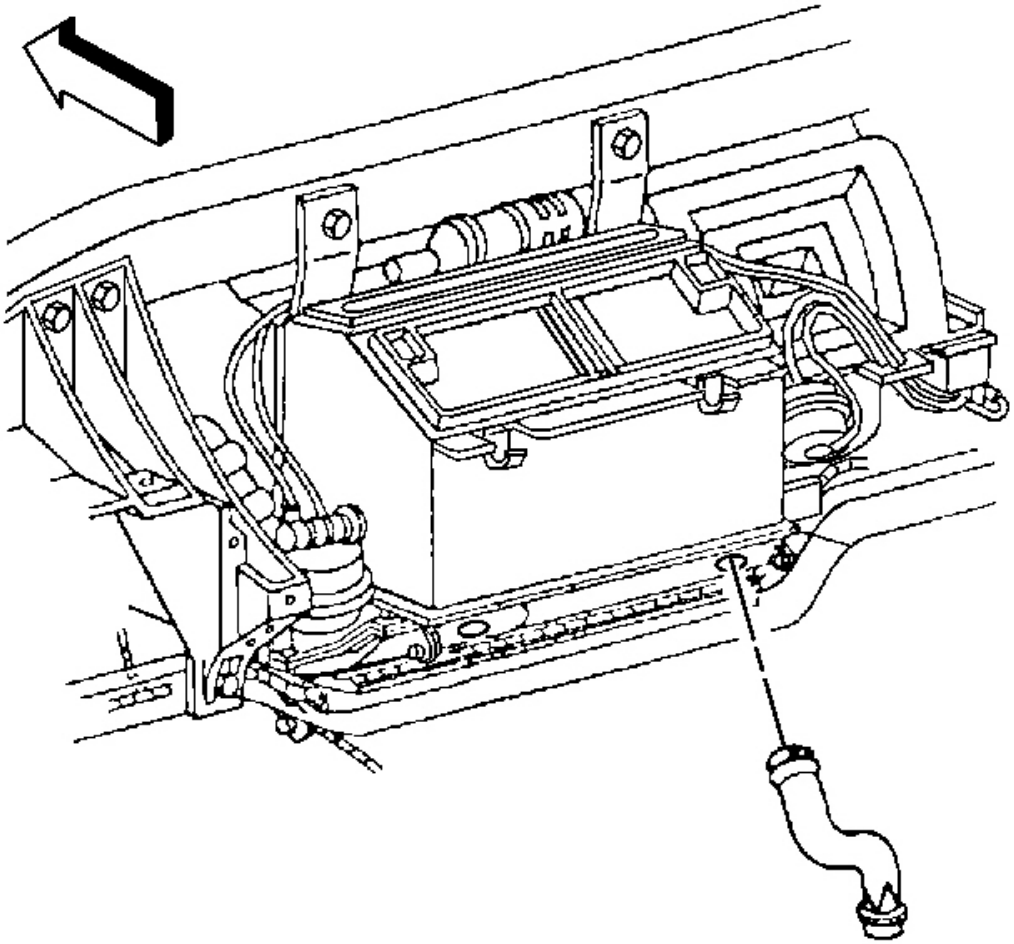

Fig. 166: Rear RH Floor Air Outlet Duct
Courtesy of GENERAL MOTORS CORP.

10. Position and align the RH floor air outlet duct - rear to the HVAC module, then push firmly and evenly to secure the duct.

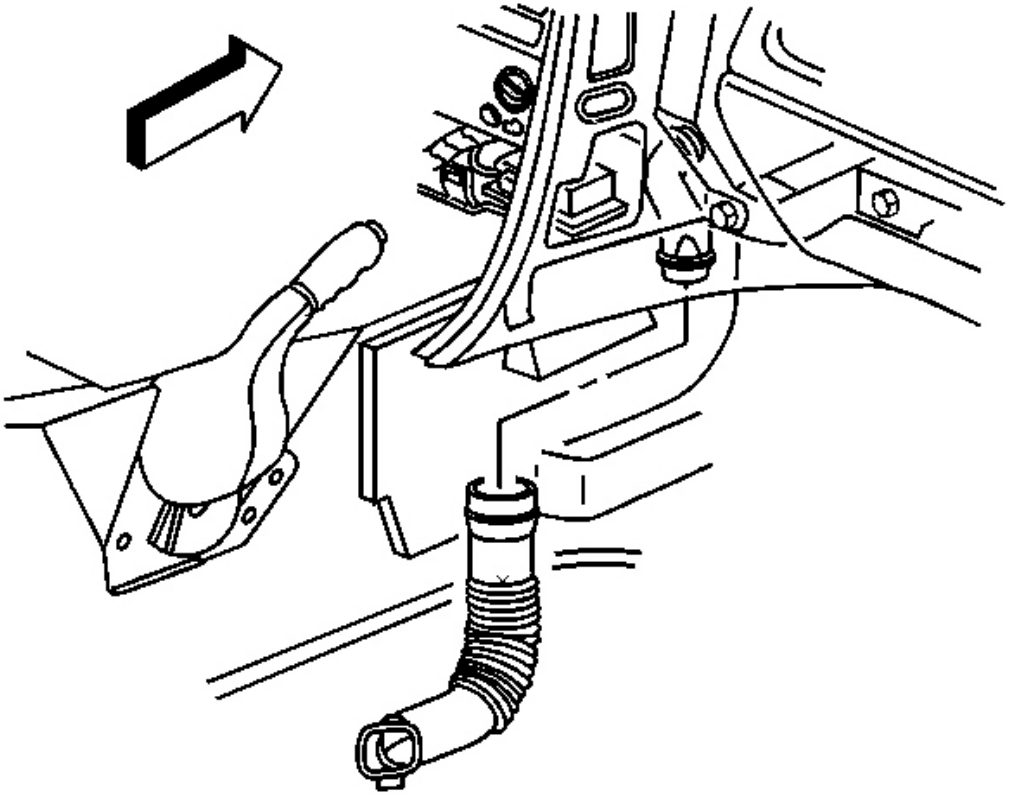

Fig. 167: RH Side Driveline Tunnel & Carpet Air Outlet Duct
Courtesy of GENERAL MOTORS CORP.

11. Secure the carpet air outlet duct to the RH floor air outlet duct - rear.

    Use a rotating motion to secure the carpet air outlet duct to the floor air outlet duct - rear.

12. Position the front floor carpet to the RH side of the driveline tunnel.

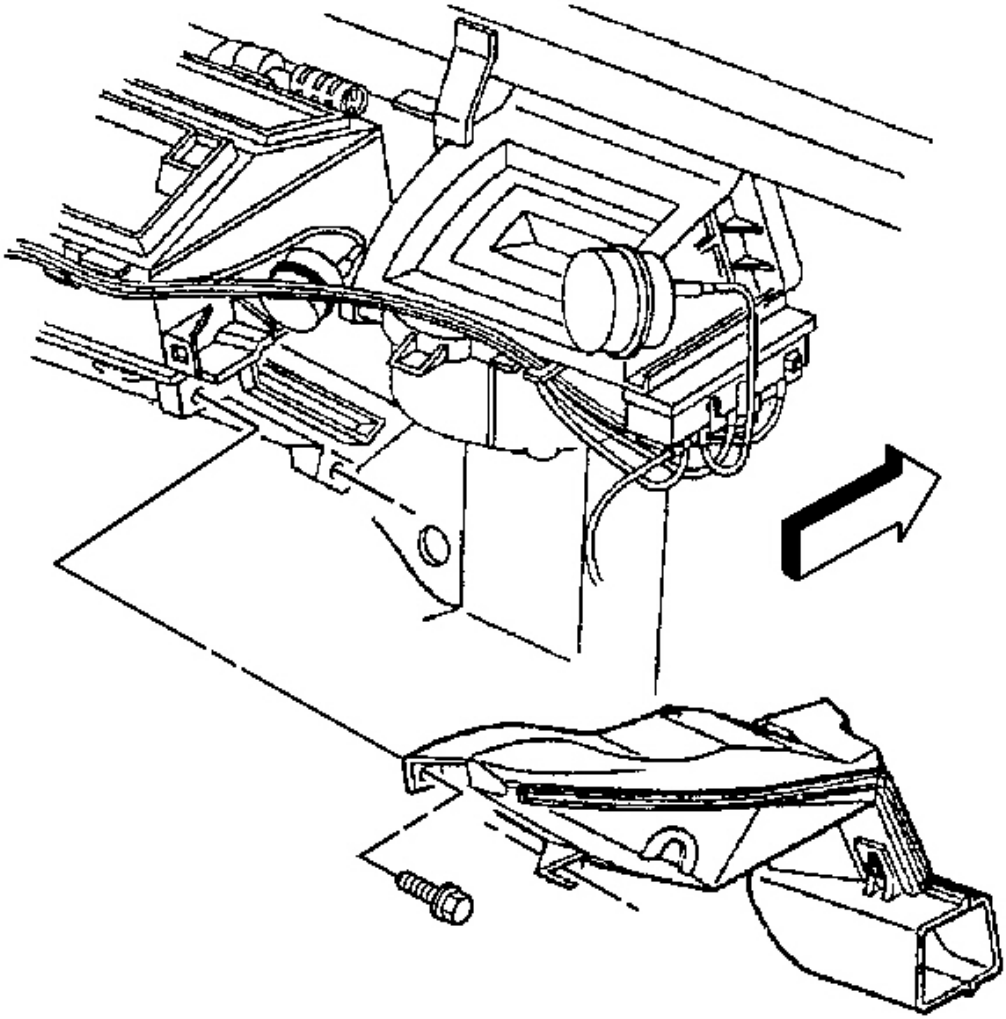

Fig. 168: RH Floor Air Outlet Duct & Screws
Courtesy of GENERAL MOTORS CORP.

13. Install the RH floor air outlet duct to the HVAC module.
14. Install the RH floor air outlet duct retaining screws.

Tighten: Tighten the screws to 1.6 N.m (14 lb in).

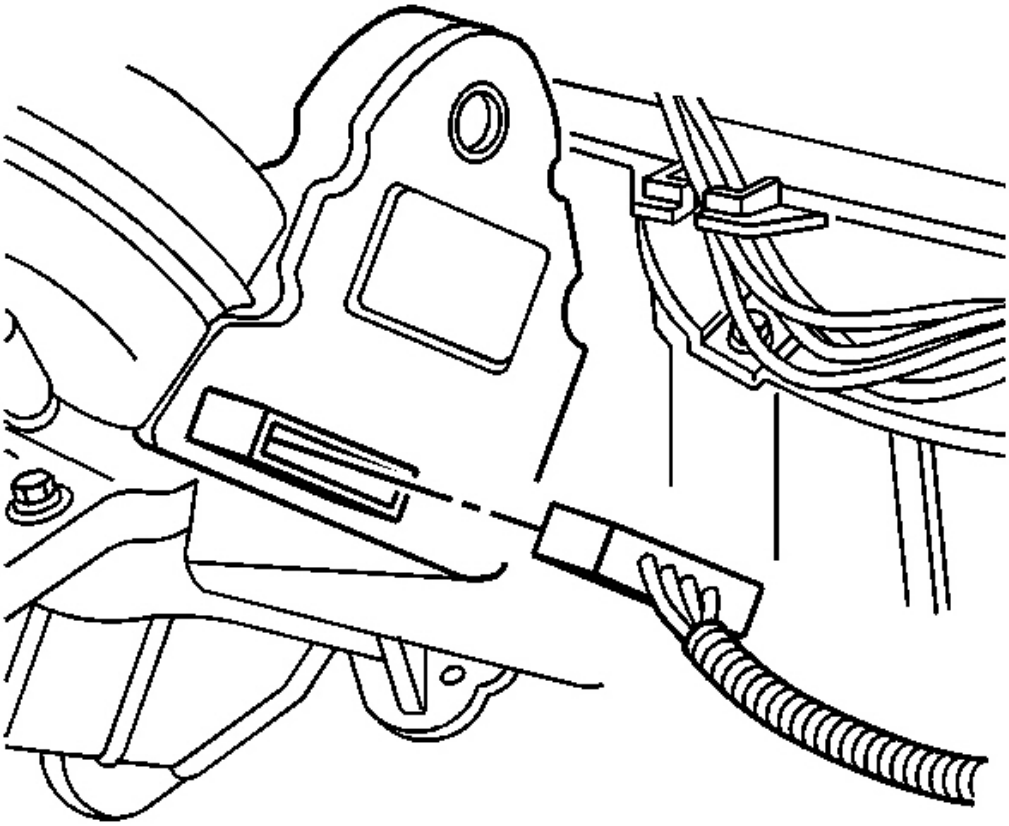

Fig. 169: RH Temperature Actuator & Electrical Connector
Courtesy of GENERAL MOTORS CORP.

15. Connect the electrical connector to the RH temperature actuator.
16. Connect the sunload sensor electrical connector.

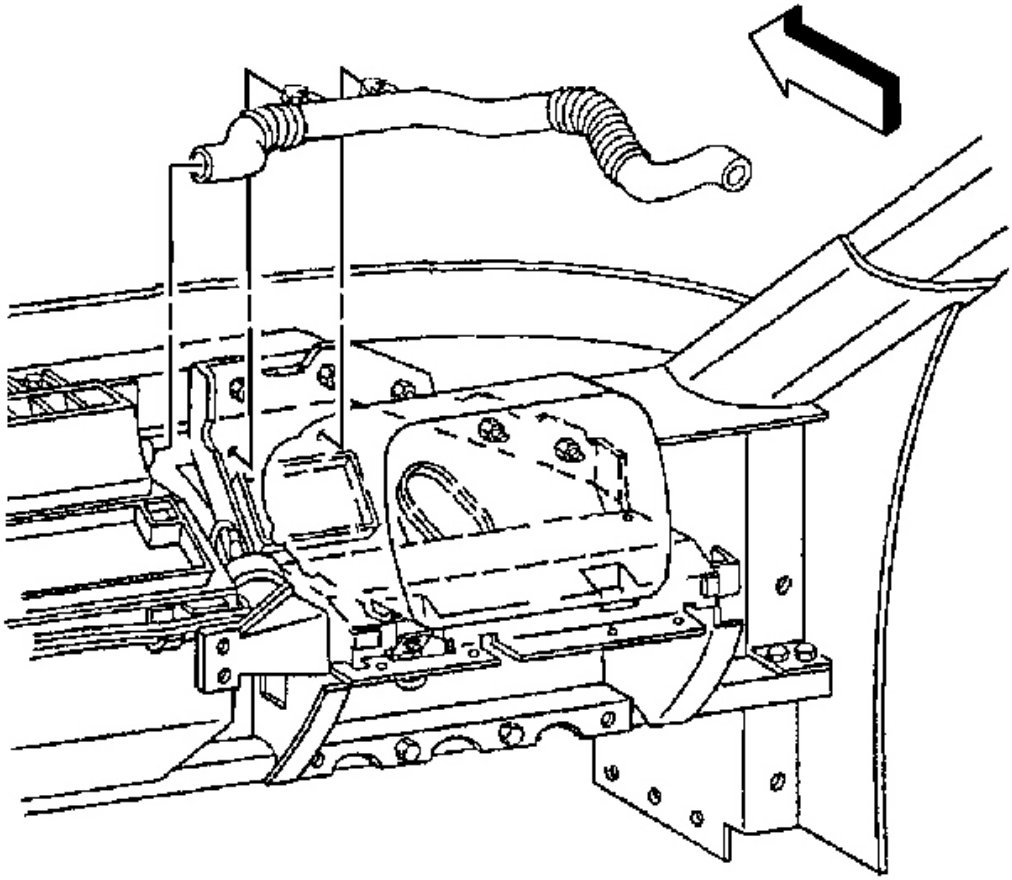

Fig. 170: RH Side Window Defogger & Lower Outlet Duct
Courtesy of GENERAL MOTORS CORP.

17. Install the passenger SIR bracket and the passenger knee bolster bracket. Refer to **Bracket Replacement - Knee Bolster (Passenger)** or **Bracket Replacement - Knee Bolster (Driver)** or **Bracket Replacement - Knee Bolster (Driver Outer)** in Instrument Panel, Gages and Console.
18. Install the RH side window defogger outlet duct - lower.
    1. Use a twisting motion to secure the defogger outlet duct - lower to the defogger outlet duct - upper, then to the windshield defroster duct.
    2. Install the defogger outlet duct - lower retaining tabs to the passenger SIR bracket.

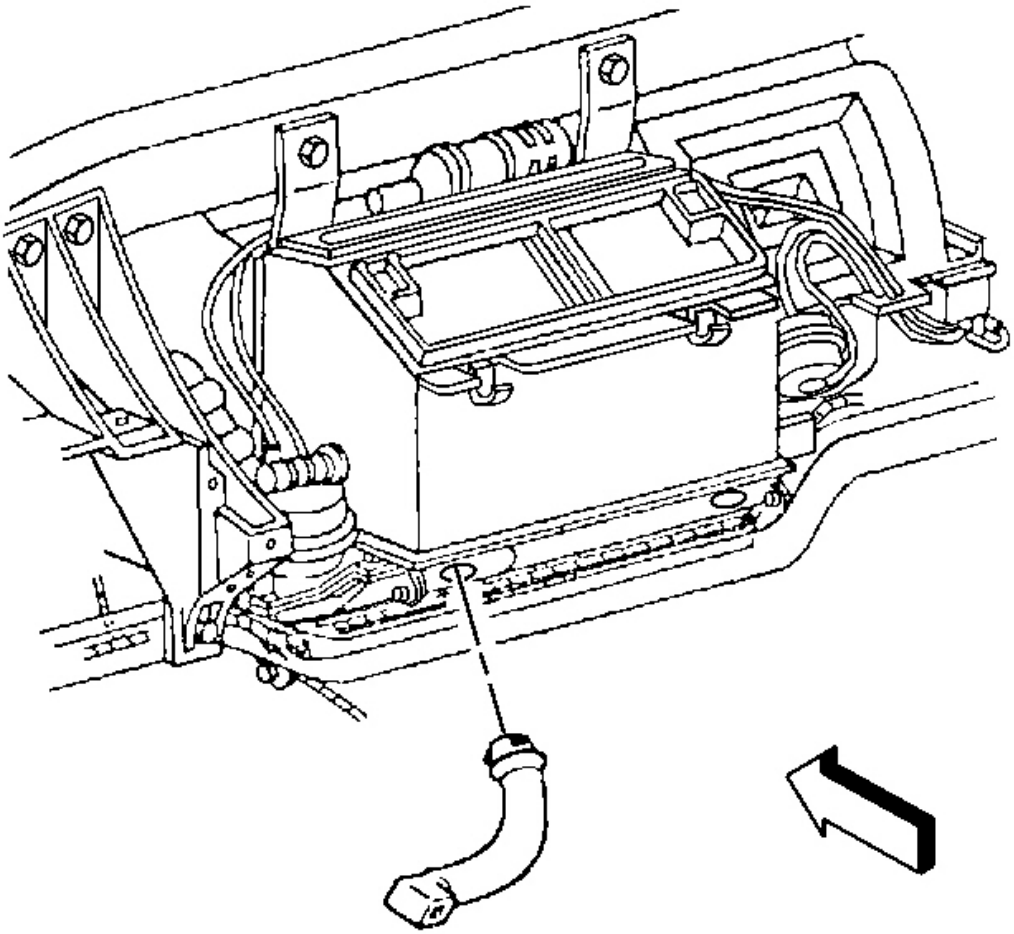

Fig. 171: Rear LH Floor Air Outlet Duct
Courtesy of GENERAL MOTORS CORP.

19. Position and align the LH floor air outlet duct - rear to the HVAC module, then push firmly and evenly to secure the duct.

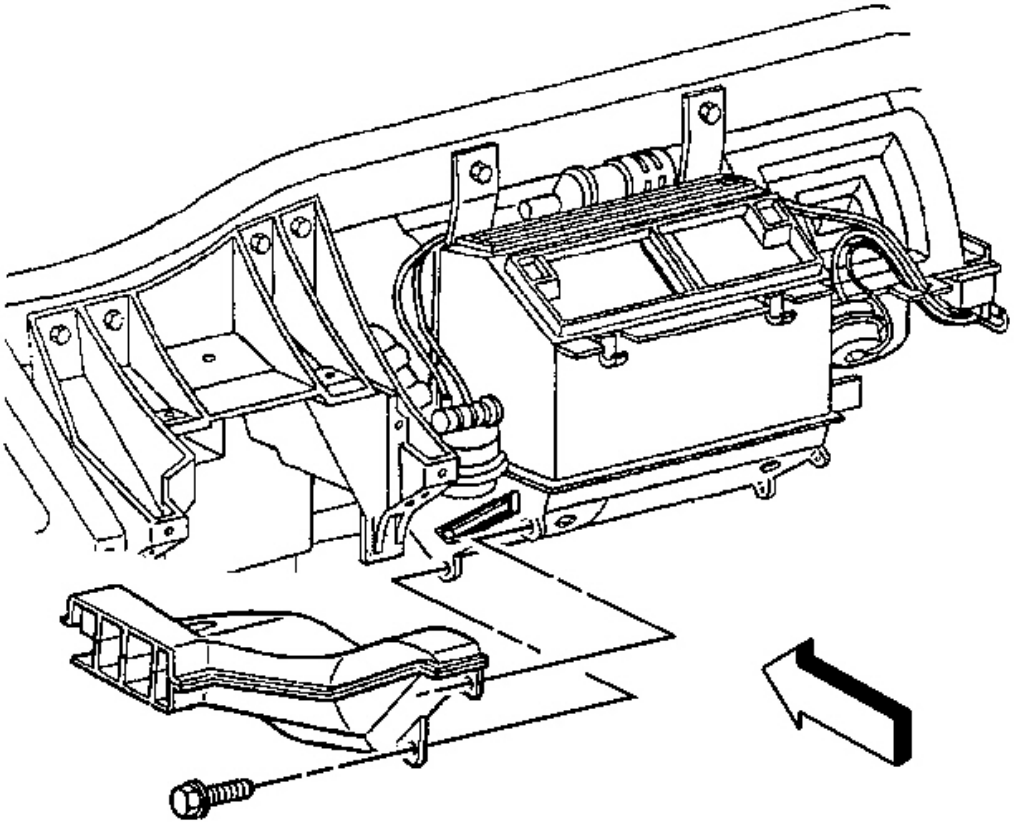

Fig. 172: LH Floor Air Outlet Duct & Retaining Screws
Courtesy of GENERAL MOTORS CORP.

20. Install the LH floor air outlet duct to the HVAC module.
21. Install the LH floor air outlet duct retaining screws.

    Tighten: Tighten the screws to 1.6 N.m (14 lb in).

22. Install the I/P center support bracket and the ignition switch housing bracket. Refer to **Bracket Replacement - Instrument Panel (I/P) Center Support** in Instrument Panel, Gages and Console.

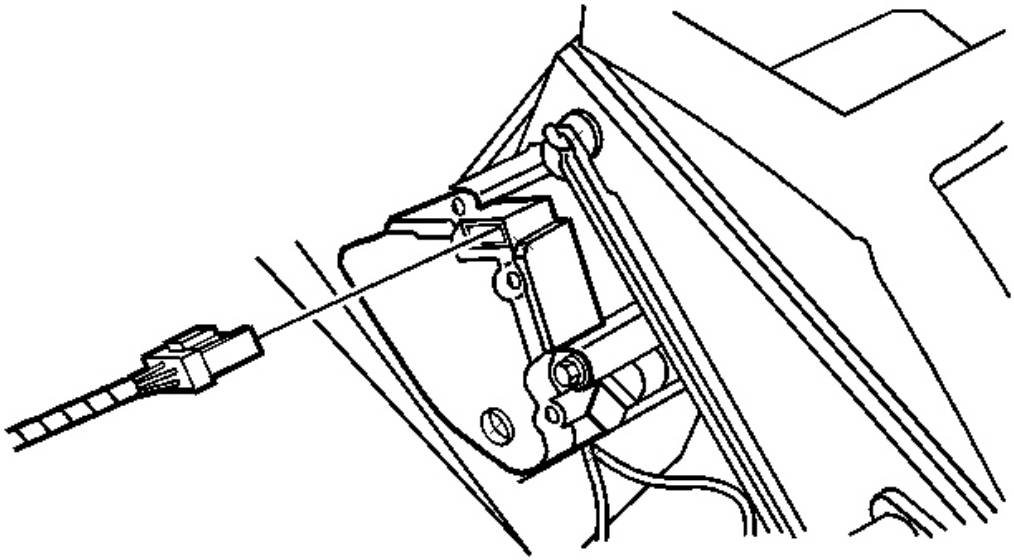

Fig. 173: Electrical Connector & LH Temperature Actuator
Courtesy of GENERAL MOTORS CORP.

23. Connect the electrical connector to the LH temperature actuator.
24. Connect the DRL sensor electrical connector, if equipped.

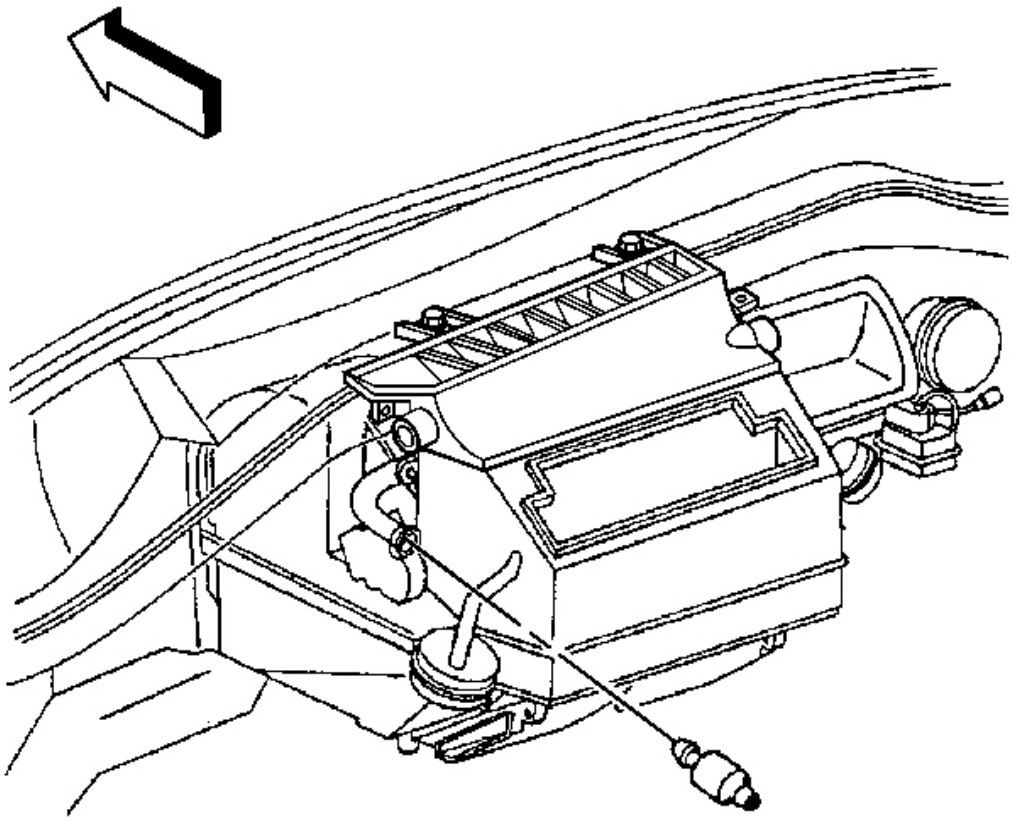

Fig. 174: DRL Sensor Electrical Connector
Courtesy of GENERAL MOTORS CORP.

25. Install the inside air temperature sensor aspirator duct muffler.

    Use a twisting motion to secure the duct muffler.

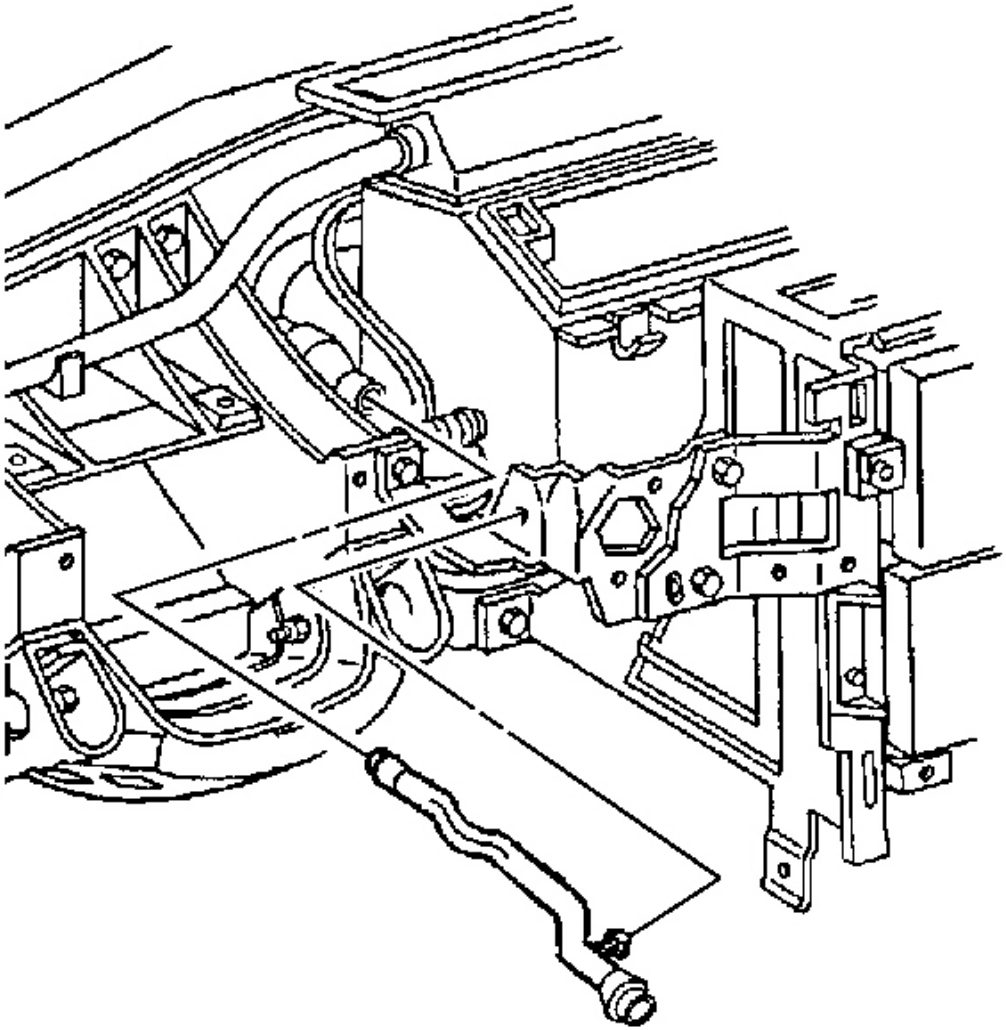

Fig. 175: Inside Air Temperature Sensor Aspirator Duct
Courtesy of GENERAL MOTORS CORP.

26. Install the inside air temperature sensor aspirator duct.
    1. Use a twisting motion to secure the duct to the duct muffler.
    2. Install the duct retaining tab to the ignition switch housing bracket.

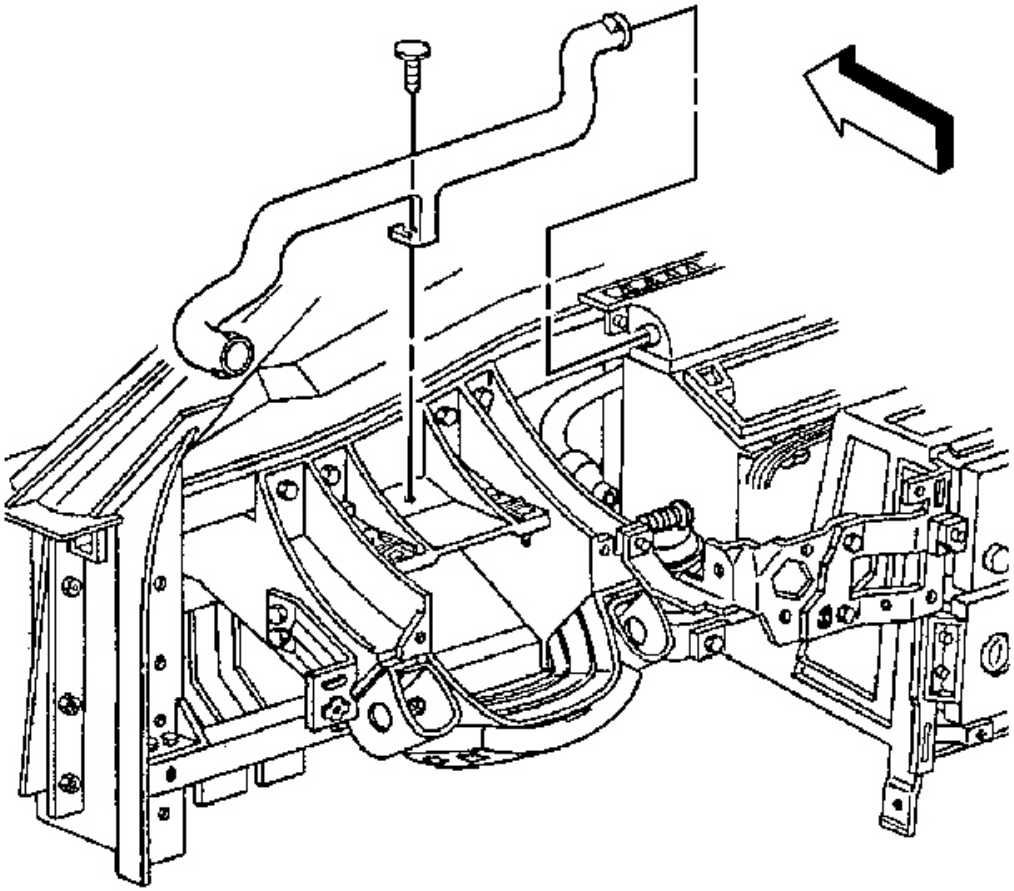

Fig. 176: LH Side Window Defogger & Lower Outlet Duct
Courtesy of GENERAL MOTORS CORP.

27. Install the LH side window defogger outlet duct - lower.
    1. Use a twisting motion to secure the defogger outlet duct - lower to the defogger outlet duct - upper, then to the windshield defroster duct.
    2. Install the push-in retainer.
28. Install the I/P upper trim pad. Refer to **Trim Pad Replacement - Instrument Panel (I/P) Upper** in Instrument Panel, Gages and Console.

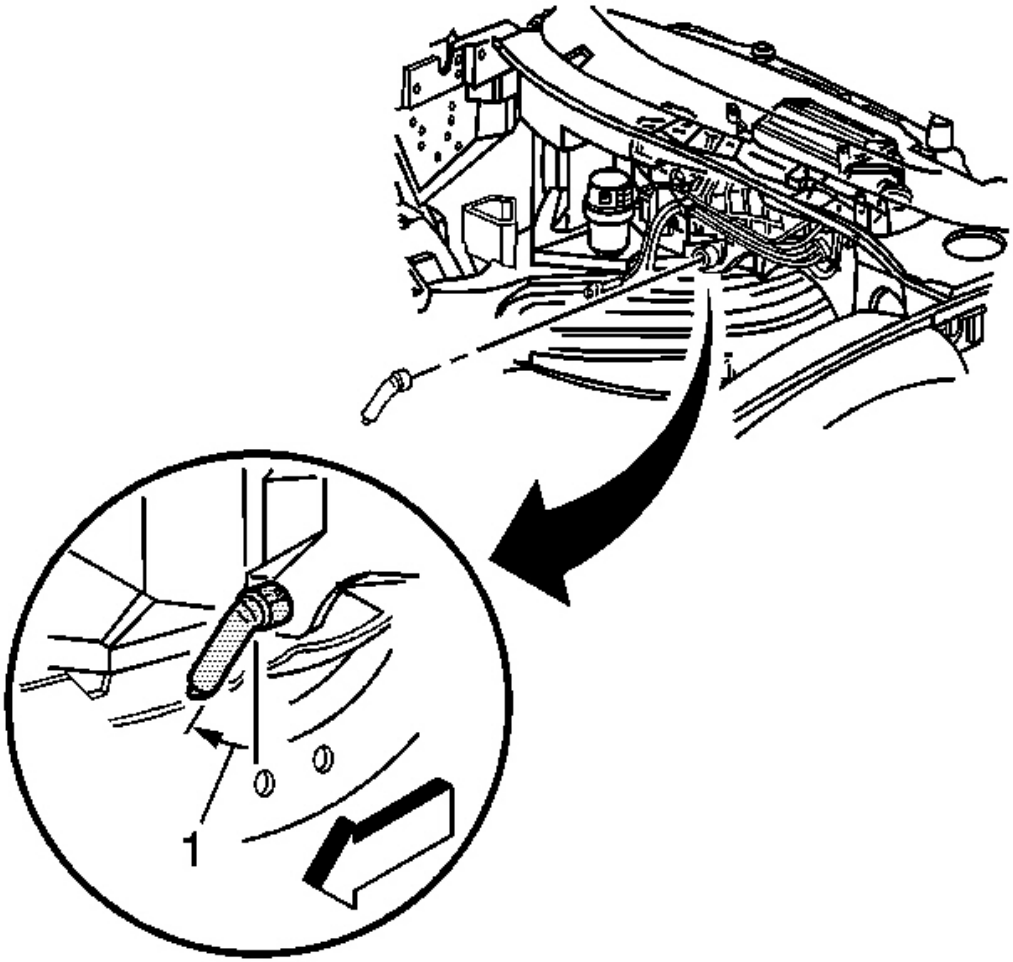

Fig. 177: HVAC Module Drain Tube
Courtesy of GENERAL MOTORS CORP.

29. Install the HVAC module drain tube to the module.
    - Ensure that the drain tube is fully seated to the HVAC module.
    - Align the drain tube to contact the cowl as shown (1).
30. Remove the cap or tape from the accumulator hose, evaporator tube - rear and the evaporator.
31. Install a new O-ring. Refer to **O-Ring Replacement** .

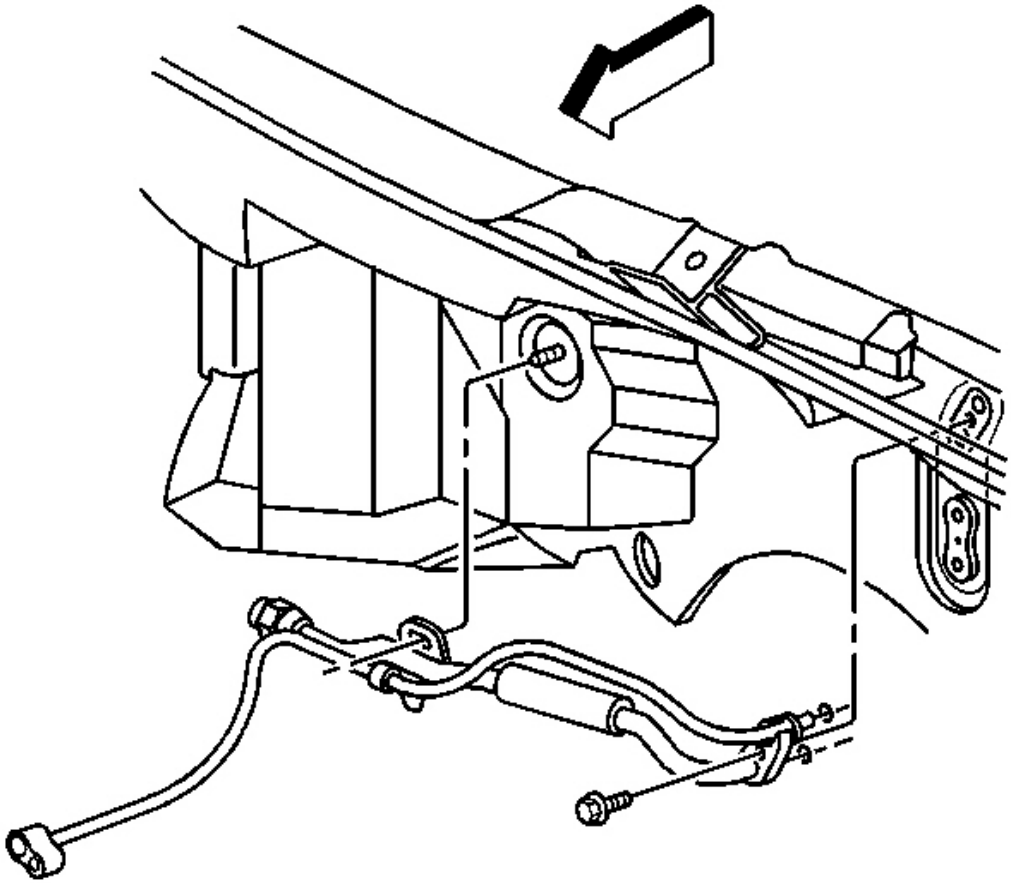

Fig. 178: Accumulator Hose, Evaporator & Bolt
Courtesy of GENERAL MOTORS CORP.

32. Install the accumulator hose and evaporator tube - rear to the evaporator.
33. Install the accumulator hose to evaporator retaining bolt.

Tighten: Tighten the bolt to 16 N.m (12 lb ft).

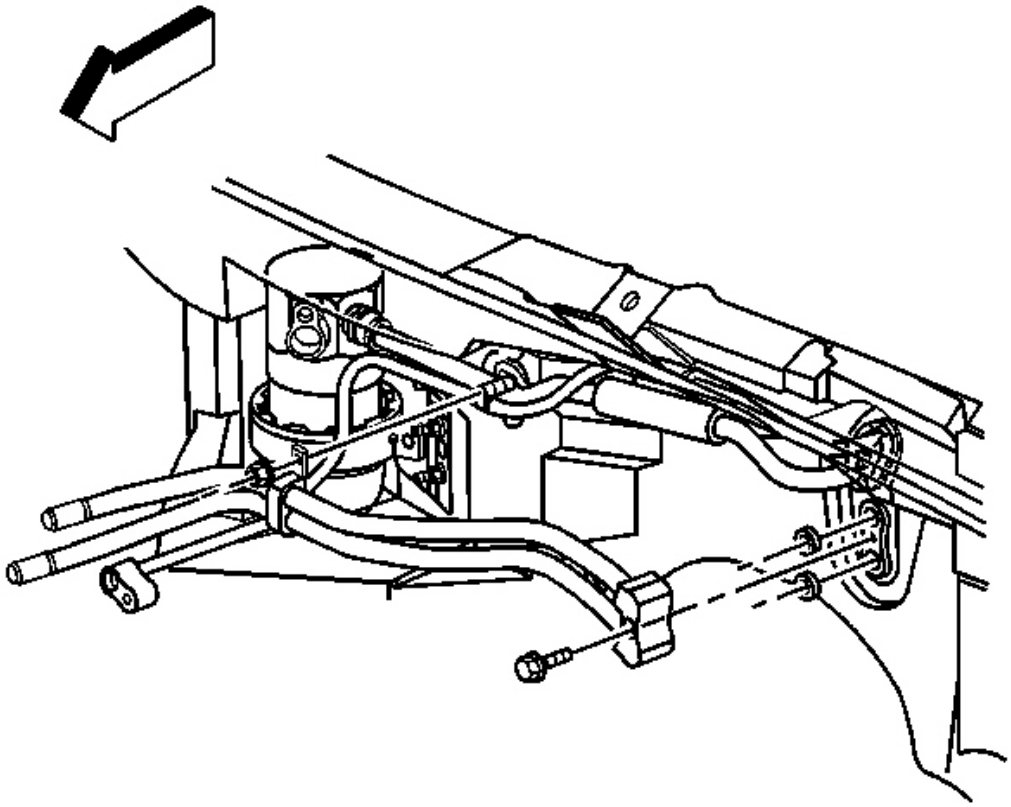

Fig. 179: Heater Core, Retaining Bolt & Heater Pipe
Courtesy of GENERAL MOTORS CORP.

34. Remove the cap or plug from the heater pipe assembly and the heater core.
35. Install new sealing washers. Refer to **Sealing Washer Replacement** .
36. Connect the heater pipe assembly to the heater core.
37. Install the heater pipe assembly retaining bolt.

    Tighten: Tighten the bolt to 16 N.m (12 lb ft).

38. Install the RH air injection pipe.
39. Install the RH air injection pipe to RH cylinder head bolts.

    Tighten: Tighten the bolts to 20 N.m (15 lb ft).

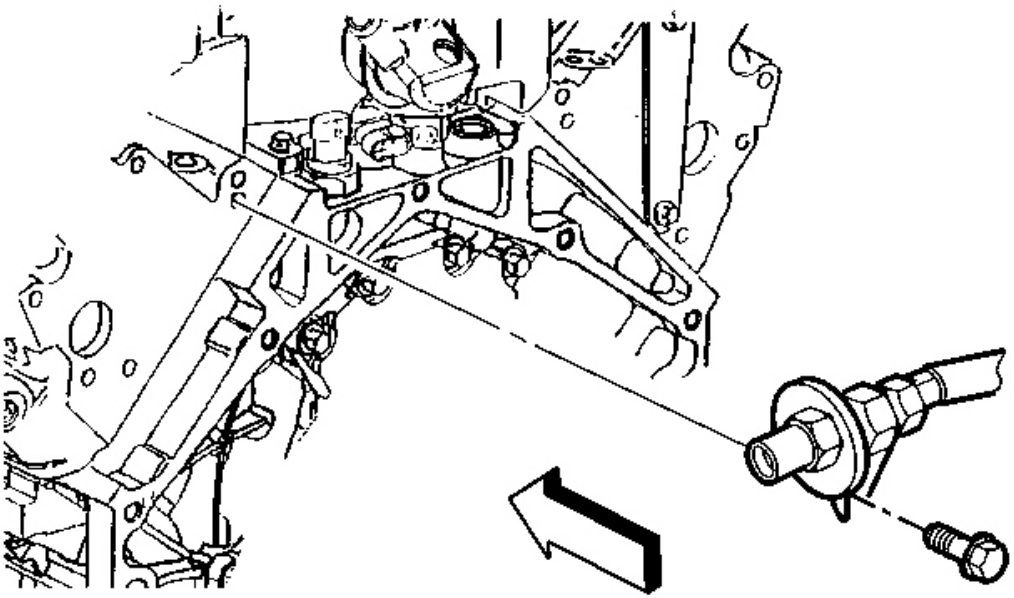

Fig. 180: RH Air Injection Check Valve To RH/LH Cylinder Head & Bolts
Courtesy of GENERAL MOTORS CORP.

40. Install the RH air injection check valve to LH cylinder head bolt.

    Tighten: Tighten the bolt to 20 N.m (15 lb ft).

41. Connect the hose and hose clamp to the RH air injection check valve.

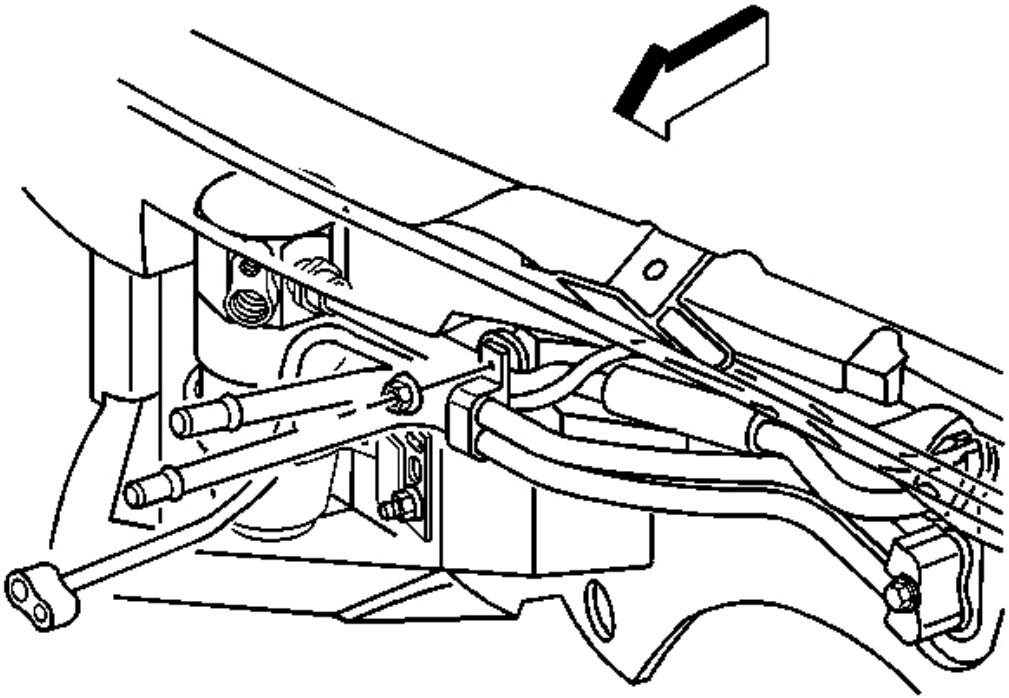

Fig. 181: Heater Pipe Bracket & Cowl
Courtesy of GENERAL MOTORS CORP.

42. Install the heater pipe bracket into position.
43. Install the heater pipe bracket retaining nut.

    Tighten: Tighten the nut to 10 N.m (89 lb in).

44. Install the intake manifold. Refer to **Intake Manifold Replacement** in Engine Mechanical 5.7-L.
45. Install the battery heat shield. Refer to **Battery Heat Shield Replacement** in Engine Electrical.
46. Evacuate and recharge the A/C system. Refer to **Refrigerant Recovery and Recharging** .
47. Leak test the fittings of the component using **J 39400-A** . See **Special Tools and Equipment** .

EVAPORATOR CORE REPLACEMENT

Tools Required

J 39400-A Halogen Leak Detector. See **Special Tools and Equipment** .

Removal Procedure

1. Remove the HVAC module. Refer to **HVAC Module Assembly Replacement** .
2. Disconnect the vacuum harness from both of the harness retainers on the HVAC module case.

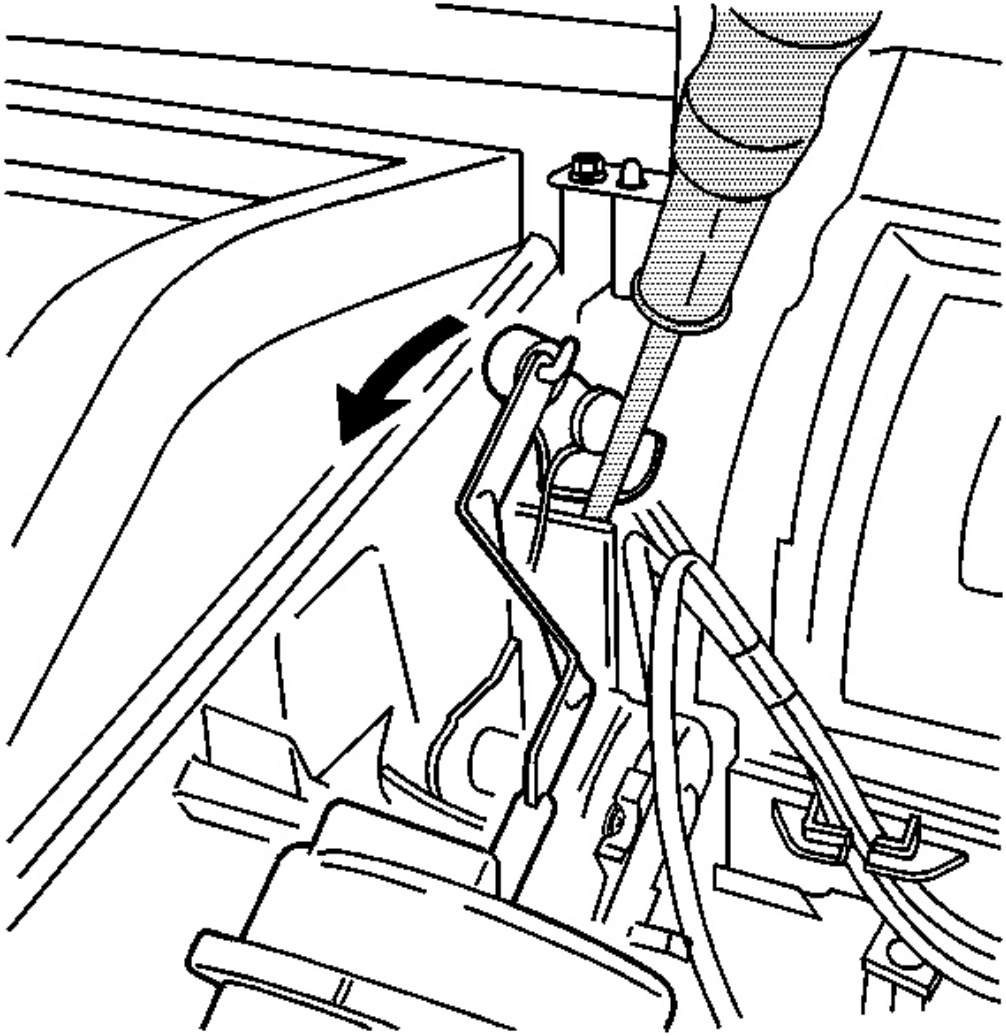

Fig. 182: Defroster Actuator Vacuum Harness Connectors
Courtesy of GENERAL MOTORS CORP.

3. Disconnect the vacuum harness connectors from the defroster actuator.
4. Rotate the defrost door lever fully rearward (counterclockwise), then carefully insert a flat bladed tool

between the bottom of the defrost door lever and the protruding wall of the HVAC module case below the door lever in order to keep the door lever in place.

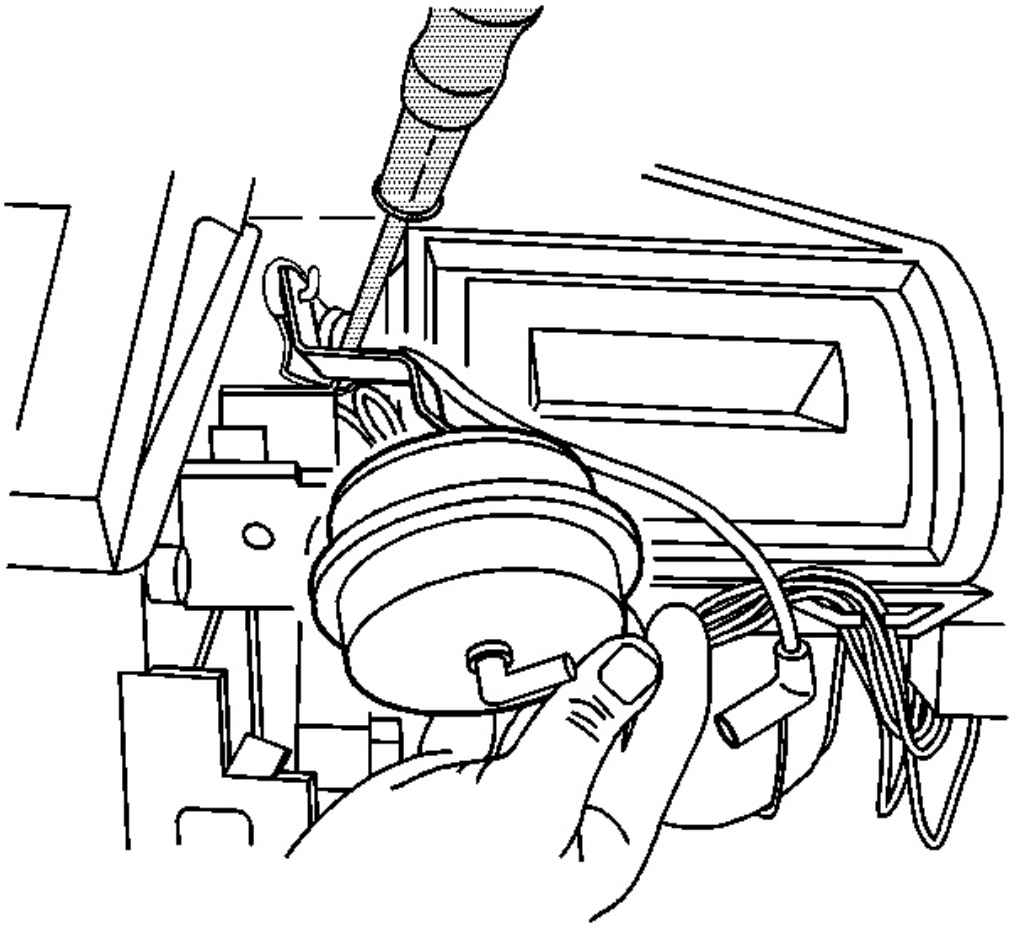

Fig. 183: Defroster Actuator Retaining Tab
Courtesy of GENERAL MOTORS CORP.

5. Lift to release the defroster actuator retaining tab.

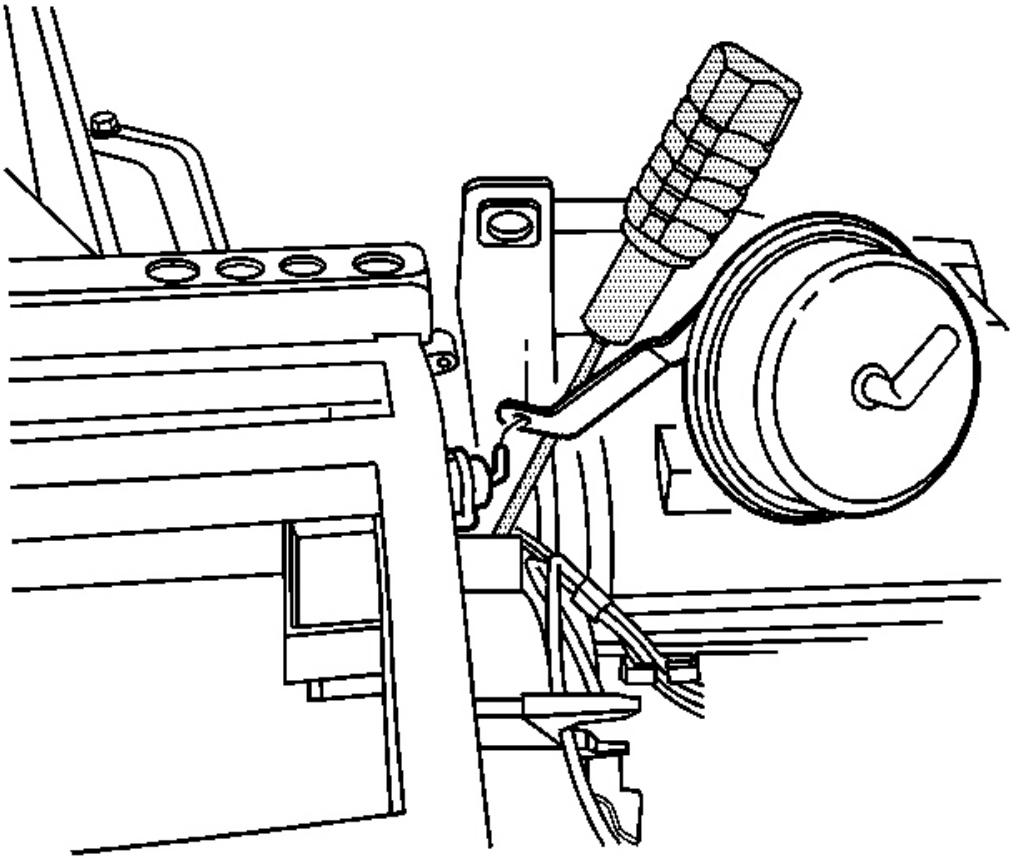

Fig. 184: Defroster Actuator Pushrod & Defrost Door Lever
Courtesy of GENERAL MOTORS CORP.

6. Disconnect the defroster actuator pushrod from the defrost door lever and remove the actuator.

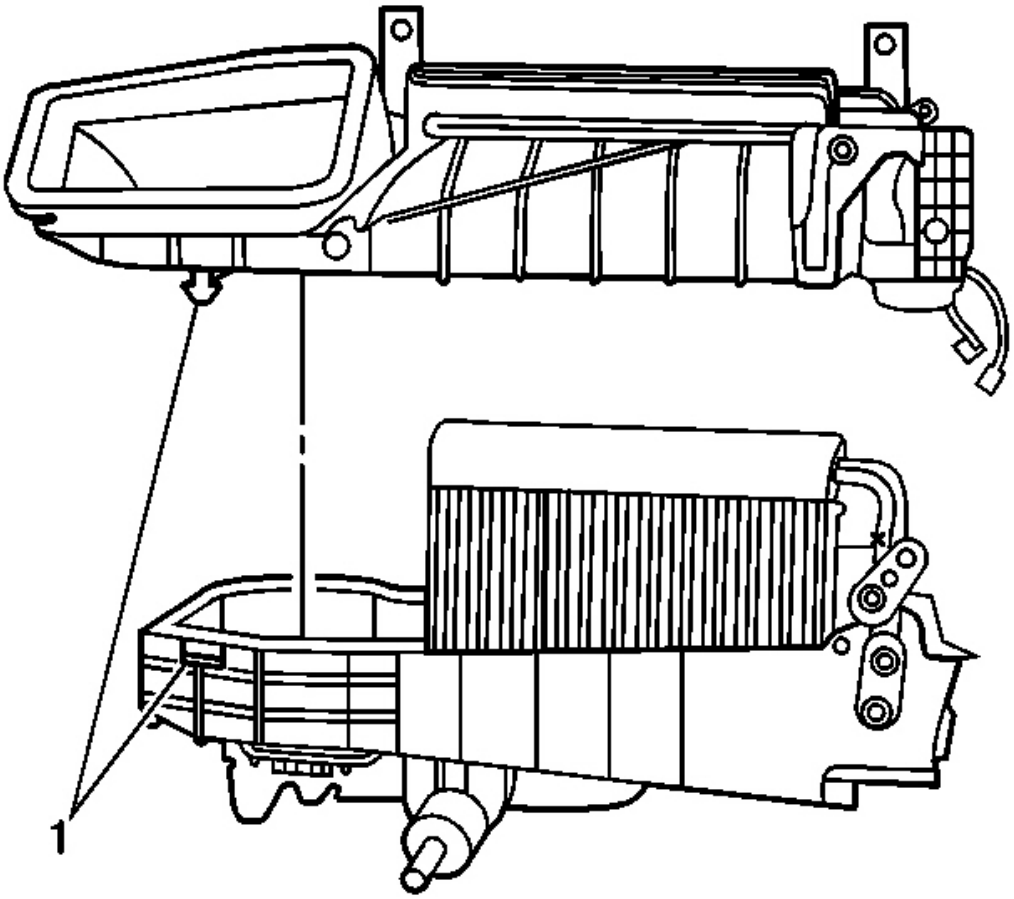

Fig. 185: Upper/Lower HVAC Module Halves
Courtesy of GENERAL MOTORS CORP.

7. Remove the screws retaining the HVAC module case - upper to the HVAC module case - lower.

   To access the screw hidden under the air inlet door, open the door and retain in the open position.

8. Release the retaining tab (1) securing the HVAC module case - upper to the HVAC module case - lower.
9. Separate the HVAC module case - upper from the HVAC module case - lower.

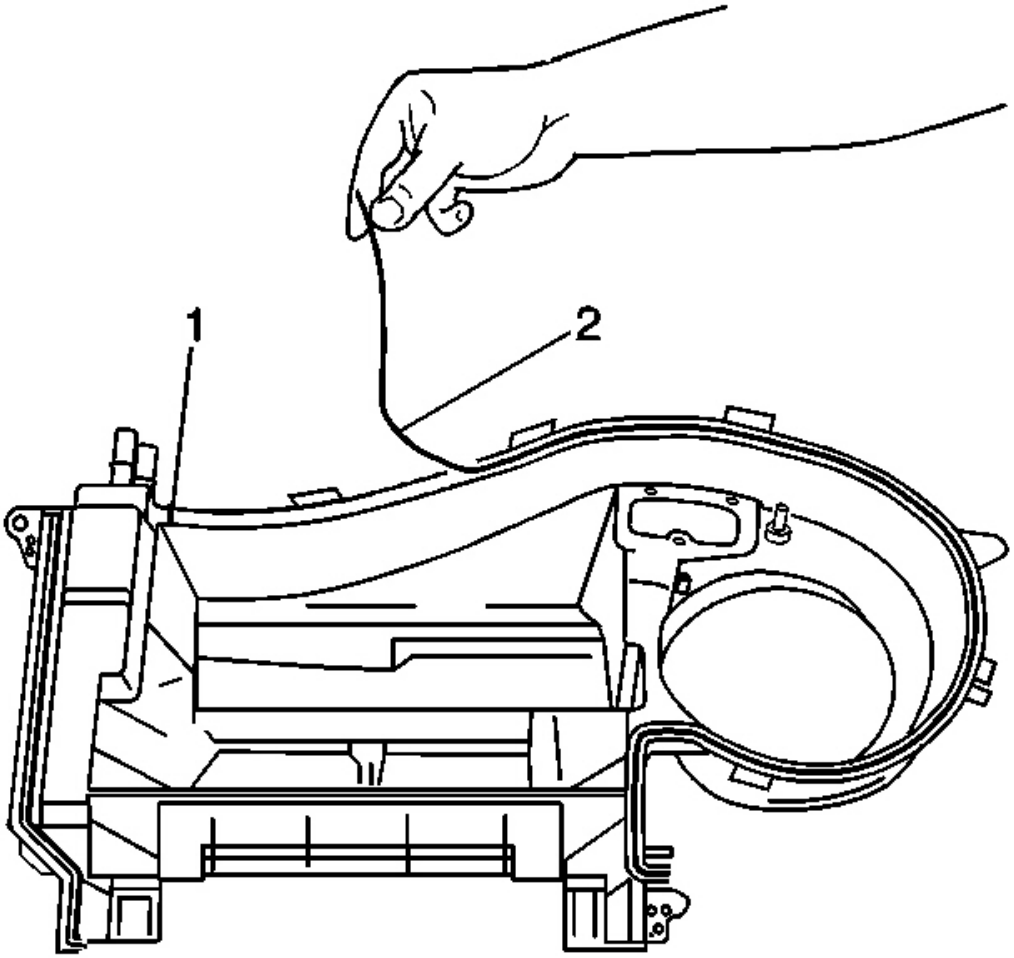

Fig. 186: HVAC Module Case Seals
Courtesy of GENERAL MOTORS CORP.

10. Remove and discard the HVAC module case seals.

    Start to remove the HVAC module case primary (blower motor side of case) seal (2) from the HVAC module case - lower at the position shown (1).

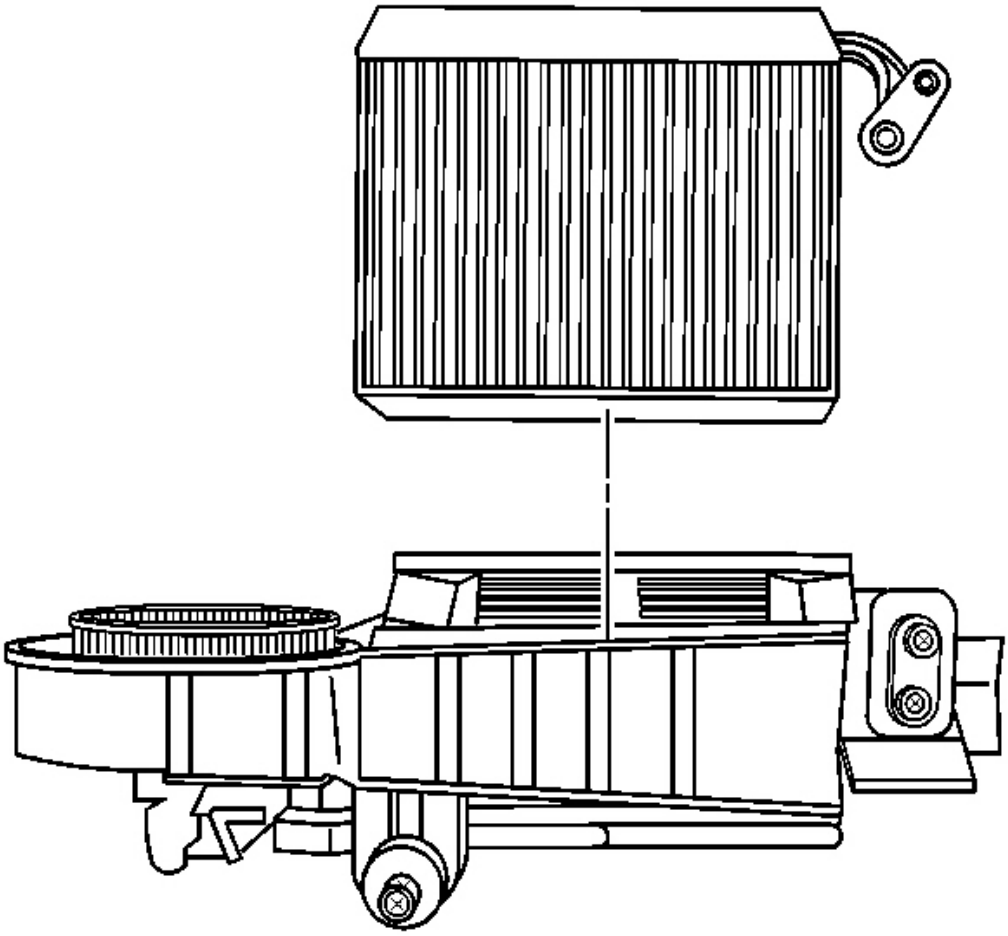

Fig. 187: Evaporator Core & Lower HVAC Module Case
Courtesy of GENERAL MOTORS CORP.

11. Remove the evaporator core from the HVAC module case - lower.

Installation Procedure

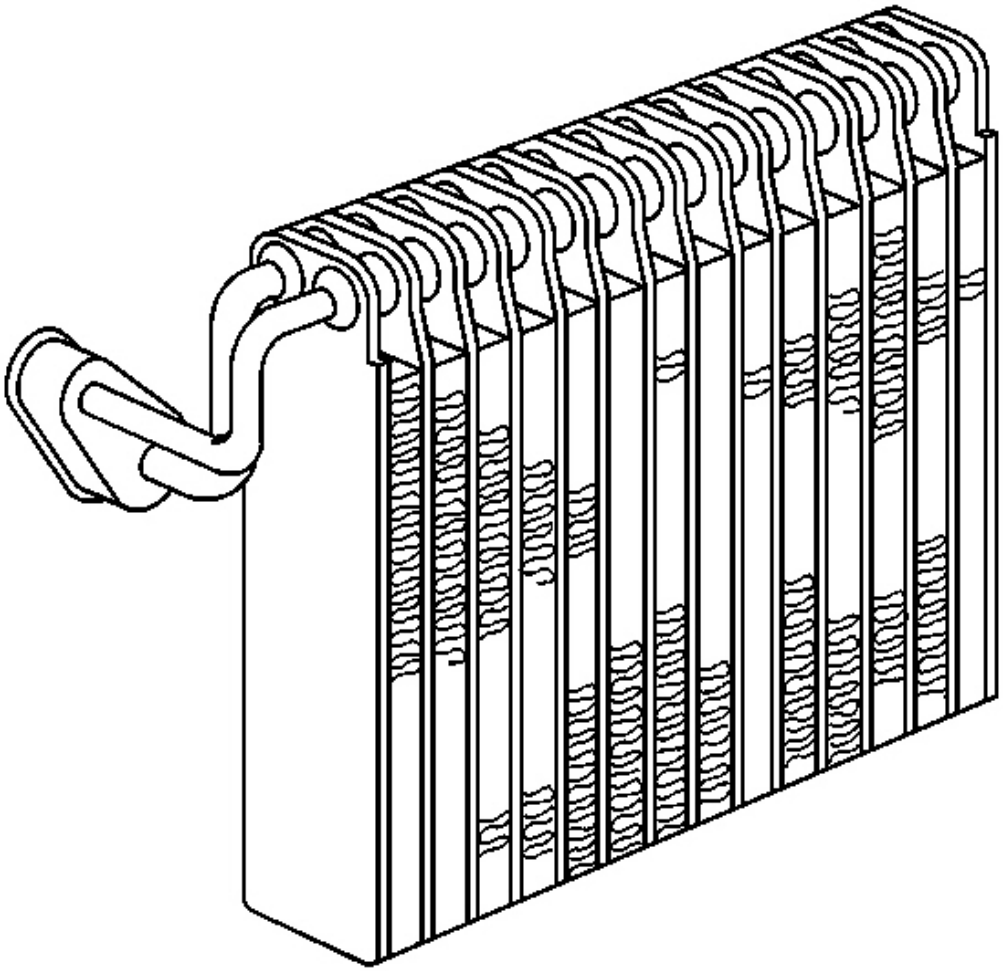

Fig. 188: Evaporator Core
Courtesy of GENERAL MOTORS CORP.

1. If installing a new evaporator core, add the specified amount of PAG Refer to **Refrigerant System Capacities** .

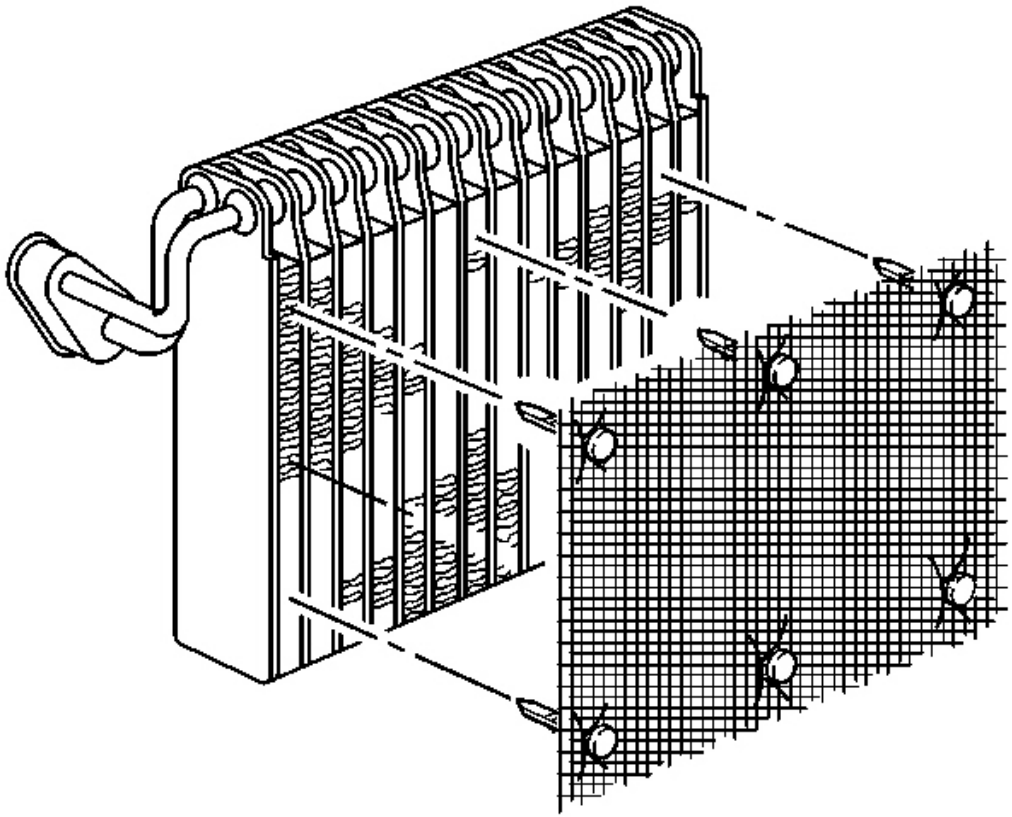

Fig. 189: Evaporator Core & Water Core Filter
Courtesy of GENERAL MOTORS CORP.

2. Install a new water core filter to the evaporator core.

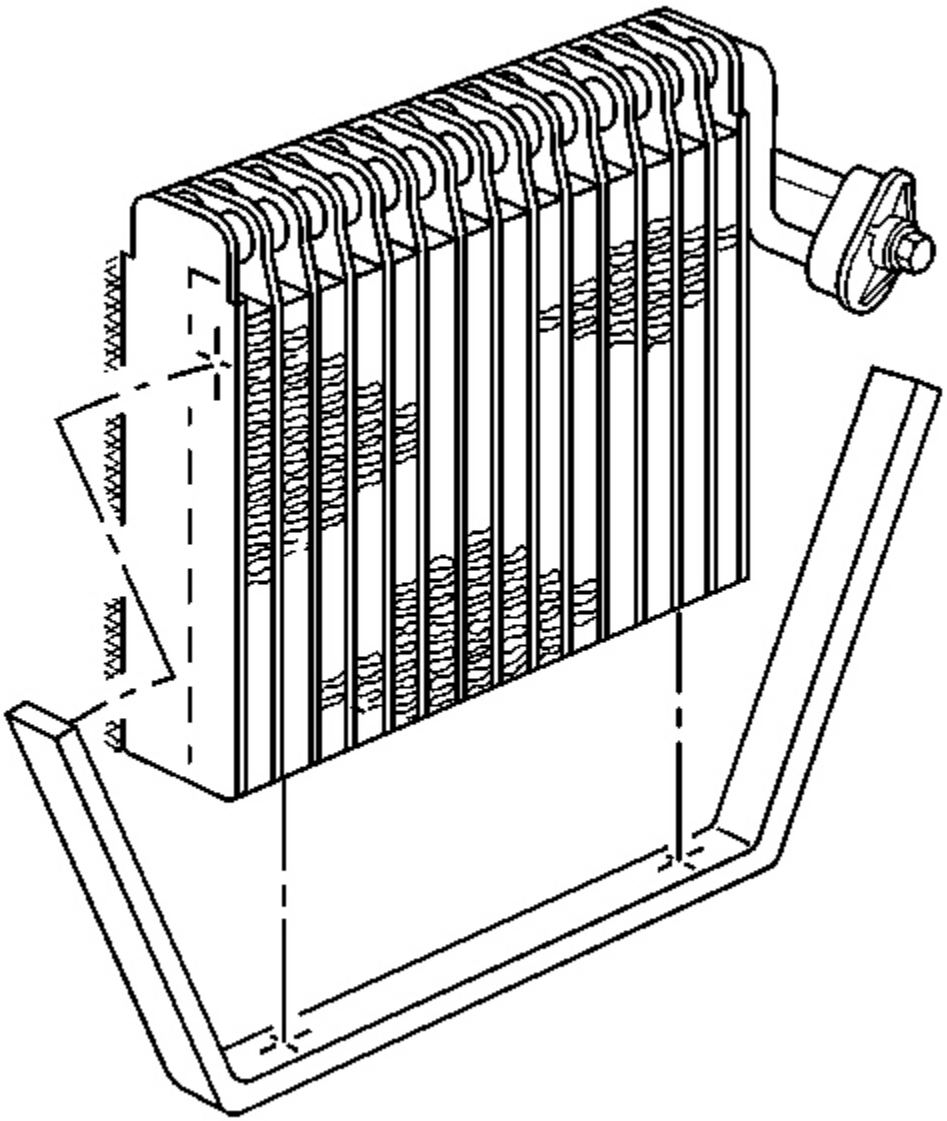

Fig. 190: Evaporator Core Side Seal
Courtesy of GENERAL MOTORS CORP.

3. Install a new side seal to the evaporator core.

   Line the evaporator core side seal up with the corners of the evaporator core.

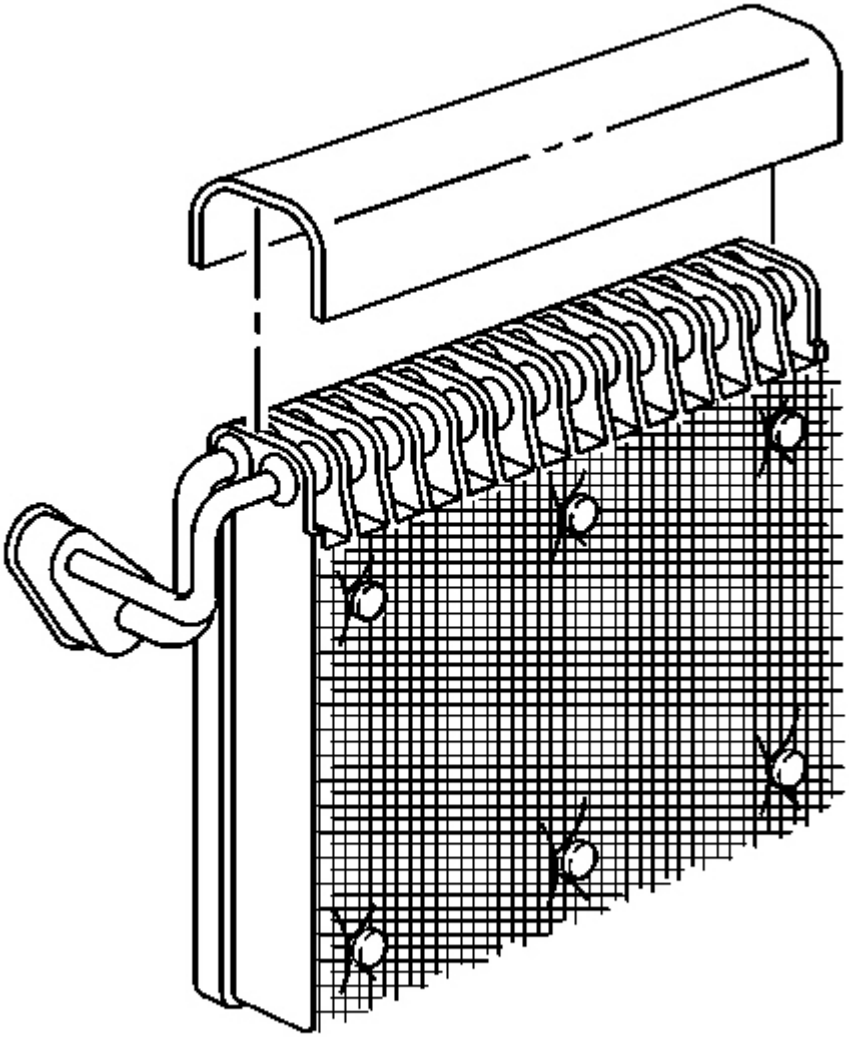

Fig. 191: Evaporator Core Upper Seal
Courtesy of GENERAL MOTORS CORP.

4. Install a new upper seal to the evaporator core.

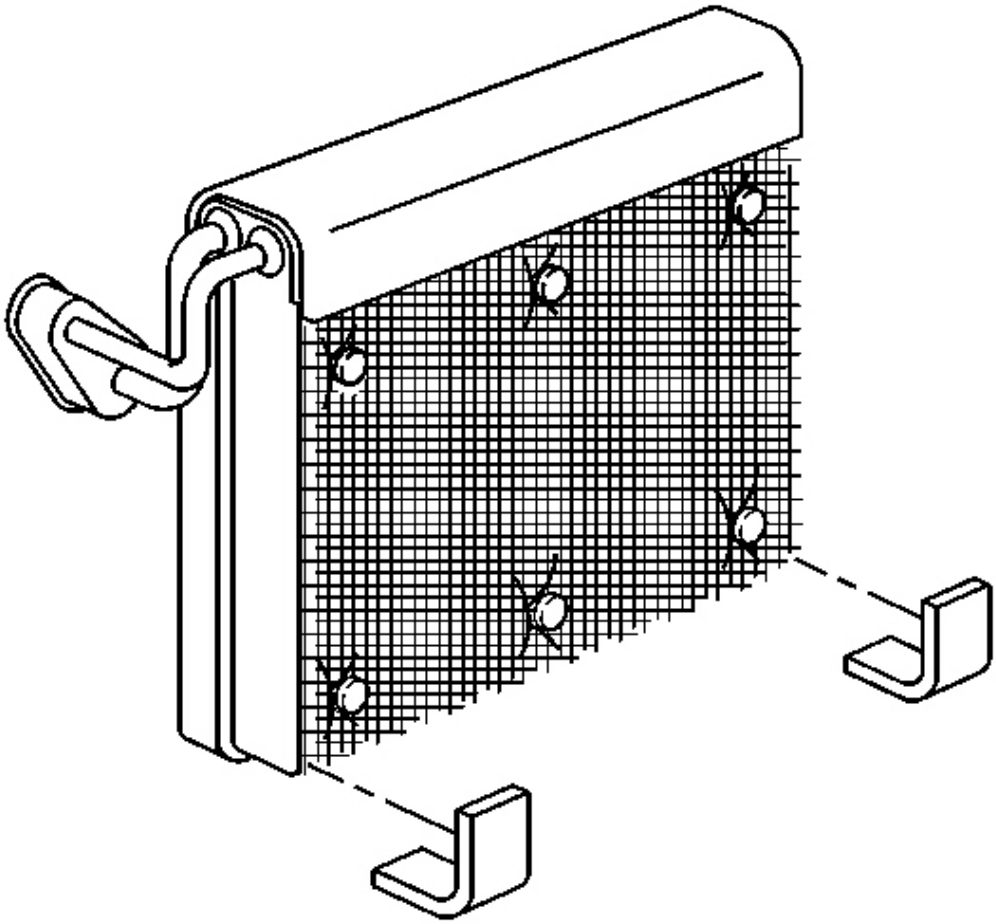

Fig. 192: Evaporator Core Lower Seals
Courtesy of GENERAL MOTORS CORP.

5. Install two new lower seals to the evaporator core.

   Locate the seals at the outer corners (or edges) of the evaporator core.

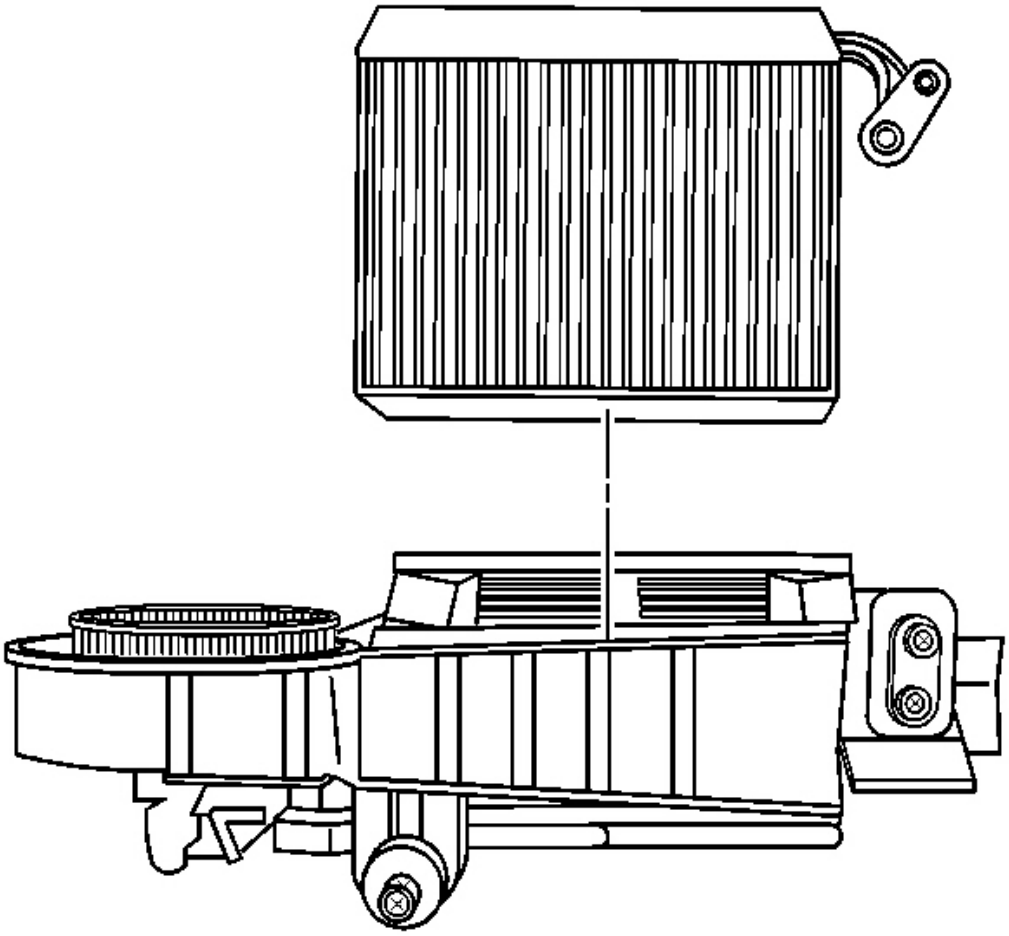

Fig. 193: Evaporator Core & Lower HVAC Module Case
Courtesy of GENERAL MOTORS CORP.

6. Install the evaporator core to the HVAC module case - lower.

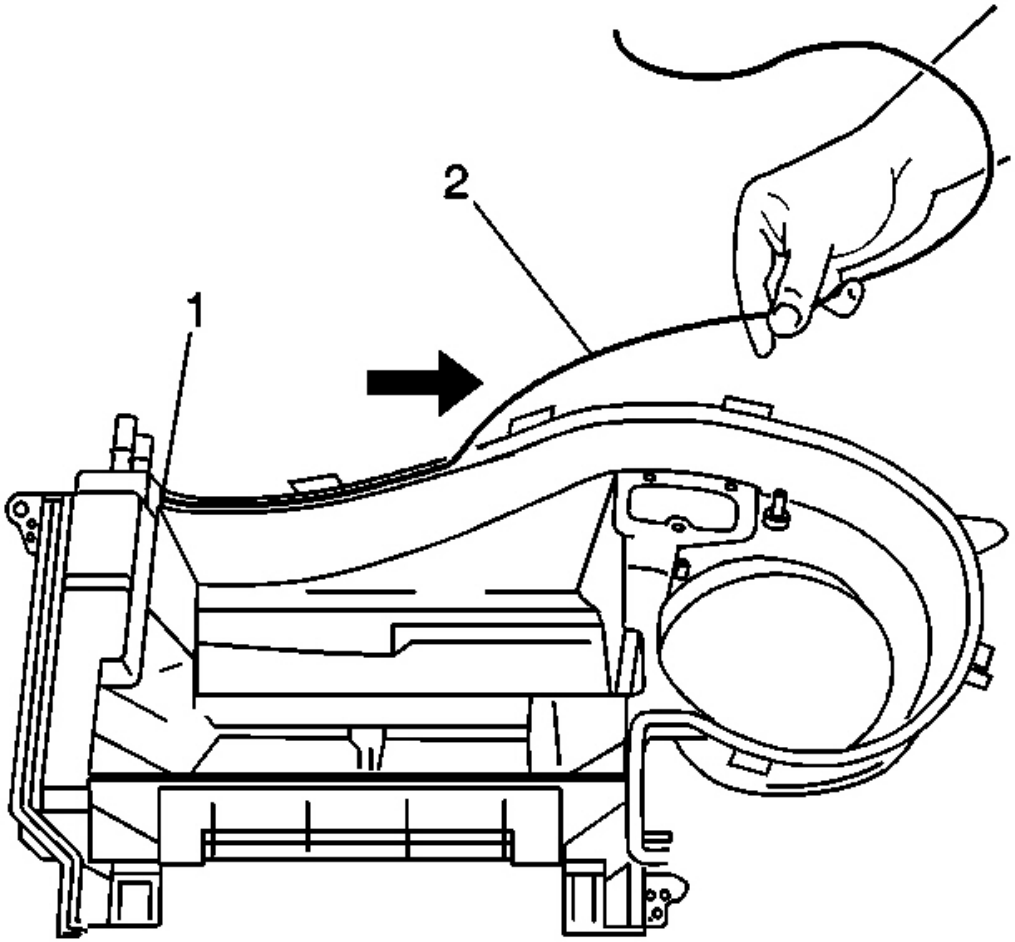

Fig. 194: Lower HVAC Module Case & HVAC Module Case Primary Seal
Courtesy of GENERAL MOTORS CORP.

7. Install new case seals to the HVAC module case - lower.

   Start to install the HVAC module case primary (blower motor side of case) seal (2) to the HVAC module case - lower from the position shown (1).

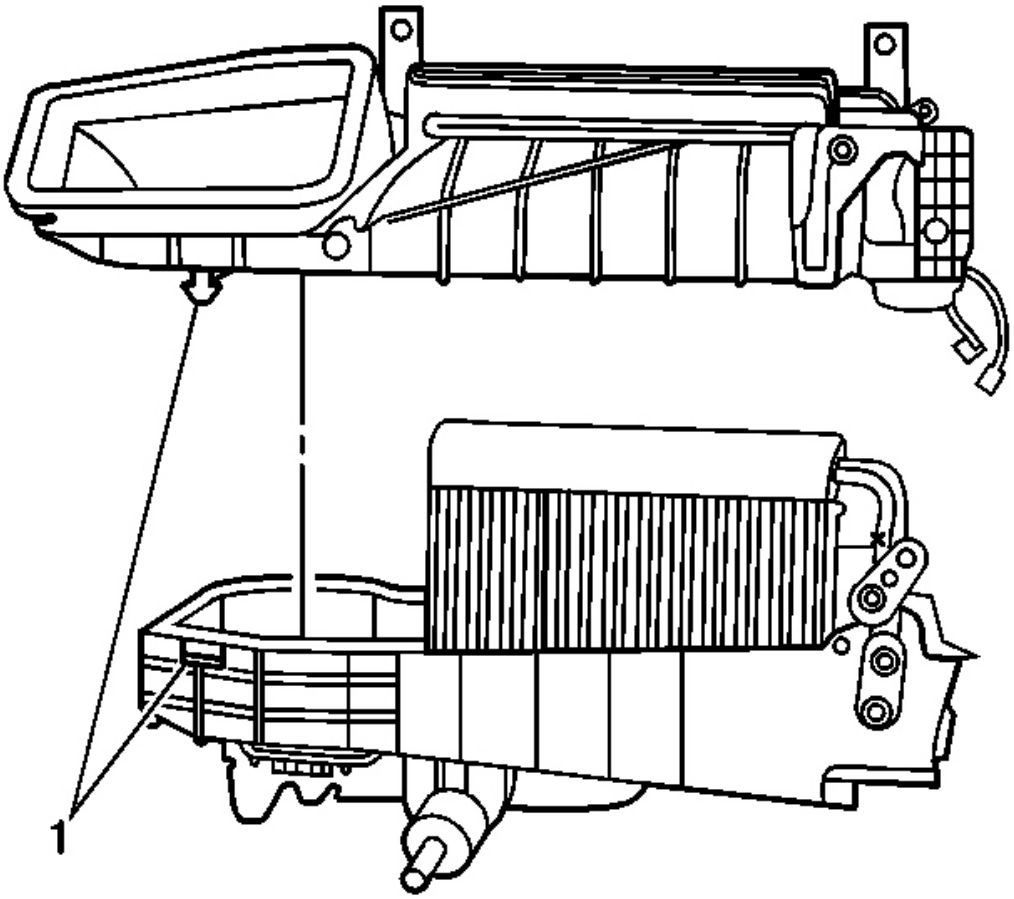

Fig. 195: Upper/Lower HVAC Module Halves
Courtesy of GENERAL MOTORS CORP.

IMPORTANT: Inspect the condition of the retaining tab on the HVAC module case - upper prior to installing to the HVAC module case - upper to the HVAC module case - lower. If the retaining tab is broken or damaged, install an external retaining clip.

8. Align and install the HVAC module case - upper to the HVAC module case - lower.

   Align and secure the retaining tab (1) on the HVAC module case - upper to the retaining slot on the HVAC module case - lower.

   NOTE: Refer to Fastener Notice in Cautions and Notices.

9. Install the HVAC module case - upper to the HVAC module case - lower retaining screws.

   Tighten: Tighten the screws to 1.6 N.m (14 lb in).

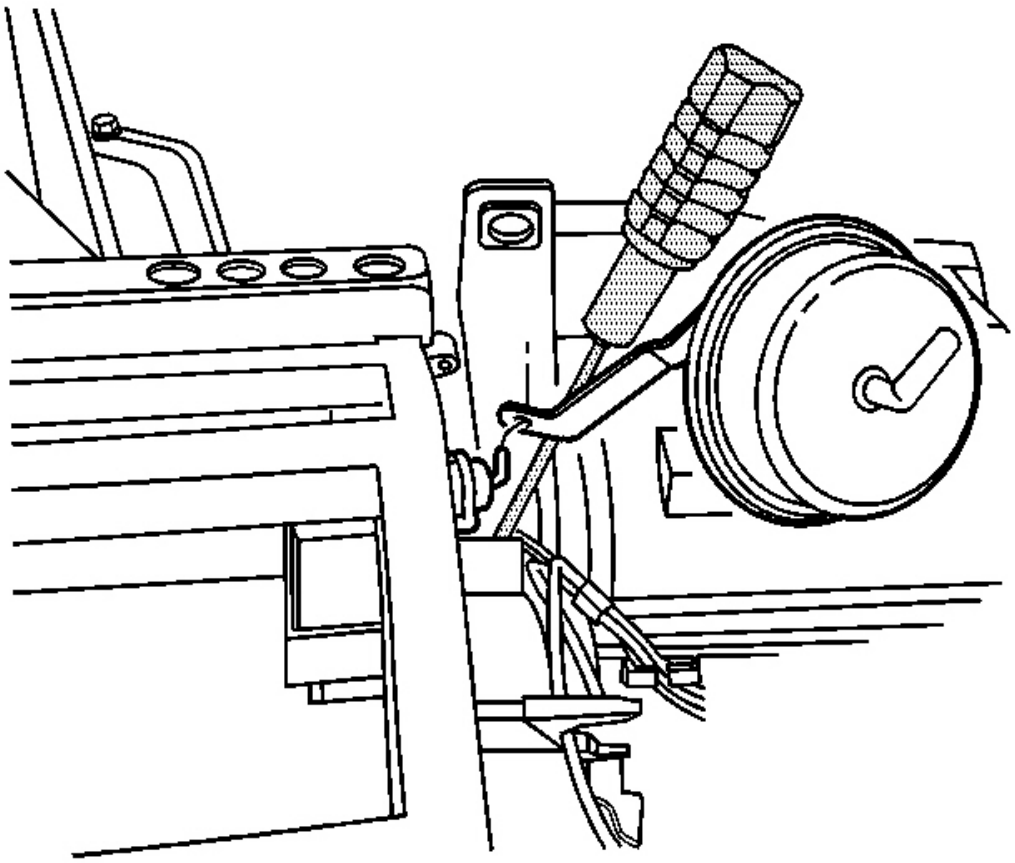

Fig. 196: Defroster Actuator Pushrod & Defrost Door Lever
Courtesy of GENERAL MOTORS CORP.

10. Connect the defroster actuator pushrod to the defrost door lever.

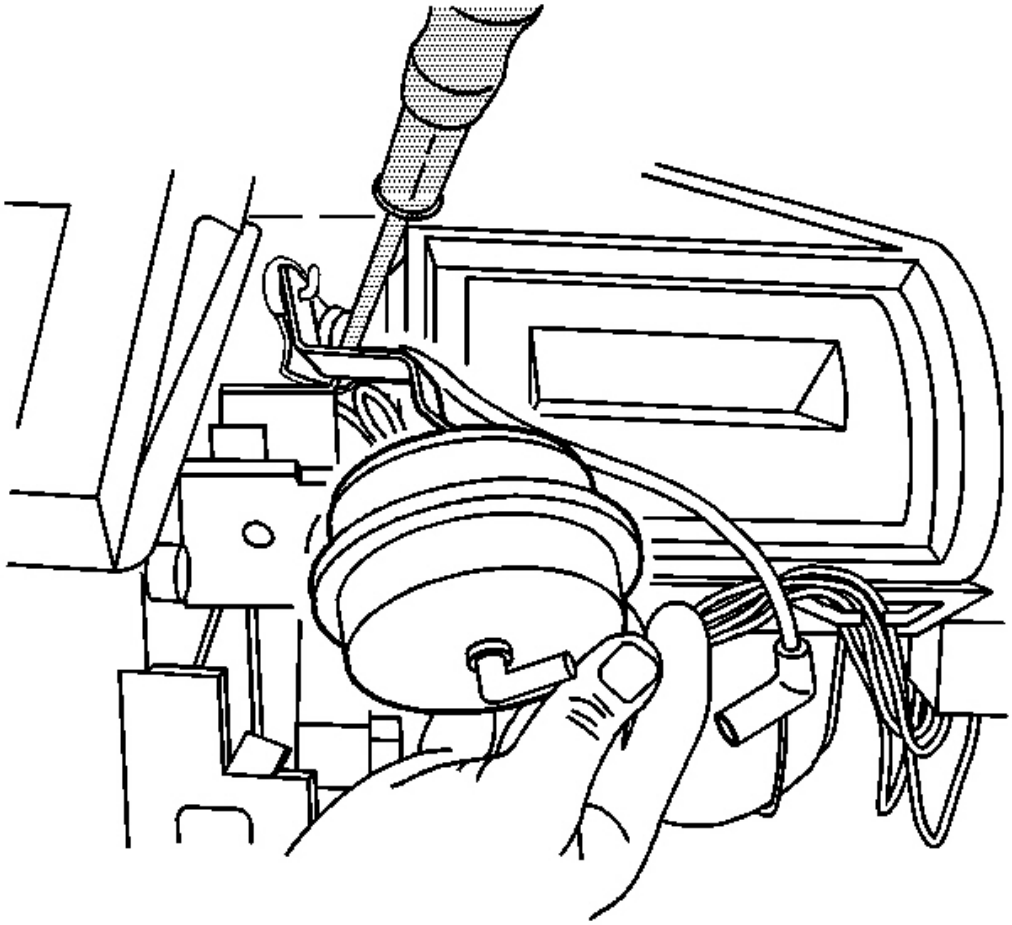

Fig. 197: Defroster Actuator Retaining Tab
Courtesy of GENERAL MOTORS CORP.

11. Position the defroster actuator in line with the mounting pins on the HVAC module case.
12. Carefully rotate the defroster actuator until the actuator slots align with the HVAC module mounting pins.
13. Inspect that the defroster actuator pushrod is not binding on the defrost door lever.
14. Push the defroster actuator toward the HVAC module case to secure the retaining tab.

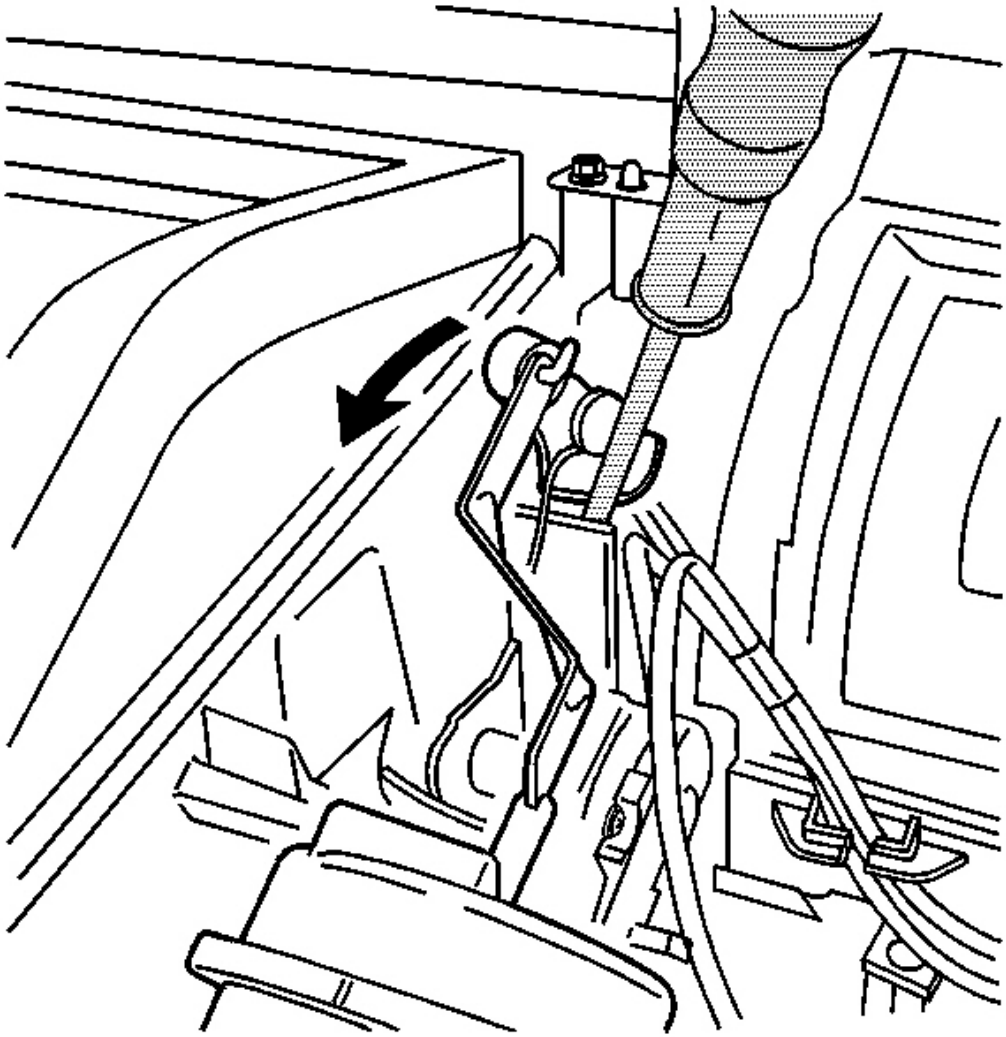

Fig. 198: Defroster Actuator Vacuum Harness Connectors
Courtesy of GENERAL MOTORS CORP.

15. Remove the flat bladed tool maintaining the defrost door lever in position.
16. Connect both of the vacuum harness connectors to the defroster actuator.
17. Secure the vacuum harness to both of the harness retainers on the HVAC module case.
18. Install the HVAC module to the vehicle. Refer to **HVAC Module Assembly Replacement** .

EVAPORATOR DRAIN HOSE REPLACEMENT

Removal Procedure

1. Remove the battery. Refer to **Battery Replacement** in Engine Electrical.
2. Remove the battery heat shield. Refer to **Battery Heat Shield Replacement** in Engine Electrical.

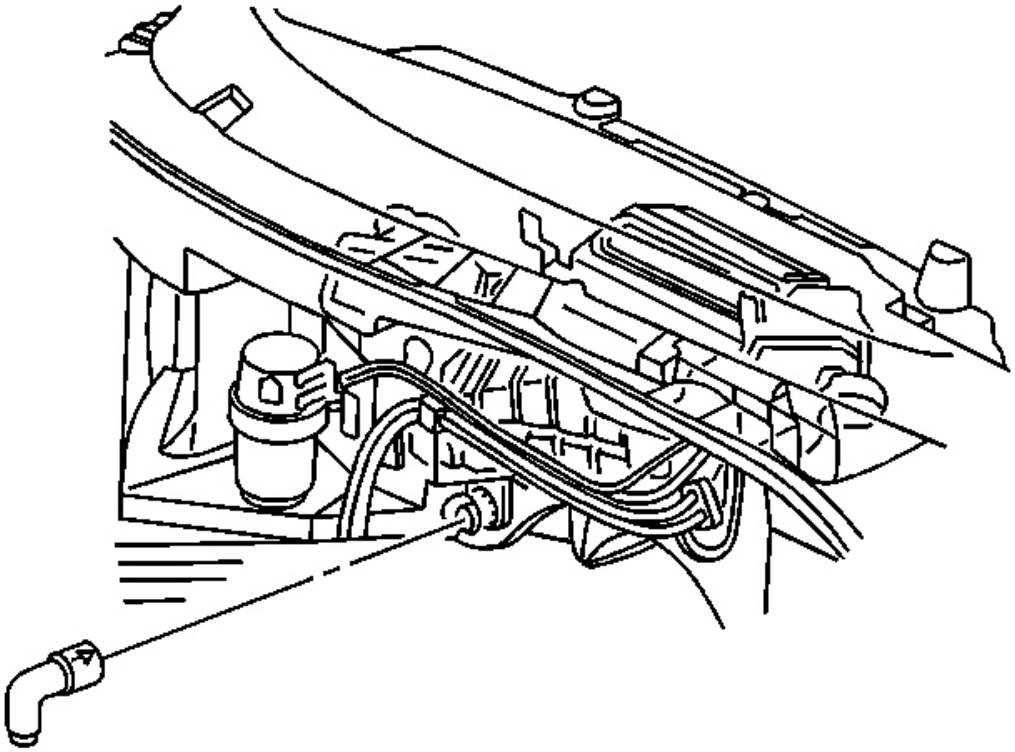

Fig. 199: HVAC Module Drain Tube & I/P Upper Trim Pad
Courtesy of GENERAL MOTORS CORP.

3. Remove the HVAC module drain tube from the HVAC module.

Installation Procedure

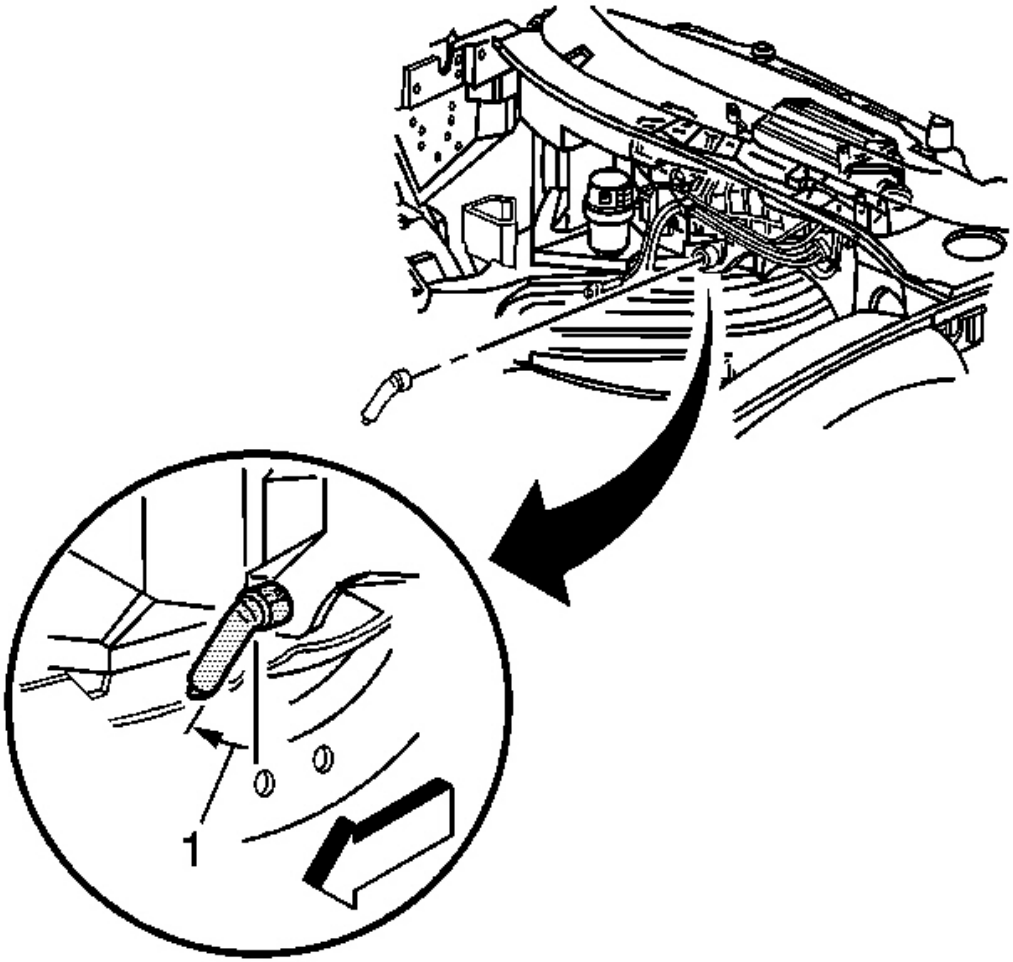

Fig. 200: HVAC Module Drain Tube
Courtesy of GENERAL MOTORS CORP.

1. Install the HVAC module drain tube to the module.
    - Ensure that the drain tube is fully seated to the HVAC module.
    - Align the drain tube to contact the cowl as shown (1).
2. Install the battery heat shield. Refer to **Battery Heat Shield Replacement** in Engine Electrical.
3. Install the battery. Refer to **Battery Replacement** in Engine Electrical.

HEATER HOSE REPLACEMENT - INLET

Tools Required

J 38185 Hose Clamp Pliers

Removal Procedure

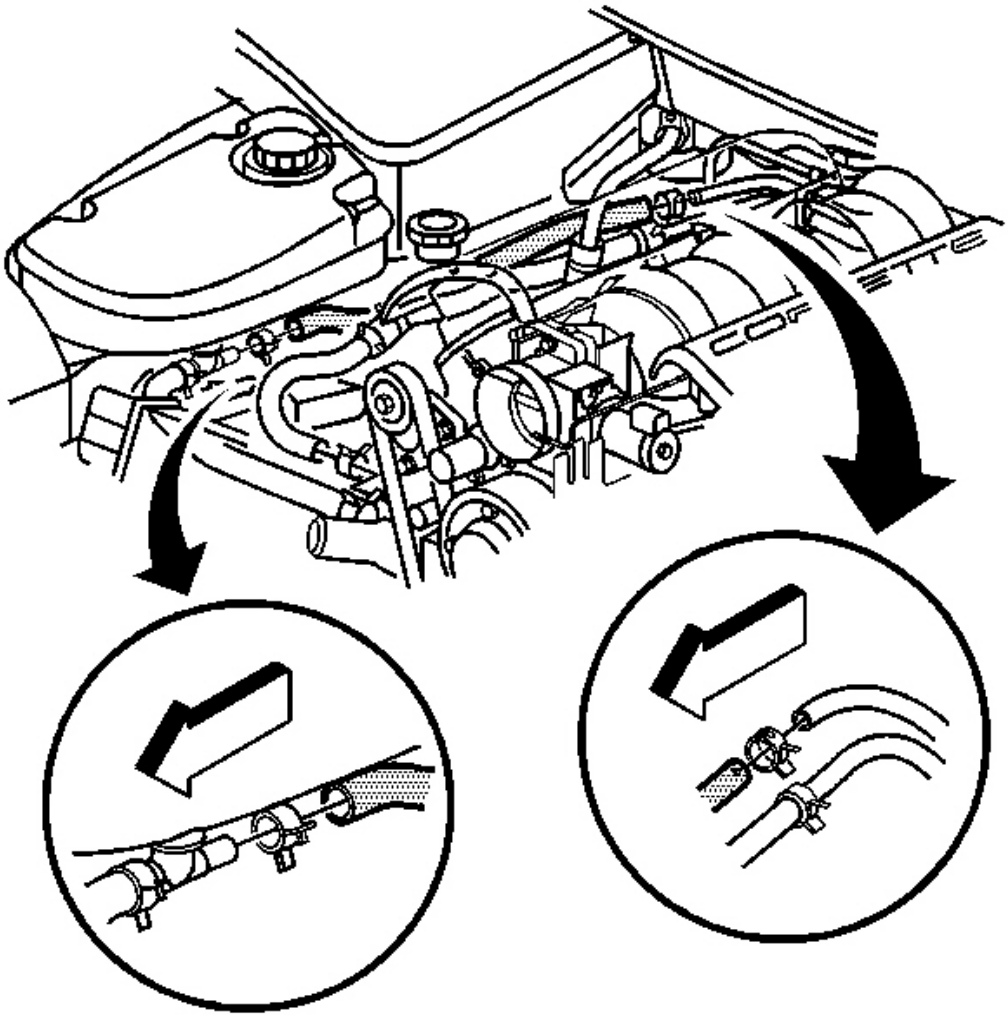

Fig. 201: Engine Cooling Coolant
Courtesy of GENERAL MOTORS CORP.

1. Drain the coolant. Refer to **Draining and Filling Cooling System** in Engine Cooling.

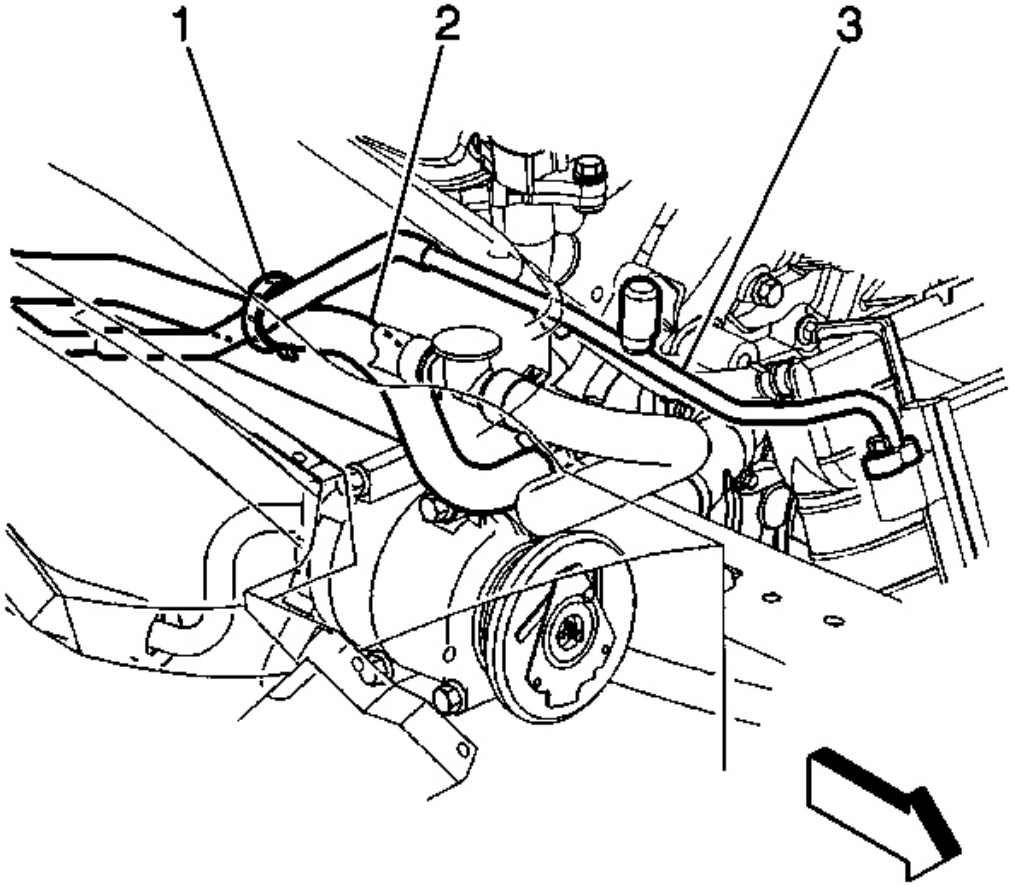

Fig. 202: Front Evaporator Tube, Heater Inlet Hose & Retaining Strap
Courtesy of GENERAL MOTORS CORP.

2. Remove the retaining strap (1), which retains the heater inlet hose (2) to the evaporator tube - front.

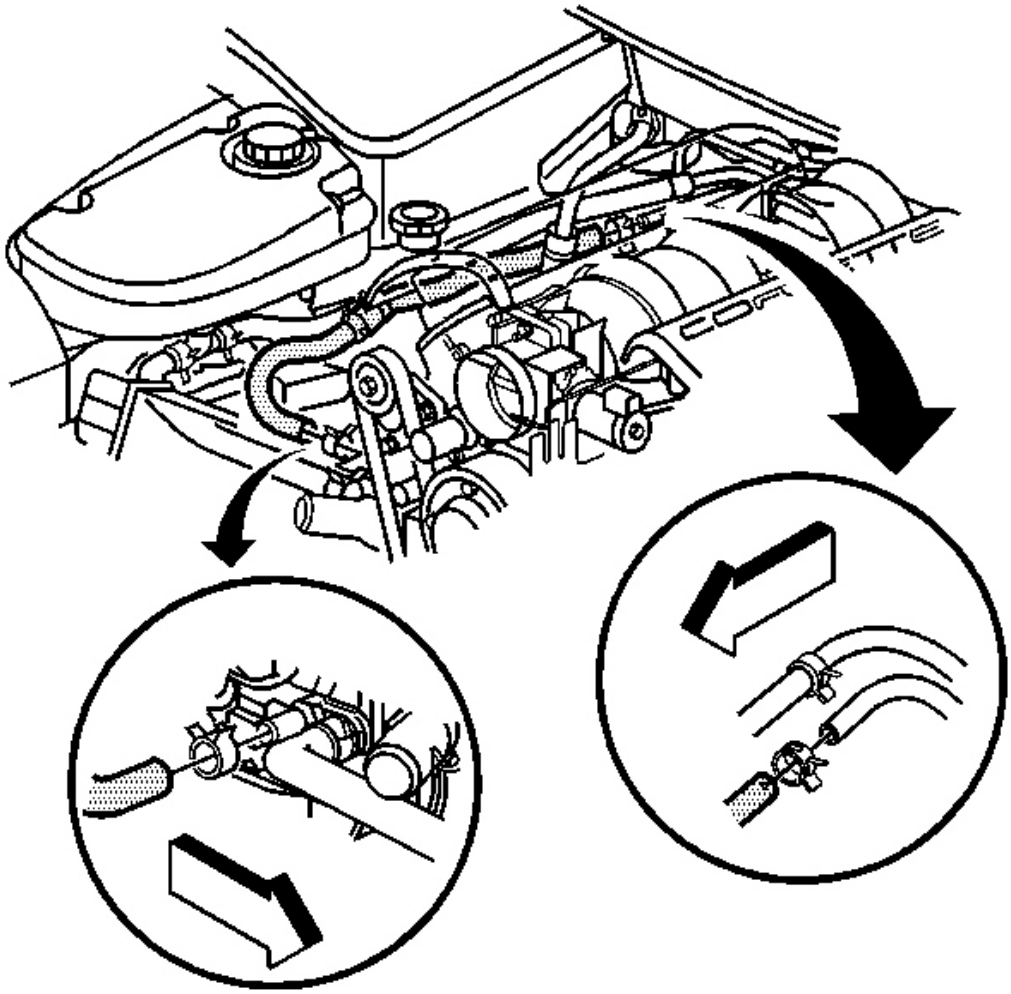

Fig. 203: Inlet Heater Hose, Heater Pipe & Coolant Pump
Courtesy of GENERAL MOTORS CORP.

3. Using the **J 38185** , release and reposition the inlet heater hose clamp away from the heater pipe.
4. Separate the inlet heater hose from heater pipe.
5. Using the **J 38185** , release and reposition the inlet heater hose clamp away from the engine coolant pump.
6. Separate the heater inlet hose from coolant pump.
7. Remove the inlet heater hose from the vehicle.

Installation Procedure

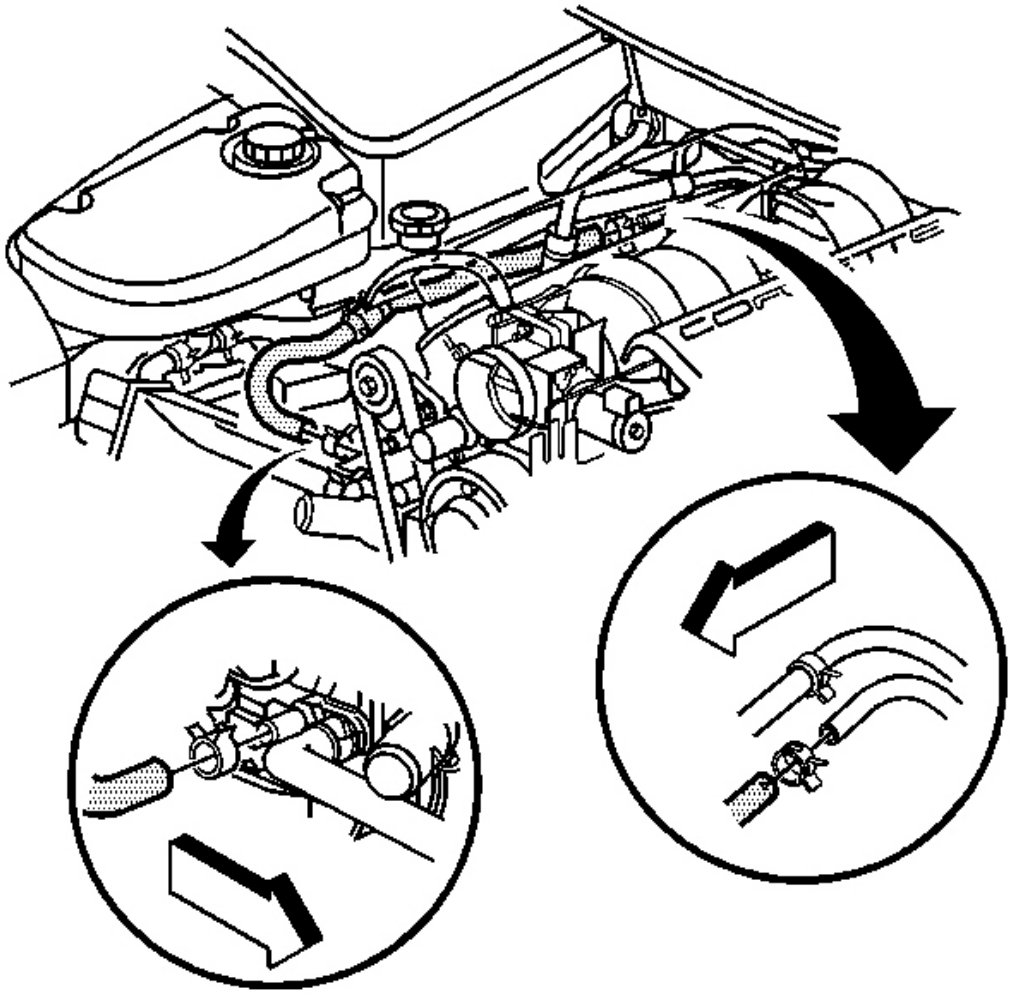

Fig. 204: Inlet Heater Hose, Heater Pipe & Coolant Pump
Courtesy of GENERAL MOTORS CORP.

1. Using a lint-free clean, dry cloth, carefully clean the sealing surfaces of the heater inlet pipe end, and the coolant pump.
2. Position the inlet heater hose to the vehicle.
3. Install the heater inlet hose to the heater pipe.
4. Using the **J 38185** , install the heater inlet hose clamp.

   Align the heater hose clamp as shown.

5. Install the heater inlet hose to the engine coolant pump.
6. Using the **J 38185** , install the heater hose clamp.

   Align the heater hose clamp as shown.

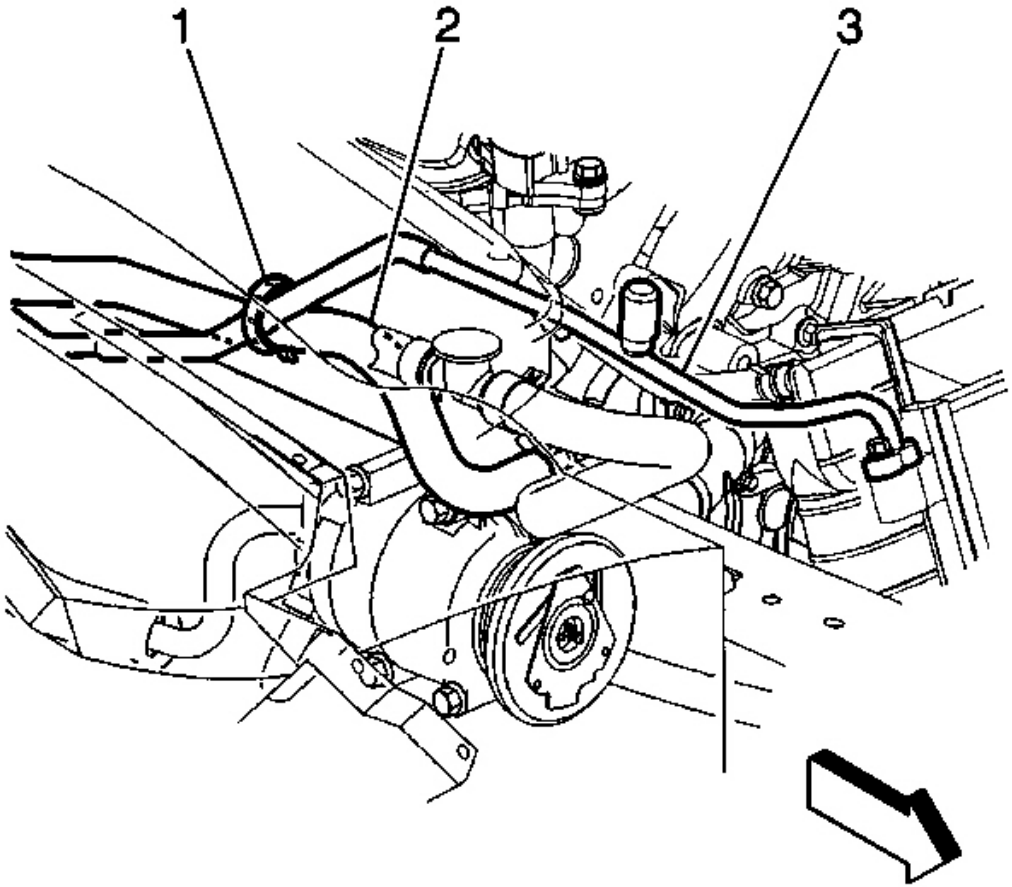

Fig. 205: Front Evaporator Tube, Heater Inlet Hose & Retaining Strap
Courtesy of GENERAL MOTORS CORP.

7. Install a new retaining strap (1) to retain the heater inlet hose (2) to the evaporator tube - front.

   Position the retaining strap as shown.

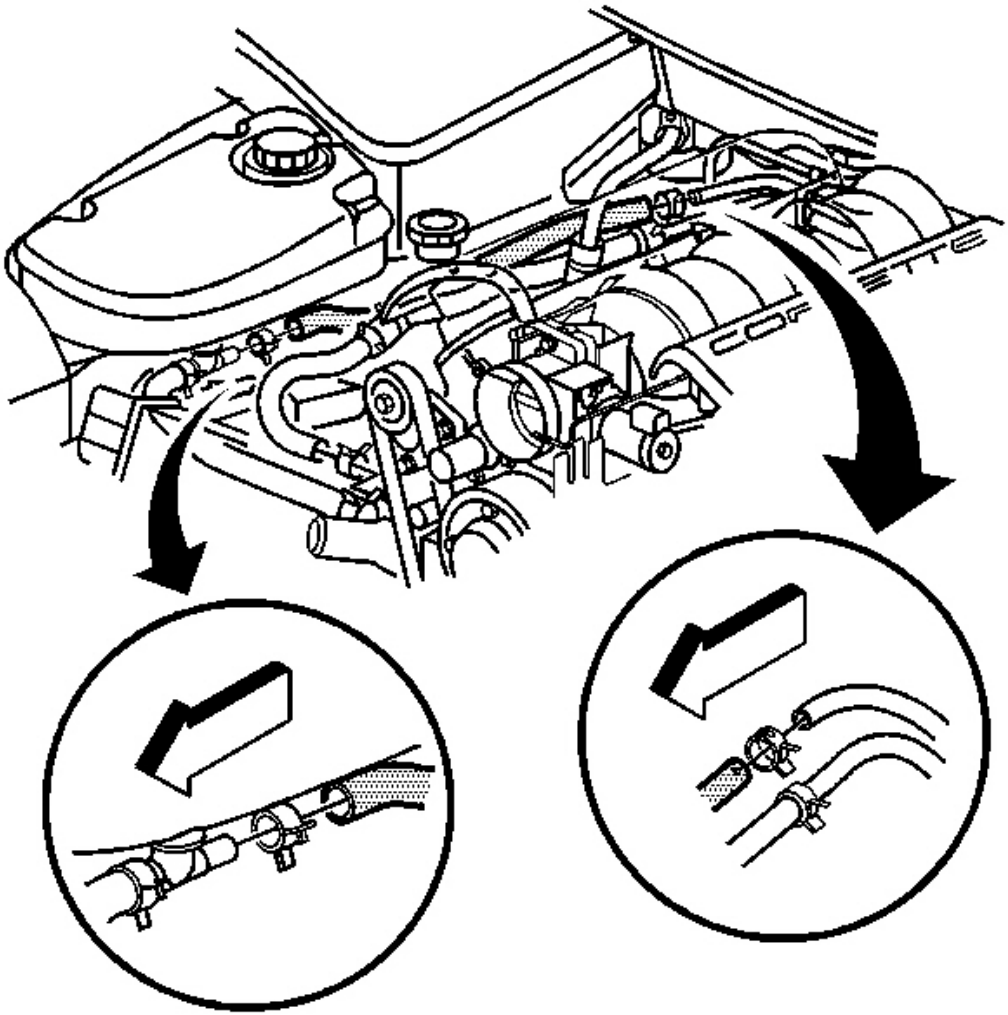

Fig. 206: Engine Cooling Coolant
Courtesy of GENERAL MOTORS CORP.

8. Refill the cooling system. Refer to **Draining and Filling Cooling System** in Engine Cooling.

HEATER PIPES REPLACEMENT

Tools Required

J 38185 Spring Hose Clamp Pliers

Removal Procedure

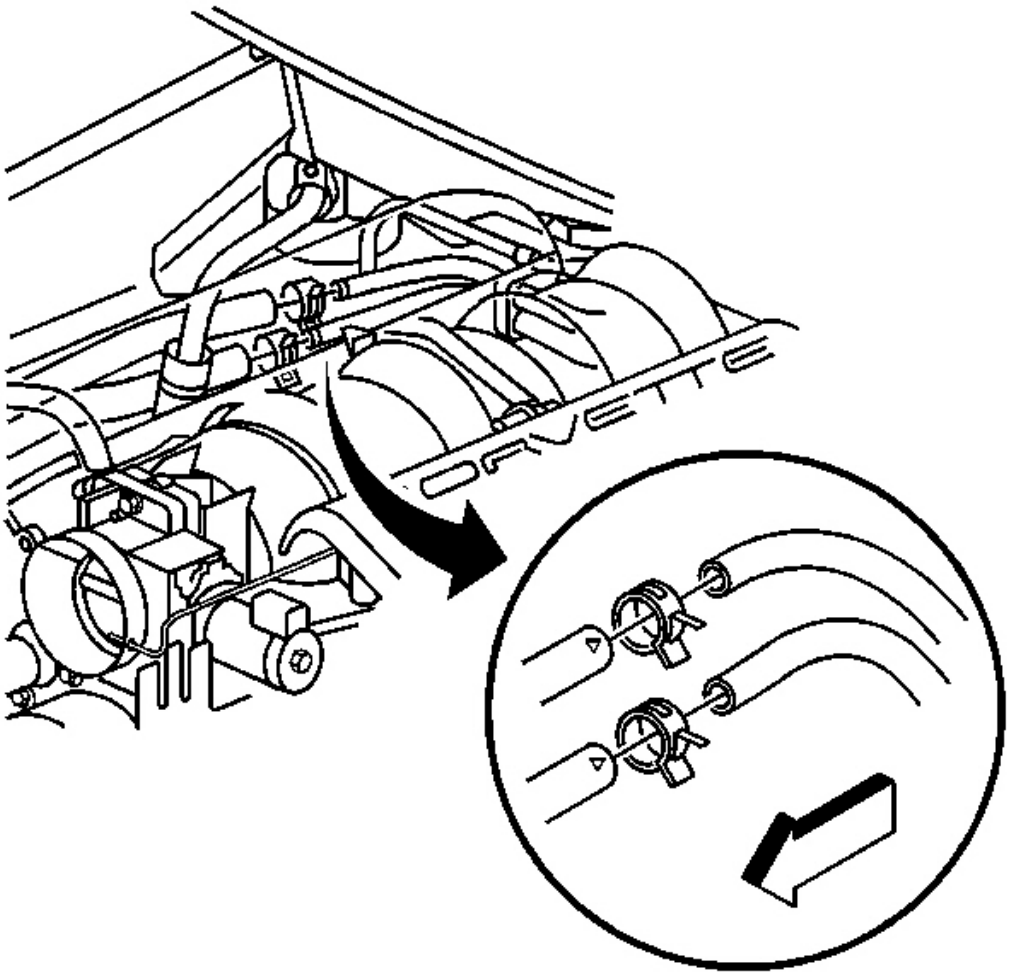

Fig. 207: RH Air Injection Check Valve & Hose Clamp
Courtesy of GENERAL MOTORS CORP.

1. Remove the battery heat shield. Refer to **Battery Heat Shield Replacement** in Engine Electrical.
2. Drain the cooling system. Refer to **Draining and Filling Cooling System** in Engine Cooling.
3. Remove the intake manifold. Refer to **Intake Manifold Replacement** in Engine Mechanical.
4. Using the **J 38185** , release and reposition the heater inlet and outlet hose clamps.
5. Separate the heater hoses from heater pipes.
6. Disconnect the hose clamp and hose from the RH air injection check valve.

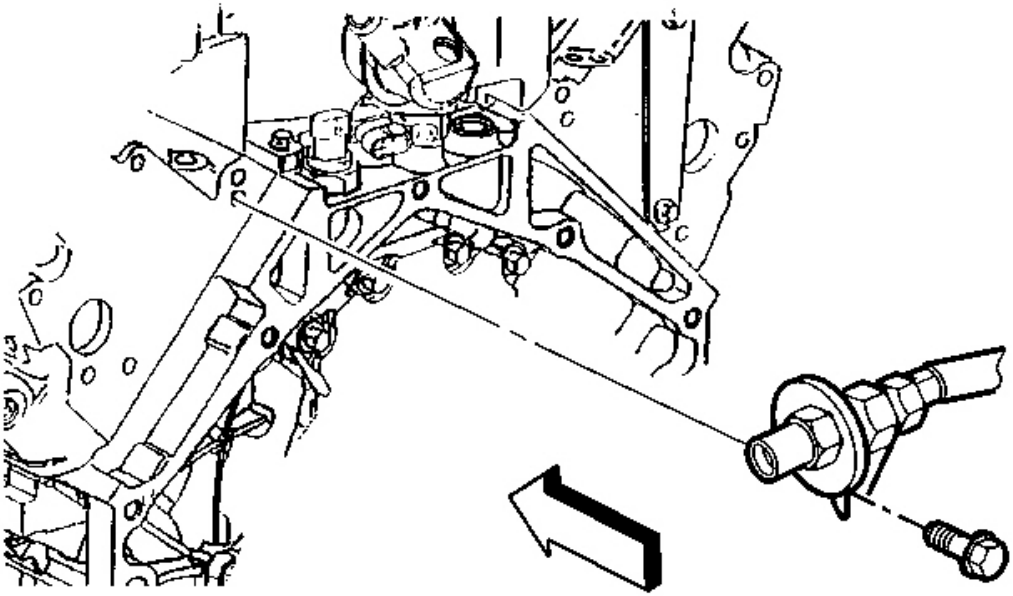

Fig. 208: RH Air Injection Check Valve To RH/LH Cylinder Head & Bolts
Courtesy of GENERAL MOTORS CORP.

7. Remove the RH air injection check valve to LH cylinder head bolt.
8. Remove the RH air injection check valve to RH cylinder head bolts.
9. Remove the RH air injection pipe.

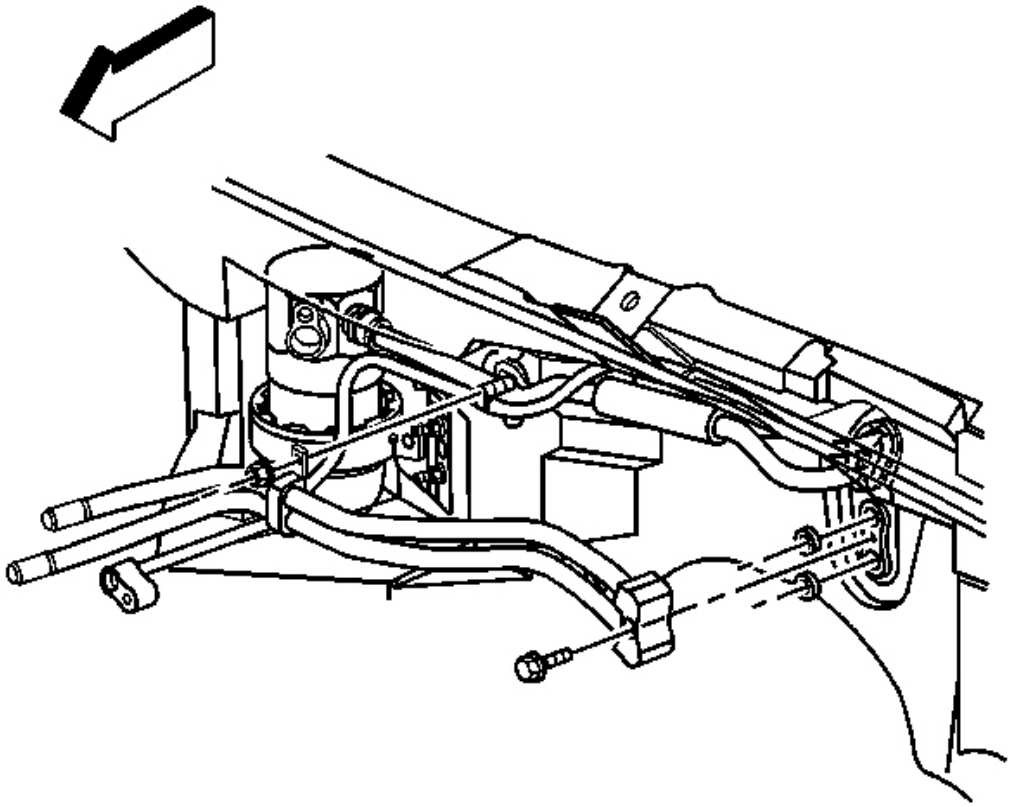

Fig. 209: Heater Core, Retaining Bolt & Heater Pipe
Courtesy of GENERAL MOTORS CORP.

10. Remove the nut retaining the heater pipe bracket to the cowl.
11. Remove the heater pipe to heater core retaining bolt.

IMPORTANT: Be sure to cap or plug the open heater core to prevent contamination.

12. Disconnect the heater pipe assembly from the heater core, allow any remaining coolant to drain, discard the seal washers and cap or plug the heater core to prevent contamination.
13. Remove the heater pipe assembly from the vehicle.

Installation Procedure

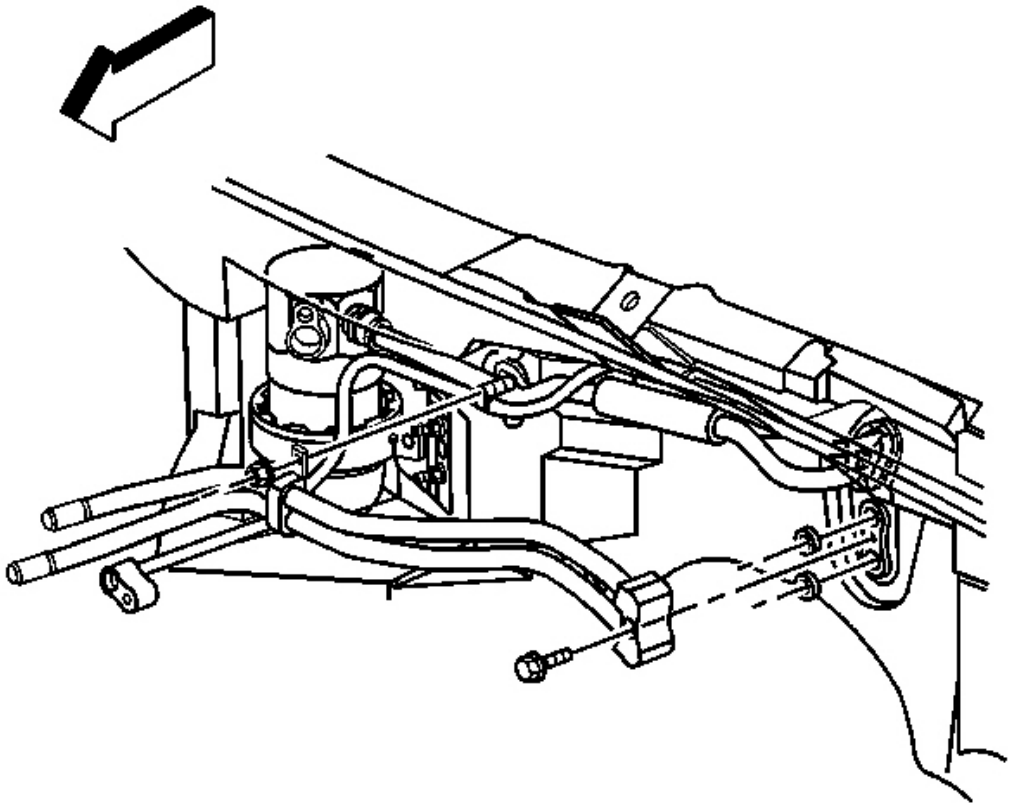

Fig. 210: Heater Core, Retaining Bolt & Heater Pipe
Courtesy of GENERAL MOTORS CORP.

1. Remove the cap or plug from the heater core.
2. Using a lint-free clean, dry cloth, carefully clean the sealing surfaces of the heater pipe assembly and the heater core.
3. Lightly coat the new seal washers with coolant.
4. Carefully slide the new sealing washers onto the heater pipe assembly until seated.
5. Install the heater pipe assembly into position in the vehicle.
6. Install the heater pipe assembly to the heater core.

NOTE: Refer to Fastener Notice in Cautions and Notices.

7. Install the heater pipe assembly retaining bolt.

Tighten: Tighten the bolt to 16 N.m (12 lb ft).

8. Install the RH air injection pipe.
9. Install the RH air injection pipe to RH cylinder head bolts.

   Tighten: Tighten the bolts to 20 N.m (15 lb ft).

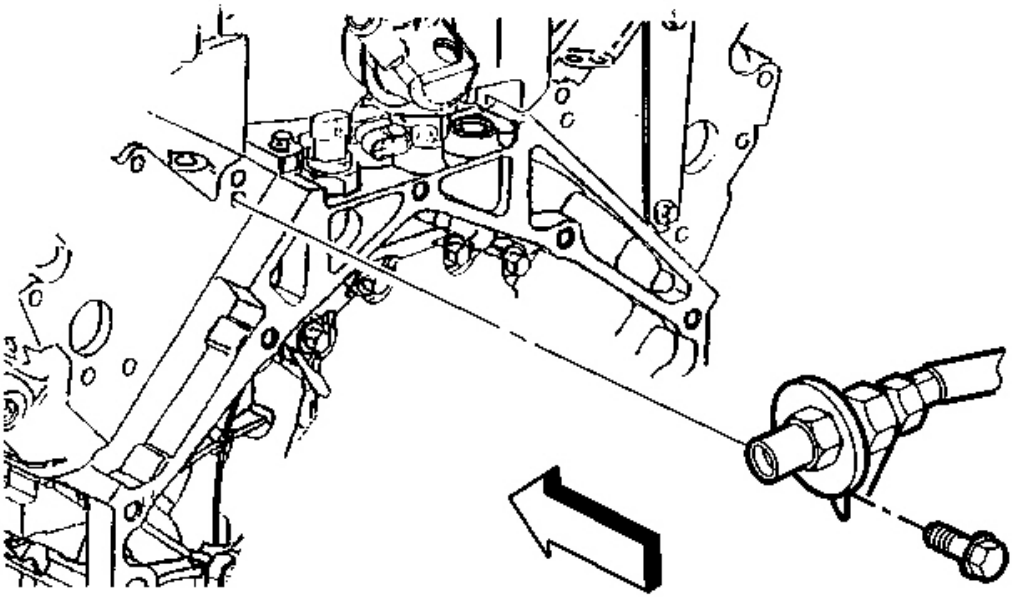

Fig. 211: RH Air Injection Check Valve To RH/LH Cylinder Head & Bolts
Courtesy of GENERAL MOTORS CORP.

10. Install the RH air injection check valve to LH cylinder head bolt.

    Tighten: Tighten the bolt to 20 N.m (15 lb ft).

11. Connect the hose and hose clamp to the RH air injection check valve.

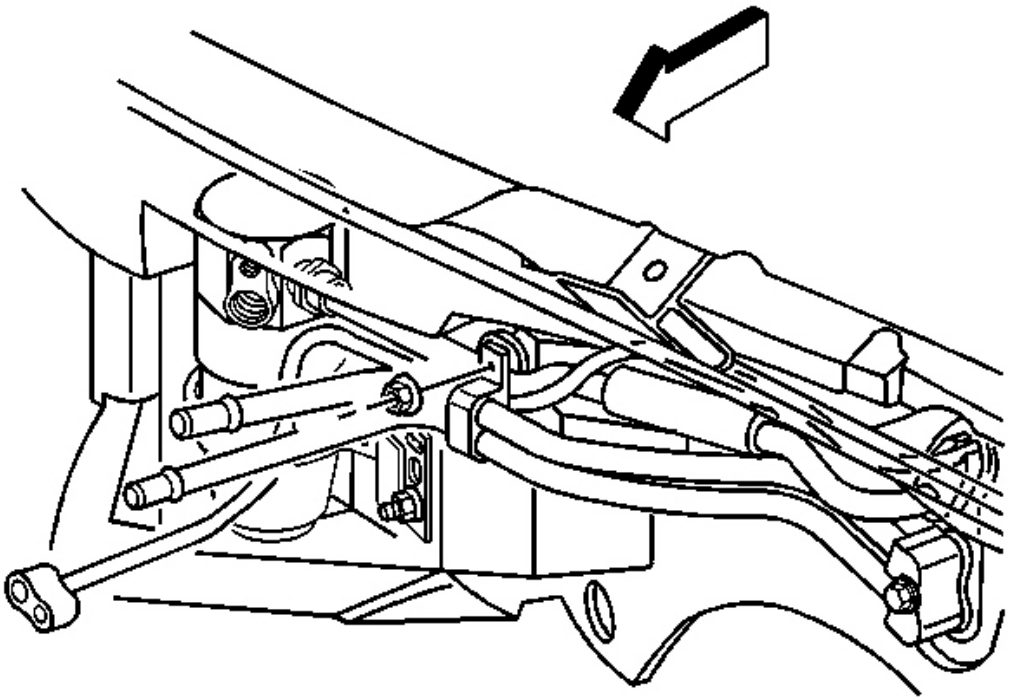

Fig. 212: Heater Pipe Bracket & Cowl
Courtesy of GENERAL MOTORS CORP.

12. Install the heater pipe bracket into position.
13. Install the heater pipe bracket retaining nut.

Tighten: Tighten the nut to 10 N.m (89 lb in).

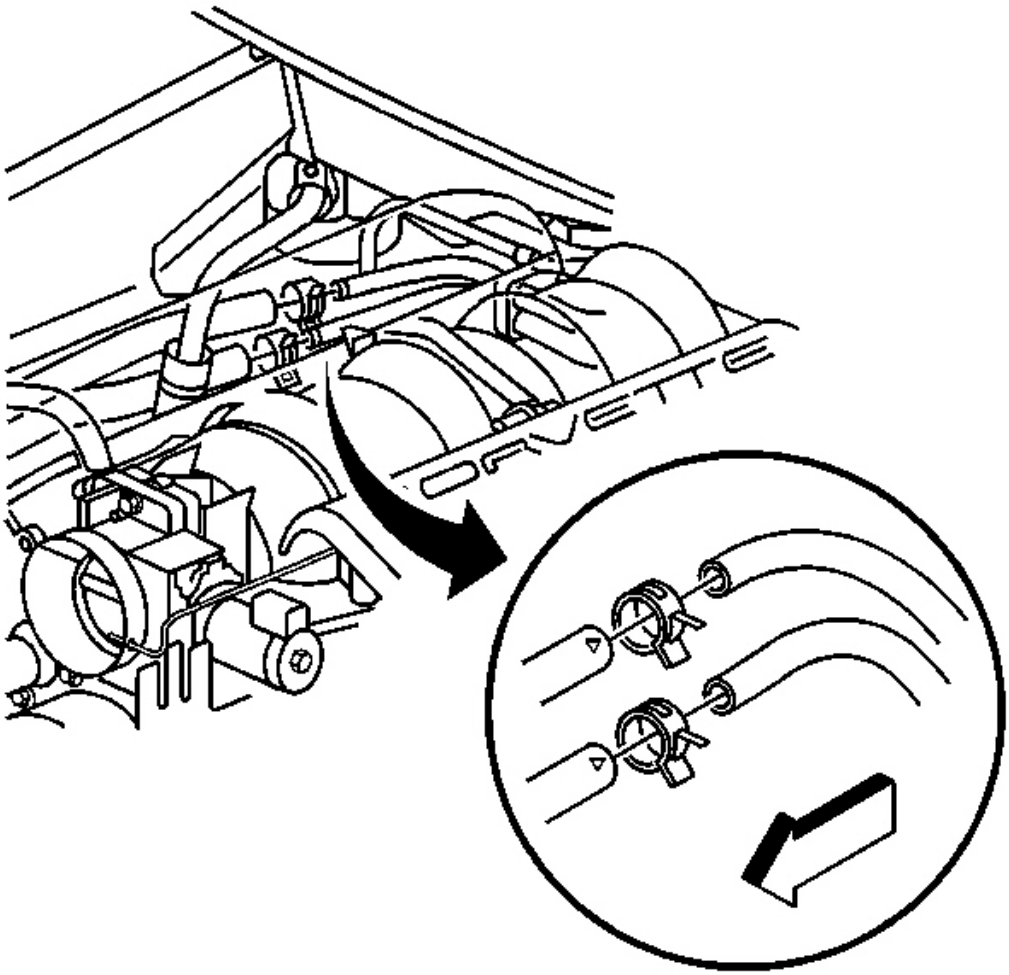

Fig. 213: RH Air Injection Check Valve & Hose Clamp
Courtesy of GENERAL MOTORS CORP.

14. Install the heater inlet and outlet hoses to the heater pipes.
15. Using the **J 38185** , install the heater hose clamps.

    Align the heater hose clamps as shown.

16. Install the intake manifold. Refer to **Intake Manifold Replacement** in Engine Mechanical.
17. Install the battery heat shield. Refer to **Battery Heat Shield Replacement** in Engine Electrical.
18. Refill the cooling system. Refer to **Draining and Filling Cooling System** in Engine Cooling.

HEATER HOSE REPLACEMENT - OUTLET

Tools Required

J 38185 Hose Clamp Pliers

Removal Procedure

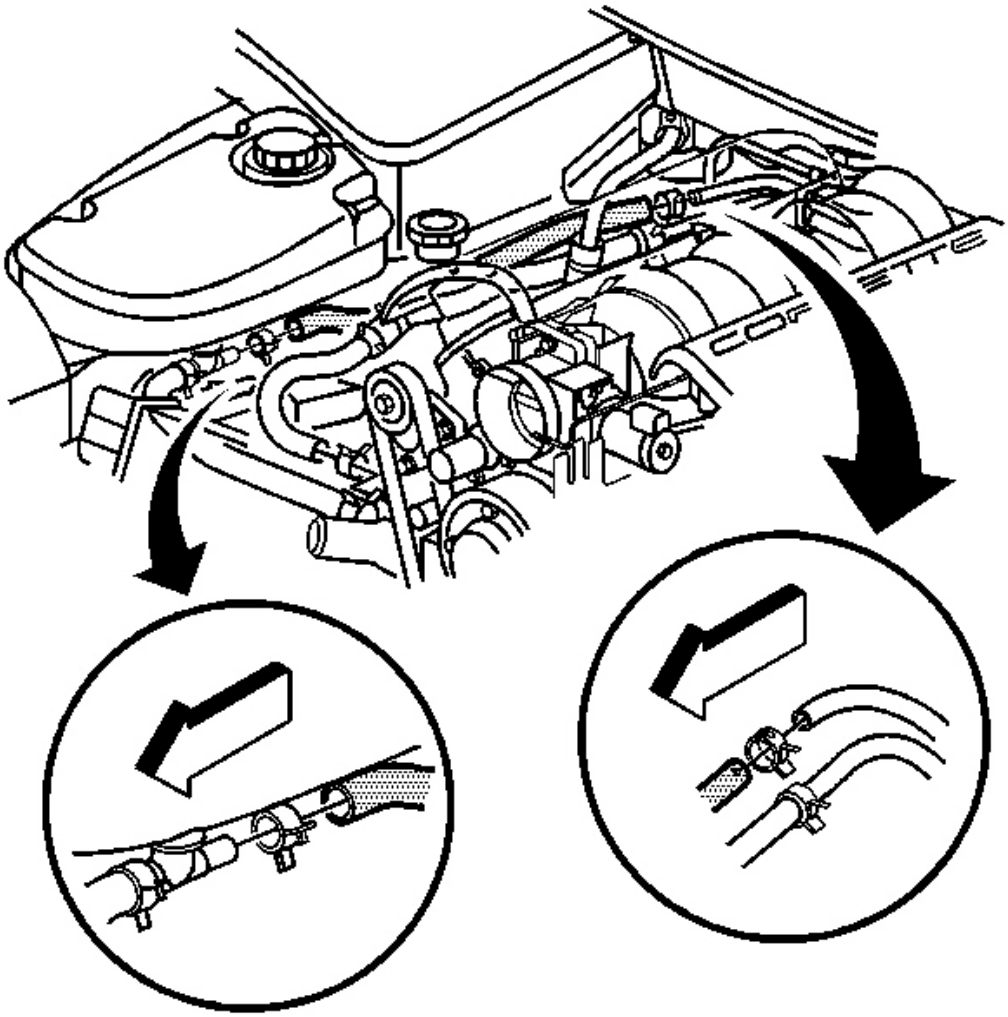

Fig. 214: Engine Cooling Coolant
Courtesy of GENERAL MOTORS CORP.

1. Drain the coolant. Refer to **Draining and Filling Cooling System** in Engine Cooling.

2. Using the **J 38185** , release and reposition the outlet heater hose clamp.
3. Separate the outlet heater hose from heater pipe.
4. Using the **J 38185** , release and reposition the outlet heater hose clamp away from the coolant surge tank.
5. Separate the outlet heater hose from surge tank inlet.

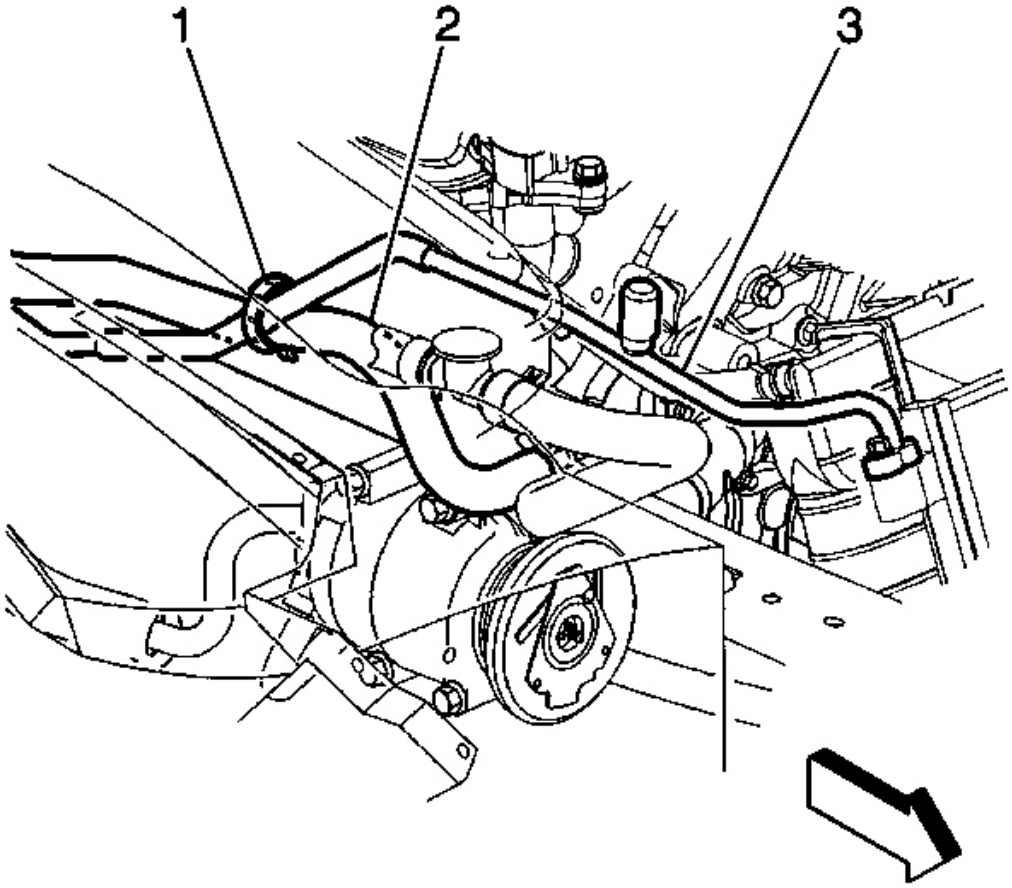

Fig. 215: Front Evaporator Tube, Heater Inlet Hose & Retaining Strap
Courtesy of GENERAL MOTORS CORP.

6. Remove the outlet heater hose from the vehicle.
7. Remove the retaining strap (1), which retains the heater inlet hose (2) to the evaporator tube - front.

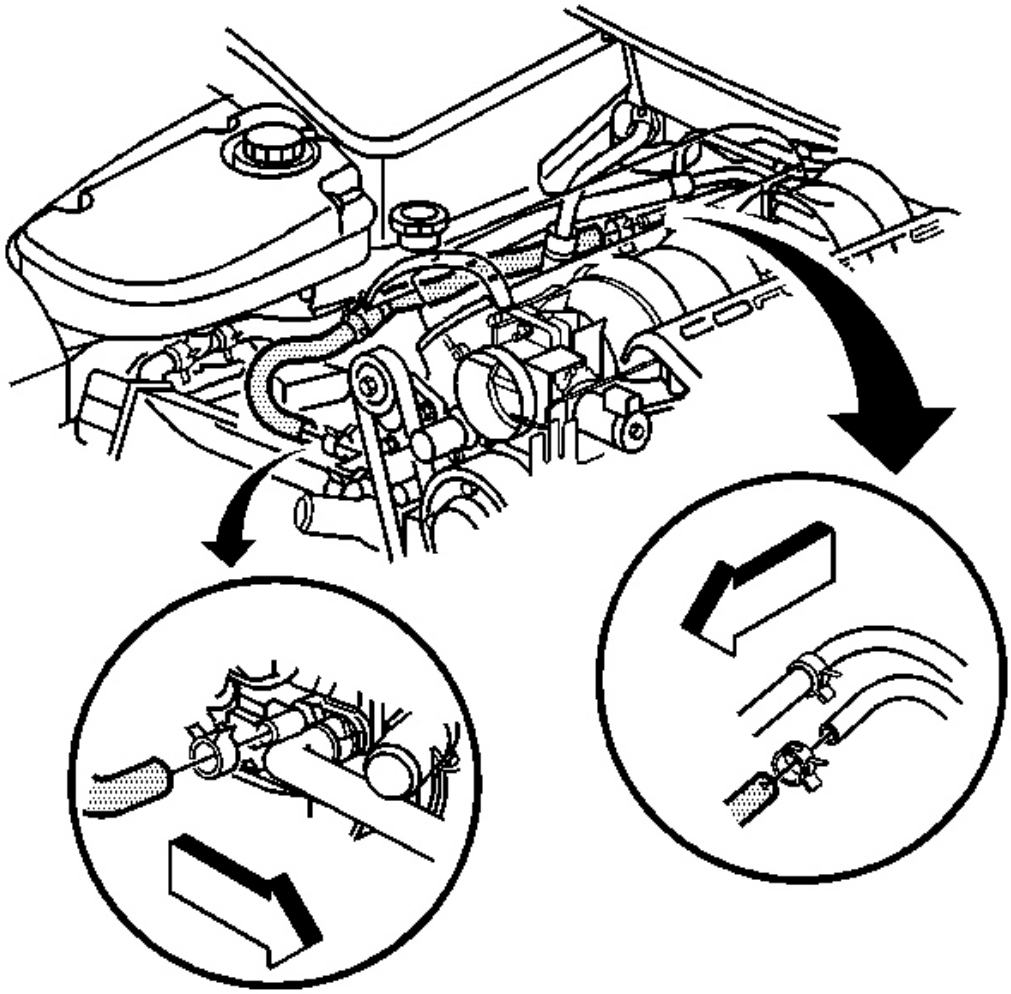

Fig. 216: Inlet Heater Hose, Heater Pipe & Coolant Pump
Courtesy of GENERAL MOTORS CORP.

8. Separate the inlet heater hose from heater pipe.
9. Using the **J 38185** , release and reposition the inlet heater hose clamp away from the engine coolant pump.
10. Separate the heater inlet hose from coolant pump.
11. Remove the inlet heater hose from the vehicle.

Installation Procedure

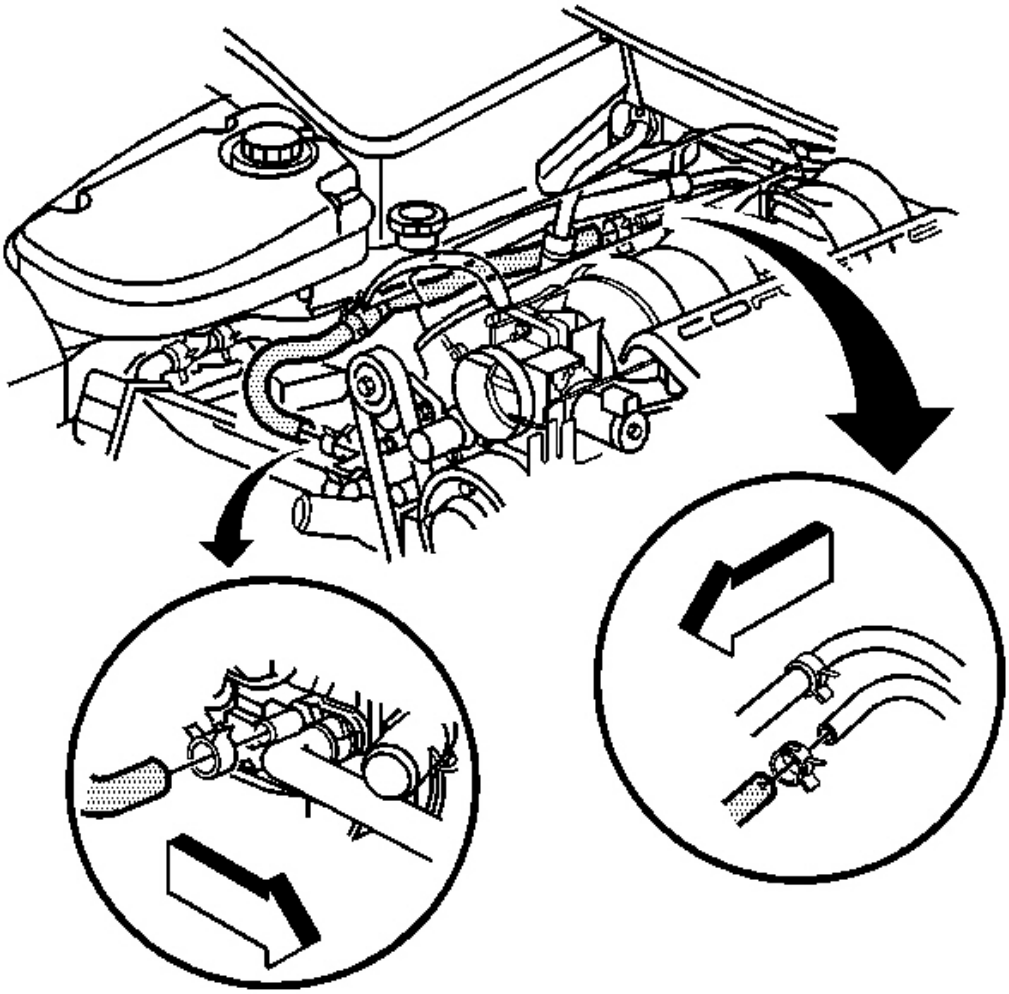

Fig. 217: Inlet Heater Hose, Heater Pipe & Coolant Pump
Courtesy of GENERAL MOTORS CORP.

1. Using a lint-free clean, dry cloth, carefully clean the sealing surfaces of the heater outlet pipe end, and the coolant surge tank inlet.

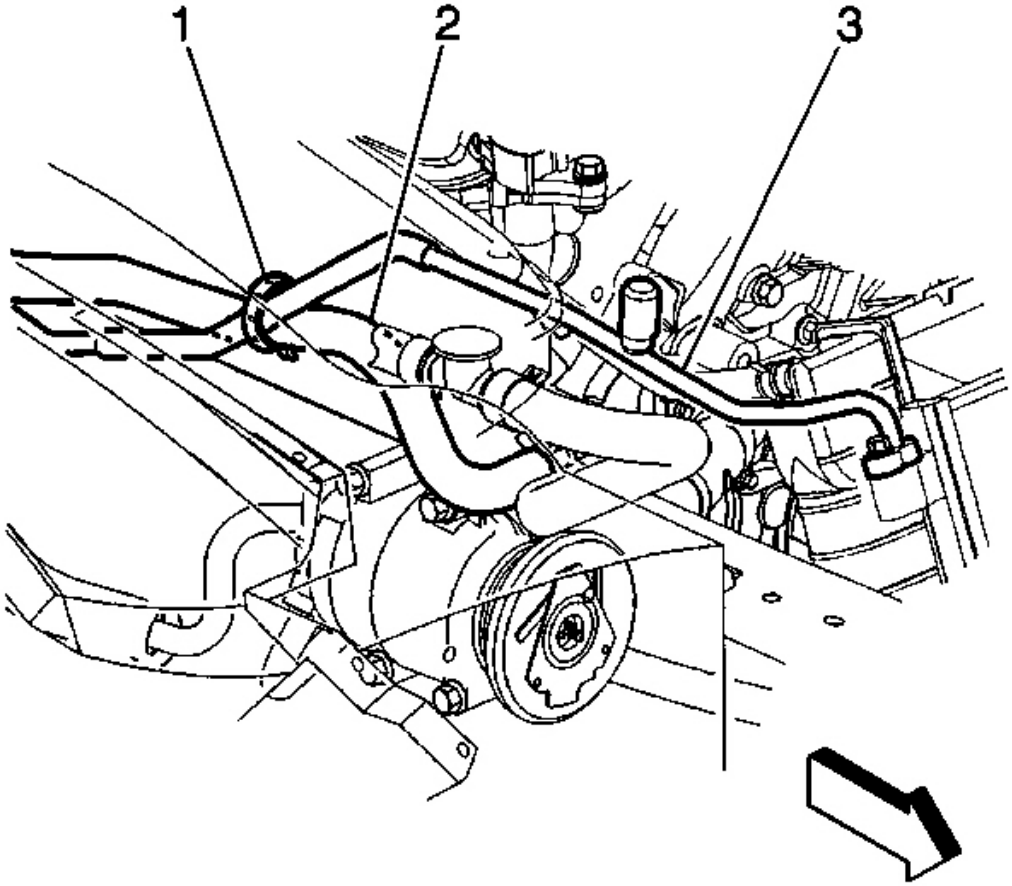

Fig. 218: Front Evaporator Tube, Heater Inlet Hose & Retaining Strap
Courtesy of GENERAL MOTORS CORP.

2. Install a new retaining strap (1) to retain the heater inlet hose (2) to the evaporator tube - front.

   Position the retaining strap as shown.

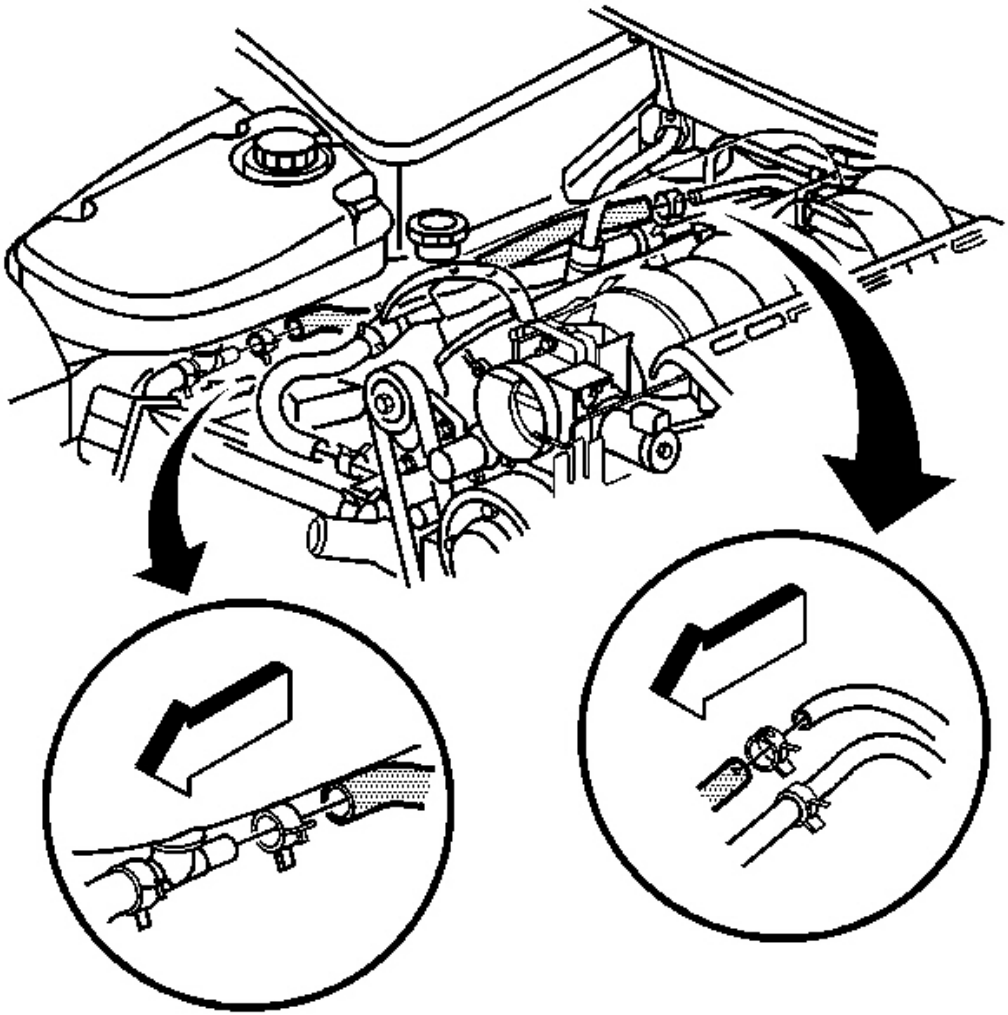

Fig. 219: Engine Cooling Coolant
Courtesy of GENERAL MOTORS CORP.

3. Install the outlet heater hose to the heater outlet pipe.
4. Using the **J 38185** , install the heater hose clamp.

   Align the heater hose clamp as shown.

5. Install the outlet heater hose to the coolant surge tank.
6. Using the **J 38185** , install the heater hose clamp.

Align the heater hose clamp as shown.

7. Refill the cooling system. Refer to **Draining and Filling Cooling System** in Engine Cooling.

BLOWER MOTOR RESISTOR ASSEMBLY REPLACEMENT

Removal Procedure

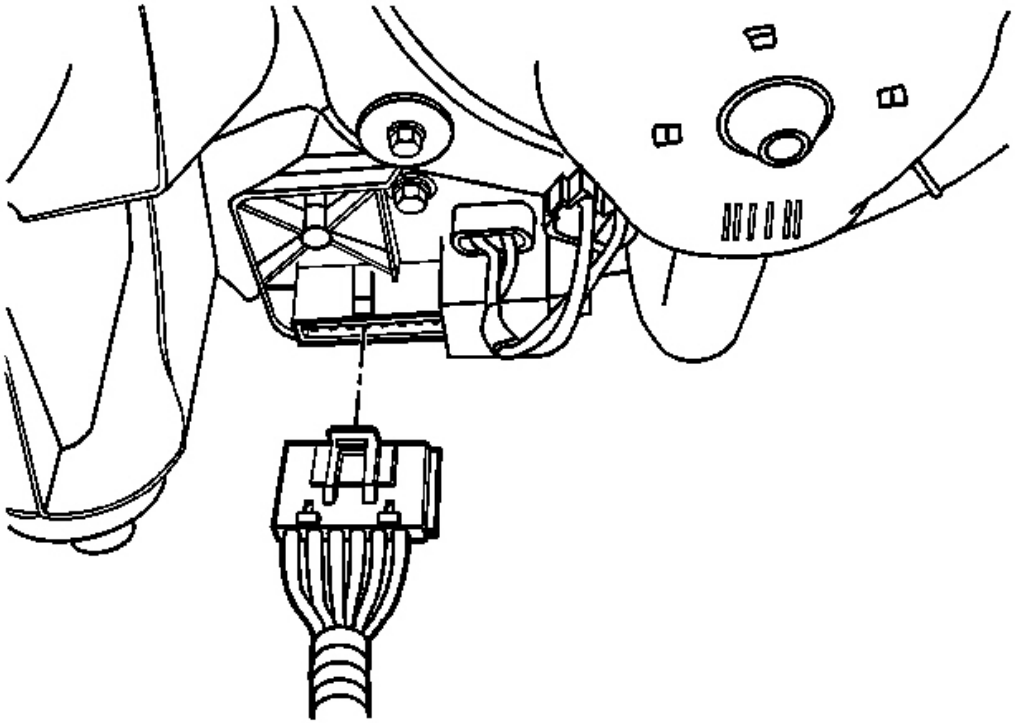

Fig. 220: Blower Motor Resistor & Wiring Harness Electrical Connector
Courtesy of GENERAL MOTORS CORP.

1. Remove the front floor kick-up panel. Refer to **Kick-Up Panel Replacement - Front Floor** in Interior Trim.
2. Remove the cover from the I/P electrical center.
3. Remove the BLO MOT MaxiFuse(R) #49 from the I/P electrical center.
4. Remove the RH lower I/P insulator panel. Refer to **Closeout/Insulator Panel Replacement - Right** in Instrument Panel, Gages and Console.
5. Disconnect the wiring harness electrical connector from the blower motor resistor.

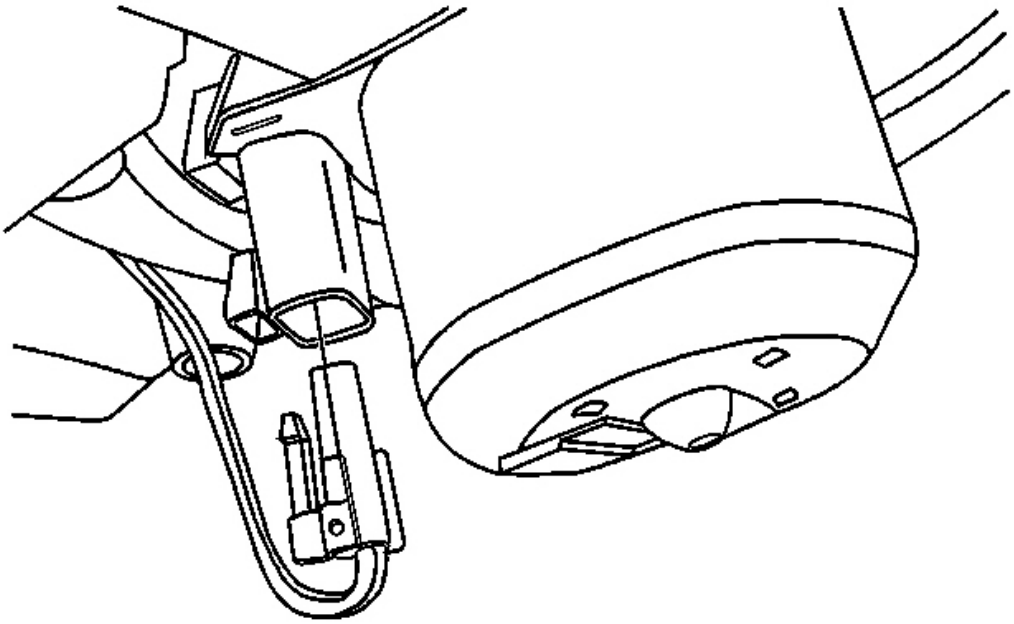

Fig. 221: Blower Motor Resistor & Electrical Connector
Courtesy of GENERAL MOTORS CORP.

6. Disconnect the blower motor resistor electrical connector from the blower motor.

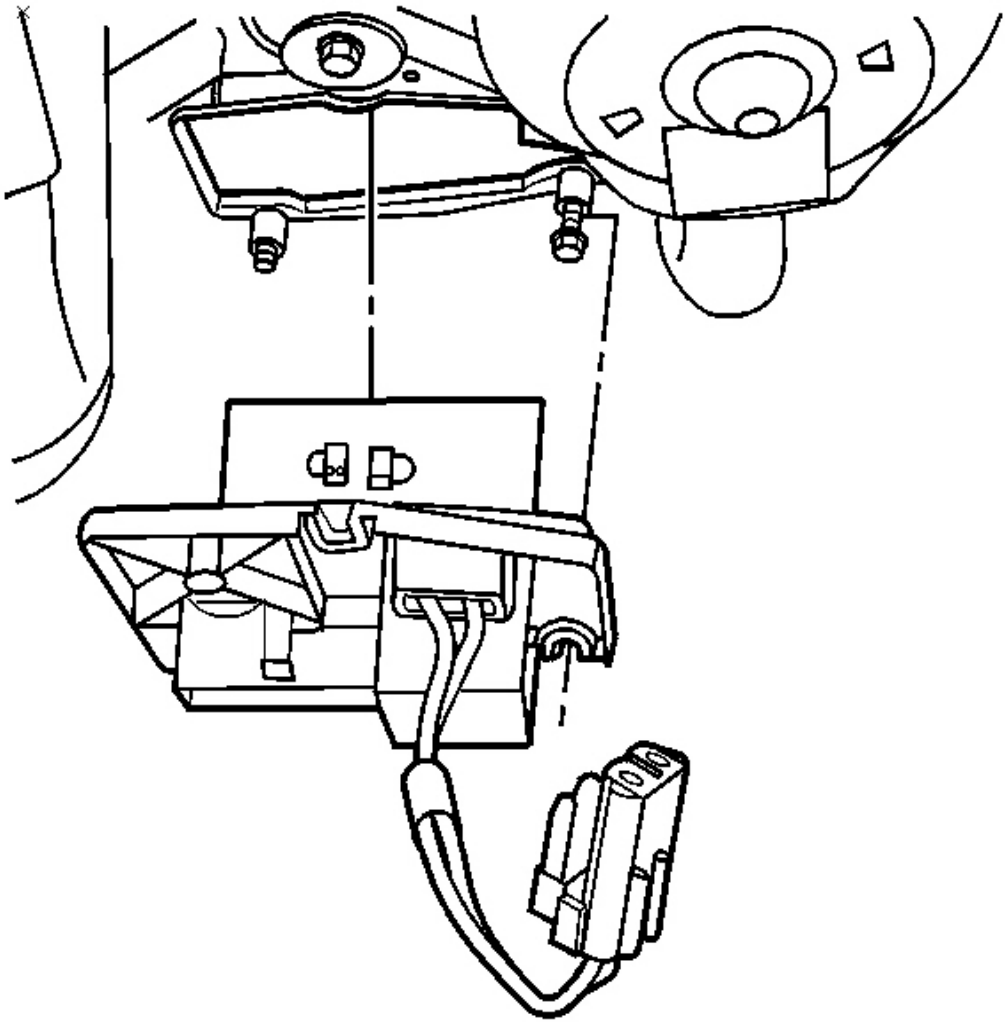

Fig. 222: Blower Motor Resistor & HVAC Module
Courtesy of GENERAL MOTORS CORP.

7. Loosen the blower motor resistor forward retaining screws (nearest the dash mat) approximately 5 mm (0.197 in).

   The resistor is slotted at the forward retaining locations.

8. Remove the resistor rear retaining screw.
9. Tilt down the rear of the resistor; use care to not damage the portion of the resistor which fits up into the HVAC module.

10. Remove the blower motor resistor from the vehicle.
11. Inspect the condition of the blower motor resistor seal. Replace if necessary.

Installation Procedure

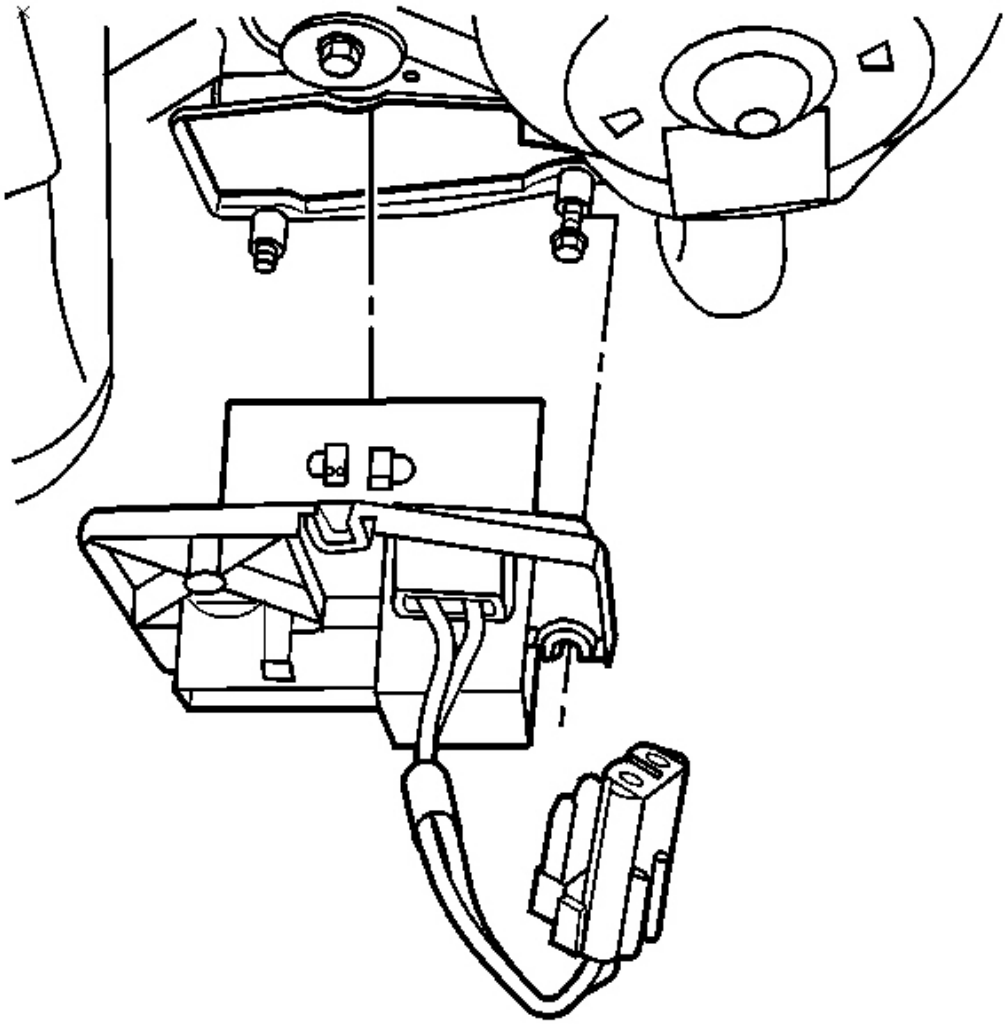

Fig. 223: Blower Motor Resistor & HVAC Module
Courtesy of GENERAL MOTORS CORP.

1. Position the blower motor resistor forward retaining slots onto the forward retaining screws and the upper portion of the resistor into the HVAC module.

2. Align and seat the resistor to the HVAC module.
3. Install the resistor rear retaining screw and drive until just secure.

NOTE: Refer to Fastener Notice in Cautions and Notices.

4. Tighten all the resistor retaining screws.

   Tighten: Tighten the screws to 1.6 N.m (14 lb in).

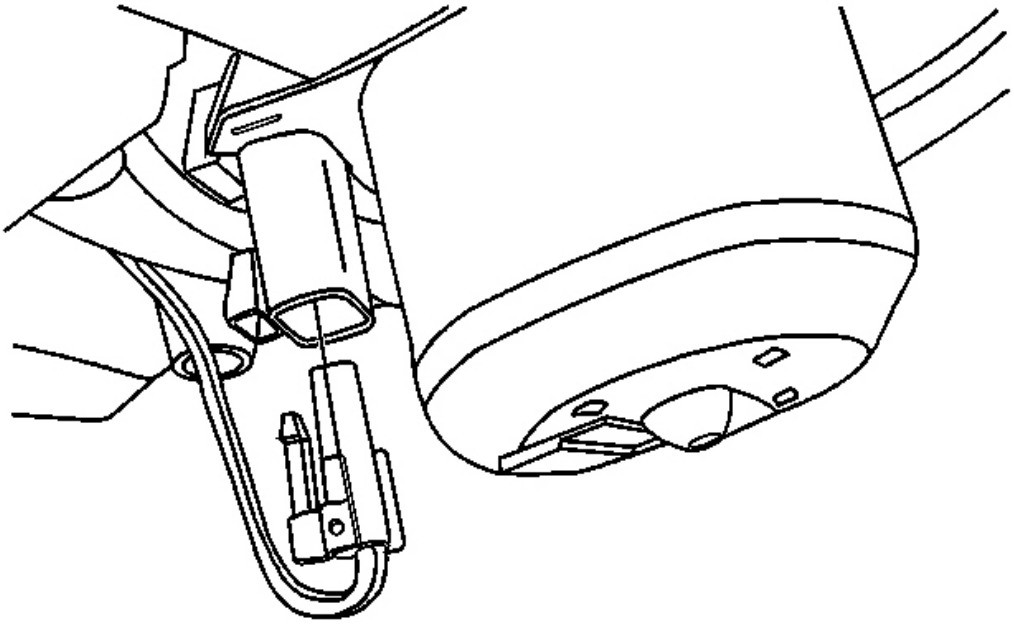

Fig. 224: Blower Motor Resistor & Electrical Connector
Courtesy of GENERAL MOTORS CORP.

5. Connect the blower motor resistor electrical connector to the blower motor.

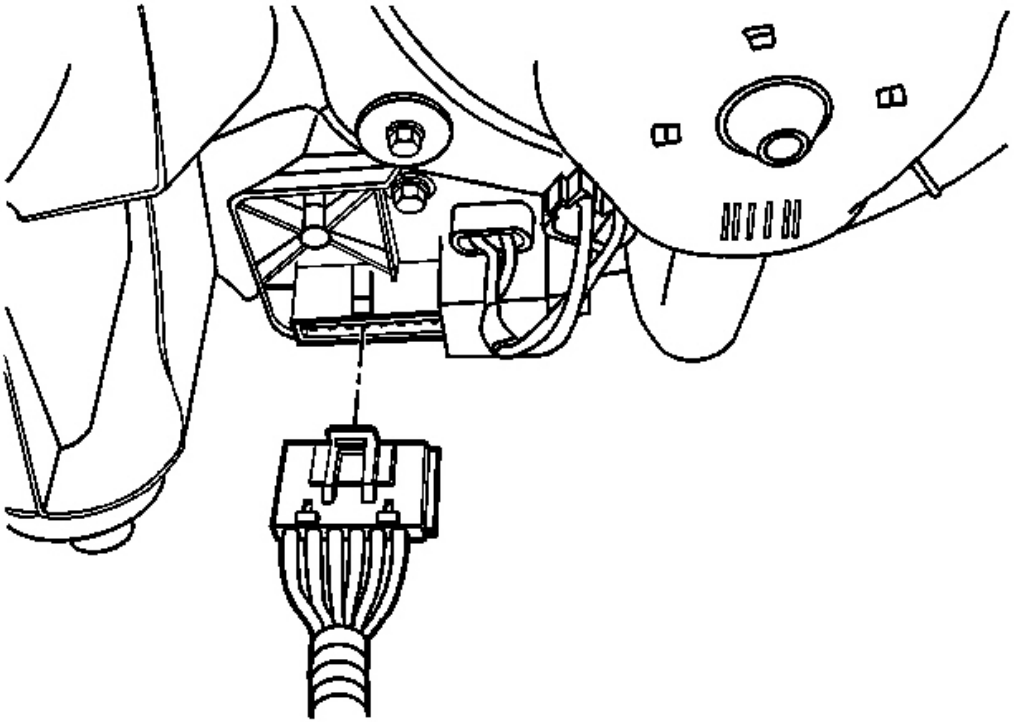

Fig. 225: Blower Motor Resistor & Wiring Harness Electrical Connector
Courtesy of GENERAL MOTORS CORP.

6. Connect the wiring harness electrical connector to the blower motor resistor.
7. Install the RH lower I/P insulator panel. Refer to **Closeout/Insulator Panel Replacement - Right** in Instrument Panel, Gages and Console.
8. Install the BLO MOT MaxiFuse(R) #49 to the I/P electrical center.
9. Install the cover to the I/P electrical center.
10. Install the front floor kick-up panel. Refer to **Kick-Up Panel Replacement - Front Floor** in Interior Trim.

BLOWER MOTOR REPLACEMENT

Removal Procedure

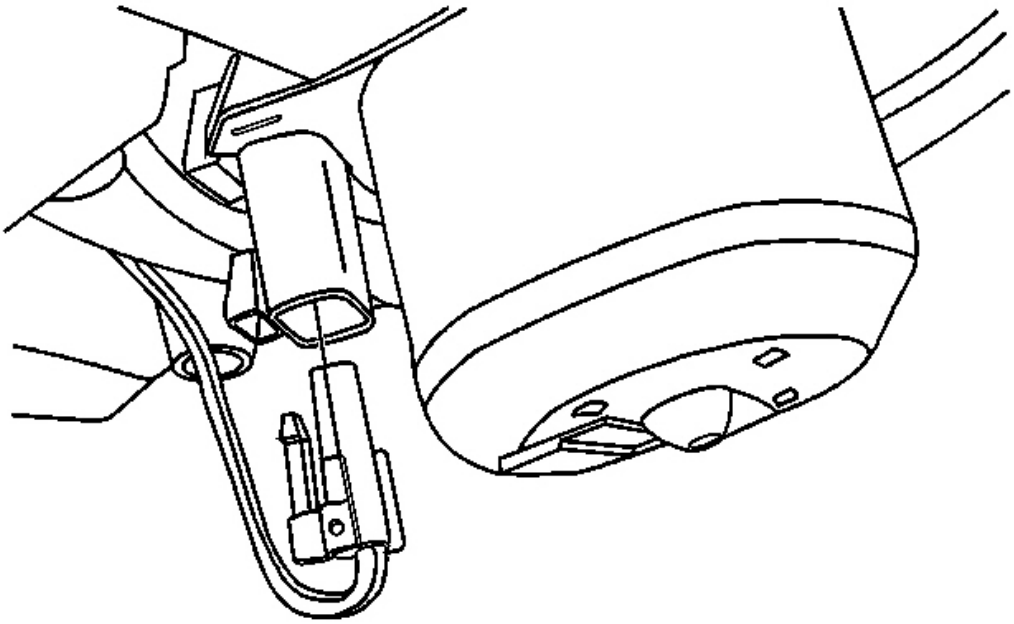

Fig. 226: Blower Motor Resistor & Electrical Connector
Courtesy of GENERAL MOTORS CORP.

1. Remove the I/P lower insulator panel - RH. Refer to **Closeout/Insulator Panel Replacement - Right** in Instrument Panel, Gages and Console.

CAUTION: Unplug the blower motor before removal. Blower motor case contact with any ground may start the fan and cause personal injury.

2. Disconnect the blower motor electrical connector.

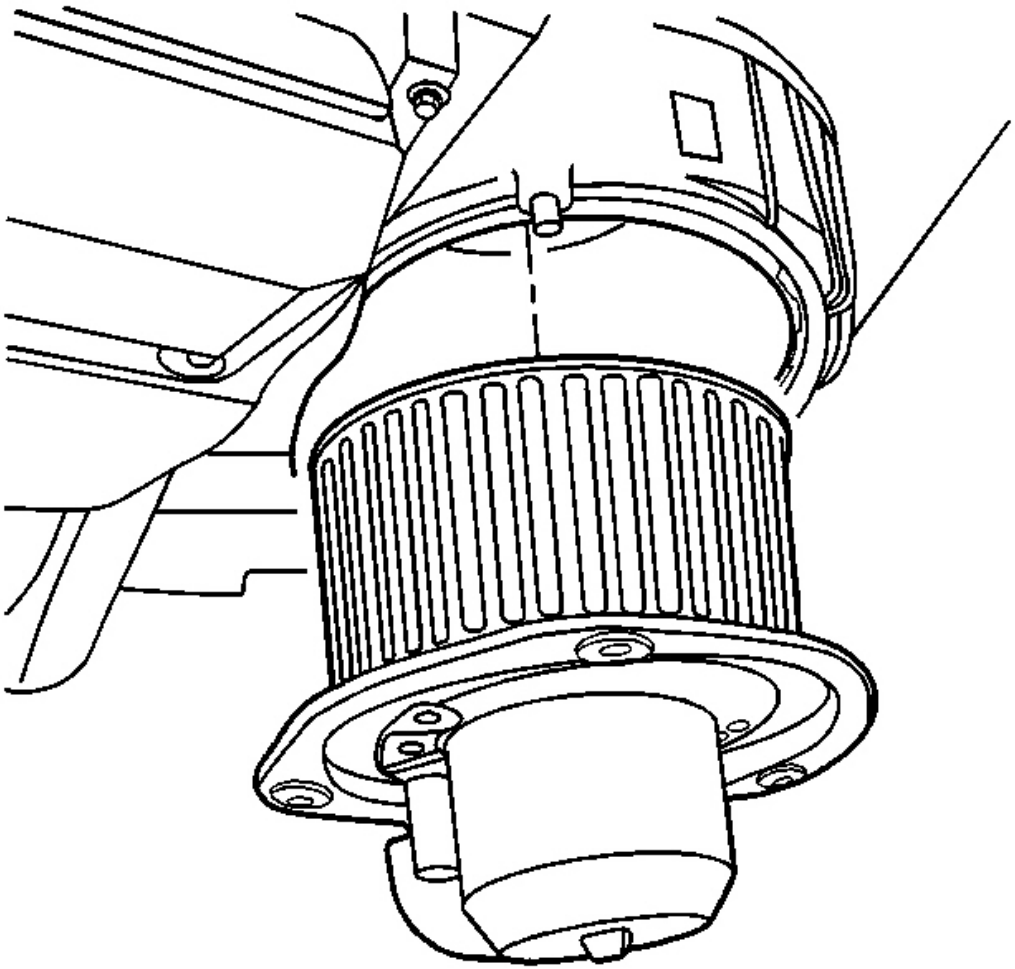

Fig. 227: View Of Blower Motor
Courtesy of GENERAL MOTORS CORP.

3. Disconnect the blower motor cooling tube from the HVAC module.
4. Remove the blower motor retaining screws.
5. Remove the blower motor from the HVAC module.

Installation Procedure

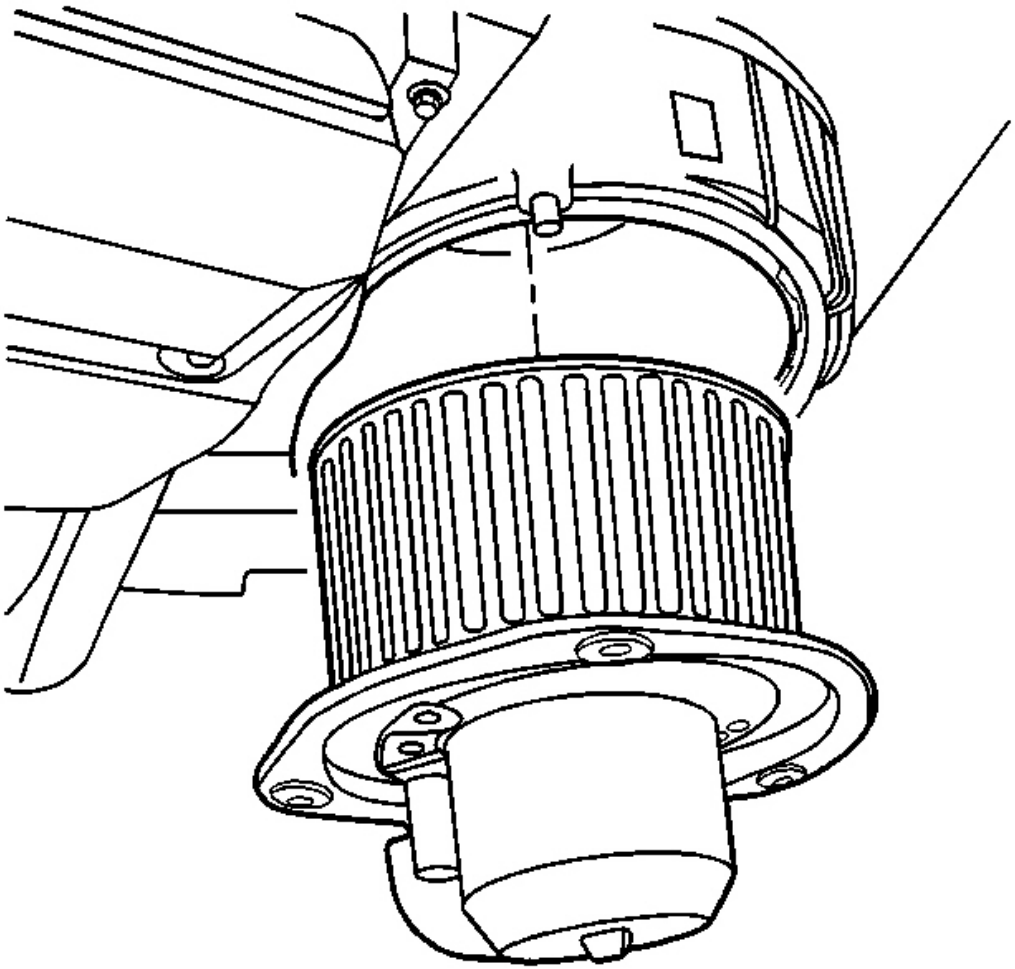

Fig. 228: View Of Blower Motor
Courtesy of GENERAL MOTORS CORP.

1. Install the blower motor to the HVAC module.

NOTE: **Refer to Fastener Notice in Cautions and Notices.**

2. Install the blower motor retaining screws.

   Tighten: Tighten the screws to 1.7 N.m (15 lb in).

3. Connect the blower motor cooling tube to the HVAC module.

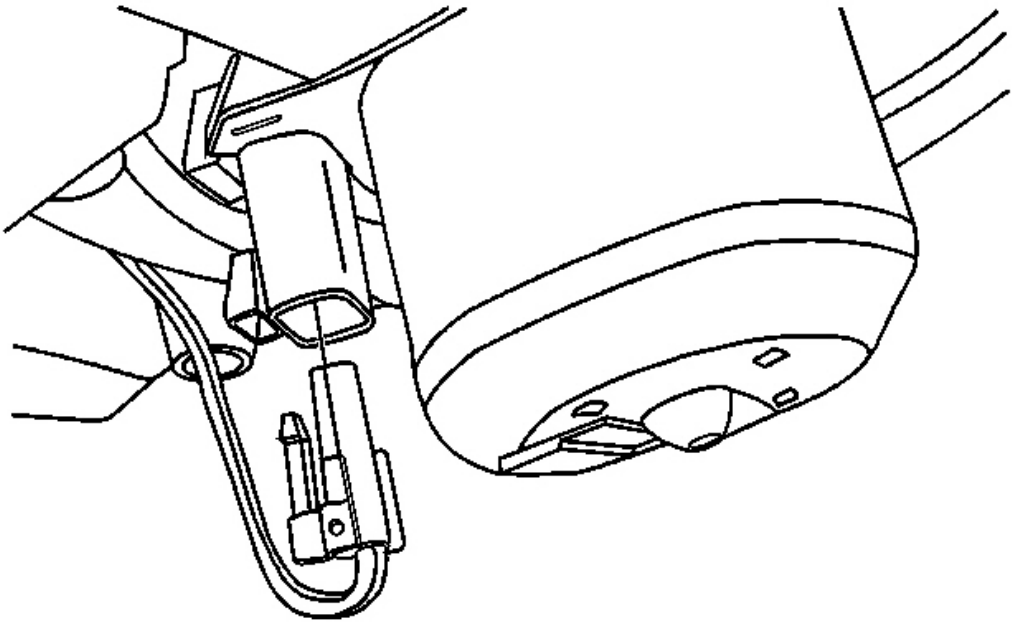

Fig. 229: Blower Motor Resistor & Electrical Connector
Courtesy of GENERAL MOTORS CORP.

4. Connect the blower motor electrical connector.
5. Install the I/P lower insulator panel - RH. Refer to **Closeout/Insulator Panel Replacement - Right** in Instrument Panel, Gages and Console.

DEFROSTER DUCT REPLACEMENT - WINDSHIELD

Removal Procedure

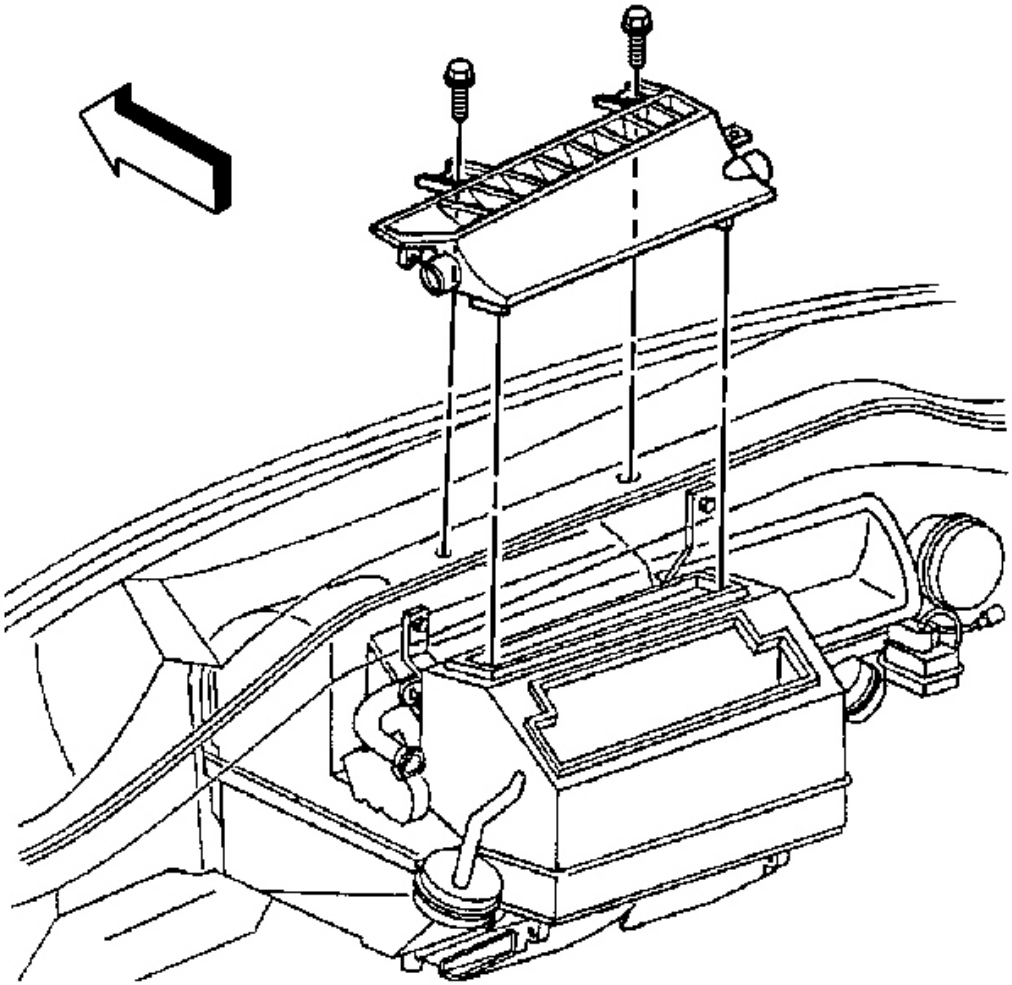

Fig. 230: Windshield Defroster Duct & Screws
Courtesy of GENERAL MOTORS CORP.

1. Remove the I/P upper trim pad. Refer to **Trim Pad Replacement - Instrument Panel (I/P) Upper** in Instrument Panel, Gages and Console.
2. Remove the DRL and sunload temperature sensor wire retainers from the windshield defroster duct.
3. Remove the windshield defroster duct retaining screws.
4. Release the windshield defroster duct from the LH and RH side window lower defogger outlet ducts.

   Lift the windshield defroster duct slightly, then use a twisting motion to release from the side window lower defogger ducts.

5. Remove the defroster duct.

Installation Procedure

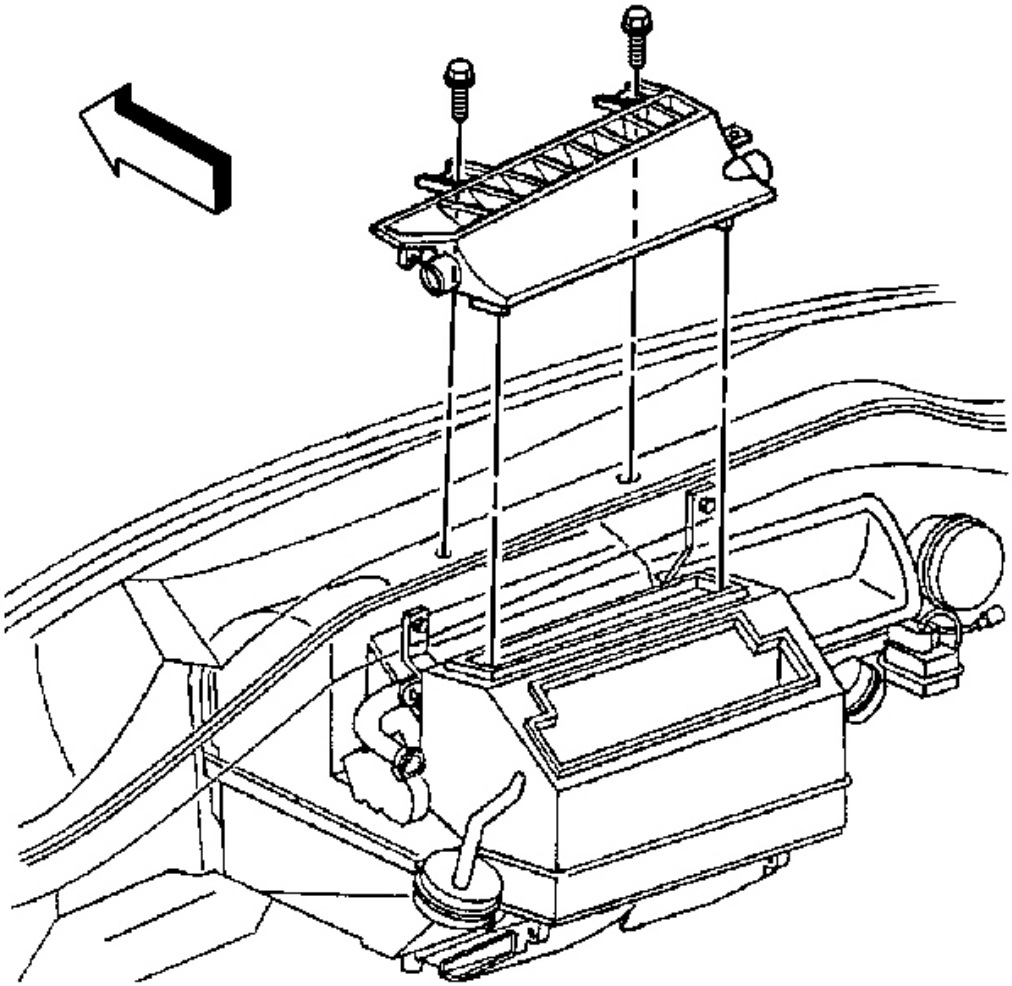

Fig. 231: Windshield Defroster Duct & Screws
Courtesy of GENERAL MOTORS CORP.

1. Install the defroster duct.

   Use a twisting motion to secure the windshield defroster duct to the LH and RH side window lower defogger outlet ducts.

2. Lower the windshield defroster duct into position and align the duct with the opening of the HVAC module and the I/P upper support beam.

NOTE: Refer to Fastener Notice in Cautions and Notices.

3. Install the windshield defroster duct LH retaining screw first (net location), then install the RH retaining screw.

   Tighten: Tighten the screws to 10 N.m (89 lb in).

4. Install the DRL and sunload temperature sensor wire retainers to the windshield defroster duct.
5. Install the I/P upper trim pad. Refer to **Trim Pad Replacement - Instrument Panel (I/P) Upper** in Instrument Panel, Gages and Console.

AIR OUTLET REPLACEMENT - CENTER

Removal Procedure

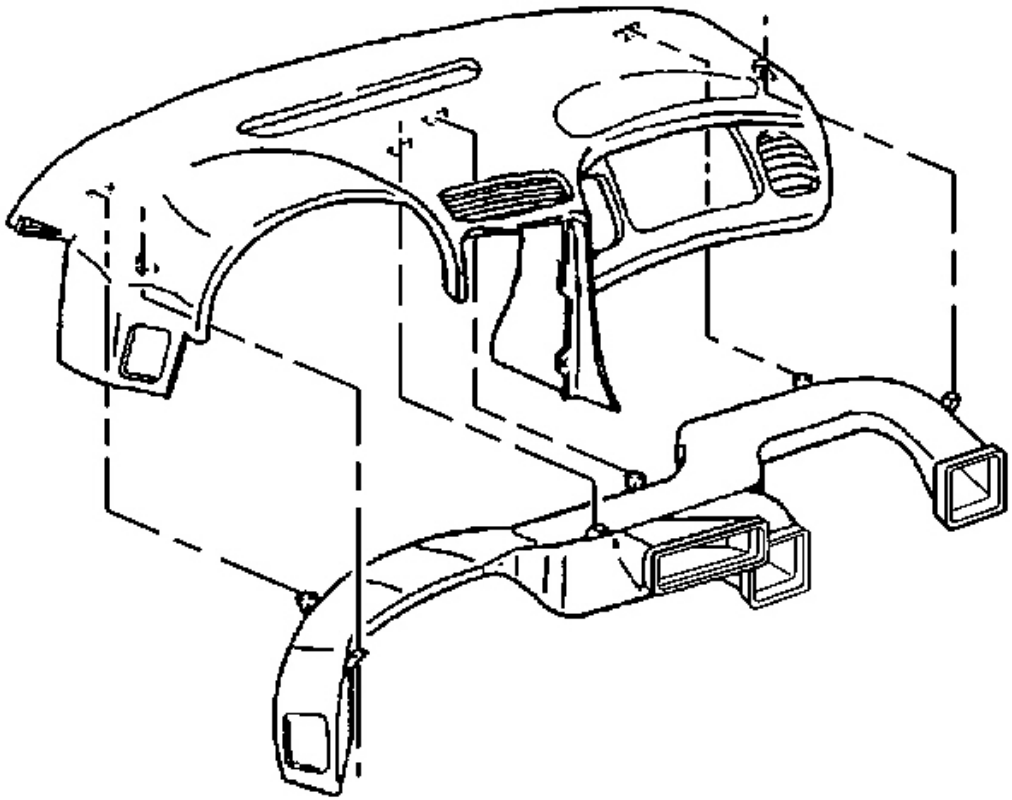

Fig. 232: Upper Trim Pad & Air Distribution Duct
Courtesy of GENERAL MOTORS CORP.

1. Remove the I/P upper trim pad. Refer to **Trim Pad Replacement - Instrument Panel (I/P) Upper** in Instrument Panel, Gages and Console.
2. Remove the screws retaining the air distribution duct to the underside of the upper trim pad.
3. Remove the air distribution duct.

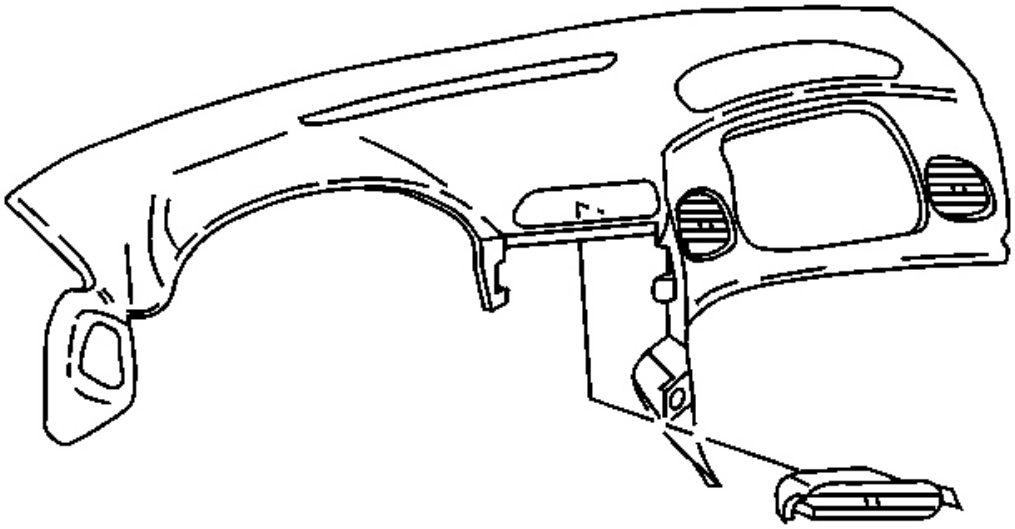

Fig. 233: Underside Trim Pad & Center Air Outlet
Courtesy of GENERAL MOTORS CORP.

4. Remove the screws retaining the center air outlet to the underside of the trim pad.
5. Remove the air outlet.

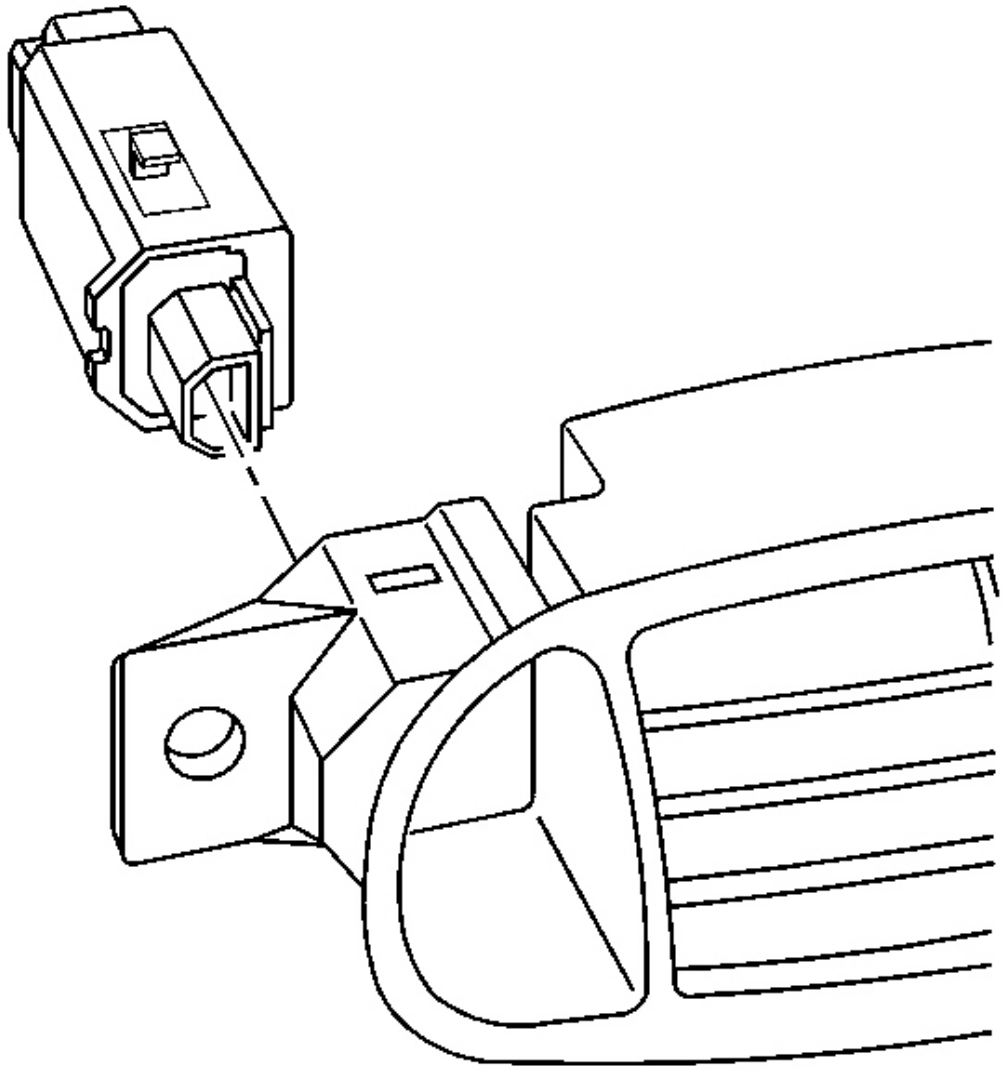

Fig. 234: Center Air Outlet & Hazard Warning Switch
Courtesy of GENERAL MOTORS CORP.

6. Remove the hazard warning switch from the center air outlet.

   CAREFULLY release the switch retaining tabs from the rear of the air outlet, then pull to remove the switch. The hazard warning switch button will release from the switch.

Installation Procedure

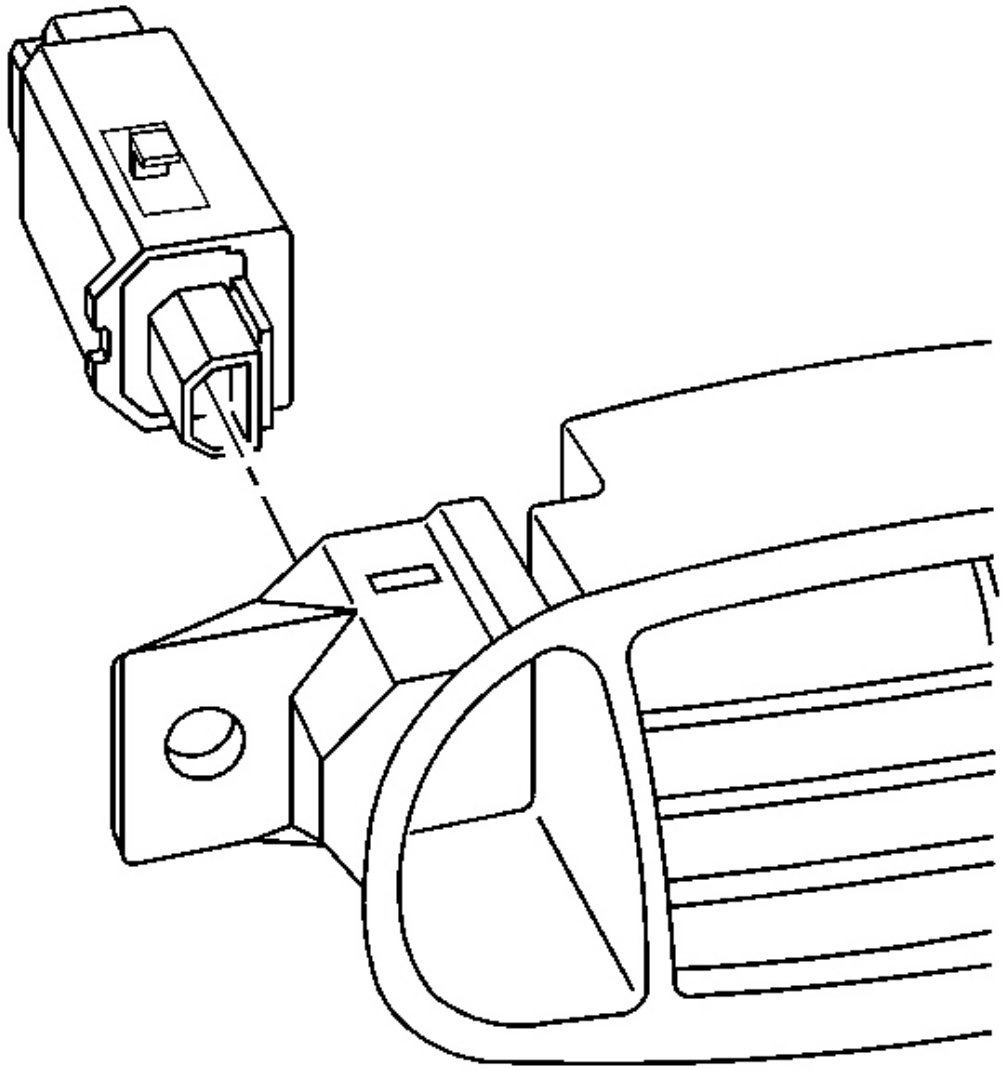

Fig. 235: Center Air Outlet & Hazard Warning Switch
Courtesy of GENERAL MOTORS CORP.

1. Install the hazard warning switch to the center air outlet.

   Align the switch to the rear of the air outlet, then push to secure the switch.

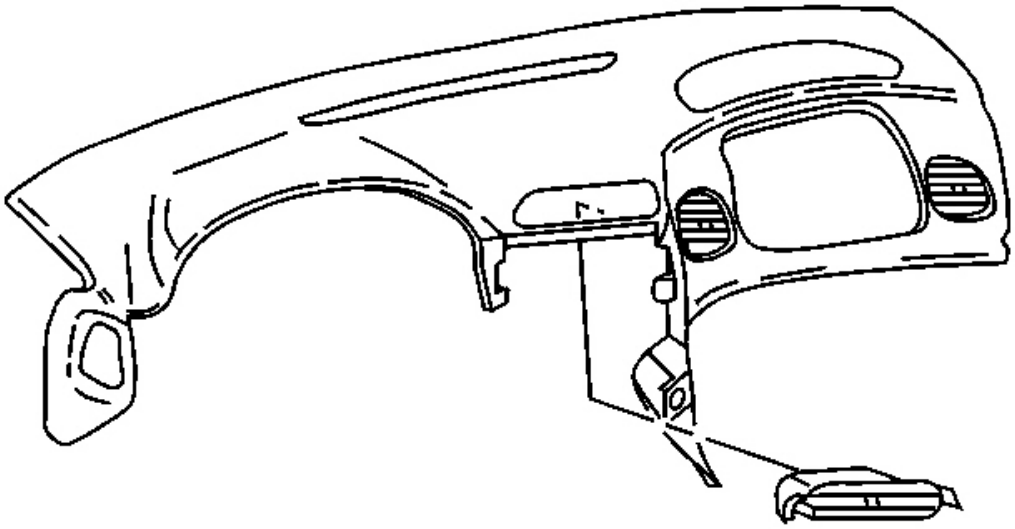

Fig. 236: Underside Trim Pad & Center Air Outlet
Courtesy of GENERAL MOTORS CORP.

2. Install the air outlet into position on the upper trim pad.

NOTE: **Refer to Fastener Notice in Cautions and Notices.**

3. Install the screws retaining the center air outlet to the trim pad.

Tighten: Tighten the screws to 1.7 N.m (15 lb in).

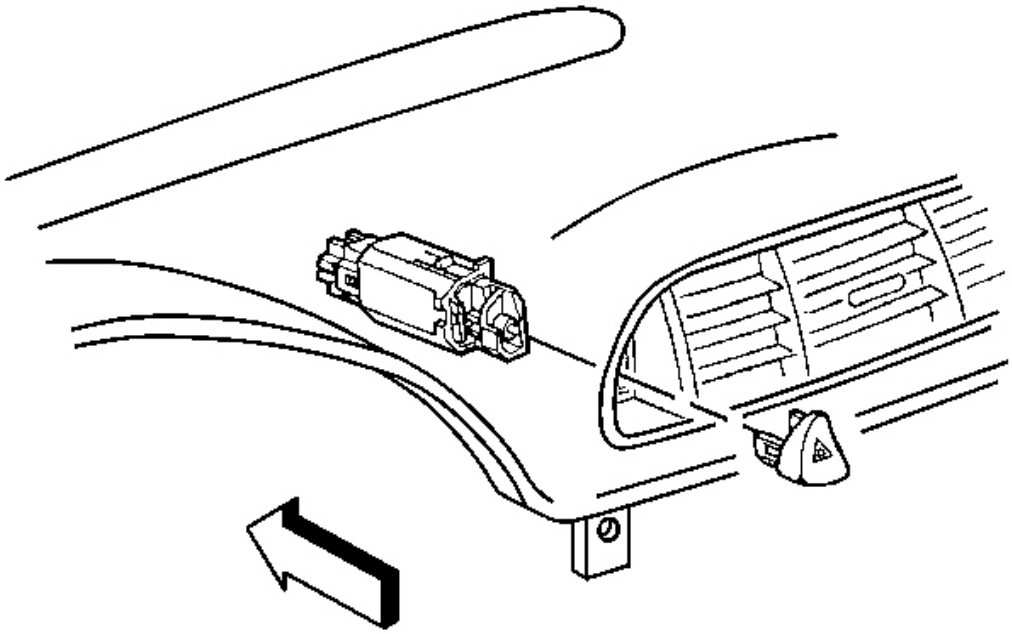

Fig. 237: Hazard Warning Switch Button
Courtesy of GENERAL MOTORS CORP.

IMPORTANT: Align the button to the switch, then push to secure.

4. Install the hazard warning switch button.

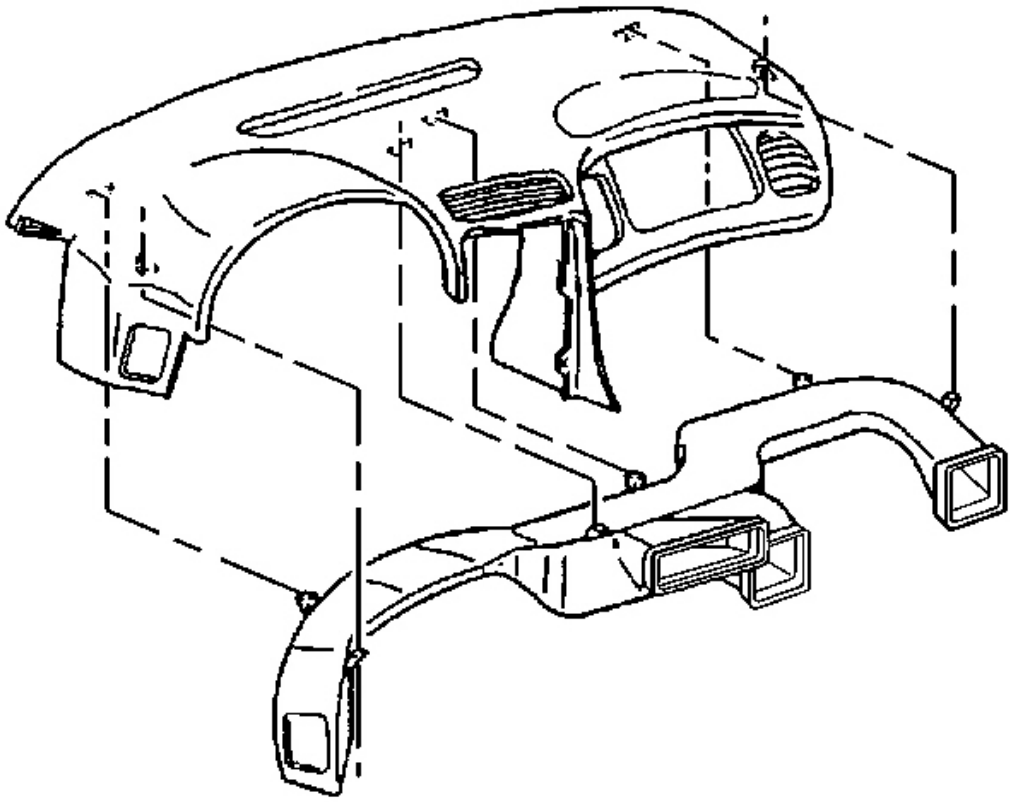

Fig. 238: Upper Trim Pad & Air Distribution Duct
Courtesy of GENERAL MOTORS CORP.

5. Install the air distribution duct into position on the upper trim pad.

   Insert the duct retaining tabs into the trim pad slots.

6. Install the screws retaining the air distribution duct to the trim pad.

   Tighten: Tighten the screws to 1.8 N.m (16 lb in).

7. Install the I/P upper trim pad. Refer to **Trim Pad Replacement - Instrument Panel (I/P) Upper** in Instrument Panel, Gages and Console.

AIR OUTLET REPLACEMENT - PASSENGER

Removal Procedure

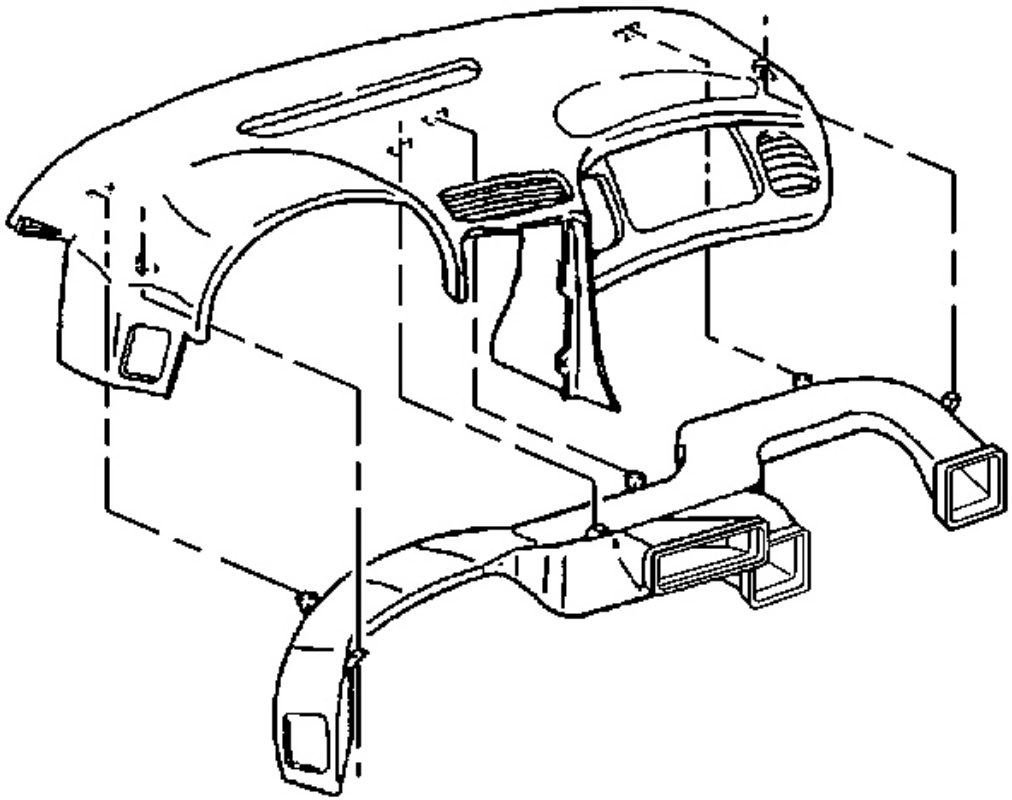

Fig. 239: Upper Trim Pad & Air Distribution Duct
Courtesy of GENERAL MOTORS CORP.

1. Remove the I/P upper trim pad. Refer to **Trim Pad Replacement - Instrument Panel (I/P) Upper** in Instrument Panel, Gages and Console.
2. Remove the screws retaining the air distribution duct to the underside of the upper trim pad.
3. Remove the air distribution duct.

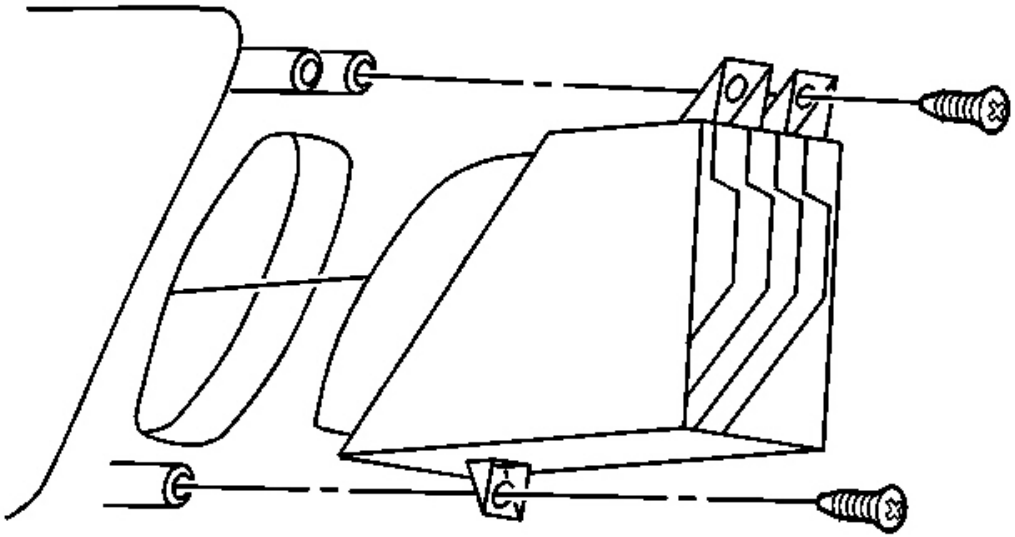

Fig. 240: Passenger Air Outlet & Screws
Courtesy of GENERAL MOTORS CORP.

4. Remove the screws retaining the passenger air outlet to the underside of the trim pad.
5. Remove the air outlet.

Installation Procedure

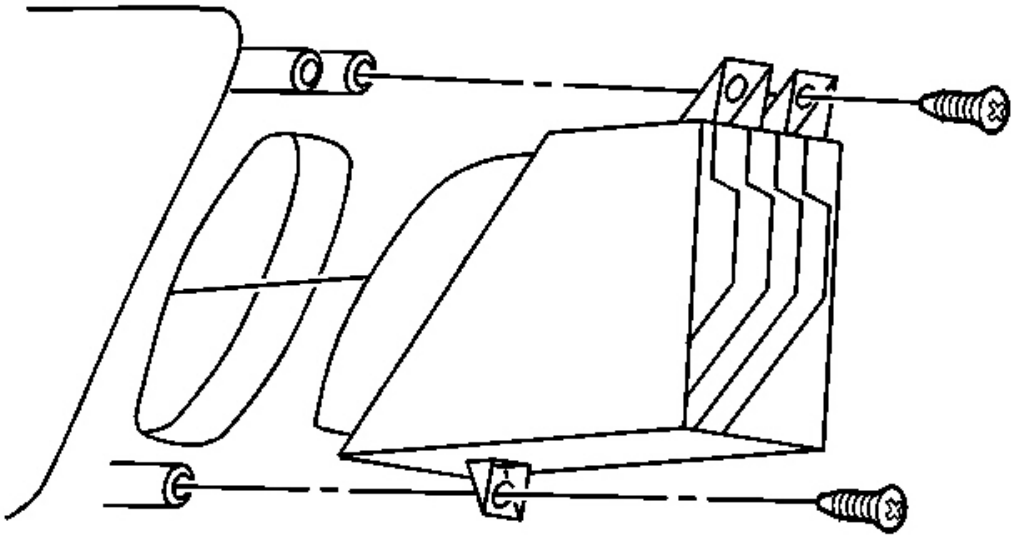

Fig. 241: Passenger Air Outlet & Screws
Courtesy of GENERAL MOTORS CORP.

1. Install the air outlet into position on the upper trim pad.

   NOTE: Refer to Fastener Notice in Cautions and Notices.

2. Install the screws retaining the air outlet to the trim pad.

   Tighten: Tighten the screws to 1.7 N.m (15 lb in).

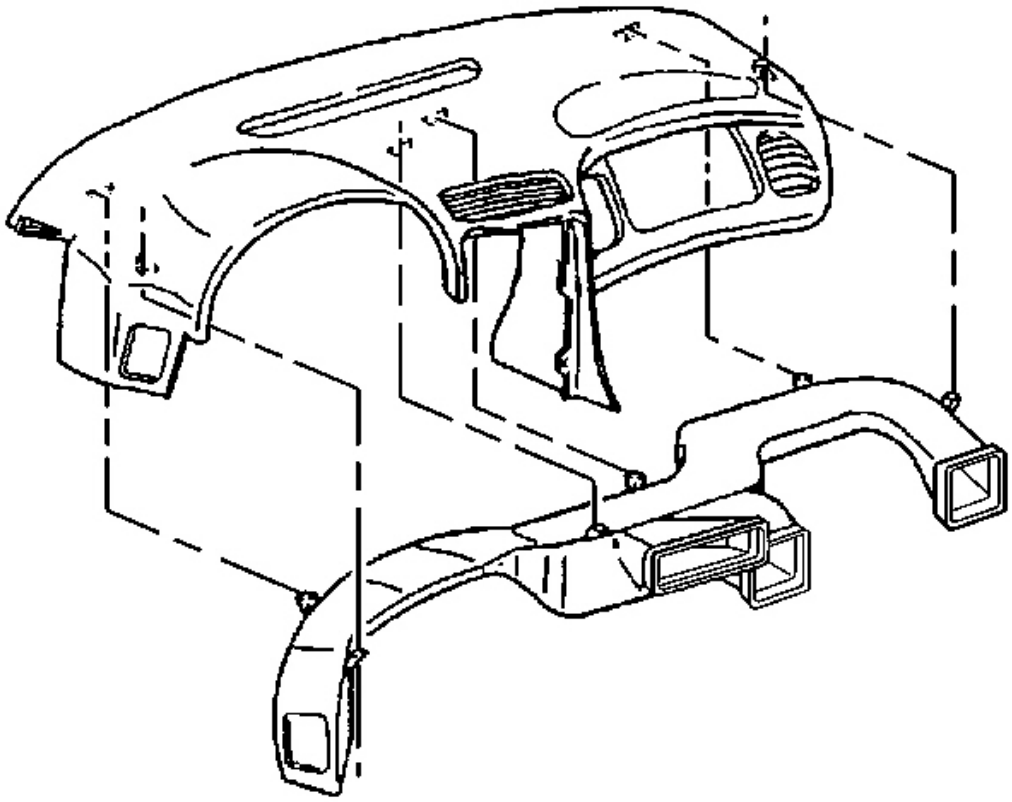

Fig. 242: Upper Trim Pad & Air Distribution Duct
Courtesy of GENERAL MOTORS CORP.

3. Install the air distribution duct into position on the upper trim pad.

   Insert the duct retaining tabs into the trim pad slots.

4. Install the screws retaining the air distribution duct to the trim pad.

   Tighten: Tighten the screws to 1.8 N.m (16 lb in).

5. Install the I/P upper trim pad. Refer to **Trim Pad Replacement - Instrument Panel (I/P) Upper** in Instrument Panel, Gages and Console.

AIR DISTRIBUTION DUCT REPLACEMENT

Removal Procedure

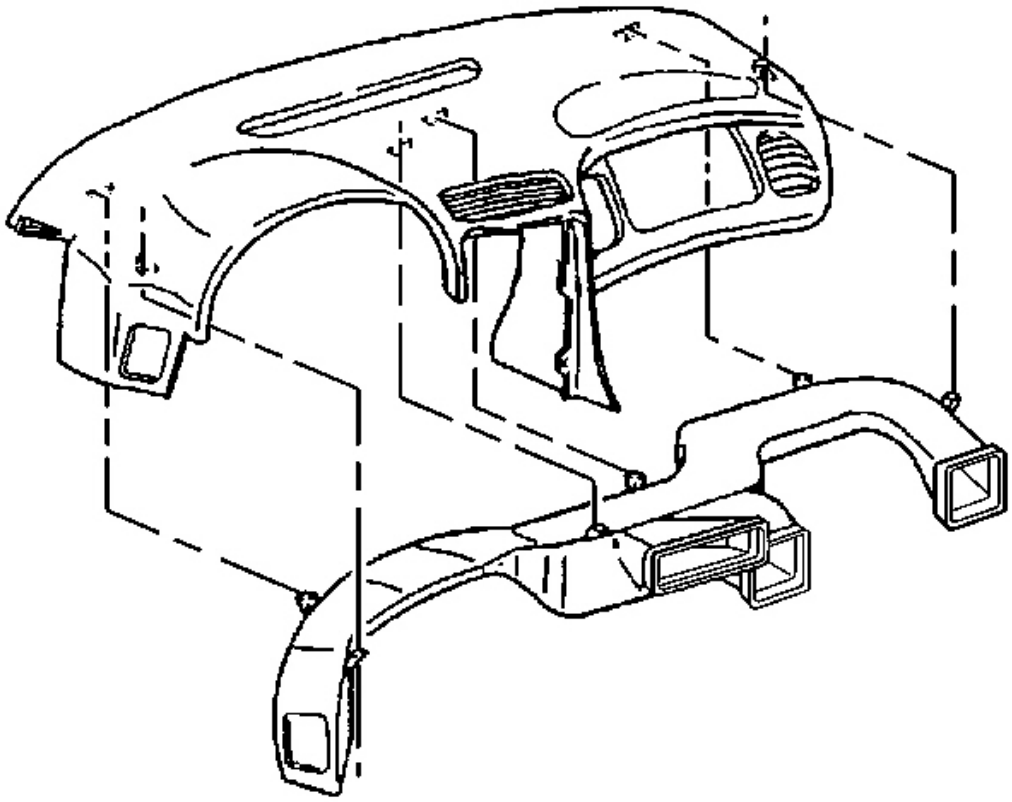

Fig. 243: Upper Trim Pad & Air Distribution Duct
Courtesy of GENERAL MOTORS CORP.

1. Remove the I/P upper trim pad. Refer to **Trim Pad Replacement - Instrument Panel (I/P) Upper** in Instrument Panel, Gages and Console.
2. Remove the screws retaining the air distribution duct to the underside of the upper trim pad.
3. Remove the air distribution duct.

Installation Procedure

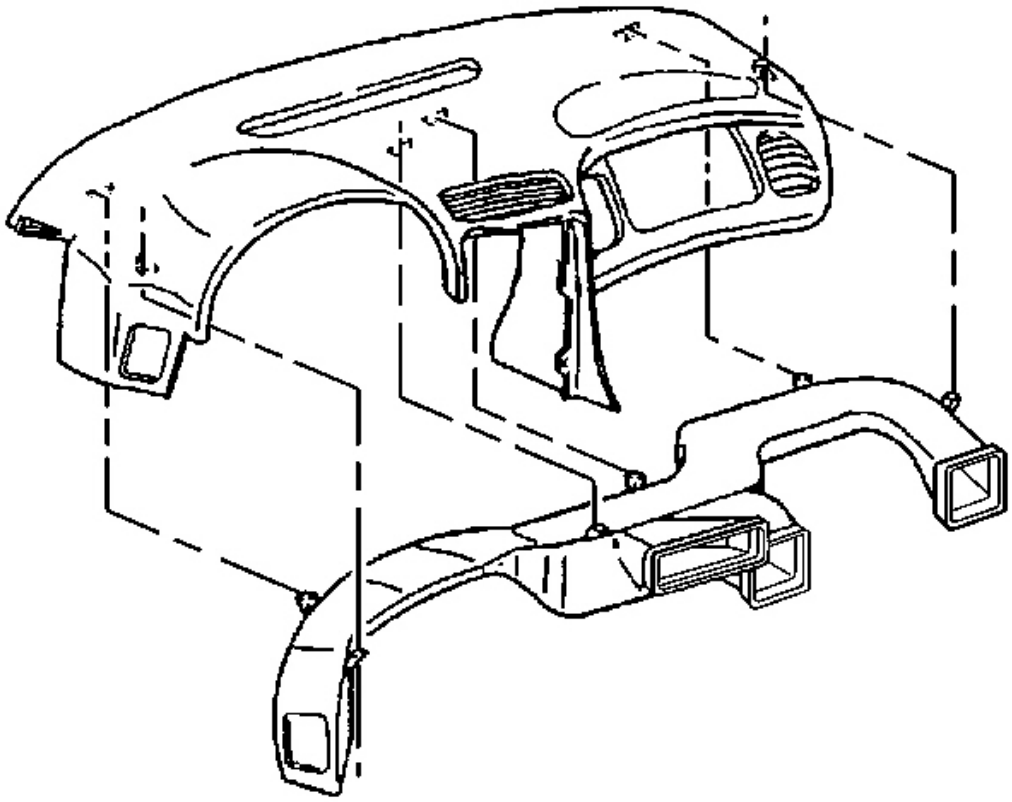

Fig. 244: Upper Trim Pad & Air Distribution Duct
Courtesy of GENERAL MOTORS CORP.

1. Install the distribution duct into position on the upper trim pad.

   Insert the duct retaining tabs into the trim pad slots.

   NOTE: Refer to Fastener Notice in Cautions and Notices.

2. Install the air distribution duct retaining screws to the underside of the trim pad.

   Tighten: Tighten the screws to 1.8 N.m (16 lb in).

3. Install the I/P upper trim pad. Refer to **Trim Pad Replacement - Instrument Panel (I/P) Upper** in Instrument Panel, Gages and Console.

DEFOGGER OUTLET DUCT REPLACEMENT - SIDE WINDOW, LH

Removal Procedure

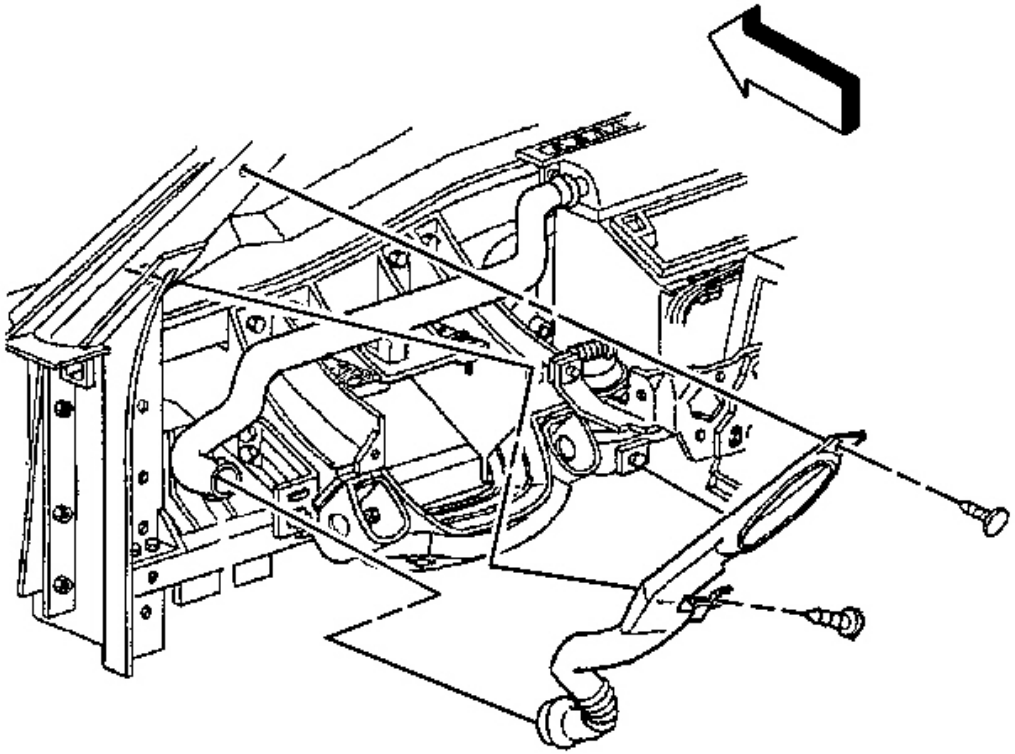

Fig. 245: LH Side Window Defogger Upper Outlet Duct
Courtesy of GENERAL MOTORS CORP.

1. Remove the I/P upper trim pad. Refer to **Trim Pad Replacement - Instrument Panel (I/P) Upper** in Instrument Panel, Gages and Console.
2. Remove the side window defogger upper outlet duct.
    1. Remove the push-in retainers.
    2. Use a twisting motion to release the upper duct from the lower duct.

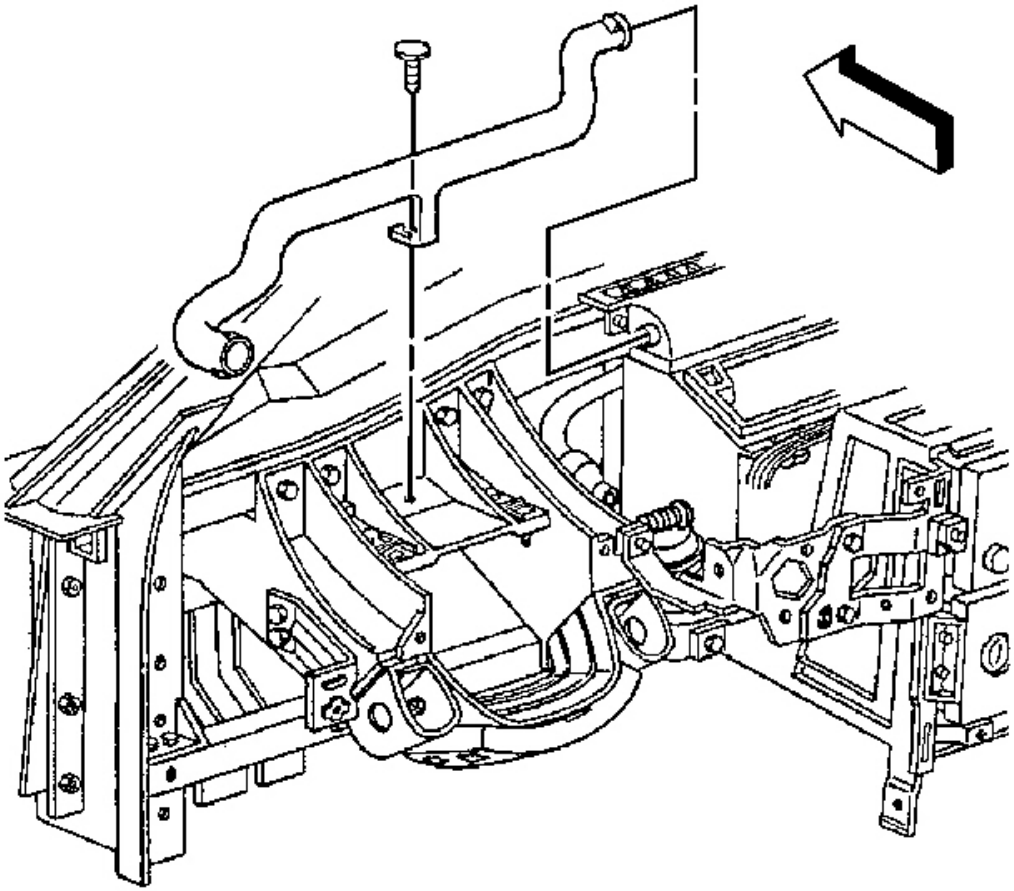

Fig. 246: LH Side Window Defogger Lower Outlet Duct
Courtesy of GENERAL MOTORS CORP.

3. Remove the side window defogger lower outlet duct.
    1. Remove the push-in retainer.
    2. Use a twisting motion to release the lower duct from the windshield defroster duct.

Installation Procedure

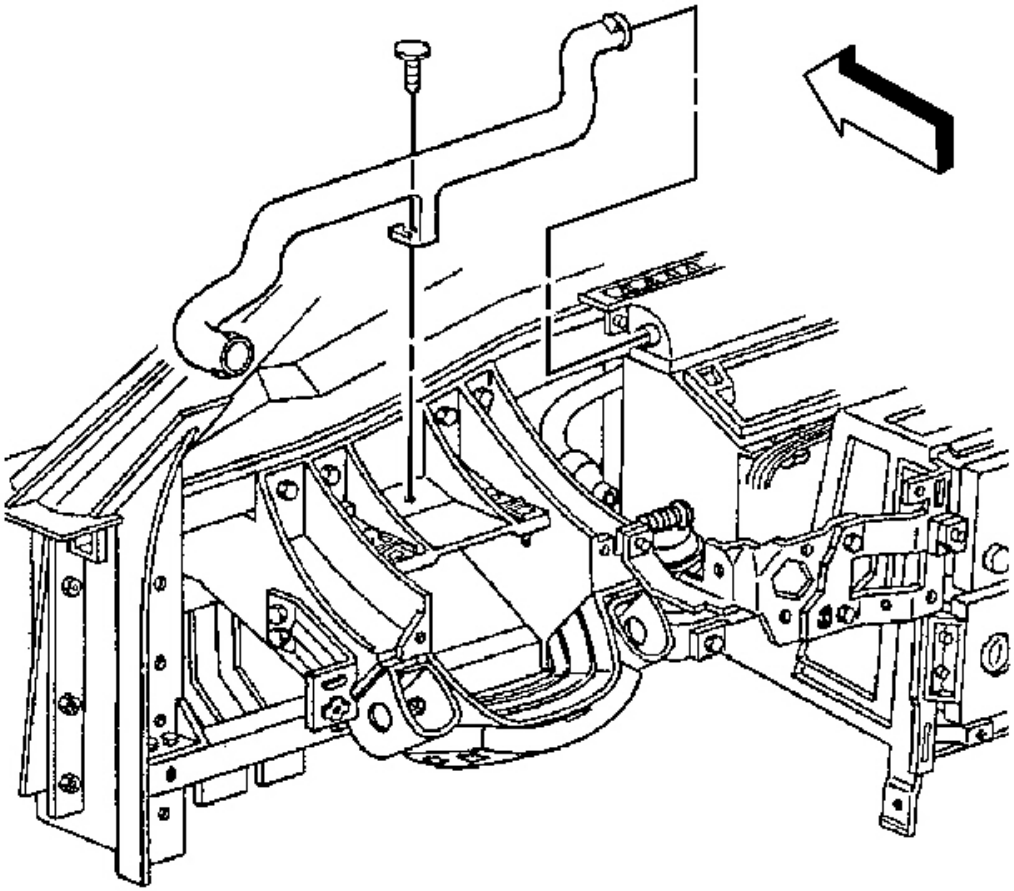

Fig. 247: LH Side Window Defogger Lower Outlet Duct
Courtesy of GENERAL MOTORS CORP.

1. Install the side window defogger lower outlet duct.
    1. Use a twisting motion to secure the lower duct to the windshield defroster duct.
    2. Install the push-in retainer.

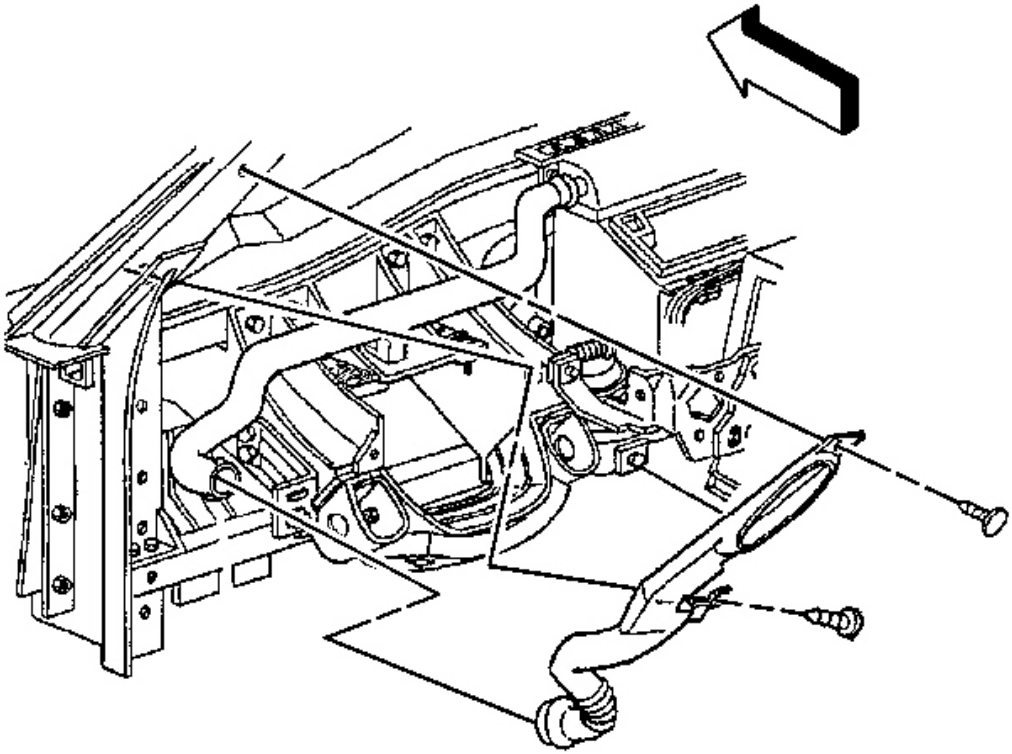

Fig. 248: LH Side Window Defogger Upper Outlet Duct
Courtesy of GENERAL MOTORS CORP.

2. Install the side window defogger upper outlet duct.
    1. Use a twisting motion to secure the upper duct to the lower duct.
    2. Install the push-in retainers.
3. Install the I/P upper trim pad. Refer to **Trim Pad Replacement - Instrument Panel (I/P) Upper** in Instrument Panel, Gages and Console.

DEFOGGER OUTLET DUCT REPLACEMENT - SIDE WINDOW, RH

Removal Procedure

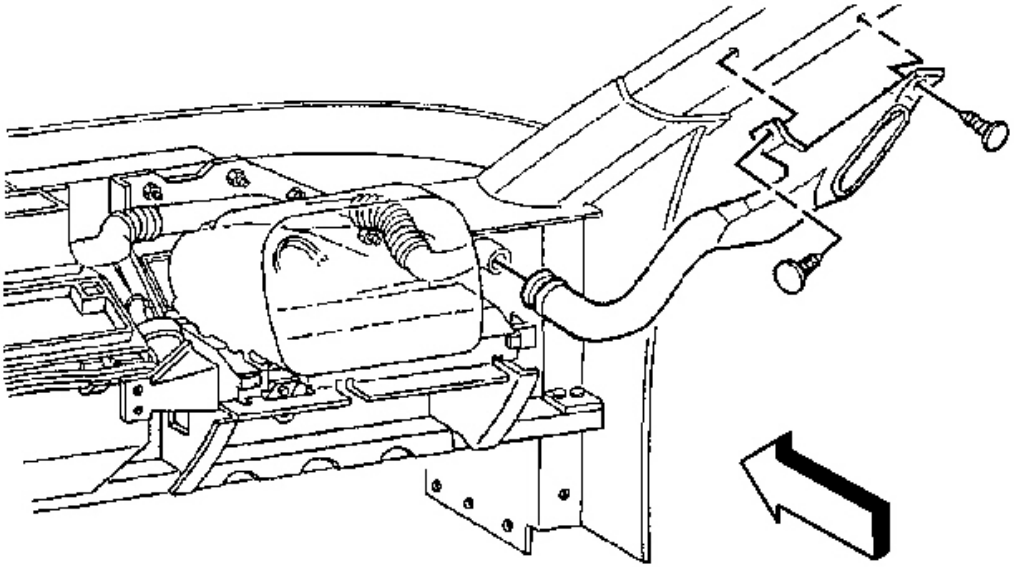

Fig. 249: RH Side Window Defogger Upper Outlet Duct
Courtesy of GENERAL MOTORS CORP.

1. Remove the I/P upper trim pad. Refer to **Trim Pad Replacement - Instrument Panel (I/P) Upper** in Instrument Panel, Gages and Console.
2. Remove the side window defogger upper outlet duct.
    1. Remove the push-in retainers.
    2. Use a twisting motion to release the upper duct from the lower duct.

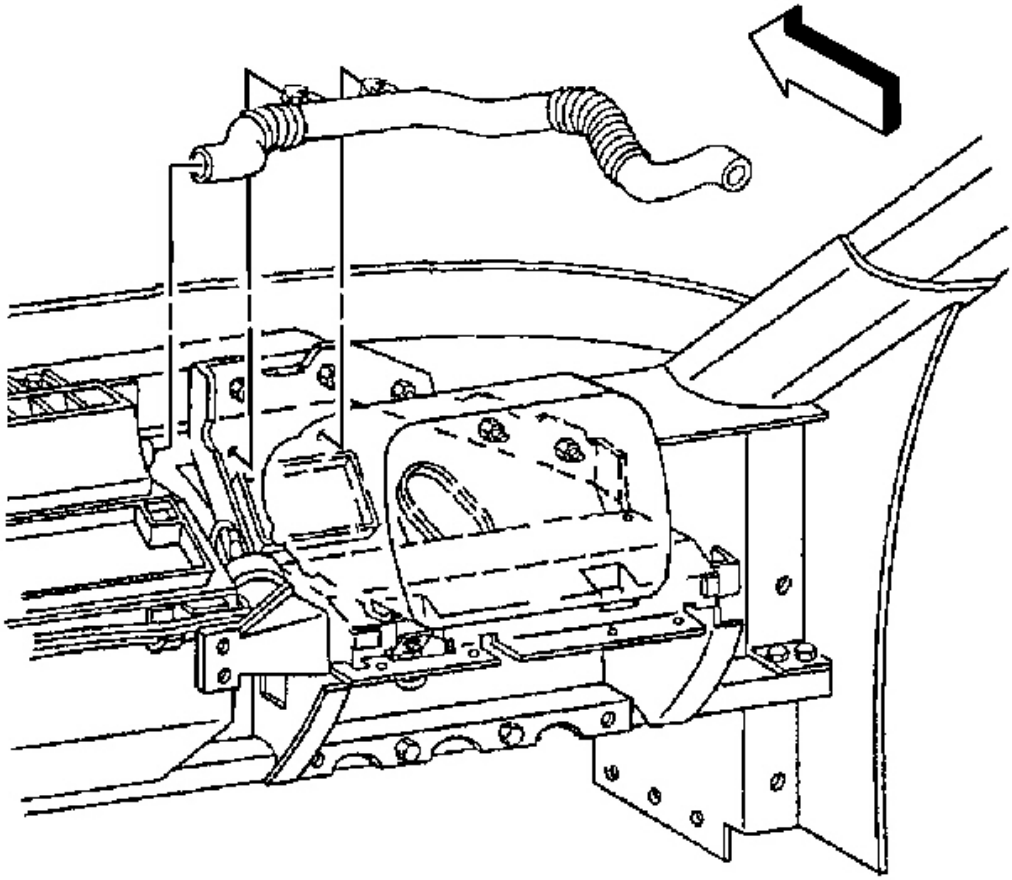

Fig. 250: RH Side Window Defogger Lower Outlet Duct
Courtesy of GENERAL MOTORS CORP.

3. Remove the side window defogger lower outlet duct.
    1. Depress the duct retaining tabs and remove the duct from the passenger SIR bracket.
    2. Use a twisting motion to release the upper duct from the windshield defroster duct.

Installation Procedure

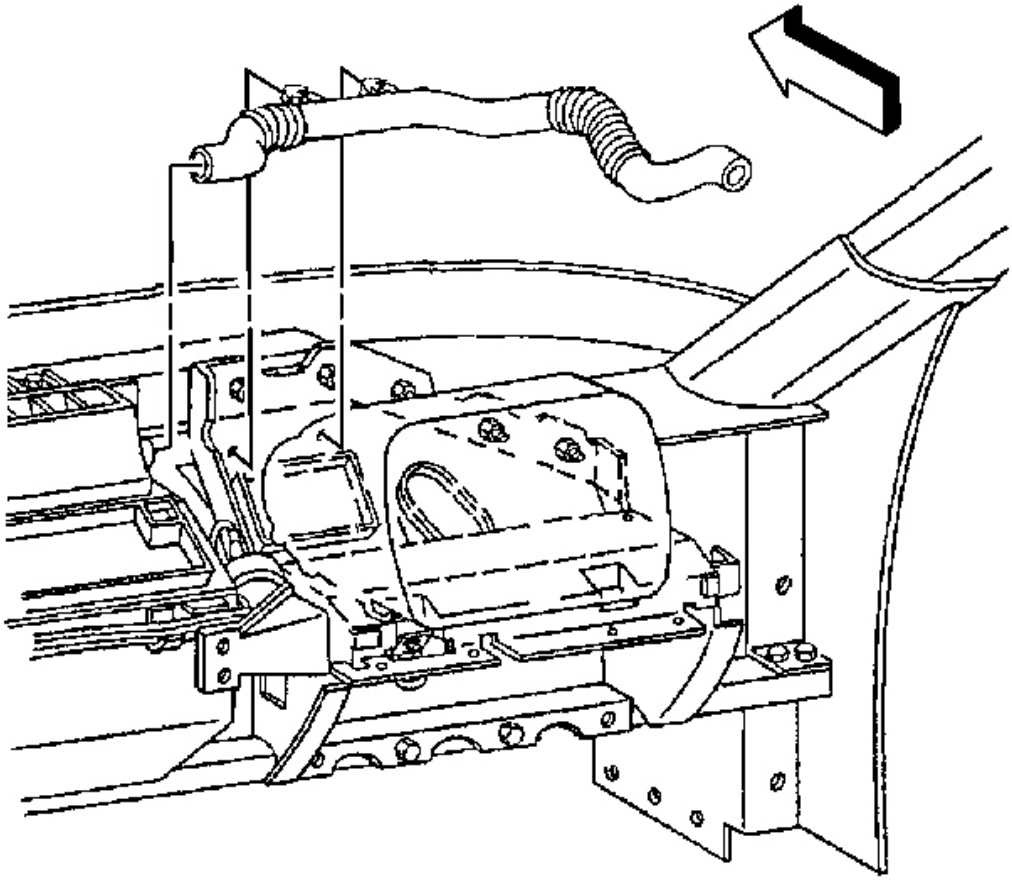

Fig. 251: RH Side Window Defogger Lower Outlet Duct
Courtesy of GENERAL MOTORS CORP.

1. Install the side window defogger lower outlet duct.
    1. Use a twisting motion to secure the lower duct to the windshield defroster duct.
    2. Install the duct retaining tabs to the passenger SIR bracket.

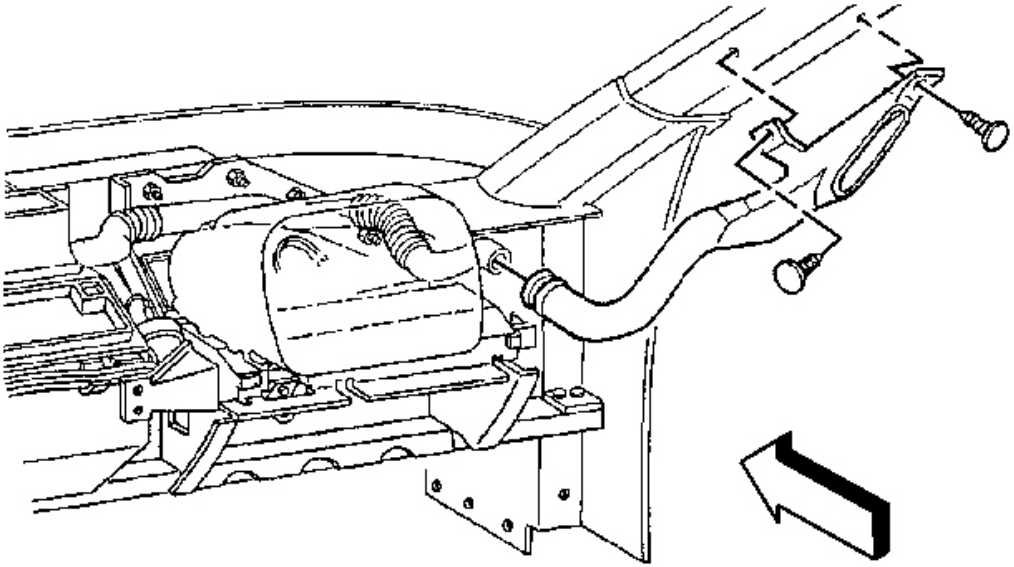

Fig. 252: RH Side Window Defogger Upper Outlet Duct
Courtesy of GENERAL MOTORS CORP.

2. Install the side window defogger upper outlet duct.
    1. Use a twisting motion to secure the upper duct to the lower duct.
    2. Install the push-in retainers.
3. Install the I/P upper trim pad. Refer to **Trim Pad Replacement - Instrument Panel (I/P) Upper** in Instrument Panel, Gages and Console.

AIR OUTLET DUCT REPLACEMENT - FLOOR, LH

Removal Procedure

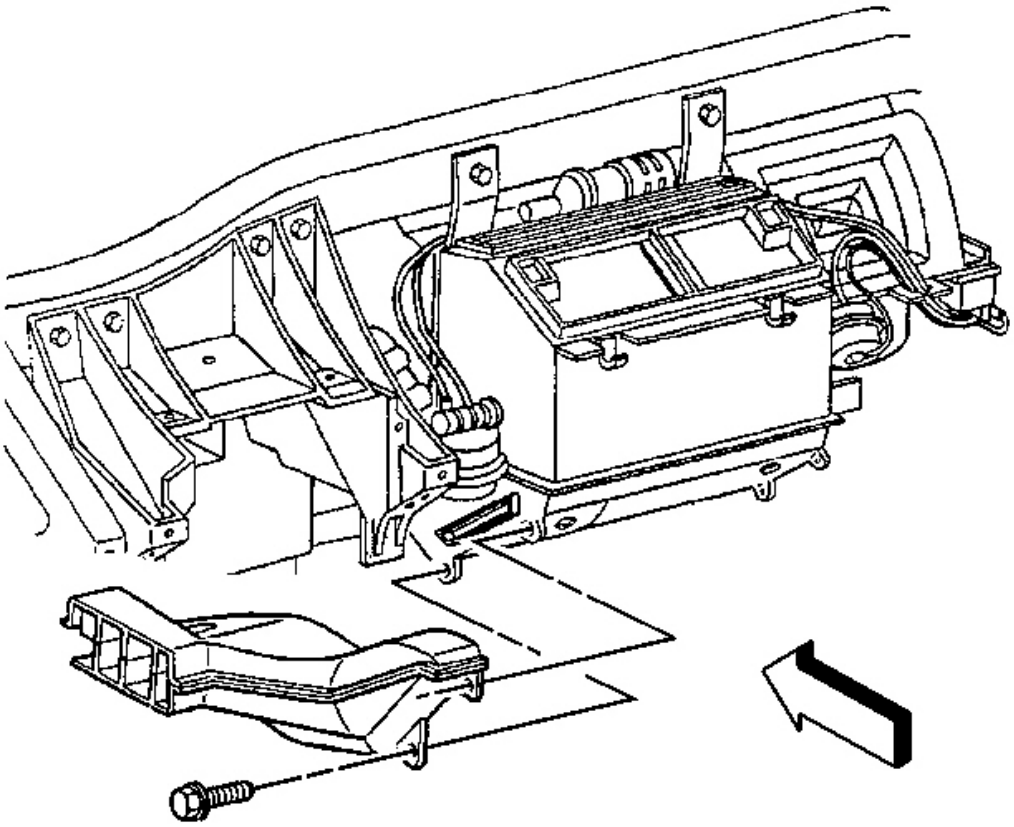

Fig. 253: LH Floor Air Outlet Duct & Retaining Screws
Courtesy of GENERAL MOTORS CORP.

1. Remove the left lower closeout/insulator panel. Refer to **Closeout/Insulator Panel Replacement - Left** in Instrument Panel, Gages and Console.
2. Remove the screws retaining the floor air outlet duct.
3. Remove the floor duct.

Installation Procedure

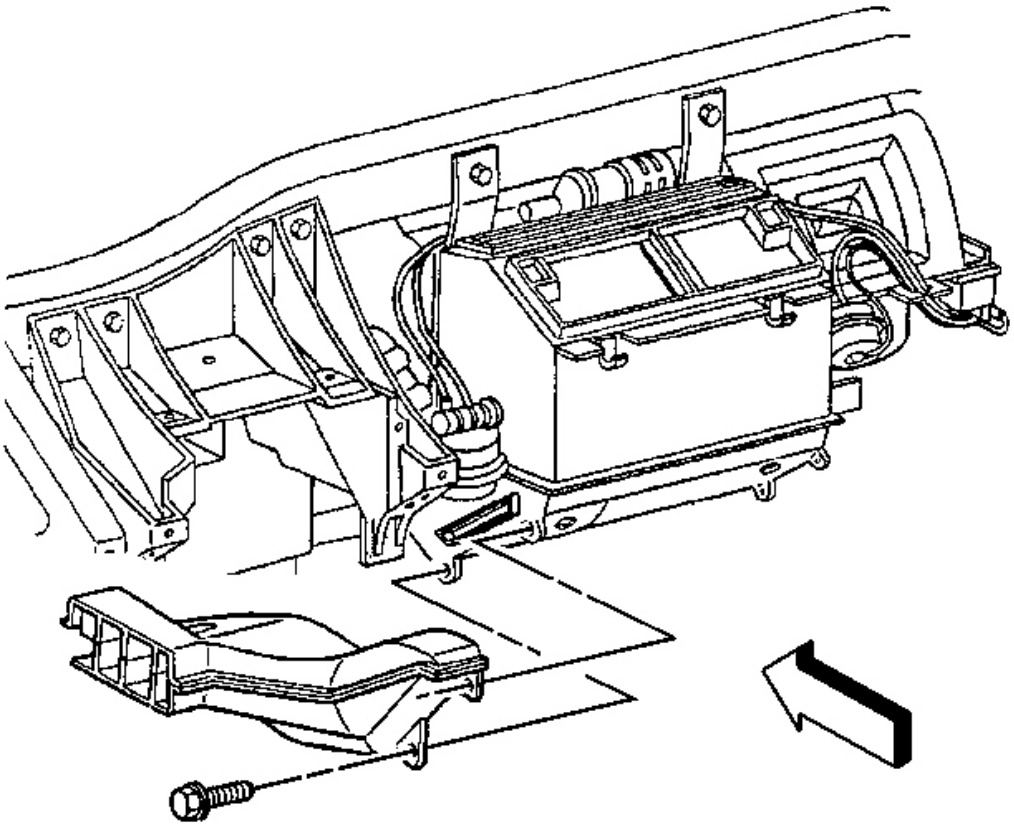

Fig. 254: LH Floor Air Outlet Duct & Retaining Screws
Courtesy of GENERAL MOTORS CORP.

1. Install the floor air outlet duct into position.

   NOTE: Refer to Fastener Notice in Cautions and Notices.

2. Install the floor air outlet duct retaining screws.

   Tighten: Tighten the screws to 1.6 N.m (14 lb in).

3. Install the left lower closeout/insulator panel. Refer to **Closeout/Insulator Panel Replacement - Left** in Instrument Panel, Gages and Console.

AIR OUTLET DUCT REPLACEMENT - FLOOR, RH

Removal Procedure

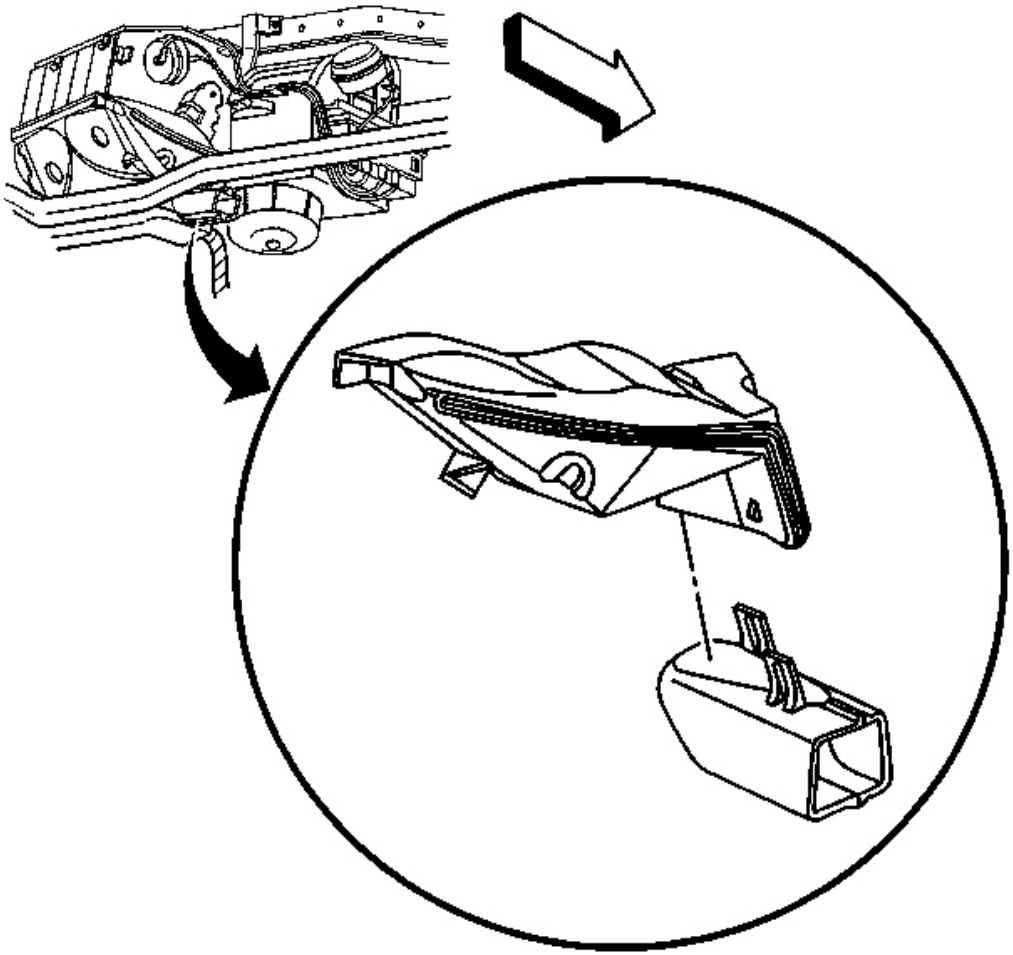

Fig. 255: RH Lower Closeout/Insulator Panel
Courtesy of GENERAL MOTORS CORP.

1. Remove the RH lower closeout/insulator panel. Refer to **Closeout/Insulator Panel Replacement - Right** in Instrument Panel, Gages and Console.
2. Remove the lower half of the floor air outlet duct.

   Using a flat bladed tool, release the retaining tabs, then remove the lower duct.

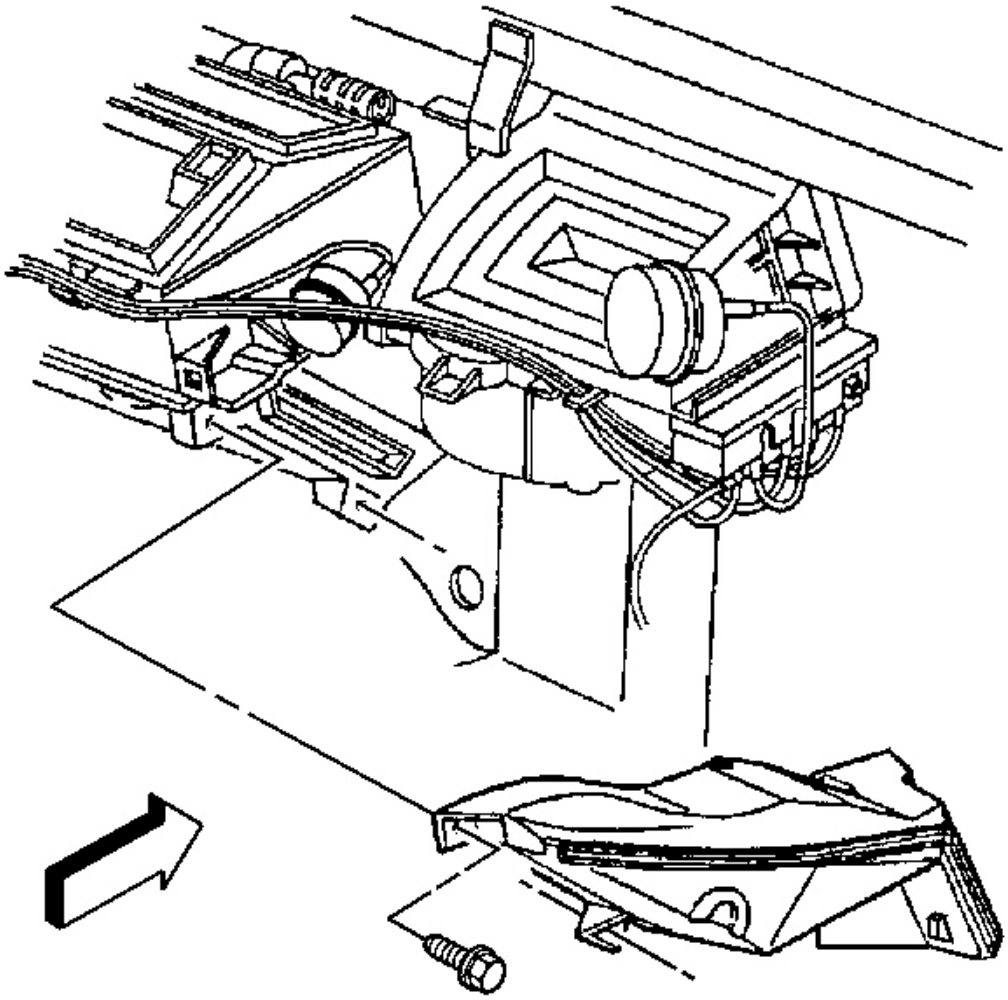

Fig. 256: Floor Air Outlet Duct, Upper Half & Screws
Courtesy of GENERAL MOTORS CORP.

3. Remove the floor air outlet duct retaining screws.
4. Remove the floor duct, upper half.

Installation Procedure

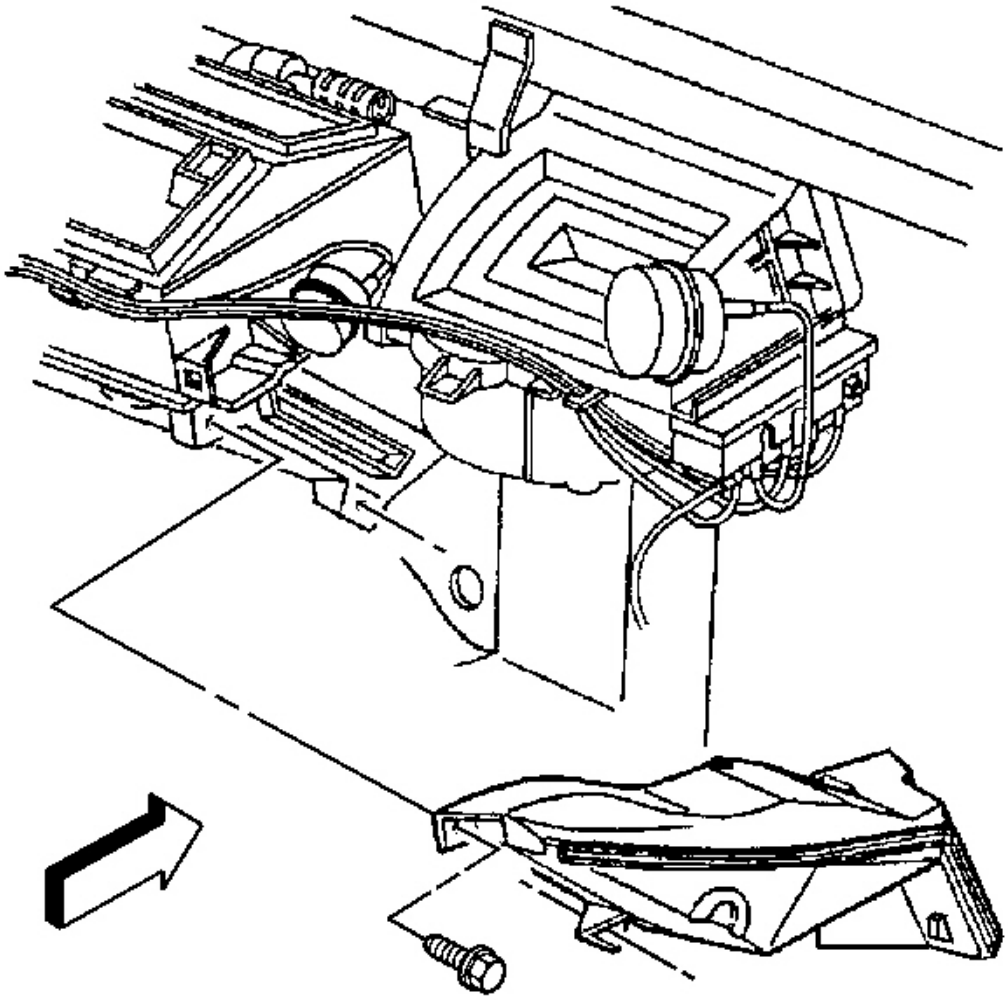

Fig. 257: Floor Air Outlet Duct, Upper Half & Screws
Courtesy of GENERAL MOTORS CORP.

1. Install the floor air outlet duct, upper half, into position.

NOTE: **Refer to Fastener Notice in Cautions and Notices.**

2. Install the floor air outlet duct retaining screws.

Tighten: Tighten the screws to 1.6 N.m (14 lb in).

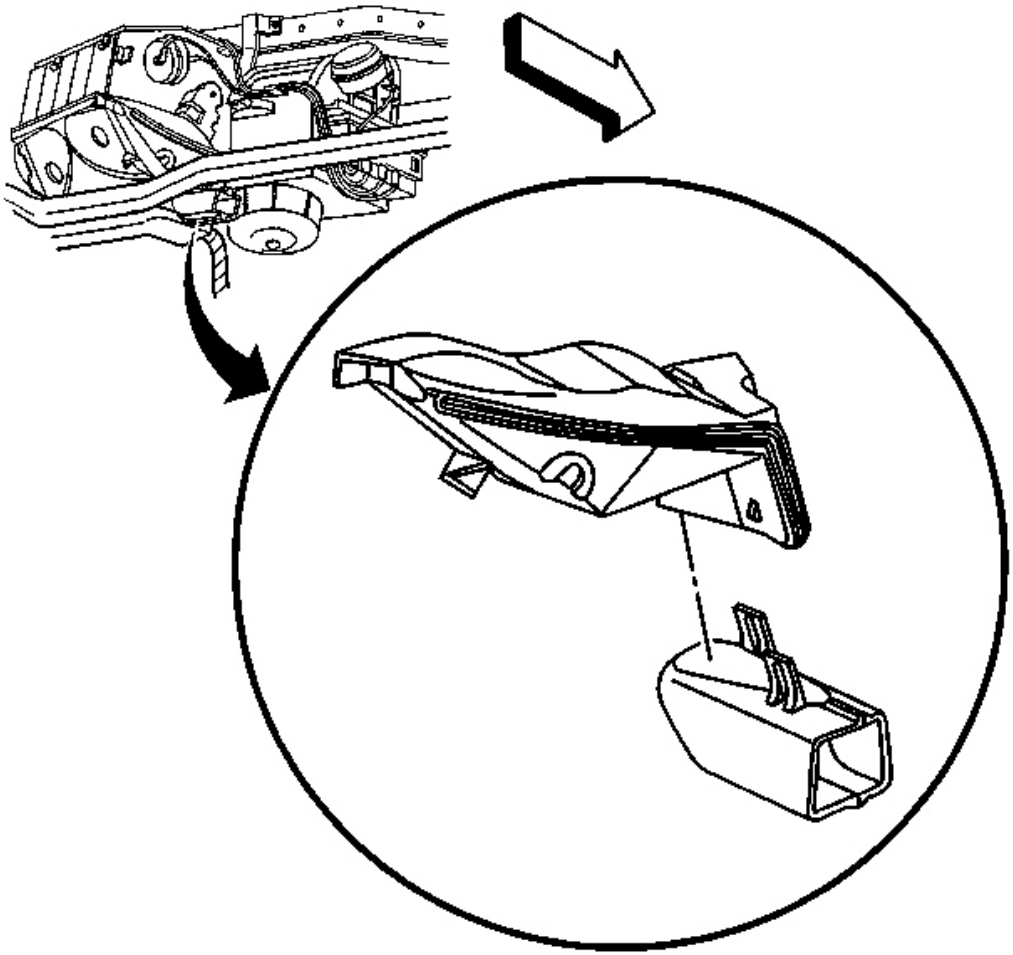

Fig. 258: RH Lower Closeout/Insulator Panel
Courtesy of GENERAL MOTORS CORP.

3. Install the floor air outlet duct, lower half.

   Align the retaining tabs and snap into place.

4. Install the RH lower closeout/insulator panel. Refer to **Closeout/Insulator Panel Replacement - Right** in Instrument Panel, Gages and Console.

AIR OUTLET DUCT REPLACEMENT - REAR FLOOR, LH

Removal Procedure

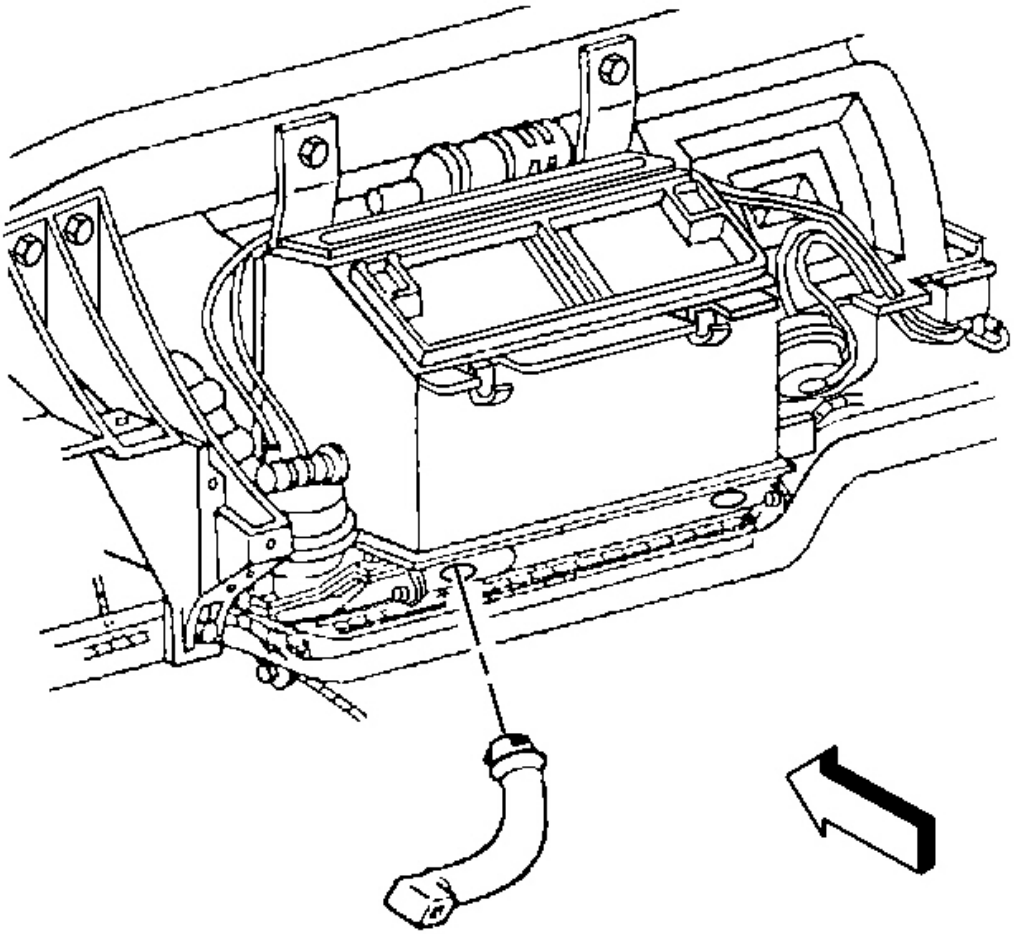

Fig. 259: Rear LH Floor Air Outlet Duct
Courtesy of GENERAL MOTORS CORP.

1. Remove the console. Refer to **Console Replacement** in Instrument Panel, Gages and Console.
2. Remove the IP accessory trim plate. Refer to **Trim Plate Replacement - Instrument Panel (I/P) Accessory** in Instrument Panel, Gages and Console.
3. Remove the driver knee bolster trim panel. Refer to **Trim Panel Replacement - Knee Bolster** in Instrument Panel, Gages and Console.
4. Grasp the floor air outlet rear duct - LH and rotate 1/4 turn clockwise to release.

   Carefully use a flat bladed tool to release the duct, if necessary.

5. Remove the duct.

Installation Procedure

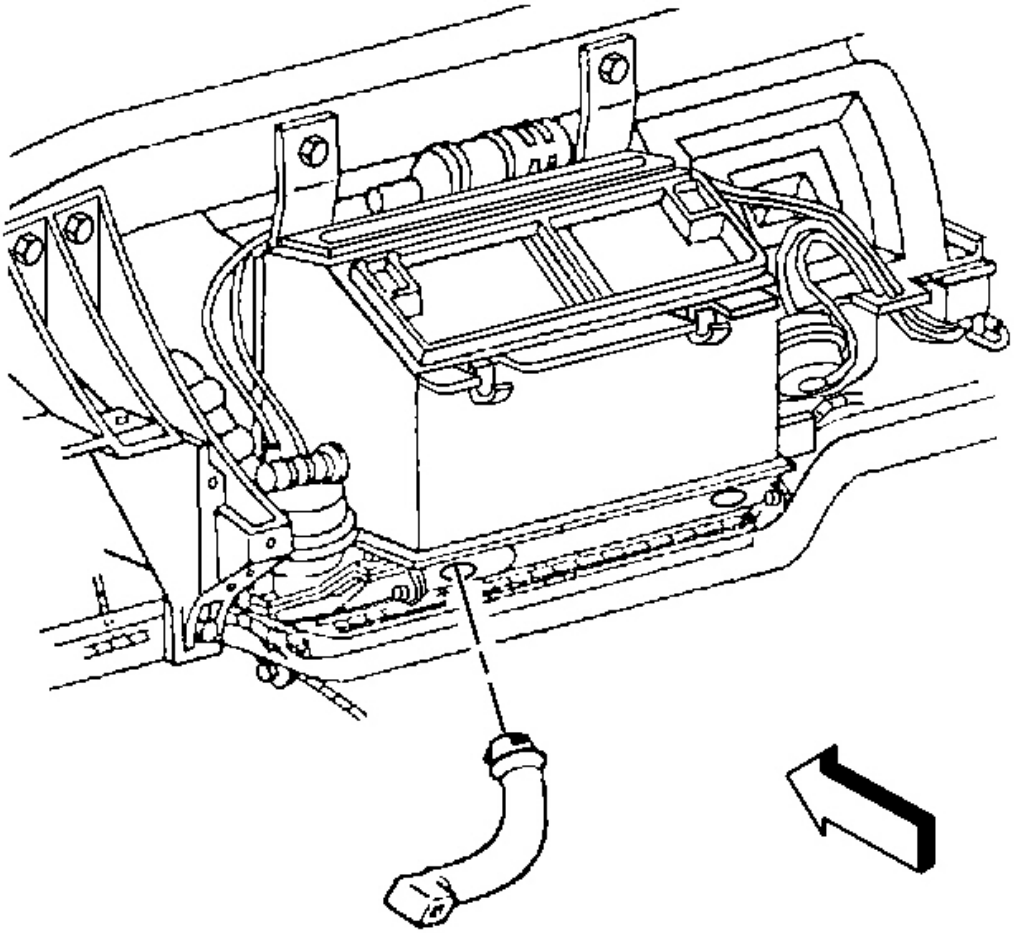

Fig. 260: Rear LH Floor Air Outlet Duct
Courtesy of GENERAL MOTORS CORP.

1. Position the floor air outlet rear duct - LH in the same position in which it was released (1/4 turn above the installed position).
2. Insert and seat the duct into the HVAC module.
3. Rotate the duct 1/4 turn counterclockwise to secure.
4. Install the driver knee bolster trim panel. Refer to **Trim Panel Replacement - Knee Bolster** in Instrument Panel, Gages and Console.
5. Install the IP accessory trim plate. Refer to **Trim Plate Replacement - Instrument Panel (I/P) Accessory** in Instrument Panel, Gages and Console.

6. Install the console. Refer to **Console Replacement** in Instrument Panel, Gages and Console.

AIR OUTLET DUCT REPLACEMENT - REAR FLOOR, RH

Removal Procedure

1. Remove the I/P upper trim pad. Refer to **Trim Pad Replacement - Instrument Panel (I/P) Upper** in Instrument Panel, Gages and Console.
2. Pull the front floor carpet away from the RH side of the driveline tunnel to access the floor air outlet - inner.

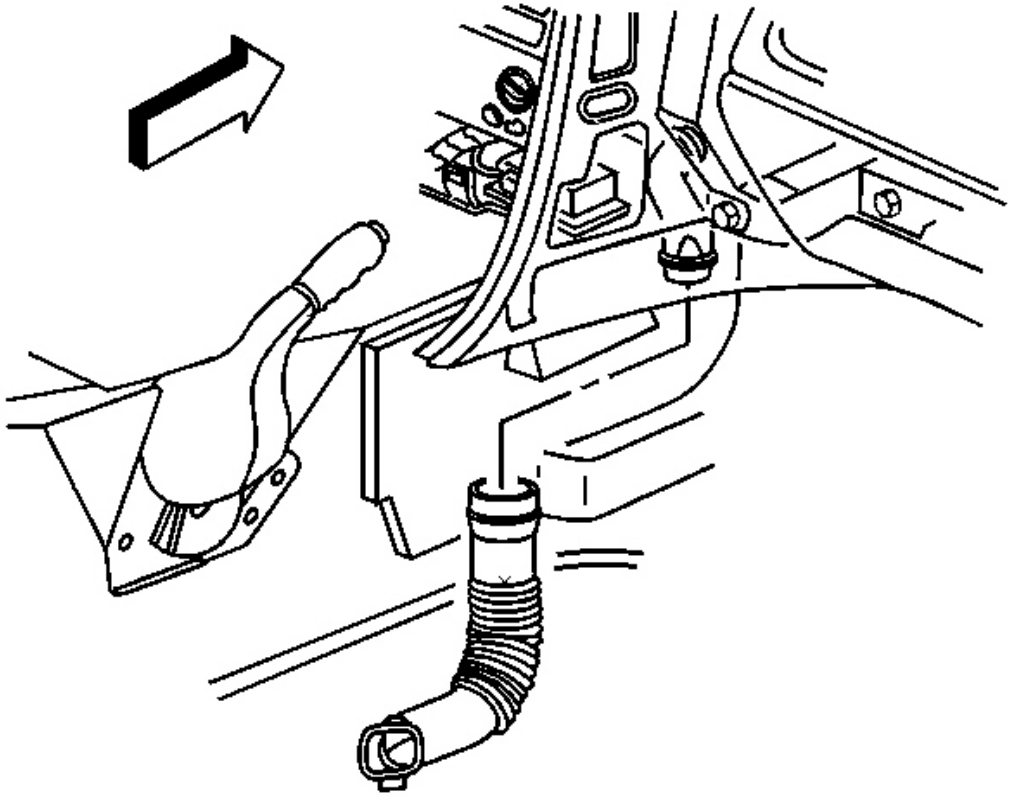

Fig. 261: RH Side Driveline Tunnel & Carpet Air Outlet Duct
Courtesy of GENERAL MOTORS CORP.

3. Release the floor air outlet - inner from the floor air outlet lower duct - RH rear.

   Use a twisting motion to release the floor outlet from the floor duct.

4. Release the floor air outlet lower duct - RH rear from the floor air outlet duct - RH rear, then remove the duct.

   Use a twisting motion to release the lower duct from the duct.

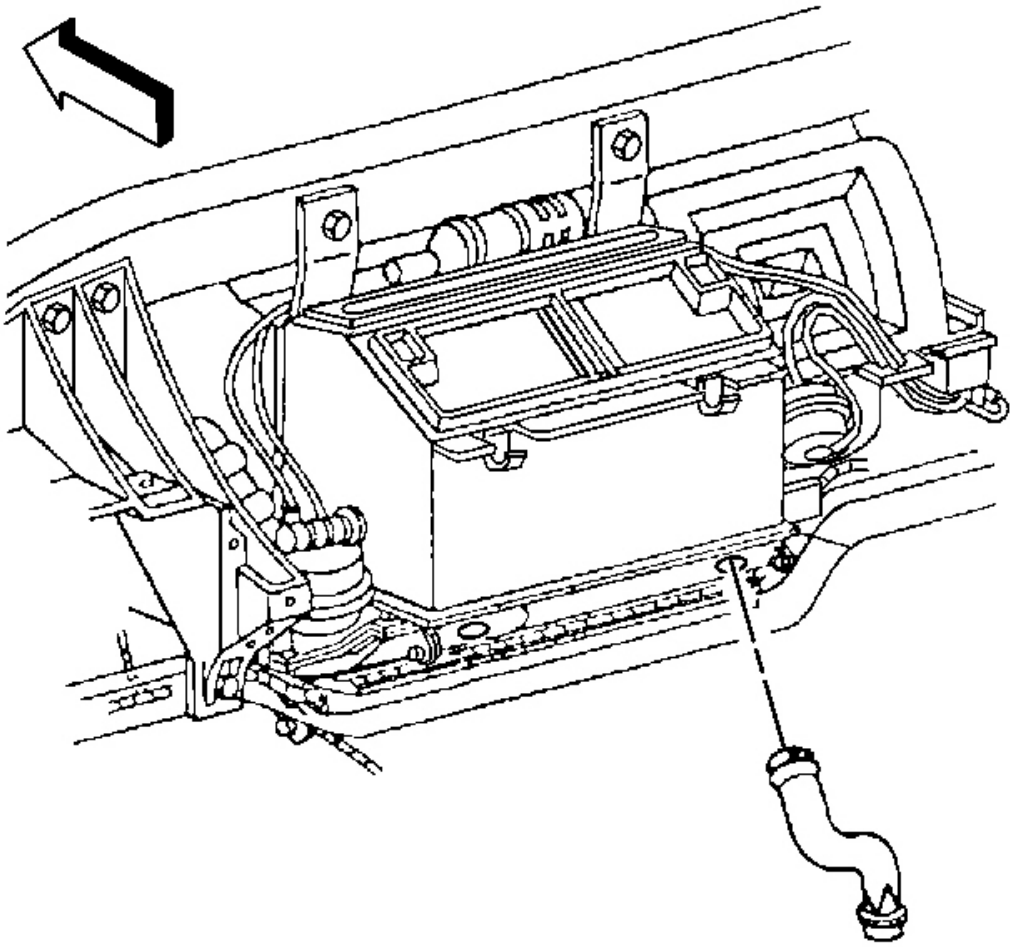

Fig. 262: Rear RH Floor Air Outlet Duct
Courtesy of GENERAL MOTORS CORP.

5. Using a flat bladed screwdriver, CAREFULLY release the floor air outlet duct - RH rear from the HVAC module.
6. Lower the duct down between the I/P center support bracket and the side of the driveline tunnel, then remove the duct.

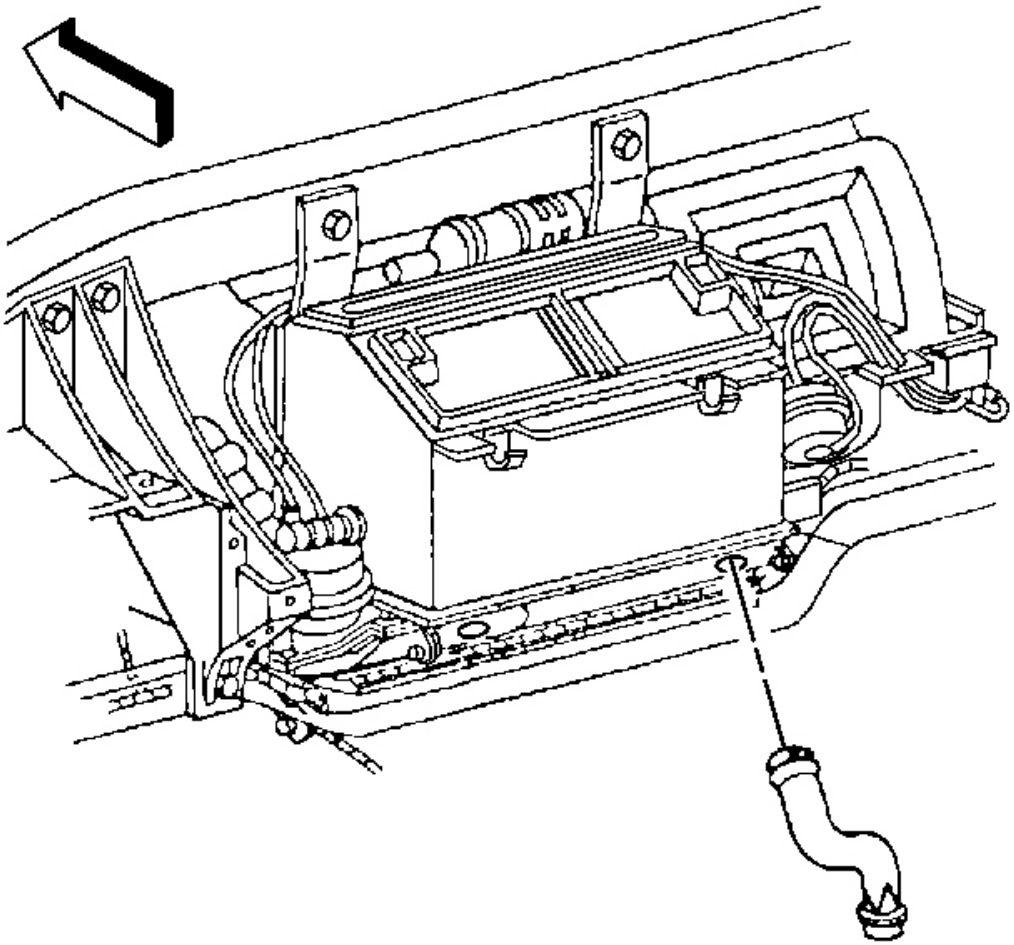

Fig. 263: Rear RH Floor Air Outlet Duct
Courtesy of GENERAL MOTORS CORP.

1. Insert the floor air outlet duct - RH rear up between the I/P center support bracket and the side of the driveline tunnel, then position the duct to the HVAC module.
2. Align the floor duct to the HVAC module, then push firmly and evenly to secure the duct.

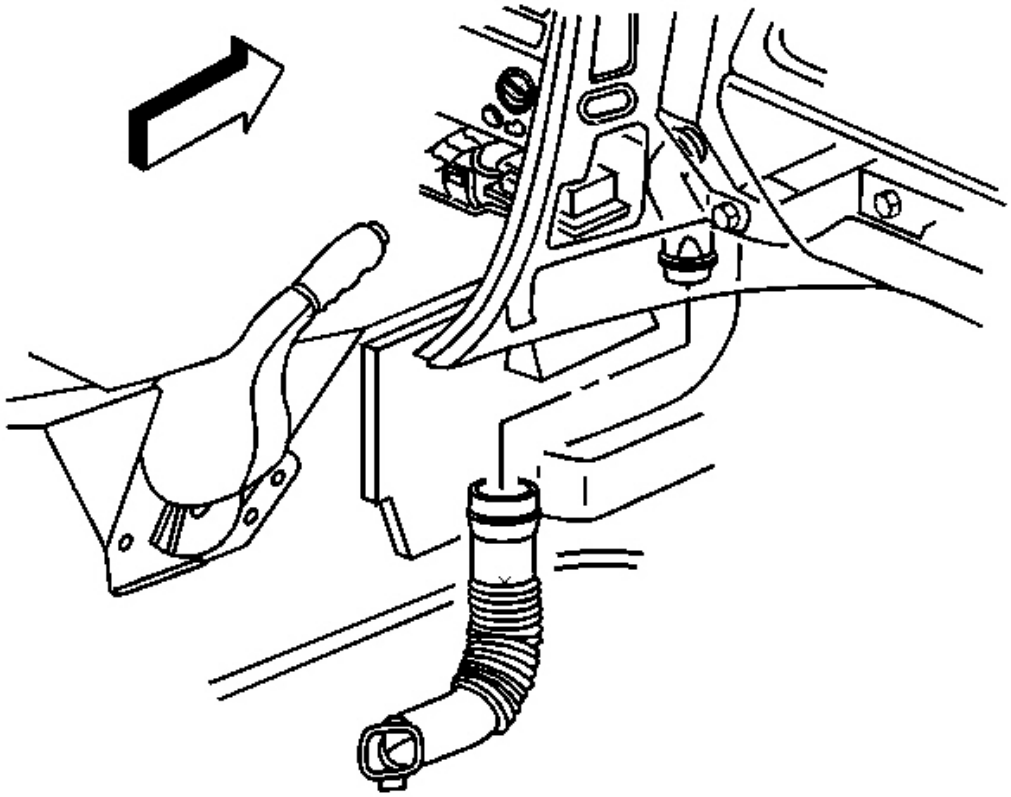

Fig. 264: RH Side Driveline Tunnel & Carpet Air Outlet Duct
Courtesy of GENERAL MOTORS CORP.

3. Position and secure the floor air outlet lower duct - RH rear to the floor air outlet duct - RH rear.

   Use a twisting motion to secure the lower duct to the duct.

4. Secure the floor air outlet - inner to the floor air outlet lower duct - RH rear.

   Use a twisting motion to secure the floor outlet to the floor duct.

5. Position the front floor carpet to the RH side of the driveline tunnel.
6. Install the I/P upper trim pad. Refer to **Trim Pad Replacement - Instrument Panel (I/P) Upper** in Instrument Panel, Gages and Console.

AIR OUTLET REPLACEMENT - FLOOR - RIGHT

Removal Procedure

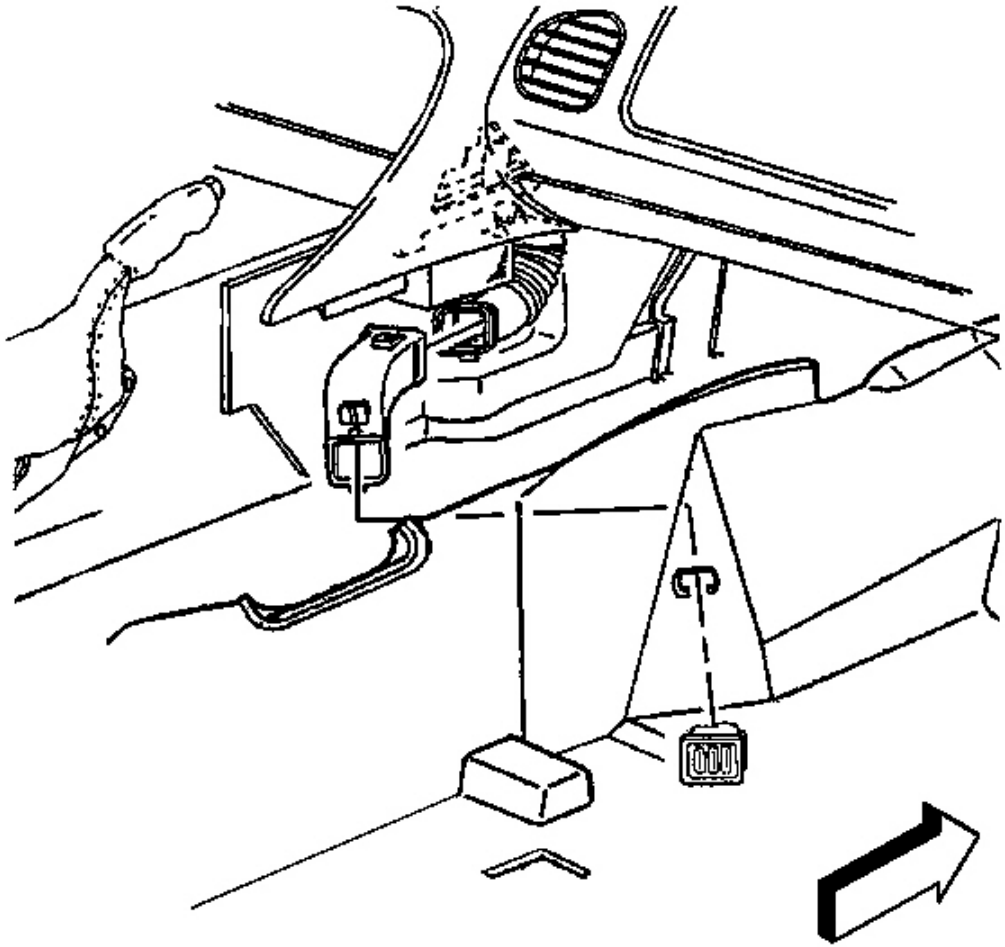

Fig. 265: RH Side I/P Accessory Trim Plate & I/P Upper Trim Pad
Courtesy of GENERAL MOTORS CORP.

1. Carefully pull the front floor carpet from under the RH side of the I/P accessory trim plate and the I/P upper trim pad, along the driveline tunnel.
2. Release the floor air outlet - inner from the floor air outlet - outer.
3. Release the floor air outlet - inner from the floor air outlet lower duct - RH rear, then remove the air outlet.
4. Carefully release the floor air outlet - outer from the front floor carpet and remove the outlet.

Installation Procedure

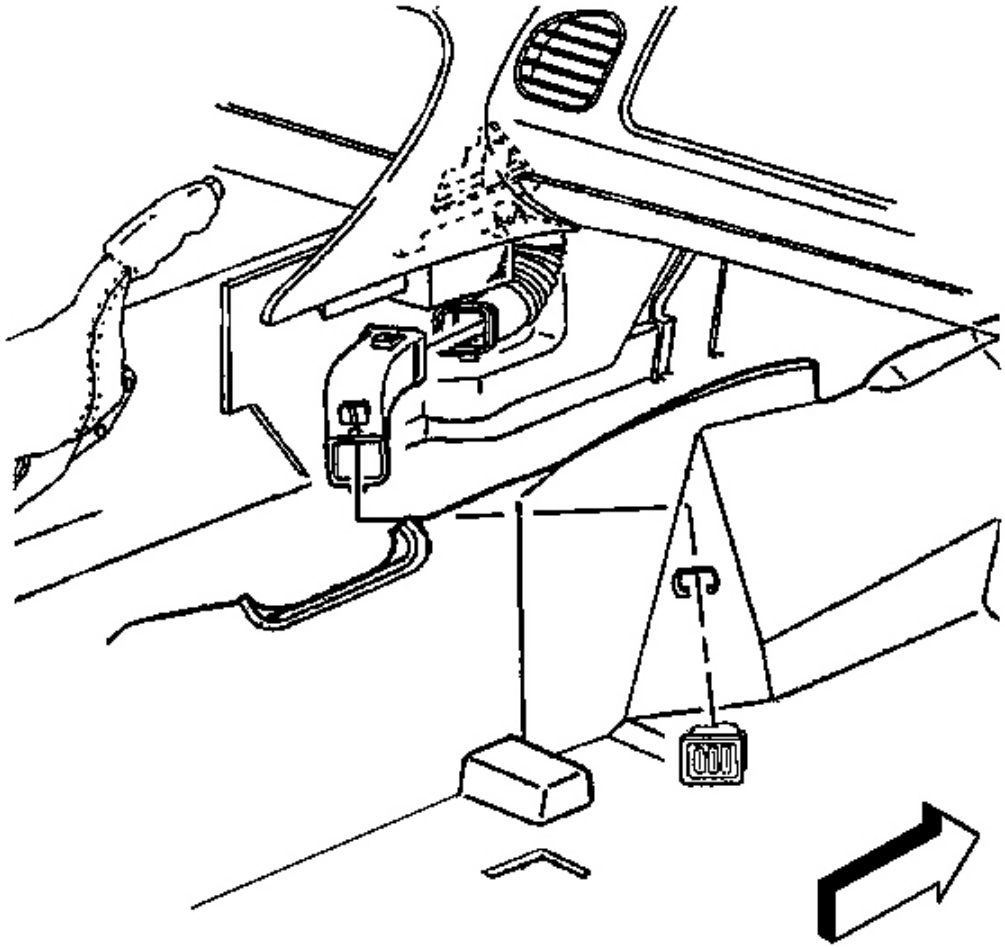

Fig. 266: RH Side I/P Accessory Trim Plate & I/P Upper Trim Pad
Courtesy of GENERAL MOTORS CORP.

1. Carefully position and secure the floor air outlet - outer to the front floor carpet.
2. Position and secure the floor air outlet - inner to the floor air outlet lower duct - RH rear.
3. Secure the floor air outlet - inner to the floor air outlet - outer.
4. Carefully position the front floor carpet under the RH side of the I/P accessory trim plate and the I/P upper trim pad, along the driveline tunnel.

AIR TEMPERATURE DOOR REPLACEMENT

Removal Procedure

1. Remove the HVAC module. Refer to **HVAC Module Assembly Replacement** .
2. Remove the temperature actuator screws.
3. Remove the temperature actuator.
4. Remove the air inlet housing retaining screws.
5. Remove the air inlet housing.
6. Remove the HVAC module upper mounting screws.

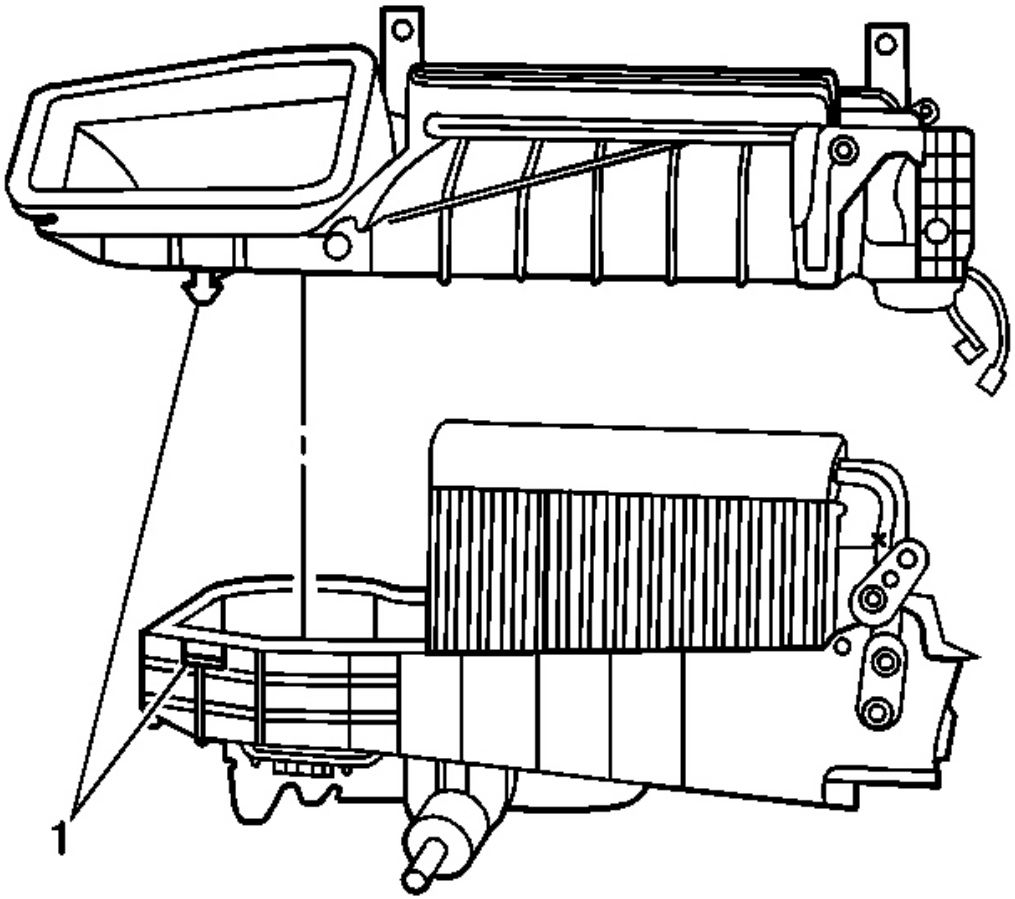

Fig. 267: Upper/Lower HVAC Module Halves
Courtesy of GENERAL MOTORS CORP.

7. Release the retaining tab (1) securing the HVAC module halves.
8. Separate the upper and lower module halves.

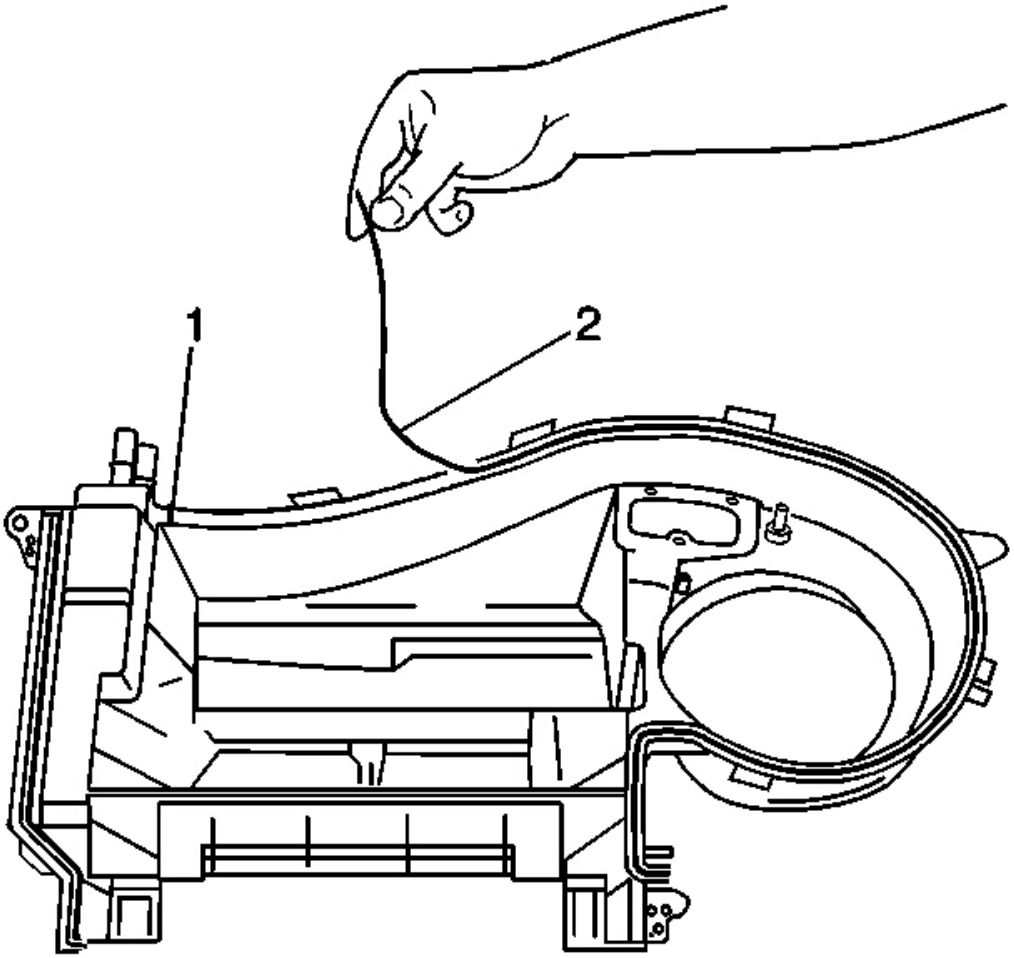

Fig. 268: HVAC Module Case Seals
Courtesy of GENERAL MOTORS CORP.

9. Remove the HVAC module seal (2).

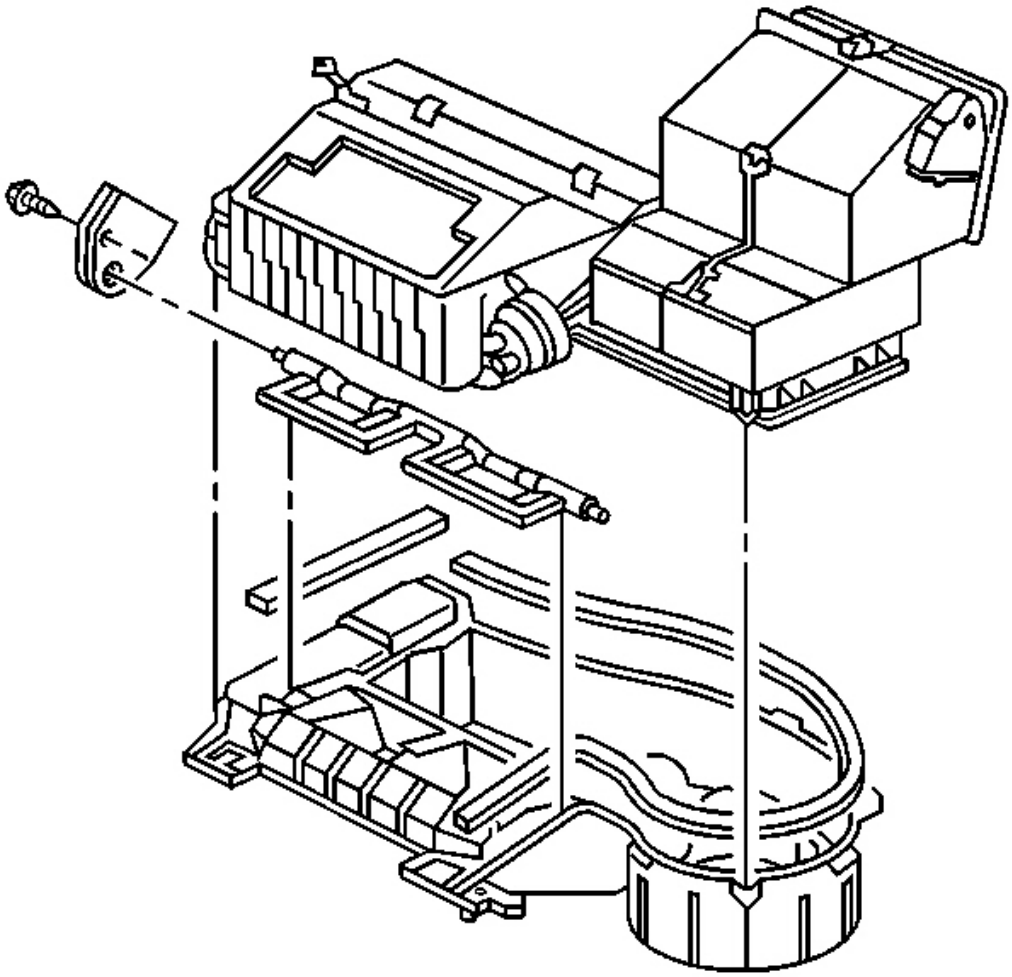

Fig. 269: Temperature Door
Courtesy of GENERAL MOTORS CORP.

10. Remove the temperature door.

Installation Procedure

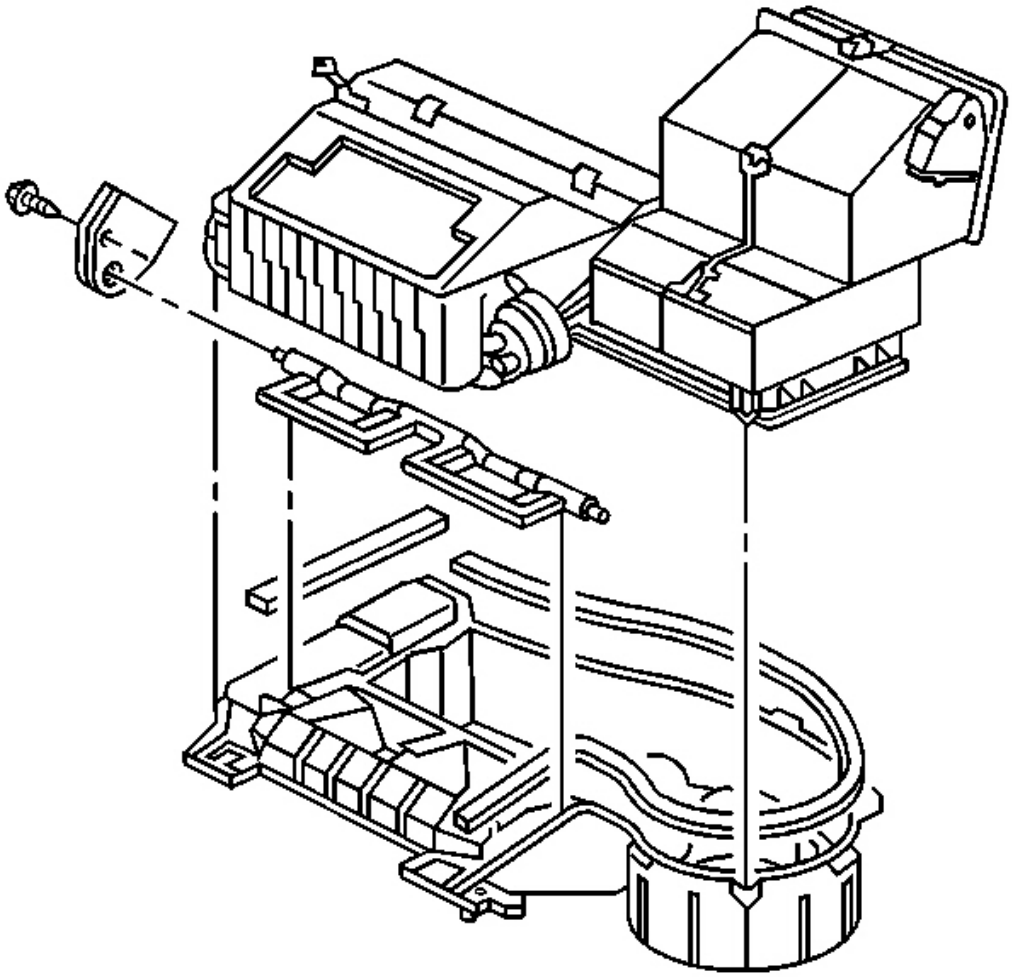

Fig. 270: Temperature Door
Courtesy of GENERAL MOTORS CORP.

1. Install the temperature door.

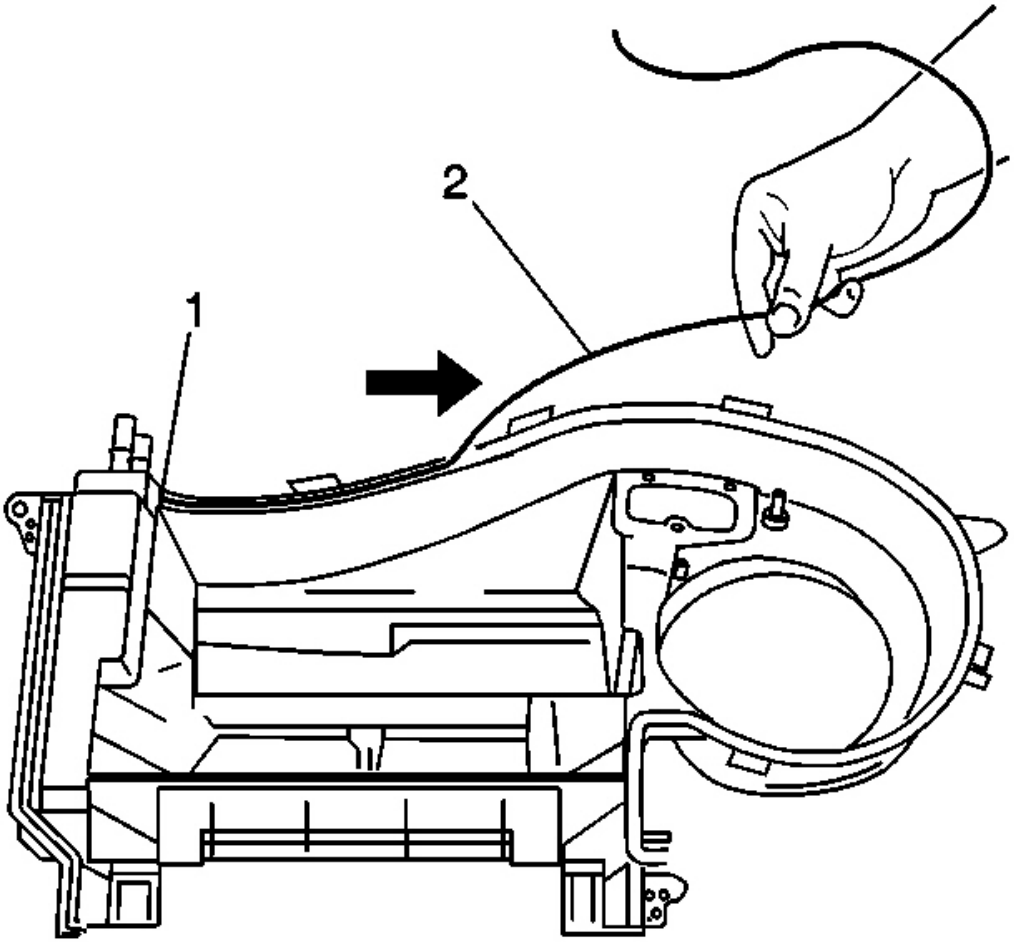

Fig. 271: Lower HVAC Module Case & HVAC Module Case Primary Seal
Courtesy of GENERAL MOTORS CORP.

2. Install the new case seal to the HVAC module case.
3. Wet the upper evaporator core seal with water.

IMPORTANT: Inspect the condition of the retaining tab on the upper module case prior to installing the lower module case. If the retaining tab is broken or damaged, install an external retaining clip (P/N 52458793, or equivalent).

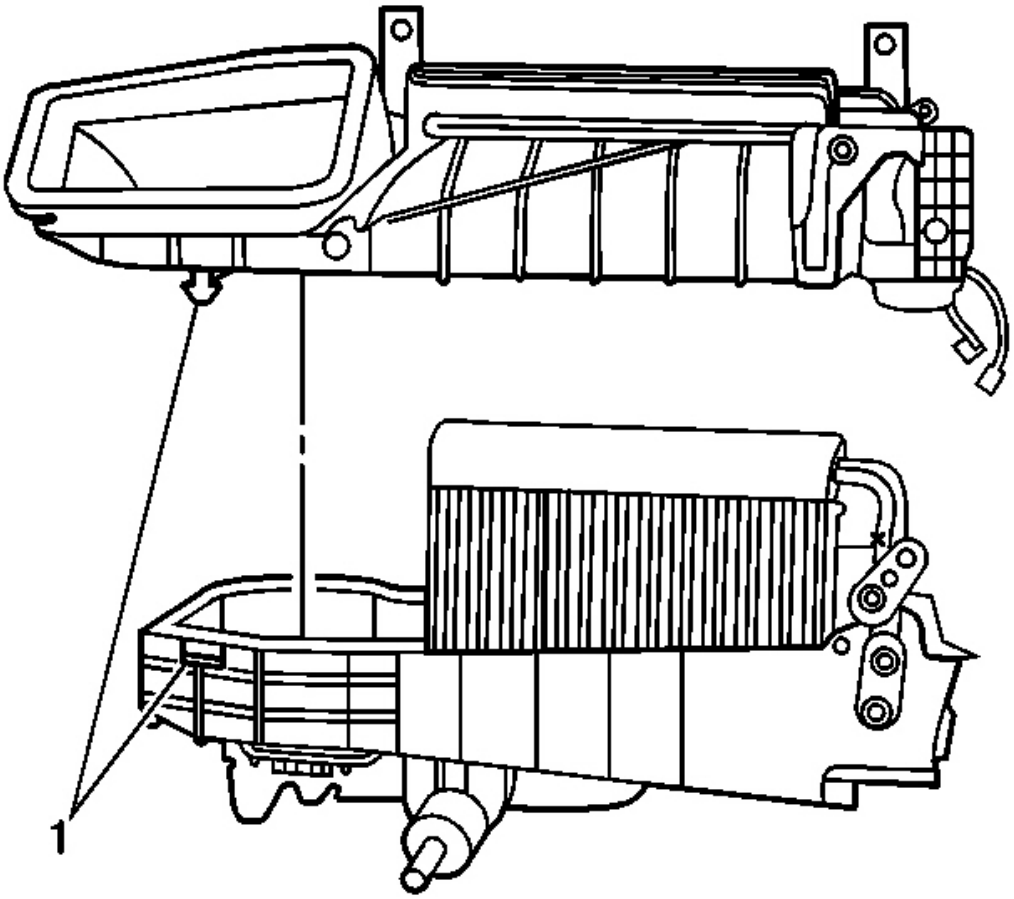

Fig. 272: Upper/Lower HVAC Module Halves
Courtesy of GENERAL MOTORS CORP.

4. Align and install the upper module case to the lower module case.

   Align and secure the retaining tab (1).

   NOTE: Refer to Fastener Notice in Cautions and Notices.

5. Install the HVAC module upper mounting screws.

   Tighten: Tighten the screws to 1.6 N.m (14 lb in).

6. Install the air inlet housing.

7. Install the air inlet housing retaining screws.

   Tighten: Tighten the screws to 1.6 N.m (14 lb in).

8. Install the temperature actuator.
9. Install the temperature actuator screws.

   Tighten: Tighten the screws to 1.5 N.m (13 lb in).

10. Install the HVAC module. Refer to **HVAC Module Assembly Replacement** .

AIR TEMPERATURE DOOR REPLACEMENT - RIGHT

Removal Procedure

1. Remove the HVAC module. Refer to **HVAC Module Assembly Replacement** .
2. Remove the temperature actuator screws.
3. Remove the temperature actuator.
4. Remove the air inlet housing retaining screws.
5. Remove the air inlet housing.
6. Remove the HVAC module upper mounting screws.

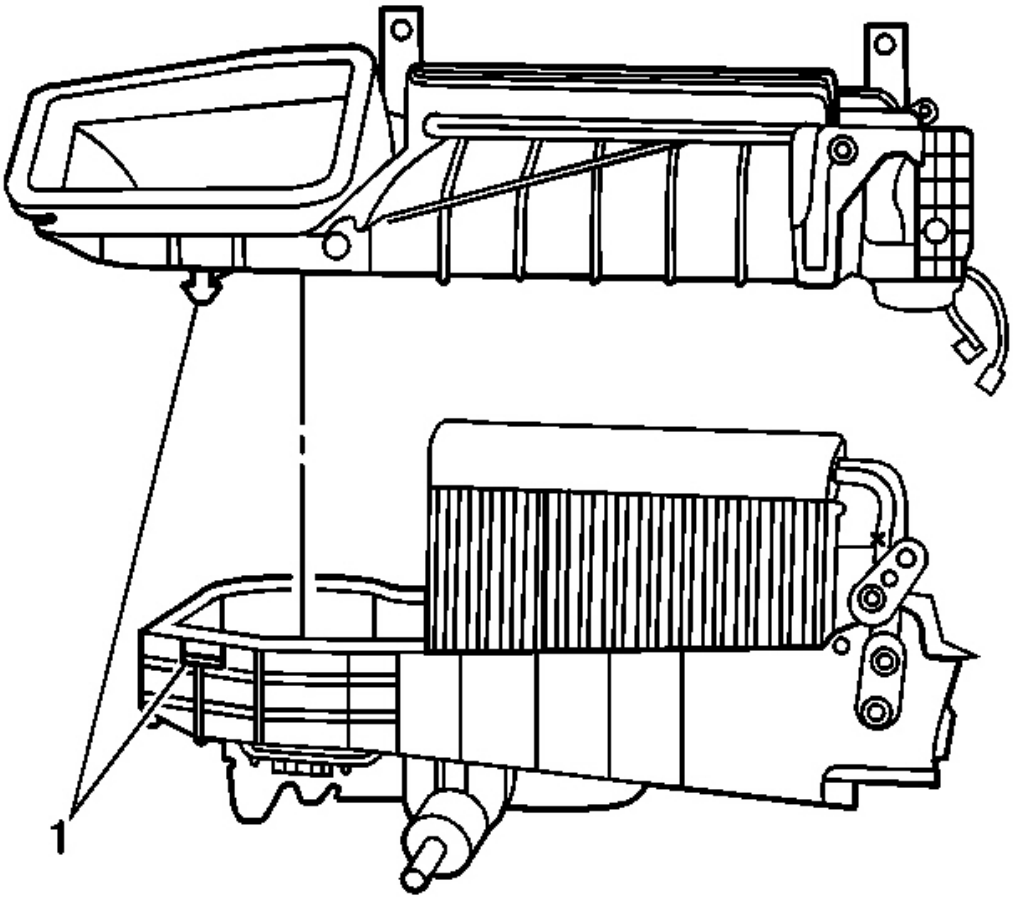

Fig. 273: Upper/Lower HVAC Module Halves
Courtesy of GENERAL MOTORS CORP.

7. Release the retaining tab (1) securing the HVAC module halves.
8. Separate the upper and lower module halves.

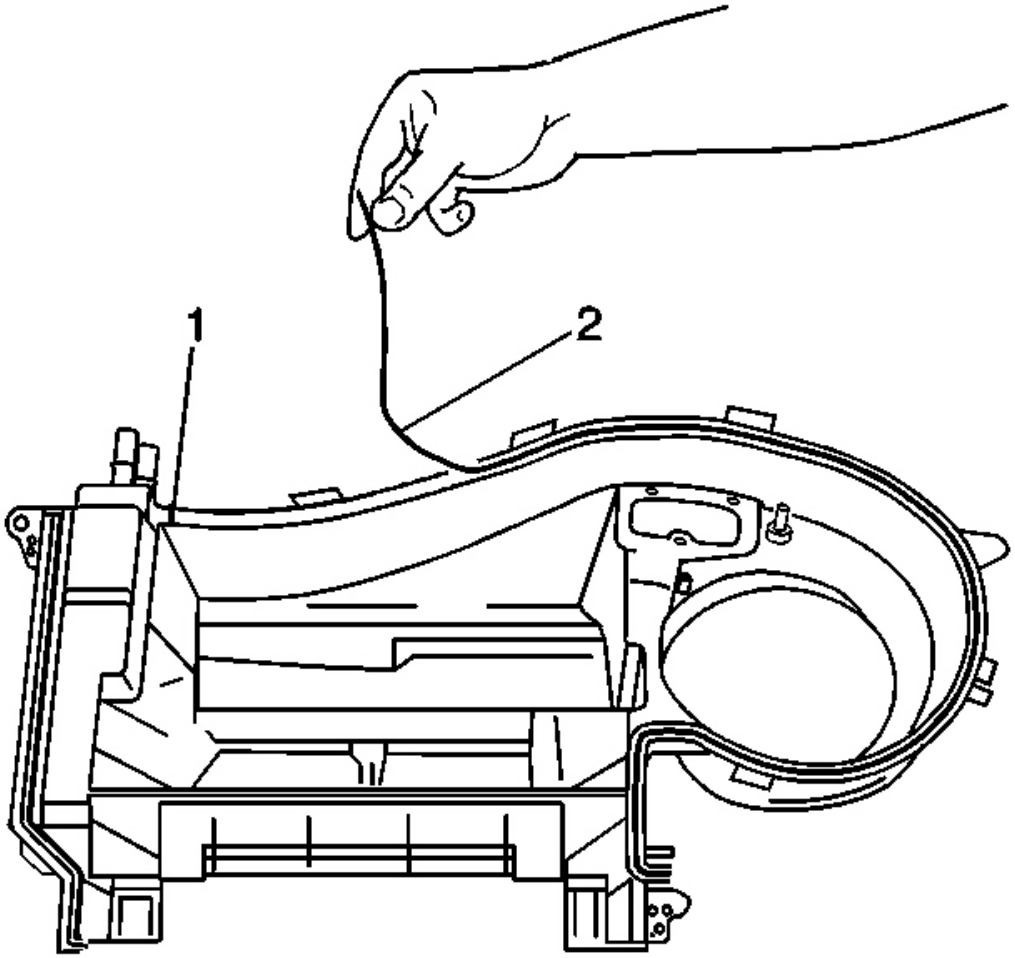

Fig. 274: HVAC Module Case Seals
Courtesy of GENERAL MOTORS CORP.

9. Remove the HVAC module seal (2).
10. Remove the right temperature door.

Installation Procedure

1. Install the right temperature door.

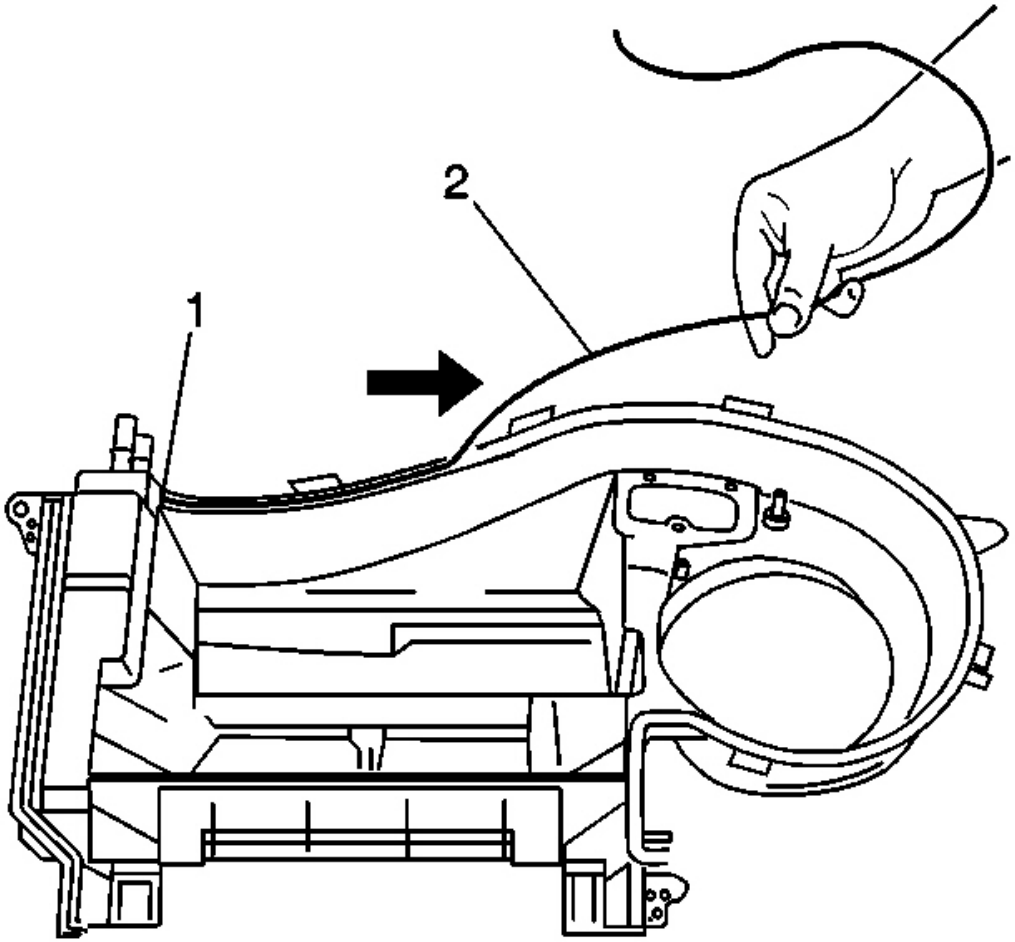

Fig. 275: Lower HVAC Module Case & HVAC Module Case Primary Seal
Courtesy of GENERAL MOTORS CORP.

2. Install the new case seal (2) to the HVAC module case.

   Start to install the lower case seal (2) to the lower case from the position shown (1).

3. Wet the upper evaporator core seal with water.

IMPORTANT: Inspect the condition of the retaining tab on the upper module case prior to installing the lower module case. If the retaining tab is broken or damaged, install an external retaining clip (P/N 52458793, or equivalent).

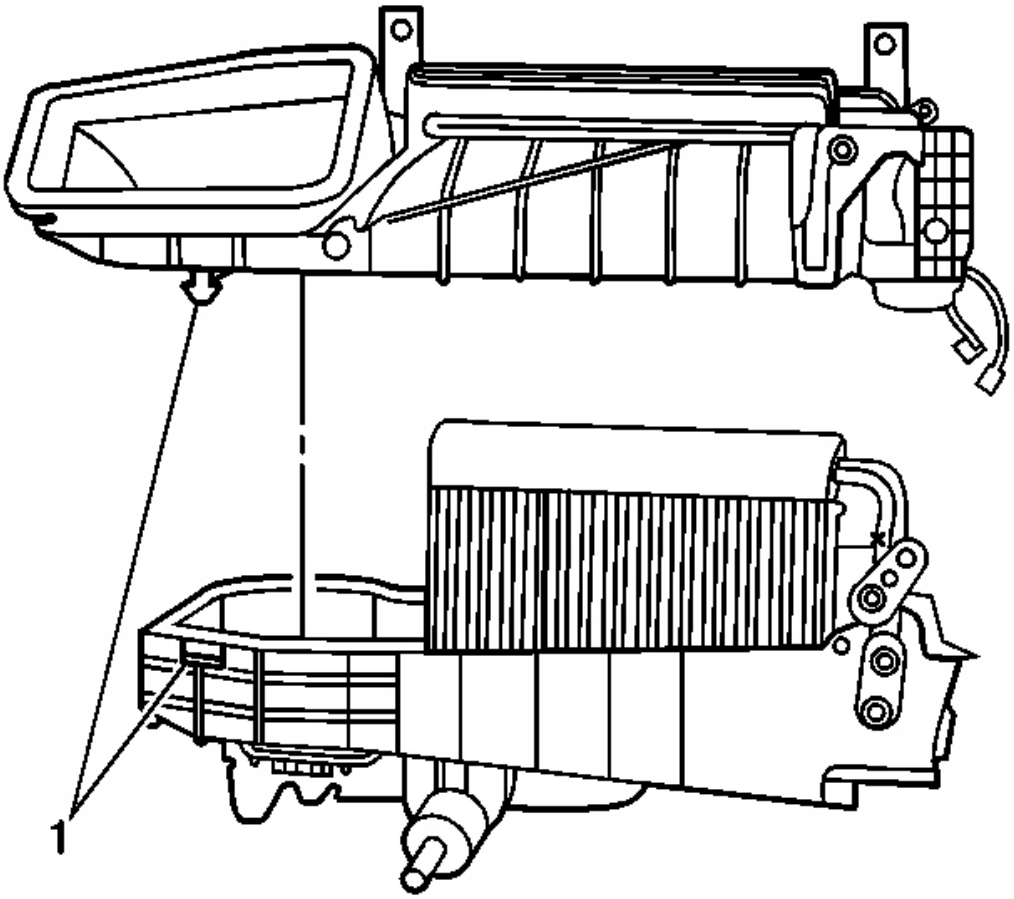

Fig. 276: Upper/Lower HVAC Module Halves
Courtesy of GENERAL MOTORS CORP.

4. Align and install the upper module case to the lower module case.

   Align and secure the retaining tab (1).

   NOTE: Refer to Fastener Notice in Cautions and Notices.

5. Install the HVAC module upper mounting screws.

   Tighten: Tighten the screws to 1.6 N.m (14 lb in).

6. Install the air inlet housing.

7. Install the air inlet housing retaining screws.

   Tighten: Tighten the screws to 1.6 N.m (14 lb in).

8. Install the temperature actuator.
9. Install the temperature actuator screws.

   Tighten: Tighten the screws to 1.5 N.m (13 lb in).

10. Install the HVAC module. Refer to **HVAC Module Assembly Replacement** .

AIR TEMPERATURE DOOR REPLACEMENT - LEFT

Removal Procedure

1. Remove the HVAC module. Refer to **HVAC Module Assembly Replacement** .
2. Remove the temperature actuator screws.
3. Remove the temperature actuator.
4. Remove the air inlet housing retaining screws.
5. Remove the air inlet housing.
6. Remove the HVAC module upper mounting screws.

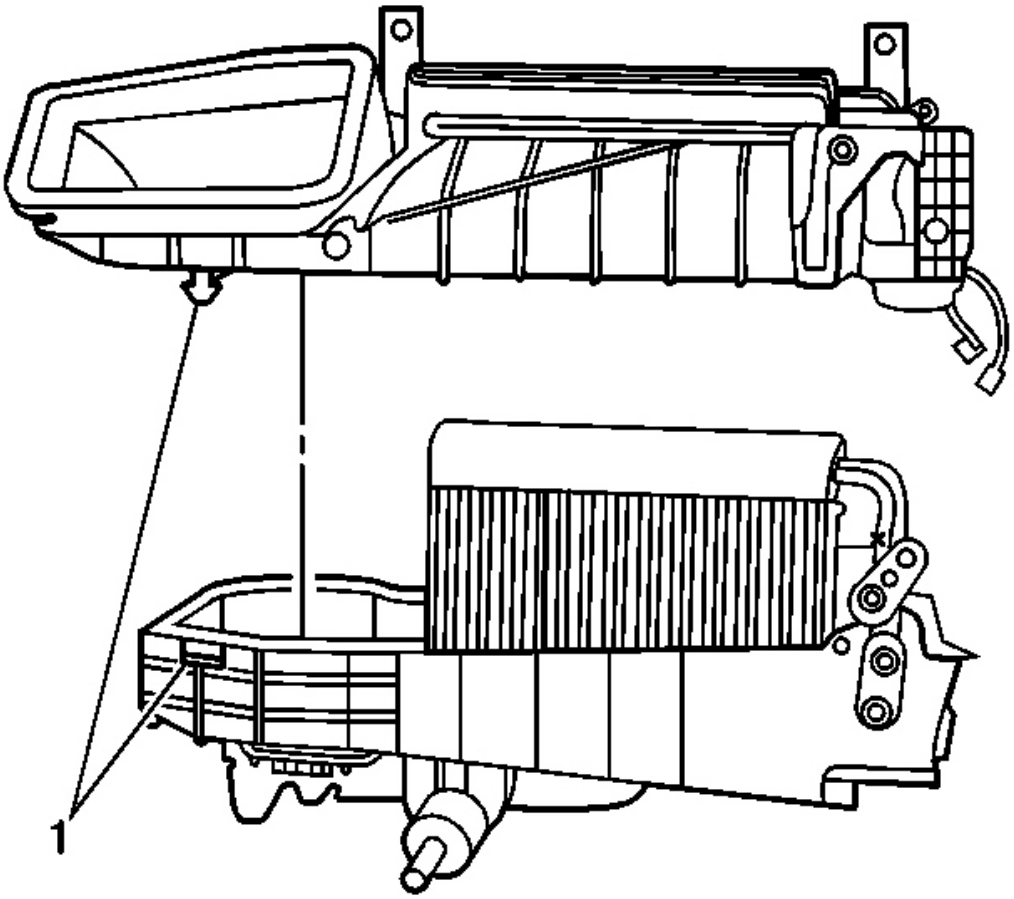

Fig. 277: Upper/Lower HVAC Module Halves
Courtesy of GENERAL MOTORS CORP.

7. Release the retaining tab (1) securing the HVAC module halves.
8. Separate the upper and lower module halves.

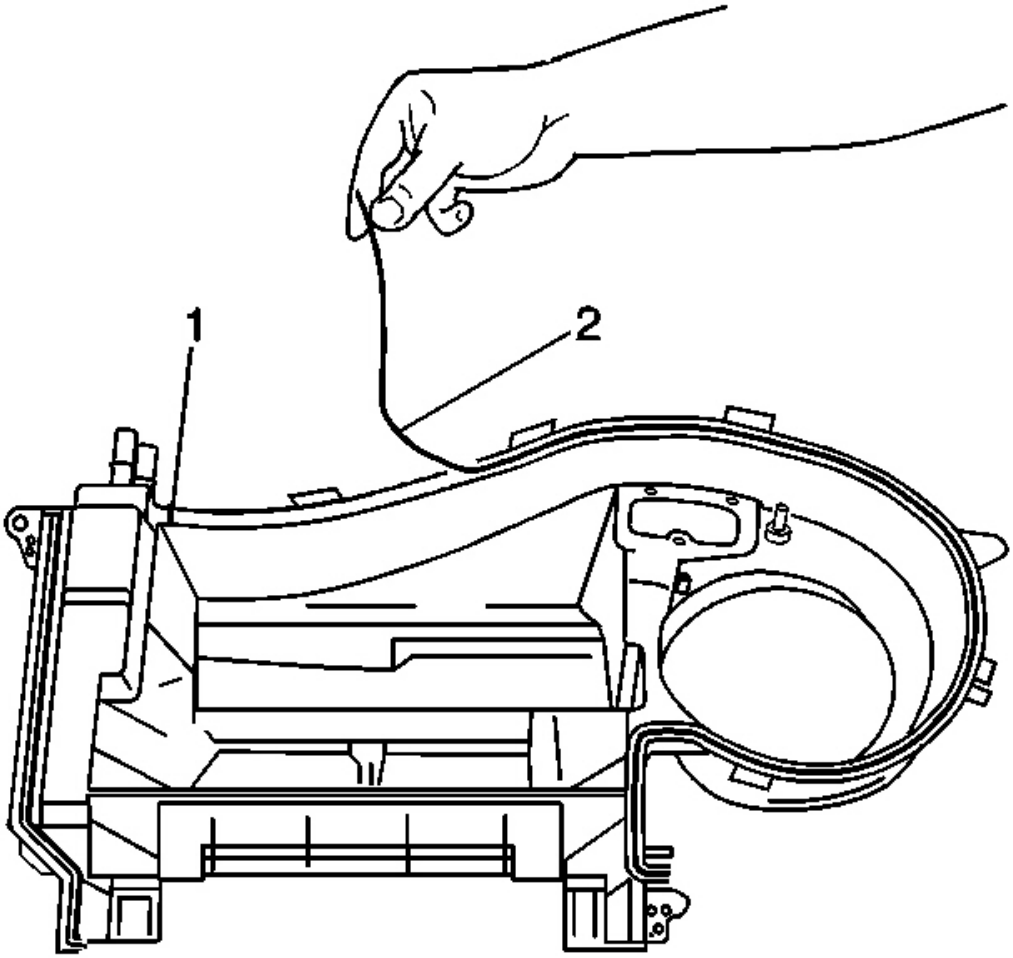

Fig. 278: HVAC Module Case Seals
Courtesy of GENERAL MOTORS CORP.

9. Remove the HVAC module seal that is located between the upper and lower cases.
10. Remove the temperature door.

Installation Procedure

1. Install the temperature door.

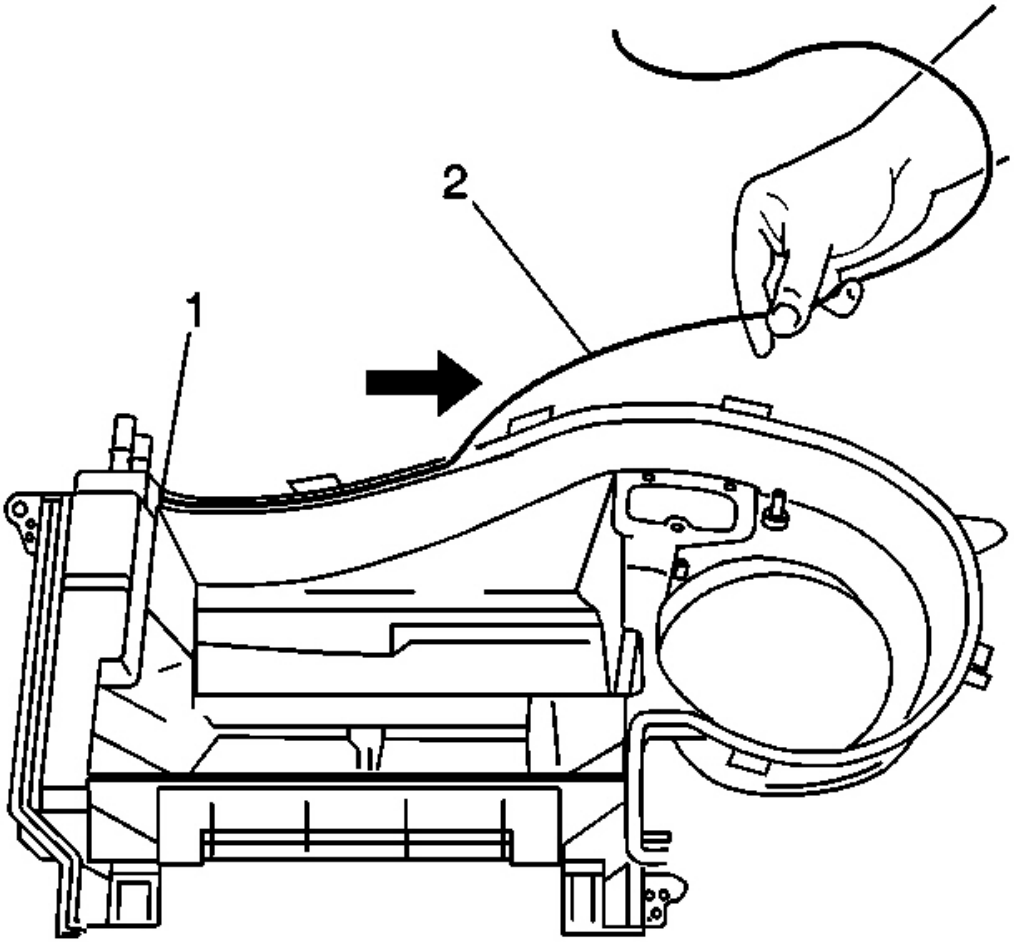

Fig. 279: Lower HVAC Module Case & HVAC Module Case Primary Seal
Courtesy of GENERAL MOTORS CORP.

2. Install the new case seal to the HVAC module case.
3. Wet the upper evaporator core seal with water.

IMPORTANT: Inspect the condition of the retaining tab on the upper module case prior to installing the lower module case. If the retaining tab is broken or damaged, install an external retaining clip (P/N 52458793, or equivalent).

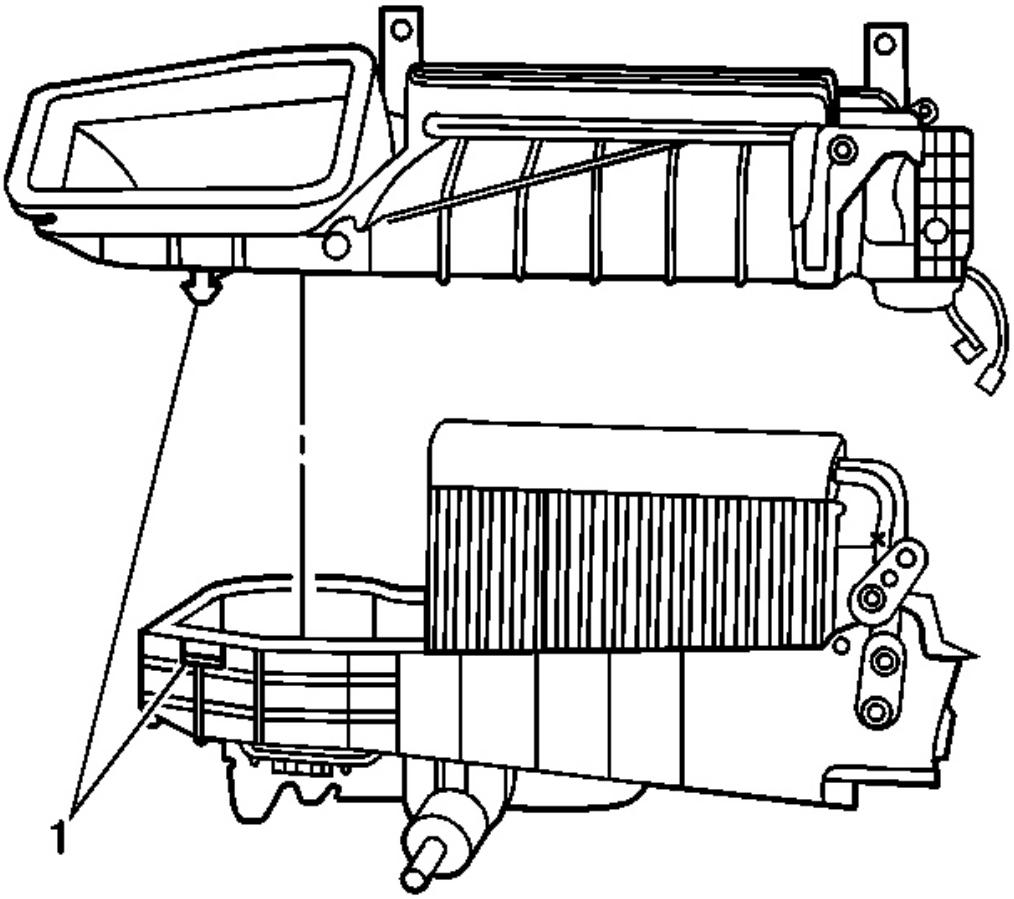

Fig. 280: Upper/Lower HVAC Module Halves
Courtesy of GENERAL MOTORS CORP.

4. Align and install the upper module case to the lower module case.

   Align and secure the retaining tab (1).

   NOTE: Refer to Fastener Notice in Cautions and Notices.

5. Install the HVAC module upper mounting screws.

   Tighten: Tighten the screws to 1.6 N.m (14 lb in).

6. Install the air inlet housing.

7. Install the air inlet housing retaining screws.

   Tighten: Tighten the screws to 1.6 N.m (14 lb in).

8. Install the temperature actuator.
9. Install the temperature actuator screws.

   Tighten: Tighten the screws to 1.5 N.m (13 lb in).

10. Install the HVAC module. Refer to **HVAC Module Assembly Replacement** .

DEFROSTER DOOR REPLACEMENT

Removal Procedure

1. Remove the I/P trim pad. Refer to **Trim Pad Replacement - Instrument Panel (I/P) Upper** in Instrument Panel, Gages and Console.
2. Remove the defroster door vacuum actuator.

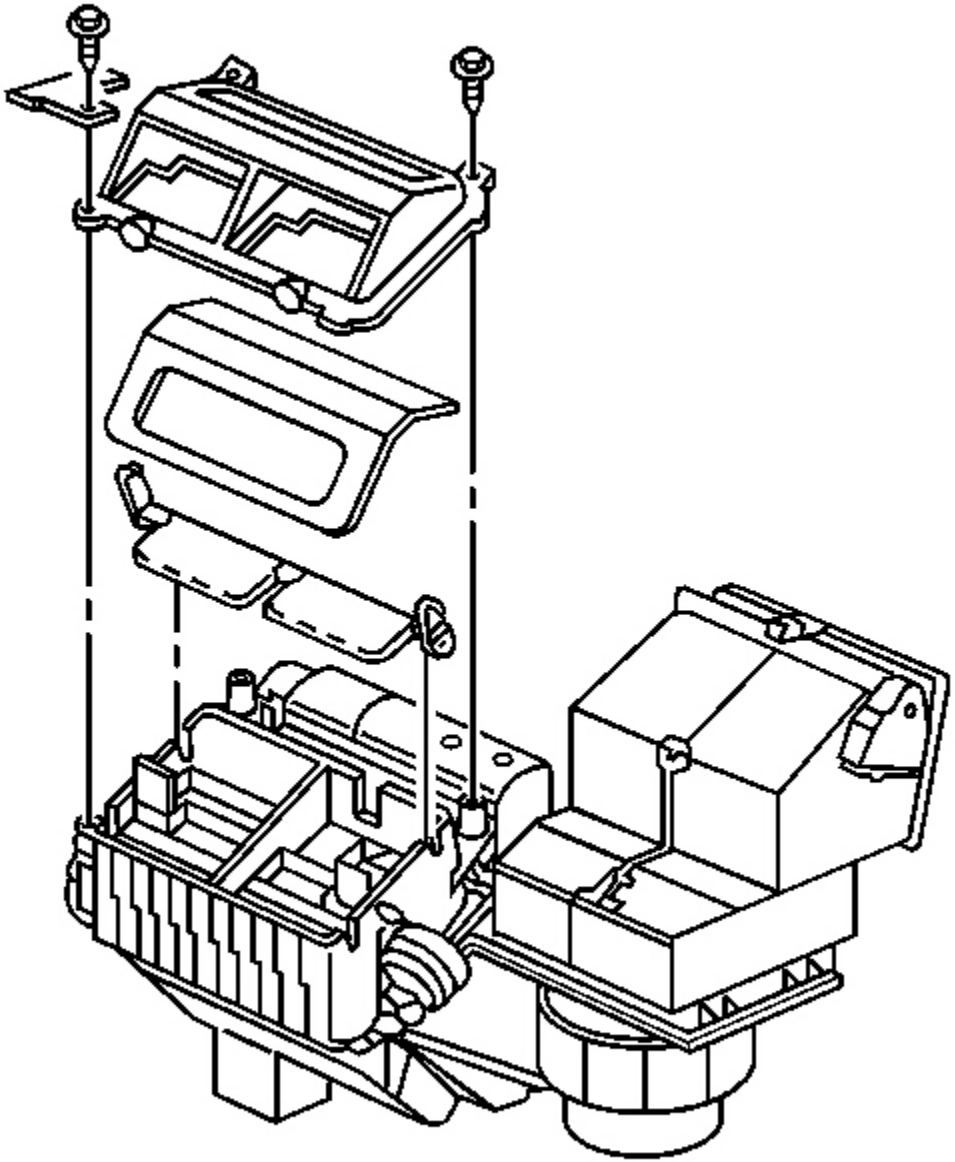

Fig. 281: Air Distribution Case Cover & Retaining Screws
Courtesy of GENERAL MOTORS CORP.

3. Remove the air distribution case cover retaining screws.
4. Remove the air distribution case cover.
5. Remove and discard the air distribution case seal.

6. Remove the linkage between the air temperature door and the heater door on the left side of the HVAC module assembly.
7. Remove the defroster door.

Installation Procedure

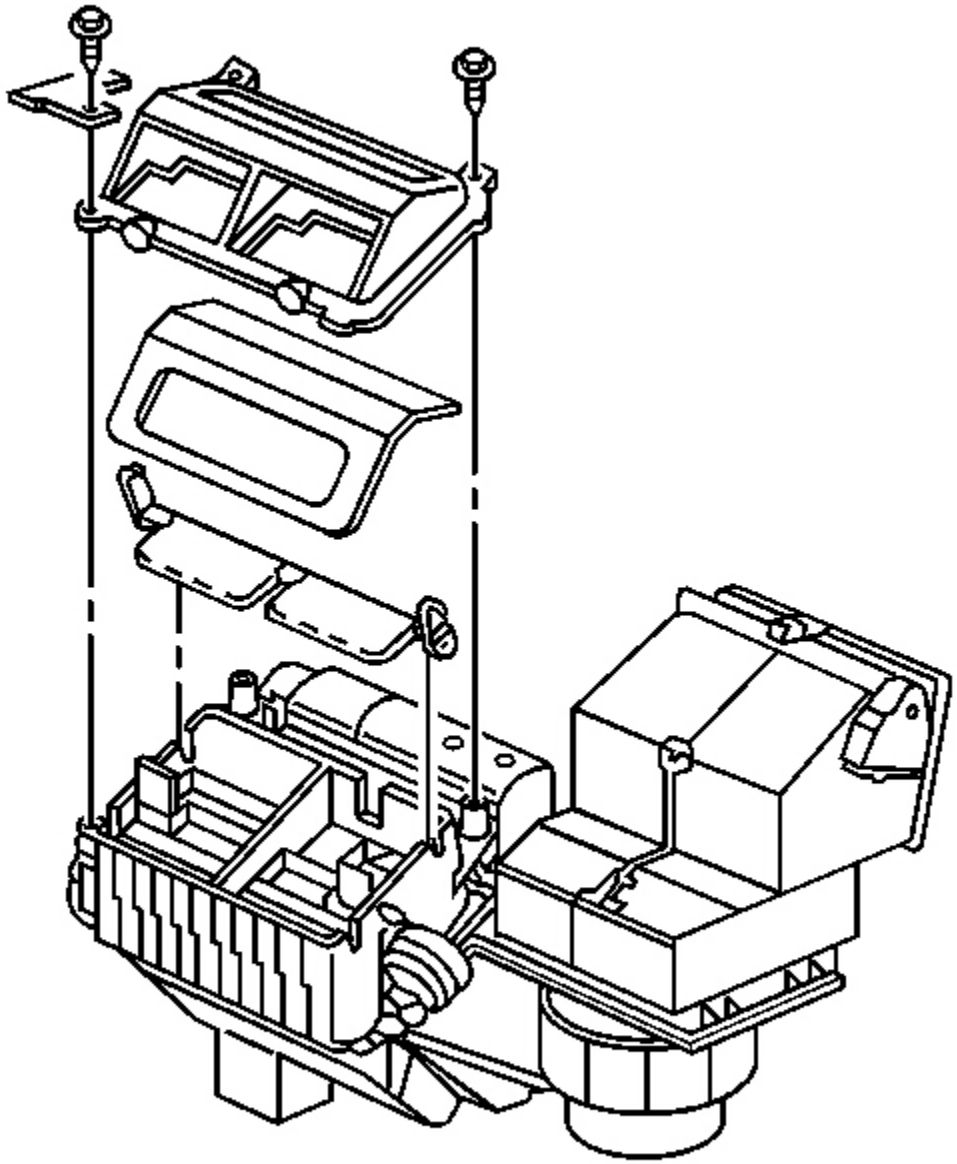

Fig. 282: Air Distribution Case Cover & Retaining Screws
Courtesy of GENERAL MOTORS CORP.

1. Install the defroster door.
2. Connect the linkage between the air temperature door and the heater door.
3. Install a new air distribution case seal
4. Install the air distribution case cover.

NOTE: Refer to Fastener Notice in Cautions and Notices.

5. Install the air distributor case cover retaining screws.

   Tighten: Tighten the screws to 1.6 N.m (14 lb in).

6. Install the defroster door vacuum actuator.
7. Install the I/P trim pad. Refer to **Trim Pad Replacement - Instrument Panel (I/P) Upper** in Instrument Panel, Gages and Console.

MODE DOOR REPLACEMENT

Removal Procedure

1. Remove the I/P trim pad. Refer to **Trim Pad Replacement - Instrument Panel (I/P) Upper** in Instrument Panel, Gages and Console.
2. Remove the mode door actuator.

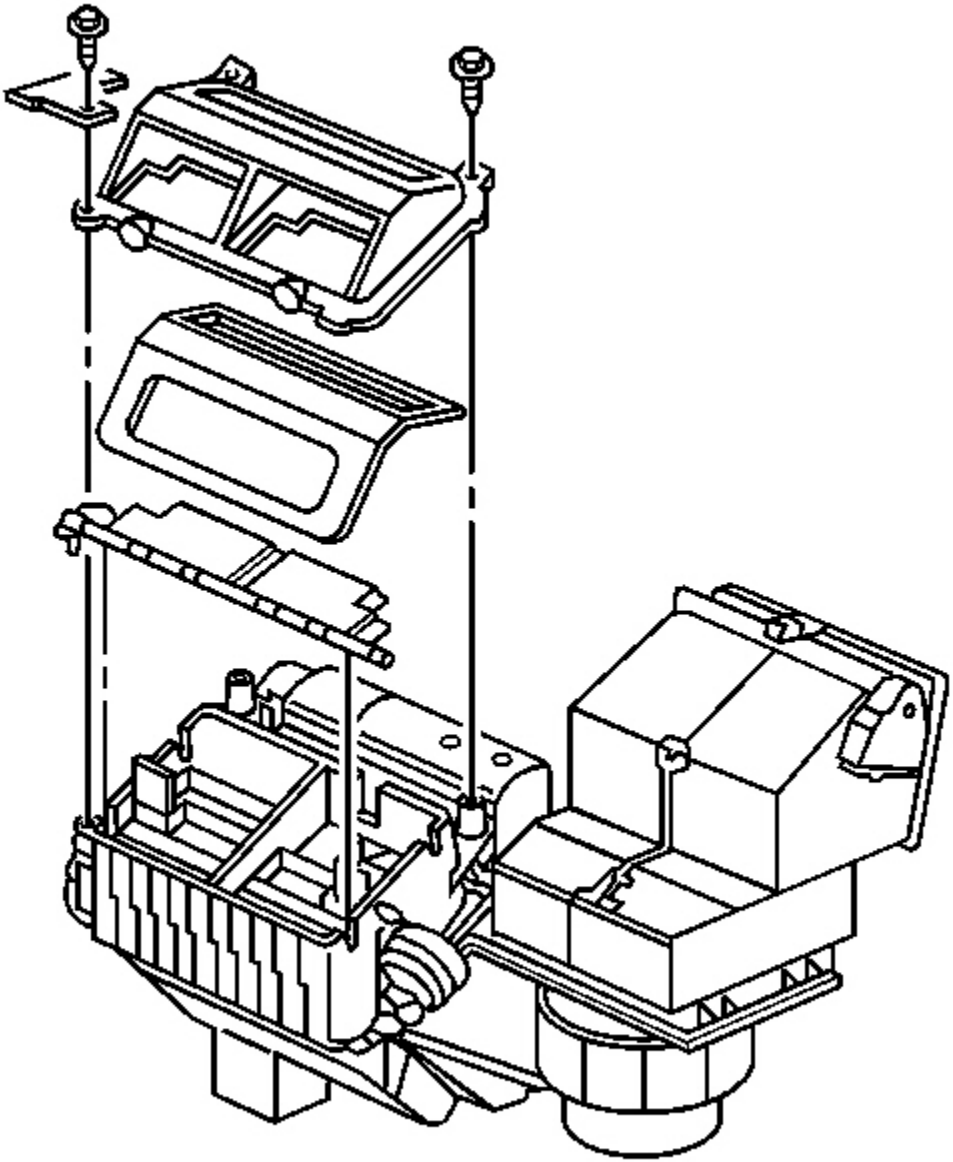

Fig. 283: Air Distribution Case Seal, Screws & Mode Door
Courtesy of GENERAL MOTORS CORP.

3. Remove the air distribution case cover retaining screws.
4. Remove the air distribution case cover.
5. Remove and discard the air distribution case seal.

6. Remove the mode door.

Installation Procedure

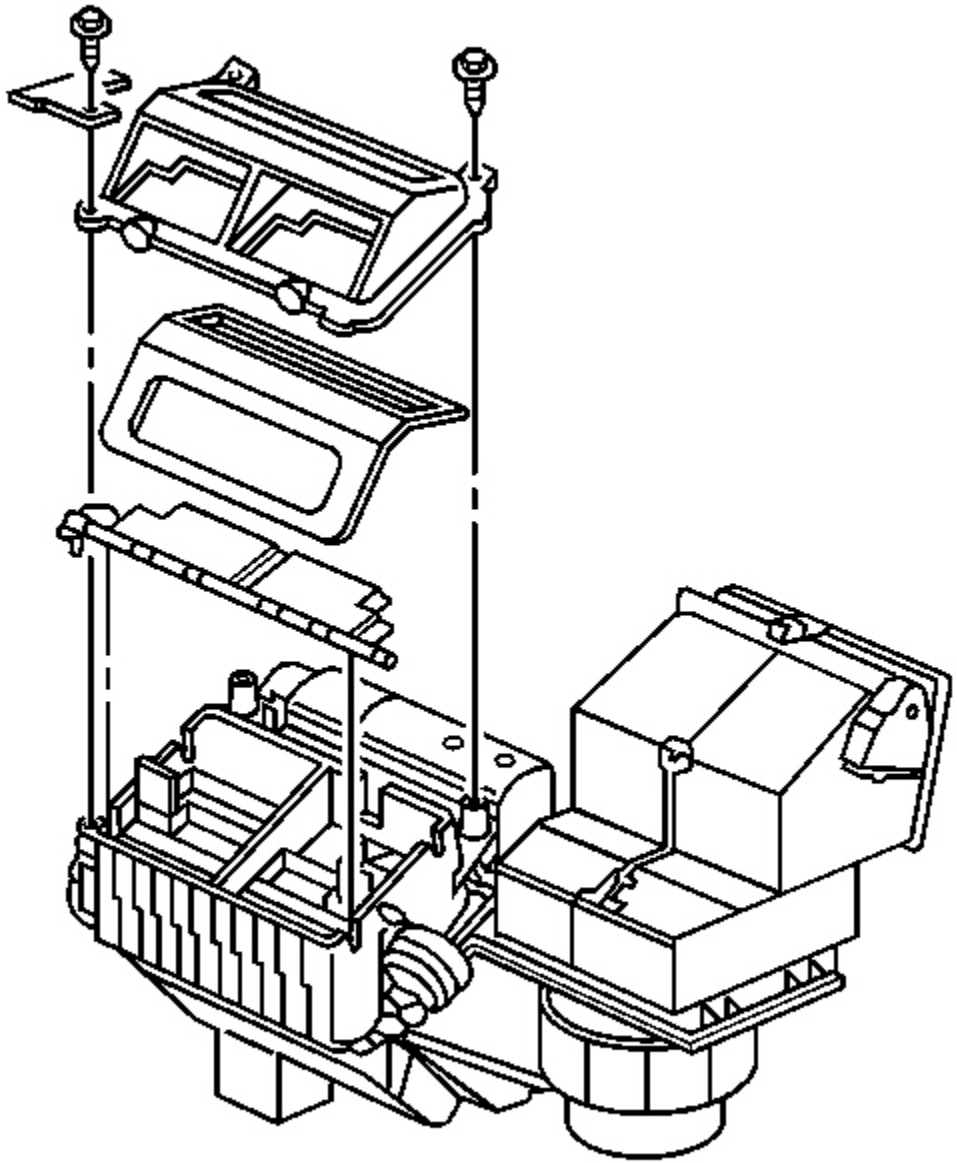

Fig. 284: Air Distribution Case Seal, Screws & Mode Door
Courtesy of GENERAL MOTORS CORP.

1. Install the mode door.
2. Install a new air distribution case seal.
3. Install the air distribution case cover.

NOTE: Refer to Fastener Notice in Cautions and Notices.

4. Install the air distribution case cover retaining screws.

   Tighten: Tighten the screws to 1.6 N.m (14 lb in).

5. Install the mode door actuator.
6. Install the I/P trim pad. Refer to **Trim Pad Replacement - Instrument Panel (I/P) Upper** in Instrument Panel, Gages and Console.

RECIRCULATION DOOR REPLACEMENT

Removal Procedure

1. Remove the I/P trim pad. Refer to **Trim Pad Replacement - Instrument Panel (I/P) Upper** in Instrument Panel, Gages and Console.
2. Remove the SIR bracket. Refer to **Bracket Replacement - SIR** in Instrument Panel, Gages and Console.

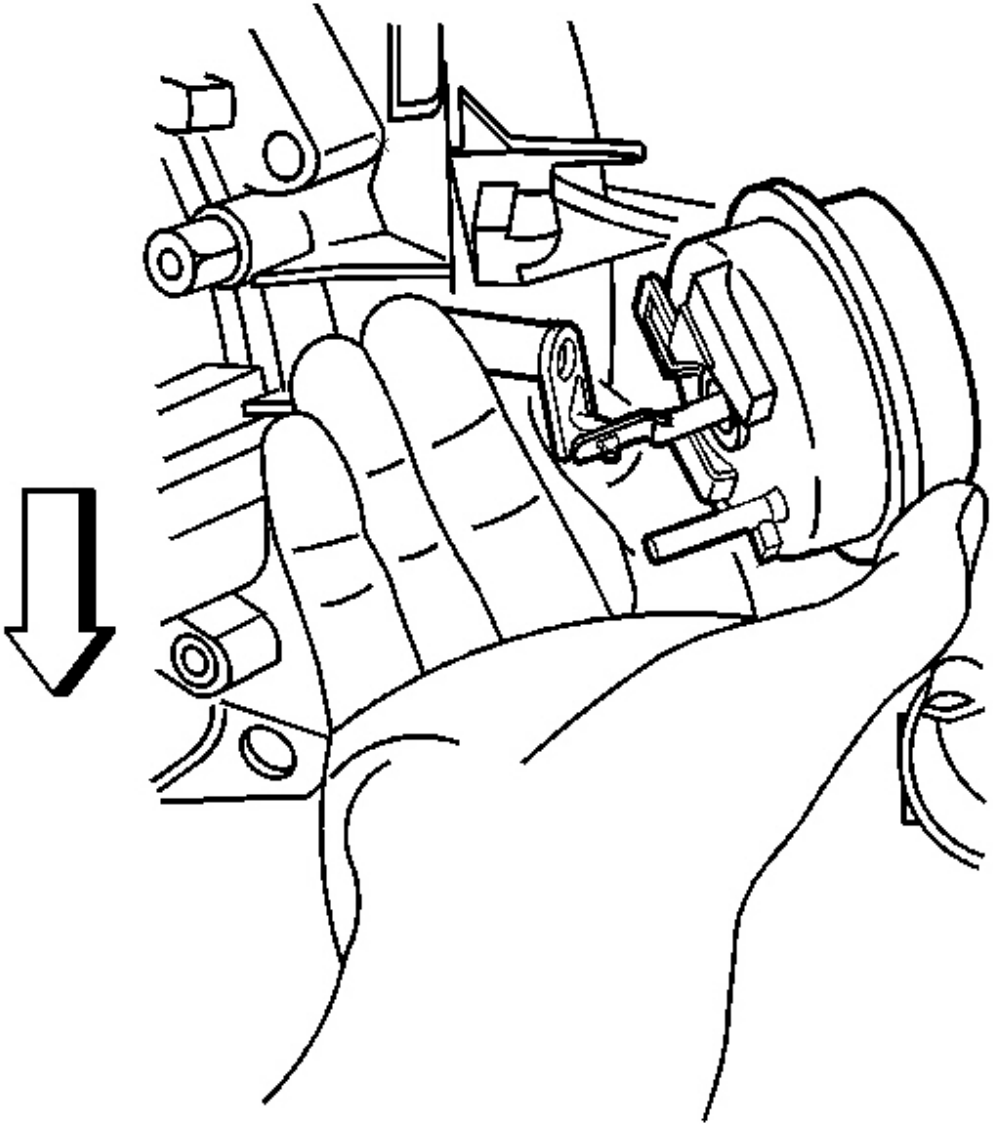

Fig. 285: Recirculation Actuator Vacuum Hose
Courtesy of GENERAL MOTORS CORP.

3. Disconnect the recirculation actuator vacuum hose.
4. Remove the recirculation housing screws.
5. Tilt the recirculation housing away from the HVAC module and lift housing from the tab slots in the module case.

6. Remove the recirculation actuator.
7. Remove the recirculation door from the recirculation housing.

Installation Procedure

1. Install the recirculation door into the recirculation housing.
2. Install the recirculation actuator.

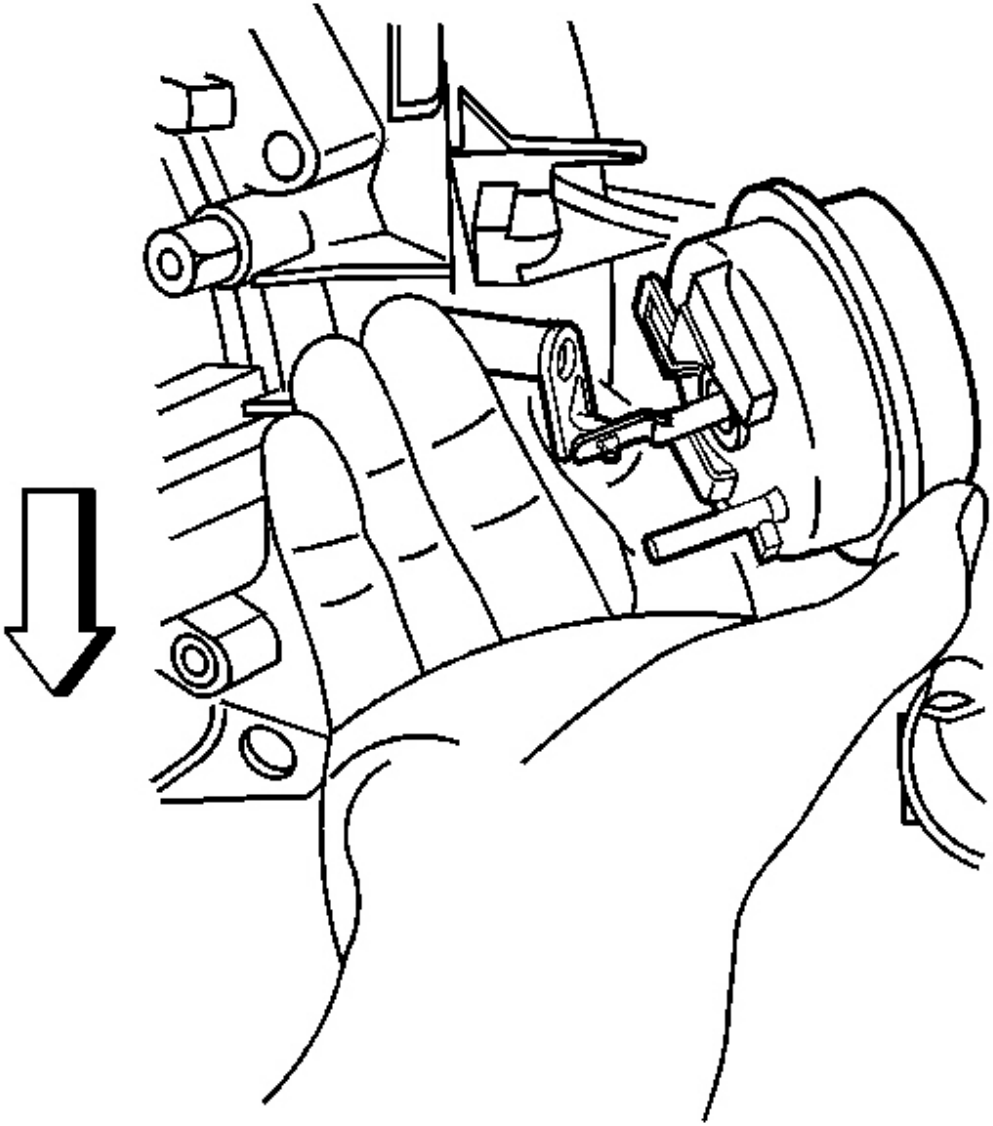

Fig. 286: Recirculation Actuator Vacuum Hose
Courtesy of GENERAL MOTORS CORP.

3. Install the recirculation housing to the HVAC module.

NOTE: **Refer to Fastener Notice in Cautions and Notices.**

4. Install the recirculation housing screws.

   Tighten: Tighten the screws to 1.6 N.m (14 lb in).

5. Connect the recirculation actuator vacuum hose.
6. Install the SIR bracket. Refer to **Bracket Replacement - SIR** in Instrument Panel, Gages and Console.
7. Install the I/P trim pad. Refer to **Trim Pad Replacement - Instrument Panel (I/P) Upper** in Instrument Panel, Gages and Console.

HEATER DOOR REPLACEMENT

Removal Procedure

1. Remove the HVAC module. Refer to **HVAC Module Assembly Replacement** .
2. Remove the defroster actuator tie strap.
3. Remove the defroster actuator. Refer to **Defroster Actuator Replacement** .
4. Remove the heater door linkage.

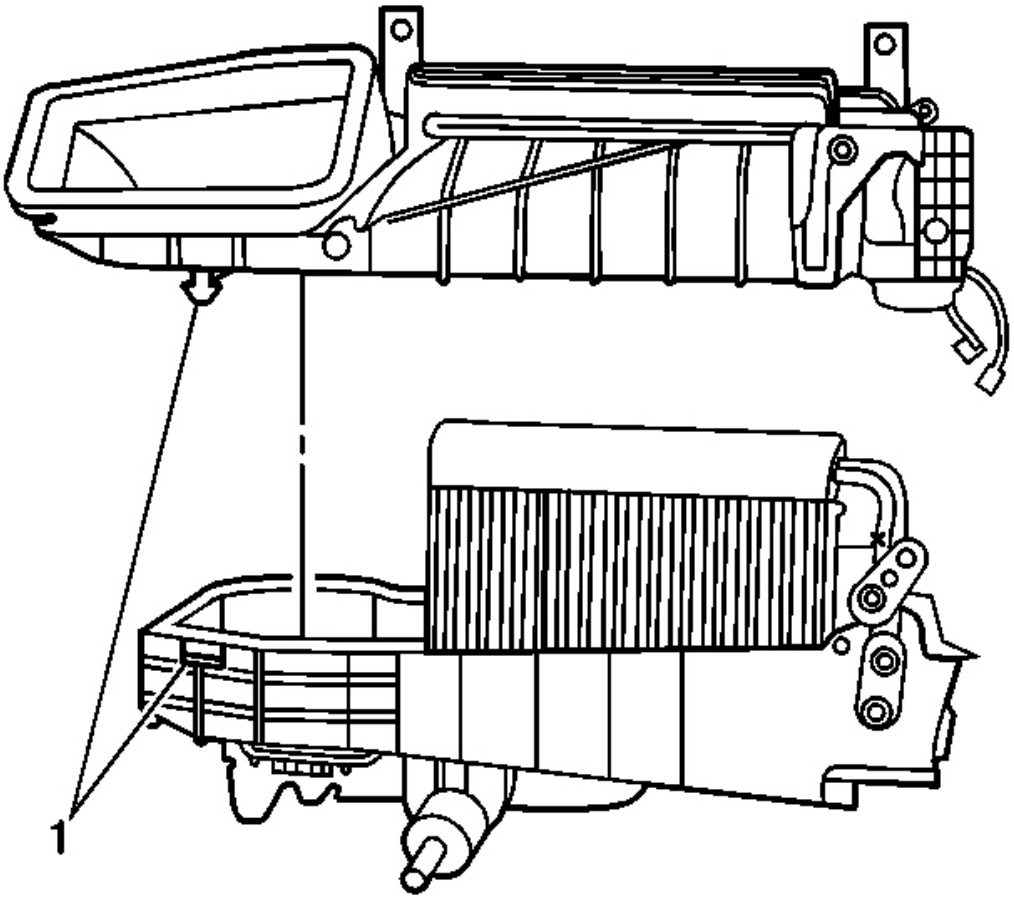

Fig. 287: Upper/Lower HVAC Module Halves
Courtesy of GENERAL MOTORS CORP.

5. Remove the HVAC case retaining screws.
6. Separate the HVAC case halves (1).

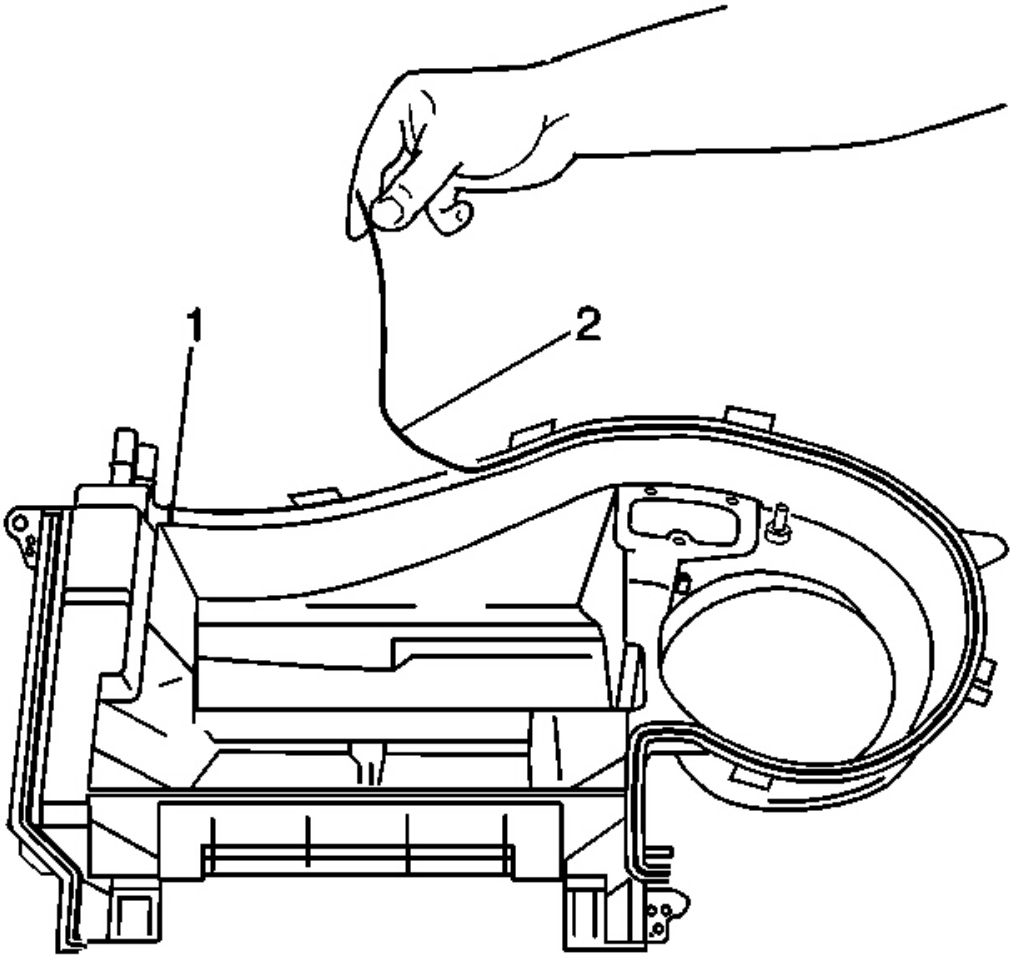

Fig. 288: HVAC Module Case Seals
Courtesy of GENERAL MOTORS CORP.

7. Remove and discard the case seal (2).
8. Remove the heater door.

Installation Procedure

1. Install the heater door.

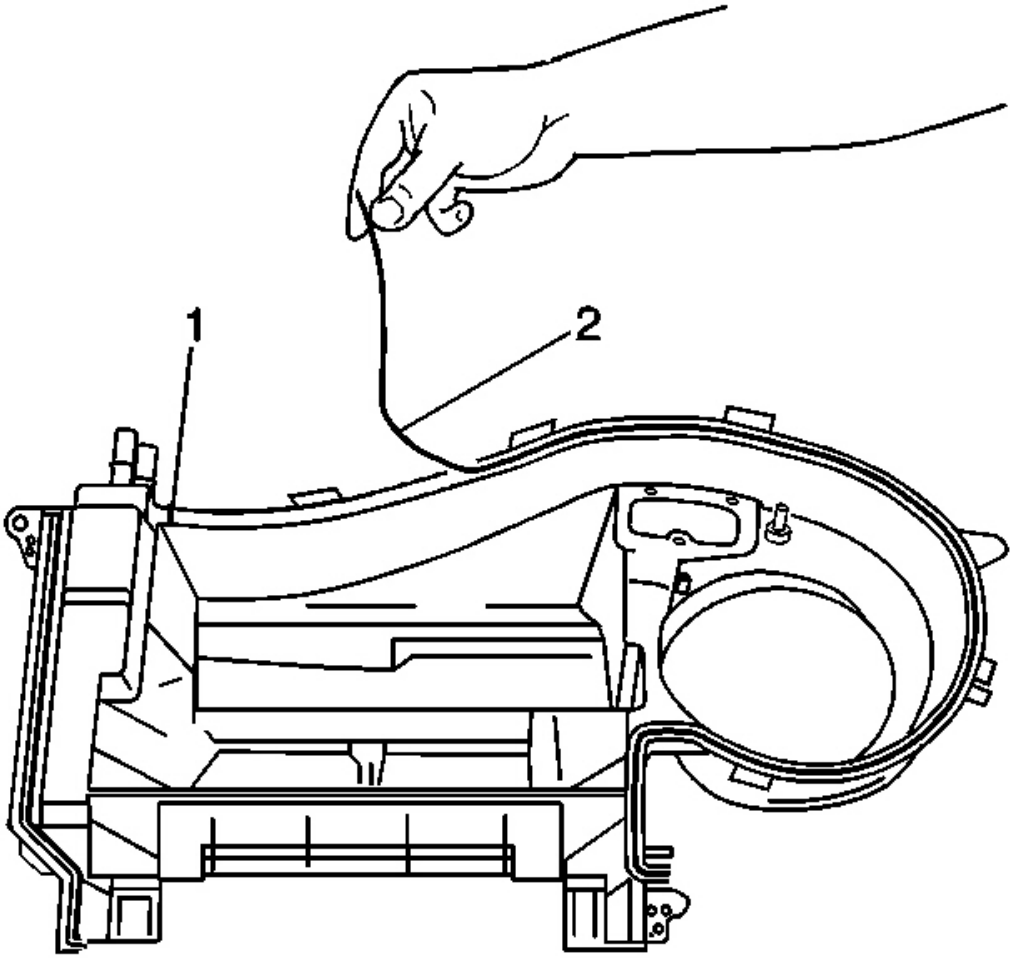

Fig. 289: HVAC Module Case Seals
Courtesy of GENERAL MOTORS CORP.

2. Install a new case seal (2).

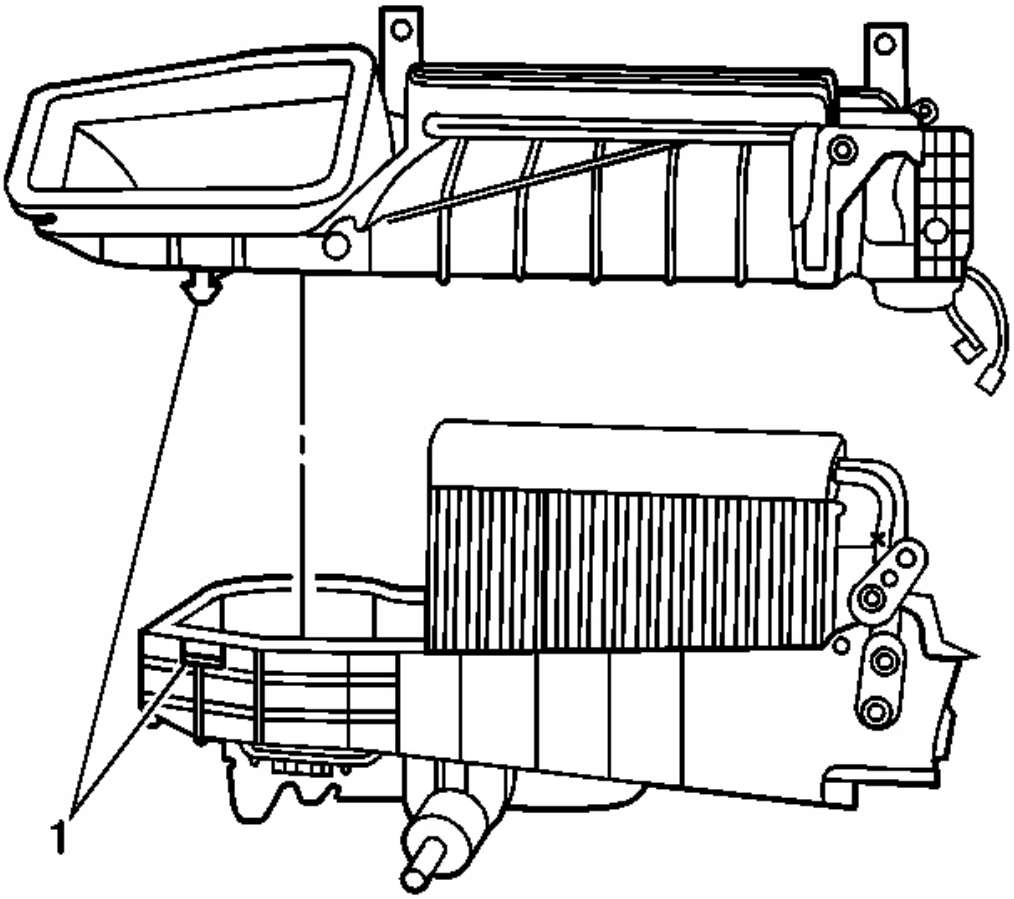

Fig. 290: Upper/Lower HVAC Module Halves
Courtesy of GENERAL MOTORS CORP.

3. Align and attach the HVAC case halves (1).

NOTE: **Refer to Fastener Notice in Cautions and Notices.**

4. Install the HVAC case retaining screws.

   Tighten: Tighten the screws to 1.6 N.m (14 lb in).

5. Install the heater door linkage.
6. Install the defroster actuator. Refer to **Defroster Actuator Replacement** .
7. Install the HVAC module. Refer to **HVAC Module Assembly Replacement** .

HEATER CORE REPLACEMENT

Removal Procedure

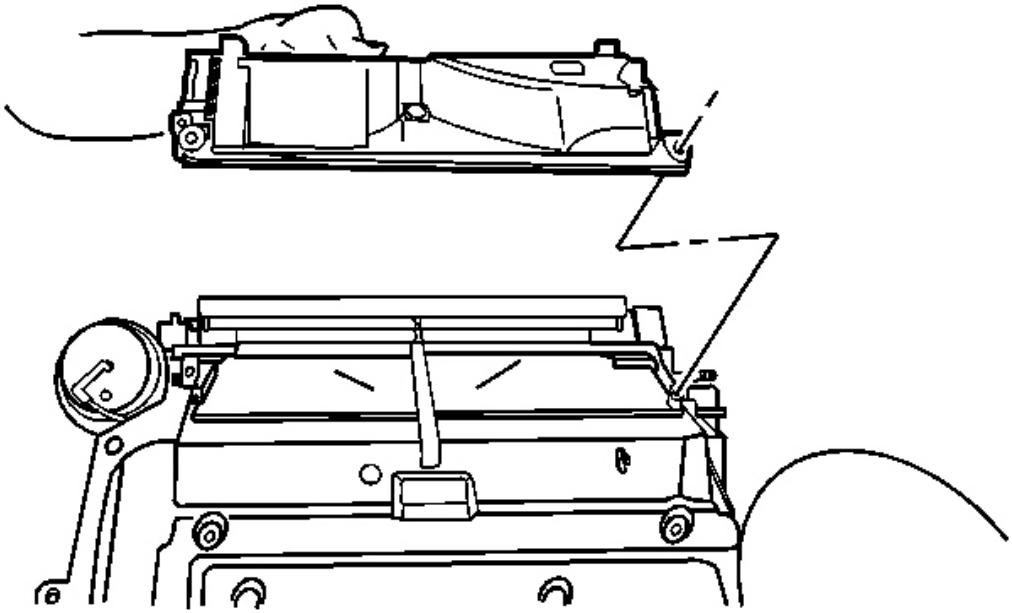

Fig. 291: Heater Core Outlet Cover & HVAC Module
Courtesy of GENERAL MOTORS CORP.

1. Remove the HVAC module. Refer to **HVAC Module Assembly Replacement** .
2. Remove the heater core outlet cover screws.
3. Remove the heater core outlet cover.

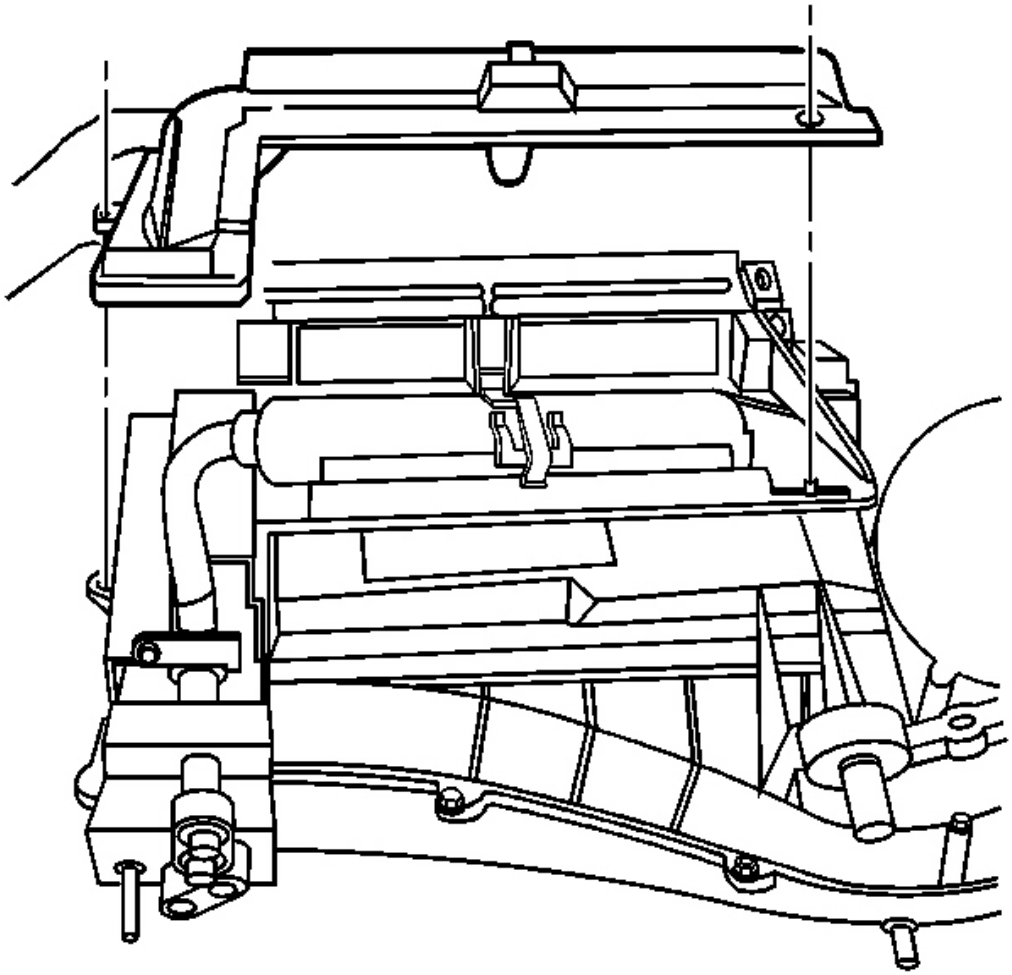

Fig. 292: Heater Core Cover Screws
Courtesy of GENERAL MOTORS CORP.

4. Remove the heater core cover screws.
5. Remove the heater core cover.

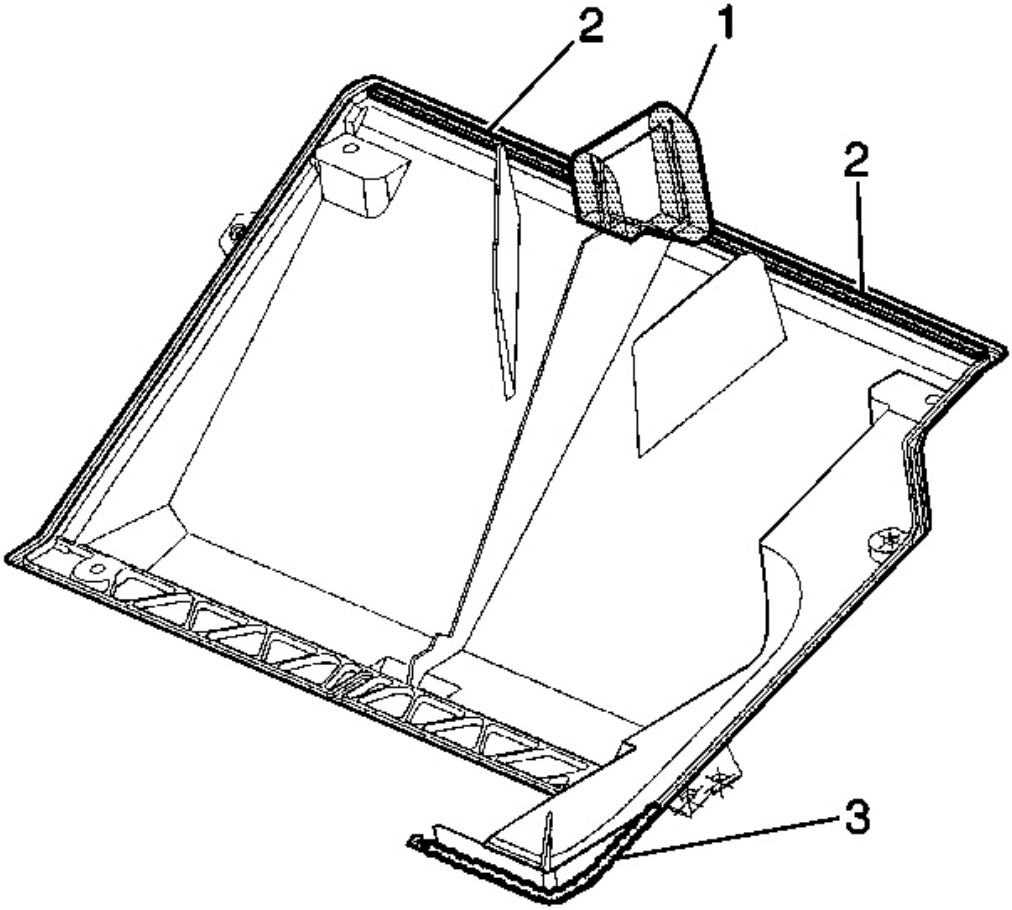

Fig. 293: Heater Core Cover Cavity Seals (1,2,3)
Courtesy of GENERAL MOTORS CORP.

6. Remove and discard the seals (1,2,3) from the heater core cover.

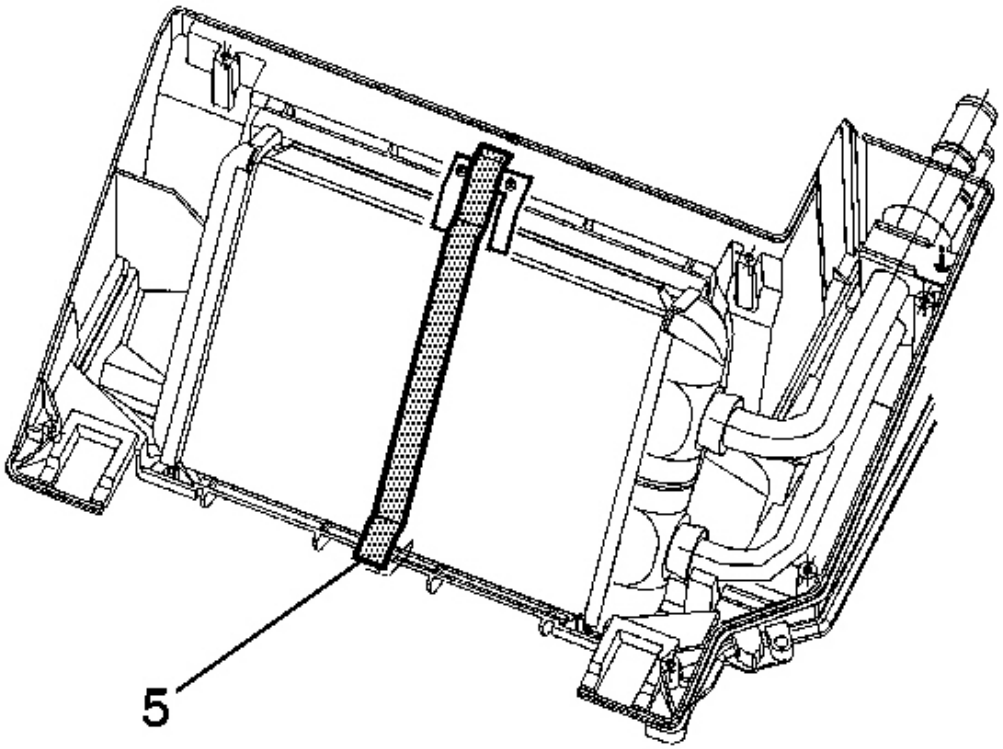

Fig. 294: Heater Core Outer Seal
Courtesy of GENERAL MOTORS CORP.

7. Remove and discard the heater core outer seal (5) from the heater core.

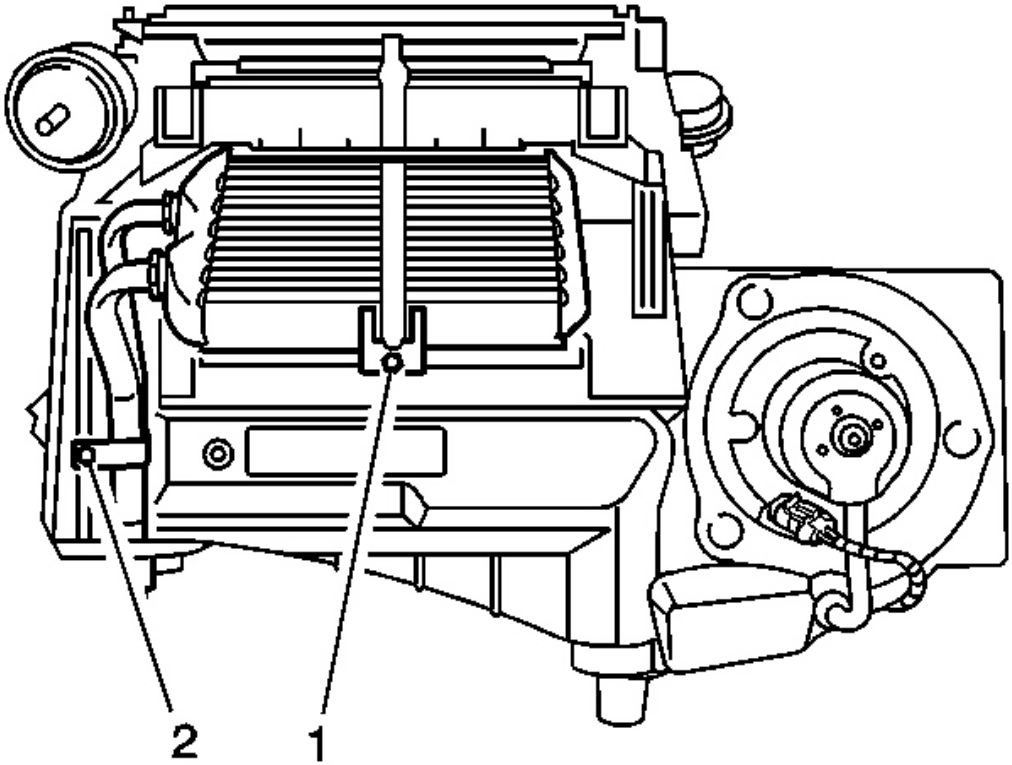

Fig. 295: Heater Core Pipe Retainer Clamp & Screw
Courtesy of GENERAL MOTORS CORP.

8. Remove the heater core retaining clamp screw (1).
9. Remove the heater core retaining clamp.
10. Remove the heater core pipe retainer clamp screw (2).

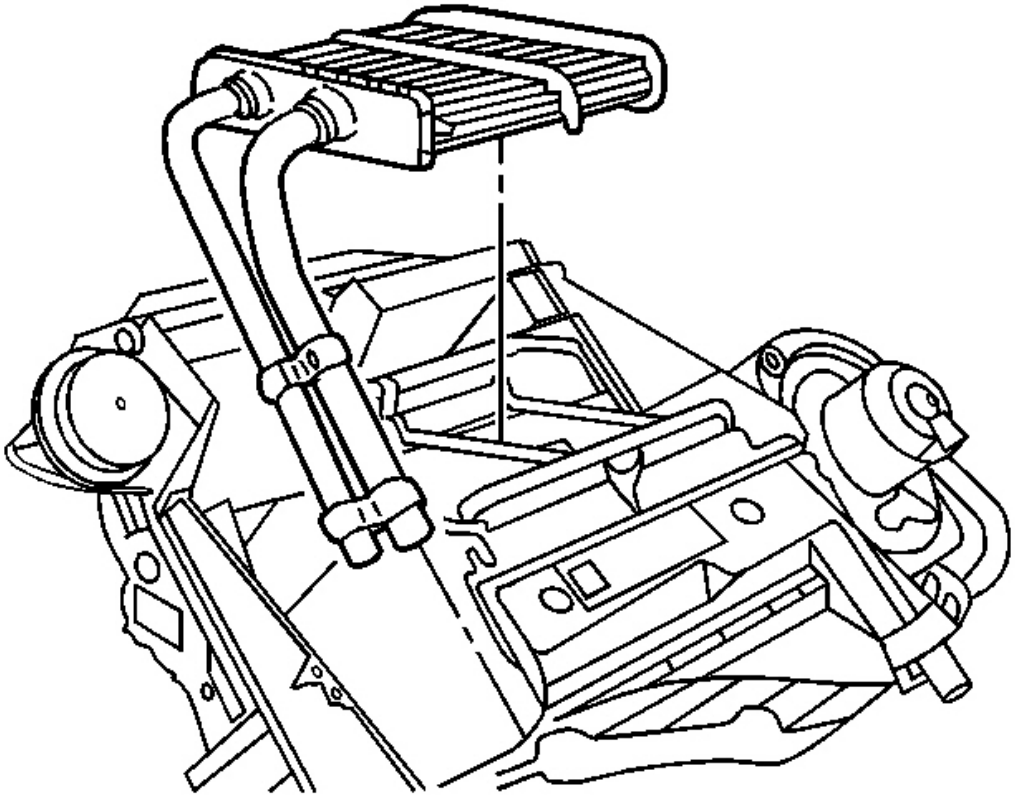

Fig. 296: Lower HVAC Module Case & Heater Core
Courtesy of GENERAL MOTORS CORP.

11. Remove the heater core from the HVAC module case - lower.

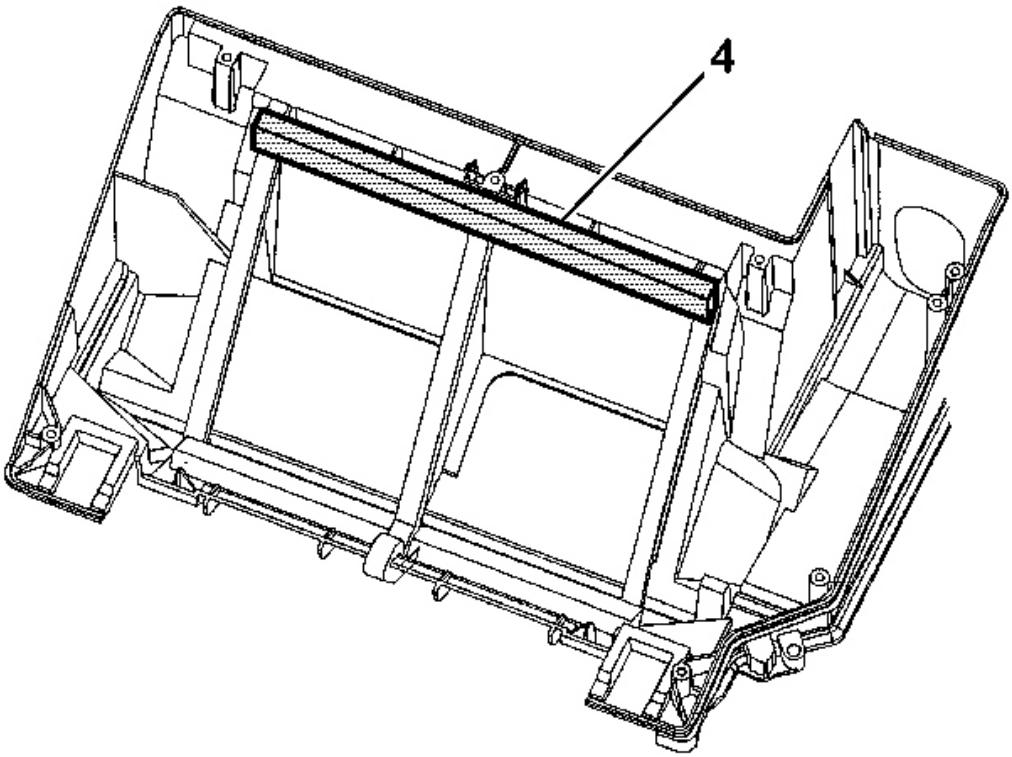

Fig. 297: Lower HVAC Module Case & Heater Core Lower Seal
Courtesy of GENERAL MOTORS CORP.

12. Remove and discard the heater core lower seal (4) from the HVAC module case - lower.

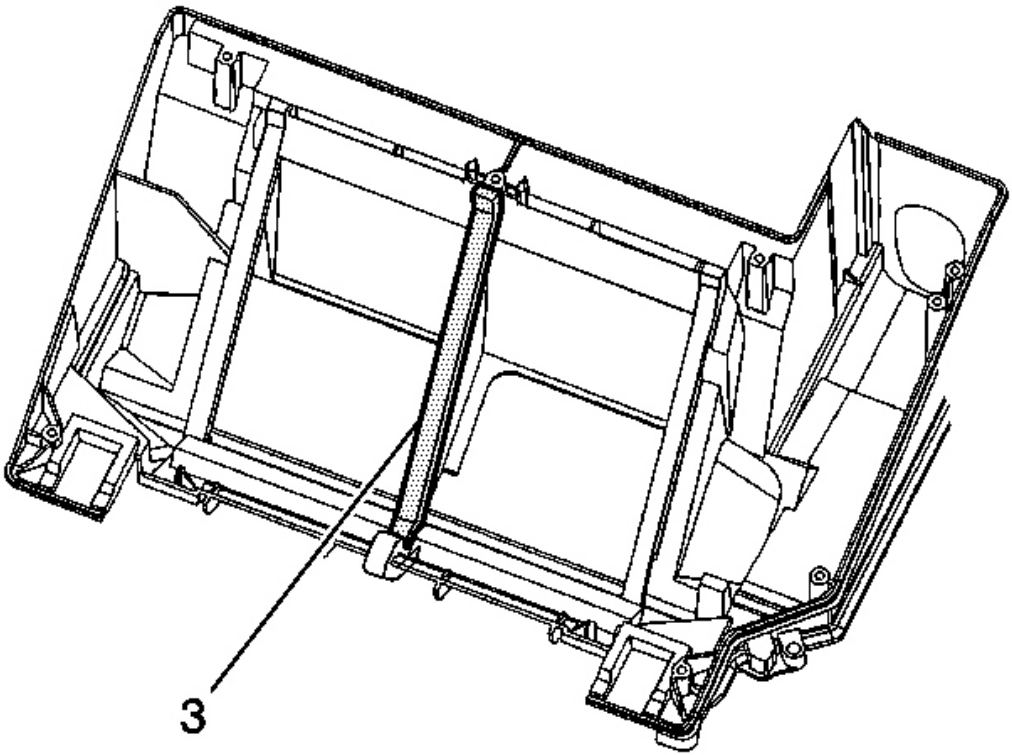

Fig. 298: Lower HVAC Module Case & Heater Core Center Seal
Courtesy of GENERAL MOTORS CORP.

13. Remove and discard the heater core center seal (3) from the HVAC module case - lower.

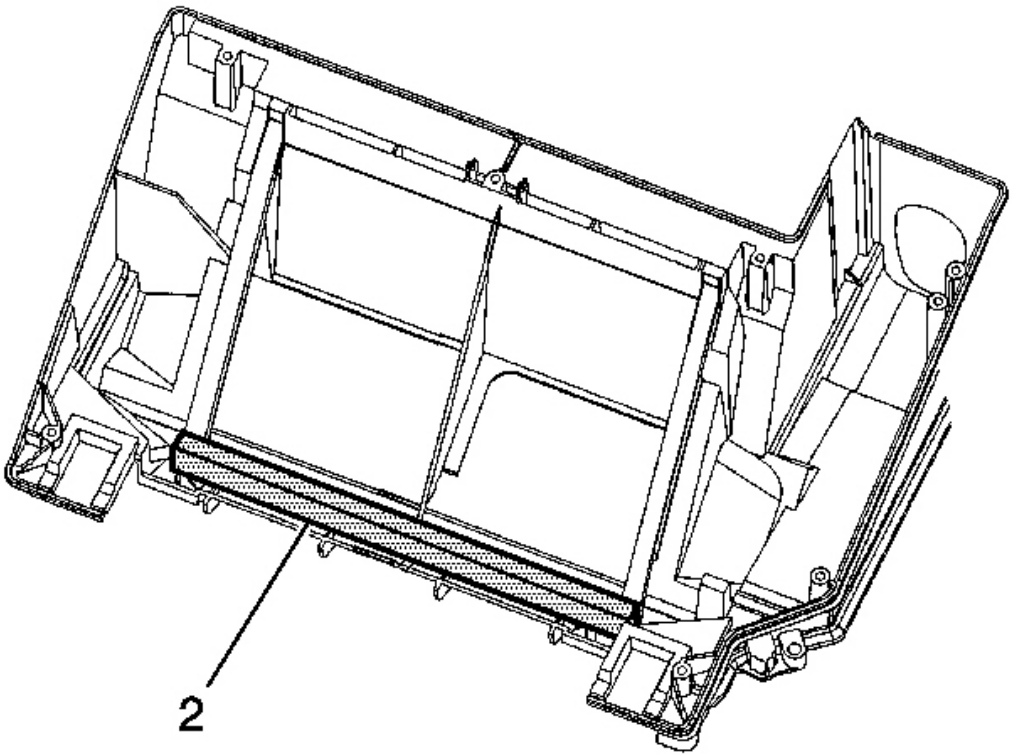

Fig. 299: Lower HVAC Module Case & Heater Core Upper Seal
Courtesy of GENERAL MOTORS CORP.

14. Remove and discard the heater core upper seal (2) from the HVAC module case - lower.

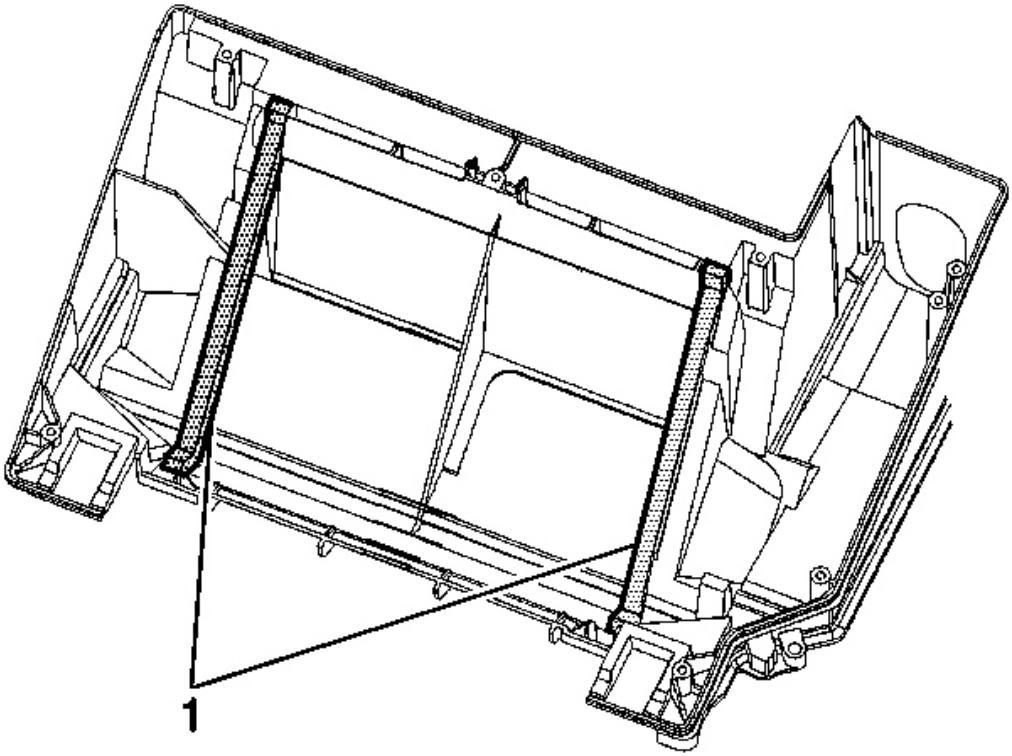

Fig. 300: Lower HVAC Module Case & Heater Core Side Seal
Courtesy of GENERAL MOTORS CORP.

15. Remove and discard the heater core side seals (1) from the HVAC module case - lower.

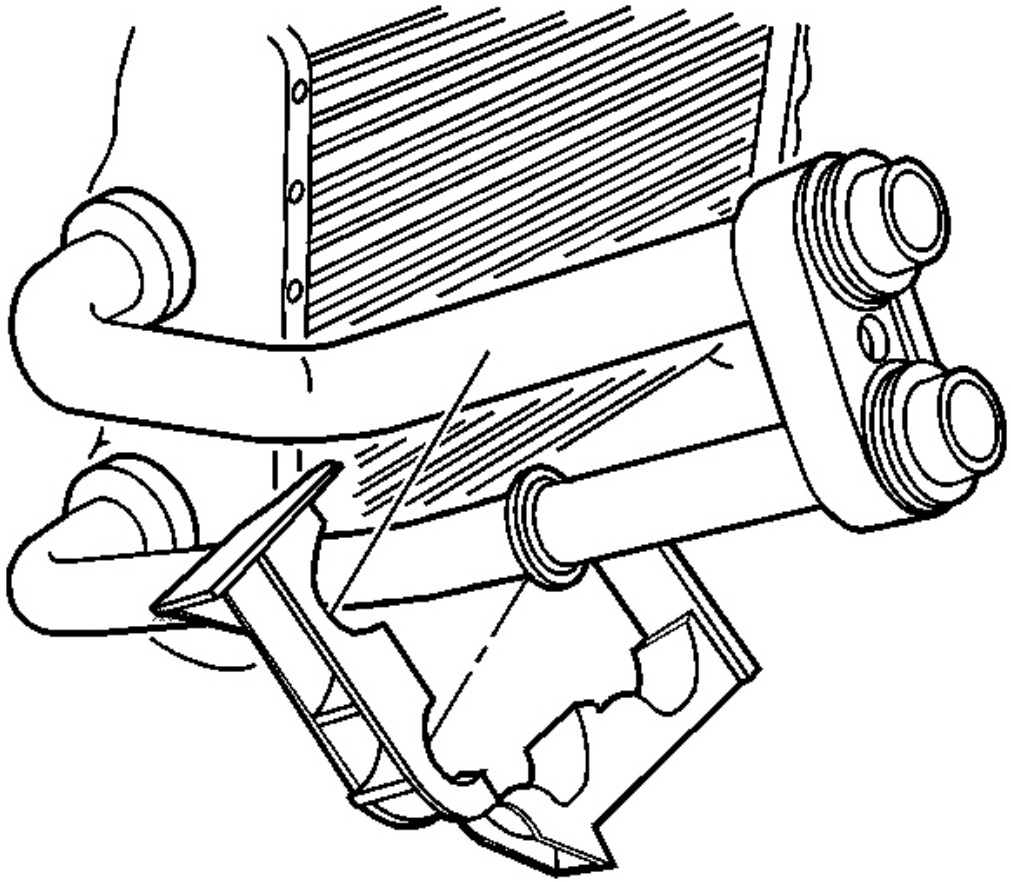

Fig. 301: Heater Core Pipe Retainer Clamp
Courtesy of GENERAL MOTORS CORP.

16. Remove the heater core pipe retainer clamp from the heater core pipes.

    Using a flat bladed tool, release the retaining tab and open the clamp.

Installation Procedure

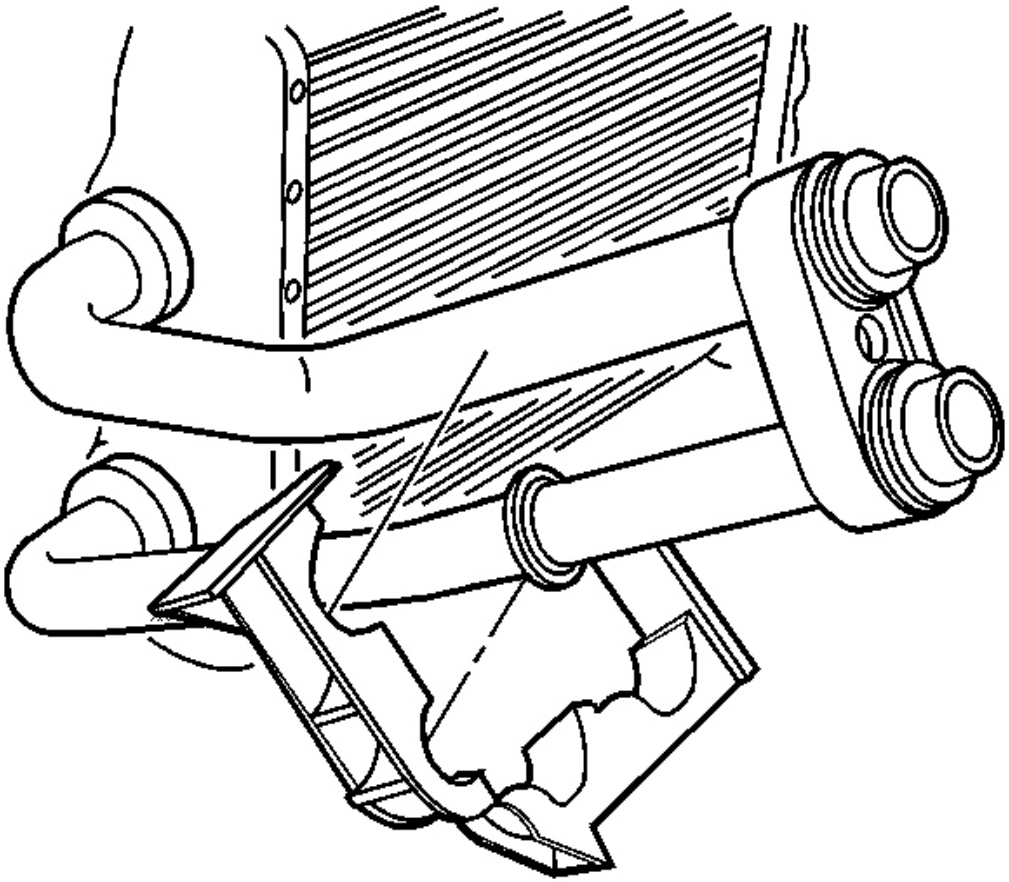

Fig. 302: Heater Core Pipe Retainer Clamp
Courtesy of GENERAL MOTORS CORP.

1. Install the heater core pipe retainer clamp to the heater core pipes.

   Align the depression in the clamp to the ridge on one of the heater core pipes, then close the clamp to secure.

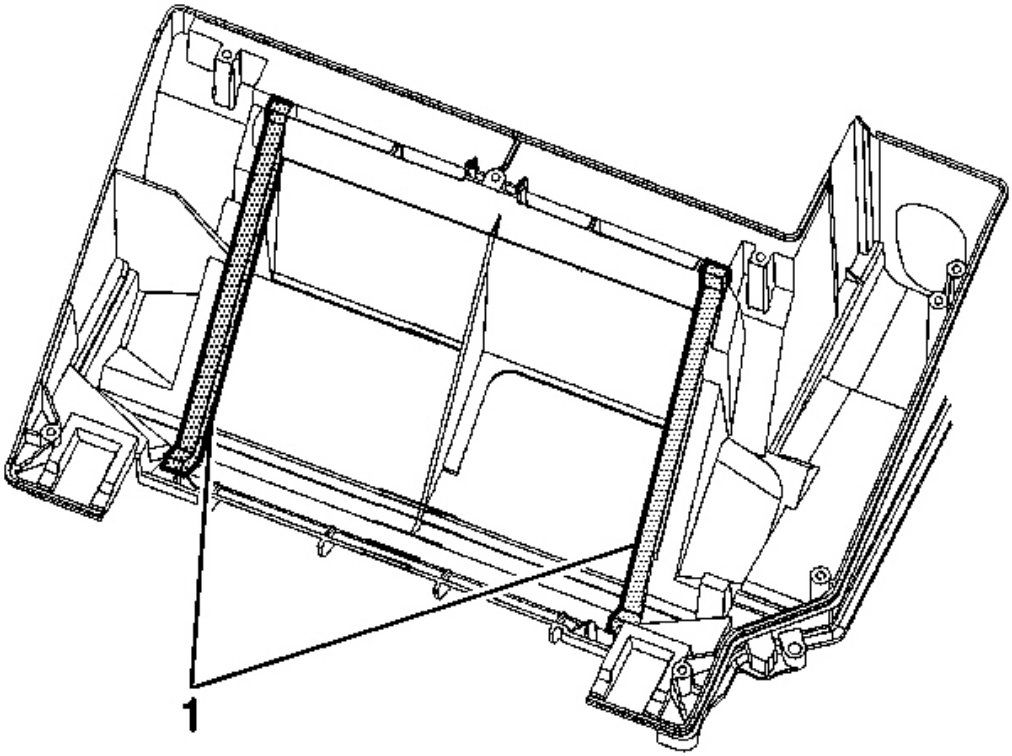

Fig. 303: Lower HVAC Module Case & Heater Core Side Seal
Courtesy of GENERAL MOTORS CORP.

2. Install new heater core side seals (1) to the HVAC module case - lower.

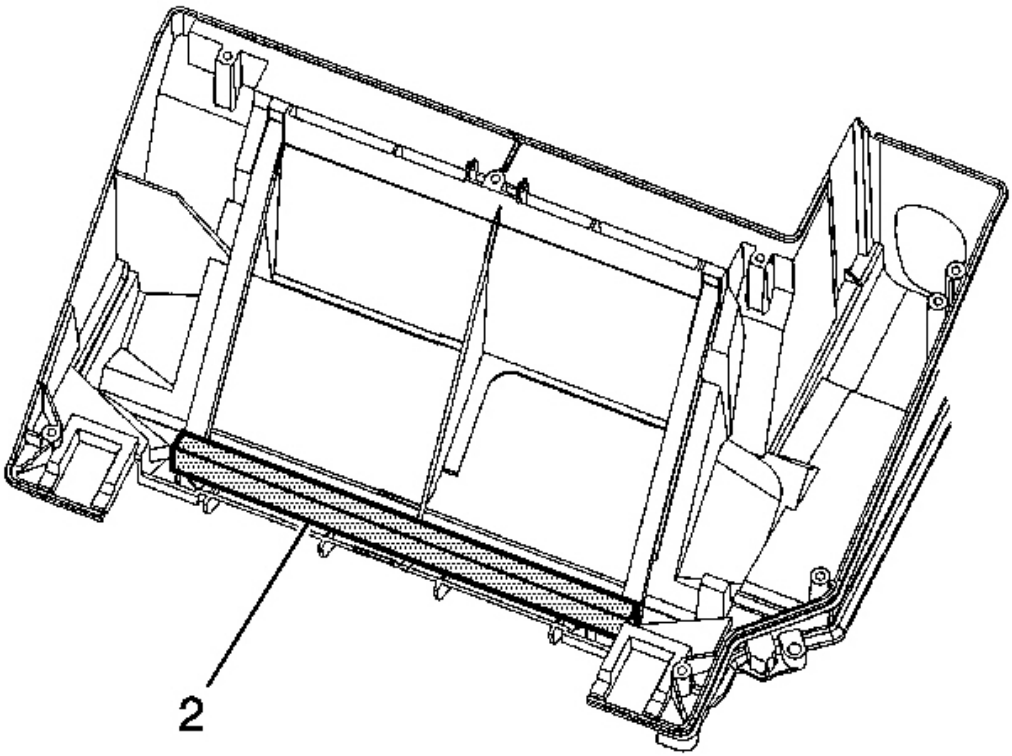

Fig. 304: Lower HVAC Module Case & Heater Core Upper Seal
Courtesy of GENERAL MOTORS CORP.

3. Install a new heater core upper seal (2) to the HVAC module case - lower.

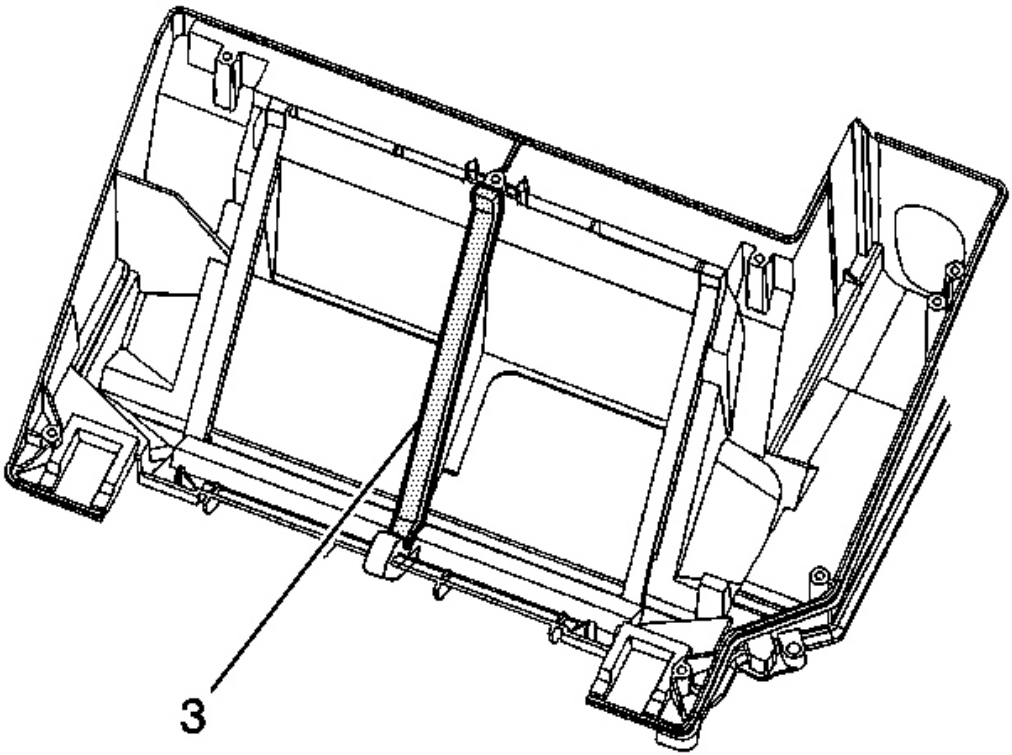

Fig. 305: Lower HVAC Module Case & Heater Core Center Seal
Courtesy of GENERAL MOTORS CORP.

4. Install a new heater core center seal (3) to the HVAC module case - lower.

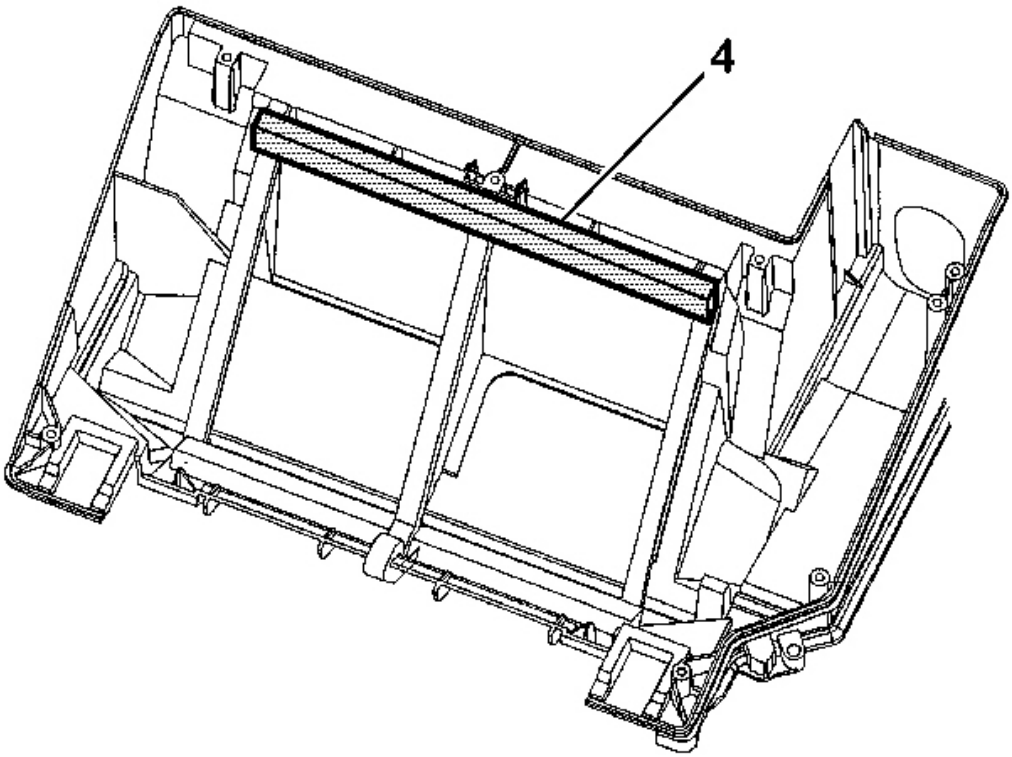

Fig. 306: Lower HVAC Module Case & Heater Core Lower Seal
Courtesy of GENERAL MOTORS CORP.

5. Install a new heater core lower seal (4) to the HVAC module case - lower.

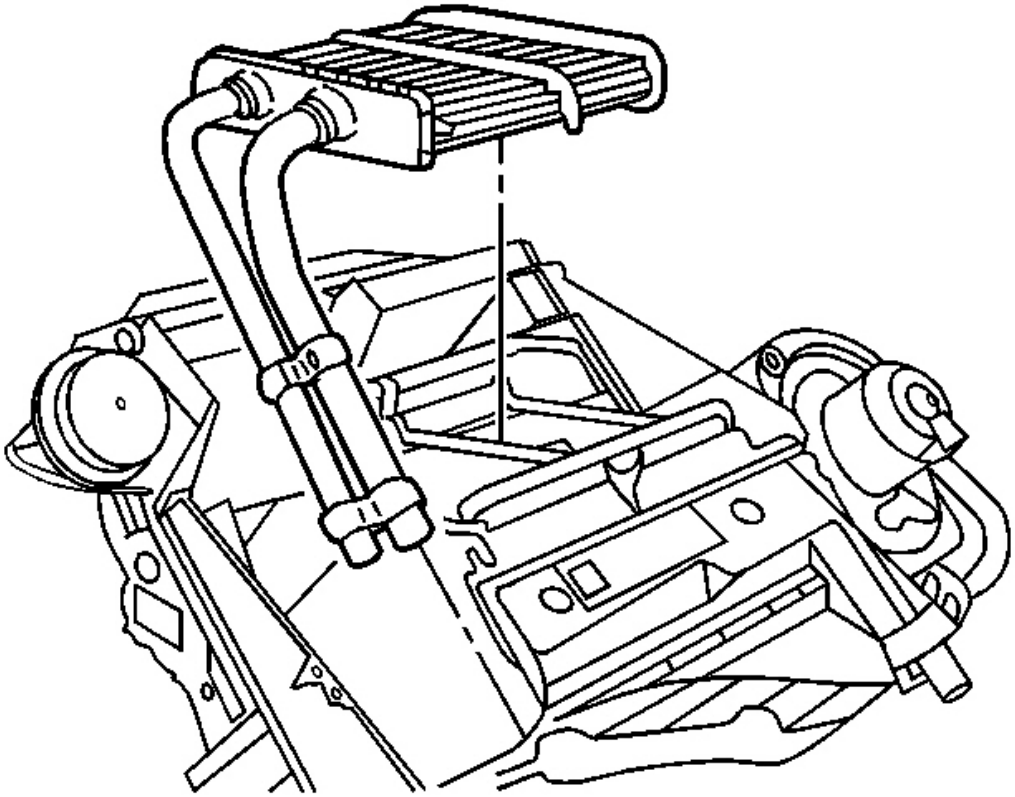

Fig. 307: Lower HVAC Module Case & Heater Core
Courtesy of GENERAL MOTORS CORP.

6. Install the heater core to the HVAC module case - lower.

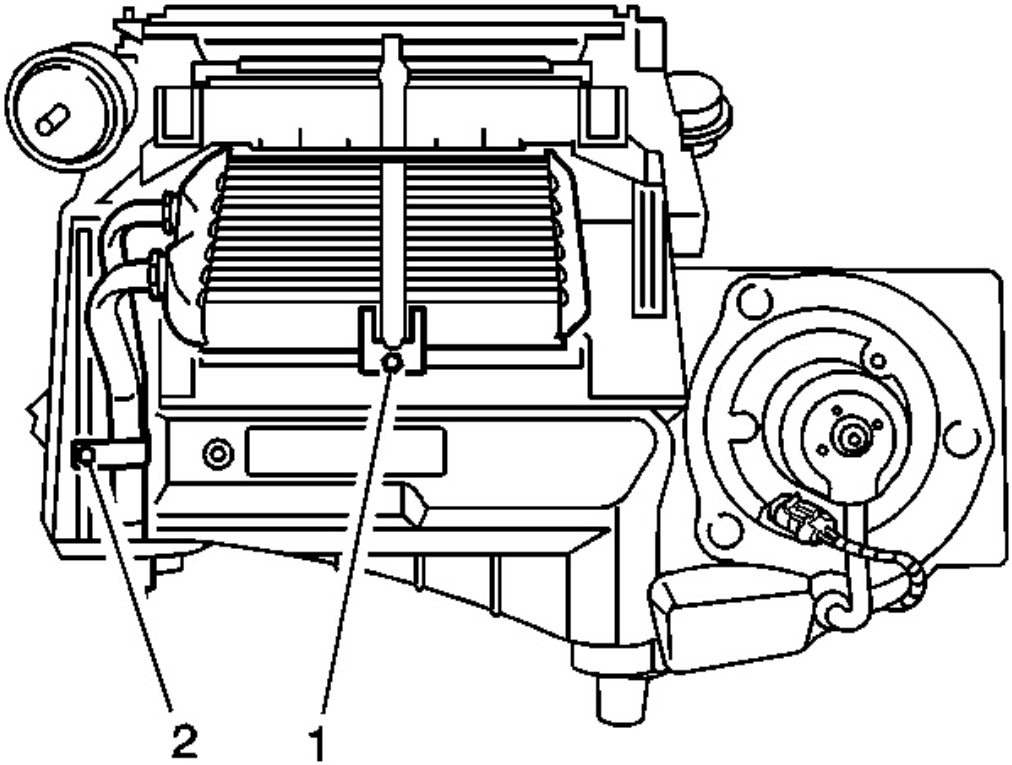

Fig. 308: Heater Core Pipe Retainer Clamp & Screw
Courtesy of GENERAL MOTORS CORP.

NOTE: Refer to Fastener Notice in Cautions and Notices.

7. Install the heater core pipe retainer clamp screw (2).

   Tighten: Tighten the screw to 1.6 N.m (14 lb in).

8. Install the heater core retaining clamp.
9. Install the heater core retaining clamp screw (1).

   Tighten: Tighten the screw to 1.6 N.m (14 lb in).

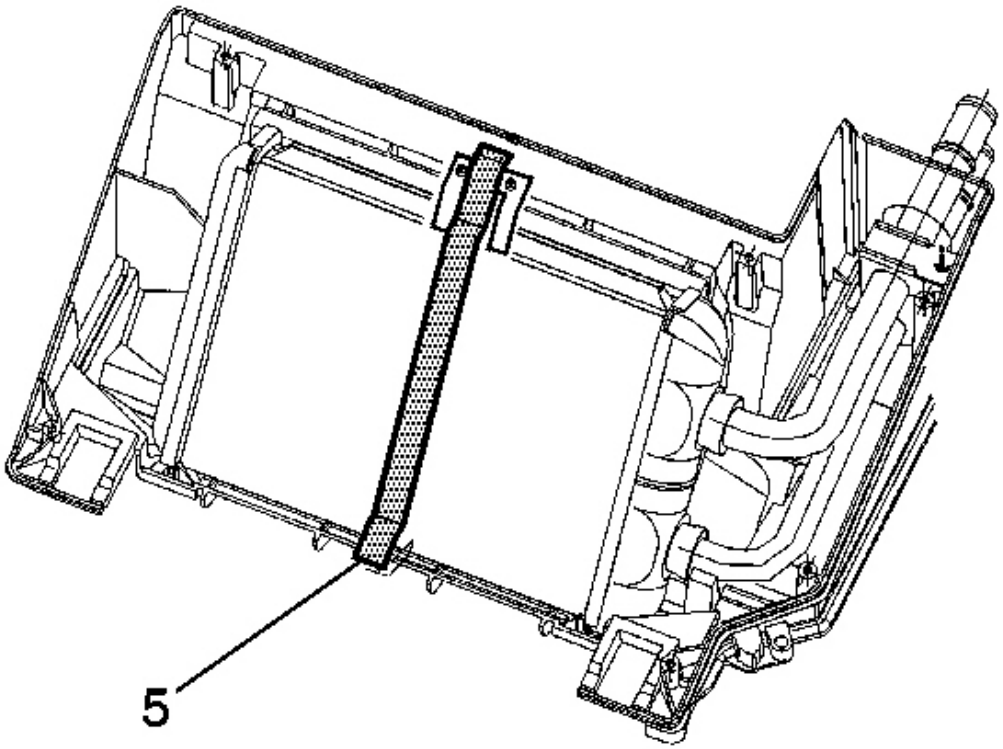

Fig. 309: Heater Core Outer Seal
Courtesy of GENERAL MOTORS CORP.

10. Install a new heater core outer seal (5) to the heater core.

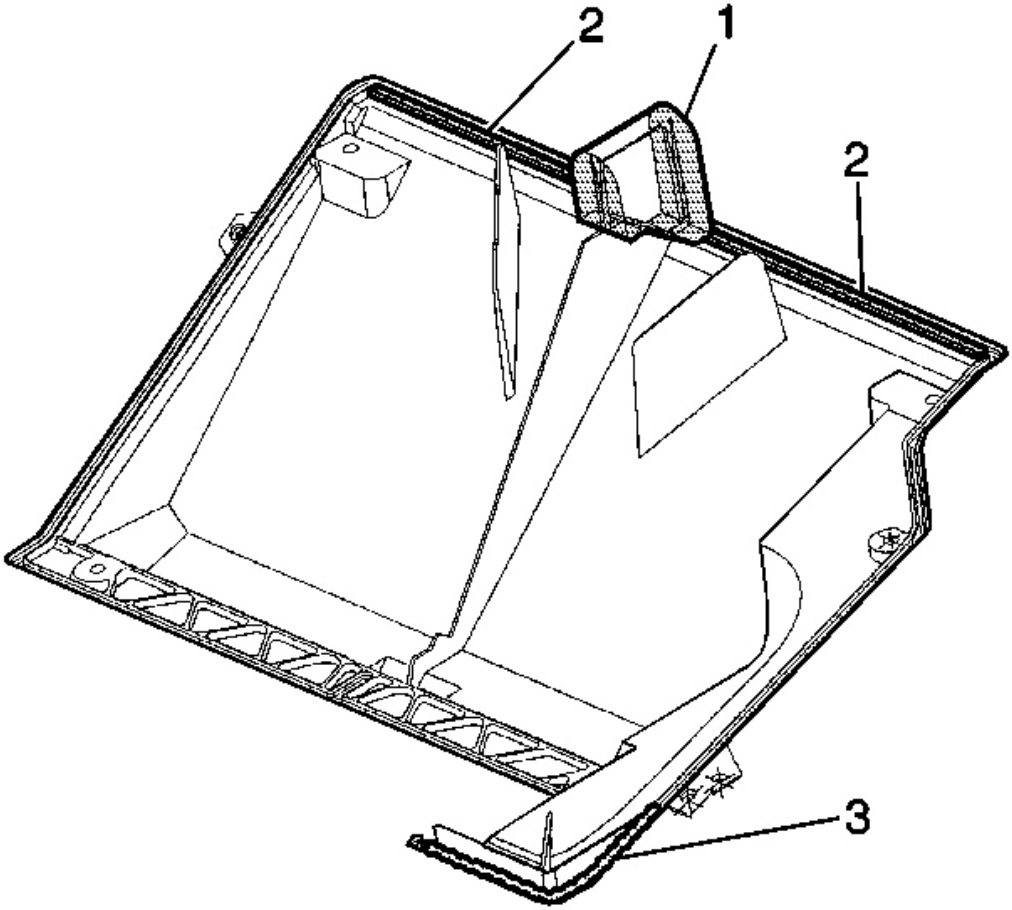

Fig. 310: Heater Core Cover Cavity Seals (1,2,3)
Courtesy of GENERAL MOTORS CORP.

11. Install new cavity seals (1,2,3) to the heater core cover.

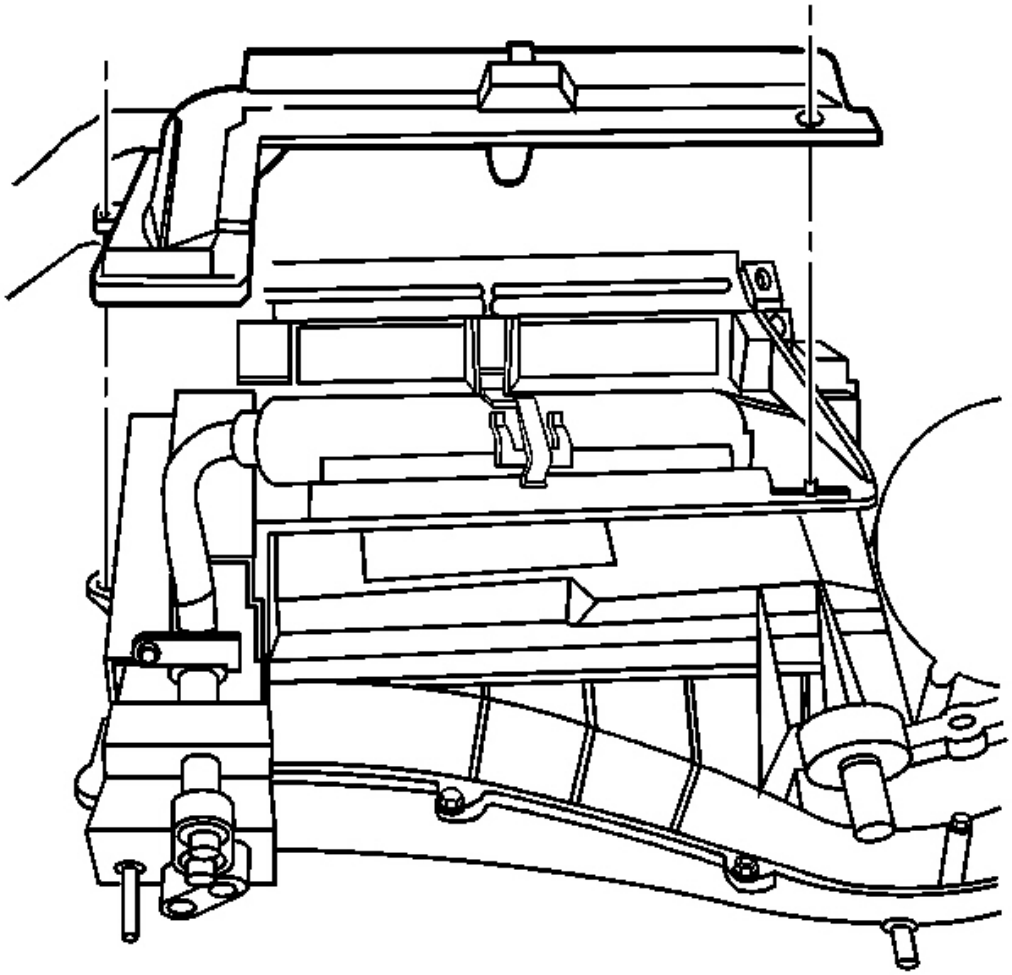

Fig. 311: Heater Core Cover Screws
Courtesy of GENERAL MOTORS CORP.

12. Install the heater core cover.
13. Install the heater core cover screws.

Tighten: Tighten the screws to 1.6 N.m (14 lb in).

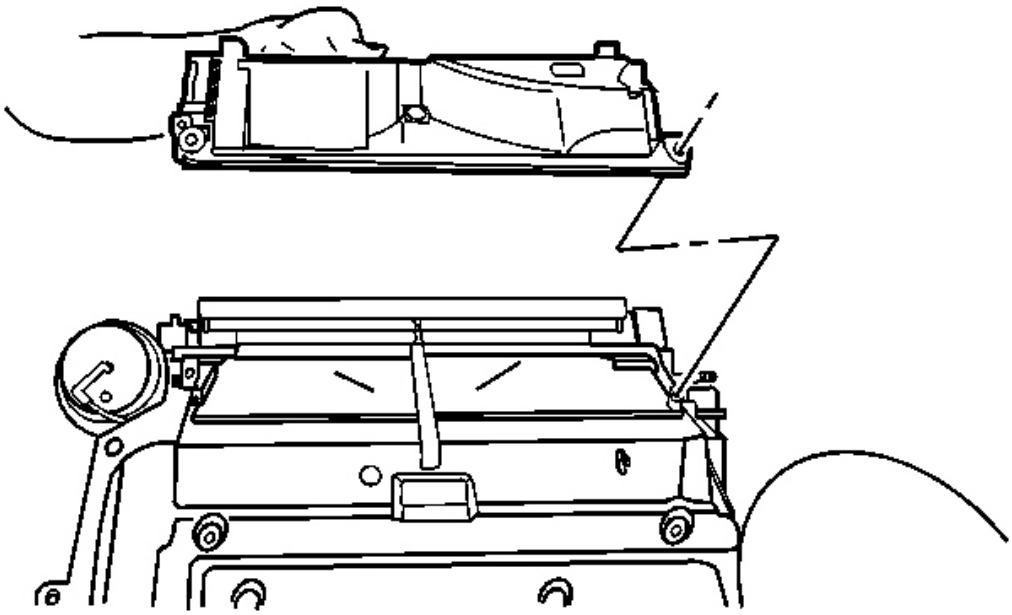

Fig. 312: Heater Core Outlet Cover & HVAC Module
Courtesy of GENERAL MOTORS CORP.

14. Install the heater core outlet cover.
15. Install the heater core outlet cover screws.

    Tighten: Tighten the screws to 1.6 N.m (14 lb in).

16. Install the HVAC module. Refer to **HVAC Module Assembly Replacement** .

SPECIAL TOOLS AND EQUIPMENT

SPECIAL TOOLS

Special Tools

Illustration	Tool Number/Description
	J 8433

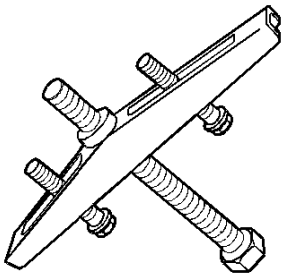	Compressor Pulley Puller
	J 8433-3 Forcing Screw
	J 26549-E Orifice Tube Remover

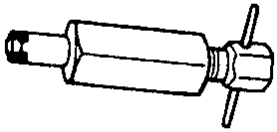	
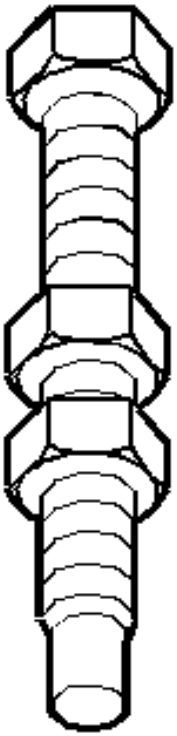	J 33013-B Hub and Drive Plate Remover/Installer
	J 33017 Pulley and Bearing Assembly Installer

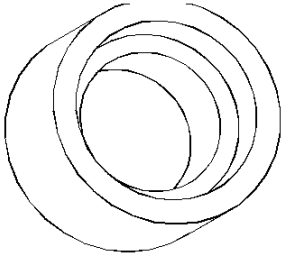	
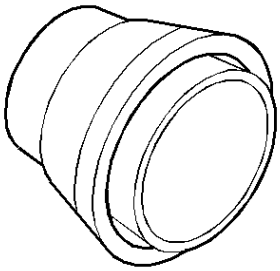	J 33023-A Puller Pilot
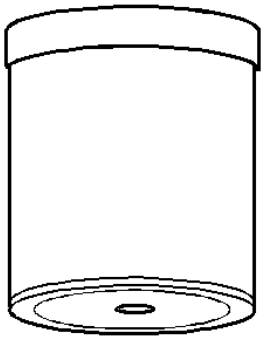	J 33024 Clutch Coil Installer Adapter
	J 33025 Clutch Coil Puller Legs

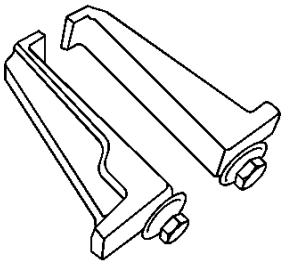	
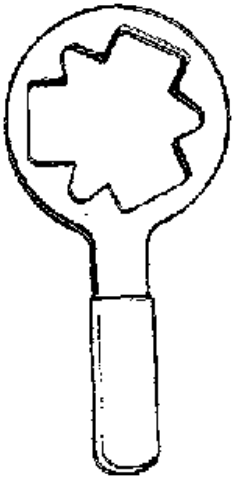	J 33027-A Clutch Hub Holding Tool
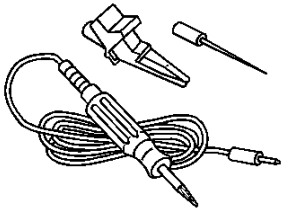	J 34142-B Test Light
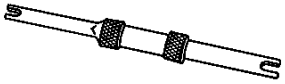	J 34611-A Valve Core Remover/Installer

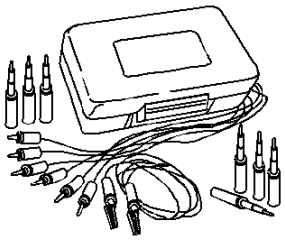	J 35616-A Connector Test Adapter Kit
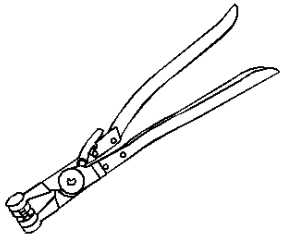	J 38185 Spring Hose Clamp Pliers
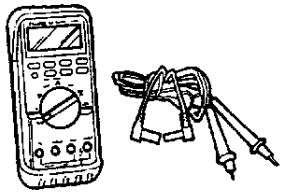	J 39200 Digital Multimeter
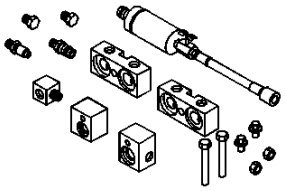	J45268 Flushing Adaptor Kit
	J 39400-A Halogen Leak Detector

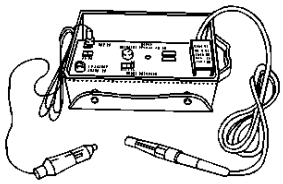	
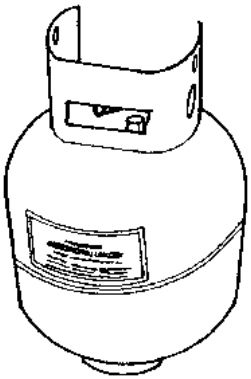	J 39500-50 Refillable Recovery Tank
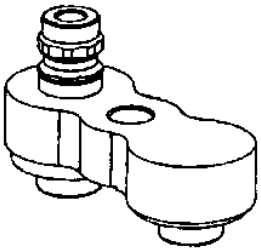	J 39893 Pressure Test Adapter
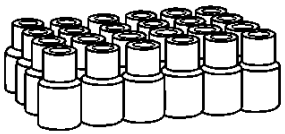	J 41447 R-134a Leak Detection Dye

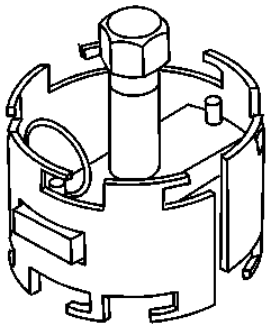	J 41552 Compressor Pulley Puller
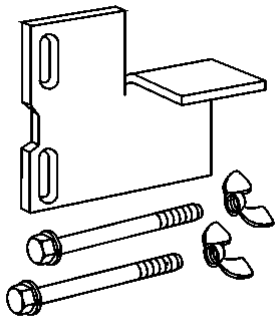	J 41790 Compressor Holding Fixture
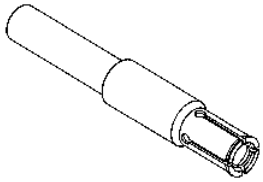	J 42136 A/C Lip Seal Remover
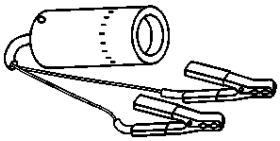	J 42220 Leak Detection Lamp

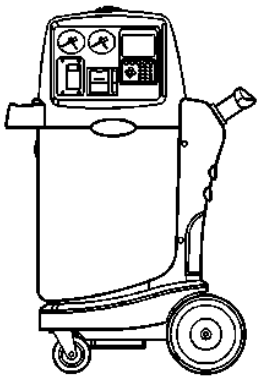	J 43600 ACR 2000 Air Conditioning Service Center
	J 43872 Fluorescent Dye Cleaner
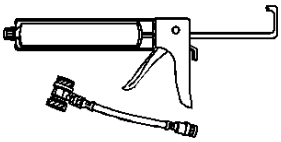	J 45037 Leak Detection Dye Injector

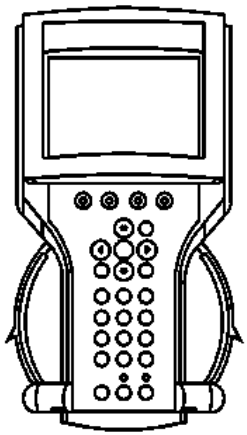	Tech 2 Scan Tool