SPECIFICATIONS

FASTENER TIGHTENING SPECIFICATIONS

Fastener Tightening Specifications

Application	Specification	
	Metric	English
Antenna Buffer Retaining Screws	1.8 N.m	16 lb in
Antenna Module Retaining Screws	1.8 N.m	16 lb in
Bose(R) Signal Processing Module Retaining Bolts	2.5 N.m	22 lb in
Front Door Speaker Assembly Retaining Screws (Tighten in Sequence)	2.5 N.m	22 lb in
Front Windshield Antenna Coaxial Cable Ground Wire Bolt	1.8 N.m	16 lb in
Ignition Switch Retaining Bolts	5.5 N.m	49 lb in
Negative Battery Cable Bolt	15 N.m	11 lb ft
Radio Control Retaining Screws	2.5 N.m	22 lb in
Radio Fixed Antenna Long Braided Ground Strap Retaining Nut	5.8 N.m	51 lb in
Radio Fixed Antenna Mast	5 N.m	44 lb in
Radio Fixed Antenna Retaining Nuts	12 N.m	106 lb in
Radio Fixed Antenna Short Braided Ground Strap and Dual Cable Strap Retaining Nut	5.8 N.m	51 lb in
Radio Power Antenna Bracket Retaining Bolts	10 N.m	89 lb in
Radio Power Antenna Bracket Retaining Nuts	12 N.m	106 lb in
Radio Power Antenna Long Braided Ground Strap Retaining Nut	5.8 N.m	51 lb in
Radio Power Antenna Short Braided Ground Strap and Dual Cable Strap Retaining Nut	5.8 N.m	51 lb in
Rear Speaker Retaining Screws	2.5 N.m	22 lb in
Remote CD Changer Mounting Bracket Bolts	1.9 N.m	17 lb in

Remote CD Changer Mounting Nuts	12 N.m	106 lb in
Taillamp Retaining Screws	2 N.m	18 lb in

SCHEMATIC AND ROUTING DIAGRAMS

ENTERTAINMENT SCHEMATIC ICONS

Entertainment Schematic Icons

Icon	Icon Definition
	IMPORTANT: **Twisted -pair wires provide an effective"shield" that helps protect sensitive electronic components from electrical interference.** **In order to prevent electrical interference from degrading the performance of the connected components, you must maintain the proper specification when making any repairs to the twisted -pair wires shown:** • **The wires must be twisted a minimum of 9 turns per 31 cm (12 in) as measured anywhere along the length of the wires.** • **The outside diameter of the twisted wires must not exceed 6.0 mm (0.2 in).**

RADIO/AUDIO SYSTEM SCHEMATICS

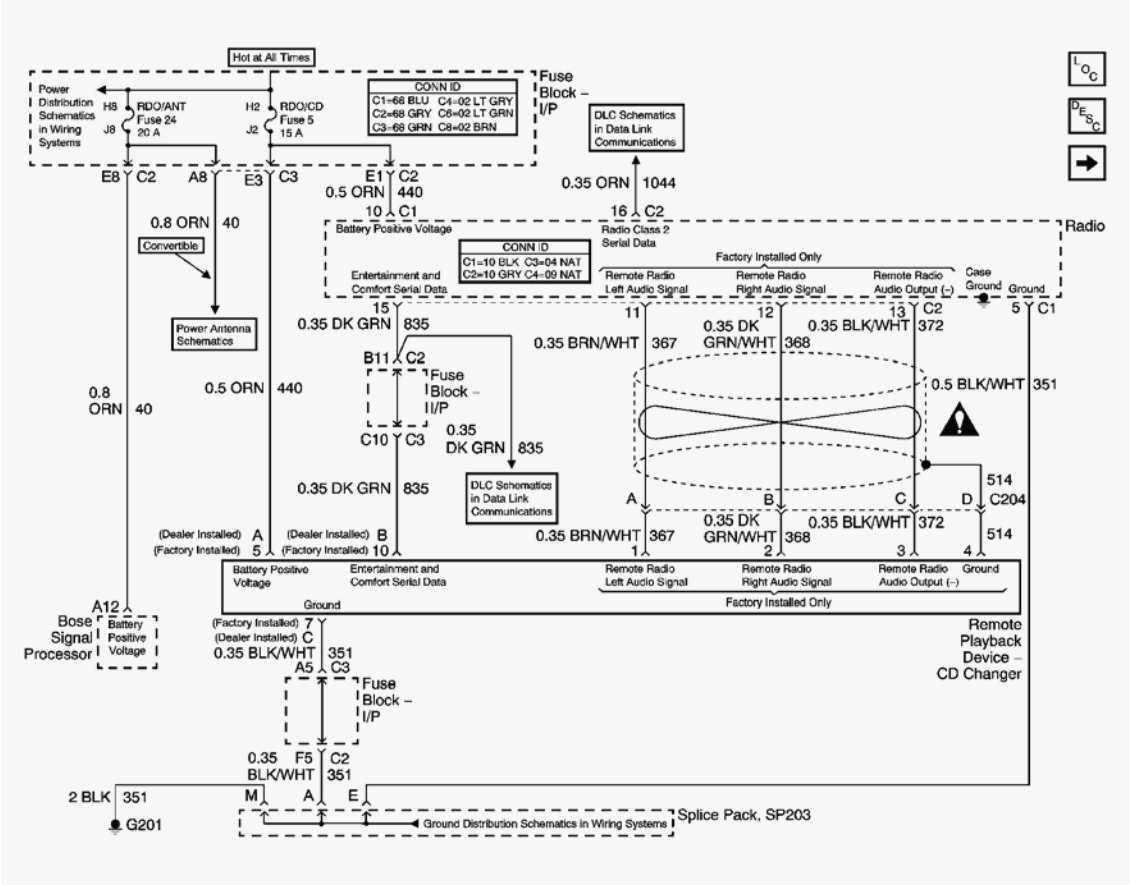

Fig. 1: Power, Ground And DLC Schematic
Courtesy of GENERAL MOTORS CORP.

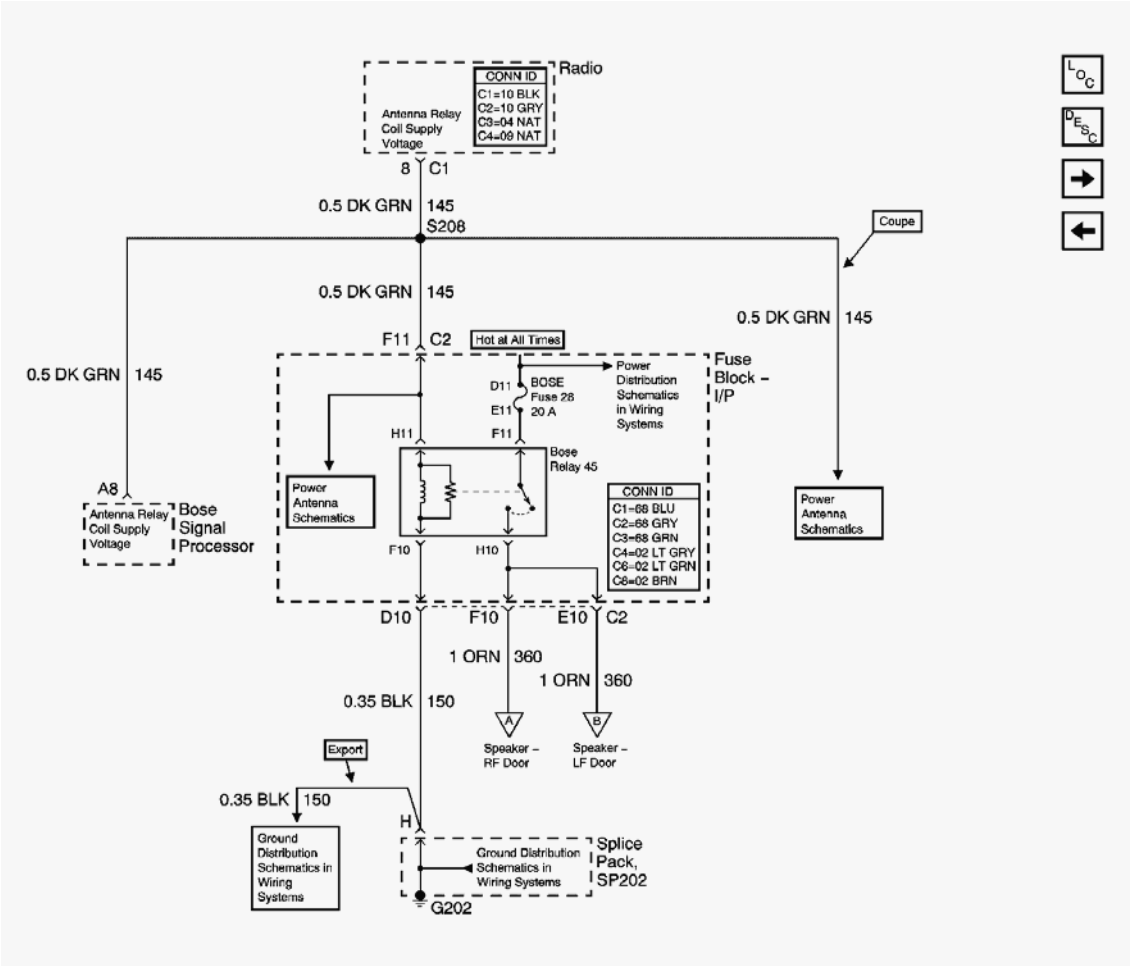

Fig. 2: Bose Relay Control Schematic
Courtesy of GENERAL MOTORS CORP.

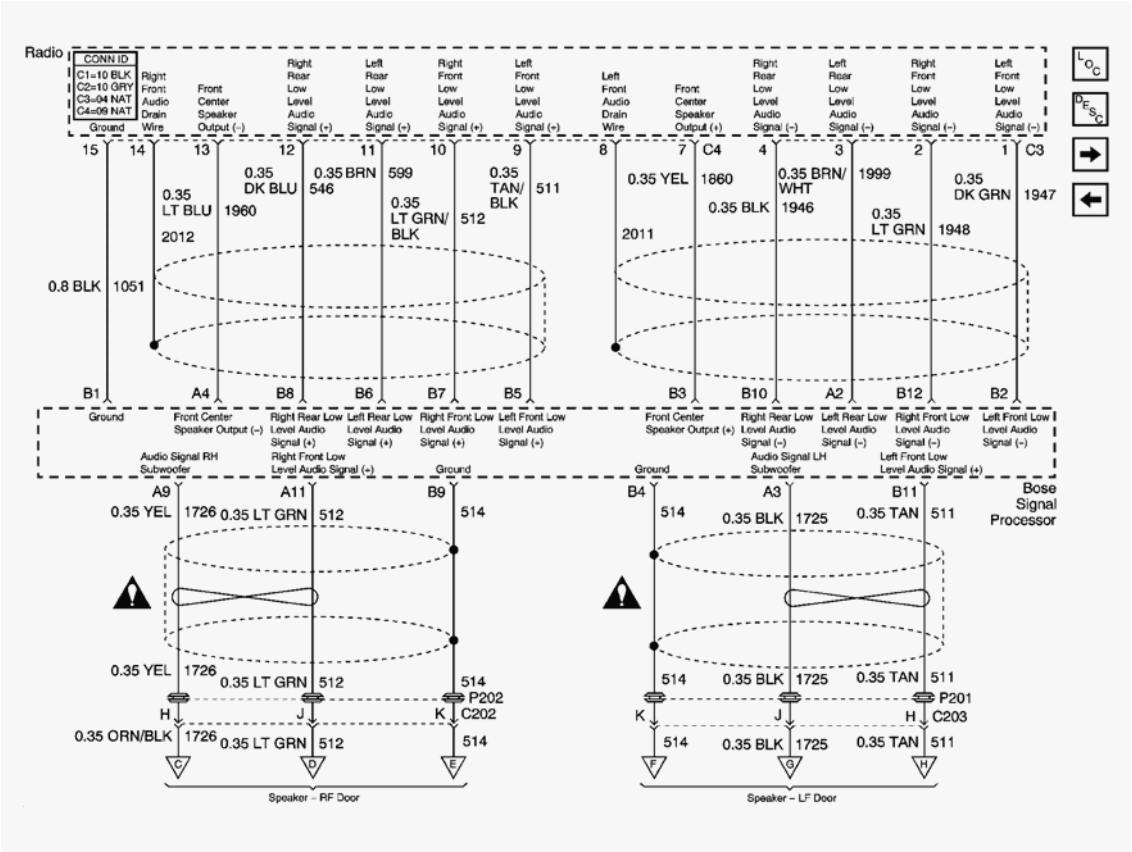

Fig. 3: Bose Signal Processor Schematic
Courtesy of GENERAL MOTORS CORP.

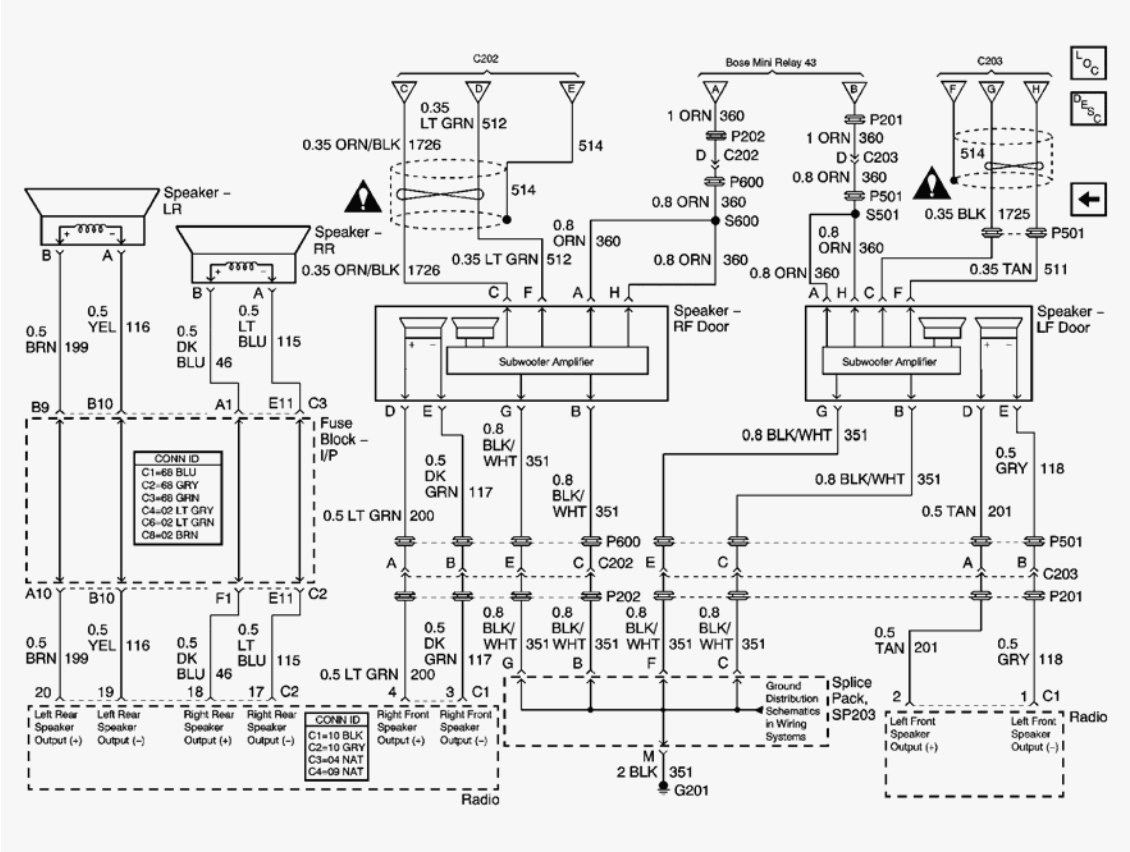

Fig. 4: Front And Rear Speakers Schematic
Courtesy of GENERAL MOTORS CORP.

POWER ANTENNA SCHEMATICS

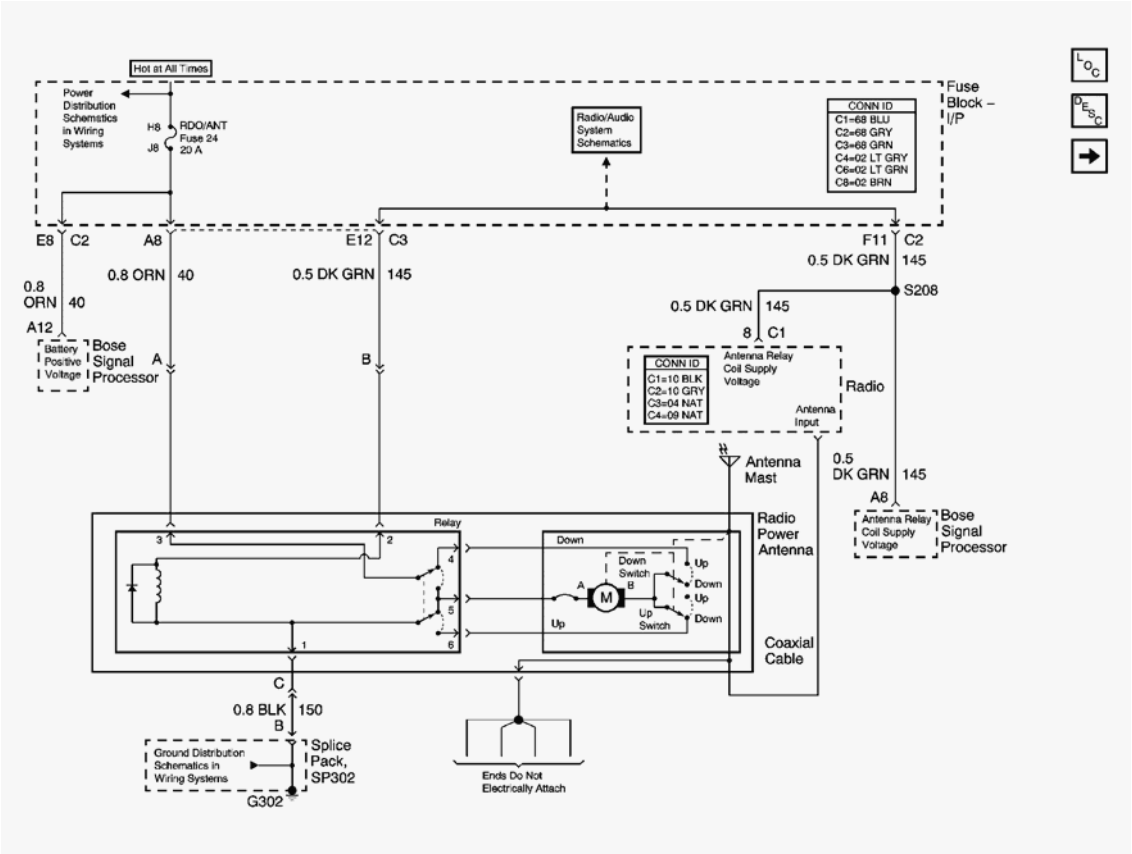

Fig. 5: Convertible Schematic
Courtesy of GENERAL MOTORS CORP.

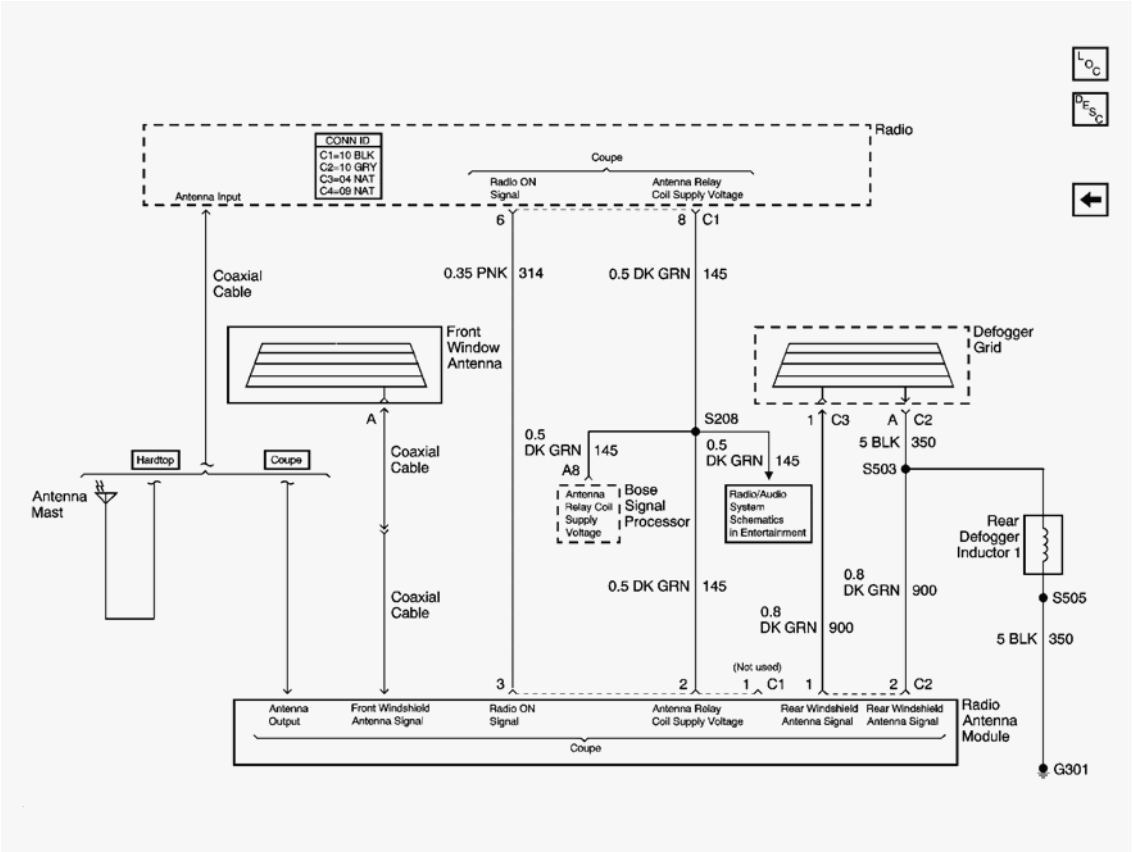

Fig. 6: Coupe And Hardtop Schematic
Courtesy of GENERAL MOTORS CORP.

COMPONENT LOCATOR

ENTERTAINMENT COMPONENT VIEWS

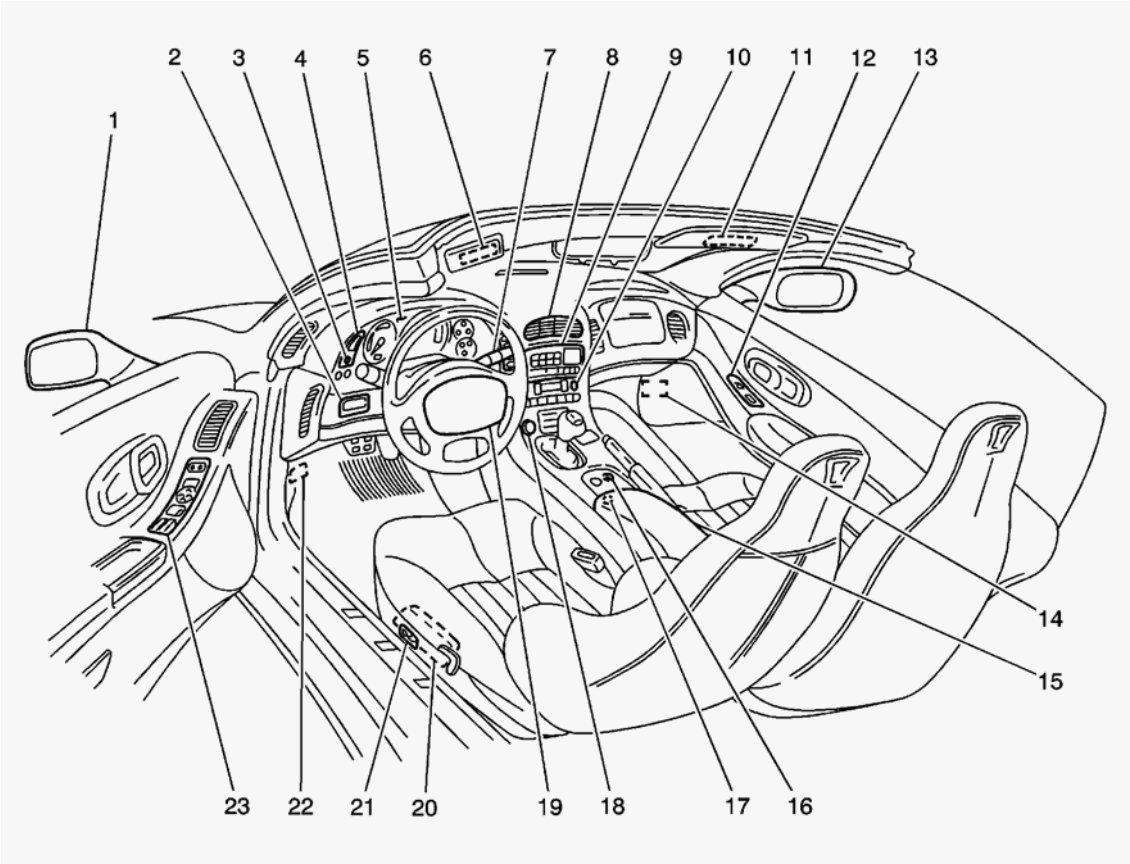

Fig. 7: Cockpit Component View
Courtesy of GENERAL MOTORS CORP.

Callouts For Fig. 7

Callout	Component Name
1	Outside Rearview Mirror -Driver
2	Fog Lamp/Rear Compartment Lid Release Switch (Domestic), Fog Lamp Switch (Export)
3	Dimmer Switch
4	Dimmer/Head Up Display (HUD) Switch
5	Instrument Panel Cluster (IPC)
6	Vanity Mirror Lamp -Left
7	Driver Information Center (DIC) Switch -Right
8	Hazard Switch
9	Radio
10	HVAC Control Module
11	Vanity Mirror Lamp -Right
12	Door Switch -Passenger
13	Outside Rearview Mirror -Passenger
14	Footwell Courtesy Lamp -Right
15	Fuel Door Lock Release Switch (Domestic), Rear Compartment Lid/Fuel Door Lock Release

	Switch (Export)
16	Traction/Suspension Control Switch
17	Auxiliary Power Outlet Connector
18	Cigar Lighter
19	Horn Switch
20	Seat Control Module (SCM) -Driver (W/Memory Seats), Seat Relay Center -Driver (W/O Memory Seats)
21	Seat Adjuster Switch -Driver
22	Footwell Courtesy Lamp -Left
23	Door Switch -Driver

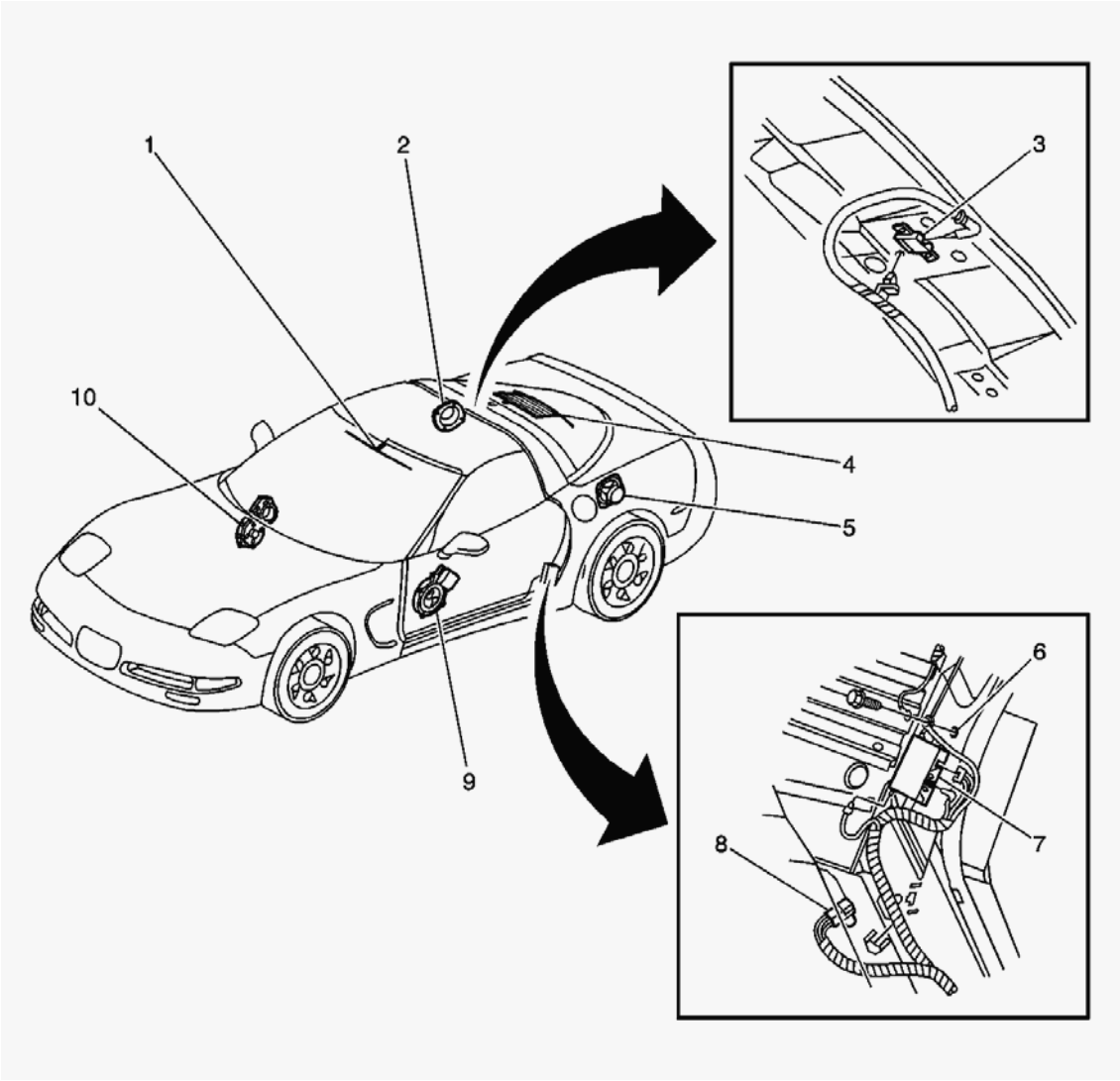

Fig. 8: Speakers And Antennas Component View
Courtesy of GENERAL MOTORS CORP.

Callouts For Fig. 8

Callout	Component Name
1	Front Window Antenna
2	Speaker -RR
3	Antenna Buffer
4	Rear Window Antenna
5	Speaker -LR
6	G205
7	Radio Antenna Module (Coupe)
8	C301
9	Speaker -LF Door
10	Speaker -RF Door

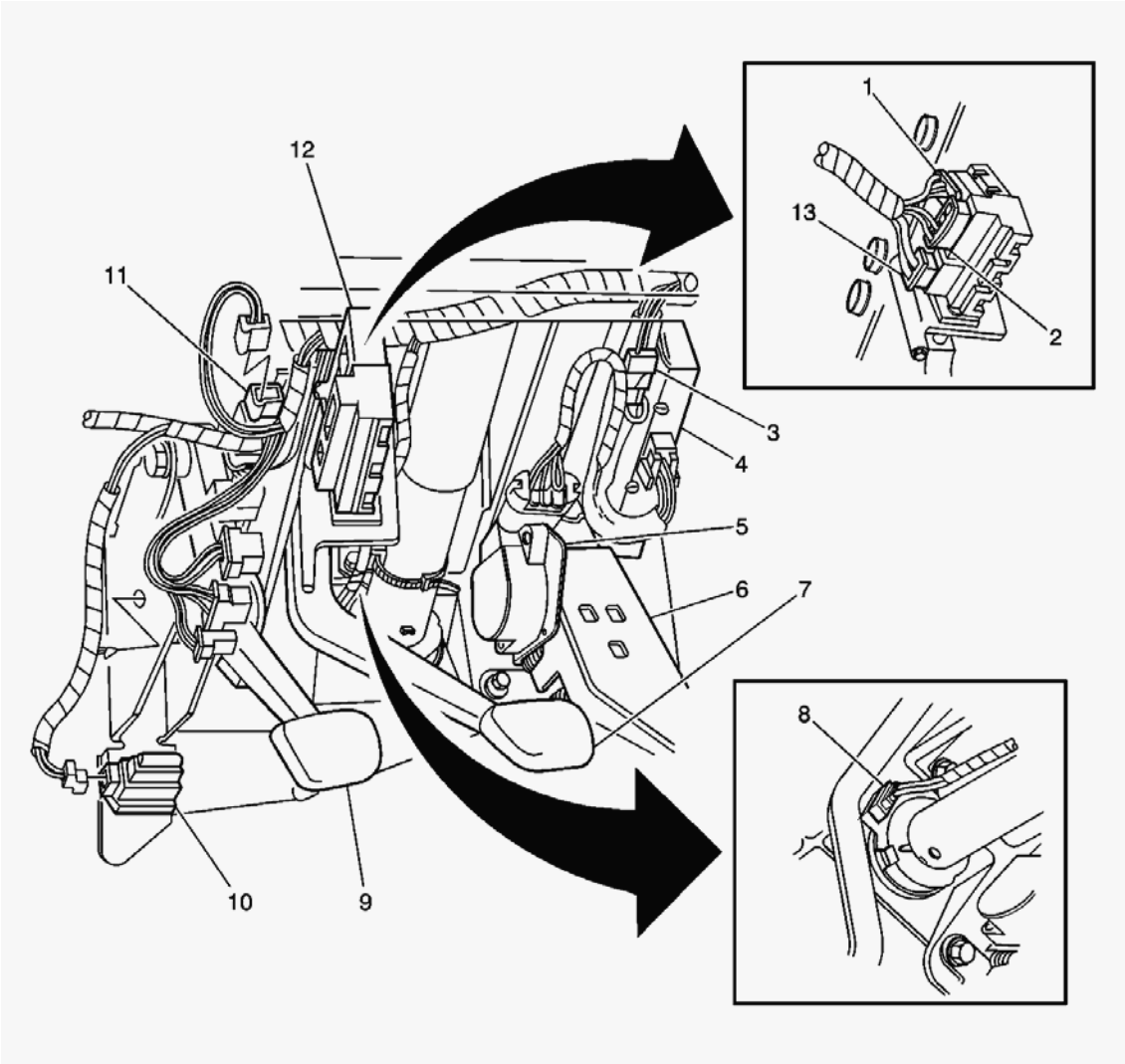

Fig. 9: Under Side Of The Dash Component View - Left
Courtesy of GENERAL MOTORS CORP.

Callouts For Fig. 9

Callout	Component Name
1	Stop Lamp Switch C1
2	Stop Lamp Switch C3
3	C213
4	Bose Signal Processor
5	Accelerator Pedal Position (APP) Sensor
6	Accelerator Pedal
7	Brake Pedal
8	Steering Wheel Position Sensor
9	Clutch Pedal
10	Clutch Pedal Start Switch
11	Clutch Pedal Position Switch
12	Stop Lamp Switch
13	Stop Lamp Switch Connector C2

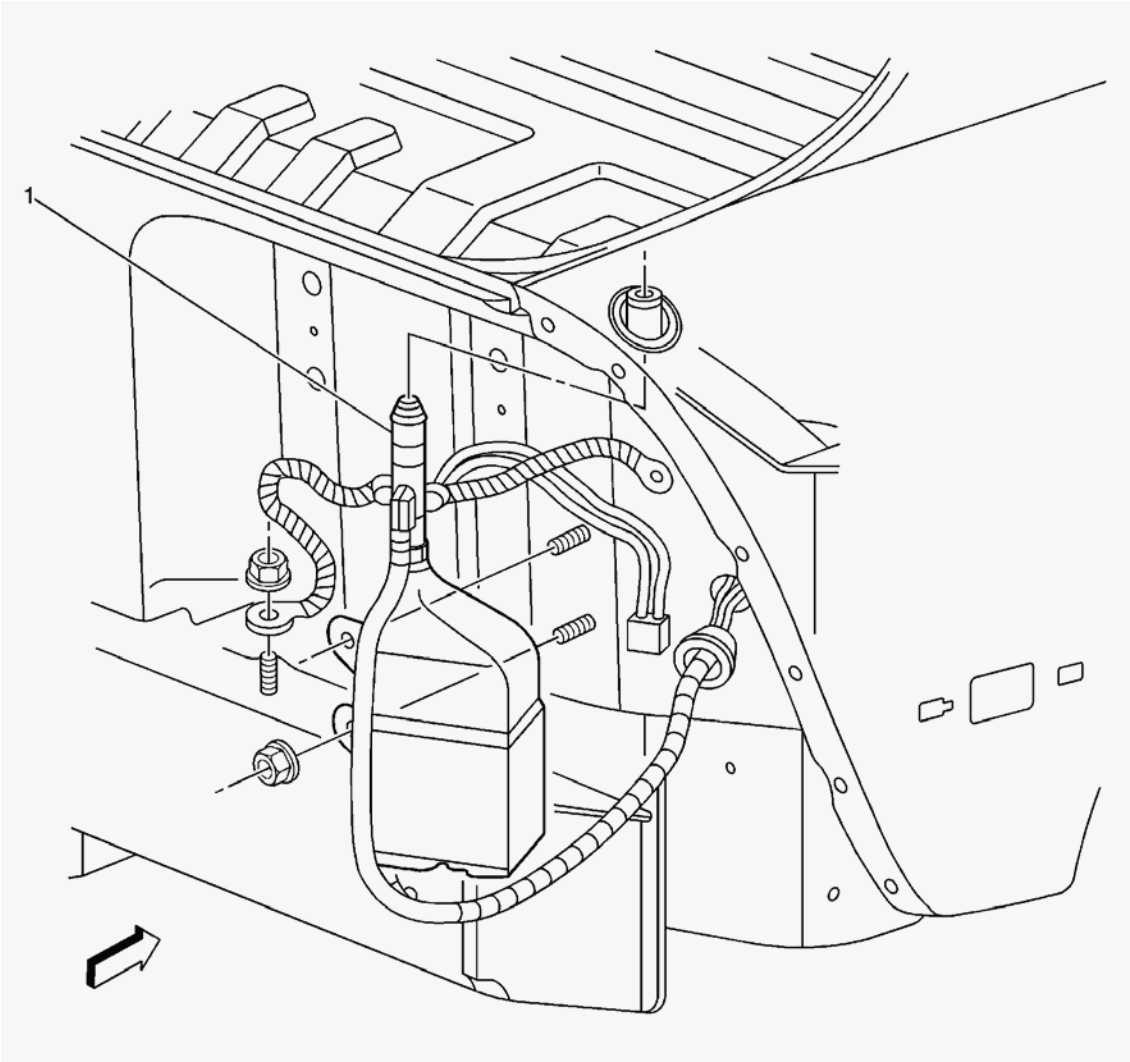

Fig. 10: Rear Of The Vehicle Component View
Courtesy of GENERAL MOTORS CORP.

Callouts For Fig. 10

Callout	Component Name
1	Radio Power Antenna (Convertible)

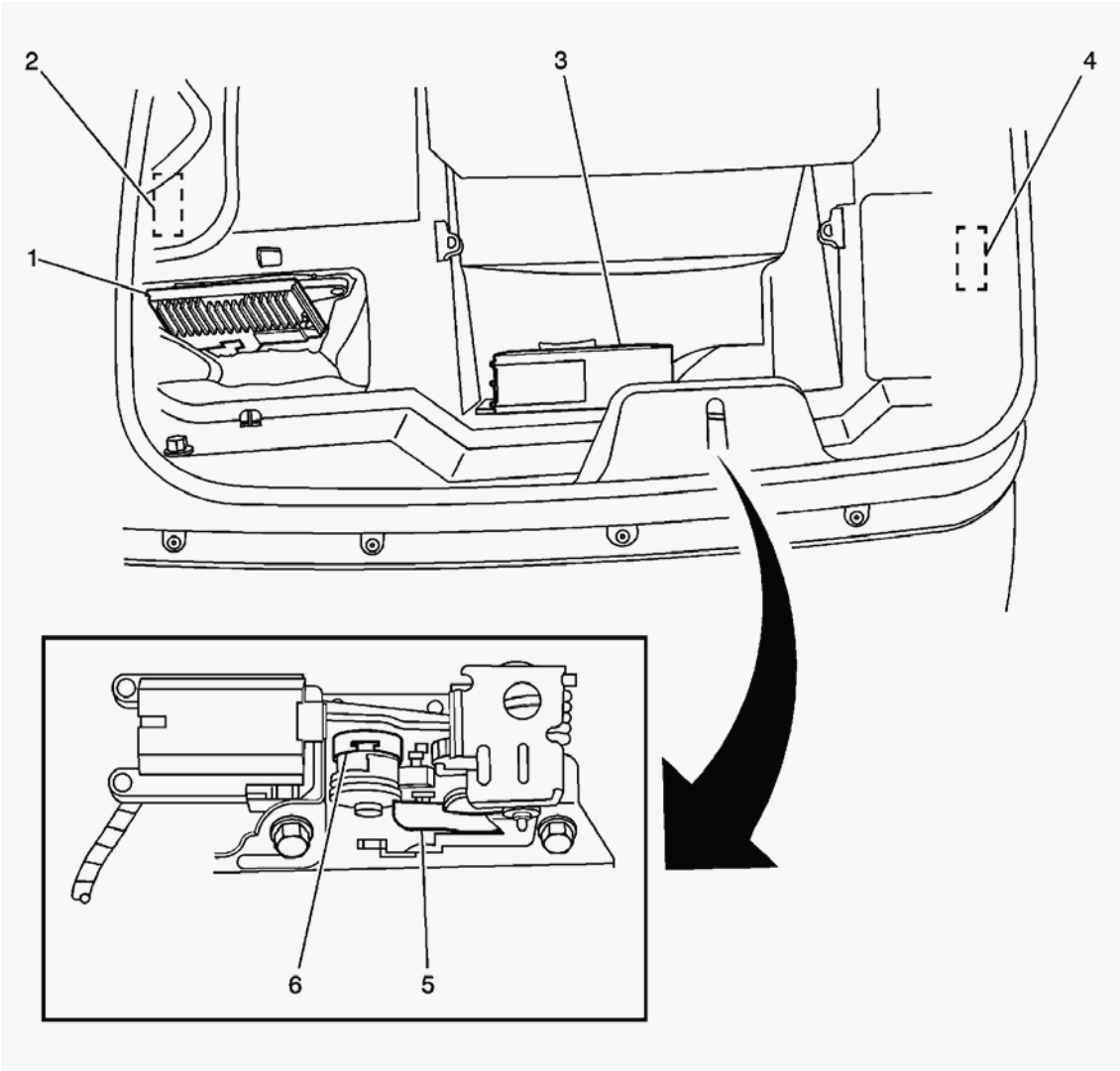

Fig. 11: Luggage Compartment Component View
Courtesy of GENERAL MOTORS CORP.

Callouts For Fig. 11

Callout	Component Name
1	Electronic Suspension Control (ESC) Module
2	Rear Compartment Courtesy Lamp - Left
3	Remote Playback Device - CD Changer
4	Rear Compartment Courtesy Lamp - Right
5	Rear Compartment Lid Ajar Switch
6	Rear Compartment Lid Latch (Hardtop/Convertible)

ENTERTAINMENT CONNECTOR END VIEWS

Bose(R) Signal Processor Terminal Identification - Coupe

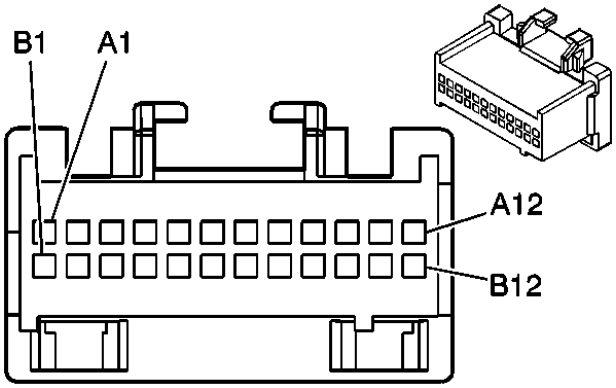

Connector Part Information		• 1210088 • 24-way F Micro-Pack 100 Series (GRY)	
Pin	**Wire Color**	**Circuit No.**	**Function**
A1	-	-	Not Used
A2	BRN/WHT	1999	Left Rear Low Level Audio Signal (-)
A3	BLK	1725	Audio Signal -LH Sub Woofer
A4	LT BLU	1960	Front Center Speaker Output (-)
A5 -A7	-	-	Not Used
A8	DK GRN	145	Antenna Relay Coil Supply Voltage
A9	YEL	1726	Audio Signal -RH Sub Woofer
A10	-	-	Not Used
A11	LT GRN	512	Right Front Low Level Audio Signal (+)
A12	ORN	40	Battery Positive Voltage
B1	BLK	1051	Ground
B2	DK GRN	1947	Left Front Low Level Audio Signal (-)
B3	YEL	1860	Front Center Speaker Output (+)
B4	BARE	514	Ground
B5	TAN/BLK	511	Left Front Low Level Audio Signal (+)
B6	BRN	599	Left Rear Low Level Audio Signal (+)
B7	LT GRN/BLK	512	Right Front Low Level Audio Signal (+)
B8	DK BLU	546	Right Rear Low Level Audio Signal (+)
B9	BARE	514	Ground
B10	BLK	1946	Right Rear Low Level Audio Signal (-)
B11	TAN	511	Left Front Low Level Audio Signal (+)
B12	LT GRN	1948	Right Front Low Level Audio Signal (-)

Bose(R) Signal Processor Terminal Identification -Hardtop/Convertible

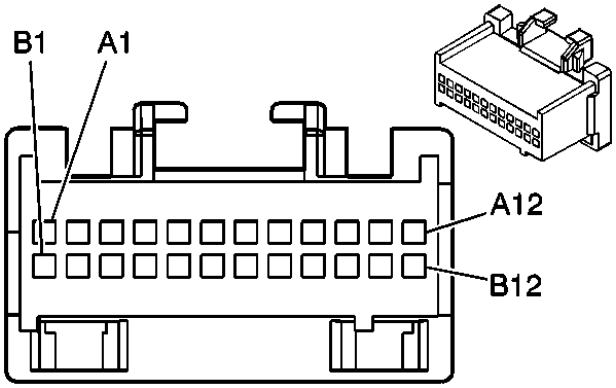

Connector Part Information		• 12110206 • 24-way F Micro-Pack 100 Series (BLU)	
Pin	**Wire Color**	**Circuit No.**	**Function**
A1	-	-	Not Used
A2	BRN/WHT	1999	Audio Signal -Conditioned -LH Rear
A3	BLK	1725	Audio Signal -LH Sub Woofer
A4	LT BLU	1960	Front Center Speaker Output (-)
A5 -A7	-	-	Not Used
A8	DK GRN	145	Antenna Relay Coil Supply Voltage
A9	YEL	1726	Audio Signal -RH Sub Woofer
A10	-	-	Not Used
A11	LT GRN	512	Right Front Low Level Audio Signal (+)
A12	ORN	40	Battery Positive Voltage
B1	BLK	1051	Ground
B2	DK GRN	1947	Left Front Low Level Audio Signal (-)
B3	YEL	1860	Front Center Speaker Output (+)
B4	BARE	514	Ground
B5	TAN/BLK	511	Left Front Low Level Audio Signal (+)
B6	BRN	599	Left Rear Low Level Audio Signal (+)
B7	LT GRN/BLK	512	Right Front Low Level Audio Signal (+)
B8	DK BLU	546	Right Rear Low Level Audio Signal (+)
B9	BARE	514	Ground
B10	BLK	1946	Right Rear Low Level Audio Signal (-)
B11	TAN	511	Left Front Low Level Audio Signal (+)
B12	LT GRN	1948	Right Front Low Level Audio Signal (-)

Front Window Antenna Terminal Identification

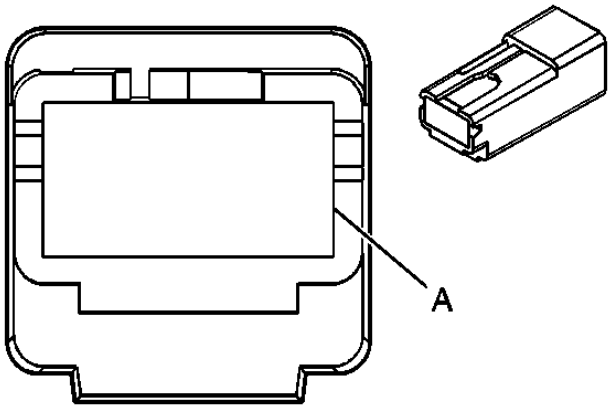

Connector Part Information		• 12092133 • 1-way F Metri-Pack 630 Series Self Lock (BLK)	
Pin	**Wire Color**	**Circuit No.**	**Function**
A	BLK	-	Front Windshield Antenna Signal

Radio Antenna Module Terminal Identification C1 -Coupe

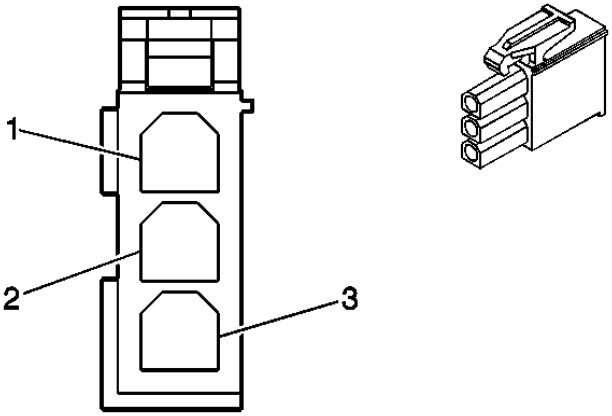

Connector Part Information		• 12186246 • 3-way F Metri-Pack 150 Series (NAT)	
Pin	**Wire Color**	**Circuit No.**	**Function**
1	-	-	Not Used
2	DK GRN	145	Antenna Relay Coil Supply Voltage
3	PNK	314	Radio On Signal

Radio Antenna Module Terminal Identification C2 -Coupe

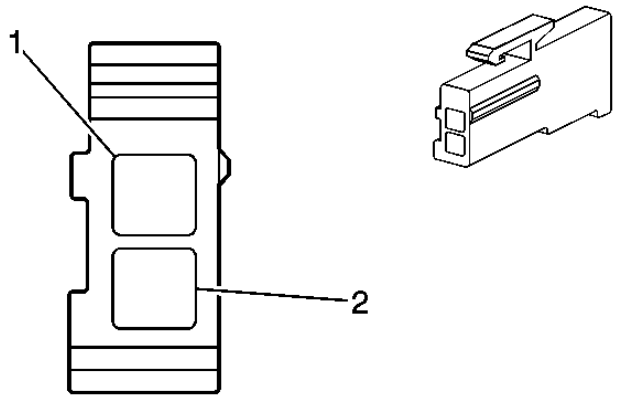

Connector Part Information		• 10774586 • 2-way F Metri-Pack 150 Series (NAT)	
Pin	**Wire Color**	**Circuit No.**	**Function**
1	DK GRN	900	Rear Windshield Antenna Signal
2	DK GRN	900	Rear Windshield Antenna Signal

Radio Terminal Identification C1

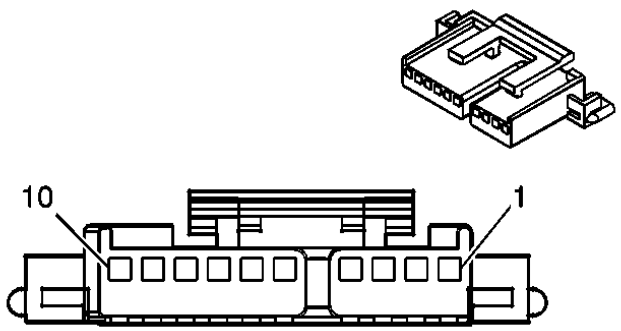

Connector Part Information		• 12047531 • 10-way F Micro-Pack 100 Series (BLK)	
Pin	**Wire Color**	**Circuit No.**	**Function**
1	GRY	118	Left Front Speaker Output (-)
2	TAN	201	Left Front Speaker Output (+)
3	DK GRN	117	Right Front Speaker Output (-)
4	LT GRN	200	Right Front Speaker Output (+)

5	BLK/WHT	351	Ground
6	PNK	314	Radio On Signal
7	-	-	Not Used
8	DK GRN	145	Antenna Relay Coil Supply Voltage
9	-	-	Not Used
10	ORN	440	Battery Positive Voltage

Radio Terminal Identification C2

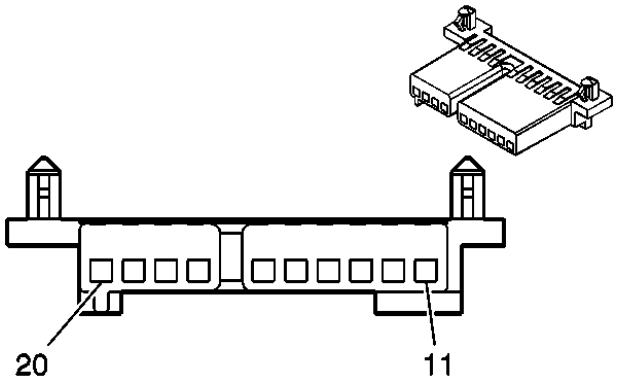

Connector Part Information		• **12065785** • **10-way F Micro-Pack 100 Series (GRY)**	
Pin	**Wire Color**	**Circuit No.**	**Function**
11	BRN/WHT	367	Remote Radio Left Audio Signal With UZ6
12	DK GRN/WHT	368	Remote Radio Right Audio Signal With UZ6
13	BLK/WHT	372	Remote Radio Audio Output (-) With UZ6
14	-	-	Not Used
15	DK GRN	835	Entertainment and Comfort Serial Data
16	ORN	1044	Radio Class 2 Serial Data
17	LT BLU	115	Right Rear Speaker Output (-)
18	DK BLU	46	Right Rear Speaker Output (+)
19	YEL	116	Left Rear Speaker Output (-)
20	BRN	199	Left Rear Speaker Output (+)

Radio Terminal Identification C3

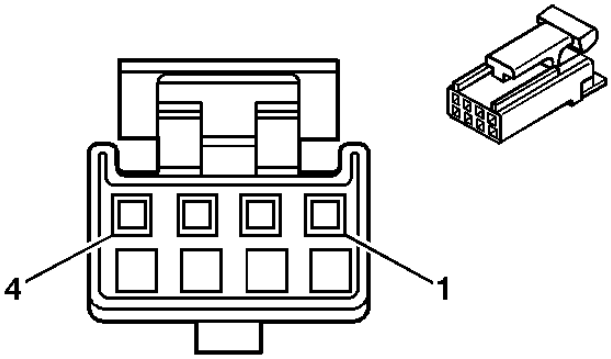

Connector Part Information		• 12066189 • 4-way F Micro-Pack 100 Series (NAT)	
Pin	**Wire Color**	**Circuit No.**	**Function**
1	DK GRN	1947	Left Front Low Level Audio Signal (-)
2	LT GRN	1948	Right Front Low Level Audio Signal (-)
3	BRN/WHT	1999	Left Rear Low Level Audio Signal (-)
4	BLK	1946	Right Rear Low Level Audio Signal (-)

Radio Terminal Identification C4

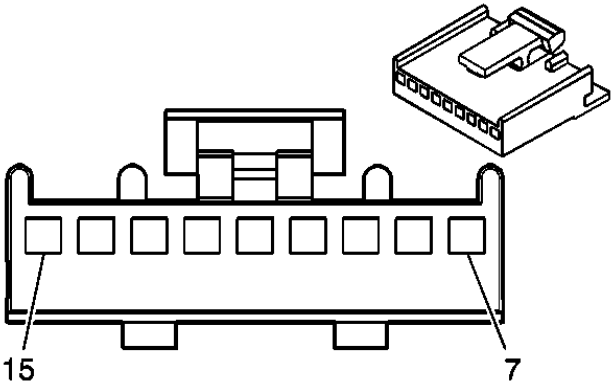

Connector Part Information		• 12066130 • 9-way F Micro-Pack 100 Series (NAT)	
Pin	**Wire Color**	**Circuit No.**	**Function**
7	YEL	1860	Front Center Speaker Output (+)
8	BARE	2011	Drain Wire

9	TAN/BLK	511	Left Front Low Level Audio Signal (+)
10	LT GRN/BLK	512	Right Front Low Level Audio Signal (+)
11	BRN	599	Left Rear Low Level Audio Signal (+)
12	DK BLU	546	Right Rear Low Level Audio Signal (+)
13	LT BLU	1960	Front Center Speaker Output (-)
14	BARE	2012	Drain Wire
15	BLK	1051	Ground

Radio Power Antenna Terminal Identification -Convertible

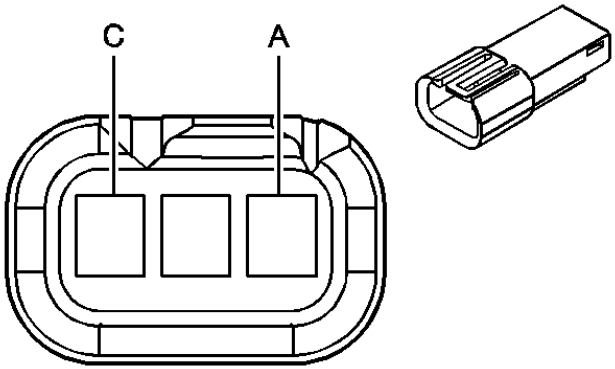

Connector Part Information		• **12047782** • **3-way M Metri-Pack 150 Series (BLK)**	
Pin	**Wire Color**	**Circuit No.**	**Function**
A	ORN	40	Battery Positive Voltage
B	DK GRN	145	Antenna Relay Coil Supply Voltage
C	BLK	150	Ground

Remote Playback Device Terminal Identification -CD Changer

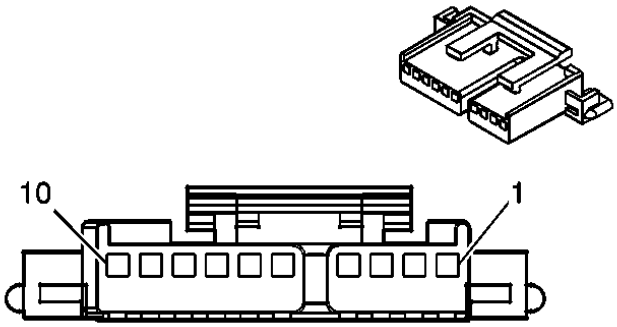

Connector Part Information		• **12047531** • **10-way F Micro-Pack 100 Series (BLK)**	
Pin	**Wire Color**	**Circuit No.**	**Function**
1	BRN/WHT	367	Remote Radio Left Audio Signal
2	DK GRN/WHT	368	Remote Radio Right Audio Signal
3	BLK/WHT	372	Remote Radio Audio Output (-)
4	BARE	514	Ground
5	ORN	440	Battery Positive Voltage
6	-	-	Not Used
7	BLK/WHT	351	Ground
8 -9	-	-	Not Used
10	DK GRN	835	Entertainment and Comfort Serial Data

Remote Playback Device Terminal Identification - CD Changer - Dealer Installed

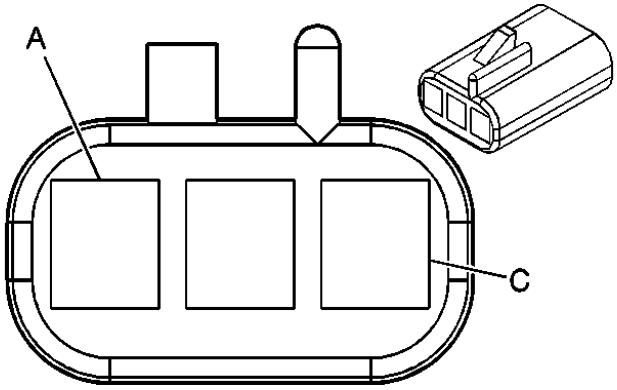

Connector Part Information	• **12047781**

		• 3-way F Metri-Pack 150 Series (BLK)	
Pin	**Wire Color**	**Circuit No.**	**Function**
A	ORN	440	Battery Positive Voltage
B	DK GRN	835	Entertainment and Comfort Serial Data
C	BLK/WHT	351	Ground

Speaker Terminal Identification -LF Door

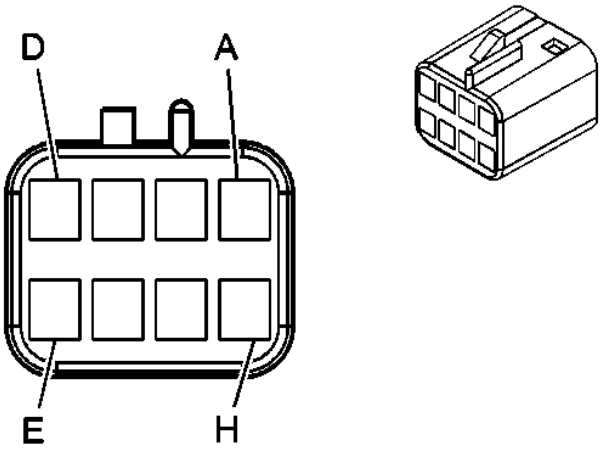

Connector Part Information		• **12065398** • **8-way F Metri-Pack 150 Series (NAT)**	
Pin	**Wire Color**	**Circuit No.**	**Function**
A	ORN	360	Speaker Supply Voltage
B	BLK/WHT	351	Ground
C	BLK	1725	Audio Signal -LH Sub Woofer
D	TAN	201	Battery Positive Voltage
E	GRY	118	Left Front Speaker Output (-)
F	TAN	511	Left Front Low Level Audio Signal (+)
G	BLK/WHT	351	Ground
H	ORN	360	Speaker Supply Voltage

Speaker Terminal Identification - LR

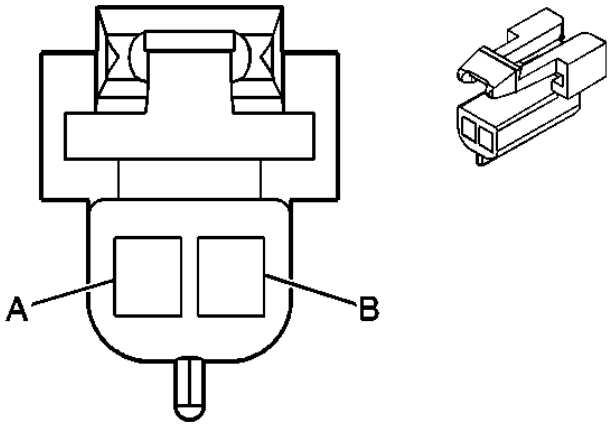

Connector Part Information		• 12052832 • 2-way F Metri-Pack 150 Series (BLK)	
Pin	**Wire Color**	**Circuit No.**	**Function**
A	YEL	116	Left Rear Speaker Output (-)
B	BRN	199	Rear Speaker Output (+)

Speaker Terminal Identification - RF Door

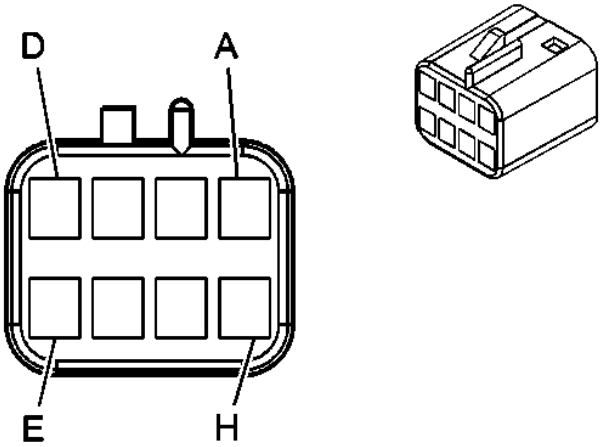

Connector Part Information		• 12065398 • 8-Way F Metri-Pack 150 Series (NAT)	
Pin	**Wire Color**	**Circuit No.**	**Function**
A	ORN	360	Speaker Supply Voltage

B	BLK/WHT	351	Ground
C	ORN/BLK	1726	Audio Signal -RH Sub Woofer
D	LT GRN	200	Right Front Speaker Output (+)
E	DK GRN	117	Right Front Speaker Output (-)
F	LT GRN	512	Right Front Low Level Audio Signal (+)
G	BLK/WHT	351	Ground
H	ORN	360	Speaker Supply Voltage

Speaker Terminal Identification - RR

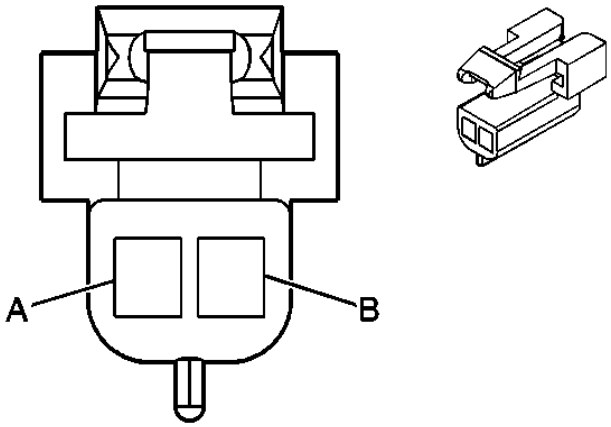

Connector Part Information		• 12052832 • 2-way F Metri-Pack 150 Series (BLK)	
Pin	**Wire Color**	**Circuit No.**	**Function**
A	LT BLU	115	Right Rear Speaker Output (-)
B	DK BLU	46	Right Rear Speaker Output (+)

DIAGNOSTIC INFORMATION AND PROCEDURES

DIAGNOSTIC STARTING POINT - ENTERTAINMENT

Begin the system diagnosis by reviewing the system Description and Operation. Reviewing the Description and Operation information will help you determine the correct symptom diagnostic procedure when a malfunction exists. Reviewing the Description and Operation information will also help you determine if the condition described by the customer is normal operation. Refer to **Symptoms - Entertainment** in order to identify the correct procedure for diagnosing the system and where the procedure is located.

DIAGNOSTIC SYSTEM CHECK - RADIO/AUDIO SYSTEM

Test Description

The number(s) below refer to the step number(s) on the diagnostic table.

3: Lack of communication may be due to a partial malfunction of the class 2 serial data circuit or due to a total malfunction of the class 2 serial data circuit. The specified procedure will determine the particular condition.

4: The symptom list in Symptoms will determine the correct diagnostic procedure to use.

5: The presence of DTCs which begin with "U" indicate some other module is not communicating. The specified procedure will compile all the available information before tests are performed.

Diagnostic System Check - Radio/Audio System

Step	Action	Yes	No
1	Install a scan tool. Does the scan tool power up?	Go to **Step 2**	Go to **Scan Tool Does Not Power Up** in Data Link Communications
2	Attempt to establish communications with the remote playback device, if equipped. Does the scan tool communicate with the remote playback device?	Go to **Step 3**	Go to **Scan Tool Does Not Communicate with E and C Data Line** in Data Link Communications
3	Attempt to establish communication with the radio. Does the scan tool communicate with the radio?	Go to **Step 4**	Go to **Scan Tool Does Not Communicate with Class 2 Device** in Data Link Communications
4	Select the radio DTC functions on the scan tool. Does the scan tool display any DTCs?	Go to **Step 5**	Go to **Symptoms - Entertainment**
5	Does the scan tool display any DTCs which begin with a"U"?	Go to **Scan Tool Does Not Communicate with Class 2 Device** in Data Link Communications	Go to **Symptoms - Entertainment**

SCAN TOOL DATA LIST

Radio/Integrated Radio Control (IRC) Scan Tool Data List

Scan Tool Parameter	Data List	Units Displayed	Typical Data Value
Operating Conditions: Ignition ON/Engine OFF/Radio ON			
Software ID	Module Information 1	Numeric	Varies
Hardware ID	Module Information 2	Numeric	Varies

SCAN TOOL DATA DEFINITIONS

Software ID

The scan tool displays a numeric number. The ID number of the software.

Hardware ID

The scan tool displays a numeric number. The ID number of the hardware.

SYMPTOMS - ENTERTAINMENT

IMPORTANT:

1. **Perform the Diagnostic System Check - Radio/Audio System before using the Symptom Tables in order to verify that all of the following are true:**
   - **There are no DTCs set.**
   - **The control module(s) can communicate via the serial data link.**
2. **Review the system operation in order to familiarize yourself with the system functions. Refer to Radio/Audio System Description and Operation .**

Visual/Physical Inspection

- Inspect for aftermarket devices which could affect the operation of the Radio/Audio System. Refer to **Checking Aftermarket Accessories** in Wiring Systems.
- Inspect for easily accessible or visible system components for obvious damage or conditions which could cause the symptom.

Intermittent

Faulty electrical connections or wiring may be the cause of intermittent conditions. Refer to **Testing for Intermittent Conditions and Poor Connections** in Wiring Systems.

Symptom List

Refer to a symptom diagnostic procedure from the following list in order to diagnose the symptom:

- **Audio System Troubleshooting Hints**
- **Radio Poor Reception**
- **Power Antenna Inoperative**
- **Audio Distortion - One or More Speakers**
- **Remote Playback Device Inoperative**
- **Remote Playback Device Left or Right Channel Inoperative**
- **Radio Display Inoperative, No Sound from Speakers**
- **Tape Player Weak, Slow, or Garbled Output**
- **Speakers Inoperative - One or More**

AUDIO SYSTEM TROUBLESHOOTING HINTS

Many conditions that affect radio operation may be corrected without removing the radio from the car. Verify the condition, and follow the diagnostic procedures in order to isolate and correct the condition. In order to properly diagnose any audio system problems, ensure that you have a fully charged battery.

Preliminary Inspections

IMPORTANT: When testing the audio system for poor reception or noise, the vehicle should be outside away from metal buildings and utility lines, with the hood and rear compartment closed.

- Inspect for any aftermarket equipment that may have been installed on the vehicle. If aftermarket equipment is found, disconnect the equipment and verify that the audio noise is still present.

  Verify that the antenna connector and the antenna coaxial cable are clean and tight.

- For reception concerns, first determine if the customer is within the listening area of the stations they are attempting to receive.
- Stations at the lower end of the FM band are more susceptible to audio noises than stations at the higher end.
- If the noise is only from one speaker, inspect for the following items before speaker replacement:
  - Isolate the noise using the J 39916 -A .
  - Inspect the speaker connections in order to ensure they are clean and tight. Refer to **Testing for Intermittent Conditions and Poor Connections** in Wiring Systems.
  - Inspect for a loose or incorrectly installed speaker or surrounding trim. Loose trim may cause a buzz or flutter which sounds like a malfunctioning speaker.
- Ignition noise on the FM band may be an indication of an ignition system problem.
- Verify that all vehicle grounds are clean, tight, and free of corrosion.
- Inspect the rear defogger grid lines for large breaks or dark spots.
- Inspect the connections at the radio antenna module, if equipped, in order to ensure that they are clean and tight.
- Compare the customers vehicle to another of similar model and audio system in order to determine if the condition is abnormal.

Identifying Concerns

1. In order to isolate the source of the noise/poor reception, identify the ignition switch position that the concern is most noticeable:
   1. Turn the ignition switch to the accessory position.
   2. Turn ON the radio.
   3. Seek up 88 to 108 FM then 550 to 1600 AM.
   4. Record the number of valid radio stations where the tuner stops.

    5. Repeat these steps with the ignition ON, and the engine OFF, then repeat the steps again with the engine running.
2. Return the ignition switch to the position that the concern was most noticeable.
3. Remove the fuses or circuit breakers, one at a time, until the noise has been eliminated.
4. Identify what systems or components are powered by the fuse.
5. Reinstall all fuses and circuit breakers.
6. Disconnect the components powered by the fuse, one at a time, until the concern has been eliminated.

Corrective Action

- Inspect the ground integrity of the component or system causing the noise.
- Malfunctioning and marginal components such as relays and solenoids may cause noise and/or poor reception.
- Always use a braided ground strap when applying additional grounds and keep the ground strap as short as possible.
- If the noise source is found to be coming from the vehicle harness:
    - Route the antenna cable separately from the wire harness that is emitting the noise.
    - Use aluminum or nickel tape in order to shield the antenna cable. Try variations of the following repairs:
        - Try adding only aluminum or nickel tape before adding a ground strap to the tape.
        - Wrap a ground strap 360 degrees around the tape, securing the other end of the strap to chassis ground.

IMPORTANT: When installing suppression devices, signal wires such as sensor and communication circuits should not be suppressed. Battery and ignition voltage circuits are the best choices for suppressing.

- Capacitors work best on switch pops and low frequency noise.
- Filters work best on high frequency whines and static.
- After adding any suppression device, inspect all of the vehicle systems, including those not related to the audio system, for proper operation and function.
- Whenever possible, make a test harness that includes filters or capacitors. Always inspect the effectiveness and operation before permanent installation.
- If an audible pop is caused due to operating a switch, perform the following repairs as necessary
    - Add a capacitor across the contacts of the switch.
    - Add a capacitor from the battery positive voltage (B+) side of the switch to chassis ground.
    - Add a capacitor from the ground side of the switch to chassis ground.
- Use the following available noise suppression devices:
    - 220 micro farad (50V) capacitor GM P/N 1227895

      This works well for ignition system related noise.

- 0.47 micro farad capacitor GM P/N 1227894

  This works well for switches and relays.

- Feed through capacitor GM P/N 477371

  This works well for high current situations.

- Filter package GM P/N 1224205

  This works well for low current situations.

- Fuel pump suppressor GM P/N 25027405
- 21 in braided ground strap GM P/N 8910791
- 19 in braided ground strap GM P/N 6286800
- 10.5 in braided ground strap GM P/N 6287160
- 8.5 in braided ground strap GM P/N 12091511

Generator Whine Concerns

1. Inspect the ground terminal and cable for high resistance.
2. Inspect the generator and brackets for loose or coated mounting bolts.
3. Verify that the ground straps between the engine and the frame are clean and tight.
4. If the noise is still present, inspect the electrical system for proper operation. Refer to **Diagnostic Starting Point - Engine Electrical** in Engine Electrical.
5. Install a filter GM P/N 1224205 in the battery voltage feed circuit to the radio.
6. If the noise is not eliminated, install the filter in each following variation:
   - Install the filter with the single wire side toward the radio and the ground wire attached to chassis ground.
   - Remove the ground to the filter.
   - Reverse the filter so that the two -wire side is toward the radio with the ground wire attached to chassis ground.
   - Remove the ground from the filter.
7. If the filter GM P/N 1224205 causes a delay when turning the radio ON or OFF, or other problems, remove the filter and Install a 0.47 micro farad capacitor to chassis ground.
8. Before reassembling the vehicle, remove any unneeded filters.
9. Test the functionality of all the vehicle systems, including those not related to the audio system, for proper operation and function.

RADIO POOR RECEPTION

Radio Poor Reception

Step	Action	Value (s)	Yes	No
1	Did you perform the Radio/Audio System Diagnostic System Check?	-	Go to **Step 2**	Go to **Diagnostic System Check - Radio/Audio System**
2	1. Turn ON the ignition, with the engine OFF. 2. Turn ON the radio. 3. Tune the radio to a known strong AM station, then tune to a known strong FM station. Is the radio reception clear?	-	Go to **Audio System Troubleshooting Hints**	Go to **Step 3**
3	Inspect for a poor connection at the radio antenna lead -in connector. Refer to **Testing for Intermittent Conditions and Poor Connections** and **Wiring Repairs** in Wiring Systems. Did you find and correct the condition?	-	Go to **Step 12**	Go to **Step 4**
4	1. Turn OFF the ignition. 2. Disconnect the negative battery cable. 3. Remove the radio. Refer to **Radio Replacement** for service procedure. **IMPORTANT:** **Always zero out the DMM before taking a resistance measurement in order to ensure an accurate reading.** 4. Measure the resistance between the negative battery cable and the radio antenna coaxial ground at the radio. Does the resistance measure greater than the specified value?	0.20 ohm	Go to **Step 5**	Go to **Step 6**
5	Inspect the base of the antenna for a proper connection to body ground. Refer to **Testing for Intermittent Conditions and Poor Connections** in Wiring Systems. Did you find and correct the condition?	-	Go to **Step 12**	Go to **Step 7**
	1. Grasp the antenna mast. 2. Monitor the DMM and wiggle the antenna mast.			

6	3. Continue to monitor the DMM and wiggle the radio antenna coaxial cable. Does the DMM display intermittent continuity?	-	Go to **Step 8**	Go to **Step 9**
7	Test for an open or high resistance from the battery negative cable to body ground. Refer to **Circuit Testing** and **Wiring Repairs** in Wiring Systems. Did you find and correct the condition?	-	Go to **Step 12**	Go to **Step 10**
8	1. Inspect the base of the antenna for a proper connection to body ground. 2. Inspect the antenna coaxial cable interconnects for a poor connection or corrosion. Refer to **Testing for Intermittent Conditions and Poor Connections** in Wiring Systems. Did you find and correct the condition?	-	Go to **Step 12**	Go to **Step 10**
9	1. Remove the antenna coaxial lead -in connector from the radio. 2. Measure the resistance between the antenna coaxial lead -in connector (center conductor) and the antenna mast. Refer to **Circuit Testing** in Wiring Systems. Does the resistance measure greater than the specified values?	RG -58/ RG -59 Coax: 0.2 ohm RG -62/ RG -62M Coax: 3.5 ohm	Go to **Step 10**	Go to **Step 11**
10	Replace the antenna coaxial cable. Refer to **Fixed Antenna Replacement** for service procedure. Did you complete the replacement?	-	Go to **Step 12**	-
11	1. Test for continuity between the antenna coaxial cable center conductor and metal case. 2. Test at the opposite end of the antenna cable also. Did you measure continuity?	-	Go to **Step 10**	Go to **Audio System Troubleshooting Hints**
	Operate the system in order to verify the			

12	repair. Did you correct the condition?	-	System OK	Go to **Step 2**

POWER ANTENNA INOPERATIVE

Power Antenna Inoperative (Convertible)

Step	Action	Value (s)	Yes	No
Schematic Reference: Radio/Audio System Schematics				
1	Did you perform the Radio/Audio System Diagnostic System Check?	-	Go to **Step 2**	Go to **Diagnostic System Check - Radio/Audio System**
2	1. Disconnect the power antenna harness connector. 2. Test the battery positive voltage circuit at the power antenna connector. Refer to **Circuit Testing** and **Wiring Repairs** in Wiring Systems. Does the voltage measure near the specified value?	12 V DC	Go to **Step 3**	Go to **Step 6**
3	1. Turn ON the ignition, with the engine OFF. 2. Turn ON the radio. 3. Test the antenna relay coil supply voltage circuit input at the power antenna connector. Refer to **Circuit Testing** and **Wiring Repairs** in Wiring Systems. Does the voltage measure near the specified value?	12 V DC	Go to **Step 4**	Go to **Step 5**
4	Test the ground circuit at the power antenna harness connector for an open. Refer to **Circuit Testing** and **Wiring Repairs** in Wiring Systems. Does the resistance measure near the specified value?	0 ohm	Go to **Step 9**	Go to **Step 8**
5	1. Turn ON the ignition with the engine OFF. 2. Turn ON the radio. 3. Test the antenna relay coil supply voltage circuit output voltage at the radio connector. Refer to **Circuit Testing** and **Wiring Repairs** in Wiring Systems. Does the voltage measure near the specified value?	12 V DC	Go to **Step 7**	Go to **Step 10**
6	Repair the battery positive voltage circuit. Refer to **Circuit Testing** and **Wiring Repairs** in Wiring Systems. Did you find and correct the condition?	-	Go to **Step 13**	-
	Repair the antenna relay coil supply voltage circuit.			

7	Refer to **Circuit Testing** and **Wiring Repairs** in Wiring Systems. Did you find and correct the condition?	-	Go to **Step 13**	Go to **Step 10**
8	Repair the ground circuit of the power antenna. Refer to **Circuit Testing** and **Wiring Repairs** in Wiring Systems. Did you find and correct the condition?	-	Go to **Step 13**	-
9	Inspect for poor connections at the harness connector of the power antenna. Did you find and correct the condition?	-	Go to **Step 13**	Go to **Step 11**
10	Inspect for poor connections at the harness connector of the radio. Did you find and correct the condition?	-	Go to **Step 13**	Go to **Step 12**
11	Replace the radio power antenna. Refer to **Power Antenna Assembly Replacement** . Did you complete the replacement?	-	Go to **Step 13**	-
12	Replace the radio. Refer to **Radio Replacement** . Did you complete the replacement?	-	Go to **Step 13**	-
13	Operate the system in order to verify the repair. Did you correct the condition?	-	System OK	Go to **Step 2**

AUDIO DISTORTION - ONE OR MORE SPEAKERS

Audio Distortion - One or More Speakers

Step	Action	Value (s)	Yes	No
Schematic Reference: Radio/Audio System Schematics				
1	Did you perform the Radio/Audio System Diagnostic System Check?	-	Go to **Step 2**	Go to **Diagnostic System Check - Radio/Audio System**
2	Turn OFF the ignition. Can audio distortion be heard from the speakers?	-	Go to **Step 7**	Go to **Step 3**
3	1. Turn ON the ignition, with the engine OFF. 2. Turn ON the radio. 3. Adjust the fade and balance controls to mid range. 4. Insert the tape or CD from the J 39916 -A . Can audio distortion be heard from the speakers?	-	Go to **Step 4**	Go to **Testing for Intermittent Conditions and Poor Connections** in Wiring Systems
4	Test the ground circuits of the Bose signal processor for an open or high resistance. Refer to **Circuit Testing** and **Wiring Repairs** in Wiring Systems. Did you find and correct the condition?	-	Go to **Step 15**	Go to **Step 5**
	Test the audio drain wire circuits of the radio for high			

5	resistance or an open. Refer to **Circuit Testing** and **Wiring Repairs** in Wiring Systems. Did you find and correct the condition?	-	Go to **Step 15**	Go to **Step 6**
6	Test the front center speaker output circuits of the radio and the sub -woofer audio return circuits of the Bose signal processor for a short to voltage or a short to ground. Refer to **Circuit Testing** and **Wiring Repairs** in Wiring Systems. Did you find and correct the condition?	-	Go to **Step 15**	Go to **Step 10**
7	1. Disconnect the Bose signal processor. 2. Test the antenna relay coil supply voltage circuit of the Bose signal processor for a short to voltage. Refer to **Circuit Testing** and **Wiring Repairs** in Wiring Systems. Did you find and correct the condition?	0 V DC	Go to **Step 15**	Go to **Step 8**
8	1. Disconnect the Bose relay. 2. Test the speaker supply voltage circuit of the Bose relay for a short to voltage. Refer to **Circuit Testing** and **Wiring Repairs** in Wiring Systems. Did you find and correct the condition?	0 V DC	Go to **Step 15**	Go to **Step 11**
9	Inspect for poor connections at the harness connector to the radio. Refer to **Testing for Intermittent Conditions and Poor Connections** and **Connector Repairs** in Wiring Systems. Did you find and correct the condition?	-	Go to **Step 15**	Go to **Step 12**
10	Inspect for poor connections at the harness connector to the Bose signal processor. Refer to **Testing for Intermittent Conditions and Poor Connections** and **Connector Repairs** in Wiring Systems. Did you find and correct the condition?	-	Go to **Step 15**	Go to **Step 13**
11	Inspect for poor connections at the harness connector to the Bose relay. Refer to **Testing for Intermittent Conditions and Poor Connections** and **Connector Repairs** in Wiring Systems. Did you find and correct the condition?	-	Go to **Step 15**	Go to **Step 14**
12	Replace the radio. Refer to **Radio Replacement** . Did you complete the repair?	-	Go to **Step 15**	-
13	Replace the Bose signal processor. Refer to **Bose Module Replacement** . Did you complete the repair?	-	Go to **Step 15**	-
14	Replace the Bose relay. Did you complete the repair?	-	Go to **Step 15**	-

15	Operate the system in order to verify the repair. Did you correct the condition?	-	System OK	-

REMOTE PLAYBACK DEVICE INOPERATIVE

Remote Playback Device Inoperative

Step	Action	Yes	No
Schematic Reference: Radio/Audio System Schematics			
1	Did you perform the Radio/Audio System Diagnostic System Check?	Go to **Step 2**	Go to **Diagnostic System Check - Radio/Audio System**
2	1. Turn ON the ignition, with the engine OFF. 2. Turn ON the radio. 3. Insert a CD magazine with at least 1 audio CD inside into the remote playback device. 4. Operate the remote CD playback device. Does the remote CD playback device operate normally?	Go to **Testing for Intermittent Conditions and Poor Connections** in Wiring Systems	Go to **Step 3**
3	1. Disconnect the remote CD playback device. 2. Test the battery positive voltage circuit for an open. Refer to **Circuit Testing** and **Wiring Repairs** in Wiring Systems.Did you find and correct the condition?	Go to **Step 8**	Go to **Step 4**
4	Test the ground circuit for an open or high resistance. Refer to **Circuit Testing** and **Wiring Repairs** in Wiring Systems. Did you find and correct the condition?	Go to **Step 8**	Go to **Step 5**
5	Inspect for poor connections at the harness connector of the Remote CD Playback Device. Refer to **Testing for Intermittent Conditions and Poor Connections** and **Connector Repairs** in Wiring Systems. Did you find and correct the condition?	Go to **Step 8**	Go to **Step 6**
6	Inspect for poor connections at the harness connector of the radio. Refer to **Testing for Intermittent Conditions and Poor Connections** and a **Connector Repairs** in Wiring Systems. Did you find and correct the condition.	Go to **Step 8**	Go to **Step 7**
7	Replace the remote playback device. Refer to **Remote CD Changer Replacement** .		

	Did you complete the replacement?	Go to **Step 8**	-
8	Operate the system in order to verify the repair. Did you correct the condition?	System OK	Go to **Step 2**

REMOTE PLAYBACK DEVICE LEFT OR RIGHT CHANNEL INOPERATIVE

Remote Playback Device Left or Right Channel Inoperative

Step	Action	Yes	No
Schematic Reference: Radio/Audio System Schematics			
1	Did you perform the Radio/Audio System Diagnostic System Check?	Go to **Step 2**	Go to **Diagnostic System Check - Radio/Audio System**
2	1. Turn ON the ignition, with the engine OFF. 2. Turn ON the radio. 3. Insert a tape, CD, or CD magazine with at least 1 audio CD inside into the remote playback device. 4. Operate the remote playback device. Does the remote playback device play on the right and left audio channels?	Go to **Testing for Intermittent Conditions and Poor Connections** in Wiring Systems	Go to **Step 3**
3	1. Turn OFF the ignition. 2. Disconnect the remote playback device. 3. Test the appropriate (left or right) audio output for an open, short or high resistance. Refer to **Circuit Testing** and **Wiring Repairs** in Wiring Systems. Did you find and correct the condition?	Go to **Step 7**	Go to **Step 4**
4	Inspect for poor connections at the harness connector of the remote playback device. Refer to **Testing for Intermittent Conditions and Poor Connections** and **Connector Repairs** in Wiring Systems. Did you find and correct the condition?	Go to **Step 7**	Go to **Step 5**
5	1. Disconnect the radio. 2. Inspect for poor connections at the harness connector of the Radio. Refer to **Testing for Intermittent Conditions and Poor Connections** and **Connector Repairs** in Wiring Systems.		

	Did you find and correct the condition?	Go to **Step 7**	Go to **Step 6**
6	Replace the remote playback device. Refer to **Remote CD Changer Replacement** . Did you complete the replacement?	Go to **Step 7**	-
7	Operate the system in order to verify the repair. Did you correct the condition?	System OK	Go to **Step 2**

RADIO DISPLAY INOPERATIVE, NO SOUND FROM SPEAKERS

Radio Display Inoperative, No Sound from Speakers

Step	Action	Yes	No
Schematic Reference: Radio/Audio System Schematics			
1	Did you perform the Radio/Audio System Diagnostic System Check?	Go to **Step 2**	Go to **Diagnostic System Check - Radio/Audio System**
2	1. Turn ON the ignition, with the engine OFF. 2. Turn ON the radio. Does the radio operate properly?	Go to **Testing for Intermittent Conditions and Poor Connections** in Wiring Systems	Go to **Step 3**
3	1. Disconnect the radio. 2. Test the accessory voltage circuit of the radio for a short to ground, or an open. Refer to **Circuit Testing** and **Wiring Repairs** in Wiring Systems. Did you find and correct the condition?	Go to **Step 7**	Go to **Step 4**
4	Test the battery positive voltage circuit of the radio for a short to ground, or an open. Refer to **Circuit Testing** and **Wiring Repairs** in Wiring Systems. Did you find and correct the condition?	Go to **Step 7**	Go to **Step 5**
5	Inspect for poor connections at the harness connector of the radio. Refer to **Testing for Intermittent Conditions and Poor Connections** and **Connector Repairs** in Wiring Systems. Did you find and correct the condition?	Go to **Step 7**	Go to **Step 6**
6	Replace the radio. Refer to **Radio Replacement** . Did you complete the replacement?	Go to **Step 7**	-
7	Operate the system in order to verify the repair. Did you complete the repair?	System OK	Go to **Step 2**

TAPE PLAYER WEAK, SLOW, OR GARBLED OUTPUT

Tape Player Weak, Slow, or Garbled Output

Step	Action	Yes	No
Schematic Reference: Radio/Audio System Schematics			
1	Did you review the Radio/Audio Description and Operation and perform the necessary inspections?	Go to **Step 2**	Go to **Radio/Audio System Description and Operation**
2	Use the J 39916 -A CD and Cassette Diagnostic Audio Kit in order to perform the motor speed test. Is the cassette motor speed correct?	Go to **Step 3**	Go to **Step 4**
3	Use the J 39916 -A CD in order to clean the cassette player. Did you complete the repair?	Go to **Step 5**	-
4	**IMPORTANT:** **Perform the set up procedure for the radio.** Replace the radio. Refer to **Radio Replacement** .Did you complete the repair?	Go to **Step 5**	-
5	Operate the system in order to verify the repair. Did you correct the condition?	System OK	Go to **Step 2**

SPEAKERS INOPERATIVE - ONE OR MORE

Speakers Inoperative - One or More

Step	Action	Value (s)	Yes	No
Schematic Reference:Radio/Audio System Schematics				
1	Did you perform the Radio/Audio System Diagnostic System Check?	-	Go to **Step 2**	Go to **Diagnostic System Check - Radio/Audio System**
2	1. Turn ON the ignition, with the engine OFF. 2. Turn ON the radio. 3. Adjust the radio balance and fade to the suspect speaker. Do all of the speakers operate properly?	-	Go to **Testing for Intermittent Conditions and Poor Connections** in Wiring Systems	Go to **Step 3**
3	Are all of the speakers inoperative?	-	Go to **Step 9**	Go to **Step 4**
4	Do both sub -woofer amplified speakers operate properly?	-	Go to **Step 5**	Go to **Step 11**
5	Are all of the non -amplified speakers inoperative?	-	Go to **Step 10**	Go to **Step 6**

6	Test the low level audio signal circuits for an open or high resistance. Refer to **Circuit Testing** and **Wiring Repairs** in Wiring Systems. Did you find and correct the condition?	-	Go to **Step 30**	Go to **Step 7**
7	1. Turn OFF the ignition. 2. Disconnect the radio. 3. Momentarily touch a 1.5 volt battery between the appropriate speaker output circuits of the radio. Does the speaker emit an audible pop?	-	Go to **Step 21**	Go to **Step 8**
8	Test the appropriate non -amplified speaker output circuits of the radio for an open or high resistance. Refer to **Circuit Testing** and **Wiring Repairs** in Wiring Systems. Did you find and correct the condition?	-	Go to **Step 30**	Go to **Step 20**
9	1. Disconnect the radio. 2. Test the antenna relay coil supply voltage circuit for an open or short to ground. Refer to **Circuit Testing** and **Wiring Repairs** in Wiring Systems. Did you find and correct the condition?	-	Go to **Step 30**	Go to **Step 21**
10	Test all non -amplified speaker output circuits of the radio for a short to voltage or a short to ground. Refer to **Circuit Testing** and **Wiring Repairs** in Wiring Systems. Did you find and correct the condition?	-	Go to **Step 30**	Go to **Step 21**
11	Are both sub -woofer amplified speakers inoperative?	-	Go to **Step 12**	Go to **Step 15**
12	1. Disconnect the Bose relay. 2. Turn ON the ignition, with the engine OFF. 3. Turn ON the radio. 4. Test the antenna relay coil supply voltage circuit and the battery positive voltage circuit of the Bose relay for an open, high resistance, or a short to ground. Refer to **Circuit Testing** and **Wiring Repairs** in Wiring Systems. Did you find and correct the condition?	-	Go to **Step 30**	Go to **Step 13**

13	Test the ground circuit of the Bose relay for an open or high resistance. Refer to **Circuit Testing** and **Wiring Repairs** in Wiring Systems. Did you find and correct the condition?	-	Go to **Step 30**	Go to **Step 14**
14	1. Turn OFF the ignition. 2. Place a fused jumper across the Bose relay connections between the battery positive voltage circuit and the speaker supply voltage circuit. 3. Turn ON the ignition, with the engine OFF. 4. Turn ON the radio. Do all of the speakers operate properly?	-	Go to **Step 24**	Go to **Step 23**
15	1. Disconnect the appropriate sub -woofer amplifier. 2. Test the speaker supply voltage circuits of the appropriate sub -woofer amplifier for an open. Refer to **Circuit Testing** and **Wiring Repairs** in Wiring Systems. Did you find and correct the condition?	-	Go to **Step 30**	Go to **Step 16**
16	Test the ground circuits of the appropriate sub -woofer amplifier for an open or high resistance. Refer to **Circuit Testing** and **Wiring Repairs** in Wiring Systems. Did you find and correct the condition?	-	Go to **Step 30**	Go to **Step 17**
17	1. Adjust the radio volume to an audible level. 2. Test the low level audio signal circuits of the appropriate sub -woofer amplifier for AC voltage. Does the voltage measure greater than the specified value?	0.20 V AC	Go to **Step 22**	Go to **Step 18**
18	Test the low level audio signal circuits of the appropriate sub -woofer amplifier for an open, a short to ground, or for a short to voltage. Refer to **Circuit Testing** and **Wiring Repairs** in Wiring Systems. Did you find and correct the condition?	-	Go to **Step 30**	Go to **Step 19**
	1. Disconnect the Bose signal processor.			

19	2. Test the appropriate speaker audio input circuits of the Bose signal processor for an open, short to ground, or short to voltage. Did you find and correct the condition?	-	Go to **Step 30**	Go to **Step 23**
20	Inspect for poor connections at the harness connector of the speaker. Refer to **Testing for Intermittent Conditions and Poor Connections** and **Connector Repairs** in Wiring Systems. Did you find and correct the condition?	-	Go to **Step 30**	Go to **Step 25**
21	Inspect for poor connections at the harness connector of the radio. Refer to **Testing for Intermittent Conditions and Poor Connections** and **Connector Repairs** in Wiring Systems. Did you find and correct the condition?	-	Go to **Step 30**	Go to **Step 26**
22	Inspect for poor connections at the harness connector of the appropriate sub -woofer. Refer to **Testing for Intermittent Conditions and Poor Connections** and **Connector Repairs** in Wiring Systems. Did you find and correct the condition?	-	Go to **Step 30**	Go to **Step 27**
23	Inspect for poor connections at the harness connector of the Bose signal processor. Refer to **Testing for Intermittent Conditions and Poor Connections** and **Connector Repairs** in Wiring Systems. Did you find and correct the condition?	-	Go to **Step 30**	Go to **Step 28**
24	Inspect for poor connections at the harness connector of the Bose relay. Refer to **Testing for Intermittent Conditions and Poor Connections** and **Connector Repairs** in Wiring Systems. Did you find and correct the condition?	-	Go to **Step 30**	Go to **Step 29**
25	Replace the speaker. Refer to **Speaker Replacement - Front** or **Speaker Replacement - Rear (Coupe)** or **Speaker Replacement - Rear (Convertible)** or **Speaker Replacement - Rear (Hardtop)** . Did you complete the replacement?	-	Go to **Step 30**	-
26	Replace the radio. Refer to **Radio Replacement** . Did you complete the repair?	-	Go to **Step 30**	-
	Replace the appropriate sub -woofer amplifier.			

27	Refer to **Speaker Replacement - Front** . Did you complete the replacement?	-	Go to **Step 30**	-
28	Replace the Bose signal processor. Refer to **Bose Module Replacement** . Did you complete the replacement?	-	Go to **Step 30**	-
29	Replace the Bose relay. Did you complete the replacement?	-	Go to **Step 30**	-
30	Operate the system in order to verify the repair. Did you find and correct the condition?	-	System OK	Go to **Step 2**

REPAIR INSTRUCTIONS

RADIO REPLACEMENT

Removal Procedure

1. Remove the front floor kick -up panel. Refer to **Kick -Up Panel Replacement - Front Floor** in Interior Trim.
2. Remove the cover from the I/P electrical center.

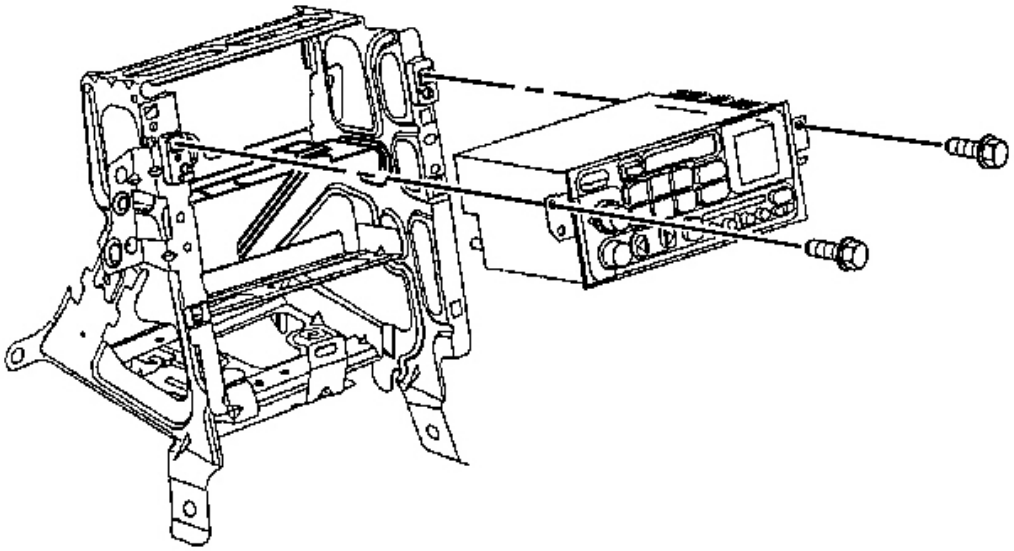

Fig. 12: Radio Control & Center Bracket
Courtesy of GENERAL MOTORS CORP.

3. Remove the RDO/CD MiniFuse(R) #5 from the I/P electrical center.
4. Remove the console. Refer to **Console Replacement** in Instrument Panel, Gauges and Console.
5. Remove the I/P accessory trim plate. Refer to **Trim Plate Replacement - Instrument Panel (I/P) Accessory** in Instrument Panel, Gauges and Console.
6. Remove the screws retaining the radio control to the I/P center support bracket.
7. Begin to remove the radio control from the center support bracket enough to access the connectors at rear of the radio control.

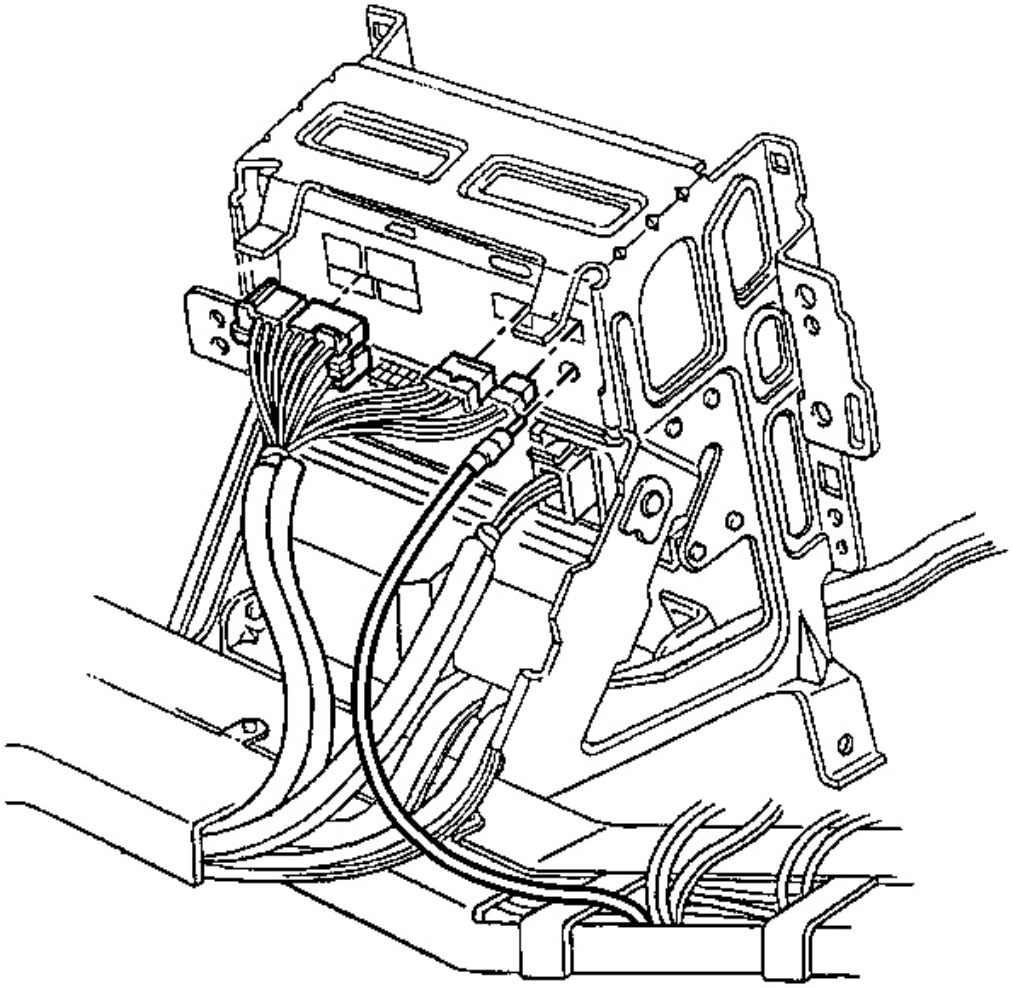

Fig. 13: Electrical/Audio And Coaxial Cable Connectors At Radio Control
Courtesy of GENERAL MOTORS CORP.

8. Disconnect the electrical/audio and coaxial cable connectors from the radio control.

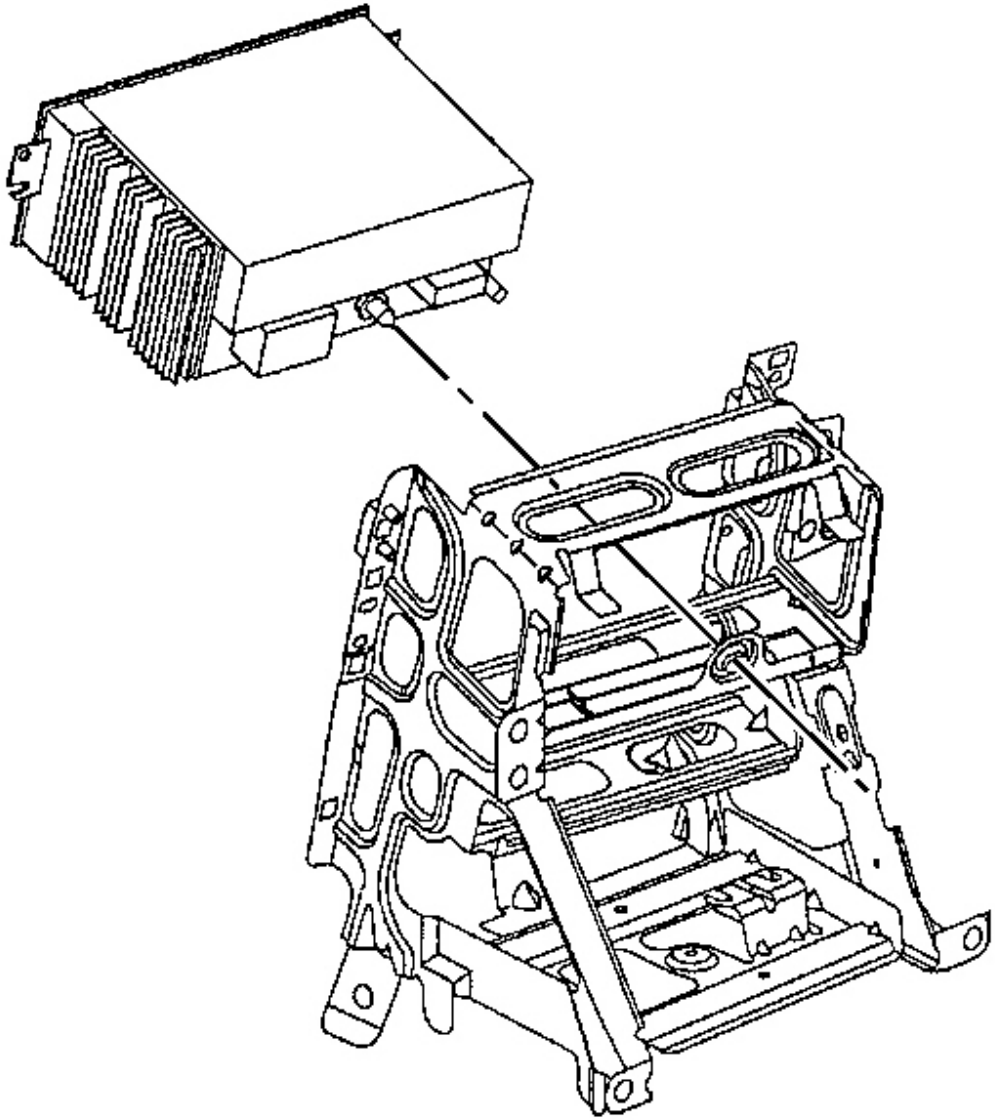

Fig. 14: Radio Control To Bracket Alignment
Courtesy of GENERAL MOTORS CORP.

9. Remove the radio control.

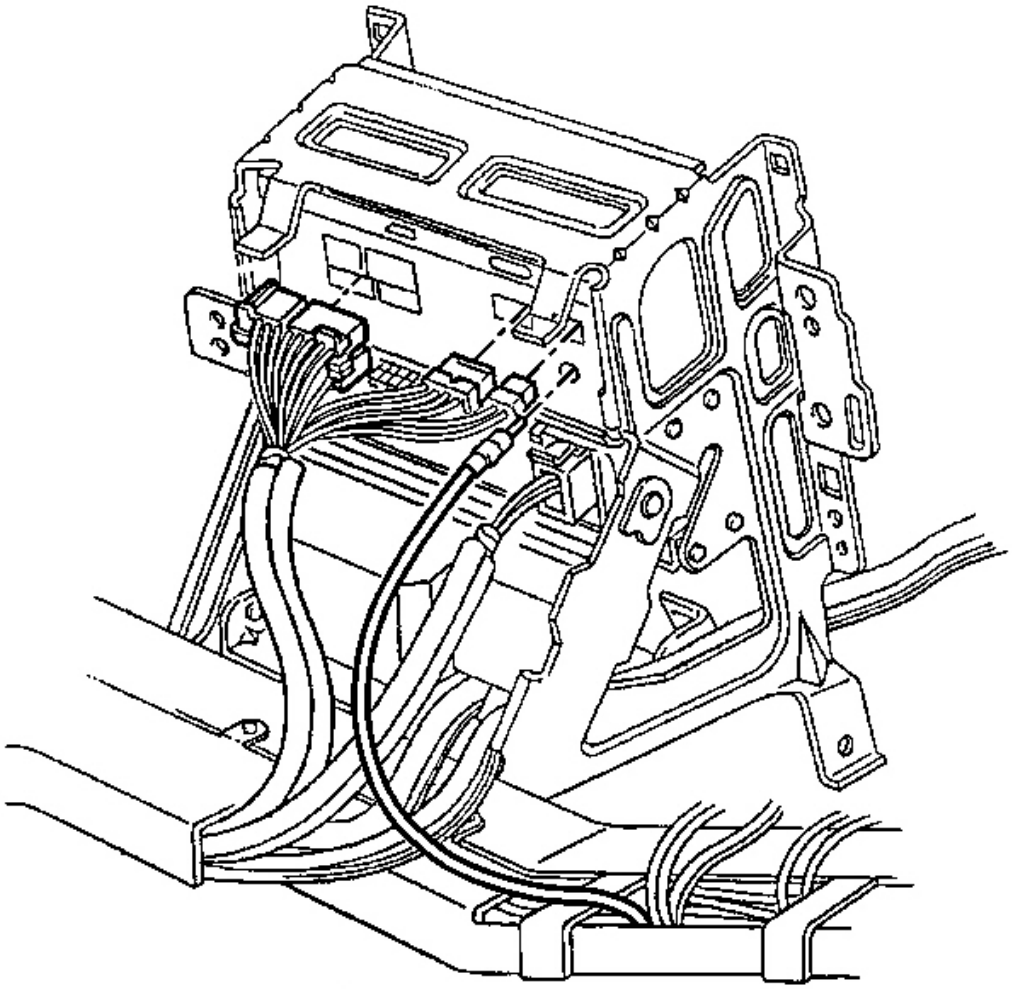

Fig. 15: Electrical/Audio And Coaxial Cable Connectors At Radio Control
Courtesy of GENERAL MOTORS CORP.

1. Connect the electrical/audio and coaxial cable connectors to the radio control.

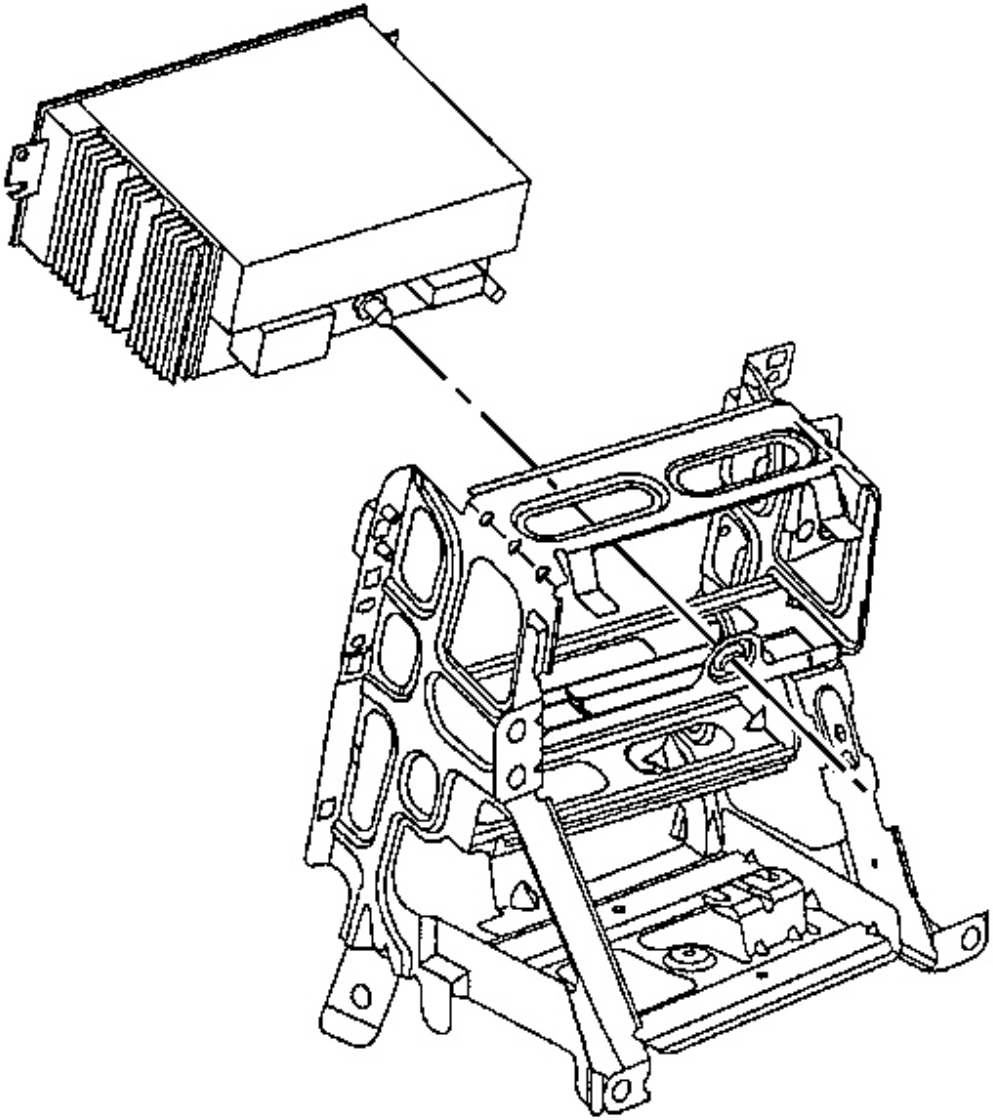

Fig. 16: Radio Control To Bracket Alignment
Courtesy of GENERAL MOTORS CORP.

2. Install the radio control into position in the I/P center support bracket.

   Align the radio control locator tab into the center support bracket locator hole.

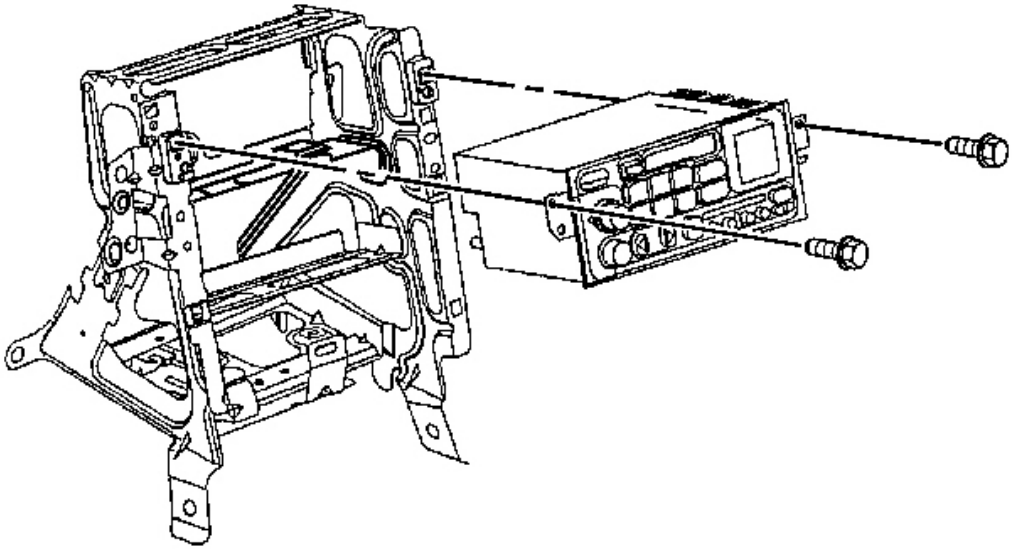

Fig. 17: Radio Control & Center Bracket
Courtesy of GENERAL MOTORS CORP.

NOTE: Refer to Fastener Notice in Cautions and Notices.

3. Install the radio control retaining screws.

   Tighten: Tighten the radio control retaining screws to 2.5 N.m (22 lb in).

4. Install the I/P accessory trim plate. Refer to **Trim Plate Replacement - Instrument Panel (I/P) Accessory** in Instrument Panel, Gauges and Console.
5. Install the console. Refer to **Console Replacement** in Instrument Panel, Gauges and Console.
6. Install the RDO/CD MiniFuse(R) #5 to the I/P electrical center.
7. Install the cover to the I/P electrical center.
8. Install the front floor kick -up panel. Refer to **Kick -Up Panel Replacement - Front Floor** in Interior Trim.

BOSE MODULE REPLACEMENT

Removal Procedure

1. Remove the front floor kick -up panel. Refer to **Kick -Up Panel Replacement - Front Floor** in Interior Trim.

2. Remove the cover from theinstrument panel (IP) electrical center.

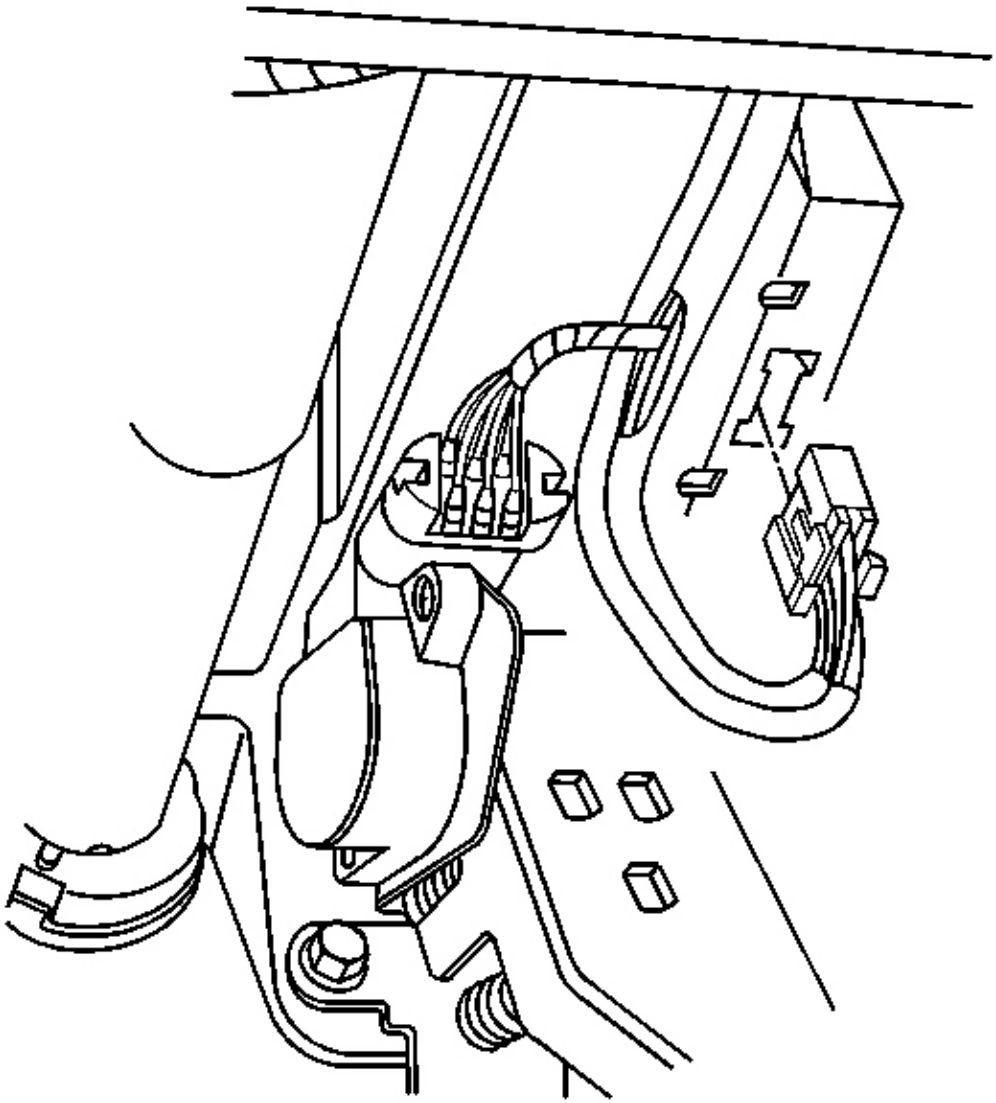

Fig. 18: Electrical/Audio Connector At Bose(R) Signal Processing Module
Courtesy of GENERAL MOTORS CORP.

3. Remove the RDO/ANT MiniFuse(R) #24 from the IP electrical center.
4. Remove the IP left lower insulator panel. Refer to **Closeout/Insulator Panel Replacement - Left** in Instrument Panel, Gages and Console.

5. Disconnect the electrical/audio connector from the Bose(R) signal processing module.

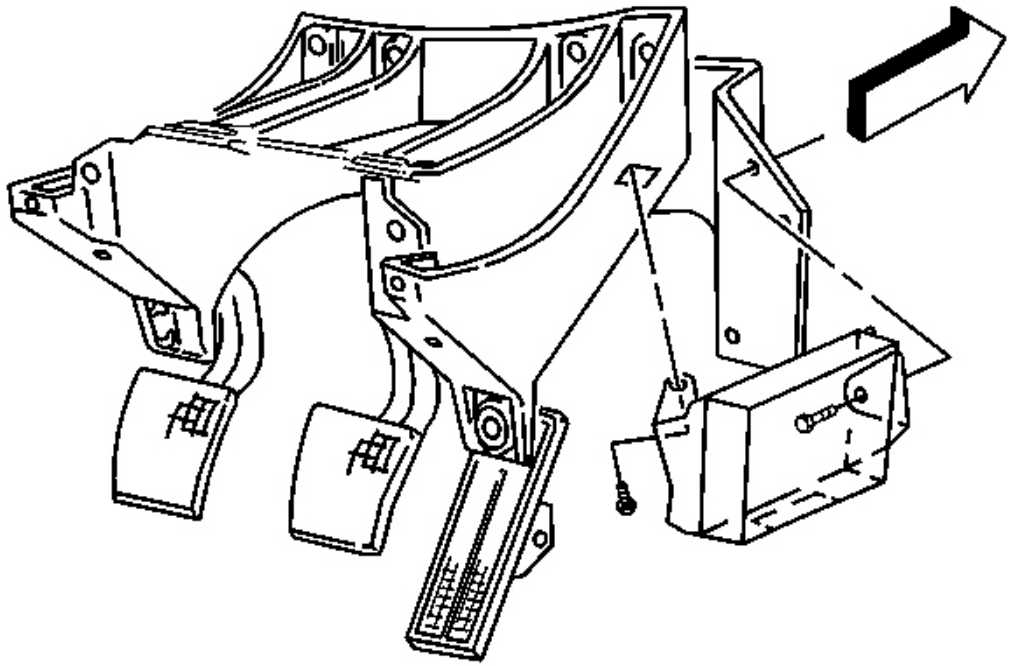

Fig. 19: Signal Processing Module At Steering Column Bracket
Courtesy of GENERAL MOTORS CORP.

IMPORTANT: The signal processing module is only held in place by retaining bolts. Be sure to support the signal processor upon removal of the bolts.

6. Remove the bolts retaining the Bose(R) signal processor to the steering column bracket.
7. Remove the signal processing module.

Installation Procedure

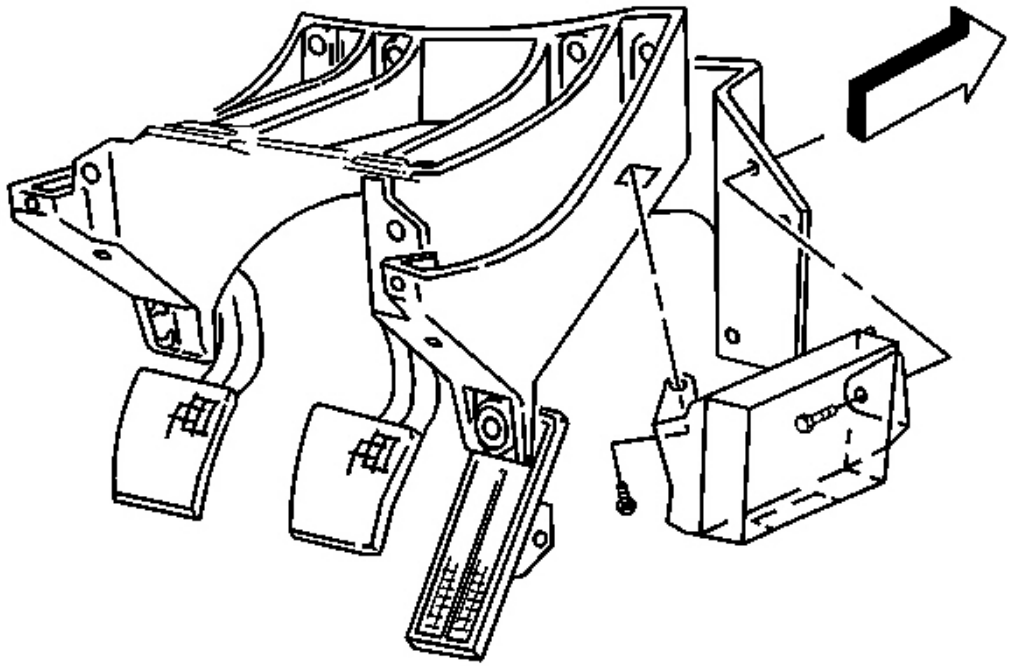

Fig. 20: Signal Processing Module At Steering Column Bracket
Courtesy of GENERAL MOTORS CORP.

1. Install the Bose(R) signal processing module into position on the steering column bracket.

   NOTE: Refer to Fastener Notice in Cautions and Notices.

2. Install the Bose(R) signal processing module retaining bolts.

   Tighten: Tighten the Bose(R) signal processing module retaining bolts to 2.5 N.m (22 lb in).

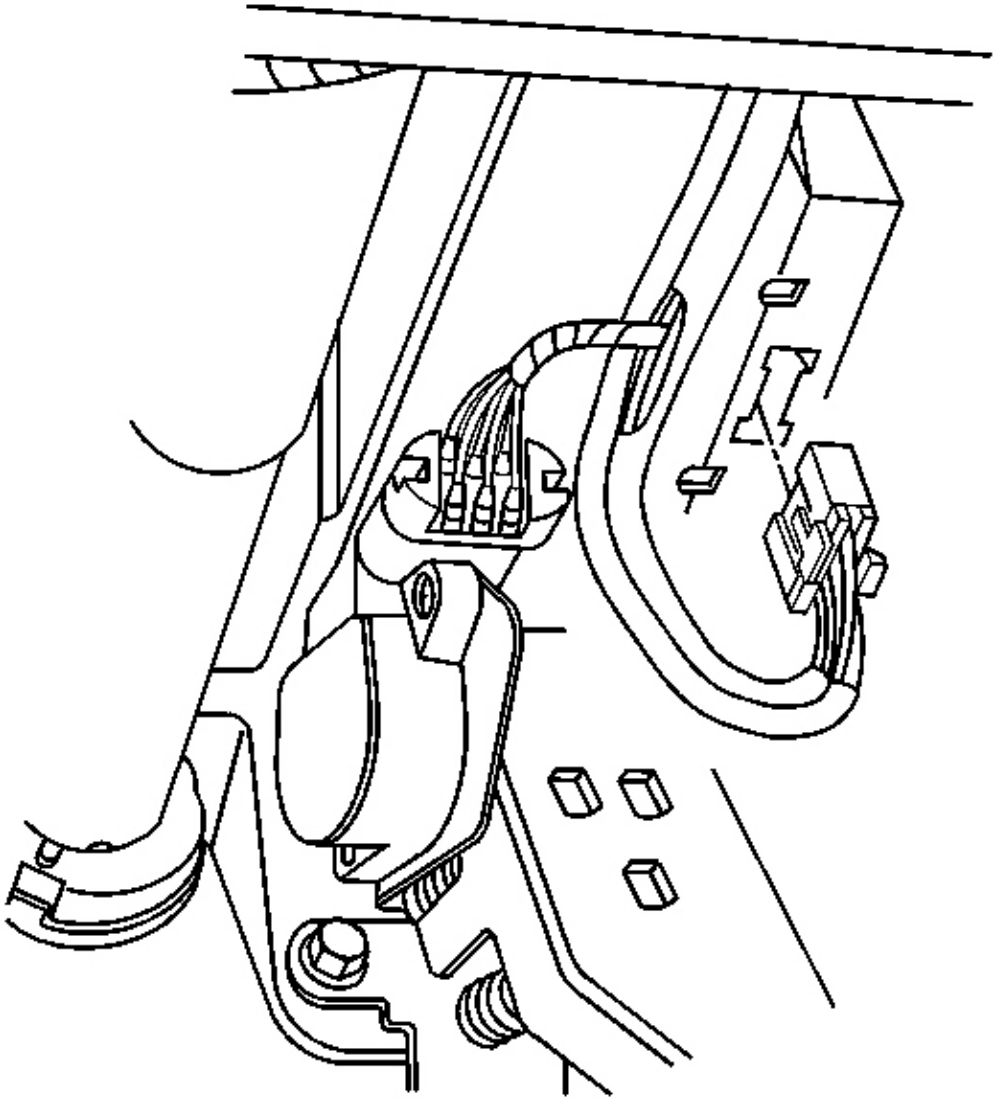

Fig. 21: Electrical/Audio Connector At Bose(R) Signal Processing Module
Courtesy of GENERAL MOTORS CORP.

3. Connect the electrical/audio connector to the signal processing module.
4. Install the IP left lower insulator panel. Refer to **Closeout/Insulator Panel Replacement - Left** in Instrument Panel, Gages and Console.
5. Install the RDO/ANT MiniFuse(R) #24 to the IP electrical center.
6. Install the cover to the I/P electrical center.

7. Install the front floor kick -up panel. Refer to **Kick -Up Panel Replacement - Front Floor** in Interior Trim.

CASSETTE PLAYER CARE AND CLEANING

Store cassettes away from extreme heat or direct sunlight. Protect the open ends from dirt or damage. Store cassettes in their original cases or other protective cases. Do not use tapes longer than 60 minutes total length (30 minutes per side) for best results.

Cassettes may be left in the tape player when leaving the vehicle.

Tape Cleaning Intervals

The recommended time for cleaning is every 30 hours for best performance and every 50 hours to prevent damage to the tape head. The preferred tape cleaner is available as a part of J 39916 -A .

Cleaning Procedure

Tools Required

J 39916 -A Audio System Diagnostic Kit

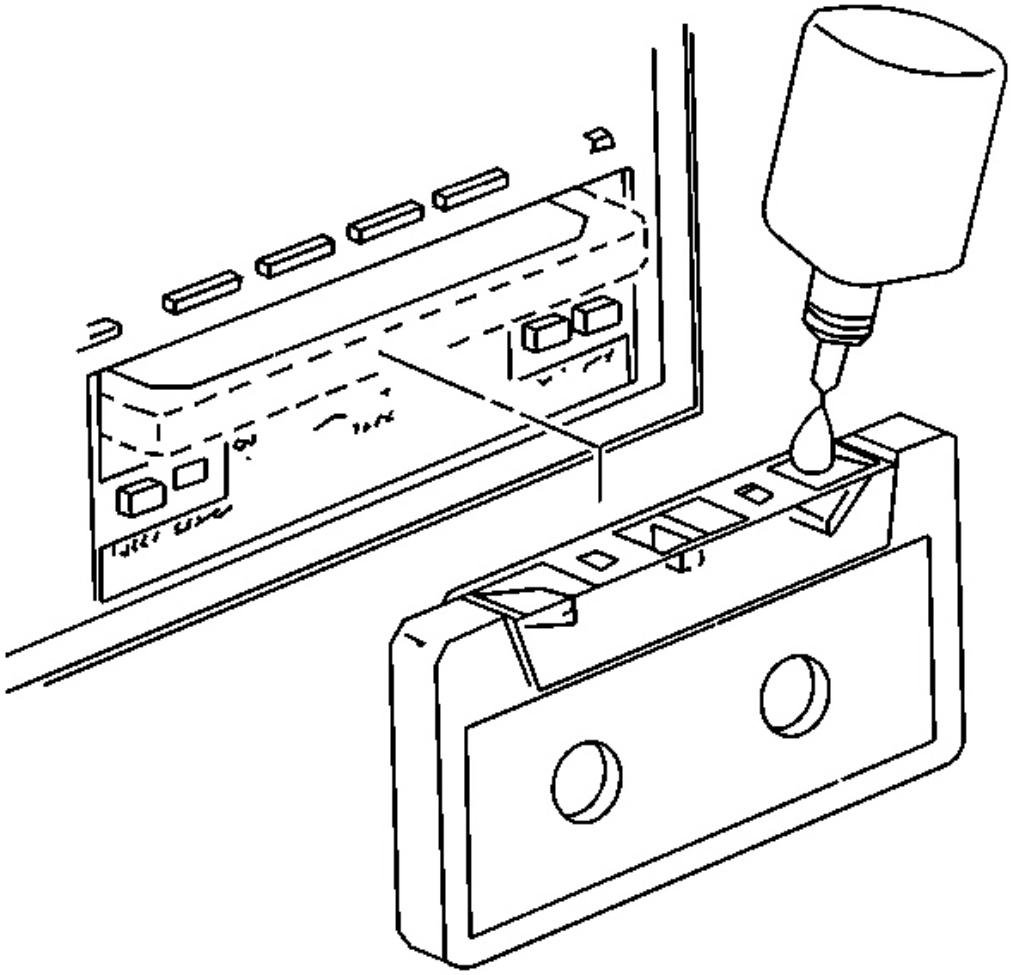

Fig. 22: Cleaning Cassette Tape Player
Courtesy of GENERAL MOTORS CORP.

IMPORTANT: DO NOT use lubricants in the cassette tape player. Lubricants will cause the tape player to operate improperly, especially at high temperatures. Clean the following at the above mentioned intervals to maintain optimum performance of the cassette deck:

- The internal tape head
- The capstan
- The pinch roller

This can be done by inserting a non -abrasive cleaning cassette in place of a conventional cassette tape. The preferred type is available as a part of J 39916 -A . Perform this service at the prescribed intervals as described above.

REMOTE CD CHANGER REPLACEMENT

Removal Procedure

1. Remove the front floor kick -up panel. Refer to **Kick -Up Panel Replacement - Front Floor** in Interior Trim.
2. Remove the cover from the I/P electrical center.
3. Remove the RDO/CD MiniFuse(R) #5 from the I/P electrical center.

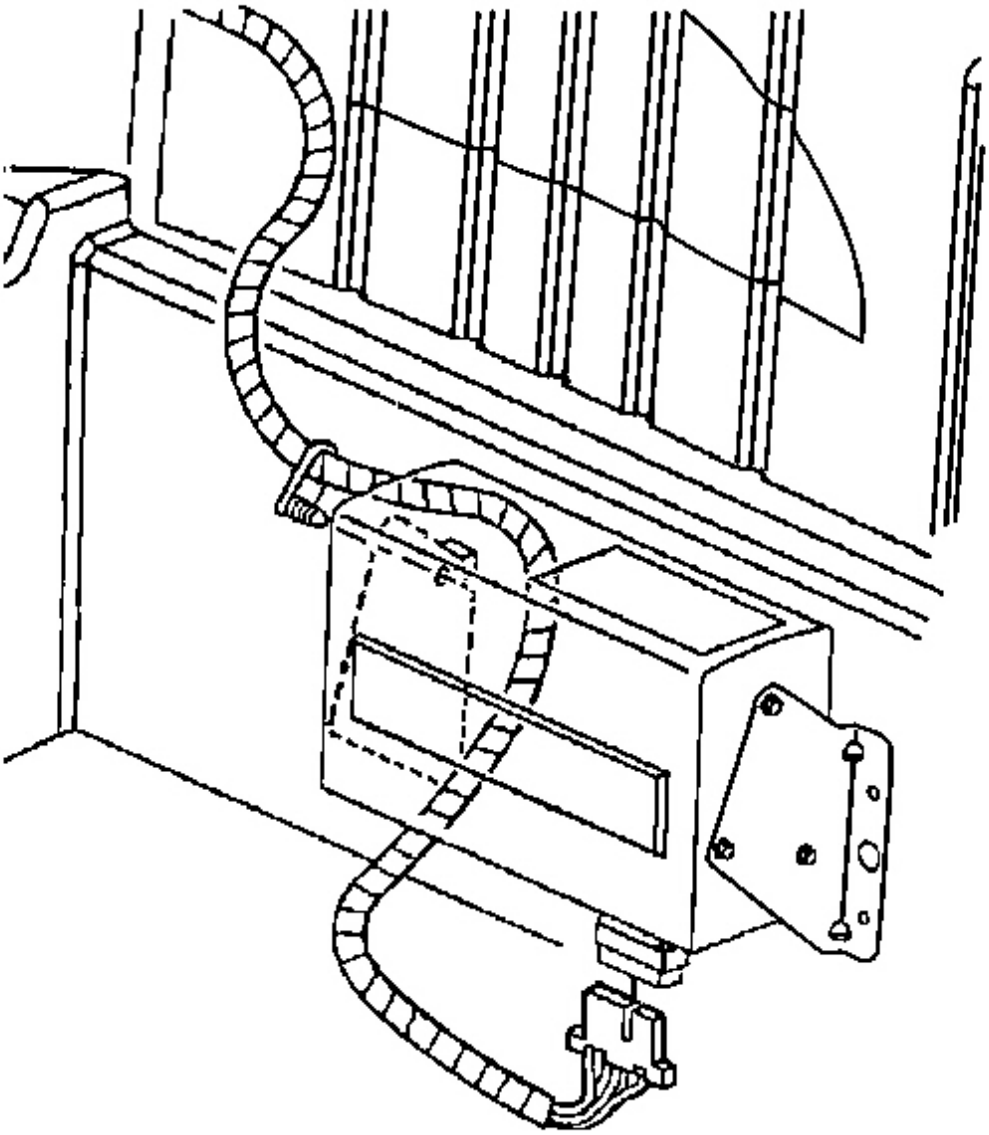

Fig. 23: Electrical/Audio Connector At Remote CD Changer
Courtesy of GENERAL MOTORS CORP.

4. Open the rear lift window panel.
5. Remove the center rear storage compartment cover.
6. Reposition the carpet in the center rear storage compartment to expose the base of the remote compact disc (CD) changer.

7. Disconnect the electrical/audio connector from the remote compact disc (CD) changer.

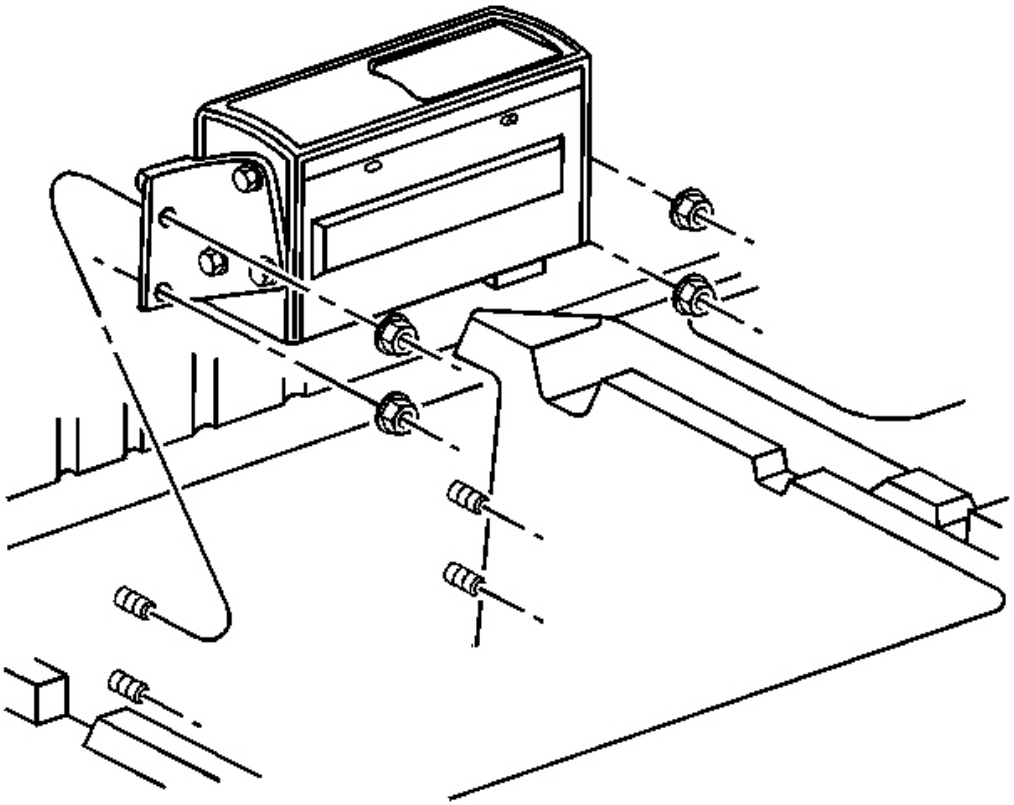

Fig. 24: Remote CD Changer & Mounting Nuts
Courtesy of GENERAL MOTORS CORP.

8. Remove the nuts mounting the remote CD changer to the center rear storage compartment rear wall.
9. Remove the remote CD changer from the vehicle.

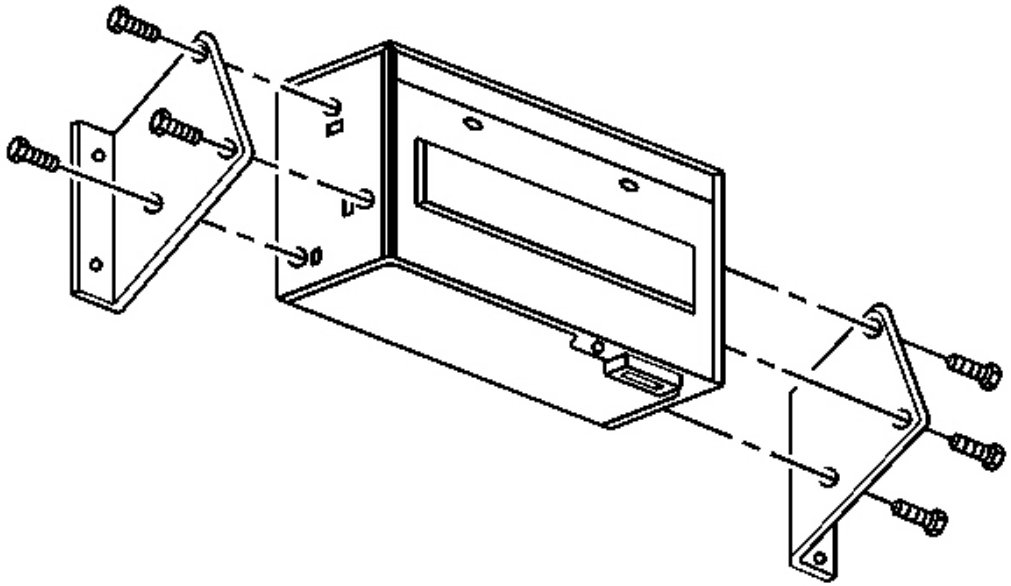

Fig. 25: CD Mounting Brackets & Bolts
Courtesy of GENERAL MOTORS CORP.

10. Remove the remote CD changer mounting bracket bolts.
11. Remove the mounting brackets from the remote CD changer.

IMPORTANT: Reinstall the transportation pin when shipping or transporting the remote CD changer.

12. If shipping or transporting the remote CD changer, reinstall the transportation pin by inserting into the original position and fixing in place with clear tape.

Installation Procedure

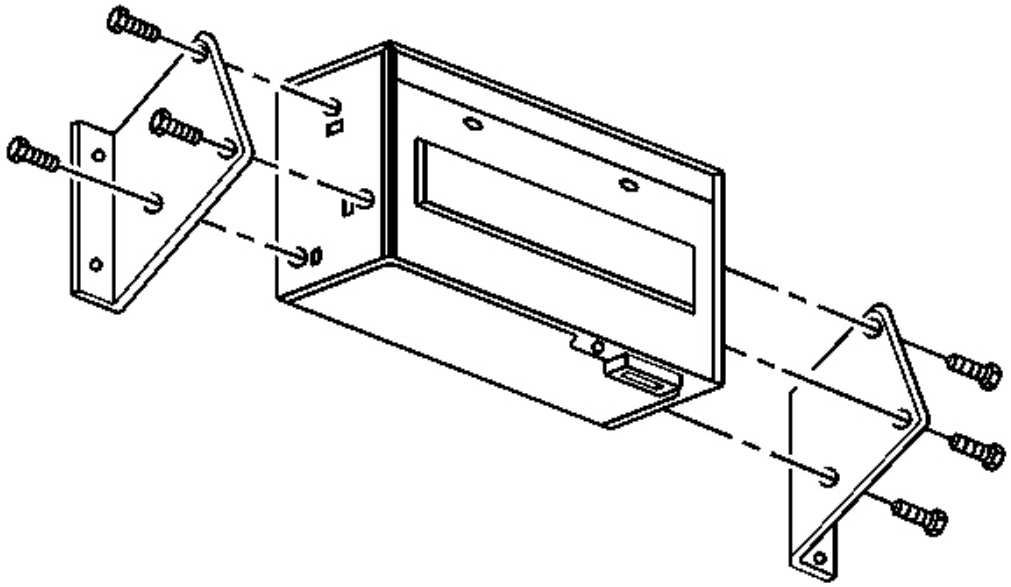

Fig. 26: CD Mounting Brackets & Bolts
Courtesy of GENERAL MOTORS CORP.

1. Remove the transportation pin from the remote CD changer, if installed prior.
2. Install the mounting brackets to the remote CD changer.

NOTE: Refer to Fastener Notice in Cautions and Notices.

3. Install the remote CD changer mounting bracket bolts.

Tighten: Tighten the remote CD changer mounting bracket bolts to 1.9 N.m (17 lb in).

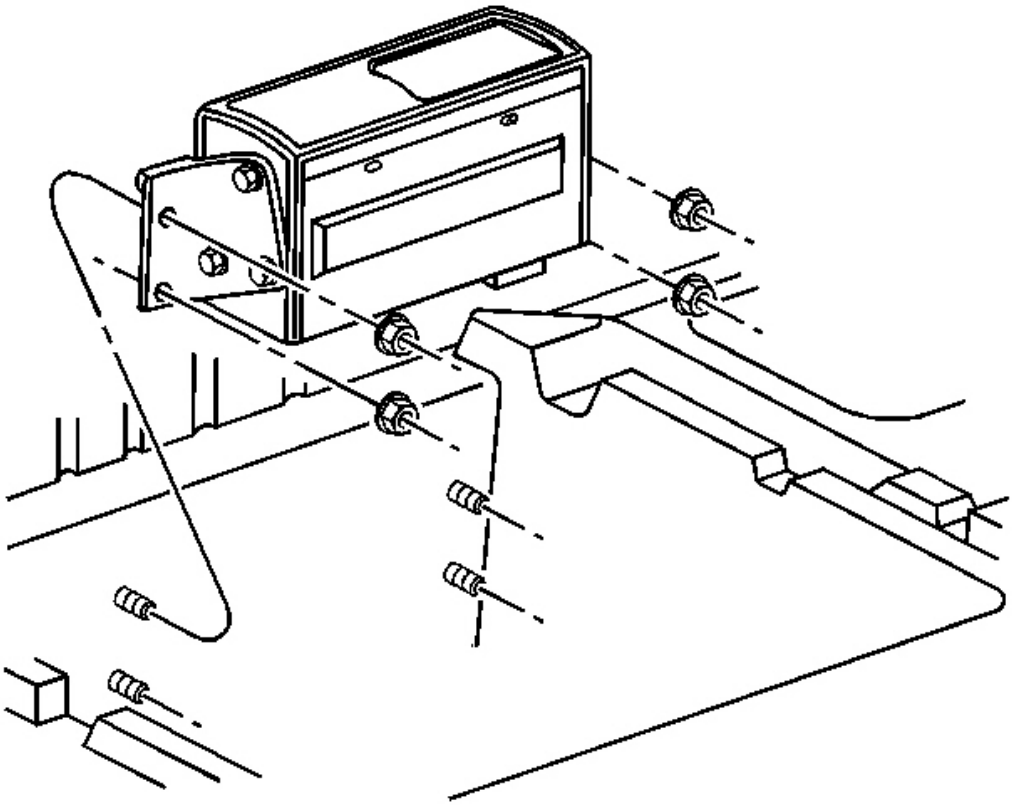

Fig. 27: Remote CD Changer & Mounting Nuts
Courtesy of GENERAL MOTORS CORP.

4. Position the remote CD changer to the studs on the center rear storage compartment rear wall.
5. Install the nuts mounting the remote CD changer to the rear compartment wall.

Tighten: Tighten the remote CD changer mounting nuts to 12 N.m (106 lb in).

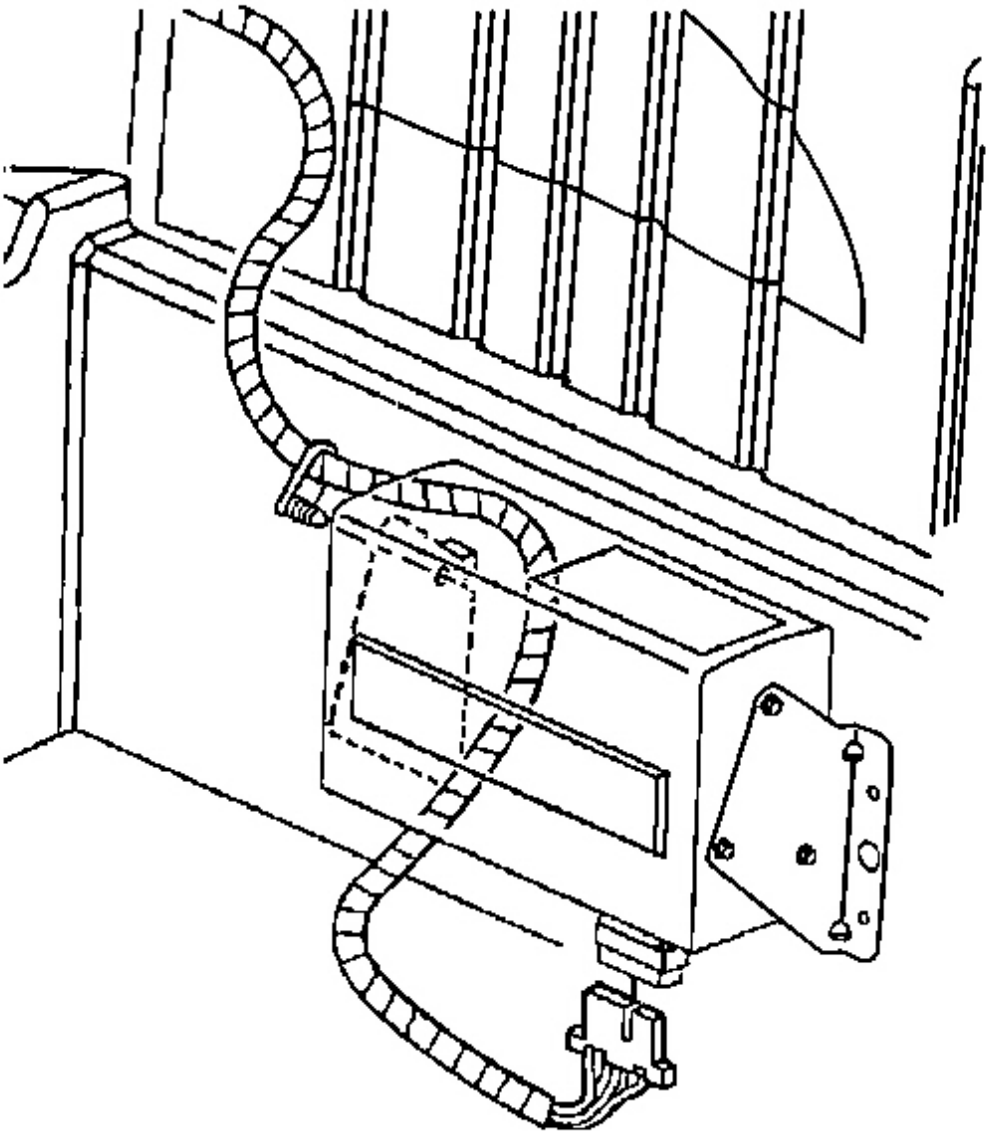

Fig. 28: Electrical/Audio Connector At Remote CD Changer
Courtesy of GENERAL MOTORS CORP.

6. Connect the electrical/audio connector to the remote CD changer.
7. Position the carpet in the center rear storage compartment to cover the base of the remote compact disc (CD) changer.
8. Install the center rear storage compartment cover.

9. Close the rear lift window panel.
10. Install the RDO/CD MiniFuse(R) #5 to the I/P electrical center.
11. Install the cover to the I/P electrical center.
12. Install the front floor kick -up panel. Refer to **Kick -Up Panel Replacement - Front Floor** in Interior Trim.

ANTENNA MODULE REPLACEMENT

Removal Procedure

1. Remove the door sill plate. Refer to **Door Sill Plate Replacement** in Interior Trim.
2. Remove the lock pillar trim panel. Refer to **Trim Replacement - Lock Pillar (Upper Convertible)** or **Trim Replacement - Lock Pillar (Coupe)** or **Trim Replacement - Lock Pillar (Lower Convertible and Hard Top)** in Interior Trim.
3. Disconnect the electrical/audio connector (3) from the antenna module (6).

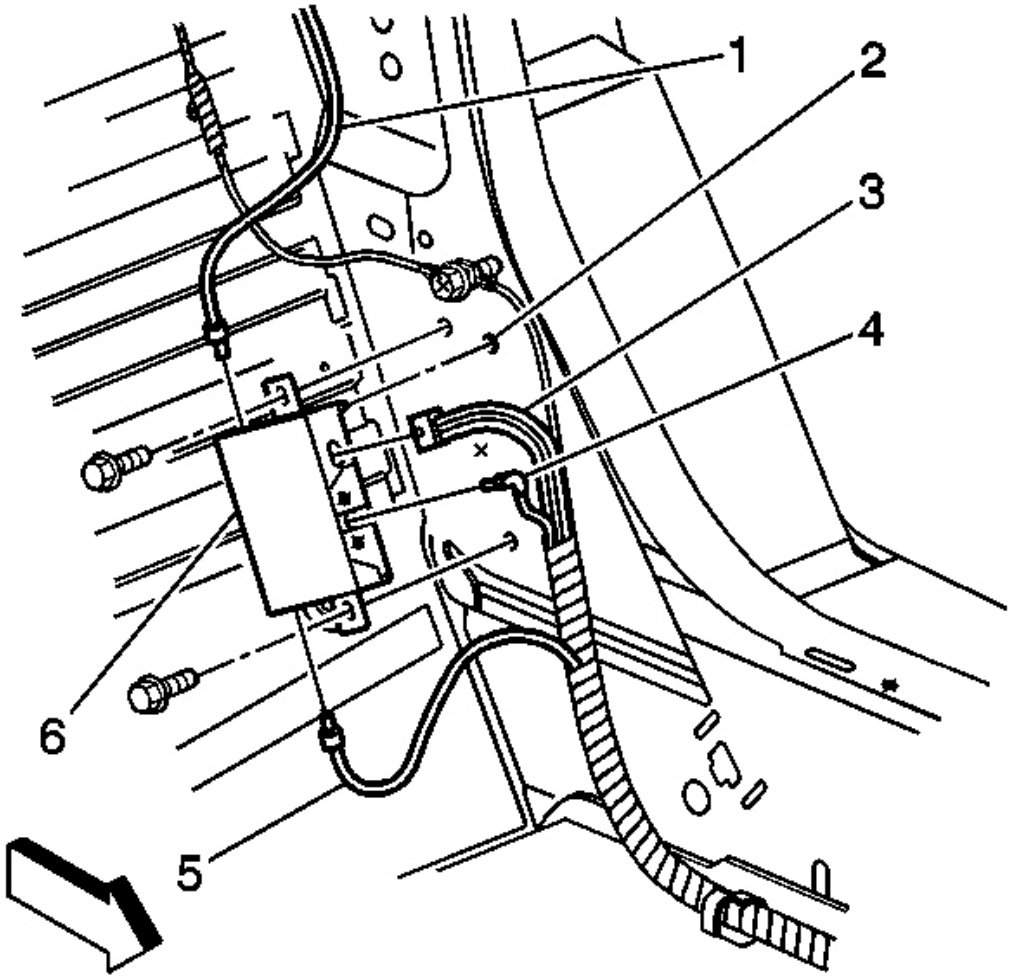

Fig. 29: Antenna Module Components
Courtesy of GENERAL MOTORS CORP.

4. Disconnect the following three coaxial cables from the antenna module (6).
    - Rear lift window antenna extension (1)
    - Radio control (4)
    - Front windshield antenna (5)
5. Remove the screws retaining the antenna module (6) to the lock pillar.
6. Remove the antenna module (6).

Installation Procedure

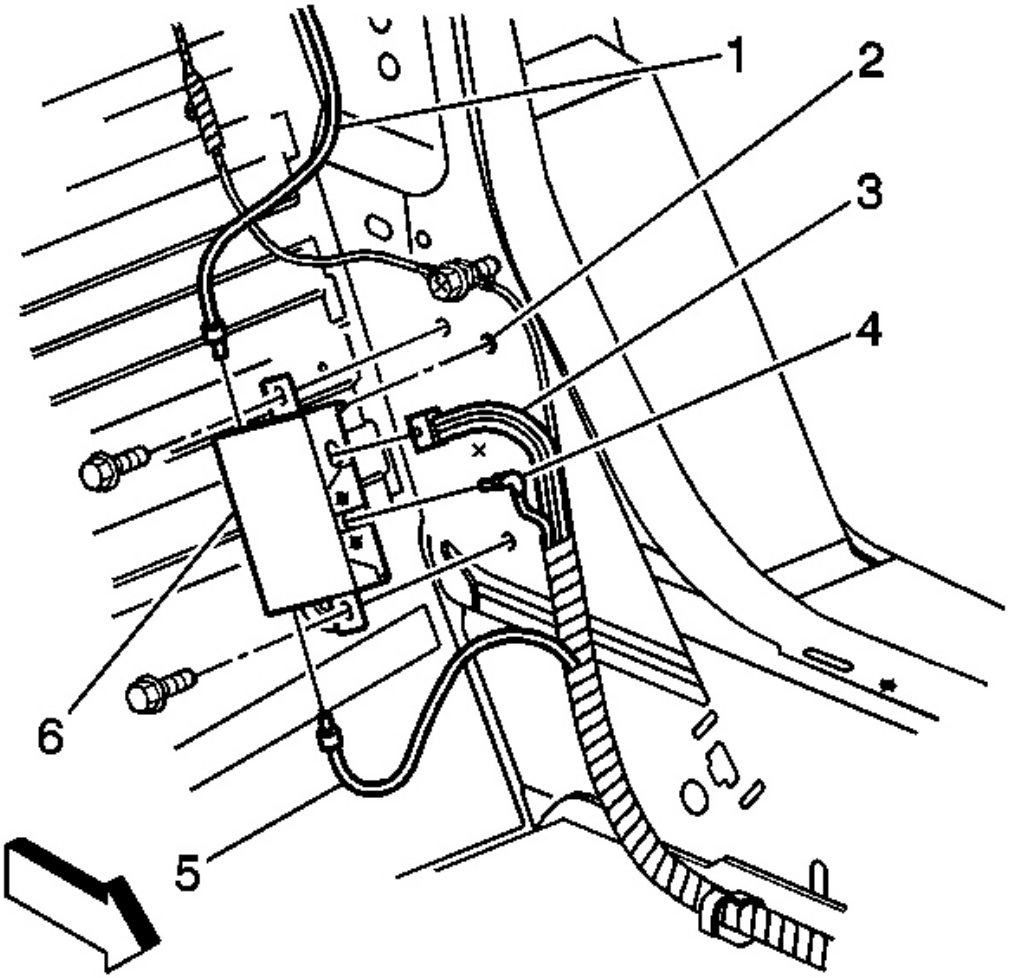

Fig. 30: Antenna Module Components
Courtesy of GENERAL MOTORS CORP.

1. Install the antenna module (6) into position on the lock pillar.

   Align the module locator tab to the lock pillar locating hole (2).

   NOTE: Refer to Fastener Notice in Cautions and Notices.

2. Install the antenna module (6) retaining screws.

   Tighten: Tighten the antenna module retaining screws to 1.8 N.m (16 lb in).

3. Connect the following three coaxial cables to the antenna module (6).
    - Rear lift window antenna extension (1)
    - Radio control (4)
    - Front windshield antenna (5)
4. Connect the electrical/audio connector (3) to the antenna module (6).
5. Install the lock pillar trim panel. Refer to **Trim Replacement - Lock Pillar (Upper Convertible)** or **Trim Replacement - Lock Pillar (Coupe)** or **Trim Replacement - Lock Pillar (Lower Convertible and Hard Top)** in Interior Trim.
6. Install the door sill plate. Refer to **Door Sill Plate Replacement** in Interior Trim.

ANTENNA BUFFER REPLACEMENT

Removal Procedure

1. Remove the roof bow interior trim panel. Refer to **Trim Panel Replacement - Rear Roof Bow** in Interior Trim.
2. Disconnect the rear lift window antenna cable connector and the rear lift window antenna extension cable from the antenna buffer.

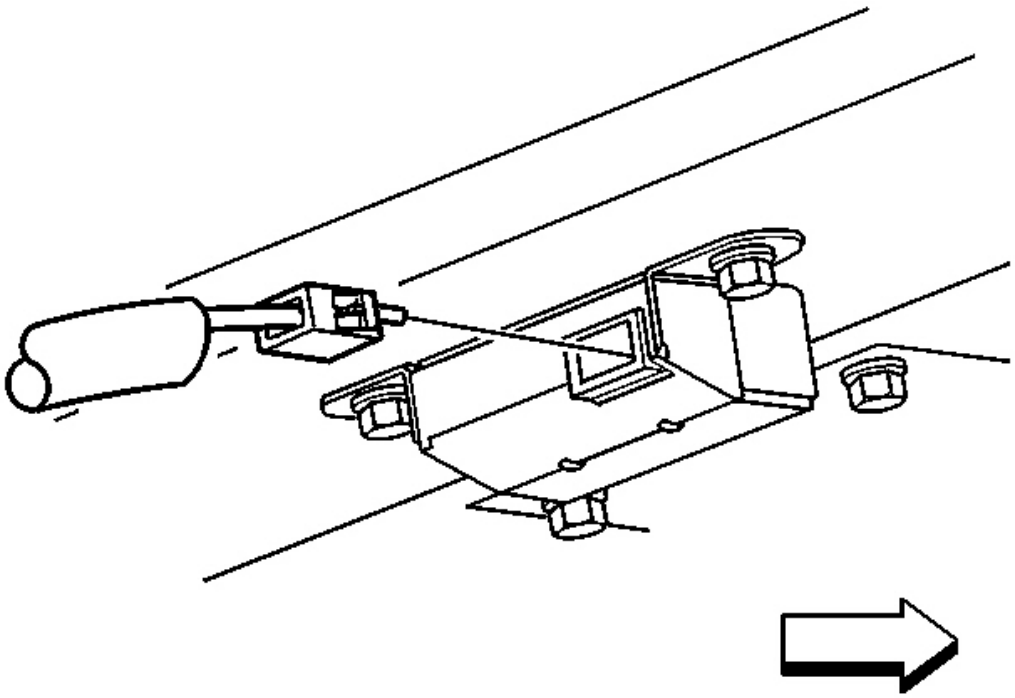

Fig. 31: Rear Lift Window Antenna Cable Connector & Extension Cable At Antenna Buffer
Courtesy of GENERAL MOTORS CORP.

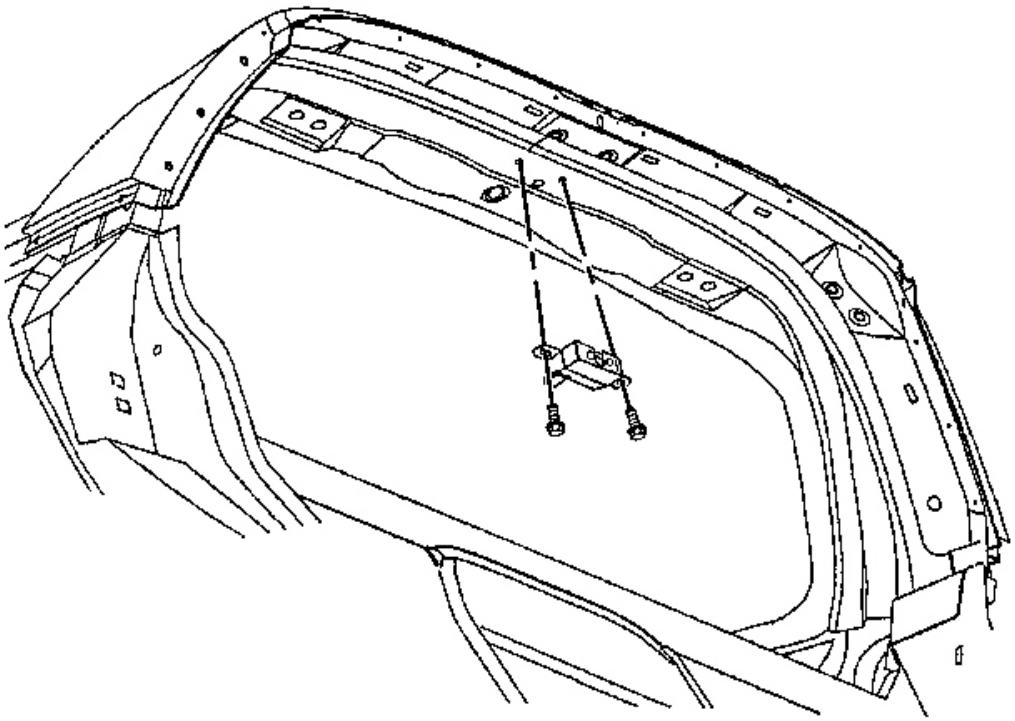

Fig. 32: Antenna Buffer To Roof Bow Retaining Screws
Courtesy of GENERAL MOTORS CORP.

3. Remove the screws retaining the antenna buffer to the roof bow.
4. Remove the antenna buffer.

Installation Procedure

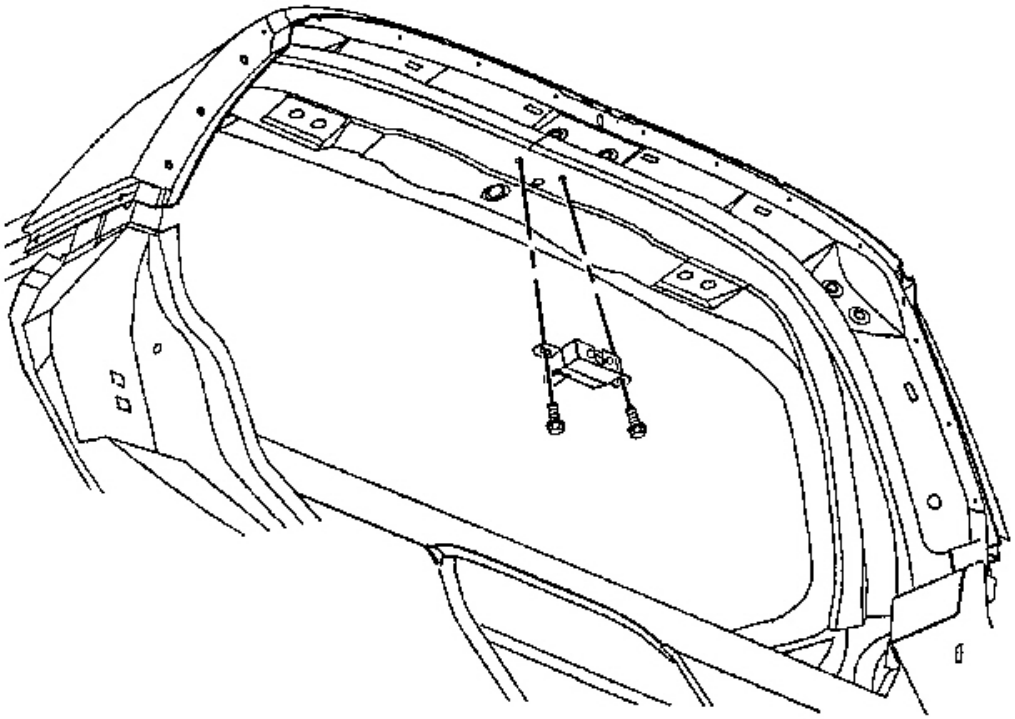

Fig. 33: Antenna Buffer To Roof Bow Retaining Screws
Courtesy of GENERAL MOTORS CORP.

1. Install the antenna buffer into position on the roof bow.

NOTE: **Refer to Fastener Notice in Cautions and Notices.**

2. Install the antenna buffer retaining screws.

Tighten: Tighten the antenna buffer retaining screws to 1.8 N.m (16 lb in).

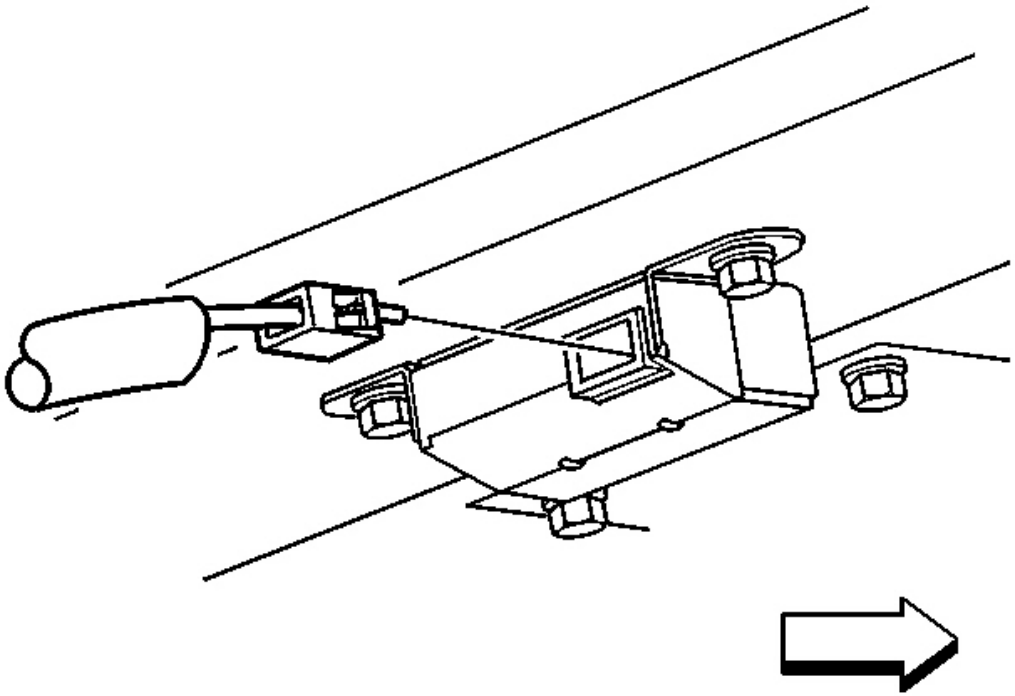

Fig. 34: Rear Lift Window Antenna Cable Connector & Extension Cable At Antenna Buffer
Courtesy of GENERAL MOTORS CORP.

3. Connect the rear lift window antenna cable connector and the rear lift window antenna extension cable to the antenna buffer.
4. Install the roof bow interior trim panel; use care to not damage the rear antenna cable. Refer to **Trim Panel Replacement - Rear Roof Bow** in Interior Trim.

FIXED ANTENNA MAST REPLACEMENT

Removal Procedure

IMPORTANT: Be sure to use tape on the contacting surfaces of the tool used in order to protect the paint on the antenna mast.

1. Install tape onto the contacting surfaces of the tool to be used in loosening the radio fixed antenna mast.
2. Using the taped tool, loosen the fixed antenna mast.

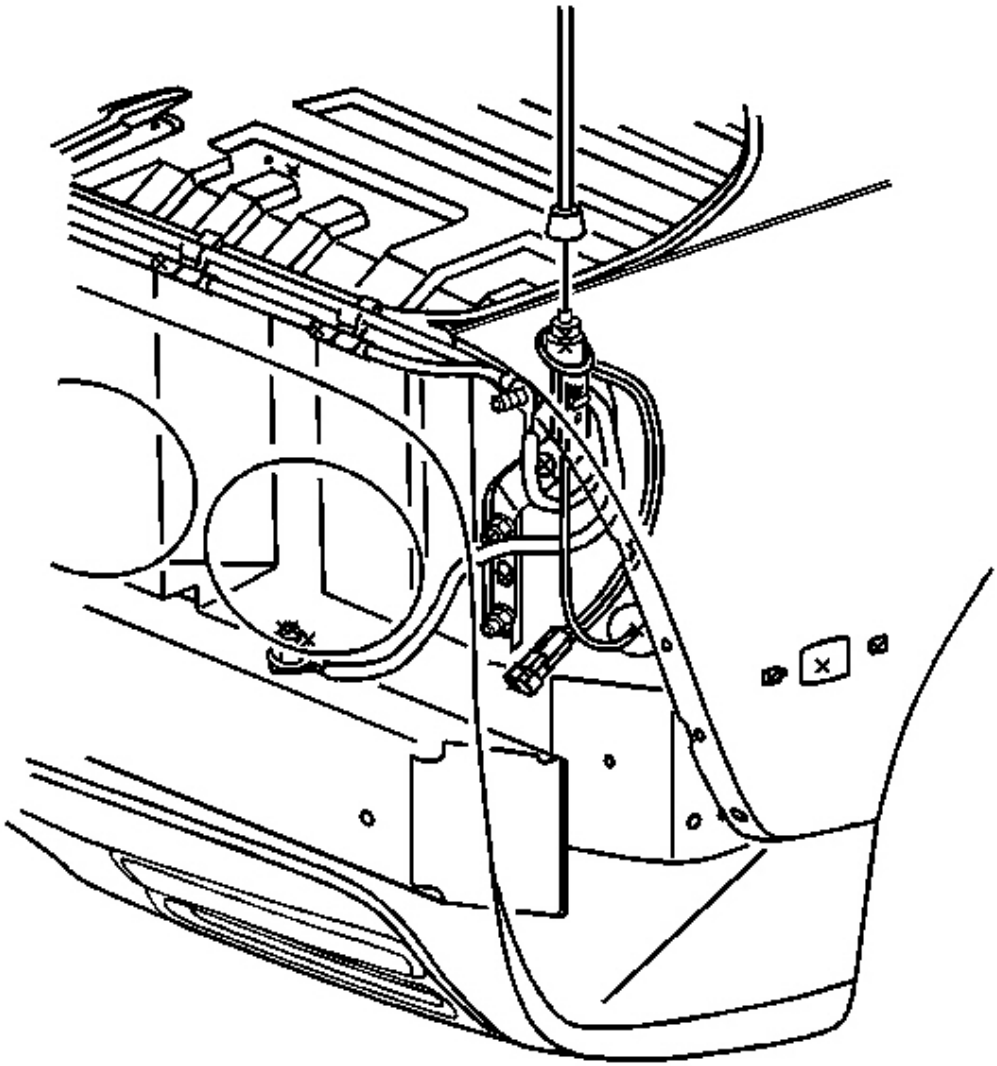

Fig. 35: Radio Fixed Antenna Mast At Radio Fixed Antenna
Courtesy of GENERAL MOTORS CORP.

3. Remove the radio fixed antenna mast from the radio fixed antenna.

Installation Procedure

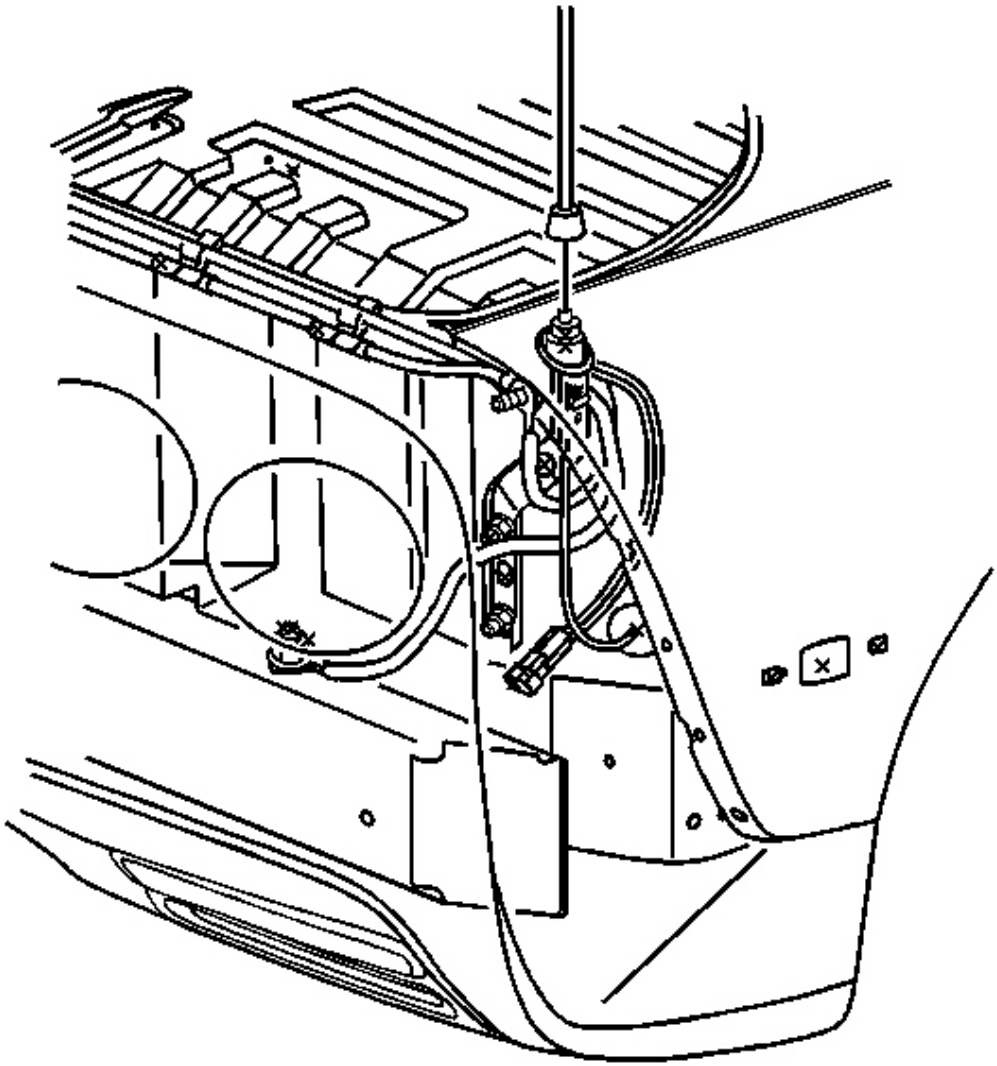

Fig. 36: Radio Fixed Antenna Mast At Radio Fixed Antenna
Courtesy of GENERAL MOTORS CORP.

1. Install the radio fixed antenna mast to the radio fixed antenna.

NOTE: Refer to Fastener Notice in Cautions and Notices.

2. Using the tool taped previously, tighten the antenna mast.

Tighten: Tighten the radio fixed antenna mast to 5 N.m (44 lb in).

FIXED ANTENNA REPLACEMENT

Removal Procedure

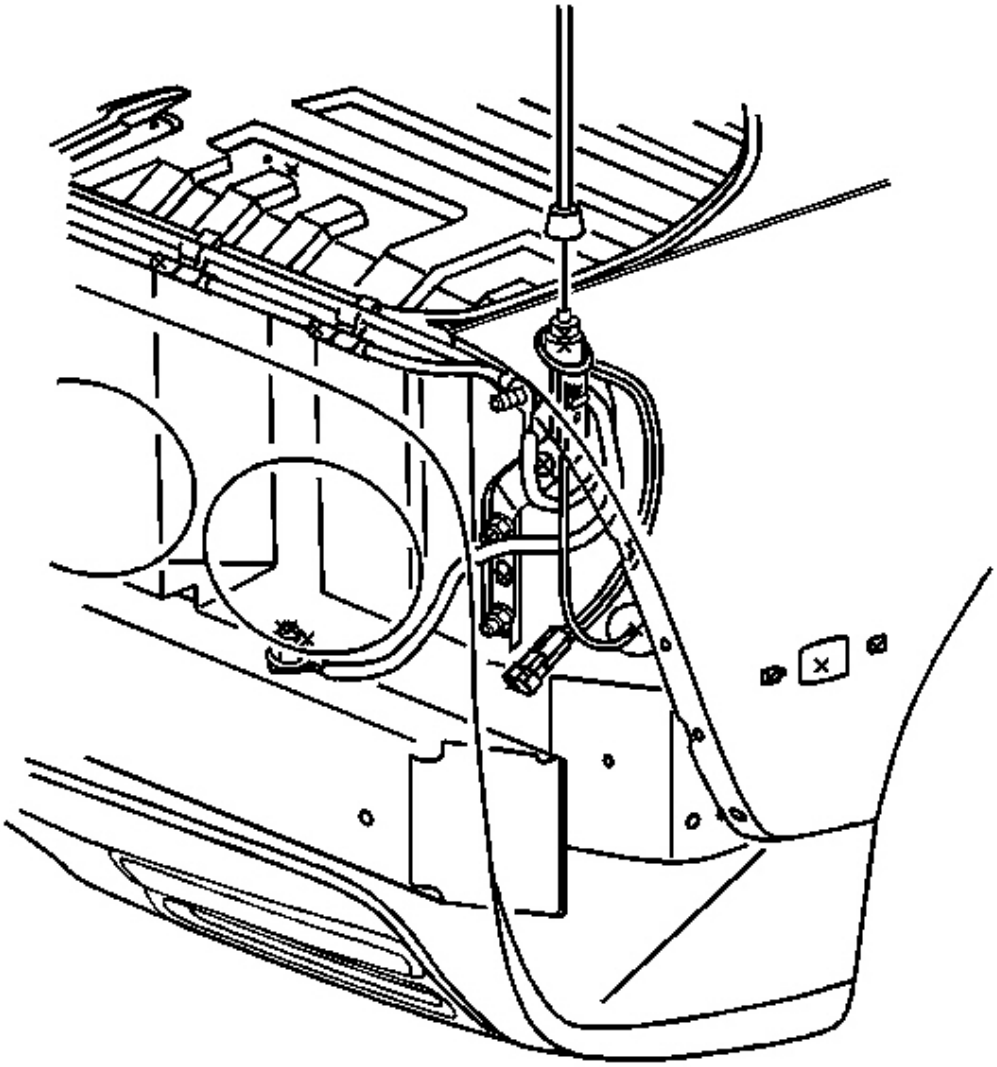

Fig. 37: Radio Fixed Antenna Mast At Radio Fixed Antenna
Courtesy of GENERAL MOTORS CORP.

NOTE: **Use tape on the tool surface so that you do not damage the paint on the antenna mast.**

1. Loosen the fixed antenna mast.
2. Remove the radio fixed antenna mast from the radio fixed antenna.

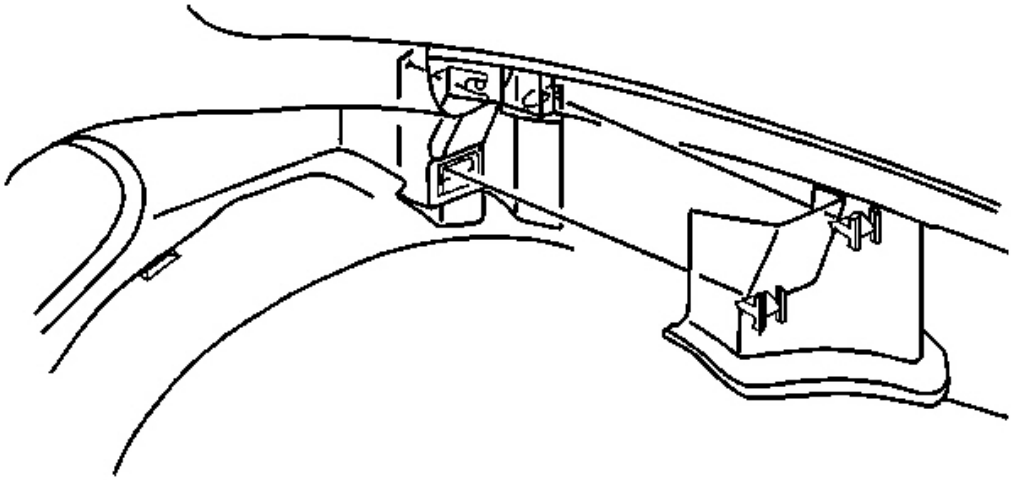

Fig. 38: Right Deck Lid Support Trim Panel
Courtesy of GENERAL MOTORS CORP.

3. Open the rear compartment lid.
4. Remove the right deck lid support trim panel.

   Pull to release the retaining clips.

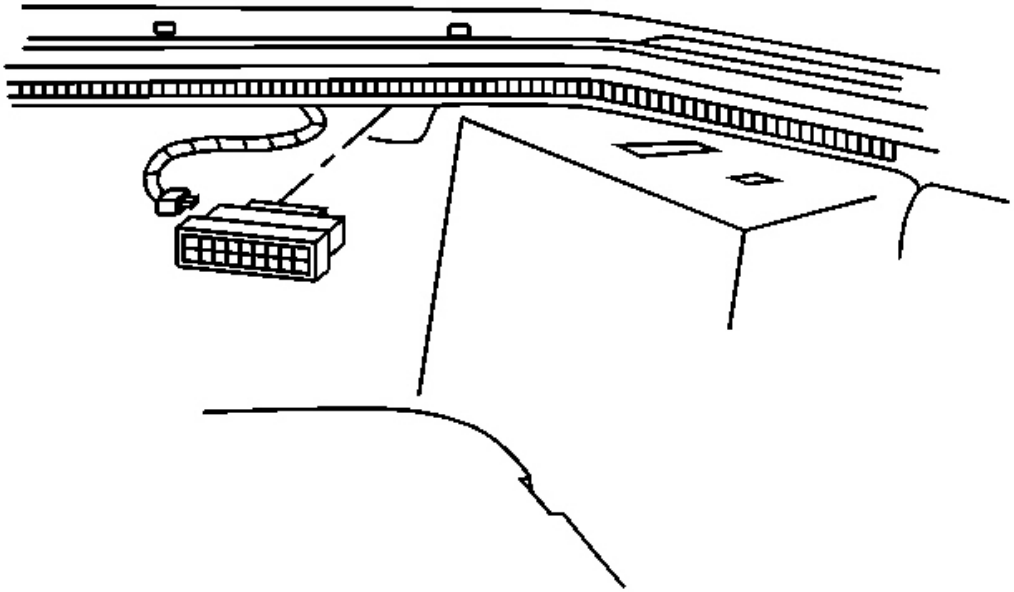

Fig. 39: Sliding The Cargo Lamps Up Out Of The Corners Of The Carpet
Courtesy of GENERAL MOTORS CORP.

5. Pull back the edge of the rear compartment floor carpet from behind the right deck lid support, then reposition the right side of the carpet.
6. Remove the convenience net right plastic retaining nuts, if equipped.
7. Pull back the right edge of the rear carpet trim panel.
8. Disconnect the electrical connector from the cargo lamp assembly.
9. Remove the cargo lamp assembly.
10. Reposition the right edge of the rear carpet trim panel.

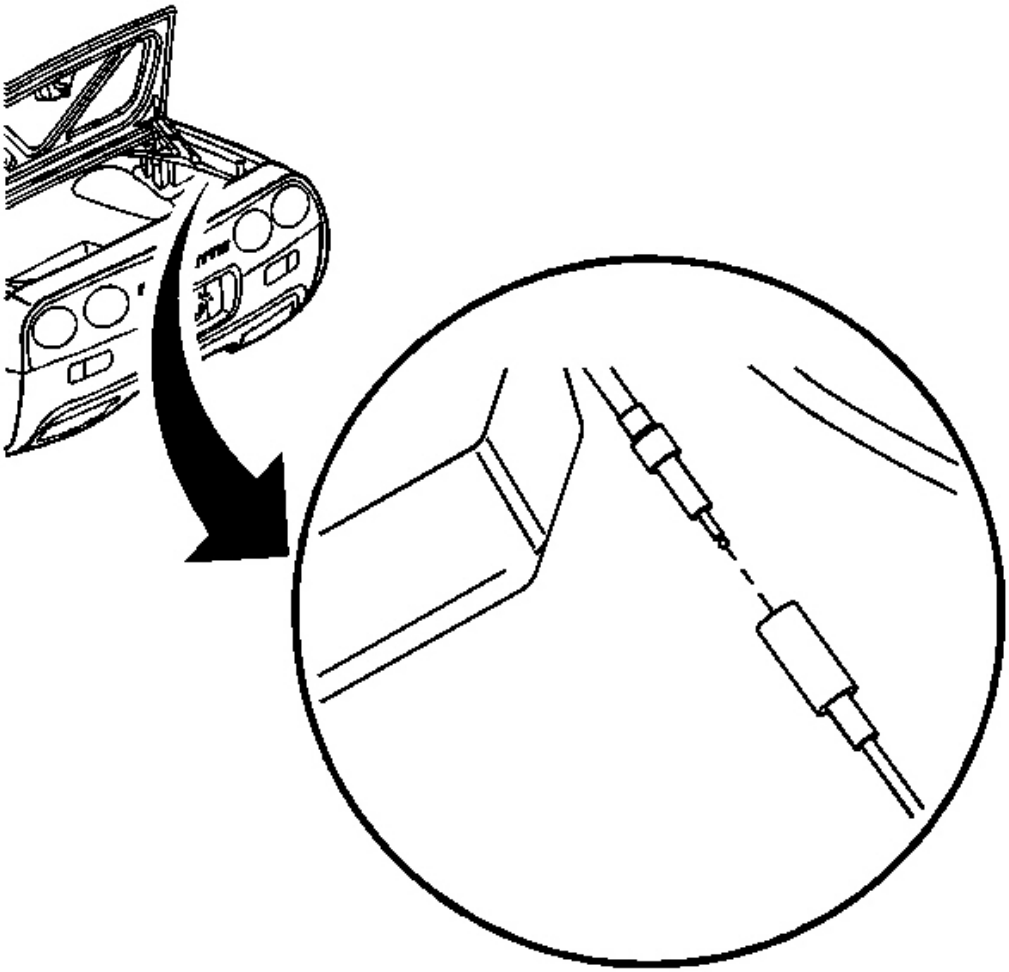

Fig. 40: Antenna Coaxial Cable At Fixed Antenna Coaxial Extension Cable
Courtesy of GENERAL MOTORS CORP.

11. Release the antenna coaxial cable from the retaining clip on the rear of the wheelhouse.
12. Disconnect the fixed antenna coaxial cable from the fixed antenna coaxial extension cable.

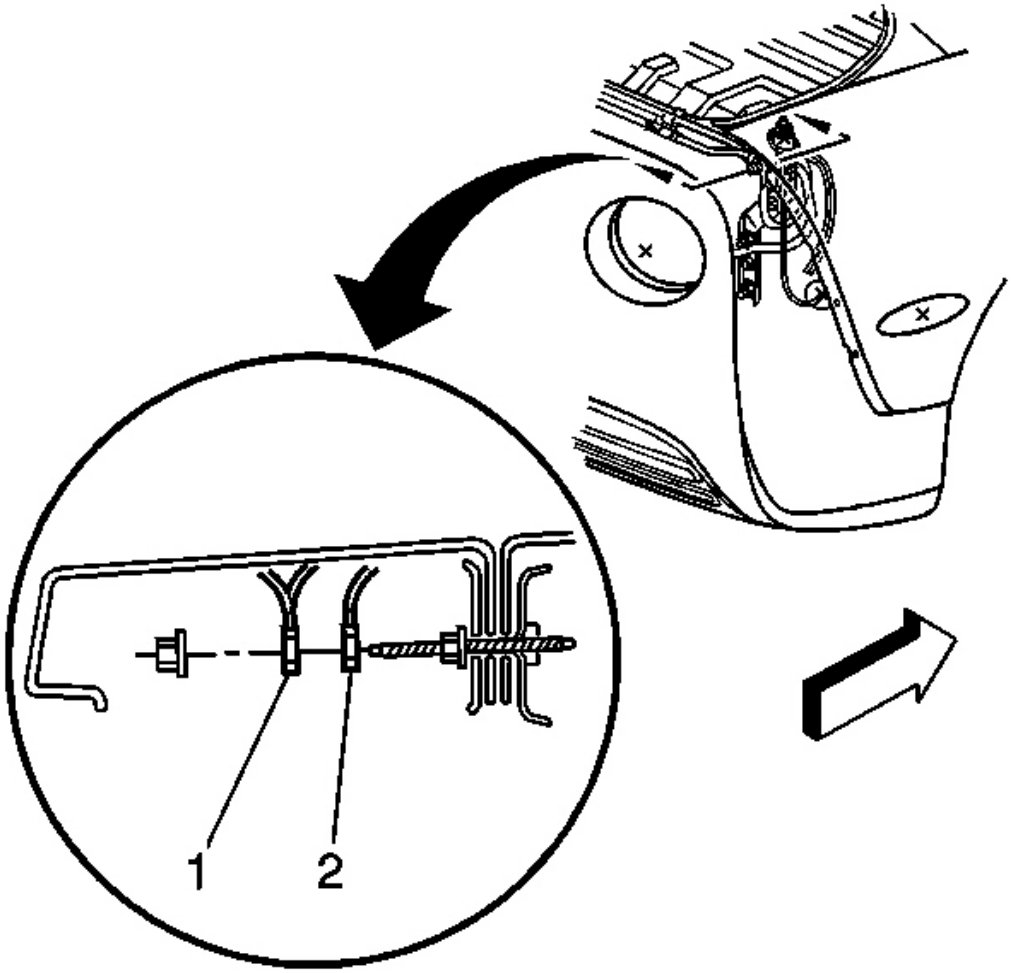

Fig. 41: Antenna Ground Connector At Rear Body Wiring Harness
Courtesy of GENERAL MOTORS CORP.

13. Remove the screws retaining both of the right tail lamps.
14. Remove both of the right tail lamps.
15. Disconnect the antenna ground connector from the rear body wiring harness.

IMPORTANT: Use care not to twist and damage the ground straps when removing the retaining nut.

16. Remove the nut retaining the antenna dual cable strap (1) and antenna short braided ground strap (2) to the rear fascia retaining stud, then reposition the straps.

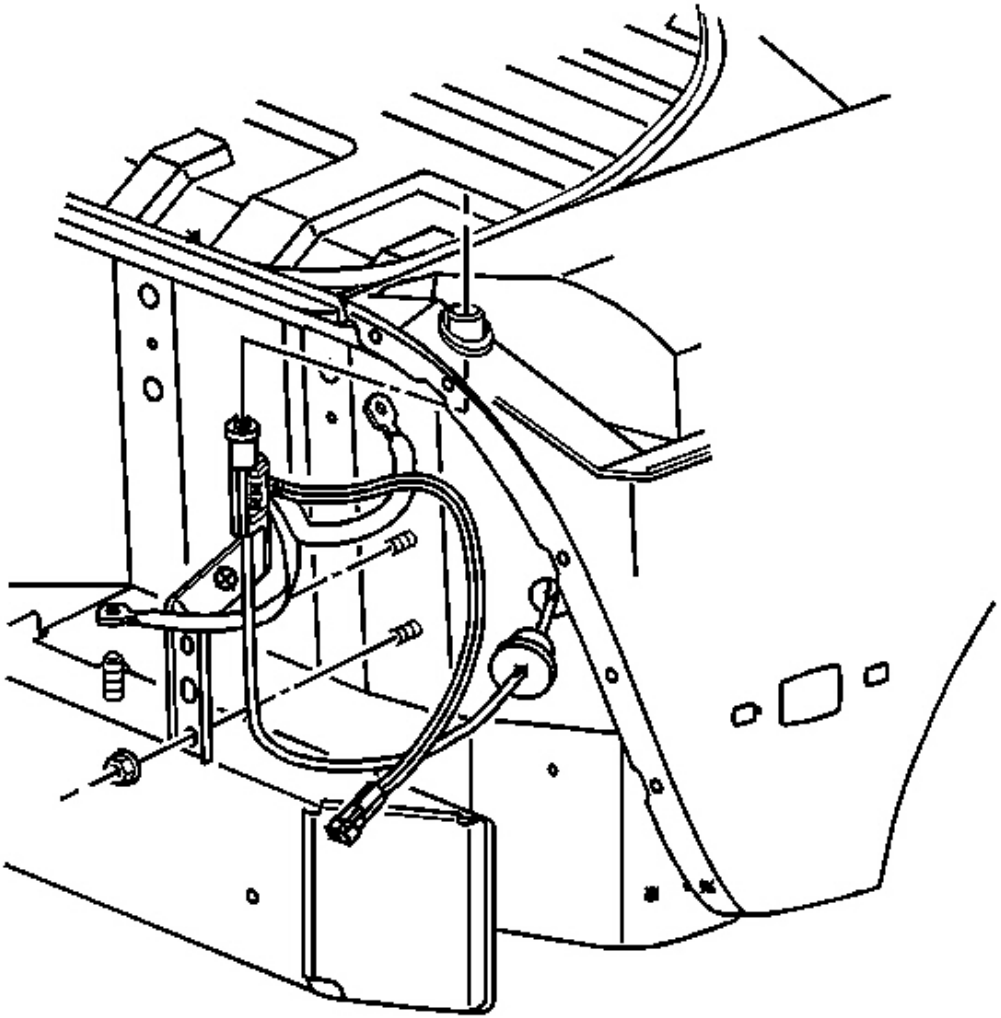

Fig. 42: Antenna Coaxial Cable Grommet At Rear Compartment Panel
Courtesy of GENERAL MOTORS CORP.

17. Remove the nut retaining the antenna long braided ground strap to the rear bumper impact bar stud, then reposition the strap.
18. Remove the antenna retaining nuts.
19. Release the antenna from the mounting studs.
20. Reposition the antenna body toward the RR tire.
21. Using a slight twisting motion, pull down to release the antenna from the antenna bezel.
22. Release the antenna coaxial cable grommet from the rear compartment panel, toward the outside of the

vehicle.

1. Starting from the outer lip of the grommet, on the outside of the vehicle, begin to unseat the bottom right area of the grommet.
2. Using a flat bladed screwdriver or other suitable tool as an aid if necessary, work around the base of the tapered lip of the grommet on the inside of the vehicle, while simultaneously finessing the outer lip of the grommet on the outside of the vehicle, in order to release the grommet completely from the rear compartment panel.

23. Remove the antenna coaxial cable and grommet from the opening in the rear compartment panel toward the outside of the vehicle.

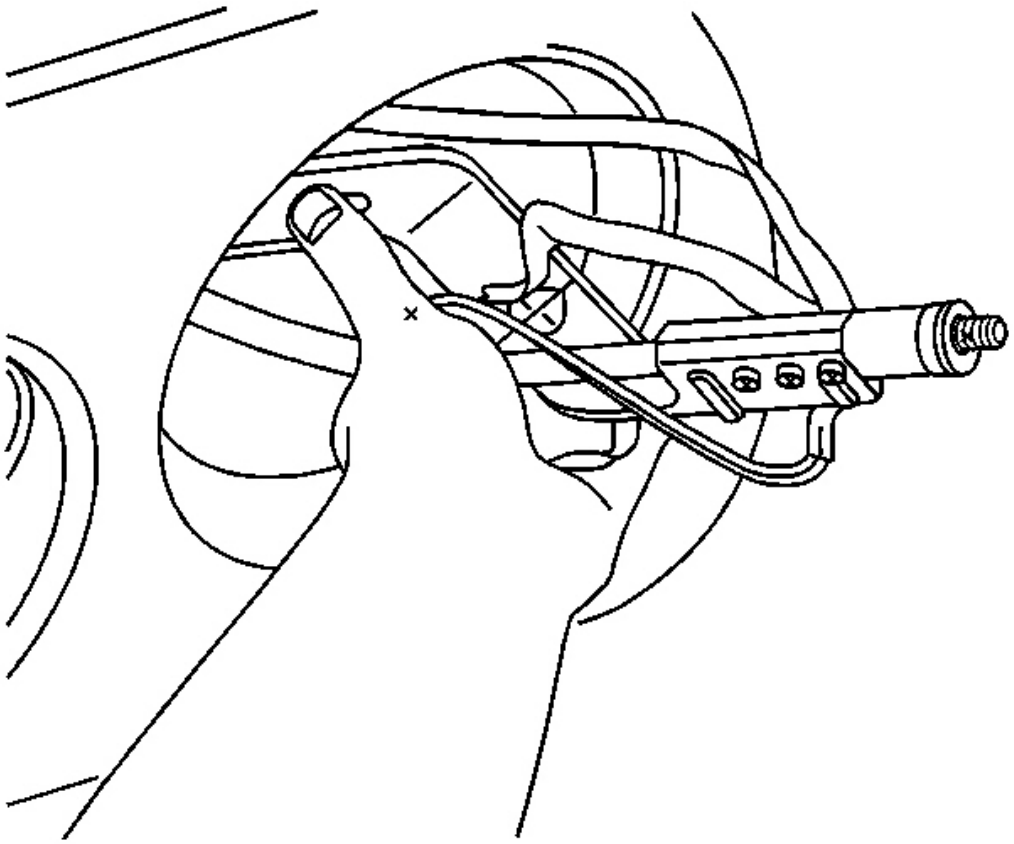

Fig. 43: Antenna Bezel Upward At Quarter Panel
Courtesy of GENERAL MOTORS CORP.

24. Carefully remove the fixed antenna from the vehicle through one of the tail lamp openings.
25. Remove the antenna bezel upward through the quarter panel, if necessary.

Installation Procedure

1. Install the antenna bezel to the quarter panel, if removed.

   Align the locating tab on the antenna bezel to the notch in the quarter panel, then insert the bezel and push to secure.

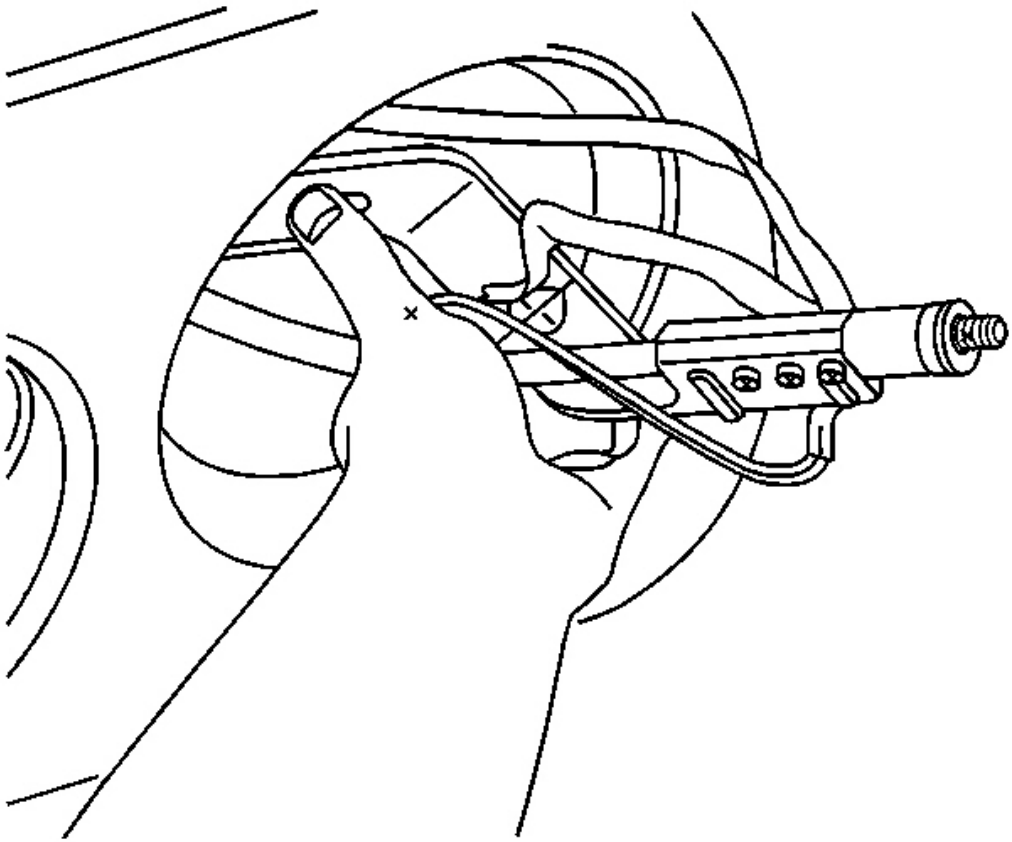

Fig. 44: Antenna Bezel Upward At Quarter Panel
Courtesy of GENERAL MOTORS CORP.

2. Carefully install the fixed antenna to the vehicle through one of the tail lamp openings.

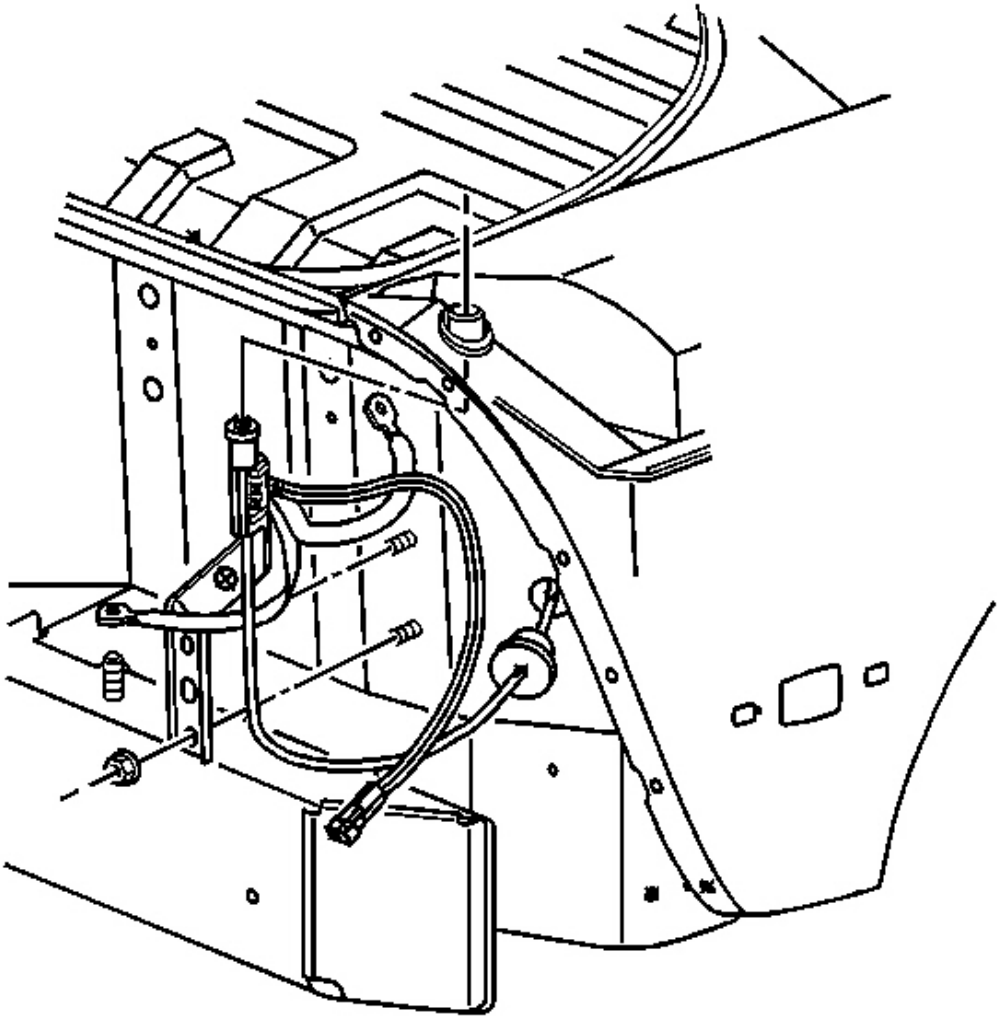

Fig. 45: Antenna Coaxial Cable Grommet At Rear Compartment Panel
Courtesy of GENERAL MOTORS CORP.

3. Apply sealer to the groove on the antenna coaxial cable grommet.
4. Apply a light coating of lubricant to the narrow end of the antenna coaxial cable grommet to aid in seating the grommet.
5. Install the antenna coaxial cable and grommet through the opening in the rear compartment panel toward the inside of the vehicle.
6. Fully seat the antenna coaxial cable grommet to the rear compartment panel.
7. Position the antenna upright, toward the RR tire and align the top of the antenna with the opening in the

antenna bezel.

8. Install the antenna to the bezel.

   Insert the antenna up through the opening in the bezel, then check that the antenna and the bezel are seated properly.

9. Position the antenna and install the antenna onto the mounting studs.

   NOTE: Refer to Fastener Notice in Cautions and Notices.

   NOTE: Do NOT twist or damage the ground straps when you tighen the retaining nut.

10. Install the antenna retaining nuts.

    Tighten: Tighten the retaining nuts to 12 N.m (106 lb in).

11. Install the antenna long braided ground strap to the rear bumper impact bar stud.
12. Install the nut retaining the antenna long braided ground strap to the rear bumper impact bar stud.

    Tighten: Tighten the retaining nut to 5.8 N.m (51 lb in).

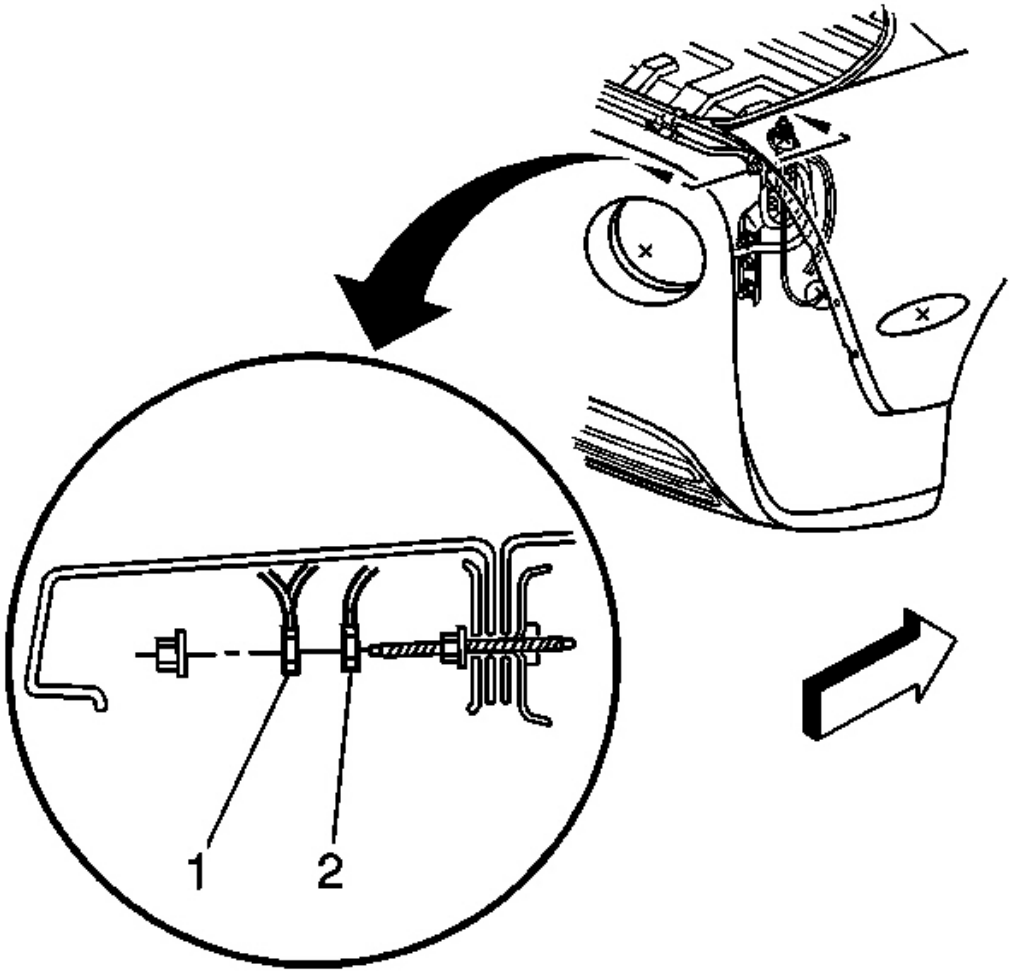

Fig. 46: Antenna Ground Connector At Rear Body Wiring Harness
Courtesy of GENERAL MOTORS CORP.

13. Install the antenna short braided ground strap (2), then the antenna dual cable strap (1), to the rear fascia retaining stud.
14. Install the nut retaining the straps to the rear fascia retaining stud.

    Tighten: Tighten the retaining nut to 5.8 N.m (51 lb in).

15. Connect the antenna ground connector to the rear body wiring harness.
16. Install both of the right tail lamps.
17. Install the screws retaining both of the right tail lamps.

Tighten: Tighten the tail lamp retaining screws to 2 N.m (18 lb in).

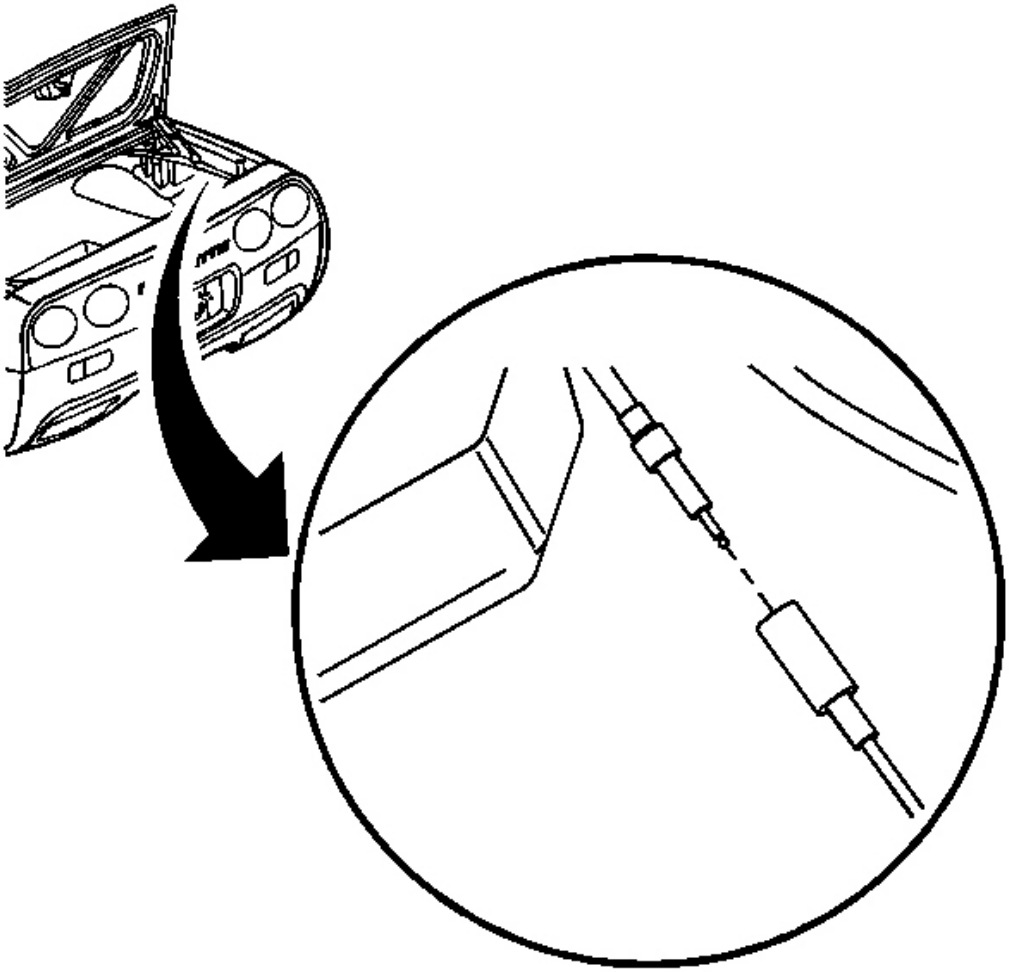

Fig. 47: Antenna Coaxial Cable At Fixed Antenna Coaxial Extension Cable
Courtesy of GENERAL MOTORS CORP.

18. Secure the antenna coaxial cable to the retaining clip on the rear of the wheelhouse.
19. Connect the antenna coaxial cable to the antenna coaxial extension cable.

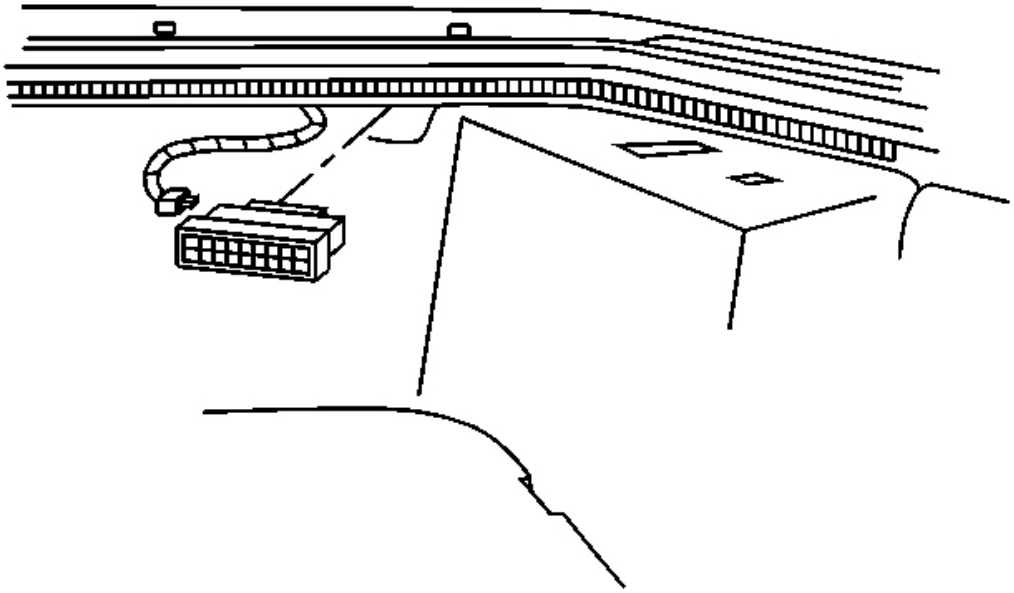

Fig. 48: Sliding The Cargo Lamps Up Out Of The Corners Of The Carpet
Courtesy of GENERAL MOTORS CORP.

20. Install the cargo lamp assembly to the rear carpet trim panel.
21. Connect the electrical connector to the cargo lamp assembly.
22. Install the right edge of the rear carpet trim panel into position.
23. Install the convenience net right plastic retaining nuts, if equipped.
24. Install the edge of the rear compartment floor carpet behind the right deck lid support.

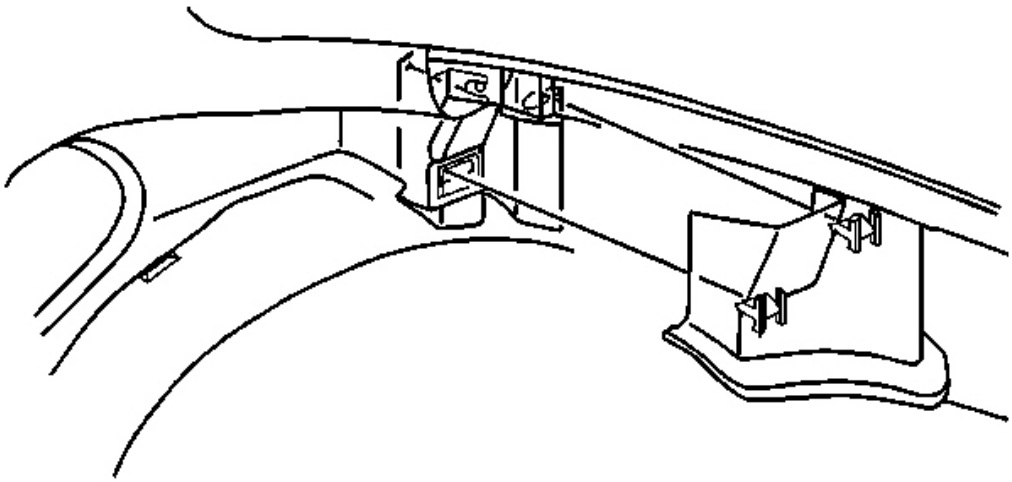

Fig. 49: Right Deck Lid Support Trim Panel
Courtesy of GENERAL MOTORS CORP.

25. Install the right deck lid support trim panel.

    Align the panel, then push to secure the retaining clips.

26. Close the rear compartment lid.

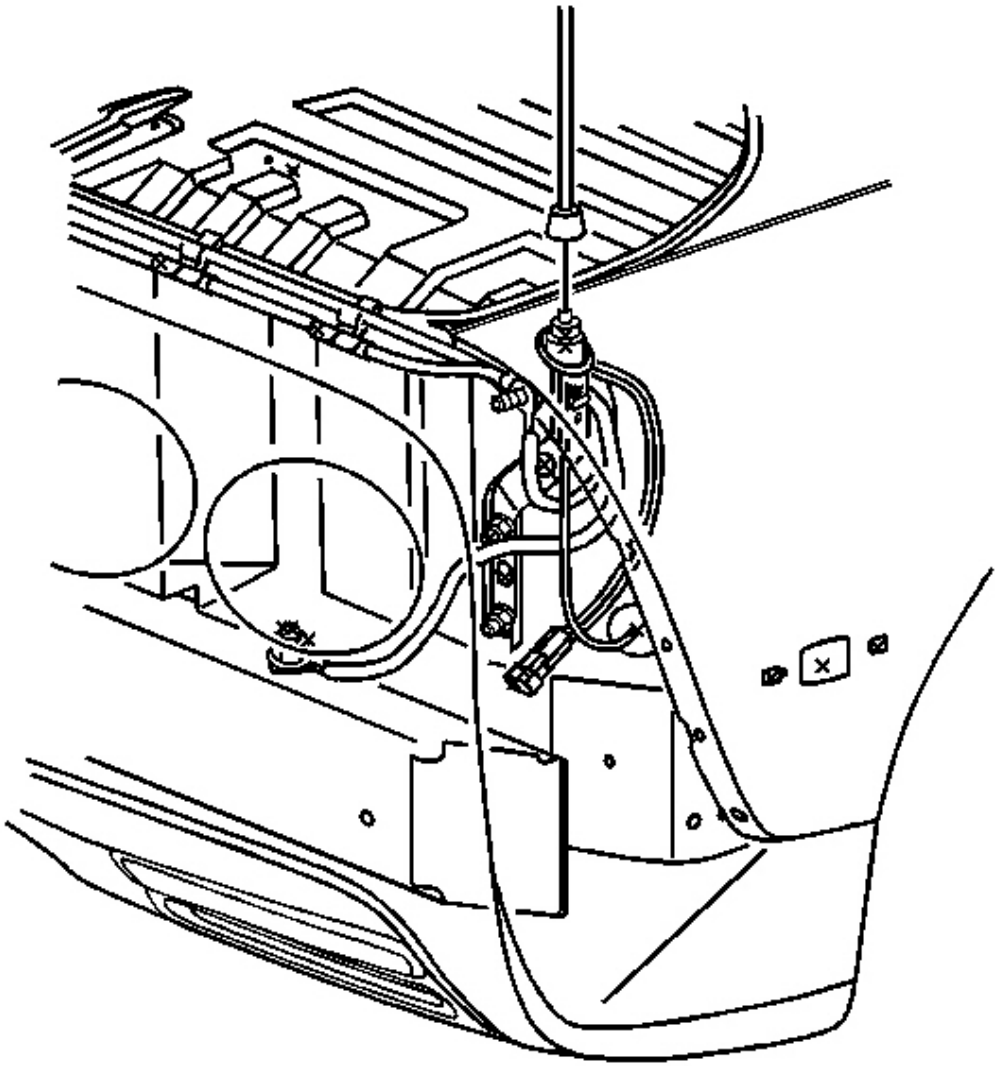

Fig. 50: Radio Fixed Antenna Mast At Radio Fixed Antenna
Courtesy of GENERAL MOTORS CORP.

27. Install the radio fixed antenna mast to the radio fixed antenna.
28. Using the tool taped previously, tighten the antenna mast.

Tighten: Tighten the antenna mast to 5 N.m (44 lb in).

ANTENNA MAST CLEANING

1. Turn the ignition to the ACC or ON position.
2. Turn the radio ON to raise the power antenna to full extension.

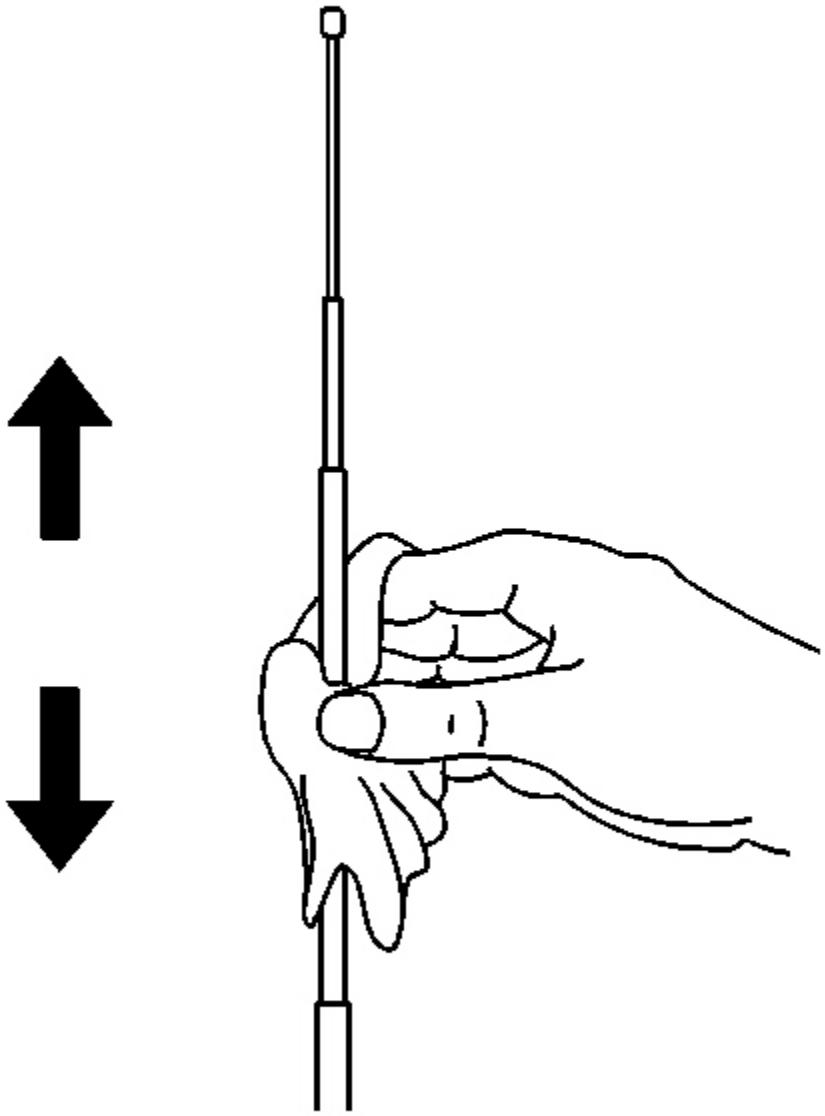

Fig. 51: Antenna Mast Cleaning
Courtesy of GENERAL MOTORS CORP.

3. Dampen a clean cloth with mineral spirits.

IMPORTANT: When wiping the antenna clean, pay particular attention to removing any dirt from the antenna section joints.

4. Wipe the cloth up and down over the antenna sections, in order to remove any dirt.
5. Using a clean, dry cloth, wipe off the antenna to remove any loosened dirt and or moisture.
6. Turn the radio OFF to fully lower the power antenna.
7. Repeat steps 2 through 6 until the antenna is clean.
8. Turn the ignition OFF.

POWER ANTENNA MAST REPLACEMENT

Removal Procedure

The power antenna is serviced as a complete unit only, however an antenna (mast) which has been bent or broken can be replaced, rather than replacing the complete power antenna.

1. Using the socket (1) provided with the antenna (mast) service kit, remove the antenna mast nut (2).

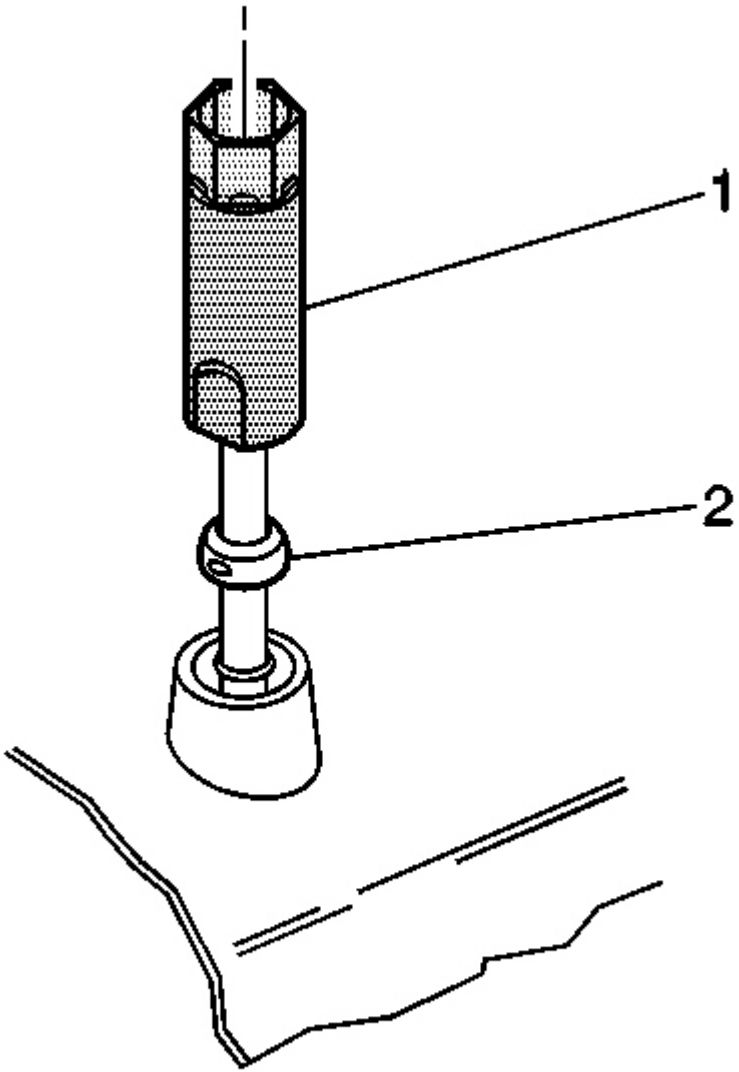

Fig. 52: Antenna Mast Nut
Courtesy of GENERAL MOTORS CORP.

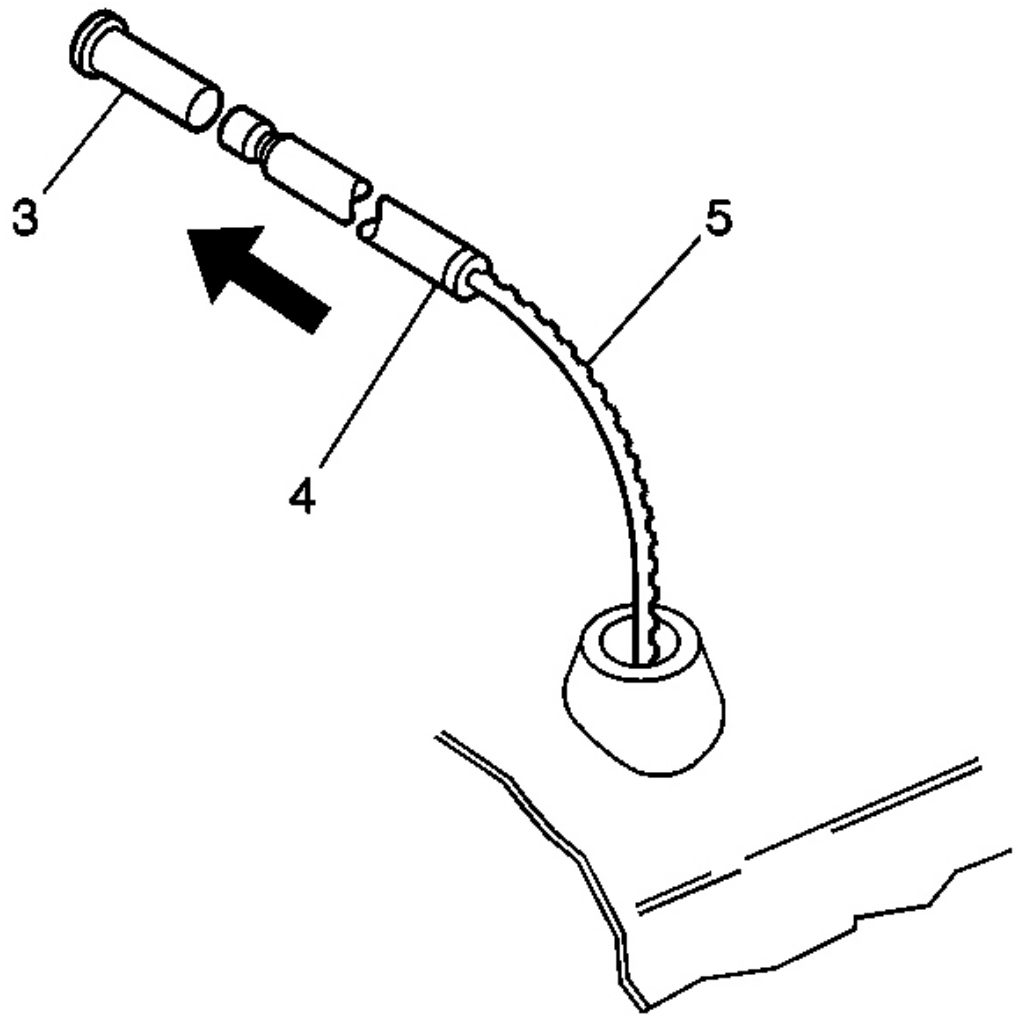

Fig. 53: Antenna Mast Plastic Cable, Contact Spring & Antenna Mast
Courtesy of GENERAL MOTORS CORP.

2. Turn the ignition to the ACC or ON position.
3. Turn the radio ON to raise the power antenna.

IMPORTANT:

- **Prior to complete removal, note the orientation of the serrated side of the antenna mast plastic cable (5).**
- **The antenna mast plastic cable (5) will likely coil back once removed, take precautions to avoid grease splatter on the vehicle.**

4. Remove the antenna mast (4) with the contact spring (3).

   It may be necessary to gently pull the mast up by hand to release and remove.

5. Turn the radio OFF.
6. Turn the ignition OFF.

Installation Procedure

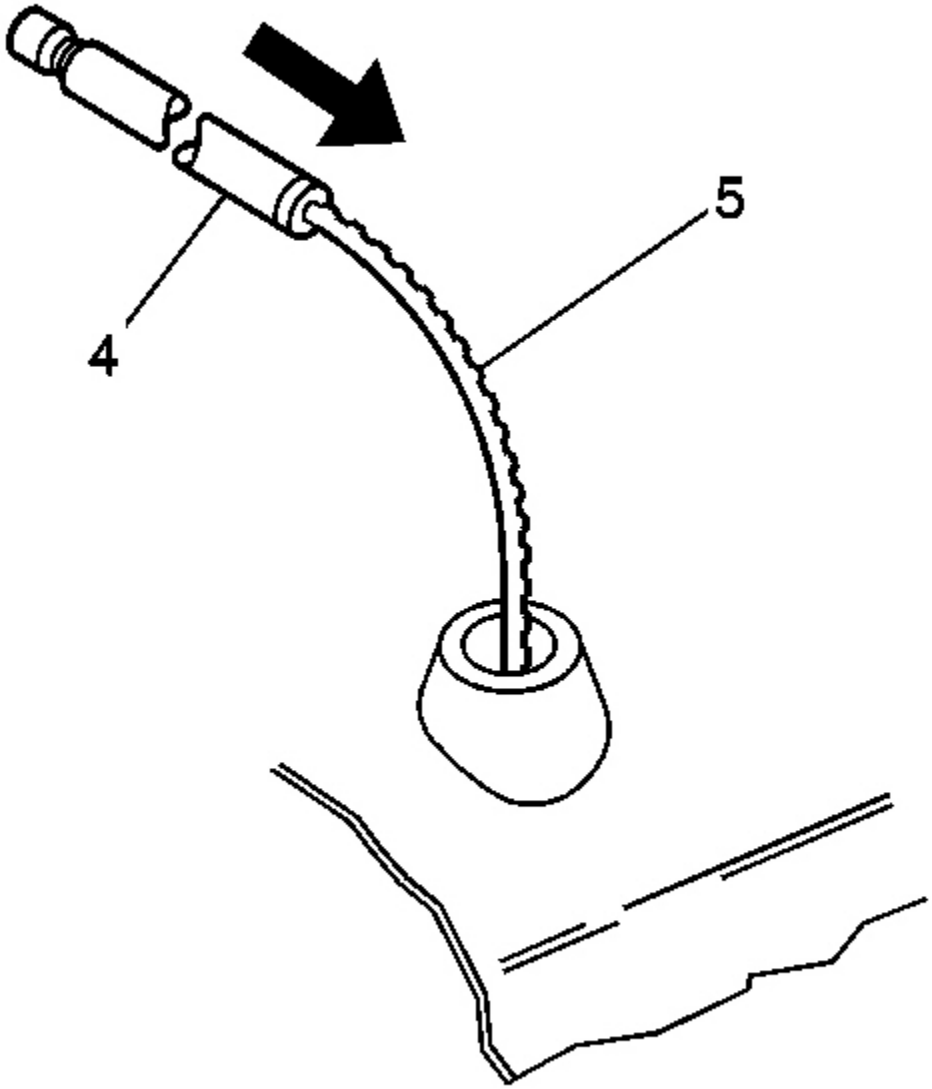

Fig. 54: Insert Antenna Mast Plastic Cable
Courtesy of GENERAL MOTORS CORP.

1. Turn the ignition to the ACC or ON position.
2. Turn the radio ON.
3. Insert the replacement antenna (mast) plastic cable (5) into the power antenna housing, with the serrated side of the cable facing slightly forward and toward the RH side of the vehicle.

When resistance is felt, continue to gently push until the tip of the cable engages in the motor.

4. While guiding the plastic cable into the housing, have an assistant turn the radio OFF.
5. Quickly align and guide the antenna mast (4) into the power antenna housing.

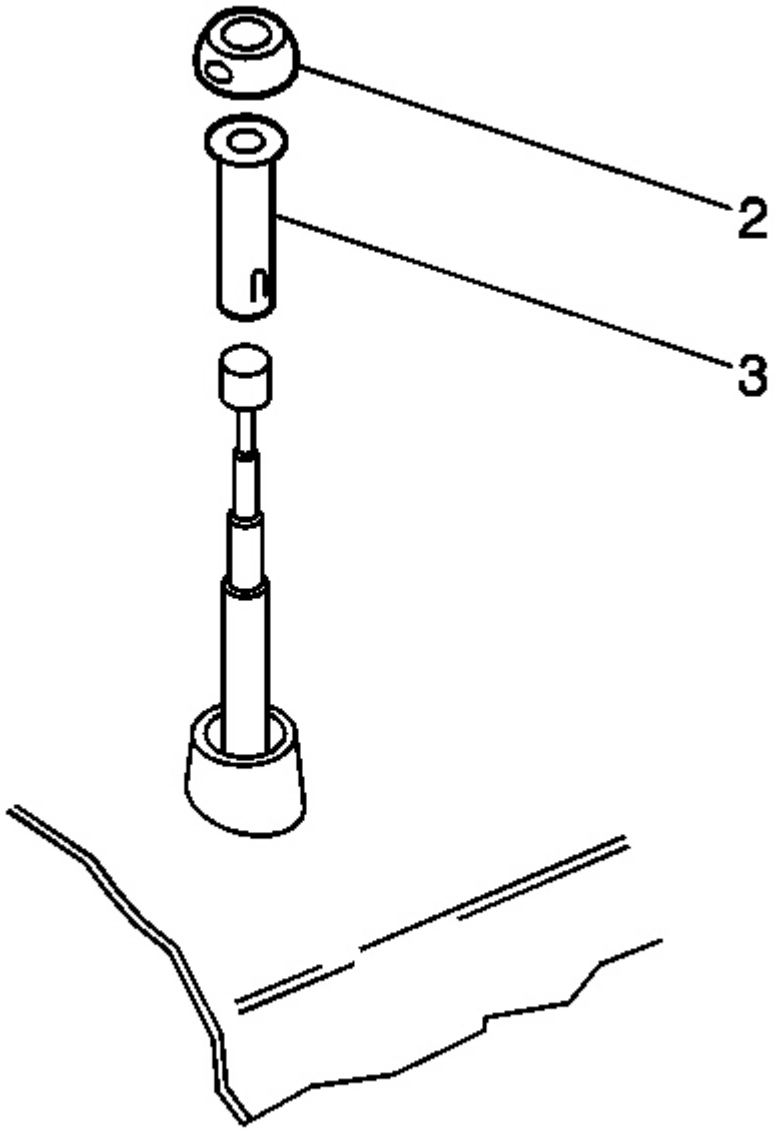

Fig. 55: Antenna Mast And Power Antenna Housing
Courtesy of GENERAL MOTORS CORP.

6. Push the contact spring (flared end up) over the antenna mast and into the power antenna housing.
7. Install the antenna mast nut (2).

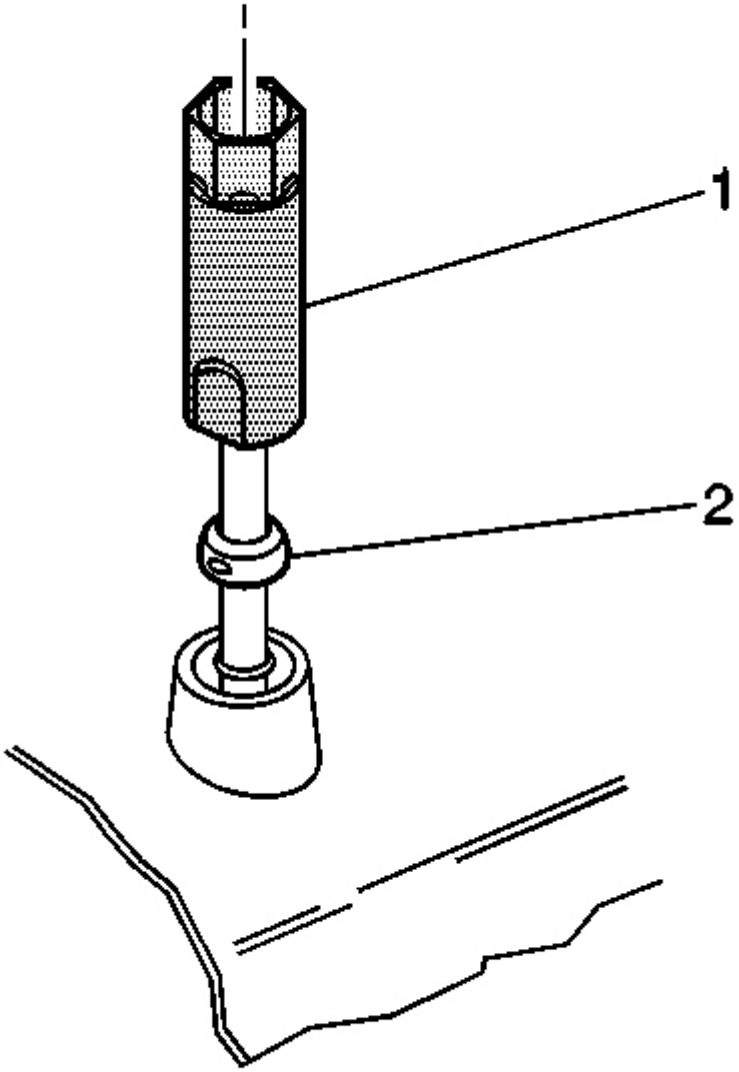

Fig. 56: Antenna Mast Nut
Courtesy of GENERAL MOTORS CORP.

8. Using the socket (1) provided, tighten the antenna mast nut (2).
9. Turn the radio ON and OFF, allowing the antenna to cycle several times; in order to check antenna

operation and until the antenna mast fully extends and retracts.

(Usually one or two cycles are sufficient to fully extend the mast.)

10. Turn the ignition OFF.

POWER ANTENNA ASSEMBLY REPLACEMENT

Removal Procedure

1. Open the rear compartment lid.
2. Check to be sure that the ignition switch is in the OFF position.
3. Remove the RR end/corner carpet trim panel. Refer to **Trim Panel Carpet Replacement - Rear Corner (Coupe)** or **Trim Panel Carpet Replacement - Rear Corner (Convertible)** or **Trim Panel Carpet Replacement - Rear Corner (Hardtop)** in Interior Trim.
4. Remove the RH decklid support trim panel.

   Pull to release the retaining clips.

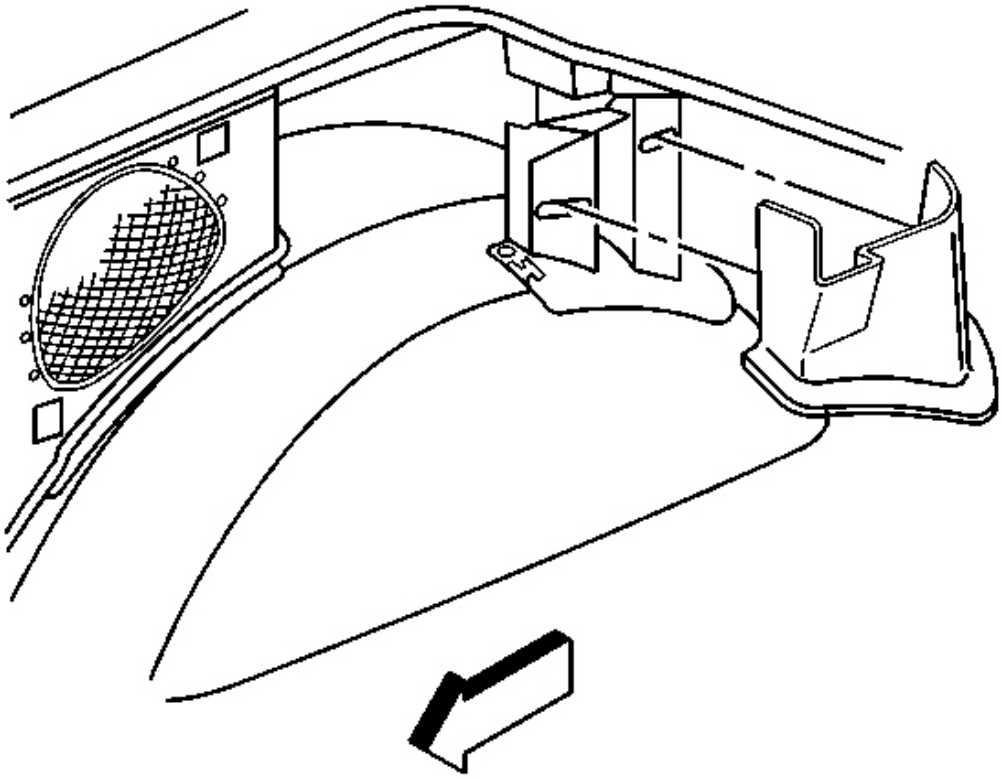

Fig. 57: RH Decklid Support Trim Panel
Courtesy of GENERAL MOTORS CORP.

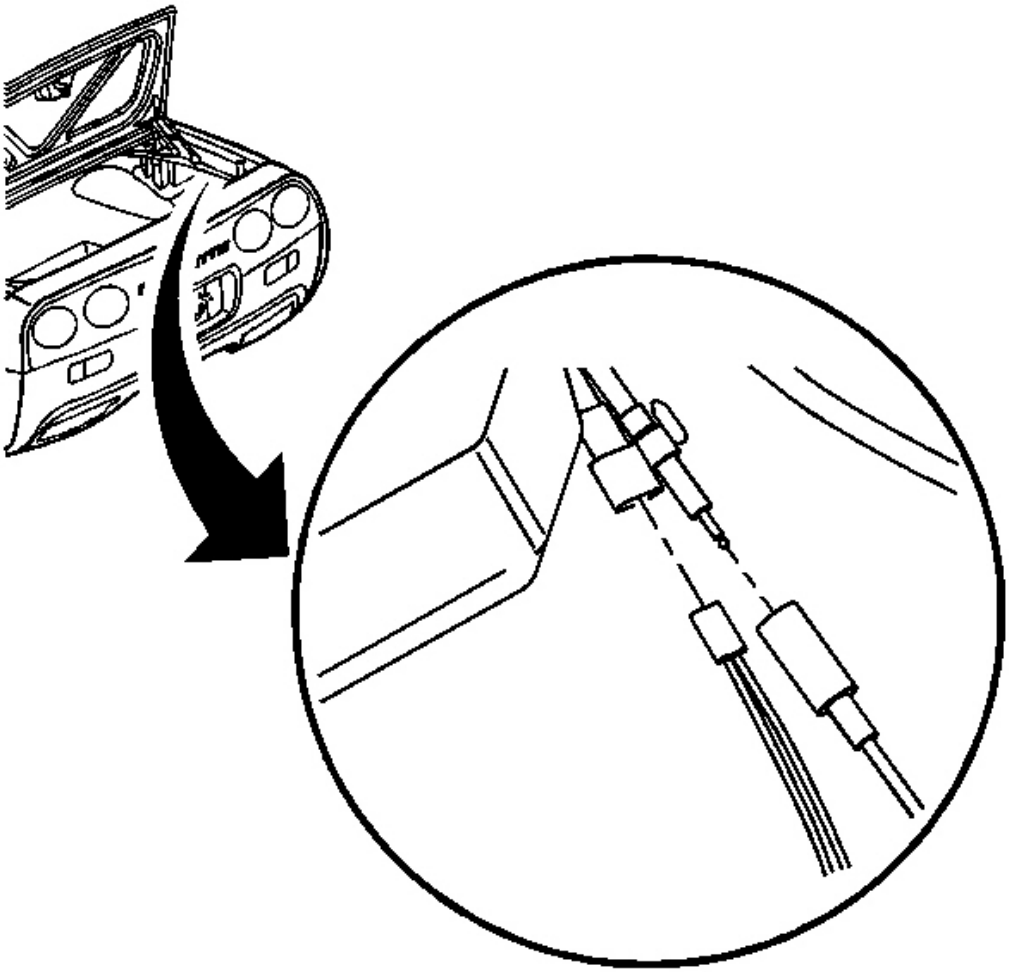

Fig. 58: Antenna Electrical Connector At Front Body Wiring Harness Connector
Courtesy of GENERAL MOTORS CORP.

5. Pull back the edge of the rear compartment floor carpet from behind the RH decklid support, then reposition the RH side of the carpet.
6. Release the antenna coaxial cable and wiring harness from the retaining clip on the rear of the wheelhouse.
7. Disconnect the power antenna coaxial cable from the power antenna coaxial extension cable.
8. Disconnect the antenna electrical connector from the front body wiring harness connector.

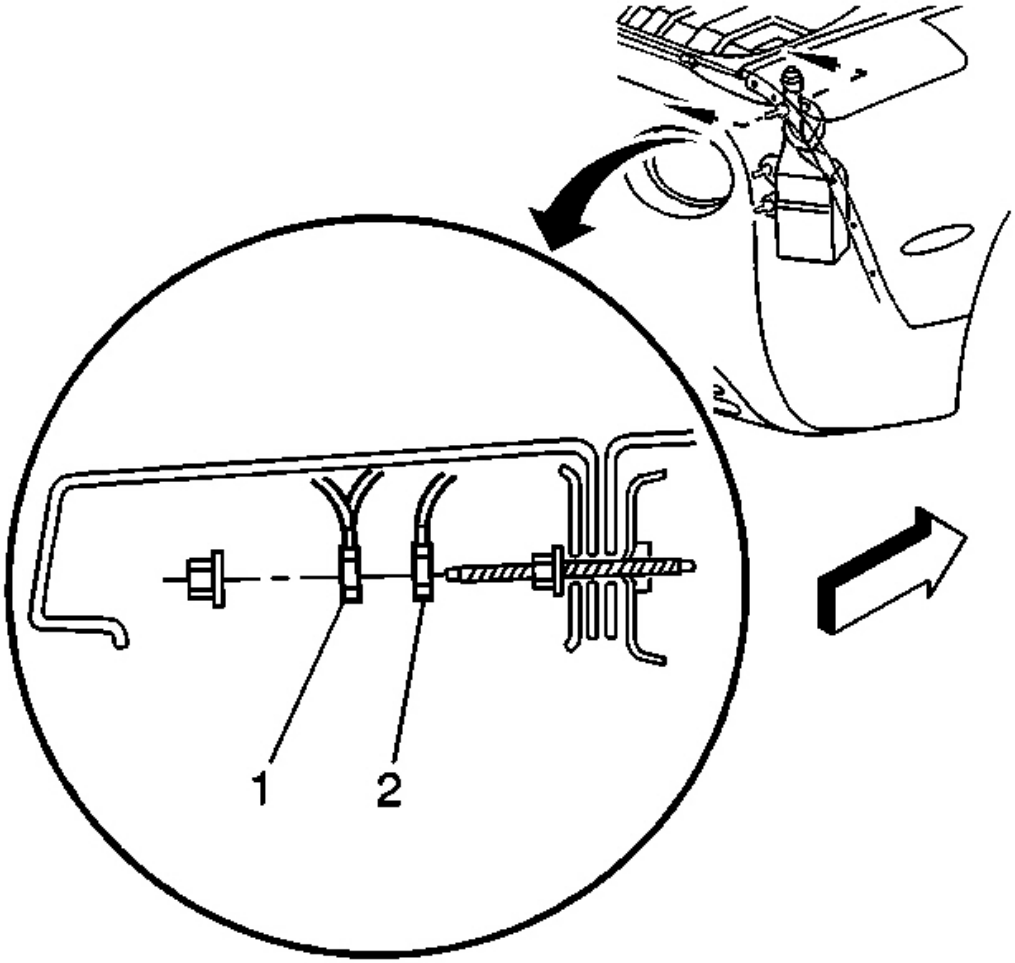

Fig. 59: Antenna Ground Connector At Rear Body Wiring Harness
Courtesy of GENERAL MOTORS CORP.

9. Remove the screws retaining both of the RH taillamps.
10. Remove both of the RH taillamps.
11. Disconnect the antenna ground connector from the rear body wiring harness.

IMPORTANT: Use care not to twist and damage the ground straps when removing the retaining nut.

12. Remove the nut retaining the antenna dual cable strap (1) and antenna short braided ground strap (2) to the rear fascia retaining stud, then reposition the straps.

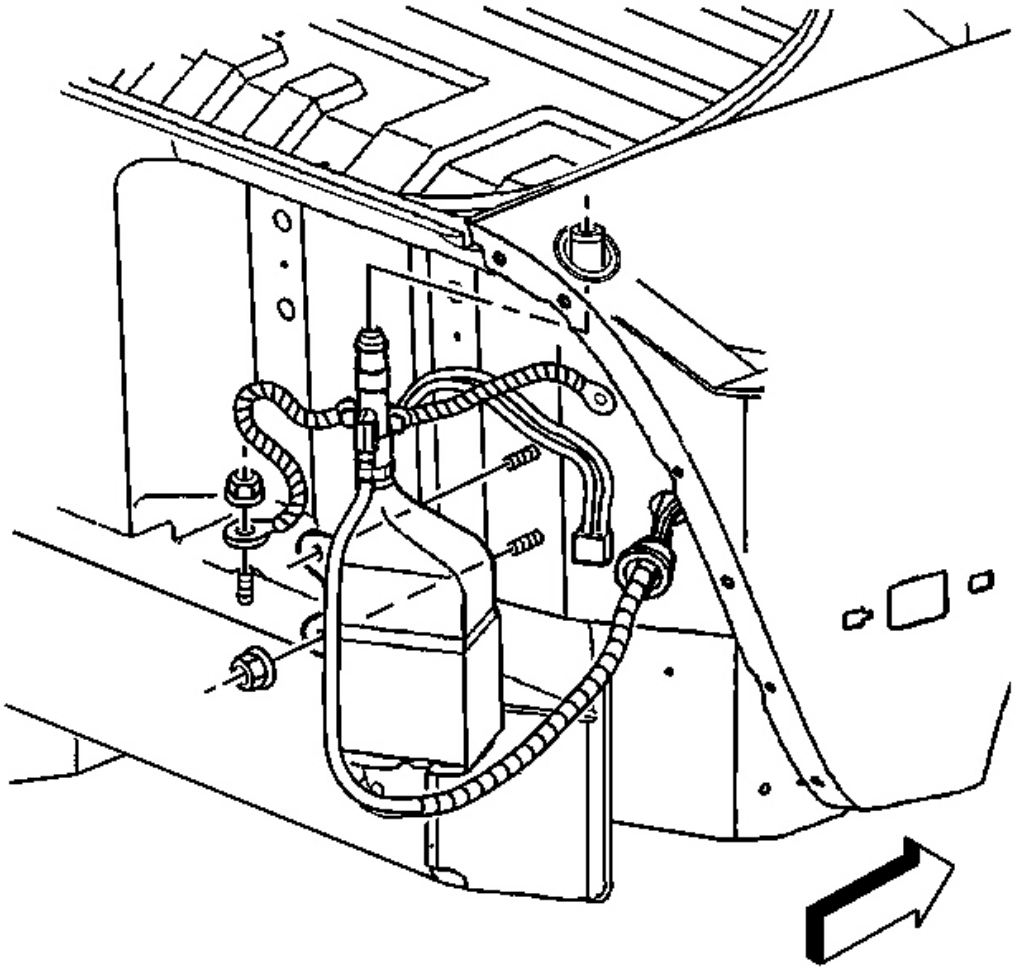

Fig. 60: Antenna Wiring Harness And Grommet At Opening In The Rear Compartment Panel
Courtesy of GENERAL MOTORS CORP.

13. Remove the nut retaining the antenna long braided ground strap to the rear bumper impact bar stud, then reposition the strap.
14. Remove the antenna bracket retaining nuts.
15. Release the antenna bracket from the mounting studs.
16. Reposition the antenna body (with bracket) toward the RR tire.
17. Using a slight twisting motion, pull down to release the antenna from the antenna bezel.
18. Release the antenna wiring harness grommet from the rear compartment panel, toward the outside of the vehicle.
    1. Starting from the outer lip of the grommet, on the outside of the vehicle, begin to unseat the bottom

right area of the grommet.

2. Using a flat bladed screwdriver or other suitable tool as an aid if necessary, work around the base of the tapered lip of the grommet on the inside of the vehicle, while simultaneously finessing the outer lip of the grommet on the outside of the vehicle, in order to release the grommet completely from the rear compartment panel.

19. Remove the antenna wiring harness and grommet from the opening in the rear compartment panel toward the outside of the vehicle.

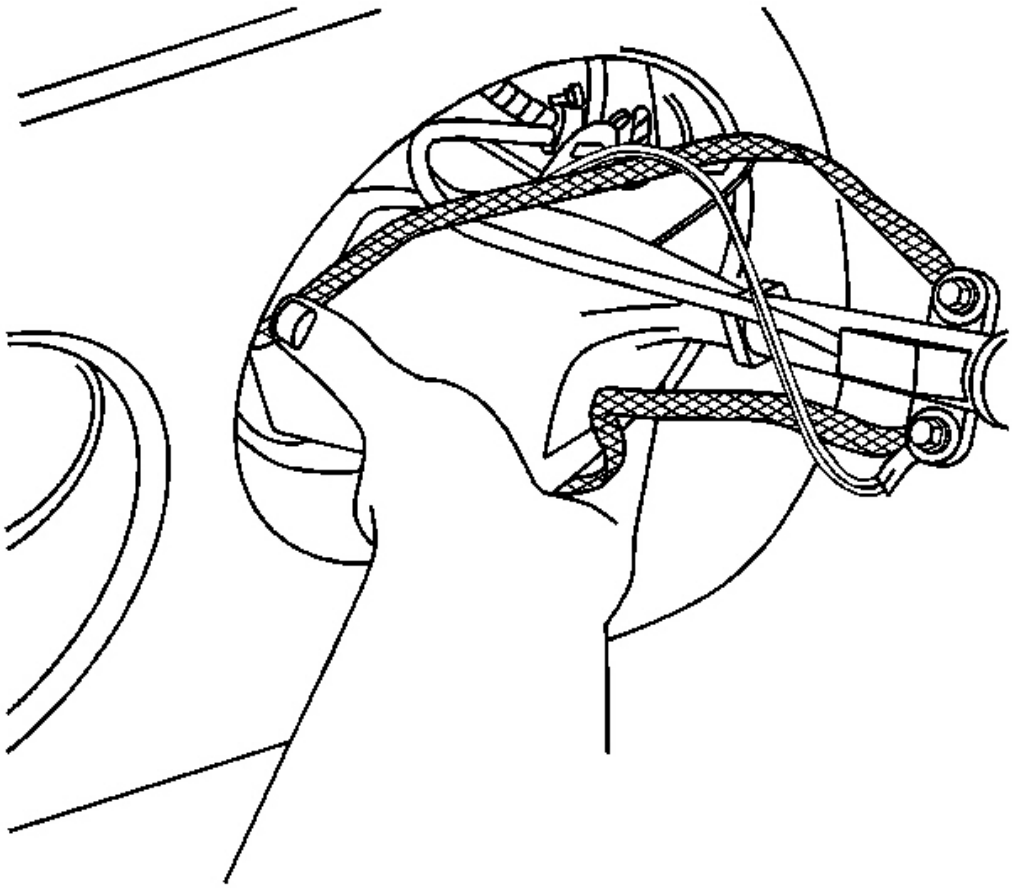

Fig. 61: Power Antenna At Taillamp Openings
Courtesy of GENERAL MOTORS CORP.

20. Carefully remove the power antenna from the vehicle through one of the taillamp openings.

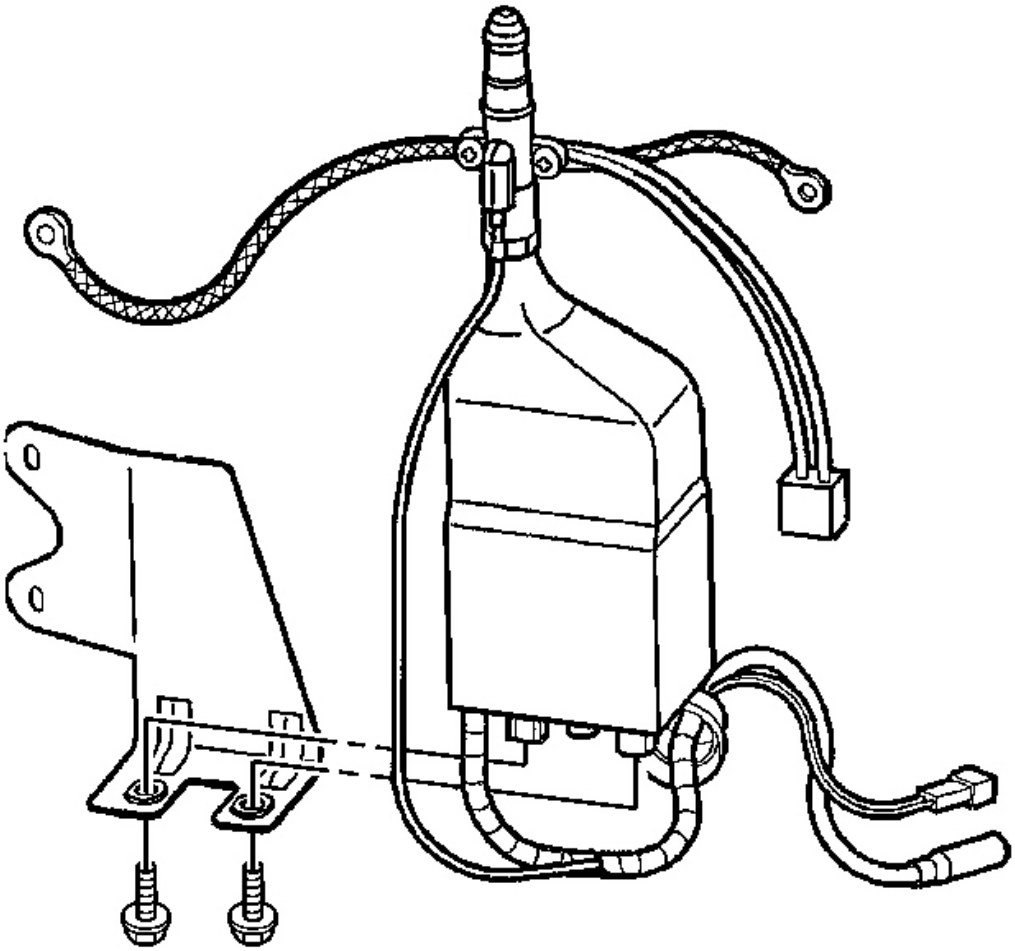

Fig. 62: Power Antenna Unit
Courtesy of GENERAL MOTORS CORP.

21. Remove the bolts retaining the antenna bracket to the antenna, if bracket removal is necessary.
22. Remove the antenna bracket from the antenna, if necessary.
23. Remove the antenna bezel upward through the quarter panel, if necessary.

Installation Procedure

1. Install the antenna bezel to the quarter panel, if removed.

   Align the locating tab on the antenna bezel to the notch in the quarter panel, then insert the bezel and push to secure.

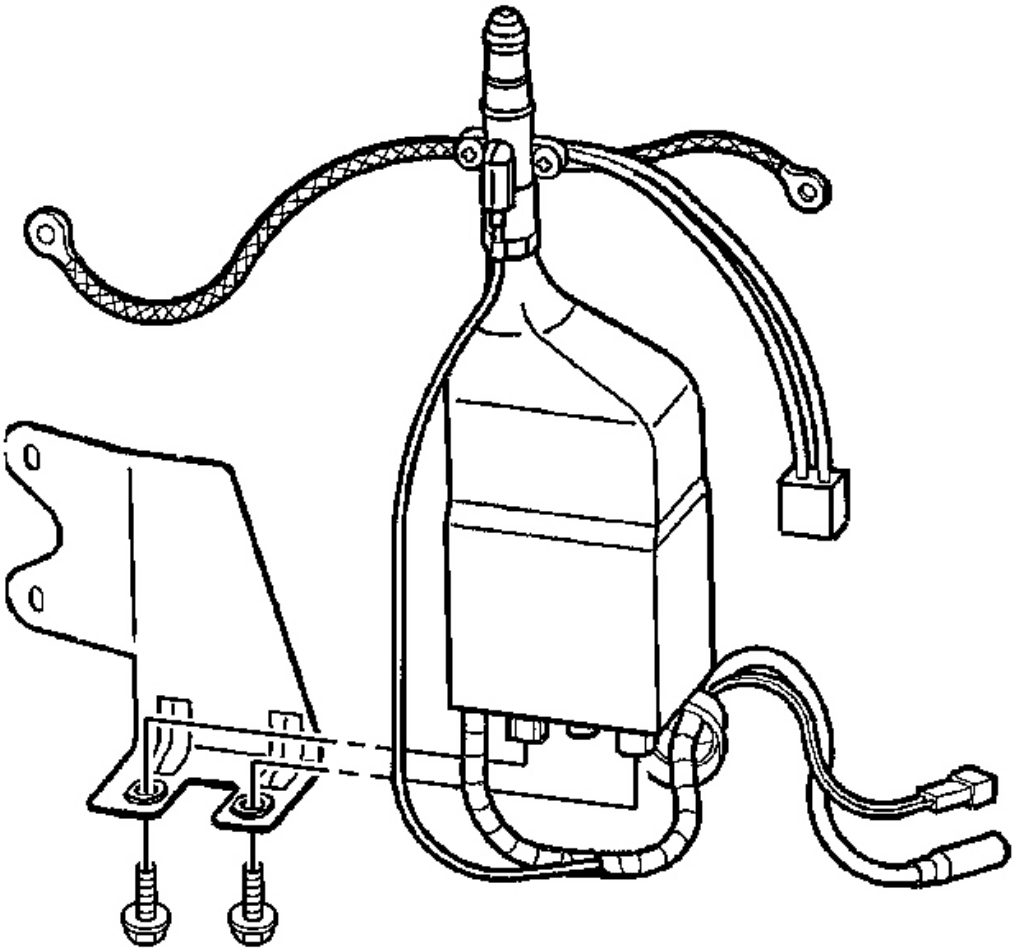

Fig. 63: Power Antenna Unit
Courtesy of GENERAL MOTORS CORP.

2. Install the antenna bracket to the antenna, if removed.

NOTE: **Refer to Fastener Notice in Cautions and Notices.**

IMPORTANT: **Use care not to twist and damage the ground straps when tightening the retaining nut.**

3. Install the bolts retaining the antenna bracket to the antenna, if the bracket was removed.

Tighten: Tighten the radio power antenna bracket retaining bolts to 10 N.m (89 lb in).

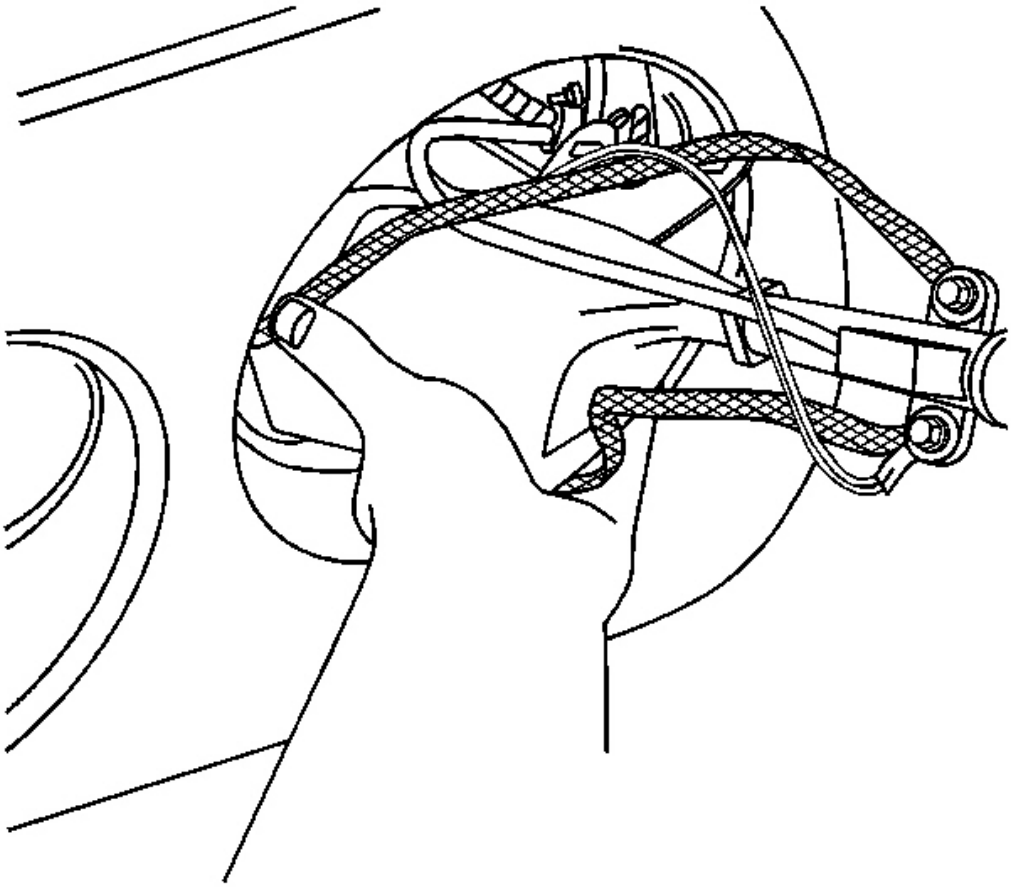

Fig. 64: Power Antenna At Taillamp Openings
Courtesy of GENERAL MOTORS CORP.

4. Carefully install the power antenna to the vehicle through one of the taillamp openings.

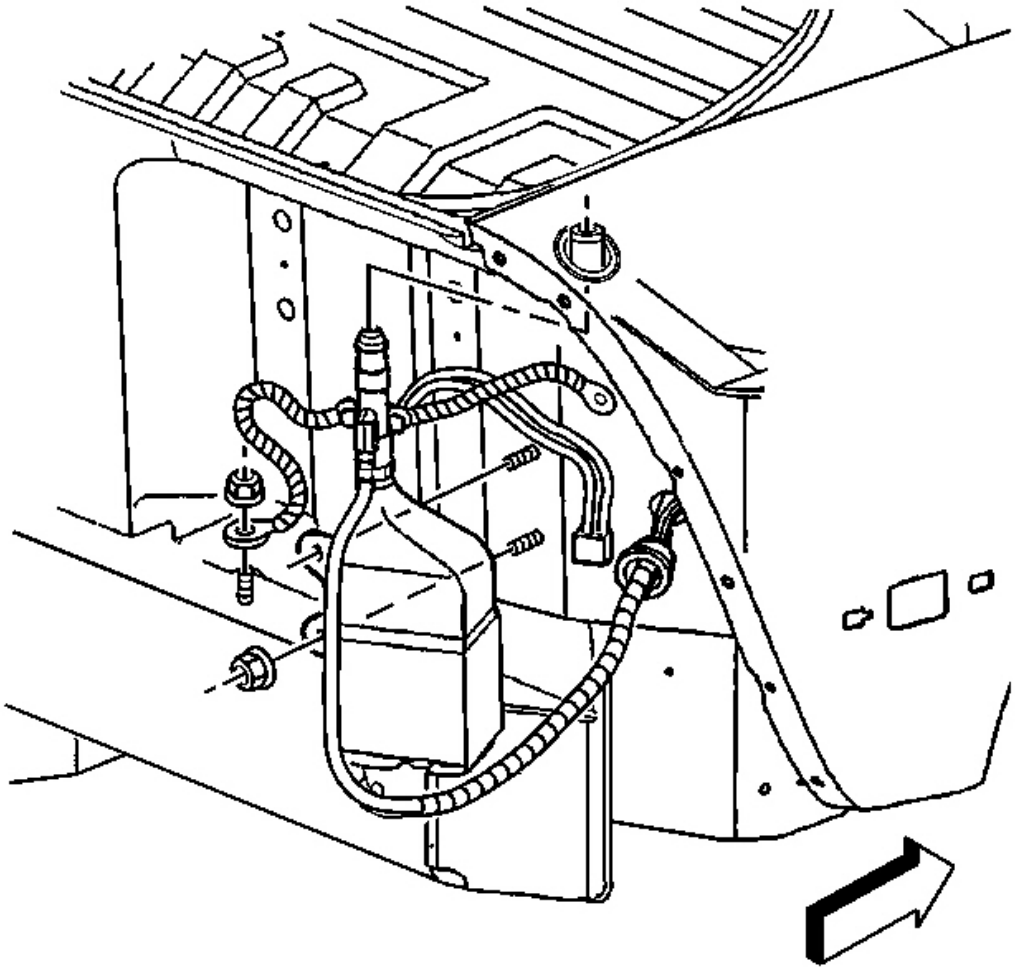

Fig. 65: Antenna Wiring Harness And Grommet At Opening In The Rear Compartment Panel
Courtesy of GENERAL MOTORS CORP.

5. Apply sealer to the groove on the antenna wiring harness grommet.
6. Apply a light coating of lubricant to the narrow end of the antenna wiring harness grommet to aid in seating the grommet.
7. Install the antenna wiring harness and grommet through the opening in the rear compartment panel toward the inside of the vehicle.
8. Fully seat the antenna wiring harness grommet to the rear compartment panel.
9. Position the antenna upright, toward the RR tire and align the top of the antenna with the opening in the antenna bezel.
10. Install the antenna to the bezel.

Insert the antenna up through the opening in the bezel, then check that the antenna and the bezel are seated properly.

11. Position the antenna and install the antenna bracket onto the mounting studs.
12. Install the antenna bracket retaining nuts.

    Tighten: Tighten the radio power antenna bracket retaining nuts to 12 N.m (106 lb in).

13. Install the antenna long braided ground strap to the rear bumper impact bar stud.
14. Install the nut retaining the antenna long braided ground strap to the rear bumper impact bar stud.

    Tighten: Tighten the radio power antenna long braided ground strap retaining nut to 5.8 N.m (51 lb in).

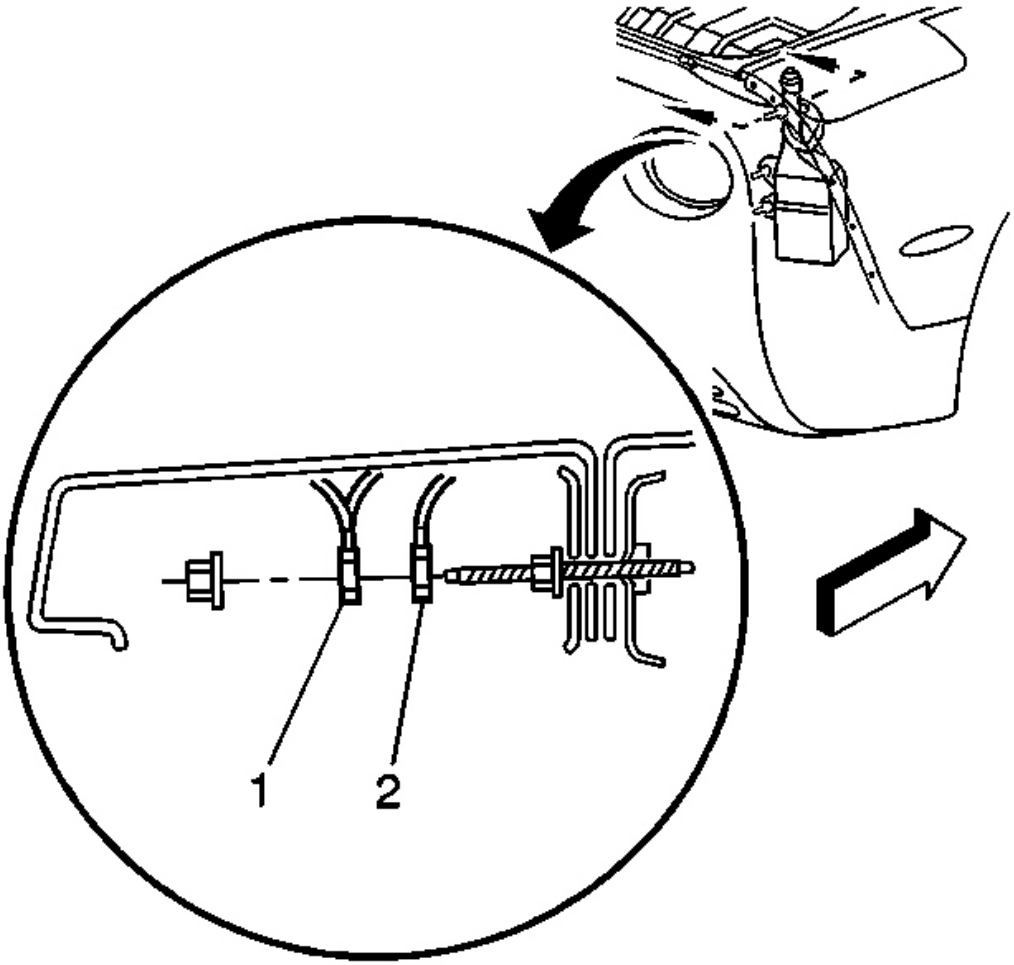

Fig. 66: Antenna Ground Connector At Rear Body Wiring Harness
Courtesy of GENERAL MOTORS CORP.

15. Install the antenna short braided ground strap (2), then the antenna dual cable strap (1), to the rear fascia retaining stud.
16. Install the nut retaining the straps to the rear fascia retaining stud.

    Tighten: Tighten the radio power antenna short braided ground strap and dual cable strap retaining nut to 5.8 N.m (51 lb in).

17. Connect the antenna ground connector to the rear body wiring harness.
18. Install both of the RH taillamps.
19. Install the screws retaining both of the RH taillamps.

    Tighten: Tighten the taillamp retaining screws to 2 N.m (18 lb in).

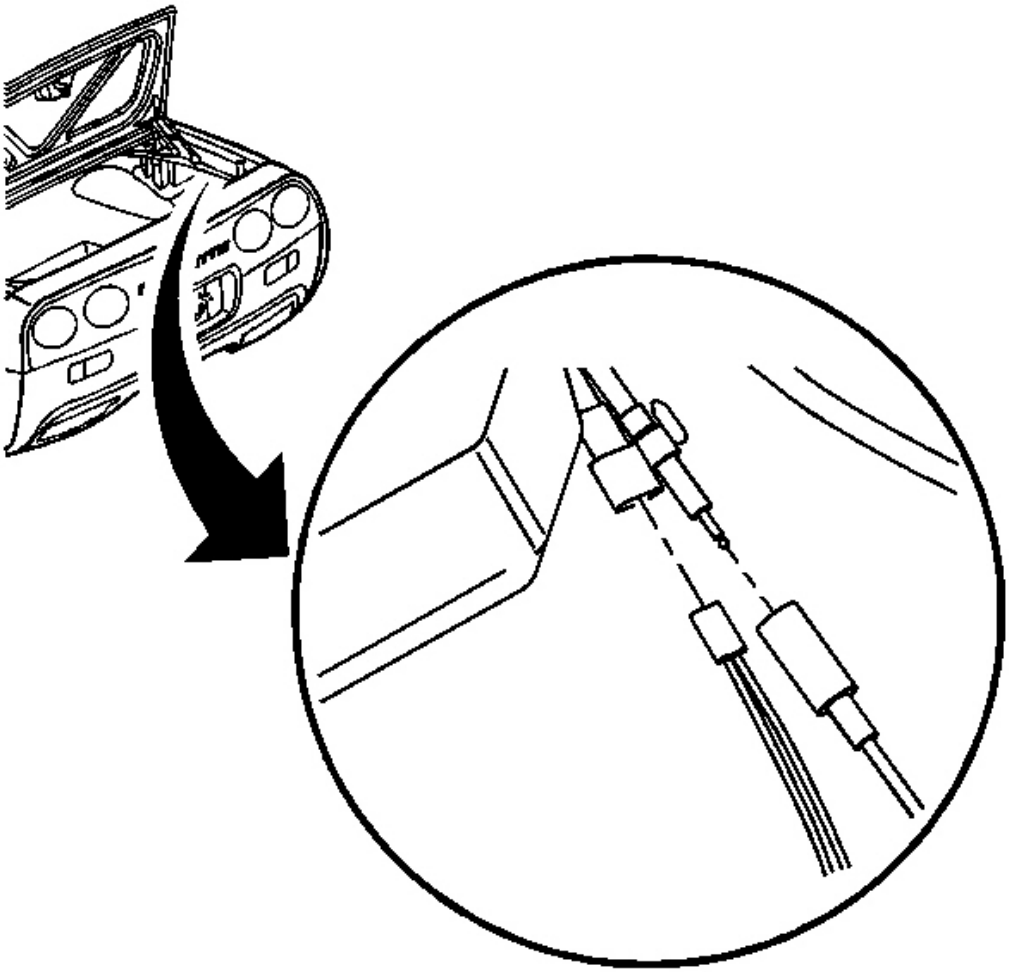

Fig. 67: Antenna Electrical Connector At Front Body Wiring Harness Connector
Courtesy of GENERAL MOTORS CORP.

20. Secure the antenna coaxial cable and wiring harness to the retaining clip on the rear of the wheelhouse.
21. Connect the antenna wiring harness electrical connector to the front body wiring harness connector.
22. Connect the antenna coaxial cable to the antenna coaxial extension cable.
23. Install the edge of the rear compartment floor carpet behind the RH decklid support.

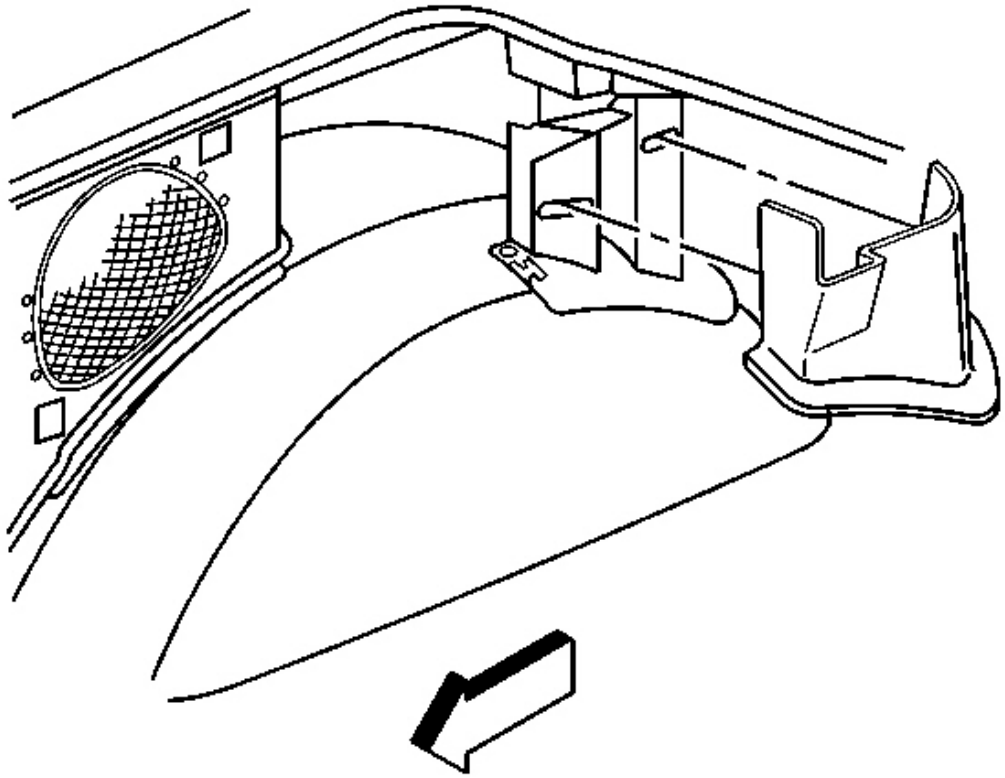

Fig. 68: RH Decklid Support Trim Panel
Courtesy of GENERAL MOTORS CORP.

24. Install the RR end/corner carpet trim panel. Refer to **Trim Panel Carpet Replacement - Rear Corner (Coupe)** or **Trim Panel Carpet Replacement - Rear Corner (Convertible)** or **Trim Panel Carpet Replacement - Rear Corner (Hardtop)** in Interior Trim.
25. Install the RH decklid support trim panel.

    Align the panel, then push to secure the retaining clips.

26. Close the rear compartment lid.

ANTENNA EXTENSION CABLE REPLACEMENT (REAR LIFT WINDOW, COUPE)

Removal Procedure

1. Remove the roof bow interior trim panel. Refer to **Trim Panel Replacement - Rear Roof Bow** in

Interior Trim.

2. Remove the left rear compartment side trim panel. Refer to **Trim Panel Replacement - Rear Compartment Front Side (Convertible)** or **Trim Panel Replacement - Rear Compartment Front Side (Hardtop)** or **Trim Panel Replacement - Rear Compartment Front Side (Coupe)** in Interior Trim.
3. Remove the left lock pillar trim panel. Refer to **Trim Replacement - Lock Pillar (Upper Convertible)** or **Trim Replacement - Lock Pillar (Coupe)** or **Trim Replacement - Lock Pillar (Lower Convertible and Hard Top)** in Interior Trim.
4. Disconnect the rear lift window antenna coaxial extension cable from the antenna buffer.

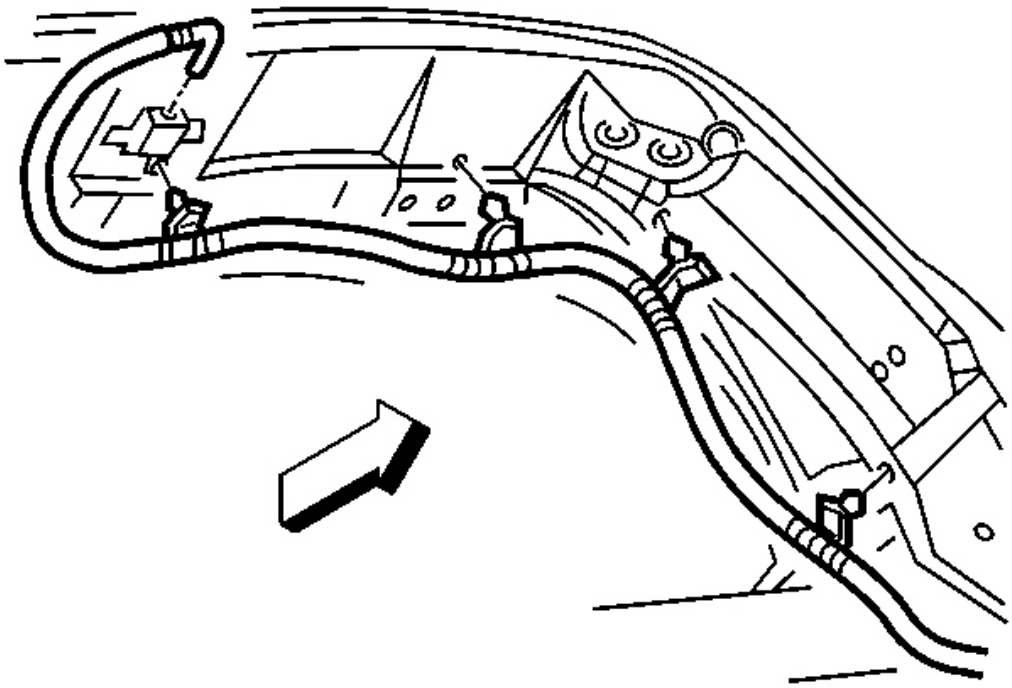

Fig. 69: Rear Lift Window Antenna Coaxial Extension Cable At Antenna Buffer
Courtesy of GENERAL MOTORS CORP.

5. Beginning at the antenna buffer end, carefully remove the push -in fastener retainers securing the coaxial extension cable along the roof bow.

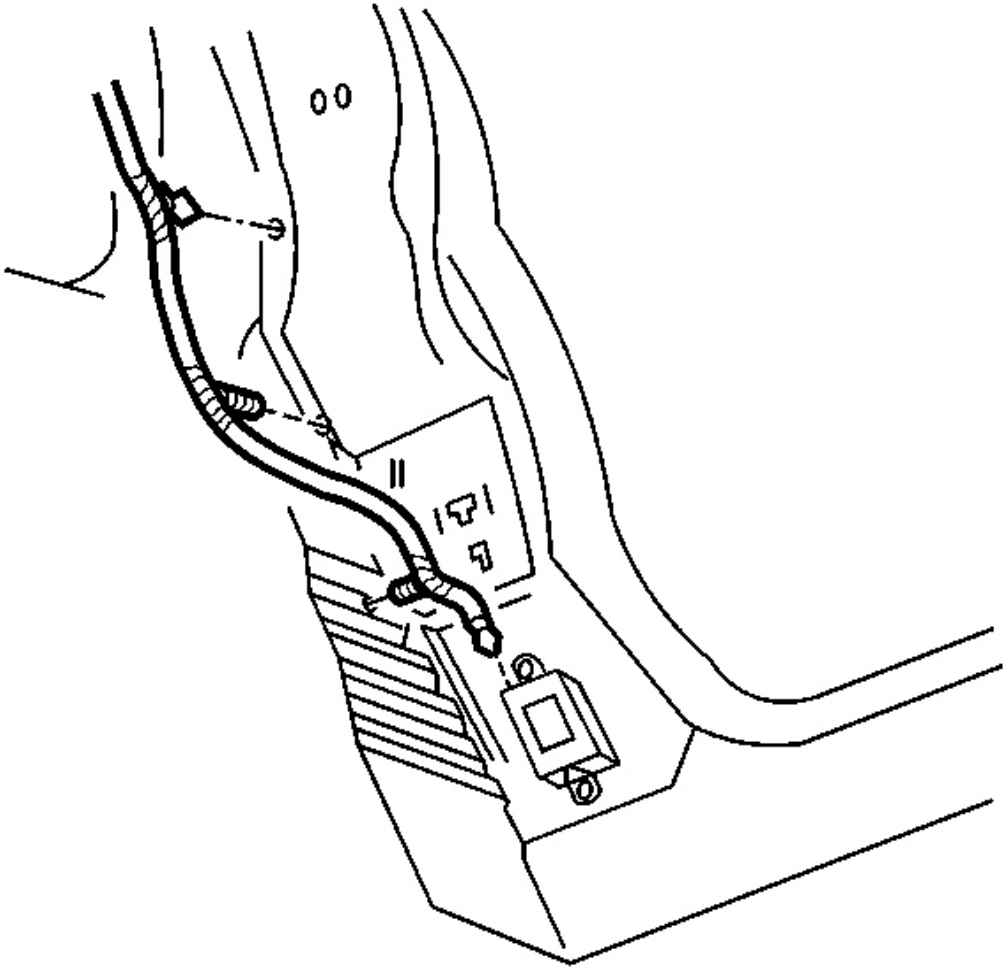

Fig. 70: Coaxial Extension Cable At Antenna Module
Courtesy of GENERAL MOTORS CORP.

6. Remove the push -in fastener retainers securing the coaxial extension cable to the lock pillar and the front seat back reinforcement panel.
7. Disconnect the coaxial extension cable from the antenna module.
8. Remove the coaxial extension cable.

Installation Procedure

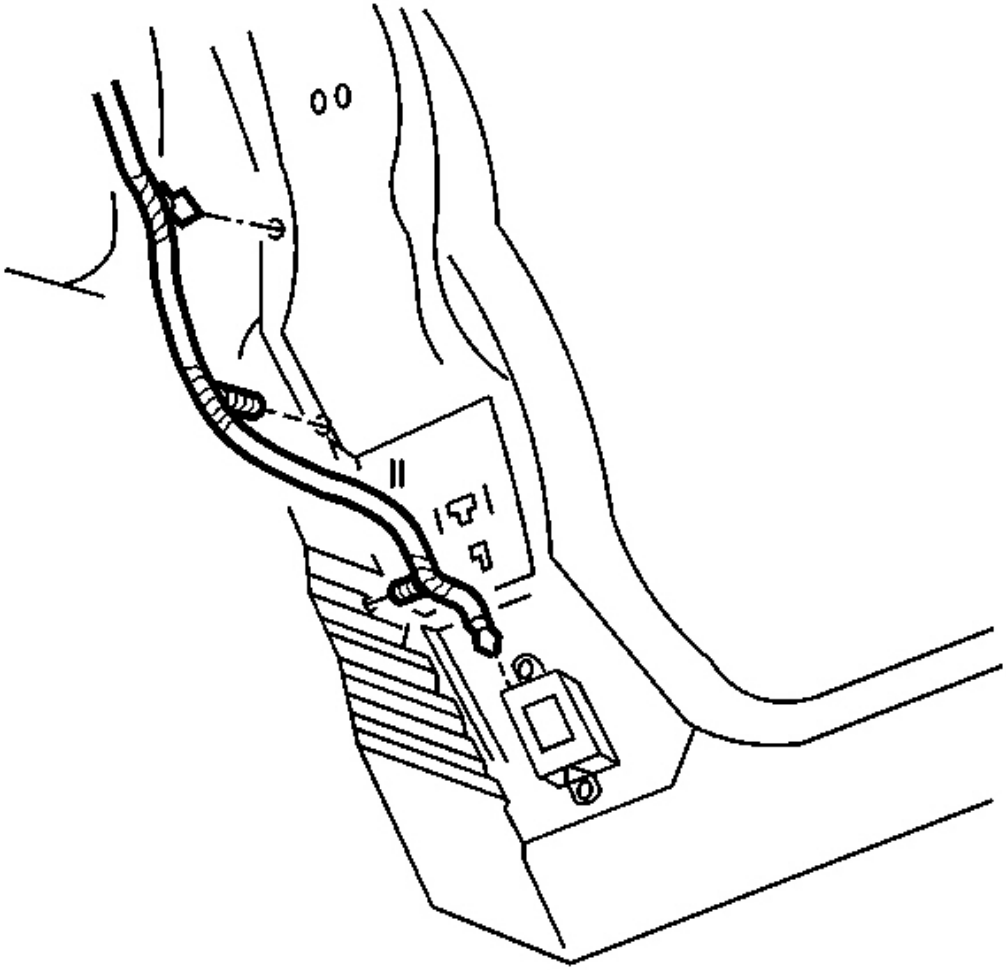

Fig. 71: Coaxial Extension Cable At Antenna Module
Courtesy of GENERAL MOTORS CORP.

1. Install the rear lift window antenna coaxial extension cable push -in fastener retainers to the front seat back reinforcement panel and along the lock pillar.
2. Connect the coaxial extension cable to the antenna module.

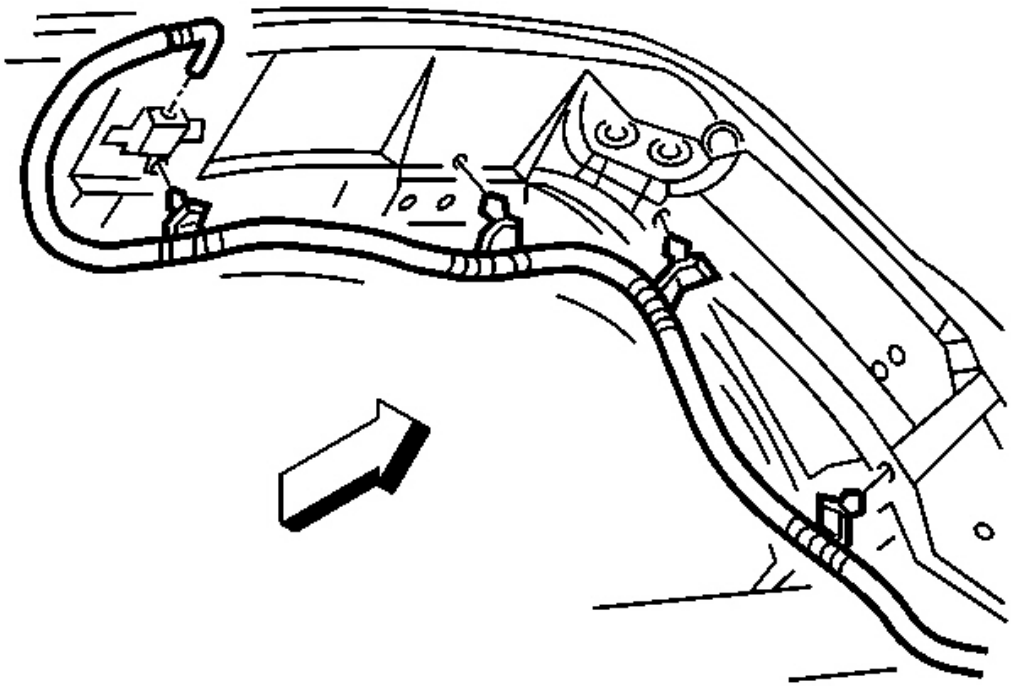

Fig. 72: Rear Lift Window Antenna Coaxial Extension Cable At Antenna Buffer
Courtesy of GENERAL MOTORS CORP.

3. Working upward along the roof bow, install the remaining coaxial extension cable push -in fastener retainers.
4. Connect the coaxial extension cable to the antenna buffer.
5. Install the lock pillar trim panel. Refer to **Trim Replacement - Lock Pillar (Upper Convertible)** or **Trim Replacement - Lock Pillar (Coupe)** or **Trim Replacement - Lock Pillar (Lower Convertible and Hard Top)** in Interior Trim.
6. Install the rear compartment side trim panel. Refer to **Trim Panel Replacement - Rear Compartment Front Side (Convertible)** or **Trim Panel Replacement - Rear Compartment Front Side (Hardtop)** or **Trim Panel Replacement - Rear Compartment Front Side (Coupe)** in Interior Trim.
7. Install the roof bow interior trim panel. Refer to **Trim Panel Replacement - Rear Roof Bow** in Interior Trim.

ANTENNA EXTENSION CABLE REPLACEMENT (CONVERTIBLE)

Removal Procedure

1. Open the rear compartment lid.

2. Remove the RR end/corner carpet trim panel. Refer to **Trim Panel Carpet Replacement - Rear Corner (Coupe)** or **Trim Panel Carpet Replacement - Rear Corner (Convertible)** or **Trim Panel Carpet Replacement - Rear Corner (Hardtop)** in Interior Trim.
3. Remove the decklid latch carpet trim panel.
4. Reposition the center carpet section to expose the front body wiring harness connectors.

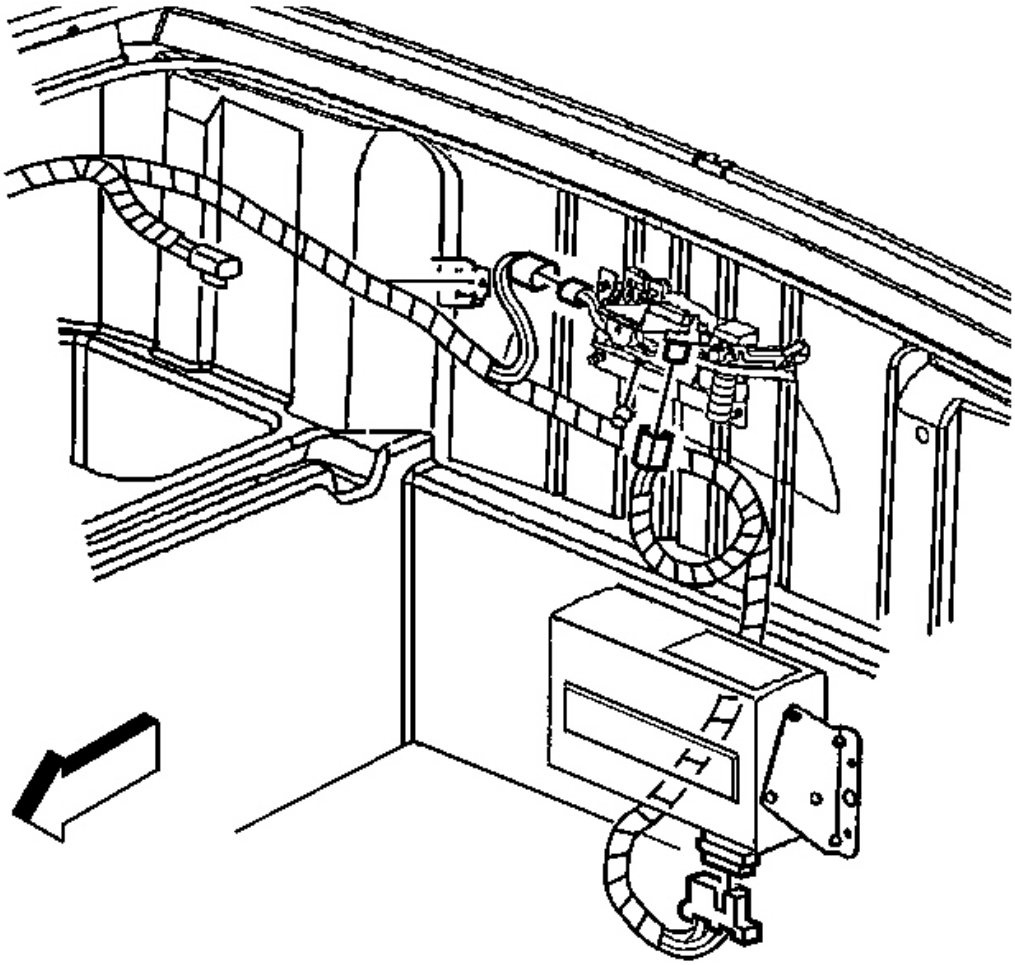

Fig. 73: Front Body Wiring Harness Connectors At Decklid Latch And Remote CD Changer (Convertible)
Courtesy of GENERAL MOTORS CORP.

5. Disconnect the front body wiring harness connectors from the decklid latch and the remote CD changer, if equipped.

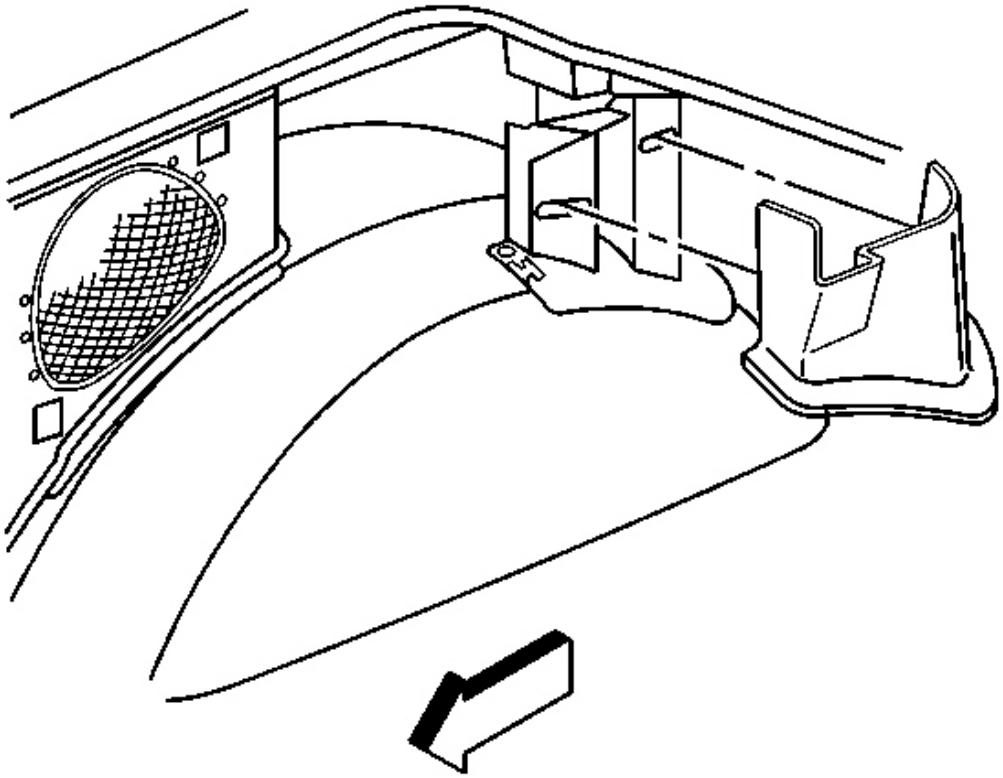

Fig. 74: RH Decklid Support Trim Panel (Convertible)
Courtesy of GENERAL MOTORS CORP.

6. Remove the right decklid support trim panel.

   Pull to release the retaining clips.

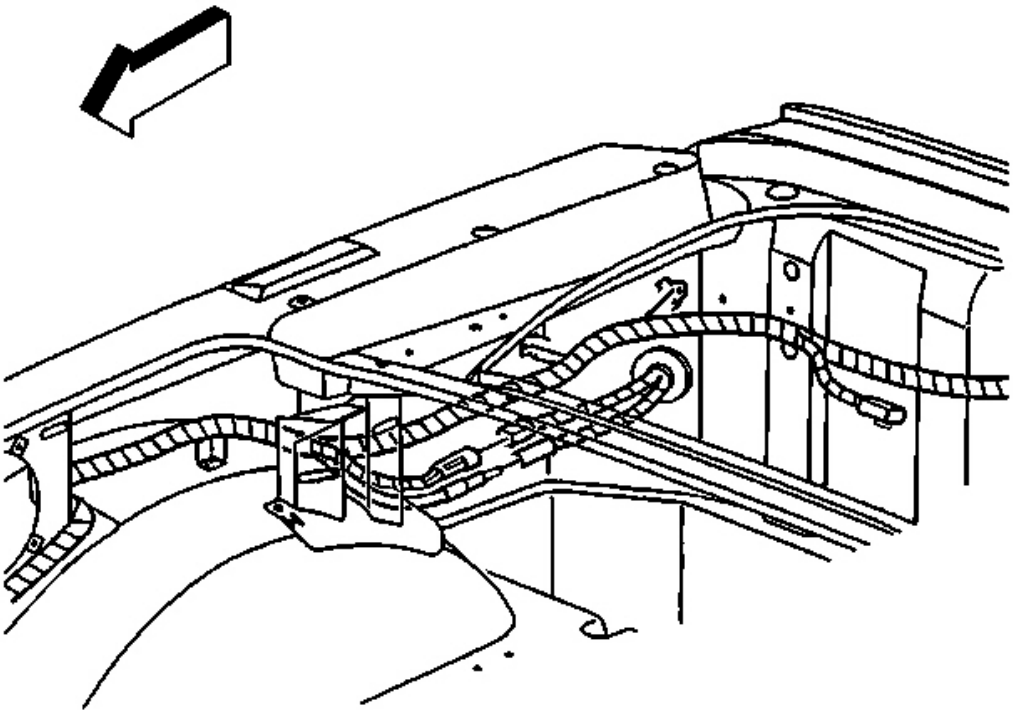

Fig. 75: Antenna Electrical Connector At Front Body Wiring Harness Connector (Convertible)
Courtesy of GENERAL MOTORS CORP.

7. Pull back the edge of the rear compartment floor carpet from behind the right decklid support, then reposition the right side of the carpet.
8. Disconnect the power antenna coaxial cable from the power antenna coaxial extension cable.
9. Disconnect the antenna electrical connector from the front body wiring harness connector.
10. Release the front body wiring harness from the retaining clip on the rear compartment side wall.
11. Close the rear compartment lid.

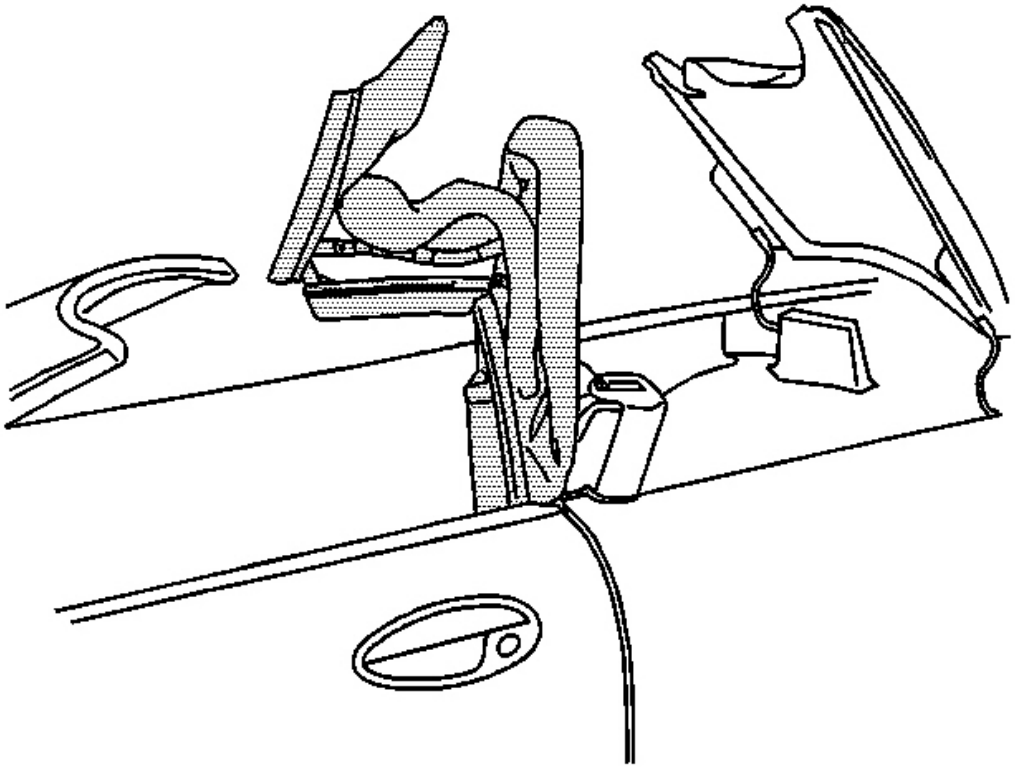

Fig. 76: Folding Top With The #1 Bow And The #5 Bow Up (Convertible)
Courtesy of GENERAL MOTORS CORP.

12. Raise and position the convertible top with the 1 and 5 bows upright.
13. Raise or leave raised, the folding top stowage compartment lid.

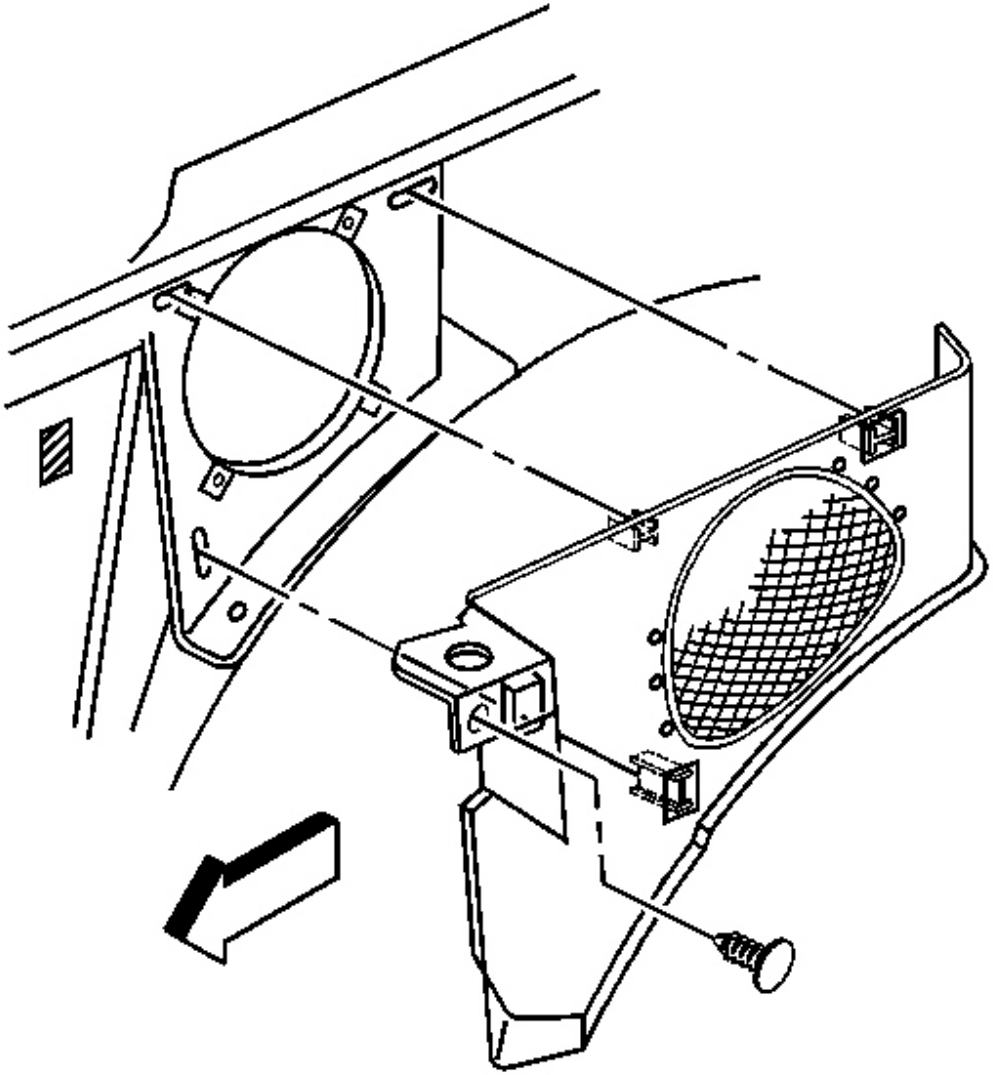

Fig. 77: Rear Compartment Right Side Trim Panel (Convertible)
Courtesy of GENERAL MOTORS CORP.

14. Remove the push -in fastener from the rear compartment right side trim panel.
15. Remove the rear compartment right side trim panel.
16. Remove the right lock pillar upper trim panel. Refer to **Trim Replacement - Lock Pillar (Upper Convertible)** or **Trim Replacement - Lock Pillar (Coupe)** or **Trim Replacement - Lock Pillar (Lower Convertible and Hard Top)** in Interior Trim.

17. Release the front body wiring harness retainers from the rear speaker housing.

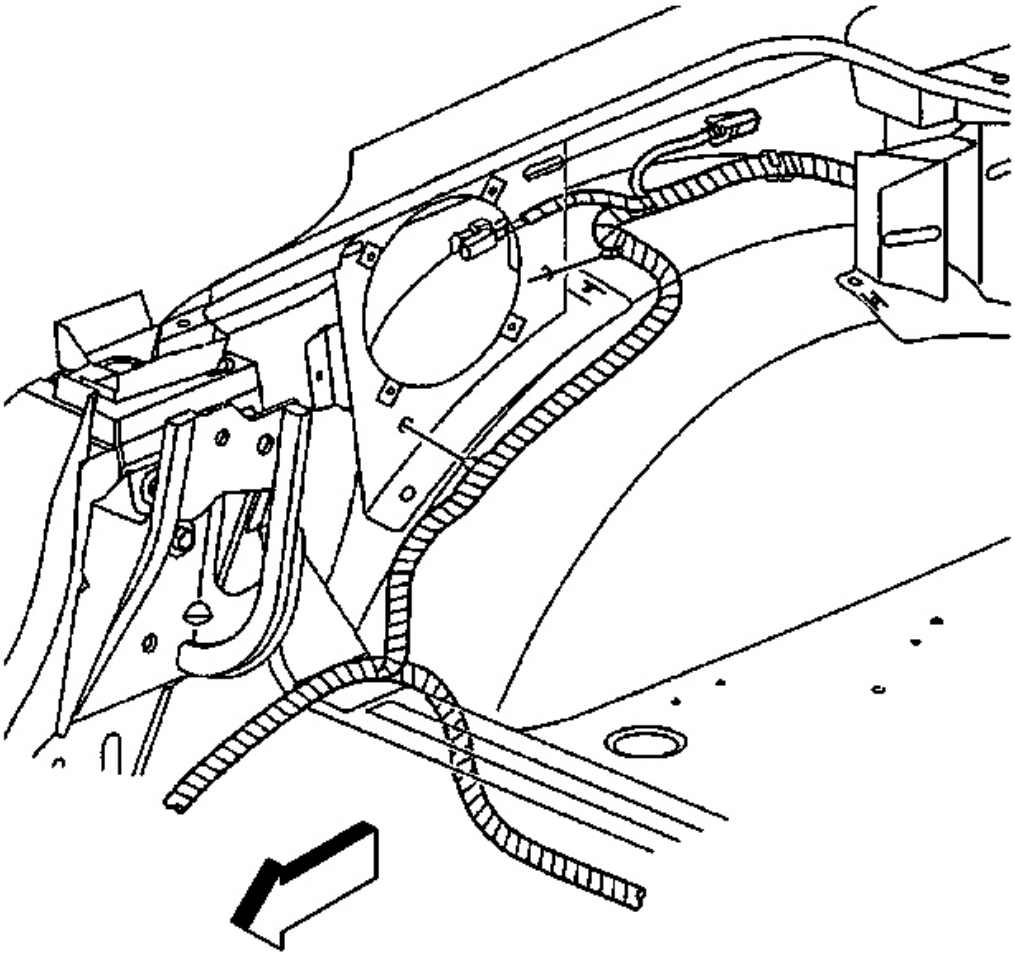

Fig. 78: Front Body Wiring Harness Retainers At Rear Speaker Housing
Courtesy of GENERAL MOTORS CORP.

18. Pull the front body wiring harness from the rear of the vehicle.
19. Remove the right door sill plate. Refer to **Door Sill Plate Replacement** in Interior Trim.
20. Remove the right lock pillar lower trim panel. Refer to **Trim Replacement - Lock Pillar (Upper Convertible)** or **Trim Replacement - Lock Pillar (Coupe)** or **Trim Replacement - Lock Pillar (Lower Convertible and Hard Top)** in Interior Trim.

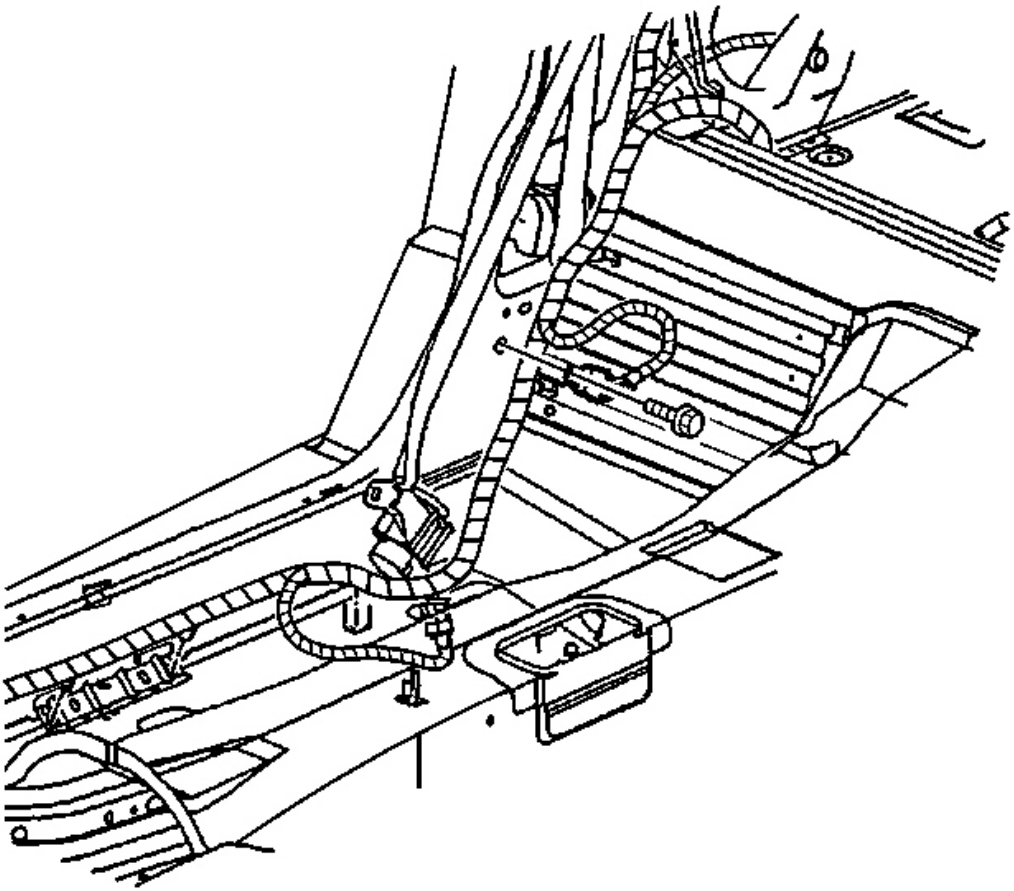

Fig. 79: Power Antenna Coaxial Extension Cable At Front Body Wiring Harness
Courtesy of GENERAL MOTORS CORP.

21. Release the front body wiring harness retainers from the lock pillar and the floor panel support.
22. Release the front body wiring harness from the body retainers.
23. Carefully remove the tape securing the power antenna coaxial extension cable to the front body wiring harness.

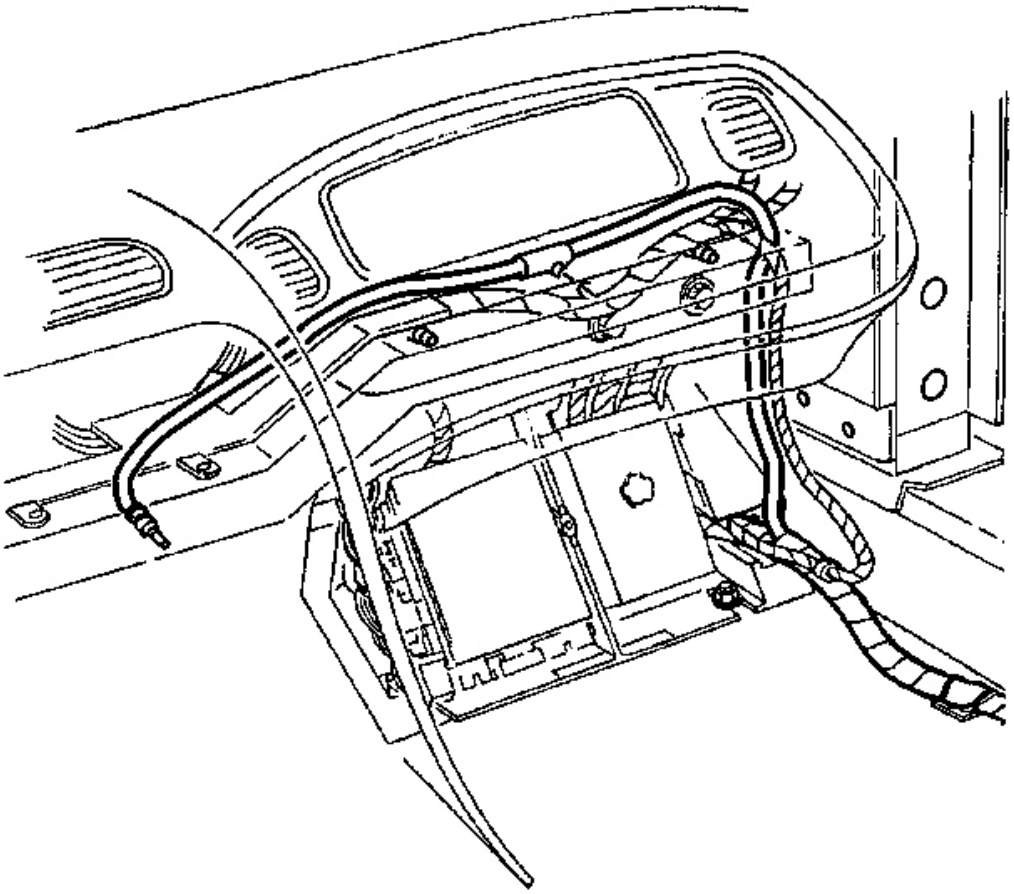

Fig. 80: Power Antenna Coaxial Extension Cable Retainer At IP Lower Support Beam
Courtesy of GENERAL MOTORS CORP.

24. Remove the IP right lower insulator panel. Refer to **Closeout/Insulator Panel Replacement - Right** in Instrument Panel, Gages and Console.
25. Release the power antenna coaxial extension cable retainer from the IP lower support beam.

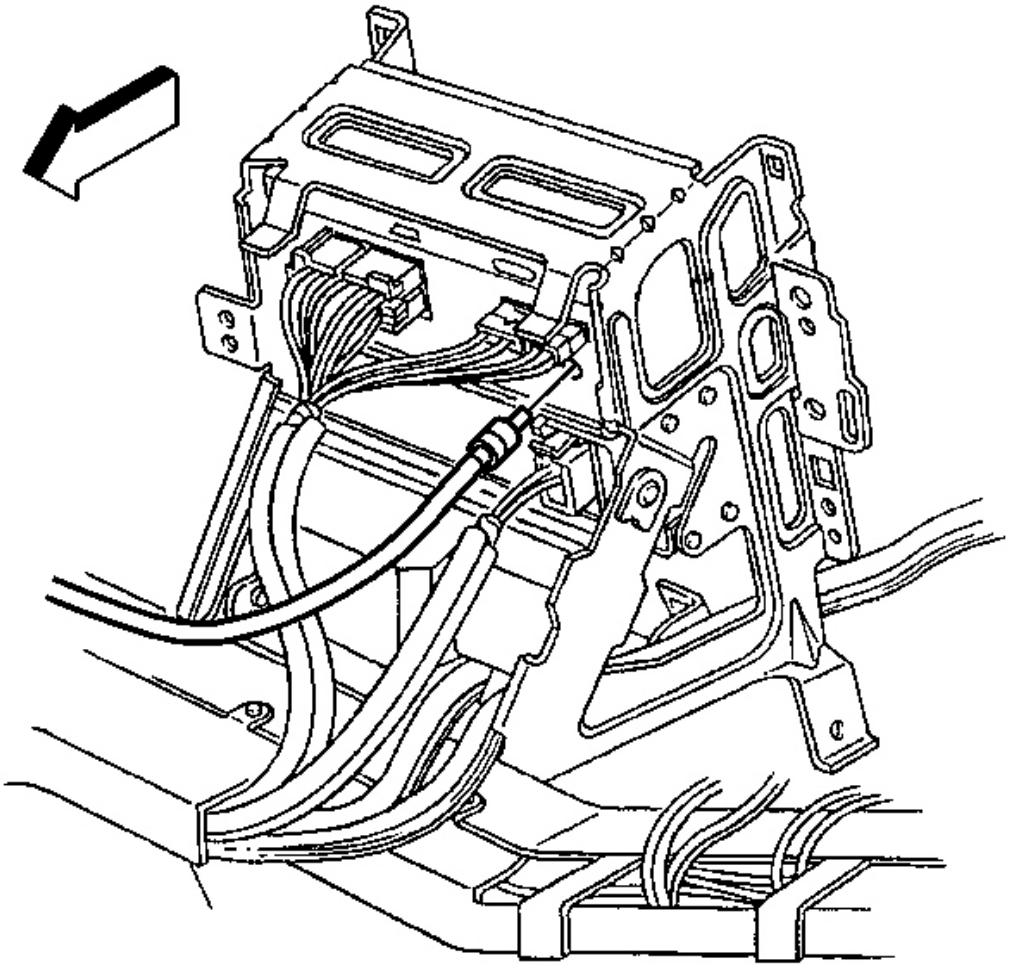

Fig. 81: Power Antenna Coaxial Extension Cable At Radio Control
Courtesy of GENERAL MOTORS CORP.

26. Remove the radio control. Refer to **Radio Replacement** .
27. Remove the power antenna coaxial extension cable.

Installation Procedure

1. Position the power antenna coaxial extension cable to the vehicle.

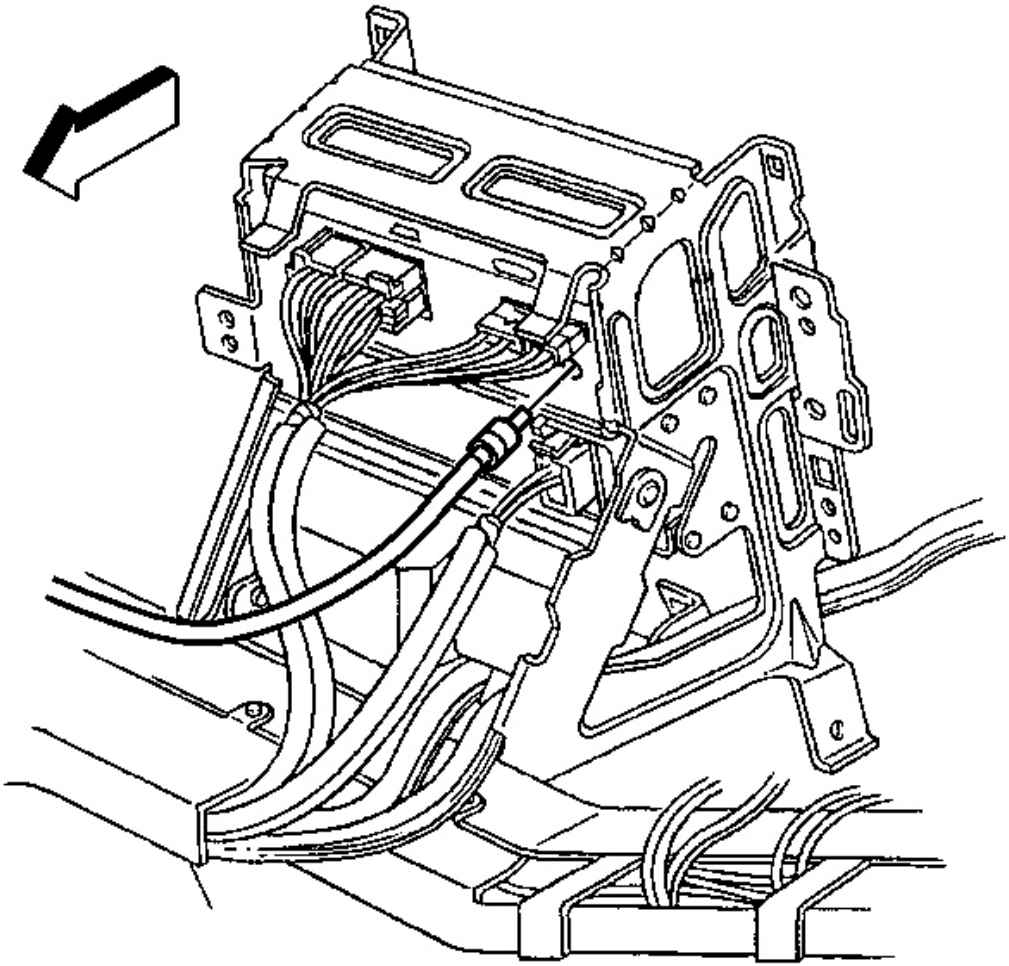

Fig. 82: Power Antenna Coaxial Extension Cable At Radio Control
Courtesy of GENERAL MOTORS CORP.

2. Install the radio control. Refer to **Radio Replacement** .

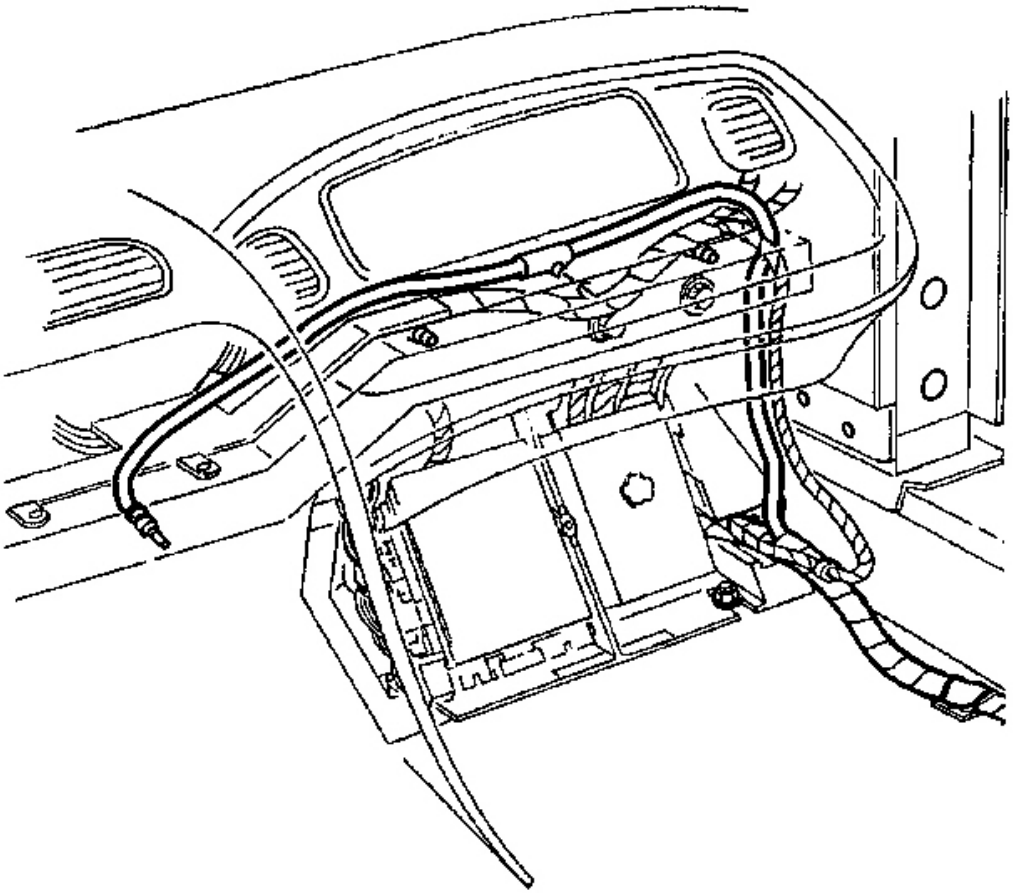

Fig. 83: Power Antenna Coaxial Extension Cable Retainer At IP Lower Support Beam
Courtesy of GENERAL MOTORS CORP.

3. Secure the power antenna coaxial extension cable retainer to the IP lower support beam.
4. Install the /P right lower insulator panel. Refer to **Closeout/Insulator Panel Replacement - Right** in Instrument Panel, Gages and Console.

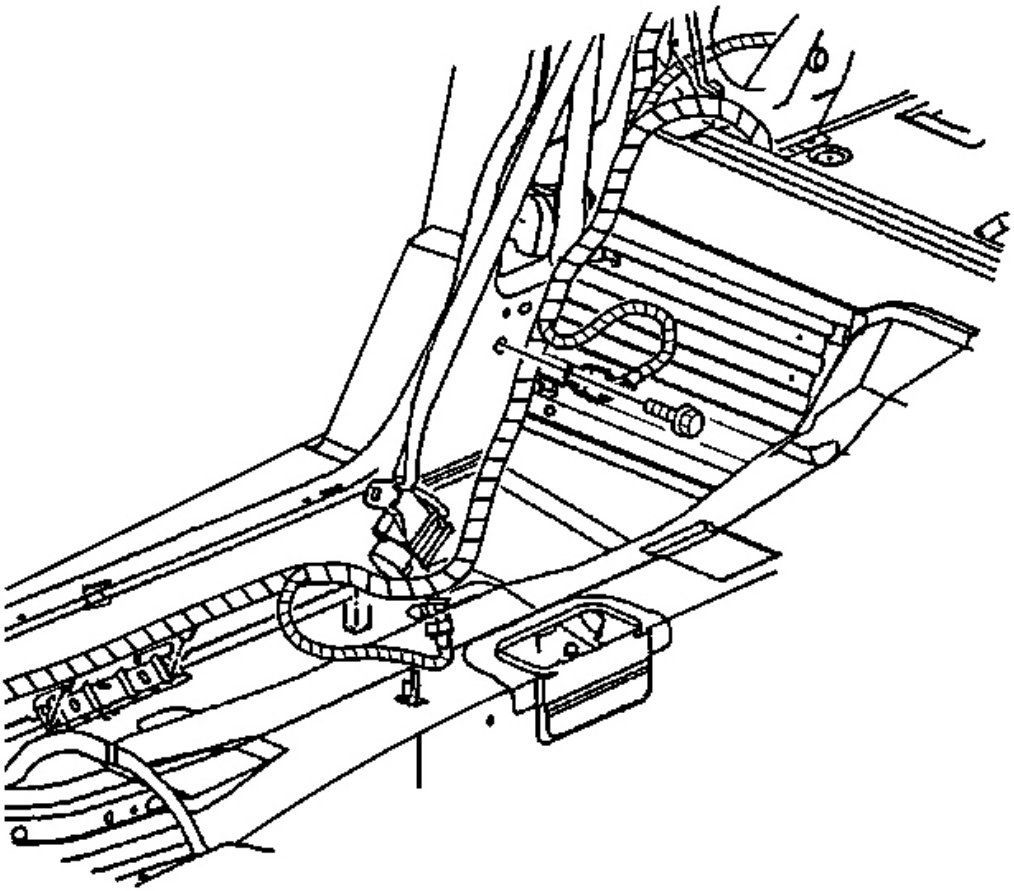

Fig. 84: Power Antenna Coaxial Extension Cable At Front Body Wiring Harness
Courtesy of GENERAL MOTORS CORP.

5. Using tape, secure the power antenna coaxial extension cable to the front body wiring harness.
6. Secure the front body wiring harness to the body retainers.
7. Secure the front body wiring harness retainers to the lock pillar and the floor panel support.

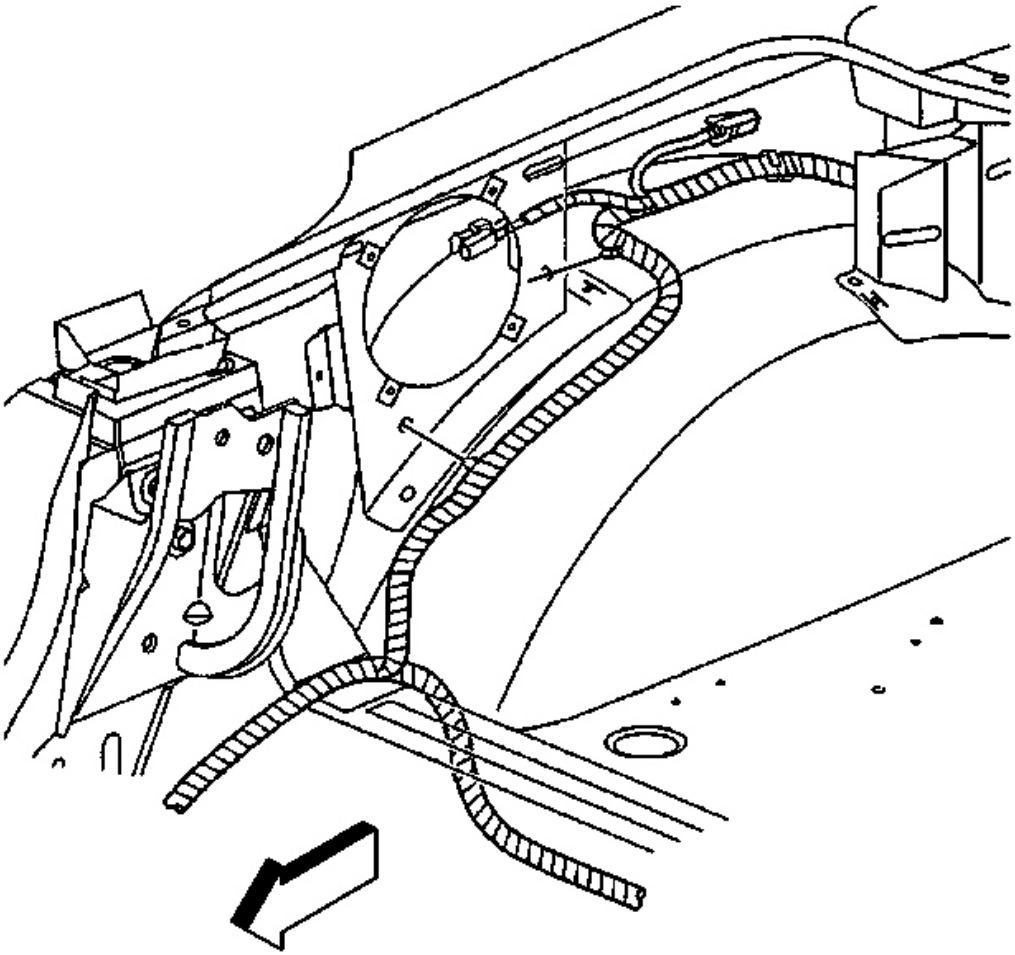

Fig. 85: Front Body Wiring Harness Retainers At Rear Speaker Housing
Courtesy of GENERAL MOTORS CORP.

8. Install the right lock pillar lower trim panel. Refer to **Trim Replacement - Lock Pillar (Upper Convertible)** or **Trim Replacement - Lock Pillar (Coupe)** or **Trim Replacement - Lock Pillar (Lower Convertible and Hard Top)** in Interior Trim.
9. Install the right door sill plate. Refer to **Door Sill Plate Replacement** in Interior Trim.
10. Position the front body wiring harness to the rear of the vehicle.
11. Secure the front body wiring harness retainers to the rear speaker housing.
12. Install the right lock pillar upper trim panel. Refer to **Trim Replacement - Lock Pillar (Upper Convertible)** or **Trim Replacement - Lock Pillar (Coupe)** or **Trim Replacement - Lock Pillar (Lower Convertible and Hard Top)** in Interior Trim.

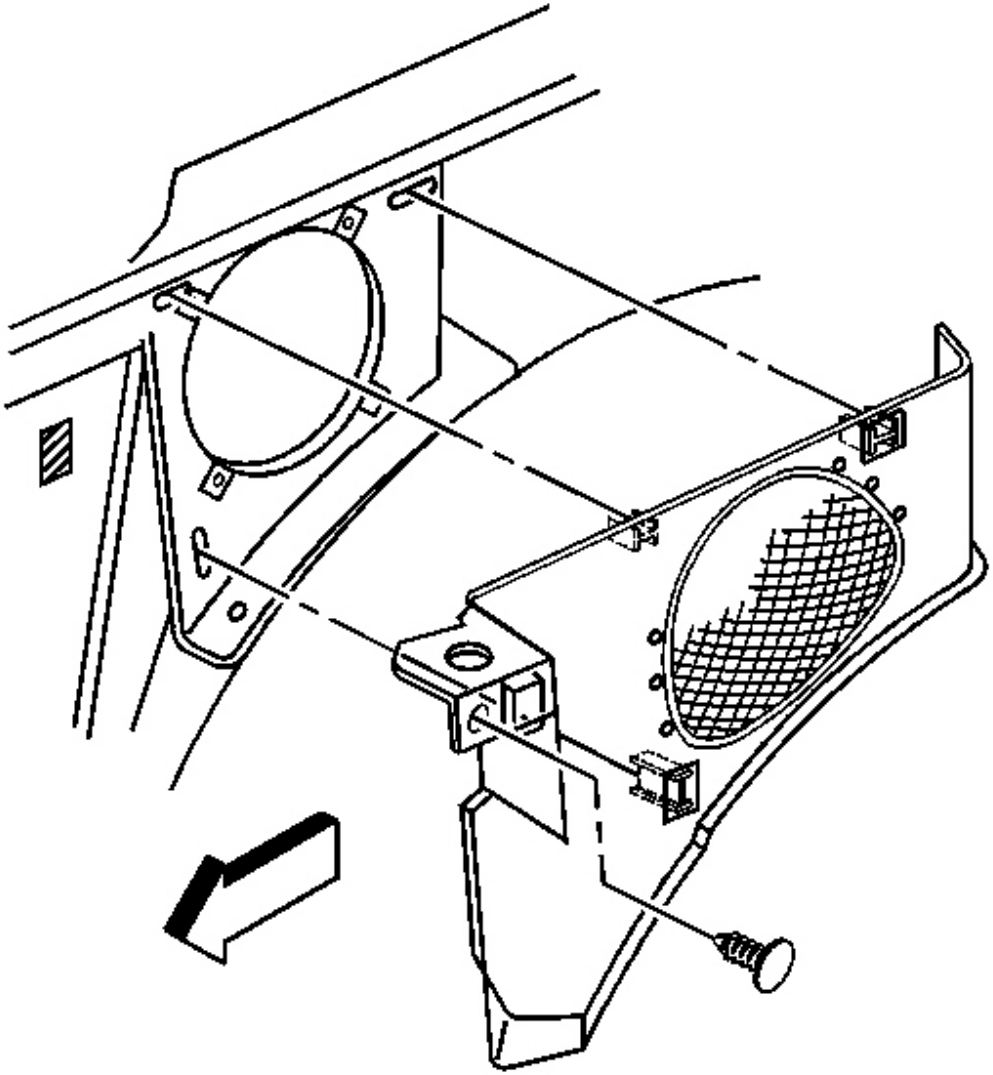

Fig. 86: Rear Compartment Right Side Trim Panel
Courtesy of GENERAL MOTORS CORP.

13. Install the rear compartment right side trim panel.
14. Install the push -in fastener to the rear compartment right side trim panel.
15. Lower the folding top stowage compartment lid.
16. Raise the convertible top.

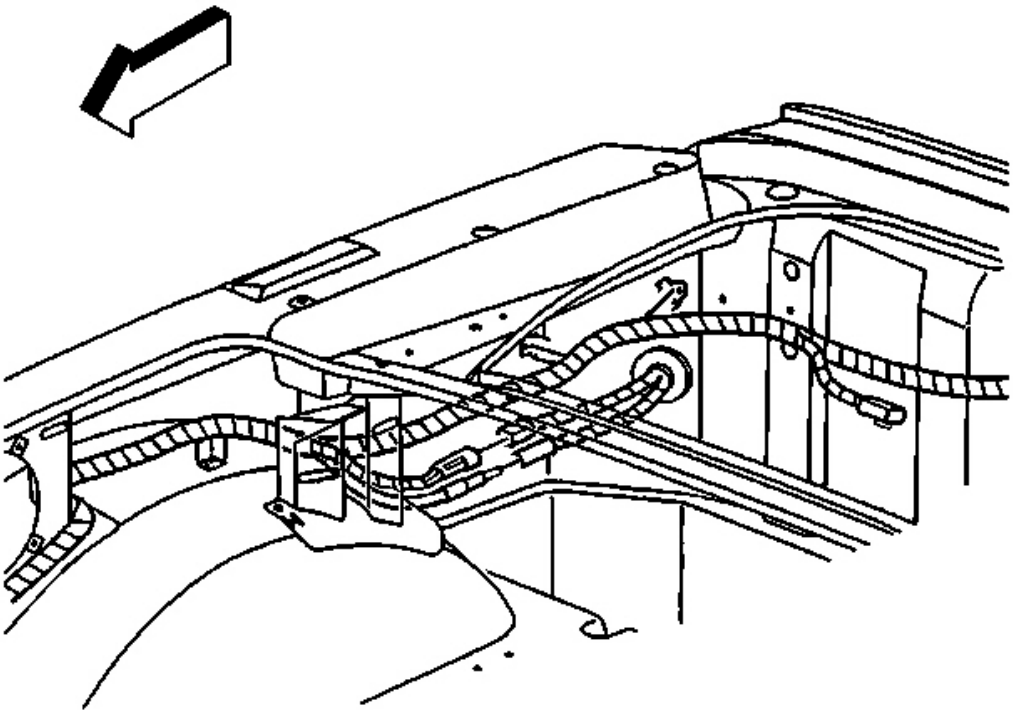

Fig. 87: Antenna Electrical Connector At Front Body Wiring Harness Connector
Courtesy of GENERAL MOTORS CORP.

17. Open the rear compartment lid.
18. Secure the front body wiring harness to the retaining clip on the rear compartment side wall.
19. Connect the antenna electrical connector to the front body wiring harness connector.
20. Connect the power antenna coaxial cable to the power antenna coaxial extension cable.
21. Install the edge of the rear compartment floor carpet behind the right decklid support.

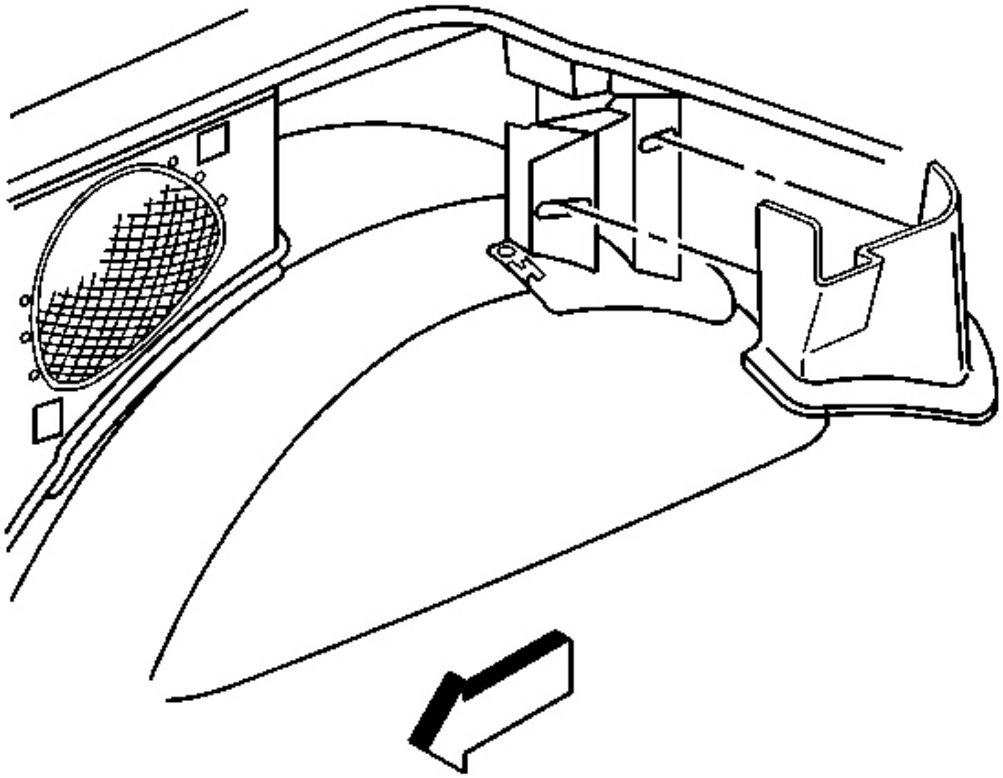

Fig. 88: RH Decklid Support Trim Panel
Courtesy of GENERAL MOTORS CORP.

22. Install the right decklid support trim panel.

    Align the panel, then push to secure the retaining clips.

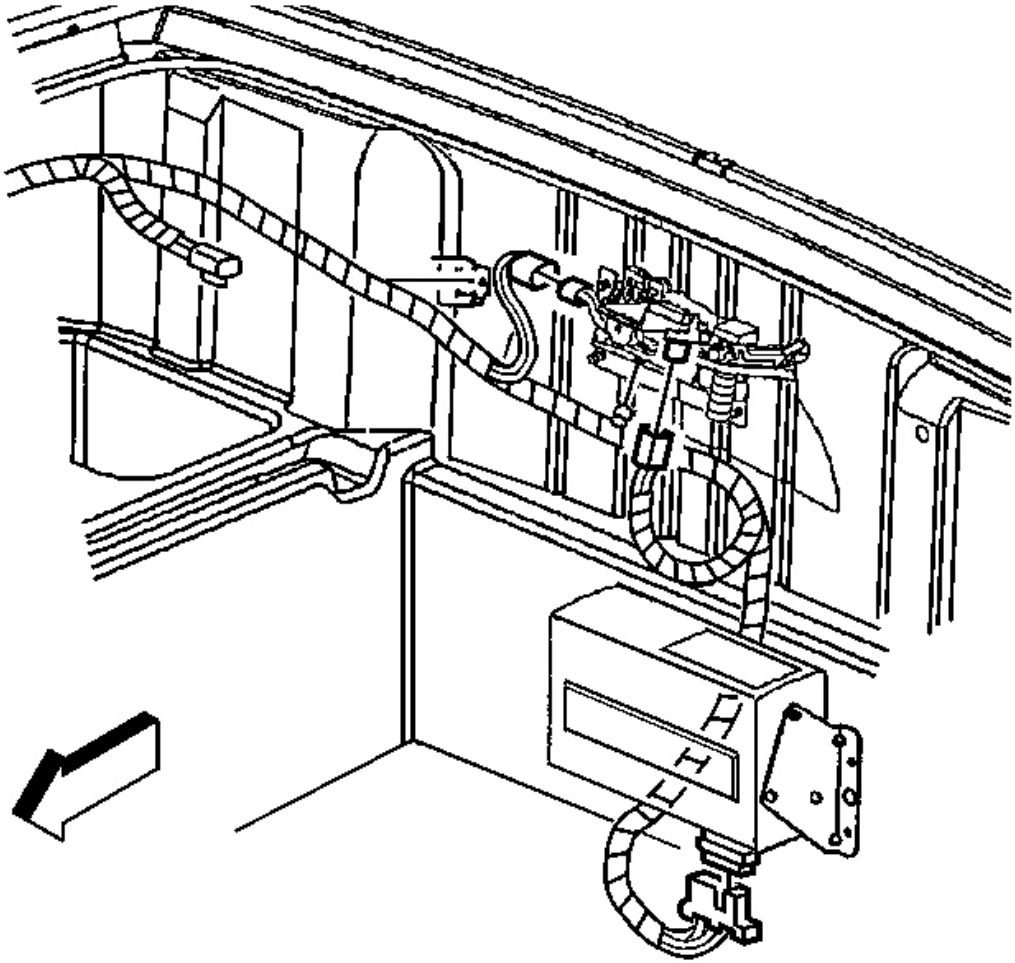

Fig. 89: Front Body Wiring Harness Connectors At Decklid Latch And Remote CD Changer
Courtesy of GENERAL MOTORS CORP.

23. Connect the front body wiring harness connectors to the decklid latch and the remote CD changer, if equipped.
24. Install the center carpet section into position.
25. Install the decklid latch carpet trim panel.
26. Install the RR end/corner carpet trim panel. Refer to **Trim Panel Carpet Replacement - Rear Corner (Coupe)** or **Trim Panel Carpet Replacement - Rear Corner (Convertible)** or **Trim Panel Carpet Replacement - Rear Corner (Hardtop)** in Interior Trim.
27. Close the rear compartment lid.

ANTENNA EXTENSION CABLE REPLACEMENT (HARDTOP)

Removal Procedure

1. Open the rear compartment lid.
2. Remove the right decklid support trim panel.

   Pull to release the retaining clips.

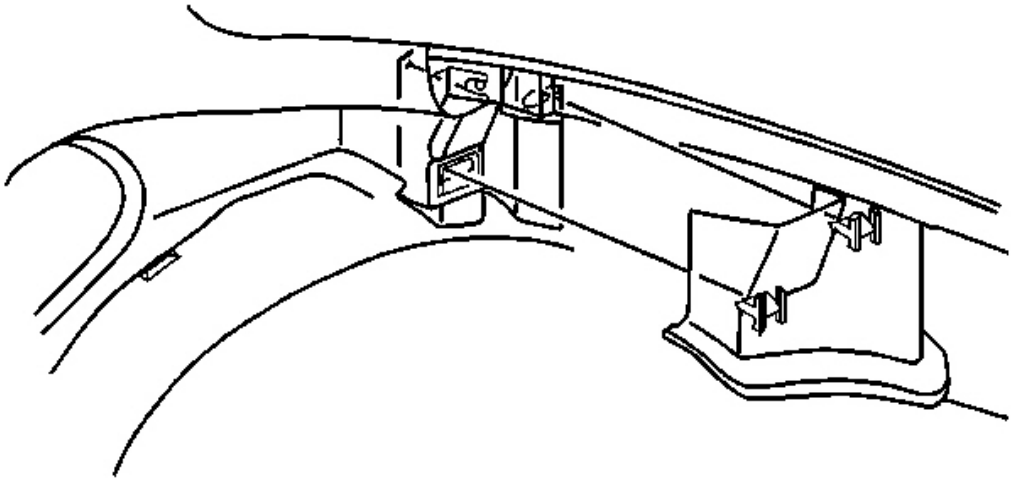

Fig. 90: Right Deck Lid Support Trim Panel
Courtesy of GENERAL MOTORS CORP.

3. Pull back the edge of the rear compartment floor carpet from behind the right decklid support, then reposition the right side of the carpet.

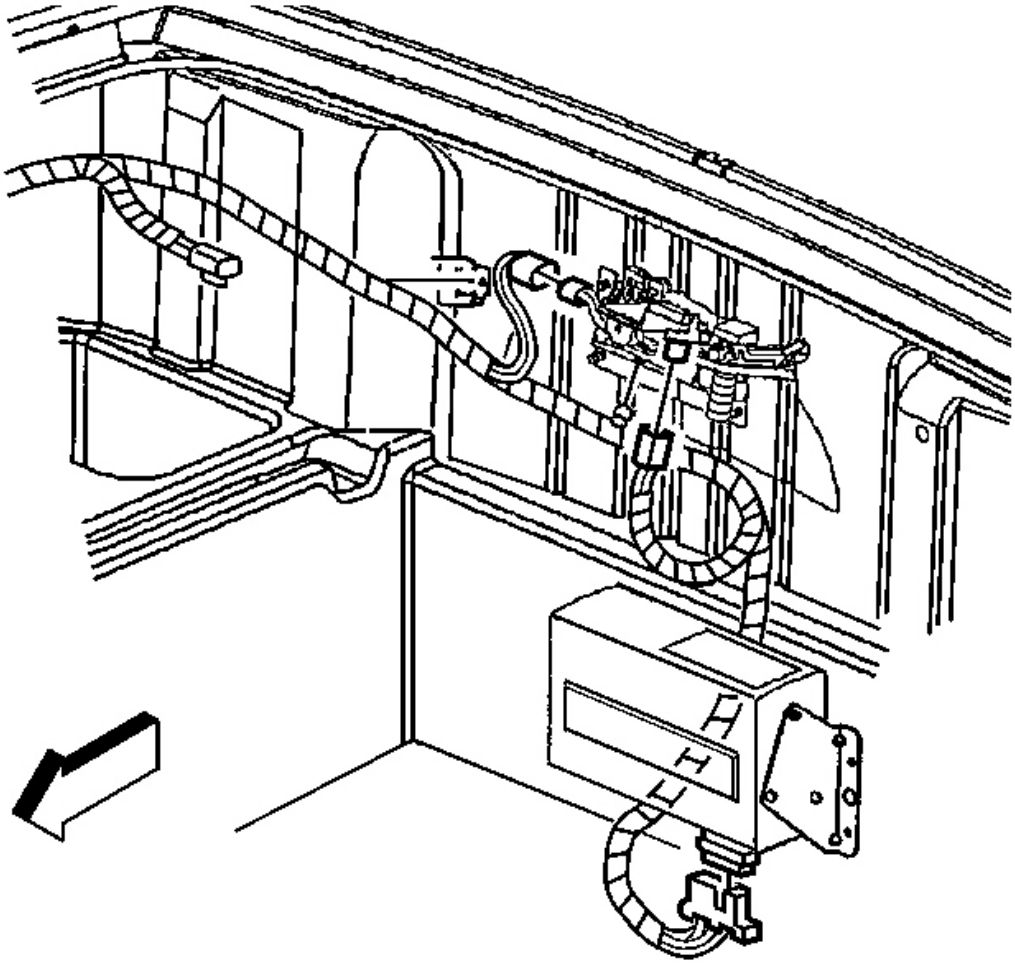

Fig. 91: Front Body Wiring Harness Connectors At Decklid Latch And Remote CD Changer
Courtesy of GENERAL MOTORS CORP.

4. Remove the rear carpet trim panel. Refer to **Trim Panel Carpet - Rear Compartment Rear Center (Convertible)** or **Trim Panel Carpet - Rear Compartment Rear Center (Coupe)** or **Trim Panel Carpet - Rear Compartment Rear Center (Hardtop)** in Interior Trim.
5. Disconnect the front body wiring harness connectors from the decklid latch and the remote CD changer, if equipped.

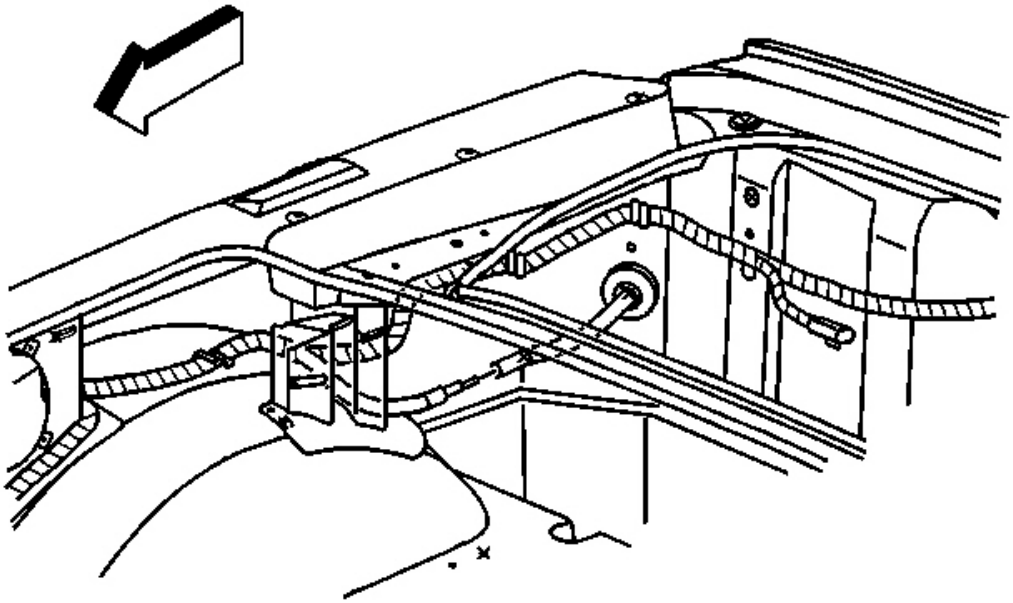

Fig. 92: Front Body Wiring Harness At Rear Compartment Side Wall
Courtesy of GENERAL MOTORS CORP.

6. Disconnect the fixed antenna coaxial cable from the fixed antenna coaxial extension cable.
7. Release the front body wiring harness from the retaining clip on the rear compartment side wall.

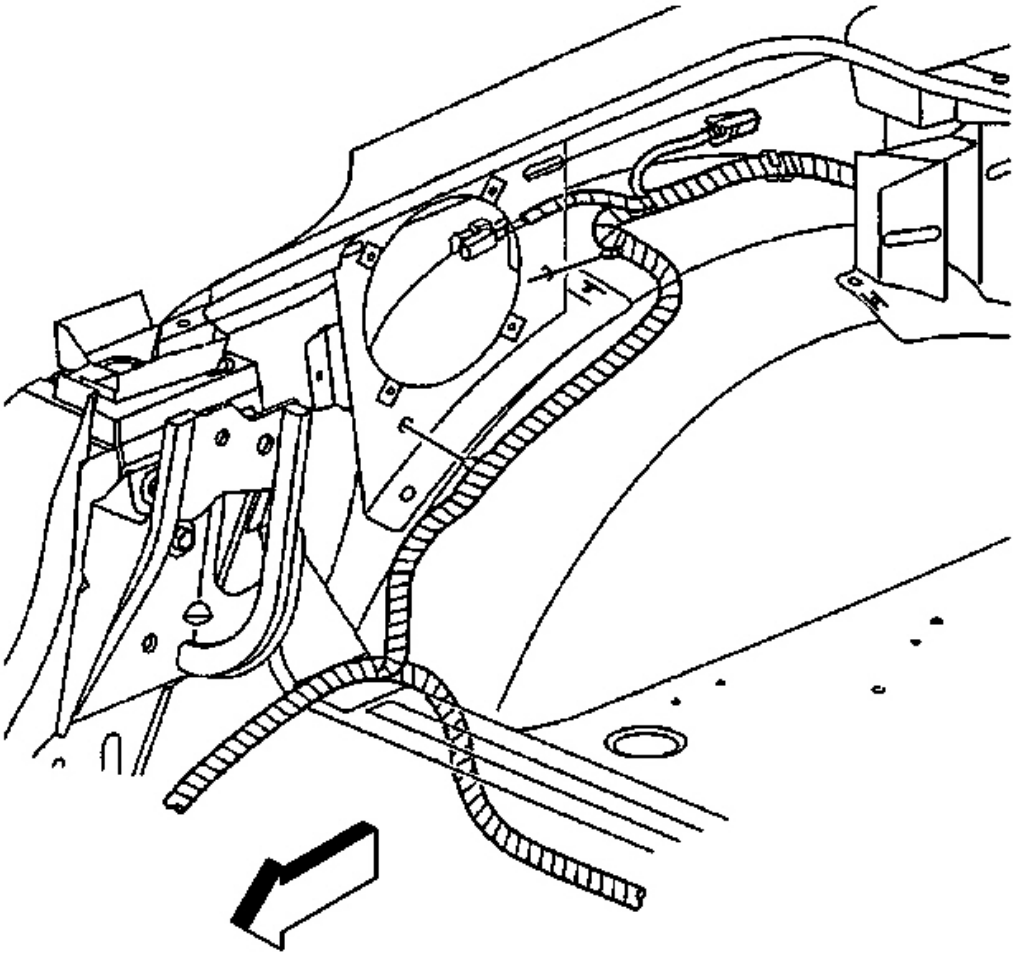

Fig. 93: Front Body Wiring Harness Retainers At Rear Speaker Housing
Courtesy of GENERAL MOTORS CORP.

8. Remove the rear compartment right side trim panel. Refer to **Trim Panel Replacement - Rear Compartment Front Side (Convertible)** or **Trim Panel Replacement - Rear Compartment Front Side (Hardtop)** or **Trim Panel Replacement - Rear Compartment Front Side (Coupe)** in Interior Trim.
9. Release the front body wiring harness retainers from the rear speaker housing.
10. Pull the front body wiring harness from the rear of the vehicle.
11. Remove the right door sill plate. Refer to **Door Sill Plate Replacement** in Interior Trim.
12. Remove the right lock pillar trim panel. Refer to **Trim Replacement - Lock Pillar (Upper Convertible)** or **Trim Replacement - Lock Pillar (Coupe)** or **Trim Replacement - Lock Pillar (Lower Convertible and Hard Top)** in Interior Trim.

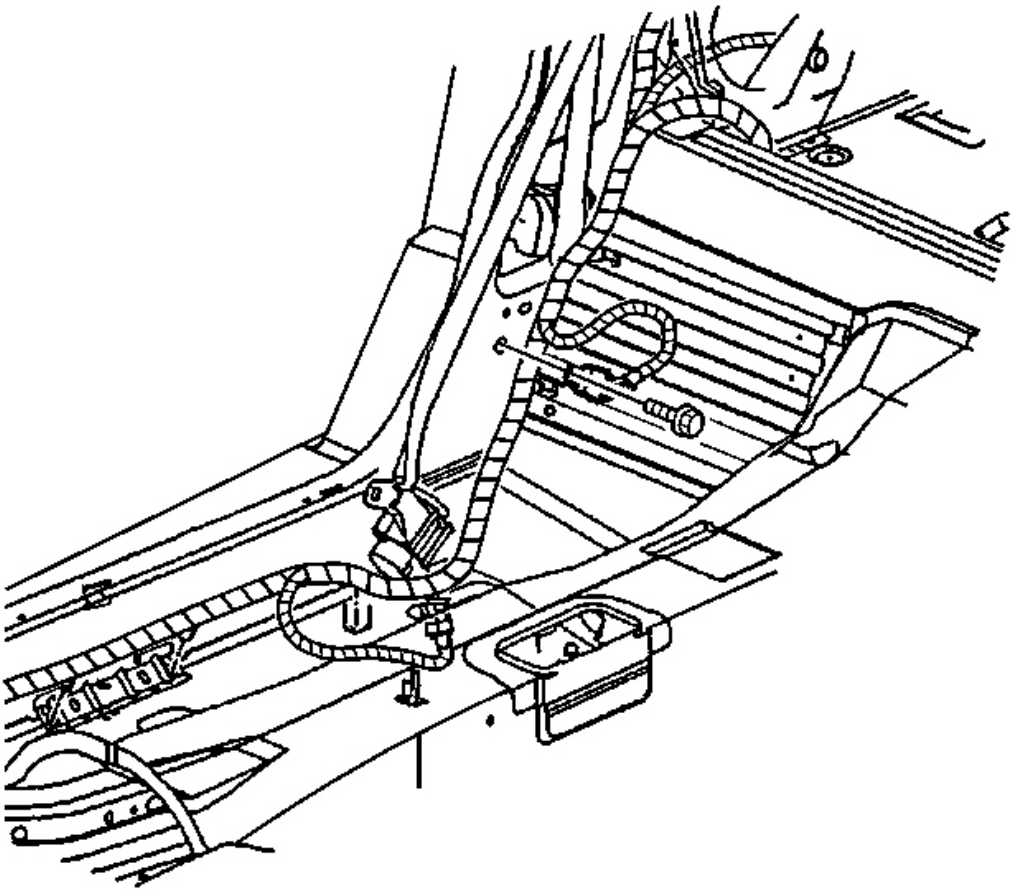

Fig. 94: Power Antenna Coaxial Extension Cable At Front Body Wiring Harness
Courtesy of GENERAL MOTORS CORP.

13. Release the front body wiring harness retainers from the lock pillar and the floor panel support.
14. Release the front body wiring harness from the body retainers.
15. Carefully remove the tape securing the fixed antenna coaxial extension cable to the front body wiring harness.

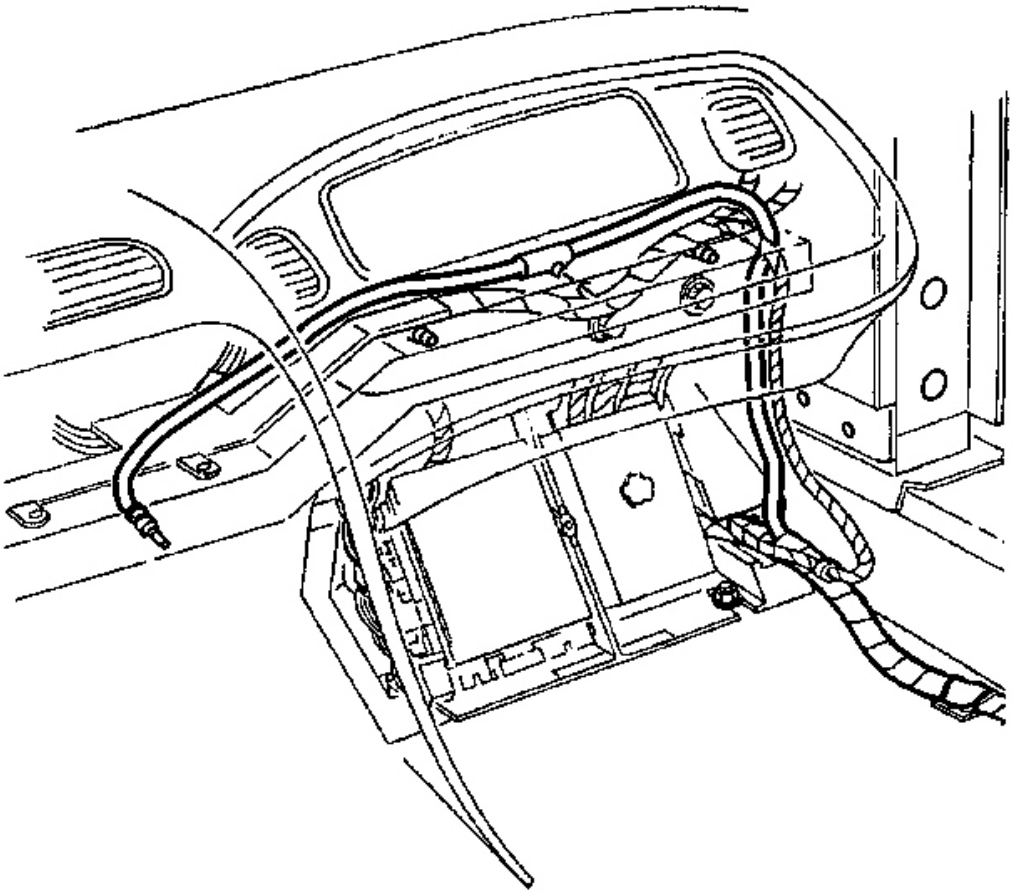

Fig. 95: Power Antenna Coaxial Extension Cable Retainer At IP Lower Support Beam
Courtesy of GENERAL MOTORS CORP.

16. Remove the IP right lower insulator panel. Refer to **Closeout/Insulator Panel Replacement - Right** in Instrument Panel, Gages and Console.
17. Release the fixed antenna coaxial extension cable retainer from the IP lower support beam.

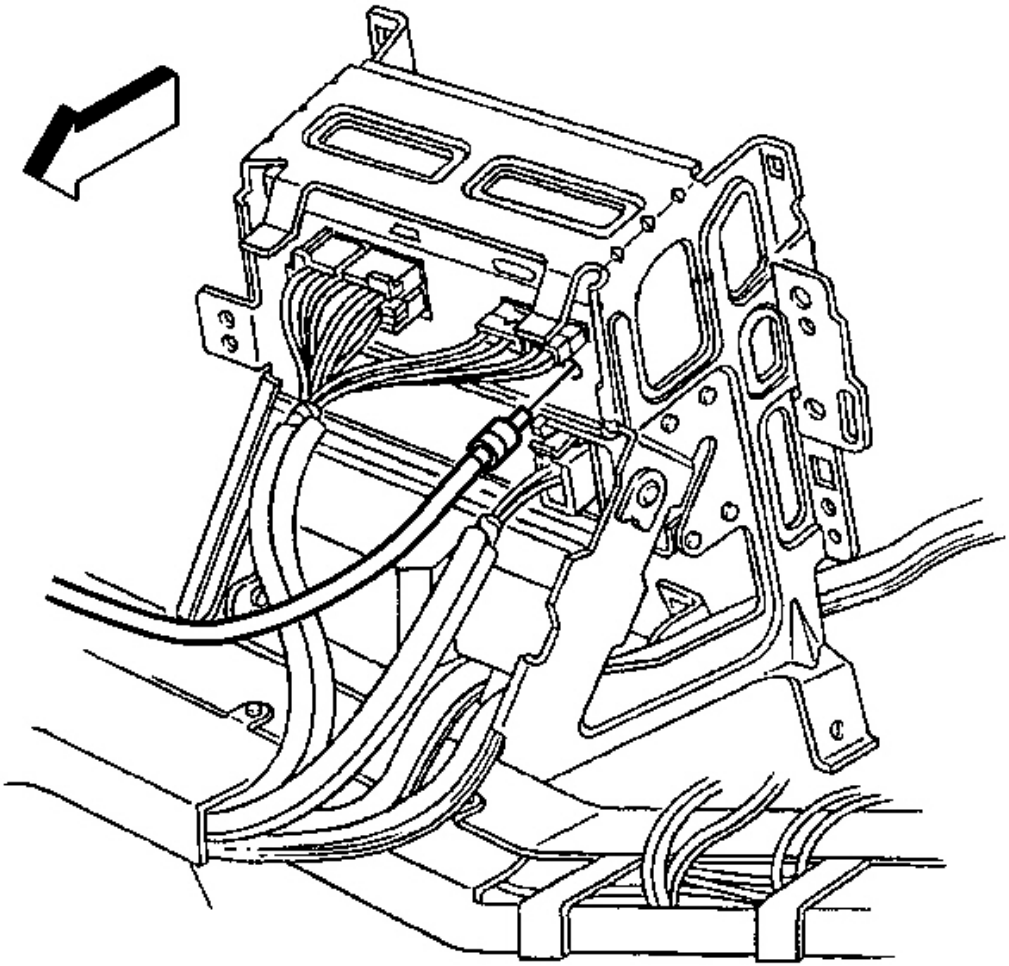

Fig. 96: Power Antenna Coaxial Extension Cable At Radio Control
Courtesy of GENERAL MOTORS CORP.

18. Remove the radio control. Refer to **Radio Replacement** .
19. Remove the fixed antenna coaxial extension cable.

Installation Procedure

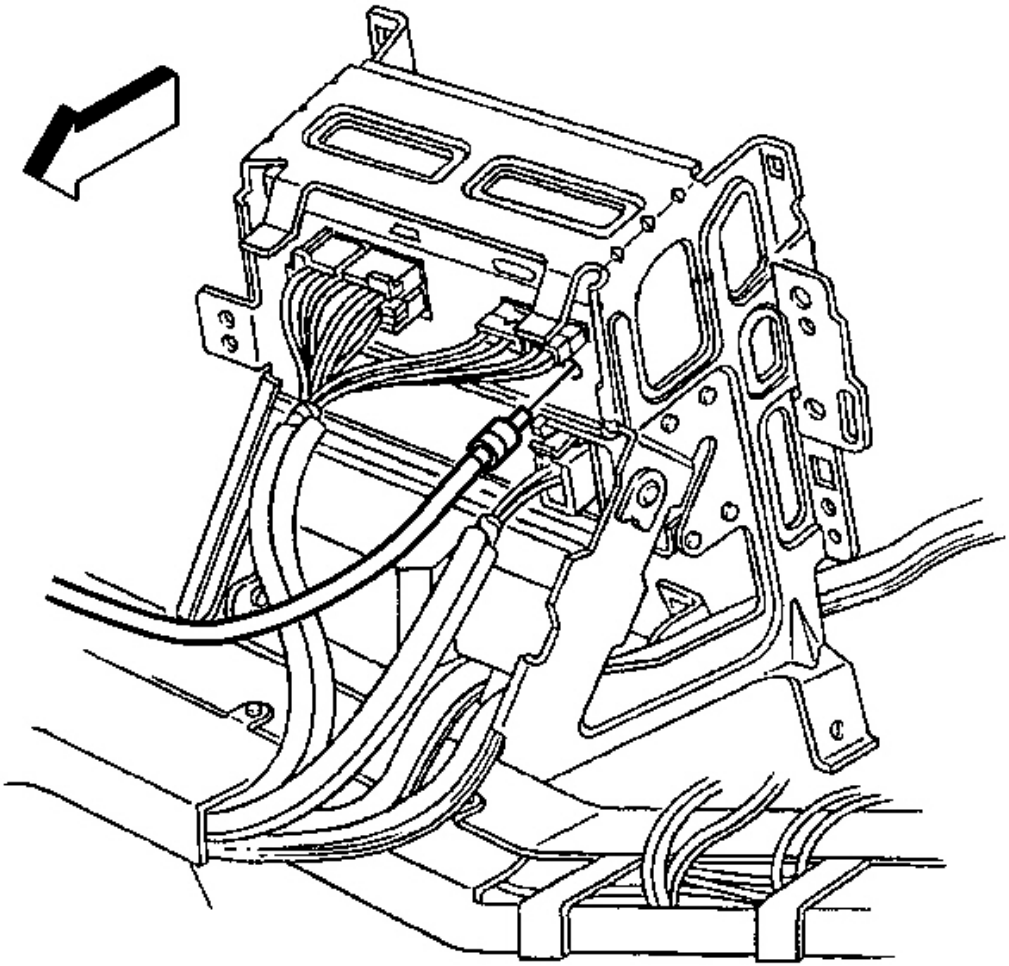

Fig. 97: Power Antenna Coaxial Extension Cable At Radio Control
Courtesy of GENERAL MOTORS CORP.

1. Position the fixed antenna coaxial extension cable to the vehicle.
2. Install the radio control. Refer to **Radio Replacement** .

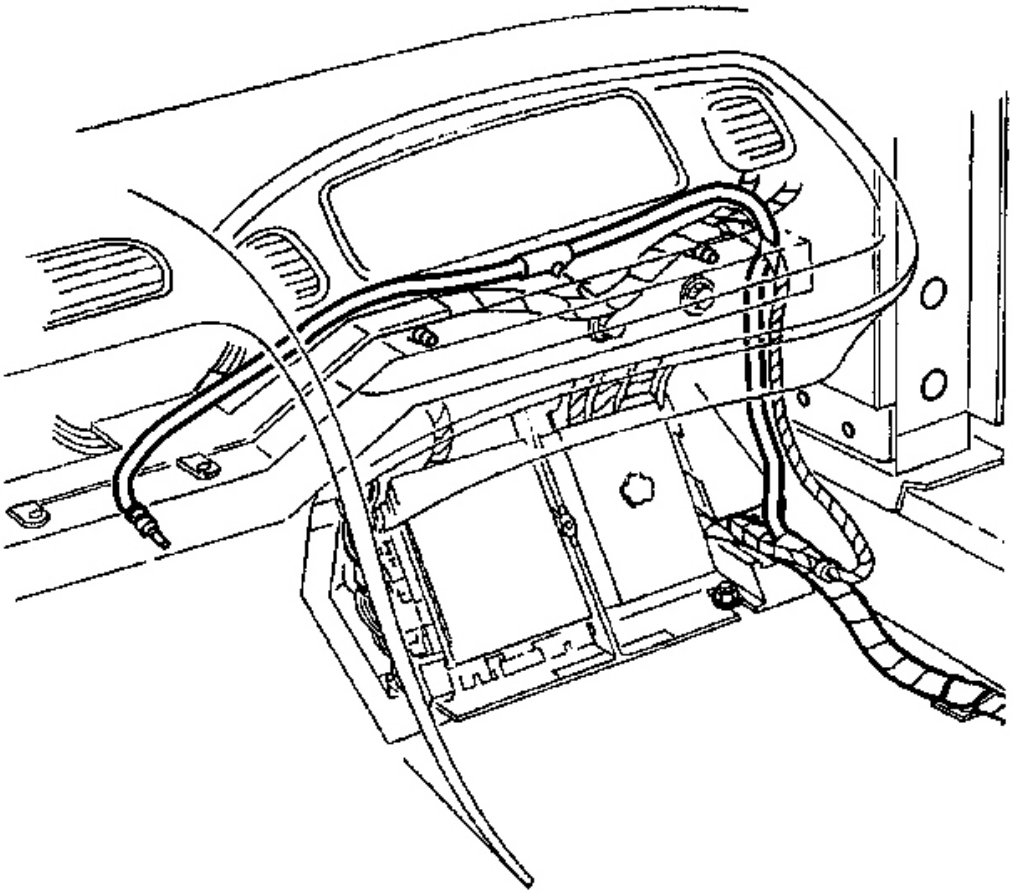

Fig. 98: Power Antenna Coaxial Extension Cable Retainer At IP Lower Support Beam
Courtesy of GENERAL MOTORS CORP.

3. Secure the fixed antenna coaxial extension cable retainer to the IP lower support beam.
4. Install the IP right lower insulator panel. Refer to **Closeout/Insulator Panel Replacement - Right** in Instrument Panel, Gages and Console.

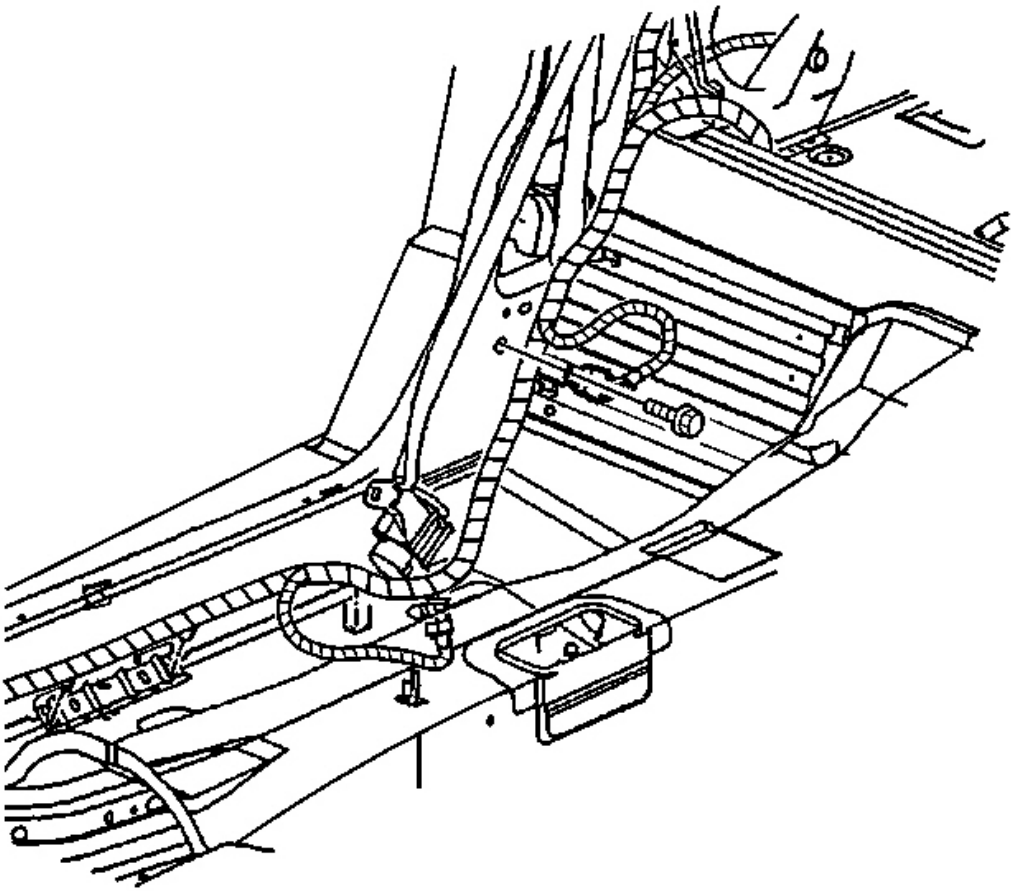

Fig. 99: Power Antenna Coaxial Extension Cable At Front Body Wiring Harness
Courtesy of GENERAL MOTORS CORP.

5. Using tape, secure the fixed antenna coaxial extension cable to the front body wiring harness.
6. Secure the front body wiring harness to the body retainers.
7. Secure the front body wiring harness retainers to the lock pillar and the floor panel support.

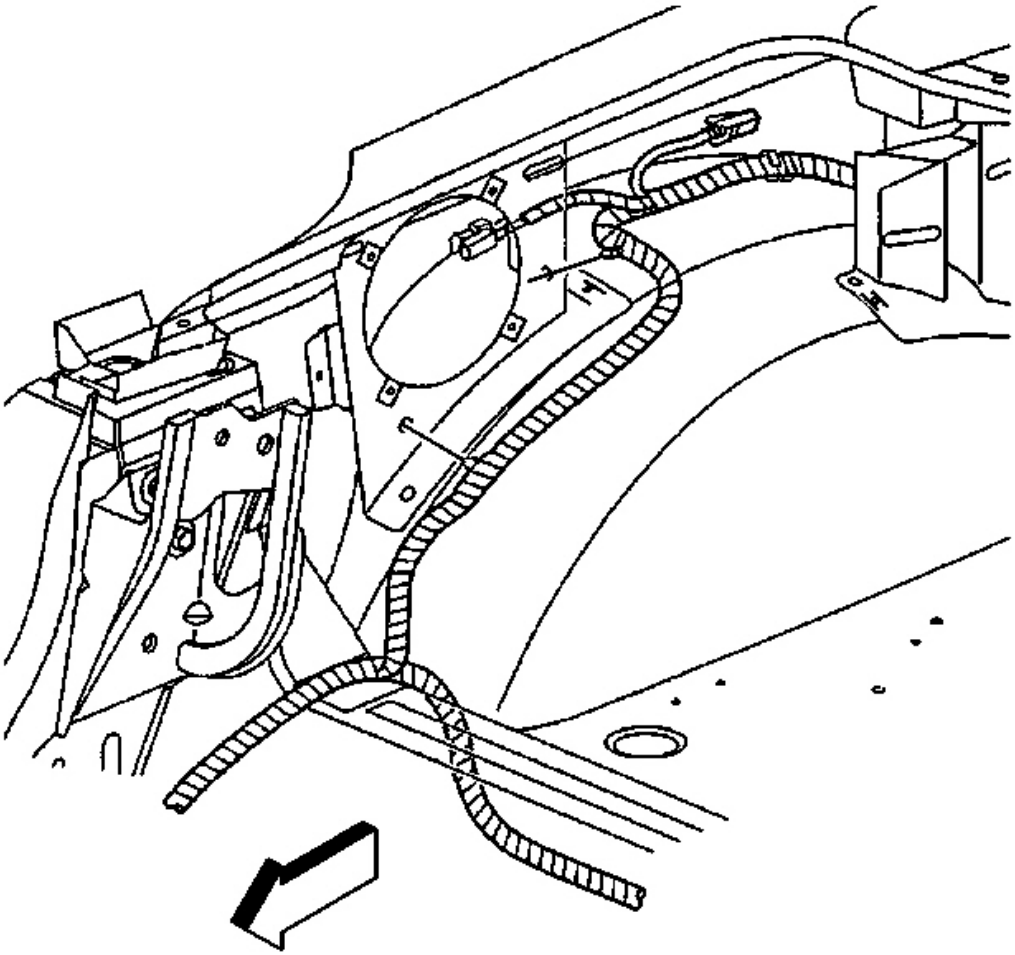

Fig. 100: Front Body Wiring Harness Retainers At Rear Speaker Housing
Courtesy of GENERAL MOTORS CORP.

8. Install the right lock pillar trim panel. Refer to **Trim Replacement - Lock Pillar (Upper Convertible)** or **Trim Replacement - Lock Pillar (Coupe)** or **Trim Replacement - Lock Pillar (Lower Convertible and Hard Top)** in Interior Trim.
9. Install the right door sill plate. Refer to **Door Sill Plate Replacement** in Interior Trim.
10. Position the front body wiring harness to the rear of the vehicle.
11. Secure the front body wiring harness retainers to the rear speaker housing.
12. Install the rear compartment right side trim panel. Refer to **Trim Panel Replacement - Rear Compartment Front Side (Convertible)** or **Trim Panel Replacement - Rear Compartment Front Side (Hardtop)** or **Trim Panel Replacement - Rear Compartment Front Side (Coupe)** in Interior Trim.

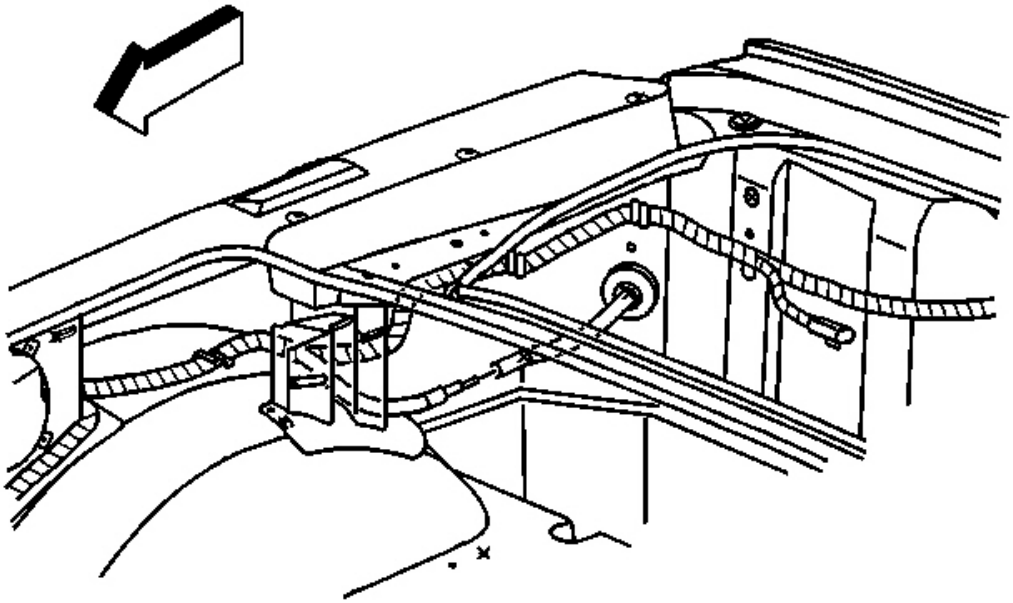

Fig. 101: Front Body Wiring Harness At Rear Compartment Side Wall
Courtesy of GENERAL MOTORS CORP.

13. Secure the front body wiring harness to the retaining clip on the rear compartment side wall.
14. Connect the fixed antenna coaxial cable to the fixed antenna coaxial extension cable.

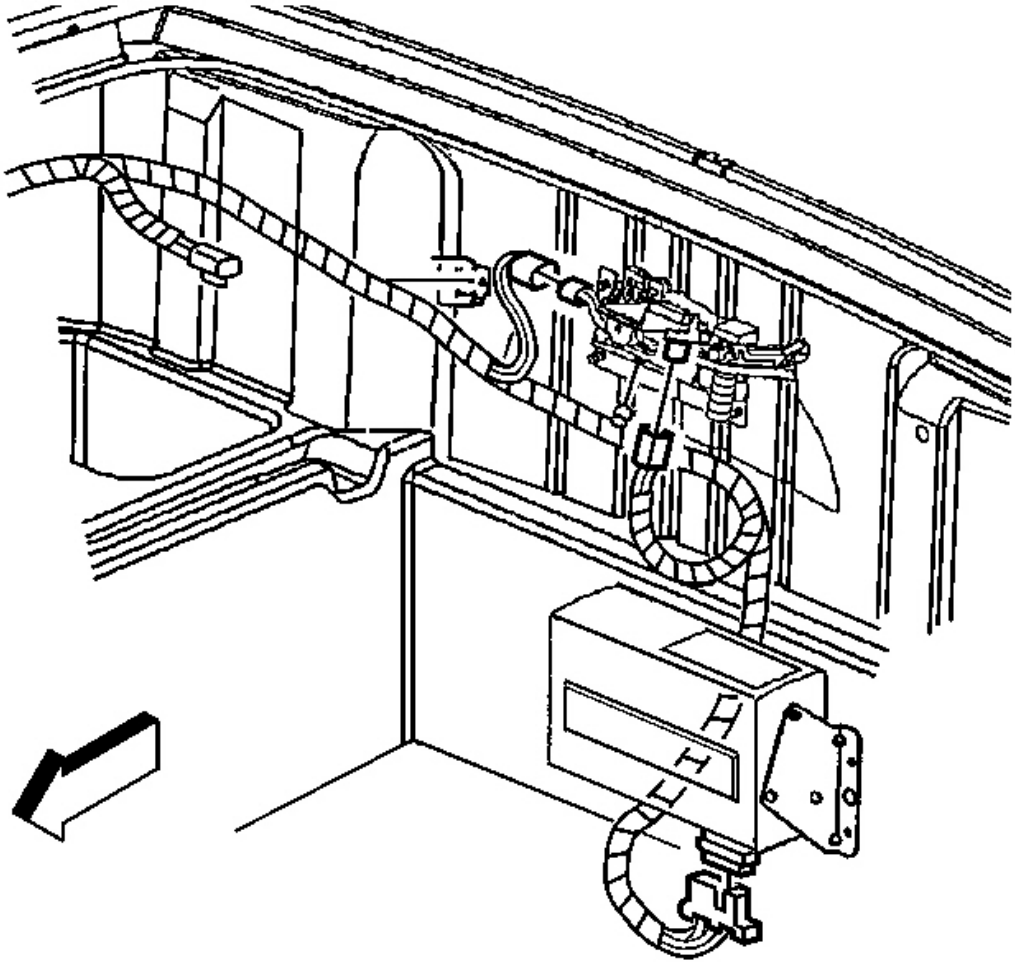

Fig. 102: Front Body Wiring Harness Connectors At Decklid Latch And Remote CD Changer
Courtesy of GENERAL MOTORS CORP.

15. Connect the front body wiring harness connectors to the decklid latch and the remote CD changer, if equipped.
16. Install the rear carpet trim panel. Refer to **Trim Panel Carpet - Rear Compartment Rear Center (Convertible)** or **Trim Panel Carpet - Rear Compartment Rear Center (Coupe)** or **Trim Panel Carpet - Rear Compartment Rear Center (Hardtop)** in Interior Trim.

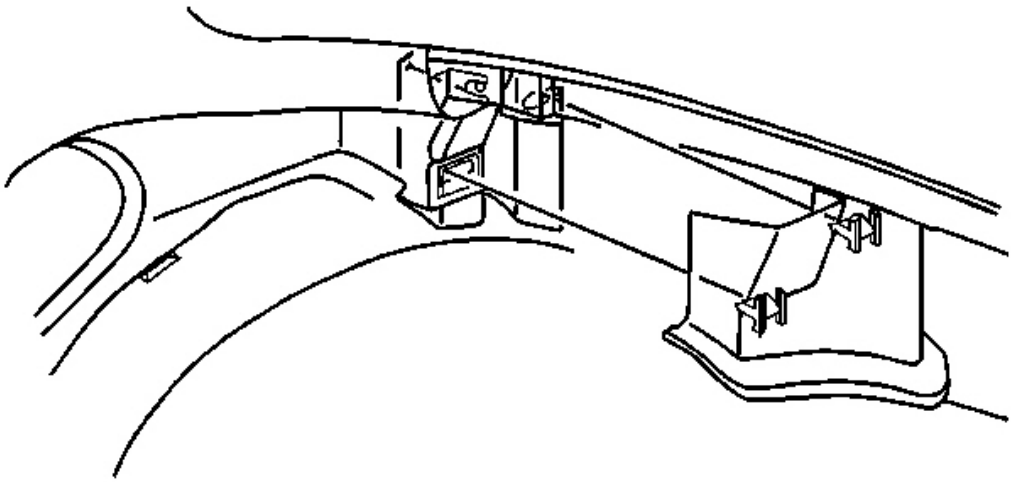

Fig. 103: Right Deck Lid Support Trim Panel
Courtesy of GENERAL MOTORS CORP.

17. Install the edge of the rear compartment floor carpet behind the right decklid support.
18. Install the right decklid support trim panel.

    Align the panel, then push to secure the retaining clips.

19. Close the rear compartment lid.

ANTENNA CABLE REPLACEMENT (WINDSHIELD)

Removal Procedure

1. Remove the left door sill plate. Refer to **Door Sill Plate Replacement** in Interior Trim.
2. Remove the left lock pillar trim. Refer to **Trim Replacement - Lock Pillar (Upper Convertible)** or **Trim Replacement - Lock Pillar (Coupe)** or **Trim Replacement - Lock Pillar (Lower Convertible and Hard Top)** in Interior Trim.
3. Disconnect the front windshield antenna coaxial cable from the antenna module.

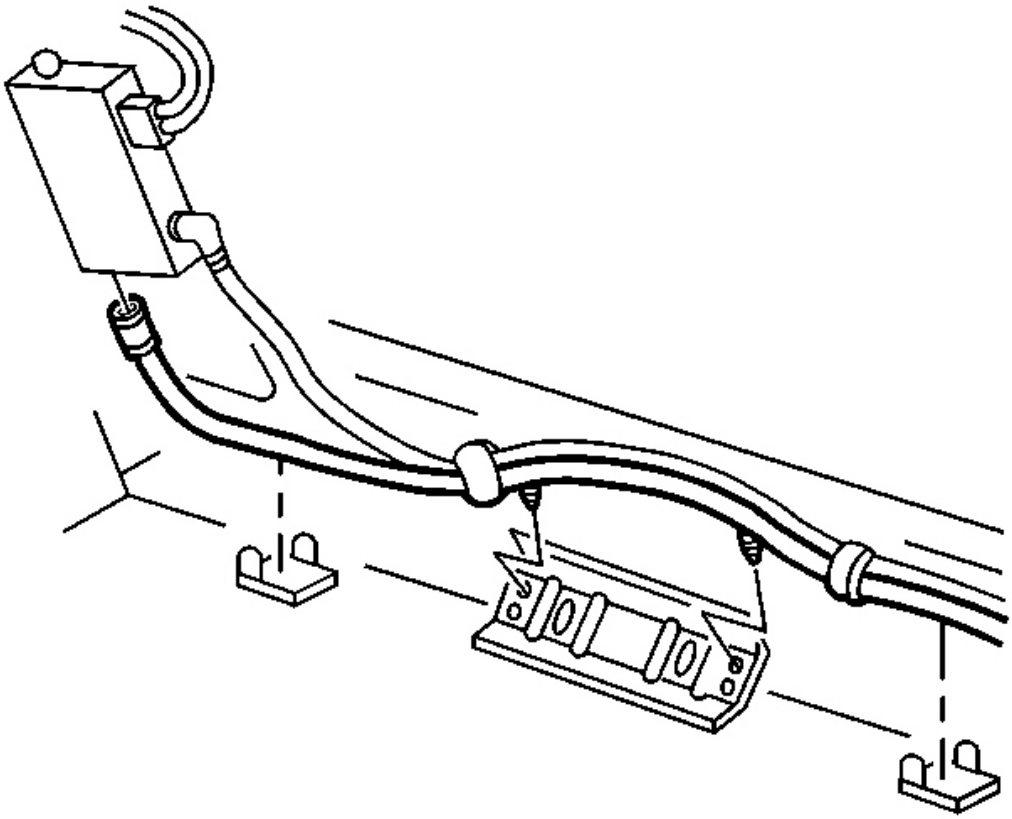

Fig. 104: Front Windshield Antenna Coaxial Cable At Antenna Module
Courtesy of GENERAL MOTORS CORP.

4. Release the IP wiring harness from the body retaining clips.
5. Remove the IP wiring harness push -in retainers from the floor panel support.
6. Separate the front windshield antenna coaxial cable from the radio control coaxial cable and the IP wiring harness.

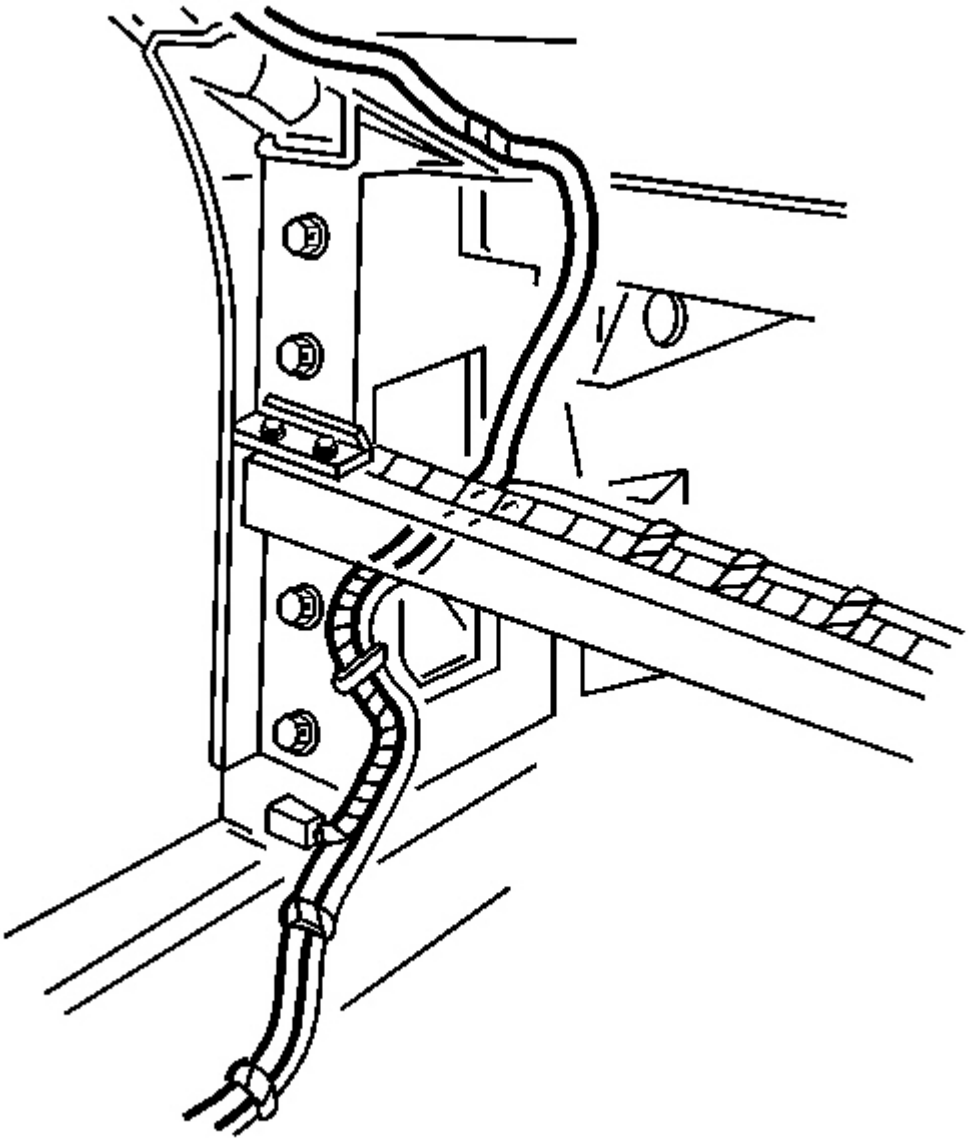

Fig. 105: Coaxial Cable At Insulation Tape Along The Hinge Pillar
Courtesy of GENERAL MOTORS CORP.

7. Remove the IP left lower insulator panel. Refer to **Closeout/Insulator Panel Replacement - Left** in Instrument Panel, Gages and Console.
8. Remove the coaxial cable from the insulation tape along the hinge pillar.

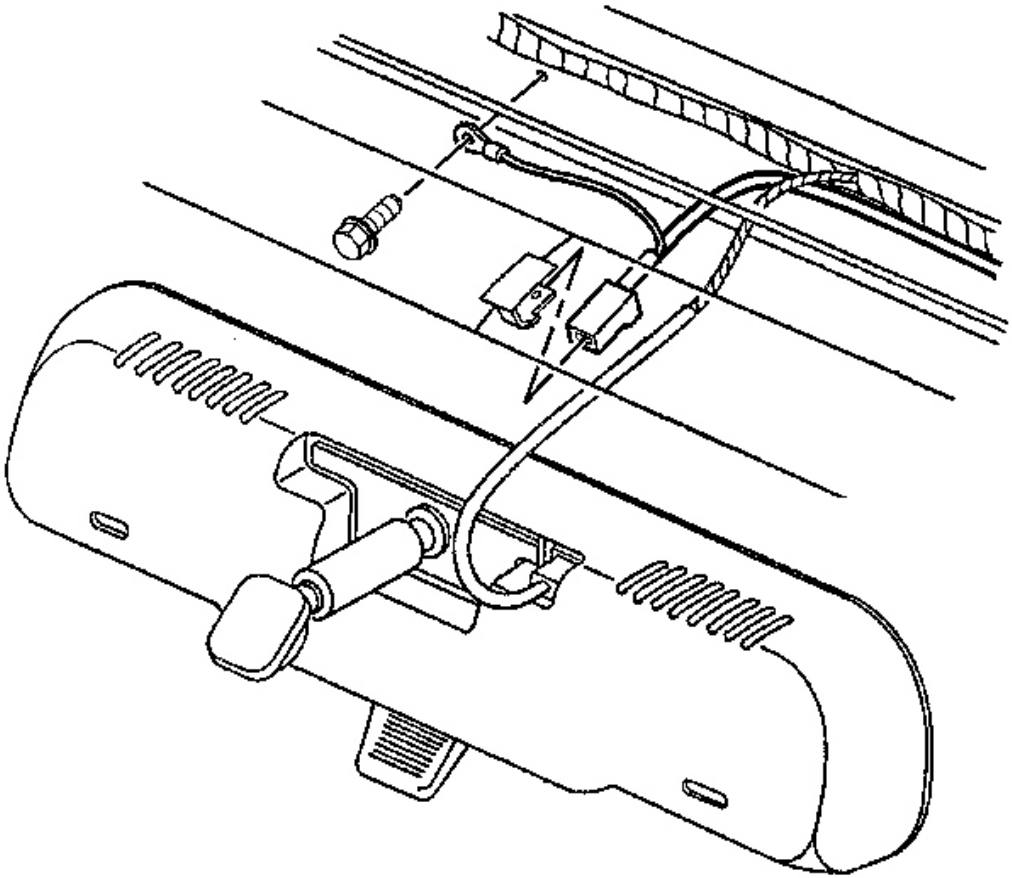

Fig. 106: Coaxial Cable At Front Windshield Antenna Connector
Courtesy of GENERAL MOTORS CORP.

9. Remove the windshield side garnish moldings. Refer to **Windshield Side Garnish Molding Replacement** in Interior Trim.
10. Remove the sunshades. Refer to **Sunshade Replacement** in Interior Trim.
11. Remove the windshield upper garnish molding. Refer to **Windshield Upper Garnish Molding Replacement** in Interior Trim.
12. Disconnect the coaxial cable from the front windshield antenna connector.
13. Remove the bolt retaining the coaxial cable ground wire to the windshield frame.

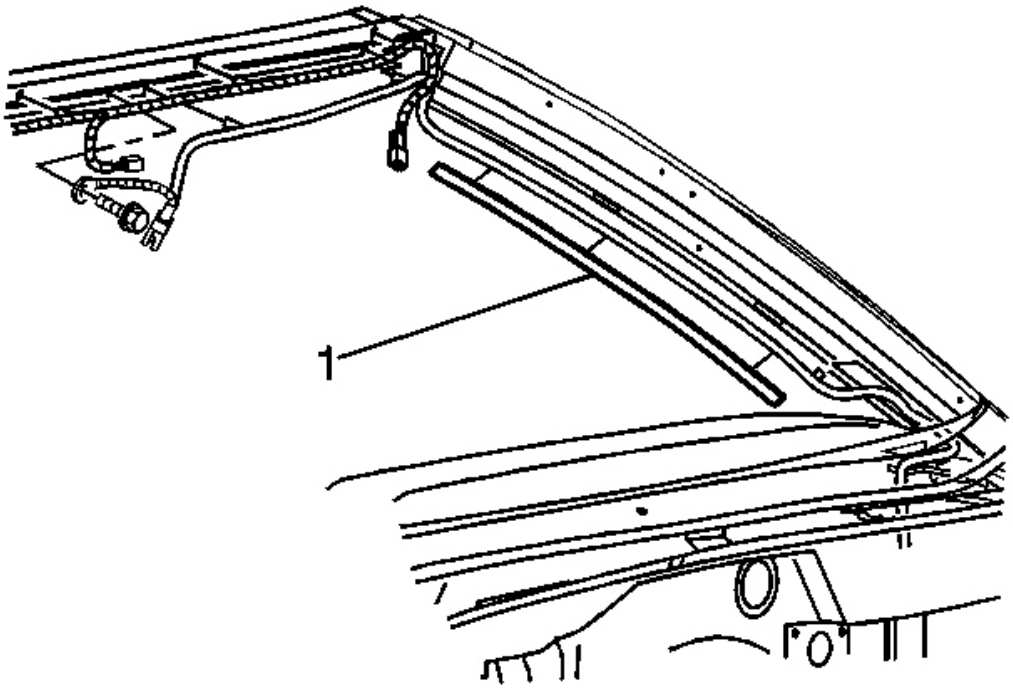

Fig. 107: Coaxial Cable At Windshield Frame
Courtesy of GENERAL MOTORS CORP.

14. Remove the tape (1) retaining the coaxial cable to the windshield frame.
15. Remove the coaxial cable from the vehicle.

Installation Procedure

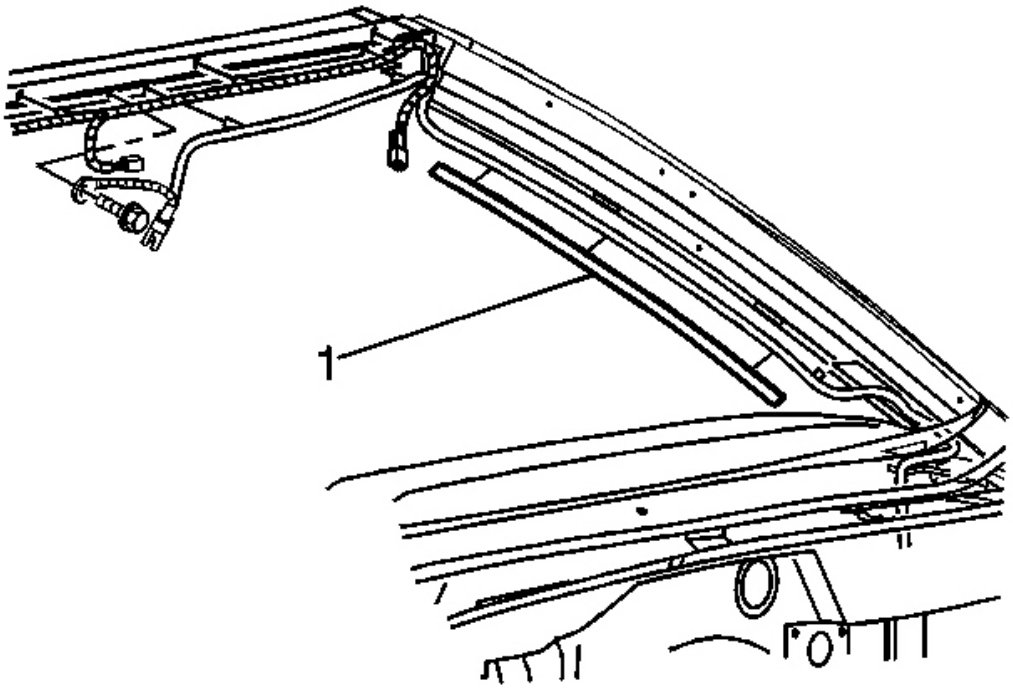

Fig. 108: Coaxial Cable At Windshield Frame
Courtesy of GENERAL MOTORS CORP.

1. Install the front windshield antenna cable coaxial cable into position in the vehicle.
2. Install new tape (1) to retain the coaxial cable to the windshield frame.

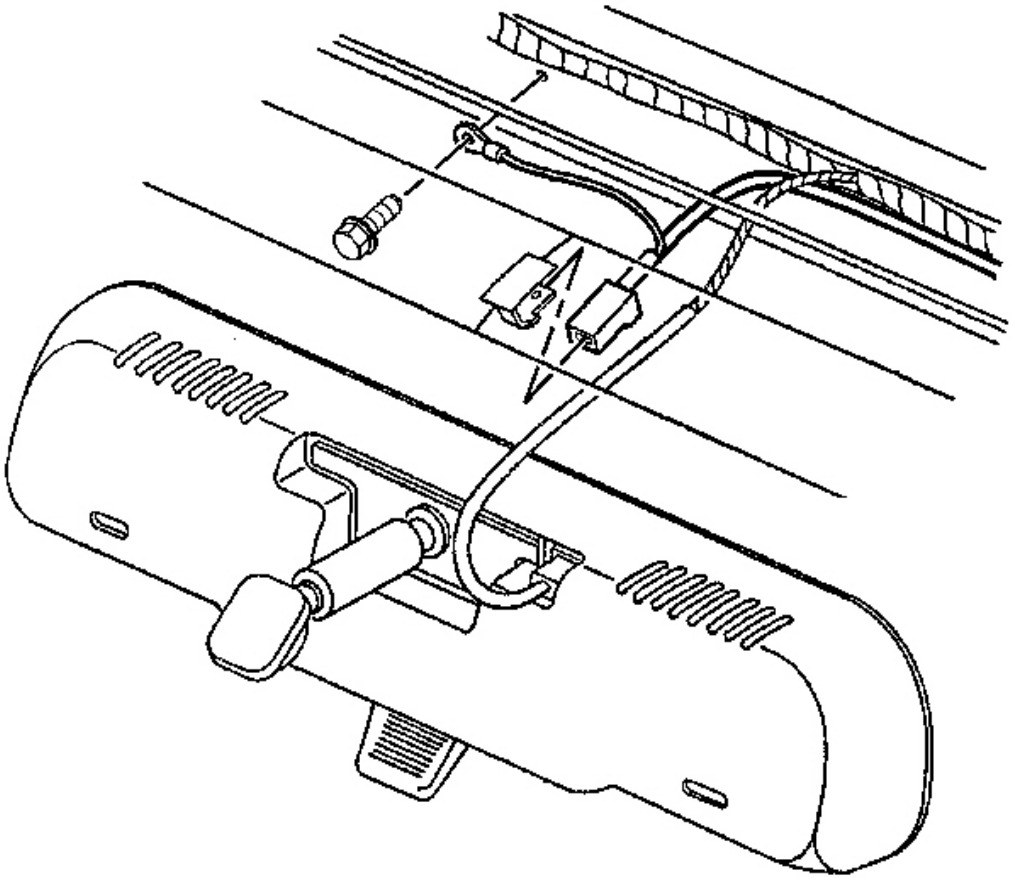

Fig. 109: Coaxial Cable At Front Windshield Antenna Connector
Courtesy of GENERAL MOTORS CORP.

3. Connect the coaxial cable to the front windshield antenna connector.

NOTE: Refer to Fastener Notice in Cautions and Notices.

4. Install the coaxial cable to the windshield frame ground wire with a bolt.

Tighten: Tighten the bolt to 1.8 N.m (16 lb in).

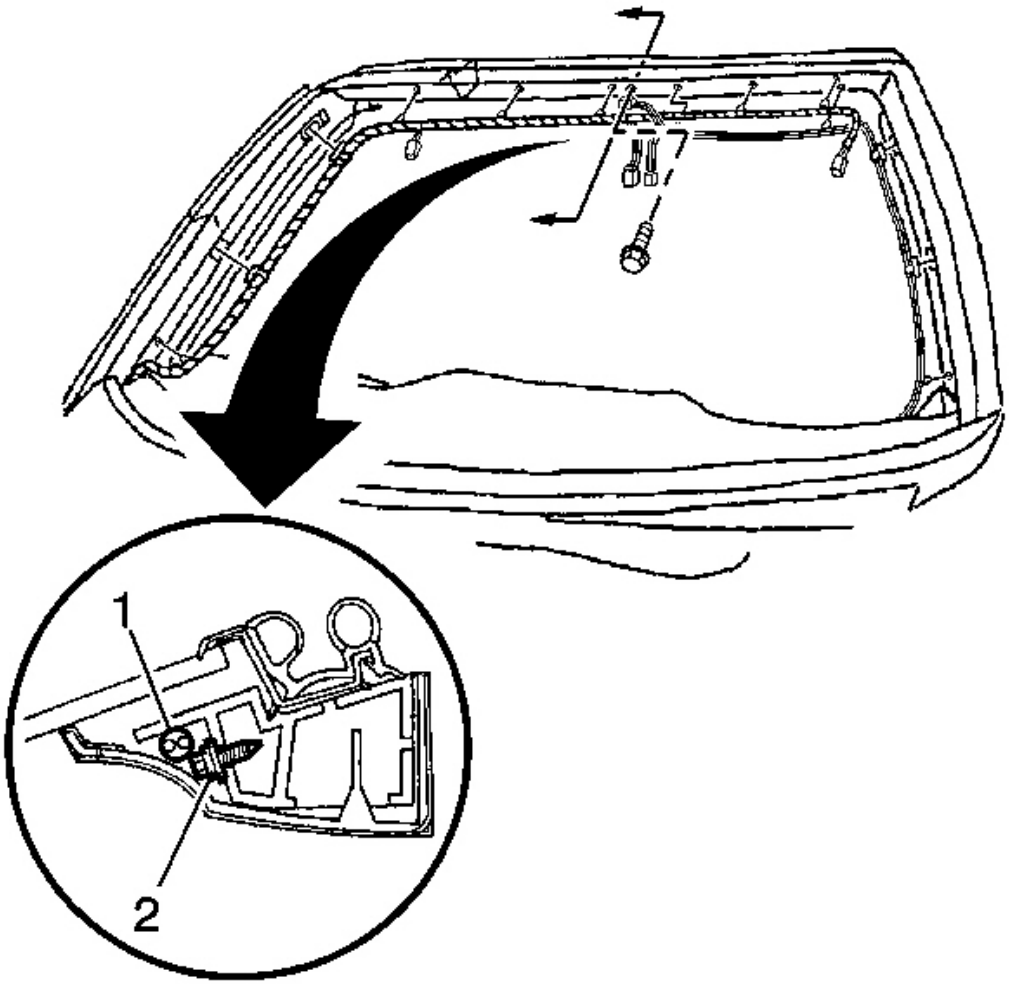

Fig. 110: Check That The IP Harness & Ground Wire Bolt
Courtesy of GENERAL MOTORS CORP.

5. Check that the IP harness (1), which runs along the windshield frame, is positioned as shown in relation to the ground wire bolt (2).
6. Install the windshield upper garnish molding. Refer to **Windshield Upper Garnish Molding Replacement** in Interior Trim.
7. Install the sunshades. Refer to **Sunshade Replacement** in Interior Trim.
8. Install the windshield side garnish moldings. **Windshield Side Garnish Molding Replacement** in Interior Trim.

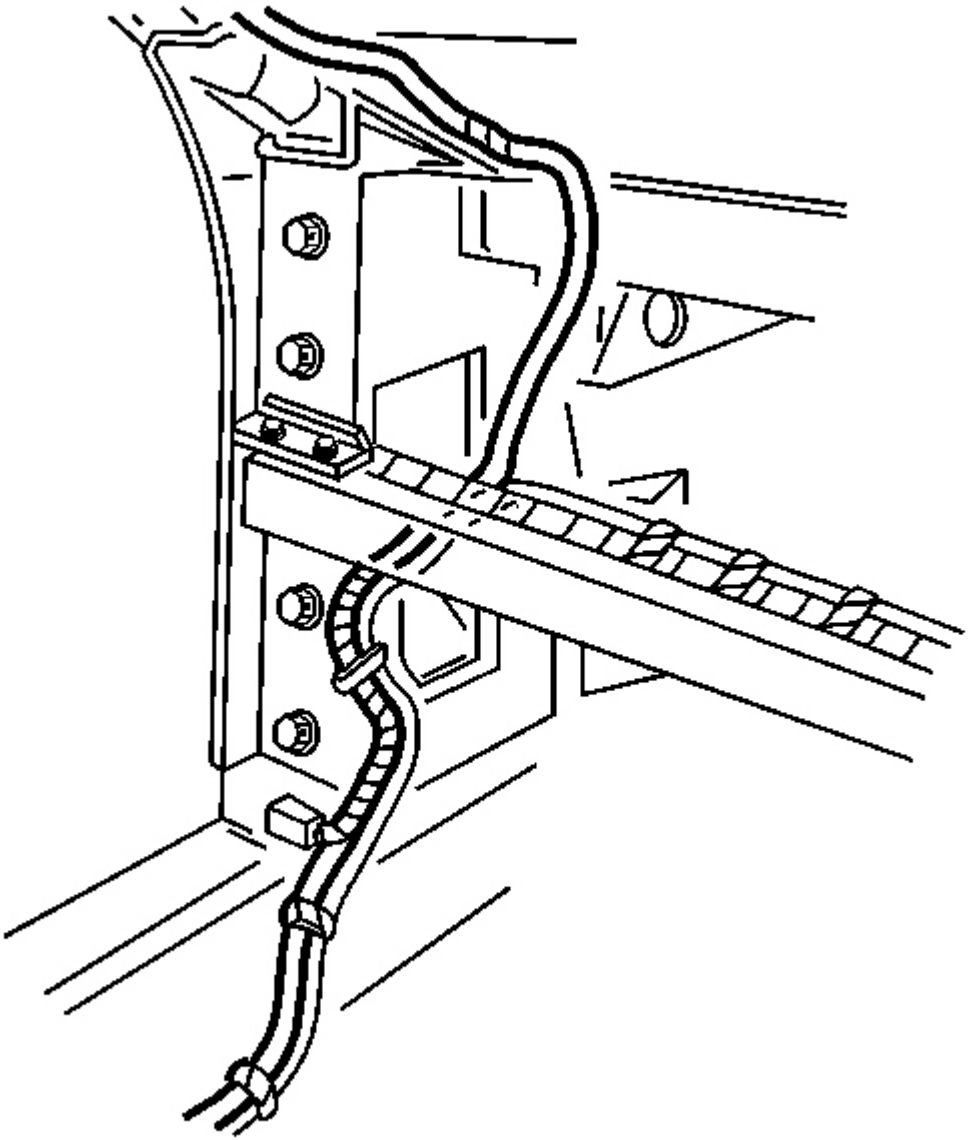

Fig. 111: Coaxial Cable At Insulation Tape Along The Hinge Pillar
Courtesy of GENERAL MOTORS CORP.

9. Install the coaxial cable to the insulation tape along the hinge pillar.
10. Install the IP left lower insulator panel. Refer to **Closeout/Insulator Panel Replacement - Left** in Instrument Panel, Gages and Console.

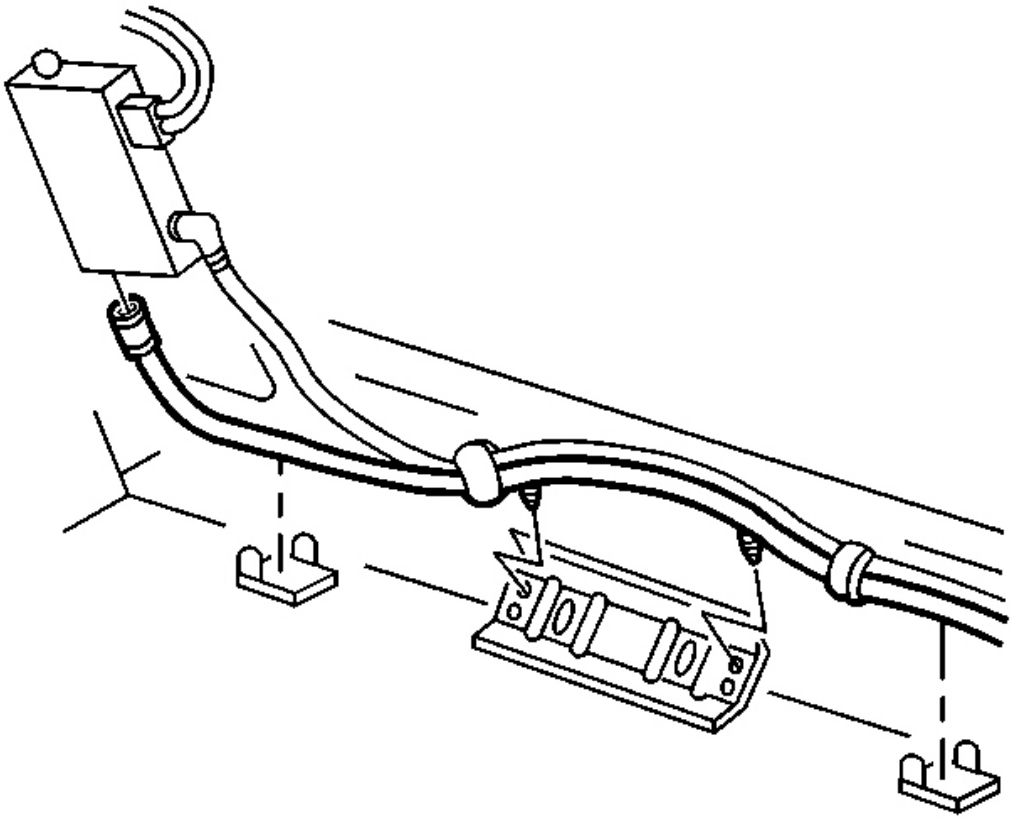

Fig. 112: Front Windshield Antenna Coaxial Cable At Antenna Module
Courtesy of GENERAL MOTORS CORP.

11. Tape the front windshield antenna coaxial cable to the radio control antenna coaxial cable and the IP wiring harness.
12. Install the IP wiring harness push -in retainers to the floor panel support.
13. Secure the IP wiring harness to the body retaining clips.
14. Connect the coaxial cable to the antenna module.
15. Install the left lock pillar trim. Refer to **Trim Replacement - Lock Pillar (Upper Convertible)** or **Trim Replacement - Lock Pillar (Coupe)** or **Trim Replacement - Lock Pillar (Lower Convertible and Hard Top)** in Interior Trim.
16. Install the left door sill plate. Refer to **Door Sill Plate Replacement** in Interior Trim.

ANTENNA CABLE REPLACEMENT (REAR LIFT WINDOW)

Removal Procedure

1. Remove the rear roof bow interior trim panel. Refer to **Trim Panel Replacement - Rear Roof Bow** in Interior Trim.
2. Disconnect the rear lift window antenna cable from the antenna buffer.

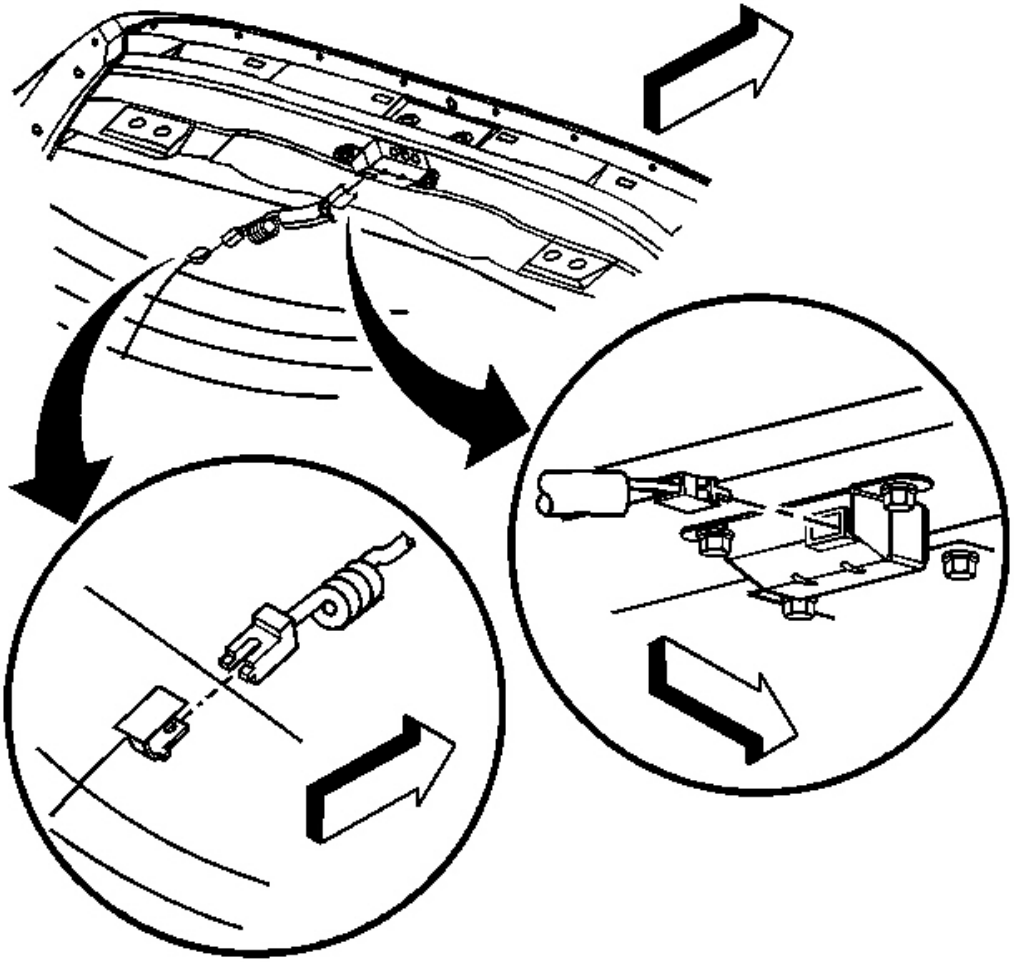

Fig. 113: Rear Lift Window Antenna Cable At Rear Lift Window Antenna Connector
Courtesy of GENERAL MOTORS CORP.

3. Carefully disconnect the rear lift window antenna cable from the rear lift window antenna connector.
4. Remove the rear lift window antenna cable.

Installation Procedure

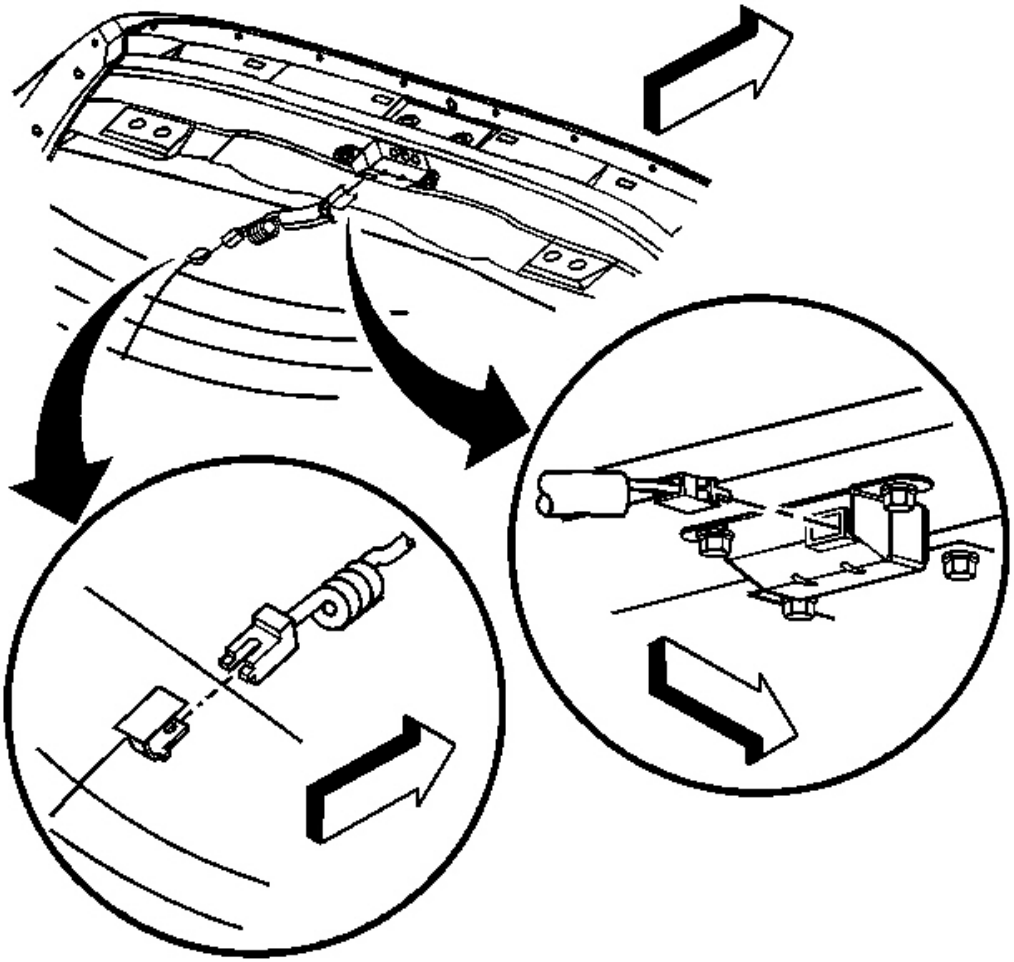

Fig. 114: Rear Lift Window Antenna Cable At Rear Lift Window Antenna Connector
Courtesy of GENERAL MOTORS CORP.

1. Carefully connect the rear lift window antenna cable to the rear lift window antenna connector.
2. Connect the rear lift window antenna cable to the antenna buffer.

IMPORTANT: When installing the rear roof bow interior trim panel, ensure that the rear lift window antenna cable is seated in the slot along the rear edge of the trim panel.

3. Install the rear roof bow interior trim panel. Refer to **Trim Panel Replacement - Rear Roof Bow** in Interior Trim.

COAXIAL CABLE REPLACEMENT

Removal Procedure

1. Remove the console. Refer to **Console Replacement** in Instrument Panel, Gages and Console.
2. Remove the IP accessory trim plate. Refer to **Trim Plate Replacement - Instrument Panel (I/P) Accessory** in Instrument Panel, Gages and Console.
3. Remove the driver knee bolster trim panel. Refer to **Trim Panel Replacement - Knee Bolster** in Instrument Panel, Gages and Console.
4. Remove the ignition switch bezel.

   Carefully pull from the top to unsnap.

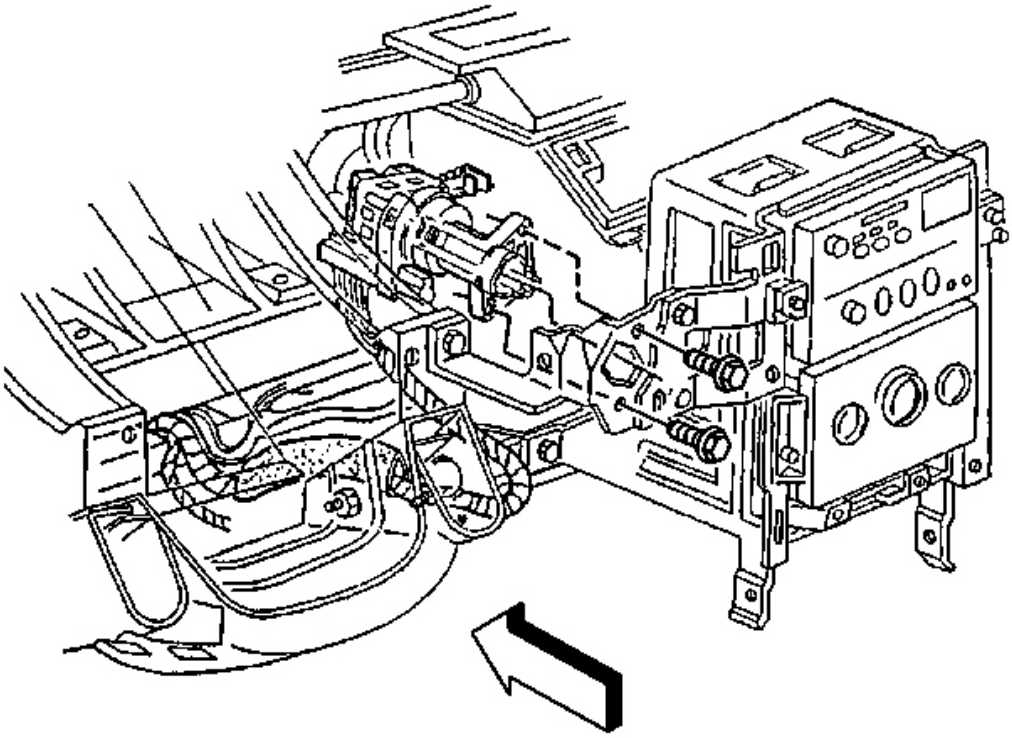

Fig. 115: View Of Ignition Switch
Courtesy of GENERAL MOTORS CORP.

5. Remove the ignition switch retaining bolts.
6. Remove the ignition switch from the ignition switch housing bracket and reposition the switch.

Reposition the ignition switch to better access the coaxial cable.

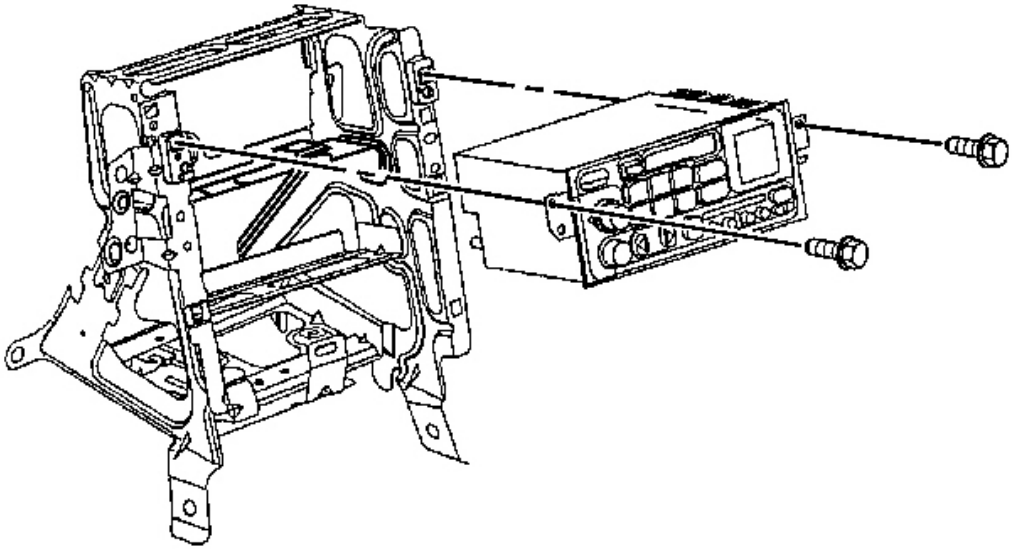

Fig. 116: Radio Control & Center Bracket
Courtesy of GENERAL MOTORS CORP.

7. Remove the screws retaining the radio control to the IP center support bracket.
8. Begin to remove the radio control from the center support bracket in order to access the coaxial cable.

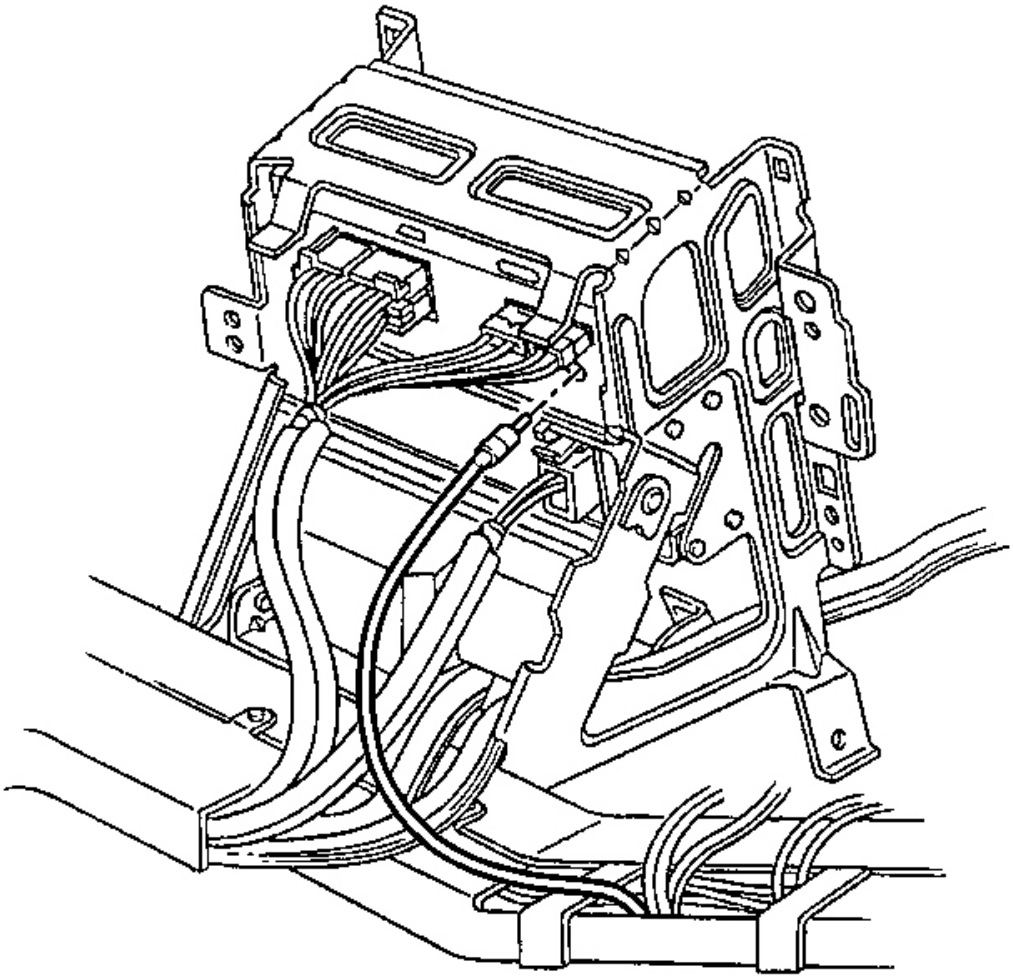

Fig. 117: Radio Control Coaxial Cable At IP Wiring Harness
Courtesy of GENERAL MOTORS CORP.

9. Disconnect the radio control coaxial cable from the radio control.
10. Separate the radio control coaxial cable from the IP wiring harness along the IP lower support beam.

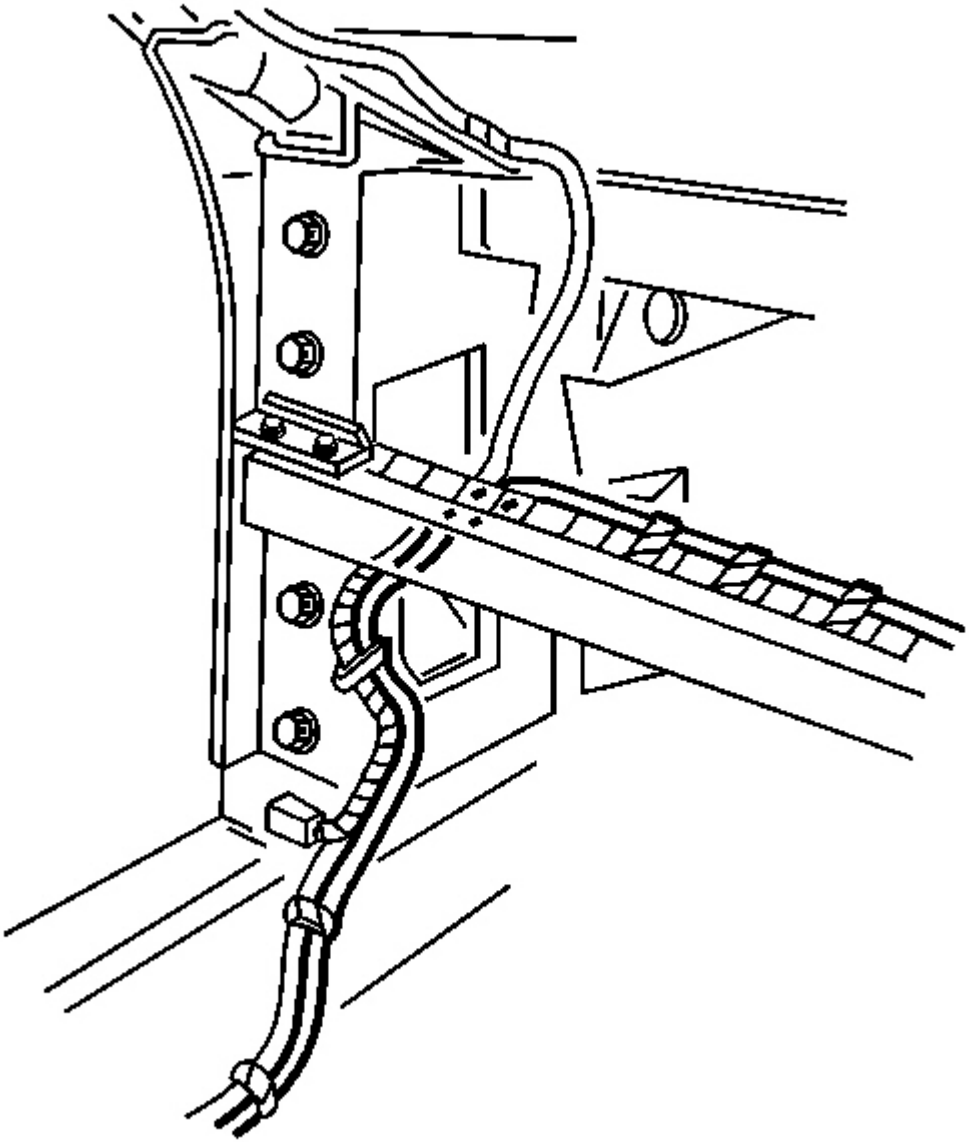

Fig. 118: Coaxial Cable At Insulation Tape Along The Hinge Pillar
Courtesy of GENERAL MOTORS CORP.

11. Remove the IP left lower insulator panel. Refer to **Closeout/Insulator Panel Replacement - Left** in Instrument Panel, Gages and Console.
12. Remove the coaxial cable from the insulation tape along the hinge pillar.

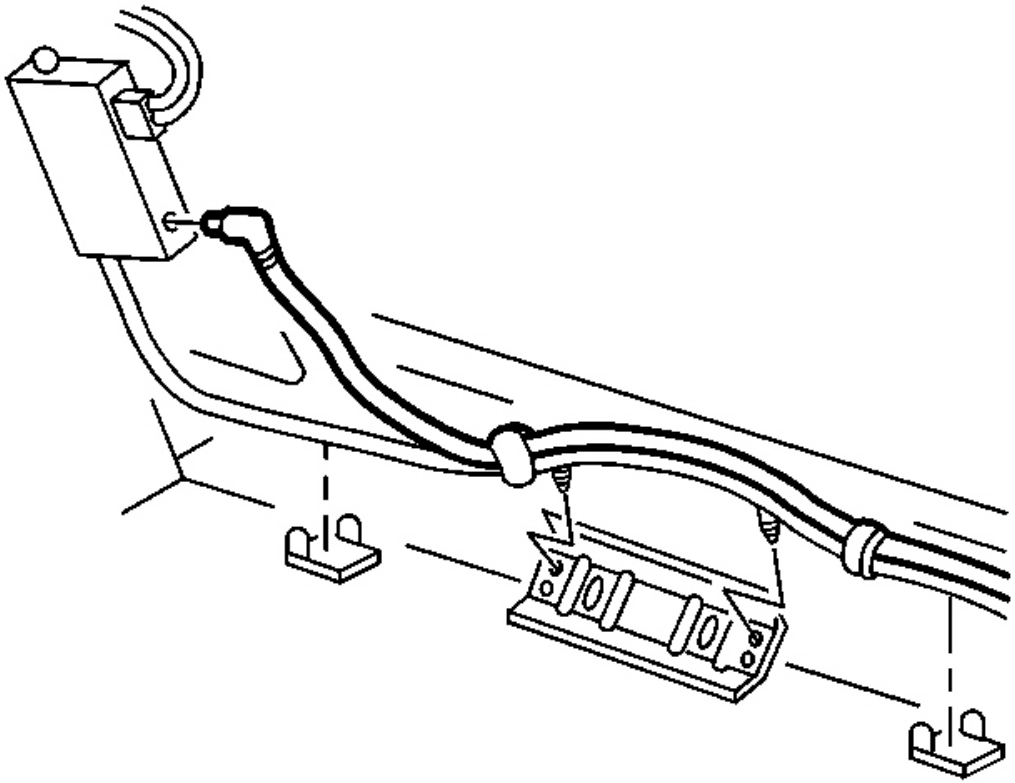

Fig. 119: Radio Control Coaxial Cable At Antenna Module
Courtesy of GENERAL MOTORS CORP.

13. Remove the left door sill plate. Refer to **Door Sill Plate Replacement** in Interior Trim.
14. Remove the left lock pillar trim. Refer to **Trim Replacement - Lock Pillar (Upper Convertible)** or **Trim Replacement - Lock Pillar (Coupe)** or **Trim Replacement - Lock Pillar (Lower Convertible and Hard Top)** in Interior Trim.
15. Disconnect the radio control coaxial cable from the antenna module.
16. Release the IP wiring harness from the body retaining clips.
17. Remove the IP wiring harness push -in retainers from the floor panel support.
18. Separate the radio control coaxial cable from the front windshield antenna coaxial cable and the IP wiring harness.
19. Remove the radio control coaxial cable.

Installation Procedure

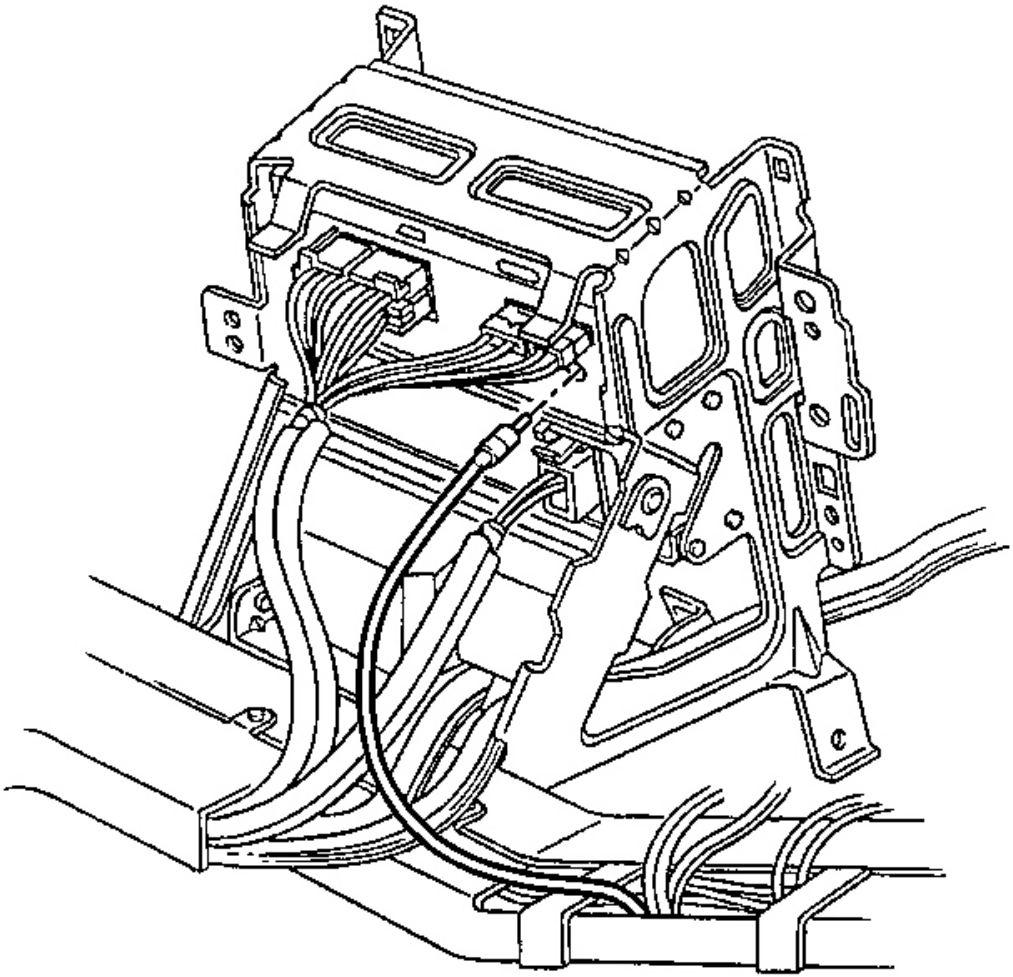

Fig. 120: Radio Control Coaxial Cable At IP Wiring Harness
Courtesy of GENERAL MOTORS CORP.

1. Install the radio control coaxial cable into position in the vehicle.
2. Tape the radio control coaxial cable to the IP wiring harness along the IP lower support beam.
3. Connect the radio control coaxial cable to the radio control.

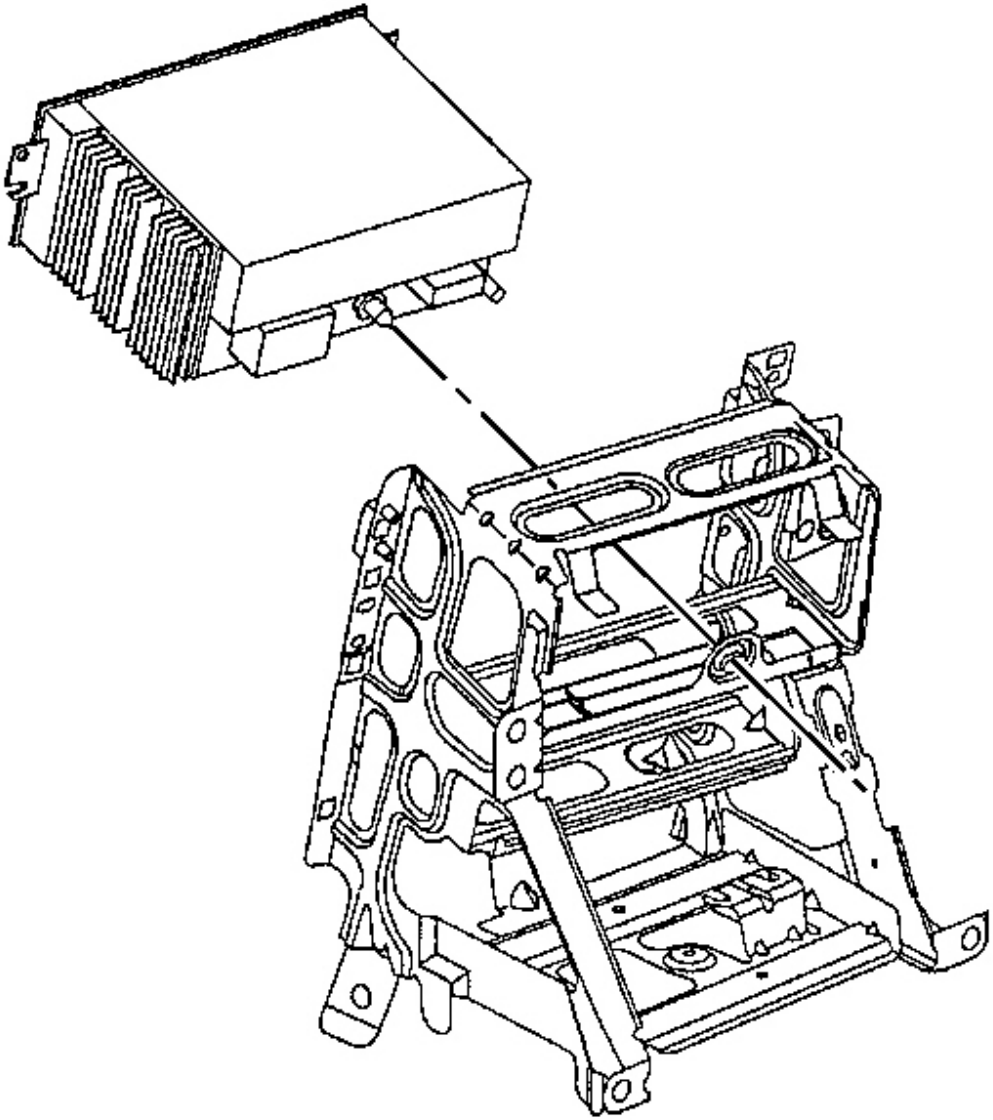

Fig. 121: Radio Control To Bracket Alignment
Courtesy of GENERAL MOTORS CORP.

4. Align the radio control locator tab to the IP center support bracket locator hole.
5. Install the radio control.

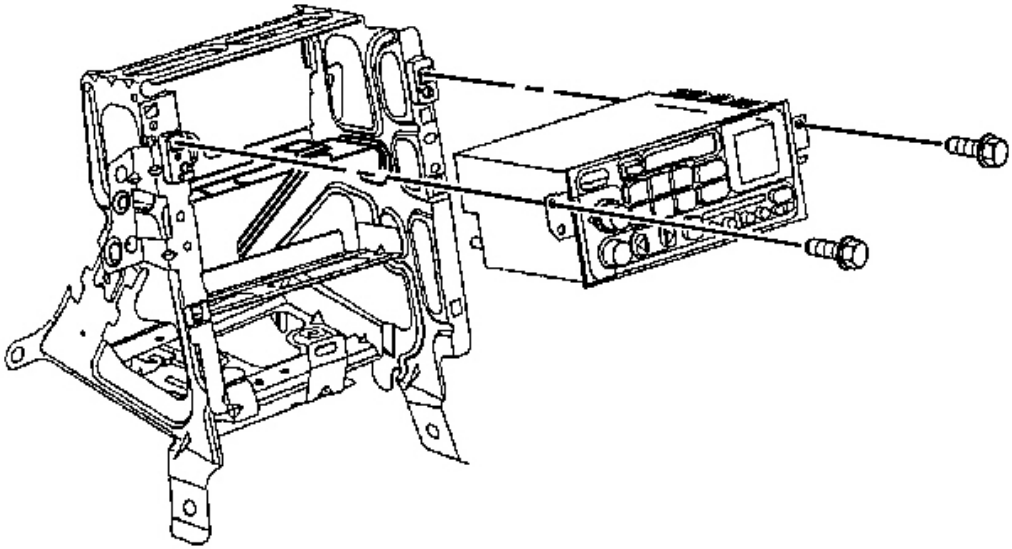

Fig. 122: Radio Control & Center Bracket
Courtesy of GENERAL MOTORS CORP.

NOTE: Refer to Fastener Notice in Cautions and Notices.

6. Install the radio control retaining screws.

   Tighten: Tighten the radio control retaining screws to 2.5 N.m (22 lb in).

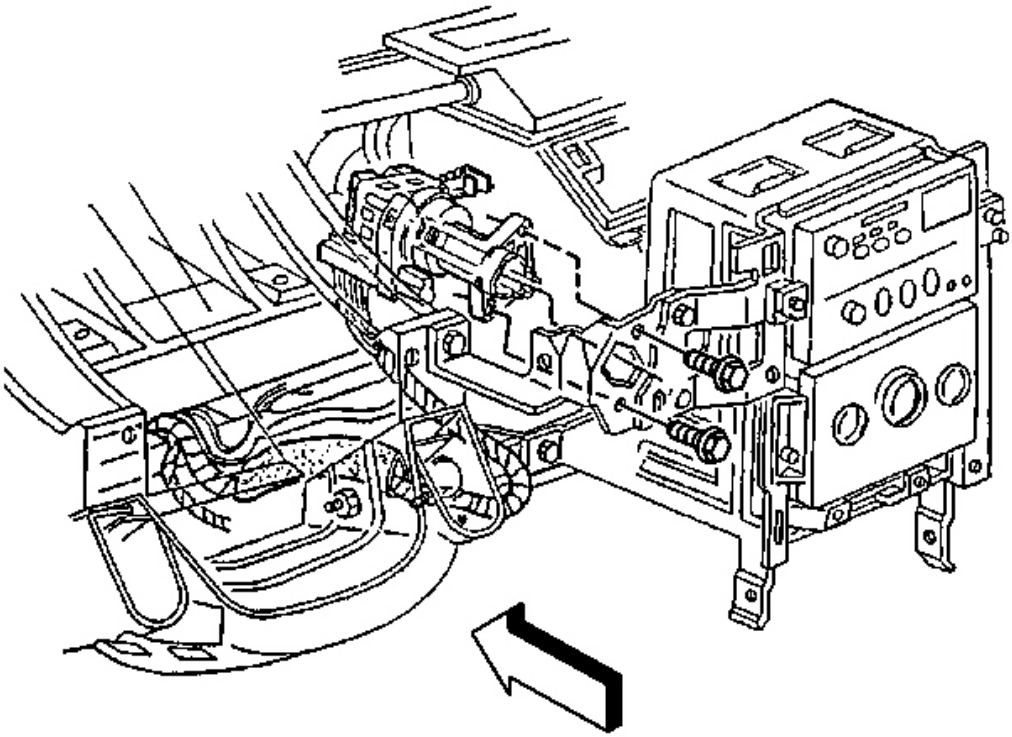

Fig. 123: View Of Ignition Switch
Courtesy of GENERAL MOTORS CORP.

7. Install the ignition switch to the ignition switch housing bracket.
8. Install the ignition switch retaining bolts.

   Tighten: Tighten the ignition switch retaining bolts to 5.5 N.m (49 lb in).

9. Install the ignition switch bezel to the switch.

   Align the bezel slots to the switch pins, then push to secure.

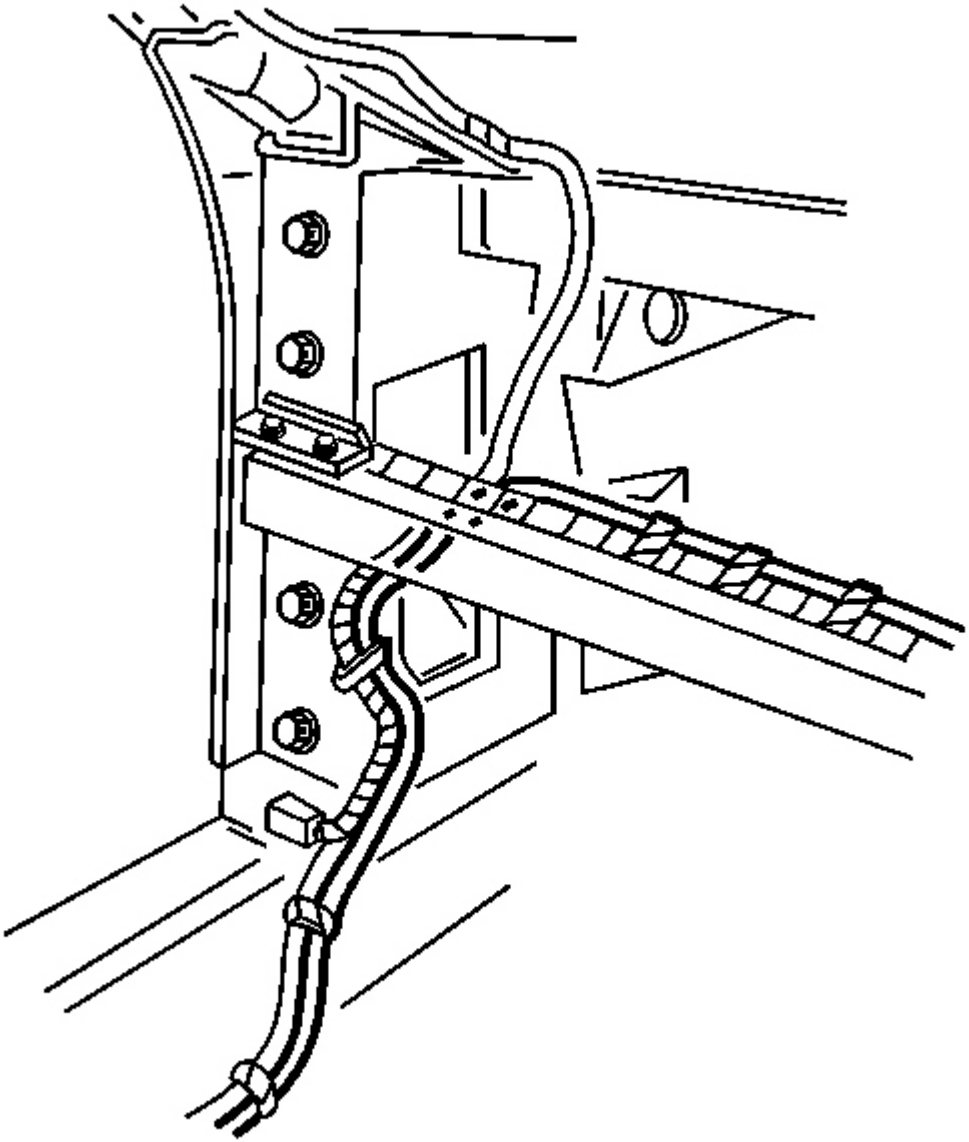

Fig. 124: Coaxial Cable At Insulation Tape Along The Hinge Pillar
Courtesy of GENERAL MOTORS CORP.

10. Install the coaxial cable to the insulation tape along the hinge pillar.
11. Install the IP left lower insulator panel. Refer to **Closeout/Insulator Panel Replacement - Left** in Instrument Panel, Gages and Console.

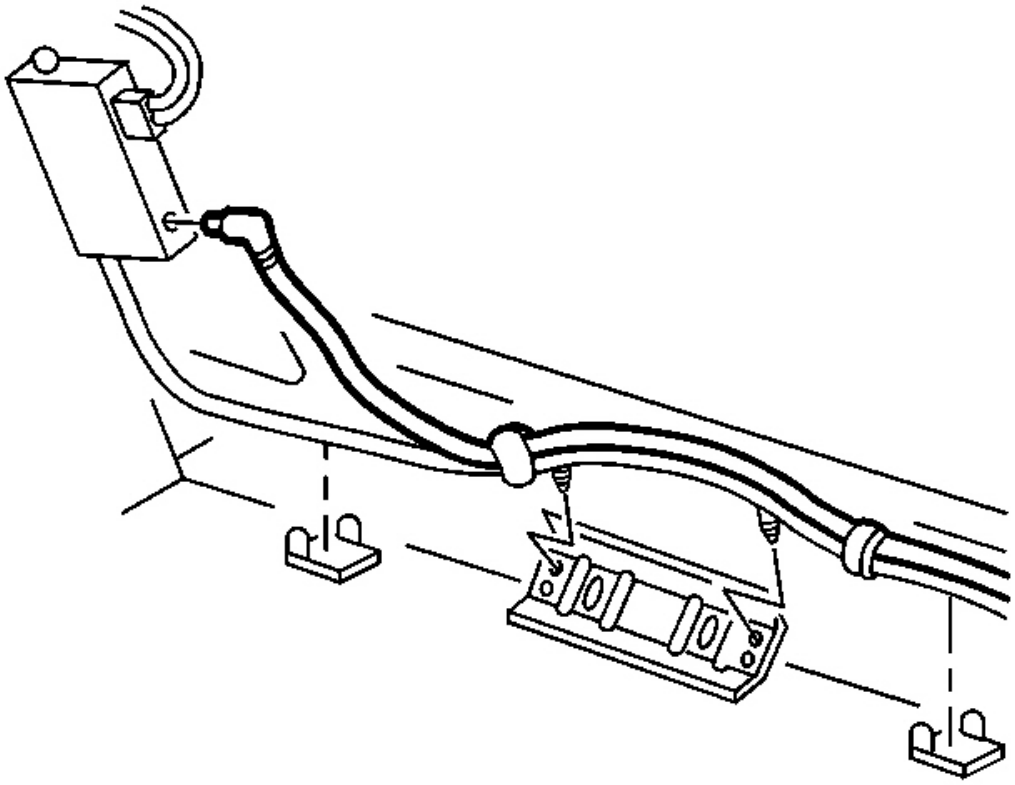

Fig. 125: Radio Control Coaxial Cable At Antenna Module
Courtesy of GENERAL MOTORS CORP.

12. Tape the radio control coaxial cable to the front windshield antenna coaxial cable and the IP wiring harness.
13. Install the IP wiring harness push -in retainers to the floor panel support.
14. Secure the IP wiring harness to the body retaining clips.
15. Connect the coaxial cable to the antenna module.
16. Install the left lock pillar trim. Refer to **Trim Replacement - Lock Pillar (Upper Convertible)** or **Trim Replacement - Lock Pillar (Coupe)** or **Trim Replacement - Lock Pillar (Lower Convertible and Hard Top)** in Interior Trim.
17. Install the left door sill plate. Refer to **Door Sill Plate Replacement** in Interior Trim.
18. Install the driver knee bolster trim panel. Refer to **Trim Panel Replacement - Knee Bolster** in Instrument Panel, Gages and Console.
19. Install the IP accessory trim plate. Refer to **Trim Plate Replacement - Instrument Panel (I/P) Accessory** in Instrument Panel, Gages and Console.

20. Install the console. Refer to **Console Replacement** in Instrument Panel, Gages and Console.

SPEAKER REPLACEMENT - FRONT

Removal Procedure

1. Remove the door trim panel. Refer to **Trim Panel Replacement - Door** in Doors.

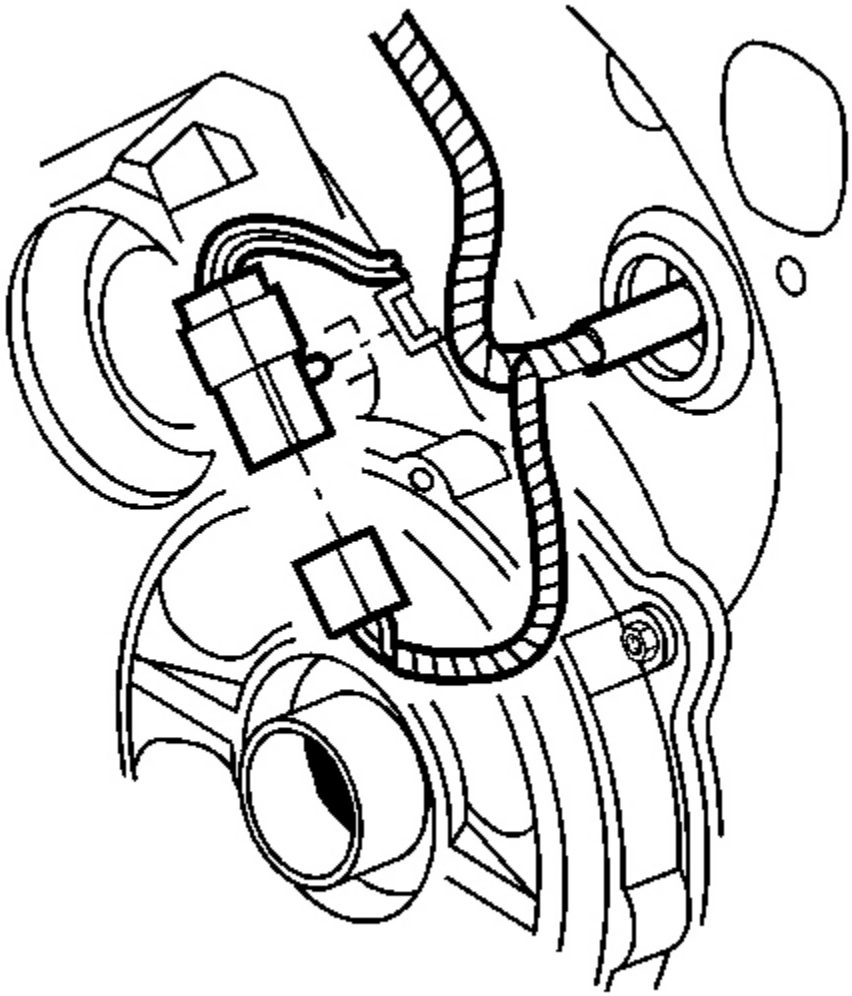

Fig. 126: Electrical/Audio Connector At Front Door Radio Speaker
Courtesy of GENERAL MOTORS CORP.

2. Disconnect the electrical/audio connector from the front door radio speaker assembly.

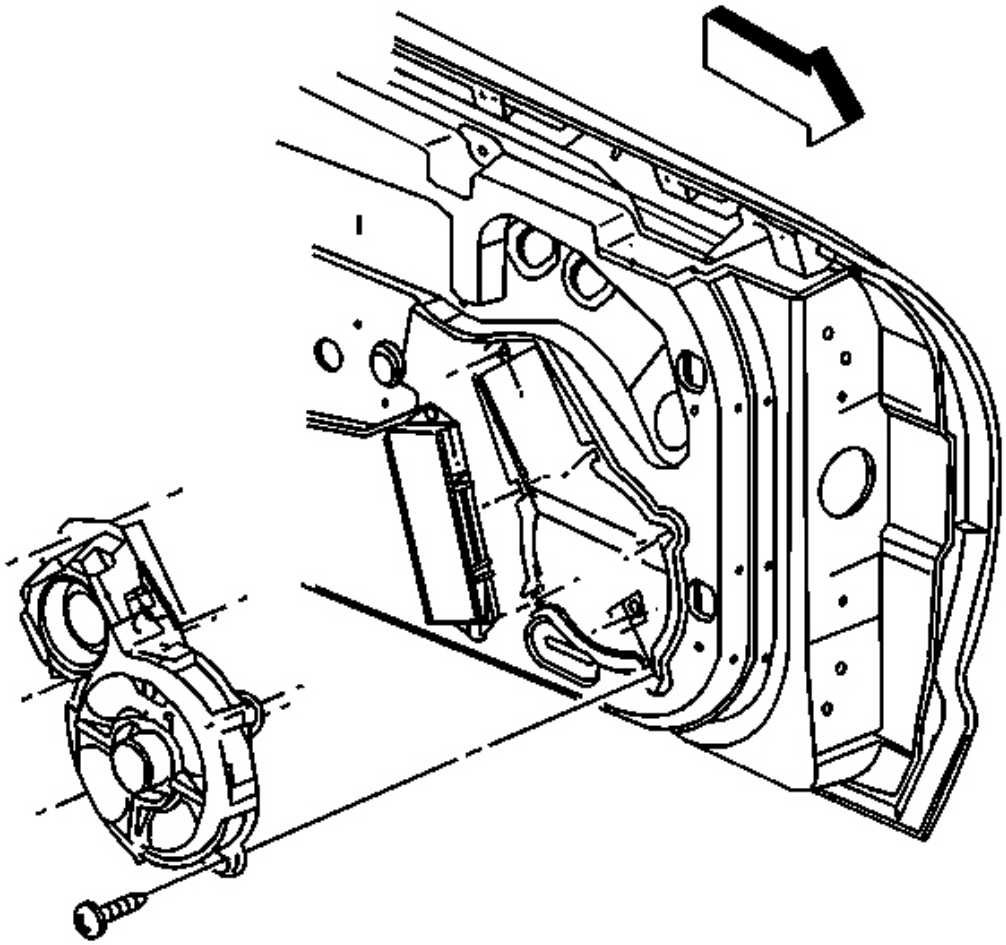

Fig. 127: Front Door Speaker Assembly And Screws
Courtesy of GENERAL MOTORS CORP.

IMPORTANT: The speaker assembly is only held in place by retaining screws. Be sure to support the speaker assembly upon removal.

3. Remove the screws retaining the front door speaker assembly to the door.
4. Remove the front door speaker assembly.

Installation Procedure

1. Install the front door speaker assembly into position in the door.

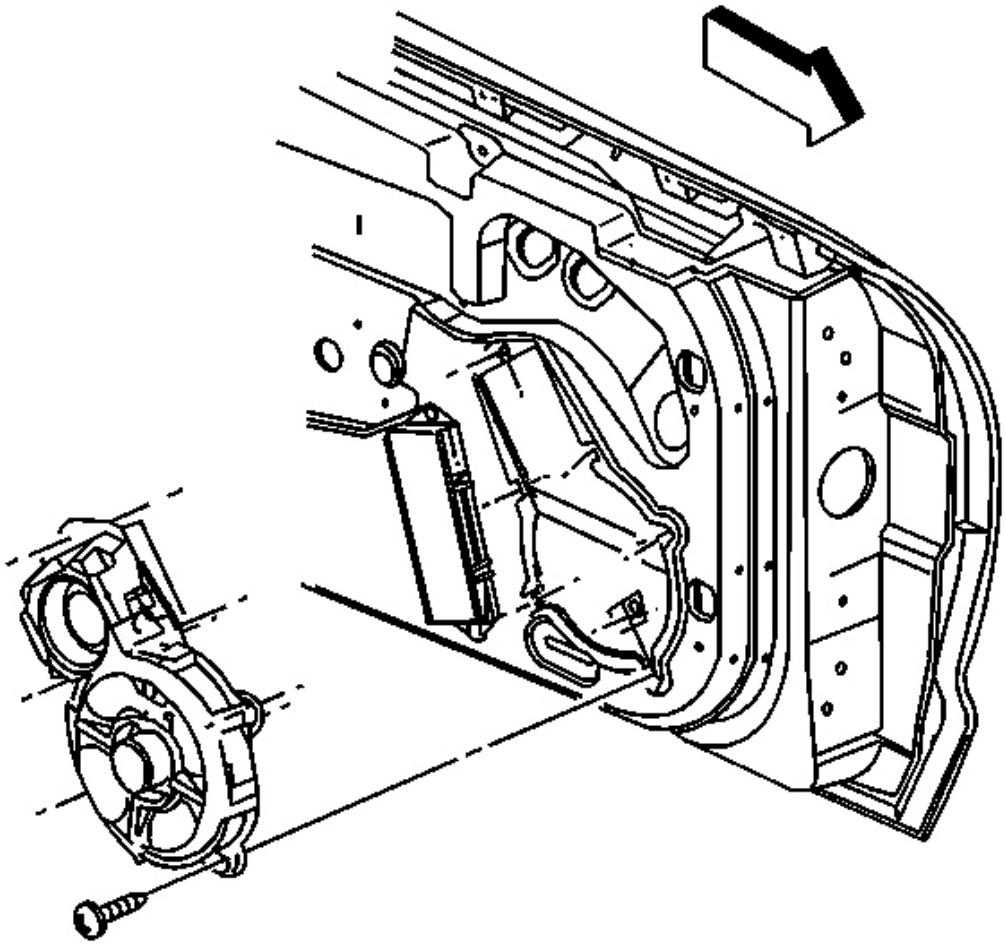

Fig. 128: Front Door Speaker Assembly And Screws
Courtesy of GENERAL MOTORS CORP.

NOTE: Refer to Fastener Notice in Cautions and Notices.

IMPORTANT: The tightening sequence MUST be followed.

2. Install the front door speaker assembly retaining screws in the following sequence:
   1. The uppermost screw
   2. The lowermost screw

3. The remaining screws in a criss -cross pattern

   Tighten: Tighten the front door speaker assembly retaining screws in sequence to 2.5 N.m (22 lb in).

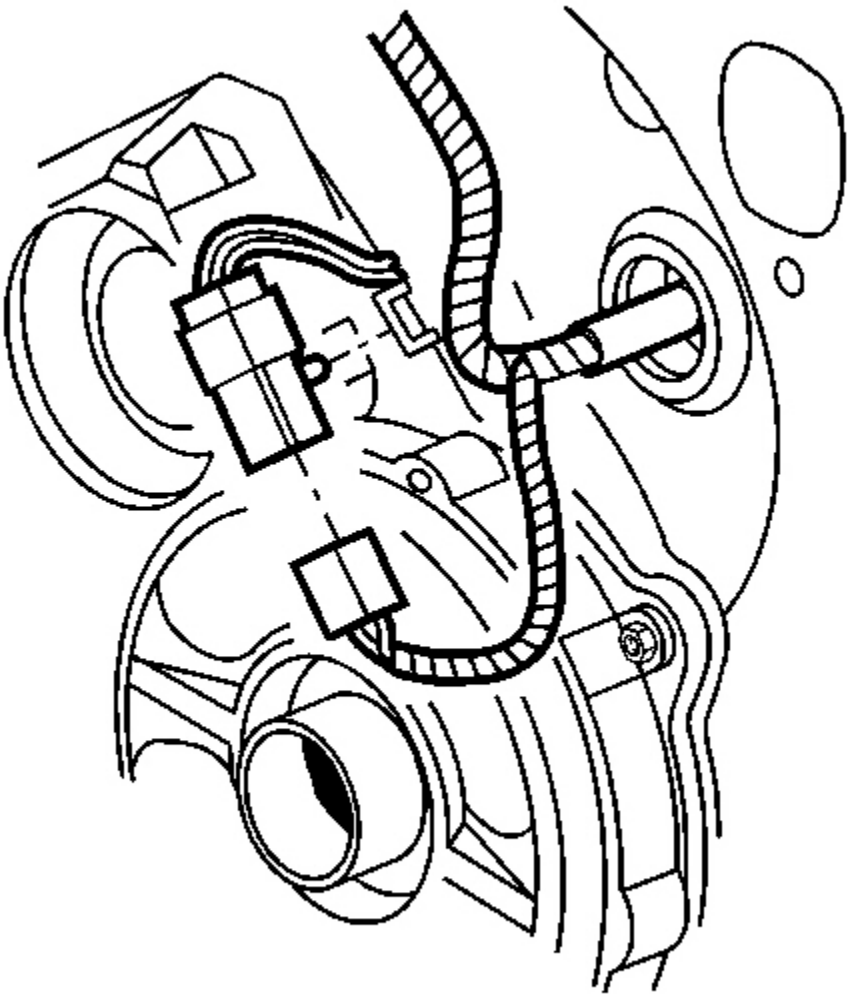

Fig. 129: Electrical/Audio Connector At Front Door Radio Speaker
Courtesy of GENERAL MOTORS CORP.

3. Connect the electrical/audio connector to the front door speaker assembly.
4. Install the door trim panel. Refer to **Trim Panel Replacement - Door** in Doors.

SPEAKER REPLACEMENT - REAR (COUPE)

Removal Procedure

1. Open the rear lift window panel.
2. Using two flat bladed tools, CAREFULLY and simultaneously pry at the upper RH and LH edges of the rear radio speaker grille to release the locking tabs.

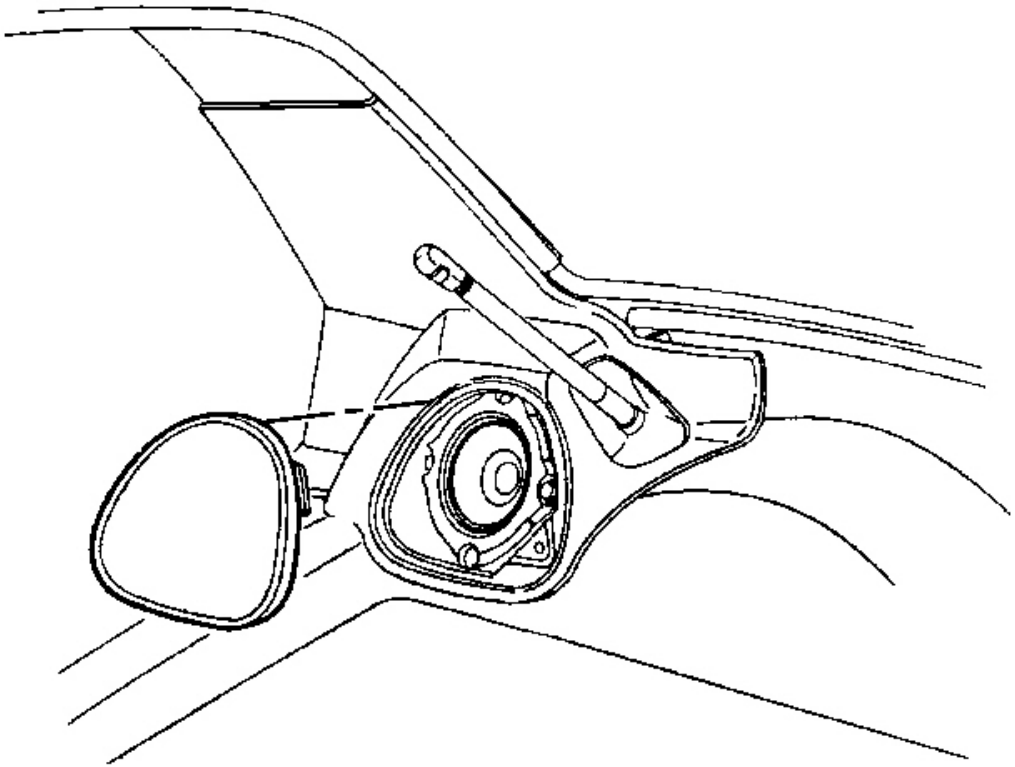

Fig. 130: Push -In Fastener At Rear Compartment Speaker Grille
Courtesy of GENERAL MOTORS CORP.

3. Pivot the speaker grille downward to release the lower retaining tab, then remove the grille.
4. Remove the push -in fastener (in the lower corner of the speaker opening) retaining the rear compartment side trim panel.

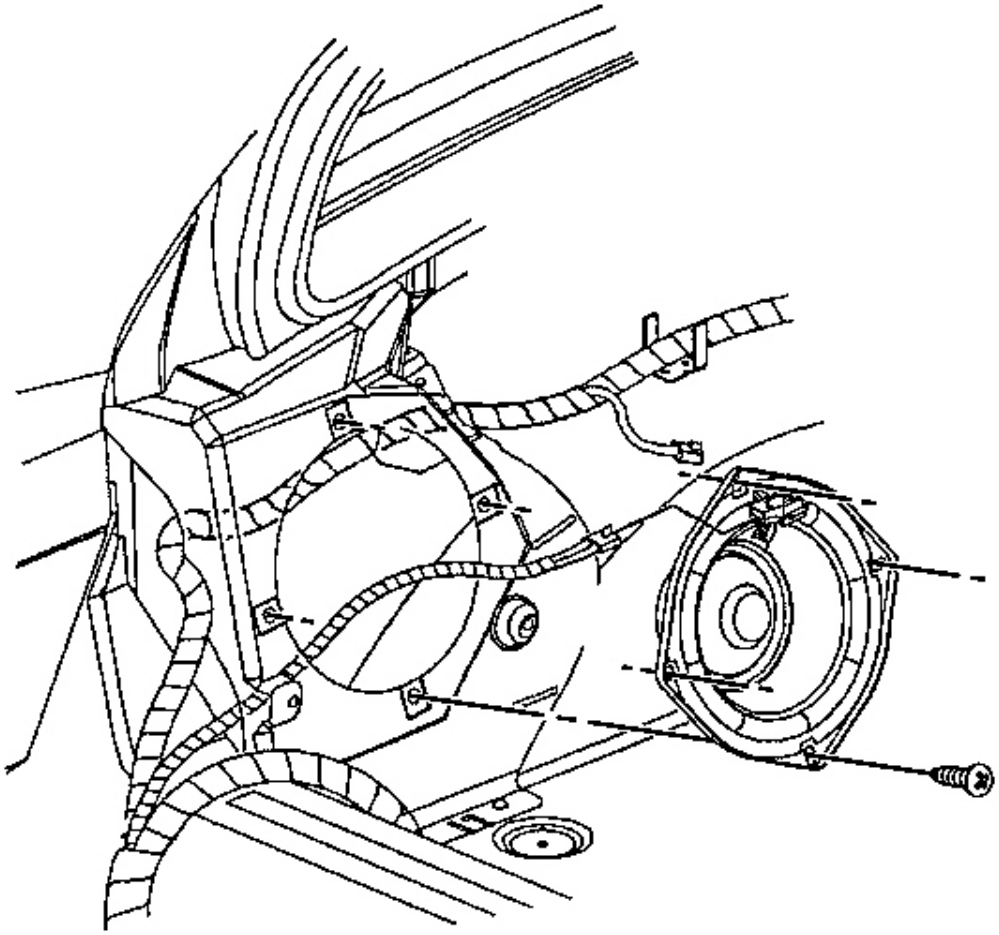

Fig. 131: Electrical/Audio Connector At Rear Speaker
Courtesy of GENERAL MOTORS CORP.

5. Remove the rear speaker retaining screws.

   Finesse the rear compartment side trim panel carefully upward, rearward and outward slightly to access the upper speaker retaining screw.

6. Begin to remove the rear speaker in order to access the electrical/audio connector.
7. Disconnect the electrical/audio connector from the rear speaker.
8. Remove the rear speaker.

Installation Procedure

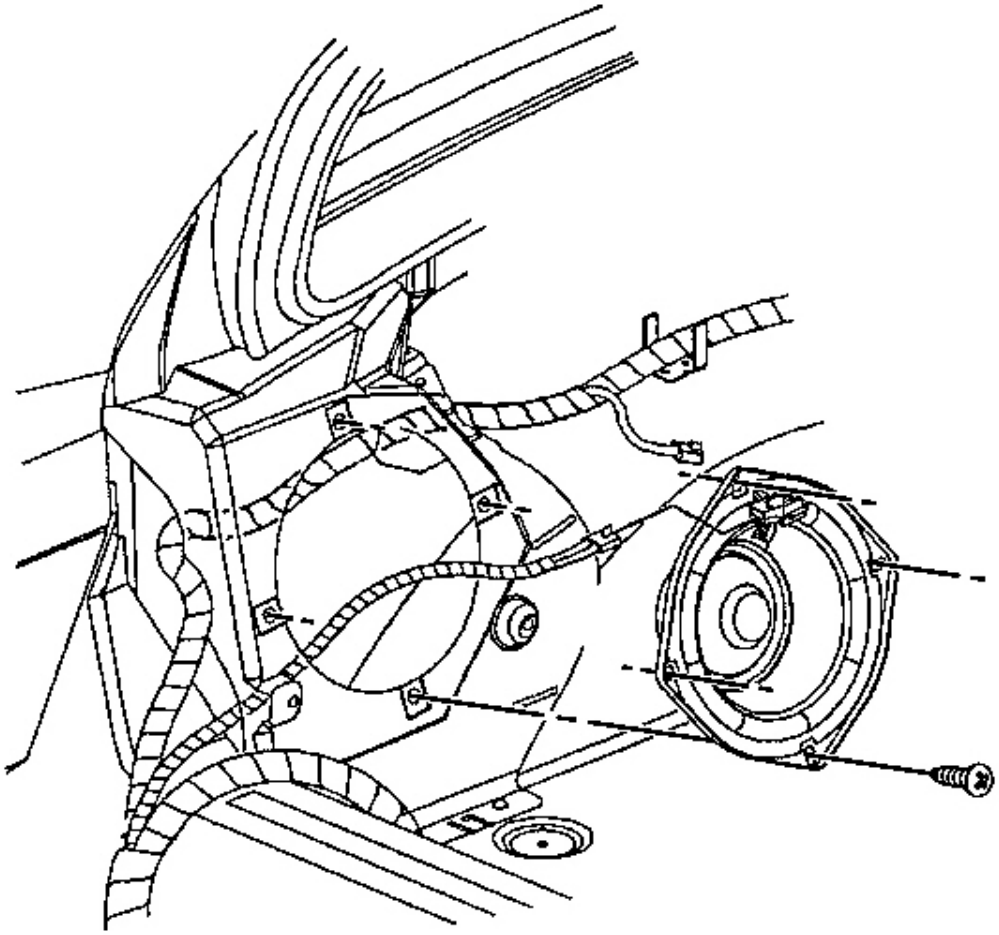

Fig. 132: Electrical/Audio Connector At Rear Speaker
Courtesy of GENERAL MOTORS CORP.

1. Connect the electrical/audio connector to the rear speaker.
2. Install the rear speaker into position.

NOTE: Refer to Fastener Notice in Cautions and Notices.

3. Install the rear speaker retaining screws.

   Finesse the rear compartment side trim panel carefully upward, rearward and outward slightly to access the upper speaker retaining screw.

Tighten: Tighten the rear speaker retaining screws to 2.5 N.m (22 lb in).

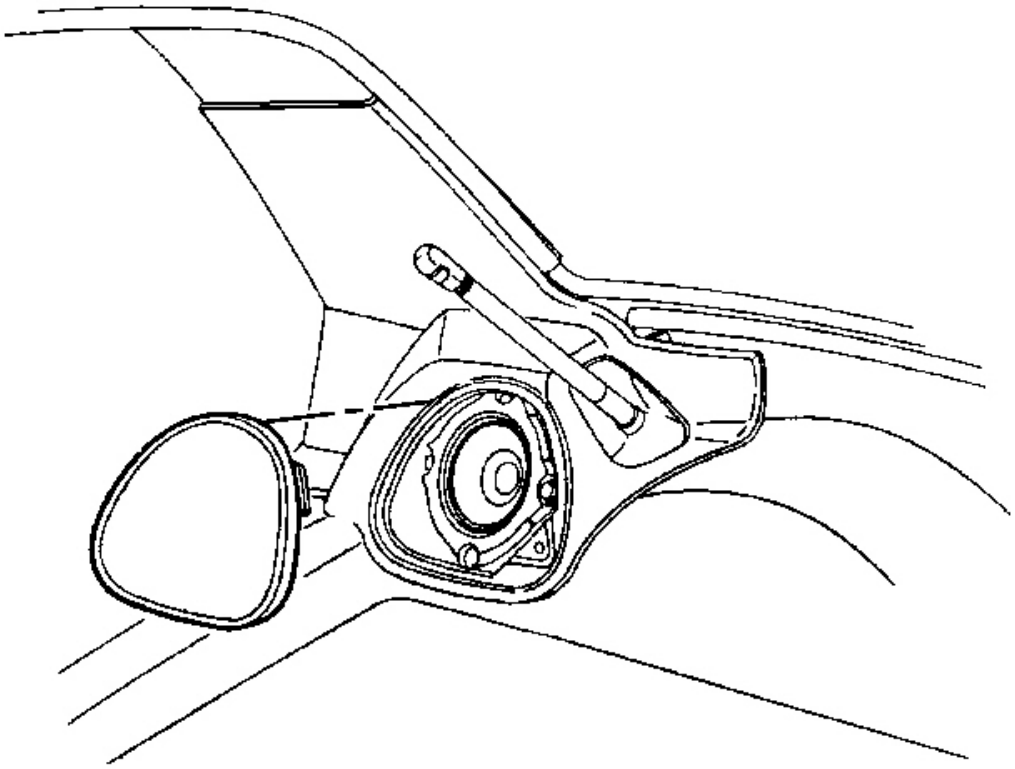

Fig. 133: Push -In Fastener At Rear Compartment Speaker Grille
Courtesy of GENERAL MOTORS CORP.

4. Install the push -in fastener (in the lower corner of the speaker opening) retaining the rear compartment side trim panel.
5. Insert the rear speaker grille lower retaining tab into position.
6. Raise the speaker grille and align the locking tabs.
7. Carefully push the tabs in to lock.
8. Close the rear lift window panel.

SPEAKER REPLACEMENT - REAR (CONVERTIBLE)

Removal Procedure

1. Raise and position the convertible top with the 1 and 5 bows upright.

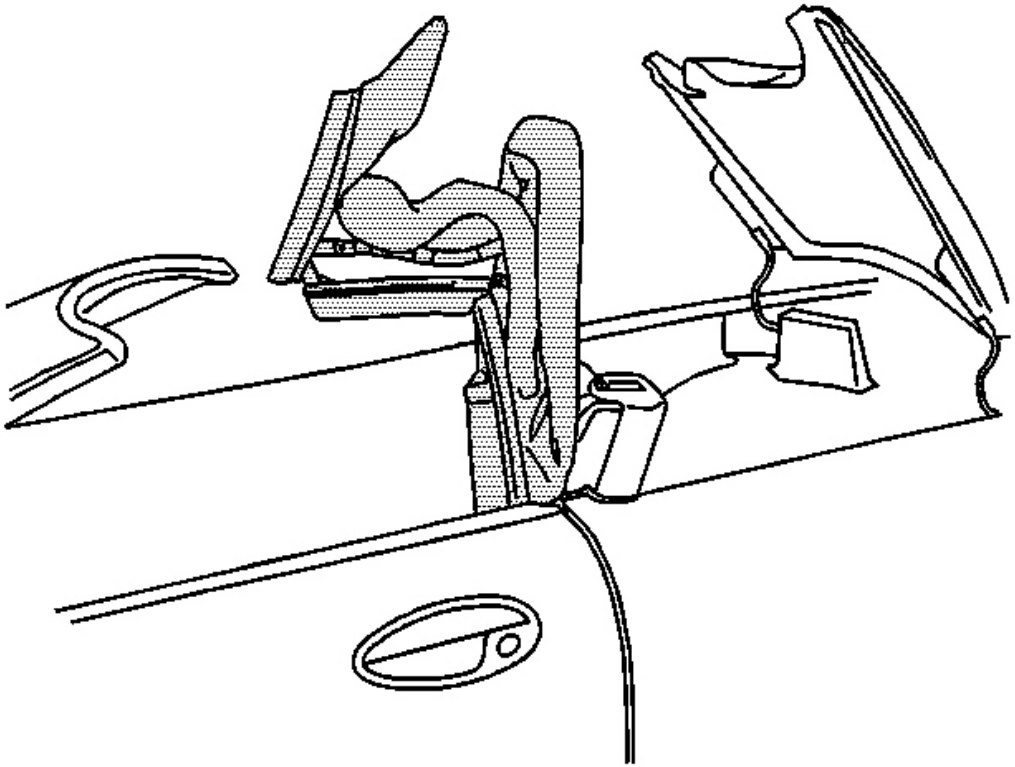

Fig. 134: Folding Top With The #1 Bow And The #5 Bow Up
Courtesy of GENERAL MOTORS CORP.

2. Raise or leave raised, the folding top stowage compartment lid.

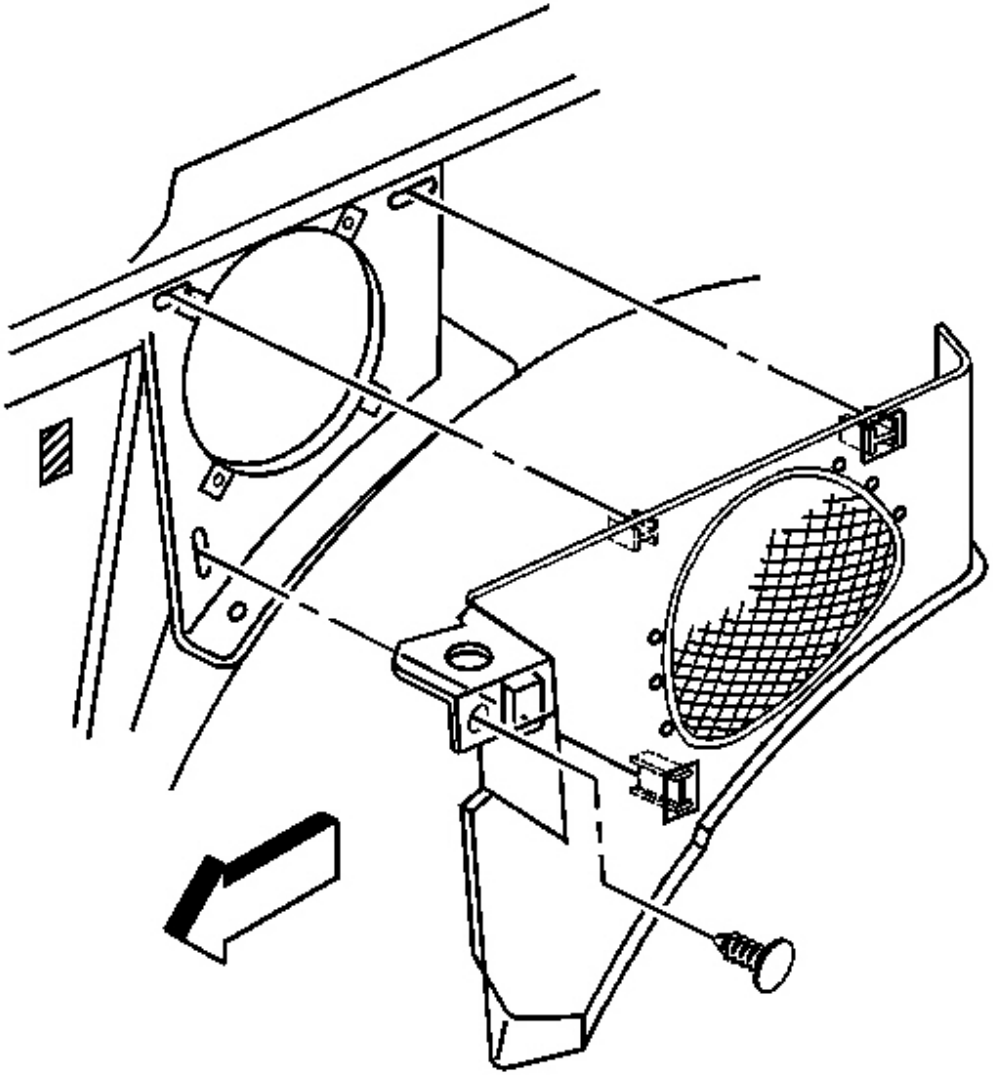

Fig. 135: Rear Compartment Right Side Trim Panel
Courtesy of GENERAL MOTORS CORP.

3. Remove the push-in fastener from the rear compartment side trim panel.
4. Remove the rear compartment side trim panel.

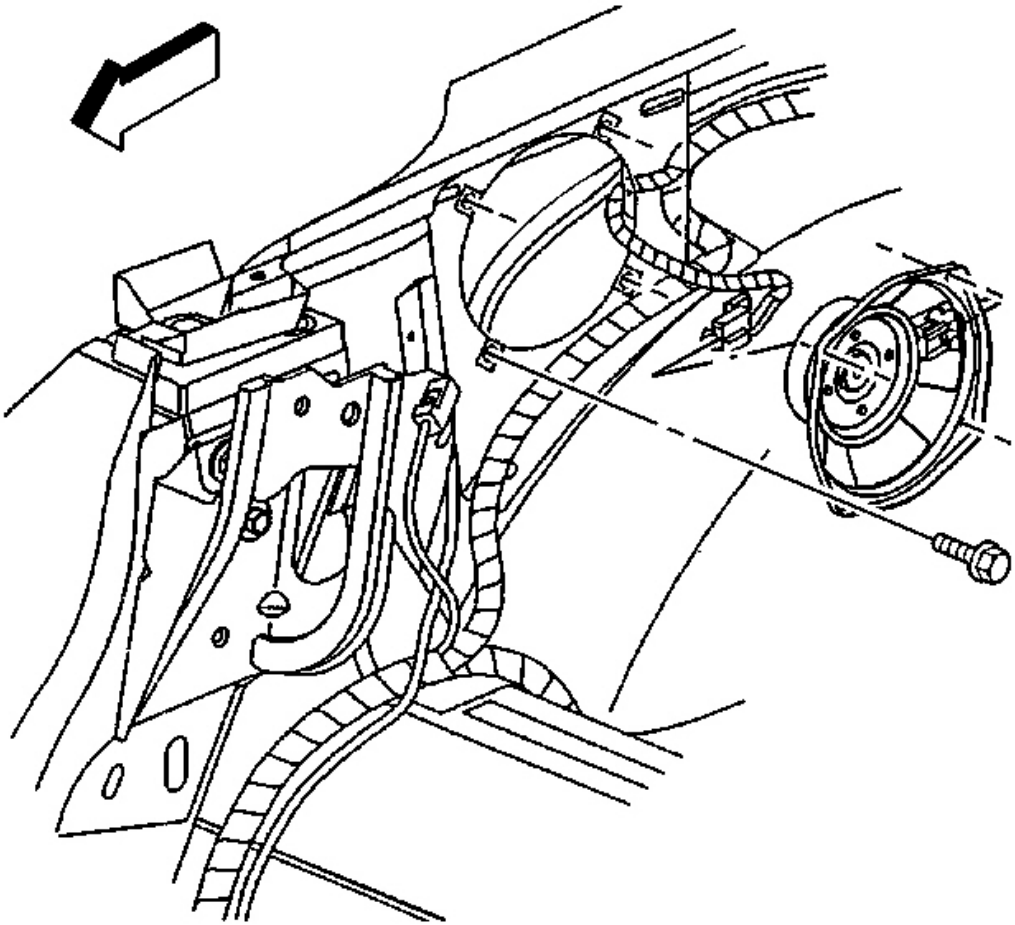

Fig. 136: Electrical/Audio Connector At Rear Speaker & Screws
Courtesy of GENERAL MOTORS CORP.

5. Remove the rear speaker retaining screws.
6. Begin to remove the rear speaker in order to access the electrical/audio connector.
7. Disconnect the electrical/audio connector from the rear speaker.
8. Remove the rear speaker.

Installation Procedure

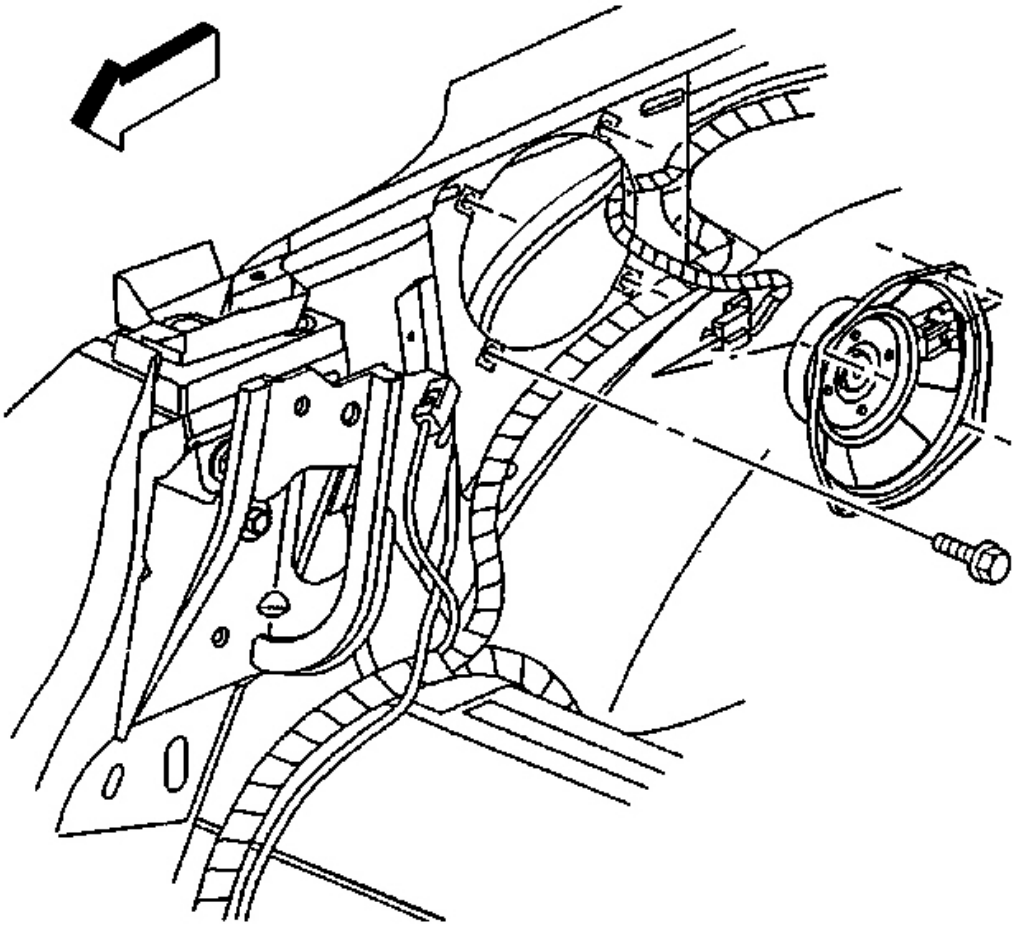

Fig. 137: Electrical/Audio Connector At Rear Speaker & Screws
Courtesy of GENERAL MOTORS CORP.

1. Connect the electrical/audio connector to the rear speaker.
2. Install the rear speaker into position.

NOTE: Refer to Fastener Notice in Cautions and Notices.

3. Install the rear speaker retaining screws.

Tighten: Tighten the rear speaker retaining screws to 2.5 N.m (22 lb in).

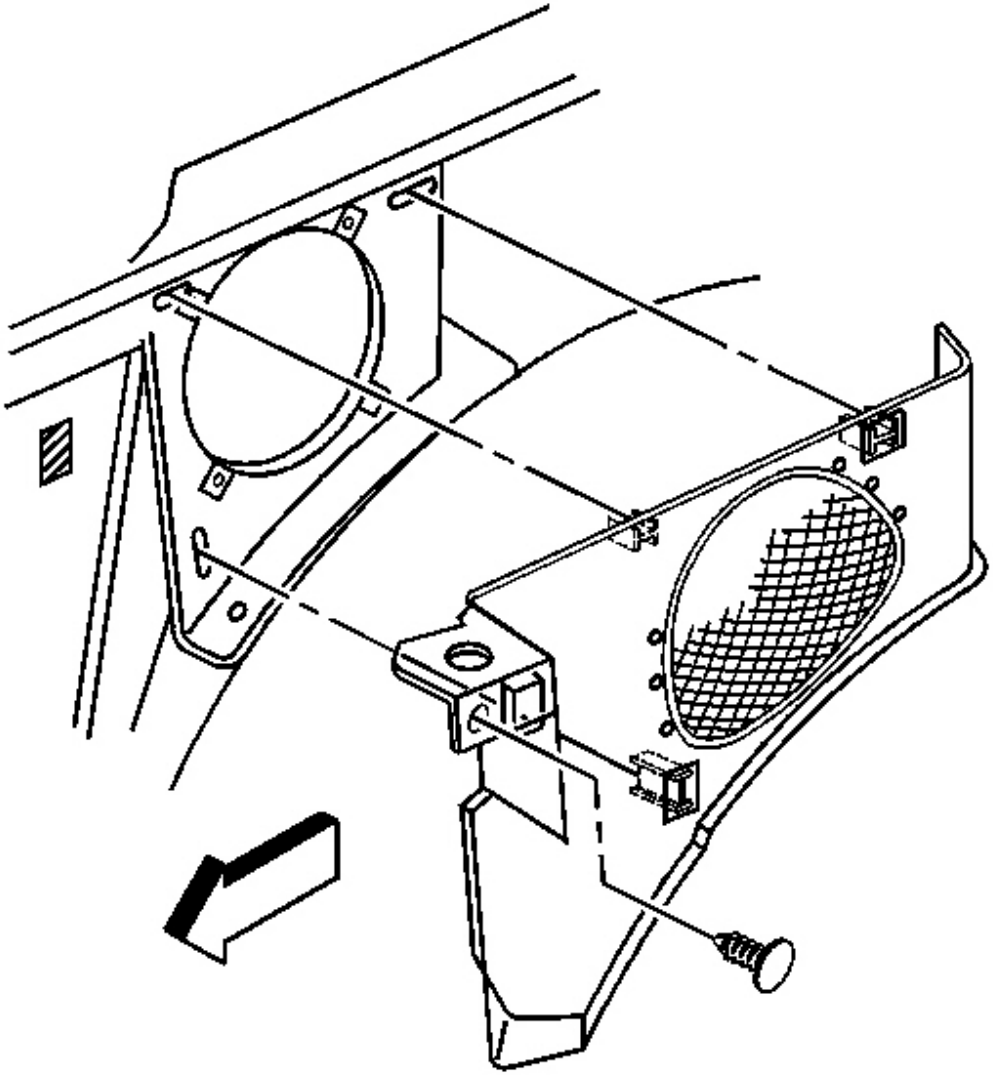

Fig. 138: Rear Compartment Right Side Trim Panel
Courtesy of GENERAL MOTORS CORP.

4. Install the rear compartment side trim panel.
5. Install the push -in fastener to the rear compartment side trim panel.
6. Lower the folding top stowage compartment lid.
7. Raise the convertible top.

SPEAKER REPLACEMENT - REAR (HARDTOP)

Removal Procedure

1. Remove the rear compartment side trim panel. Refer to **Trim Panel Replacement - Rear Compartment Front Side (Convertible)** or **Trim Panel Replacement - Rear Compartment Front Side (Hardtop)** or **Trim Panel Replacement - Rear Compartment Front Side (Coupe)** in Interior Trim.
2. Remove the rear speaker retaining screws.
3. Begin to remove the rear speaker in order to access the electrical/audio connector.

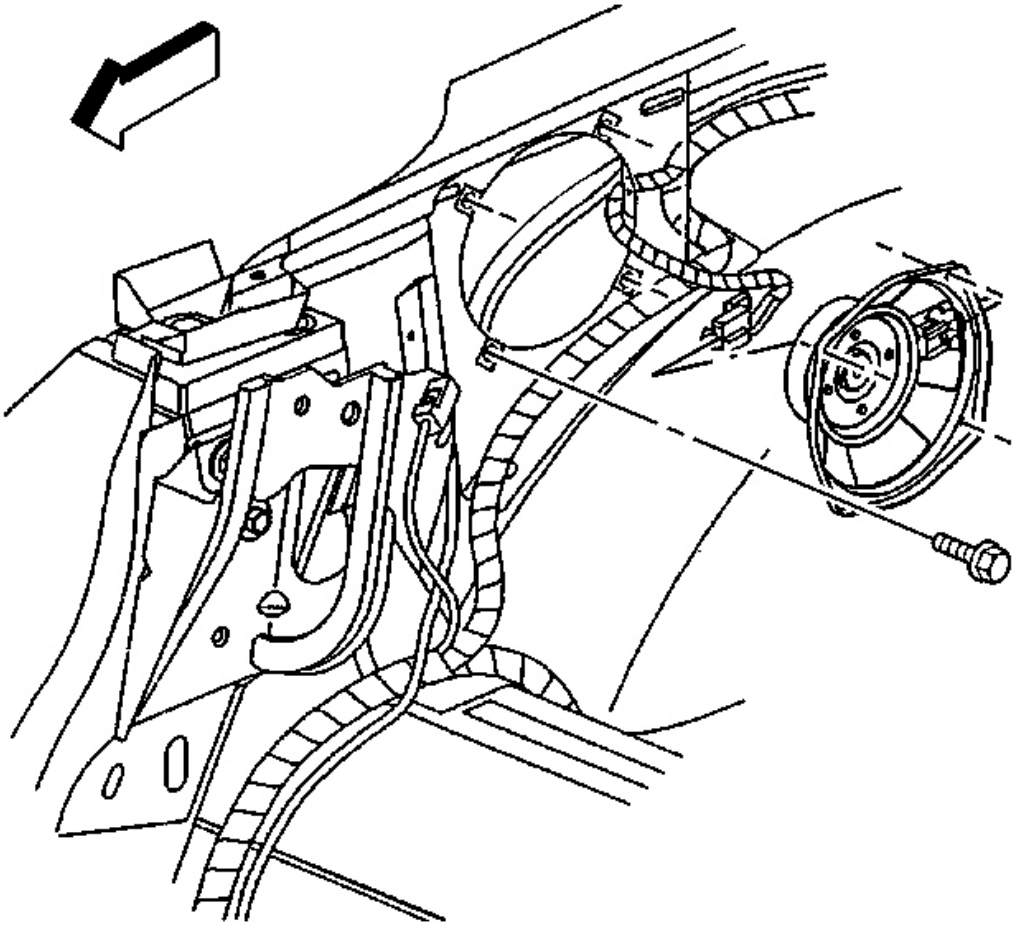

Fig. 139: Electrical/Audio Connector At Rear Speaker & Screws
Courtesy of GENERAL MOTORS CORP.

4. Disconnect the electrical/audio connector from the rear speaker.

5. Remove the rear speaker.

Installation Procedure

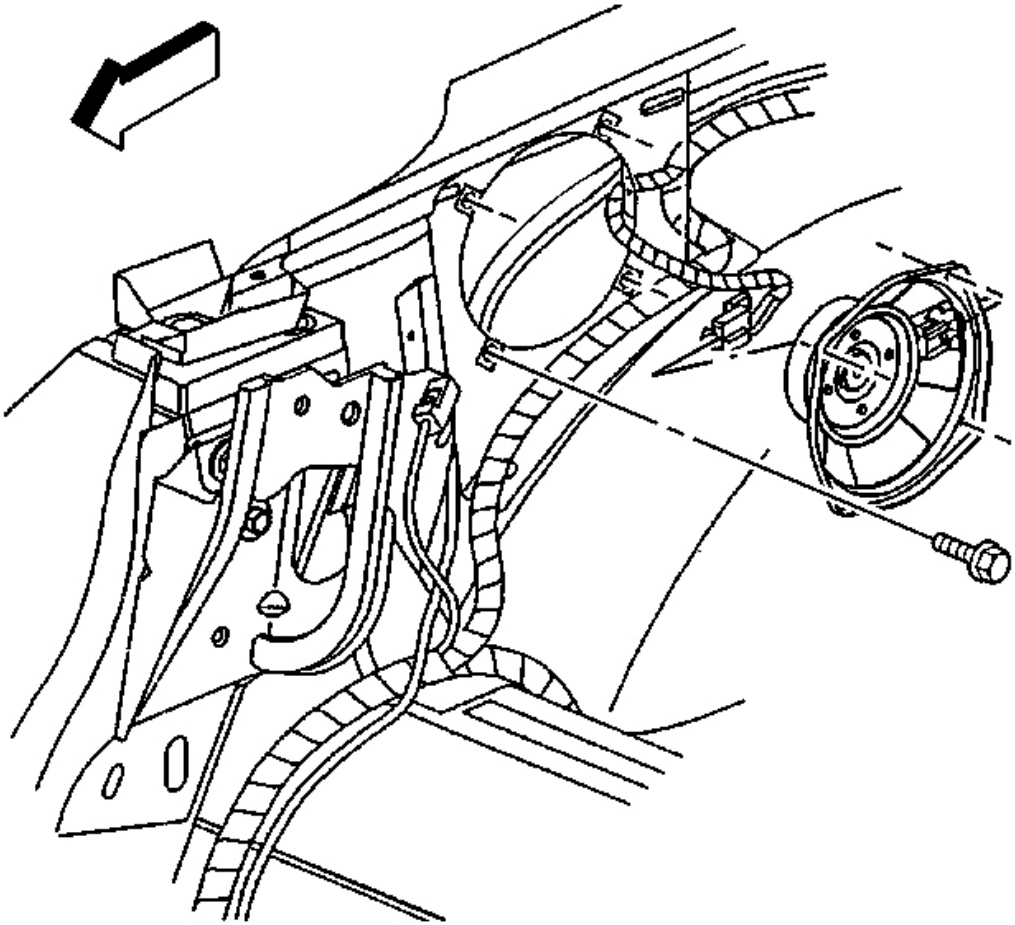

Fig. 140: Electrical/Audio Connector At Rear Speaker & Screws
Courtesy of GENERAL MOTORS CORP.

1. Connect the electrical/audio connector to the rear speaker.
2. Install the rear speaker into position.

NOTE: Refer to Fastener Notice in Cautions and Notices.

3. Install the rear speaker retaining screws.

Tighten: Tighten the rear speaker retaining screws to 2.5 N.m (22 lb in).

4. Install the rear compartment side trim panel. Refer to **Trim Panel Replacement - Rear Compartment Front Side (Convertible)** or **Trim Panel Replacement - Rear Compartment Front Side (Hardtop)** or **Trim Panel Replacement - Rear Compartment Front Side (Coupe)** in Interior Trim.

DESCRIPTION AND OPERATION

RADIO/AUDIO SYSTEM DESCRIPTION AND OPERATION

Radio/Audio System Description

The following audio systems are available for the 2002 Corvette:

RPO ULO

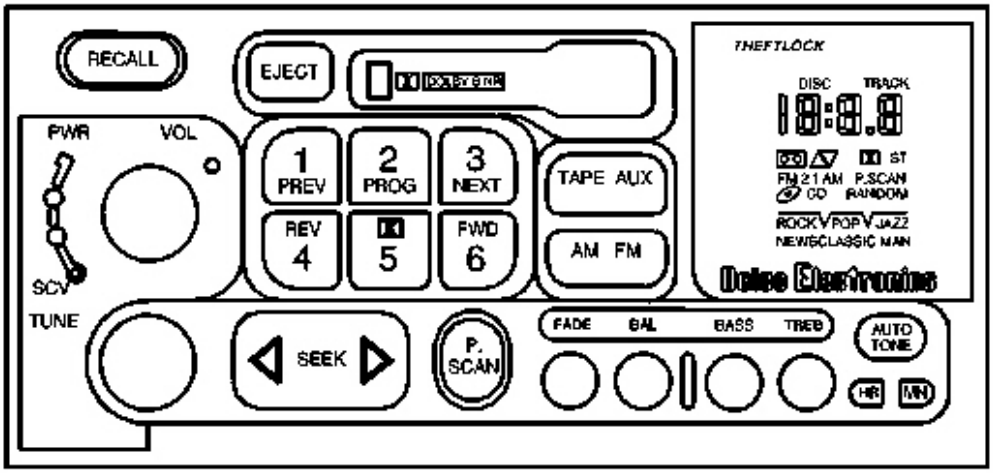

Fig. 141: Radio/Audio System
Courtesy of GENERAL MOTORS CORP.

- Radio AM/FM stereo
- Seek/scan
- Auto reverse music search cassette
- Auto tone
- Clock

- Electronically tuned receiver (ETR)

RPO UNO

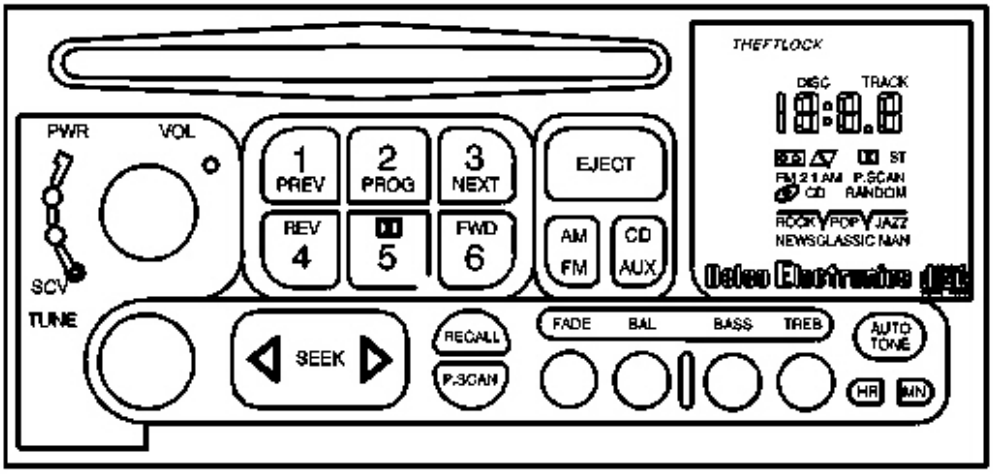

Fig. 142: Radio/Audio System
Courtesy of GENERAL MOTORS CORP.

- Radio AM/FM stereo
- Seek/scan
- Compact disc
- Auto tone
- Clock
- Electronically tuned receiver (ETR)

RPO U1S

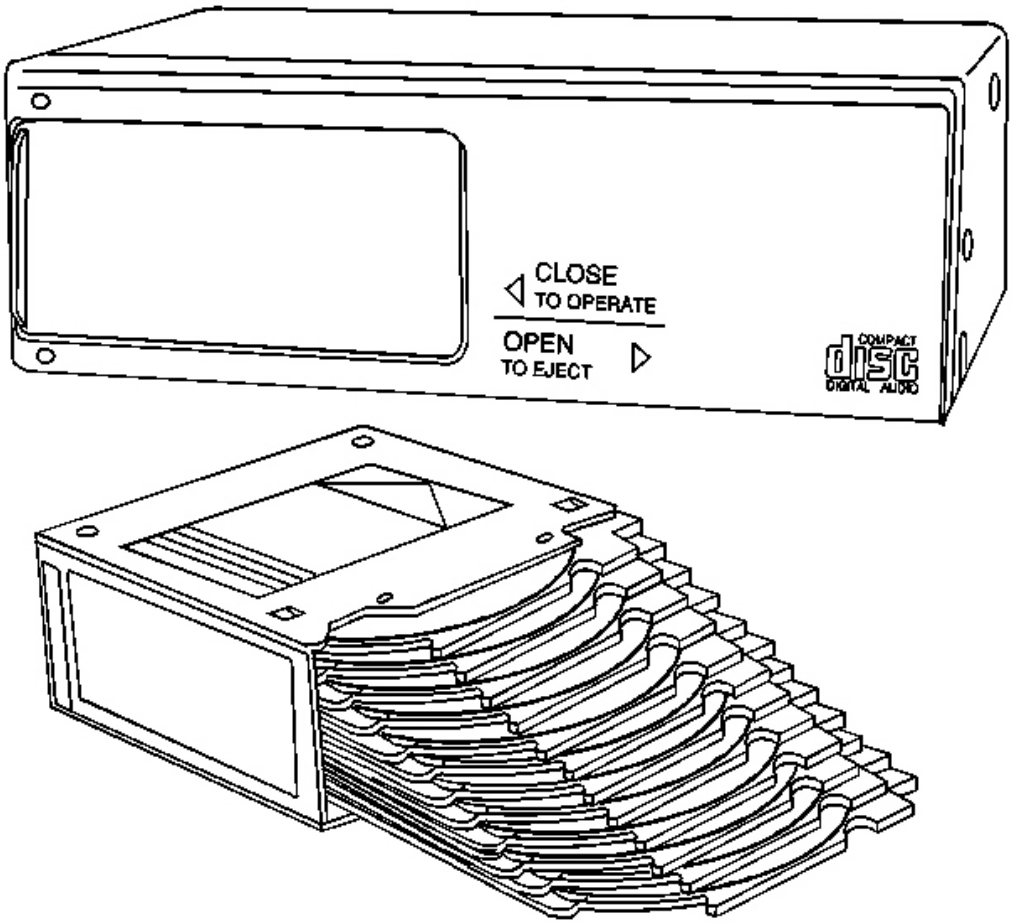

Fig. 143: Compact Disc Changer
Courtesy of GENERAL MOTORS CORP.

Remote compact disc changer (available with ULO or UNO)

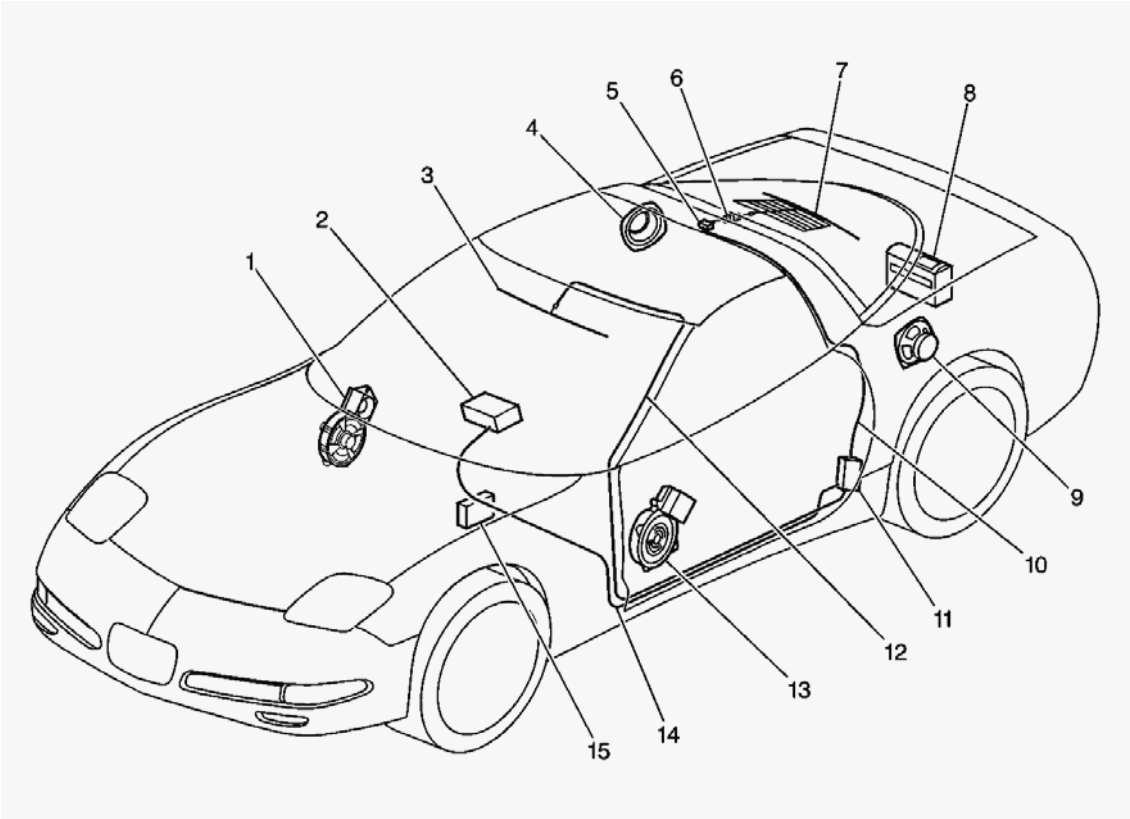

Fig. 144: Audio System Components - Coupe
Courtesy of GENERAL MOTORS CORP.

Callouts For Fig. 144

Callout	Component Name
1	Front Door Speaker Assembly RH
2	Radio Control
3	Windshield Antenna
4	Rear Speaker Assembly RH
5	Antenna Buffer
6	Rear Lift Window Antenna Cable
7	Rear Lift Window Antenna
8	Remote CD Changer
9	Rear Speaker Assembly LH
10	Rear Lift Window Antenna Coaxial Extension Cable
11	Antenna Module
12	Front Windshield Antenna Coaxial Cable
13	Front Door Speaker Assembly LH
14	Radio Control Coaxial Cable
15	Bose(R) Signal Processing Module

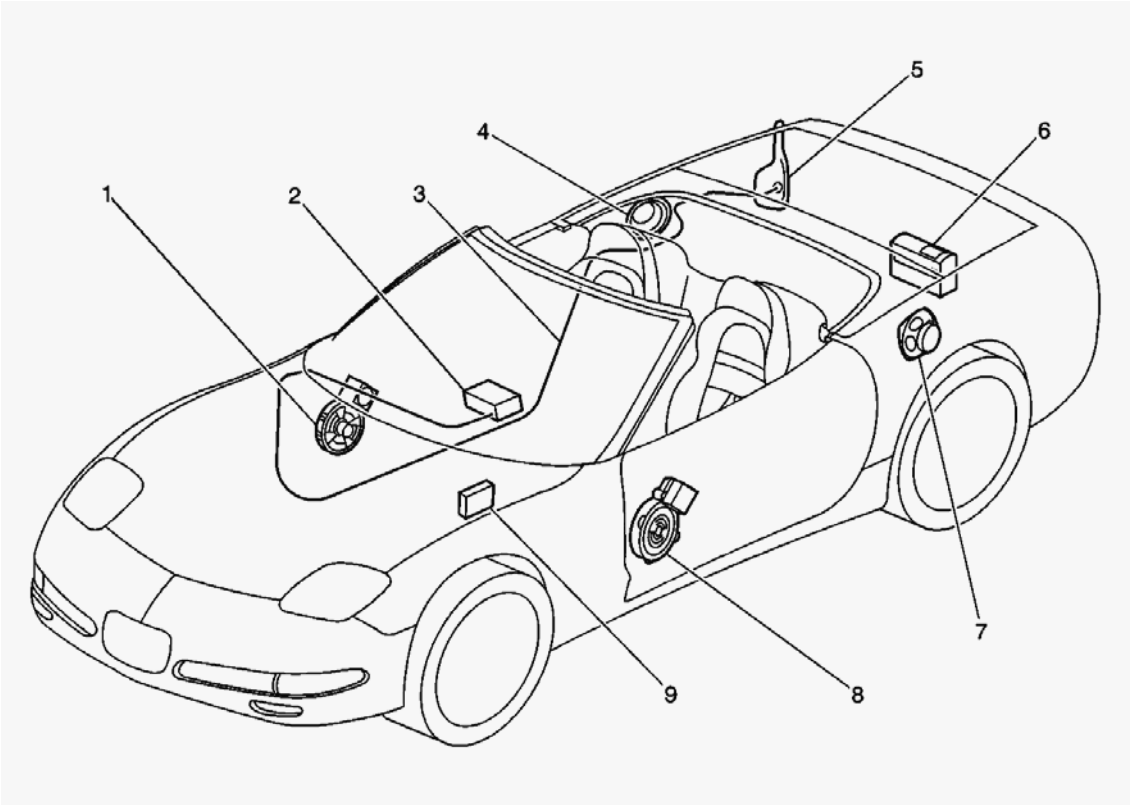

Fig. 145: Audio System Components - Convertible
Courtesy of GENERAL MOTORS CORP.

Callouts For Fig. 145

Callout	Component Name
1	Front Door Speaker Assembly RH
2	Radio Control
3	Power Antenna Coaxial Extension Cable
4	Rear Speaker Assembly RH
5	Power Antenna Assembly
6	Remote CD Changer
7	Rear Speaker Assembly LH
8	Front Door Speaker Assembly LH
9	Bose(R) Signal Processing Module

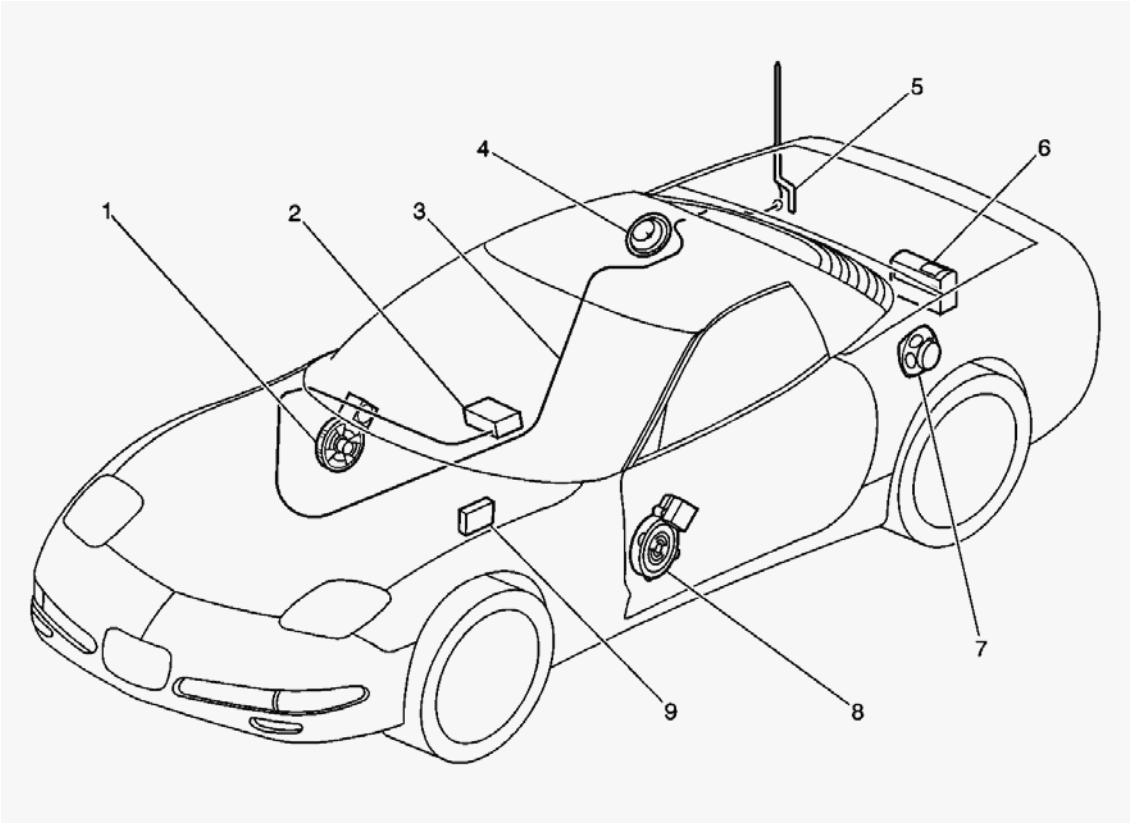

Fig. 146: Audio System Components - Hardtop
Courtesy of GENERAL MOTORS CORP.

Callouts For Fig. 146

Callout	Component Name
1	Front Door Speaker Assembly RH
2	Radio Control
3	Fixed Antenna Coaxial Extension Cable
4	Rear Speaker Assembly RH
5	Fixed Antenna Assembly
6	Remote CD Changer
7	Rear Speaker Assembly LH
8	Front Door Speaker Assembly LH
9	Bose(R) Signal Processing Module

The following is included in each audio system:

- A radio control located in the instrument panel (I/P)
- A electronically tuned radio reception
- The following six speakers:
  - Four door mounted speakers

    - Two quarter mounted speakers
- A fixed antenna system (Hardtop)
- A diversity (dual) antenna system (Coupe)
- A power antenna system (Convertible)
- A THEFTLOCK(R) radio theft -deterrent system

The Electronically Tuned Receiver (ETR) utilizes a programmer and synthesizer to provide optimum sound reproduction. The ETR incorporates an electronic memory for preselected station and digital clock function. Reset the memory whenever the battery is disconnected.

Each system has a vacuum fluorescent (VF) display that coordinates with the other instrument panel (I/P) displays. The Body Control Module (BCM) controls the dimming of the display based on inputs from the I/P cluster which reads adjustments of the I/P cluster dimmer switch (rheostat). The Light Emitting Diode (LED) and the back lighting of the radio face is done with incandescent light powered directly by the I/P cluster dimmer switch (rheostat).

AM Mode

The range of most Amplitude Modulation (AM) stations is greater than FM stations. This is especially true at night. The AM band tuning range is 530 kHz to 1710 kHz.

Delco -Bose System

The Delco -GM/BOSE(R) audio system is an advanced automotive sound system that is tuned to the interior of the vehicle. The six speakers in four locations, two amplifiers in the forward speaker locations, and an amplifier incorporated into a signal processor are designed to deliver acoustically customized sound. The following are considered in the customization of the sound:

- The shape of the windows
- The location of the windows
- The type of upholstery
- The type of carpeting
- The position of the passengers

The result is a carefully calculated distribution of sound. The sound does not seem to come only from the speaker which results in a resemblance of a live concert performance.

When the system is turned ON the Bose(R) relay is energized through the radio receiver. The relay contacts close and apply current from the Bose(R) fuse to the two door mounted speaker/amplifier assemblies. This causes a slight delay from the time the system is turned on, until the sound is heard.

Loud bass volume is possible while maintaining sound clarity. Both forward speaker assemblies contain a specially designed amplifier and woofer (speaker) to assure clear sound reproduction at high volume levels. The following are some features of the system:

- Full -time loudness control
- Built -in Dolby(R) B tape noise reduction
- Direct and reflected sound design
- Front and rear tuned speaker locations and front location amplifiers with an overall system power of 252 watts

Compact Disc Player

The Compact Disc (CD) player provides exceptional clarity and provides low background noise through digital reproduction. A selectable audio compression circuit processes the audio signal. This processed audio signal brings quiet and loud music passages into a more desirable listening range. This is especially useful in the automotive environment. When using compression, a demanding recording can be listened to without continually adjusting the volume.

The automotive environment can be a difficult one for sophisticated electronics. The CD player design takes into account many of the problems seen in automobiles. The player is designed to protect its optics from humidity and from excessive heat by automatically shutting down and ejecting the disc or displaying ERR. A special nylon filter across the disc opening protects the disc mechanism's optics from interference caused by moisture, dust and sunlight.

The loading system gently draws the disc into the mechanism. An ejected disc extends out almost halfway allowing the user to easily manage the disc. The loading system prevents damage to the disc if insertion of a second disc is attempted.

The use of a laser beam to read digital information means the disc will rarely wear out. There is no physical contact with the disc. An occasional skip due to rough roads will not damage the disc.

Remote Compact Disc Changer

The remote compact disc (CD) changer is available with either the UL0 or the UN0. The remote (CD) changer is located in the cargo area in the center storage compartment. This CD changer features a 12 disc, removable magazine, and operation through the radio control head. The CD changer includes many of the quality design components found in the I/P mounted CD player (UN0).

Antenna System (Coupe)

(Convertible Models have a Power Antenna)

The Corvette Coupe features a diversity antenna system designed to deliver the best radio signal reception possible.

Two antennas are used to form a diversity system. The primary antenna is attached to the rear lift window similar to a defogger grid. This antenna is used to receive both AM and FM signals. The secondary antenna is attached to the windshield in the same manner as the primary antenna. This antenna is used to receive only FM (diversity) signals. The antenna reception signals are sorted by a reception processing module. The module then sends the clearest, strongest signal to the radio control.

Multipath or signal flutter is the quickly fading in and out of FM radio signal reception. Multipath or signal flutter most often occurs in down -town areas or wherever large obstructions are present. A radio signal reflects off of buildings at various angles. When one signal crosses paths with a same signal (at a different angle) they will cancel each other out. The signal will be received and then not received very rapidly by a vehicle audio system. This causes a fluttering effect to be heard through a vehicle's speakers. With the Corvette diversity antenna system one of the two antennas will virtually always receive a strong signal and widely limit multipath.

Radio Theft -Deterrent Feature

Corvette radios come with the THEFTLOCK(R) radio security system. THEFTLOCK(R) is designed to discourage theft of the radio by using a secret code to disable all radio functions whenever battery power is removed.

The radio feature THEFTLOCK(R) may be used or ignored. If ignored, the system plays normally and the radio is not protected by this feature. If THEFTLOCK(R) is activated, the radio will not operate if stolen.

When THEFTLOCK(R) is activated, the radio will display LOC to indicate a locked condition anytime battery power is removed. If the system loses battery power for any reason the radio must be unlocked with the secret code before it will operate.

Radio/Audio System Operation -Radio Controls

PWR -VOL Control

The system will turn ON with a momentary delay with the ignition in the ON or in the ACCESSORY position and rotating the upper knob clockwise. The station frequency is displayed and then the time of day is displayed. Rotate the knob clockwise to increase the volume. Rotate the knob counterclockwise to decrease the volume.

RECALL (Radio) Control

When the system is ON pressing RECALL will display (or recall) the station being played. When the ignition is OFF pressing RECALL will display the time of day.

SCV (Speed -Compensated Volume) Control

The SCV (Speed -Compensated Volume) ring is located behind the PWR -VOL control knob. Rotating the ring up or down will automatically cause the volume to raise and lower as the speed of the vehicle increases and decreases. The top position has a higher maximum volume. The top position gets louder faster than the lower positions. When the system is ON the SCV will display. Rotating the ring all the way down will turn the SCV system OFF. Subtle changes in volume should not be noticeable to the driver when the system is working properly.

BASS Control

Push the BASS Control knob to release it. Rotate the knob to the right to increase bass. Rotate the knob to the left to decrease bass. Push the knob back in to store it when not adjusting.

TREB Control

Push the TREB knob to release it. Rotate the knob to the right to increase treble. Rotate the knob to the left to decrease treble. Push the knob back in to store it when not adjusting.

BAL Control

Push the BAL Control knob to release it. Rotate the knob to move sound between the right and left speakers. Push the knob back in to store it when not adjusting.

FADE Control

Push the FADE Control knob to release it. Rotate the knob to move sound between the front and the rear speakers. Push the knob back in to store it when not adjusting.

TUNE Control

Push the TUNE Control knob to release it. Rotate the knob to choose desired radio stations. Push the knob back in to store it when not adjusting.

SEEK (Radio) Control

Press SEEK > or < SEEK and the radio will tune to the next higher or the next lower station and stay there.

AM/FM (Radio) Control

Press AM/FM to receive AM, FM1, or FM2 band. The selection will appear on the VF display.

P SCAN Control

Press P SCAN to hear each of the present stations for a few seconds. Press P SCAN again to stop at a chosen station.

AUTO TONE Control

Press AUTO TONE to choose preset treble and bass equalization settings designed for one of the following:

- ROCK
- NEWS
- POP
- CLASSICAL
- JAZZ

Each time AUTO TONE is pressed, another setting will appear on the display. When MAN (manual) appears the control of the tone will be back to the treble and bass knobs.

ST (Stereo) Indicator

ST will appear on the VF display whenever a FM stereo broadcast is selected.

Push Buttons (Numbered)

A total of 18 stations can be preset. Six AM stations can be preset. Six FM1 stations can be preset. Six FM2 stations can be preset. The following is the preset stations procedure:

1. Tune in the desired station (in the desired band; AM, FM1, or FM2).
2. Press and hold one of the six push buttons for 5 seconds. The station will fade out and then return when set. The present station will return whenever that button is pressed.

Repeat these steps for each push button.

Clock

The time will appear on the VF display. To set the time perform the following procedure:

1. Press and hold HR (hour) until the correct hour appears.
2. Press and hold MIN (minute) until the correct minute appears.

There will be a 2 -second delay before the clock goes into the time set mode.

Press RECALL to display the time when the ignition is OFF.

Radio/Audio System Operation -Cassette Tape Player

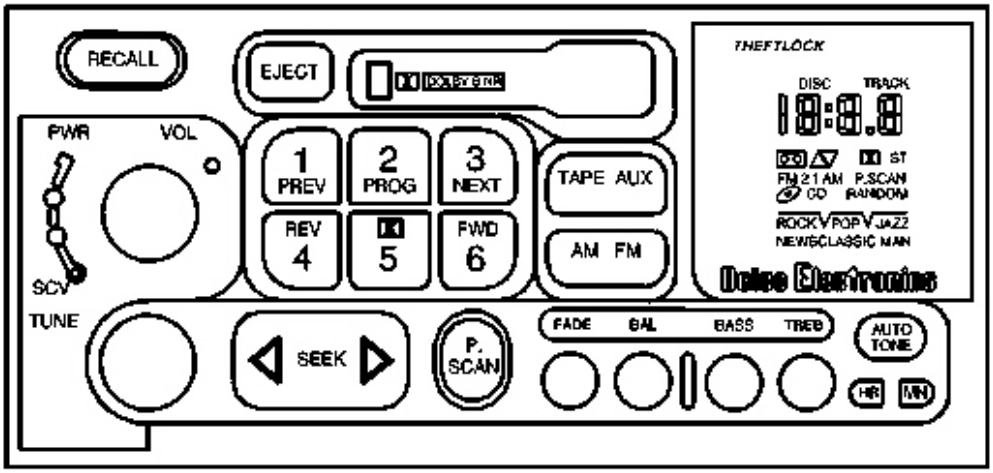

Fig. 147: Radio/Audio System
Courtesy of GENERAL MOTORS CORP.

This cassette tape player is designed to work best with tapes that are 30 minutes long on each side. Longer tapes are much thinner. Thinner tape may not work well in this player.

This tape player has an automatic reverse feature. The automatic reverse feature automatically reverses the tape direction at the end of a side. Pressing PROG while the cassette tape is playing will reverse the tape direction.

To play a cassette tape perform the following procedure:

1. The ignition must be in the ACCESSORY or ON position.
2. Turn ON the radio.
3. Insert the exposed tape side of the cassette tape squarely through the tape door. If the tape is not inserted squarely no sound or a garbled sound may be heard. Press EJECT to remove the tape if no sound or a garbled sound is heard. Reinsert the exposed tape side of the cassette tape squarely through the tape door.
4. The radio will automatically turn OFF and the cassette tape will play. An arrow will appear in the VF display to indicate the direction of the play.

The following controls will function when a cassette tape is playing the same as they do during radio operation:

- PWR -VOL
- SCV
- BASS

- TREB
- BAL
- FADE
- AUTO TONE

Refer to Radio/Audio System Operation - Radio Controls.

To stop play of a cassette tape perform one of the following:

- Turn the ignition OFF. The cassette will remain in the player. The cassette will resume play at the point where it stopped.
- Turn the radio OFF. The cassette will remain in the player. The cassette will resume play at the point where it stopped.
- Press AM/FM to stop cassette play and to switch to radio. Press TAPE AUX to switch back to playing tape.
- Press EJECT to remove cassette from the player (stopping play) and switch to radio.

FWD (Tape) Control

Press FWD to rapidly advance the tape. Press FWD again to stop the tape advancing. The radio will play during this operation.

REV (Tape) Control

Press REV to rapidly reverse the tape. Press REV again to stop the tape reversing. The radio will play during this operation.

NEXT (Tape) Control

Press NEXT to play the next selection instead of waiting for the current selection to finish. For NEXT to work properly the tape must have at least three seconds of silence between each selection. The radio will pay during this operation.

PREV (Tape) Control

Press PREV to replay the current selection. For PREV to work properly the tape must have at least three seconds of silence between each selection. The radio will play during this operation.

SEEK (Tape) Control

Press SEEK > to play the next selection instead of waiting for the current selection to finish. Press < SEEK to replay the current selection. The radio will play during these operations.

PROG Control

Press PROG to switch from one side of tape to the other side of tape. To reverse the direction of play.

AM/FM (Tape) Control

Press AM/FM to stop cassette play and switch to radio.

TAPE AUX (Tape) Control

Press TAPE AUX to stop cassette play and switch to radio. If the remote compact disc changer (U1S) is included in the vehicle sound system, pressing TAPE AUX a second time will allow it to play.

Dolby(R) Control

Press Dolby(R) to reduce background noise. The Dolby(R) symbol will appear in the VF display.

EJECT (Tape) Control

Press EJECT to remove cassette from the player. The radio will then play (when the power is on). EJECT will work with the ignition ON or OFF.

CLN (Clean) Indicator

This message may appear on the VF display. If it does appear on the VF display the cassette player needs to be cleaned. Clean the player as soon as possible to help prevent permanent damage to tapes and to the player itself. Refer to **Cassette Player Care and Cleaning** .

To reset the CLN indicator after the player has been cleaned perform the following procedure:

1. Press and hold EJECT for five seconds.
2. " - - -" will appear on the VF display to verify that the indicator is reset.

Radio/Audio System Operation - Compact Disc Player (Instrument Panel)

This compact disc (CD) player is designed to use 120 mm (4.75 in) full size compact discs. If a 80 mm (3.14 in) single mini disc is inserted the disc will not be able to be ejected.

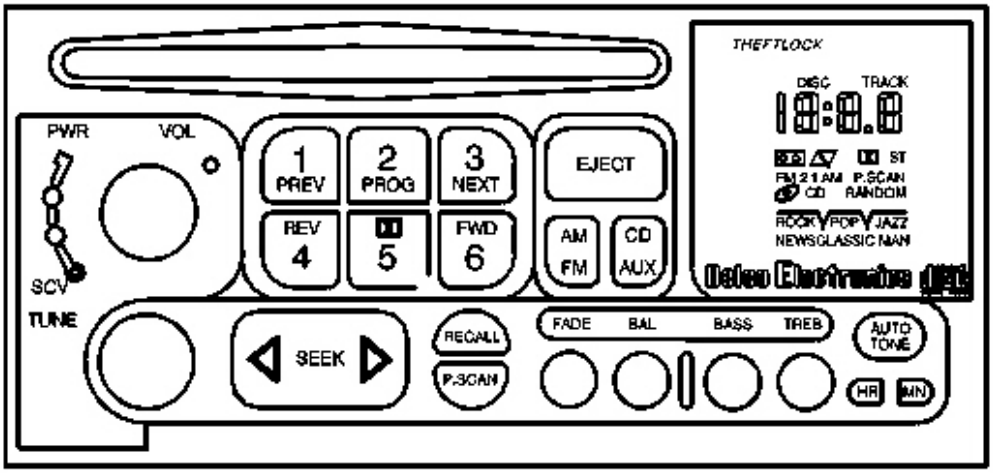

Fig. 148: Radio/Audio System
Courtesy of GENERAL MOTORS CORP.

To play a compact disc (CD) perform the following procedure:

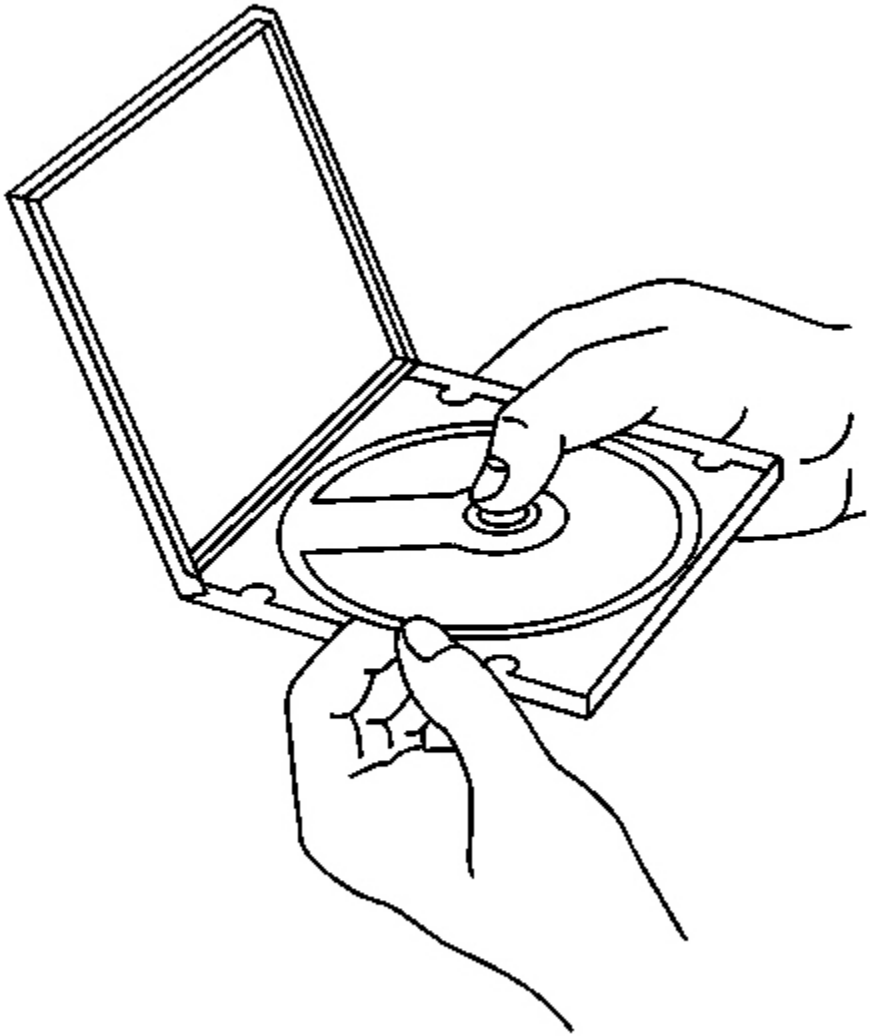

Fig. 149: Compact Disc Case
Courtesy of GENERAL MOTORS CORP.

1. Turn the ignition to the ACCESSORY or the ON position.
2. Turn ON the radio.
3. Remove the compact disc from the case.

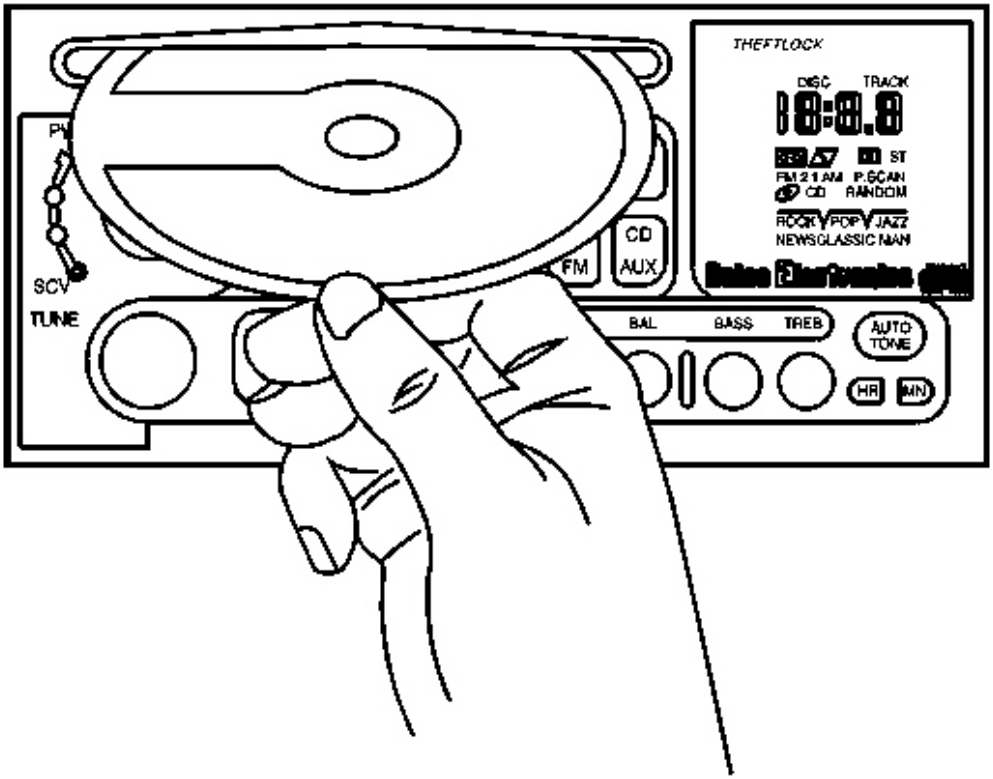

Fig. 150: Inserting Disc Into Player
Courtesy of GENERAL MOTORS CORP.

4. Insert the disc partway into the slot with the LABEL SIDE UP. The player will pull the disc in automatically. If the disc is upside down, dirty, scratched or wet, the player will eject it and ERR will appear on the VF display.
5. When successfully inserted, track 1 will begin to play. If the ignition or the power was turned OFF and a disc was left in the player the play will resume where it stopped. The following will appear on the VF display when a track begins:
    - CD will display (CD will appear on the display as long as a disc is in the player).
    - The disc icon will display.
    - The number of the track being played will display.

Once a disc is playing the following controls will function as they do during radio operation:

- PWR -VOL

- SCV
- BASS
- TREB
- BAL
- FADE
- AUTO TONE

Refer to Radio/Audio System Operation - Radio Controls.

To stop play of a compact disc (CD) perform one of the following:

- Turn the ignition OFF. The disc will remain in the player. The disc will resume play at the point where it stopped.
- Turn the radio OFF. The disc will remain in the player. The disc will resume play at the point where it stopped.
- Press AM/FM to stop disc play and switch to radio. Press CD AUX to switch back to playing disc.
- Press EJECT to remove CD from player (stopping play) and switch to radio.

RECALL (CD) Control

Press RECALL to display the number of the track currently playing. Press again within five seconds to display elapsed time (how long disc has been playing).

FWD (CD) Control

Press and hold FWD to rapidly advance within a track. Release it to resume playing.

REV (CD) Control

Press and hold REV to rapidly reverse within a track. Release it to resume playing.

NEXT (CD) Control

Press NEXT to hear the next track (instead of waiting for the current track to finish). If NEXT is held or pressed more than once the play will advance further.

PREV (CD) Control

Press PREV to replay the current track (selection). If held or pressed more than once the previous track will be played.

Press PREV within eight seconds of play from the beginning of the current track and the previous track will be played.

RDM Control

Press RDM to hear random order of tracks played. When the final random track has been played the same random selection will be played again. Press RDM while random selection is playing to return to normal sequence. The sequence will being playing in order of the current track playing when button was pressed. If RDM is pressed again a different random selection of tracks will play.

COMP Control

Press COMP to bring loud and soft sound into more desirable range (more nearly equal in volume). Press COMP again to return to normal function.

AM/FM (CD) Control

Press AM/FM to stop disc play and switch to radio. The disc icon will go off the VF display.

CD AUX (CD) Control

Press CD AUX to stop radio play and switch to disc play. Press TAPE AUX to switch back to playing tape.

If the remote compact disc changer (U1S) is included in the vehicle sound system, pressing TAPE AUX a second time will allow it to play.

EJECT (CD) Control

Press EJECT to remove CD from player. EJECT will operate whether the power is ON or OFF. The radio will then play when the power is ON.

If EJECT is pressed but the disc not removed, the disc will be drawn back into the player (for protection) in approximately one minute.

ERR (Error) Indicator

Under certain conditions ERR will appear on the VF display. The following can cause an ERR message to display:

- Operational and/or interior ambient temperatures are too high.
- Operational and/or interior ambient temperatures are too low.
- Driving on very rough road.

Perform the following to reset the ERR indicator:

Press RECALL to clear ERR indicator from the VF display.

Radio/Audio System Operation -Compact Disc Player (Remote Changer)

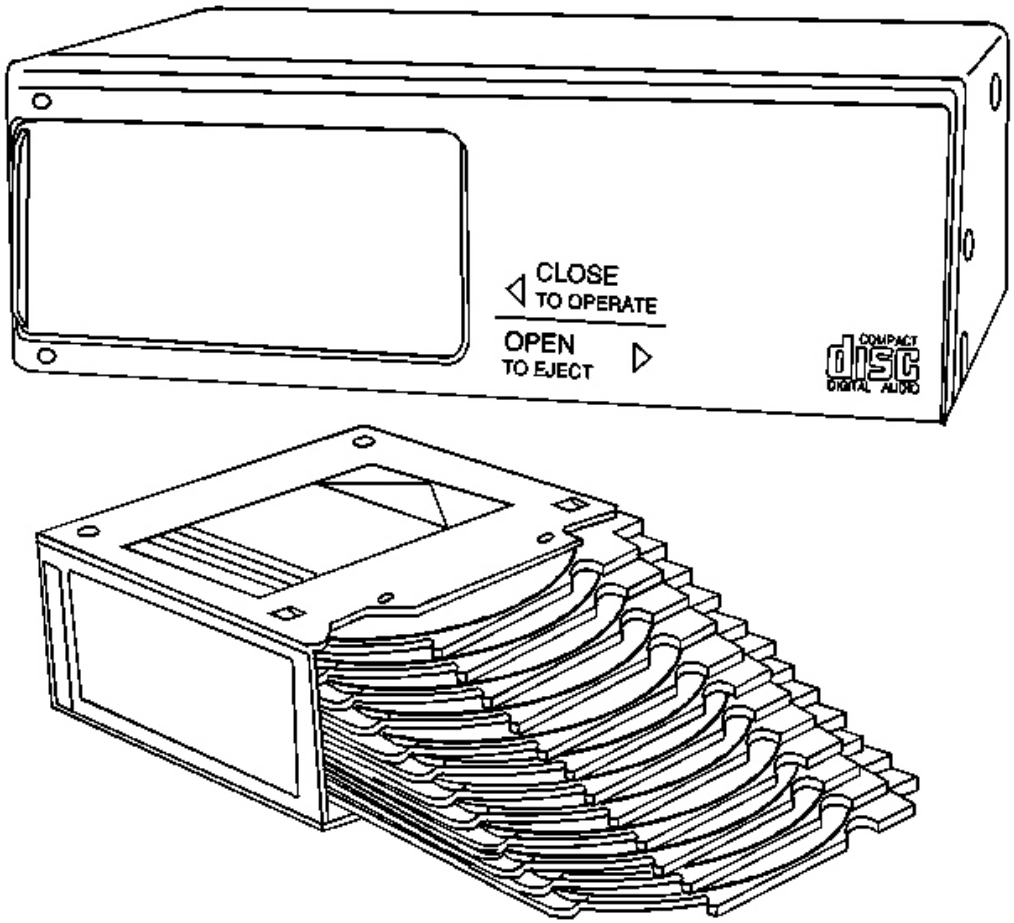

Fig. 151: Compact Disc Changer
Courtesy of GENERAL MOTORS CORP.

The disc icon appears on the VF display of the radio control whenever a magazine containing discs is loaded into the changer. The disc icon will flash while the player is checking for discs. The CD disc icon is located in the bottom left corner. The following appears on the display when a disc begins playing:

- The CD disc icon located in the bottom left corner
- The disc number
- The track number

Perform the following to play a compact disc in the remote CD changer:

1. Load discs into the magazine. Refer to Radio/Audio System Operation - Compact Disc Player (Remote

Changer Magazine).

2. Insert the magazine into the CD player. Refer to Radio/Audio System Operation - Compact Disc Player (Remote Changer Magazine).
3. Turn the ignition to the ACCESSORY or ON position.
4. Turn ON the radio.
5. If radio is playing, press TAPE AUX (UL0) or CD AUX (UN0) to switch from radio play to playing a compact disc in the remote CD changer.
6. If cassette tape is playing, press TAPE AUX to switch from cassette play to playing a compact disc in the remote CD changer.
7. If the compact disc is playing (in the radio control UN0), press CD AUX to switch from compact disc play (UN0) to playing a compact disc in the remote CD changer.

The following controls will function as they do during radio operation once a disc is playing:

- PWR -VOL
- SCV
- BASS
- TREB
- BAL
- FADE
- AUTO TONE

Refer to Radio/Audio System Operation - Radio Controls.

Perform any one of the following procedures to stop play of a compact disc (CD) in the remote CD changer:

- Turn the ignition OFF. The disc will remain in the changer. The disc will resume play at the point where it stopped.
- Turn the radio OFF. The disc will remain in the changer. The disc will resume play at the point where it stopped.
- Press AM/FM to stop disc play and switch to radio (if no cassette or CD are loaded into the radio control).
- Press TAPE AUX 2 times to stop disc play and switch back to cassette play UL0 (if a cassette is loaded into the radio control).
- Press CD AUX 2 times to stop disc play and switch back to disc play into the radio control UN0 (if a disc is loaded into the radio control).

TAPE AUX (Remote CD) Control

- Press TAPE AUX to switch from radio play to playing a compact disc in the remote CD changer. Press AM/FM to switch back to radio play.
- Press TAPE AUX to switch from cassette play to playing a compact disc in the remote CD changer. Press TAPE AUX 2 times to switch back to cassette play.

CD AUX (Remote CD) Control

- Press CD AUX to switch from radio play (UN0) to playing a compact disc in the remote CD changer. Press AM/FM to switch back to radio play.
- Press CD AUX to switch from compact disc play in the radio control (UN0) to playing a compact disc in the remote CD changer. Press CD AUX 2 times to switch back to disc play in the radio control.

PREV (Remote CD) Control

Press PREV to replay current track (on the same disc).

PROG (Remote CD) Control

Press PROG to select the next available disc in the magazine. The disc number appears on the VF display. If one of the discs cannot be played, that number will be skipped on the display.

NEXT (Remote CD) Control

Press NEXT to advance to the next track (on the same disc).

FWD (Remote CD) Control

Press and hold FWD to rapidly advance through a track. The elapsed time will appear on the display.

REV (Remote CD) Control

Press and hold REV to rapidly reverse through a track. The elapsed time will appear on the display.

SEEK (Remote CD) Control

Press < SEEK to replay the current track once more than eight seconds have played. Press < SEEK 2 times to play the previous track. Press SEEK > to advance to the next highest track on the disc.

Random (Remote CD) Mode

Press P SCAN to enter the random play mode. RANDOM appears on the VF display. The tracks on all loaded discs play in random order. Press SEEK while RANDOM is displayed to randomly scan the discs and tracks.

Eject (Remote CD)

Slide the door on the remote CD changer all the way open. The disc will automatically eject. Keep the door closed whenever possible to prevent dirt and dust from getting into the changer.

Radio/Audio System Operation -Compact Disc Player (Remote Changer Magazine)

IMPORTANT:

- **Keep the magazine away from high heat.**

- **Keep the magazine away from direct sunlight.**
- **Do not disassemble the magazine.**
- **Do not knock anything against the magazine.**
- **Do not use cracked trays.**
- **Do not use warped trays.**
- **Never insert anything other than discs.**
- **Do not attach a label to a disc.**
- **Do not attach tape to a disc.**
- **The use of the following may damage the magazine surface:**
  - **The use of benzine.**
  - **The use of thinner.**
  - **The use of insecticide.**
  - **The use of any other volatile chemical.**

Inserting Discs

Up to 12 discs can be loaded in the magazine. The discs are numbered from 1 to 12 starting with the bottom disc tray.

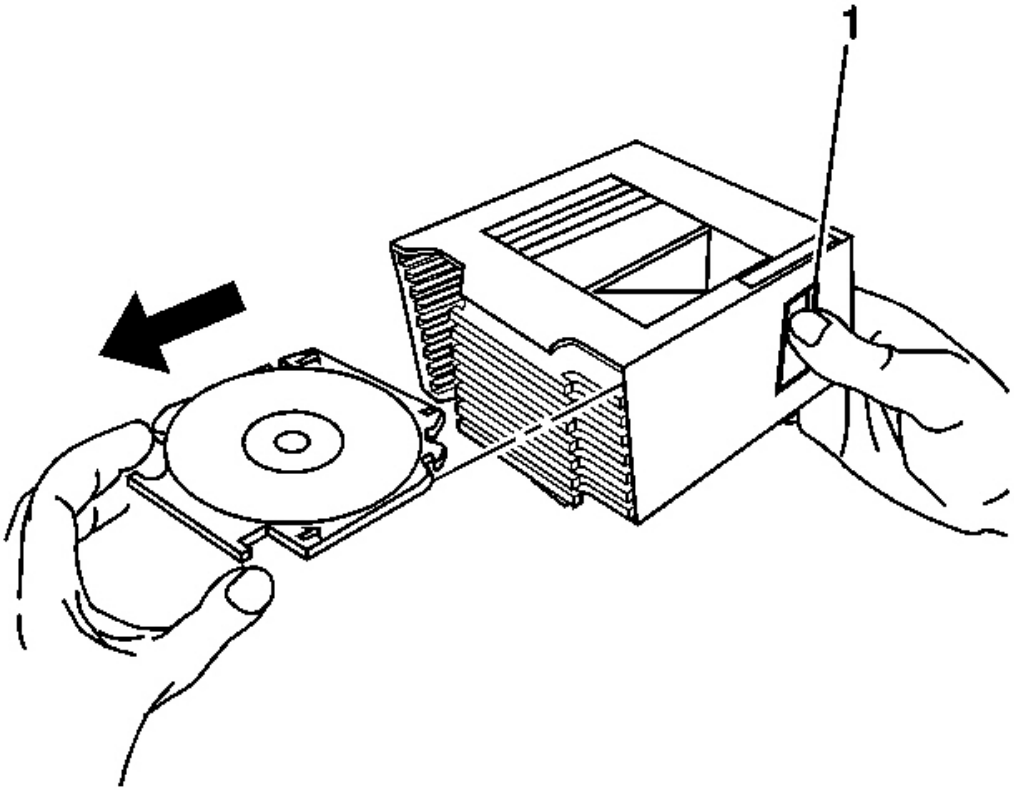

Fig. 152: Pulling Disc Tray Out Of Player
Courtesy of GENERAL MOTORS CORP.

1. Hold down the magazine lock button (1) and pull the tray out by holding if from underneath. The tray will detach from the magazine. Do not drop the tray. Do not drop the disc.

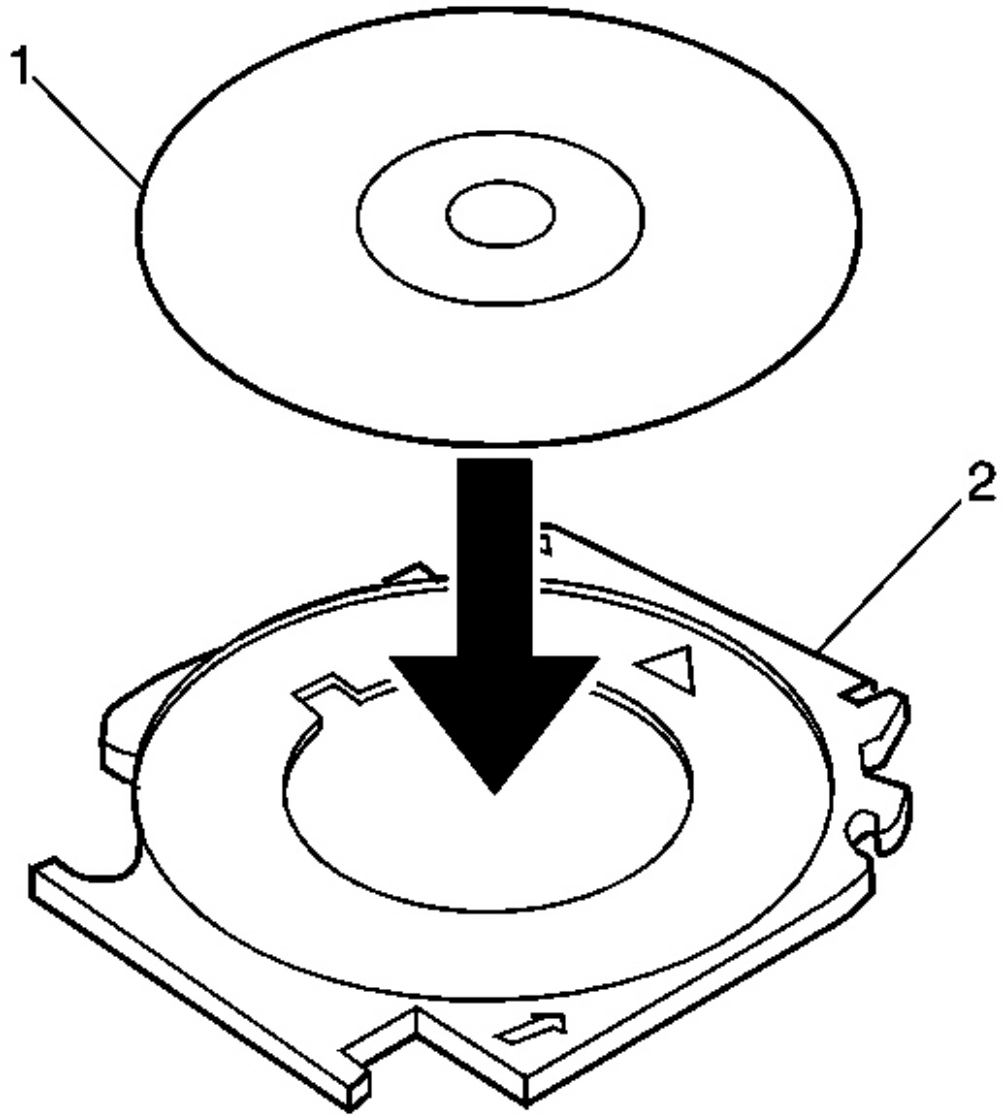

Fig. 153: Placing Disc Label-Side Down
Courtesy of GENERAL MOTORS CORP.

2. Place one LABEL -SIDE DOWN disc (1) on the disc tray (2). Do not touch the surface of the disc. The disc will not play if loaded upside down.

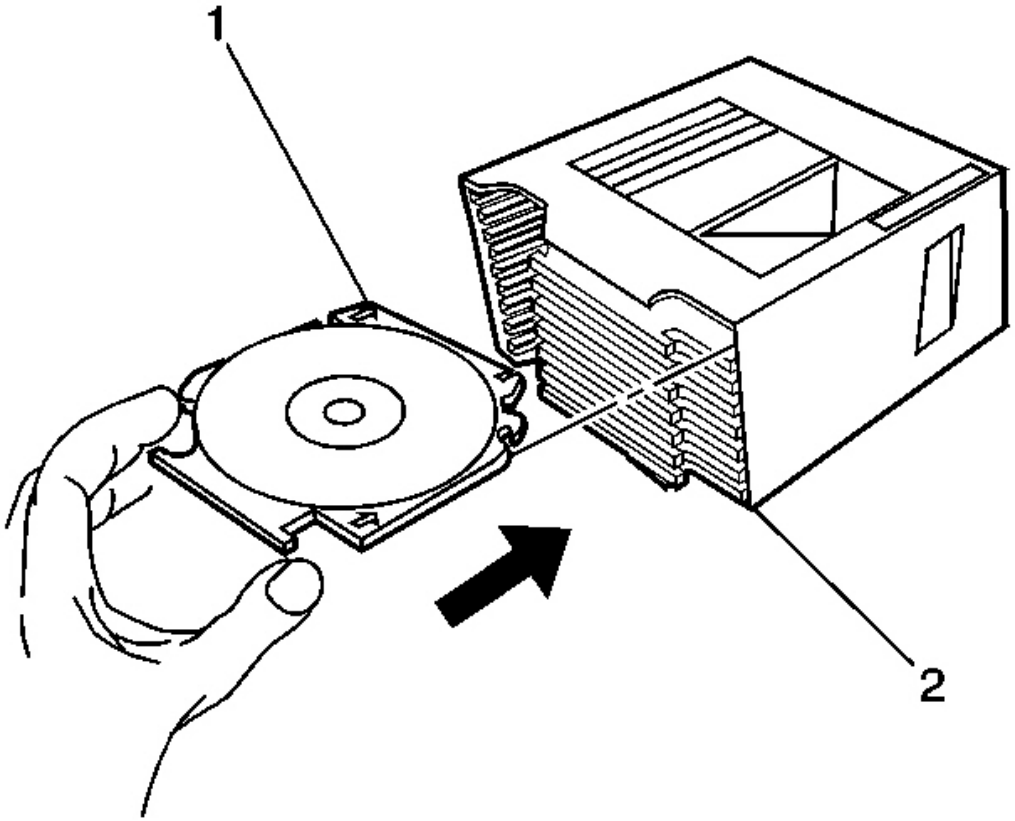

Fig. 154: Inserting Disc Tray Into Player
Courtesy of GENERAL MOTORS CORP.

IMPORTANT:

- **Align the tray with the right and left grooves to allow it to be inserted to the end. Do not bend the tray. Do not force the tray.**
- **Always load 12 trays in the magazine to prevent loss or warping of trays.**
- **The player cannot recognize whether the disc is set or not if the disc is loaded label -side up. NO error message will display. Be sure all discs are loaded LABEL -SIDE DOWN.**

3. Insert the tray (1) horizontally along the right and left grooves of the magazine (2) until it clicks. The disc must not lift from the tray.

Inserting Magazine

1. Slide the door on the remote CD changer open completely until it locks with a click.

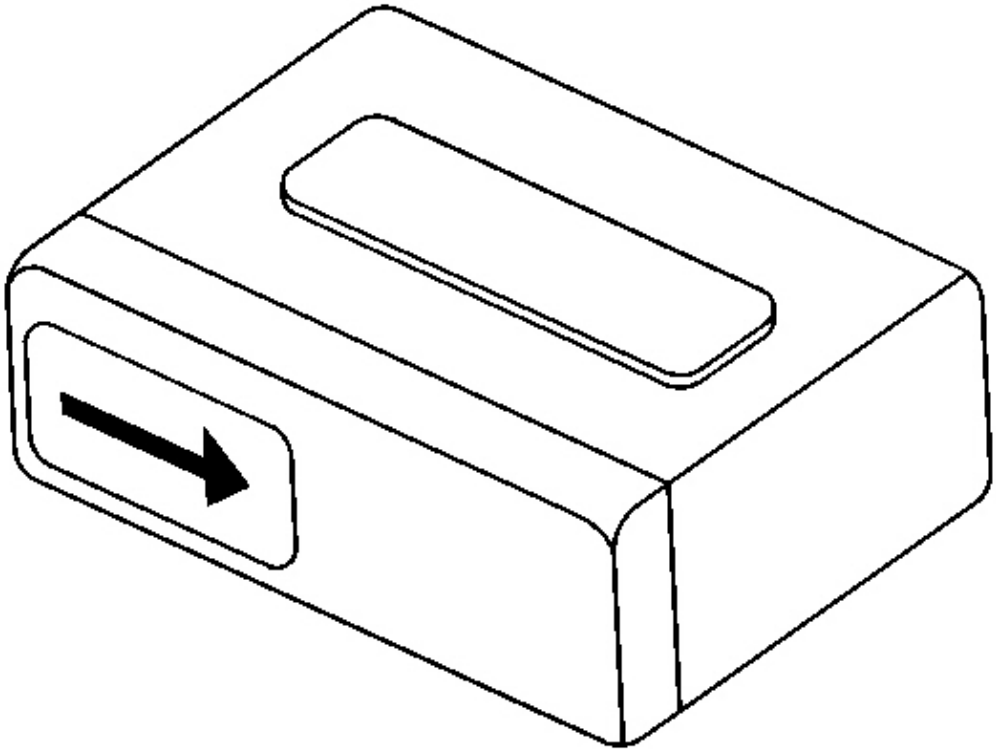

Fig. 155: Sliding Door On Remote CD Changer To Lock
Courtesy of GENERAL MOTORS CORP.

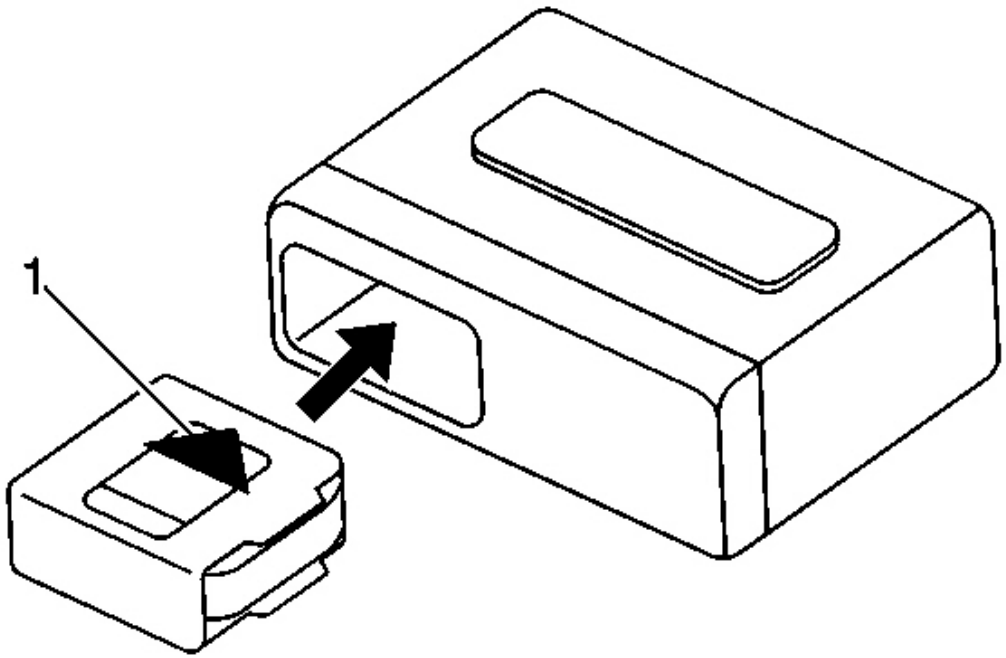

Fig. 156: Inserting The CD Changer In The Player
Courtesy of GENERAL MOTORS CORP.

IMPORTANT:

- **You must load the magazine with discs before inserting into player.**
- **You must insert the magazine in the direction of the arrow (1). Be sure the arrow (1) is facing upward.**
- **Completely remove the label on the magazine if it is coming off or if it is wrinkled. A damaged label may in -turn damage the eject mechanism. The eject mechanism may not eject the magazine.**

2. Insert the magazine into the player in the direction of the arrow (1) on top of the magazine.

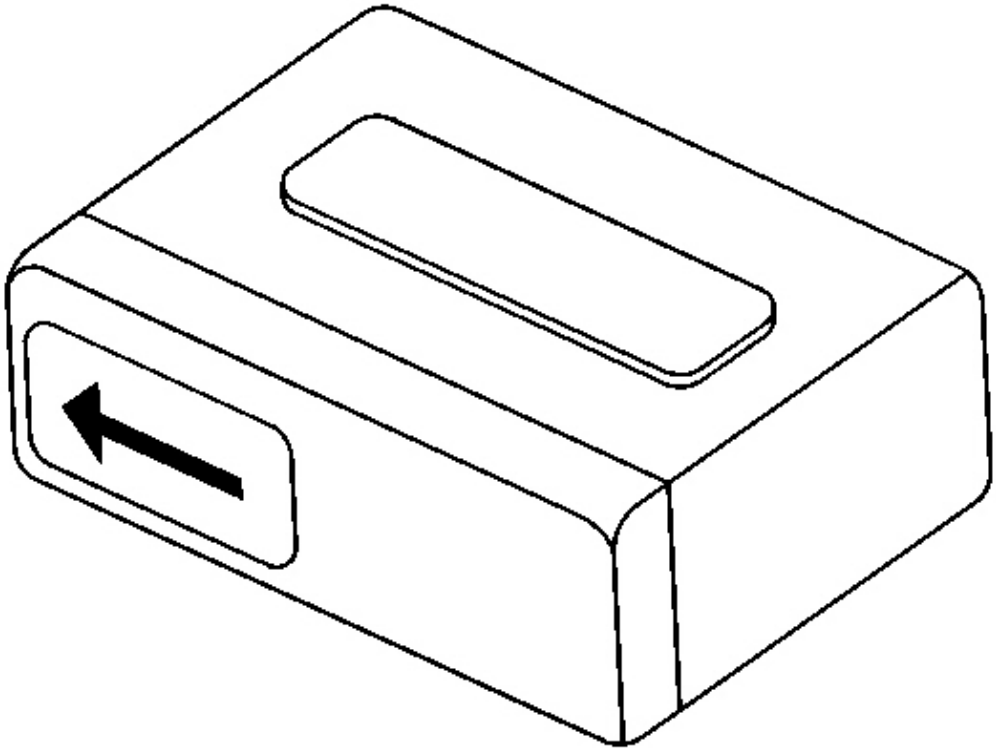

Fig. 157: Sliding Door To Lock It In Place
Courtesy of GENERAL MOTORS CORP.

3. Slide the door all the way to the left to close. The player begins checking for discs in the magazine once the door is closed. This continues for up to 1 -1/2 minutes depending on the number of discs loaded.

An error will occur and the changer will not operate if the door is left partially open.

To eject the magazine from the changer, refer to Radio/Audio System Operation - Compact Disc Player.

Radio/Audio System Operation -Theftlock

Radio Theft -Deterrent Activating

The following instructions explain how to enter a secret code to activate the THEFTLOCK(tm) system.

Read all nine steps before starting the procedure.

IMPORTANT: If more than 15 SECONDS is allowed to elapse between any steps, the radio automatically reverts to displaying time and the procedure must be started over at Step 4.

1. Write down any three or four -digit number from 000 to 1999. Keep the number in a safe place separate from the vehicle. This number is the secret code.
2. Turn the ignition to the ACCESSORY or ON position.
3. Turn the radio OFF.
4. Press the number 1 and 4 push buttons at the same time. Hold the number 1 and 4 push buttons down until " - - -" appears on the VF display.
5. Press MN.

   000 will appear on the display.

6. Press MN again until the last two digits agree with the last two digits of the secret code.
7. Press HR until the first one or two digits agree with the first one or two digits of the secret code.
8. Press AM/FM after confirming that the display code matches the secret code. REP appears on the display indicating that steps 5 through step 7 need to be repeated to confirm the secret code.
9. Press AM/FM again. SEC appears on the display indicating that the radio is secure. The indicator light by the PWR -VOL control begins flashing when the ignition is turned off.

Radio Theft -Deterrent Disabling

Enter the secret code as follows pausing no more than 15 seconds between steps:

1. Turn the ignition to the ACCESSORY or ON position.
2. Turn the radio OFF.
3. Press the number 1 and 4 push buttons at the same time. Hold the number 1 and 4 push buttons down until SEC appears on the VF display.
4. Press MN.

   000 will appear on the display.

5. Press MN again until the last two digits agree with the last two digits of the secret code.
6. Press HR until the first one or two digits agree with the first one or two digits of the secret code.
7. Press AM/FM after confirming that the display code matches the secret code. " - - -" appears on the display indicating that the radio is no longer secured.

SEC appears if the code is incorrectly entered. The radio will remain secured until the correct code is entered.

When battery power is supplied to a secured radio, the radio will not turn ON and LOC will appear on the display.

Radio Theft -Deterrent Unlocking After Power Loss

Enter the secret code as follows pausing no more than 15 seconds between steps:

1. LOC appears on the VF display with the ignition ON.
2. Press MN.

   000 will appear on the display.

3. Press MN again until the last two digits agree with the last two digits of the secret code.
4. Press HR until the first one or two digits agree with the first one or two digits of the secret code.
5. Press AM/FM after confirming that the display code matches the secret code. SEC appears on the display indicating that the radio is now operable and secure.

INOP appears on the display if a wrong code is entered after eight attempts to enter the correct code. Wait one hour with the ignition ON before trying again. Only three attempts are allowed when retrying to enter the correct code before INOP appears.

Radio Theft -Deterrent, Radio Display Code

IMPORTANT: In order to display this code the radio should be in LOC mode or have SEC displayed before proceeding. Pause no more than 15 seconds between steps:

1. Press and hold push button numbers 2 and 3 for about 6 seconds until the first 3 digits of the display code appear.
2. Write the numbers down.
3. Press AM/FM to display the second set of 3 digits.
4. Write the numbers down.

After approximately 5 seconds, or if another button is pressed, the display returns to LOC. The display code must be unscrambled to get the factory backup code which unlocks the radio. Refer to Radio Theft -Deterrent, Factory Backup Code.

Radio Theft -Deterrent, Factory Backup Code

If the security is activated and the radio is disconnected from battery power, the radio will display LOC. The radio will not turn on until the correct unlocking code is entered. If the customer code is lost or unavailable, refer to the Dealer Communications System bulletin about the unlock procedure.

Radio Theft -Deterrent, Changing Owner's Code

IMPORTANT: The radio must be unlocked and no owners code can be currently stored in the radio to change the owners code. The radio will display 1:00 when unlocked. To determine whether or not there is an owners code stored press and hold push button numbers 1 and 4 until the display changes. If SEC is displayed there is

an owners code stored. If " - - -" is displayed there is no code stored.

To Remove Owner's Code

(To Deactivate the Theft -Deterrent From the Unlocked Mode, Deterrent Activated):

IMPORTANT: Either the owners code or the factory backup code can be used to remove the owners code.

IMPORTANT: The theft -deterrent is already deactivated and no code is stored if the display changes to " - - -".

1. Turn the radio OFF. Press and hold push button numbers 1 and 4 for about 6 seconds until the display changes to read SEC.
2. Press HR to set the first two digits (0 -19) of the code.
3. Press MN to set the next two digits (0 -99) of the code.
4. Press the AM/FM button to enter the code.

Theft -Deterrent is deactivated when " - - -" appears on the display and then the time of day displays.

To Add Owner's Code

(To set the User Code (Activate) From the Unlocked Mode, Deterrent Deactivated):

IMPORTANT: If SEC displays, the theft -deterrent is already activated. This means the old code must be removed before entering a new code.

1. Turn the radio OFF. Press and hold push button numbers 1 and 4 for about 6 seconds until the display changes to " - - -".
2. Press HR to set the first two digits (0 -19) of the code.
3. Press MN to set the next two digits (0 -99) of the code.

IMPORTANT: If " - - -" displays after pressing AM/FM, the owners code has not been entered.

4. Press the AM/FM button to enter the code.
5. When REP then 000 are displayed, repeat steps 2 through step 4. This confirms the owners code and activates the theft -deterrent. SEC appears on the display indicating that the theft -deterrent is active, then the time of day appears on the display.

Anytime battery power is cycled and ignition is applied the LOC appears on the display. The system locks. To unlock the system use the owners code or the factory backup code. Refer to Radio Theft -Deterrent Unlocking After Power Loss.