# CONSTRUCTION SPECIFICATIONS

The C635 is a dual clutch automatic transmission, with 6 speeds and electrohydraulic controls.
It has a classic three-shaft layout and can transmit a max. torque of 350 Nm.
For torque transmission, two dry clutches are installed on the main shaft, operated by two different hydraulic actuators:
- a coaxial one inside the gearbox bell housing to manage the even gear clutch
- the second one, on the bottom of the gearbox casing to manage the odd gear clutch.
For the gear engagement system features
See descriptions 2128 DUAL CLUTCH TRANSMISSION EXTERNAL CONTROLS

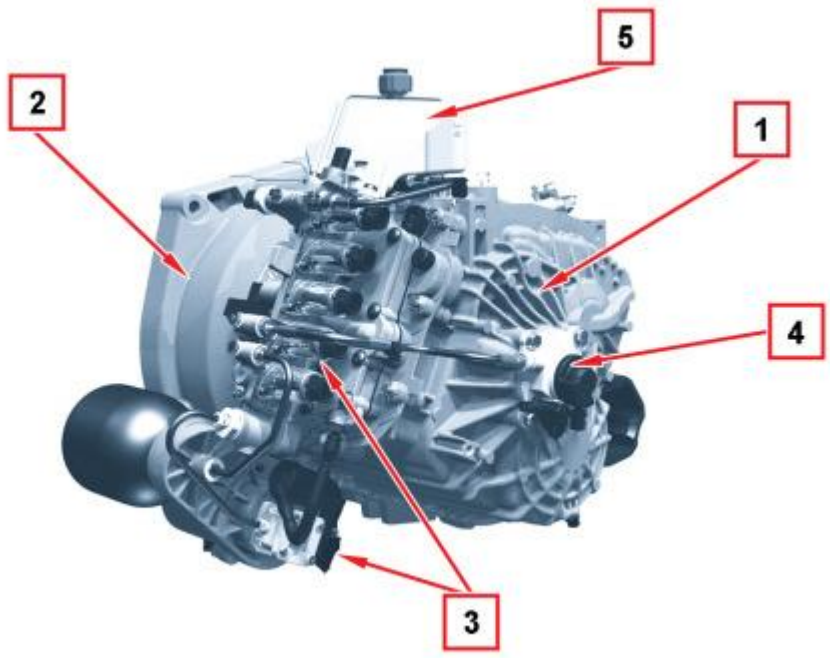


cardiagn.com

1. Gearbox casing
2. Clutch casing
3. Electrohydraulic control unit
4. Odd gear clutch control actuator
5. Fluid reservoir for electrohydraulic control unit

**The specific features are:**
- manual gearbox with fixed idler (or cascade gear) with 6 transmission ratios plus reverse;
- all gears synchronised including reverse;
- idler wheel for reverse engagement;
- toothed wheels with helical teeth;
- two coaxial input shafts plus two layshafts (upper and lower);
- double dry clutch;
- double hydraulic actuator for clutch control;
- special differential integrated in the gearbox casing;
- brake on differential for "Parking" function;
- coupling with special flywheel;
- electrohydraulic system for clutch and gearshifting handling.

# COMPOSITION OF THE GEARBOX

Inside the gearbox each transmission ratio is produced by means of a pair of gears that mesh constantly with one idling on the relevant shaft.
Reverse gear is an exception, it is made by a set of three gears to reverse the direction of movement.

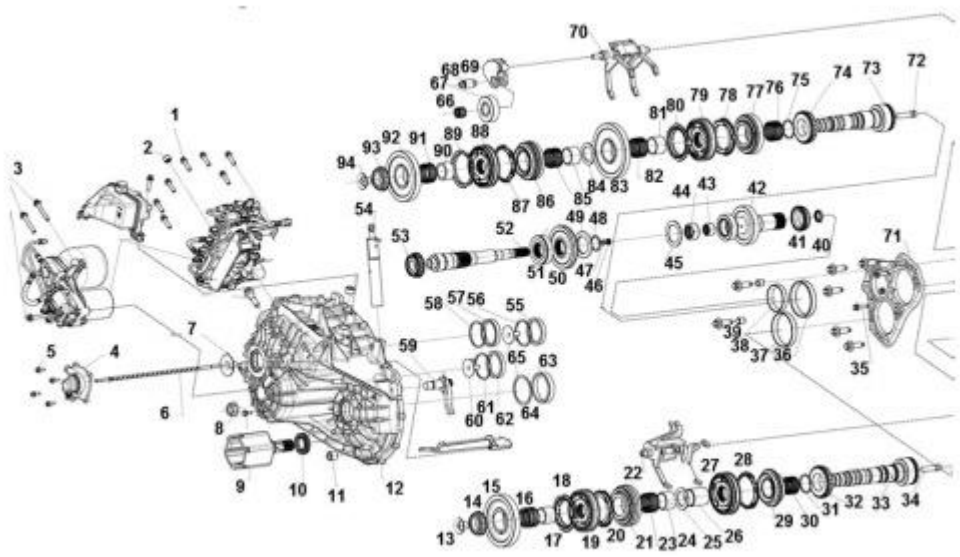

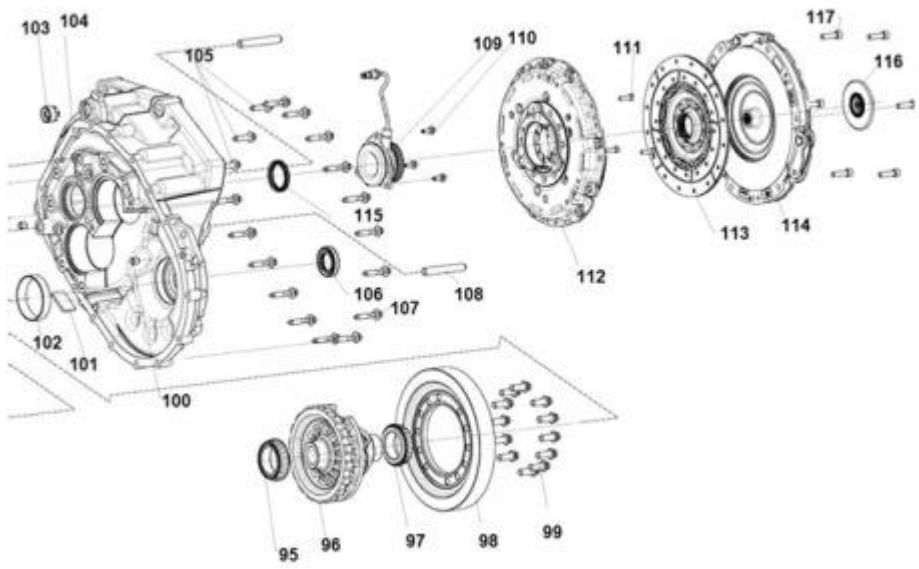

1. Electrohydraulic unit fixing screws
2. Bleed plug
3. Power unit fixing screws
4. Odd gear clutch release actuator
5. Fixing screws for odd speed clutch release actuator
6. Odd speed clutch release rod
7. Main shaft rear oil duct
8. Flanged nut for "Parking" mechanism
9. Left differential shaft
10. Oil seal ring for left differential shaft
11. Gearbox oil drain plug
12. Gearbox casing
13. Ring nut for lower layshaft
14. Lower layshaft rear bearing
15. Driven gear
16. Needle bearing
17. First speed gear bushing
18. First speed synchroniser ring
19. First-third speed synchroniser sleeve
20. Third speed synchroniser ring
21. 3rd speed driven gear
22. First, third and sixth control fork
23. Needle bearing
24. Third speed gear bushing
25. Third speed thrust ring
26. Sixth speed spacer
27. Sixth speed synchroniser sleeve
28. Sixth speed synchroniser ring
29. 6th speed driven gear
30. Needle bearing
31. Retaining ring for lower layshaft front bearing
32. Lower layshaft front bearing
33. Lower layshaft
34. Lower layshaft plug
35. Shaft mounting plate fixing screws
36. Outer race for upper layshaft front bearing
37. Outer race for lower layshaft front bearing
38. Outer race for main shaft front bearing
39. Shaft mounting plate fixing screw

cardiagn.com

40. Internal/external main shaft seal
41. Inner race for main shaft front bearing
42. Outer main shaft
43. Needle bearing for inner main shaft
44. Needle bearing for outer main shaft
45. Outer main shaft bearing outer race
46. Inner main shaft front gasket
47. Odd speed clutch release rod bushing
48. Fifth speed gear retaining ring
49. Inner main shaft axial bearing
50. 5th speed drive gear
51. 3rd speed drive gear
52. Inner main shaft
53. Inner ring for main shaft rear bearing
54. "Parking" function actuator
55. Outer ring for upper layshaft rear bearing
56. Scraper ring for upper layshaft rear bearing
57. Outer ring for main shaft rear bearing
58. Scraper ring for main shaft rear bearing
59. "Parking" function ratchet
60. Cup for lower layshaft oil duct
61. Scraper ring for lower layshaft rear bearing
62. Outer ring for lower layshaft rear bearing
63. Outer ring for differential left bearing
64. Scraper ring for differential left bearing
65. Cup for upper layshaft oil duct
66. Needle bearing for reverse idle gear
67. Reverse idle gear
68. Reverse shaft
69. Reverse control mounting
70. Second-fourth speed and fifth-reverse speed control fork
71. Shaft support plate
72. Upper layshaft plug
73. Upper layshaft
74. Inner ring for upper layshaft front bearing
75. Retaining ring for upper layshaft front bearing
76. Needle bearing
77. 4th speed driven gear
78. Fourth speed synchroniser ring
79. Second-fourth speed synchroniser sleeve
80. Second speed synchroniser ring
81. Second speed gear bushing
82. Needle bearing
83. 2nd speed driven gear
84. Second-fifth speed thrust ring
85. Fifth speed gear bushing
86. 5th speed driven gear
87. Outer reverse synchroniser ring
88. Fifth speed synchroniser sleeve
89. Fifth speed synchroniser ring
90. Reverse gear bushing
91. Needle bearing
92. Reverse gear
93. Inner ring for upper layshaft rear bearing
94. Ring nut for upper layshaft
95. Inner ring for differential left bearing
96. Differential casing
97. Inner ring for differential right bearing
98. Differential ring gear
99. Differential ring gear fixing screws
100. Gearbox casing centring dowel
101. Magnet
102. Outer ring for differential right bearing
103. Retaining ring for oil pipe connection to even speed clutch actuator
104. Clutch casing
105. Gearbox casing/clutch casing fixing screws
106. Oil seal for right differential shaft
107. Gearbox casing/clutch casing fixing screws
108. Gearbox casing stud
109. Even speed release clutch control actuator
110. Fixing screws for even speed clutch release actuator
111. Fixing screws for odd speed clutch
112. Even speed control clutch mechanism
113. Even speed clutch driven plate
114. Odd speed clutch mechanism
115. Thrust bearing guard

cardiagn.com

116. Thrust bearing
117. Fixing screws for odd speed clutch mechanism

## Main shaft

The main shaft is formed by two coaxial shafts called outer main shaft and inner main shaft.
The junction area houses an axial bearing for the reciprocal rotation.
The third and fifth speed drive gears are splined on the inner main shaft; the outer main shaft is a single piece.

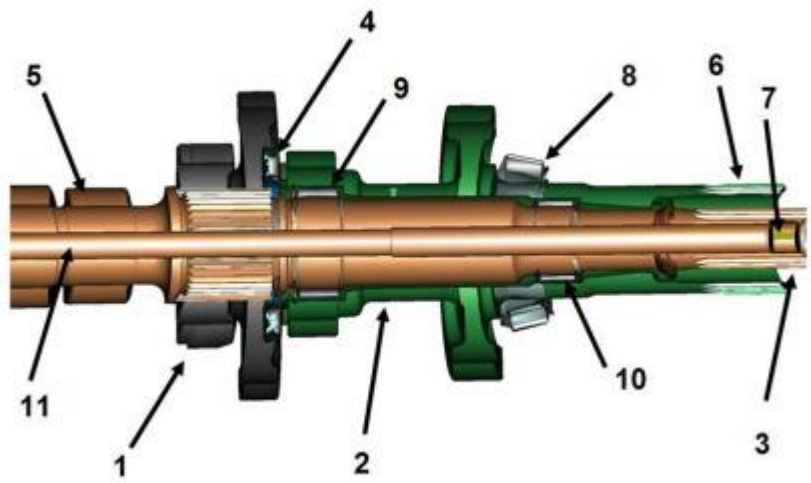


1. 3rd speed drive gear
2. Outer main shaft
3. Inner main shaft ribbing for odd speed clutch
4. Axial bearing
5. Inner main shaft
6. Outer main shaft ribbing for even speed clutch
7. Odd speed clutch control rod bushing
8. Outer main shaft bearing
9. Roller bearing
10. Roller bearing for inner main shaft
11. Hole on inner main shaft for odd speed clutch rod

This gearbox features a continuous movement transmission, obtained by two main shafts housing two gear pairs always matched.
To prevent any mechanical damage, this layout must compulsorily have two clutches, one for odd speeds (K1) and the other for even speeds (K2).
One clutch is "closed" to send movement to a single gear pair, while the other clutch is in "open" position to prevent transmitting movement to the other gear pair.
During gearshifting, both while lifting and lowering, both clutches works so that one opens while the other closes and vice versa.
On the outer main shaft, coupled to the clutch K2, the drive gears for all even speeds are housed, including the ribbing for the even speed clutch splining.
On the inner main shaft, coupled to the clutch K1, the odd speed and reverse drive gears are splined, along with the ribbing for the odd speed clutch splining.

## Clutches

The clutch unit is one piece, including two plates and the relevant retainers.

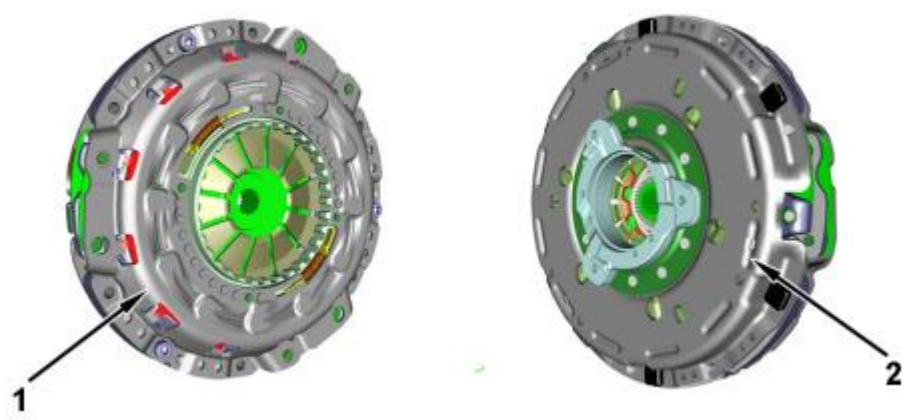


1. Clutch unit - engine side view
2. Clutch unit - gearbox side view

The clutch unit is matched with a suitable flywheel with relevant locking grooves.
See descriptions 1024B FLYWHEEL
The driven plate of clutch K1 (usually closed) is placed towards the engine and differs from the driven plate of clutch K2 (normally open) for the ribbing with lower diameter for the splining on the main shaft.

The driven plate of clutch K1 can only be replaced with the relevant mechanism, while the driven plate of clutch K2 can be individually replaced, like its mechanism.

cardiagn.com

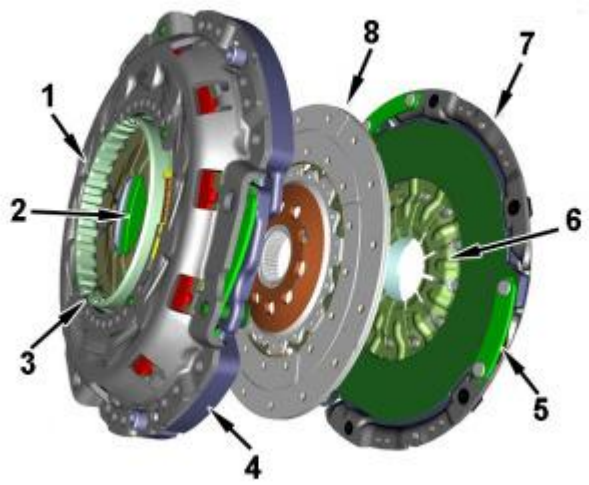


1. Clutch K1 mechanism
2. Clutch K1 driven plate
3. Ring gear for coupling to engine flywheel
4. Intermediate flywheel
5. Clutch K2 pressure plate retaining spring
6. Clutch K2 pressure plate spring
7. Clutch K2 mechanism
8. Clutch K2 driven plate

As shown in the figure, the clutch plates K1 and K2 are not pressed on the surface of the engine flywheel, rather on the surfaces of an intermediate flywheel, integral to the engine flywheel.
The clutch K1 is normally closed, while the clutch K2, with a diaphragm spring with different shape, is normally open.

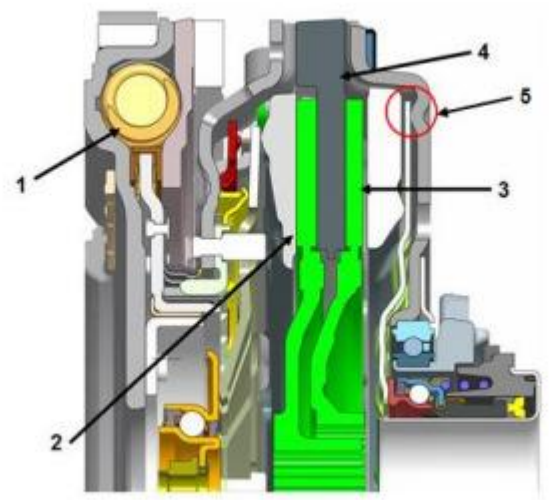


cardiagn.com

1. Engine flywheel
2. Clutch K1 plate
3. Clutch K2 plate
4. Intermediate flywheel
5. Clutch K2 mechanism diaphragm spring fulcrum

**CLUTCH CONTROL**

The clutch handling is fully managed by the electrohydraulic actuation system control unit (TCU).
When one clutch is released, the other one is engaged.
The clutch control circuit supply oil is the same one used for gear engagement and selection actuators.

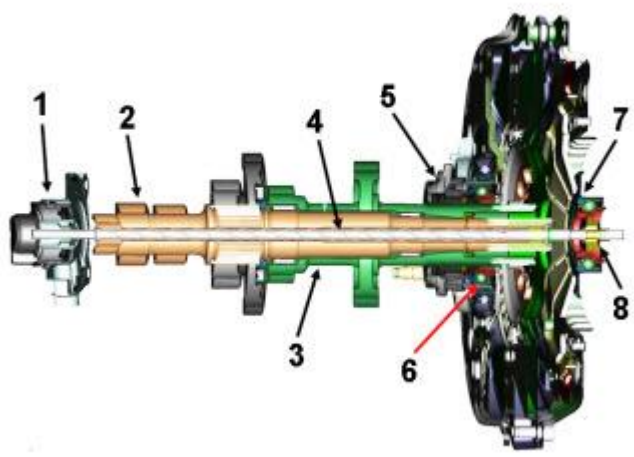


1. Clutch K1 control actuator
2. Inner main shaft
3. Outer main shaft
4. Clutch K1 thrust bearing control rod

5. Clutch K2 control coaxial actuator
6. Clutch K2 thrust bearing
7. Clutch K1 thrust bearing
8. Clutch K1 thrust bearing guard

**CLUTCH OPERATION**

The clutch operating features are described here below, during a standard gearshifting, from first to second speed.
The first speed drive gear is on the inner main shaft and is coupled to clutch K1.
The second speed drive gear is on the outer main shaft and is coupled to clutch K2.

**First speed**

With engine running, placing the gear lever in "D", the system engages the first speed.
During starting and for the first movements, the TCU controls the closing of the clutch K1.

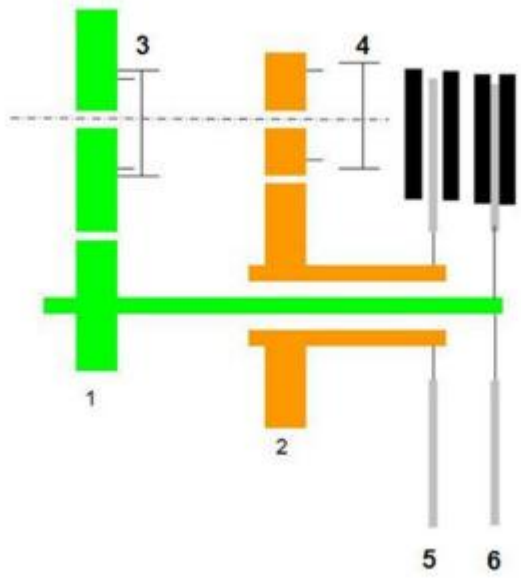


1. 1st speed drive gear
2. 2nd speed drive gear
3. Sliding sleeve for first speed engagement
4. Sliding sleeve for second speed engagement
5. Clutch K2 for even gears
6. Clutch K1 for odd gears

**Pre-engagement for the second speed**

While driving in first speed, the TCU controls the pre-engagement of the second speed, to reduce the standard gearshifting time and reduce torque loss.
The second speed sliding sleeve engages, with clutch K2 open.

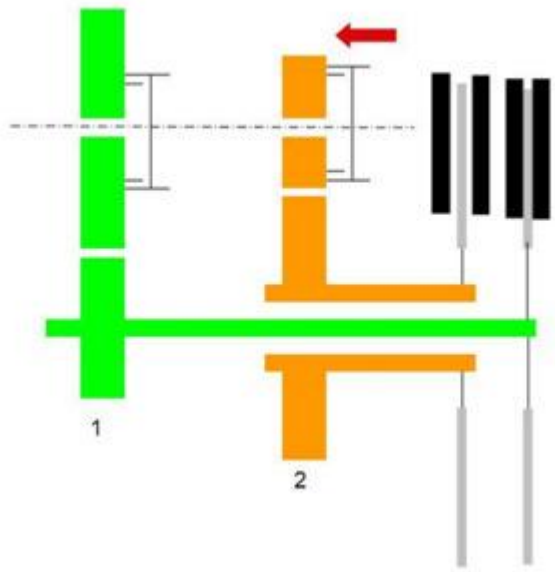


**Shifting of clutches**

After pre-engaging the second speed, when the engine running conditions require it, a "Cross Shifting" stage starts.
The TCU control unit operates the closing modulation of clutch K2 and the opening modulation of clutch K1

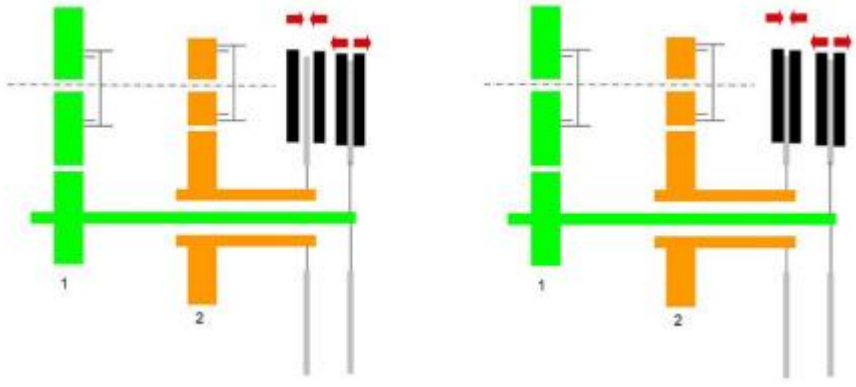


During a short time interval, both clutches transmit torque slipping in first or second speed.
The "Cross Shifting" stage ends when clutch K1 is fully open and clutch K2 is finally closed, as shown by the figure below.

cardiagn.com

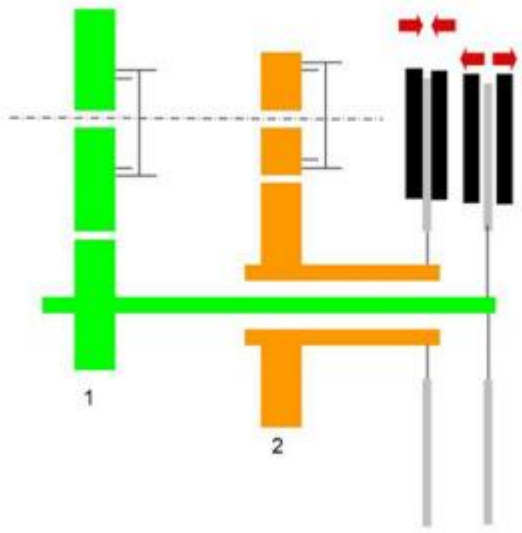


The gearshifting ends when the first speed sliding sleeve is released.
During this stage, the driver does not notice anything, because movement is transmitted to the wheels through clutch K2.

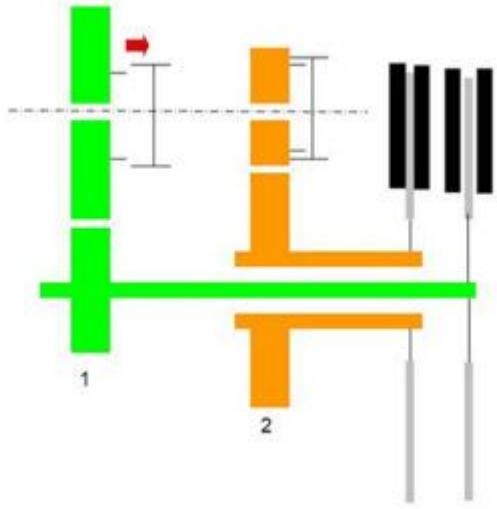


cardiagn.com

**CLUTCH CONTROL ACTUATORS**
**Even gear clutch control actuator**
It is coaxial type, whose piston (annular) touches, through the thrust bearing, the diaphragm spring of the even gear clutch K2 mechanism.
The piston is kept in rest position by the diaphragm spring; if there is no pressure in the circuit, the clutch is normally released (open).
The actuator position is determined by the TCU control unit, that processes the oil pressure value measured by a suitable sensor, fitted on the supply line.

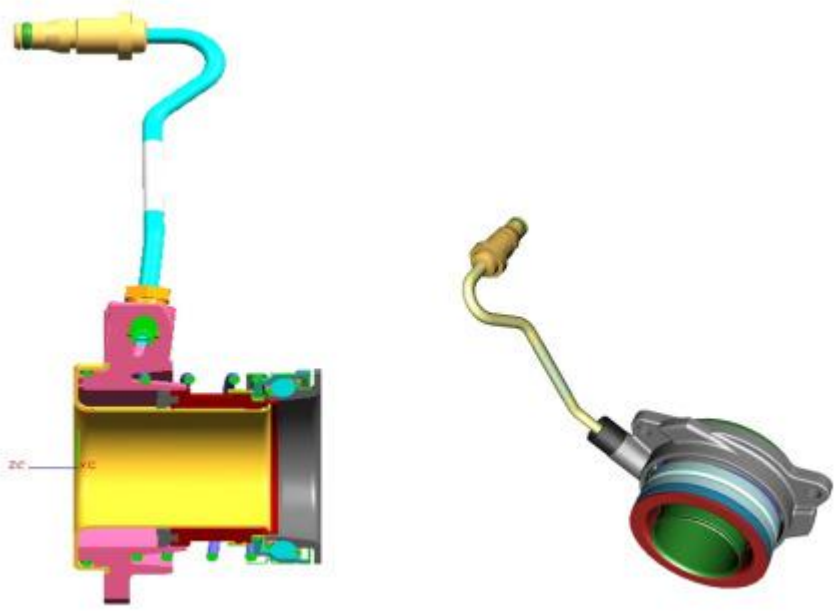

**Odd gear clutch control actuator**
The pressure of oil coming from the valve unit moves the piston (5) that slides on the guide pipe with a low friction, due to the interposition of teflon pads.
The piston action is transmitted through a suitable rod (3) to the thrust bearing for the clutch release.
When the valve unit does not control oil pressure anymore, the diaphragm spring presses the thrust bearing that retracts the piston through the control rod, restoring the engagement conditions.
When the valve unit has an intermediate position, the trapped oil cannot be compressed and prevents the piston movement, that maintains in position.
A suitable Hall effect sensor (1) sends to the TCU control unit the position of the piston, to monitor possible missed engagements of the odd gear clutch.

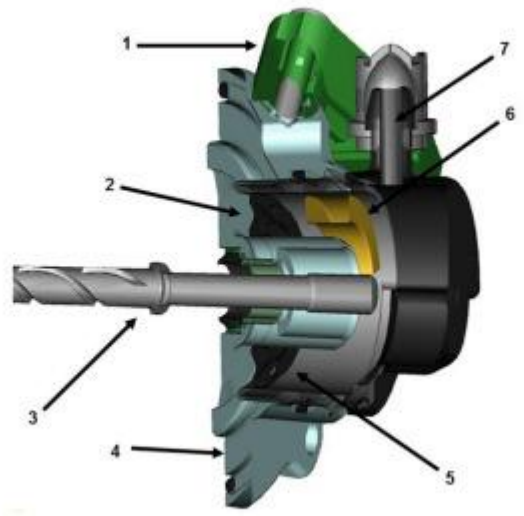


1. Piston position sensor
2. Oil inlet chamber
3. Thrust bearing control rod
4. Actuator mounting
5. Piston
6. Magnet
7. Air bleed

## Upper layshaft

The upper layshaft supports the toothed wheels that produce second, fourth and fifth speeds and reverse; these toothed wheels are all fitted "loose" on needle bearings.
There are two synchronisers: one to form one piece between the toothed wheels for second or fourth speed with the shaft, the other for reverse and fifth speed.
The fifth speed and reverse synchronisers are two-cone type, while that for second and forth speed is three-cone type.
On the front end of the shaft there is a toothed wheel that transfers the power to the differential ring gear.
The upper layshaft is supported at both ends by two tapered roller bearings.

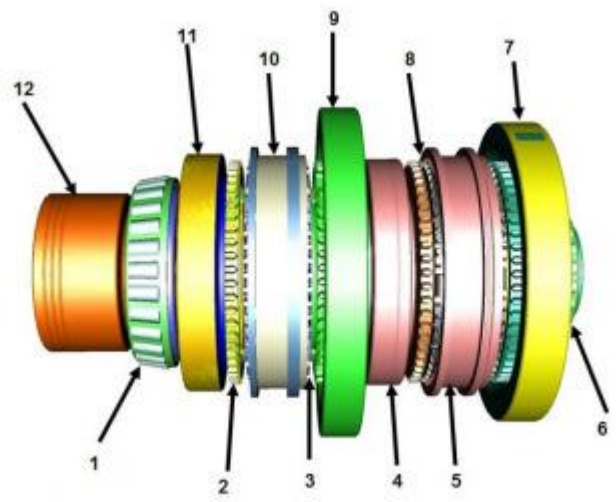


1. Front bearing
2. Fourth speed gear toothed ring
3. Second speed synchroniser ring
4. Fifth speed gear
5. Sliding sleeve for fifth speed and reverse synchroniser
6. Rear bearing
7. Reverse driven gear
8. Fifth speed synchroniser ring
9. 2nd speed driven gear
10. Sliding sleeve for second and fourth speed
11. 4th speed driven gear
12. Movement transmission gear to the differential

## Lower layshaft

The first, third and sixth speed toothed wheels are fitted on the lower layshaft.
The lower layshaft is supported at its ends by two tapered roller bearings.

cardiagn.com

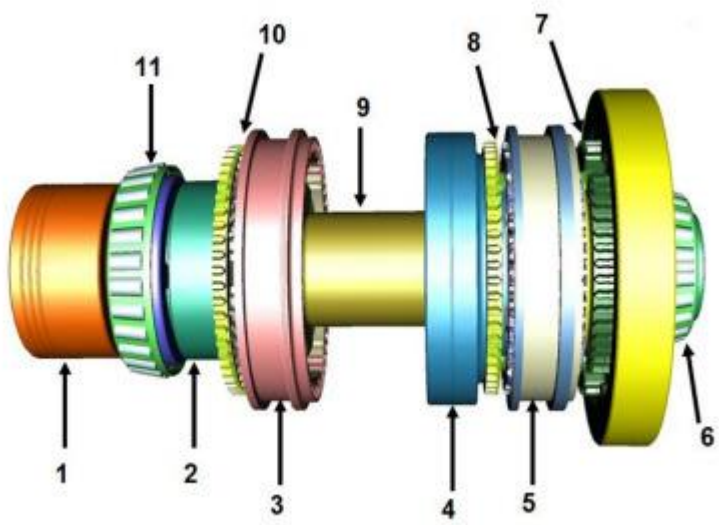


1. Movement transmission gear to the differential
2. 6th speed driven gear
3. Sliding sleeve for sixth speed synchroniser
4. 3rd speed driven gear
5. Sliding sleeve for third and first speed synchroniser
6. Rear bearing
7. First speed toothed ring
8. Third speed synchroniser ring
9. Spacer
10. Sixth speed toothed ring
11. Front bearing

## Gear engagement diagram

Odd speed gears are shown below in blue while even speed gears in green.
The inner main shaft is light blue and the outer main shaft is yellow.
**First speed engagement**

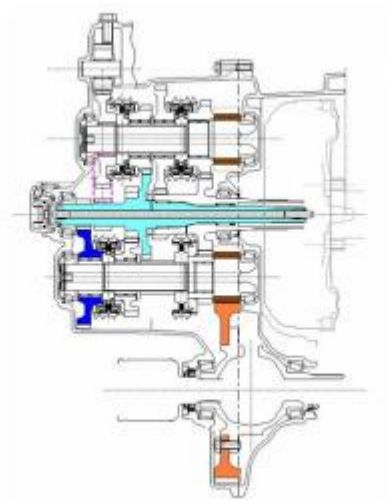

**Second speed engagement**

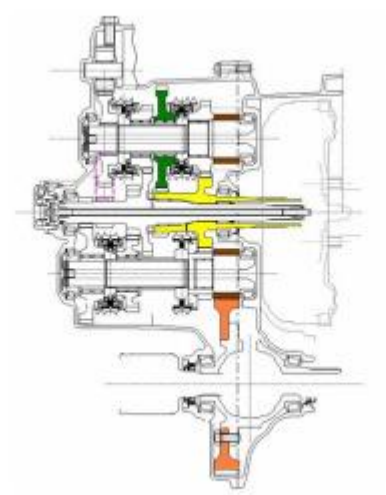

**Third speed engagement**

cardiagn.com

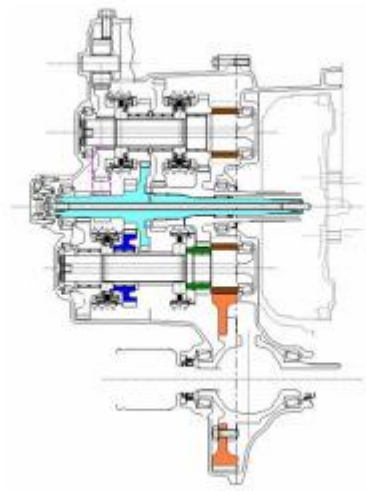

**Fourth speed engagement**

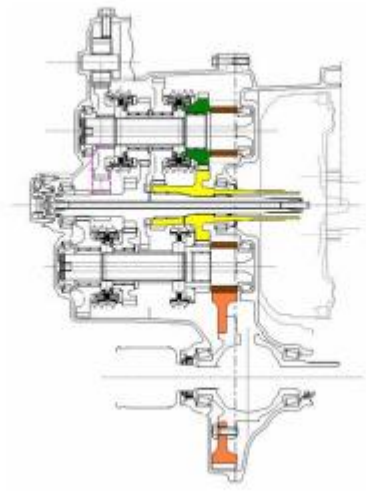

**Fifth speed engagement**

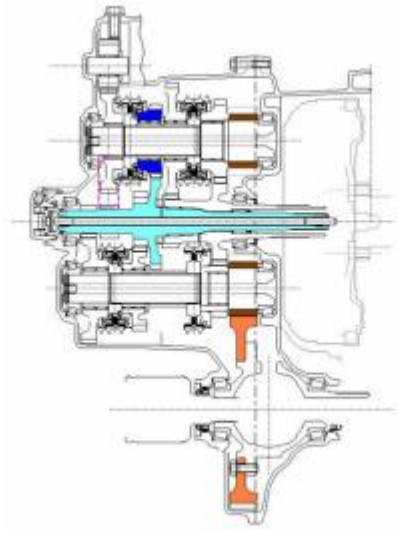

**Sixth speed engagement**

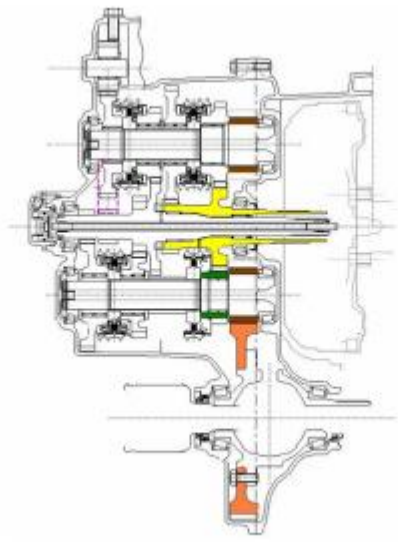

**Reverse engagement**

cardiagn.com

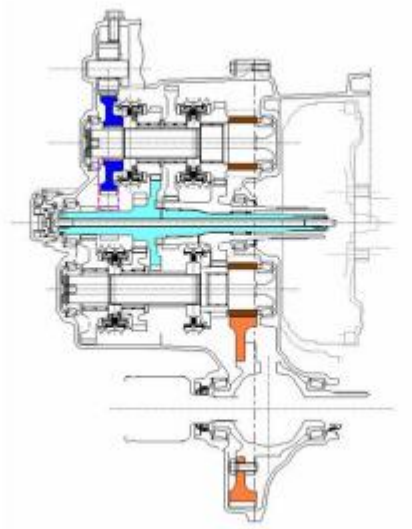

## Gear engagement rods

To engage gears, the electrohydraulic unit makes use of 4 rods with four forks fitted in gear engagement synchroniser sliding sleeves.

cardiagn.com

The engagement rods are placed in pairs. One pair handles gear engagement on the upper layshaft, the other pair handles those on the lower layshaft.
The rod fastening to the gearbox casing is made by two hollow shafts that let the synchroniser sliding sleeve move.

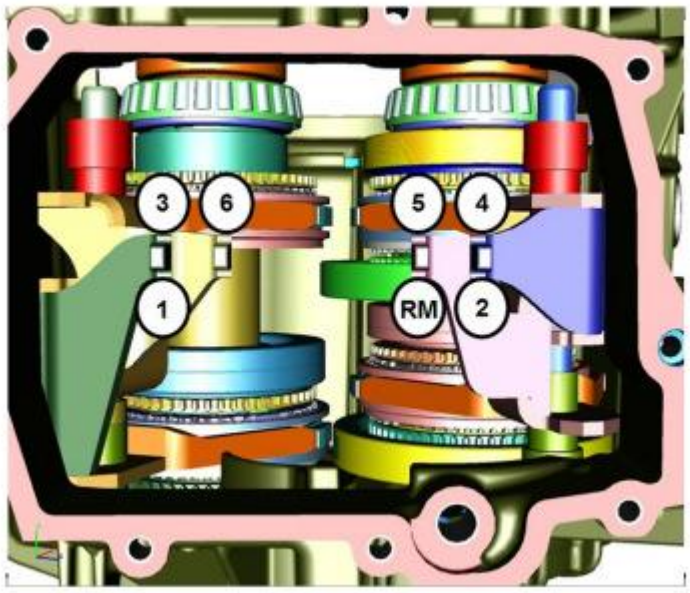


## Differential

This is the mechanical device which performs two fundamental actions to drive the vehicle:
- it divides drive torque equally on the two driveshafts;
- it allows the drive wheels to assume different rotation speeds.

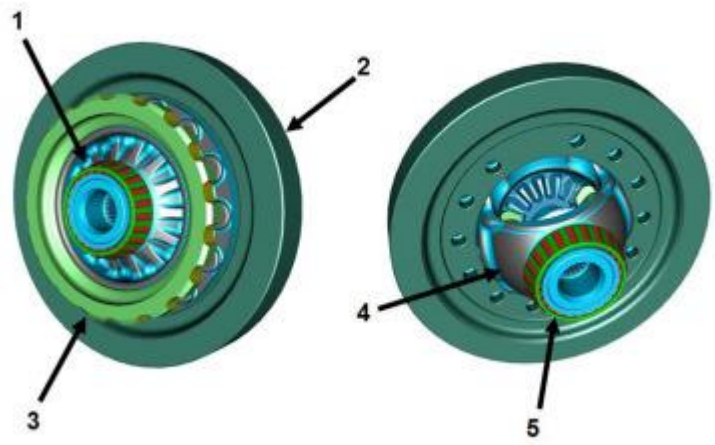


1. Tapered bearing, left side
2. Toothed gear
3. "Parking" function ring gear
4. Differential gear casing
5. Tapered bearing, right side

The "Parking" function is required through the selection lever and is mechanically operated by a flexible cable operating a ratchet actuator, that locks a ring gear on the differential.

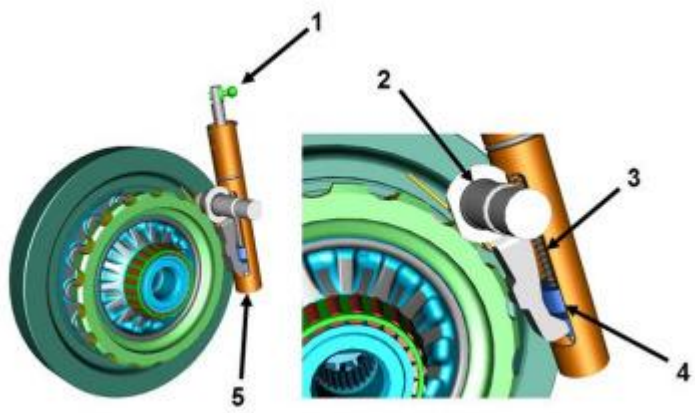


1. Connection to control flexible cable
2. Parking ratchet
3. Spring
4. Piston
5. Parking actuator

cardiagn.com