Manual Transaxle (M5HF2)

GENERAL MANUAL TRANSAXLE

MANUAL TRANSAXLE SYSTEM

GENERAL

SPECIFICATIONS EB4D4ABB

Model			M5HF2
Related engine			D2.2
Torque [Nm (kgf.m, lb-ft)			350 (35, 253)
Full length [mm(in)]			392.5 (15.45)
Weight [N(kgf, lbf)]			673.7 (68.7, 151)
Oil capacity			1.85ℓ
Oil replacement	Private use	Normal	No Need
		Severe(※)	100,000 Km
	Business use		100,000 Km
Gear ratio	1st		3.875
	2nd		2.130
	3rd		1.205
	4th		0.848
	5th		0.827
	Reverse		4.413
	Reduction gear ratio		4.500/3.706
Lubricant			SAE 75W/85, API GL - 4

※Severe(marked '※') is definde as:

1. Driving on rough road(bumpy road, gravel road, snowy road, unpaved road etc.).
2. Driving on mountain road, ascent/descent.
3. Repetition of short distance driving.
4. More than 50% operation in heavy city traffic during hot weather above 32°C(89.6°F).
5. Police car, Taxi, Commercial type operation of trailer towing, etc.

TIGHTENING TORQUE

Item	Nm	kgf.m	lb-ft
Oil drain plug	40~60	4.0~6.0	28.9~43.4
Shift control cable bracket	15~22	1.5~2.2	10.9~16
Oil filler plug	30~35	3.0~3.5	21.7~25.3
Back up lamp switch	30~35	3.0~3.5	21.7~25.3
Transaxle mounting bracket assembly	60~80	6.0~8.0	43.6~58.2
Transaxle and engine mounting bolt	80~100	8.0~10.0	57.9~72.3
'N' Position switch	30~35	3.0~3.5	21.7~25.3

SERVICE STANDARD

Item	Specification [mm(in)]
Differential end play	0.05T-0.10T
Input shaft end play	0.01L-0.12L
Output shaft end play	0-0.05T
1st gear end play	0.11L-0.22L
2nd gear end play	0.11L-0.22L
3rd gear end play	0.11L-0.22L
4th gear end play	0.11L-0.22L
5th gear end play	0.11L-0.22L
Reverse gear end play	0.11L-0.22L

LUBRICANTS ECE1FD06

Item	Lubricant	Quantity
Transaxle input shaft splin	CASMOLY L9508	0.2 gr.
Transaxle case gasket	LOCTITE 587	As required

SPECIAL TOOLS E43B86CA

Item (Number & Name)	Illustration	Use
09452-21200 Oil seal installer	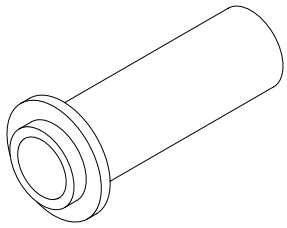 AMJF002A	Oil seal installation
09200-38001 Engine supporting fisture	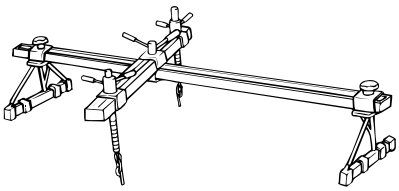 AMJF002B	Removal and installation of transaxle

MANUAL TRANSAXLE SYSTEM

DESCRIPTION E0C8C4CC

CM Diesel (D2.2) model has the manual transaxle (M5HF2).

IMPROVEMENT

ITEM	Improvement
Better shift feeling	1. New shift pattern 2. Multi cone synchronizer system 3. Module of control system 4. New type of poppet ball
Better duability	1. Optimizing strength of shift control system 2. Optimizing strength of housing and cases (for NVH) 3. Carbonized material for synchronized rings
Cost saving & Convenience	1. Permanent oil (low viscosity)

This new shift pattern has the same shift direction for both 1st and Reverse which is convenient when on traffic jam or parking (1↔R).
You should pull the lower part of the shift lever to shift in reverse.

SHIFT CONTROL SYSTEM

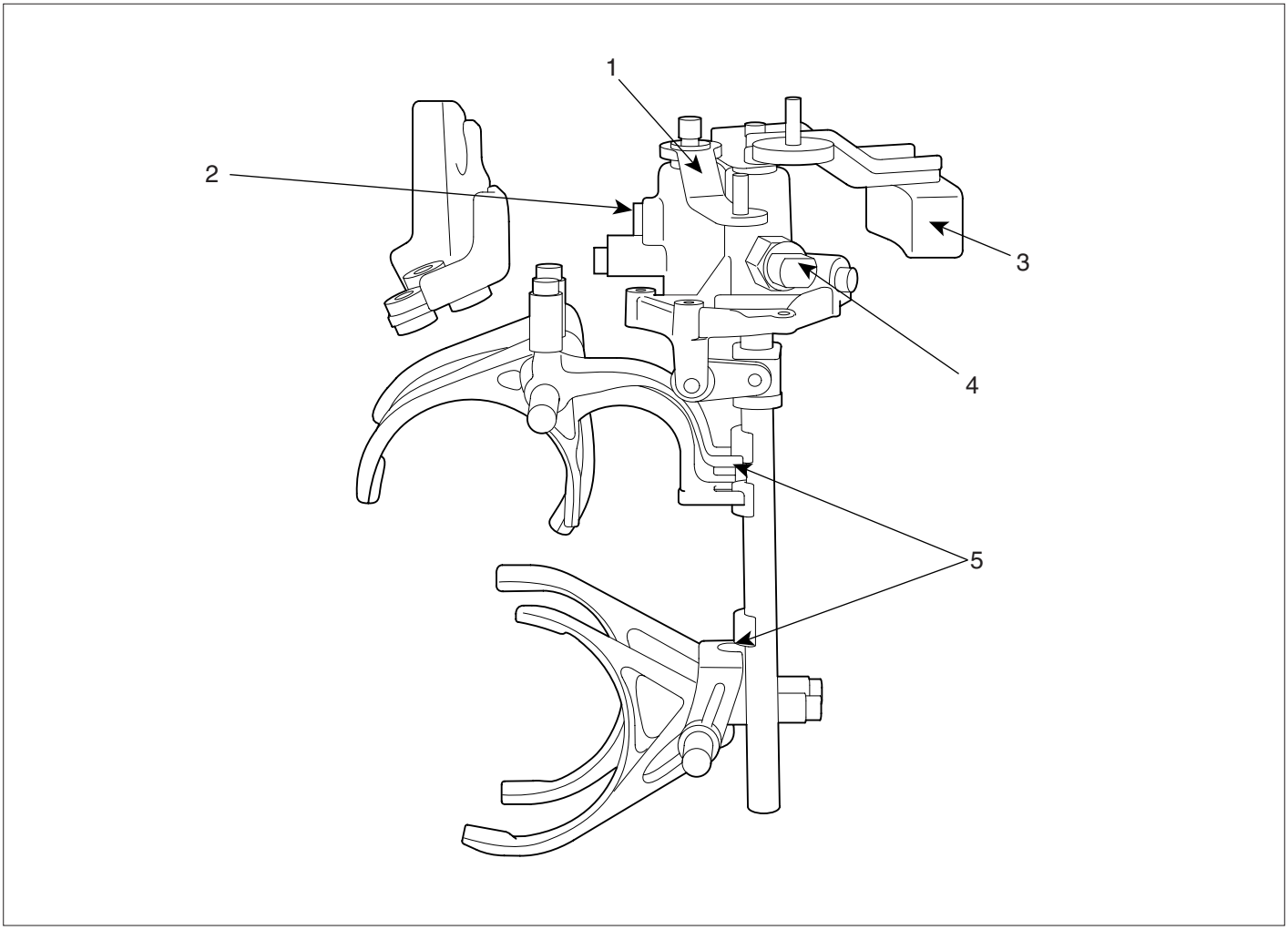

1. Select lever
2. Neutral position switch
3. Shift lever
4. Backup lamp switch
5. Control finger

LMKF001C

SYNCHRONIZER SYSTEM

COMPONENTS

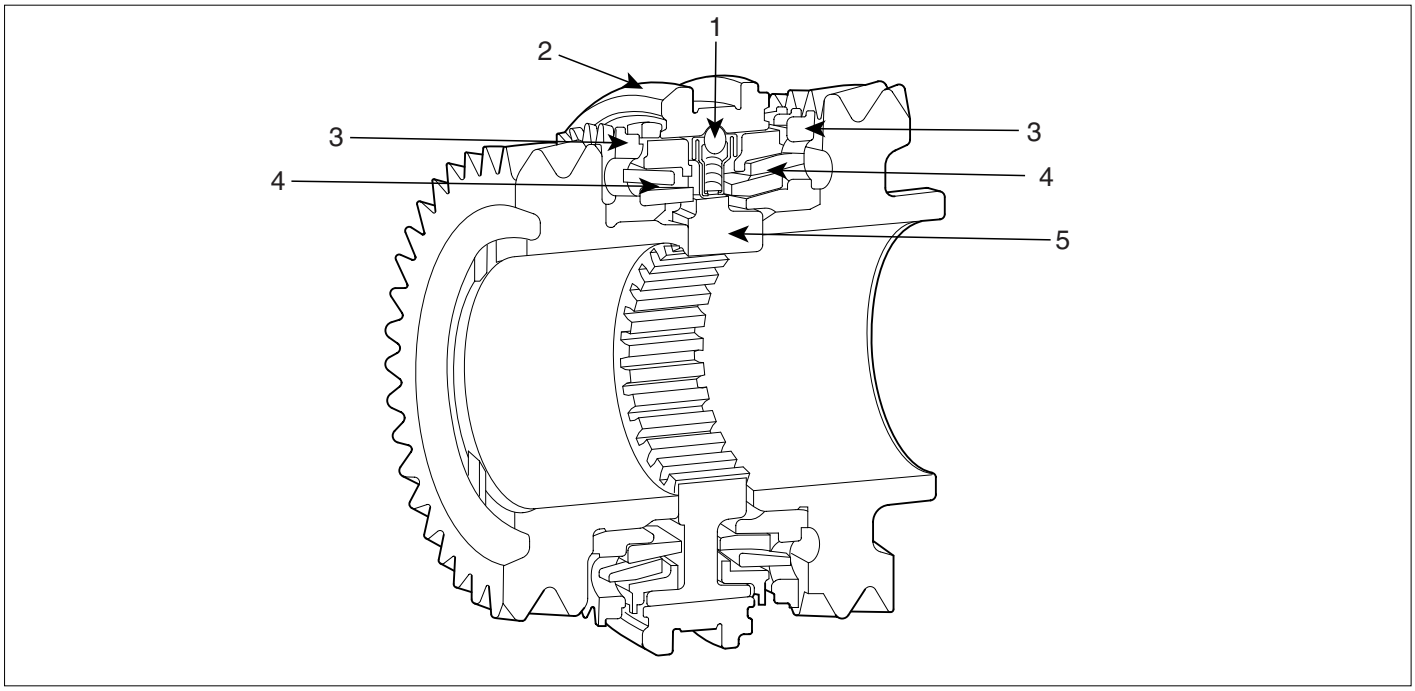

1. Synchronizer key
2. Synchronizer sleeve
3. Clutch gear
4. Synchronizer ring
5. Synchronizer hub

LMKF001E

MANUAL TRANSAXLE

COMPONENTS E235BFF3

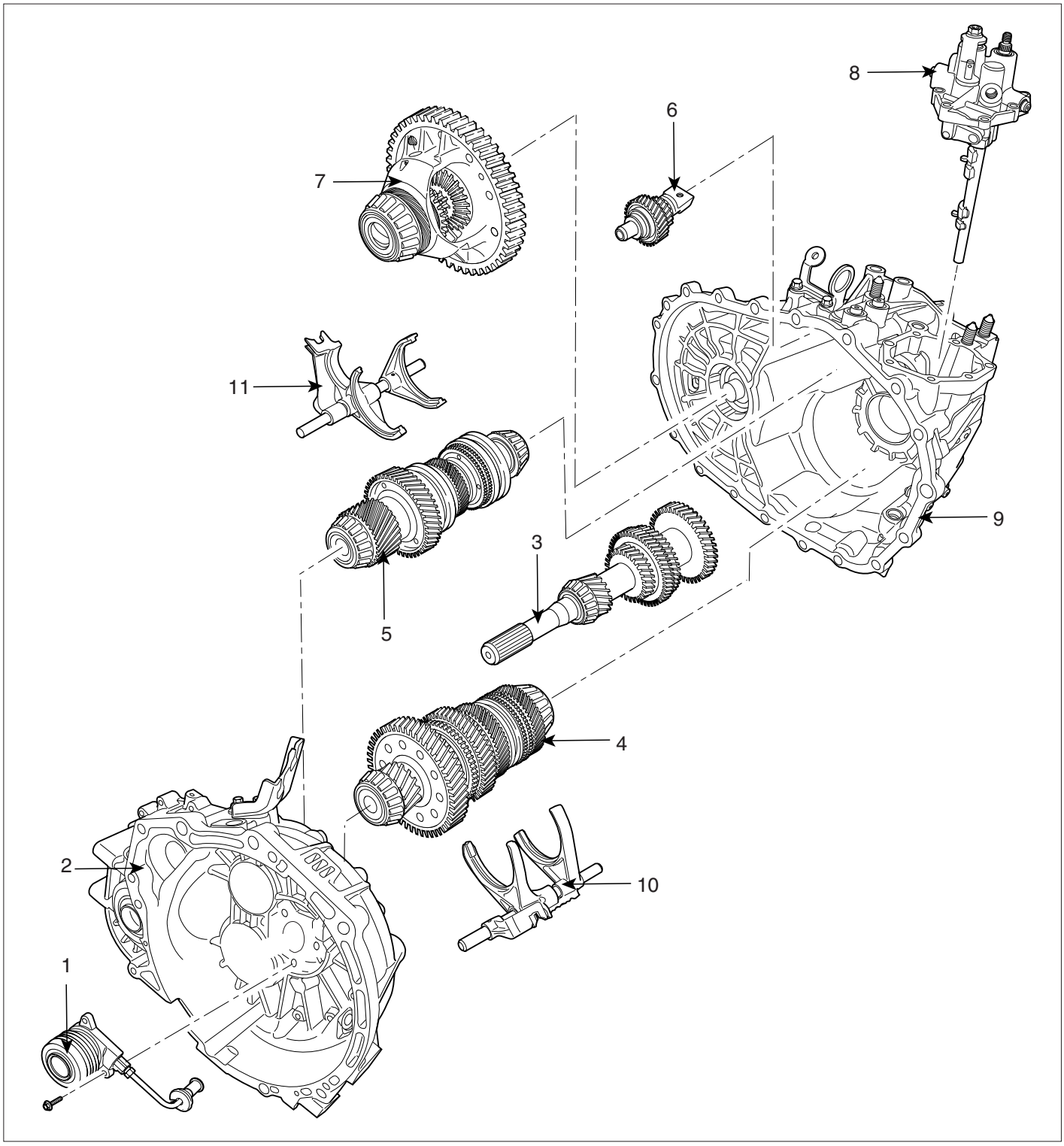

1. C.S.C. (Concentric Slave Cylinder)
2. Clutch housing
3. Input shaft
4. 1st output shaft
5. 2nd output shaft
6. Reverse idler gear assembly
7. Differential assembly
8. Control shaft assembly
9. Transaxle case
10. 3rd/4th shift rail sub assembly
11. 5th/Reverse shift rail sub assembly

LMKF002A

REMOVAL E4ACFE47

CAUTION

- ***Use a cover not to damage the vehicle surface.***
- ***Disconnect connectors carefully not to be damaged.***

NOTE

- *Mark wires or hoses for identification not to be confused.*

1. Remove the inter cooler assembly and the engine cover.(see 'EM' group).

2. Remove the battery (A).

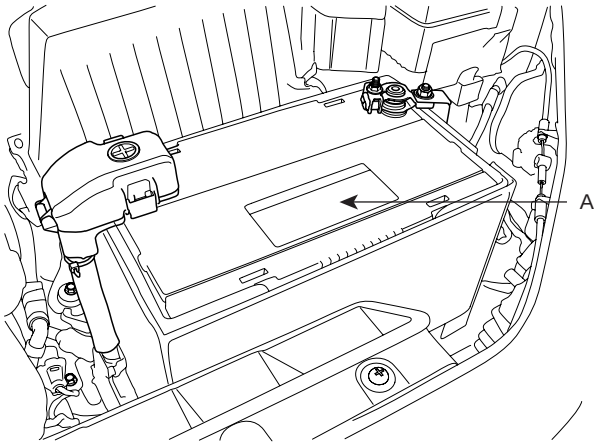

SCMMT6001D

3. Disconnect the AFS connector (A).

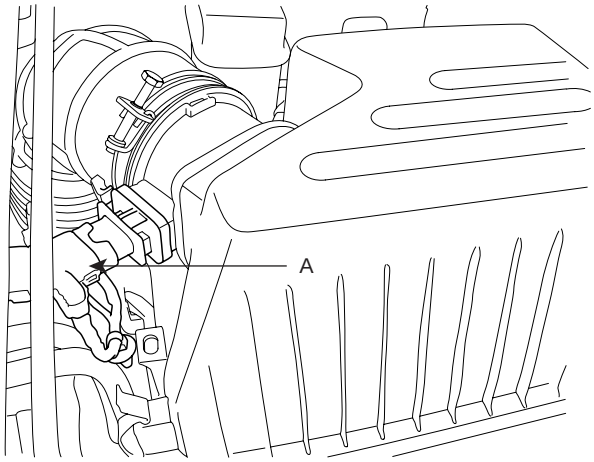

SCMMT6002D

4. Remove the air cleaner upper cover (B) by loosening the clamp(A) and the clips.

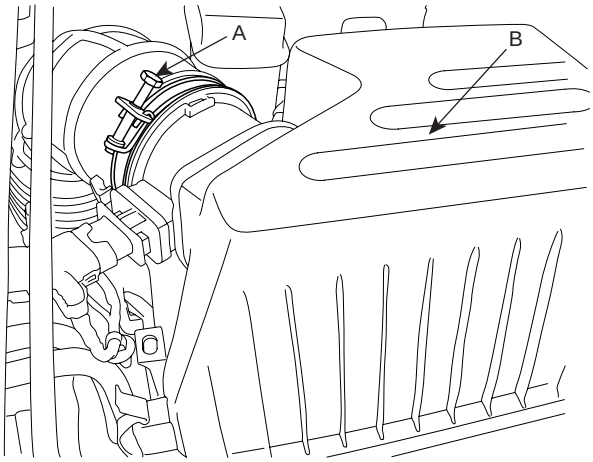

SCMMT6060D

5. Remove the air cleaner assembly (B) by removing the two mounting bolts(A).

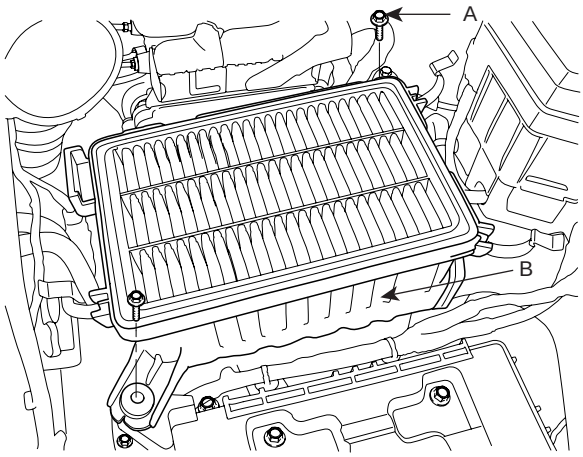

SCMMT6004D

6. Remove the battery tray (B) by removing the four mounting bolts (A).

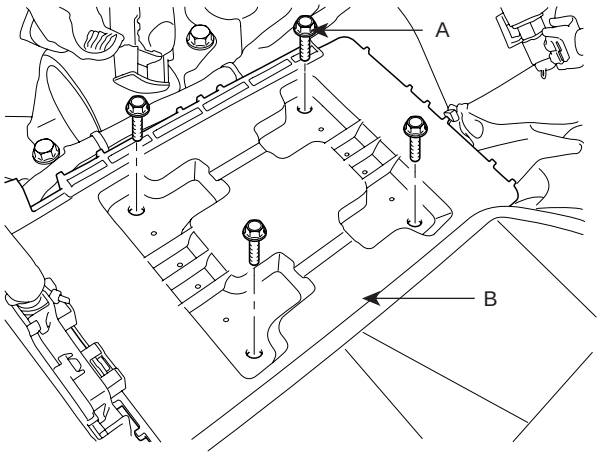

SCMMT6005D

7. Remove the ground wire (A) from the transaxle case.

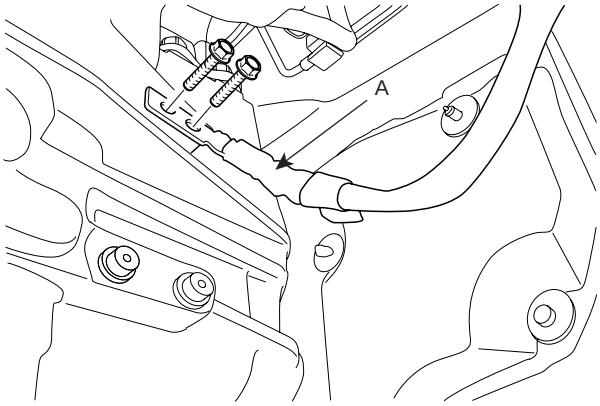

SCMMT6006D

8. Remove the vehicle speed sensor connector (A).

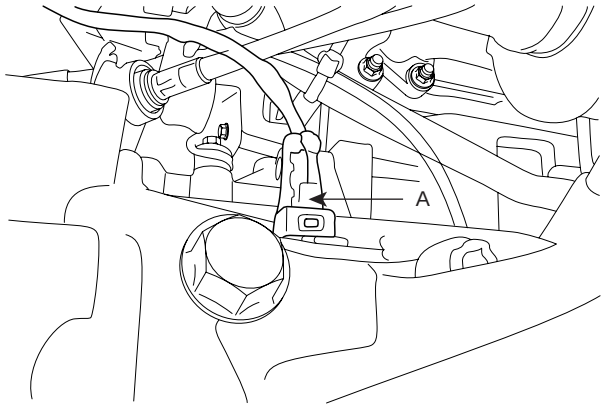

SCMMT6007D

9. Remove the control cable assemblies(A) by removing the snap pins(B) and clips(C).

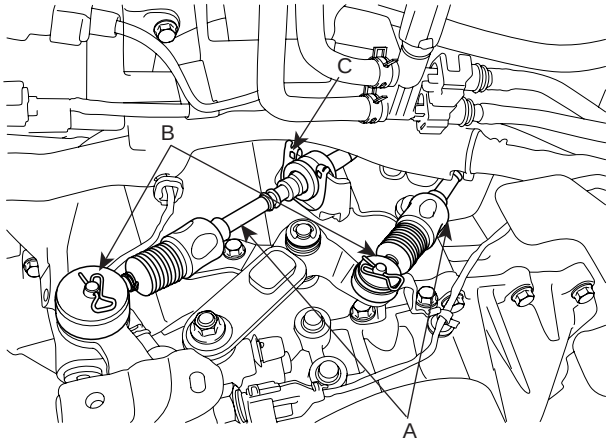

SCMMT6008D

10. Disconnect the "N" (A) and the "R" (B) position switch.

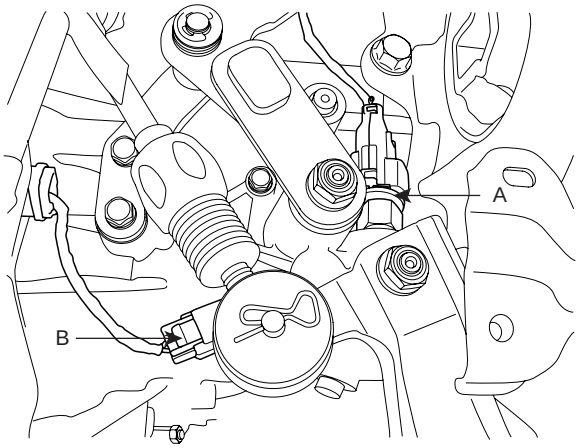

SCMMT6009D

11. Remove C.S.C (Concentric Slave Cylinder) tube(A) which is being clamped by loosening the nut(B).

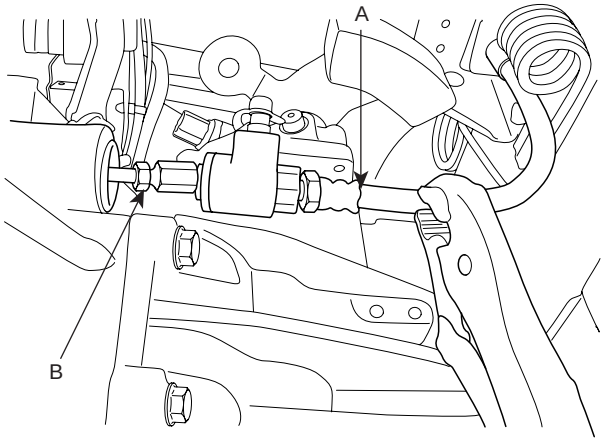

SCMMT6010D

12. Remove the four mounting bolts(A) of upper part of the transaxle.

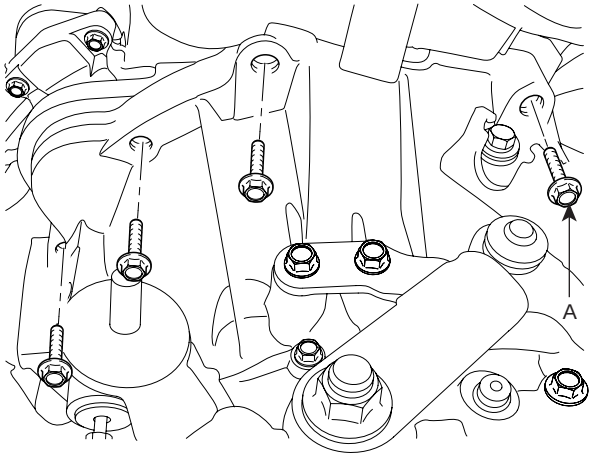

SCMMT6011D

13. Support the engine and transaxle by using the special tool (09200-38001).

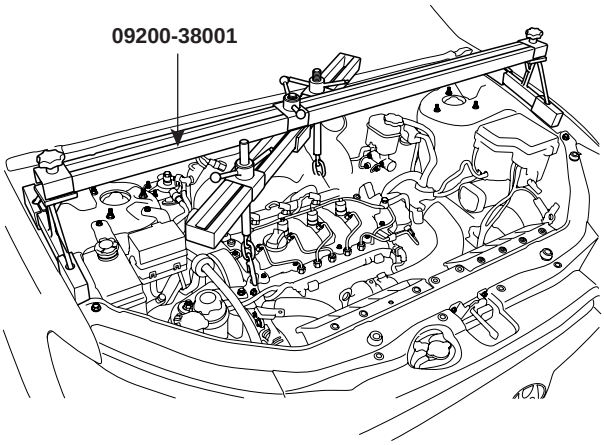

SCMMT6012D

14. Remove the transaxle insulator bracket (B) by removing the bolts (A).

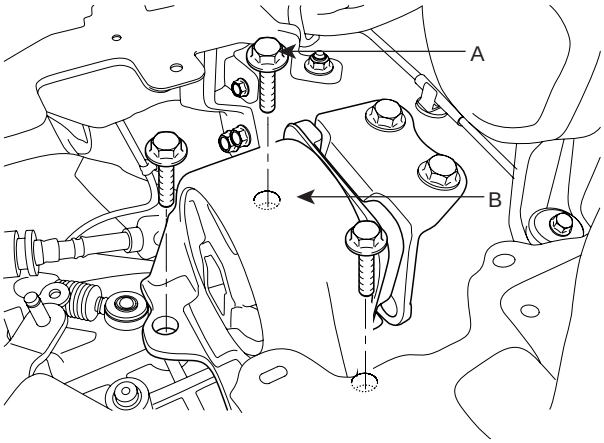

SCMMT6013D

15. Remove the front wheels and tires. (see SS group)

16. Lift up the vehicle.

17. Remove the steering column joint bolt. (see ST group).

18. Remove the under cover(A).

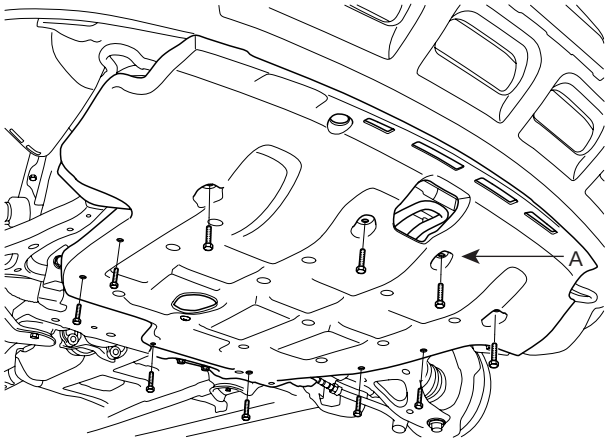

SCMMT6014D

19. Drain power steering oil through the return tube. (see ST group)

20. Disconnect the power steering pressure hose (A) from the power steering oil pump.

21. Drain the tranaxle fluid through the drain plug.

22. Disconnect the lower arm, the tie rod end ball joint, the stabilizer bar link from the front knuckle. (see SS group)

23. Remove the roll stopper mounting bolts.

24. Remove the mounting bolts from the sub frame by supporting the sub frame with a jack. (see SS group)

25. Remove the drive shafts from the transaxle. (see DS group)

26. Disconnect the starter motor connector and remove the starter motor. (see EE group)

27. In case of 4WD, remove the transfer case assembly.(see 'Transfer case' removal).

28. Remove the mounting bolts(A-3ea, B-2ea) of lower part of the transaxle, and the left side cover and remove the transaxle assembly by supporting it with a jack.

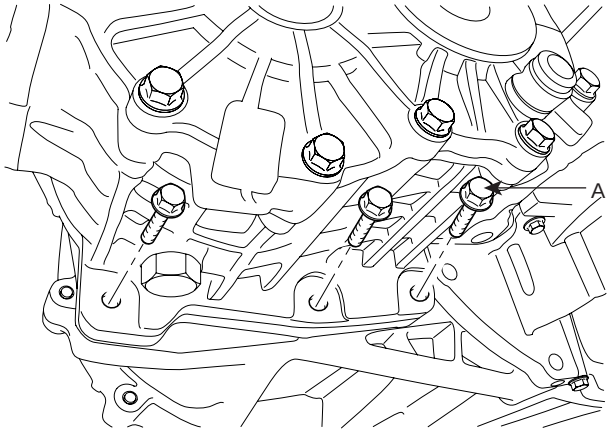

SCMMT6017D

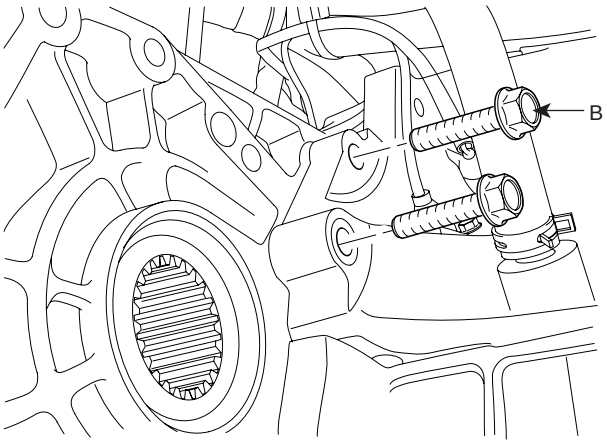

SCMMT6018D

INSTALLATION E552EB03

Installation is in the reverse order of removal.
Perform the following :

- Adjust the shift cable.
- Refill the transaxle with fluid.
- Refill the radiator with engine coolant.
- Bleed air from the cooling system with the heater valve open.
- Clean the battery posts and cable terminals with sandpaper, assemble them, and apply grease to prevent corrosion.

1. Lowering the vehicle or lifting up a jack, install the transaxle assembly.

2. Tighten the transaxle under mounting bolts(A-3ea, B-2ea).

TORQUE:
65~85 Nm(6.5~8.5 kgf.m, 47.0~61.5 lb-ft)

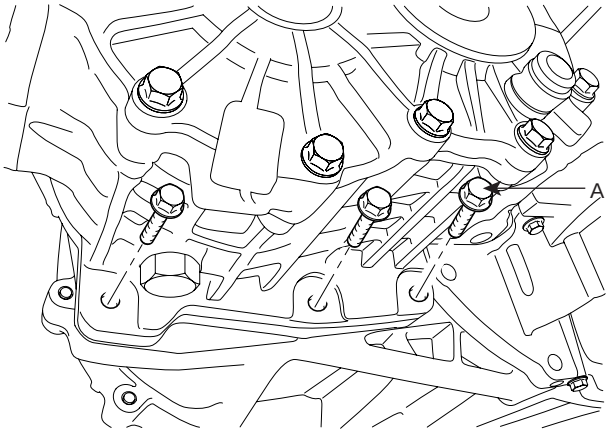

SCMMT6017D

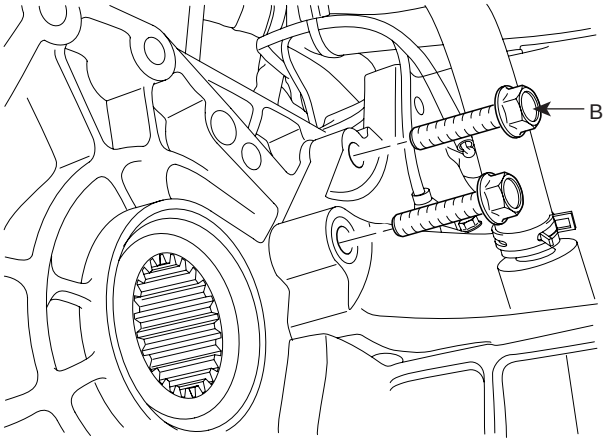

SCMMT6018D

3. Install the starter motor and connect the starter motor connector. (see EE group)

4. In case of 4WD, install the transfer case assembly.(see 'Transfer case' installation)

5. Install the drive shafts to the transaxle. (See "DS" group)

6. Install the transaxle insulator (B) and mounting bracket (C) by tightening the bolts (A).

TORQUE:
60~80 Nm (6~8 kgf.m, 43.6~58.2 lb-ft)

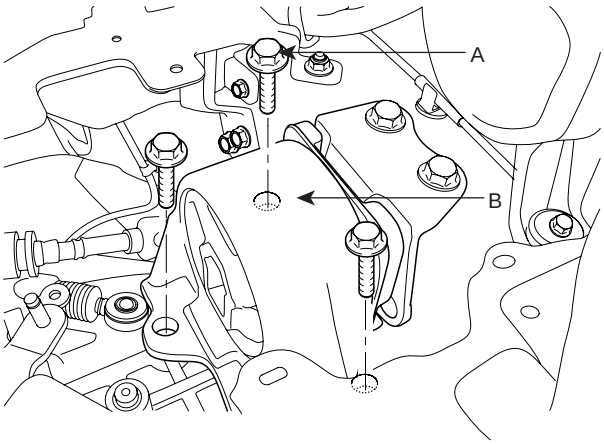

SCMMT6013D

7. Install the sub frame. (see SS group)

TORQUE:
60~80 Nm(6~8 kgf.m, 65.1~79.5 lb-ft)

8. Connect the power steering return hose. (see ST group)

9. Connect the lower arm, the rod end ball joint, the stabilizer bar link to the front knuckle.(see SS group)

10. Install the steering column joint bolt.(See ST group).

11. Install the C.S.C (Cincentric Slave Cylinder) tube(A) by tightening the nut(B).

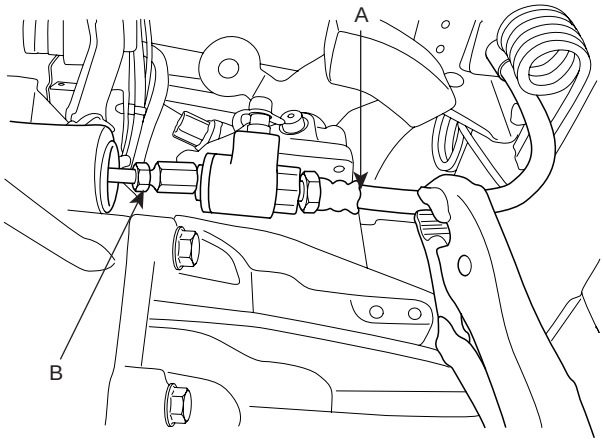

SCMMT6010D

12. Refill transaxle oil through the inlet hole(A).

TORQUE:
30~35 Nm(3.0~3.5 kgf.m, 21.8~25.4 lb-ft)

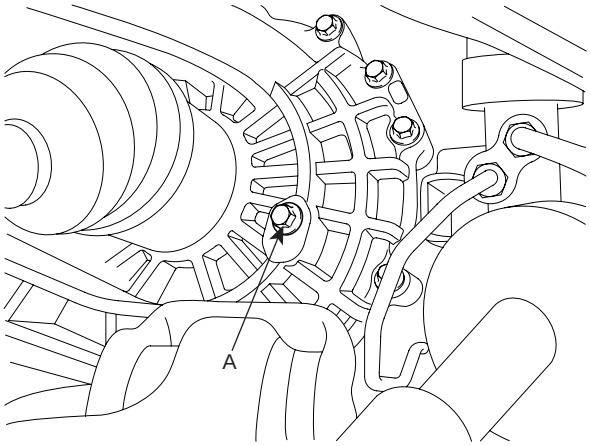

AMKF002J

13. Install the under cover(A).

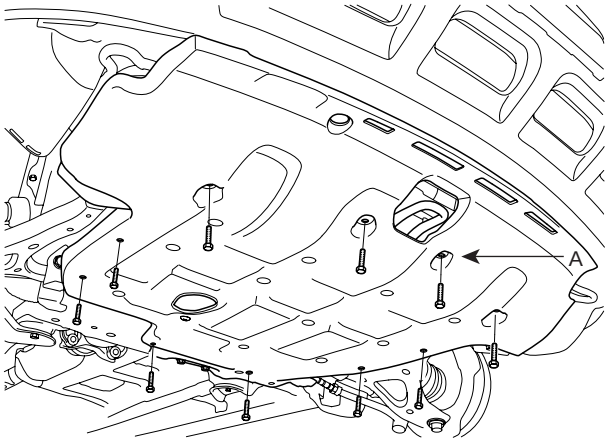

SCMMT6014D

14. Install the front wheels and tires. (see SS group)

15. Tighten the transaxle mounting bolts(A-4ea) and remove the SST (09200-38001) holding the engine and transaxle assembly.

TORQUE: 80~100Nm(8.0~10.0 kgf.m, 57.9~72.3 lb-ft)

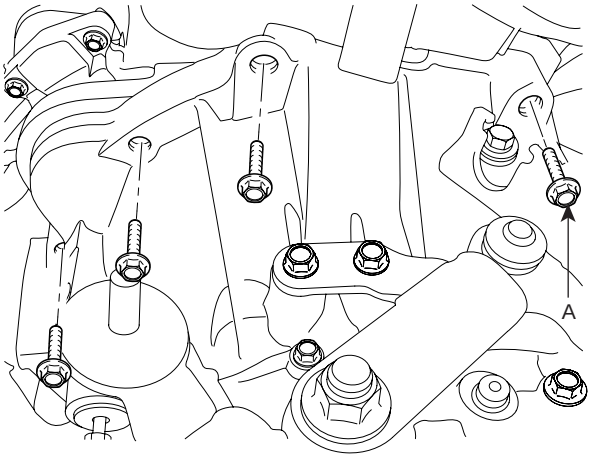

SCMMT6011D

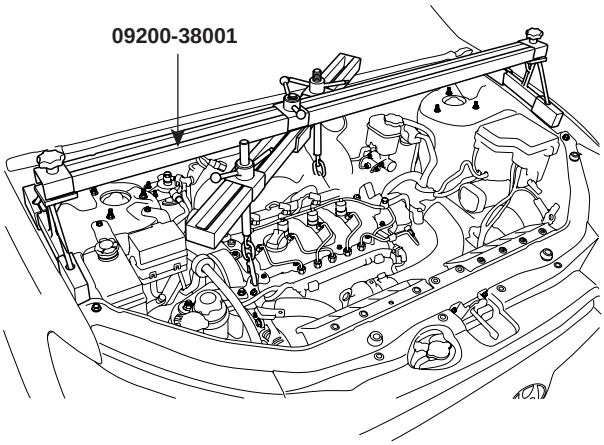

SCMMT6012D

16. Connect the power steering pressure hose (A) to the power steering oil pump.

17. Connect the "N" (A) and the "R" (B) position switch.

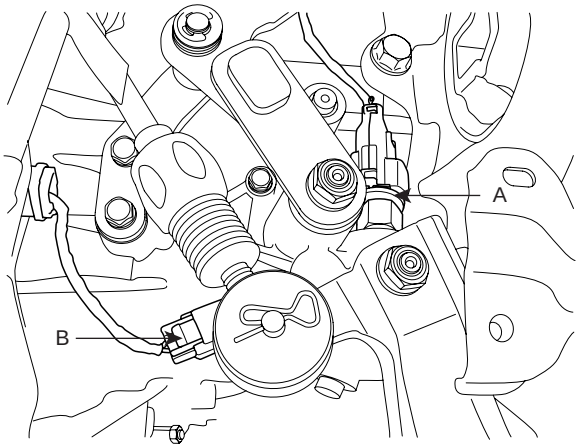

SCMMT6009D

18. Install the control cable assemblies(A) by tightening the clips (C) and snap pins (B).

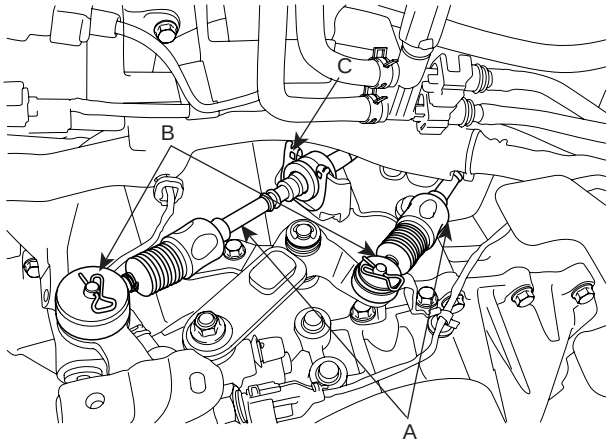

SCMMT6008D

19. Install the vehicle speed sensor connector (A).

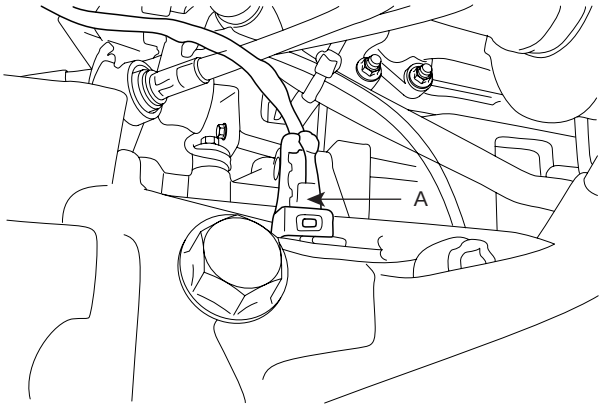

SCMMT6007D

20. Install the ground wire (A) from the transaxle case.

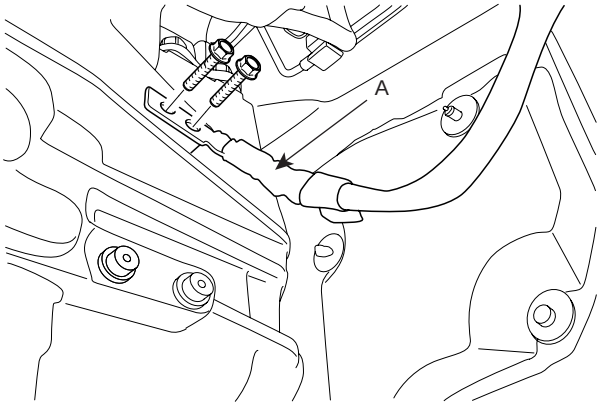

SCMMT6006D

21. Install the battery tray (B) by removing the four mounting bolts (A).

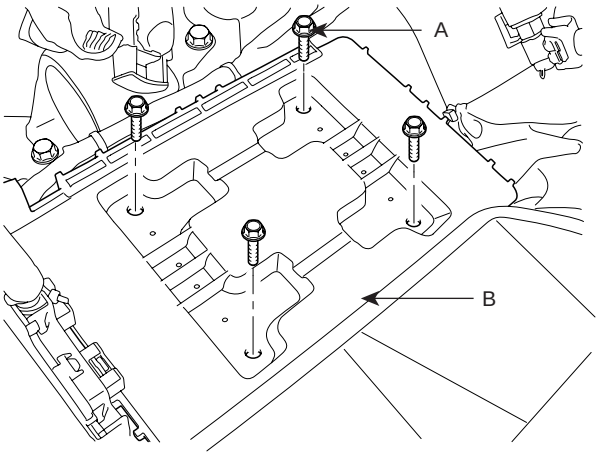

SCMMT6005D

22. Install the air cleaner assembly (B) by tightening the two mounting bolts(A).

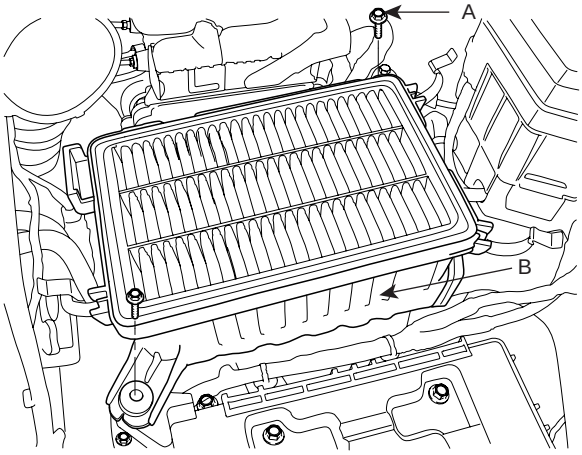

SCMMT6004D

23. Install the air cleaner upper cover (B) by tightening the clamp(A) and the clips.

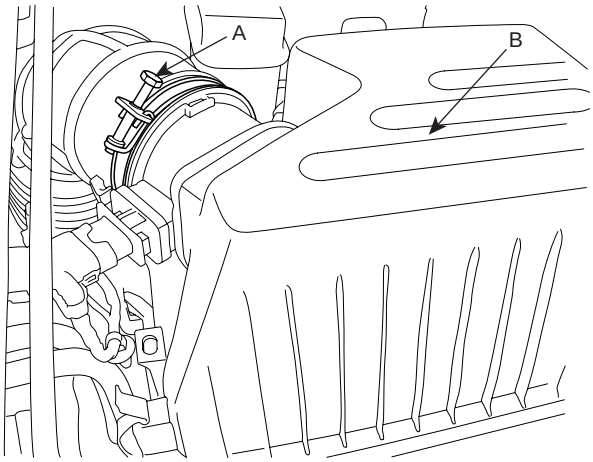

SCMMT6060D

24. Connect the AFS connector (A).

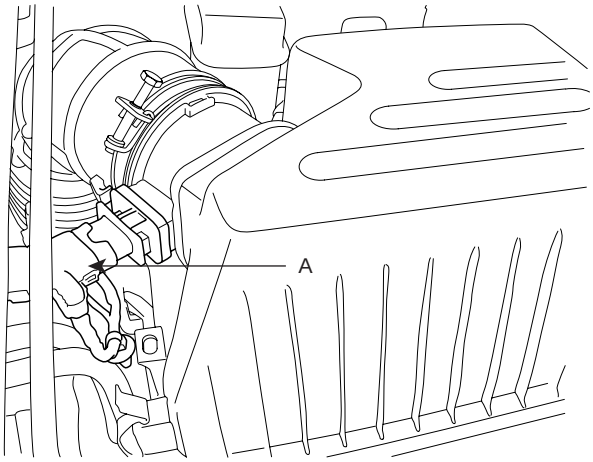

SCMMT6002D

25. Install the battery (A).

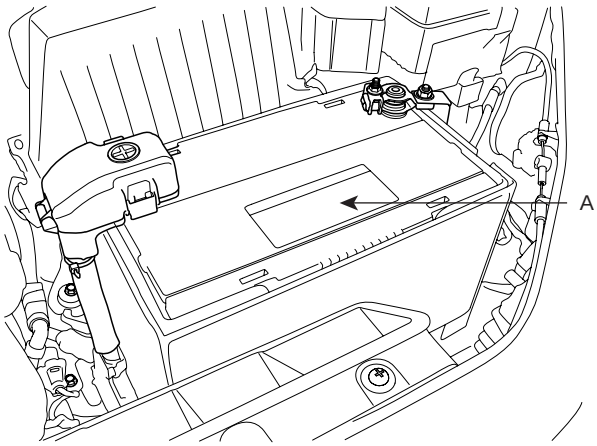

SCMMT6001D

26. Refill the power steering fluid.(see ’ST’ group)

    CAUTION

    Bleed air in the system, after installing the inter cooler assembly and the engine cover.

27. Install the engine cover and the inter cooler assembly.(see ’EM’ group)