# 2010 Cadillac CTS/CTS-V Owner Manual


**Keys, Doors and Windows** ... 1-1
Keys and Locks ... 1-2
Doors ... 1-17
Vehicle Security ... 1-23
Exterior Mirrors ... 1-26
Interior Mirrors ... 1-27
Windows ... 1-28
Roof ... 1-31

**Seats and Restraints** ... 2-1
Head Restraints ... 2-2
Front Seats ... 2-3
Rear Seats ... 2-10
Safety Belts ... 2-11
Airbag System ... 2-27
Child Restraints ... 2-43

**Storage** ... 3-1
Storage Compartments ... 3-1
Additional Storage Features ... 3-2
Roof Rack System ... 3-6

**Instruments and Controls** ... 4-1
Instrument Panel Overview ... 4-4
Controls ... 4-6
Warning Lights, Gages, and Indicators ... 4-14
Information Displays ... 4-31
Vehicle Messages ... 4-36
Vehicle Personalization ... 4-51
OnStar® System ... 4-59
Universal Remote System ... 4-61

**Lighting** ... 5-1
Exterior Lighting ... 5-1
Interior Lighting ... 5-5
Lighting Features ... 5-6

**Infotainment System** ... 6-1
Introduction ... 6-1
Radio ... 6-9
Audio Players ... 6-16
Phone ... 6-37

**Climate Controls** ... 7-1
Climate Control Systems ... 7-1
Air Vents ... 7-6
Maintenance ... 7-6

**Driving and Operating** ... 8-1
Driving Information ... 8-2
Starting and Operating ... 8-17
Engine Exhaust ... 8-25
Automatic Transmission ... 8-26
Manual Transmission ... 8-30
Drive Systems ... 8-32
Brakes ... 8-33
Ride Control Systems ... 8-37
Cruise Control ... 8-41
Object Detection Systems ... 8-44
Fuel ... 8-49
Towing ... 8-54
Conversions and Add-Ons ... 8-60

# 2010 Cadillac CTS/CTS-V Owner Manual

**Vehicle Care** ..... 9-1
General Information ..... 9-2
Vehicle Checks ..... 9-4
Headlamp Aiming ..... 9-34
Bulb Replacement ..... 9-37
Electrical System ..... 9-40
Wheels and Tires ..... 9-58
Jump Starting ..... 9-103
Towing ..... 9-108
Appearance Care ..... 9-110

**Service and Maintenance** ... 10-1
General Information ..... 10-1
Scheduled Maintenance ..... 10-3
Recommended Fluids, Lubricants, and Parts ..... 10-7
Maintenance Records ..... 10-11

**Technical Data** ..... 11-1
Vehicle Identification ..... 11-1
Vehicle Data ..... 11-2

**Customer Information** ..... 12-1
Customer Information ..... 12-1
Reporting Safety Defects .... 12-13
Vehicle Data Recording and Privacy ..... 12-15

**Index** ..... i-1

GENERAL MOTORS, GM, the GM Emblem, CADILLAC, the CADILLAC Crest and Wreath, and the name CTS/CTS-V are registered trademarks of General Motors.

This manual describes features that may or may not be on your specific vehicle either because they are options that you did not purchase or due to changes subsequent to the printing of this owner manual. Please refer to the purchase documentation relating to your specific vehicle to confirm each of the features found on your vehicle. For vehicles first sold in Canada, substitute the name “General Motors of Canada Limited” for Cadillac Motor Car Division wherever it appears in this manual.

Music recognition technology and related data are provided by Gracenote®. Gracenote is the industry standard in music recognition technology and related content delivery.
For more information, visit www.gracenote.com.

DTS and DTS Digital surround are registered trademarks of Digital Theater systems, Inc.

Dolby® is manufactured under license from Dolby® Laboratories. Dolby®, MLP Lossless, and the double-D symbol are trademarks of Dolby® Laboratories.

This manual describes features that may or may not be on your specific vehicle either because they are options that you did not purchase or due to changes subsequent to the printing of this owner manual. Please refer to the purchase documentation relating to your specific vehicle to confirm each of the features found on your vehicle. For vehicles first sold in Canada, substitute the name “General Motors of Canada Limited” for Cadillac Motor Car Division wherever it appears in this manual.

Litho in U.S.A.
Part No. 25834994 B Second Printing

©2009 General Motors. All Rights Reserved.

## Canadian Vehicle Owners

### Propriétaires Canadiens

A French language copy of this manual can be obtained from your dealer/retailer or from:

On peut obtenir un exemplaire de ce guide en français auprès du concessionnaire ou à l'adresse suivante:

Helm, Incorporated
P.O. Box 07130
Detroit, MI 48207

1-800-551-4123
Numéro de poste 6438 de langue française
www.helminc.com

## Using this Manual

To quickly locate information about the vehicle use the Index in the back of the manual. It is an alphabetical list of what is in the manual and the page number where it can be found.

## Danger, Warnings, and Cautions

Warning messages found on vehicle labels and in this manual describe hazards and what to do to avoid or reduce them.

**Danger** indicates a hazard with a high level of risk which will result in serious injury or death.

**Warning** or **Caution** indicates a hazard that could result in injury or death.

| ⚠ WARNING |
| --- |
| These mean there is something that could hurt you or other people. |

***Notice:*** **This means there is something that could result in property or vehicle damage. This would not be covered by the vehicle's warranty.**

A circle with a slash through it is a safety symbol which means "Do Not," "Do not do this" or "Do not let this happen."

## Symbols

The vehicle has components and labels that use symbols instead of text. Symbols are shown along with the text describing the operation or information relating to a specific component, control, message, gage, or indicator.

**:** This symbol is shown when you need to see your owner manual for additional instructions or information.

**:** This symbol is shown when you need to see a service manual for additional instructions or information.

**Vehicle Symbol Chart**

Here are some additional symbols that may be found on the vehicle and what they mean. For more information on the symbol, refer to the index.

: Airbag Readiness Light

: Air Conditioning

: Antilock Brake System (ABS)

: Audio Steering Wheel Controls or OnStar®

: Brake System Warning Light

: Charging System

: Cruise Control

: Engine Coolant Temperature

: Exterior Lamps

: Fog Lamps

: Fuel Gage

: Fuses

: Headlamp High/Low-Beam Changer

: LATCH System Child Restraints

: Malfunction Indicator Lamp

: Oil Pressure

: Power

: Remote Vehicle Start

: Safety Belt Reminders

: Tire Pressure Monitor

: Traction Control

: Windshield Washer Fluid

## ✍ NOTES

# Keys, Doors and Windows


## Keys and Locks
Keys . . . . . 1-2
Remote Keyless Entry (RKE) System . . . . . 1-4
Remote Keyless Entry (RKE) System Operation (Key Access) . . . . . 1-5
Remote Keyless Entry (RKE) System Operation (Keyless Access) . . . . . 1-7
Remote Vehicle Start . . . . . 1-12
Door Locks . . . . . 1-14
Central Door Unlocking System . . . . . 1-15
Power Door Locks . . . . . 1-15
Delayed Locking . . . . . 1-15
Automatic Door Locks . . . . . 1-15
Lockout Protection . . . . . 1-16
Safety Locks . . . . . 1-16

## Doors
Trunk (Sedan) . . . . . 1-17
Liftgate (Wagon) . . . . . 1-19

## Vehicle Security
Vehicle Security . . . . . 1-23
Anti-Theft Alarm System . . . . . 1-23
Immobilizer . . . . . 1-24
Immobilizer Operation (Key Access) . . . . . 1-24
Immobilizer Operation (Keyless Access) . . . . . 1-25

## Exterior Mirrors
Convex Mirrors . . . . . 1-26
Power Mirrors . . . . . 1-27
Folding Mirrors . . . . . 1-27
Heated Mirrors . . . . . 1-27

## Interior Mirrors
Automatic Dimming Rearview Mirror . . . . . 1-27

## Windows
Windows . . . . . 1-28
Power Windows . . . . . 1-28
Sun Visors . . . . . 1-31

## Roof
Sunroof . . . . . 1-31

# Keys and Locks

## Keys

**⚠ WARNING**

Leaving children in a vehicle with the ignition key is dangerous for many reasons, children or others could be badly injured or even killed. They could operate the power windows or other controls or even make the vehicle move. The windows will function with the keys in the ignition and children could be seriously injured or killed if caught in the path of a closing window. Do not leave the keys in a vehicle with children.

**⚠ WARNING**

Leaving children in a vehicle with the keyless access transmitter is dangerous for many reasons, children or others could be badly injured or even killed. They could operate the power windows or other controls or even make the vehicle move. The windows will function with the keyless access transmitter in the vehicle and they could be seriously injured or killed if caught in the path of a closing window. Do not leave the keyless access transmitter in a vehicle with children.

One of the following keys comes with the vehicle.

This key is used for the driver door, ignition, and glove box.

This key, located inside the keyless access transmitter, is used for the driver door, glove box, and rear seat pass-through door. See “Rear Seat Pass-Through Door” under *Trunk (Sedan) on page 1-17* for more information.

This type of transmitter has a thin button (A) near the bottom of the keyless access transmitter. To remove the key, press (A) and pull the key out. Never pull the key out without pressing the button.

***Notice:*** **If the transmitter does not have a button near the base, do not pull on the chrome base of the transmitter. This type of transmitter does not have a key inside. Pulling on the base of this transmitter could damage it.**

This vehicle may have the Keyless Access System. See *Ignition Positions (Key Access) on page 8-18* or *Ignition Positions (Keyless Access) on page 8-19* for information on starting the vehicle.

See your dealer/retailer if a new key is needed.

***Notice:*** **If you ever lock your keys in the vehicle, you may have to damage the vehicle to get in. Be sure you have spare keys.**

Contact Roadside Service if you are locked out of the vehicle. See *Roadside Service on page 12-6*.

## Remote Keyless Entry (RKE) System

See *Radio Frequency Statement on page 12-16* for information regarding Part 15 of the Federal Communications Commission (FCC) Rules and RSS-210/211 of Industry and Science Canada.

Changes or modifications to this system by other than an authorized service facility could void authorization to use this equipment.

If there is a decrease in the RKE operating range:

- Check the distance. The transmitter may be too far from the vehicle.
- Check the location. Other vehicles or objects may be blocking the signal.
- Check the transmitter's battery. See “Battery Replacement” later in this section.
- If the transmitter is still not working correctly, see your dealer/retailer or a qualified technician for service.

## Remote Keyless Entry (RKE) System Operation (Key Access)

The Remote Keyless Entry (RKE) transmitter functions work up to 20 m (65 feet) away from the vehicle.

There are other conditions that can affect the performance of the transmitter. See *Remote Keyless Entry (RKE) System on page 1-4*.

Do not pull on the chrome base of the transmitter.

**(Lock):** Press to lock all the doors.

If enabled through the Driver Information Center (DIC), the parking lamps may flash once to indicate locking has occurred.

The horn may chirp when is pressed again within five seconds. See *Vehicle Personalization on page 4-51* for additional information.

**(Unlock):** Press to unlock the driver door. If is pressed again within five seconds, all remaining doors unlock. The interior lamps come on and stay on for 20 seconds or until the ignition is turned on.

If enabled through the DIC, the parking lamps flash twice to indicate unlocking has occurred. See *Vehicle Personalization on page 4-51*.

**/ (Remote Trunk/Liftgate Release):** Press and hold for about one second to unlock the trunk/liftgate. The automatic transmission must be in P (Park) or the manual transmission must be in Neutral with the parking brake set.

**(Vehicle Locator/Panic Alarm):** Press and release to locate the vehicle. The turn signal lamps flash and the horn sounds three times.

Press and hold for more than two seconds to activate the panic alarm. The turn signal lamps flash and the horn sounds for 30 seconds. The alarm turns off when the ignition is moved to START or is pressed again. The ignition must be in LOCK/OFF for the panic alarm to work.

The vehicle comes with two transmitters. Each transmitter will have a number on top of it, “1” or “2”. These numbers correspond to the driver of the vehicle. For example, the memory seat position for driver 1 will be recalled when using the transmitter labeled “1”, if enabled through the DIC. See “Memory Seat” under *Power Seat Adjustment on page 2-4* and *Vehicle Personalization on page 4-51* for more information.

## Programming Transmitters to the Vehicle

Only RKE transmitters programmed to the vehicle will work. If a transmitter is lost or stolen, a replacement can be purchased and programmed through your dealer/retailer. When the replacement transmitter is programmed to the vehicle, all remaining transmitters must also be programmed. Any lost or stolen transmitters no longer work once the new transmitter is programmed. Each vehicle can have up to eight transmitters programmed to it. See “Relearn Remote Key” under *Driver Information Center (DIC) on page 4-31*.

## Battery Replacement

Replace the battery if the Replace Battery In Remote Key message displays in the DIC. See “Replace Battery In Remote Key” under *Key and Lock Messages on page 4-42* for additional information.

***Notice:*** **When replacing the battery, do not touch any of the circuitry on the transmitter. Static from your body could damage the transmitter.**

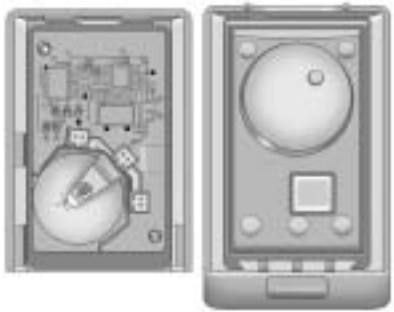

To replace the battery:

1. Separate the transmitter with a flat, thin object inserted into the notch, located above the metal base.
2. Remove the old battery. Do not use a metal object.
3. Insert the new battery, positive side facing up. Replace with a CR2032 or equivalent battery.
4. Snap the transmitter back together.

## Remote Keyless Entry (RKE) System Operation (Keyless Access)

The Keyless Access System transmitter functions will work up to 60 m (195 feet) away from the vehicle.

The Keyless Access System lets you lock and unlock the doors and access the trunk without removing the remote transmitter from your pocket, purse, briefcase, etc.
The keyless access transmitter must be within 1 m (3 feet) of the door or trunk being opened.

### Keyless Unlocking

With the keyless access transmitter within 1 m (3 feet), approach the front door and pull the handle to unlock and open the door. If the transmitter is recognized, the door will unlock and open.

To access the rear doors first, pull the rear door handle once to unlock all doors and a second time to open the door.

Entering any door other than the driver door will always cause all of the doors to unlock. This is not customizable.

To customize which doors unlock when the driver's door is opened, see “Keyless Unlock” under *Vehicle Personalization on page 4-51*.

### Keyless Locking

The doors lock after several seconds if all doors are closed and at least one keyless access transmitter has been removed from the interior of the vehicle. It does not matter how far away that one transmitter is from the vehicle.

To customize whether the doors automatically lock when you exit the vehicle, see “Keyless Locking” under *Vehicle Personalization on page 4-51*.

### Keyless Trunk Opening

Press the trunk release button located on the trunk lid above the license plate to open the trunk if the keyless access transmitter is within range.

There are other conditions which can affect the performance of the transmitter. See *Remote Keyless Entry (RKE) System on page 1-4*.

**With Remote Start Shown, Without Similar**

**(Lock):** Press once to lock the doors. The turn signal indicators flash. When is pressed twice, the turn signal indicators flash twice, and the horn sounds once to confirm locking.

To program the vehicle so the turn signal indicators do not flash and the horn does not sound when pressing on the keyless access transmitter, see “Remote Door Lock Feedback” under *Vehicle Personalization on page 4-51*.

**(Unlock):** Press once to unlock only the driver door. The turn signal indicators flash twice.

Press twice within five seconds to unlock all the doors. The interior lamps may come on.

To program the vehicle so the turn signal indicators do not flash and the fog lamps and reverse lamps remain on steady for about 20 seconds when the keyless access transmitter is used to unlock the vehicle, see “Remote Door Unlock Feedback” under *Vehicle Personalization on page 4-51*.

For vehicles with the memory feature, press on the keyless access transmitter to program and recall the memory settings. See “Memory Seat” under *Power Seat Adjustment on page 2-4* for more information.

**(Remote Start):** Press to operate the remote start feature. See *Remote Vehicle Start on page 1-12* for additional information.

/ **(Remote Trunk/Liftgate Release):** Press and hold for about one second to unlock the trunk/liftgate. The automatic transmission must be in P (Park) or the manual transmission must be in Neutral with the parking brake set.

**(Vehicle Locator/Panic Alarm):** Press and release to locate the vehicle. The horn sounds three times and the turn signal lamps flash three times.

Press and hold for three seconds to sound the panic alarm. The horn sounds and the turn signal lamps flash for 30 seconds. Press and release again to stop the alarm.

The vehicle comes with two transmitters. Each transmitter will have a number on top of it, “1” or “2”. These numbers correspond to the driver of the vehicle. For example, the memory seat position for driver 1 will be recalled when using the transmitter labeled “1”, if enabled through the DIC. See “Memory Seat” under *Power Seat Adjustment on page 2-4* and *Vehicle Personalization on page 4-51* for more information.

## Programming Transmitters to the Vehicle

Only keyless access transmitters programmed to the vehicle will work. If a transmitter is lost or stolen, a replacement can be purchased and programmed through your dealer/retailer. The vehicle can be reprogrammed so that lost or stolen transmitters no longer work. Each vehicle can have up to four transmitters matched to it.

### Programming with a Recognized Transmitter

A new transmitter can be programmed to the vehicle when there is one recognized transmitter. For vehicles sold in Canada, two recognized transmitters are required to program a new transmitter.

1. The vehicle must be off.
2. Place the recognized transmitter(s) in the cupholder. Have the new transmitter available with you.
3. Insert the vehicle key into the key lock cylinder located on the outside of the driver door.
4. Turn the key to the unlock position five times within five seconds.
5. The Driver Information Center (DIC) displays Ready To Learn Electronic Key #2, 3 or 4.

6. Place the new transmitter into the transmitter pocket with the buttons facing the front of the vehicle. The transmitter pocket is inside the center console storage area located between the driver and front passenger seats.
7. A beep sounds once the transmitter is programmed. The DIC displays Ready To Learn Electronic Key #3 or 4, or Maximum # Electronic Keys Learned.

8. Press the ignition control knob to exit programming mode.
9. Remove the transmitter from the transmitter pocket and press 🔓 on the keyless access transmitter two times.
10. To program additional transmitters, repeat Steps 6 through 9.

**Programming without a Recognized Transmitter**

United States owners are permitted to program a new transmitter to their vehicle when a recognized transmitter is not available. The Canadian immobilizer standard requires that Canadian owners see their dealer/retailer for programming new transmitters when two recognized transmitters are not available.

The procedure requires three, ten minute cycles to complete the matching process.

1. The vehicle must be off.

2. Place the new transmitter into the transmitter pocket with the buttons facing the front of the vehicle. The transmitter pocket is inside the center console storage area located between the driver and front passenger seats.
3. Insert the vehicle key into the key lock cylinder located on the driver door.
4. Turn the key to the unlock position five times within five seconds.
5. The DIC displays Press Start Control To Learn Keys.
6. Press the ignition switch in.
7. The DIC reads Learn Delay Active Wait XX Min and counts down to zero.
8. The DIC displays Press Start Control To Learn Keys again.
9. Press the ignition switch in again.
10. Repeat Steps 7, 8 and 9.
11. The DIC reads Learn Delay Active Wait XX Min and counts down to zero.
12. A beep sounds and the DIC reads Ready To Learn Electronic Key # X. All previously known transmitter programming has been erased.

13. A beep sounds once programming is complete. The DIC displays Ready To Learn Electronic Key # 2.

    To program additional transmitters, insert each transmitter in the pocket until a beep is heard and the DIC advances to the next electronic key number. Up to four transmitters can be programmed. The DIC displays Maximum # Electronic Keys Learned and exits the programming mode.

    Press the ignition control knob to complete the process.

14. Press the ignition control knob if programming is complete.

15. Press 🔓 on each newly programmed transmitter to complete the process.

## Starting the Vehicle with a Low Transmitter Battery

Replace the battery if the Replace Battery In Remote Key message displays in the DIC. See “Replace Battery In Remote Key” under *Key and Lock Messages on page 4-42* for additional information.

If the transmitter battery is weak, the DIC may display Electronic Key Not Detected when you try to start the vehicle. To start the vehicle, place the transmitter in the center console storage area transmitter pocket with the buttons facing to the front of the vehicle. Then, with the vehicle in P (Park) or N (Neutral), press the brake pedal and the ignition control knob. See *Starting the Engine on page 8-20*, for additional information about the vehicle's electronic keyless ignition with push start. Replace the transmitter battery as soon as possible.

## Battery Replacement

***Notice:*** **When replacing the battery, do not touch any of the circuitry on the transmitter. Static from your body could damage the transmitter.**

1. Separate the transmitter with a flat, thin object inserted into the slot on the side or back of the transmitter.
2. Remove the old battery. Do not use a metal object.

3. Insert the new battery, positive side facing down. Replace with a CR2032 or equivalent battery.
4. Snap the transmitter back together.

## Remote Vehicle Start

This vehicle may have a remote starting feature that allows you to start the engine from outside the vehicle.

**(Remote Vehicle Start):** This button will be on the RKE transmitter if you have remote start.

The automatic climate control will begin to heat or cool your vehicle during remote start depending on the temperature inside and outside of the vehicle. The windshield defroster and/or rear window defogger turn on if it is cold outside. If the vehicle has heated seats, they may also be turned on during remote start to warm up the seat in cold weather. Normal operation of the climate control system returns after the ignition is turned to ON/RUN. See *Dual Automatic Climate Control System on page 7-1*.

Laws in some local communities may restrict the use of remote starters. For example, some laws may require a person using remote start to have the vehicle in view when doing so. Check local regulations for any requirements on remote starting of vehicles.

If your vehicle is low on fuel, do not use the remote start feature. The vehicle may run out of fuel.

If your vehicle has the remote start feature, the RKE transmitter functions will have an increased range of operation. However, the range may be less while the vehicle is running.

There are other conditions which can affect the performance of the transmitter, see *Remote Keyless Entry (RKE) System on page 1-4* for additional information.

**Starting the Engine Using Remote Start**

To start the engine using the remote start feature:

1. Aim the transmitter at the vehicle and press on the transmitter.
2. Press and hold for at least four seconds or until the vehicle's turn signal lamps flash. The parking lamps will turn on and remain on as long as the engine is running. The vehicle's doors will be locked.
3. After entering the vehicle during a remote start, press the brake pedal and turn the ignition to ON/RUN to drive the vehicle.

   After a remote start, the engine will automatically shut off after 10 minutes unless a time extension has been done or the ignition has been turned to ON/RUN.

**Extending Engine Run Time**

To extend the engine run time by 10 minutes, repeat Steps 1 and 2 while the engine is still running. The engine run time can only be extended if it is the first remote start since the vehicle has been driven. Remote start can be extended one time.

If the remote start procedure is used again before the first 10 minute time frame has ended, the first 10 minutes will immediately expire and the second 10 minute time frame will start.

For example, if the lock button and then the remote start buttons are pressed again after the vehicle has been running for five minutes, 10 minutes are added, allowing the engine to run for a total of 15 minutes.

A maximum of two remote starts or remote start attempts are allowed between ignition cycles.

After the vehicle's engine has been started two times using the remote start button, the ignition must be turned on and then back off before the remote start procedure can be used again.

**Shutting the Engine Off After a Remote Start**

To manually shut off the engine after a remote start, do any of the following:

- Press until the parking lamps turn off.
- Turn on the hazard warning flashers.
- Turn the ignition switch on and then off.

**Conditions in Which Remote Start Will Not Work**

The remote vehicle start feature will not operate if any of the following occur:

- The ignition is in any position other than LOCK/OFF.
- A keyless access transmitter is inside the vehicle.
- The vehicle's hood is not closed.
- The hazard warning flashers are on.
- There is an emission control system malfunction.
- The engine coolant temperature is too high.
- The oil pressure is low.
- Two remote vehicle starts have already been used. The maximum number of remote starts or remote start attempts between ignition cycles with the key is two.

## Door Locks

**⚠ WARNING**

Unlocked doors can be dangerous.

- Passengers, especially children, can easily open the doors and fall out of a moving vehicle. When a door is locked, the handle will not open it. The chance of being thrown out of the vehicle in a crash is increased if the doors are not locked. So, all passengers should wear safety belts properly and the doors should be locked whenever the vehicle is driven.

(Continued)

**WARNING (Continued)**

- Young children who get into unlocked vehicles may be unable to get out. A child can be overcome by extreme heat and can suffer permanent injuries or even death from heat stroke. Always lock the vehicle whenever leaving it.
- Outsiders can easily enter through an unlocked door when you slow down or stop your vehicle. Locking your doors can help prevent this from happening.

There are several ways to lock and unlock the vehicle.

From the outside, use the key, or press the lock or unlock button on the Remote Keyless Entry (RKE) transmitter. See *Remote Keyless Entry (RKE) System Operation (Key Access) on page 1-5* or *Remote Keyless Entry (RKE) System Operation (Keyless Access) on page 1-7* for more information.

On vehicles with the Remote Keyless Access system, the door unlocks by pulling the door handle when you have the transmitter with you. See *Remote Keyless Entry (RKE) System Operation (Key Access) on page 1-5* or *Remote Keyless Entry (RKE) System Operation (Keyless Access) on page 1-7* for more information.

If the windows are down and the doors are locked, do not reach in to manually unlock the vehicle because you will set off the alarm.

From the inside, press the power door lock switch located on the front door. See *Power Door Locks on page 1-15*.

Push down or pull up on the manual lock knob, located at the top of the door near the window, for the rear doors.

## Central Door Unlocking System

The vehicle has a central door unlocking feature. When unlocking the driver door, the other doors can be unlocked by holding the key in the turned position for a few seconds or by quickly turning the key twice in the lock cylinder.

## Power Door Locks

On vehicles with power door locks, the switches are located on the front doors.

**(Unlock):** Press to unlock the doors.

**(Lock):** Remove the key from the ignition and press to lock the doors.

## Delayed Locking

With this feature, you can delay the actual locking of the doors.

When the power door lock switch is pressed when the key is not in the ignition and the driver door is opened, a chime will sound three times indicating that delayed locking is active.

When all the doors are closed, the doors will lock automatically after five seconds. If a door is reopened before five seconds have elapsed, the five second timer will reset itself once all the doors are closed again.

You can press the door lock switch again or the lock button on the RKE transmitter to override this feature and lock the doors immediately.

## Automatic Door Locks

If the vehicle has an automatic transmission, the vehicle is programmed so that the doors will lock automatically when all doors are closed, the ignition is on, and the shift lever is moved out of P (Park). The doors will automatically unlock when the vehicle is stopped and the shift lever is moved into P (Park).

If the vehicle has a manual transmission, the vehicle is programmed so that the doors will lock automatically after the vehicle speed reaches 8 km (5 mph). The doors will automatically unlock when the ignition is turned off and the key is removed from the ignition.

If someone needs to exit the vehicle once the doors are locked, have that person use the manual lever or power door lock switch. When the door is closed again, it will not lock automatically. Use the manual lever or the power door lock switch to lock the door.

The power door locks can be programmed through prompts displayed on the Driver Information Center (DIC). For more information on programming, see *Vehicle Personalization on page 4-51*.

## Lockout Protection

If the power door lock switch is pressed when the key is in the ignition and a door is open, all the doors will lock and only the driver door will unlock. If the doors are closed, they can be locked by using the Remote Keyless Entry (RKE) transmitter. Be sure to remove the key from the ignition when locking the vehicle.

This feature can be overridden by pressing the lock button on the RKE transmitter or by pressing the power lock switch a second time.

On vehicles with a Keyless Access System, the system can be programmed to alert you when all the doors are closed and a transmitter has been left inside of the vehicle. See *Vehicle Personalization on page 4-51* for more information.

## Safety Locks

The vehicle has rear door security locks. These prevent passengers from opening the rear doors from the inside.

**Lock Label shown**

The rear door security locks are located on the inside edge of each rear door. The rear doors must be open to access them. The label showing lock and unlock positions is located near the lock.

To set the locks:

1. Insert the key into the security lock slot and turn it so the slot is in the horizontal position.
2. Close the door.

When you want to open a rear door when the security lock is on:

1. Unlock the door using the Remote Keyless Entry (RKE) or Keyless Access System transmitter, if the vehicle has one, the power door lock switch, or the rear door manual lock.
2. Open the door from the outside.

To cancel the rear door security lock:

1. Unlock the door and open it from the outside.
2. Insert the key into the security lock slot and turn it so the slot is in the vertical position.

# Doors

## Trunk (Sedan)

**⚠ WARNING**

Exhaust gases can enter the vehicle if it is driven with the liftgate, trunk/hatch open, or with any objects that pass through the seal between the body and the trunk/hatch or liftgate. Engine exhaust contains Carbon Monoxide (CO) which cannot be seen or smelled. It can cause unconsciousness and even death.

If the vehicle must be driven with the liftgate, or trunk/hatch open:

- Close all of the windows.
- Fully open the air outlets on or under the instrument panel.

(Continued)

**WARNING (Continued)**

- Adjust the Climate Control system to a setting that brings in only outside air and set the fan speed to the highest setting. See Climate Control System in the Index.
- If the vehicle is equipped with a power liftgate, disable the power liftgate function.

For more information about carbon monoxide, see *Engine Exhaust on page 8-25*.

### Trunk Lock Release

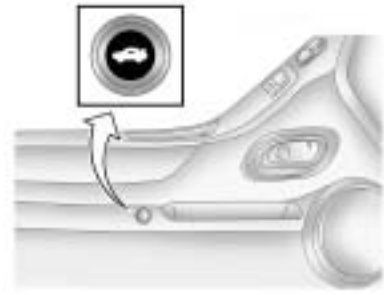

The remote trunk release button is located on the lower portion of the driver door.

To use the remote trunk release, the shift lever must be in P (Park) or N (Neutral) for a vehicle with an automatic transmission. The shift lever must be in N (Neutral), with the parking brake set for a vehicle with a manual transmission.

Press the button to open the trunk. You can also press the button with the trunk symbol on the Remote Keyless Entry (RKE) transmitter to open the trunk.

With the Keyless Access System, when you have the transmitter, the trunk can be opened by the trunk release button located on the rear of the trunk above the license plate. The vehicle must be in P (Park) and the valet mode turned off.

If the vehicle is locked, the keyless access transmitter must be within 3 feet (1 meter) of the trunk opening for it to be recognized and allow the trunk to open.

If the vehicle is ever without power, the trunk area can still be accessed by using one of the following procedures.

On vehicles with a rear seat pass-through door:

1. Fold the rear armrest down and open the pass-through door. See “Rear-Seat Pass Through” following for more information.
2. Reach upward through the opening to locate the emergency trunk release handle. See “Emergency Trunk Release Handle” for more information.
3. Pull forward on the trunk release handle to open the trunk lid.

On vehicles with a split folding rear seat:

1. Fold down the rear seatback. See *Rear Seats on page 2-10* for more information.
2. Reach upward through the opening to locate the trunk release handle.
3. Pull forward on the trunk release handle to open the trunk lid.

Close the trunk by pulling on the handle. Do not use the handle as a tie-down.

## Rear-Seat Pass Through

If the vehicle has the rear seat-pass through door, the trunk can be accessed through the rear seat. This is useful when transporting long items.

To open the door, pull down the rear seat armrest. Then pull the lever all the way down to release the door.

To close the door, push it up and back into place. Then try to open the door without pulling up on the lever to make sure it is locked into place.

### Emergency Trunk Release Handle (Sedan Only)

***Notice:*** **Do not use the emergency trunk release handle as a tie-down or anchor point when securing items in the trunk as it could damage the handle. The emergency trunk release handle is only intended to aid a person trapped in a latched trunk, enabling them to open the trunk from the inside.**

There is a glow-in-the-dark emergency trunk release handle located on the back wall of the trunk. This handle will glow following exposure to light. Pull the release handle toward the front of the vehicle to open the trunk from the inside.

## Liftgate (Wagon)

### Power Liftgate Operation

**⚠ WARNING**

Exhaust gases can enter the vehicle if it is driven with the liftgate, trunk/hatch open, or with any objects that pass through the seal between the body and the trunk/hatch or liftgate. Engine exhaust contains Carbon Monoxide (CO) which cannot be seen or smelled. It can cause unconsciousness and even death.

(Continued)

**WARNING (Continued)**

If the vehicle must be driven with the liftgate, or trunk/hatch open:

- Close all of the windows.
- Fully open the air outlets on or under the instrument panel.
- Adjust the Climate Control system to a setting that brings in only outside air and set the fan speed to the highest setting. See Climate Control System in the Index.
- If the vehicle is equipped with a power liftgate, disable the power liftgate function.

For more information about carbon monoxide, see *Engine Exhaust on page 8-25*.

The switch is located on the driver's door. The vehicle must be in P (Park) to use the power feature. The taillamps flash when the power liftgate moves.

**⚠ WARNING**

You or others could be injured if caught in the path of the power liftgate. Make sure there is no one in the way of the liftgate as it is opening and closing.

***Notice:*** **If you open the liftgate without checking for overhead obstructions such as a garage door, you could damage the liftgate or the liftgate glass. Always check to make sure the area above and behind the liftgate is clear before opening it.**

The power liftgate has three modes of operation. Mode selection is controlled by the interior mode switch located on the driver door.

Choose the power liftgate mode by turning the dial on the switch until the indicator lines up with the desired position.

The three modes are:

**MAX:** The liftgate power opens to the full open height.

**3/4:** The liftgate power opens to a reduced open height that can be set by the vehicle operator in a range of approximately ¾ open to full open.

Use this setting to prevent the liftgate from opening into overhead obstructions such as a garage door or roof mounted cargo during power operation. The liftgate can still be opened fully manually.

**OFF:** The liftgate only operates manually in this position.

Manual operation of a liftgate that also has power operation requires more effort than with a standard manual liftgate.

In either the MAX or the ¾ mode, the liftgate can be power opened and closed by:

- Press and hold the power liftgate button on the Remote Keyless Entry (RKE) transmitter until the liftgate starts moving. See *Remote Keyless Entry (RKE) System Operation (Key Access) on page 1-5* or *Remote Keyless Entry (RKE) System Operation (Keyless Access) on page 1-7*.

- Press the power liftgate button on the center of the mode switch, located on the driver's door.
- Press the touchpad switch on the liftgate outside handle to open the liftgate.

- Press and release the power liftgate button on the liftgate adjacent to the latch to close the liftgate.

Pressing any button that operates the power liftgate, or the touchpad switch while the liftgate is moving, stops it. Pressing the button or RKE switch again reverses the direction. There is a minimum that the power liftgate must already be open for the system to hold it open. If movement is stopped below that minimum the liftgate closes.

Do not force the liftgate open or closed during a power cycle.

The power liftgate may be temporarily disabled under extreme temperatures or low battery conditions. If this occurs, the liftgate can still be operated manually.

If you shift the transmission out of P (Park) while the power function is in progress, the liftgate power function will continue to completion. If you shift the transmission out of P (Park) and accelerate before the power liftgate latch is closed, the liftgate may reverse to the open position. Cargo could fall out of the vehicle. Always make sure the power liftgate is closed and latched before you drive away.

If the liftgate is powered open and the liftgate support struts have lost pressure, the turn signals will flash and a chime will sound. The liftgate will stay open temporarily, and then slowly close. See your dealer/retailer for service before using the liftgate.

### Obstacle Detection Features

If the liftgate encounters an obstacle during a power open or close cycle, a warning chime will sound and the liftgate will automatically reverse direction to the full closed or open position. After removing the obstruction, the power liftgate operation can be used again.
If the liftgate encounters multiple obstacles on the same power cycle, the power function will deactivate. After removing the obstructions, the liftgate will resume normal power operation.

The vehicle has pinch sensors located on the side edges of the liftgate. If an object is caught between the liftgate and the body and presses against this sensor, the liftgate will reverse direction and open fully. The liftgate will remain open until it is activated again or closed manually.

### Setting the Power Liftgate Intermediate Mode

To change the liftgate stop position:

1. Turn the liftgate switch to either the MAX, or the ¾ mode position and power open the liftgate.
2. Stop the liftgate movement at the desired height by pressing any button that operates the power lift gate, or the touchpad switch. Manually adjust the liftgate position if required.
3. Press and hold the button on the liftgate adjacent to the latch until the turn signals flash and a beep sounds to indicate that the new setting is recorded.

When power opened with the ¾ mode selected, the liftgate stops at the new set position.

If an audible and visual response is not received when setting the intermediate stop position, the liftgate height is below the ¾ open height minimum, approximately 5 feet at the edge of the liftgate.

### Manual Operation of Power Liftgate

To change the liftgate to manual operation, turn the mode switch to OFF.

With the power liftgate disabled and all of the doors unlocked, the liftgate can be manually opened and closed. Note: Manual efforts of a vehicle equipped with a power liftgate will be higher than a standard non-power liftgate.

To open the liftgate, press the touchpad on the handle on the outside of the liftgate, and lift the gate open. To close the liftgate, use the pull cup to lower the liftgate and close. With the power liftgate disabled the liftgate electric latch will still power latch once contact is made with the striker. Always close the liftgate before driving.

If the RKE button is pressed while power operation is disabled, the turn signals will flash, and the liftgate will not move.

The liftgate has an electric latch. If the battery is disconnected or has low voltage, the liftgate will not open. The liftgate will resume operation when the battery is reconnected and charged.

# Vehicle Security

Vehicle theft is big business, especially in some cities. This vehicle has theft-deterrent features, however, they do not make it impossible to steal.

## Anti-Theft Alarm System

This vehicle has an anti-theft alarm system.

The security light, located in the instrument panel cluster, comes on when the system is arming.

### Arming the System

To arm the system,

1. Open the door.
2. Lock the door with the transmitter. The security light should come on and stay on.
3. Close all doors. The security light should go off after about 30 seconds. The alarm is not armed until the security light goes off.

If a locked door or trunk is opened without using the key in the driver's door key cylinder or the transmitter, a ten second pre-alarm will occur. The horn will chirp and the lights will flash. If the key is not placed in the ignition and turned to START or the door is not unlocked by pressing the unlock button on the transmitter during the ten second pre-alarm, the alarm will go off. Your vehicle's headlamps will flash and the horn will sound for about 30 seconds, then will turn off to save the battery power.

The theft-deterrent system will not activate if the doors are locked with the vehicle's key or the manual door lock. It activates only if the power door lock switch is used while the door is open or with the transmitter. You should also remember that you can start your vehicle with the correct ignition key if the alarm has been set off.

To avoid setting off the alarm by accident:

- Lock the vehicle with the door key after the doors are closed.
- Always unlock a door with the transmitter. Unlocking a door any other way will set off the alarm.

If you set off the alarm by accident, turn off the alarm by pressing the unlock button on the transmitter. The alarm will not stop if you try to unlock a door any other way.

### How to Detect a Tamper Condition

If 🔒 is pressed and the horn sounds, an attempted break-in has occurred while the system was armed.

If the alarm has been activated, the Theft Attempted message will appear on the DIC. See *Key and Lock Messages on page 4-42* for additional information.

## Immobilizer

See *Radio Frequency Statement on page 12-16* for information regarding Part 15 of the Federal Communications Commission (FCC) Rules and RSS-210/211 of Industry and Science Canada.

## Immobilizer Operation (Key Access)

This vehicle has a passive theft-deterrent system.

The system does not have to be manually armed or disarmed.

The vehicle is automatically immobilized when the key is removed from the ignition.

The system is automatically disarmed when the vehicle is started with the correct key. The key uses a transponder that matches an immobilizer control unit in the vehicle and automatically disarms the system. Only the correct key starts the vehicle. The vehicle may not start if the key is damaged.

The security light, located in the instrument panel cluster, comes on if there is a problem with arming or disarming the theft-deterrent system.

When trying to start the vehicle, the security light comes on briefly when the ignition is turned on.

If the engine does not start and the security light stays on there is a problem with the system. Turn the ignition off and try again.

If the engine still does not start, and the key appears to be undamaged, try another ignition key.

If the engine still does not start and the light continues to stay on try another key.

If the engine still does not start with the other key, the vehicle needs service. If the vehicle does start, the first key may be damaged. See your dealer/retailer who can service the theft-deterrent system and have a new key made.

It is possible for the theft-deterrent system decoder to learn the transponder value of a new or replacement key. Up to 10 keys can be programmed for the vehicle. The following procedure is for programming additional keys only.

To program a new key do the following:

1. Verify that the new key has ⊕ stamped on it.
2. Insert the current driver's key in the ignition and start the engine. If the engine will not start see your dealer/retailer for service.
3. After the engine has started, turn the key to LOCK/OFF, and remove the key.
4. Insert the key to be programmed and turn it to ON/RUN within five seconds of the ignition being turned to LOCK/OFF in Step 3.
5. The security light will turn off once the key has been programmed. It may not be apparent that the security light went on due to how quickly the key is programmed.
6. Repeat the Steps 1 through 4 if additional keys are to be programmed.

Do not leave the key or device that disarms or deactivates the theft deterrent system in the vehicle.

## Immobilizer Operation (Keyless Access)

This vehicle has a passive theft-deterrent system.

The system does not have to be manually armed or disarmed.

The vehicle is automatically immobilized when the ignition control knob is turned to LOCK/OFF.

The immobilization system is disarmed when the ignition control knob is pushed in and a valid transmitter is found in the vehicle.

The security light, located in the instrument panel cluster, comes on if there is a problem with arming or disarming the theft-deterrent system.

The system has one or more keyless access transmitters that are matched to an immobilizer control unit in your vehicle. Only a correctly matched keyless access transmitter will start the vehicle. If the keyless access transmitter is ever damaged, you may not be able to start your vehicle.

When trying to start the vehicle, the security light comes on briefly when the ignition is turned on.

If the engine does not start and the security light stays on there is a problem with the system. Turn the ignition control knob off and try again.

If the ignition control knob does not rotate, and the keyless access transmitter appears to be undamaged, try another keyless access transmitter. Or, you may try placing the transmitter in the transmitter pocket located in the center console. See “Electronic Key Not Detected” under *Key and Lock Messages on page 4-42*.

If the ignition control knob still does not rotate with the other transmitter, your vehicle needs service. If the ignition control knob does rotate, the first transmitter may be faulty. See your dealer/retailer who can service the theft-deterrent system and have a new keyless access transmitter programmed to the vehicle.

It is possible for the immobilizer system to learn new or replacement keyless access transmitters. Up to 4 keyless access transmitters can be programmed for the vehicle. To program additional transmitters, see “Matching transmitter(s) to Your Vehicle” for Keyless Access under *Remote Keyless Entry (RKE) System Operation (Key Access) on page 1-5* or *Remote Keyless Entry (RKE) System Operation (Keyless Access) on page 1-7*.

Do not leave the key or device that disarms or deactivates the theft deterrent system in the vehicle.

# Exterior Mirrors

## Convex Mirrors

**⚠ CAUTION**

A convex mirror can make things, like other vehicles, look farther away than they really are. If you cut too sharply into the right lane, you could hit a vehicle on the right. Check the inside mirror or glance over your shoulder before changing lanes.

The passenger side mirror is convex shaped. A convex mirror's surface is curved so more can be seen from the driver seat.

## Power Mirrors

Controls for the outside power mirrors are located on the driver door.

To adjust each mirrors:

1. Press ▭ or ▭ to select the driver or passenger side mirror.
2. Press one of the four arrows located on the control pad to move the mirror to the desired direction.
3. Adjust each outside mirror so that a little of the vehicle and the area behind it can be seen.
4. Press either ▭ or ▭ again to deselect the mirror.

## Folding Mirrors

### Manual

Vehicles with manual fold mirrors are folded inward toward the vehicle to prevent damage when going through an automatic car wash. Push the mirror outward, to return it to the original position.

## Heated Mirrors

**(Rear Window Defogger):** Press to heat the mirrors.

See “Rear Window Defogger” under Climate Control for more information.

# Interior Mirrors

## Automatic Dimming Rearview Mirror

The vehicle has an automatic dimming inside rearview mirror with OnStar® controls, located at the bottom of the mirror. See your dealer/retailer for more information on the system and how to subscribe to OnStar. See OnStar System for more information about the services OnStar provides.

**(On/Off):** Press to turn the dimming feature on or off.

If the vehicle has a rear vision camera (RVC). See *Rear Vision Camera (RVC) on page 8-46* for more information.

### Automatic Dimming Mirror Operation

Automatic dimming reduces the glare of headlamps from behind you. The dimming feature comes on and the indicator light illuminates each time the vehicle is started.

### Cleaning the Mirror

Do not spray glass cleaner directly on the mirror. Use a soft towel dampened with water.

## Windows

**⚠ WARNING**

Leaving children, helpless adults, or pets in a vehicle with the windows closed is dangerous. They can be overcome by the extreme heat and suffer permanent injuries or even death from heat stroke. Never leave a child, a helpless adult, or a pet alone in a vehicle, especially with the windows closed in warm or hot weather.

## Power Windows

**⚠ WARNING**

Leaving children in a vehicle with the keys is dangerous for many reasons, children or others could be badly injured or even killed. They could operate the power windows or other controls or even make the vehicle move. The windows will function and they could be seriously injured or

(Continued)

**WARNING (Continued)**

killed if caught in the path of a closing window. Do not leave keys in a vehicle with children.

When there are children in the rear seat use the window lockout button to prevent unintentional operation of the windows.

**Driver Side Shown**

The power window switches are located on the driver door.

In addition, each door has a switch for its own window. The front power window switch operates with two positions for both up and down movement and the rear power window switch operates with one position for up and two positions for down movement. Press the switch to the first position to lower the window to the desired level. Pull the switch up to raise the window.

The vehicle has Retained Accessory Power (RAP) that allows you to use the power windows once the ignition has been turned off. For more information, see *Retained Accessory Power (RAP) on page 8-19*.

## Express-Down/Up Windows

Windows with the express feature allow the windows to be raised and lowered all the way without holding the switch.

Press or pull the switch fully and release it to activate the express feature.

The express mode can be canceled at any time by briefly pressing or pulling the switch.

## Express Window Anti-Pinch Feature

If any object is in the path of the window when the express-up is active, the window will stop at the obstruction and auto-reverse to a preset factory position. Weather conditions such as severe icing may also cause the window to auto-reverse. The window will return to normal operation once the obstruction or condition is removed.

## Express Window Anti-Pinch Override

**⚠ WARNING**

If express override is activated, the window will not reverse automatically. You or others could be injured and the window could be damaged. Before you use express override, make sure that all people and obstructions are clear of the window path.

In an emergency, the anti-pinch feature can be overridden in a supervised mode. Hold the window switch all the way up to the second position. The window will rise for as long as the switch is held. Once the switch is released, the express mode is re-activated.

In this mode, the window can still close on an object in its path. Use care when using the override mode.

## Programming the Power Windows

If the battery on the vehicle has been recharged, disconnected, or is not working, you will need to reprogram each front power window for the express-up feature to work. Before reprogramming, replace or recharge the vehicle's battery.

To program each front window, follow these steps:

1. With the ignition in ACC/ ACCESSORY, ON/RUN, or when Retained Accessory Power (RAP) is active, close all doors.
2. Press and hold the power window switch until the window is fully open.
3. Pull the power window switch up until the window is fully closed.
4. Continue holding the switch up for approximately two seconds after the window is completely closed.

The window is now reprogrammed. Repeat the process for the other windows.

## Window Lockout

**(Window Lockout):** The rear window lockout button is located on the driver door near the window switches.

Press the right side of the button to disable the rear window controls. The light on the button will illuminate, indicating the feature is in use. The rear windows still can be raised or lowered using the driver window switches when the lockout feature is active.

To restore power to the rear windows, press the button again. The light on the button will go out.

## Sun Visors

Swing down the visor to block out glare. It can also be detached from the center mount and moved to the side to block glare from that direction.

The driver visor may also have buttons for a built-in garage door opener. See *Universal Remote System on page 4-61* for more information.

### Lighted Visor Vanity Mirror

Pull the visor down and lift the cover to access the mirror. A light comes on when the cover is lifted and goes out when it is closed.

# Roof

## Sunroof

If the vehicle has a power sunroof it will only operate when the ignition is turned on, or in ACC/ACCESSORY, or when Retained Accessory Power (RAP) is active. See *Retained Accessory Power (RAP) on page 8-19*.

The sunroof switches are located on the overhead console.

The driver side switch operates the sunshade.

Press and hold the rear of the switch to open the sunshade. Press and hold the front of the switch to close the sunshade.

**Express-Open:** To open the sunshade, fully press and release the rear of the driver side switch. The sunshade will automatically open. To stop the sunshade partway, press the switch a second time.

**Express-Close:** To close the sunshade, fully press and release the front of the driver side switch. The sunshade will automatically close. To stop the sunshade partway, press the switch a second time.

The sunshade will open automatically with the sunroof, but can also be opened manually.

The passenger side switch operates the sunroof.

**Express-Open:** To open the sunroof, fully press and release the rear of the passenger side switch. The sunroof will automatically open. To stop the sunroof partway, press the switch a second time.

**Express-Close:** To close the sunroof, fully press and release the front of the driver's side switch. The sunroof will automatically close. To stop the sunroof partway, press the switch a second time.

**Comfort Stop Feature:** The sunroof has a comfort stop feature which stops the sunroof from opening to the full-open position. From the comfort stop position, press the rear of the passenger side switch a second time to open the sunroof to the full-open position.

**Vent Feature:** Press and hold the front of the passenger side switch to vent the sunroof. The sunshade will automatically open approximately fifteen inches. Press and hold the rear of the passenger side switch to close the sunroof vent.

## Anti-Pinch Feature

If an object is in the path of the sunroof/sunshade when it is closing, the anti-pinch feature will detect the object and stop the sunroof/sunshade from closing at the point of the obstruction. The sunroof/sunshade will then return to the full-open position. To close the sunroof/sunshade, see “Express-Close” earlier in this section.

# Seats and Restraints


## Head Restraints
Head Restraints . . . . . 2-2
Active Head Restraints . . . . . 2-3

## Front Seats
Seat Adjustment . . . . . 2-3
Power Seat Adjustment . . . . . 2-4
Lumbar Adjustment . . . . . 2-6
Thigh Support Adjustment . . . . 2-7
Reclining Seatbacks . . . . . 2-7
Heated and Ventilated Front Seats . . . . . 2-9

## Rear Seats
Rear Seats . . . . . 2-10

## Safety Belts
Safety Belts . . . . . 2-11
How to Wear Safety Belts Properly . . . . . 2-15
Lap-Shoulder Belt . . . . . 2-20
Safety Belt Use During Pregnancy . . . . . 2-25
Safety Belt Extender . . . . . 2-25
Safety System Check . . . . . 2-25
Safety Belt Care . . . . . 2-26
Replacing Safety Belt System Parts After a Crash . . . . . 2-26

## Airbag System
Airbag System . . . . . 2-27
Where Are the Airbags? . . . . . 2-29
When Should an Airbag Inflate? . . . . . 2-31
What Makes an Airbag Inflate? . . . . . 2-32
How Does an Airbag Restrain? . . . . . 2-33
What Will You See After an Airbag Inflates? . . . . . 2-33
Passenger Sensing System . . . . . 2-35
Servicing the Airbag-Equipped Vehicle . . . . . 2-40
Adding Equipment to the Airbag-Equipped Vehicle . . . 2-40
Airbag System Check . . . . . 2-42
Replacing Airbag System Parts After a Crash . . . . . 2-42

## Child Restraints
Older Children . . . . . 2-43
Infants and Young Children . . . . . 2-45
Child Restraint Systems . . . . . 2-47
Where to Put the Restraint . . . 2-49
Lower Anchors and Tethers for Children (LATCH System) . . . . . 2-51
Replacing LATCH System Parts After a Crash . . . . . 2-57
Securing Child Restraints (Rear Seat) . . . . . 2-57
Securing Child Restraints (Front Passenger Seat) . . . . 2-59

# Head Restraints

The vehicle's front seats have adjustable head restraints in the outboard seating positions.

The vehicle's rear seats have head restraints in the outboard seating positions, but they are not adjustable.

**⚠ WARNING**

With head restraints that are not installed and adjusted properly, there is a greater chance that occupants will suffer a neck/spinal injury in a crash. Do not drive until the head restraints for all occupants are installed and adjusted properly.

Adjust the head restraint so that the top of the restraint is at the same height as the top of the occupant's head. This position reduces the chance of a neck injury in a crash.

Pull the head restraint up to raise it. To lower the head restraint, press the button, located on the top of the seatback, and push the restraint down.

Push down on the head restraint after the button is released to make sure that it is locked in place.

The vehicle's head restraints are not designed to be removed.

## Active Head Restraints

### Active Head Restraint System

The vehicle has an active head restraint system in the front seating positions. These automatically tilt forward to reduce the risk of neck injury if the vehicle is hit from behind.

# Front Seats

## Seat Adjustment

**⚠ WARNING**

You can lose control of the vehicle if you try to adjust a manual driver's seat while the vehicle is moving. The sudden movement could startle and confuse you, or make you push a pedal when you do not want to. Adjust the driver's seat only when the vehicle is not moving.

To move a manual seat forward or rearward:

1. Lift the bar to unlock the seat.
2. Slide the seat to the desired position and release the bar.

Try to move the seat with your body to be sure the seat is locked in place.

# Power Seat Adjustment

## Power Seats

On vehicles with power seats, the controls are located on the outboard side of the seats.

- Move the seat forward or rearward by sliding the horizontal control forward or rearward.
- Raise or lower the front part of the seat cushion by moving the front of the horizontal control up or down.
- Raise or lower the rear part of the seat cushion by moving the rear of the horizontal control up or down.
- Raise or lower the entire seat by moving the entire horizontal control up or down.

The vertical control is used for reclining the seatback. See “Power Reclining Seatbacks” under *Reclining Seatbacks on page 2-7* for more information.

## Memory Seat, Mirrors and Steering Wheel

On vehicles with the memory package the controls are located on the driver door. This feature is used to program and recall memory settings for the driver seat, outside mirror, and the steering wheel position if the vehicle has the power tilt wheel and telescopic steering feature.

**1:** Saves the seating position for driver 1.

**2:** Saves the seating position for driver 2.

**:** Recalls the easy exit position.

To save your positions in memory:

1. Adjust the driver seat, seatback recliner and lumbar, both outside mirrors, and the steering wheel to a comfortable position.
2. Press and hold button 1 until two beeps sound through the driver side front speaker to let you know that the position has been stored.
3. Repeat the procedure for a second driver using button 2.

To recall memory positions, the vehicle must be in P (Park) for an automatic transmission or the parking brake applied for a manual transmission. Press and release either button 1 or button 2.

A single beep will sound. The seat, outside mirrors, and steering wheel will move to the position previously stored for the identified driver.

If the Remote Keyless Entry (RKE) transmitter is used to enter the vehicle and the remote recall memory feature is on, automatic seat and mirror movement occur.

On vehicles with the Keyless Access System, automatic adjustment occurs when the driver door is opened.

To stop recall movement of the memory feature at any time, press one of the power seat controls, memory buttons, power tilt wheel control, or power mirror buttons.

If something has blocked the driver seat or the steering column while recalling a memory position, the recall may stop. Remove the obstruction, then press the appropriate control for the area that is not recalling for two seconds. Try recalling the memory position again by pressing the appropriate memory button. If the memory position is still not recalling, see your dealer/retailer for service.

## Easy Exit Recall

: With the vehicle in P (Park) for an automatic transmission or the parking brake applied for a manual transmission, press the exit button to recall the exit position.

If the easy exit seat feature is on in the DIC, automatic seat and power telescopic steering column movement occurs when the key is removed from the ignition.

On vehicles with the Keyless Access System, automatic adjustment occurs when the ignition is turned to OFF and the driver door is opened.

A single beep sounds. The driver seat moves back, and if the vehicle has the power tilt wheel and telescopic steering feature, it moves up and forward.

See “EASY EXIT RECALL” under *Vehicle Personalization on page 4-51* for more information.

For more programming information, see *Vehicle Personalization on page 4-51*.

## Lumbar Adjustment

The vehicle may have this feature. The driver and passenger seatback lumbar support can be adjusted by moving the control located on the outboard side of the seat cushions.

To increase or decrease support, hold the control forward or rearward. Adjust the seat as needed.

A. Seat Cushion Bolster Adjustment Switch

B. Lumbar Support Control Switch

C. Seatback Bolster Adjustment Switch

### Power Lumbar

On vehicles with this feature:

- Press and hold the top of the control (B) to increase support to the top of the seatback and decrease support to the bottom of the lumbar.
- Press and hold the bottom of the control to decrease support to the top of the seatback and increase support to the bottom of the seatback.
- Press and hold the front or rear of the control to increase or decrease support to the entire seatback.

### Side Bolster

On vehicles with this feature:

- Press the top or bottom of control (A) to increase or decrease support in seat cushion bolsters.
- Press the top or bottom of the control (C) to increase or decrease support in the seatback bolsters.

## Thigh Support Adjustment

On vehicles with this feature, adjust the manual leg extension by reaching under it, in the pocketed area. Press the release button and pull or push to lengthen or shorten it. Release the button to lock it in place.

## Reclining Seatbacks

### Manual Reclining Seatbacks

**⚠ WARNING**

You can lose control of the vehicle if you try to adjust a manual driver's seat while the vehicle is moving. The sudden movement could startle and confuse you, or make you push a pedal when you do not want to. Adjust the driver's seat only when the vehicle is not moving.

**⚠ WARNING**

If either seatback is not locked, it could move forward in a sudden stop or crash. That could cause injury to the person sitting there. Always push and pull on the seatbacks to be sure they are locked.

If the front passenger seat has a manual reclining seatback, the lever used to operate it is located on the outboard side of the seat.

To recline the seatback:

1. Lift the recline lever.
2. Move the seatback to the desired position, then release the lever to lock the seatback in place.
3. Push and pull on the seatback to make sure it is locked.

To return the seatback to an upright position:

1. Lift the lever fully without applying pressure to the seatback and the seatback will return to the upright position.
2. Push and pull on the seatback to make sure it is locked.

## Power Reclining Seatbacks

If the seats have power reclining seatbacks, use the vertical power seat control located on the outboard side of each seat.

- To recline the seatback, press the control toward the rear of the vehicle.
- To raise the seatback, press the control toward the front of the vehicle.

**⚠ WARNING**

Sitting in a reclined position when your vehicle is in motion can be dangerous. Even if you buckle up, your safety belts cannot do their job when you are reclined like this.

The shoulder belt cannot do its job. In a crash, you could go into it, receiving neck or other injuries.

The lap belt cannot do its job either. In a crash the belt could go up over your abdomen. The belt forces would be there, not at your pelvic bones. This could cause serious internal injuries.

For proper protection when the vehicle is in motion, have the seatback upright. Then sit well back in the seat and wear your safety belt properly.

Do not have a seatback reclined if the vehicle is moving.

## Heated and Ventilated Front Seats

**⚠ WARNING**

If you cannot feel temperature change or pain to the skin, the seat heater may cause burns even at low temperatures. To reduce the risk of burns, people with such a condition should use care when using the seat heater, especially for long periods of time. Do not place anything on the seat that insulates against heat, such as a blanket, cushion, cover or similar item. This may cause the seat heater to overheat. An overheated seat heater may cause a burn or may damage the seat.

On vehicles with this feature, the buttons are located on the climate control panel.

**(Heated Seat and Seatback):** Press to heat the seat and seatback.

**(Ventilated Seat):** Press to ventilate the seat.

A light bar in the climate control display shows the setting; high, medium, or low.

Press either button to start that feature at the highest setting. Each press of the button, decreases the setting.

To turn the feature off, press the button until the light turns off.

The heated or ventilated seats shut off when the vehicle is turned off.

# Rear Seats

***Notice:*** **Folding a rear seat with the safety belts still fastened may cause damage to the seat or the safety belts. Always unbuckle the safety belts and return them to their normal stowed position before folding a rear seat.**

The vehicle may have a split folding rear seat.

**Sedan**

To lower one or both of the rear seatbacks:

1. Pull forward on the tab, located on the outboard side of the seatback, to unlock the seatback.
2. Fold the seatback down. This allows access to the trunk.

See *Trunk (Sedan) on page 1-17* for more information.

**Wagon**

To lower one or both of the rear seatbacks:

1. Pull on the lever, located on the top outboard side of the seatback, to unlock the seatback.
2. Fold the seatback down.

To return a seatback to the upright position:

**⚠ WARNING**

If either seatback is not locked, it could move forward in a sudden stop or crash. That could cause injury to the person sitting there. Always push and pull on the seatbacks to be sure they are locked.

1. Lift the seatback up and push it back into place.
2. Make sure the seatback is locked into place by pushing and pulling on it.
3. Repeat Steps 1 and 3 for the other seatback.

When the seatback is not in use, it should be kept in the upright, locked position.

# Safety Belts

This section of the manual describes how to use safety belts properly. It also describes some things not to do with safety belts.

**⚠ WARNING**

Do not let anyone ride where a safety belt cannot be worn properly. In a crash, if you or your passenger(s) are not wearing safety belts, the injuries can be much worse. You can hit things inside the vehicle harder or be ejected from the vehicle. You and your passenger(s) can be seriously injured or killed. In the same crash, you might not be, if you are buckled up. Always fasten your safety belt, and check that your passenger(s) are restrained properly too.

**⚠ WARNING**

It is extremely dangerous to ride in a cargo area, inside or outside of a vehicle. In a collision, people riding in these areas are more likely to be seriously injured or killed. Do not allow people to ride in any area of your vehicle that is not equipped with seats and safety belts. Be sure everyone in your vehicle is in a seat and using a safety belt properly.

This vehicle has indicators as a reminder to buckle the safety belts. See *Safety Belt Reminders on page 4-21* for additional information.

In most states and in all Canadian provinces, the law requires wearing safety belts. Here is why:

You never know if you will be in a crash. If you do have a crash, you do not know if it will be a serious one.

A few crashes are mild, and some crashes can be so serious that even buckled up, a person would not survive. But most crashes are in between. In many of them, people who buckle up can survive and sometimes walk away. Without safety belts they could have been badly hurt or killed.

After more than 40 years of safety belts in vehicles, the facts are clear. In most crashes buckling up does matter ... a lot!

## Why Safety Belts Work

When you ride in or on anything, you go as fast as it goes.

Take the simplest vehicle. Suppose it is just a seat on wheels.

Put someone on it.

Get it up to speed. Then stop the vehicle. The rider does not stop.

The person keeps going until stopped by something. In a real vehicle, it could be the windshield...

or the instrument panel...

or the safety belts!

With safety belts, you slow down as the vehicle does. You get more time to stop. You stop over more distance, and your strongest bones take the forces. That is why safety belts make such good sense.

## Questions and Answers About Safety Belts

**Q: Will I be trapped in the vehicle after a crash if I am wearing a safety belt?**

**A:** You *could* be — whether you are wearing a safety belt or not. But your chance of being conscious during and after an accident, so you *can* unbuckle and get out, is *much* greater if you are belted. And you can unbuckle a safety belt, even if you are upside down.

**Q: If my vehicle has airbags, why should I have to wear safety belts?**

**A:** Airbags are supplemental systems only; so they work *with* safety belts — not instead of them. Whether or not an airbag is provided, all occupants still have to buckle up to get the most protection. That is true not only in frontal collisions, but especially in side and other collisions.

**Q: If I am a good driver, and I never drive far from home, why should I wear safety belts?**

**A:** You may be an excellent driver, but if you are in a crash — even one that is not your fault — you and your passenger(s) can be hurt. Being a good driver does not protect you from things beyond your control, such as bad drivers.

Most accidents occur within 40 km (25 miles) of home. And the greatest number of serious injuries and deaths occur at speeds of less than 65 km/h (40 mph).

Safety belts are for everyone.

## How to Wear Safety Belts Properly

This section is only for people of adult size.

Be aware that there are special things to know about safety belts and children. And there are different rules for smaller children and infants. If a child will be riding in the vehicle, see *Older Children on page 2-43* or *Infants and Young Children on page 2-45*. Follow those rules for everyone's protection.

It is very important for all occupants to buckle up. Statistics show that unbelted people are hurt more often in crashes than those who are wearing safety belts.

Occupants who are not buckled up can be thrown out of the vehicle in a crash. And they can strike others in the vehicle who are wearing safety belts.

First, before you or your passenger(s) wear a safety belt, there is important information you should know.

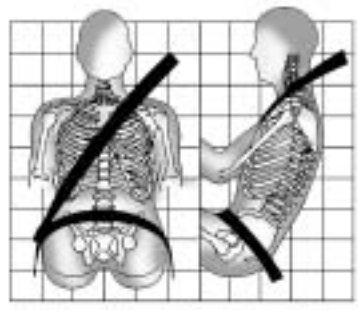

Sit up straight and always keep your feet on the floor in front of you. The lap part of the belt should be worn low and snug on the hips, just touching the thighs. In a crash, this applies force to the strong pelvic bones and you would be less likely to slide under the lap belt.

If you slid under it, the belt would apply force on your abdomen. This could cause serious or even fatal injuries. The shoulder belt should go over the shoulder and across the chest. These parts of the body are best able to take belt restraining forces.

The shoulder belt locks if there is a sudden stop or crash.

**Q: What is wrong with this?**

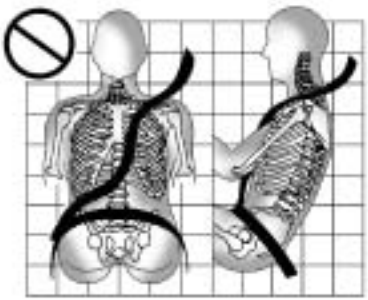

**A:** The shoulder belt is too loose. It will not give as much protection this way.

**⚠ WARNING**

You can be seriously hurt if your shoulder belt is too loose. In a crash, you would move forward too much, which could increase injury. The shoulder belt should fit snugly against your body.

**Q: What is wrong with this?**

**A:** The lap belt is too loose. It will not give nearly as much protection this way.

**⚠ WARNING**

You can be seriously hurt if your lap belt is too loose. In a crash, you could slide under the lap belt and apply force on your abdomen. This could cause serious or even fatal injuries. The lap belt should be worn low and snug on the hips, just touching the thighs.

**Q: What is wrong with this?**

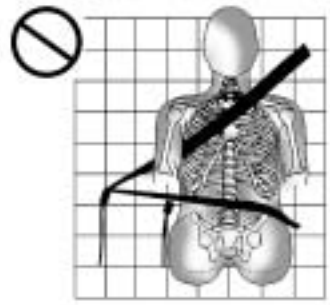

**A:** The belt is buckled in the wrong buckle.

**⚠ WARNING**

You can be seriously injured if your belt is buckled in the wrong place like this. In a crash, the belt would go up over your abdomen. The belt forces would be there, not on the pelvic bones. This could cause serious internal injuries. Always buckle your belt into the buckle nearest you.

**Q: What is wrong with this?**

**A:** The belt is over an armrest.

**⚠ WARNING**

You can be seriously injured if your belt goes over an armrest like this. The belt would be much too high. In a crash, you can slide under the belt. The belt force would then be applied on the abdomen, not on the pelvic bones, and that could cause serious or fatal injuries. Be sure the belt goes under the armrests.

**Q: What is wrong with this?**

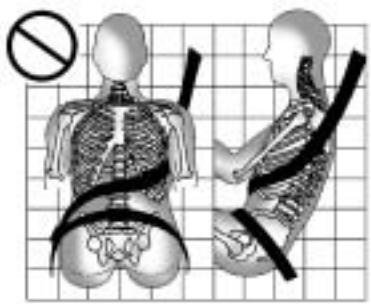

**A:** The shoulder belt is worn under the arm. It should be worn over the shoulder at all times.

**⚠ WARNING**

You can be seriously injured if you wear the shoulder belt under your arm. In a crash, your body would move too far forward, which would increase the chance of head and neck injury. Also, the belt would apply too much force to the ribs, which are not as strong as shoulder bones.
You could also severely injure internal organs like your liver or spleen. The shoulder belt should go over the shoulder and across the chest.

**Q: What is wrong with this?**

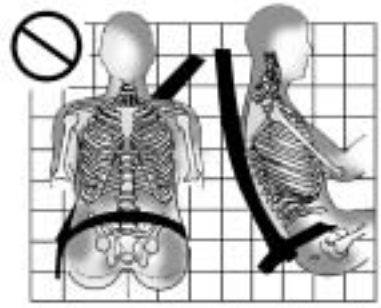

**A:** The belt is behind the body.

**⚠ WARNING**

You can be seriously injured by not wearing the lap-shoulder belt properly. In a crash, you would not be restrained by the shoulder belt. Your body could move too far forward increasing the chance of head and neck injury. You might also slide under the lap belt. The belt force would then be applied right on the abdomen. That could cause serious or fatal injuries. The shoulder belt should go over the shoulder and across the chest.

**Q: What is wrong with this?**

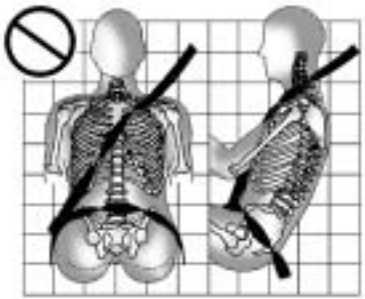

**A:** The belt is twisted across the body.

**⚠ WARNING**

You can be seriously injured by a twisted belt. In a crash, you would not have the full width of the belt to spread impact forces. If a belt is twisted, make it straight so it can work properly, or ask your dealer/retailer to fix it.

## Lap-Shoulder Belt

All seating positions in the vehicle have a lap-shoulder belt.

The following instructions explain how to wear a lap-shoulder belt properly.

1. Adjust the seat, if the seat is adjustable, so you can sit up straight. To see how, see “Seats” in the Index.
2. Pick up the latch plate and pull the belt across you. Do not let it get twisted.

   The lap-shoulder belt may lock if you pull the belt across you very quickly. If this happens, let the belt go back slightly to unlock it. Then pull the belt across you more slowly.

   If the shoulder portion of a passenger belt is pulled out all the way, the child restraint locking feature may be engaged. If this happens, let the belt go back all the way and start again.

3. Push the latch plate into the buckle until it clicks.

   Pull up on the latch plate to make sure it is secure. If the belt is not long enough, see *Safety Belt Extender on page 2-25*.

   Position the release button on the buckle so that the safety belt could be quickly unbuckled if necessary.

4. If equipped with a shoulder belt height adjuster, move it to the height that is right for you. See “Shoulder Belt Height Adjustment” later in this section for use and important safety information.

5. To make the lap part tight, pull up on the shoulder belt.

   It may be necessary to pull stitching on the safety belt through the latch plate to fully tighten the lap belt on smaller occupants.

To unlatch the belt, push the button on the buckle. The belt should return to its stowed position.

Before a door is closed, be sure the safety belt is out of the way. If a door is slammed against a safety belt, damage can occur to both the safety belt and the vehicle.

## Shoulder Belt Height Adjuster

The vehicle has a shoulder belt height adjuster for the driver and right front passenger seating positions.

Adjust the height so that the shoulder portion of the belt is centered on the shoulder. The belt should be away from the face and neck, but not falling off the shoulder. Improper shoulder belt height adjustment could reduce the effectiveness of the safety belt in a crash.

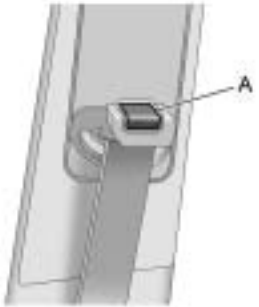


Push down on the release button (A) and move the height adjuster to the desired position. The adjuster can be moved up by pushing up on the shoulder belt guide.

After the height adjuster is set to the desired position, try to move it down without pressing the release button to make sure it has locked into position.

## Safety Belt Pretensioners

This vehicle has safety belt pretensioners for front outboard occupants. Although the safety belt pretensioners cannot be seen, they are part of the safety belt assembly. They can help tighten the safety belts during the early stages of a moderate to severe frontal or near frontal crash if the threshold conditions for pretensioner activation are met. And, if the vehicle has side impact airbags, safety belt pretensioners can help tighten the safety belts in a side or rear crash.

Pretensioners work only once. If the pretensioners activate in a crash, They will need to be replaced, and probably other new parts for the vehicle's safety belt system.
See *Replacing Safety Belt System Parts After a Crash on page 2-26*.

## Rear Safety Belt Comfort Guides

This vehicle may have rear shoulder belt comfort guides. If not, they are available through your dealer/retailer. The guides may provide added safety belt comfort for older children who have outgrown booster seats and for some adults. When installed and properly adjusted, the comfort guide positions the shoulder belt away from the neck and head.

Here is how to install a comfort guide to the safety belt:

1. Pull the elastic cord out from between the edge of the seatback and the interior body to remove the guide from its storage clip.

2. Place the guide over the belt and insert the two edges of the belt into the slots of the guide.

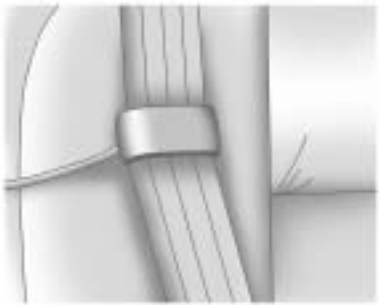

3. Be sure that the belt is not twisted and it lies flat. The elastic cord must be under the belt and the guide on top.

**⚠ WARNING**

A safety belt that is not properly worn may not provide the protection needed in a crash. The person wearing the belt could be seriously injured. The shoulder belt should go over the shoulder and across the chest. These parts of the body are best able to take belt restraining forces.

4. Buckle, position, and release the safety belt as described previously in this section. Make sure that the shoulder belt crosses the shoulder.

To remove and store the comfort guide, squeeze the belt edges together so that the safety belt can be removed from the guide. Pull the guide upward to expose its storage clip, and then slide the guide onto the clip. Turn the guide and clip inward and slide them in between the seatback and the interior body, leaving only the loop of the elastic cord exposed.

## Safety Belt Use During Pregnancy

Safety belts work for everyone, including pregnant women. Like all occupants, they are more likely to be seriously injured if they do not wear safety belts.

A pregnant woman should wear a lap-shoulder belt, and the lap portion should be worn as low as possible, below the rounding, throughout the pregnancy.

The best way to protect the fetus is to protect the mother. When a safety belt is worn properly, it is more likely that the fetus will not be hurt in a crash. For pregnant women, as for anyone, the key to making safety belts effective is wearing them properly.

## Safety Belt Extender

If the vehicle's safety belt will fasten around you, you should use it.

But if a safety belt is not long enough, your dealer/retailer will order you an extender. When you go in to order it, take the heaviest coat you will wear, so the extender will be long enough for you. To help avoid personal injury, do not let someone else use it, and use it only for the seat it is made to fit. The extender has been designed for adults. Never use it for securing child seats. To wear it, attach it to the regular safety belt. For more information, see the instruction sheet that comes with the extender.

## Safety System Check

Now and then, check that the safety belt reminder light, safety belts, buckles, latch plates, retractors and anchorages are working properly. Look for any other loose or damaged safety belt system parts that might keep a safety belt system from doing its job. See your dealer/retailer to have it repaired. Torn or frayed safety belts may not protect you in a crash. They can rip apart under impact forces. If a belt is torn or frayed, get a new one right away.

Make sure the safety belt reminder light is working. See *Safety Belt Reminders on page 4-21* for more information.

Keep safety belts clean and dry. See *Safety Belt Care on page 2-26*.

## Safety Belt Care

Keep belts clean and dry.

**⚠ WARNING**

Do not bleach or dye safety belts. It may severely weaken them. In a crash, they might not be able to provide adequate protection. Clean safety belts only with mild soap and lukewarm water.

## Replacing Safety Belt System Parts After a Crash

**⚠ WARNING**

A crash can damage the safety belt system in the vehicle. A damaged safety belt system may not properly protect the person using it, resulting in serious injury or even death in a crash. To help make sure the safety belt systems are working properly after a crash, have them inspected and any necessary replacements made as soon as possible.

After a minor crash, replacement of safety belts may not be necessary. But the safety belt assemblies that were used during any crash may have been stressed or damaged. See your dealer/retailer to have the safety belt assemblies inspected or replaced.

New parts and repairs may be necessary even if the safety belt system was not being used at the time of the crash.

Have the safety belt pretensioners checked if the vehicle has been in a crash, or if the airbag readiness light stays on after you start the vehicle or while you are driving. See *Airbag Readiness Light on page 4-21*.

## Airbag System

The vehicle has the following airbags:

- A frontal airbag for the driver.
- A frontal airbag for the right front passenger.
- A seat-mounted side impact airbag for the driver.
- A seat-mounted side impact airbag for the right front passenger.
- A roof-rail airbag for the driver and the passenger seated directly behind the driver.
- A roof-rail airbag for the right front passenger and the passenger seated directly behind the right front passenger.

All of the airbags in the vehicle will have the word AIRBAG embossed in the trim or on an attached label near the deployment opening.

For frontal airbags, the word AIRBAG will appear on the middle part of the steering wheel for the driver and on the instrument panel for the right front passenger.

With seat-mounted side impact airbags, the word AIRBAG will appear on the side of the seatback closest to the door.

With roof-rail airbags, the word AIRBAG will appear along the headliner or trim.

Airbags are designed to supplement the protection provided by safety belts. Even though today's airbags are also designed to help reduce the risk of injury from the force of an inflating bag, all airbags must inflate very quickly to do their job.

Here are the most important things to know about the airbag system:

**⚠ WARNING**

You can be severely injured or killed in a crash if you are not wearing your safety belt — even if you have airbags. Airbags are designed to work with safety belts, but do not replace them. Also, airbags are not designed to deploy in every crash. In some crashes safety belts are your only restraint. See *When Should an Airbag Inflate? on page 2-31*.

Wearing your safety belt during a crash helps reduce your chance of hitting things inside the vehicle or being ejected from it. Airbags are “supplemental restraints” to the safety belts. Everyone in your vehicle should wear a safety belt properly — whether or not there is an airbag for that person.

**⚠ WARNING**

Airbags inflate with great force, faster than the blink of an eye. Anyone who is up against, or very close to, any airbag when it inflates can be seriously injured or killed. Do not sit unnecessarily close to the airbag, as you would be if you were sitting on the edge of your seat or leaning forward. Safety belts help keep you in position before and during a crash. Always wear your safety belt, even with airbags. The driver should sit as far back as possible while still maintaining control of the vehicle.

Occupants should not lean on or sleep against the door or side windows in seating positions with seat-mounted side impact airbags and/or roof-rail airbags.

**⚠ WARNING**

Children who are up against, or very close to, any airbag when it inflates can be seriously injured or killed. Airbags plus lap-shoulder belts offer protection for adults and older children, but not for young children and infants. Neither the vehicle's safety belt system nor its airbag system is designed for them. Young children and infants need the protection that a child restraint system can provide. Always secure children properly in your vehicle. To read how, see *Older Children on page 2-43* or *Infants and Young Children on page 2-45*.

There is an airbag readiness light on the instrument panel cluster, which shows the airbag symbol. The system checks the airbag electrical system for malfunctions. The light tells you if there is an electrical problem. See *Airbag Readiness Light on page 4-21* for more information.

## Where Are the Airbags?

The driver's frontal airbag is in the middle of the steering wheel.

The right front passenger frontal airbag is in the instrument panel on the passenger side.

**Driver Side shown, Passenger Side similar**

The seat-mounted side impact airbags for the driver and right front passenger are in the side of the seatbacks closest to the door.

**Driver Side shown, Passenger Side similar**

The roof-rail airbags for the driver, right front passenger, and second row outboard passengers are in the ceiling above the side windows.

**⚠ WARNING**

If something is between an occupant and an airbag, the airbag might not inflate properly or it might force the object into that person causing severe injury or even death. The path of an inflating airbag must be kept clear. Do not put anything between an occupant and an airbag, and do not attach or put anything on the steering wheel hub or on or near any other airbag covering.

(Continued)

**WARNING (Continued)**

Do not use seat accessories that block the inflation path of a seat-mounted side impact airbag.

Never secure anything to the roof of a vehicle with roof-rail airbags by routing a rope or tie down through any door or window opening. If you do, the path of an inflating roof-rail airbag will be blocked.

## When Should an Airbag Inflate?

Frontal airbags are designed to inflate in moderate to severe frontal or near-frontal crashes to help reduce the potential for severe injuries mainly to the driver's or right front passenger's head and chest. However, they are only designed to inflate if the impact exceeds a predetermined deployment threshold. Deployment thresholds are used to predict how severe a crash is likely to be in time for the airbags to inflate and help restrain the occupants.

Whether your frontal airbags will or should deploy is not based on how fast your vehicle is traveling. It depends largely on what you hit, the direction of the impact, and how quickly your vehicle slows down.

Frontal airbags may inflate at different crash speeds.
For example:

- If the vehicle hits a stationary object, the airbags could inflate at a different crash speed than if the vehicle hits a moving object.
- If the vehicle hits an object that deforms, the airbags could inflate at a different crash speed than if the vehicle hits an object that does not deform.
- If the vehicle hits a narrow object (like a pole), the airbags could inflate at a different crash speed than if the vehicle hits a wide object (like a wall).
- If the vehicle goes into an object at an angle, the airbags could inflate at a different crash speed than if the vehicle goes straight into the object.

Thresholds can also vary with specific vehicle design.

Frontal airbags are not intended to inflate during vehicle rollovers, rear impacts, or in many side impacts.

In addition, the vehicle has dual-stage frontal airbags. Dual-stage airbags adjust the restraint according to crash severity. Your vehicle has electronic frontal sensors, which help the sensing system distinguish between a moderate frontal impact and a more severe frontal impact. For moderate frontal impacts, dual-stage airbags inflate at a level less than full deployment. For more severe frontal impacts, full deployment occurs.

The vehicle has seat-mounted side impact and roof-rail airbags. See *Airbag System on page 2-27*.

Seat-mounted side impact and roof-rail airbags are intended to inflate in moderate to severe side crashes. In addition, these roof-rail airbags are intended to inflate during a rollover or in a severe frontal impact. Seat-mounted side impact and roof-rail airbags will inflate if the crash severity is above the system's designed threshold level. The threshold level can vary with specific vehicle design.

Roof-rail airbags are not intended to inflate in rear impacts. A seat-mounted side impact airbag is intended to deploy on the side of the vehicle that is struck. Both roof-rail airbags will deploy when either side of the vehicle is struck or if the sensing system predicts that the vehicle is about to roll over, or in a severe frontal impact.

In any particular crash, no one can say whether an airbag should have inflated simply because of the damage to a vehicle or because of what the repair costs were. For frontal airbags, inflation is determined by what the vehicle hits, the angle of the impact, and how quickly the vehicle slows down. For seat-mounted side impact and roof-rail airbags, deployment is determined by the location and severity of the side impact.

In a rollover event, roof-rail airbag deployment is determined by the direction of the roll.

## What Makes an Airbag Inflate?

In a deployment event, the sensing system sends an electrical signal triggering a release of gas from the inflator. Gas from the inflator fills the airbag causing the bag to break out of the cover and deploy. The inflator, the airbag, and related hardware are all part of the airbag module.

Frontal airbag modules are located inside the steering wheel and instrument panel. For vehicles with seat-mounted side impact airbags, there are airbag modules in the side of the front seatbacks closest to the door. For vehicles with roof-rail airbags, there are airbag modules in the ceiling of the vehicle, near the side windows that have occupant seating positions.

## How Does an Airbag Restrain?

In moderate to severe frontal or near frontal collisions, even belted occupants can contact the steering wheel or the instrument panel. In moderate to severe side collisions, even belted occupants can contact the inside of the vehicle.

Airbags supplement the protection provided by safety belts. Frontal airbags distribute the force of the impact more evenly over the occupant's upper body, stopping the occupant more gradually. Seat-mounted side impact and roof-rail airbags distribute the force of the impact more evenly over the occupant's upper body.

Rollover capable roof-rail airbags are designed to help contain the head and chest of occupants in the outboard seating positions in the first and second rows. The rollover capable roof-rail airbags are designed to help reduce the risk of full or partial ejection in rollover events, although no system can prevent all such ejections.

But airbags would not help in many types of collisions, primarily because the occupant's motion is not toward those airbags. See *When Should an Airbag Inflate? on page 2-31* for more information.

Airbags should never be regarded as anything more than a supplement to safety belts.

## What Will You See After an Airbag Inflates?

After the frontal airbags and seat-mounted side impact airbags inflate, they quickly deflate, so quickly that some people may not even realize an airbag inflated. Roof-rail airbags may still be at least partially inflated for some time after they deploy. Some components of the airbag module may be hot for several minutes. For location of the airbag modules, see *What Makes an Airbag Inflate? on page 2-32*.

The parts of the airbag that come into contact with you may be warm, but not too hot to touch. There may be some smoke and dust coming from the vents in the deflated airbags. Airbag inflation does not prevent the driver from seeing out of the windshield or being able to steer the vehicle, nor does it prevent people from leaving the vehicle.

**⚠ WARNING**

When an airbag inflates, there may be dust in the air. This dust could cause breathing problems for people with a history of asthma or other breathing trouble. To avoid this, everyone in the vehicle should get out as soon as it is safe to do so. If you have breathing problems but cannot

(Continued)

**WARNING (Continued)**

get out of the vehicle after an airbag inflates, then get fresh air by opening a window or a door. If you experience breathing problems following an airbag deployment, you should seek medical attention.

The vehicle has a feature that may automatically unlock the doors, turn the interior lamps on, and turn the hazard warning flashers on when the airbags inflate. You can lock the doors, turn the interior lamps off, and turn the hazard warning flashers off by using the controls for those features.

In many crashes severe enough to inflate the airbag, windshields are broken by vehicle deformation. Additional windshield breakage may also occur from the right front passenger airbag.

- Airbags are designed to inflate only once. After an airbag inflates, you will need some new parts for the airbag system. If you do not get them, the airbag system will not be there to help protect you in another crash. A new system will include airbag modules and possibly other parts. The service manual for your vehicle covers the need to replace other parts.

- The vehicle has a crash sensing and diagnostic module which records information after a crash. See *Vehicle Data Recording and Privacy on page 12-15* and *Event Data Recorders on page 12-15*.
- Let only qualified technicians work on the airbag systems. Improper service can mean that an airbag system will not work properly. See your dealer/retailer for service.

## Passenger Sensing System

The vehicle has a passenger sensing system for the right front passenger position. The passenger airbag status indicator will be visible on the instrument panel when the vehicle is started.

**United States**

**Canada**

The words ON and OFF, or the symbol for on and off, will be visible during the system check. If the vehicle has remote start, and it is being used to start the vehicle from a distance, you may not see the system check. When the system check is complete, either the word ON or OFF, or the symbol for on or off, will be visible. See *Passenger Airbag Status Indicator on page 4-22*.

The passenger sensing system turns off the right front passenger frontal airbag under certain conditions. The driver airbag, seat-mounted side impact airbags and the roof-rail airbags are not affected by the passenger sensing system.

The passenger sensing system works with sensors that are part of the right front passenger seat. The sensors are designed to detect the presence of a properly-seated occupant and determine if the right front passenger frontal airbag should be enabled (may inflate) or not.

According to accident statistics, children are safer when properly secured in a rear seat in the correct child restraint for their weight and size.

We recommend that children be secured in a rear seat, including: an infant or a child riding in a rear-facing child restraint; a child riding in a forward-facing child seat; an older child riding in a booster seat; and children, who are large enough, using safety belts.

A label on the sun visor says, “Never put a rear-facing child seat in the front.” This is because the risk to the rear-facing child is so great, if the airbag deploys.

**⚠ WARNING**

A child in a rear-facing child restraint can be seriously injured or killed if the right front passenger airbag inflates. This is because the back of the rear-facing child restraint would be very close to the inflating airbag. A child in a forward-facing child restraint can be seriously injured or killed if the right front passenger airbag inflates and the passenger seat is in a forward position.

(Continued)

**WARNING (Continued)**

Even if the passenger sensing system has turned off the right front passenger frontal airbag, no system is fail-safe. No one can guarantee that an airbag will not deploy under some unusual circumstance, even though the airbag is turned off.

Secure rear-facing child restraints in a rear seat, even if the airbag is off. If you secure a forward-facing child restraint in the right front seat, always move the front passenger seat as far back as it will go. It is better to secure the child restraint in a rear seat.

The passenger sensing system is designed to turn off the right front passenger airbag if:

- The right front passenger seat is unoccupied.
- The system determines an infant is present in a child restraint.
- A right front passenger takes his/her weight off of the seat for a period of time.
- Or, if there is a critical problem with the airbag system or the passenger sensing system.

When the passenger sensing system has turned off the right front passenger frontal airbag, the off indicator will light and stay lit to remind you that the airbag is off. See *Passenger Airbag Status Indicator on page 4-22*.

The passenger sensing system is designed to turn on (may inflate) the right front passenger frontal airbag anytime the system senses that a person of adult size is sitting properly in the right front passenger seat.

When the passenger sensing system has allowed the airbag to be enabled, the on indicator will light and stay lit to remind you that the airbag is active.

For some children, including children in child restraints, and for very small adults, the passenger sensing system may or may not turn off the right front passenger frontal airbag, depending upon the person's seating posture and body build. Everyone in the vehicle who has outgrown child restraints should wear a safety belt properly — whether or not there is an airbag for that person.

**⚠ WARNING**

If the airbag readiness light ever comes on and stays on, it means that something may be wrong with the airbag system. To help avoid injury to yourself or others, have the vehicle serviced right away. See *Airbag Readiness Light on page 4-21* for more information, including important safety information.

### If the On Indicator is Lit for a Child Restraint

If a child restraint has been installed and the on indicator is lit:

1. Turn the vehicle off.
2. Remove the child restraint from the vehicle.
3. Remove any additional items from the seat such as blankets, cushions, seat covers, seat heaters, or seat massagers.
4. Reinstall the child restraint following the directions provided by the child restraint manufacturer and refer to *Securing Child Restraints (Rear Seat) on page 2-57* or *Securing Child Restraints (Front Passenger Seat) on page 2-59*.
5. If, after reinstalling the child restraint and restarting the vehicle, the on indicator is still lit, turn the vehicle off. Then slightly recline the vehicle seatback and adjust the seat cushion, if adjustable, to make sure that the vehicle seatback is not pushing the child restraint into the seat cushion.

   Also make sure the child restraint is not trapped under the vehicle head restraint. If this happens, adjust the head restraint. See *Head Restraints on page 2-2*.
6. Restart the vehicle.

   The passenger sensing system may or may not turn off the airbag for a child in a child restraint depending upon the child's seating posture and body build. It is better to secure the child restraint in a rear seat.

### If the Off Indicator is Lit for an Adult-Size Occupant

If a person of adult-size is sitting in the right front passenger seat, but the off indicator is lit, it could be because that person is not sitting properly in the seat.

If this happens, use the following steps to allow the system to detect that person and enable the right front passenger frontal airbag:

1. Turn the vehicle off.
2. Remove any additional material from the seat, such as blankets, cushions, seat covers, seat heaters, or seat massagers.
3. Place the seatback in the fully upright position.
4. Have the person sit upright in the seat, centered on the seat cushion, with legs comfortably extended.
5. Restart the vehicle and have the person remain in this position for two to three minutes after the on indicator is lit.

## Additional Factors Affecting System Operation

Safety belts help keep the passenger in position on the seat during vehicle maneuvers and braking, which helps the passenger sensing system maintain the passenger airbag status. See “Safety Belts” and “Child Restraints” in the Index for additional information about the importance of proper restraint use.

A thick layer of additional material, such as a blanket or cushion, or aftermarket equipment such as seat covers, seat heaters, and seat massagers can affect how well the passenger sensing system operates. We recommend that you not use seat covers or other aftermarket equipment except when approved by GM for your specific vehicle. See *Adding Equipment to the Airbag-Equipped Vehicle on page 2-40* for more information about modifications that can affect how the system operates.

A wet seat can affect the performance of the passenger sensing system. Here is how:

- The passenger sensing system may turn off the passenger airbag when liquid is soaked into the seat. If this happens, the off indicator will be lit, and the airbag readiness light on the instrument panel will also be lit.
- Liquid pooled on the seat that has not soaked in may make it more likely that the passenger sensing system will enable (turn on) the passenger airbag while a child restraint or child occupant is on the seat. If the passenger airbag is turned on, the on indicator will be lit.

If the passenger seat gets wet, dry the seat immediately. If the airbag readiness light is lit, do not install a child restraint or allow anyone to occupy the seat. See *Airbag Readiness Light on page 4-21* for important safety information.

The on indicator may be lit if an object, such as a briefcase, handbag, grocery bag, laptop or other electronic device, is put on an unoccupied seat. If this is not desired remove the object from the seat.

**⚠ WARNING**

Stowing of articles under the passenger seat or between the passenger seat cushion and seatback may interfere with the proper operation of the passenger sensing system.

## Servicing the Airbag-Equipped Vehicle

Airbags affect how the vehicle should be serviced. There are parts of the airbag system in several places around the vehicle. Your dealer/retailer and the service manual have information about servicing the vehicle and the airbag system. To purchase a service manual, see *Service Publications Ordering Information on page 12-12*.

**⚠ WARNING**

For up to 10 seconds after the ignition is turned off and the battery is disconnected, an airbag can still inflate during improper service. You can be injured if you are close to an airbag when it inflates. Avoid yellow connectors. They are probably part of the airbag system. Be sure to follow proper service procedures, and make sure the person performing work for you is qualified to do so.

## Adding Equipment to the Airbag-Equipped Vehicle

**Q: Is there anything I might add to or change about the vehicle that could keep the airbags from working properly?**

**A:** Yes. If you add things that change the vehicle's frame, bumper system, height, front end or side sheet metal, they may keep the airbag system from working properly. Changing or moving any parts of the front seats, safety belts, the airbag sensing and diagnostic module, steering wheel, instrument panel, roof-rail airbag modules, ceiling headliner or pillar garnish trim, overhead console, front sensors, side impact sensors, rollover sensor module, or airbag wiring can affect the operation of the airbag system.

In addition, the vehicle has a passenger sensing system for the right front passenger position, which includes sensors that are part of the passenger seat. The passenger sensing system may not operate properly if the original seat trim is replaced with non-GM covers, upholstery or trim, or with GM covers, upholstery or trim designed for a different vehicle. Any object, such as an aftermarket seat heater or a comfort enhancing pad or device, installed under or on top of the seat fabric, could also interfere with the operation of the passenger sensing system. This could either prevent proper deployment of the passenger airbag(s) or prevent the passenger sensing system from properly turning off the passenger airbag(s). See *Passenger Sensing System on page 2-35*.

If you have questions, call Customer Assistance. The phone numbers and addresses for Customer Assistance are in Step Two of the Customer Satisfaction Procedure in this manual. See *Customer Satisfaction Procedure on page 12-1*.

If the vehicle has rollover roof-rail airbags, see *Different Size Tires and Wheels on page 9-77* for additional important information.

**Q: Because I have a disability, I have to get my vehicle modified. How can I find out whether this will affect my airbag system?**

**A:** If you have questions, call Customer Assistance. The phone numbers and addresses for Customer Assistance are in Step Two of the Customer Satisfaction Procedure in this manual. See *Customer Satisfaction Procedure on page 12-1*.

In addition, your dealer/retailer and the service manual have information about the location of the airbag sensors, sensing and diagnostic module and airbag wiring.

## Airbag System Check

The airbag system does not need regularly scheduled maintenance or replacement. Make sure the airbag readiness light is working. See *Airbag Readiness Light on page 4-21* for more information.

***Notice:*** **If an airbag covering is damaged, opened, or broken, the airbag may not work properly. Do not open or break the airbag coverings. If there are any opened or broken airbag covers, have the airbag covering and/or airbag module replaced. For the location of the airbag modules, see *What Makes an Airbag Inflate? on page 2-32*. See your dealer/retailer for service.**

## Replacing Airbag System Parts After a Crash

**⚠ WARNING**

A crash can damage the airbag systems in your vehicle. A damaged airbag system may not work properly and may not protect you and your passenger(s) in a crash, resulting in serious injury or even death. To help make sure your airbag systems are working properly after a crash, have them inspected and any necessary replacements made as soon as possible.

If an airbag inflates, you will need to replace airbag system parts. See your dealer/retailer for service.

If the airbag readiness light stays on after the vehicle is started or comes on when you are driving, the airbag system may not work properly. Have the vehicle serviced right away. See *Airbag Readiness Light on page 4-21* for more information.

# Child Restraints

## Older Children

Older children who have outgrown booster seats should wear the vehicle's safety belts.

The manufacturer's instructions that come with the booster seat, state the weight and height limitations for that booster.

Use a booster seat with a lap-shoulder belt until the child passes the below fit test:

- Sit all the way back on the seat. Do the knees bend at the seat edge? If yes, continue. If no, return to the booster seat.
- Buckle the lap-shoulder belt. Does the shoulder belt rest on the shoulder? If yes, continue. If no, try using the rear safety belt comfort guide. See “Rear Safety Belt Comfort Guides” under *Lap-Shoulder Belt on page 2-20* for more information. If the shoulder belt still does not rest on the shoulder, then return to the booster seat.
- Does the lap belt fit low and snug on the hips, touching the thighs? If yes, continue. If no, return to the booster seat.
- Can proper safety belt fit be maintained for the length of the trip? If yes, continue. If no, return to the booster seat.

**Q: What is the proper way to wear safety belts?**

**A:** An older child should wear a lap-shoulder belt and get the additional restraint a shoulder belt can provide. The shoulder belt should not cross the face or neck. The lap belt should fit snugly below the hips, just touching the top of the thighs. This applies belt force to the child's pelvic bones in a crash. It should never be worn over the abdomen, which could cause severe or even fatal internal injuries in a crash.

Also see “Rear Safety Belt Comfort Guides” under *Lap-Shoulder Belt on page 2-20*.

According to accident statistics, children and infants are safer when properly restrained in a child restraint system or infant restraint system secured in a rear seating position.

In a crash, children who are not buckled up can strike other people who are buckled up, or can be thrown out of the vehicle. Older children need to use safety belts properly.

**⚠ WARNING**

Never do this.

Never allow two children to wear the same safety belt. The safety belt can not properly spread the impact forces. In a crash, the two children can be crushed together and seriously injured. A safety belt must be used by only one person at a time.

**⚠ WARNING**

Never do this.

Never allow a child to wear the safety belt with the shoulder belt behind their back. A child can be seriously injured by not wearing the lap-shoulder belt properly.
In a crash, the child would not be restrained by the shoulder belt.

(Continued)

**WARNING (Continued)**

The child could move too far forward increasing the chance of head and neck injury. The child might also slide under the lap belt. The belt force would then be applied right on the abdomen. That could cause serious or fatal injuries. The shoulder belt should go over the shoulder and across the chest.

## Infants and Young Children

Everyone in a vehicle needs protection! This includes infants and all other children. Neither the distance traveled nor the age and size of the traveler changes the need, for everyone, to use safety restraints. In fact, the law in every state in the United States and in every Canadian province says children up to some age must be restrained while in a vehicle.

**⚠ WARNING**

Children can be seriously injured or strangled if a shoulder belt is wrapped around their neck and the safety belt continues to tighten. Never leave children unattended in a vehicle and never allow children to play with the safety belts.

Airbags plus lap-shoulder belts offer protection for adults and older children, but not for young children and infants. Neither the vehicle's safety belt system nor its airbag system is designed for them. Every time infants and young children ride in vehicles, they should have the protection provided by appropriate child restraints.

Children who are not restrained properly can strike other people, or can be thrown out of the vehicle.

**⚠ WARNING**

Never do this.

Never hold an infant or a child while riding in a vehicle. Due to crash forces, an infant or a child will become so heavy it is not possible to hold it during a crash.

(Continued)

**WARNING (Continued)**

For example, in a crash at only 40 km/h (25 mph), a 5.5 kg (12 lb) infant will suddenly become a 110 kg (240 lb) force on a person's arms. An infant should be secured in an appropriate restraint.

**⚠ WARNING**

Never do this.

Children who are up against, or very close to, any airbag when it inflates can be seriously injured or killed. Never put a rear-facing child restraint in the right front seat. Secure a rear-facing child restraint in a rear seat. It is also better to secure a forward-facing child restraint in a rear seat. If you must secure a forward-facing child restraint in the right front seat, always move the front passenger seat as far back as it will go.

**Q: What are the different types of add-on child restraints?**

**A:** Add-on child restraints, which are purchased by the vehicle's owner, are available in four basic types. Selection of a particular restraint should take into consideration not only the child's weight, height, and age but also whether or not the restraint will be compatible with the motor vehicle in which it will be used.

For most basic types of child restraints, there are many different models available. When purchasing a child restraint, be sure it is designed to be used in a motor vehicle. If it is, the restraint will have a label saying that it meets federal motor vehicle safety standards.

The restraint manufacturer's instructions that come with the restraint state the weight and height limitations for a particular child restraint. In addition, there are many kinds of restraints available for children with special needs.

**⚠ WARNING**

To reduce the risk of neck and head injury during a crash, infants need complete support. This is because an infant's neck is not fully developed and its head weighs so much compared with the rest of its body. In a crash, an infant in a rear-facing child restraint settles into the restraint, so the crash forces can be distributed across the strongest part of an infant's body, the back and shoulders. Infants should always be secured in rear-facing child restraints.

**⚠ WARNING**

A young child's hip bones are still so small that the vehicle's regular safety belt may not remain low on the hip bones, as it should. Instead, it may settle up around the child's abdomen. In a crash, the belt would apply force on a body area that is unprotected by any bony structure. This alone could cause serious or fatal injuries. To reduce the risk of serious or fatal injuries during a crash, young children should always be secured in appropriate child restraints.

## Child Restraint Systems

**(A) Rear-Facing Infant Seat**

A rear-facing infant seat (A) provides restraint with the seating surface against the back of the infant.

The harness system holds the infant in place and, in a crash, acts to keep the infant positioned in the restraint.

**(B) Forward-Facing Child Seat**

A forward-facing child seat (B) provides restraint for the child's body with the harness.

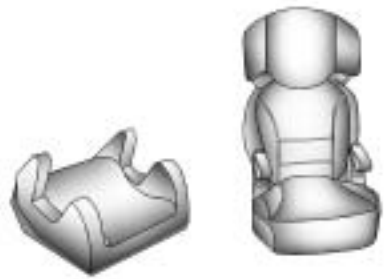

**(C) Booster Seats**

A booster seat (C) is a child restraint designed to improve the fit of the vehicle's safety belt system.
A booster seat can also help a child to see out the window.

## Securing an Add-On Child Restraint in the Vehicle

**⚠ WARNING**

A child can be seriously injured or killed in a crash if the child restraint is not properly secured in the vehicle. Secure the child restraint properly in the vehicle using the vehicle's safety belt or LATCH system, following the instructions that came with that child restraint and the instructions in this manual.

To help reduce the chance of injury, the child restraint must be secured in the vehicle. Child restraint systems must be secured in vehicle seats by lap belts or the lap belt portion of a lap-shoulder belt, or by

the LATCH system. See *Lower Anchors and Tethers for Children (LATCH System) on page 2-51* for more information. Children can be endangered in a crash if the child restraint is not properly secured in the vehicle.

When securing an add-on child restraint, refer to the instructions that come with the restraint which may be on the restraint itself or in a booklet, or both, and to this manual. The child restraint instructions are important, so if they are not available, obtain a replacement copy from the manufacturer.

Keep in mind that an unsecured child restraint can move around in a collision or sudden stop and injure people in the vehicle. Be sure to properly secure any child restraint in the vehicle — even when no child is in it.

### Securing the Child Within the Child Restraint

**⚠ WARNING**

A child can be seriously injured or killed in a crash if the child is not properly secured in the child restraint. Secure the child properly following the instructions that came with that child restraint.

## Where to Put the Restraint

According to accident statistics, children and infants are safer when properly restrained in a child restraint system or infant restraint system secured in a rear seating position.

We recommend that children and child restraints be secured in a rear seat, including: an infant or a child riding in a rear-facing child restraint; a child riding in a forward-facing child seat; an older child riding in a booster seat; and children, who are large enough, using safety belts.

A label on the sun visor says, “Never put a rear-facing child restraint in the front.” This is because the risk to the rear-facing child is so great, if the airbag deploys.

**⚠ WARNING**

A child in a rear-facing child restraint can be seriously injured or killed if the right front passenger airbag inflates. This is because the back of the rear-facing child restraint would be very close to the inflating airbag. A child in a forward-facing child restraint can be seriously injured or killed if the right front passenger airbag inflates and the passenger seat is in a forward position.

(Continued)

**WARNING (Continued)**

Even if the passenger sensing system has turned off the right front passenger frontal airbag, no system is fail-safe. No one can guarantee that an airbag will not deploy under some unusual circumstance, even though it is turned off.

Secure rear-facing child restraints in a rear seat, even if the airbag is off. If you secure a forward-facing child restraint in the right front seat, always move the front passenger seat as far back as it will go. It is better to secure the child restraint in a rear seat.

See *Passenger Sensing System on page 2-35* for additional information.

When securing a child restraint in a rear seating position, study the instructions that came with the child restraint to make sure it is compatible with this vehicle.

Wherever a child restraint is installed, be sure to secure the child restraint properly.

Keep in mind that an unsecured child restraint can move around in a collision or sudden stop and injure people in the vehicle. Be sure to properly secure any child restraint in the vehicle — even when no child is in it.

## Lower Anchors and Tethers for Children (LATCH System)

The LATCH system holds a child restraint during driving or in a crash. This system is designed to make installation of a child restraint easier. The LATCH system uses anchors in the vehicle and attachments on the child restraint that are made for use with the LATCH system.

Make sure that a LATCH-compatible child restraint is properly installed using the anchors, or use the vehicle's safety belts to secure the restraint, following the instructions that came with that restraint, and also the instructions in this manual.

When installing a child restraint with a top tether, you must also use either the lower anchors or the safety belts to properly secure the child restraint. A child restraint must never be installed using only the top tether and anchor.

In order to use the LATCH system in your vehicle, you need a child restraint that has LATCH attachments. The child restraint manufacturer will provide you with instructions on how to use the child restraint and its attachments. The following explains how to attach a child restraint with these attachments in your vehicle.

Not all vehicle seating positions or child restraints have lower anchors and attachments or top tether anchors and attachments.

### Lower Anchors

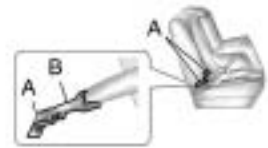


Lower anchors (A) are metal bars built into the vehicle. There are two lower anchors for each LATCH seating position that will accommodate a child restraint with lower attachments (B).

## Top Tether Anchor

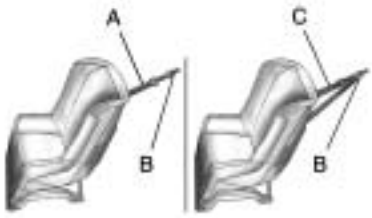


A top tether (A, C) anchors the top of the child restraint to the vehicle. A top tether anchor is built into the vehicle. The top tether attachment (B) on the child restraint connects to the top tether anchor in the vehicle in order to reduce the forward movement and rotation of the child restraint during driving or in a crash.

Your child restraint may have a single tether (A) or a dual tether (C). Either will have a single attachment (B) to secure the top tether to the anchor.

Some child restraints with top tethers are designed for use with or without the top tether being attached. Others require the top tether always to be attached. In Canada, the law requires that forward-facing child restraints have a top tether, and that the tether be attached. Be sure to read and follow the instructions for your child restraint.

If the child restraint does not have a top tether, one can be obtained, in kit form, for many child restraints. Ask the child restraint manufacturer whether or not a kit is available.

## Lower Anchor and Top Tether Anchor Locations

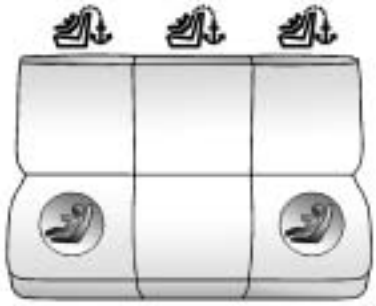

**Rear Seat**

**(Top Tether Anchor):** Seating positions with top tether anchors.

**(Lower Anchor):** Seating positions with two lower anchors.

To assist you in locating the lower anchors, each seating position with lower anchors has two labels, near the crease between the seatback and the seat cushion. For a wagon the lower anchors are beneath zippers, located near the labels. Open the zippers to access the lower anchors.

To assist you in locating the top tether anchors, the top tether anchor symbol is located on the cover.

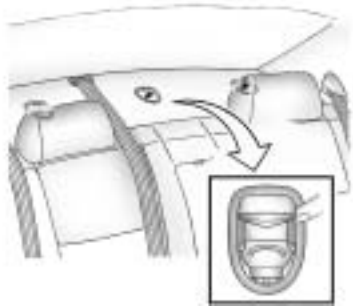

**Sedan**

**Wagon**

The top tether anchors for a sedan are located under the tether covers, on the rear seatback filler panel. For the wagon, the outboard top tether anchors are located under the tether covers behind the rear seatback. The wagon's center top tether anchor is under the tether cover, located on the vehicle floor, behind the rear seatback. Be sure to use an anchor located on the same side of the vehicle as the seating position where the child restraint will be placed.

Do not secure a child restraint in a position without a top tether anchor if a national or local law requires that the top tether be attached, or if the instructions that come with the child restraint say that the top tether must be attached.

Accident statistics show that children are safer if they are restrained in the rear rather than the front seat. See *Where to Put the Restraint on page 2-49* for additional information.

### Securing a Child Restraint Designed for the LATCH System

**⚠ WARNING**

If a LATCH-type child restraint is not attached to anchors, the child restraint will not be able to protect the child correctly. In a crash, the child could be seriously injured or killed. Install a LATCH-type child restraint properly using the anchors, or use the vehicle's safety belts to secure the restraint, following the instructions that came with the child restraint and the instructions in this manual.

**⚠ WARNING**

Do not attach more than one child restraint to a single anchor. Attaching more than one child restraint to a single anchor could cause the anchor or attachment to come loose or even break during a crash. A child or others could be injured. To reduce the risk of serious or fatal injuries during a crash, attach only one child restraint per anchor.

**⚠ WARNING**

Children can be seriously injured or strangled if a shoulder belt is wrapped around their neck and the safety belt continues to tighten. Buckle any unused safety

(Continued)

**WARNING (Continued)**

belts behind the child restraint so children cannot reach them. Pull the shoulder belt all the way out of the retractor to set the lock, if your vehicle has one, after the child restraint has been installed.

***Notice:*** **Do not let the LATCH attachments rub against the vehicle's safety belts. This may damage these parts. If necessary, move buckled safety belts to avoid rubbing the LATCH attachments.**

**Do not fold the empty rear seat with a safety belt buckled. This could damage the safety belt or the seat. Unbuckle and return the safety belt to its stowed position, before folding the seat.**

1. Attach and tighten the lower attachments to the lower anchors. If the child restraint does not have lower attachments or the desired seating position does not have lower anchors, secure the child restraint with the top tether and the safety belts. Refer to your child restraint manufacturer instructions and the instructions in this manual.
   1.1. Find the lower anchors for the desired seating position.
   1.2. Put the child restraint on the seat.
   1.3. Attach and tighten the lower attachments on the child restraint to the lower anchors.
2. If the child restraint manufacturer recommends that the top tether be attached, attach and tighten the top tether to the top tether anchor, if equipped. Refer to the child restraint instructions and the following steps:
   2.1. Find the top tether anchor.
   2.2. Press the ribbed area of the cover to open the cover and expose the anchor.
   2.3. If you have an adjustable head restraint, raise the head restraint.
   2.4. Route, attach and tighten the top tether according to your child restraint instructions and the following instructions:

If the position you are using does not have a headrest or head restraint and you are using a single tether, route the tether over the seatback.

If the position you are using does not have a headrest or head restraint and you are using a dual tether, route the tether over the seatback.

If the position you are using has a fixed headrest or head restraint and you are using a dual tether, route the tether around the headrest or head restraint.

If the position you are using has a fixed headrest or head restraint and you are using a single tether, route the tether over the headrest or head restraint.

3. Push and pull the child restraint in different directions to be sure it is secure.

## Replacing LATCH System Parts After a Crash

**⚠ WARNING**

A crash can damage the LATCH system in the vehicle. A damaged LATCH system may not properly secure the child restraint, resulting in serious injury or even death in a crash. To help make sure the LATCH system is working properly after a crash, see your dealer/retailer to have the system inspected and any necessary replacements made as soon as possible.

If the vehicle has the LATCH system and it was being used during a crash, new LATCH system parts may be needed.

New parts and repairs may be necessary even if the LATCH system was not being used at the time of the crash.

## Securing Child Restraints (Rear Seat)

When securing a child restraint in a rear seating position, study the instructions that came with the child restraint to make sure it is compatible with this vehicle.

If the child restraint has the LATCH system, see *Lower Anchors and Tethers for Children (LATCH System) on page 2-51* for how and where to install your child restraint using LATCH. If a child restraint is secured in the vehicle using a safety belt and it uses a top tether, see *Lower Anchors and Tethers for Children (LATCH System) on page 2-51* for top tether anchor locations.

Do not secure a child restraint in a position without a top tether anchor if a national or local law requires that the top tether be anchored, or if the instructions that come with the child restraint say that the top strap must be anchored.

If the child restraint does not have the LATCH system, you will be using the safety belt to secure the child restraint in this position.
Be sure to follow the instructions that came with the child restraint. Secure the child in the child restraint when and as the instructions say.

If more than one child restraint needs to be installed in the rear seat, be sure to read *Where to Put the Restraint on page 2-49*.

1. Put the child restraint on the seat.
2. Pick up the latch plate, and run the lap and shoulder portions of the vehicle's safety belt through or around the restraint. The child restraint instructions will show you how.

3. Push the latch plate into the buckle until it clicks.

   Position the release button on the buckle so that the safety belt could be quickly unbuckled if necessary.

4. Pull the rest of the shoulder belt all the way out of the retractor to set the lock.

5. To tighten the belt, push down on the child restraint, pull the shoulder portion of the belt to tighten the lap portion of the belt, and feed the shoulder belt back into the retractor. When installing a forward-facing child restraint, it may be helpful to use your knee to push down on the child restraint as you tighten the belt.
6. If the child restraint has a top tether, follow the child restraint manufacturer's instructions regarding the use of the top tether. See *Lower Anchors and Tethers for Children (LATCH System) on page 2-51* for more information.
7. Push and pull the child restraint in different directions to be sure it is secure.

To remove the child restraint, unbuckle the vehicle safety belt and let it return to the stowed position. If the top tether is attached to a top tether anchor, disconnect it.

## Securing Child Restraints (Front Passenger Seat)

This vehicle has airbags. A rear seat is a safer place to secure a forward-facing child restraint. See *Where to Put the Restraint on page 2-49*

In addition, the vehicle has a passenger sensing system which is designed to turn off the front passenger frontal airbag under certain conditions. See *Passenger Sensing System on page 2-35* and *Passenger Airbag Status Indicator on page 4-22* for more information, including important safety information.

A label on the sun visor says, “Never put a rear-facing child seat in the front.” This is because the risk to the rear-facing child is so great, if the airbag deploys.

**⚠ WARNING**

A child in a rear-facing child restraint can be seriously injured or killed if the front passenger airbag inflates. This is because the back of the rear-facing child restraint would be very close to the inflating airbag. A child in a forward-facing child restraint can be seriously injured or killed if the front passenger airbag inflates and the passenger seat is in a forward position.

(Continued)

**WARNING (Continued)**

Even if the passenger sensing system has turned off the front passenger frontal airbag, no system is fail-safe. No one can guarantee that an airbag will not deploy under some unusual circumstance, even though it is turned off.

Secure rear-facing child restraints in a rear seat, even if the airbag is off. If you secure a forward-facing child restraint in the front seat, always move the front passenger seat as far back as it will go. It is better to secure the child restraint in a rear seat.

See *Passenger Sensing System on page 2-35* for additional information.

If the child restraint has the LATCH system, see *Lower Anchors and Tethers for Children (LATCH System) on page 2-51* for how and where to install the child restraint using LATCH. If a child restraint is secured using a safety belt and it uses a top tether, see *Lower Anchors and Tethers for Children (LATCH System) on page 2-51* for top tether anchor locations.

Do not secure a child seat in a position without a top tether anchor if a national or local law requires that the top tether be anchored, or if the instructions that come with the child restraint say that the top strap must be anchored.

In Canada, the law requires that forward-facing child restraints have a top tether, and that the tether be attached.

You will be using the lap-shoulder belt to secure the child restraint in this position. Follow the instructions that came with the child restraint.

1. Move the seat as far back as it will go before securing the forward-facing child restraint.

   When the passenger sensing system has turned off the front passenger frontal airbag, the off indicator on the passenger airbag status indicator should light and stay lit when the vehicle is started. See *Passenger Airbag Status Indicator on page 4-22*.

2. Put the child restraint on the seat.

3. Pick up the latch plate, and run the lap and shoulder portions of the vehicle's safety belt through or around the restraint. The child restraint instructions will show you how.

4. Push the latch plate into the buckle until it clicks.

   Position the release button on the buckle, so that the safety belt could be quickly unbuckled if necessary.

5. Pull the rest of the shoulder belt all the way out of the retractor to set the lock.

6. To tighten the belt, push down on the child restraint, pull the shoulder portion of the belt to tighten the lap portion of the belt and feed the shoulder belt back into the retractor. When installing a forward-facing child restraint, it may be helpful to use your knee to push down on the child restraint as you tighten the belt.
7. Push and pull the child restraint in different directions to be sure it is secure.

If the airbag is off, the off indicator in the passenger airbag status indicator will come on and stay on when the vehicle is started.

If a child restraint has been installed and the on indicator is lit, see "If the On Indicator is Lit for a Child Restraint" under *Passenger Sensing System on page 2-35* for more information.

To remove the child restraint, unbuckle the vehicle safety belt and let it return to the stowed position.

# Storage

**Storage Compartments**
Instrument Panel Storage .... 3-1
Glove Box ..... 3-1
Cupholders ..... 3-1
Center Console Storage ..... 3-1

**Additional Storage Features**
Cargo Cover ..... 3-2
Cargo Management System (Wagon Only) ..... 3-3
Cargo Net (Wagon) ..... 3-4
Convenience Net (Sedan) ..... 3-6

**Roof Rack System**
Roof Rack System (Wagon) ... 3-6

# Storage Compartments

## Instrument Panel Storage

Your vehicle has a storage area located below the climate control systems. To access, push on the cover.

## Glove Box

To open, press the button. Use the key to lock and unlock. The glove box has a shelf that can be removed by pulling it out.

## Cupholders

The vehicle has cupholders located in front of the center console. Push down on the cover to open. There are also cupholders in the rear center armrest. Pull the armrest down to use.

## Center Console Storage

Your vehicle has a center console with an upper and lower storage area. To access the upper storage area, lift the driver side lever on the front of the console and lift the cover. To access the lower storage area, lift the passenger side lever on the center console. There is an additional storage area behind the center console. To access, push the cover.

# Additional Storage Features

## Cargo Cover

The cargo cover can be used to cover items in the cargo area of the vehicle.

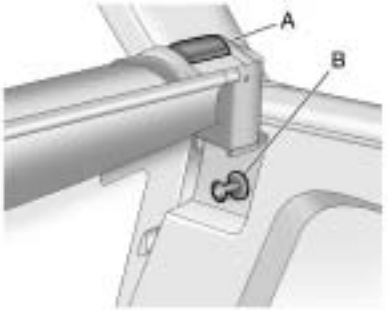


To install the cargo cover:

1. Hold the cartridge so that the pull out shade faces backwards.
2. Align the cartridge over the pin (B) on both sides. Press the cartridge down and turn it slightly forward until it clicks.
3. Make sure the cartridge is properly installed by pulling it slightly up, it should be firmly fitted.
4. Grasp the handle and unroll the cover. Latch the posts into the sockets on the inside of the vehicle to secure it.

To remove the cargo cover, do the following:

1. Release the cover from the latch posts and carefully roll it back up.
2. Pull the handle (A) back and remove it from the pin (B) on the trim panel. Repeat this on the other side.

**⚠ WARNING**

An improperly stored cargo cover could be thrown about the vehicle during a collision or sudden maneuver. Someone could be injured. If the cover is removed, always store it in the proper storage location. When it is replaced, always be sure that it is securely reattached.

## Cargo Management System (Wagon Only)

Press on the bottom of load floor handle assembly to lift the top on the handle. Pull up on the handle to open the cargo management system.

The cover can be opened to two positions to allow access to the storage area.

Some items may be stored in the cargo area when the cover is closed.

### D-Ring Sliders

There are four D-Ring sliders that move along rails on both sides of the cargo management area. These can be used as tie-downs when storing cargo.

**Installing D-Ring Sliders**

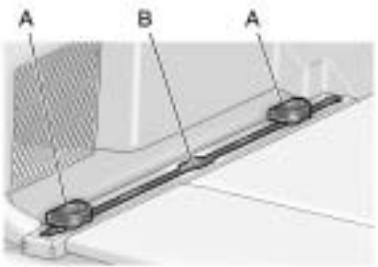


To install the D-Ring slider (A), insert it into the channel (B) located in the middle of each rail.

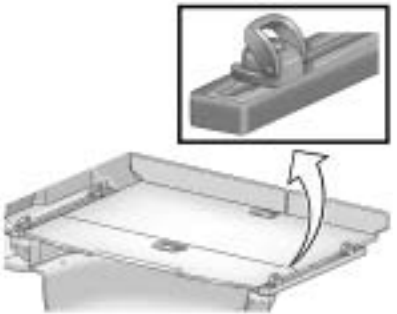

The loop of the D-Ring slider must be facing inward towards the storage area and the ring must be in the up position for proper usage.

Push the button to move the D-Ring slider either towards the front or the rear of the vehicle. The rings can be locked into various positions along the rail.

## Cargo Net (Wagon)

**⚠ WARNING**

Do not stack items higher than the upper end of the cargo net or hang anything from the net. Avoid items that have sharp edges or that apply excessive force to the net. If items are not properly stored, damage to the net could occur and items can be thrown about the vehicle. You or other could be injured. Always store items behind the net.

For vehicles equipped with a cargo net, it can be used to store light loads, keeping them from falling over or being thrown into the cabin during heavy braking.

The net should not be overloaded or used to store heavy loads.

1. There are four installation openings in the roof, two located in front of and two behind the rear seats.

   Insert the top corners of the cargo net into the large opening in the roof and secure by sliding them into the small opening.

2. There are four tether positions for the lower hook straps. In the front position, the seat backs should be down for the net to properly hold items.

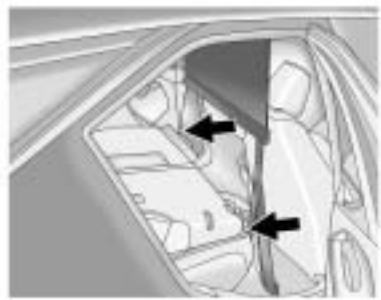

3. Mount the cargo net to the rear seat tethers located on the front of the bottom cushions.

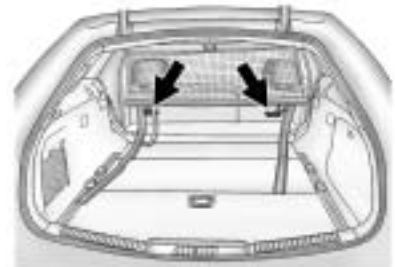

4. The net can also be mounted to the tethers on the back of the rear seats when the seats are upright.

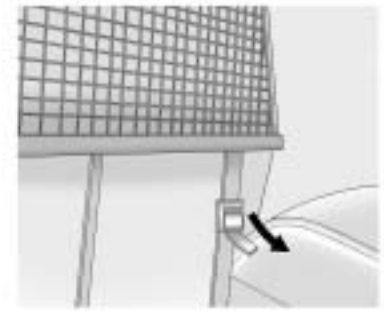

5. Pull on the straps to tighten the net.

   Put light loads behind the net to keep them from falling over or being thrown into the cabin during heavy braking. The net should not be overloaded or used to store heavy loads.

## Convenience Net (Sedan)

Your vehicle may have a convenience net in the rear of the vehicle. Put small loads behind the net. It can also be positioned into an envelope style to hold smaller items. The net is not for heavier loads. Store items as far forward as you can.

# Roof Rack System

## Roof Rack System (Wagon)

**⚠ WARNING**

If something is carried on top of the vehicle that is longer or wider than the roof rack — like paneling, plywood, or a mattress — the wind can catch it while the vehicle is being driven. The item being carried could be violently torn off, and this could cause a collision, and damage the vehicle. Never carry something longer or wider than the roof rack on top of the vehicle unless using a GM Certified accessory carrier.

For vehicles with a roof rack, the rack can be used to load items. For roof racks that do not have crossrails included, GM Certified crossrails can be purchased as an accessory. See your dealer/retailer for additional information.

***Notice:*** **Loading cargo on the roof rack that weighs more than 75 kg (165 lbs) or hangs over the rear or sides of the vehicle may damage the vehicle. Load cargo so that it rests evenly between the crossrails, making sure to fasten cargo securely.**

To prevent damage or loss of cargo when driving, check to make sure crossrails and cargo are securely fastened. Loading cargo on the roof rack will make the vehicle's center of gravity higher. Avoid high speeds, sudden starts, sharp turns, sudden braking or abrupt maneuvers, otherwise it may result in loss of control. If driving for a long distance, on rough roads, or at high speeds, occasionally stop the vehicle to make sure the cargo remains in its place.

Do not exceed the maximum vehicle capacity when loading the vehicle. For more information on vehicle capacity and loading, see *Vehicle Load Limits on page 8-12*.

## Installation of Crossrails

A. Crossrails

B. Crossrail End

C. Siderail Cover

1. Siderail covers (C) must be removed for installing the crossrails (A).
2. To remove siderail covers, start at the back of the vehicle and pull straight up.

3. Store the siderail covers in a place where it can be laid flat. Do not stack any items on top of the cover.

4. Identify front and rear crossrail by the size of the crossrail support.
5. The front crossrail support (A) is smaller than the rear crossrail support (B).

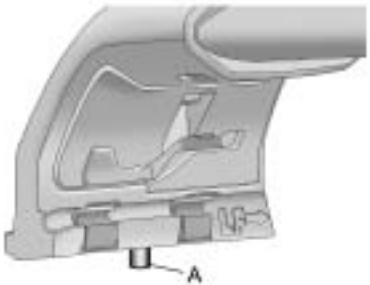


6. The crossrail supports are labeled with an arrow that needs to point toward the front of the vehicle. When the lever on the crossrail support is in the down position a pin (A) will be visible on the bottom of the assembly. To install the crossrail support, move the lever into the forward upper position. The pin (A) should no longer be visible.

7. Locate the forward or rearward most cut-out (A) in the siderail channel.
8. Insert both crossrail ends into the cut-outs, making sure the arrows on the crossrail ends are pointed towards the front of the vehicle.

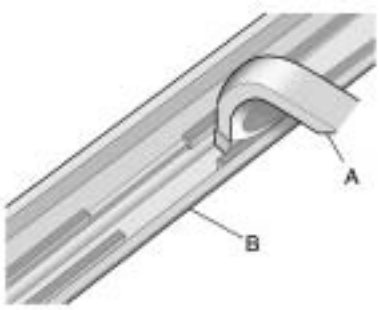


9. Levers must still be in the forward up position. For front crossbar, slide the crossrail assembly (A) forward until the crossrail end is past the channel cut-out area (B). For rear crossbar, slide the crossrail assembly (A) rearward until the entire crossrail support is in first position to the rear of the channel cut-out area (B).
10. Move the levers on both crossrail supports to the down position. Slide the crossrail assembly back and forth until the crossrail pin engages.
11. Push back and forth again to make sure the pins have engaged into the slots.

    Make sure both crossrails are locked into the same hole position on each side of the vehicle.

### Removing the Crossrails

1. Start with either crossrail assembly, slide both levers into the upper most position, moving the lever from the rear to the front of the vehicle.
2. Slide the crossrail assembly until it is in the cut-out area or the siderail channel.
3. Remove the crossrail from the vehicle.
4. Repeat steps 1–3 for the other crossrail assembly.
5. Reinstall the siderail covers making sure they are fully seated in the siderail channel.

## ✍ NOTES

# Instruments and Controls


## Instrument Panel Overview
Instrument Panel Overview .... 4-4

## Controls
Steering Wheel Adjustment ... 4-6
Steering Wheel Controls ..... 4-7
Horn ..... 4-7
Windshield Wiper/Washer ..... 4-8
Rear Window Wiper/ Washer ..... 4-9
Headlamp Washer ..... 4-10
Compass ..... 4-11
Clock ..... 4-12
Power Outlets ..... 4-12
Cigarette Lighter ..... 4-13
Ashtrays ..... 4-14

## Warning Lights, Gages, and Indicators
Warning Lights, Gages, and Indicators ..... 4-14
Instrument Cluster ..... 4-15
Speedometer ..... 4-17
Odometer ..... 4-17
Trip Odometer ..... 4-17
Tachometer ..... 4-17
Fuel Gage ..... 4-17
Boost Gage ..... 4-18
Engine Speed Limiter ..... 4-19
Engine Oil Pressure Gage ... 4-19
Engine Coolant Temperature Gage ..... 4-20
Safety Belt Reminders ..... 4-21
Airbag Readiness Light ..... 4-21
Passenger Airbag Status Indicator ..... 4-22
Charging System Light ..... 4-23
Malfunction Indicator Lamp ..... 4-23
Brake System Warning Light ..... 4-26
Antilock Brake System (ABS) Warning Light ..... 4-27
Up-Shift Light ..... 4-28
Traction Control System (TCS)/StabiliTrak® Light .... 4-28
Engine Coolant Temperature Warning Light ..... 4-29
Tire Pressure Light ..... 4-29
Engine Oil Pressure Light .... 4-30
Security Light ..... 4-30
High-Beam on Light ..... 4-30
Fog Lamp Light ..... 4-31
Lamps on Reminder ..... 4-31
Cruise Control Light ..... 4-31

## Information Displays
Driver Information Center (DIC) ..... 4-31

## Vehicle Messages

Vehicle Messages . . . . . 4-36
Battery Voltage and Charging Messages . . . . . 4-37
Brake System Messages . . . . 4-38
Compass Messages . . . . . 4-39
Cruise Control Messages . . . . 4-39
Door Ajar Messages . . . . . 4-39
Engine Cooling System Messages . . . . . 4-40
Engine Oil Messages . . . . . 4-40
Engine Power Messages . . . . 4-41
Fuel System Messages . . . . . 4-42
Key and Lock Messages . . . . . 4-42
Lamp Messages . . . . . 4-44
Object Detection System Messages . . . . . 4-45
Ride Control System Messages . . . . . 4-45
Airbag System Messages . . . . 4-48
Anti-Theft Alarm System Messages . . . . . 4-48
Service Vehicle Messages . . . 4-48
Tire Messages . . . . . 4-48
Transmission Messages . . . . . 4-49
Vehicle Speed Messages . . . . 4-50
Washer Fluid Messages . . . . . 4-50

## Vehicle Personalization

Vehicle Personalization . . . . . 4-51

## OnStar® System

OnStar® System . . . . . 4-59

## Universal Remote System

Universal Remote System . . . 4-61
Universal Remote System Programming . . . . . 4-61
Universal Remote System Operation . . . . . 4-65

## ✍ NOTES

# Instrument Panel Overview

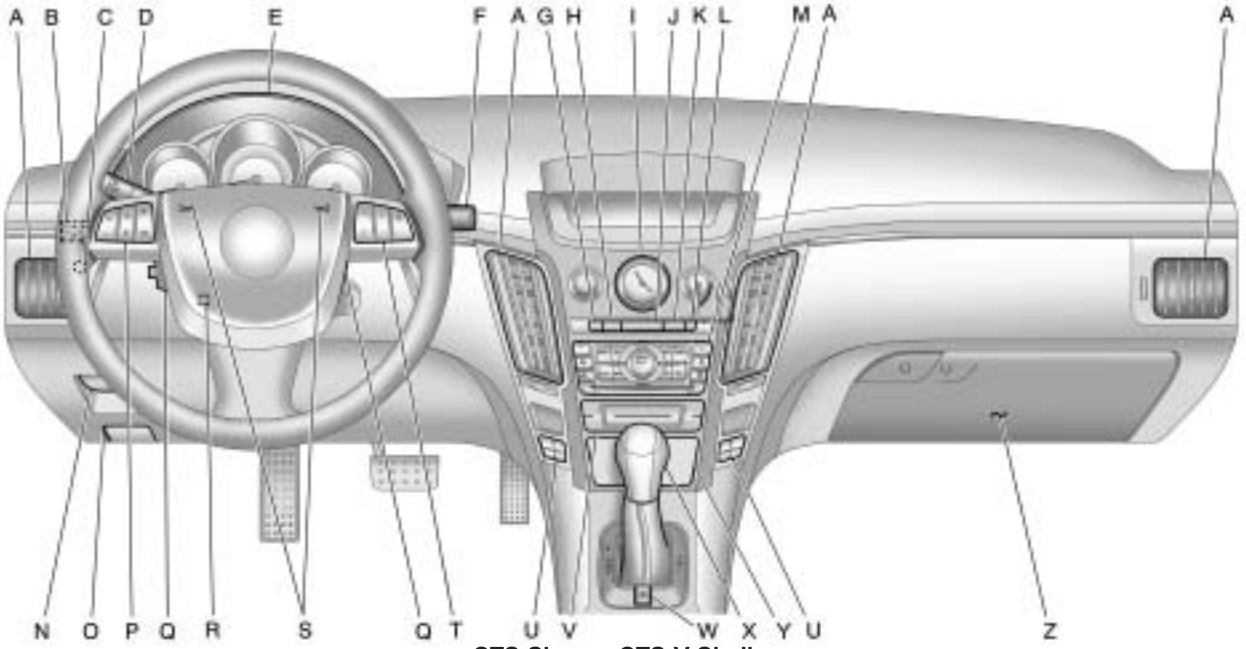


CTS Shown, CTS-V Similar

A. *Air Vents on page 7-6*.

B. *Driver Information Center (DIC) on page 4-31*.

C. *Instrument Panel Illumination Control on page 5-5*.

D. *Turn and Lane-Change Signals on page 5-4*.

E. *Instrument Cluster on page 4-15*.

F. *Windshield Wiper/Washer on page 4-8*. *Rear Window Wiper/Washer on page 4-9* (If Equipped).

G. Navigation Button (If Equipped). See Navigation System Manual.

H. *Traction Control System (TCS) on page 8-37*. *Magnetic Ride Control on page 8-40* (CTS-V Model Only).

I. *Clock on page 4-12*.

J. *Passenger Sensing System on page 2-35*.

K. *Hazard Warning Flashers on page 5-4*.

L. Navigation Display Brightness Control (If Equipped). See Navigation System Manual.

M. *AM-FM Radio on page 6-9* (Base Audio System) or Navigation/Radio System (If Equipped). See Navigation System Manual.

N. *Parking Brake (Manual) on page 8-34* or *Parking Brake (Electric) on page 8-35*.

O. *Hood on page 9-5*.

P. *Cruise Control on page 8-41*. Traction Control System (TCS) Disable Button (CTS-V Model Only). See *Traction Control System (TCS) on page 8-37*.

Q. Tap Shift Controls (CTS-V Model Only). See *Automatic Transmission on page 8-26*.

R. *Steering Wheel Adjustment on page 4-6*.

S. *Horn on page 4-7*.

T. *Steering Wheel Controls on page 4-7*.

U. *Heated and Ventilated Front Seats on page 2-9*.

V. *Dual Automatic Climate Control System on page 7-1*.

W. *Parking Brake (Manual) on page 8-34* or *Parking Brake (Electric) on page 8-35*.

X. Shift Lever. See *Automatic Transmission on page 8-26* or *Manual Transmission on page 8-30*.

Y. *Instrument Panel Storage on page 3-1*. *Power Outlets on page 4-12*.

Z. *Glove Box on page 3-1*.

# Controls

## Steering Wheel Adjustment

A tilt and telescope wheel lets the steering wheel be adjusted.

Do not adjust the steering wheel while driving.

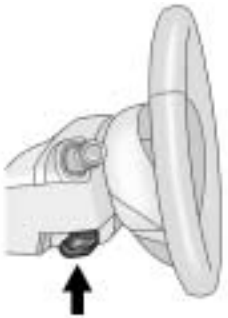

The tilt and telescope lever is on the left side of the steering column.

To tilt and telescope the steering wheel, pull the lever down. Then move the steering wheel up or down or backward or forward into a comfortable position. Pull the lever up to lock the steering wheel in place.

### Power Tilt Wheel

For vehicles with this feature, the power tilt wheel control is on the left side of the steering column.

To operate the power tilt feature, push the control up or down to tilt the steering wheel up or down.

Push the control forward or rearward to move the steering wheel toward the front or rear of the vehicle.

## Steering Wheel Controls

Some audio steering wheel controls could differ depending on the vehicle's options. Controls that can be adjusted at the steering wheel may include:

**SRCE (Source):** Press to switch between the radio AM, FM, XM (if equipped), CD, HDD (if equipped), auxiliary input jack, DVD (if equipped), and USB (if equipped).

**/ (Previous/Next):** Press to go to the previous or next radio station stored as a favorite, or the previous or next track of a CD.

Press to interact with the Bluetooth® system. See *Bluetooth on page 6-37* for more information.

**+ – (Volume):** Press to increase or to decrease the volume.

**(Mute/Speech Recognition/ Push to Talk):** Press and release to silence the vehicle speakers only. The audio of the wireless and wired headphones, if the vehicle has these features, does not mute.

Press and release again, to turn the sound on.

- For vehicles with a navigation system, press and hold for two seconds to initiate speech recognition. See “Speech Recognition” in the Navigation System manual for more information.
- For vehicles without a navigation system, press and hold for two seconds to interact with OnStar® or Bluetooth. See the *OnStar® System on page 4-59*, or *Bluetooth on page 6-37* for more information about these features.
- For vehicles with a navigation system, OnStar, or Bluetooth, press and hold for two seconds and say “hands free” to interact with OnStar or Bluetooth. See the *OnStar® System on page 4-59*, or *Bluetooth on page 6-37* for more information about these features.

## Horn

Press near the horn symbols or press on the steering wheel pad to sound the horn.

## Windshield Wiper/Washer

**Sedan Model shown**

**Wagon Model shown**

The windshield wiper lever is on the right side of the steering column.

Move the windshield wiper lever to select the wiper speed.

**(Mist):** Single wipe, briefly move the lever down and release. Several wipes, hold the lever down.

**(Off):** Turns the wipers off.

**(Adjustable Interval Wipes):** For a delayed wiping cycle. Turn the adjustable interval wiper band to set the frequency of wipes.

**(Adjustable Interval Wiper Band):** Turn the band up for more frequent wipes or down for less frequent wipes.

**1 :** Slow wipes.

**2 :** Fast wipes.

If the windshield wipers are in use for about six seconds while you are driving, the exterior lamps come on automatically if the exterior lamp control is in AUTO. See “Wiper Activated Headlamps” for more information.

Clear snow and ice from the wiper blades before using them. If frozen to the windshield, carefully loosen or thaw them. Damaged wiper blades should be replaced. For more information, see *Wiper Blade Replacement on page 9-33*.

Heavy snow or ice can overload the wiper motor. A circuit breaker will stop the motor until it cools down.

### Wiper Arm Assembly Protection

When using an automatic car wash, move the windshield wiper lever to the OFF position. This disables the windshield wipes and/or rear wipers, if equipped.

The wiper operations return to normal when the transmission is no longer in N (Neutral) or the vehicle speed has increased.

### Windshield Washer

**⚠ WARNING**

In freezing weather, do not use your washer until the windshield is warmed. Otherwise the washer fluid can form ice on the windshield, blocking your vision.

**Sedan Model**

**(Washer Fluid):** Press the button with this symbol, on the end of the windshield washer lever, to wash the windshield. The washer fluid sprays onto the windshield and the wipers run for a few cycles to clear the windshield. Press and hold for more wash cycles.

**Wagon Model**

Pull the lever toward you to spray washer fluid on the windshield. The spray continues until the lever is released. The wipers will run a few times.

Washer Fluid Low Add Fluid displays on the Driver Information Center (DIC) when the washer fluid is low. See *Driver Information Center (DIC) on page 4-31*.

See *Washer Fluid on page 9-25* for information on filling the windshield washer fluid reservoir.

If the headlamps are on while the windshield is being washed, the headlamp washers, if the vehicle has them, will also turn on. See “Headlamp Washer” following for more information.

### Wiper Activated Headlamps

This feature activates the headlamps and parking lamps after the windshield wipers have been in use for about six seconds. For this feature to work, the exterior lamp control must be in AUTO.

The wiper-activated headlamps immediately turn off, when the ignition is turned to LOCK/OFF or the windshield wiper control is turned off.

## Rear Window Wiper/Washer

For vehicles with a rear window wiper/washer, the controls are on the end of the windshield wiper lever.

Press the upper or lower portion of the button to control the rear wiper and rear wiper delay.

The system turns off when the button is returned to the middle position.

**(Rear Wiper Delay Short):** Sets a five second delay between wipes.

**(Rear Wiper Delay Long):** Sets a ten second delay between wipes.

**(Rear Washer):** Push the windshield wiper lever forward to spray washer fluid on the rear window. The lever returns to its starting position when released.

The windshield washer reservoir is used for the windshield and the rear window. Check the fluid level in the reservoir if either washer is not working. See *Washer Fluid on page 9-25*.

**⚠ WARNING**

In freezing weather, do not use your washer until the windshield is warmed. Otherwise the washer fluid can form ice on the windshield, blocking your vision.

## Headlamp Washer

For vehicles with headlamp washers they clear debris from the headlamp lenses.

The headlamp washers are beneath the headlamps.

Press the washer button at the end of the windshield wiper lever, to wash the headlamps. Both the headlamps and the windshield will be washed. After the first wash, the headlamps will not be washed until the fifth press of the windshield washer button.

The headlamps must be on to be washed. If the headlamps are off, only the windshield will be washed when the washer button is pressed. If the washer fluid is low, the headlamp washers will not work.

See *Windshield Wiper/Washer on page 4-8* for more information.

## Compass

The vehicle may have a compass in the Driver Information Center (DIC).

### Compass Zone

The zone is set to zone eight. If you do not live in zone eight or drive out of the area, the variance needs to be changed to the appropriate zone.

To adjust for compass variance, use the following procedure:

### Compass Variance (Zone) Procedure

1. Do not set the compass zone when the vehicle is moving. On an automatic transmission vehicle, only set it when the vehicle is in P (Park). On a manual transmission vehicle, only set it when the vehicle is stopped.

   Press the vehicle information button until Press To Change Compass Zone displays.

2. Find the vehicle's current location and variance zone number on the map.

   Zones 1 through 15 are available.

3. Press the set/reset button to scroll through and select the appropriate variance zone.
4. Press the trip/fuel button until the vehicle heading, for example, N for North, is displayed in the DIC.
5. Calibrate the compass. See “Compass Calibration Procedure” following.

### Compass Calibration

The compass can be manually calibrated. Only calibrate the compass in a magnetically clean and safe location, such as an open parking lot, where driving the vehicle in circles is not a danger. It is suggested to calibrate away from tall buildings, utility wires, manhole covers, or other industrial structures, if possible.

If CAL appears in the DIC display, the compass should be calibrated.

If the DIC display does not show a heading, for example, N for North, or the heading does not change after making turns, there may be a strong magnetic field interfering with the compass. Interference may be caused by a magnetic antenna mount, magnetic note pad holder, or any other magnetic item. Turn off the vehicle, move the magnetic item, then turn on the vehicle and calibrate the compass.

To calibrate the compass, use the following procedure:

**Compass Calibration Procedure**

1. Before calibrating the compass, check that the compass is set to the correct variance zone. See “Compass Variance (Zone) Procedure” earlier in this section.

   Do not operate any switches such as window, sunroof, climate controls, seats, etc. during the calibration procedure.
2. Press the vehicle information button until Press To Calibrate Compass displays.
3. Press the set/reset button to start the compass calibration.
4. The DIC will display Calibrating Drive In Circles. Drive the vehicle in tight circles at less than 8 km/h (5 mph) to complete the calibration. The DIC will display Calibration Complete for a few seconds when the calibration is complete. The DIC display will then return to Press To Calibrate Compass.

## Clock

The analog clock is located on the instrument panel above the radio. The clock is not connected with any other vehicle system and runs by itself. To adjust the clock:

1. Locate the adjustment buttons directly below the clock face.
2. Push and hold the right adjustment button to move the clock hands forward or the left adjustment button to make the clock hands go backward.

   Holding either button down will cause the clock to advance faster. Release the button before the desired time is reached.
3. Push and release either button to adjust the time by one minute increments until the desired time is reached.

## Power Outlets

Accessory power outlets can be used to connect auxiliary electrical equipment, such as a cellular telephone.

There are three accessory power outlets. There is an outlet located in the front storage area below the climate control system, one inside the center console storage bin, and one on the rear of the center console.

For CTS Wagon model only, there is an additional accessory power outlet located near the rear cargo net.

To use an outlet, remove the protective cap. When not in use, always cover the outlet with the protective cap. The accessory power outlet is operational at all times.

***Notice:*** **If electrical devices are left plugged into a power outlet, the battery may drain causing the vehicle not to start or damage to the battery. This would not be covered by the vehicle warranty. Always unplug all electrical devices when turning off the vehicle.**

Certain electrical accessories may not be compatible with the accessory power outlet and could result in blown vehicle or adapter fuses. If you experience a problem see your dealer/retailer for additional information on accessory power outlets.

***Notice:*** **Adding any electrical equipment to the vehicle can damage it or keep other components from working as they should. The repairs would not be covered by the vehicle warranty. Do not use equipment exceeding maximum amperage rating of 20 amperes. Check with your dealer/retailer before adding electrical equipment.**

***Notice:*** **Improper use of the power outlet can cause damage not covered by the vehicle warranty. Do not hang any type of accessory or accessory bracket from the plug because the power outlets are designed for accessory power plugs only.**

## Cigarette Lighter

The vehicle may have a cigarette lighter. To use the lighter, push it in all the way and let go. When it is ready, it will pop back out by itself.

***Notice:*** **Holding a cigarette lighter in while it is heating does not let the lighter back away from the heating element when it is hot. Damage from overheating can occur to the lighter or heating element, or a fuse could be blown. Do not hold a cigarette lighter in while it is heating.**

## Ashtrays

The vehicle may have two removable ashtrays. One ashtray can be placed into the instrument panel storage compartment and the other into the center console rear compartment.

To empty the ashtrays, hold on to the edges of the bin and pull straight out. To reinstall, push the tray back into place.

***Notice:*** **If papers, pins, or other flammable items are put in the ashtray, hot cigarettes or other smoking materials could ignite them and possibly damage the vehicle. Never put flammable items in the ashtray.**

# Warning Lights, Gages, and Indicators

Warning lights come on when there could be a problem with a vehicle function. Some warning lights come on briefly when the engine is started to indicate they are working.

Gages can indicate when there could be a problem with a vehicle function. Often gages and warning lights work together to indicate a problem with the vehicle.

When one of the warning lights comes on and stays on while driving, or when one of the gages shows there may be a problem, check the section that explains what to do. Follow this manual's advice. Waiting to do repairs can be costly and even dangerous.

## Instrument Cluster

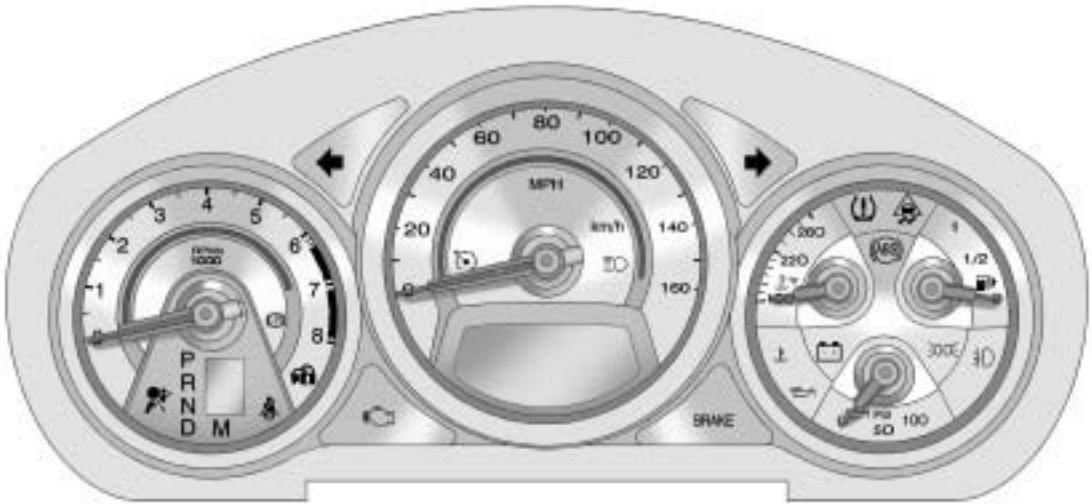


**United States Automatic Transmission Cluster Shown, Canada and Manual Similar**

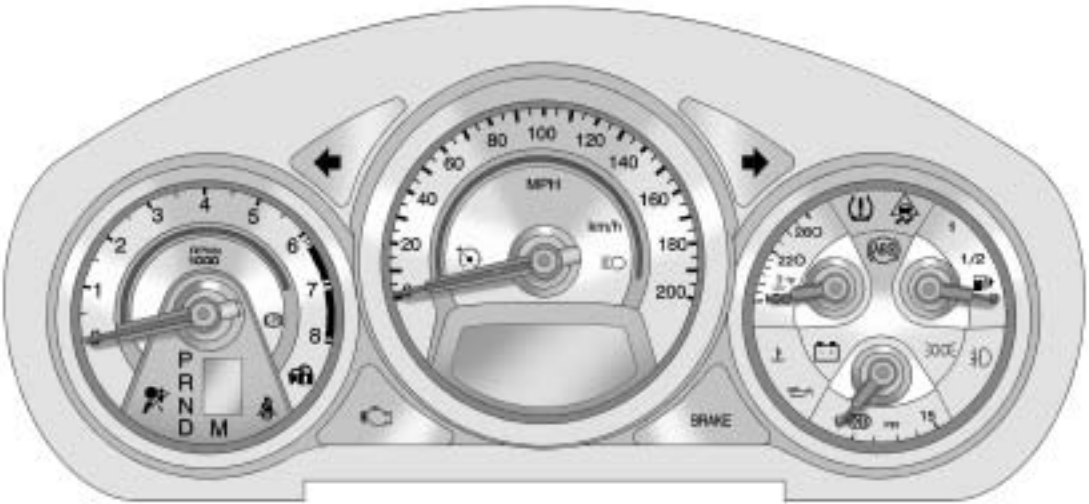


**United States V-Series Automatic Transmission Cluster Shown, Canada and Manual Similar**

## Speedometer

The speedometer shows the vehicle's speed in both kilometers per hour (km/h) and miles per hour (mph).

## Odometer

The odometer shows how far the vehicle has been driven, in either kilometers or miles.

If this vehicle has to have a new odometer installed, the new one may read the correct mileage. This is because the vehicle computer has stored the mileage in memory.

## Trip Odometer

The trip odometer can record the number of miles or kilometers traveled for up to two trips.

The trip odometer is part of the Driver Information Center (DIC), for more information see *Driver Information Center (DIC) on page 4-31*.

For vehicles that have the navigation system, see your Navigation System manual for more information.

## Tachometer

The tachometer displays the engine speed in revolutions per minute (rpm).

***Notice:*** **If the engine is operated with the tachometer in the shaded warning area, the vehicle could be damaged, and the damages would not be covered by the vehicle warranty. Do not operate the engine with the tachometer in the shaded warning area.**

The CTS-V tachometer has tracer lights that follow the movement of the tachometer indicator. The tracer lights also flash when it is time to up-shift to avoid the engine speed limit. See *Automatic Transmission on page 8-26* or *Manual Transmission on page 8-30* for more information.

## Fuel Gage

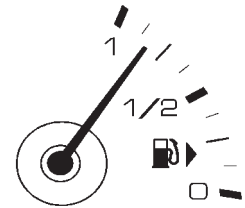


When the ignition is on, the fuel gage tells you about how much fuel you have left in your tank.

An arrow on the fuel gage indicates the side of the vehicle the fuel door is on.

When the indicator nears empty, the low fuel light comes on. There is still a little fuel left in the vehicle, but the fuel tank should be filled soon.

The Fuel Level Low message appears in the Driver Information Center (DIC) and a single chime sounds. See *Fuel System Messages on page 4-42* for more information.

Here are four things that some owners ask about. None of these show a problem with your fuel gage:

- At the service station, the fuel pump shuts off before the gage reads full.
- It takes a little more or less fuel to fill up than the gage indicated. For example, the gage may have indicated the tank was half full, but it actually took a little more or less than half the tank's capacity to fill the tank.
- The gage moves a little while turning a corner or speeding up.
- The gage takes a few seconds to stabilize after the ignition is turned on, and will go back to empty when the ignition is turned off.

## Boost Gage

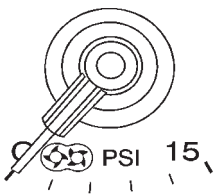


**United States**

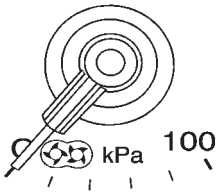


**Canada**

For the CTS-V, this gage is located in the instrument panel cluster.

This gage indicates positive manifold pressure which is the induction air pressure level in the intake manifold before it enters the combustion chamber. This gage reads zero under light throttle before boost is generated.

This gage automatically resets to zero every time the engine is started.

## Engine Speed Limiter

This feature prevents the engine speed from reaching an unsafe level. If the level is too high, the throttle closes or limits the fuel supply until the engine speed returns to a safe level. Throttle operation and fuel supply returns to normal when engine speed is lowered.

For the CTS-V, the tachometer tracer lights flashes prior to reaching engine speed limit. The tracer lights also flash on automatic transmission vehicles while in the DSC or Tap Shift modes.

## Engine Oil Pressure Gage

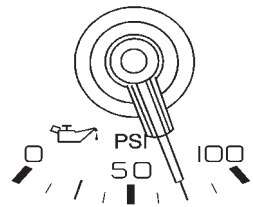


**United States**

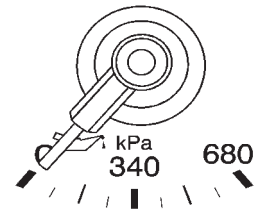


**Canada**

For vehicles with an engine oil pressure gage. It shows the engine oil pressure in psi (pounds per square inch) when the engine is running. Canadian vehicles indicate pressure in kPa (kilopascals).

Oil pressure may vary with engine speed, outside temperature and oil viscosity, but if readings are outside the normal operating range, the oil pressure light will come on. See *Engine Oil Pressure Light on page 4-30* for more information.

A reading outside the normal operating range may be caused by a dangerously low oil level or some other problem causing low oil pressure. Oil should be checked as soon as possible. See Oil Pressure Low Stop Engine under *Driver Information Center (DIC) on page 4-31* and *Engine Oil on page 9-10*.

**⚠ WARNING**

Do not keep driving if the oil pressure is low. The engine can become so hot that it catches fire. Someone could be burned. Check the oil as soon as possible and have the vehicle serviced.

***Notice:*** **Lack of proper engine oil maintenance can damage the engine. The repairs would not be covered by the vehicle warranty. Always follow the maintenance schedule in this manual for changing engine oil.**

## Engine Coolant Temperature Gage

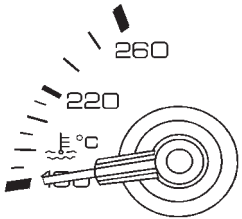


**United States**

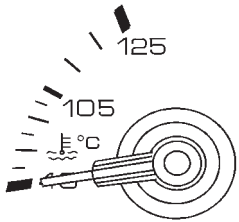


**Canada**

This gage shows the engine coolant temperature. If the engine coolant overheats the engine coolant temperature warning light will come on. See *Engine Coolant Temperature Warning Light on page 4-29* and *Engine Overheating on page 9-23* for more information.

## Safety Belt Reminders

### Driver Safety Belt Reminder Light

There is a driver safety belt reminder light on the instrument panel cluster.

When the engine is started this light and a chime come on and stay on for several seconds to remind drivers to fasten their safety belts. The light also begins to flash.

This cycle repeats if the driver remains unbuckled and the vehicle is moving.

If the driver safety belt is already buckled, neither the light nor chime come on.

### Passenger Safety Belt Reminder Light

When the engine is started this light and the chime comes on and stays on for several seconds to remind the passenger to fasten their safety belt. The light also begins to flash.

This cycle repeats if the passenger remains unbuckled and the vehicle is moving.

If the passenger safety belt is buckled, neither the chime nor the light comes on.

The front passenger safety belt warning light and chime may turn on if an object is put on the seat such as a briefcase, handbag, grocery bag, laptop or other electronic device. To turn off the warning light and or chime, remove the object from the seat or buckle the safety belt.

## Airbag Readiness Light

This light shows if there is an electrical problem. The system check includes the airbag sensor, the pretensioners, the airbag modules, the wiring and the crash sensing and diagnostic module. For more information on the airbag system, see *Airbag System on page 2-27*.

The airbag readiness light comes on and stays on for several seconds when the vehicle is started. Then the light goes out.

**⚠ WARNING**

If the airbag readiness light stays on after the vehicle is started or comes on while driving, it means the airbag system might not be working properly. The airbags in the vehicle might not inflate in a crash, or they could even inflate without a crash. To help avoid injury, have the vehicle serviced right away.

## Passenger Airbag Status Indicator

The vehicle has the passenger sensing system. See *Passenger Sensing System on page 2-35* for important safety information. The instrument panel has a passenger airbag status indicator.

**United States**

**Canada**

When the vehicle is started, the passenger airbag status indicator will light the words ON and OFF, or the symbols for on and off, for several seconds as a system check. If the vehicle has remote start, and it is being used to start the vehicle from a distance, you may not see the system check. Then, after several more seconds, the status indicator will light either ON or OFF, or either the on or off symbol, to let you know the status of the right front passenger frontal airbag.

If the word ON or the on symbol is lit on the passenger airbag status indicator, it means that the right front passenger frontal airbag is enabled (may inflate).

If the word OFF or the off symbol is lit on the passenger airbag status indicator, it means that the passenger sensing system has turned off the right front passenger frontal airbag.

If, after several seconds, both status indicator lights remain on, or if there are no lights at all, there may be a problem with the lights or the passenger sensing system. See your dealer/retailer for service.

**⚠ WARNING**

If the airbag readiness light ever comes on and stays on, it means that something may be wrong with the airbag system. To help avoid injury to yourself or others, have the vehicle serviced right away. See *Airbag Readiness Light on page 4-21* for more information, including important safety information.

## Charging System Light

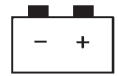


The charging system light comes on briefly when the ignition is turned on but the engine is not running, as a check to show the light is working. It should go out when the engine is started.

If the light stays on, or comes on while driving, there may be a problem with the electrical charging system. Have it checked by your dealer/retailer. Driving while this light is on could drain the battery.

When this light comes on, the Driver Information Center (DIC) also displays a message.

See *Battery Voltage and Charging Messages on page 4-37*.

If a short distance must be driven with the light on, be sure to turn off all accessories, such as the radio and air conditioner.

## Malfunction Indicator Lamp

A computer system called OBD II (On-Board Diagnostics-Second Generation) monitors operation of the fuel, ignition, and emission control systems. It ensures that emissions are at acceptable levels for the life of the vehicle, helping to produce a cleaner environment.

This light comes on when the ignition is on, but the engine is not running, as a check to show it is working. If it does not, have the vehicle serviced by your dealer/retailer.

If the check engine light comes on and stays on, while the engine is running, this indicates that there is an OBD II problem and service is required.

Malfunctions often are indicated by the system before any problem is apparent. Being aware of the light can prevent more serious damage to the vehicle. This system assists the service technician in correctly diagnosing any malfunction.

***Notice:*** **If the vehicle is continually driven with this light on, after a while, the emission controls might not work as well, the vehicle's fuel economy might not be as good, and the engine might not run as smoothly. This could lead to costly repairs that might not be covered by the vehicle warranty.**

***Notice:*** **Modifications made to the engine, transmission, exhaust, intake, or fuel system of the vehicle or the replacement of the original tires with other than those of the same Tire Performance Criteria (TPC) can affect the vehicle's emission controls and can cause this light to come on. Modifications to these systems could lead to costly repairs not covered by the vehicle warranty. This could also result in a failure to pass a required Emission Inspection/ Maintenance test. See *Accessories and Modifications on page 9-3*.**

This light comes on during a malfunction in one of two ways:

**Light Flashing:** A misfire condition has been detected. A misfire increases vehicle emissions and could damage the emission control system on the vehicle. Diagnosis and service might be required.

The following can prevent more serious damage to the vehicle:

- Reduce vehicle speed.
- Avoid hard accelerations.
- Avoid steep uphill grades.
- If towing a trailer, reduce the amount of cargo being hauled as soon as it is possible.

If the light continues to flash, when it is safe to do so, stop the vehicle. Find a safe place to park the vehicle. Turn the vehicle off, wait at least 10 seconds, and restart the engine. If the light is still flashing, follow the previous steps and see your dealer/retailer for service as soon as possible.

**Light On Steady:** An emission control system malfunction has been detected on the vehicle. Diagnosis and service might be required.

An emission system malfunction might be corrected.

- Make sure the fuel cap is fully installed. See *Filling the Tank on page 8-52*. The diagnostic system can determine if the fuel cap has been left off or improperly installed. A loose or missing fuel cap allows fuel to evaporate into the atmosphere. A few driving trips with the cap properly installed should turn the light off.
- If the vehicle has been driven through a deep puddle of water, the vehicle's electrical system might be wet. The condition is usually corrected when the electrical system dries out. A few driving trips should turn the light off.
- Make sure to fuel the vehicle with quality fuel. Poor fuel quality causes the engine not to run as efficiently as designed and may cause: stalling after start-up, stalling when the vehicle is changed into gear, misfiring, hesitation on acceleration, or stumbling on acceleration. These conditions might go away once the engine is warmed up.

  If one or more of these conditions occurs, change the fuel brand used. It will require at least one full tank of the proper fuel to turn the light off.

  See *Gasoline Specifications on page 8-50*.

If none of the above have made the light turn off, your dealer/retailer can check the vehicle. The dealer/retailer has the proper test equipment and diagnostic tools to fix any mechanical or electrical problems that might have developed.

## Emissions Inspection and Maintenance Programs

Some state/provincial and local governments have or might begin programs to inspect the emission control equipment on the vehicle. Failure to pass this inspection could prevent getting a vehicle registration.

Here are some things to know to help the vehicle pass an inspection:

- The vehicle will not pass this inspection if the check engine light is on with the engine running, or if the ignition is placed in ON/RUN and the light is not on.

- The vehicle will not pass this inspection if the OBD II (on-board diagnostic) system determines that critical emission control systems have not been completely diagnosed by the system. The vehicle would be considered not ready for inspection. This can happen if the battery has recently been replaced or if the battery has run down. The diagnostic system is designed to evaluate critical emission control systems during normal driving. This can take several days of routine driving. If this has been done and the vehicle still does not pass the inspection for lack of OBD II system readiness, your dealer/retailer can prepare the vehicle for inspection.

## Brake System Warning Light

This vehicle's hydraulic brake system is divided into two parts. If one part is not working, the other part can still work and stop the vehicle. For good braking both parts need to be working well.

If the warning light comes on, there is a brake problem. Have the brake system inspected right away.

**United States** **Canada**

This light should come on briefly when the ignition is placed in ON/RUN. If it does not come on then, have it fixed so it will be ready to warn if there is a problem.

When the ignition is on, the brake system warning light will also come on when the parking brake is set.

The light will flash or stay on if the parking brake is not fully released.

If the light stays on after the parking brake is fully released there is a base brake problem.

**⚠ CAUTION**

The brake system might not be working properly if the brake system warning light is on. Driving with the brake system warning light on can lead to a crash. If the light is still on after the vehicle has been pulled off the road and carefully stopped, have the vehicle towed for service.

For vehicles with the Electric Park Brake (EPB), this red brake warning light comes on when the park brake is applied. If the light continues flashing after the park brake is released, or while driving, there is a problem with the Electric Parking Brake system.

If the light does not come on, or remains flashing, see you dealer/retailer.

For vehicles with the Electric Park Brake (EPB), this park brake status light should come on briefly when ignition is placed in ON/RUN. If it does not come on then, have it fixed so it will be ready to warn if there is a problem.

If this park brake light comes on there is a problem with a system on the vehicle that is causing the park brake system to work at a reduced level. The vehicle can still be driven, but should be taken to a dealer/ retailer

See *Brake Assist (Except CTS-V) on page 8-37* for more information.

## Antilock Brake System (ABS) Warning Light

For vehicles with the Antilock Brake System (ABS), this light comes on briefly when the engine is started.

If the light does not come on, have it fixed so it will be ready to warn if there is a problem.

If the ABS light stays on, turn the ignition off. If the light comes on while driving, stop as soon as it is safely possible and turn the ignition off. A chime may also sound when the light comes on steady.

Then start the engine again to reset the system. If the ABS light stays on, or comes on again while driving, the vehicle needs service. If the regular brake system warning light is not on, the vehicle still has brakes, but not antilock brakes. If the regular brake system warning light is also on, the vehicle does not have antilock brakes and there is a problem with the regular brakes. See *Brake System Warning Light on page 4-26*.

For vehicles with a Driver Information Center (DIC), see *Driver Information Center (DIC) on page 4-31* for all brake related DIC messages.

## Up-Shift Light

The vehicle may have an up-shift light, it shows when to shift to the next higher gear for best fuel economy.

See *Manual Transmission on page 8-30* for more information.

For the CTS-V, the tracer lights function as a performance up-shift light.

These tracers flash to indicate when to shift to the next higher gear to avoid the engine speed limit. See *Automatic Transmission on page 8-26* or *Manual Transmission on page 8-30* for more information.

## Traction Control System (TCS)/StabiliTrak® Light

The Traction Control System (TCS)/StabiliTrak warning light should come on briefly when the engine is started.

If it does not, have the vehicle serviced by your dealer/retailer. If the system is working normally the indicator light then goes off.

If the light comes on or stays on while driving, there may be a problem with the TCS/StabiliTrak and the vehicle may need service. When this warning light is on, the system does not limit wheel spin. Adjust driving accordingly.

See *Traction Control System (TCS) on page 8-37* and *StabiliTrak System on page 8-38* for more information.

## Engine Coolant Temperature Warning Light

The engine coolant temperature warning light comes on briefly when the engine is started.

If it does not, have the vehicle serviced by your dealer/retailer. If the system is working normally the indicator light then goes off.

If the light comes on and stays on while driving, the vehicle may have a problem with the cooling system.

Stop the vehicle and turn off the engine to avoid damage to the engine. A warning chime sounds when this light is on.

See *Engine Overheating on page 9-23* for more information.

## Tire Pressure Light

For vehicles with a tire pressure monitoring system, this light comes on briefly when the engine is started. It provides information about tire pressures and the Tire Pressure Monitoring System.

**When the Light is On Steady**

This indicates that one or more of the tires are significantly underinflated.

A tire pressure message in the Driver Information Center (DIC), can accompany the light. See *Tire Messages on page 4-48* for more information. Stop as soon as possible, and inflate the tires to the pressure value shown on the tire loading information label. See *Tire Pressure on page 9-66* for more information.

**When the Light Flashes First and Then is On Steady**

This indicates that there may be a problem with the Tire Pressure Monitor System. The light flashes for about a minute and stays on steady for the remainder of the ignition cycle. This sequence repeats with every ignition cycle. See *Tire Pressure Monitor Operation on page 9-69* for more information.

## Engine Oil Pressure Light

**⚠ WARNING**

Do not keep driving if the oil pressure is low. The engine can become so hot that it catches fire. Someone could be burned. Check the oil as soon as possible and have the vehicle serviced.

***Notice:*** **Lack of proper engine oil maintenance can damage the engine. The repairs would not be covered by the vehicle warranty. Always follow the maintenance schedule in this manual for changing engine oil.**

The oil pressure light should come on briefly as the engine is started. If it does not come on have the vehicle serviced by your dealer/retailer.

If the light comes on and stays on, it means that oil is not flowing through the engine properly. The vehicle could be low on oil and might have some other system problem. See your dealer/retailer.

## Security Light

This light flashes when the security system is activated.

For more information, see *Vehicle Security on page 1-23*.

## High-Beam on Light

The high-beam on light comes on when the high-beam headlamps are in use.

See *Headlamp High/Low-Beam Changer on page 5-2* for more information.

## Fog Lamp Light

The fog lamp light comes on when the fog lamps are in use.

The light goes out when the fog lamps are turned off. See *Fog Lamps on page 5-5* for more information.

## Lamps on Reminder

This light comes on when the taillamps are on.

## Cruise Control Light

This light comes on whenever the cruise control is set.

The light goes out when the cruise control is turned off. See *Cruise Control on page 8-41* for more information.

# Information Displays

## Driver Information Center (DIC)

The Driver Information Center (DIC) gives you the status of many of your vehicle's systems. The DIC is also used to display warning/status messages. All messages appear in the DIC display located at the bottom of the instrument panel cluster. The DIC buttons are located on the instrument panel, next to the steering wheel.

The DIC comes on when the ignition is on. After a short delay, the DIC displays the information that was last displayed before the engine was turned off.

The top line of the DIC display shows the DIC information. The bottom line of the DIC display shows the compass. The compass displays in the trip/fuel menus and in some vehicle information menus.

If a problem is detected, a warning message appears on the display. Take any message that appears on the display seriously and remember that clearing the message only makes the message disappear, and does not correct the problem.

## DIC Operation and Displays

The Driver Information Center (DIC) has different displays which can be accessed by pressing the DIC buttons located on the instrument panel, next to the steering wheel.

**(Trip/Fuel):** Press this button to scroll through the trip and fuel displays. See “Trip/Fuel Display Menu Items” following for more information on these displays.

**(Vehicle Information):** Press this button to scroll through the vehicle information displays. See “Vehicle Information Display Menu Items” following for more information on these displays.

**(Customization):** Press this button to scroll through each of the customization features. See *Vehicle Personalization on page 4-51* for more information on the customization features.

**(Set/Reset):** Press this button to reset certain DIC features and to acknowledge DIC warning messages and clear them from the DIC display.

**(Menu Up/Down):** Press this button to scroll up and down the menu items.

## Trip/Fuel Display Menu Items

**(Trip/Fuel):** The following display menu items can be displayed by pressing the trip/fuel button:

### Odometer

This display shows the distance the vehicle has been driven in either miles (mi) or kilometers (km).

### Trip A or Trip B

These displays show the current distance traveled since the last reset for each trip odometer in either miles (mi) or kilometers (km). Both odometers can be used at the same time. Each trip odometer can be reset to zero separately by pressing and holding the set/reset button for a few seconds while the desired trip odometer is displayed.

### Fuel Range

This display shows the approximate number of remaining miles (mi) or kilometers (km) you can drive without refilling the fuel tank. This estimate is based on the current driving conditions and changes if the driving conditions change. For example, if you are driving in traffic and making frequent stops, the display may read one number, but if you enter the freeway, the number may change even though you still have the same amount of fuel in the fuel tank. This is because different driving conditions produce different fuel economies. Generally, freeway driving produces better fuel economy than city driving.

Once the range drops below about 30 miles (48 km) remaining, the display shows Low Range.

If the vehicle is low on fuel, the Fuel Level Low message displays. See “Fuel Level Low” under *Fuel System Messages on page 4-42* for more information.

### AVG (Average) Economy

This display shows the approximate average miles per gallon (mpg) or liters per 100 kilometers (L/100 km). This number is calculated based on the number of mpg (L/100 km) recorded since the last time this display was reset. To reset this display to zero, press the set/reset button.

### Timer

This display can be used like a stopwatch. You can record the time it takes to travel from one point to another. To access the timer, press the trip/fuel button until Timer 00:00:00 displays.

To turn on the timer, press the set/reset button until the timer starts.

To turn off the timer, press the set/reset button again. The timer stops and displays the end timing value.

To reset the timer to zero, press and hold the set/reset button after the timer has been stopped.

### Inst (Instantaneous) Economy

This display shows the current fuel economy in either miles per gallon (mpg) or liters per 100 kilometers (L/100 km). This number reflects only the fuel economy that the vehicle has right now and changes frequently as driving conditions change. Unlike average economy, this display cannot be reset.

### AVG (Average) Speed

This display shows the average speed of the vehicle in either miles per hour (mph) or kilometers per hour (km/h). This average is calculated based on the various vehicle speeds recorded since the last reset of this display. To reset this display to zero, press the set/reset button.

### Speedometer

This display shows a digital speedometer in the DIC. The speed displays in either miles per hour (mph) or kilometers per hour (km/h). To change the units from English to metric, see “Units” later in this section.

### Blank Display

This display shows no information.

## Vehicle Information Display Menu Items

**(Vehicle Information):** The following display menu items can be displayed by pressing the vehicle information button:

### Oil Life Remaining

If the vehicle has this display, it shows the estimated oil life remaining. If you see 99% Oil Life Remaining on the display, that means that 99% of the current oil life remains.

When the oil life is depleted, the Change Engine Oil Soon message appears on the display. You should change the oil as soon as possible. In addition to the engine oil life system monitoring the oil life, additional maintenance is recommended in the Maintenance Schedule in this manual. See *Scheduled Maintenance on page 10-3* and *Engine Oil on page 9-10*.

The Oil Life must be reset after each oil change. It does not reset itself. Avoid accidental resetting of the Oil Life system. It cannot be reset accurately until the next oil change. To reset the engine oil life system, See *Engine Oil Life System on page 9-12*. The display shows 100% when the system is reset.

### Units

This display allows you to select between English or Metric units of measurement. Once in this display, press the set/reset button to select between English or Metric units.

### Parking Assist

If the vehicle has the Ultrasonic Rear Parking Assist (URPA) system, this display allows the system to be turned on or off. Once in this display, press the set/reset button to select between On or Off. The URPA system automatically turns back on after each vehicle start. When the URPA system is turned off and the vehicle is shifted out of P (Park), the DIC displays the Parking Assist Off message as a reminder that the system has been turned off. See *Object Detection System Messages on page 4-45* and *Ultrasonic Parking Assist on page 8-44* for more information.

### Tire Pressure

The pressure for each tire can be viewed in the DIC. The tire pressure is shown in either pounds per square inch (psi) or kilopascals (kPa). Press the vehicle information button until the DIC displays Front Tire PSI (kPa) Left ## Right ##. Press the vehicle

information button again until the DIC displays Rear Tire PSI (kPa) Left ## Right ##.

If a low tire pressure condition is detected by the system while driving, a message advising you to add air to a specific tire appears in the display. See *Tire Pressure on page 9-66* and *Tire Messages on page 4-48* for more information.

**Battery Voltage**

This display shows the current battery voltage. The vehicle's charging system regulates voltage based on the state of the battery. The battery voltage may fluctuate when viewing this information on the DIC. This is normal.

If there is a problem with the battery charging system, the charging system light illuminates and/or the DIC displays a message. See *Charging System Light on page 4-23*, *Battery Voltage and Charging Messages on page 4-37* and *Battery Load Management on page 5-6* for more information.

**Calibrate Compass**

The vehicle may have this feature. The compass can be manually calibrated. To calibrate the compass through the DIC, see “DIC Compass” later in this section.

**Change Compass Zone**

The vehicle may have this feature. To change the compass zone through the DIC, see “DIC Compass” later in this section.

**Relearn Remote Key**

If the vehicle has the Remote Keyless Entry (RKE) system, this display allows you to match the transmitter to the vehicle. This procedure will erase all previously learned transmitters. Therefore, they must be relearned as additional transmitters.

If the vehicle has the keyless access system, see the Keyless Access information for *Remote Keyless Entry (RKE) System Operation (Key Access) on page 1-5* or *Remote Keyless Entry (RKE) System Operation (Keyless Access) on page 1-7* for instructions on matching a keyless access transmitter to the vehicle.

To match an RKE transmitter to the vehicle:

1. Press the vehicle information button until Press To Relearn Remote Key displays.
2. Press the set/reset button until Remote Key Learning Active is displayed.
3. Press and hold the lock and unlock buttons on the first transmitter at the same time for about 15 seconds.

   On vehicles with memory recall seats, the first transmitter learned will match driver 1 and the second will match driver 2.

   A chime sounds indicating that the transmitter is matched.

4. To learn additional transmitters at this time, repeat Step 3.

   Each vehicle can have a maximum of eight learned transmitters.

5. To exit the programming mode, you must cycle the key to LOCK/OFF.

**Trans (Transmission) Temp (Temperature) (CTS-V Only)**

This display shows the transmission fluid temperature in either degrees Fahrenheit (°F) or degrees Celsius (°C).

**Oil Pressure (CTS-V Only)**

This display shows the oil pressure in either pounds per square inch (psi) or kilopascals (kPa).

**Lateral Acceleration (CTS-V Only)**

Lateral acceleration is a measure of how hard you are taking a corner. For example, when you are turning right you will feel your body push to the left. This force is measured in a "g". This gage will display from 0.0 g to 2.0 g.

**Blank Display**

This display shows no information.

### DIC Compass

The vehicle may have a compass in the Driver Information Center (DIC). See *Compass on page 4-11* for information.

## Vehicle Messages

Messages are displayed on the DIC to notify the driver that the status of the vehicle has changed and that some action may be needed by the driver to correct the condition. Multiple messages may appear one after another.

Some messages may not require immediate action, but you can press ✓ (Set/Reset) to acknowledge that you received the messages and to clear them from the display.

Some messages cannot be cleared from the DIC display because they are more urgent. These messages require action before they can be cleared. You should take any messages that appear on the display seriously and remember that clearing the messages will only make the messages disappear, not correct the problem.

The following are the possible messages that can be displayed and some information about them.

## Battery Voltage and Charging Messages

### Battery Saver Active

This message displays when the system detects that the battery voltage is dropping below expected levels. The battery saver system starts reducing certain features of the vehicle that you may be able to notice. At the point that the features are disabled, this message is displayed. It means that the vehicle is trying to save the charge in the battery.

Turn off all unnecessary accessories to allow the battery to recharge.

The normal battery voltage range is 11.5 to 15.5 volts. You can monitor battery voltage on the DIC by pressing the vehicle information button until Battery Voltage is displayed.

### Battery Volts Low

This message displays when the electrical system is charging less than 10 volts or the battery has been drained.

If this message appears immediately after starting the engine, it is possible that the generator can still recharge the battery. The battery should recharge while driving, but may take a few hours to do so. Consider using an auxiliary charger to boost the battery after returning home or to a final destination. Make sure you follow the manufacturer's instructions.

If this message appears while driving or after starting the vehicle and stays on, have it checked immediately to determine the cause of this problem.

To help the generator recharge the battery quickly, you can reduce the load on the electrical system by turning off the accessories.

The normal battery voltage range is 11.5 to 15.5 volts. You can monitor battery voltage on the DIC by pressing the vehicle information button until Battery Voltage is displayed.

### Service Battery Charging System

This message displays when there is a problem with the generator and battery charging systems. Driving with this problem could drain the battery. Turn off all unnecessary accessories. Stop and turn off the vehicle as soon as it is safe to do so. Have the electrical system checked by your dealer/retailer. Under certain conditions, the charging system light may also turn on in the instrument panel cluster. See *Charging System Light on page 4-23* for more information.

## Brake System Messages

### Park Brake Released

For vehicles with the Electric Parking Brake, this message displays when the parking brake has been released from the set position. See the Electric Parking Brake information under *Parking Brake (Manual) on page 8-34* or *Parking Brake (Electric) on page 8-35* for more information.

### Park Brake Set

For vehicles with the Electric Parking Brake, this message displays when the parking brake has been applied to the set position. See the Electric Parking Brake information under *Parking Brake (Manual) on page 8-34* or *Parking Brake (Electric) on page 8-35* for more information.

### Press Brake To Start Engine (Automatic Transmission Only)

If the vehicle has the keyless access system, this message displays if you try to start the engine without having the brake pressed. The brake needs to be pressed when starting the engine. See *Ignition Positions (Key Access) on page 8-18* or *Ignition Positions (Keyless Access) on page 8-19* for more information.

### Release Park Brake Switch

For vehicles with the Electric Parking Brake, this message displays if the Park Brake switch is pulled while the vehicle is moving. See the Electric Parking Brake information under *Parking Brake (Manual) on page 8-34* or *Parking Brake (Electric) on page 8-35* for more information.

### Service Brake Assist

This message displays if there is a problem with the brake system. The brake system warning light and the antilock brake system (ABS) warning light may also display on the instrument panel cluster. See *Brake System Warning Light on page 4-26* and *Antilock Brake System (ABS) Warning Light on page 4-27* for more information. Stop as soon as possible and turn off the vehicle. Restart the vehicle and check for the message on the DIC display. If the message displays immediately or again after you begin driving, the brake system needs service. See your dealer/retailer as soon as possible. See *Antilock Brake System (ABS) on page 8-33* for more information.

### Service Brake System

This message displays, while the ignition is on, when the brake fluid level is low. The brake system warning light on the instrument panel cluster also comes on. See

*Brake System Warning Light on page 4-26* for more information. This message may also be displayed for other brake system problems. Have the brake system serviced by your dealer/retailer as soon as possible.

### Service Park Brake

For vehicles with the Electric Parking Brake, this message displays if a problem is detected with the electric parking brake system. See your dealer/retailer for service.

### Step On Brake To Release Park Brake

For vehicles with the Electric Parking Brake, this message displays if you try to release the park brake system without first pressing the brake pedal. See the Electric Parking Brake information under *Parking Brake (Manual) on page 8-34* or *Parking Brake (Electric) on page 8-35* for more information.

## Compass Messages

### Calibrating Drive In Circles

This message displays when calibrating the compass. Drive the vehicle in circles at less than 5 mph (8 km/h) to complete the calibration. See “DIC Compass” under *Driver Information Center (DIC) on page 4-31* for more information.

### Calibration Complete

This message displays when the compass calibration is complete. See “DIC Compass” under *Driver Information Center (DIC) on page 4-31* for more information.

## Cruise Control Messages

### Cruise Set To XXX MPH (km/h)

This message displays whenever the cruise control is set. See *Cruise Control on page 8-41* for more information.

## Door Ajar Messages

### Driver Door Open

This message displays when the driver door is not closed completely. Close the door completely.

### Hood Open

This message displays when the hood is not closed completely. Make sure that the hood is closed completely.

### Left Rear Door Open

This message displays when the driver side rear door is not closed completely. Make sure that the door is closed completely.

### Passenger Door Open

This message displays when the passenger side front door is not closed completely. Make sure that the door is closed completely.

### Rear Access Open (Wagon)

This message displays when the liftgate is not closed completely. Make sure that the liftgate is closed completely.

### Right Rear Door Open

This message displays when the passenger side rear door is not closed completely. Make sure that the door is closed completely.

### Trunk Open (Sedan)

This message displays when the trunk is not closed completely. Make sure that the trunk is closed completely.

## Engine Cooling System Messages

### Engine Hot A/C (Air Conditioning) Off

This message displays when the engine coolant becomes hotter than the normal operating temperature. See *Engine Coolant Temperature Gage on page 4-20*. To avoid added strain on a hot engine, the air conditioning compressor automatically turns off. When the coolant temperature returns to normal, the air conditioning compressor turns back on. You can continue to drive the vehicle.

If this message continues to appear, have the system repaired by your dealer/retailer as soon as possible to avoid damage to the engine.

### Engine Overheated Idle Engine

***Notice:*** **If you drive your vehicle while the engine is overheating, severe engine damage may occur. If an overheat warning appears on the instrument panel cluster and/or DIC, stop the vehicle as soon as possible. Do not increase the engine speed above normal idling speed. See *Engine Overheating on page 9-23* for more information.**

This message displays when the engine coolant temperature is too hot. Stop and allow the vehicle to idle until it cools down. If the message does not clear in a few minutes or if the overheat light stays on, shut the vehicle off and have it serviced before driving again. See *Engine Coolant Temperature Warning Light on page 4-29*.

See *Overheated Engine Protection Operating Mode on page 9-24* for information on driving to a safe place in an emergency.

## Engine Oil Messages

### Change Engine Oil Soon

When this message displays, it means that service is required for the vehicle. See your dealer/retailer. See *Scheduled Maintenance on page 10-3* and *Engine Oil on page 9-10* for more information.

When you reset the Change Engine Oil Soon message by clearing it from the display, you still must reset the engine oil life system separately. For more information on resetting the engine oil life system, see *Engine Oil Life System on page 9-12*.

### Engine Oil Low Add Oil

If the vehicle has an oil level sensor, this message displays if the oil level in the vehicle is low. Check the oil level and correct it as necessary. You may need to let the vehicle cool or warm up and cycle the ignition to be sure this message clears.

This message clears itself after 10 seconds, until the next ignition cycle. See *Engine Oil on page 9-10* for additional information.

### Oil Pressure Low Stop Engine

***Notice:*** **If you drive your vehicle while the engine oil pressure is low, severe engine damage may occur. If a low oil pressure warning appears on the instrument panel cluster and/or DIC, stop the vehicle as soon as possible. Do not drive the vehicle until the cause of the low oil pressure is corrected. See *Engine Oil on page 9-10* for more information.**

This message displays when the vehicle's engine oil pressure is low. The oil pressure light may also appear on the instrument panel cluster. See *Engine Oil Pressure Light on page 4-30*. See *Engine Oil on page 9-10* for more information.

Stop the vehicle immediately, as engine damage can result from driving a vehicle with low oil pressure. Have the vehicle serviced by your dealer/retailer as soon as possible when this message is displayed.

## Engine Power Messages

### Engine Power Is Reduced

This message displays when the engine power is being reduced to protect the engine from damage. There could be several malfunctions that might cause this message. Reduced engine power can affect the vehicle's ability to accelerate. If this message is on, but there is no reduction in performance, proceed to your destination. The performance may be reduced the next time the vehicle is driven. The vehicle may be driven at a reduced speed while this message is on, but acceleration and speed may be reduced. Anytime this message stays on, the vehicle should be taken to your dealer/retailer for service as soon as possible.

## Fuel System Messages

### Fuel Level Low

This message displays when the vehicle is low on fuel. Refill the fuel tank as soon as possible. A chime may sound when this message displays. See *Filling the Tank on page 8-52*.

### Tighten Gas Cap

This message displays when the fuel cap has not been fully tightened. Recheck the fuel cap to ensure that it is on and tightened properly.

## Key and Lock Messages

### Accessory Mode Active

If the vehicle has the keyless access system, this message displays when the accessory mode is active. See *Ignition Positions (Key Access) on page 8-18* or *Ignition Positions (Keyless Access) on page 8-19* for more information.

### Electronic Key Already Known

If the vehicle has the keyless access system, this message displays if you try to match a transmitter that has already been learned. See the Keyless Access information for *Remote Keyless Entry (RKE) System Operation (Key Access) on page 1-5* or *Remote Keyless Entry (RKE) System Operation (Keyless Access) on page 1-7* for more information.

### Electronic Key Not Detected

If the vehicle has the keyless access system, this message displays if the vehicle does not detect the presence of a transmitter when you have attempted to start the vehicle or a vehicle door has just closed. The following conditions may cause this message to appear:

- Driver-added equipment plugged into the accessory power outlet on the center console is causing interference. Examples of these devices are cell phones and cell phone chargers, two-way radios, power inverters, or similar items. Try moving the keyless access transmitter away from these devices when starting the vehicle. In addition, PDA devices and remote garage and gate openers may also generate Electromagnetic Interference (EMI) that may interfere with the keyless access transmitter. Do not carry the keyless access transmitter in the same pocket or bag as these devices.
- The vehicle is experiencing Electromagnetic Interference (EMI). Some locations, such as airports, automatic toll booths, and some gas stations have EMI fields which may interfere with the keyless access transmitter.

If moving the transmitter to different locations within the vehicle does not help, place the transmitter in the center console transmitter pocket with the buttons facing the front of the vehicle and then start the vehicle.

- The vehicle's battery voltage is low. The battery voltage must be above 10 volts for the keyless access transmitter to be detected properly.

### Electronic Key Not Detected Restart Allowed

If the vehicle has the keyless access system, this message displays when the keyless access transmitter is not detected inside the vehicle while you are trying to turn the ignition off. The vehicle may be near a strong radio antenna signal causing the keyless access system to be jammed. If you have the keyless access transmitter with you, get out of the vehicle and lock the doors. If you do not have the keyless access transmitter with you, you will be able to start the vehicle again within five minutes, or until the vehicle's content theft deterrent system is armed. See *Starting the Engine on page 8-20* for more information.

### Learn Delay Active Wait XX Min (Minutes)

If the vehicle has the keyless access system, this message displays when matching new transmitters to the vehicle. See the Keyless Access information for *Remote Keyless Entry (RKE) System Operation (Key Access) on page 1-5* or *Remote Keyless Entry (RKE) System Operation (Keyless Access) on page 1-7* for more information.

### Maximum # Electronic Keys Learned

If the vehicle has the keyless access system, this message displays when the maximum number of transmitters have been learned. See the Keyless Access information for *Remote Keyless Entry (RKE) System Operation (Key Access) on page 1-5* or *Remote Keyless Entry (RKE) System Operation (Keyless Access) on page 1-7* for more information.

### Press Start Control To Learn Keys

If the vehicle has the keyless access system, this message displays when matching new transmitters to the vehicle. See the Keyless Access information for *Remote Keyless Entry (RKE) System Operation (Key Access) on page 1-5* or *Remote Keyless Entry (RKE) System Operation (Keyless Access) on page 1-7* for more information.

### Ready To Learn Electronic Key # X

If the vehicle has the keyless access system, this message displays while matching new transmitters to the vehicle. See the Keyless Access information for *Remote Keyless Entry (RKE) System Operation (Key Access) on page 1-5* or *Remote Keyless Entry (RKE) System Operation (Keyless Access) on page 1-7* for more information.

### Remote Key Learning Active

If the vehicle has the Remote Keyless Entry (RKE) system, this message displays while matching new transmitters to the vehicle. See "Matching Transmitter(s) to Your Vehicle" under the Key Access information for *Remote Keyless Entry (RKE) System Operation (Key Access) on page 1-5* or *Remote Keyless Entry (RKE) System Operation (Keyless Access) on page 1-7* and *Driver Information Center (DIC) on page 4-31* for more information.

### Replace Battery In Remote Key

This message displays when the battery in the Remote Keyless Entry (RKE) or keyless access transmitter needs to be replaced. To replace the battery, see "Battery Replacement" under *Remote Keyless Entry (RKE) System Operation (Key Access) on page 1-5* or *Remote Keyless Entry (RKE) System Operation (Keyless Access) on page 1-7*.

### Rotate Control To Off Position

If the vehicle has the keyless access system, this message displays when the ignition is in ACC/ACCESSORY and the shift lever has just been moved to P (Park). The message displays as a reminder to turn the ignition off. To avoid draining the battery, make sure the ignition is turned off before leaving the vehicle.

### Service Keyless Start System

If the vehicle has the keyless access system, this message displays when there is a problem with this feature. See your dealer/retailer.

## Lamp Messages

### AFL (Adaptive Forward Lighting) Lamps Need Service

This message displays when the Adaptive Forward Lighting (AFL) system is disabled and needs service. See your dealer/retailer.

See *Adaptive Forward Lighting (AFL) on page 5-4* for more information.

### Automatic Light Control Off

This message displays when the automatic headlamps are turned off.

### Automatic Light Control On

This message displays when the automatic headlamps are turned on.

### Turn Signal On

This message displays as a reminder to turn off the turn signal if you drive the vehicle for more than about 1.6 km (1 mile) with a turn signal on. A multiple chime sounds when this message displays.

## Object Detection System Messages

### Parking Assist Off

If the vehicle has the Ultrasonic Rear Parking Assist (URPA) system, after the vehicle has been started, this message displays to remind the driver that the URPA system has been turned off. Press the set/reset button to acknowledge this message and clear it from the DIC display. To turn the URPA system back on, see "Parking Assist" under *Driver Information Center (DIC) on page 4-31*. See *Ultrasonic Parking Assist on page 8-44* for more information.

### Service Parking Assist

If the vehicle has the Ultrasonic Rear Parking Assist (URPA) system, this message displays if there is a problem with the URPA system. See *Ultrasonic Parking Assist on page 8-44* for more information. See your dealer/retailer for service.

## Ride Control System Messages

### All Wheel Drive Off

If the vehicle has the All-Wheel Drive (AWD) system, this message displays when there is a temporary condition making the AWD system unavailable. The vehicle will run in 2WD. This could be caused by:

- Loss of wheel or vehicle speed
- AWD system overheat
- Certain vehicle electrical conditions

This message turns off when the above conditions are no longer present and by resetting the warning message.

To reset the warning message, turn the ignition off and then back on again after 30 seconds. If the message stays on, see your dealer/retailer right away. See *All-Wheel Drive on page 8-32* for more information.

### Service All Wheel Drive

This message displays if a problem occurs with the All-Wheel Drive (AWD) system. The vehicle will run in 2WD. This could be caused by:

- An electronics problem
- An AWD system oil overheat
- Worn out or overheated clutch plates
- Various electrical issues

If this message appears, stop as soon as possible and turn off the ignition for 30 seconds. Restart the vehicle and check for the message on the DIC display. If the message is still displayed or appears again when you begin driving, the system needs service. See your dealer/retailer right away.

### Service Power Steering

This message displays if a problem is detected with the speed variable assist steering system. When this message is displayed, you may notice that the effort required to steer the vehicle increases or feels heavier, but you will still be able to steer the vehicle. See *Steering on page 8-5*.

### Service Stabilitrak

This message displays if there has been a problem detected with the StabiliTrak® system. The TCS/StabiliTrak warning light on the instrument panel cluster also comes on.

If this message comes on while you are driving, pull off the road as soon as possible and stop carefully. Try resetting the system by turning the ignition off then back on. If this message still stays on or comes back on again while you are driving, the vehicle needs service. Have the StabiliTrak system inspected by your dealer/retailer as soon as possible. See *StabiliTrak System on page 8-38* for more information.

### Service Suspension System

This message displays when there is a problem with the Magnetic Ride Control system. See *Magnetic Ride Control on page 8-40* for more information. Have the vehicle serviced by your dealer/retailer.

### Service Traction Control

This message displays when there is a problem with the Traction Control System (TCS). The TCS/StabiliTrak warning light on the instrument panel cluster also comes on. When this message displays, the system will not limit wheel spin. Adjust your driving accordingly. See your dealer/retailer for service. See *Traction Control System (TCS) on page 8-37* for more information.

### Stabilitrak Competitive Mode

This message displays when the Competitive Driving mode is selected. When in this mode, the Traction Control System (TCS) will not be operating and the TCS/StabiliTrak warning light will turn on.

Adjust your driving accordingly. See "Competitive Driving Mode" under *Traction Control System (TCS) on page 8-37* for more information.

### Stabilitrak Not Ready

This message may display after first driving the vehicle and exceeding 30 km/h (19 mph) for 30 seconds. The TCS/StabiliTrak warning light on the instrument panel cluster also comes on. The StabiliTrak system is not functional until the message has turned off. See *StabiliTrak System on page 8-38* for more information.

### Stabilitrak Off

This message displays when you turn off StabiliTrak, or when the stability control has been automatically disabled. The TCS/StabiliTrak warning light on the instrument panel cluster also comes on.

To realize the full benefits of the stability enhancement system, you should normally leave StabiliTrak on. To turn the StabiliTrak system on or off, see *StabiliTrak System on page 8-38*.

There are several conditions that can cause this message to appear.

- One condition is overheating, which could occur if StabiliTrak activates continuously for an extended period of time.
- The message also displays if the brake system warning light is on. See *Brake System Warning Light on page 4-26*.
- The message could display if the stability system takes longer than usual to complete its diagnostic checks due to driving conditions.
- The message displays if an engine or vehicle related problem has been detected and the vehicle needs service. See your dealer/retailer.

The message turns off as soon as the conditions that caused the message to be displayed are no longer present.

### Suspension Mode Sport (CTS-V Only)

This message will be displayed when sport mode is selected using the Magnetic Ride Control button in the center of the instrument panel. See *Magnetic Ride Control on page 8-40* for more information.

### Suspension Mode Tour (CTS-V Only)

This message will be displayed when touring mode is selected using the Magnetic Ride Control button in the center of the instrument panel. See *Magnetic Ride Control on page 8-40* for more information.

## Airbag System Messages

### Service Air Bag

This message displays when there is a problem with the airbag system. Have the vehicle serviced by your dealer/retailer immediately. See *Airbag Readiness Light on page 4-21* for more information.

## Anti-Theft Alarm System Messages

### Service Theft Deterrent System

This message displays when there is a problem with the theft-deterrent system programmed in the key. A fault has been detected in the system which means that the system is disabled and it is not protecting the vehicle. The vehicle usually restarts; however, you may want to take the vehicle to your dealer/retailer before turning off the engine. See *Immobilizer Operation (Key Access) on page 1-24* or *Immobilizer Operation (Keyless Access) on page 1-25* for more information.

### Start Aborted By Theft Deterrent

This message displays if there is a communication problem between the keyless access system and the vehicle. The vehicle cannot be started when this message displays. See your dealer/retailer for service.

### Theft Attempted

This message displays if the theft-deterrent system has detected a break-in attempt while you were away from the vehicle. See *Anti-Theft Alarm System on page 1-23* for more information.

## Service Vehicle Messages

### Service A/C System

This message displays when the electronic sensors that control the air conditioning and heating systems are no longer working. Have the climate control system serviced by your dealer/retailer if you notice a drop in heating and air conditioning efficiency.

### Service Vehicle Soon

This message displays when a non-emissions related malfunction occurs. Have the vehicle serviced by your dealer/retailer as soon as possible.

## Tire Messages

### Service Tire Monitor System

This message displays if a part on the Tire Pressure Monitor System (TPMS) is not working properly. The tire pressure light also flashes and then remains on during the same ignition cycle. See *Tire Pressure Light on page 4-29*. Several conditions may cause this message to appear. See *Tire Pressure Monitor Operation on page 9-69* for more information. If the warning

comes on and stays on, there may be a problem with the TPMS. See your dealer/retailer.

### Tire Learning Active

This message displays when the Tire Pressure Monitor System (TPMS) is re-learning the tire positions on the vehicle. The tire positions must be re-learned after rotating the tires or after replacing a tire or sensor. See *Tire Rotation on page 9-73*, *Tire Pressure Monitor System on page 9-68*, and *Tire Pressure on page 9-66* for more information.

### Tire Low Add Air To Tire

On vehicles with the Tire Pressure Monitor System (TPMS), this message displays when the pressure in one or more of the vehicle's tires is low. This message also displays LEFT FRONT, RIGHT FRONT, LEFT REAR, or RIGHT REAR to indicate the location of the low tire.

The low tire pressure warning light will also come on. See *Tire Pressure Light on page 4-29*.

If a tire pressure message appears on the DIC, stop as soon as you can. Inflate the tires by adding air until the tire pressure is equal to the values shown on the Tire Loading Information label. See *Tires on page 9-58*, *Vehicle Load Limits on page 8-12*, and *Tire Pressure on page 9-66*.

If the vehicle does not have a spare tire, the message will display "Use Inflator Kit in Trunk". Use the inflator kit to inflate the tires to the correct pressure. See *Tire Sealant and Compressor Kit on page 9-84* for more information.

More than one tire pressure message can be received at a time. To read the other messages, press the set/reset button.

The DIC display also shows the tire pressure values. See *Driver Information Center (DIC) on page 4-31*.

## Transmission Messages

### Differential Hot, Reduce Speed (CTS-V Only)

This message displays and a chime sounds if the differential fluid temperature exceeds 150°C (300°F). Driving aggressively or at high speeds can cause the differential fluid temperature to be higher than normal. If this message appears, you may continue to drive at a slower speed. If you have been operating the vehicle under normal driving conditions, the vehicle may need service. See your dealer/retailer for an inspection.

To acknowledge the message, press ✓. The message reappears and a chime sounds every two minutes until this condition changes. If you do not clear the message, it will remain on until the condition changes.

### Service Transmission

This message displays when there is a problem with the vehicle's transmission. Have the vehicle serviced by your dealer/retailer.

### Shift To Park (Automatic Transmission Only)

If the vehicle has the keyless access system, this message displays if the vehicle is not in P (Park) while the engine is being turned off. The vehicle will be in ACC/ACCESSORY. Once the shift lever is moved to P (Park), the ignition needs to be turned off. If the ignition is not turned off, the vehicle will remain in ACC/ACCESSORY. To avoid draining the battery, turn the ignition to off before leaving the vehicle.

### Sport Mode

This message displays when the vehicle is in sport mode. The transmission gear position will also be displayed when DSC is in use. See “Driver Shift Control (DSC)” under *Automatic Transmission on page 8-26* for more information.

### Transmission Hot Idle Engine

This message displays when the transmission fluid in the vehicle is too hot. Stop the vehicle and allow it to idle until the transmission cools down or until this message is removed.

## Vehicle Speed Messages

### Ice Possible Drive With Care

This message displays when the outside temperature is cold enough to create icy road conditions. Adjust your driving accordingly.

### Speed Limited To XXX MPH (km/h)

This message displays when the vehicle speed is limited to 80 mph (128 km/h) because the vehicle detects a problem in the speed variable assist steering, magnetic ride control, or automatic leveling control systems. Have the vehicle serviced by your dealer/retailer.

## Washer Fluid Messages

### Washer Fluid Low Add Fluid

This message displays when the vehicle is low on windshield washer fluid. Refill the windshield washer fluid reservoir as soon as possible. See *Washer Fluid on page 9-25* for more information.

# Vehicle Personalization

Vehicle customization allows certain features to be programmed for one preferred setting.

Only the customization options available will be displayed on the DIC.

The default settings were preset when the vehicle left the factory, but may have been changed.

The customization preferences are automatically recalled.

To change customization preferences, use the following procedure.

## Entering the Feature Settings Menu

1. Turn the ignition on.

   To avoid excessive drain on the battery, it is recommended that the headlamps are turned off.

2. Press the customization button to enter the feature settings menu.

## Feature Settings Menu Items

The following are customization features that allow you to program settings to the vehicle:

### Display In English

This feature will only display if a language other than English has been set. This feature allows for changing the language of the DIC messages back to English.

Press the customization button until the Press ✓ To Display In English screen appears on the DIC display. Press the set/reset button once to select English as the language in which all DIC messages will appear.

### Display Language

This feature allows you to select the language in which the DIC messages will appear.

Press the customization button until the Display Language screen appears on the DIC display. Press the set/reset button once to access the settings for this feature. Then press the menu up/down button to scroll through the following settings:

**English (default):** All messages will appear in English.

**Deutsch:** All messages will appear in German.

**Italiano:** All messages will appear in Italian.

**Francais:** All messages will appear in French.

**Espanol:** All messages will appear in Spanish.

**Portugese:** All messages will appear in Portugese.

**Arabic:** All messages will appear in Arabic.

**Chinese:** All messages will appear in Chinese.

**Japanese:** All messages will appear in Japanese.

**No Change:** No change will be made to this feature. The current setting will remain.

To select a setting, press the set/reset button while the desired setting is displayed on the DIC.

**Auto Door Lock**

This feature allows you to select when the vehicle's doors will automatically lock. See *Automatic Door Locks on page 1-15* for more information.

Press the customization button until Auto Door Lock appears on the DIC display. Press the set/reset button once to access the settings for this feature. Then press the menu up/down button to scroll through the following settings:

**Shift Out Of Park (default on Automatic Transmission) (Automatic Transmission Only):** The vehicle's doors automatically lock when the doors are closed and the vehicle is shifted out of P (Park).

**At Vehicle Speed (default on Manual Transmission):** The vehicle's doors automatically lock when the vehicle speed is above 5 mph (8 km/h) for three seconds.

**No Change:** No change will be made to this feature. The current setting will remain.

To select a setting, press the set/reset button while the desired setting is displayed on the DIC.

**Auto Door Unlock**

This feature allows you to select whether or not the door(s) will automatically unlock. It also allows you to select which doors and when they will automatically unlock. See *Automatic Door Locks on page 1-15* for more information.

Press the customization button until Auto Door Unlock appears on the DIC display. Press the set/reset button once to access the settings for this feature. Then press the menu up/down button to scroll through the following settings:

**Off:** None of the doors will automatically unlock.

**Driver Only At Off:** Only the driver's door will unlock when the ignition is turned off.

**All At Off (default on Manual Transmission):** All of the doors will unlock when the ignition is turned off.

**All In Park (default on Automatic Transmission) (Automatic Transmission Only):** All of the doors will unlock when the vehicle is shifted into P (Park).

**No Change:** No change will be made to this feature. The current setting will remain.

To select a setting, press the set/reset button while the desired setting is displayed on the DIC.

**Remote Door Lock Feedback**

This feature allows you to select the type of feedback you will receive when locking the vehicle with the Remote Keyless Entry (RKE) or keyless access transmitter, or when the vehicle is automatically locked using the Keyless Locking feature. You will not receive feedback when locking the vehicle with the transmitter if the doors are open. See *Remote Keyless Entry (RKE) System Operation (Key Access) on page 1-5* or *Remote Keyless Entry (RKE) System Operation (Keyless Access) on page 1-7* or “Keyless Locking” later in this section for more information.

Press the customization button until Remote Door Lock appears on the DIC display. Press the set/reset button once to access the settings for this feature. Then press the menu up/down button to scroll through the following settings:

**Off:** There will be no feedback when you press the lock button on the transmitter.

**Lights Only:** The exterior lamps will flash when you press the lock button on the transmitter.

**Horn Only:** The horn will sound on the second press of the lock button on the transmitter.

**Horn & Lights (default):** The exterior lamps will flash when you press the lock button on the transmitter, and the horn will sound when the lock button is pressed again within five seconds of the previous command.

**No Change:** No change will be made to this feature. The current setting will remain.

To select a setting, press the set/reset button while the desired setting is displayed on the DIC.

**Remote Door Unlock Feedback**

This feature allows you to select the type of feedback you will receive when unlocking the vehicle with the Remote Keyless Entry (RKE) or keyless access transmitter, or when the vehicle is automatically unlocked using the Keyless Unlock feature. You will not receive feedback when unlocking the vehicle with the transmitter if the doors are open. See *Remote Keyless Entry (RKE) System Operation (Key Access) on page 1-5* or *Remote Keyless Entry (RKE) System Operation (Keyless Access) on page 1-7* or “Keyless Unlock” later in this section for more information.

Press the customization button until Remote Door Unlock appears on the DIC display. Press the set/reset button once to access the settings for this feature. Then press the menu up/down button to scroll through the following settings:

**Lights Off:** The exterior lamps will not flash when you press the unlock button on the transmitter.

**Lights On (default):** The exterior lamps will flash when you press the unlock button on the transmitter.

**No Change:** No change will be made to this feature. The current setting will remain.

To select a setting, press the set/reset button while the desired setting is displayed on the DIC.

### Exit Lighting

This feature allows you to select the amount of time you want the exterior lamps to remain on when it is dark enough outside. This happens after the key is turned from ON/RUN to LOCK/OFF.

Press the customization button until Exit Lighting appears on the DIC display. Press the set/reset button once to access the settings for this feature. Then press the menu up/down button to scroll through the following settings:

**Off:** The exterior lamps will not turn on.

**10 Seconds (default):** The exterior lamps will stay on for 10 seconds.

**30 Seconds:** The exterior lamps will stay on for 30 seconds.

**2 Minutes:** The exterior lamps will stay on for two minutes.

**No Change:** No change will be made to this feature. The current setting will remain.

To select a setting, press the set/reset button while the desired setting is displayed on the DIC.

### Approach Lighting

This feature allows you to select whether or not to have the exterior lights turn on briefly during low light periods after unlocking the vehicle using the Remote Keyless Entry (RKE) or keyless access transmitter.

Press the customization button until Approach Lighting appears on the DIC display. Press the set/reset button once to access the settings for this feature. Then press the menu up/down button to scroll through the following settings:

**Off:** The exterior lights will not turn on when you unlock the vehicle with the transmitter.

**On (default):** If it is dark enough outside, the exterior lights will turn on briefly when you unlock the vehicle with the transmitter.

The lights will remain on for 20 seconds or until the lock button on the transmitter is pressed, or the vehicle is no longer off. See *Remote Keyless Entry (RKE) System Operation (Key Access) on page 1-5* or *Remote Keyless Entry (RKE) System Operation (Keyless Access) on page 1-7* for more information.

**No Change:** No change will be made to this feature. The current setting will remain.

To select a setting, press the set/reset button while the desired setting is displayed on the DIC.

**Factory Settings**

This feature allows you to set all of the customization features back to their factory default settings.

Press the customization button until Factory Settings appears on the DIC display. Press the set/reset button once to access the settings for this feature. Then press the menu up/down button to scroll through the following settings:

**Restore All (default):** The customization features will be set to their factory default settings.

**No Change:** The customization features will not be set to their factory default settings.

To select a setting, press the set/reset button while the desired setting is displayed on the DIC.

**Keyless Locking**

If the vehicle has the keyless access system, this feature allows you to select whether the doors automatically lock during normal vehicle exit. When the ignition is turned off and all doors become closed, the vehicle will determine how many keyless access transmitters remain in the vehicle interior. If at least one keyless access transmitter has been removed from the interior of the vehicle, the doors will lock after several seconds.

For example, if there are two keyless access transmitters in the vehicle and one is removed, the other will be locked in. The keyless access transmitter locked in the vehicle can still be used to start the vehicle or unlock the doors, if needed. A person approaching the outside of the locked vehicle without an authorized keyless access transmitter, however, will not be able to open the door, even with a transmitter in the vehicle. See the Keyless Access information for *Remote Keyless Entry (RKE) System Operation (Key Access) on page 1-5* or *Remote Keyless Entry (RKE) System Operation (Keyless Access) on page 1-7* for more information.

You may temporarily disable the keyless locking feature by pressing the door unlock switch for three seconds on an open door. Keyless locking will then remain disabled until a door lock switch is pressed or until the power mode transitions from the off power mode.

To select whether the horn sounds or the lights flash when the vehicle is locked, see “Remote Door Lock” earlier in this section.

Press the customization button until Keyless Locking appears on the DIC display. Press the set/reset button once to access the settings for this feature. Then press the menu up/down button to scroll through the following settings:

**Off (default):** The keyless locking feature will be disabled.

**On:** The keyless locking feature will be enabled.

The doors will automatically lock several seconds after you turn the ignition off, remove a keyless access transmitter from the interior of the vehicle, and close all of the doors.

**No Change:** No change will be made to this feature. The current setting will remain.

To select a setting, press the set/reset button while the desired setting is displayed on the DIC.

**Keyless Unlock**

If the vehicle has the keyless access system, this feature allows you to select which doors will automatically unlock when you approach the vehicle with the keyless access transmitter and open the driver's door. See the Keyless Access information for *Remote Keyless Entry (RKE) System Operation (Key Access) on page 1-5* or *Remote Keyless Entry (RKE) System Operation (Keyless Access) on page 1-7* for more information.

To select whether the lights flash when the vehicle is unlocked, see “Remote Door Unlock” earlier in this section.

Press the customization button until Keyless Unlock appears on the DIC display. Press the set/reset button once to access the settings for this feature. Then press the menu up/down button to scroll through the following settings:

**Entry Door Only:** Only the driver's door will automatically unlock when you approach the vehicle with the keyless access transmitter and open the driver's door.

**All Doors (default):** All doors will automatically unlock when you approach the vehicle with the keyless access transmitter and open the driver's door.

**No Change:** No change will be made to this feature. The current setting will remain.

To select a setting, press the set/reset button while the desired setting is displayed on the DIC.

**Chime Volume**

This feature allows you to select the volume level of the chime.

Press the customization button until Chime Volume appears on the DIC display. Press the set/reset button once to access the settings for this feature. Then press the menu up/down button to scroll through the following settings:

**Normal:** The chime volume will be set to a normal level.

**Loud:** The chime volume will be set to a loud level.

**No Change:** No change will be made to this feature. The current setting will remain.

There is no default for chime volume. The volume will stay at the last known setting.

To select a setting, press the set/reset button while the desired setting is displayed on the DIC.

**Easy Exit Recall**

If the vehicle has this feature, it allows you to select your preference for the automatic easy exit seat feature and the remote memory feature. See the “Memory Seat” information under *Power Seat Adjustment on page 2-4* for more information.

Press the customization button until Easy Exit Recall appears on the DIC display. Press the set/reset button once to access the settings for this feature. Then press the menu up/down button to scroll through the following settings:

**Automatic Off (default):** No automatic seat exit recall or remote memory recall will occur. The easy exit seat recall will only occur after pressing the easy exit seat button. The automatic memory recall will only occur after pressing the memory buttons.

**Automatic On (Keyless Access):** If the features are enabled though the Easy Exit Setup menu, the driver's seat will move back, and if the vehicle has the power tilt wheel and telescopic steering feature, the power steering column will move up and forward when the vehicle is parked and the driver door is opened, or after pressing the easy exit seat button.

The automatic easy exit seat movement will only occur one time after the driver door is opened. Also the driver's seat, outside mirrors and steering wheel will automatically move to the stored driving position when the unlock button on the keyless access transmitter is pressed or when the driver door is opened. The steering column will also move on vehicles with the power tilt and telescopic steering feature.

**Automatic On (Key Access):** If the features are enabled though the Easy Exit Setup menu, the driver's seat will move back, and if the vehicle has the power tilt wheel and telescopic steering feature, the power steering column will move up and forward when the key is removed from the ignition or after pressing the easy exit seat button.

The automatic easy exit seat movement will only occur one time after the key is removed from the ignition. If the automatic movement has already occurred, and you put the key back in the ignition and remove it again, the seat and steering column will stay in the original exit position, unless a memory recall took place prior to removing the key again.

Also, the driver's seat, outside mirrors and steering wheel will automatically move to the stored driving position when the unlock button on the Remote Keyless Entry (RKE) transmitter is pressed. The steering column will also move on vehicles with the power tilt and telescopic steering feature.

**No Change:** No change will be made to this feature. The current setting will remain.

To select a setting, press the set/reset button while the desired setting is displayed on the DIC.

**Easy Exit Setup**

If the vehicle has this feature, it allows you to select which areas will recall with the automatic easy exit seat feature. The remote memory recall feature is unaffected by this selection. It also allows you to turn off the automatic easy exit feature. See the “Memory Seat” information under *Power Seat Adjustment on page 2-4* and “Easy Exit Recall” earlier for more information.

Press the customization button until Easy Exit Setup appears on the DIC display. Press the set/reset button once to access the settings for this feature. Then press the menu up/down button to scroll through the following settings:

**Off:** No automatic seat exit will recall.

**Tilt/Telescope:** The steering wheel tilt and steering column telescope features will recall.

**All (default):** The driver's seat and the steering wheel tilt and steering column telescope features will recall, if the vehicle has this option.

**No Change:** No change will be made to this feature. The current setting will remain.

To select a setting, press the set/reset button while the desired setting is displayed on the DIC.

## Exiting the Feature Settings Menu

The feature settings menu will be exited when any of the following occurs:

- The vehicle is no longer in ON/RUN.
- The trip/fuel or vehicle information DIC buttons are pressed.
- The end of the feature settings menu is reached and exited.
- A 40 second time period has elapsed with no selection made.

# OnStar® System

OnStar® uses several innovative technologies and live advisors to provide a wide range of safety, security, navigation, diagnostics, and calling services.

### Automatic Crash Response

In a crash, built in sensors can automatically alert an OnStar advisor who is immediately connected to the vehicle to see if you need help.

## How OnStar Service Works

: This blue button connects you to a specially trained OnStar advisor to verify your account information and to answer questions.

: Push this red emergency button to get priority help from specially trained OnStar emergency advisors.

: Push this button for hands-free, voice-activated calling and to give voice commands for turn-by-turn navigation.

Crisis Assist, Stolen Vehicle Assistance, Vehicle Diagnostics, Remote Door Unlock, Roadside Assistance, Turn-by-Turn Navigation and Hands-Free Calling are available on most vehicles. Not all OnStar services are available on all vehicles. For more information see the OnStar Owner's Guide or visit www.onstar.com (U.S.) or www.onstar.ca (Canada), contact OnStar at 1-888-4-ONSTAR (1-888-466-7827) or

TTY 1-877-248-2080, or press to speak with an OnStar advisor 24 hours a day, 7 days a week.

For a full description of OnStar services and system limitations, see the OnStar Owner's Guide in the glove box.

OnStar service is subject to the OnStar terms and conditions included in the OnStar Subscriber Information.

OnStar service cannot work unless the vehicle is in a place where OnStar has an agreement with a wireless service provider for service in that area. OnStar service also cannot work unless the vehicle is in a place where the wireless service provider OnStar has hired for that area has coverage, network capacity and reception when the service is needed, and technology that is compatible with the OnStar service. Not all services are available everywhere, particularly in remote or enclosed areas, or at all times.

The OnStar system can record and transmit vehicle information. This information is automatically sent to an OnStar call center when is pressed, is pressed, or if the airbags or ACR system deploy. This information usually includes the vehicle's GPS location and, in the event of a crash, additional information regarding the crash that the vehicle was involved in (e.g. the direction from which the vehicle was hit). When the virtual advisor feature of OnStar hands-free calling is used, the vehicle also sends OnStar the vehicle's GPS location so they can provide services where it is located.

Location information about the vehicle is only available if the GPS satellite signals are unobstructed and available.

The vehicle must have a working electrical system, including adequate battery power, for the OnStar equipment to operate. There are other problems OnStar cannot control that may prevent OnStar from providing OnStar service at any particular time or place. Some examples are damage to important parts of the vehicle in a crash, hills, tall buildings, tunnels, weather or wireless phone network congestion.

## OnStar Steering Wheel Controls

This vehicle may have a Talk/Mute button that can be used to interact with OnStar hands-free calling. See *Steering Wheel Controls on page 4-7* for more information.

On some vehicles, the mute button can be used to dial numbers into voice mail systems, or to dial phone extensions. See the OnStar Owner's Guide for more information.

## Your Responsibility

Increase the volume of the radio if the OnStar advisor cannot be heard.

If the light next to the OnStar buttons is red, the system may not be functioning properly. Press and request a vehicle diagnostic. If the light appears clear (no light is appearing), your OnStar subscription has expired and all services have been deactivated. Press to confirm that the OnStar equipment is active.

# Universal Remote System

See *Radio Frequency Statement on page 12-16* for information regarding Part 15 of the Federal Communications Commission (FCC) Rules and RSS-210/211 of Industry and Science Canada.

## Universal Remote System Programming

This system provides a way to replace up to three remote control transmitters used to activate devices such as garage door openers, security systems, and home automation devices.

Do not use the Universal Home Remote with any garage door opener that does not have the stop and reverse feature. This includes any garage door opener model manufactured before April 1, 1982.

Read the instructions completely before attempting to program the Universal Home Remote. Because of the steps involved, it may be helpful to have another person available to assist you with programming the Universal Home Remote.

Keep the original hand-held transmitter for use in other vehicles as well as for future Universal Home Remote programming. It is also recommended that upon the sale of the vehicle, the programmed Universal Home Remote buttons should be erased for security purposes. See “Erasing Universal Home Remote Buttons” later in this section.

When programming a garage door, park outside of the garage. Park directly in line with and facing the garage door opener motor-head or gate motor-head. Be sure that people and objects are clear of the garage door or gate that is being programmed.

It is recommended that a new battery be installed in your hand-held transmitter for quicker and more accurate transmission of the radio-frequency signal.

## Programming the Universal Home Remote System

For questions or help programming the Universal Home Remote System, call 1-800-355-3515 or go to www.homelink.com.

Programming a garage door opener involves time-sensitive actions, so read the entire procedure before starting. Otherwise, the device will time out and the procedure will have to be repeated.

To program up to three devices:

1. From inside the vehicle, press and hold down the two outside buttons at the same time, releasing only when the Universal Home Remote indicator light begins to flash, after 20 seconds. This step will erase the factory settings or all previously programmed buttons. Do not hold down the buttons for longer than 30 seconds and do not repeat this step to program the remaining two Universal Home Remote buttons.
2. Hold the end of your hand-held transmitter about 3 to 8 cm (1 to 3 inches) away from the Universal Home Remote buttons while keeping the indicator light in view. The hand-held transmitter was supplied by the manufacturer of your garage door opener receiver (motor head unit).

3. At the same time, press and hold both the Universal Home Remote button to be used to control the garage door and the hand-held transmitter button. Do not release the Universal Home Remote button or the hand-held transmitter button until Step 4 has been completed.

   Some entry gates and garage door openers may require substitution of Step 3 with the procedure noted in “Gate Operator and Canadian Programming” later in this section.

4. The indicator light on the Universal Home Remote will flash slowly at first and then rapidly after Universal Home Remote successfully receives the frequency signal from the hand-held transmitter. Release both buttons.

5. Press and hold the newly-trained Universal Home Remote button and observe the indicator light.

   - If the indicator light stays on continuously, the programming is complete and the garage door should move when the Universal Home Remote button is pressed and released. There is no need to continue programming Steps 6 through 8.

   - If the Universal Home Remote indicator light blinks rapidly for two seconds and then turns to a constant light, continue with the programming Steps 6 through 8.

     It may be helpful to have another person assist with the remaining steps.

6. After Steps 1 through 5 have been completed, locate inside the garage the garage door opener receiver (motor-head unit). Locate the “Learn” or “Smart” button. The name and color of the button may vary by manufacturer.
7. Firmly press and release the “Learn” or “Smart” button. After you press this button, you will have 30 seconds to complete Step 8.
8. Immediately return to the vehicle. Firmly press and hold the Universal Home Remote button, selected in Step 3 to control the garage door, for two seconds, and then release it. If the garage door does not move, press and hold the same button a second time for two seconds, and then release it. Again, if the door does not move, press and hold the same button a third time for two seconds, and then release.

   The Universal Home Remote should now activate the garage door.

To program the remaining two Universal Home Remote buttons, begin with Step 2 of “Programming the Universal Home Remote System.” Do not repeat Step 1, as this will erase all previous programming from the Universal Home Remote buttons.

### Gate Operator and Canadian Programming

If you have questions or need help programming the Universal Home Remote System, call 1-800-355-3515 or go to www.homelink.com.

Canadian radio-frequency laws require transmitter signals to time out or quit after several seconds of transmission. This may not be long enough for Universal Home Remote to pick up the signal during programming. Similarly, some U.S. gate operators are manufactured to time out in the same manner.

If you live in Canada, or you are having difficulty programming a gate operator or garage door opener by using the “Programming Universal Home Remote” procedures, regardless of where you live, replace Step 3 under “Programming Universal Home Remote” with the following:

Continue to press and hold the Universal Home Remote button while you press and release every two seconds (cycle) the hand-held transmitter button until the frequency signal has been successfully accepted by the Universal Home Remote. The Universal Home Remote indicator light will flash slowly at first and then rapidly. Proceed with Step 4 under “Programming Universal Home Remote” to complete the training procedure.

## Universal Remote System Operation

### Using Universal Remote

Press and hold the appropriate Universal Remote button for at least half of a second. The indicator light will come on while the signal is being transmitted.

## Erasing Universal Remote Buttons

All programmed buttons should be erased when the vehicle is sold or the lease ends.

To erase all programmed buttons on the Universal Remote device:

1. Press and hold down the two outside buttons until the indicator light begins to flash, after 20 seconds.
2. Release both buttons.

## Reprogramming a Single Universal Remote Button

To reprogram any of the three Universal Remote buttons, repeat the programming instructions earlier in this section, beginning with Step 2.

For help or information on the Universal Home Remote System, call the customer assistance phone number under *Customer Assistance Offices on page 12-3*.

# Lighting

**Exterior Lighting**
Exterior Lamp Controls . . . . . 5-1
Exterior Lamps Off Reminder . . . . . 5-2
Headlamp High/Low-Beam Changer . . . . . 5-2
Flash-to-Pass . . . . . 5-2
Daytime Running Lamps (DRL) . . . . . 5-3
Adaptive Forward Lighting (AFL) . . . . . 5-4
Hazard Warning Flashers . . . . . 5-4
Turn and Lane-Change Signals . . . . . 5-4
Fog Lamps . . . . . 5-5

**Interior Lighting**
Instrument Panel Illumination Control . . . . . 5-5
Reading Lamps . . . . . 5-5

**Lighting Features**
Entry Lighting . . . . . 5-6
Parade Dimming . . . . . 5-6
Battery Load Management . . . . 5-6
Battery Power Protection . . . . . 5-7
Exterior Lighting Battery Saver . . . . . 5-7

# Exterior Lighting

## Exterior Lamp Controls

The exterior lamp control is located towards the end of the turn signal/lane change lever.

☼ **(Exterior Lamp Control):** Turn the band with this symbol on it to operate the exterior lamps.

The exterior lamp control has four positions:

⏻ **(Off):** Turns off all lamps, except the Daytime Running Lamps (DRL).

**AUTO (Automatic):** Turns the headlamps on and off automatically, depending upon how much light is available outside of the vehicle.

**(Parking Lamps):** Turns on the parking lamps together with the following:

- Sidemarker Lamps
- Taillamps
- License Plate Lamps
- Instrument Panel Lights

**(Headlamps):** Turns on the headlamps, together with the previously listed lamps and lights.

## Exterior Lamps Off Reminder

A warning chime will sound if the exterior lamp control is left on in either the headlamp or parking lamp position and the driver's door is opened with the ignition off.

## Headlamp High/ Low-Beam Changer

Push the turn signal/lane change lever away from you to turn the high beams on. Pull the lever towards you and then release it to return to low beams.

If the vehicle is turned off while the high beams are on, they will come on the next time the vehicle is started.

This indicator light turns on in the instrument panel cluster when the high beam headlamps are on.

## Flash-to-Pass

This feature allows the high-beam headlamps to be used to signal the driver in front of you that you want to pass.

Pull and hold the turn signal/lane change lever toward you to use this feature. When this is done the following will occur:

- If the headlamps are off, in low-beam or in Daytime Running Lamps (DRL) mode, the high-beam headlamps will turn on. They will stay on as long as the lever is held there. Release the lever to turn them off.
- If the headlamps are already in high-beam mode, they will remain on high-beam.

## Daytime Running Lamps (DRL)

Daytime Running Lamps (DRL) can make it easier for others to see the front of your vehicle during the day. Fully functional daytime running lamps are required on all vehicles first sold in Canada.

The DRL system will make either the reduced intensity low-beam headlamps or dedicated DRL's come on when the following conditions are met:

- It is still daylight and the ignition is in ON/RUN or START.
- The exterior lamp control is in off or AUTO and the headlamps are off.
- The automatic transmission is not in P (Park).

When DRL's are on, only the reduced intensity low-beam headlamps or dedicated DRL's will be on. The other exterior lamps and the instrument panel cluster will not be on.

When the exterior lamp control is in AUTO and it is dark enough outside, the DRL turns off and the low-beam headlamps will turn on. When it is bright enough outside, the low-beam headlamps will go off, and the DRL will turn back on. If the vehicle is started in a dark garage, the automatic headlamp system comes on immediately. Once the vehicle leaves the garage, it takes about one minute for the automatic headlamp system to change to DRL if it is light outside. During that delay, the instrument panel cluster may not be as bright as usual.

Make sure the instrument panel brightness lever is in the full bright position. See *Instrument Panel Illumination Control on page 5-5*.

Turning the exterior lamp control to off or to the low-beam headlamp position will turn off the DRL. If the parking lamps or the fog lamps were turned on instead, the DRL will still turn off.

This will work regardless of gear position and whether or not the parking brake is set.

## Adaptive Forward Lighting (AFL)

The Adaptive Forward Lighting System (AFL) pivots the headlamps horizontally to provide greater road illumination while turning. To enable AFL, set the exterior lamp switch on the multifunction lever to the AUTO position. Moving the switch out of the AUTO position will deactivate the system. AFL will operate when the vehicle speed is greater than 2 mph (3 km/h). AFL will not operate when the transmission is in R (Reverse). AFL is not immediately operable after starting the vehicle; driving a short distance is required to calibrate the AFL. See *Exterior Lamp Controls on page 5-1*.

## Hazard Warning Flashers

**Hazard Warning Flasher:** Press this button located on the instrument panel near the audio system, to make the front and rear turn signal lamps flash on and off. This warns others that you are having trouble. Press again to turn the flashers off.

## Turn and Lane-Change Signals

An arrow on the instrument panel cluster flashes in the direction of the turn or lane change.

Move the lever all the way up or down to signal a turn.

Raise or lower the lever until the arrow starts to flash to signal a lane change. Hold it briefly until the lane change is complete. The arrow will automatically flash three times.

The lever returns to its starting position when it is released.

If after signaling a turn or lane change the arrow flashes rapidly or does not come on, a signal bulb may be burned out.

Have the bulbs replaced. If the bulb is not burned out, check the fuse. See *Fuses and Circuit Breakers on page 9-41*.

### Turn Signal On Chime

If the turn signal is left on for about 1.6 km (1 mile), a warning chime will sound and the TURN SIGNAL ON message will appear on the Driver Information Center (DIC) display. See “Turn Signal On” under *Driver Information Center (DIC) on page 4-31* for more information.

## Fog Lamps

Use the fog lamps for better vision in foggy or misty conditions. The fog lamp control is located on the turn signal/multifunction lever.

**(Fog Lamps):** Turn the fog lamp band on the lever up to and release it, to turn the fog lamps on or off. The band will return to its original position.

The parking lamps must be on for the fog lamps to work.

If the high-beam headlamps are turned on, the fog lamps will also turn off. They will turn back on again when you change back to low-beam headlamps.

Some localities have laws that require the headlamps to be on along with the fog lamps.

# Interior Lighting

## Instrument Panel Illumination Control

The instrument panel brightness knob is located on the instrument panel to the left of the steering column.

**(Instrument Panel Brightness):** Turn the knob clockwise or counterclockwise to brighten or dim the lights. Turn the knob completely clockwise to turn on the interior lamps.

## Reading Lamps

The reading lamps are located on the overhead console. These lamps come on automatically when any door is opened.

For manual operation, press the button next to each lamp to turn it on or off.

If the reading lamps are left on, they automatically shut off 10 minutes after the ignition has been turned off.

# Lighting Features

## Entry Lighting

The entry lighting system turns on the reading and dome lamps and the backlighting to the exterior lamp control, when a door is opened or if the transmitter unlock button is pressed. If activated by the transmitter, the lighting stays on for about 25 seconds. The entry lighting system uses the light sensor on the instrument panel; so it must be dark outside in order for the lamps to turn on. The lamps turn off about 25 seconds after the last door is closed. They dim then turn off if the ignition key is turned to ON/RUN. They immediately turn off if the power locks are used.

## Parade Dimming

This feature does not let the instrument panel backlight dim during daylight hours while the key is in the ignition and the headlamps are on. Parade dimming automatically works with the light sensor, located on top of the dashboard. If it is dark enough outside and the parking lamps are on, the backlight on the instrument panel can be adjusted by turning the instrument panel brightness knob clockwise or counterclockwise to brighten or dim the lighting. See *Instrument Panel Illumination Control on page 5-5*.

## Battery Load Management

The vehicle has Electric Power Management (EPM) that estimates the battery's temperature and state of charge. It then adjusts the voltage for best performance and extended life of the battery.

When the battery's state of charge is low, the voltage is raised slightly to quickly bring the charge back up. When the state of charge is high, the voltage is lowered slightly to prevent overcharging. If the vehicle has a voltmeter gage or a voltage display on the Driver Information Center (DIC), you may see the voltage move up or down. This is normal. If there is a problem, an alert will be displayed.

The battery can be discharged at idle if the electrical loads are very high. This is true for all vehicles.

This is because the generator (alternator) may not be spinning fast enough at idle to produce all the power that is needed for very high electrical loads.

A high electrical load occurs when several of the following are on, such as: headlamps, high beams, fog lamps, rear window defogger, climate control fan at high speed, heated seats, engine cooling fans, trailer loads, and loads plugged into accessory power outlets.

EPM works to prevent excessive discharge of the battery. It does this by balancing the generator's output and the vehicle's electrical needs. It can increase engine idle speed to generate more power, whenever needed. It can temporarily reduce the power demands of some accessories.

Normally, these actions occur in steps or levels, without being noticeable. In rare cases at the highest levels of corrective action, this action may be noticeable to the driver. If so, a Driver Information Center (DIC) message might be displayed, such as BATTERY SAVER ACTIVE, BATTERY VOLTAGE LOW, or LOW BATTERY. If one of these messages displays, it is recommended that the driver reduce the electrical loads as much as possible. See *Driver Information Center (DIC) on page 4-31*.

## Battery Power Protection

This feature helps to prevent battery drain if accessory lamps are left on. If accessory lamps such as the vanity mirror, cargo, reading, console, or glove box are left on, they automatically time-out after about 20 minutes. To reset the battery protection, all of the above lamps must be turned off or the ignition must be in the ACC/ACCESSORY position.

## Exterior Lighting Battery Saver

The exterior lamps turn off about 10 minutes after the ignition is turned to LOCK/OFF, if the parking lamps or headlamps have been left on. This protects against draining the battery. The battery saver does not work if the headlamps are turned on after the ignition is turned to LOCK/OFF.

To keep the lamps on for more than 10 minutes, turn the lamps back on with the exterior lamp control.

## ✍ NOTES

# Infotainment System

**Introduction**
Introduction . . . . . 6-1
Theft-Deterrent Feature . . . . . 6-2
Operation . . . . . 6-2

**Radio**
AM-FM Radio . . . . . 6-9
Satellite Radio . . . . . 6-11
Radio Reception . . . . . 6-15
Diversity Antenna System . . . 6-15

**Audio Players**
CD Player . . . . . 6-16
CD/DVD Player . . . . . 6-19
MP3 . . . . . 6-23
Hard Drive Device (HDD) . . . . 6-27
Auxiliary Devices . . . . . 6-35

**Phone**
Bluetooth . . . . . 6-37

## Introduction

Read the following pages to become familiar with the audio system's features.

**⚠ WARNING**

Taking your eyes off the road for extended periods could cause a crash resulting in injury or death to you or others. Do not give extended attention to entertainment tasks while driving.

This system provides access to many audio and non audio listings.

To minimize taking your eyes off the road while driving, do the following while the vehicle is parked:

- Become familiar with the operation and controls of the audio system.
- Set up the tone, speaker adjustments, and preset radio stations.

For more information, see *Defensive Driving on page 8-3*.

***Notice:*** **Contact your dealer/retailer before adding any equipment.**

**Adding audio or communication equipment could interfere with the operation of the vehicle's engine, radio, or other systems, and could damage them. Follow federal rules covering mobile radio and telephone equipment.**

The vehicle has Retained Accessory Power (RAP). With RAP, the audio system can be played even after the ignition is turned off. See *Retained Accessory Power (RAP) on page 8-19* for more information.

### Navigation/Radio System

For vehicles with a navigation radio system, see the separate Navigation System manual.

## Theft-Deterrent Feature

THEFTLOCK® is designed to discourage theft of the vehicle's radio by learning a portion of the Vehicle Identification Number (VIN). The radio does not operate if it is stolen or moved to a different vehicle.

## Operation

**Full View of Radio with CD shown, Radio with Six-Disc CD similar**

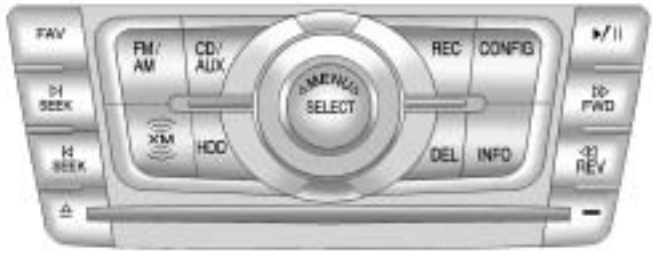


**Partial View of Radio with DVD Audio, Hard Drive Device (HDD), and USB**

The vehicle may have one of these radios as its audio system.

If the vehicle does not have one of these radio systems, it may have a navigation radio system. See the Navigation System manual for more information on the navigation audio system.

## Turning the System On or Off

**VOL ⏻ (Volume/Power):** Press to turn the system on and off.

## Volume Control

**VOL ⏻ (Volume/Power):** Turn clockwise or counterclockwise to increase or decrease the volume.

## Setting the Tone (Bass/Midrange/Treble)

**BASS/MID/TREB (Bass, Midrange, or Treble):** To adjust bass, midrange, or treble:

1. Press the TUNE/TONE knob until the tone control tabs display.
2. Continue pressing the TUNE/TONE knob, or press the softkey under the desired tab to highlight the desired tone setting.
3. To increase the highlighted setting, do one of the following:
   - Turn the TUNE/TONE knob clockwise.
   - Press the ▷▷ FWD button.
   - Press the ⊳| SEEK button.

4. To decrease the highlighted setting, do one of the following:
   - Turn the TUNE/TONE knob counterclockwise.
   - Press the ◁◁ REV button.
   - Press the ⏮ SEEK button.

To quickly adjust bass, midrange, or treble to the middle position, press the softkey under the BASS, MID, or TREB tab for more than two seconds. A beep may sound and the level adjusts to the middle position.

To quickly adjust all tone and speaker controls to the middle position, press the TUNE/TONE knob for more than two seconds.

## Adjusting the Speakers (Balance/Fade)

**BAL/FADE (Balance/Fade):** To adjust balance or fade:

1. Press the TUNE/TONE knob until the speaker control tabs display.
2. Continue pressing the TUNE/TONE knob, or press the softkey under the desired tab to highlight the desired tone setting.
3. To increase the highlighted setting, do one of the following:
   - Turn the TUNE/TONE knob clockwise.
   - Press the ▷▷ FWD button.
   - Press the ⏭ SEEK button.
4. To decrease the highlighted setting, do one of the following:
   - Turn the TUNE/TONE knob counterclockwise.
   - Press the ◁◁ REV button.
   - Press the ⏮ SEEK button.

To quickly adjust balance or fade to the middle position, press the pushbutton positioned under the BAL or FADE label for more than two seconds. A beep may sound and the level adjusts to the middle position.

To quickly adjust all speaker and tone controls to the middle position, press the TUNE/TONE knob for more than two seconds.

## Digital Signal Processing (DSP)

If the radio has this feature, it has either a Bose® sound system or a Bose® 5.1 Cabin Surround® sound system. DSP is used to provide a choice of different listening experiences.

To choose a DSP setting:

1. Press the TUNE/TONE knob to display the tone/speaker, and DSP labels.
2. Press the pushbutton located under the DSP label.
3. Press the Back button to exit the display. To return to the original display, repeatedly press the Back button or wait for the display to time out.

The DSP settings available are:

- **Normal**: Select for normal mode, this provides the best sound quality for all seating positions.
- **Driver**: Select to adjust the audio for the driver to receive the best possible sound quality.
- **Rear**: Select to adjust the audio for the rear seat passengers to receive the best possible sound quality.
- **Centerpoint®**: Select to enable Bose® Centerpoint®. Centerpoint® produces a full vehicle surround sound listening experience from CD, non-5.1 surround sound DVD-A, MP3/WMA, AUX (auxiliary) input, or XM digital audio source and will deliver five independent audio channels from conventional two channel stereo recording.

  This feature is not available in AM/FM radio mode.

  If the vehicle is equipped with the Bose® 5.1 Cabin Surround® sound system, the radio can support the playback of 5.1 Surround Sound DVD-A discs or DTS 5.1 Surround Sound CD discs. When a 5.1 Surround Sound formatted disc is playing, DSP options available are:

  - 5.1 Surround + Normal: Best for all seating positions.
  - 5.1 Surround + Rear: Best for the rear seating position.

## System Settings

**CONFIG:** Press to adjust the number of favorites pages, auto volume, XM (if equipped), and HDD (if available) settings. The FAV, AUTO VOL, XM (if equipped), HDD (if available), and Back tabs display. Press the softkey located under the Back tab to go back to the previous display.

### Configuring the Number of Favorite Pages

The number of favorites pages can be setup using the CONFIG button. To setup the number of favorites pages:

1. Press the CONFIG button to display the radio setup menu.
2. Press the softkey located below the FAV tab.
3. Select the desired number of favorites pages by pressing the softkey located below the displayed page numbers.
4. Press the FAV button, or let the menu time out, to return to the original main radio screen showing the radio station frequency tabs and to begin the process of programming favorites for the chosen number of pages.

**Speed Compensated Volume (SCV)**

A Radio with SCV automatically adjusts the sound to compensate for road and wind noise as the vehicle speeds up or slows down, so that the volume is consistent while driving. To activate SCV:

1. Set the radio volume to the desired level.
2. Press the CONFIG button to display the radio setup menu.
3. Press the softkey under the AUTO VOL tab on the radio display.
4. Press the softkey under the desired Speed Compensated Volume setting (OFF, Low, Med, or High) to select the level of radio volume compensation. The display times out after approximately 10 seconds. Each higher setting allows for more radio volume compensation at faster vehicle speeds.

**Noise Compensation Technology**

If the vehicle has the Radio with DVD Audio, HDD, and USB, it has Bose AudioPilot® noise compensation technology.

When turned on, AudioPilot® continuously adjusts the audio system equalization, to compensate for background noise.

To activate AudioPilot®:

1. Press the CONFIG button to display the radio setup menu.
2. Press the pushbutton under the AUTO VOL label on the radio display.
3. Press either the On or Off label located under the AUTO VOL display to turn this feature on or off. The display times out after approximately 10 seconds.

This feature is most effective at lower radio volume settings where background noise can affect how the music being played through the vehicle's audio system is heard. At higher volume settings, where the music is much louder than the background noise, there may be little or no adjustments by AudioPilot®. For additional information on AudioPilot®, visit www.bose.com/audiopilot.

## Radio Message

**Locked:** Displays when the THEFTLOCK® system has locked up the infotainment system. Take the vehicle to your dealer/retailer for service.

If any error occurs repeatedly or if an error cannot be corrected, contact your dealer/retailer.

## Other Information

The radio with DVD Audio, HDD, and USB utilizes Gracenote® technology to provide Song, Artist, Album, and Genre information for many CD audio discs and is capable of playing DVD-A and DTS encoded discs, (DTS and DTS Digital Surround are registered trademarks of Digital Theater Systems, Inc.).

Dolby and the double-D symbol are trademarks of Dolby Laboratories. Manufactured under license from Dolby Laboratories.

**Gracenote® Database**

Gracenote Music Recognition Service, Music recognition technology, and related data are provided by Gracenote®. Gracenote is the industry standard in music recognition technology and related content delivery. For more information, visit www.gracenote.com.

CD and music-related data from Gracenote, Inc., copyright © 2000-2007 Gracenote. Gracenote Software, copyright © 2000-2007 Gracenote. This product and service may practice one or more of the following U.S. Patents: #5,987,525; #6,061,680; #6,154,773, #6,161,132, #6,230,192, #6,230,207, #6,240,459, #6,330,593, and other patents issued or pending.

Some services supplied under license from Open Globe, Inc. for U.S. Patent: #6,304,523.

Gracenote and CDDB are registered trademarks of Gracenote. The Gracenote logo and logotype, and the “Powered by Gracenote” logo are trademarks of Gracenote.

If you require more information regarding the use of the Gracenote Service, visit: www.gracenote.com/corporate.

For the data provided by Gracenote® Music Recognition Service, the content is not necessarily guaranteed 100%.

Regarding the use of Gracenote Music Recognition Service. When this product is used, it is necessary to agree to the following articles.

This application or device contains software from Gracenote, Inc. of Emeryville, California (“Gracenote”).

The software from Gracenote (the “Gracenote Software”) enables this application to perform disc and/or file identification and obtain music-related information, including name, artist, track, and title information (“Gracenote Data”) from online servers or embedded databases (collectively, “Gracenote Servers”) and to perform other functions.

You may use Gracenote Data only by means of the intended End-User functions of this application or device. You agree that you will use Gracenote Data, the Gracenote Software, and Gracenote Servers for your own personal non-commercial use only. You agree not to assign, copy, transfer or transmit the Gracenote Software or any Gracenote Data to any third party.

YOU AGREE NOT TO USE OR EXPLOIT GRACENOTE DATA, THE GRACENOTE SOFTWARE, OR GRACENOTE SERVERS, EXCEPT AS EXPRESSLY PERMITTED HEREIN.

You agree that your non-exclusive license to use the Gracenote Data, the Gracenote Software, and Gracenote Servers will terminate if you violate these restrictions. If your license terminates, you agree to cease any and all use of the Gracenote Data, the Gracenote Software, and Gracenote Servers.

Gracenote reserves all rights in Gracenote Data, the Gracenote Software, and the Gracenote Servers, including all ownership rights.

Under no circumstances will Gracenote become liable for any payment to you for any information that you provide. You agree that Gracenote, Inc. may enforce its rights under this Agreement against you directly in its own name.

The Gracenote service uses a unique identifier to track queries for statistical purposes.

The purpose of a randomly assigned numeric identifier is to allow the Gracenote service to count queries without knowing anything about who you are. For more information, see the web page for the Gracenote Privacy Policy for the Gracenote service.

The Gracenote Software and each item of Gracenote Data are licensed to you “AS IS.” Gracenote makes no representations or warranties, express or implied, regarding the accuracy of any Gracenote Data from in the Gracenote Servers.

Gracenote reserves the right to delete data from the Gracenote Servers or to change data categories for any cause that Gracenote deems sufficient.

No warranty is made that the Gracenote Software or Gracenote Servers are error-free or that functioning of Gracenote Software or Gracenote Servers will be uninterrupted.

Gracenote is not obligated to provide you with new enhanced or additional data types or categories that Gracenote may provide in the future and is free to discontinue its services at any time.

GRACENOTE DISCLAIMS ALL WARRANTIES EXPRESS OR IMPLIED, INCLUDING, BUT NOT LIMITED TO, IMPLIED WARRANTIES OF MERCHANTABILITY, FITNESS FOR A PARTICULAR PURPOSE, TITLE, AND NON-INFRINGEMENT. GRACENOTE DOES NOT WARRANT THE RESULTS THAT WILL BE OBTAINED BY YOUR USE OF THE GRACENOTE SOFTWARE OR ANY GRACENOTE SERVER.
IN NO CASE WILL GRACENOTE BE LIABLE FOR ANY CONSEQUENTIAL OR INCIDENTAL DAMAGES OR FOR ANY LOST PROFITS OR LOST REVENUES.

# Radio

## AM-FM Radio

### Control Buttons

The buttons used to control the radio are:

**FM/AM:** Press to choose between FM and AM.

**:** Press to choose the XM™ band (if equipped).

**TUNE:** Turn to search for stations.

**MENU/SELECT:** Turn clockwise or counterclockwise to scroll through the station list. Press the MENU/SELECT knob to select the desired station.

**INFO:** Press to display additional information that may be available for the current song. When information is not available, No Information displays.

⊳| **SEEK/** |⊲ **SEEK:** Press to go to the previous or to the next radio station and stay there.

The radio only tunes into stations with a strong signal that are in the selected band.

**FAV:** Press to open the favorites list.

**Softkeys:** Press to select preset stations.

### Radio Data System (RDS)

The audio system has a Radio Data System (RDS) feature. RDS is available for use only on FM stations that broadcast RDS information. This system relies upon receiving specific information from these stations and only works when the information is available. While the radio is tuned to an FM-RDS station, the station name or call letters display. In rare cases, a radio station can broadcast incorrect information that causes the radio features to work improperly. If this happens, contact the radio station.

### Selecting a Station

#### Seek Tuning

If the radio station is not known:

Briefly press ⊳| SEEK or |⊲ SEEK. The radio automatically searches for the next receivable station. If the radio does not find a station, it switches automatically to a more sensitive search level. If it still does not find a station, the frequency that was last active begins to play.

If the radio station is known:

Press and hold ⊳| SEEK or |⊲ SEEK until the desired station on the pop-up frequency display is almost reached, then release the button.

#### Manual Tuning

Turn the TUNE knob to select the frequency on the pop-up display.

## Storing a Radio Station as a Favorite

Drivers are encouraged to set up their radio station favorites while the vehicle is stopped. Tune to favorite stations using the presets, favorites button, and steering wheel controls, if the vehicle has this feature.

**FAV (Favorites):** A maximum of 36 stations can be programmed as favorites using the six softkeys below the radio station frequency tabs on the display and by using the radio favorites page button (FAV button). Press the FAV button to go through up to six pages of favorites, each having six favorite stations available per page. Each page of favorites can contain any combination of AM, FM, or XM stations.

To store a station as a favorite, perform the following steps:

1. Tune to the desired radio station.
2. Press the FAV button to display the page where the station is to be stored.
3. Press and hold one of the six softkeys until a beep sounds. When that softkey is pressed and released, the radio recalls the station that was set.
4. Repeat the steps for each radio station to be stored as a favorite.

The number of favorites pages can be setup using the CONFIG button. To setup the number of favorites pages, perform the following steps:

1. Press the CONFIG button to display the radio setup menu.
2. Press the softkey located below the FAV label.
3. Select the desired number of favorites pages by pressing the softkey located below the displayed page numbers.
4. Press the FAV button, or let the menu time out, to return to the original main radio screen showing the radio station frequency labels and to begin the process of programming favorites for the chosen number of pages.

## Time-shifting — Pause and Rewind Live FM/AM

The Radio with DVD Audio, HDD, and USB has the ability to rewind 60 minutes of FM/AM and XM (if equipped) content. While listening to the radio, the content from the current station is always being buffered to the HDD.

Press ▶ / ❚❚ (play/pause) To pause the radio. The radio display will show the Time Shift buffer status bar. The status bar shows the amount of content that is stored in the buffer and the current pause point.

To resume playback from the current pause point, press ▶ / ❚❚ again. The radio will no longer be playing “live” radio. Instead, time shifted content is being played from the buffer. When the radio is playing time shifted content from the buffer, a buffer status bar shows below the station number on the left side of screen.

Press and hold the REV or FWD buttons to rewind or fast forward through the time shift buffer. Hold FWD until the end of the currently recorded buffer to resume “live” radio playback. With “live” radio playing, the radio display will no longer show the buffer bar below the station number.

On AM/FM, press the REV or FWD button multiple times to rewind or fast forward. Each press will rewind or fast forward 30 seconds of content. On XM, press the REV or FWD button multiple time to jump to the previous or next song or commercial.

When the radio station is changed, the buffer is cleared and automatically restarted for the current station. You cannot rewind to content from a previously tuned station.

Time shifting of AM/FM or XM is not available while recording or while other sources of playback are selected.

**Pausing AM/FM or XM™ (if equipped) with the Vehicle Turned Off**

If AM/FM or XM is paused when the vehicle is turned off, the radio will continue to buffer the current radio station for up to one hour. If the vehicle is turned back on within one hour, the radio will automatically resume playback from the pause point.

## Satellite Radio

Vehicles with an XM™ Satellite Radio tuner and a valid XM Satellite Radio subscription can receive XM programming.

### XM Satellite Radio Service

XM is a satellite radio service that is based in the 48 contiguous United States and 10 Canadian provinces. XM Satellite Radio has a wide variety of programming and commercial-free music, coast-to-coast, and in digital-quality sound. A service fee is required to receive the XM service. For more information, contact XM at www.xmradio.com or call 1-800-929-2100 in the U.S. and www.xmradio.ca or call 1-877-438-9677 in Canada.

## Control Buttons

The buttons used to control the radio are:

**:** Press to choose the XM™ band (if equipped).

**TUNE:** Turn to search for stations.

**MENU/SELECT:** Turn clockwise or counterclockwise to scroll through the category list. Press the MENU/SELECT knob to select the desired category.

**INFO:** Press to display additional information that may be available for the current song. When information is not available, No Information displays.

**SEEK/ SEEK:** Press to go to the previous or to the next radio station.

**FAV:** Press to open the favorites list.

**Softkeys:** Press to select preset stations.

## XM Categories

XM stations are organized in categories.

### Removing or Adding Categories

1. Press the CONFIG button.
2. Press the softkey below the XM tab.
3. Turn the TUNE/TONE knob or the MENU/SELECT knob to scroll through the available categories.
4. Press any softkey below the Remove or Add tab to add or remove the displayed category.
5. Press any softkey below the Restore All tab to restore all removed categories.

## Selecting an XM Station

### Seek Tuning

Press SEEK or SEEK to go to the next or previous station.

### Selecting a Station by Station List

The infotainment system can list all XM stations.

To select a station from the station list:

1. Turn the TUNE/TONE knob and highlight the desired station.
2. Press the TUNE/TONE knob to select the station.

### Selecting a Station by Category

The infotainment system can list XM stations by genre.

To select a station from the category list:

1. Turn the MENU/SELECT knob and highlight the desired genre, then press the MENU/SELECT knob to select the genre.
2. Turn the MENU/SELECT knob and highlight the desired station, then press the MENU/SELECT knob to select the station.

: Press to switch to XM mode. Turn the TUNE/TONE knob to select from a list of available XM stations. Turn the TUNE/TONE knob until the desired station is highlighted. Press the TUNE/TONE knob to select the highlighted station. The highlighted station will also automatically be selected if the TUNE/TONE is released and no longer turned.

## Storing an XM Station as a Favorite

Drivers are encouraged to set up their radio station favorites while the vehicle is stopped. Tune to favorite stations using the presets, favorites button, and steering wheel controls, if the vehicle has this feature.

**FAV (Favorites):** A maximum of 36 stations can be programmed as favorites using the six softkeys below the radio station frequency tabs on the display and by using the radio favorites page button (FAV button). Press the FAV button to go through up to six pages of favorites, each having six favorite stations available per page. Each page of favorites can contain any combination of AM, FM, or XM stations.

To store a station as a favorite, perform the following steps:

1. Tune to the desired radio station.
2. Press the FAV button to display the page where the station is to be stored.
3. Press and hold one of the six softkeys until a beep sounds. When that softkey is pressed and released, the radio recalls the station that was set.
4. Repeat the steps for each radio station to be stored as a favorite.

The number of favorites pages can be setup using the CONFIG button. To setup the number of favorites pages, perform the following steps:

1. Press the CONFIG button to display the radio setup menu.
2. Press the softkey located below the FAV label.
3. Select the desired number of favorites pages by pressing the softkey located below the displayed page numbers.
4. Press the FAV button, or let the menu time out, to return to the original main radio screen showing the radio station frequency labels and to begin the process of programming favorites for the chosen number of pages.

## XM Messages

**XL (Explicit Language Channels):** These channels, or any others, can be blocked at a customer's request, by calling 1-800-852-XMXM (9696).

**XM Updating:** The encryption code in the receiver is being updated, and no action is required. This process should take no longer than 30 seconds.

**No XM Signal:** The system is functioning correctly, but the vehicle is in a location that is blocking the XM™ signal. When the vehicle is moved into an open area, the signal should return.

**Loading XM:** The audio system is acquiring and processing audio and text data. No action is needed. This message should disappear shortly.

**Channel Off Air:** This channel is not currently in service. Tune in to another channel.

**Channel Unauth:** This channel is blocked or cannot be received with your XM Subscription package.

**Channel Unavail:** This previously assigned channel is no longer assigned. Tune to another station. If this station was one of the presets, choose another station for that preset button.

**No Artist Info:** No artist information is available at this time on this channel. The system is working properly.

**No Title Info:** No song title information is available at this time on this channel. The system is working properly.

**No CAT Info:** No category information is available at this time on this channel. The system is working properly.

**No Information:** No text or informational messages are available at this time on this channel. The system is working properly.

**CAT Not Found:** There are no channels available for the selected category. The system is working properly.

**XM Theftlocked:** The XM receiver in the vehicle could have previously been in another vehicle. For security purposes, XM receivers cannot be swapped between vehicles. If this message is received after having the vehicle serviced, check with your dealer/retailer.

**XM Radio ID:** If tuned to channel 0, this message alternates with the XM™ Radio 8 digit radio ID label. This label is needed to activate the service.

**Unknown:** If this message is received when tuned to channel 0, there could be a receiver fault. Consult with your dealer/retailer.

**Check XM Receivr:** If this message does not clear within a short period of time, the receiver could have a fault. Consult with your dealer/retailer.

**XM Not Available:** If this message does not clear within a short period of time, the receiver could have a fault. Consult with your dealer/retailer.

## Radio Reception

Frequency interference and static can occur during normal radio reception if items such as cell phone chargers, vehicle convenience accessories, and external electronic devices are plugged into the accessory power outlet. If there is interference or static, unplug the item from the accessory power outlet.

### FM

FM signals only reach about 16 to 65 km (10 to 40 miles). Although the radio has a built-in electronic circuit that automatically works to reduce interference, some static can occur, especially around tall buildings or hills, causing the sound to fade in and out.

### AM

The range for most AM stations is greater than for FM, especially at night. The longer range can cause station frequencies to interfere with each other. For better radio reception, most AM radio stations boost the power levels during the day, and then reduce these levels during the night. Static can also occur when things like storms and power lines interfere with radio reception. When this happens, try reducing the treble on the radio.

### XM™ Satellite Radio Service

XM Satellite Radio Service gives digital radio reception from coast-to-coast in the 48 contiguous United States, and in Canada. Just as with FM, tall buildings or hills can interfere with satellite radio signals, causing the sound to fade in and out. In addition, traveling or standing under heavy foliage, bridges, garages, or tunnels may cause loss of the XM signal for a period of time.

### Cellular Phone Usage

Cellular phone usage may cause interference with the vehicle's radio. This interference may occur when making or receiving phone calls, charging the phone's battery, or simply having the phone on. This interference can cause an increased level of static while listening to the radio. If static is received while listening to the radio, unplug the cellular phone and turn it off.

## Diversity Antenna System

The multi-band antenna is located on the roof of the vehicle. The antenna is used for the AM/FM radio, OnStar, the XM Satellite Radio Service System, and GPS; if the vehicle has these features. Keep the antenna clear of obstructions for clear reception. If the vehicle has a sunroof, the performance of the AM/FM radio, OnStar, XM system, and GPS may be affected if the sunroof is open.

# Audio Players

## CD Player

The Infotainment system's CD player can play audio CDs and MP3 CDs.

CDs that are 8 cm (3 in.) in diameter will not work in the CD player.

### Care of CDs

If playing a CD, the sound quality can be reduced due to disc quality, the method of recording, the quality of the music that has been recorded, and the way the disc has been handled. Handle discs carefully. Store CDs in their original cases or other protective cases and away from direct sunlight and dust. The CD player scans the bottom surface of the disc. If the surface of a disc is damaged, such as cracked, broken, or scratched, the disc may not play properly or not at all. Do not touch the bottom side of a disc while handling it; this could damage the surface. Pick up discs by grasping the outer edges or the edge of the hole and the outer edge.

If the surface of a disc is soiled, take a soft, lint free cloth or dampen a clean, soft cloth in a mild, neutral detergent solution mixed with water, and clean it. Make sure the wiping process starts from the center to the edge.

### Care of the CD Player

Do not add labels to a disc, it could get caught in the CD player. If a label is needed, label the top of the recorded disc with a marking pen.

The use of disc lens cleaners for discs is not advised, due to the risk of contaminating the lens of the disc optics with lubricants internal to the CD player mechanism.

***Notice:*** **If a label is added to a CD, or more than one CD is inserted into the slot at a time, or an attempt is made to play scratched or damaged CDs, the CD player could be damaged.**

**While using the CD player, use only CDs in good condition without any label, load one CD at a time, and keep the CD player and the loading slot free of foreign materials, liquids, and debris.**

### Control Buttons

The buttons used to control the CD player are:

**CD:** Press to play a CD when listening to the radio. The disc and/or track number displays when a CD is in the player.

⏮ **SEEK** ⏭ **:** Press to select tracks.

**TUNE/TONE:** Turn and then press to select tracks.

**MENU/SELECT:** Turn and then press to select.

⏪ **REV (Fast Reverse):** Press and hold to reverse playback quickly within a track.

**FWD (Fast Forward):** Press and hold to advance playback quickly within a track.

**(Load) :** Press to load CDs into the Six-Disc CD player.

**(Eject):** Press to eject the disc.

For the Six-Disc CD player, press and hold for two seconds to eject all discs.

## Inserting a CD (Single Disc Player)

With the printed side facing up, insert a CD into the audio CD slot until it is drawn in. The CD track number and a Shuffle label displays and begins playback.

If the ignition or radio is turned off while a CD in the player, it stays in the player. When the ignition or radio is turned on, the CD starts playing where it stopped, if it was the last selected audio source.

## Inserting a CD (Six-Disc CD Player)

**(Load) :** Press to load CDs into the CD player. This CD player holds up to six CDs.

To insert one CD:

1. Press and release the load button.
2. Wait for the message to insert the disc.
3. Load a CD. Insert the CD partway into the slot, label side up. The player pulls the CD in. A Shuffle label and the DISC icon displays.
4. Press the pushbutton located below the Shuffle label to play the tracks of a current disc in random order. Press the pushbutton again to turn Shuffle off. Shuffle Off displays.
5. The CD resumes normal playback.

To insert multiple CDs:

1. Press and hold this button for five seconds. A beep sounds and Load All Discs displays.
2. Follow the displayed instruction on when to insert the discs. The CD player takes up to six CDs.
3. Press the Load button again to cancel loading more CDs.

If the ignition or radio is turned off while a CD in the player, it stays in the player. When the ignition or radio is turned on, the CD starts playing where it stopped, if it was the last selected audio source.

When a CD is inserted, the disc number displays on the upper right side of the screen and the track number displays at the left and center of the screen. The Shuffle and Disc labels appear below. Press the pushbuttons located under the Disc label to change to another disc.

The CD begins playback of the first track on the selected disc. As each new track starts to play the track number displays in the left and center of the screen.

## Playing a CD

### Selecting a CD Track

Tracks can be selected using the seek buttons, TUNE/TONE knob, or the MENU/SELECT knob.

To use the seek buttons:

Press the ⏮ SEEK button to go to the start of the current track, if more than five seconds have played.

Press the ⏭ SEEK button to go to the next track. If ⏮ SEEK or ⏭ SEEK is held, or pressed multiple times, the player continues moving backward or forward through the tracks on the CD.

To use the TUNE/TONE knob or the MENU SELECT knob:

Turn the TUNE/TONE knob or the MENU/SELECT knob to highlight the desired track then press the TUNE/TONE knob or MENU/SELECT knob to select the track.

### Fast Forward and Rewind

◁◁ **REV (Fast Reverse):** Press and hold to reverse playback quickly within a track. Sound is heard at a reduced volume and the elapsed time of the track displays. Release to resume playing the track.

▷▷ **FWD (Fast Forward):** Press and hold to advance playback quickly within a track. Sound is heard at a reduced volume and the elapsed time of the track displays. Release to resume playing the track.

### Playing Tracks in Random Order

Press the softkey under the Shuffle tab to play the tracks of a CD in random order. Press again to turn Shuffle off. Shuffle Off displays.

For vehicles with a Radio with Six-Disc CD player, the shuffle feature only works on the disc that is currently playing.

## Playing an MP3/WMA Disc

CD players with the MP3 feature are capable of playing an MP3/WMA CD-R or CD-RW disc, see *MP3 on page 6-23* for more information.

## Disc Messages

**DISC ERROR:** If this message displays and/or the disc ejects, it could be for one of the following reasons:

- The radio system does not support the playlist format, the compressed audio format, or the data file format.
- It is very hot. When the temperature returns to normal, the disc should play.

- The road is very rough. When the road becomes smoother, the disc should play.
- The disc is dirty, scratched, wet, or upside down.
- The air is very humid. If so, wait about an hour and try again.
- There could have been a problem while burning the disc.
- The label could be caught in the CD/DVD-A player.

If the disc is not playing correctly, for any other reason, try a known good disc.

If any error occurs repeatedly or if an error cannot be corrected, contact your dealer/retailer. If the radio displays an error message, write it down and provide it to your dealer/retailer when reporting the problem.

## CD/DVD Player

The Infotainment system's CD/DVD player can play audio discs and MP3 discs.

Discs that are 8 cm (3 in.) in diameter will not work in the CD/DVD player.

The CD/DVD player does not support the playback of DVD video discs. If DVD video disc is inserted into the player, the radio displays “Read Error Please Check Disc” and ejects the disc.

### Care of CDs and DVDs

If playing a CD/DVD, the sound quality can be reduced due to disc quality, the method of recording, the quality of the music that has been recorded, and the way the disc has been handled. Handle discs carefully. Store CDs and DVDs in their original cases or other protective cases and away from direct sunlight and dust.

The CD/DVD player scans the bottom surface of the disc. If the surface of a disc is damaged, such as cracked, broken, or scratched, the disc may not play properly or not at all. Do not touch the bottom side of a disc while handling it; this could damage the surface. Pick up discs by grasping the outer edges or the edge of the hole and the outer edge.

If the surface of a disc is soiled, take a soft, lint free cloth or dampen a clean, soft cloth in a mild, neutral detergent solution mixed with water, and clean it. Make sure the wiping process starts from the center to the edge.

### Care of the CD/DVD Player

Do not add labels to a disc, it could get caught in the CD/DVD player. If a label is needed, label the top of the recorded disc with a marking pen.

The use of disc lens cleaners for discs is not advised, due to the risk of contaminating the lens of the disc optics with lubricants internal to the CD/DVD player mechanism.

***Notice:*** **If a label is added to a CD, or more than one CD is inserted into the slot at a time, or an attempt is made to play scratched or damaged CDs, the CD player could be damaged. While using the CD player, use only CDs in good condition without any label, load one CD at a time, and keep the CD player and the loading slot free of foreign materials, liquids, and debris.**

## Control Buttons

The buttons used to control the CD/DVD player are:

**CD/AUX (CD/Auxiliary):** Press to switch between CD/DVD, auxiliary input, and USB devices.

⏮ **SEEK** ⏭ **:** Press to select tracks.

**TUNE/TONE:** Turn and then press to select tracks.

**MENU/SELECT:** Turn and then press to select.

⏪ **REV (Fast Reverse):** Press to reverse playback quickly within a track. Sound is heard at a reduced volume. Press once to change playback to a speed of 2X. Each successive press changes playback to a speed of 4X, 10X, or 21X. Press ▶ / ⏸ to resume normal playback. The elapsed time of the track displays.

While recording a disc to HDD, the fast reverse does not function.

⏩ **FWD (Fast Forward):** Press to advance playback quickly within a track. Sound is heard at a reduced volume. Press once to change playback to a speed of 2X. Each successive press changes playback to a speed of 4X, 10X, or 21X. Press ▶ / ⏸ to resume normal playback. The elapsed time of the track displays.

While recording a disc to HDD, the fast forward does not function.

⏏ **(Eject):** Press to eject the disc.

## Inserting a Disc

With the printed side facing up, insert a disc into the audio CD/DVD slot until it is drawn in. The disc track number and a Shuffle label displays and begins playback.

If the ignition or radio is turned off while a disc in the player, it stays in the player. When the ignition or radio is turned on, the disc starts playing where it stopped, if it was the last selected audio source.

## Playing a CD

### Selecting a CD Track

Tracks can be selected using the seek buttons, TUNE/TONE knob, or the MENU/SELECT knob.

To use the seek buttons:

Press the ⏮ SEEK button to go to the start of the current track, if more than five seconds have played.

Press the ⊳| SEEK button to go to the next track. If |⊲ SEEK or ⊳| SEEK is held, or pressed multiple times, the player continues moving backward or forward through the tracks on the CD.

To use the TUNE/TONE knob:

Turn the TUNE/TONE knob to highlight the desired track then press the TUNE/TONE knob to select the track.

To use the MENU/SELECT knob:

Turn the MENU/SELECT knob to highlight the desired track then press the MENU/SELECT knob to select the track.

**Fast Forward and Rewind**

⊲⊲ **REV (Fast Reverse):** Press and hold to reverse playback quickly within a track. Sound is heard at a reduced volume and the elapsed time of the track displays. Release to resume playing the track.

⊳⊳ **FWD (Fast Forward):** Press and hold to advance playback quickly within a track. Sound is heard at a reduced volume and the elapsed time of the track displays. Release to resume playing the track.

**Playing Tracks in Random Order**

Press the softkey under the Shuffle tab to play the tracks of a CD in random order. Press again to turn Shuffle off. Shuffle Off displays.

## Playing a DVD-A (Audio) Disc

The radio with DVD Audio, HDD, and USB is capable of playing DVD audio discs in the Bose® 5.1 Cabin surround sound system.

Insert the DVD audio disc into the CD/DVD player. DVD AUDIO displays and playback begins. The Group and track number displays during playback.

**Selecting a DVD-A Track**

Tracks can be selected using the seek buttons, TUNE/TONE knob, or the MENU/SELECT knob.

To use the seek buttons:

Press |⊲ SEEK button to go to the start of the current track, if more than five seconds have played.

Press the ⊳| SEEK button to go to the next track. If the |⊲ SEEK or ⊳| SEEK button is held, or pressed multiple times, the player continues moving backward or forward through the tracks within the current group.

To use the TUNE/TONE knob:

Turn the TUNE/TONE knob to display a list of all tracks in all groups on the DVD audio disc and to highlight tracks. Stop turning the TUNE/TONE knob or press the TUNE/TONE knob to start playback of the highlighted track.

To use the MENU/SELECT knob:

Press the softkey under the Menu tab to display a list of all Groups. To change Groups, turn the MENU/SELECT knob to highlight the desired Group. Press the MENU/SELECT knob to select it. Playback begins from track 1 of the highlighted Group.

**Fast Forward and Rewind**

◁◁ **REV (Fast Reverse):** Press to reverse playback quickly within a track. Sound is heard at a reduced volume. Press once to change playback to a speed of 2X. Each successive press changes playback to a speed of 4X, 10X, or 21X. Press ▶ / ❚❚ to resume normal playback. The elapsed time of the track displays.

While recording a disc to HDD, the fast reverse does not function.

▷▷ **FWD (Fast Forward):** Press to advance playback quickly within a track. Sound is heard at a reduced volume. Press once to change playback to a speed of 2X. Each successive press changes playback to a speed of 4X, 10X, or 21X. Press ▶ / ❚❚ to resume normal playback. The elapsed time of the track displays.

While recording a disc to HDD, the fast forward does not function.

**Playing Tracks in Random Order**

Press the softkey under the Shuffle tab to begin random playback of all songs in the current Group. Press again to turn off random playback.

**Stopping DVD Audio Playback**

Press the softkey under the ■ tab to stop playback of the DVD audio disc. “DVD PreStop” displays. Press the ▶ / ❚❚ button to resume playback from where it was stopped.

Press the softkey under the ■ tab again while in DVDPreStop, “DVDStop” displays. Press the ▶ / ❚❚ button while in DVDStop to begin playback from the beginning of the DVD audio disc.

Press the ▶ / ❚❚ button during DVD audio playback to pause or resume playback.

**Selecting DVD Audio Streams**

Each DVD audio Group may contain audio content that is encoded in one or two formats. For example, a particular Group may have both a 5.1 surround audio stream and a 2.0 stereo audio stream available.

Press the softkey located under the Audio label to display the current audio stream playing. “Audio Stream 1” or “Audio Stream 2” briefly displays. Press the softkey located under the Audio label again to toggle between Audio Stream 1 or Audio Stream 2 (if available).

Check the DSP settings to determine if a 5.1 surround sound Audio Stream is playing. See *Operation on page 6-2* for more information. Press the DSP tab to see if the 5.1 + Normal or 5.1 + Rear settings are available for selection. If these settings are available, Audio Stream 1 is playing.

### Playing an MP3/WMA Disc

CD/DVD players with the MP3 feature are capable of playing an MP3/WMA on DVD+/-R, CD-R, or CD-RW discs. For more information, see *MP3 on page 6-23* for more information.

### Disc Messages

**DISC ERROR:** If this message displays and/or the disc ejects, it could be for one of the following reasons:

- The radio system does not support the playlist format, the compressed audio format, or the data file format.
- It is very hot. When the temperature returns to normal, the disc should play.
- The road is very rough. When the road becomes smoother, the disc should play.
- The disc is dirty, scratched, wet, or upside down.
- The air is very humid. If so, wait about an hour and try again.
- There could have been a problem while burning the disc.
- The label could be caught in the CD/DVD player.

If the disc is not playing correctly, for any other reason, try a known good disc.

If any error occurs repeatedly or if an error cannot be corrected, contact your dealer/retailer. If the radio displays an error message, write it down and provide it to your dealer/retailer when reporting the problem.

## MP3

### MP3/WMA Format

The Single CD and the Six-Disc CD Radio will play MP3/WMA files that were recorded on a CD-R or CD-RW disc. The HDD Radio and can also play MP3/WMA files recorded on DVD +/− R discs or stored on a USB storage device. Some USB storage devices may not be supported.

The files can be recorded with the following fixed bit rates: 32 kbps, 40 kbps, 56 kbps, 64 kbps, 80 kbps, 96 kbps, 112 kbps, 128 kbps, 160 kbps, 192 kbps, 224 kbps, 256 kbps, and 320 kbps or a variable bit rate. Song title, artist name, and album can display when files are recorded using ID3 tags version 1 and 2.

**Creating an MP3/WMA Disc**

When creating a MP3/WMA disc:

- Make sure the MP3/WMA files are recorded on a CD-R or CD-RW disc.
- Do not mix standard audio and MP3/WMA files on one disc.
- Make sure the CD does not have more than a maximum of 50 folders and playlists, and 255 files to read and play.
- Create a folder structure that makes it easy to find songs while driving. Organize songs by albums using one folder for each album. Each folder or album should contain 18 songs or less.
- Avoid subfolders. The system can support up to 8 subfolders deep, keep the total number of folders to a minimum to reduce the complexity and confusion during playback.
- Create playlists that have a .m3u or .wpl extension, other file extensions may not work.
- Minimize the length of the file, folder or playlist names. Long file, folder, or playlist names, or a combination of a large number of files and folders, or playlists can cause the player to be unable to play up to the maximum number of files, folders, playlists, or sessions.
- Finalize the audio disc before burning it. Adding music to an existing disc can cause the disc not to function.

Playlists can be selected by using the previous and next folder buttons, the SEEK arrows, ▷▷ FWD, or ◁◁ REV buttons. An MP3/WMA CD-R or CD-RW that was recorded using no file folders can also be played. If a CD-R or CD-RW contains more than the maximum of 50 folders and playlists, and 255 files, the player lets you access and navigate up to the maximum, but all items over the maximum are not accessible.

The HDD Radio can support more than 255 files on an MP3/WMA disc.

The HDD Radio does not support playlists on a disc or USB storage device.

**Root Directory**

The root directory of the CD-R or CD-RW is treated as a folder. If the root directory has compressed audio files, the directory displays as F1 DISC. All files contained directly under the root directory are accessed prior to any root directory folders. Playlists (Px) are always accessed after root folders or files.

The HDD Radio displays the root directory of an MP3/WMA disc as F1 MP3 and the root directory of a USB storage device as F1 USB.

### Empty Directory or Folder

If a root directory or a folder exists somewhere in the file structure that contains only folders/subfolders and no compressed files directly beneath them, the player advances to the next folder in the file structure that contains compressed audio files.

### No Folder

When the CD contains only compressed files, the files are located under the root folder. The next and previous folder functions do not display on a CD that was recorded without folders or playlists. The radio displays F1 DISC for the root directory.

When the CD contains only playlists and compressed audio files, but no folders, all files are located under the root folder. The folder down and the folder up buttons search playlists (Px) first and then goes to the root folder. The radio displays F1 DISC for the root directory.

### Order of Play

Tracks recorded to the CD-R or CD-RW play in the following order:

- Play begins from the first track in the first folder and continues sequentially through all tracks in each folder. When the last track of the last folder has played, play continues from the first track of the first playlist.
  - Playlists can be changed by pressing the next and previous folder button.
- Play begins from the first track in the first playlist and continues sequentially through all tracks in each playlist. When the last track of the last playlist has played, play continues from the first track of the first folder.

When play enters a new folder, the display does not automatically show the new folder name unless the folder mode has been chosen as the default display. The new track name displays.

### File System and Naming

The song name displays the song name that is contained in the ID3 tag. If the song name is not in the ID3 tag, the radio displays the file name without the extension.

Track names longer than 32 characters are shortened. Parts of words on the last page of text and the extension of the file name is not displayed.

The HDD Radio will display file names with the extension.

### Preprogrammed Playlists

Preprogrammed playlists that were created using WinAmp™, MusicMatch™, or Real Jukebox™ software can be accessed, however they cannot be edited using the radio. These playlists are special folders containing compressed audio song files. Playlists must have a file extension of PLS or M3U.

Playlists can be selected using the previous and next folder buttons. Tracks can be changed by pressing the seek buttons or turning the tune knob. Songs are played sequentially; press the ◁◁ REV or ▷▷ FWD to reverse or advance through the playing song.

The HDD Radio does not support preprogrammed playlists. To create a playlist on the HDD radio from songs recorded to the HDD, see *Hard Drive Device (HDD) on page 6-27*.

## Playing an MP3/WMA From a Disc or a USB Storage Device

### Selecting an MP3 Track

Tracks can be selected using the seek buttons, the TUNE/TONE knob, or the softkeys below the folder tabs on the infotainment display.

To use the seek buttons:

Press the ⊲ SEEK button to go to the start of the current track, if more than five seconds have played.

Press the ⊳ SEEK button to go to the next track. If ⊲ SEEK or ⊳ SEEK is held, or pressed multiple times, the player continues moving backward or forward through the tracks on the disc.

To use the TUNE/TONE knob:

Turn the TUNE/TONE knob to highlight the desired track then press the TUNE/TONE knob to select the track.

To use the softkeys below the folder tabs:

**< Folder (Previous Folder):** Press the softkey under the Folder tab to go to the first track in the previous folder.

**Folder > (Next Folder):** Press the softkey under the Folder tab to go to the first track in the next folder.

### Fast Forward and Rewind

**◁◁ REV (Fast Reverse):** Press and hold to reverse playback quickly within a track. Sound is heard at a reduced volume and the elapsed time of the track displays. Release to resume playing the track.

**▷▷ FWD (Fast Forward):** Press and hold to advance playback quickly within a track. Sound is heard at a reduced volume and the elapsed time of the track displays. Release to resume playing the track.

### Searching for MP3 Tracks

Tracks can be searched for by using the menu system.

To use the menu system:

1. Press the MENU/SELECT knob to display the MP3 Menu.
2. Turn the MENU/SELECT knob to highlight an option from the MP3 Menu. The available options are:
   - Playlists*
   - Tracks
   - Folders
   - Artists
   - Albums
   - Song Titles
   - AudioBook
3. Press the MENU/SELECT knob to select the desired option.

*The HDD Radio does not support preprogrammed playlists. To create a playlist on the HDD radio from songs recorded to the HDD, see *Hard Drive Device (HDD) on page 6-27*.

### Quick Jump

To scroll up or down the list of Artists, Albums, or Song Titles, press and hold the softkey located under the FWD or REV tab.

To jump to the beginning, middle, or last section of the list:

- Press the first softkey located under the display to go to the beginning section of the list.
- Press the second softkey located under the display to go to the middle section of the list.
- Press the third softkey located under the display to go to the last section of the list.

### Playing Tracks in Random Order

Press the softkey under the Shuffle tab to play the tracks of the current folder in random order. Press again to turn Shuffle off. Shuffle Off displays.

## Hard Drive Device (HDD)

To use the HDD, tracks must be recorded from a CD, DVD, or USB device first.

### Recording From Audio Discs

**REC (Record):** Press to start recording tracks from the disc while it is playing. The radio has the option to record the current track playing or all tracks from the CD. Press the softkey under the desired record option.

The last radio station that was on begins playing and a status bar appears on the top of the display when the recording process starts. The status bar disappears when the process has ended. The recorded songs are now available.

### Copy Protected CD(s)

Make sure the disc is not copy-protected. The radio does not copy a copy-protected CD to the HDD.

### Deleting a Recorded Song or Category

**DEL (Delete):** Press the DEL button to delete the track that is currently playing or select a track from one of the song lists.

To Delete an entire category, select a category and press DEL.

### Stopping the Recording

While recording from the audio CD, press the REC button to display the stop recording option. Press the softkey under this option to confirm the selection.

### Ejecting a CD or Turning Off The Vehicle While Recording

If the CD is ejected or the vehicle is turned off before the recording process has completed, tracks that have been completely recorded are stored to the HDD. Incomplete tracks are discarded.

### Re-recording Audio CDs

If a CD has already been recorded, the radio system will not record the contents again. If a partially recorded CD is selected for recording, only those songs which are not already on the HDD will be recorded.

### Audio CD Song, Artist, Album and Genre Information

Radios with HDD, contain a Gracenote® Database that the radio uses to determine the song, artist, album and genre information.

The Gracenote® Database allows the radio to record an audio CD to the HDD and store the content using song, artist, album and genre information.

Newly released audio CDs as well as some less common audio CDs may not be found in the Gracenote® Database stored on the HDD. If these audio CDs contain CD-text, the radio will use the CD-text information when recording the content to the HDD. If an audio CD is not found in the Gracenote® Database and it does not have CD-text information, the radio will record the audio CD with all song, artist, album and genre names as “NO INFO”.

Songs recorded with “NO INFO” to the HDD will be hard to sort, identify, and select. To make HDD navigation easier, CDs with “NO INFO” can first be converted to MP3 format with Tag information on a home computer and then recorded to the HDD from an MP3 disc or USB device.

Occasionally, the radio may find more than one match in Gracenote® Database for an audio CD that has been recorded. If this happens, the radio will display “Multi-Hit” for the name information when the songs are selected from the HDD. With a “Muli-Hit” song playing, press the button below the EDIT tab to bring up the list of multiple names found in the Gracenote® Database. Use the Menu/Select knob to highlight and select the correct name for the “Multi-Hit” recorded CD.

The Gracenote® Database stored on the HDD can be updated so that it includes name information for more recently released audio CDs. See your dealer/retailer for more information on Gracenote® Database updates for the HDD radio.

## Recording From MP3/WMA Discs or USB

**REC (Record):** Press to start recording tracks from a MP3/WMA disc or a USB device (excluding iPod), while it is playing. The radio has the option to record the current track playing or all tracks from the CD. Press the softkey under the desired record option.

The last radio station that was on begins playing and a status bar appears on the top of the display when the recording process starts. The status bar disappears when the process has ended. The recorded songs are now available.

AAC and OGG Vorbis file types are not fully supported. These file types may or may not play and may be shown without Tag information. Without Tag information available, these file types may be identified only by file name.

AudioBooks from audible.com can also be transferred to the HDD using the record function. See AudioBooks later in this section for more information.

### USB Host Support

The USB connector uses the USB standards, 1.1 and 2.0.

### USB Supported Devices

- USB Flash Drives
- Portable USB Hard Drives

## Playing From the Hard Drive Device

**HDD (Hard Drive Device):** Press the HDD button to start playing tracks from the HDD. HDD displays and playback resumes from where it was last stopped.

### HDD Playback Mode

The infotainment system displays the current HDD playback mode. The table below shows the display mode options and what happens as the mode is displayed:

| Mode | When Displayed |
|---|---|
| Shuffle | System is randomly playing back all HDD content. |
| Artist | System is playing back content by a selected Artist in alphabetical order. |
| Album | System is playing back content from a selected album in track order. |
| Genre | System is playing back content in a selected Genre in alphabetical order. |
| Song | System is playing back all songs in alphabetical order. |
| Playlist | System is playing back all songs from the selected playlist in the order they were added. |
| AudioBook | System is playing back AudioBook content. |

### HDD Menu

1. Press the MENU/SELECT knob to display the HDD Menu.
2. Turn the MENU/SELECT knob to highlight an option from the HDD Menu. The available options are:
   - Shuffle Songs
   - Playlist
   - Artists
   - Albums
   - Song Titles
   - Genres
   - Recently Saved
   - AudioBook
3. Press the MENU/SELECT knob to select the desired option.

### Quick Jump

To scroll up or down the list of Artists, Albums, or Song Titles, press and hold the softkey under the FWD or REV tab.

To jump to the beginning, middle, or last section of the list:

- Press the first softkey located under the display to go to the beginning section of the list.
- Press the second softkey located under the display to go to the middle section of the list.
- Press the third softkey located under the display to go to the last section of the list.

### Shuffle Songs

Select this option from the HDD Menu to randomly play back HDD content.

### Playlist

Select this option from the HDD Menu to display all six favorite Playlists, then select one of the six playlist to display a list of songs that have been added to that favorite playlist. Select a song from the list to begin playback of that song and to put the HDD into the Playlist mode. See “Saving HDD Favorites” later in this section for more information.

### HDD Categories

The HDD category mode can be used to select a song by a particular artist, album, or genre for playback. As an example, the HDD Menu displays a layout such as:

| | |
|---|---|
| | Artists (5) |
| | Albums (6) |
| | Song Titles (77) |
| | Genres (3) |

The radio system displays the number of available items in each individual category as shown on the sample display. For example, the sample display shows there is content on the hard drive from five individual artists.

Select the HDD Menu category to display the available items in each individual category, then select an item from one of these submenus to display a list of songs related to that menu item. Select a song to begin playback of that song and to put the HDD in the playback mode.

### Recently Saved

Select this option from the HDD Menu to display the last 50 songs added since the vehicle was last turned on. The songs are categorized into songs recorded from CDs or USB devices.

### Audiblebook

The radio is able to play back AudioBook content downloaded from www.audible.com. This content can be transferred into the HDD by either burning it to a CD or copying it to a USB storage device and then recording it to the HDD.

The audible.com® playback requires activation of the vehicle as a player for downloaded content. The radio system activates the audible.com® system when information is found on either a CD inserted into the CD/DVD player or if a USB storage device is connected. The Vehicle Identification Number (VIN) number is a required in order to activate the vehicle.

### Saving HDD Favorites

Press the FAV button to change between favorite modes during HDD playback. The following favorite modes are supported:

- Playlists
- Artists
- Albums
- Genres

Favorites can be saved by pressing and holding the softkey under the favorites selection. Store favorites according to the following table:

| Favorites Display Mode | Action on Press-and-Hold |
|---|---|
| Playlist | Adds currently playing track to the playlist selected. |
| Artist | Saves the artist associated with the currently playing track in the indicated favorites position. |
| Album | Saves the album associated with the currently playing track in the indicated favorites position. |
| Genre | Saves the genre associated with the currently playing track in the indicated favorites position. |

### Configuring HDD Favorites

Press the CONFIG button to display the radio configuration options. Press the softkey under the HDD tab to display the available favorite modes. Press the softkey under the favorite tab to set the available favorite modes. Available favorite modes are highlighted.

### Time-shifting — Pause and Rewind Live FM/AM and XM™ (if equipped)

The Radio with DVD Audio, HDD, and USB has the ability to rewind 60 minutes of FM/AM and XM (if equipped) content. While listening to the radio, the content from the current station is always being buffered to the HDD.

Press ▶ / ❚❚ (play/pause) To pause the radio. The radio display will show the Time Shift buffer status bar. The status bar shows the amount of content that is stored in the buffer and the current pause point.

To resume playback from the current pause point, press ▶ / ❚❚ again. The radio will no longer be playing “live” radio. Instead, time shifted content is being played from the buffer. When the radio is playing time shifted content from the buffer, a buffer status bar shows below the station number on the left side of screen.

Press and hold the REV or FWD buttons to rewind or fast forward through the time shift buffer. Hold FWD until the end of the currently recorded buffer to resume “live” radio playback. With “live” radio playing, the radio display will no longer show the buffer bar below the station number.

On AM/FM, press the REV or FWD button multiple times to rewind or fast forward. Each press will rewind or fast forward 30 seconds of content. On XM, press the REV or FWD button multiple time to jump to the previous or next song or commercial.

When the radio station is changed, the buffer is cleared and automatically restarted for the current station. You cannot rewind to content from a previously tuned station.

Time shifting of AM/FM or XM is not available while recording or while other sources of playback are selected.

**Pausing AM/FM or XM™ (if equipped) with the Vehicle Turned Off**

If AM/FM or XM is paused when the vehicle is turned off, the radio will continue to buffer the current radio station for up to one hour. If the vehicle is turned back on within one hour, the radio will automatically resume playback from the pause point.

## Auxiliary Devices

The 3.5mm (1/8 in.) input jack and the USB port (if equipped), located in the center console bin, allows portable devices to connect to the vehicle. This is not an audio output; do not plug headphones into the auxiliary input jack.

Set up auxiliary devices while the vehicle is stopped. See *Defensive Driving on page 8-3* for more information on driver distraction.

When a device is first connected to the 3.5mm (1/8 in.) input jack or the USB port (if equipped) the infotainment system automatically switches to that device. If an auxiliary device has already been connected, press the AUX or CD/AUX button.

### 3.5mm Jack

Connect a 3.5mm (1/8 in.) cable to the auxiliary input jack to use a portable audio player.

Playback of an audio device that is connected to the 3.5mm jack can only be controlled using the controls on the device.

**VOL/ ⏻ (Volume/Power):** Turn clockwise or counterclockwise to increase or decrease the volume of the portable player. Use the portable device to make additional volume adjustments.

**CD or CD/AUX (CD/Auxiliary):** Press to play a CD when a portable audio device is playing. Press again to start playing audio from the connected portable audio player. If a portable audio player is not connected, “No Aux Device” displays.

### USB Port

The USB connector uses the USB standards, 1.1 and 2.0.

**USB Supported Devices**

- USB Flash Drives
- Portable USB Hard Drives
- Fifth generation or later iPod*
- First, Second, or Third generation iPod nano*
- iPod classic*

*For proper operation, make sure the iPod has the latest firmware from Apple®. The iPod firmware can be updated using the latest iTunes application. See www.apple.com/itunes.

**Connecting a USB Storage Device**

Connect the USB storage device to the USB port located in the center console. Some USB devices may not be supported.

**Playing an MP3/WMA From a USB Storage Device**

See *MP3 on page 6-23* for more information.

### Connecting an iPod

To connect the iPod, connect one end of the special iPod connection cable to the iPod’s dock connector. Connect the other end to both the USB port and the auxiliary input jack located in the center console. The USB port and the auxiliary input jack are located in the center console bin. If the vehicle is on and the USB connection works, a GM logo may appear on the iPod. The iPod's music information will be shown on the radio’s display and the music begins playing through the vehicles audio system.

The iPod's battery charges while it is connected to the vehicle and if the ignition is turned to ACC/ACCESSORY or ON/RUN. It can also be left connected to the vehicle after the vehicle is turned off. With the vehicle turned off, the iPod will automatically be powered off and will not charge or draw power from the vehicle's battery.

A standard iPod USB cable, like the one that came with the iPod, cannot be used to connect an iPod to the vehicle. The special iPod connection cable that came equipped with the vehicle or that was made available from your dealer/retailer must be used to command and control an iPod.

Use a standard 3.5 mm (1/8 in.) stereo cable to connect an older iPod model that is not supported, or if the special iPod connection cable is missing. Command and control of the iPod using the infotainment control buttons and knobs is not supported when only a 3.5 mm (1/8 in.) stereo cable is used.

### Commanding and Controlling an iPod

An iPod™ can be controlled by using the radio buttons and knobs; the song information shows on the infotainment system's display.

To connect and control the iPod using the radio controls, use the special iPod connection cable that came as standard equipment with the vehicle as part of the USB option. The special iPod connection cable can also be purchased or made available, from your dealer/retailer. See your dealer/retailer for more information.

Use the Menu/Select knob to bring up the iPod Menu and select Songs, Artists, Albums, Playlists and Audio books to play from the iPod.

### Disconnecting an iPod

To properly dismount the iPod USB device before disconnecting from the vehicle, press the softkey under the EJECT tab on the infotainment display screen during iPod playback.

# Phone

## Bluetooth

Vehicles with a Bluetooth system can use a Bluetooth capable cell phone with a Hands Free Profile to make and receive phone calls. The system can be used while the ignition is in ON/RUN or ACC/ ACCESSORY position. The range of the Bluetooth system can be up to 30 ft. (9.1 m). Not all phones support all functions, and not all phones are guaranteed to work with the in-vehicle Bluetooth system. See www.gm.com/bluetooth for more information on compatible phones.

### Voice Recognition

The Bluetooth system uses voice recognition to interpret voice commands to dial phone numbers and name tags.

**Noise:** Keep interior noise levels to a minimum. The system may not recognize voice commands if there is too much background noise.

**When to Speak:** A short tone sounds after the system responds indicating when it is waiting for a voice command. Wait until the tone and then speak.

**How to Speak:** Speak clearly in a calm and natural voice.

### Audio System

When using the in-vehicle Bluetooth system, sound comes through the vehicle's front audio system speakers and over-rides the audio system. Use the audio system volume knob, during a call, to change the volume level. The adjusted volume level remains in memory for later calls. To prevent missed calls, a minimum volume level is used if the volume is turned down too low.

### Bluetooth Controls

Use the buttons located on the steering wheel to operate the in-vehicle Bluetooth system. See *Steering Wheel Controls on page 4-7* for more information.

**(Push To Talk) :** Press to answer incoming calls, to confirm system information, and to start speech recognition.

**(Phone On Hook):** Press to end a call, reject a call, or to cancel an operation.

### Pairing

A Bluetooth enabled cell phone must be paired to the in-vehicle Bluetooth system first and then connected to the vehicle before it can be used. See the cell phone manufacturers user guide for Bluetooth functions before pairing the cell phone. If a Bluetooth phone is not connected, calls will be made using OnStar® Hands-Free Calling, if available. Refer to the OnStar owner's guide for more information.

Pairing Information:

- Up to five cell phones can be paired to the in-vehicle Bluetooth system.
- The pairing process is disabled when the vehicle is moving.
- The in-vehicle Bluetooth system automatically links with the first available paired cell phone in the order the phone was paired.
- Only one paired cell phone can be connected to the in-vehicle Bluetooth system at a time.
- Pairing should only need to be completed once, unless changes to the pairing information have been made or the phone is deleted.

To link to a different paired phone, see Linking to a Different Phone later in this section.

**Pairing a Phone**

1. Press and hold for two seconds:
   - For vehicles without a navigation system, the system responds with “Ready” followed by a tone.
   - For vehicles with a navigation system, the system responds with a tone. After the tone say “Hands Free”. The system responds with “Ready” followed by a tone.
2. Say “Bluetooth”. The system responds with “Bluetooth ready” followed by a tone.
3. Say “Pair”. The system responds with instructions and a four digit PIN number. The PIN number will be used in Step 4.
4. Start the Pairing process on the cell phone that will be paired to the vehicle. Reference the cell phone manufacturers user guide for information on this process.

   Locate the device named “General Motors” in the list on the cellular phone and follow the instructions on the cell phone to enter the four digit PIN number that was provided in Step 3.
5. The system prompts for a name for the phone. Use a name that best describes the phone. This name will be used to indicate which phone is connected. The system then confirms the name provided.
6. The system responds with “<Phone name> has been successfully paired” after the pairing process is complete.
7. Repeat Steps 1 through 7 for additional phones to be paired.

### Listing All Paired and Connected Phones

1. Press and hold ✆ for two seconds:
   - For vehicles without a navigation system, the system responds with “Ready” followed by a tone.
   - For vehicles with a navigation system, the system responds with a tone. After the tone say “Hands Free”. The system responds with “Ready” followed by a tone.
2. Say “Bluetooth”. The system responds with “Bluetooth ready” followed by a tone.
3. Say “List”. The system lists all the paired Bluetooth devices. If a phone is connected to the vehicle, the system will say “Is connected” after the connected phone.

### Deleting a Paired Phone

1. Press and hold ✆ for two seconds:
   - For vehicles without a navigation system, the system responds with “Ready” followed by a tone.
   - For vehicles with a navigation system, the system responds with a tone. After the tone say “Hands Free”. The system responds with “Ready” followed by a tone.
2. Say “Bluetooth”. The system responds with “Bluetooth ready” followed by a tone.
3. Say “Delete”. The system asks which phone to delete followed by a tone.
4. Say the name of the phone to be deleted. If the phone name is unknown, use the “List” command for a list of all paired phones. The system responds with “Would you like to delete <phone name>? Yes or No” followed by a tone
5. Say “Yes” to delete the phone. The system responds with “OK, deleting <phone name>”.

### Linking to a Different Phone

1. Press and hold ✆ for two seconds:
   - For vehicles without a navigation system, the system responds with “Ready” followed by a tone.
   - For vehicles with a navigation system, the system responds with a tone. After the tone say “Hands Free”. The system responds with “Ready” followed by a tone.
2. Say “Bluetooth”. The system responds with “Bluetooth ready” followed by a tone.

3. Say “Change phone”. The system responds with “Please wait while I search for other phones”.
   - If another phone is found, the response will be “<Phone name> is now connected”.
   - If another phone is not found, the original phone remains connected.

## Storing Name Tags

The system can store up to thirty phone numbers as name tags that are shared between the Bluetooth and OnStar systems.

The system uses the following commands to store and retrieve phone numbers:

- Store
- Digit Store
- Directory

### Using the Store Command

The store command allows a phone number to be stored without entering the digits individually.

1. Press and hold ✆ for two seconds:
   - For vehicles without a navigation system, the system responds with “Ready” followed by a tone.
   - For vehicles with a navigation system, the system responds with a tone. After the tone say “Hands Free”. The system responds with “Ready” followed by a tone.
2. Say “Store”. The system responds with “Store, number please” followed by a tone.
3. Say the complete phone number to be stored at once with no pauses.
   - If the system recognizes the number it responds with “OK, Storing” and repeats the phone number.
   - If the system is unsure it recognizes the phone number, it responds with “Store” and repeats the number followed by “Please say yes or no”. If the number is correct, say “Yes”. If the number is not correct, say “No”. The system will ask for the number to be re-entered.
4. After the system stores the phone number, it responds with “Please say the name tag” followed by a tone.

5. Say a name tag for the phone number. The name tag is recorded and the system responds with “About to store <name tag>. Does that sound OK?”.
   - If the name tag does not sound correct, say “No” and repeat Step 5.
   - If the name tag sounds correct, say “Yes” and the name tag is stored. After the number is stored the system returns to the main menu.

**Using the Digit Store Command**

The digit store command allows a phone number to be stored by entering the digits individually.

1. Press and hold for two seconds:
   - For vehicles without a navigation system, the system responds with “Ready” followed by a tone.
   - For vehicles with a navigation system, the system responds with a tone. After the tone say “Hands Free”. The system responds with “Ready” followed by a tone.
2. Say “Digit Store”. The system responds with “Please say the first digit to store” followed by a tone.
3. Say the first digit to be stored. The system will repeat back the digit it heard followed by a tone. Continue entering digits until the number to be stored is complete.
   - If an unwanted number is recognized by the system, say “Clear” at any time to clear the last number.
   - To hear all of the numbers recognized by the system, say “Verify” at any time and the system will repeat them.
4. After the complete number has been entered, say “Store”. The system responds with “Please say the name tag” followed by a tone.
5. Say a name tag for the phone number. The name tag is recorded and the system responds with “About to store <name tag>. Does that sound OK?”.
   - If the name tag does not sound correct, say “No” and repeat Step 5.
   - If the name tag sounds correct, say “Yes” and the name tag is stored. After the number is stored the system returns to the main menu.

### Using the Directory Command

The directory command lists all of the name tags stored by the system. To use the directory command:

1. Press and hold for two seconds:
   - For vehicles without a navigation system, the system responds with “Ready” followed by a tone.
   - For vehicles with a navigation system, the system responds with a tone. After the tone say “Hands Free”. The system responds with “Ready” followed by a tone.
2. Say “Directory”. The system responds with “Directory” and then plays back all of the stored name tags. When the list is complete, the system returns to the main menu.

## Deleting Name Tags

The system uses the following commands to delete name tags:

- Delete
- Delete all name tags

### Using the Delete Command

The delete command allows specific name tags to be deleted.

To use the delete command:

1. Press and hold for two seconds:
   - For vehicles without a navigation system, the system responds with “Ready” followed by a tone.
   - For vehicles with a navigation system, the system responds with a tone. After the tone say “Hands Free”. The system responds with “Ready” followed by a tone.
2. Say “Delete”. The system responds with “Delete, please say the name tag” followed by a tone.
3. Say the name tag to be deleted. The system responds with “Would you like to delete, <name tag>? Please say yes or no”.
   - If the name tag is correct, say “Yes” to delete the name tag. The system responds with “OK, deleting <name tag>, returning to the main menu.”
   - If the name tag is incorrect, say “No”. The system responds with “No. OK, let's try again, please say the name tag.”

### Using the Delete All Name Tags Command

The delete all name tags command deletes all stored phone book name tags and route name tags for OnStar (if present).

To use the delete all name tags command:

1. Press and hold ✆ for two seconds:
   - For vehicles without a navigation system, the system responds with “Ready” followed by a tone.
   - For vehicles with a navigation system, the system responds with a tone. After the tone say “Hands Free”. The system responds with “Ready” followed by a tone.
2. Say “Delete all name tags”. The system responds with “You are about to delete all name tags stored in your phone directory and your route destination directory. Are you sure you want to do this? Please say yes or no.”
   - Say “Yes” to delete all name tags.
   - Say “No” to cancel the function and return to the main menu.

## Making a Call

Calls can be made using the following commands:

- Dial
- Digit Dial
- Call
- Re-dial

### Using the Dial Command

1. Press and hold ✆ for two seconds:
   - For vehicles without a navigation system, the system responds with “Ready” followed by a tone.
   - For vehicles with a navigation system, the system responds with a tone. After the tone say “Hands Free”. The system responds with “Ready” followed by a tone.
2. Say “Dial”. The system responds with “Dial using <phone name>. “Number please” followed by a tone.

3. Say the entire number without pausing.
   - If the system recognizes the number, it responds with “OK, Dialing” and dials the number.
   - If the system does not recognize the number, it confirms the numbers followed by a tone. If the number is correct, say “Yes”. The system responds with “OK, Dialing” and dials the number. If the number is not correct, say “No”. The system will ask for the number to be re-entered.

**Using the Digit Dial Command**

1. Press and hold ✆ for two seconds:
   - For vehicles without a navigation system, the system responds with “Ready” followed by a tone.
   - For vehicles with a navigation system, the system responds with a tone. After the tone say “Hands Free”. The system responds with “Ready” followed by a tone.
2. Say “Digit Dial”. The system responds with “Digit dial using <phone name>, please say the first digit to dial” followed by a tone.
3. Say the digit to be dialed one at a time. Following each digit, the system will repeat back the digit it heard followed by a tone.
4. Continue entering digits until the number to be dialed is complete. After the whole number has been entered, say “Dial”. The system responds with “OK, Dialing” and dials the number.
   - If an unwanted number is recognized by the system, say “Clear” at any time to clear the last number.
   - To hear all of the numbers recognized by the system, say “Verify” at any time and the system will repeat them.

**Using the Call Command**

1. Press and hold ✆ for two seconds:
   - For vehicles without a navigation system, the system responds with “Ready” followed by a tone.
   - For vehicles with a navigation system, the system responds with a tone. After the tone say “Hands Free”. The system responds with “Ready” followed by a tone.
2. Say “Call”. The system responds with “Call using <phone name>. Please say the name tag” followed by a tone.

3. Say the name tag of the person to call.
   - If the system clearly recognizes the name tag it responds with “OK, calling, <name tag>” and dials the number.
   - If the system is unsure it recognizes the right name tag, it confirms the name tag followed by a tone. If the name tag is correct, say “Yes”. The system responds with “OK, calling, <name tag>” and dials the number. If the name tag is not correct, say “No”. The system will ask for the name tag to be re-entered.

Once connected, the person called will be heard through the audio speakers.

**Using the Re-dial Command**

1. Press and hold for two seconds:
   - For vehicles without a navigation system, the system responds with “Ready” followed by a tone.
   - For vehicles with a navigation system, the system responds with a tone. After the tone say “Hands Free”. The system responds with “Ready” followed by a tone.
2. After the tone, say “Re-dial”. The system responds with “Re-dial using <phone name>” and dials the last number called from the connected Bluetooth phone.

Once connected, the person called will be heard through the audio speakers.

## Receiving a Call

When an incoming call is received, the audio system mutes and a ring tone is heard in the vehicle.

- Press and begin speaking to answer the call.
- Press to ignore a call.

## Call Waiting

Call waiting must be supported on the Bluetooth phone and enabled by the wireless service carrier to work.

- Press to answer an incoming call when another call is active. The original call is placed on hold.
- Press again to return to the original call.
- To ignore the incoming call, continue with the original call with no action.
- Press to disconnect the current call and switch to the call on hold.

## Three-Way Calling

Three-Way Calling must be supported on the Bluetooth phone and enabled by the wireless service carrier to work.

1. While on a call press . The system responds with “Ready” followed by a tone.
2. Say “Three-way call”. The system responds with “Three-way call, please say dial or call”.
3. Use the dial or call command to dial the number of the third party to be called.
4. Once the call is connected, press to link all the callers together.

## Ending a Call

Press to end a call.

## Muting a Call

During a call, all sounds from inside the vehicle can be muted so that the person on the other end of the call cannot hear them.

### To Mute a call

1. Press . The system responds with “Ready” followed by a tone.
2. Say “Mute Call”. The system responds with “Call muted”.

### To Cancel Mute

1. Press . The system responds with “Ready” followed by a tone.
2. After the tone, say “Mute Call”. The system responds with “Resuming call”.

## Transferring a Call

Audio can be transferred between the in-vehicle Bluetooth system and the cell phone.

### To Transfer Audio to the Cell Phone

During a call with the audio in the vehicle:

1. Press . The system responds with “Ready” followed by a tone.
2. Say “Transfer Call.” The system responds with “Transferring call” and the audio will switch from the vehicle to the cell phone.

**To Transfer Audio to the In-Vehicle Bluetooth System**

The cellular phone must be paired and connected with the Bluetooth system before a call can be transferred. The connection process can take up to two minutes after the ignition is turned to the ON/RUN or ACC/ACCESSORY position.

1. During a call with the audio on the cell phone, press and hold for two seconds:
   - For vehicles without a navigation system, the call transfers to the Bluetooth system.
   - For vehicles with a navigation system, the system responds with a tone. After the tone say “Hands Free”. The call then transfers to the Bluetooth system.

## Voice Pass-Thru

Voice Pass-Thru allows access to the voice recognition commands on the cell phone. See the cell phone manufacturers user guide to see if the cell phone supports this feature. This feature can be used to verbally access contacts stored in the cell phone.

1. Press and hold for two seconds:
   - For vehicles without a navigation system, the system responds with “Ready” followed by a tone.
   - For vehicles with a navigation system, the system responds with a tone. After the tone say “Hands Free”. The system responds with “Ready” followed by a tone.
2. Say “Bluetooth”. The system responds with “Bluetooth ready” followed by a tone.
3. Say “Voice”. The system responds with “OK, accessing <phone name>”.
   - The cell phone's normal prompt messages will go through its cycle according to the phone's operating instructions.

## Dual Tone Multi-Frequency (DTMF) Tones

The in-vehicle Bluetooth system can send numbers and numbers stored as name tags during a call. This is used when calling a menu driven phone system. Account numbers can be programmed into the phonebook for retrieval during menu driven calls.

**Sending a number during a call**

1. Press . The system responds with “Ready” followed by a tone.
2. Say “Dial”. The system responds with “Say a number to send tones” followed by a tone.

3. Say the number to send.
   - If the system clearly recognizes the number it responds with “OK, Sending Number” and the dial tones are sent and the call continues.
   - If the system is not sure it recognized the number properly, it responds “Dial Number, Please say yes or no?” followed by a tone. If the number is correct, say “Yes”. The system responds with “OK, Sending Number” and the dial tones are sent and the call continues.

**Sending a Stored Name Tag During a Call**

1. Press . The system responds with “Ready” followed by a tone.
2. Say “Send name tag.” The system responds with “Say a name tag to send tones” followed by a tone.
3. Say the name tag to send.
   - If the system clearly recognizes the name tag it responds with “OK, Sending <name tag>” and the dial tones are sent and the call continues.
   - If the system is not sure it recognized the name tag properly, it responds “Dial <name tag>, Please say yes or no?” followed by a tone. If the name tag is correct, say “Yes”. The system responds with “OK, Sending <name tag>” and the dial tones are sent and the call continues.

## Clearing the System

Unless information is deleted out of the in-vehicle Bluetooth system, it will be retained indefinitely. This includes all saved name tags in the phonebook and phone pairing information. For information on how to delete this information, see the above sections on Deleting a Paired Phone and Deleting Name Tags.

## Other Information

The Bluetooth® word mark and logos are owned by the Bluetooth® SIG, Inc. and any use of such marks by General Motors is under license. Other trademarks and trade names are those of their respective owners.

See *Radio Frequency Statement on page 12-16* for FCC information.

# Climate Controls

**Climate Control Systems**
Dual Automatic Climate Control System . . . . . 7-1

**Air Vents**
Air Vents . . . . . 7-6

**Maintenance**
Passenger Compartment Air Filter . . . . . 7-6

# Climate Control Systems

## Dual Automatic Climate Control System

The heating, cooling, and ventilation for the vehicle can be controlled with this system.

A. Display
B. Fan Control
C. Power
D. AUTO
E. PASS (Passenger Climate Control)
F. Defrost
G. Air Delivery Mode Control
H. Temperature Control and Heated Seat
I. Air Conditioning
J. Recirculation
K. Outside Air
L. Rear Window Defogger

### Automatic Operation

**AUTO (Automatic):** The system automatically controls fan speed, air delivery, and air conditioning in order to heat or cool the vehicle to the desired temperature. When the indicator light is on, the system is in full automatic operation. If the air delivery mode or fan setting is manually adjusted, the auto indicator turns off and displays will show the selected settings.

1. Press the AUTO button.
2. Adjust the temperature to a comfortable setting between 21°C (70°F) and 27°C (80°F).

   Choosing the coldest or warmest temperature setting will not cause the system to heat or cool any faster.

   To avoid blowing cold air in cold weather, the system delays turning on the fan until warm air is available. The system starts out blowing air at the floor, but can automatically change modes as the vehicle warms up to maintain the chosen temperature setting. The length of time needed for warm up depends on the outside temperature and the length of time that has elapsed since the vehicle was last driven.
3. Wait for the system to regulate. This may take from 10 to 30 minutes. Then adjust the temperature, if necessary.

English can be changed to metric units through the Driver Information Center (DIC). See *Driver Information Center (DIC) on page 4-31*.

**▲ / ▼ (Temperature Control):** The temperature can be adjusted separately for the driver and the passenger. Press to increase or decrease the automatic temperature settings.

**PASS (Passenger Climate Control):** Press to set a different temperature for the passenger. Then adjust the passenger temperature buttons to a comfortable setting.

Pressing the PASS button again automatically sets the passenger's temperature to the driver's setting.

Turning the passenger's temperature display off does not shut the passenger's climate control system off.

### Manual Operation

**⏻ (Power):** Press to turn the climate control system on or off. When the climate control system is turned off the air inlet defaults to outside air.

**(Fan Control):** Press the buttons to increase or decrease the fan speed. Pressing either button cancels automatic fan control. Press AUTO to return to automatic operation. The blower may reduce during an Onstar® session to limit background noise.

If the airflow seems low when the fan speed is at the highest setting, the passenger compartment air filter might need to be replaced. For more information, see *Passenger Compartment Air Filter on page 7-6* and *Scheduled Maintenance on page 10-3*.

**(Air Delivery Mode Control):** Press the buttons to change the direction of the airflow. The current mode appears in the display screen. Changing the mode cancels the automatic air delivery. Press AUTO to return to automatic operation.

The outboard air outlets always receive some airflow in every mode, except defrost.

To change the current mode, select one of the following:

**(Vent):** Air is directed to the instrument panel outlets.

**(Bi-Level):** Air is divided between the instrument panel outlets and the floor outlets. In automatic operation, cooler air is directed to the upper outlets and warmer air to the floor outlets.

**(Floor):** Air is directed to the floor outlets, with some air directed to the windshield and outboard outlets.

**(Defog):** This mode clears the windows of fog or moisture. Air is directed to the windshield, floor and side window outlets. When this mode is selected, the system turns off recirculation and runs the air-conditioning compressor unless the outside temperature is at or below freezing. If recirculation is selected while in defog mode, it is cancelled after 10 minutes.

**(Defrost):** This mode clears the windshield of fog or frost more quickly. Air is directed to the windshield, with some air directed to the side windows. In this mode, the system automatically turns off recirculation and runs the air-conditioning compressor, unless the outside temperature is at or below freezing.

This mode can also cause the fan speed and air temperature to increase.

**(Air Conditioning):** Press to turn the air conditioning system on or off and override the automatic system. When in AUTO, the air conditioning compressor comes on automatically, as needed.

The air conditioning system removes moisture from the air, so water might drip under the vehicle while idling or after turning off the engine. This is normal.

**(Recirculation):** Press to turn on recirculation. An indicator light comes on. Air is recirculated inside the vehicle. It helps to quickly cool the air inside the vehicle or prevent outside air and odors from entering. Press the auto button to have the system select the best air delivery mode for the temperature setting.

Recirculation is not available in the defrost mode and automatically turns off 10 minutes after defog is selected. This helps to limit window fogging in the vehicle.

Using recirculation for long periods of time could cause the air inside the vehicle to become too dry or stuffy. To prevent this from happening, after the air in the vehicle has cooled, select outside air or press the auto button.

**(Outside Air):** Press to turn on the outside air. An indicator light turns on. The outside air mode pulls fresh air from outside the vehicle. Outside air is always selected in defrost mode to prevent fogging.

## Rear Window Defogger

The rear window defogger uses a warming grid to remove fog or frost from the rear window. It only works when the ignition is in ON/RUN.

**(Rear Window Defogger):** Press to turn the rear window defogger on or off.

The rear window defogger stays on for about 15 minutes, before turning off if the vehicle is moving at a slower speed. At higher speeds, the rear window defogger may stay on continuously. With each additional press, the defogger runs for about 10 minutes. The defogger can also be turned off by turning off the engine.

The heated outside rearview mirrors turn on when the rear window defogger button is on and helps to clear fog or frost from the surface of the mirror. See *Heated Mirrors on page 1-27*.

***Notice:*** **Do not try to clear frost or other material from the inside of the front windshield and rear window with a razor blade or anything else that is sharp. This may damage the rear window defogger grid and affect your radio's ability to pick up stations clearly. The repairs wouldn't be covered by your warranty.**

**/ (Heated and Ventilated Seats):** Press to heat or ventilate the seat. See *Heated and Ventilated Front Seats on page 2-9*.

**Remote Start Climate Control Operation:** For vehicles with remote vehicle start, the climate control system automatically heats and cools the vehicle based on the temperature inside and outside of the vehicle. The climate control displays will be blank. See *Remote Vehicle Start on page 1-12*.

In cold weather the windshield defroster and/or rear window defogger automatically turn on. If the vehicle has heated seats, they will also turn on.

When the ignition is turned to ON/RUN, the climate control system returns to the settings used before the vehicle was last turned off. The heated seats will turn off, if equipped.

## Sensors

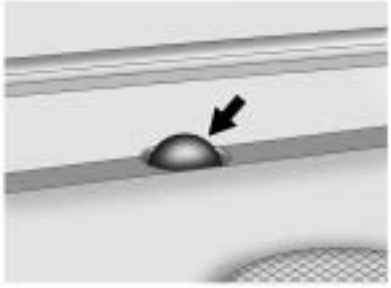

The solar sensor located on the instrument panel, near the windshield, monitors the solar heat.

The interior temperature sensor located on the instrument panel to the right of the steering wheel, measures the temperature of the air inside the vehicle.

The climate control system uses the information from these sensors to adjust the fan speed and the air delivery, in order to maintain the selected temperature. The system may also supply cooler air to the side of the vehicle facing the sun. The recirculation mode will also be activated, as necessary.

Do not cover the sensors or the automatic climate control system will not work properly.

### Air Quality Sensor

For vehicles with an air quality sensor, the climate control system adjusts to limit some exhaust fumes from being pulled inside your vehicle.

Press the AUTO button on the climate control to activate the air quality sensor. The recirculation indicator light comes on when poor quality air is detected. The air quality sensor will not maintain recirculation for an extended period to prevent the air inside the vehicle from becoming too dry or stuffy.

Under certain conditions, the air quality sensor will not activate recirculation, such as during cold weather or with odors, like skunk. To limit odors manually, press until the condition has passed.

The air quality sensor system does not protect against carbon monoxide (CO), which you cannot see or smell. See *Engine Exhaust on page 8-25*.

# Air Vents

Use the air outlets located in the center and on the side of the instrument panel to direct the airflow. Use the thumbwheels near the air outlets to open or close off the airflow.

**Operation Tips**

- Clear away any ice, snow, or leaves from air inlets at the base of the windshield that could block the flow of air into the vehicle.
- Keep the path under the front seats clear of objects to help circulate the air inside of the vehicle more effectively.
- Use of non-GM approved hood deflectors can adversely affect the performance of the system. Check with your dealer/retailer before adding equipment to the outside of the vehicle.

# Maintenance

## Passenger Compartment Air Filter

The passenger compartment air filter traps most of the dust and pollen from the air entering the vehicle. The filter will need to be changed periodically. See *Scheduled Maintenance on page 10-3*.

Using the climate control system without the passenger air filter installed could let water or other debris enter the system. This could cause a water leak or noises. Make sure a new air filter is installed after removing the old one.

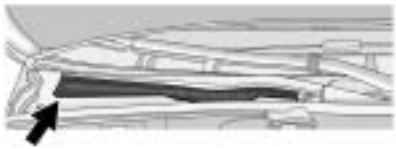

The passenger compartment air filter is located under the hood below the windshield wiper arm and the screen on the passenger side of the vehicle. See *Engine Compartment Overview on page 9-6* for more information on location.

To replace the passenger compartment air filter:

1. Turn the ignition to ON/RUN with the engine off.
2. Turn on the windshield wipers and turn the ignition off again when the wipers are straight up on the windshield.

   This allows access to the leaf screen. The passenger compartment air filter is located under the screen.
3. Open the hood to access the engine compartment. See *Hood on page 9-5* for more information.
4. Remove the three screws that hold the screen in place and lift off the screen by lifting and sliding it toward the center of the vehicle.
5. Pull out on the two tabs located on each end of the filter cover.
6. Lift the filter cover off by pulling it straight up.
7. Remove the old filter and insert a new one.

   See *Maintenance Replacement Parts on page 10-9* for the correct part number for the filter.
8. Reverse Steps 1 through 6 to reinstall the cover.

## ✍ NOTES

# Driving and Operating


## Driving Information
Driving for Better Fuel Economy . . . . . 8-2
Defensive Driving . . . . . 8-3
Drunk Driving . . . . . 8-3
Control of a Vehicle . . . . . 8-4
Braking . . . . . 8-4
Steering . . . . . 8-5
Off-Road Recovery . . . . . 8-6
Loss of Control . . . . . 8-7
Competitive Driving . . . . . 8-8
Driving on Wet Roads . . . . . 8-8
Highway Hypnosis . . . . . 8-9
Hill and Mountain Roads . . . . . 8-9
Winter Driving . . . . . 8-10
If the Vehicle is Stuck . . . . . 8-12
Vehicle Load Limits . . . . . 8-12

## Starting and Operating
New Vehicle Break-In . . . . . 8-17
Ignition Positions (Key Access) . . . . . 8-18
Ignition Positions (Keyless Access) . . . . . 8-19
Retained Accessory Power (RAP) . . . . . 8-19
Starting the Engine . . . . . 8-20
Engine Coolant Heater . . . . . 8-22
Shifting Into Park . . . . . 8-22
Shifting Out of Park . . . . . 8-23
Parking (Manual Transmission) . . . . . 8-24
Parking Over Things That Burn . . . . . 8-24

## Engine Exhaust
Engine Exhaust . . . . . 8-25
Running the Vehicle While Parked . . . . . 8-25

## Automatic Transmission
Automatic Transmission . . . . . 8-26
Manual Mode . . . . . 8-28

## Manual Transmission
Manual Transmission . . . . . 8-30

## Drive Systems
All-Wheel Drive . . . . . 8-32

## Brakes
Antilock Brake System (ABS) . . . . . 8-33
Parking Brake (Manual) . . . . . 8-34
Parking Brake (Electric) . . . . . 8-35
Brake Assist (Except CTS-V) . . . . . 8-37

## Ride Control Systems
Traction Control System (TCS) . . . . . 8-37
StabiliTrak System . . . . . 8-38
Competitive Driving Mode . . . 8-40
Magnetic Ride Control . . . . . 8-40
Limited-Slip Rear Axle . . . . . 8-41

## Cruise Control
Cruise Control . . . . . 8-41

## Object Detection Systems
Ultrasonic Parking Assist . . . . 8-44
Rear Vision Camera (RVC) . . . . . 8-46

**Fuel**
Fuel . . . . . 8-49
Recommended Fuel . . . . . 8-49
Gasoline Specifications . . . . . 8-50
California Fuel Requirements . . . . . 8-50
Fuels in Foreign Countries . . . 8-50
Fuel Additives . . . . . 8-50
Filling the Tank . . . . . 8-52
Filling a Portable Fuel Container . . . . . 8-53

**Towing**
General Towing Information . . . . . 8-54
Driving Characteristics and Towing Tips . . . . . 8-54
Trailer Towing (Except CTS-V) . . . . . 8-58
Trailer Towing (CTS-V) . . . . . 8-59
Towing Equipment . . . . . 8-59

**Conversions and Add-Ons**
Add-On Electrical Equipment . . . . . 8-60

# Driving Information

## Driving for Better Fuel Economy

Driving habits can affect fuel mileage. Here are some driving tips to get the best fuel economy possible.

- Avoid fast starts and accelerate smoothly.
- Brake gradually and avoid abrupt stops.
- Avoid idling the engine for long periods of time.
- When road and weather conditions are appropriate, use cruise control, if equipped.
- Always follow posted speed limits or drive more slowly when conditions require.
- Keep vehicle tires properly inflated.
- Combine several trips into a single trip.
- Replace the vehicle's tires with the same TPC Spec number molded into the tire's sidewall near the size.
- Follow recommended scheduled maintenance.

## Defensive Driving

Defensive driving means “always expect the unexpected.” The first step in driving defensively is to wear your safety belt, see *Safety Belts on page 2-11*.

**⚠ WARNING**

Assume that other road users (pedestrians, bicyclists, and other drivers) are going to be careless and make mistakes. Anticipate what they might do and be ready. In addition:

- Allow enough following distance between you and the driver in front of you.
- Focus on the task of driving.

Driver distraction can cause collisions resulting in injury or possible death. These simple defensive driving techniques could save your life.

## Drunk Driving

**⚠ WARNING**

Drinking and then driving is very dangerous. Your reflexes, perceptions, attentiveness, and judgment can be affected by even a small amount of alcohol. You can have a serious — or even fatal — collision if you drive after drinking. Do not drink and drive or ride with a driver who has been drinking. Ride home in a cab; or if you are with a group, designate a driver who will not drink.

Death and injury associated with drinking and driving is a global tragedy.

Alcohol affects four things that anyone needs to drive a vehicle: judgment, muscular coordination, vision, and attentiveness.

Police records show that almost 40 percent of all motor vehicle-related deaths involve alcohol. In most cases, these deaths are the result of someone who was drinking and driving. In recent years, more than 17,000 annual motor vehicle-related deaths have been associated with the use of alcohol, with about 250,000 people injured.

For persons under 21, it is against the law in every U.S. state to drink alcohol. There are good medical, psychological, and developmental reasons for these laws.

The obvious way to eliminate the leading highway safety problem is for people never to drink alcohol and then drive.

Medical research shows that alcohol in a person's system can make crash injuries worse, especially injuries to the brain,

spinal cord, or heart. This means that when anyone who has been drinking — driver or passenger — is in a crash, that person's chance of being killed or permanently disabled is higher than if the person had not been drinking.

## Control of a Vehicle

The following three systems help to control the vehicle while driving — brakes, steering, and accelerator. At times, as when driving on snow or ice, it is easy to ask more of those control systems than the tires and road can provide. Meaning, you can lose control of the vehicle. See *Traction Control System (TCS) on page 8-37*.

Adding non-dealer/non-retailer accessories can affect vehicle performance. See *Accessories and Modifications on page 9-3*.

## Braking

See *Brake System Warning Light on page 4-26*.

Braking action involves perception time and reaction time. Deciding to push the brake pedal is perception time. Actually doing it is reaction time.

Average reaction time is about three-fourths of a second. But that is only an average. It might be less with one driver and as long as two or three seconds or more with another. Age, physical condition, alertness, coordination, and eyesight all play a part. So do alcohol, drugs, and frustration. But even in three-fourths of a second, a vehicle moving at 100 km/h (60 mph) travels 20 m (66 ft). That could be a lot of distance in an emergency, so keeping enough space between the vehicle and others is important.

And, of course, actual stopping distances vary greatly with the surface of the road, whether it is pavement or gravel; the condition of the road, whether it is wet, dry, or icy; tire tread; the condition of the brakes; the weight of the vehicle; and the amount of brake force applied.

Avoid needless heavy braking. Some people drive in spurts — heavy acceleration followed by heavy braking — rather than keeping pace with traffic. This is a mistake. The brakes might not have time to cool between hard stops. The brakes will wear out much faster with a lot of heavy braking. Keeping pace with the traffic and allowing realistic following distances eliminates a lot of unnecessary braking. That means better braking and longer brake life.

If the engine ever stops while the vehicle is being driven, brake normally but do not pump the brakes. If the brakes are pumped, the pedal could get harder to push down. If the engine stops, there will still be some power brake assist but it will be used when the brake is applied. Once the power assist is used up, it can take longer to stop and the brake pedal will be harder to push.

Adding non-dealer/non-retailer accessories can affect vehicle performance. See *Accessories and Modifications on page 9-3*.

## Steering

### Power Steering

If power steering assist is lost because the engine stops or the power steering system is not functioning, the vehicle can be steered but it will take more effort.

### Speed Variable Assist Steering

The vehicle has a steering system that varies the amount of effort required to steer the vehicle in relation to the speed of the vehicle.

The amount of steering effort required is less at slower speeds to make the vehicle more maneuverable and easier to park. At faster speeds, the steering effort increases to provide a sport-like feel to the steering. This provides maximum control and stability.

If the vehicle seems harder to steer than normal when parking or driving slowly, there may be a problem with the system. You will still have power steering, but steering will be stiffer than normal at slow speeds. See your dealer/retailer for service.

### Steering Tips

It is important to take curves at a reasonable speed.

Traction in a curve depends on the condition of the tires and the road surface, the angle at which the curve is banked, and vehicle speed. While in a curve, speed is the one factor that can be controlled.

If there is a need to reduce speed, do it before entering the curve, while the front wheels are straight.

Try to adjust the speed so you can drive through the curve. Maintain a reasonable, steady speed. Wait to accelerate until out of the curve, and then accelerate gently into the straightaway.

### Steering in Emergencies

There are times when steering can be more effective than braking. For example, you come over a hill and find a truck stopped in your lane, or a car suddenly pulls out from nowhere, or a child darts out from between parked cars and stops right in front of you. These problems can be avoided by braking — if you can stop in time. But sometimes you cannot stop in time because there is no room. That is the time for evasive action — steering around the problem.

The vehicle can perform very well in emergencies like these. First apply the brakes. See *Braking on page 8-4*. It is better to remove as much speed as possible from a collision. Then steer around the problem, to the left or right depending on the space available.

An emergency like this requires close attention and a quick decision. If holding the steering wheel at the recommended 9 and 3 o'clock positions, it can be turned a full 180 degrees very quickly without removing either hand. But you have to act fast, steer quickly, and just as quickly straighten the wheel once you have avoided the object.

The fact that such emergency situations are always possible is a good reason to practice defensive driving at all times and wear safety belts properly.

## Off-Road Recovery

The vehicle's right wheels can drop off the edge of a road onto the shoulder while driving.

If the level of the shoulder is only slightly below the pavement, recovery should be fairly easy. Ease off the accelerator and then, if there is nothing in the way, steer so that the vehicle straddles the edge of the pavement. Turn the steering wheel 8 to 13 cm (3 to 5 inches), about one-eighth turn, until the right front

tire contacts the pavement edge. Then turn the steering wheel to go straight down the roadway.

## Loss of Control

Let us review what driving experts say about what happens when the three control systems — brakes, steering, and acceleration — do not have enough friction where the tires meet the road to do what the driver has asked.

In any emergency, do not give up. Keep trying to steer and constantly seek an escape route or area of less danger.

### Skidding

In a skid, a driver can lose control of the vehicle. Defensive drivers avoid most skids by taking reasonable care suited to existing conditions, and by not overdriving those conditions. But skids are always possible.

The three types of skids correspond to the vehicle's three control systems. In the braking skid, the wheels are not rolling. In the steering or cornering skid, too much speed or steering in a curve causes tires to slip and lose cornering force. And in the acceleration skid, too much throttle causes the driving wheels to spin.

If the vehicle starts to slide, ease your foot off the accelerator pedal and quickly steer the way you want the vehicle to go. If you start steering quickly enough, the vehicle may straighten out. Always be ready for a second skid if it occurs.

Of course, traction is reduced when water, snow, ice, gravel, or other material is on the road. For safety, slow down and adjust your driving to these conditions. It is important to slow down on slippery surfaces because stopping distance is longer and vehicle control more limited.

While driving on a surface with reduced traction, try your best to avoid sudden steering, acceleration, or braking, including reducing vehicle speed by shifting to a lower gear. Any sudden changes could cause the tires to slide. You might not realize the surface is slippery until the vehicle is skidding. Learn to recognize warning clues — such as enough water, ice, or packed snow on the road to make a mirrored surface — and slow down when you have any doubt.

Remember: Antilock brakes help avoid only the braking skid.

## Competitive Driving

Competitive driving may affect the vehicle warranty. See the warranty book before using the vehicle for competitive driving.

***Notice:*** **If you use your vehicle for competitive driving, the engine may use more oil than it would with normal use. Low oil levels can damage the engine. Be sure to check the oil level often during competitive driving and keep the level at or near the upper mark that shows the proper operating range on the engine oil dipstick. For information on how to add oil, see *Engine Oil on page 9-10*.**

CTS-V Only: For competitive driving, it is recommended that the brake fluid be replaced with a high performance brake fluid that has a dry boiling point greater than 279°C (534°F). After conversion to the high performance brake fluid, follow the brake fluid service recommendations outlined by the fluid manufacturer. Do not use silicone or DOT-5 brake fluids.

## Driving on Wet Roads

Rain and wet roads can reduce vehicle traction and affect your ability to stop and accelerate. Always drive slower in these types of driving conditions and avoid driving through large puddles and deep-standing or flowing water.

**⚠ WARNING**

Wet brakes can cause crashes. They might not work as well in a quick stop and could cause pulling to one side. You could lose control of the vehicle.

(Continued)

**WARNING (Continued)**

After driving through a large puddle of water or a car/vehicle wash, lightly apply the brake pedal until the brakes work normally.

Flowing or rushing water creates strong forces. Driving through flowing water could cause your vehicle to be carried away. If this happens, you and other vehicle occupants could drown. Do not ignore police warnings and be very cautious about trying to drive through flowing water.

### Hydroplaning

Hydroplaning is dangerous. Water can build up under your vehicle's tires so they actually ride on the water. This can happen if the road is wet enough and you are going fast enough. When your vehicle is hydroplaning, it has little or no contact with the road.

There is no hard and fast rule about hydroplaning. The best advice is to slow down when the road is wet.

### Other Rainy Weather Tips

Besides slowing down, other wet weather driving tips include:

- Allow extra following distance.
- Pass with caution.
- Keep windshield wiping equipment in good shape.
- Keep the windshield washer fluid reservoir filled.
- Have good tires with proper tread depth. See *Tires on page 9-58*.
- Turn off cruise control.

## Highway Hypnosis

Always be alert and pay attention to your surroundings while driving. If you become tired or sleepy, find a safe place to park your vehicle and rest.

Other driving tips include:

- Keep the vehicle well ventilated.
- Keep interior temperature cool.
- Keep your eyes moving — scan the road ahead and to the sides.
- Check the rearview mirror and vehicle instruments often.

## Hill and Mountain Roads

Driving on steep hills or through mountains is different than driving on flat or rolling terrain. Tips for driving in these conditions include:

- Keep the vehicle serviced and in good shape.
- Check all fluid levels and brakes, tires, cooling system, and transmission.
- Going down steep or long hills, shift to a lower gear.

**⚠ WARNING**

If you do not shift down, the brakes could get so hot that they would not work well. You would then have poor braking or even none going down a hill. You could crash. Shift down to let the engine assist the brakes on a steep downhill slope.

**⚠ WARNING**

Coasting downhill in N (Neutral) or with the ignition off is dangerous. The brakes will have to do all the work of slowing down and they could get so hot that they would not work well. You would then have poor braking or even none going down a hill. You could crash. Always have the engine running and the vehicle in gear when going downhill.

- Stay in your own lane. Do not swing wide or cut across the center of the road. Drive at speeds that let you stay in your own lane.
- Top of hills: Be alert — something could be in your lane (stalled car, accident).
- Pay attention to special road signs (falling rocks area, winding roads, long grades, passing or no-passing zones) and take appropriate action.

# Winter Driving

## Driving on Snow or Ice

Drive carefully when there is snow or ice between the tires and the road, creating less traction or grip. Wet ice can occur at about 0°C (32°F) when freezing rain begins to fall, resulting in even less traction. Avoid driving on wet ice or in freezing rain until roads can be treated with salt or sand.

Drive with caution, whatever the condition. Accelerate gently so traction is not lost. Accelerating too quickly causes the wheels to spin and makes the surface under the tires slick, so there is even less traction.

Try not to break the fragile traction. If you accelerate too fast, the drive wheels will spin and polish the surface under the tires even more.

The *Antilock Brake System (ABS) on page 8-33* improves vehicle stability during hard stops on slippery roads, but apply the brakes sooner than when on dry pavement.

Allow greater following distance on any slippery road and watch for slippery spots. Icy patches can occur on otherwise clear roads in shaded areas. The surface of a curve or an overpass can remain icy when the surrounding roads are clear. Avoid sudden steering maneuvers and braking while on ice.

Turn off cruise control, if equipped, on slippery surfaces.

### Blizzard Conditions

Being stuck in snow can be a serious situation. Stay with the vehicle unless there is help nearby. If possible, use the *Roadside Service on page 12-6*. To get help and keep everyone in the vehicle safe:

- Turn on the hazard warning flashers.
- Tie a red cloth to an outside mirror.

**⚠ WARNING**

Snow can trap engine exhaust under the vehicle. This may cause exhaust gases to get inside. Engine exhaust contains carbon monoxide (CO) which cannot be seen or smelled. It can cause unconsciousness and even death.

(Continued)

**WARNING (Continued)**

If the vehicle is stuck in the snow:

- Clear away snow from around the base of your vehicle, especially any that is blocking the exhaust pipe.
- Check again from time to time to be sure snow does not collect there.
- Open a window about 5 cm (two inches) on the side of the vehicle that is away from the wind to bring in fresh air.
- Fully open the air outlets on or under the instrument panel.
- Adjust the Climate Control system to a setting that circulates the air inside the vehicle and set the fan speed to the highest setting. See Climate Control System in the Index.

(Continued)

**WARNING (Continued)**

For more information about carbon monoxide, see *Engine Exhaust on page 8-25*.

Snow can trap exhaust gases under your vehicle. This can cause deadly CO (carbon monoxide) gas to get inside. CO could overcome you and kill you. You cannot see it or smell it, so you might not know it is in your vehicle. Clear away snow from around the base of your vehicle, especially any that is blocking the exhaust.

Run the engine for short periods only as needed to keep warm, but be careful.

To save fuel, run the engine for only short periods as needed to warm the vehicle and then shut the engine off and close the window most of the way to save heat.

Repeat this until help arrives but only when you feel really uncomfortable from the cold. Moving about to keep warm also helps.

If it takes some time for help to arrive, now and then when you run the engine, push the accelerator pedal slightly so the engine runs faster than the idle speed. This keeps the battery charged to restart the vehicle and to signal for help with the headlamps. Do this as little as possible to save fuel.

## If the Vehicle is Stuck

Slowly and cautiously spin the wheels to free the vehicle when stuck in sand, mud, ice, or snow.

If stuck too severely for the traction system to free the vehicle, turn the traction system off and use the rocking method.

**⚠ WARNING**

If the vehicle's tires spin at high speed, they can explode, and you or others could be injured. The vehicle can overheat, causing an engine compartment fire or other damage. Spin the wheels as little as possible and avoid going above 55 km/h (35 mph) as shown on the speedometer.

For information about using tire chains on the vehicle, see *Tire Chains on page 9-81*.

### Rocking the Vehicle to Get it Out

Turn the steering wheel left and right to clear the area around the front wheels. Turn off any traction system. Shift back and forth between R (Reverse) and a forward gear, or with a manual transmission, between 1 (First) or 2 (Second) and R (Reverse), spinning the wheels as little as possible. To prevent transmission wear, wait until the wheels stop spinning before shifting gears. Release the accelerator pedal while shifting, and press lightly on the accelerator pedal when the transmission is in gear. Slowly spinning the wheels in the forward and reverse directions causes a rocking motion that could free the vehicle. If that does not get the vehicle out after a few tries, it might need to be towed out. If the vehicle does need to be towed out, see *Towing the Vehicle on page 9-108*.

## Vehicle Load Limits

It is very important to know how much weight the vehicle can carry. This weight is called the vehicle capacity weight and includes the weight of all occupants, cargo and all nonfactory-installed options.

Two labels on the vehicle show how much weight it may properly carry, the Tire and Loading Information label and the Certification label.

**⚠ WARNING**

Do not load the vehicle any heavier than the Gross Vehicle Weight Rating (GVWR), or either the maximum front or rear Gross Axle Weight Rating (GAWR). If you do, parts on the vehicle can break, and it can change the way the vehicle handles. These could cause you to lose control and crash. Also, overloading can shorten the life of the vehicle.

### Tire and Loading Information Label

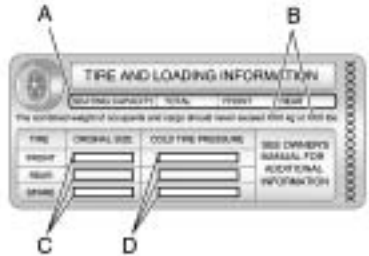


**Label Example**

A vehicle specific Tire and Loading Information label is attached to the vehicle's center pillar (B-pillar). With the driver's door open, you will find the label attached near the door lock post. The Tire and Loading Information label shows the number of occupant seating positions (A), and the maximum vehicle capacity weight (B) in kilograms and pounds.

The Tire and Loading Information label also shows the tire size of the original equipment tires (C) and the recommended cold tire inflation pressures (D). For more information on tires and inflation see *Tires on page 9-58* and *Tire Pressure on page 9-66* .

There is also important loading information on the Certification label. It tells you the Gross Vehicle Weight Rating (GVWR) and the Gross Axle Weight Rating (GAWR) for the front and rear axle. See “Certification Label” later in this section.

**Steps for Determining Correct Load Limit**

1. Locate the statement "The combined weight of occupants and cargo should never exceed XXX kg or XXX lbs" on your vehicle's placard.
2. Determine the combined weight of the driver and passengers that will be riding in your vehicle.
3. Subtract the combined weight of the driver and passengers from XXX kg or XXX lbs.
4. The resulting figure equals the available amount of cargo and luggage load capacity. For example, if the "XXX" amount equals 1400 lbs and there will be five 150 lb passengers in your vehicle, the amount of available cargo and luggage load capacity is 650 lbs (1400 − 750 (5 x 150) = 650 lbs).
5. Determine the combined weight of luggage and cargo being loaded on the vehicle. That weight may not safely exceed the available cargo and luggage load capacity calculated in Step 4.
6. If your vehicle will be towing a trailer, the load from your trailer will be transferred to your vehicle. Consult this manual to determine how this reduces the available cargo and luggage load capacity of your vehicle.

See *Trailer Towing (Except CTS-V) on page 8-58* or *Trailer Towing (CTS-V) on page 8-59* for important information on towing a trailer, towing safety rules and trailering tips.

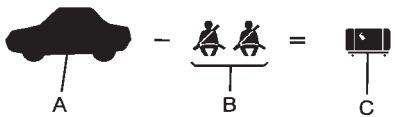


**Example 1**

A. Vehicle Capacity Weight for Example 1 = 453 kg (1,000 lbs).

B. Subtract Occupant Weight @ 68 kg (150 lbs) × 2 = 136 kg (300 lbs).

C. Available Occupant and Cargo Weight = 317 kg (700 lbs).

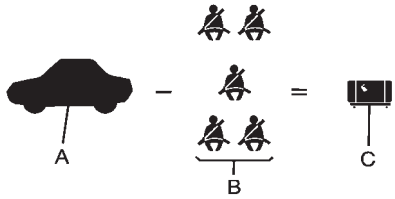


**Example 2**

A. Vehicle Capacity Weight for Example 2 = 453 kg (1,000 lbs).

B. Subtract Occupant Weight @ 68 kg (150 lbs) × 5 = 340 kg (750 lbs).

C. Available Cargo Weight = 113 kg (250 lbs).

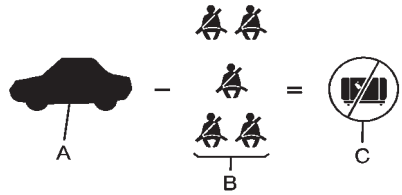


**Example 3**

A. Vehicle Capacity Weight for Example 3 = 453 kg (1,000 lbs).

B. Subtract Occupant Weight @ 91 kg (200 lbs) × 5 = 453 kg (1,000 lbs).

C. Available Cargo Weight = 0 kg (0 lbs).

Refer to the vehicle's Tire and Loading Information label for specific information about the vehicle's capacity weight and seating positions. The combined weight of the driver, passengers, and cargo should never exceed the vehicle's capacity weight.

## Certification Label

**Label Example**

A vehicle specific Certification label is attached to either the driver's door edge or the lower center pillar on the driver's side of the vehicle. The label tells the gross weight capacity of the vehicle, called the Gross Vehicle Weight Rating (GVWR).

The GVWR includes the weight of the vehicle, all occupants, fuel, and cargo. Never exceed the GVWR for the vehicle, or the Gross Axle Weight Rating (GAWR) for either the front or rear axle.

If the vehicle is carrying a heavy load, it should be spread out. See “Steps for Determining Correct Load Limit” earlier in this section.

**⚠ WARNING**

Do not load the vehicle any heavier than the Gross Vehicle Weight Rating (GVWR), or either the maximum front or rear Gross Axle Weight Rating (GAWR). If you do, parts on the vehicle can break, and it can change the way the vehicle handles.

(Continued)

**WARNING (Continued)**

These could cause you to lose control and crash. Also, overloading can shorten the life of the vehicle.

**⚠ WARNING**

Things you put inside the vehicle can strike and injure people in a sudden stop or turn, or in a crash.

- Put things in the cargo area of the vehicle. In the cargo area, put them as far forward as you can. Try to spread the weight evenly.

(Continued)

**WARNING (Continued)**

- Never stack heavier things, like suitcases, inside the vehicle so that some of them are above the tops of the seats.
- Do not leave an unsecured child restraint in the vehicle.
- When you carry something inside the vehicle, secure it whenever you can.
- Do not leave a seat folded down unless you need to.

# Starting and Operating

## New Vehicle Break-In

Follow these recommended guidelines during the first 2 414 km/1,500 miles of driving this vehicle. Parts have a break-in period and performance will be better in the long run.

For the first 2 414 km/1,500 miles:

- Avoid full throttle starts and abrupt stops.
- Do not exceed 4,000 engine rpm.
- Avoid driving at any one constant speed, fast or slow.
- Avoid downshifting to brake or slow the vehicle when the engine speed will exceed 4000 RPM.
- Do not let the engine labor. Never lug the engine in high gear at low speeds. With a manual transmission, shift to the next lower gear. This rule applies at all times, not just during the break-in period.
- Do not participate in track events, sport driving schools, or similar activities during this break–in period.
- Check engine oil with every refueling and add if necessary. Oil and fuel consumption may be higher than normal during the first 2 414 km/1,500 miles.
- To break in new tires, drive at moderate speeds and avoid hard cornering for the first 322 km/ 200 miles. New tires do not have maximum traction and may tend to slip.
- New brake linings also need a break–in period. Avoid making hard stops during the first 322 km/200 miles. This is recommended every time brake linings are replaced.

## Ignition Positions (Key Access)

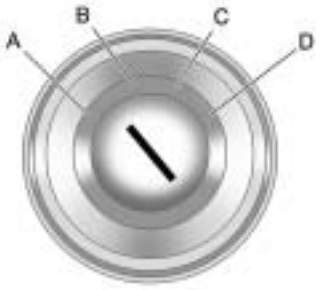


The key can be turned to four different positions.

To shift out of P (Park), the ignition must be in the ON/RUN or ACC/ACCESSORY and the brake pedal must be applied.

***Notice:*** **Using a tool to force the key from its cylinder could cause damage or break the key. Use the correct key and turn the key only with your hand. Make sure the key is all the way in. If it is and you have a manual transmission vehicle, turn the steering wheel left and right while you turn the key hard. If none of this works, then the vehicle needs service.**

**A (LOCK/OFF):** This is the only position in which the key can be inserted or removed. This position locks the ignition and shifter on automatic transmission vehicles, and the ignition and steering wheel on manual transmission vehicles.

**B (ACC/ACCESSORY):** This position lets you use things like the radio and the windshield wipers when the engine is off. This position allows you to turn off the engine.

**C (ON/RUN):** This position is for driving. It is the position the ignition switch returns to after the engine starts, and the key is released.

To shift the transmission out of P (Park), the ignition key has to be in ACC/ACCESSORY or ON/RUN.

The battery could be drained if the key is left in the ACC/ACCESSORY or ON/RUN position with the engine off. The vehicle might not start if the battery is allowed to drain for an extended period of time.

**D (START):** This position starts the engine. When the engine starts, release the key. The ignition switch returns to ON/RUN for driving.

A warning tone will sound when the driver door is opened, the ignition is in ACC/ACCESSORY or LOCK/OFF and the key is in the ignition.

## Ignition Positions (Keyless Access)

You can turn the ignition control knob to four different positions.

To shift out of P (Park), ignition must be in the ON/RUN or ACC/ ACCESSORY and the regular brake pedal must be applied.

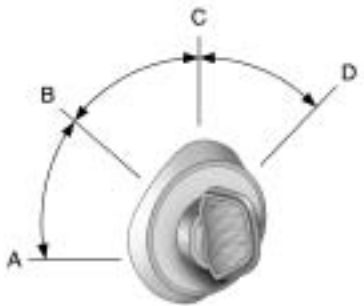


Using a tool to force the ignition control knob from its cylinder could damage it.

Make sure the keyless access transmitter is inside the vehicle when trying to turn the ignition control knob.

**A (LOCK/OFF):** The ignition control knob cannot be removed from the vehicle. The keyless access transmitter must be inside the vehicle to start the engine. This position locks the ignition and shifter on automatic transmission vehicles, and the ignition and steering wheel on manual transmission vehicles.

**B (ACC/ACCESSORY):** This position allows you to use things like the radio and the windshield wipers when the engine is off. This position will allow you to turn off the engine.

**C (ON/RUN):** This position is for driving. It is the position the ignition switch returns to after the engine starts, and the control knob is released.

If you need to shift the transmission out of P (Park), the ignition control knob has to be in ACC/ ACCESSORY or ON/RUN.

The battery could be drained if you leave the key in the ACC/ ACCESSORY or ON/RUN position with the engine off. You may not be able to start your vehicle if the battery is allowed to drain for an extended period of time.

**D (START):** This position starts the engine.

## Retained Accessory Power (RAP)

These vehicle accessories can be used for up to 10 minutes after the engine is turned off:

- Audio System
- Power Windows
- Sunroof (if equipped)

Power to the audio system will work up to 10 minutes or until the driver door is opened.

Power to the windows or sunroof will work up to 10 minutes or until any door is opened. For an additional 10 minutes of operation, close all the doors and turn the key to ON/RUN and then back to LOCK/OFF.

## Starting the Engine

Place the transmission in the proper gear.

If the vehicle has the keyless access system, the keyless access transmitter must be authenticated in order for the ignition control knob to turn. The transmitter can be authenticated either by putting your foot on the brake pedal or by pushing the ignition control knob in.

### Automatic Transmission

Move the shift lever to P (Park) or N (Neutral). The engine will not start in any other position. To restart the engine when the vehicle is already moving, use N (Neutral) only.

If the vehicle has the keyless access system, your foot must be on the brake pedal to start the engine. To rotate the ignition control knob, put your foot on the brake pedal and turn the ignition control knob to the START position. If the ignition control knob does not turn, try pushing the knob in and turning again. When the engine begins cranking, let go of the ignition control knob, it will return to the ON/RUN position.

If the transmitter is not in the vehicle or something is interfering with the transmitter, the Driver Information Center (DIC) will display Electronic Key Not Detected. See *Driver Information Center (DIC) on page 4-31* for more information.

If the battery in the keyless access transmitter needs replacing, the DIC displays Replace Battery In Remote Key. The vehicle can still be driven. See “Battery Replacement” under *Remote Keyless Entry (RKE) System Operation (Key Access) on page 1-5* or *Remote Keyless Entry (RKE) System Operation (Keyless Access) on page 1-7* for more information.

***Notice:*** **Do not try to shift to P (Park) if the vehicle is moving. If you do, you could damage the transmission. Shift to P (Park) only when the vehicle is stopped.**

### Manual Transmission

The shift lever should be in neutral position and the parking brake engaged. Hold the clutch pedal down to the floor and start the engine. The vehicle will not start if the clutch pedal is not all the way down.

**Starting Procedure**

1. With your foot off the accelerator pedal, turn the ignition key to START. If the vehicle has the keyless access system, push the ignition control knob in and rotate the knob to the START position. When the engine starts, let go of the ignition. The idle speed will go down as your engine gets warm. Do not race the engine immediately after starting it. Operate the engine and transmission gently to allow the oil to warm up and lubricate all moving parts.

   The vehicle has a Computer-Controlled Cranking System. This feature assists in starting the engine and protects components. If the ignition key is turned to the START position, and then released when the engine begins cranking, the engine will continue cranking for a few seconds or until the vehicle starts. If the engine does not start and the key is held in START for many seconds, cranking will be stopped after 15 seconds to prevent cranking motor damage. To prevent gear damage, this system also prevents cranking if the engine is already running. Engine cranking can be stopped by turning the ignition switch to ACC/ACCESSORY or LOCK/OFF.

***Notice:*** **Cranking the engine for long periods of time, by returning the key to the START position immediately after cranking has ended, can overheat and damage the cranking motor, and drain the battery. Wait at least 15 seconds between each try, to let the cranking motor cool down.**

2. If the engine does not start after 5-10 seconds, especially in very cold weather (below 0°F or −18°C), it could be flooded with too much gasoline. Try pushing the accelerator pedal all the way to the floor and holding it there as you hold the key in START for up to a maximum of 15 seconds. Wait at least 15 seconds between each try, to allow the cranking motor to cool down. When the engine starts, let go of the key and accelerator. If the vehicle starts briefly but then stops again, do the same thing. This clears the extra gasoline from the engine. Do not race the engine immediately after starting it. Operate the engine and transmission gently until the oil warms up and lubricates all moving parts.

***Notice:*** **The engine is designed to work with the electronics in the vehicle. If you add electrical parts or accessories, you could change the way the engine operates. Before adding electrical equipment, check with your dealer/retailer. If you do not, the engine might not perform properly. Any resulting damage would not be covered by the vehicle warranty.**

## Engine Coolant Heater

Vehicles with the engine coolant heater can use this option in cold weather conditions at or below −18°C (0°F) for easier starting and better fuel economy during engine warm-up. Plug in the coolant heater at least four hours before starting your vehicle.
An internal thermostat in the plug-end of the cord may exist which will prevent engine coolant heater operation at temperatures above −18°C (0°F).

### To Use the Engine Coolant Heater

1. Turn off the engine.
2. Open the hood and unwrap the electrical cord. The cord is located near the driver side strut tower.

   Remove the plastic cap to access the plug.
3. Plug it into a normal, grounded 110-volt AC outlet.

**⚠ WARNING**

Plugging the cord into an ungrounded outlet could cause an electrical shock. Also, the wrong kind of extension cord could overheat and cause a fire. You could be seriously injured. Plug the cord into a properly grounded three-prong 110-volt AC outlet.
If the cord will not reach, use a heavy-duty three-prong extension cord rated for at least 15 amps.

4. Before starting the engine, be sure to unplug and store the cord as it was before to keep it away from moving engine parts. If you do not, it could be damaged.

Contact your dealer/retailer for information on how long to use the heater in your particular area.

## Shifting Into Park

**⚠ WARNING**

It can be dangerous to get out of the vehicle if the shift lever is not fully in P (Park) with the parking brake firmly set. The vehicle can roll. If you have left the engine running, the vehicle can move suddenly. You or others could be injured. To be sure the vehicle will not move, even when you are on fairly level ground, use the steps that follow. If you are pulling a trailer, see *Driving Characteristics and Towing Tips on page 8-54*.

Use this procedure to shift into P (Park):

1. Hold the brake pedal down and set the parking brake.

   See *Parking Brake (Manual) on page 8-34* or *Parking Brake (Electric) on page 8-35* for more information.

2. Move the shift lever into P (Park) by holding in the button on the shift lever and pushing the lever all the way toward the front of the vehicle.
3. Turn the ignition key to LOCK/OFF.
4. For vehicles with key access, remove the key and take it with you. If you can leave the vehicle with the ignition key in your hand, the vehicle is in P (Park). Vehicles with the keyless access system, take the keyless access transmitter with you.

### Leaving the Vehicle With the Engine Running (Automatic Transmission)

**⚠ WARNING**

It can be dangerous to leave the vehicle with the engine running. The vehicle could move suddenly if the shift lever is not fully in

(Continued)

**WARNING (Continued)**

P (Park) with the parking brake firmly set. And, if you leave the vehicle with the engine running, it could overheat and even catch fire. You or others could be injured. Do not leave the vehicle with the engine running.

If you have to leave the vehicle with the engine running, the vehicle must be in P (Park) and the parking brake set. After shifting into P (Park), try to move the shift lever out without first pushing the button on the shift lever.

If you can, the shift lever was not fully locked into P (Park).

### Torque Lock (Automatic Transmission)

Torque lock is when the weight of the vehicle puts too much force on the parking pawl in the transmission. This happens when parking on a hill and shifting the transmission into P (Park) is not done properly and then it is difficult to shift out of P (Park). To prevent torque lock, set the parking brake and then shift into P (Park). To find out how, see "Shifting Into P (Park)" listed previously.

If torque lock does occur, your vehicle may need to be pushed uphill by another vehicle to relieve the parking pawl pressure, so you can shift out of P (Park).

## Shifting Out of Park

This vehicle is equipped with an electronic shift lock release system. The shift lock release is designed to:

- Prevent ignition key removal unless the shift lever is in P (Park) with the shift lever button fully released, for vehicles with key access.

- Prevent movement of the shift lever out of P (Park), unless the ignition is in ON/RUN or ACC/ ACCESSORY and the brake pedal is applied.

The shift lock release is always functional except in the case of an uncharged or low voltage (less than 9 volt) battery.

If the vehicle has an uncharged battery or a battery with low voltage, try charging or jump starting the battery. See *Jump Starting on page 9-103* for more information.

To shift out of P (Park) use the following:

1. Apply the brake pedal.
2. Then press the shift lever button.
3. Move the shift lever to the desired position.

If you still are unable to shift out of P (Park):

1. Fully release the shift lever button.
2. While holding down the brake pedal, press the shift lever button again.
3. Move the shift lever to the desired position.

If you still cannot move the shift lever from P (Park), consult your dealer/retailer or a professional towing service.

## Parking (Manual Transmission)

Before you get out of the vehicle, place the shift lever in R (Reverse) and firmly apply the parking brake.

For vehicles with the key access ignition, turn the ignition key to OFF/LOCK, and remove the key. See *Ignition Positions (Key Access) on page 8-18* or *Ignition Positions (Keyless Access) on page 8-19* for more information.

For vehicles with the keyless access ignition, turn the ignition to LOCK/OFF and remove the keyless access transmitter.

If you are towing a trailer, see *Trailer Towing (Except CTS-V) on page 8-58* or *Trailer Towing (CTS-V) on page 8-59*.

## Parking Over Things That Burn

**⚠ WARNING**

Things that can burn could touch hot exhaust parts under the vehicle and ignite. Do not park over papers, leaves, dry grass, or other things that can burn.

## Engine Exhaust

**⚠ WARNING**

Engine exhaust contains Carbon Monoxide (CO) which cannot be seen or smelled. Exposure to CO can cause unconsciousness and even death.

Exhaust may enter the vehicle if:

- The vehicle idles in areas with poor ventilation (parking garages, tunnels, deep snow that may block underbody airflow or tail pipes).
- The exhaust smells or sounds strange or different.
- The exhaust system leaks due to corrosion or damage.
- The vehicle's exhaust system has been modified, damaged or improperly repaired.

(Continued)

**WARNING (Continued)**

- There are holes or openings in the vehicle body from damage or after-market modifications that are not completely sealed.

If unusual fumes are detected or if it is suspected that exhaust is coming into the vehicle:

- Drive it only with the windows completely down.
- Have the vehicle repaired immediately.

Never park the vehicle with the engine running in an enclosed area such as a garage or a building that has no fresh air ventilation.

## Running the Vehicle While Parked

It is better not to park with the engine running. But if you ever have to, here are some things to know.

**⚠ WARNING**

Idling a vehicle in an enclosed area with poor ventilation is dangerous. Engine exhaust may enter the vehicle. Engine exhaust contains Carbon Monoxide (CO) which cannot be seen or smelled. It can cause unconsciousness and even death. Never run the engine in an enclosed area that has no fresh air ventilation. For more information, see *Engine Exhaust on page 8-25*.

**⚠ WARNING**

It can be dangerous to get out of the vehicle if the automatic transmission shift lever is not fully in P (Park) with the parking brake firmly set. The vehicle can roll. Do not leave the vehicle when the engine is running unless you have to. If you have left the engine running, the vehicle can move suddenly. You or others could be injured. To be sure the vehicle will not move, even when you are on fairly level ground, always set the parking brake and move the shift lever to P (Park).

Follow the proper steps to be sure the vehicle will not move. See *Shifting Into Park on page 8-22*.

If parking on a hill and pulling a trailer, see *Driving Characteristics and Towing Tips on page 8-54*.

# Automatic Transmission

The shift lever is located on the center console between the front seats.

There are several different positions for the shift lever.

**P (Park):** This position locks the rear wheels. It is the best position to use when you start the engine because the vehicle cannot move easily.

**⚠ WARNING**

It is dangerous to get out of the vehicle if the shift lever is not fully in P (Park) with the parking brake firmly set. The vehicle can roll.

Do not leave the vehicle when the engine is running unless you have to. If you have left the engine running, the vehicle can move suddenly. You or others could be injured. To be sure the vehicle will not move, even when you are on fairly level ground, always set the parking brake and move the shift lever to P (Park). See *Shifting Into Park on page 8-22*. If you are pulling a trailer, see *Driving Characteristics and Towing Tips on page 8-54*.

Make sure the shift lever is fully in P (Park) before starting the engine. The vehicle has an automatic transmission shift lock control system. You must fully apply the regular brakes first and then press

the shift lever button before you can shift from P (Park) when the ignition key is in ON/RUN. If you cannot shift out of P (Park), ease pressure on the shift lever and push the shift lever all the way into P (Park) as you maintain brake application. Then press the shift lever button and move the shift lever into another gear. See *Shifting Out of Park on page 8-23*.

***Notice:*** **Shifting to R (Reverse) while the vehicle is moving forward could damage the transmission. The repairs would not be covered by the vehicle warranty. Shift to R (Reverse) only after the vehicle is stopped.**

**R (Reverse):** Use this gear to back up.

At low vehicle speeds, R (Reverse) can be used to rock the vehicle back and forth to get out of snow, ice, or sand without damaging your transmission. See *If the Vehicle is Stuck on page 8-12* for additional information.

**N (Neutral):** In this position, the engine does not connect with the wheels. To restart when the vehicle is already moving, use N (Neutral) only. You can also use N (Neutral) when the vehicle is being towed.

**⚠ WARNING**

Shifting into a drive gear while the engine is running at high speed is dangerous. Unless your foot is firmly on the brake pedal, the vehicle could move very rapidly. You could lose control and hit people or objects. Do not shift into a drive gear while the engine is running at high speed.

***Notice:*** **Shifting out of P (Park) or N (Neutral) with the engine running at high speed may damage the transmission. The repairs would not be covered by the vehicle warranty. Be sure the engine is not running at high speed when shifting the vehicle.**

**D (Drive):** This position is for normal driving. It provides the best fuel economy. If you need more power for passing, and you are:

- Going less than 55 km/h (35 mph), push the accelerator pedal about halfway down.
- Going about 55 km/h (35 mph) or more, push the accelerator all the way down.

  The transmission will shift down to a lower gear and have more power.

Downshifting the transmission in slippery road conditions could result in skidding, see Skidding under *Loss of Control on page 8-7*

While in D (Drive), the CTS-V vehicle's first forward gear automatic shift after starting the vehicle will be from 1 (First). Afterwards, the CTS-V vehicles will always start in 2 (Second) gear. While in M (Manual Mode), for increased performance, the vehicle will start in 1 (First) gear.

**M (Manual Mode):** This position allows the driver to select the range of gears appropriate for current driving conditions. See Driver Shift Control (DSC) later in this section.

***Notice:*** **Spinning the tires or holding the vehicle in one place on a hill using only the accelerator pedal may damage the transmission. If you are stuck, do not spin the tires. When stopping on a hill, use the brakes to hold the vehicle in place.**

## Manual Mode

### Driver Shift Control (DSC) or Tap Shift

***Notice:*** **If you drive the vehicle at high RPMs without upshifting while using Driver Shift Control (DSC), you could damage the vehicle. Always upshift when necessary while using DSC.**

Driver Shift Control (DSC) allows you to shift an automatic transmission similar to a manual transmission.

DSC can be enabled through the shift lever or the Tap Shift controls, located on the back of the steering wheel (if equipped).

To use the DSC feature using the shift lever:

1. Move the shift lever to the right from D (Drive) to M (Manual Mode).

   Once in M (Manual Mode) position, if you do not move the shift lever forward or rearward, the vehicle will be in sport mode. When you are in sport mode the vehicle will still shift automatically. The transmission may remain in a gear longer than it would in the normal driving mode based on braking, throttle input, and vehicle lateral acceleration.

   SPORT MODE will be displayed in the DIC momentarily.
   The vehicle will remain in sport mode if the shift lever is not moved. Sport mode will shift automatically but remain in a gear longer then it would in normal driving mode based on braking and acceleration.

2. To go from sport mode to DSC, move the shift lever forward to upshift or rearward to downshift.

3. When in DSC, you can exit back into sport mode by continuously holding the shifter in the upshift (forward) position for approximately one second.

To use the DSC feature with the steering wheel paddles (if equipped):

1. Move the shift lever to the right from D (Drive) to M (Manual Mode).
2. The paddles are on the back of the steering wheel. Tap the left paddle to downshift, and the right paddle to upshift.
3. When in DSC, you can exit back into sport mode by continuously holding the upshift paddle (right hand side) for approximately one second.

The tachometer display on the instrument panel cluster will show which gear the vehicle is in. The number indicates the requested gear range when moving the shift lever forward or rearward. See *Tachometer on page 4-17* for more information on the odometer.

CTS-V vehicles use tracer lights around the outside of the tachometer as a performance up-shift light. These tracers flash to indicate when to shift to the next higher gear to avoid the engine speed limit. See *Tachometer on page 4-17* for more information.

While using the DSC feature, the vehicle will have firmer, quicker shifting. You can use this for sport driving or when climbing or descending hills, to stay in gear longer, or to down shift for more power or engine braking.

The transmission will only allow you to shift into gears appropriate for the vehicle speed and engine Revolutions Per Minute (RPM). The transmission will not automatically shift to the next lower gear if the engine RPM is too high, nor to the next higher gear when the maximum engine RPM is reached.

If shifting is prevented for any reason, the currently selected gear will flash multiple times, indicating that the transmission has not shifted gears.

While in the DSC mode, the CTS automatic transmission will automatically downshift when the vehicle comes to a stop. This will allow for more power during acceleration.

The CTS-V automatic transmission will not automatically downshift on hard acceleration when in DSC mode.

When accelerating the vehicle from a stop in snowy and icy conditions, you may want to shift into second gear. A higher gear allows the vehicle to gain more traction on slippery surfaces.

# Manual Transmission

If the vehicle has a manual transmission, the shift lever is located on the center console between the front seats. The following explains how to operate the manual transmission.

**CTS**

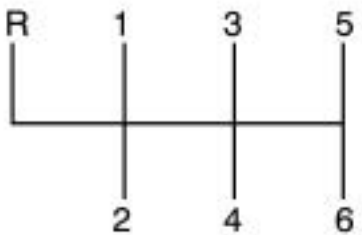


**CTS-V**

**1 (First):** Press the clutch pedal and shift into 1 (First). Then slowly let up on the clutch pedal as you press the accelerator pedal.

Shift into 1 (First) when you are going less than 40 km/h (25 mph). For CTS-V, shift into 1 (First) when you are going less than 64 km/h (40 mph ). If you come to a complete stop and it is hard to shift into 1 (First), put the shift lever in Neutral and let up on the clutch. Press the clutch pedal back down. Then shift into 1 (First).

**2 (Second):** Press the clutch pedal as you let up on the accelerator pedal and shift into 2 (Second). Then, slowly let up on the clutch pedal as you press the accelerator pedal.

**3 (Third), 4 (Fourth), 5 (Fifth) and 6 (Sixth):** Shift into 3 (Third), 4 (Fourth), 5 (Fifth) and 6 (Sixth) the same way you do for 2 (Second). Slowly let up on the clutch pedal as you press the accelerator pedal.

To stop, let up on the accelerator pedal and press the brake pedal. Just before the vehicle stops, press the clutch pedal and the brake pedal, and shift to Neutral.

**Neutral:** Use this position when you start or idle your engine. Your shift lever is in Neutral when it is centered in the shift pattern, not in any gear.

**R (Reverse):** To back up, press down the clutch pedal, completely stop the vehicle, and shift into R (Reverse). Let up on the clutch pedal slowly while pressing the accelerator pedal.

The CTS-V transmission prevents you from easily shifting into R (Reverse) using normal shifting force while the vehicle is moving at more than 5 km/h (3 mph), or when the ignition is in LOCK/OFF.

## Shift Speeds (Manual Transmission)

**⚠ WARNING**

If you skip a gear when you downshift, you could lose control of the vehicle. You could injure yourself or others. Do not shift down more than one gear at a time when you downshift.

***Notice:*** **If you skip more than one gear when you downshift, or if you race the engine when you release the clutch pedal while downshifting, you could damage the engine, clutch, driveshaft or the transmission. Do not skip gears or race the engine when downshifting.**

If the vehicle speed drops below 32 km/h (20 mph), or if the engine is not running smoothly, you should downshift to the next lower gear. You may have to downshift two or more gears to keep the engine running smoothly or for good performance.

**Up-Shift Light**

CTS vehicles with a manual transmission have an up-shift light on the instrument panel. This light shows when to shift to the next higher gear for the best fuel economy.

When this light comes on, you can shift to the next higher gear if weather, road, and traffic conditions allow. For the best fuel economy, accelerate slowly and shift when the light comes on.

While you accelerate, it is normal for the light to go on and off if you quickly change the position of the accelerator. Ignore the light when you downshift.

CTS-V vehicles use tracer lights around the outside of the tachometer as a performance up-shift light. These tracers flash to indicate when to shift to the next higher gear to avoid the engine speed limit. See *Tachometer on page 4-17* for more information.

### Skip Shift (CTS-V)

Under light acceleration, the transmission will only allow you to shift from 1 (First) to 4 (Fourth). Shifts from 1 (First) to 2 (Second) or 3 (Third) are not allowed. This helps improve fuel mileage.

Under harder acceleration, Skip Shift is disabled, and the driver has all gears available.

# Drive Systems

## All-Wheel Drive

With this feature, engine power is always sent to all four wheels. It is fully automatic, and adjusts itself as needed for road conditions.

When using a compact spare tire on an AWD vehicle, the system automatically detects the compact spare and disables AWD. To restore AWD operation and prevent excessive wear on system, replace the compact spare with a full-size tire as soon as possible. See *Compact Spare Tire on page 9-102* for more information.

# Brakes

## Antilock Brake System (ABS)

This vehicle has the Antilock Brake System (ABS), an advanced electronic braking system that helps prevent a braking skid.

When the engine is started and the vehicle begins to drive away, ABS checks itself. A momentary motor or clicking noise might be heard while this test is going on, and it might even be noticed that the brake pedal moves a little. This is normal.

If there is a problem with ABS, this warning light stays on. See *Antilock Brake System (ABS) Warning Light on page 4-27*.

If driving safely on a wet road and it becomes necessary to slam on the brakes and continue braking to avoid a sudden obstacle, a computer senses that the wheels are slowing down. If one of the wheels is about to stop rolling, the computer will separately work the brakes at each wheel.

ABS can change the brake pressure to each wheel, as required, faster than any driver could. This can help the driver steer around the obstacle while braking hard.

As the brakes are applied, the computer keeps receiving updates on wheel speed and controls braking pressure accordingly.

Remember: ABS does not change the time needed to get a foot up to the brake pedal or always decrease stopping distance. If you get too close to the vehicle in front of you, there will not be enough time to apply the brakes if that vehicle suddenly slows or stops. Always leave enough room up ahead to stop, even with ABS.

### Using ABS

Do not pump the brakes. Just hold the brake pedal down firmly and let ABS work. The ABS pump or motor might be heard operating, and the brake pedal might be felt to pulsate, but this is normal.

### Braking in Emergencies

ABS allows the driver to steer and brake at the same time. In many emergencies, steering can help more than even the very best braking.

## Parking Brake (Manual)

The parking brake pedal is located on the lower portion of the instrument panel to the left of the steering wheel.

To set the parking brake, hold the brake pedal down, then push the parking brake pedal down.

If the ignition is on, the brake system warning light on the instrument panel cluster should come on. If it does not, you need to have the vehicle serviced. See *Brake System Warning Light on page 4-26* for more information.

To release the parking brake, pull the release lever located to the left of the steering wheel on the instrument panel.

***Notice:*** **Driving with the parking brake on can overheat the brake system and cause premature wear or damage to brake system parts. Make sure that the parking brake is fully released and the brake warning light is off before driving.**

A warning chime will sound if the parking brake is set, the ignition is on, and the vehicle begins to move. To stop the chime, fully release the parking brake.

If you are towing a trailer and parking on a hill, see *Trailer Towing (Except CTS-V) on page 8-58* or *Trailer Towing (CTS-V) on page 8-59* for more information.

## Parking Brake (Electric)

**⚠ WARNING**

On vehicles with a manual transmission, releasing the clutch and pressing the accelerator will release the Electric Parking Brake. If the vehicle is not in a gear, the vehicle could move, and you or others could be injured. Make sure the vehicle is in a gear before attempting to drive away. To avoid unexpected vehicle movement, do not partially release the clutch or press the accelerator pedal until you are ready to release the parking brake and drive away.

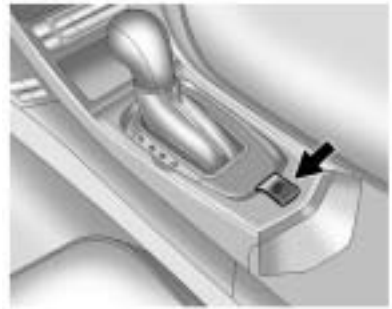

Vehicles with the electric parking brake (EPB) have a switch in the center console.

The EPB takes the place of the manual parking brake system, the foot pedal and release handle. The EPB can always be activated, even if the ignition is OFF. To avoid draining the battery, do not operate the EPB too often without the engine running.

The system has two warning lights and five Driver Information Center (DIC) messages. See *Brake System Warning Light on page 4-26* and *Driver Information Center (DIC) on page 4-31* for more information. In case of insufficient electrical power, the EPB cannot be applied or released.

### EPB Apply

The EPB can be applied any time the vehicle is stopped. The EPB is applied by momentarily lifting up on the EPB switch. Once fully applied, the BRAKE light will be on, and the DIC message “Park Brake Set” will be displayed. While the brake is being applied, the status light will flash until full apply is reached. If the light does not come on, or remains flashing, you need to have the vehicle serviced. Do not drive the vehicle if the BRAKE light is flashing. See your dealer/retailer. See *Brake System Warning Light on page 4-26* for more information.

If the EPB is applied while the vehicle is in motion, a chime will sound, and the DIC message “Release Park Brake Switch” will be displayed. The vehicle will decelerate as long as the switch is held in the up position. Releasing the EPB switch during the deceleration will release the parking brake. If the switch is held in the up position until the vehicle comes to a stop, the EPB will remain applied.

If the BRAKE light is on, either the EPB is applied, or there is a failure in the hydraulic brake system.

If this light is flashing continuously, the EPB is only partially applied or released, or there is a problem with the EPB. The DIC message “Service Park Brake” will be displayed. If this light is flashing continuously, release the EPB, and attempt to apply it again. If this light continues to flash, do not drive the vehicle. See your dealer/retailer.

If the yellow light is on, the EPB has detected an error in another system and is operating with reduced functionality. To apply the EPB when this light is on, lift up on the EPB switch and hold it in the up position. Full application of the parking brake by the EPB system may take a longer period of time than normal when this light is on. Continue to hold the switch until the BRAKE light remains on. If the yellow light is on, see your dealer/retailer.

If the EPB fails to apply, the rear wheels should be blocked to prevent vehicle movement.

## EPB Release

To release the EPB, turn the ignition switch to the ON/RUN position, apply and hold the brake pedal, and push down momentarily on the EPB switch. If you attempt to release the EPB without the brake pedal applied, a chime will sound, and the DIC message “Step On Brake to Release Park Brake” will be displayed. The EPB is released when the BRAKE light is off and the DIC message “Park Brake Released” is displayed.

If the yellow light is on, the EPB has detected an error in another system and is operating with reduced functionality. To release the EPB when this light is on, push down on the EPB switch and hold it in the down position. EPB release may take a longer period of time than normal when this light is on. Continue to hold the switch until the BRAKE light is off. If the yellow light is on, see your dealer/retailer.

***Notice:*** **Driving with the parking brake on can overheat the brake system and cause premature wear or damage to brake system parts. Make sure that the parking brake is fully released and the red brake warning light is off before driving.**

### Automatic EPB Release

The EPB will automatically release if the vehicle is running, placed into gear and an attempt is made to drive away. Avoid rapid acceleration when the EPB is applied, to preserve park brake lining life.

The EPB can also be used to prevent roll back for vehicles with a manual transmission taking off on a hill. In a situation where no roll back is desired, an applied EPB will allow both feet to be used for the clutch and accelerator pedals in preparation for starting the vehicle moving in the intended direction.

In this situation, perform the normal clutch and/or accelerator actions required to begin moving the vehicle. There is no need to push the switch to release the EPB.

If you are towing a trailer and parking on a hill, see *Trailer Towing (Except CTS-V) on page 8-58* or *Trailer Towing (CTS-V) on page 8-59* for more information.

## Brake Assist (Except CTS-V)

This vehicle has a brake assist feature designed to assist the driver in stopping or decreasing vehicle speed in emergency driving conditions. This feature uses the stability system hydraulic brake control module to supplement the power brake system under conditions where the driver has quickly and forcefully applied the brake pedal in an attempt to quickly stop or slow down the vehicle. The stability system hydraulic brake control module increases brake pressure at each corner of the vehicle until the ABS activates. Minor brake pedal pulsations or pedal movement during this time is normal and the driver should continue to apply the brake pedal as the driving situation dictates. The brake assist feature will automatically disengage when the brake pedal is released or brake pedal pressure is quickly decreased.

# Ride Control Systems

## Traction Control System (TCS)

The vehicle has a Traction Control System (TCS) that limits wheel spin. This is especially useful in slippery road conditions. On a rear-wheel-drive vehicle, the system operates if it senses that one or both of the rear wheels are spinning or beginning to lose traction. On an All-Wheel-Drive (AWD) vehicle, the system will operate if it senses that any of the wheels are spinning or beginning to lose traction. When this happens, the system brakes the spinning wheel(s) and/or reduces engine power to limit wheel spin.

The system may be heard or felt while it is working, but this is normal.

The TCS/StabiliTrak warning light flashes when the traction control system is limiting wheel spin.

The TCS/StabiliTrak warning light comes on if there is a problem with the traction control system. When the TCS/StabiliTrak warning light is on, the system will not limit wheel spin. Adjust your driving accordingly. See *Traction Control System (TCS)/StabiliTrak® Light on page 4-28* for more information.

TCS automatically comes on whenever the vehicle is started. To limit wheel spin, especially in slippery road conditions, the system should always be left on, but it may be necessary to turn the system off if the vehicle is stuck in sand, mud or snow and rocking the vehicle is required. See *If the Vehicle is Stuck on page 8-12* for more information. See *Winter Driving on page 8-10* for information on using TCS when driving in snowy or icy conditions.

The TCS/StabiliTrak button is located on the instrument panel (CTS) or the steering wheel (CTS-V).

Press and release the TCS/StabiliTrak button and the traction control system will turn off and the TCS/StabiliTrak warning light will come on. Press the button again to turn the system back on. For information on turning StabiliTrak off and on, see StabiliTrak System following.

Adding non-dealer/non-retailer accessories can affect your vehicle's performance. See *Accessories and Modifications on page 9-3* for more information.

## StabiliTrak System

The vehicle has an electronic stability control system called StabiliTrak. It is an advanced computer controlled system that assists with directional control of the vehicle in difficult driving conditions.

StabiliTrak activates when the system senses a discrepancy between the intended path and the direction the vehicle is actually traveling. StabiliTrak selectively applies braking pressure at any one of the vehicle's brakes to help steer the vehicle in the direction which you are steering.

When the system activates, the Traction Control System (TCS)/ StabiliTrak warning light flashes on the instrument panel. A noise may be heard or a vibration may be felt in the brake pedal. This is normal. Continue to steer the vehicle in the intended direction.

If there is a problem detected with StabiliTrak, SERVICE STABILITRAK displays on the Driver Information Center (DIC) and the TCS/StabiliTrak warning light comes on the instrument panel cluster. When this message and warning light displays, the system is not operational. Driving should be adjusted accordingly. See *Driver Information Center (DIC) on page 4-31* and Messages and *Traction Control System (TCS)/ StabiliTrak® Light on page 4-28* for more information.

The TCS/StabiliTrak button is located on the instrument panel (CTS) or the steering wheel (CTS-V).

StabiliTrak comes on automatically whenever the vehicle is started. The system should be left on to help assist with directional control of the vehicle. If StabiliTrak needs to be turned off, press and hold the TCS/StabiliTrak button until the TCS/StabiliTrak warning light comes on and STABILITRAK OFF comes on the DIC. More steering effort is required when the system is turned off.

If cruise control is being used when the StabiliTrak activates, the cruise control will automatically disengage. When road conditions allow, reengage the cruise control. See *Cruise Control on page 8-41* for more information.

## Competitive Driving Mode

### Competitive Driving Mode

To select this optional handling mode, press the TCS/StabiliTrak button quickly two times and STABILITRAK COMPETITIVE MODE displays in the Driver Information Center (DIC). While in the StabiliTrak Competitive Mode, the TCS/StabiliTrak warning light comes on, TCS does not limit wheel spin, and more effort is required to turn the steering wheel. Adjust your driving accordingly.

Press the TCS/StabiliTrak button again, or turn the ignition to ACC/ACCESSORY and restart the vehicle, to turn TCS back on and turn the TCS/StabiliTrak warning light off.

***Notice:*** **When traction control is turned off, or Competitive Driving Mode is active, it is possible to lose traction. If you attempt to shift with the drive wheels spinning with a loss of traction, it is possible to cause damage to the transmission. Do not attempt to shift when the drive wheels do not have traction. Damage caused by misuse of the vehicle is not covered. See the warranty book for additional information.**

## Magnetic Ride Control

With this feature on the CTS-V, the Magnetic Ride Control system adjusts the ride of the vehicle to Touring or Sport modes. Magnetic Ride Control monitors the suspension system to determine the proper system response.

**TOUR:** Use for normal city and highway driving. This setting provides a smooth, soft ride.

**SPORT:** Use where road conditions or personal preference demand more control. This setting provides more “feel”, or response to road conditions.

The setting can be changed at any time. Based on road conditions, steering wheel angle and the vehicle speed, the system automatically adjusts to provide the best handling while providing a smooth ride. The Touring and Sport modes will feel similar on a smooth road. Select a new setting whenever driving conditions change.

The Driver Information Center (DIC) briefly displays SUSPENSION MODE TOURING or SUSPENSION MODE SPORT on vehicle startup or when a new mode is selected.

Press and release this button, located in the center of the instrument panel, to change modes.

## Limited-Slip Rear Axle

Vehicles with a limited-slip rear axle can give more traction on snow, mud, ice, sand or gravel. When traction is low, this feature allows the drive wheel with the most traction to move the vehicle.

# Cruise Control

**⚠ WARNING**

Cruise control can be dangerous where you cannot drive safely at a steady speed. So, do not use the cruise control on winding roads or in heavy traffic.

Cruise control can be dangerous on slippery roads. On such roads, fast changes in tire traction can cause excessive wheel slip, and you could lose control. Do not use cruise control on slippery roads.

With cruise control, a speed of about 40 km/h (25 mph) or more can be maintained without keeping your foot on the accelerator. Cruise control does not work at speeds below about 40 km/h (25 mph).

When the brakes are applied, the cruise control turns off.

If the vehicle has the Stabilitrak® system and begins to limit wheel spin while you are using cruise control, the cruise control will automatically disengage. See *StabiliTrak System on page 8-38*. When road conditions allow you to safely use it again, the cruise control can be turned back on.

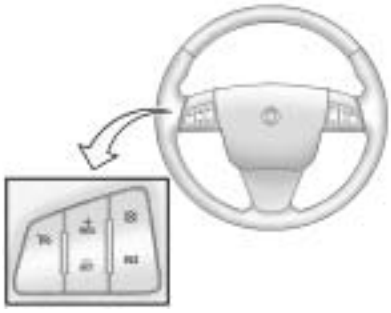

**CTS Shown, CTS-V Similar**

The cruise control buttons are located on the left side of the steering wheel.

**(On/Off):** Press to turn the system on or off. The indicator light on the button turns on when cruise control is on.

**+ RES (Resume/Accelerate):** Press to make the vehicle accelerate or resume to a previously set speed.

**SET − (Set/Coast):** Press to set the speed or make the vehicle decelerate.

**(Cancel):** Press to cancel cruise control without erasing the set speed from memory.

**Setting Cruise Control**

Cruise control will not work if the parking brake is set, or if the master cylinder brake fluid level is low.

The cruise control light on the instrument panel cluster comes on after the cruise control has been set to the desired speed.

**⚠ WARNING**

If you leave your cruise control on when you are not using cruise, you might hit a button and go into cruise when you do not want to.

(Continued)

**WARNING (Continued)**

You could be startled and even lose control. Keep the cruise control switch off until you want to use cruise control.

1. Press the button.
2. Get up to the desired speed.
3. Press the SET− button located on the steering wheel and release it.
4. Take your foot off the accelerator.

**Resuming a Set Speed**

Suppose the cruise control is set at a desired speed and then the brake is applied. This shuts off the cruise control. But it does not need to be reset.

Once the vehicle is driving at about 40 km/h (25 mph) or more, press the +RES button on the steering wheel.

The vehicle goes back to the previously set speed and stays there.

### Increasing Speed While Using Cruise Control

To increase the cruise speed while using cruise control:

- Press and hold the +RES button on the steering wheel until the desired speed is reached, then release it.
- To increase vehicle speed in small increments, press the +RES button. Each time this is done, the vehicle goes about 1.6 km/h (1 mph) faster.

### Reducing Speed While Using Cruise Control

To reduce the vehicle's speed while using cruise control:

- Press and hold the SET– button on the steering wheel until the desired speed is reached, then release it.
- To slow down in very small amounts, press the SET– button on the steering wheel briefly. Each time this is done, the vehicle goes about 1.6 km/h (1 mph) slower.

### Passing Another Vehicle While Using Cruise Control

Use the accelerator pedal to increase the vehicle's speed. When you take your foot off the pedal, the vehicle slows down to the previously set cruise speed.

### Using Cruise Control on Hills

How well the cruise control works on hills depends upon the vehicle's speed, load, and the steepness of the hills. When going up steep hills, you might have to step on the accelerator pedal to maintain the vehicle's speed. When going downhill, you might have to brake or shift to a lower gear to keep the vehicle's speed down. When the brakes are applied the cruise control turns off.

### Ending Cruise Control

There are four ways to end cruise control:

- Step lightly on the brake pedal (manual and automatic transmissions).
- Press the clutch pedal to the floor (manual transmissions).
- Press ⊗ on the steering wheel.
- Press on the steering wheel.

### Erasing Speed Memory

The cruise control set speed memory is erased when the cruise control or the ignition is turned off.

# Object Detection Systems

## Ultrasonic Parking Assist

For vehicles with the Ultrasonic Rear Parking Assist (URPA) system, it assists the driver with parking and avoiding objects while in R (Reverse). URPA operates at speeds less than 8 km/h (5 mph), and the sensors on the rear bumper detect objects up to 2.4m (8 ft.) behind the vehicle, and at least 25.4 cm (10 in.) off the ground.

**⚠ WARNING**

The Ultrasonic Rear Parking Assist (URPA) system does not replace driver vision. It cannot detect:

- Objects that are below the bumper, underneath the vehicle, or if they are too close or far from the vehicle
- Children, pedestrians, bicyclists, or pets.

If you do not use proper care before and while backing; vehicle damage, injury, or death could occur. Even with URPA, always check behind the vehicle before backing up. While backing, be sure to look for objects and check the vehicle's mirrors.

The display uses three color-coded lights to provide distance and system information and is located above the rear window. It can be seen by looking over your right shoulder.

### How the System Works

URPA comes on automatically and the display briefly illuminates to indicate the system is working when the shift lever is moved into R (Reverse).

If the vehicle is traveling faster then 8 km/h (5 mph) in reverse, the red light on the rear display flashes.

Objects must be at least 25.4 cm (10 in.) off the ground and below trunk level, and within 2.4m (8 ft.) from the rear bumper to be detected. The distance may be less during warmer or humid weather.

A single beep sounds the first time an object is detected between 1.0 m (40 in.) and 2.4m (8 ft.) away. Beeping occurs continuously when the vehicle is 0.6 m (23 in.) or closer to an object.

The following describes how the URPA display lights appear as the vehicle gets closer to a detected object:

| Description | Metric | English |
|---|---|---|
| amber light | 2.4 m | 8 ft. |
| amber/amber lights | 1.0 m | 40 in. |
| amber/amber/red lights and continuous beeping for five seconds | 0.6 m | 23 in. |
| amber/amber/red lights flashing and continuous beeping for five seconds | 0.3 m | 1 ft. |

The system can be disabled through the Driver Information Center (DIC). See “Park Assist” under *Vehicle Personalization on page 4-51* for more information.

### When the System Does Not Seem to Work Properly

If the URPA system will not activate due to a temporary condition, the message PARK ASSIST OFF will be displayed on the DIC and a red light will be shown on the rear URPA display when the shift lever is moved into R (Reverse). This occurs under the following conditions:

- The driver disables the system.
- The ultrasonic sensors are not clean. Keep the vehicle's rear bumper free of mud, dirt, snow, ice and slush. For cleaning instructions, see *Exterior Care on page 9-110*.
- A trailer was attached to the vehicle, or a bicycle or an object was hanging out of the trunk during the last drive cycle, the red light may illuminate in the rear display. Once the attached object is removed, URPA will return to normal operation.
- A tow bar is attached to the vehicle.
- The vehicle's bumper is damaged. Take the vehicle to your dealer/retailer to repair the system.
- Other conditions may affect system performance, such as vibrations from a jackhammer or the compression of air brakes on a very large truck.

If the system is still disabled after driving forward at least 25 km/h (15 mph), take the vehicle to your dealer/retailer.

## Rear Vision Camera (RVC)

The vehicle may have a Rear Vision Camera system. Read this entire section before using it.

The rear vision camera system is designed to help the driver when backing up by displaying a view of the area behind the vehicle.

**⚠ WARNING**

The Rear Vision Camera (RVC) system does not replace driver vision. RVC does not:

- Detect objects that are outside the camera's field of view, below the bumper, or underneath the vehicle.
- Detect children, pedestrians, bicyclists, or pets.

Do not back the vehicle by only looking at the RVC screen, or use the screen during longer, higher

(Continued)

**WARNING (Continued)**

speed backing maneuvers or where there could be cross-traffic. Your judged distances using the screen will differ from actual distances.

So if you do not use proper care before backing up, you could hit a vehicle, child, pedestrian, bicyclist, or pet, resulting in vehicle damage, injury, or death. Even though the vehicle has the RVC system, always check carefully before backing up by checking behind and around the vehicle.

### Vehicles Without a Navigation System

When the key is in the ON/RUN position and the driver shifts the vehicle into R (Reverse), the video image automatically appears on the inside rear view mirror. Once the driver shifts out of R (Reverse), the video image automatically disappears from the inside rear view mirror.

### Vehicles With a Navigation System

When the driver shifts the vehicle into R (Reverse), the video image automatically appears on the navigation screen. Once the driver shifts out of R (Reverse), the navigation screen will go back to the last screen that had been displayed, after a delay.

The delay that is received after shifting out of R (Reverse) is approximately 5 seconds. The delay can be cancelled by performing one of the following:

- Shifting in to P (Park).
- Reach a vehicle speed of 8 km/h (5 mph).

There may be a message on the rear vision camera screen that states “Check Surroundings for Safety”.

### Rear Vision Camera Error Messages

**Service Rear Vision Camera System:** This message can display when the system is not receiving information it requires from other vehicle systems.

If any other problem occurs or if a problem persists, see your dealer/retailer.

### Rear Vision Camera Location

The camera is located above the license plate.

The area displayed by the camera is limited and does not display objects that are close to either corner or under the bumper. The area displayed can vary depending on vehicle orientation or road conditions. The distance of the image that appears on the screen differs from the actual distance.

The following illustration shows the field of view that the camera provides.

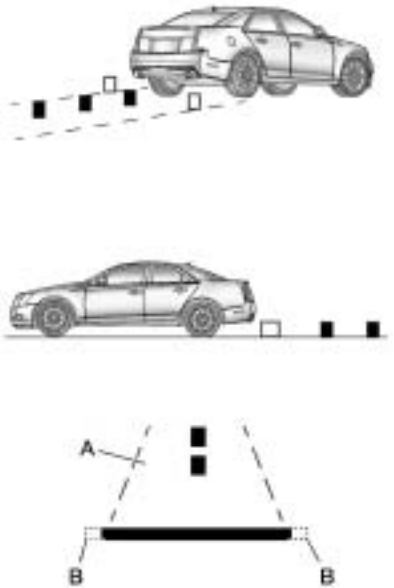


A. View displayed by the camera.

B. Corner of the rear bumper.

## When the System Does Not Seem To Work Properly

The rear vision camera system might not work properly or display a clear image if:

- It is dark.
- The sun or the beam of headlights is shining directly into the camera lens.
- Ice, snow, mud, or anything else builds up on the camera lens. Clean the lens, rinse it with water, and wipe it with a soft cloth.
- The back of the vehicle is in an accident, the position and mounting angle of the camera can change or the camera can be affected. Be sure to have the camera and its position and mounting angle checked at your dealer/retailer.
- There are extreme temperature changes.

# Fuel

Use of the recommended fuel is an important part of the proper maintenance of this vehicle. To help keep the engine clean and maintain optimum vehicle performance, we recommend the use of gasoline advertised as TOP TIER Detergent Gasoline.

Look for the TOP TIER label on the fuel pump to ensure gasoline meets enhanced detergency standards developed by auto companies. A list of marketers providing TOP TIER Detergent Gasoline can be found at www.toptiergas.com.

The 8th digit of the Vehicle Identification Number (VIN) shows the code letter or number that identifies the vehicle's engine.

The VIN is at the top left of the instrument panel. See *Vehicle Identification Number (VIN) on page 11-1*.

## Recommended Fuel

If the vehicle has a V6 engine, use regular unleaded gasoline with a posted octane rating of 87 or higher. If the octane rating is less than 87, an audible knocking noise, commonly referred to as spark knock, might be heard when driving. If this occurs, use a gasoline rated at 87 octane or higher as soon as possible. If heavy knocking is heard when using gasoline rated at 87 octane or higher, the engine needs service.

If the vehicle has the 6.2L V8 engine (VIN Code P), use premium unleaded gasoline with a posted octane rating of 91 or higher. For best performance, use premium unleaded gasoline with a posted octane rating of 93. In an emergency, you can use regular

unleaded gasoline with an octane rating of 87 or higher. If 87 octane fuel is used, do not perform any aggressive driving maneuvers such as wide open throttle applications. You might also hear audible spark knock during acceleration. Refill the tank with premium fuel as soon as possible to avoid damaging the engine. If heavy knocking is heard when using gasoline rated at 91 octane or higher, the engine needs service.

## Gasoline Specifications

At a minimum, gasoline should meet ASTM specification D 4814 in the United States or CAN/CGSB-3.5 or 3.511 in Canada. Some gasolines contain an octane-enhancing additive called methylcyclopentadienyl manganese tricarbonyl (MMT). We recommend against the use of gasolines containing MMT. See *Fuel Additives on page 8-50* for additional information.

## California Fuel Requirements

If the vehicle is certified to meet California Emissions Standards, it is designed to operate on fuels that meet California specifications. See the underhood emission control label. If this fuel is not available in states adopting California emissions standards, the vehicle will operate satisfactorily on fuels meeting federal specifications, but emission control system performance might be affected. The malfunction indicator lamp could turn on and the vehicle might fail a smog-check test. See *Malfunction Indicator Lamp on page 4-23*. If this occurs, return to your authorized dealer/retailer for diagnosis. If it is determined that the condition is caused by the type of fuel used, repairs might not be covered by the vehicle warranty.

## Fuels in Foreign Countries

If you plan on driving in another country outside the United States or Canada, the proper fuel might be hard to find. Never use leaded gasoline or any other fuel not recommended in the previous text on fuel. Costly repairs caused by use of improper fuel would not be covered by the vehicle warranty.

To check the fuel availability, ask an auto club, or contact a major oil company that does business in the country where you will be driving.

## Fuel Additives

To provide cleaner air, all gasolines in the United States are now required to contain additives that help prevent engine and fuel system deposits from forming, allowing the emission control system to work properly. In most cases, nothing should have to be added to the fuel.

However, some gasolines contain only the minimum amount of additive required to meet U.S. Environmental Protection Agency regulations. To help keep fuel injectors and intake valves clean, or if the vehicle experiences problems due to dirty injectors or valves, look for gasoline that is advertised as TOP TIER Detergent Gasoline. Look for the TOP TIER label on the fuel pump to ensure gasoline meets enhanced detergency standards developed by the auto companies. A list of marketers providing TOP TIER Detergent Gasoline can be found at www.toptiergas.com.

For customers who do not use TOP TIER Detergent Gasoline regularly, one bottle of GM Fuel System Treatment PLUS, added to the fuel tank at every engine oil change, can help clean deposits from fuel injectors and intake valves. GM Fuel System Treatment PLUS is the only gasoline additive recommended by General Motors. It is available at your dealer/retailer.

Gasolines containing oxygenates, such as ethers and ethanol, and reformulated gasolines might be available in your area. We recommend that you use these gasolines, if they comply with the specifications described earlier. However, E85 (85% ethanol) and other fuels containing more than 10% ethanol must not be used in vehicles that were not designed for those fuels.

***Notice:*** **This vehicle was not designed for fuel that contains methanol. Do not use fuel containing methanol. It can corrode metal parts in the fuel system and also damage plastic and rubber parts. That damage would not be covered under the vehicle warranty.**

Some gasolines that are not reformulated for low emissions can contain an octane-enhancing additive called methylcyclopentadienyl manganese tricarbonyl (MMT); ask the attendant where you buy gasoline whether the fuel contains MMT. We recommend against the use of such gasolines. Fuels containing MMT can reduce the life of spark plugs and the performance of the emission control system could be affected. The malfunction indicator lamp might turn on. If this occurs, return to your dealer/retailer for service.

## Filling the Tank

**⚠ WARNING**

Fuel vapor burns violently and a fuel fire can cause bad injuries. To help avoid injuries to you and others, read and follow all the instructions on the fuel pump island. Turn off the engine when refueling. Do not smoke near fuel or when refueling the vehicle. Do not use cellular phones. Keep sparks, flames, and smoking materials away from fuel. Do not leave the fuel pump unattended when refueling the vehicle. This is against the law in some places. Do not re-enter the vehicle while pumping fuel. Keep children away from the fuel pump; never let children pump fuel.

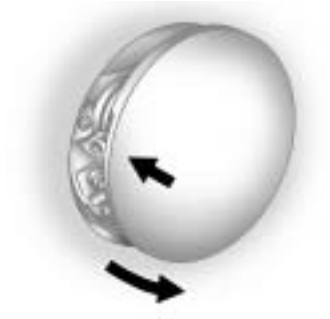

The tethered fuel cap is located behind a hinged fuel door on the passenger side of the vehicle.

To open the fuel door, push the rearward center edge in and release and it will open.

To remove the fuel cap, turn it slowly counterclockwise.

While refueling, hang the tethered fuel cap from the hook on the fuel door.

When reinstalling the cap, turn it clockwise until it clicks once, otherwise the Malfunction Indicator Lamp could turn on. See *Malfunction Indicator Lamp on page 4-23*.

**⚠ WARNING**

Fuel can spray out on you if you open the fuel cap too quickly. If you spill fuel and then something ignites it, you could be badly burned. This spray can happen if the tank is nearly full, and is more likely in hot weather. Open the fuel cap slowly and wait for any hiss noise to stop. Then unscrew the cap all the way.

Be careful not to spill fuel. Do not top off or overfill the tank and wait a few seconds after you have finished pumping before removing the nozzle. Clean fuel from painted surfaces as soon as possible. See *Exterior Care on page 9-110*.

When replacing the fuel cap, turn it clockwise until it clicks once. Make sure the cap is fully installed.

The diagnostic system can determine if the fuel cap has been left off or improperly installed. This would allow fuel to evaporate into the atmosphere. See *Malfunction Indicator Lamp on page 4-23*.

**⚠ WARNING**

If a fire starts while you are refueling, do not remove the nozzle. Shut off the flow of fuel by shutting off the pump or by notifying the station attendant. Leave the area immediately.

***Notice:*** **If a new fuel cap is needed, be sure to get the right type of cap from your dealer/retailer. The wrong type fuel cap might not fit properly, might cause the malfunction indicator lamp to light, and could damage the fuel tank and emissions system. See *Malfunction Indicator Lamp on page 4-23*.**

## Filling a Portable Fuel Container

**⚠ WARNING**

Never fill a portable fuel container while it is in the vehicle. Static electricity discharge from the container can ignite the fuel vapor. You can be badly burned and the vehicle damaged if this occurs. To help avoid injury to you and others:

- Dispense fuel only into approved containers.
- Do not fill a container while it is inside a vehicle, in a vehicle's trunk, pickup bed, or on any surface other than the ground.

(Continued)

**WARNING (Continued)**

- Bring the fill nozzle in contact with the inside of the fill opening before operating the nozzle. Contact should be maintained until the filling is complete.
- Do not smoke while pumping fuel.
- Do not use a cellular phone while pumping fuel.

# Towing

## General Towing Information

Only use towing equipment that has been designed for the vehicle. Contact your dealer/retailer or trailering retailer for assistance with preparing the vehicle for towing a trailer.

See the following trailer towing information in this section:

- For information on driving while towing a trailer, see “Driving Characteristics and Towing Tips”.
- For maximum vehicle and trailer weights, see “Trailer Towing”.
- For information on equipment to tow a trailer, see “Towing Equipment”.

For information on towing a disabled vehicle, see *Towing the Vehicle on page 9-108*. For information on towing the vehicle behind another vehicle — such as a motorhome, see *Recreational Vehicle Towing on page 9-108*.

## Driving Characteristics and Towing Tips

**⚠ WARNING**

The driver can lose control when pulling a trailer if the correct equipment is not used or the vehicle is not driven properly. For example, if the trailer is too heavy, the brakes may not work well — or even at all. The driver and passengers could be seriously injured. The vehicle may also be damaged; the resulting repairs would not be covered by the vehicle warranty. Pull a trailer only if all the steps in this section have been followed. Ask your dealer/retailer for advice and information about towing a trailer with the vehicle.

The vehicle can tow a trailer if it is equipped with the proper trailer towing equipment. To identify the trailering capacity of the vehicle, see *Trailer Towing (Except CTS-V) on page 8-58* or *Trailer Towing (CTS-V) on page 8-59*. Trailering changes handling, acceleration, braking, durability and fuel economy. With the added weight, the engine, transmission, wheel assemblies and tires are forced to work harder and under greater loads. The trailer also adds wind resistance, increasing the pulling requirements. For safe trailering, correctly use the proper trailering equipment.

The following information has important trailering tips and rules for your safety and that of your passengers. Read this section carefully before pulling a trailer.

## Pulling A Trailer

Here are some important points:

- There are many laws, including speed limit restrictions that apply to trailering. Check for legal requirements with state or provincial police.
- Do not tow a trailer at all during the first 1 600 km (1,000 miles) the new vehicle is driven. The engine, axle or other parts could be damaged.
- During the first 800 km (500 miles) that a trailer is towed, do not drive over 80 km/h (50 mph) and do not make starts at full throttle. This reduces wear on the vehicle.
- Vehicles with automatic transmissions can tow in D (Drive) but M (Manual Mode) is recommended. See *Manual Mode on page 8-28* for more information. Use a lower gear if the transmission shifts too often. For vehicles with a manual transmission, it is better not to use the highest gear.
- Use the cruise control when towing.
- Obey speed limit restrictions. Do not drive faster than the maximum posted speed for trailers, or no more than 90 km/h (55 mph), to reduce wear on the vehicle.

## Driving with a Trailer

Towing a trailer requires experience. Get familiar with handling and braking with the added trailer weight. The vehicle is now longer and not as responsive as the vehicle is by itself.

Check all trailer hitch parts and attachments, safety chains, electrical connectors, lamps, tires and mirror adjustments. If the trailer has electric brakes, start the vehicle and trailer moving and then apply the trailer brake controller by hand to be sure the brakes are working.

During the trip, check regularly to be sure that the load is secure, and the lamps and trailer brakes are working properly.

## Towing with a Stability Control System

When towing, the sound of the stability control system might be heard. The system is reacting to the vehicle movement caused by the trailer, which mainly occurs during cornering. This is normal when towing heavier trailers.

## Following Distance

Stay at least twice as far behind the vehicle ahead as you would when driving the vehicle without a trailer. This can help to avoid situations that require heavy braking and sudden turns.

## Passing

More passing distance is needed when towing a trailer. Because the rig is longer, it is necessary to go much farther beyond the passed vehicle before returning to the lane.

## Backing Up

Hold the bottom of the steering wheel with one hand. Then, to move the trailer to the left, move that hand to the left. To move the trailer to the right, move your hand to the right. Always back up slowly and, if possible, have someone guide you.

## Making Turns

***Notice:*** **Making very sharp turns while trailering could cause the trailer to come in contact with the vehicle. The vehicle could be damaged. Avoid making very sharp turns while trailering.**

When turning with a trailer, make wider turns than normal. Do this so the trailer won't strike soft shoulders, curbs, road signs, trees or other objects. Avoid jerky or sudden maneuvers. Signal well in advance.

## Turn Signals When Towing a Trailer

The arrows on the instrument panel flash whenever signaling a turn or lane change. Properly hooked up, the trailer lamps also flash, telling other drivers the vehicle is turning, changing lanes or stopping.

When towing a trailer, the arrows on the instrument panel flash for turns even if the bulbs on the trailer are burned out. For this reason you may think other drivers are seeing the signal when they are not. It is important to check occasionally to be sure the trailer bulbs are still working.

## Driving On Grades

Reduce speed and shift to a lower gear before starting down a long or steep downgrade. If the transmission is not shifted down, the brakes might have to be used so much that they would get hot and no longer work well.

Vehicles with an automatic transmission can tow in D (Drive). Shift the transmission to a lower gear if the transmission shifts too often under heavy loads and/or hilly conditions. For vehicles with a manual transmission, it is better not to use the highest gear.

When towing at high altitude on steep uphill grades, consider the following: Engine coolant will boil at a lower temperature than at normal altitudes. If the engine is turned off immediately after towing at high altitude on steep uphill grades, the vehicle may show signs similar to engine overheating. To avoid this, let the engine run while parked, preferably on level ground, with the automatic transmission in P (Park) for a few minutes before turning the engine off. For vehicles with manual transmissions, let the engine run while parked, preferably on level ground, with the transmission out of gear and the parking brake applied, for a few minutes before turning the engine off. If the overheat warning comes on, see *Engine Overheating on page 9-23*.

## Parking on Hills

**⚠ WARNING**

Parking the vehicle on a hill with the trailer attached can be dangerous. If something goes wrong, the rig could start to move. People can be injured, and both the vehicle and the trailer can be damaged. When possible, always park the rig on a flat surface.

If parking the rig on a hill:

1. Press the brake pedal, but do not shift into P (Park) yet for vehicles with an automatic transmission, or into gear for vehicles with a manual transmission. Turn the wheels into the curb if facing downhill or into traffic if facing uphill.
2. Have someone place chocks under the trailer wheels.
3. When the wheel chocks are in place, release the brake pedal until the chocks absorb the load.
4. Reapply the brake pedal. Then apply the parking brake and shift into P (Park) for vehicles with an automatic transmission or into gear for vehicles with a manual transmission.
5. Release the brake pedal.

## Leaving After Parking on a Hill

1. Apply and hold the brake pedal while you:
   - Start the engine,
   - Shift into a gear, and
   - Release the parking brake.
2. Let up on the brake pedal.
3. Drive slowly until the trailer is clear of the chocks.
4. Stop and have someone pick up and store the chocks.

### Maintenance When Trailer Towing

The vehicle needs service more often when pulling a trailer. See this manual's Maintenance Schedule or Index for more information. Things that are especially important in trailer operation are automatic transmission fluid, engine oil, axle lubricant, belts, cooling system and brake system. It is a good idea to inspect these before and during the trip.

Check periodically to see that all hitch nuts and bolts are tight.

### Engine Cooling When Trailer Towing

The cooling system may temporarily overheat during severe operating conditions. See *Engine Overheating on page 9-23*.

## Trailer Towing (Except CTS-V)

Before pulling a trailer, there are three important considerations that have to do with weight:

- The weight of the trailer.
- The weight of the trailer tongue.
- The total weight on the vehicle's tires.

### Weight of the Trailer

How heavy can a trailer safely be?

It should never weigh more than 450 kg (1,000 lbs). But even that can be too heavy.

Speed, altitude, road grades, outside temperature, special equipment, and the amount of tongue weight the vehicle can carry must be considered. See “Weight of the Trailer Tongue” later in this section for more information.

Maximum trailer weight is calculated assuming only the driver is in the tow vehicle and it has all the required trailering equipment. The weight of additional optional equipment, passengers and cargo in the tow vehicle must be subtracted from the maximum trailer weight.

Ask your dealer/retailer for our trailering information or advice, or write us at our Customer Assistance Offices. See *Customer Assistance Offices on page 12-3* for more information.

### Weight of the Trailer Tongue

The tongue load (A) of any trailer is an important weight to measure because it affects the total gross weight of the vehicle. The Gross Vehicle Weight (GVW) includes the curb weight of the vehicle, any cargo carried in it, and the people who will be riding in the vehicle. If there are a lot of options, equipment, passengers or cargo in

the vehicle, it will reduce the tongue weight the vehicle can carry, which will also reduce the trailer weight the vehicle can tow. If towing a trailer, the tongue load must be added to the GVW because the vehicle will be carrying that weight, too. See *Vehicle Load Limits on page 8-12* for more information about the vehicle's maximum load capacity.

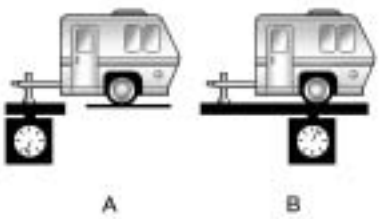


For a weight-carrying hitch, the trailer tongue (A) should weigh 10 to 15 percent of the total loaded trailer weight (B).

After loading the trailer, weigh the trailer and then the tongue, separately, to see if the weights are proper. If they are not, adjustments might be made by moving some items around in the trailer.

### Total Weight on the Vehicle's Tires

Inflate the vehicle's tires to the upper limit for cold tires. These numbers can be found on the Certification label or see *Vehicle Load Limits on page 8-12*. Do not go over the GVW limit for the vehicle, or the GAWR, including the weight of the trailer tongue.

## Trailer Towing (CTS-V)

The vehicle is neither designed nor intended to tow a trailer.

## Towing Equipment

### Hitches

Use the correct hitch equipment. See your dealer/retailer or a hitch dealer for assistance.

- The rear bumper on the vehicle is not intended for hitches. Do not attach rental hitches or other bumper-type hitches to it. Use only a frame-mounted hitch that does not attach to the bumper.
- Will any holes be made in the body of the vehicle when the trailer hitch is installed? If there are, seal the holes when the hitch is removed. If the holes are not sealed, dirt, water, and deadly carbon monoxide (CO) from the exhaust can get into the vehicle. See *Engine Exhaust on page 8-25*.

### Safety Chains

Always attach chains between the vehicle and the trailer. Cross the safety chains under the tongue of the trailer to help prevent the tongue from contacting the road if it becomes separated from the hitch. Leave enough slack so the rig can turn. Never allow safety chains to drag on the ground.

### Trailer Brakes

Does the trailer have its own brakes? Be sure to read and follow the instructions for the trailer brakes so they are installed, adjusted and maintained properly.

Because the vehicle has antilock brakes, do not tap into the vehicle's brake system. If this is done, both brake systems will not work well, or at all.

# Conversions and Add-Ons

## Add-On Electrical Equipment

***Notice:*** **Do not add anything electrical to the vehicle unless you check with your dealer/retailer first. Some electrical equipment can damage the vehicle and the damage would not be covered by the vehicle's warranty. Some add-on electrical equipment can keep other components from working as they should.**

Add-on equipment can drain the vehicle battery, even if the vehicle is not operating.

The vehicle has an airbag system. Before attempting to add anything electrical to the vehicle, see *Servicing the Airbag-Equipped Vehicle on page 2-40* and *Adding Equipment to the Airbag-Equipped Vehicle on page 2-40*.

# Vehicle Care

## General Information

General Information . . . . . 9-2
California Proposition 65 Warning . . . . . 9-3
California Perchlorate Materials Requirements . . . . . 9-3
Accessories and Modifications . . . . . 9-3

## Vehicle Checks

Doing Your Own Service Work . . . . . 9-4
Hood . . . . . 9-5
Engine Compartment Overview . . . . . 9-6
Engine Cover . . . . . 9-9
Engine Oil . . . . . 9-10
Engine Oil Life System . . . . . 9-12
Automatic Transmission Fluid . . . . . 9-13
Manual Transmission Fluid . . . . . 9-14
Hydraulic Clutch . . . . . 9-14
Engine Air Cleaner/Filter . . . . . 9-15
Cooling System . . . . . 9-18
Engine Coolant . . . . . 9-18
Engine Overheating . . . . . 9-23
Overheated Engine Protection Operating Mode . . . . . 9-24
Power Steering Fluid . . . . . 9-25
Washer Fluid . . . . . 9-25
Brakes . . . . . 9-26
Brake Fluid . . . . . 9-27
Battery . . . . . 9-29
All-Wheel Drive . . . . . 9-30
Rear Axle . . . . . 9-30
Starter Switch Check . . . . . 9-31
Automatic Transmission Shift Lock Control System Check . . . . . 9-32
Ignition Transmission Lock Check . . . . . 9-32
Park Brake and P (Park) Mechanism Check . . . . . 9-32
Wiper Blade Replacement . . . 9-33

## Headlamp Aiming

Headlamp Aiming . . . . . 9-34

## Bulb Replacement

Bulb Replacement . . . . . 9-37
Halogen Bulbs . . . . . 9-37
High Intensity Discharge (HID) Lighting . . . . . 9-37
Fog Lamps . . . . . 9-37
License Plate Lamp (Sedan) . . . . . 9-38
License Plate Lamp (Wagon) . . . . . 9-39
Replacement Bulbs . . . . . 9-39

## Electrical System

Electrical System Overload . . . . . 9-40
Fuses and Circuit Breakers . . . . . 9-41
Engine Compartment Fuse Block (CTS) . . . . . 9-41
Engine Compartment Fuse Block (CTS-V) . . . . . 9-45
Engine Compartment Fuse Block (CTS Wagon) . . . . . 9-48
Rear Compartment Fuse Block (CTS) . . . . . 9-51
Rear Compartment Fuse Block (CTS-V) . . . . . 9-53
Rear Compartment Fuse Block (CTS Wagon) . . . . . 9-55

**Wheels and Tires**
Tires . . . . . 9-58
Winter Tires . . . . . 9-59
Low-Profile Tires . . . . . 9-59
Tire Sidewall Labeling . . . . . 9-60
Tire Designations . . . . . 9-62
Tire Terminology and Definitions . . . . . 9-63
Tire Pressure . . . . . 9-66
Tire Pressure for High-Speed Operation . . . . . 9-67
Tire Pressure Monitor System . . . . . 9-68
Tire Pressure Monitor Operation . . . . . 9-69
Tire Inspection . . . . . 9-73
Tire Rotation . . . . . 9-73
When It Is Time for New Tires . . . . . 9-74
Buying New Tires . . . . . 9-75
Different Size Tires and Wheels . . . . . 9-77
Uniform Tire Quality Grading . . . . . 9-78
Wheel Alignment and Tire Balance . . . . . 9-79
Wheel Replacement . . . . . 9-80
Tire Chains . . . . . 9-81
If a Tire Goes Flat . . . . . 9-81
Tire Sealant and Compressor Kit . . . . . 9-84
Storing the Tire Sealant and Compressor Kit (Sedan) . . . . 9-92
Storing the Tire Sealant and Compressor Kit (Wagon) . . . 9-93
Tire Changing . . . . . 9-94
Compact Spare Tire . . . . . 9-102

**Jump Starting**
Jump Starting . . . . . 9-103

**Towing**
Towing the Vehicle . . . . . 9-108
Recreational Vehicle Towing . . . . . 9-108

**Appearance Care**
Exterior Care . . . . . 9-110
Interior Care . . . . . 9-114

# General Information

For service and parts needs, visit your dealer/retailer. You will receive genuine GM parts and GM-trained and supported service people.

Genuine GM parts have one of these marks:

## California Proposition 65 Warning

Most motor vehicles, including this one, contain and/or emit chemicals known to the State of California to cause cancer and birth defects or other reproductive harm. Engine exhaust, many parts and systems, many fluids, and some component wear by-products contain and/or emit these chemicals.

## California Perchlorate Materials Requirements

Certain types of automotive applications, such as airbag initiators, seat belt pretensioners, and lithium batteries contained in remote keyless transmitters, may contain perchlorate materials. Special handling may be necessary. For additional information, see www.dtsc.ca.gov/hazardouswaste/perchlorate.

## Accessories and Modifications

Adding non-dealer/non-retailer accessories to the vehicle can affect vehicle performance and safety, including such things as airbags, braking, stability, ride and handling, emissions systems, aerodynamics, durability, and electronic systems like antilock brakes, traction control, and stability control. Some of these accessories could even cause malfunction or damage not covered by the vehicle warranty.

Damage to vehicle components resulting from the installation or use of non-GM certified parts, including control module modifications, is not covered under the terms of the vehicle warranty and may affect remaining warranty coverage for affected parts.

GM Accessories are designed to complement and function with other systems on the vehicle. Your GM dealer/retailer can accessorize the vehicle using genuine GM Accessories. When you go to your GM dealer/retailer and ask for GM Accessories, you will know that GM-trained and supported service technicians will perform the work using genuine GM Accessories.

Also, see *Adding Equipment to the Airbag-Equipped Vehicle on page 2-40*.

# Vehicle Checks

## Doing Your Own Service Work

**⚠ WARNING**

You can be injured and the vehicle could be damaged if you try to do service work on a vehicle without knowing enough about it.

- Be sure you have sufficient knowledge, experience, the proper replacement parts, and tools before attempting any vehicle maintenance task.

(Continued)

**WARNING (Continued)**

- Be sure to use the proper nuts, bolts, and other fasteners. English and metric fasteners can be easily confused. If the wrong fasteners are used, parts can later break or fall off. You could be hurt.

If doing some of your own service work, use the proper service manual. It tells you much more about how to service the vehicle than this manual can. To order the proper service manual, see *Service Publications Ordering Information on page 12-12*.

This vehicle has an airbag system. Before attempting to do your own service work, see *Airbag System Check on page 2-42*.

Keep a record with all parts receipts and list the mileage and the date of any service work performed. See *Maintenance Records on page 10-11*.

## Hood

To open the hood:

1. Pull the hood release lever with this symbol on it. It is located inside the vehicle on the lower left side of the instrument panel.

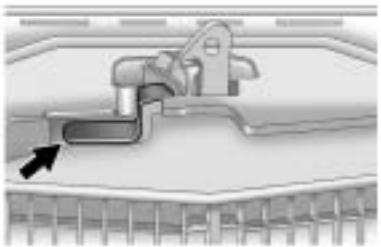

2. Then go to the front of the vehicle and find the secondary hood release lever. The lever is located under the front edge of the grille near the center. Push the release lever up and raise the hood.

Before closing the hood, be sure all the filler caps are on properly. Then pull the hood down and close it firmly.

## Engine Compartment Overview

**CTS 3.6 L V6 Engine shown, 3.0 L V6 Engine similar**

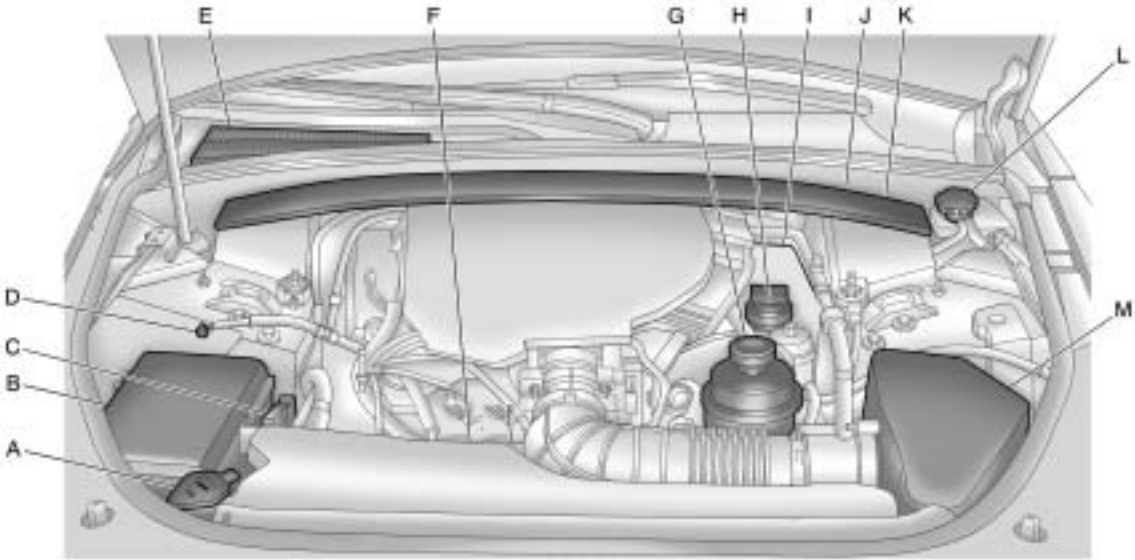

A. Windshield Washer Fluid Reservoir. See *Washer Fluid on page 9-25*.

B. *Engine Compartment Fuse Block (CTS) on page 9-41* or *Engine Compartment Fuse Block (CTS-V) on page 9-45* or *Engine Compartment Fuse Block (CTS Wagon) on page 9-48*.

C. Remote Positive (+) Terminal. See *Jump Starting on page 9-103*.

D. Remote Negative (−) Terminal. See *Jump Starting on page 9-103*.

E. Passenger Compartment Air Filter. See *Passenger Compartment Air Filter on page 7-6*.

F. Engine Cooling Fan. See *Cooling System on page 9-18*.

G. Power Steering Fluid Reservoir (Under Engine Cover). See *Power Steering Fluid on page 9-25*.

H. Engine Oil Fill Cap. See *Engine Oil on page 9-10*.

I. Engine Oil Dipstick (Out of View). See *Engine Oil on page 9-10*.

J. Hydraulic Clutch Reservoir (If Equipped) (Not Shown). See *Hydraulic Clutch on page 9-14*.

K. Brake Master Cylinder Reservoir (Out of View). See *Brakes on page 9-26*.

L. Engine Coolant Surge Tank and Pressure Cap. See *Engine Coolant on page 9-18*.

M. *Engine Air Cleaner/Filter on page 9-15*.

**CTS-V 6.2 L V8 Engine**

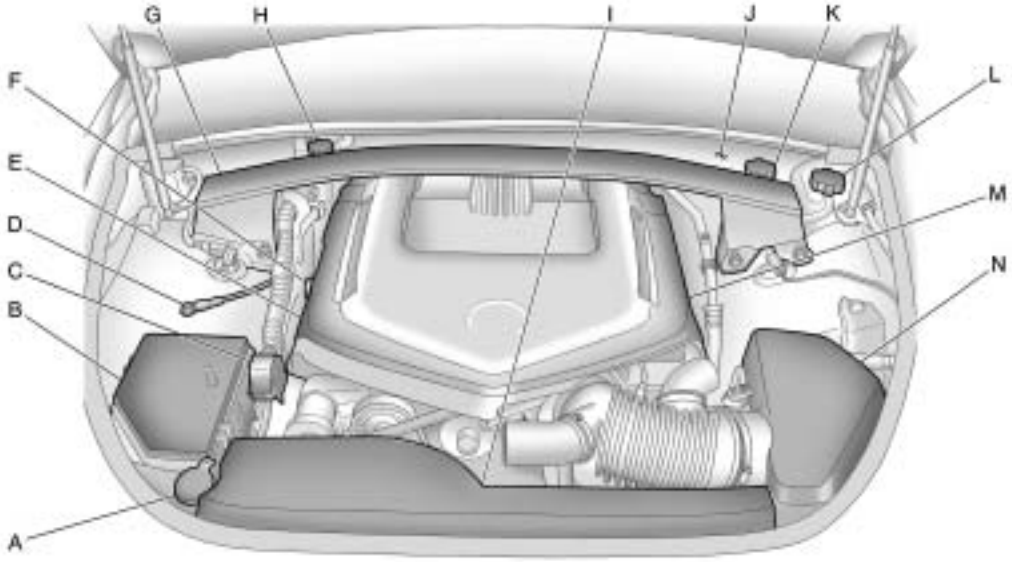

A. Windshield Washer Fluid Reservoir. See *Washer Fluid on page 9-25*.

B. *Engine Compartment Fuse Block (CTS) on page 9-41* or *Engine Compartment Fuse Block (CTS-V) on page 9-45* or *Engine Compartment Fuse Block (CTS Wagon) on page 9-48*.

C. Remote Positive (+) Terminal. See *Jump Starting on page 9-103*.

D. Remote Negative (−) Terminal. See *Jump Starting on page 9-103*.

E. Engine Oil Fill Cap (Out of View). See *Engine Oil on page 9-10*.

F. Engine Oil Dipstick. See *Engine Oil on page 9-10*.

G. Passenger Compartment Air Filter. See *Passenger Compartment Air Filter on page 7-6*.

H. Intercooler System Pressure Cap. See *Cooling System on page 9-18*.

I. Engine Cooling Fans. See *Cooling System on page 9-18*.

J. Hydraulic Clutch Reservoir (If Equipped) (Not Shown). See *Hydraulic Clutch on page 9-14*.

K. Brake Master Cylinder Reservoir. See *Brakes on page 9-26*.

L. Engine Coolant Surge Tank and Pressure Cap. See *Engine Coolant on page 9-18*.

M. Power Steering Fluid Reservoir (Under Engine Cover). See *Power Steering Fluid on page 9-25*.

N. *Engine Air Cleaner/Filter on page 9-15*.

## Engine Cover

### Engine Cover (CTS)

To remove:

1. Remove the oil fill cap (A).
2. Raise the right front corner of engine cover (B) to release from the ball stud.
3. Pull the engine cover (B) forward to slide the rear tabs (C) out from under the retainers.

4. Lift and remove the engine cover.
5. Reverse Steps 1 through 4 to reinstall engine cover.

### Engine Cover (CTS-V)

To remove:

The engine cover consists of two pieces. Only the larger front piece needs to be removed to access the engine oil and power steering fill caps.

1. Raise the front of engine cover (A) to release from the ball studs (B).
2. Pull the engine cover forward until clear of the smaller piece.
3. Lift and remove the engine cover.
4. Reverse Steps 1 through 3 to reinstall engine cover.

## Engine Oil

### Checking Engine Oil

It is a good idea to check the engine oil level at each fuel fill. In order to get an accurate reading, the oil must be warm and the vehicle must be on level ground.

The engine oil dipstick handle is a yellow loop. See *Engine Compartment Overview on page 9-6* for the location of the engine oil dipstick.

1. Turn off the engine and give the oil several minutes to drain back into the oil pan. If this is not done, the oil dipstick might not show the actual level.
2. Pull out the dipstick and clean it with a paper towel or cloth, then push it back in all the way. Remove it again, keeping the tip down, and check the level.

### When to Add Engine Oil

If the oil is below the cross-hatched area at the tip of the dipstick, add at least one liter/quart of the recommended oil. This section explains what kind of oil to use. For engine oil crankcase capacity, see *Capacities and Specifications on page 11-2*.

***Notice:*** **Do not add too much oil. If the engine has so much oil that the oil level gets above the cross-hatched area that shows the proper operating range, the engine could be damaged.**

See *Engine Compartment Overview on page 9-6* for the location of the engine oil fill cap.

Add enough oil to put the level somewhere in the proper operating range. Push the dipstick all the way back in when through.

## What Kind of Engine Oil to Use

Look for three things:

- GM4718M

  This vehicle's engine requires a special oil meeting GM Standard GM4718M. Oils meeting this standard may be identified as synthetic. However, not all synthetic oils will meet this GM standard. Use only an oil that meets GM Standard GM4718M.

***Notice:*** **Using oils that do not have the GM4718M Standard designation can cause engine damage not covered by the vehicle warranty.**

- SAE 5W-30

  SAE 5W-30 is best for the vehicle. These numbers on an oil container show its viscosity, or thickness. Do not use other viscosity oils such as SAE 20W-50.

- American Petroleum Institute (API) starburst symbol

  Oils meeting these requirements should have the starburst symbol on the container. This symbol indicates that the oil has been certified by the American Petroleum Institute (API).

This vehicle's engine was filled at the factory with a Mobil 1® synthetic oil meeting all requirements for this vehicle.

Substitute Engine Oil: When adding oil to maintain engine oil level, oil meeting GM Standard GM4718M might not be available. You can add substitute oil designated SAE 5W-30 with the starburst symbol at all temperatures. Substitute oil not meeting GM Standard GM4718M should not be used for an oil change.

### Engine Oil Additives / Engine Oil Flushes

Do not add anything to the oil. The recommended oils with the starburst symbol that meet GM standards are all that is needed for good performance and engine protection.

Engine oil system flushes are not recommended and could cause engine damage not covered by the vehicle warranty.

## Engine Oil Life System

### When to Change Engine Oil

This vehicle has a computer system that indicates when to change the engine oil and filter. This is based on engine revolutions and engine temperature, and not on mileage. Based on driving conditions, the mileage at which an oil change is indicated can vary considerably. For the oil life system to work properly, the system must be reset every time the oil is changed.

When the system has calculated that oil life has been diminished, it indicates that an oil change is necessary. A “Change Engine Oil Soon” message comes on. See *Engine Oil Messages on page 4-40*. Change the oil as soon as possible within the next 1 000 km (600 miles). It is possible that, if driving under the best conditions, the oil life system might not indicate that an oil change is necessary for over a year. However, the engine oil and filter must be changed at least once a year and at this time the system must be reset. Your dealer/retailer has trained service people who will perform this work using genuine parts and reset the system. It is also important to check the oil regularly and keep it at the proper level.

If the system is ever reset accidentally, the oil must be changed at 5 000 km (3,000 miles) since the last oil change. Remember to reset the oil life system whenever the oil is changed.

### How to Reset the Engine Oil Life System

Reset the system whenever the engine oil is changed so that the system can calculate the next engine oil change. To reset the system:

1. Turn the ignition to ON/RUN with the engine off.
2. Fully press and release the accelerator pedal three times within five seconds.

   If the “Change Engine Oil Soon” message is not on, the system is reset.

The system is reset when the “Change Engine Oil Soon” message is off.

### What to Do with Used Oil

Used engine oil contains elements that can be unhealthy for your skin and could even cause cancer. Do not let used oil stay on your skin. Clean your skin and nails with soap and water, or a good hand cleaner. Wash or properly dispose of clothing or rags. See the manufacturer's warnings about the use and disposal of oil products.

Used oil can be a threat to the environment. If you change your own oil, be sure to drain all the oil from the filter before disposal. Never dispose of oil by putting it in the trash, pouring it on the ground, into sewers, or into streams or bodies of water. Recycle it by taking it to a place that collects used oil.

## Automatic Transmission Fluid

### How to Check Automatic Transmission Fluid

It is not necessary to check the transmission fluid level.
A transmission fluid leak is the only reason for fluid loss. If a leak occurs, take the vehicle to the dealer/retailer service department and have it repaired as soon as possible.

There is a special procedure for checking and changing the transmission fluid. Because this procedure is difficult, it should be done at the dealer/retailer service department. Contact your dealer/retailer for additional information or the procedure can be found in the service manual. To purchase a service manual, see *Service Publications Ordering Information on page 12-12*.

Change the fluid and filter at the intervals listed in *Scheduled Maintenance on page 10-3*, and be sure to use the fluid listed in *Recommended Fluids and Lubricants on page 10-7*.

## Manual Transmission Fluid

It is not necessary to check the manual transmission fluid level. A transmission fluid leak is the only reason for fluid loss. If a leak occurs, take the vehicle to a dealer/retailer for service. Have it repaired as soon as possible. You may also have the fluid level checked by your dealer/retailer when the oil is changed. See *Recommended Fluids and Lubricants on page 10-7* for the proper fluid to use.

## Hydraulic Clutch

It is not necessary to regularly check clutch fluid unless you suspect there is a leak in the system. Adding fluid will not correct a leak. A fluid loss in this system could indicate a problem. Have the system inspected and repaired.

### When to Check and What to Use

The hydraulic clutch fluid reservoir cap has this symbol on it. See *Engine Compartment Overview on page 9-6* for reservoir location.

Refer to the Maintenance Schedule for the proper fluid to use. See *Recommended Fluids and Lubricants on page 10-7*. The fluid requires changing every two years. See *Scheduled Maintenance on page 10-3*.

### How to Check and Add Fluid

Visually check the clutch fluid reservoir to make sure the fluid level is at the MIN (minimum) line on the side of the reservoir. The hydraulic clutch fluid system should be closed and sealed.

Do not remove the cap to check the fluid level or to top-off the fluid level. Remove the cap only when necessary to add the proper fluid until the level reaches the MIN line.

## Engine Air Cleaner/Filter

The engine air cleaner/filter is in the engine compartment on the driver side of the vehicle, near the front. See *Engine Compartment Overview on page 9-6* for more information on location.

### When to Inspect the Engine Air Cleaner/Filter

Inspect the air cleaner/filter at the Maintenance II intervals and replace it at the first oil change after each 80 000 km (50,000 mile) interval. See *Scheduled Maintenance on page 10-3* for more information. If you are driving in dusty/dirty conditions, inspect the filter at each engine oil change.

### How to Inspect the Engine Air Cleaner/Filter

To inspect the air cleaner/filter, remove the filter from the vehicle and lightly shake the filter to release loose dust and dirt. If the filter remains caked with dirt, a new filter is required.

To inspect or replace the engine air cleaner/filter:

1. Turn the ignition off.

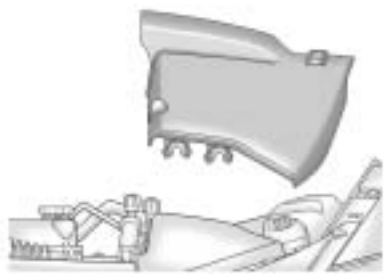

2. Remove the side cover by pulling up on the front of the cover.

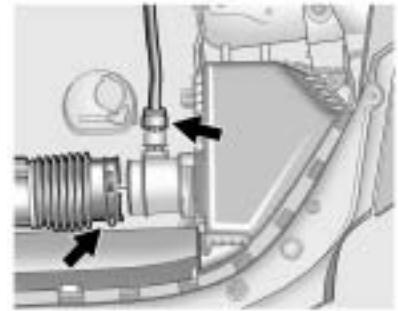

3. Disconnect the electrical connector from the air box.
4. Loosen the screw on the clamp holding the air outlet duct in place. Do not remove the clamp. Move the duct aside.
5. Remove the hose from the air cleaner housing mounting arm. Move the hose aside.

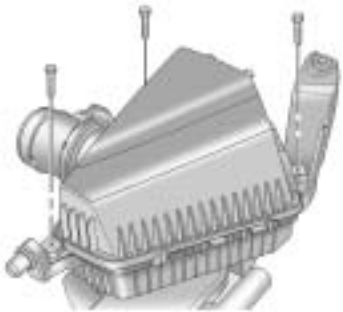

6. Remove the three air cleaner housing cover screws.

7. Move the air cleaner housing cover and remove the cover from the air cleaner housing.

8. Remove the air cleaner filter from the air cleaner housing.

### How to Reinstall Engine Air Cleaner/Filter

1. Install the air cleaner into the air cleaner housing. The outer air cleaner filter seal must be fitted properly in the air cleaner housing.
2. Align the air cleaner housing cover tabs to the air cleaner housing.
3. Install the air cleaner housing cover.
4. Install the air cleaner housing cover screws.
5. Install the hose to the air cleaner housing mounting arm. The hose must be routed correctly.
6. Install the air cleaner outlet duct to the air cleaner housing.
7. Tighten the air cleaner outlet duct screw clamp.
8. Attach the electrical connector to the air box.
9. Reinstall the side cover.

**⚠ WARNING**

Operating the engine with the air cleaner/filter off can cause you or others to be burned. The air cleaner not only cleans the air; it helps to stop flames if the engine backfires. Use caution when working on the engine and do not drive with the air cleaner/filter off.

***Notice:*** **If the air cleaner/filter is off, dirt can easily get into the engine, which could damage it. Always have the air cleaner/filter in place when you are driving.**

## Cooling System

The cooling system allows the engine to maintain the correct working temperature.

When you decide it is safe to lift the hood, here is what you will see:

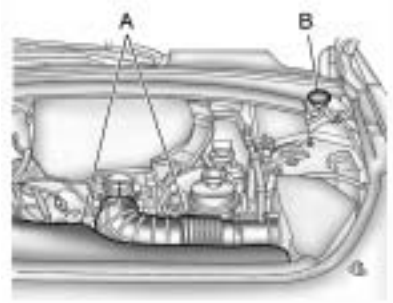


A. Electric Engine Cooling Fan(s) (Out of View)

B. Coolant Surge Tank and Pressure Cap

**⚠ WARNING**

An electric engine cooling fan under the hood can start up even when the engine is not running and can cause injury. Keep hands, clothing, and tools away from any underhood electric fan.

**⚠ WARNING**

Heater and radiator hoses, and other engine parts, can be very hot. Do not touch them. If you do, you can be burned.

Do not run the engine if there is a leak. If you run the engine, it could lose all coolant. That could cause an engine fire, and you could be burned. Get any leak fixed before you drive the vehicle.

***Notice:*** **Using coolant other than DEX-COOL® can cause premature engine, heater core, or radiator corrosion. In addition, the engine coolant could require changing sooner, at 50 000 km (30,000 miles) or 24 months, whichever occurs first. Any repairs would not be covered by the vehicle warranty. Always use DEX-COOL® (silicate-free) coolant in the vehicle.**

## Engine Coolant

The cooling system in the vehicle for all engines and the intercooler is filled with DEX-COOL®. This coolant is designed to remain in the vehicle for five years or 240 000 km (150,000 miles), whichever occurs first.

The following explains the cooling system and how to check and add coolant when it is low. If there is a problem with engine overheating, see *Engine Overheating on page 9-23*.

### What to Use

**⚠ WARNING**

Adding only plain water to the cooling system can be dangerous. Plain water, or some other liquid such as alcohol, can boil before the proper coolant mixture will. The vehicle's coolant warning system is set for the proper coolant mixture. With plain water or the wrong mixture, the engine could get too hot but you would not get the overheat warning. The engine could catch fire and you or others could be burned. Use a 50/50 mixture of clean, drinkable water and DEX-COOL® coolant.

Use a 50/50 mixture of clean, drinkable water and DEX-COOL® coolant. If using this mixture, nothing else needs to be added. This mixture:

- Gives freezing protection down to −37°C (−34°F), outside temperature.
- Gives boiling protection up to 129°C (265°F), engine temperature.
- Protects against rust and corrosion.
- Will not damage aluminum parts.
- Helps keep the proper engine temperature.

***Notice:*** **If an improper coolant mixture is used, the engine could overheat and be badly damaged. The repair cost would not be covered by the vehicle warranty. Too much water in the mixture can freeze and crack the engine, radiator, heater core, and other parts.**

### Checking Coolant

The vehicle must be on a level surface when checking the coolant level.

The engine coolant reservoir is located in the engine compartment on the driver side of the vehicle. See *Engine Compartment Overview on page 9-6*.

Check to see if coolant is visible in the surge tank. If the coolant inside the surge tank is boiling, do not do anything else until it cools down. If coolant is visible but the coolant level is not at or above the FULL COLD mark, add a 50/50 mixture of clean, drinkable water and DEX-COOL® coolant at the coolant surge tank, but be sure the cooling system is cool before this is done. See *Engine Coolant on page 9-18* for more information.

If the engine is warm or hot, the coolant level should be at or above the FROID/FULL COLD line on the side of the coolant surge tank. If the engine is cold, the coolant level should be near the FROID/FULL COLD line on the side of the coolant surge tank. If it is not, there could be a leak in the cooling system.

### How to Add Coolant to the Surge Tank

**⚠ WARNING**

You can be burned if you spill coolant on hot engine parts. Coolant contains ethylene glycol and it will burn if the engine parts are hot enough. Do not spill coolant on a hot engine.

***Notice:*** **This vehicle has a specific coolant fill procedure. Failure to follow this procedure could cause the engine to overheat and be severely damaged.**

**⚠ WARNING**

An electric engine cooling fan under the hood can start up even when the engine is not running and can cause injury. Keep hands, clothing, and tools away from any underhood electric fan.

**⚠ WARNING**

Steam and scalding liquids from a hot cooling system can blow out and burn you badly. They are under pressure, and if you turn the surge tank pressure cap — even a little — they can come out at high speed. Never turn the cap when the cooling system, including the surge tank pressure cap, is hot. Wait for the cooling system and surge tank pressure cap to cool if you ever have to turn the pressure cap.

If coolant is needed, add the proper DEX-COOL® coolant mixture at the coolant surge tank.

If no coolant is visible in the surge tank, add coolant as follows:

1. Remove the coolant surge tank pressure cap when the cooling system, including the coolant surge tank pressure cap and upper radiator hose, is no longer hot. Turn the pressure cap slowly counterclockwise about one-quarter turn and then stop.

   If you hear a hiss, wait for that to stop. A hiss means there is still some pressure left.

2. Then keep turning the pressure cap slowly and remove it.

3. Fill the coolant surge tank with the proper mixture, to slightly above the FROID/FULL COLD line on the side of the coolant surge tank.
4. With the coolant surge tank pressure cap off, start the engine and let it run until you can feel the upper radiator hose getting hot. The upper radiator hose is the top hose coming out of the radiator, on the passenger side of the vehicle. Watch out for the engine cooling fans.

   By this time, the coolant level inside the coolant surge tank may be lower. If the level is lower, add more of the proper mixture to the coolant surge tank until the level reaches the FROID/FULL COLD line on the side of the coolant surge tank.
5. Then replace the pressure cap. Be sure the pressure cap is hand-tight and fully seated.

***Notice:*** **If the pressure cap is not tightly installed, coolant loss and possible engine damage may occur. Be sure the cap is properly and tightly secured.**

Recheck the coolant level in the bottle next time you use your vehicle to insure the system is full when cold. See *Engine Coolant on page 9-18*.

## Checking Coolant in the Intercooler System (CTS-V)

The vehicle must be on a level surface when checking the coolant level.

The super charged engine intercooler coolant fill neck is located in the engine compartment on the passenger side of the vehicle. See *Engine Compartment Overview on page 9-6*.

On the coolant fill neck, there is a cold fill region between the two horizontal lines shown.

Check to see if coolant is visible in the coolant fill neck. If the coolant is not visible or below the cold fill region in the fill neck, add a 50/50 mixture of clean, drinkable water and DEX-COOL® coolant at the coolant fill bottle, but be sure the cooling system is cool before this is done.

## Adding Coolant to the Intercooler System Coolant (CTS-V)

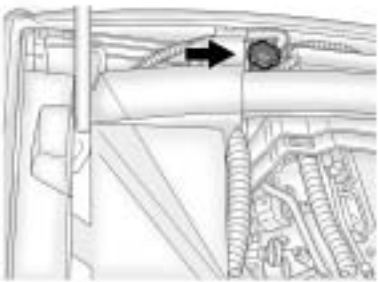

1. Remove the intercooler system pressure cap when the intercooler system hoses are no longer hot. Turn the pressure cap slowly counterclockwise about one-quarter of a turn. If you hear a hiss, wait for that to stop. This allows any pressure still left to be vented.
2. Then keep turning the pressure cap slowly and remove it.
3. Add the proper DEX-COOL® coolant mixture to the fill neck until the coolant is within the cold fill region.

   With the intercooler system pressure cap off, start the engine and let it run for a couple of minutes. Then turn the engine off. By this time, the coolant level inside the fill neck may be lower. If the level drops where coolant is no longer within the cold fill region of the fill neck with the engine off, add more of the DEX-COOL® coolant mixture to the fill neck until the level is again visible in the cold fill region.
4. Then replace the pressure cap. Be sure the pressure cap is hand-tight and fully seated.

***Notice:*** **If the pressure cap is not tightly installed, coolant loss and possible engine damage may occur. Be sure the cap is properly and tightly secured.**

If the coolant is not at the proper level when the system cools down again, see your dealer/retailer.

## Engine Overheating

The vehicle has several indicators to warn of engine overheating.

There are two engine hot messages that may be displayed in the Driver Information Center (DIC). See *Driver Information Center (DIC) on page 4-31* for more information.

You may decide not to lift the hood when this warning appears, but instead get service help right away. See *Roadside Service on page 12-6*.

If you do decide to lift the hood , make sure the vehicle is parked on a level surface.

Then check to see if the engine cooling fans are running. If the engine is overheating, the fan(s) should be running. If they are not, do not continue to run the engine and have the vehicle serviced.

***Notice:*** **Engine damage from running the engine without coolant is not covered by the warranty.**

***Notice:*** **If the engine catches fire because of being driven with no coolant, your vehicle can be badly damaged. The costly repairs would not be covered by the vehicle warranty.**

### If Steam Is Coming From The Engine Compartment

**⚠ WARNING**

Steam from an overheated engine can burn you badly, even if you just open the hood. Stay away from the engine if you see or hear steam coming from it. Just turn it off and get everyone away from the vehicle until it cools down. Wait until there is no sign of steam or coolant before you open the hood.

If you keep driving when your engine is overheated, the liquids in it can catch fire. You or others could be badly burned. Stop your engine if it overheats, and get out of the vehicle until the engine is cool.

### If No Steam Is Coming From The Engine Compartment

If an engine overheat warning is displayed but no steam can be seen or heard, the problem may not be too serious. Sometimes the engine can get a little too hot when the vehicle:

- Climbs a long hill on a hot day.
- Stops after high-speed driving.
- Idles for long periods in traffic.
- Tows a trailer.

If the overheat warning is displayed with no sign of steam:

1. Turn the air conditioning off.
2. Turn the heater on to the highest temperature and to the highest fan speed. Open the windows as necessary.
3. In heavy traffic, let the engine idle in N (Neutral) while stopped. If it is safe to do so, pull off the road, shift to P (Park) or N (Neutral) and let the engine idle.

If the temperature overheat gage is no longer in the overheat zone or an overheat warning no longer displays, the vehicle can be driven. Continue to drive the vehicle slow for about 10 minutes. Keep a safe vehicle distance from the car in front of you. If the warning does not come back on, continue to drive normally.

If the warning continues, pull over, stop, and park the vehicle right away.

If there is no sign of steam, idle the engine for three minutes while parked. If the warning is still displayed, turn off the engine until it cools down. Also, see “Overheated Engine Protection Operating Mode” next in this section.

## Overheated Engine Protection Operating Mode

This operating mode allows your vehicle to be driven to a safe place in an emergency. Should a hot engine condition exist, an overheat protection mode which alternates firing groups of cylinders helps prevent engine damage. In this mode, there is a loss in power and engine performance. Driving extended miles (km) and/or towing a trailer in the overheat protection mode should be avoided.

## Power Steering Fluid

See *Engine Compartment Overview on page 9-6* for the location of the power steering fluid reservoir.

### When to Check Power Steering Fluid

It is not necessary to regularly check power steering fluid unless you suspect there is a leak in the system or you hear an unusual noise. A fluid loss in this system could indicate a problem. Have the system inspected and repaired.

### How to Check Power Steering Fluid

To check the power steering fluid:

1. Turn the key off and let the engine compartment cool down.
2. Wipe the cap and the top of the reservoir clean.
3. Unscrew the cap and wipe the dipstick with a clean rag.
4. Replace the cap and completely tighten it.
5. Remove the cap again and look at the fluid level on the dipstick.

The level should be between the HOT and COLD marks. If necessary, add only enough fluid to bring the level up to the mark.

### What to Use

To determine what kind of fluid to use, see *Recommended Fluids and Lubricants on page 10-7*. Always use the proper fluid.

## Washer Fluid

### What to Use

When adding windshield washer fluid to the vehicle, be sure to read the manufacturer's instructions before use. If you will be operating your vehicle in an area where the temperature may fall below freezing, use a fluid that has sufficient protection against freezing.

### Adding Washer Fluid

The Washer Fluid Low Add Fluid message will appear on the Driver Information Center (DIC) when the fluid level is low. See *Driver Information Center (DIC) on page 4-31* for more information.

Open the cap with the washer symbol on it. Add washer fluid until the tank is full. See *Engine Compartment Overview on page 9-6* for reservoir location.

***Notice:***

- **When using concentrated washer fluid, follow the manufacturer's instructions for adding water.**
- **Do not mix water with ready-to-use washer fluid. Water can cause the solution to freeze and damage the washer fluid tank and other parts of the washer system. Also, water does not clean as well as washer fluid.**
- **Fill the washer fluid tank only three-quarters full when it is very cold. This allows for fluid expansion if freezing occurs, which could damage the tank if it is completely full.**
- **Do not use engine coolant (antifreeze) in the windshield washer. It can damage the vehicle's windshield washer system and paint.**

## Brakes

This vehicle has disc brakes.
Disc brake pads have built-in wear indicators that make a high-pitched warning sound when the brake pads are worn and new pads are needed. The sound can come and go or be heard all the time the vehicle is moving, except when applying the brake pedal firmly.

**⚠ WARNING**

The brake wear warning sound means that soon the brakes will not work well. That could lead to an accident. When the brake wear warning sound is heard, have the vehicle serviced.

***Notice:*** **Continuing to drive with worn-out brake pads could result in costly brake repair.**

Some driving conditions or climates can cause a brake squeal when the brakes are first applied or lightly applied. This does not mean something is wrong with the brakes.

Properly torqued wheel nuts are necessary to help prevent brake pulsation. When tires are rotated, inspect brake pads for wear and evenly tighten wheel nuts in the proper sequence to torque specifications in *Capacities and Specifications on page 11-2*.

Brake linings should always be replaced as complete axle sets.

### Brake Pedal Travel

See your dealer/retailer if the brake pedal does not return to normal height, or if there is a rapid increase in pedal travel. This could be a sign that brake service might be required.

### Brake Adjustment

Every time the brakes are applied, with or without the vehicle moving, the brakes adjust for wear.

### Replacing Brake System Parts

The braking system on a vehicle is complex. Its many parts have to be of top quality and work well together if the vehicle is to have really good braking. The vehicle was designed and tested with top-quality brake parts. When parts of the braking system are replaced, be sure to get new, approved replacement parts. If this is not done, the brakes might not work properly. For example, installing disc brake pads that are wrong for the vehicle, can change the balance between the front and rear brakes — for the worse. The braking performance expected can change in many other ways if the wrong replacement brake parts are installed.

## Brake Fluid

The brake master cylinder reservoir is filled with DOT 3 brake fluid as indicated on the reservoir cap. See *Engine Compartment Overview on page 9-6* for the location of the reservoir.

There are only two reasons why the brake fluid level in the reservoir might go down:

- The brake fluid level goes down because of normal brake lining wear. When new linings are installed, the fluid level goes back up.

- A fluid leak in the brake hydraulic system can also cause a low fluid level. Have the brake hydraulic system fixed, since a leak means that sooner or later the brakes will not work well.

Do not top off the brake fluid. Adding fluid does not correct a leak. If fluid is added when the linings are worn, there will be too much fluid when new brake linings are installed. Add or remove brake fluid, as necessary, only when work is done on the brake hydraulic system.

**⚠ WARNING**

If too much brake fluid is added, it can spill on the engine and burn, if the engine is hot enough. You or others could be burned, and the vehicle could be damaged. Add brake fluid only when work is done on the brake hydraulic system.

When the brake fluid falls to a low level, the brake warning light comes on. See *Brake System Warning Light on page 4-26*.

**What to Add**

Use only new DOT 3 brake fluid from a sealed container. See *Recommended Fluids and Lubricants on page 10-7*.

Always clean the brake fluid reservoir cap and the area around the cap before removing it. This helps keep dirt from entering the reservoir.

**⚠ WARNING**

With the wrong kind of fluid in the brake hydraulic system, the brakes might not work well. This could cause a crash. Always use the proper brake fluid.

***Notice:***

- **Using the wrong fluid can badly damage brake hydraulic system parts. For example, just a few drops of mineral-based oil, such as engine oil, in the brake hydraulic system can damage brake hydraulic system parts so badly that they will have to be replaced. Do not let someone put in the wrong kind of fluid.**
- **If brake fluid is spilled on the vehicle's painted surfaces, the paint finish can be damaged. Be careful not to spill brake fluid on the vehicle. If you do, wash it off immediately.**

## Battery

The battery is in the trunk, behind the trim panel, on the passenger side of the vehicle. Refer to the replacement number shown on the original battery label when a new battery is needed.

**⚠ DANGER**

Battery posts, terminals, and related accessories contain lead and lead compounds, chemicals known to the State of California to cause cancer and reproductive harm. Wash hands after handling.

After a power loss, such as disconnecting the battery or removing the maxi fuses in the power distribution fuse block, the following steps must be performed to calibrate the electronic throttle control. If this is not done, the engine will not run properly.

1. Turn the ignition to ON/RUN. Do not start the engine.
2. Leave the ignition in ON/RUN for at least three minutes so that the electronic throttle control will cycle and re-learn its home position.
3. Turn the ignition to LOCK/OFF.
4. Start and run the engine for at least 30 seconds.

### Vehicle Storage

**⚠ WARNING**

Batteries have acid that can burn you and gas that can explode. You can be badly hurt if you are not careful. See *Jump Starting on page 9-103* for tips on working around a battery without getting hurt.

Infrequent Usage: Remove the black, negative (−) cable from the battery to keep the battery from running down.

Extended Storage: Remove the black, negative (−) cable from the battery or use a battery trickle charger.

# All-Wheel Drive

If your vehicle is equipped with all-wheel-drive, this is an additional system that needs lubrication.

## Transfer Case

### When to Check Lubricant

It is not necessary to regularly check the transfer case fluid unless you suspect there is a leak or you hear an unusual noise. A fluid loss could indicate a problem. Have it inspected and repaired.

### How to Check Lubricant

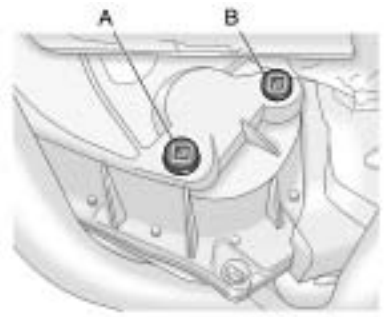


A. Drain Plug

B. Fill Plug

To get an accurate reading, the vehicle should be on a level surface.

If the level is below the bottom of the filler plug hole, located on the transfer case, you'll need to add some lubricant. Add enough lubricant to raise the level to the bottom of the filler plug hole. Use care not to overtighten the plug.

### What to Use

Refer to the Maintenance Schedule to determine what kind of lubricant to use. See *Recommended Fluids and Lubricants on page 10-7*.

# Rear Axle

## When to Check Lubricant

It is not necessary to regularly check rear axle fluid unless you suspect there is a leak or you hear an unusual noise. A fluid loss could indicate a problem. Have it inspected and repaired.

### How to Check Lubricant

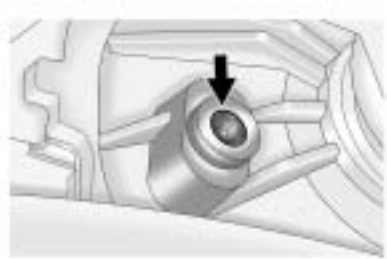

To get an accurate reading, the vehicle should be on a level surface.

If the level is below the bottom of the filler plug hole, located on the rear axle, you'll need to add some lubricant. Add enough lubricant to raise the level to the bottom of the filler plug hole.

### What to Use

Refer to the Maintenance Schedule to determine what kind of lubricant to use. See *Recommended Fluids and Lubricants on page 10-7*.

## Starter Switch Check

**⚠ WARNING**

When you are doing this inspection, the vehicle could move suddenly. If the vehicle moves, you or others could be injured.

1. Before starting this check, be sure there is enough room around the vehicle.
2. Firmly apply both the parking brake and the regular brake. See *Parking Brake (Manual) on page 8-34* or *Parking Brake (Electric) on page 8-35*.

   Do not use the accelerator pedal, and be ready to turn off the engine immediately if it starts.
3. For automatic transmission vehicles, try to start the engine in each gear. The vehicle should start only in P (Park) or N (Neutral). If the vehicle starts in any other position, contact your dealer/retailer for service.

   For manual transmission vehicles, put the shift lever in Neutral, push the clutch pedal down halfway, and try to start the engine. The vehicle should start only when the clutch pedal is pushed down all the way to the floor. If the vehicle starts when the clutch pedal is not pushed all the way down, contact your dealer/retailer for service.

## Automatic Transmission Shift Lock Control System Check

**⚠ WARNING**

When you are doing this inspection, the vehicle could move suddenly. If the vehicle moves, you or others could be injured.

1. Before starting this check, be sure there is enough room around the vehicle. It should be parked on a level surface.
2. Firmly apply the parking brake. See *Parking Brake (Manual) on page 8-34* or *Parking Brake (Electric) on page 8-35*.

   Be ready to apply the regular brake immediately if the vehicle begins to move.
3. With the engine off, turn the ignition to ON/RUN, but do not start the engine. Without applying the regular brake, try to move the shift lever out of P (Park) with normal effort. If the shift lever moves out of P (Park), contact your dealer/retailer for service.

## Ignition Transmission Lock Check

While parked, and with the parking brake set, try to turn the ignition to LOCK/OFF in each shift lever position.

- The ignition should turn to LOCK/OFF only when the shift lever is in P (Park).
- With the key access ignition system, the ignition key should come out only in LOCK/OFF.

  See *Ignition Positions (Key Access) on page 8-18* or *Ignition Positions (Keyless Access) on page 8-19*.

Contact your dealer/retailer if service is required.

## Park Brake and P (Park) Mechanism Check

**⚠ WARNING**

When you are doing this check, the vehicle could begin to move. You or others could be injured and property could be damaged. Make sure there is room in front of the vehicle in case it begins to roll. Be ready to apply the regular brake at once should the vehicle begin to move.

Park on a fairly steep hill, with the vehicle facing downhill. Keeping your foot on the regular brake, set the parking brake.

- To check the parking brake's holding ability: With the engine running and the transmission in N (Neutral), slowly remove foot pressure from the regular brake pedal. Do this until the vehicle is held by the parking brake only.
- To check the P (Park) mechanism's holding ability: With the engine running, shift to P (Park). Then release the parking brake followed by the regular brake.

Contact your dealer/retailer if service is required.

## Wiper Blade Replacement

Windshield wiper blades should be inspected for wear or cracking. See *Scheduled Maintenance on page 10-3*.

It is a good idea to clean or replace the wiper blade assembly on a regular basis or when worn. For proper windshield wiper blade length and type, see *Maintenance Replacement Parts on page 10-9*.

To replace the wiper blade assembly:

1. Turn the ignition to ON/RUN with the engine off.
2. Turn on the windshield wipers and turn them off again when the wipers are in the out-wipe position. The driver side blade will be straight up and down on the windshield.
3. Pull the windshield wiper assembly away from the windshield.

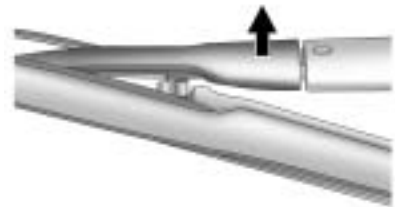

4. Lift up the wiper blade assembly cap.
5. Pull the wiper blade assembly down far enough to release it from the J-hooked end of the wiper arm. Slide the assembly away from the arm.

   Allowing the wiper blade arm to touch the windshield when no wiper blade is installed could damage the windshield. Any damage that occurs would not be covered by your warranty. Do not allow the wiper blade arm to touch the windshield.

6. Replace the blade with a new one.

7. Reinstall the wiper blade assembly by sliding it over the wiper arm to engage the J-hooked end. Pull up on the assembly to lock it into place.
8. Repeat the steps for the other wiper.

# Headlamp Aiming

The vehicle has a visual optical headlamp aiming system. The aim has been preset at the factory and should need no further adjustment.

However, if the vehicle is damaged in a crash, the headlamp aim may be affected and adjustment may be necessary.

If oncoming vehicles flash their high beams at you, this may also mean the vertical aim needs to be adjusted.

It is recommended that the vehicle is taken to your dealer/retailer for service if the headlamps need to be re-aimed. It is possible however, to re-aim the headlamps as described.

The vehicle should:

- Be placed so the headlamps are 7.6 m (25 ft) from a light colored wall.
- Have all four tires on a level surface which is level all the way to the wall.
- Be placed so it is perpendicular to the wall.
- Not have any snow, ice, or mud on it.
- Be fully assembled and all other work stopped while headlamp aiming is being performed.
- Normally loaded with a full tank of fuel and one person or 75 kg (160 lbs) sitting on the driver seat.
- Have all tires properly inflated.
- If your vehicle has a spare tire, ensure the spare tire is in its original location in the vehicle.

Headlamp aiming is done with the vehicle's low-beam headlamps. The high-beam headlamps will be correctly aimed if the low-beam headlamps are aimed properly.

To adjust the vertical aim:

1. Open the hood. See *Hood on page 9-5* for more information.

**Halogen Headlamps**

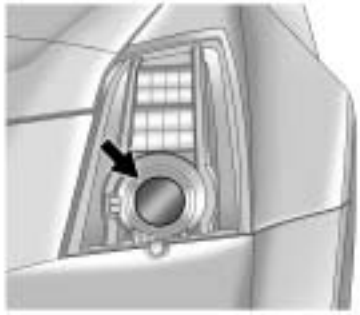

**High Intensity Discharge Headlamps**

2. Locate the aim dot on the lens of the low-beam headlamp.
3. Record the distance from the ground to the aim dot on the low-beam headlamp.

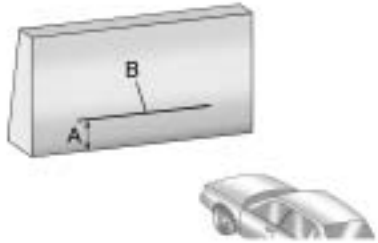


4. At a wall, measure from the ground upward (A) to the recorded distance from Step 3 and mark it.
5. Draw or tape a horizontal line (B) the width of the vehicle at the wall where it was marked in Step 4.

***Notice:*** **Do not cover a headlamp to improve beam cut-off when aiming. Covering a headlamp may cause excessive heat build-up which may cause damage to the headlamp.**

6. Turn on the low-beam headlamps and place a piece of cardboard or equivalent in front of the headlamp not being aimed. This should allow only the beam of light from the headlamp being aimed to be seen on the flat surface.

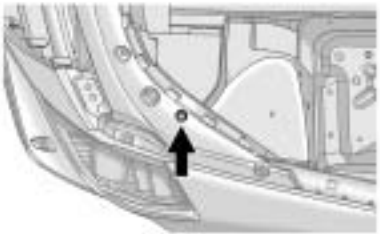

**Driver Side Shown**

7. Locate the vertical headlamp aiming screws, which are under the hood near each headlamp assembly. They are covered by a rubber caps.

   The adjustment screw can be turned with a 6 mm hex driver.

8. Turn the vertical aiming screw until the headlamp beam is aimed to the horizontal tape line. Turn it clockwise or counterclockwise to raise or lower the angle of the beam.

   The top edge of the cut-off should be positioned at the bottom edge of the horizontal tape line.

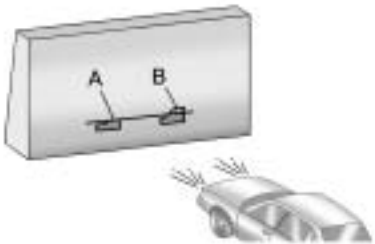


9. Make sure that the light from the headlamp is positioned at the bottom edge of the horizontal tape line. The lamp on the left (A) shows the correct headlamp aim. The lamp on the right (B) shows the incorrect headlamp aim.

10. Repeat Steps 7 through 9 for the opposite headlamp.

# Bulb Replacement

For the proper type of replacement bulbs, see *Replacement Bulbs on page 9-39*.

For any bulb changing procedure not listed in this section, contact your dealer/retailer.

## Halogen Bulbs

**⚠ WARNING**

Halogen bulbs have pressurized gas inside and can burst if you drop or scratch the bulb. You or others could be injured. Be sure to read and follow the instructions on the bulb package.

## High Intensity Discharge (HID) Lighting

**⚠ WARNING**

The low beam high intensity discharge lighting system operates at a very high voltage. If you try to service any of the system components, you could be seriously injured. Have your dealer/retailer or a qualified technician service them.

The up-level vehicle has HID headlamps. The park lamp function is also a function of the HID headlamp. After an HID headlamp bulb has been replaced, the beam might be a slightly different shade than it was originally. This is normal.

## Fog Lamps

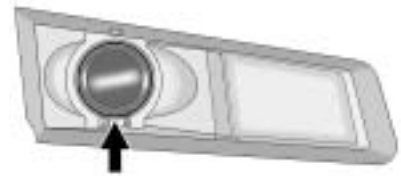

To replace fog lamp bulb:

1. Pull out the push-pins located on the underside of the protection shield to remove the shield.
2. Reach up behind the front bumper area from under the vehicle to access the lamp housing.
3. Remove the electrical connector from the bulb by lifting the two plastic clips.

4. Remove the bulb socket from the lamp housing by turning the bulb socket one-quarter turn counterclockwise.
5. Pull the old bulb from the lamp housing keeping the bulb straight as you pull it out.
6. Install a new bulb.
7. Reinstall the electrical connector by pushing in the two plastic clips.
8. Push the bulb socket into the lamp housing and turn the socket one-quarter turn clockwise.

## License Plate Lamp (Sedan)

To replace one of these bulbs:

1. Push tab to remove the license plate lamp.
2. Turn the license plate lamp assembly down to remove it.
3. Turn the socket counterclockwise and remove it.
4. Pull the bulb straight out to remove it.
5. Push the new bulb straight into the socket.
6. Reverse Steps 1 through 3 to reinstall the license plate lamp assembly.

## License Plate Lamp (Wagon)

To replace one of these bulbs:

1. Open the liftgate. See *Liftgate (Wagon) on page 1-19* for more information.

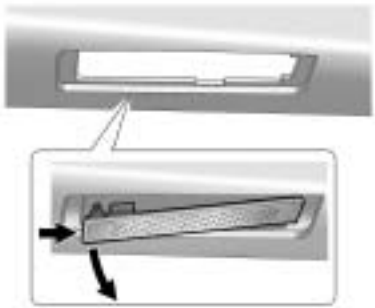

**Passenger side shown, driver side similar**

2. Push the left end of the lamp assembly towards the right.
3. Turn the lamp assembly down to remove from liftgate.

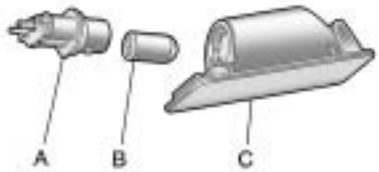


A. Bulb Socket
B. Bulb
C. Lamp Assembly

4. Turn the bulb socket (A) counterclockwise to remove from lamp assembly (C).
5. Pull the bulb (B) straight out of the bulb socket.
6. Push the replacement bulb straight into the bulb socket and turn the bulb socket clockwise to install into lamp assembly.
7. Turn the lamp assembly into the liftgate engaging the clip side first.
8. Push on the lamp side opposite the clip until the lamp assembly snaps into place.

## Replacement Bulbs

| Exterior Lamp | Bulb Number |
|---|---|
| Fog Lamp (Up Level Only) | H11LL |
| License Plate Lamp | W5WLL |

For replacement bulbs not listed here, contact your dealer/retailer.

# Electrical System

## Electrical System Overload

The vehicle has fuses and circuit breakers to protect against an electrical system overload.

When the current electrical load is too heavy, the circuit breaker opens and closes, protecting the circuit until the current load returns to normal or the problem is fixed. This greatly reduces the chance of circuit overload and fire caused by electrical problems.

Fuses and circuit breakers protect the following in the vehicle:

- Headlamp Wiring
- Windshield Wiper Motor
- Power Windows and other Power Accessories

### Headlamp Wiring

An electrical overload may cause the lamps to go on and off, or in some cases to remain off. Have the headlamp wiring checked right away if the lamps go on and off or remain off.

### Windshield Wipers

If the wiper motor overheats due to heavy snow or ice, the windshield wipers will stop until the motor cools and will then restart.

Although the circuit is protected from electrical overload, overload due to heavy snow or ice, may cause wiper linkage damage. Always clear ice and heavy snow from the windshield before using the windshield wipers.

If the overload is caused by an electrical problem and not snow or ice, be sure to get it fixed.

## Fuses and Circuit Breakers

The wiring circuits in the vehicle are protected from short circuits by a combination of fuses and circuit breakers. This greatly reduces the chance of damage caused by electrical problems.

To check a fuse, look at the silver-colored band inside the fuse. If the band is broken or melted, replace the fuse. Be sure to replace a bad fuse with a new one of the identical size and rating.

Fuses of the same amperage can be temporarily borrowed from another fuse location, if a fuse goes out. Replace the fuse as soon as you can.

To identify and check fuses, circuit breakers, and relays, see *Engine Compartment Fuse Block (CTS) on page 9-41* or *Engine Compartment Fuse Block (CTS-V) on page 9-45* or *Engine Compartment Fuse Block (CTS Wagon) on page 9-48* and *Rear Compartment Fuse Block (CTS) on page 9-51* or *Rear Compartment Fuse Block (CTS-V) on page 9-53* or *Rear Compartment Fuse Block (CTS Wagon) on page 9-55*.

## Engine Compartment Fuse Block (CTS)

The underhood fuse block is located on the passenger side of the engine compartment.

Lift the fuse block cover to access the fuses.

***Notice:*** **Spilling liquid on any electrical components on the vehicle may damage it. Always keep the covers on any electrical component.**

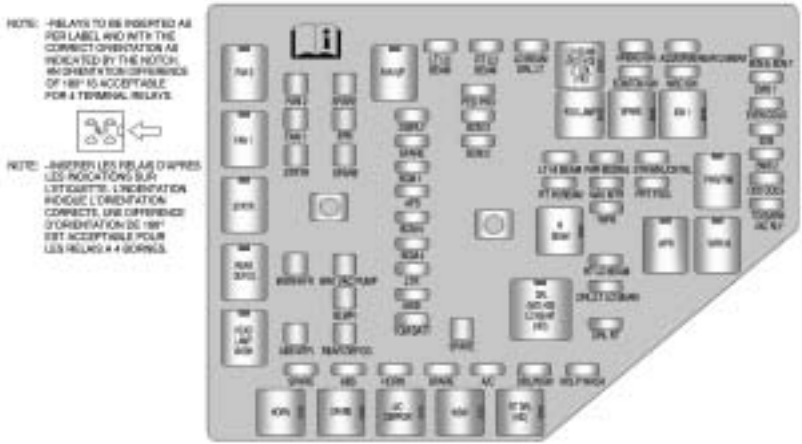

| Mini-Fuses | Usage |
|---|---|
| A/C CLTCH | Air Conditioning Clutch |
| ABS | Antilock Braking System (ABS) |
| AFS | Adaptive Forward Lighting System |

| Mini-Fuses | Usage |
|---|---|
| AIRBAG IGN | Airbag Switch |
| AQS/ ISRVM/ REAR CAMERA | Air Quality Sensor/ Inside Rear View Mirror/Rear View Camera |
| AWD | All-Wheel Drive |

| Mini-Fuses | Usage |
|---|---|
| BCM 1 | Body Control Module 1 |
| BCM 2 | Body Control Module 2 |
| BCM 3 | Body Control Module 3 |
| BCM 4 | Body Control Module 4 |
| BCM 5 | Body Control Module 5 |
| BCM 6, BCM 7 | Body Control Module 6 and 7 |
| DISPLY | Display |
| DRL/LT LO BEAM | Daytime Running Lamps/Left Low-Beam Headlamp |
| DRL RT | Right Daytime Running Lamp (DRL) |

| Mini-Fuses | Usage |
|---|---|
| DRL/WSW | Daytime Running Lamps/Windshield Washer Pump |
| ECM | Engine Control Module (ECM) |
| ECM/ TCM IGN | ECM, Transmission Control Module (TCM), Instrument Panel Cluster (IPC), PASS-Key III+ Module |
| EMIS 1 | Emission 1 |
| EMIS 2 | Emission 2 |
| EVEN COILS | Even Coils |
| FRT FOG | Front Fog Lamps |
| HDLP WASH | Not Used |
| HORN | Horn |

| Mini-Fuses | Usage |
|---|---|
| LO BEAM DRL LEFT | Low-Beam Daytime Running Lamps (Left) |
| LT HI BEAM | Left High-Beam Headlamp |
| LT LO BEAM | Left Low-Beam Headlamp |
| LTR | Cigarette Lighter |
| MISC IGN | Ignition |
| NAV MTR | Navigation Motor |
| ODD COILS | Odd Coils |
| PED PRO | Not Used |
| PWR MODING | PassKey Module, Body Control Module |
| RT HI BEAM | Right High-Beam Headlamp |
| RT LO BEAM | Right Low-Beam Headlamp |
| RT LO BEAM | Right Low-Beam Headlamp |

| Mini-Fuses | Usage |
|---|---|
| SPARE | Spare |
| SPARE | Spare |
| STR/WHL/ CNTRL | Steering Wheel Illumination |
| TCM BATT | Transmission Control Module Battery |
| TOSS/BRK VAC RLY | Transmission Output Speed Sensor/Brake Vacuum Relay |
| WPR | Windshield Wiper |
| SPARE | Spare |

| J-Case Fuses | Usage |
|---|---|
| ABS MTR | ABS Motor |
| BLWR | Blower |
| BRK VAC PUMP | Brake Vacuum Pump |
| EPB | Not Used |

| J-Case Fuses | Usage |
|---|---|
| FAN 1 | Cooling Fan 1 |
| FAN 2 | Cooling Fan 2 |
| REAR DEFOG | Rear Defogger |
| STRTR | Starter |
| SPARE | Spare |
| WSW/HTR | Not Used |

| Relays | Usage |
|---|---|
| A/C CMPRSR | Air Conditioning Compressor Clutch |
| DRL (W/O HID) LO BEAM (HID) | Daytime Running Lamps (without High Intensity Discharge), Low-Beam Headlamps (High Intensity Discharge) |

| Relays | Usage |
|---|---|
| FAN S/P | Cooling Fan Series/Parallel |
| FAN 1 | Cooling Fan 1 |
| FAN 2 | Cooling Fan 2 |
| FOG LAMP | Fog Lamps |
| HDLP WASH | Not Used |
| HI BEAM | High-Beam Headlamp |
| HORN | Horn |
| IGN 1 | Ignition 1 |
| LO BEAM (W/O HID) LT DRL (HID) | Low-Beam (without High Intensity Discharge), Left Daytime Running Lamp (High Intensity Discharge) |

| Relays | Usage |
|---|---|
| PWR/TRN | Powertrain |
| REAR DEFOG | Rear Defogger |
| RT DRL (HID) | Right Daytime Running Lamp (High Intensity Discharge) |
| SPARE | Spare |
| STRTR | Starter |
| WPR | Windshield Wiper |
| WPR HI | Windshield Wiper High Speed |
| WSW | Windshield Washer Pump |

## Engine Compartment Fuse Block (CTS-V)

The underhood fuse block is located on the passenger side of the engine compartment.

Lift the fuse block cover to access the fuses.

***Notice:*** **Spilling liquid on any electrical components on the vehicle may damage it. Always keep the covers on any electrical component.**

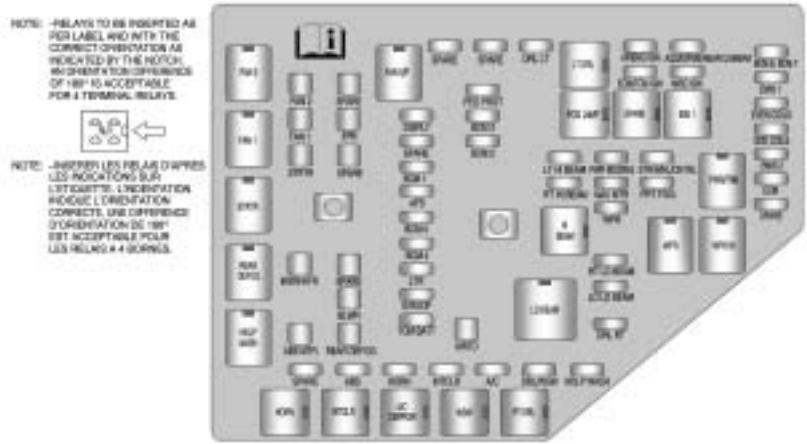

| Mini-Fuses | Usage |
|---|---|
| A/C CLTCH | Air Conditioning Clutch |
| ABS | Antilock Braking System (ABS) |
| AFS | Adaptive Forward Lighting System |

| Mini-Fuses | Usage |
|---|---|
| AIRBAG IGN | Airbag Switch |
| AQS/ ISRVM/ REAR CAMERA | Air Quality Sensor/ Inside Rear View Mirror/Rear View Camera |
| BCM 1 | Body Control Module 1 |

| Mini-Fuses | Usage |
|---|---|
| BCM 2 | Body Control Module 2 |
| BCM 3 | Body Control Module 3 |
| BCM 4 | Body Control Module 4 |
| BCM 5 | Body Control Module 5 |
| BCM 6, BCM 7 | Body Control Module 6 and 7 |
| DISPLY | Display |
| DRL LT | Left Daytime Running Lamps |
| DRL RT | Right Daytime Running Lamp (DRL) |
| DRL/WSW | Daytime Running Lamps/Windshield Washer Pump |
| ECM | Engine Control Module (ECM) |

| Mini-Fuses | Usage |
|---|---|
| ECM/ TCM IGN | ECM, Transmission Control Module (TCM), Instrument Panel Cluster (IPC), PASS-Key III+ Module |
| EMIS 1 | Emission 1 |
| EMIS 2 | Emission 2 |
| EVEN COILS | Even Coils |
| FRT FOG | Front Fog Lamps |
| HDLP WASH | Headlamp Washer |
| HORN | Horn |
| INTCLR | Intercooler Pump |
| LT HI BEAM | Left High-Beam Headlamp |
| LT LO BEAM | Left Low-Beam Headlamp |
| LTR | Cigarette Lighter |

| Mini-Fuses | Usage |
|---|---|
| MISC IGN | Ignition |
| NAV MTR | Navigation Motor |
| ODD COILS | Odd Coils |
| PED PRO | Not Used |
| PWR MODING | PassKey Module, Body Control Module |
| RT HI BEAM | Right High-Beam Headlamp |
| RT LO BEAM | Right Low-Beam Headlamp |
| SPARE | Spare |
| STR/WHL/ CNTRL | Steering Wheel Illumination |
| S/ROOF | Sunroof |
| TCM BATT | Transmission Control Module Battery |
| WPR | Windshield Wiper |

| J-Case Fuses | Usage |
|---|---|
| ABS MTR | ABS Motor |
| BLWR | Blower |
| EPB | Electric Park Brake |
| FAN 1 | Cooling Fan 1 |
| FAN 2 | Cooling Fan 2 |
| MRTD | MR Ride/ Suspension Control |
| REAR DEFOG | Rear Defogger |
| STRTR | Starter |
| SPARE | Spare |
| WSW/HTR | Not Used |

| Relays | Usage |
|---|---|
| A/C CMPRSR | Air Conditioning Compressor Clutch |
| FAN S/P | Cooling Fan Series/Parallel |

| Relays | Usage |
|---|---|
| FAN 1 | Cooling Fan 1 |
| FAN 2 | Cooling Fan 2 |
| FOG LAMP | Fog Lamps |
| HDLP WASH | Headlamp Washer |
| HI BEAM | High-Beam Headlamp |
| HORN | Horn |
| IGN 1 | Ignition 1 |
| INTCLR | Intercooler Pump |
| LT DRL | Left Daytime Running Lamps |
| LO BEAM | Low Beam |
| PWR/TRN | Powertrain |
| REAR DEFOG | Rear Defogger |
| RT DRL | Right Daytime Running Lamp |

| Relays | Usage |
|---|---|
| SPARE | Spare |
| STRTR | Starter |
| WPR | Windshield Wiper |
| WPR HI | Windshield Wiper High Speed |
| WSW | Daytime Running Lamps/Windshield Washer Pump |

## Engine Compartment Fuse Block (CTS Wagon)

The underhood fuse block is located on the passenger side of the engine compartment.

Lift the fuse block cover to access the fuses.

***Notice:*** **Spilling liquid on any electrical components on the vehicle may damage it. Always keep the covers on any electrical component.**

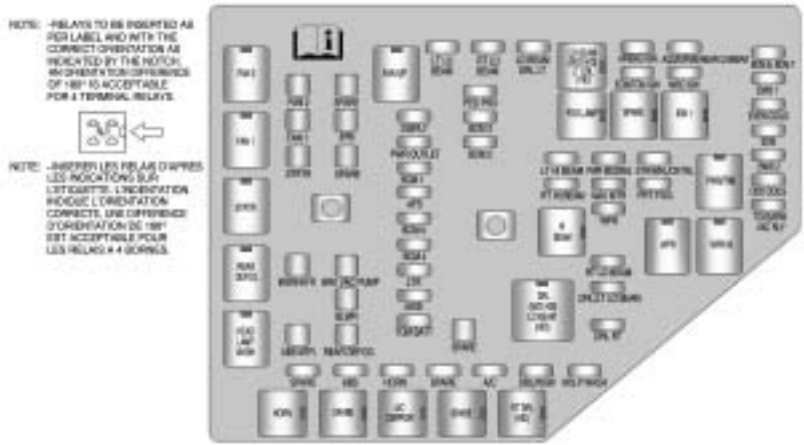

| Mini-Fuses | Usage |
|---|---|
| A/C CLTCH | Air Conditioning Clutch |
| ABS | Antilock Braking System (ABS) |
| AFS | Adaptive Forward Lighting System |

| Mini-Fuses | Usage |
|---|---|
| AIRBAG IGN | Airbag Switch |
| AQS/ ISRVM/ REAR CAMERA | Air Quality Sensor/ Inside Rear View Mirror/Rear View Camera |

| Mini-Fuses | Usage |
|---|---|
| AWD | All-Wheel Drive |
| BCM 1 | Body Control Module 1 |
| BCM 2 | Body Control Module 2 |
| BCM 3 | Body Control Module 3 |
| BCM 4 | Body Control Module 4 |
| BCM 5 | Body Control Module 5 |
| BCM 6, BCM 7 | Body Control Module 6 and 7 |
| DISPLY | Display |
| DRL RT | Right Daytime Running Lamp (DRL) |

| Mini-Fuses | Usage |
|---|---|
| DRL/LT LO BEAM | Daytime Running Lamps/Left Low-Beam Headlamp |
| DRL/WSW | Daytime Running Lamps/Windshield Washer Pump |
| ECM | Engine Control Module (ECM) |
| ECM/ TCM IGN | ECM, Transmission Control Module (TCM), Instrument Panel Cluster (IPC), PASS-Key III+ Module |
| EMIS 1 | Emission 1 |
| EMIS 2 | Emission 2 |
| EVEN COILS | Even Coils |

| Mini-Fuses | Usage |
|---|---|
| FRT FOG | Front Fog Lamps |
| HDLP WASH | Headlamp Washer |
| HORN | Horn |
| LO BEAM DRL LEFT | Low-Beam Daytime Running Lamps (Left) |
| LT HI BEAM | Left High-Beam Headlamp |
| LT LO BEAM | Left Low-Beam Headlamp |
| LTR | Cigarette Lighter |
| MISC IGN | Ignition |
| NAV MTR | Navigation Motor |
| ODD COILS | Odd Coils |
| PED PRO | Not Used |

| Mini-Fuses | Usage |
|---|---|
| PWR MODING | PassKey Module, Body Control Module |
| PWR OUTLET | Console Auxiliary Power Outlet |
| RT HI BEAM | Right High-Beam Headlamp |
| RT LO BEAM | Right Low-Beam Headlamp |
| RT LO BEAM | Right Low-Beam Headlamp |
| SPARE | Spare |
| STR/WHL/ CNTRL | Steering Wheel Illumination |
| TCM BATT | Transmission Control Module Battery |
| TOSS/BRK VAC RLY | Transmission Output Speed Sensor/Brake Vacuum Relay |
| WPR | Windshield Wiper |

| J-Case Fuses | Usage |
|---|---|
| ABS MTR | ABS Motor |
| BLWR | Blower |
| BRK VAC PUMP | Brake Vacuum Pump |
| EPB | Electric Park Brake |
| FAN 1 | Cooling Fan 1 |
| FAN 2 | Cooling Fan 2 |
| REAR DEFOG | Rear Defogger |
| SPARE | Spare |
| STRTR | Starter |
| TRLR | Trailer Towing |
| WSW/HTR | Not Used |

| Relays | Usage |
|---|---|
| A/C CMPRSR | Air Conditioning Compressor Clutch |
| DRL (W/O HID) LO BEAM (HID) | Daytime Running Lamps (without High Intensity Discharge), Low-Beam Headlamps (High Intensity Discharge) |
| FAN S/P | Cooling Fan Series/Parallel |
| FAN 1 | Cooling Fan 1 |
| FAN 2 | Cooling Fan 2 |
| FOG LAMP | Fog Lamps |
| HDLP WASH | Headlamp Washer |
| HI BEAM | High-Beam Headlamp |
| HORN | Horn |
| IGN 1 | Ignition 1 |

| Relays | Usage |
|---|---|
| LO BEAM (W/O HID) LT DRL (HID) | Low-Beam (without High Intensity Discharge), Left Daytime Running Lamp (High Intensity Discharge) |
| PWR/TRN | Powertrain |
| REAR DEFOG | Rear Defogger |
| RT DRL (HID) | Right Daytime Running Lamp (High Intensity Discharge) |
| SPARE | Spare |
| STRTR | Starter |
| WPR | Windshield Wiper |
| WPR HI | Windshield Wiper High Speed |

## Rear Compartment Fuse Block (CTS)

The rear compartment fuse block is located on top of the battery, on the right side of the trunk. The battery access door must be removed to access the fuse block.

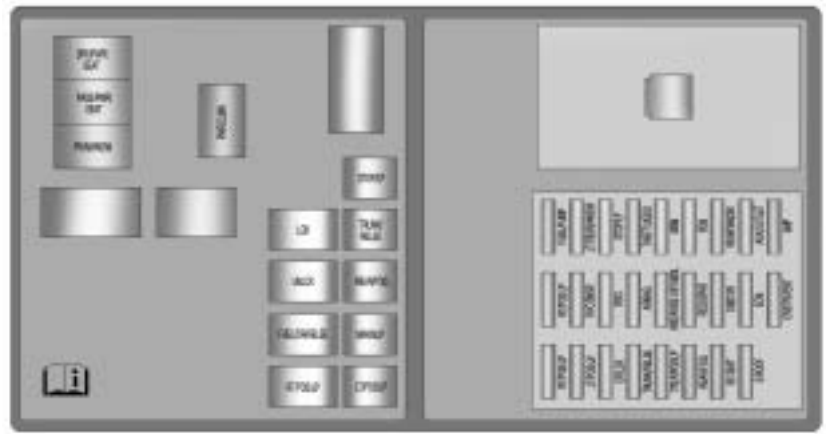

| Relays | Usage |
|---|---|
| FUEL/DR/ RELSE | Not Used |
| LCK | Lock |

| Relays | Usage |
|---|---|
| LT/POS/LP | Left Position Lamp |
| MRKR/LP | Not Used |

| Relays | Usage |
|---|---|
| REAR/FOG | Not Used |
| RT/POS/LP | Not Used |
| STOP/LP | Not Used |
| TRUNK/ RELSE | Trunk Release |
| UNLCK | Unlock |

| Mini-Fuses | Usage |
|---|---|
| AIRBAG | Airbag System |
| AMP | Amplifier |
| AUX/ OUTLET | Auxiliary Power Outlet |
| CNSTR/ VENT | Canister Vent |
| DR/LCK | Door Lock |
| ECM | Engine Control Module (ECM) |

| Mini-Fuses | Usage |
|---|---|
| EE SEAT | Not Used |
| FUEL/ PUMP | Fuel Pump |
| LT/POS/LP | Left Position Lamp |
| MSM | Memory Seat Module |
| ONSTAR | OnStar® System |
| PDM | Passenger Door Module |
| RDO | Audio System |
| RDO/SPKR | Audio Speakers |
| REAR/FOG | Not Used |
| RKE/ PASS-KEY/ MDL | Remote Keyless Entry System, Pass-Key Theft Deterrent Feature Module |

| Mini-Fuses | Usage |
|---|---|
| RT/POS/LP | Not Used |
| RT/POS/LP | Right Position Lamp |
| RVC/SNSR | Regulated Voltage Control Sensor |
| S/ROOF | Sunroof |
| STOP/LP | Not Used |
| THEFT/ UGDO | Theft Deterrent System, Universal Home Remote System |
| TRLR/ POS/LP | Not Used |
| TRUNK/ RELSE | Trunk Release |

| Circuit Breakers | Usage |
|---|---|
| DRV/ PWR/SEAT | Left Front Power Seat |
| LT/ REAR/ WNDW | Left Rear Window |
| PWR CLMN | Power Steering Column |
| PWR/ WNDW | Power Window |
| PASS/ PWR/SEAT | Right Front Power Seat |
| REAR/ WNDW | Right Rear Window |

## Rear Compartment Fuse Block (CTS-V)

The rear compartment fuse block is located on top of the battery, on the right side of the trunk. The battery access door must be removed to access the fuse block.

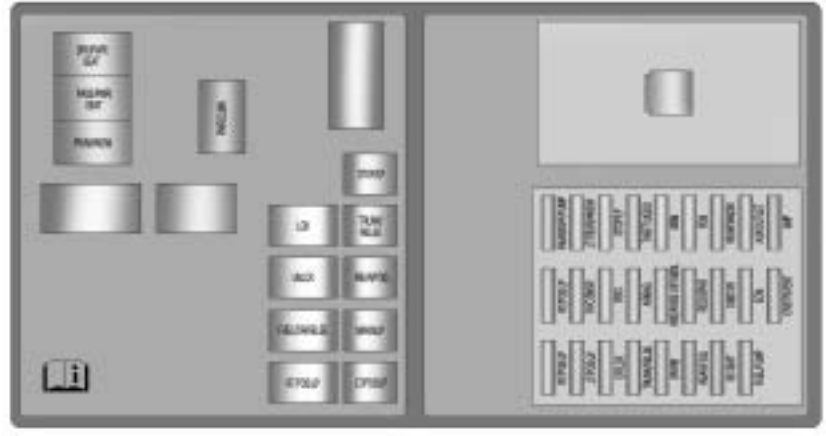

| Relays | Usage |
|---|---|
| FUEL/DR/ RELSE | Not Used |
| LCK | Lock |

| Relays | Usage |
|---|---|
| LT/POS/LP | Left Position Lamp |
| MRKR/LP | Not Used |

| Relays | Usage |
|---|---|
| REAR/FOG | Not Used |
| RT/POS/LP | Not Used |
| STOP/LP | Not Used |
| TRUNK/ RELSE | Trunk Release |
| UNLCK | Unlock |

| Mini-Fuses | Usage |
|---|---|
| AIRBAG | Airbag System |
| AMP | Amplifier |
| AUX/ OUTLET | Auxiliary Power Outlet |
| CNSTR/ VENT | Canister Vent |
| DR/LCK | Door Lock |
| ECM | Engine Control Module (ECM) |

| Mini-Fuses | Usage |
|---|---|
| EE SEAT | Not Used |
| FUEL/ PUMP | Fuel Pump |
| LT/POS/LP | Left Position Lamp |
| MSM | Memory Seat Module |
| ONSTAR | OnStar® System |
| PDM | Passenger Door Module |
| RDO | Audio System |
| RDO/SPKR | Audio Speakers |
| REAR/ DIFF/PUMP | Rear Differential Cooling Pump |
| REAR/FOG | Not Used |

| Mini-Fuses | Usage |
|---|---|
| RKE/ PASS-KEY/ MDL | Remote Keyless Entry System, Pass-Key Theft Deterrent Feature Module |
| RT/POS/LP | Right Position Lamp |
| RT/POS/LP | Not Used |
| RVC/SNSR | Regulated Voltage Control Sensor |
| SPARE | Spare |
| STOP/LP | Not Used |
| THEFT/ UGDO | Theft Deterrent System, Universal Home Remote System |
| TRUNK/ RELSE | Trunk Release |

| Circuit Breakers | Usage |
|---|---|
| DRV/ PWR/SEAT | Left Front Power Seat |
| LT/ REAR/ WNDW | Left Rear Window |
| PASS/ PWR/SEAT | Right Front Power Seat |
| PWR CLMN | Power Steering Column |
| PWR/ WNDW | Power Window |
| REAR/ WNDW | Right Rear Window |

## Rear Compartment Fuse Block (CTS Wagon)

The rear compartment fuse block is located on the passenger side of the vehicle, behind the trim panel in the rear compartment.

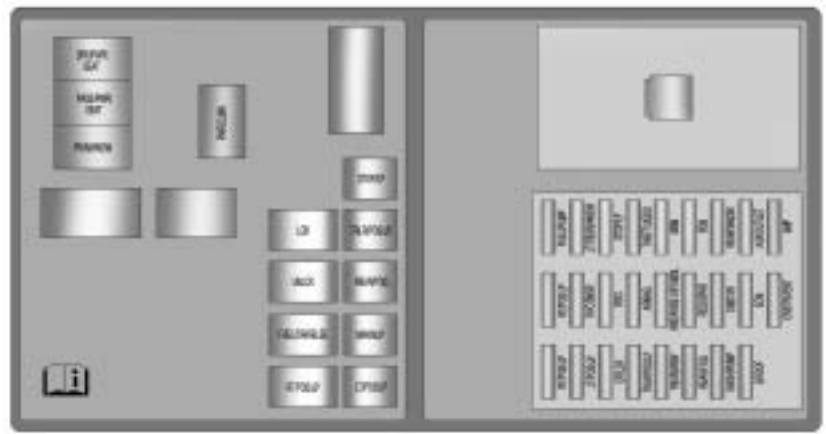

| Relays | Usage |
|---|---|
| FUEL/DR/ RELSE | Not Used |
| LCK | Lock |

| Relays | Usage |
|---|---|
| LT/POS/LP | Left Position Lamp |
| MRKR/LP | Not Used |

| Relays | Usage |
|---|---|
| REAR/FOG | Not Used |
| RT/POS/LP | Not Used |
| STOP/LP | Not Used |
| TRUNK/ RELSE | Trunk Release |
| UNLCK | Unlock |

| Mini-Fuses | Usage |
|---|---|
| AIRBAG | Airbag System |
| AMP | Amplifier |

| Mini-Fuses | Usage |
|---|---|
| AUX/ OUTLET | Auxiliary Power Outlet |
| CNSTR/ VENT | Canister Vent |
| DR/LCK | Door Lock |
| ECM | Engine Control Module (ECM) |
| FUEL/ PUMP | Fuel Pump |
| LT/POS/LP | Left Position Lamp |

| Mini-Fuses | Usage |
|---|---|
| MSM | Memory Seat Module |
| ONSTAR | OnStar® System |
| PDM | Passenger Door Module |
| RDO | Audio System |
| RDO/SPKR | Audio Speakers |
| REAR/FOG | Not Used |
| REAR/ WSW | Rear Windshield Wiper/Washer |

| Mini-Fuses | Usage |
|---|---|
| RKE/ PASS-KEY/ MDL | Remote Keyless Entry System, Pass-Key Theft Deterrent Feature Module |
| RT/POS/LP | Not Used |
| RT/POS/LP | Right Position Lamp |
| RVC/SNSR | Regulated Voltage Control Sensor |
| S/ROOF | Sunroof |

| Mini-Fuses | Usage |
|---|---|
| STOP/LP | Not Used |
| THEFT/ UGDO | Theft Deterrent System, Universal Home Remote System |
| TRLR/ POS/LP | Trailer Turn Position Lamps |
| WASH/ PUMP | Windshield Washer Pump |

| Circuit Breakers | Usage |
|---|---|
| DRV/ PWR/SEAT | Left Front Power Seat |
| LT/ REAR/ WNDW | Left Rear Window |
| PASS/ PWR/SEAT | Right Front Power Seat |
| PWR CLMN | Power Steering Column |
| PWR/ WNDW | Power Window |
| REAR/ WNDW | Right Rear Window |

# Wheels and Tires

## Tires

Your new vehicle comes with high-quality tires made by a leading tire manufacturer. If you ever have questions about your tire warranty and where to obtain service, see your vehicle Warranty booklet for details. For additional information refer to the tire manufacturer.

**⚠ WARNING**

Poorly maintained and improperly used tires are dangerous.

- Overloading your tires can cause overheating as a result of too much flexing. You could have an air-out and a serious accident. See *Vehicle Load Limits on page 8-12*.
- Underinflated tires pose the same danger as overloaded tires. The resulting accident could cause serious injury. Check all tires frequently to maintain the recommended pressure. Tire pressure should be checked when your tires are cold. See *Tire Pressure on page 9-66*.

(Continued)

**WARNING (Continued)**

- Overinflated tires are more likely to be cut, punctured or broken by a sudden impact — such as when you hit a pothole. Keep tires at the recommended pressure.
- Worn, old tires can cause accidents. If your tread is badly worn, or if your tires have been damaged, replace them.

See *Tire Pressure for High-Speed Operation on page 9-67* for inflation pressure adjustment for high speed driving.

## Winter Tires

If you expect to drive on snow or ice covered roads often, you may want to get winter tires for your vehicle. All season tires provide good overall performance on most surfaces but they may not offer the traction you would like or the same level of performance as winter tires on snow or ice covered roads.

Winter tires, in general, are designed for increased traction on snow and ice covered roads. With winter tires, there may be decreased dry road traction, increased road noise, and shorter tread life. After switching to winter tires, be alert for changes in vehicle handling and braking.

See your dealer/retailer for details regarding winter tire availability and proper tire selection. Also, see *Buying New Tires on page 9-75*.

If you choose to use winter tires:

- Use tires of the same brand and tread type on all four wheel positions.
- Use only radial ply tires of the same size, load range, and speed rating as the original equipment tires.

Winter tires with the same speed rating as your original equipment tires may not be available for H, V, W, Y, and ZR speed rated tires. If you choose winter tires with a lower speed rating, never exceed the tire's maximum speed capability.

## Low-Profile Tires

If your vehicle has 235/50ZR18, P235/50R18, 255/40ZR19 or 285/35ZR19 size tires, they are classified as low-profile tires. These tires are designed for very responsive driving on wet or dry pavement. You may also notice more road noise with low-profile performance tires and that they tend to wear faster.

***Notice:*** **If the vehicle has low-profile tires, they are more susceptible to damage from road hazards or curb impact than standard profile tires. Tire and/or wheel assembly damage can occur when coming into contact with road hazards like, potholes, or sharp edged objects, or when sliding into a curb. The vehicle warranty does not cover this type of damage. Keep tires set to the correct inflation pressure and, when possible avoid contact with curbs, potholes, and other road hazards.**

### Summer Performance Tires

Many General Motors high performance models come factory-equipped with tires that are optimized for maximum dry and wet road performance while still retaining satisfactory tread life, excellent durability, and low noise levels. In severe winter climates where snowfall may be significant, these tires may be found to provide less traction.

## Tire Sidewall Labeling

Useful information about a tire is molded into its sidewall. The examples below show a typical passenger vehicle tire and a compact spare tire sidewall.

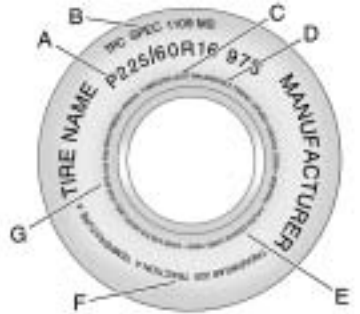


**Passenger (P-Metric) Tire Example**

**(A) Tire Size:** The tire size is a combination of letters and numbers used to define a particular tire's width, height, aspect ratio, construction type, and service description. See the “Tire Size” illustration later in this section for more detail.

**(B) TPC Spec (Tire Performance Criteria Specification):** Original equipment tires designed to GM's specific tire performance criteria have a TPC specification code molded onto the sidewall. GM's TPC specifications meet or exceed all federal safety guidelines.

**(C) DOT (Department of Transportation):** The Department of Transportation (DOT) code indicates that the tire is in compliance with the U.S. Department of Transportation Motor Vehicle Safety Standards.

**(D) Tire Identification Number (TIN):** The letters and numbers following the DOT (Department of Transportation) code is the Tire Identification Number (TIN).

The TIN shows the manufacturer and plant code, tire size, and date the tire was manufactured. The TIN is molded onto both sides of the tire, although only one side may have the date of manufacture.

**(E) Tire Ply Material:** The type of cord and number of plies in the sidewall and under the tread.

**(F) Uniform Tire Quality Grading (UTQG):** Tire manufacturers are required to grade tires based on three performance factors: treadwear, traction, and temperature resistance. For more information see *Uniform Tire Quality Grading on page 9-78* .

**(G) Maximum Cold Inflation Load Limit:** Maximum load that can be carried and the maximum pressure needed to support that load.

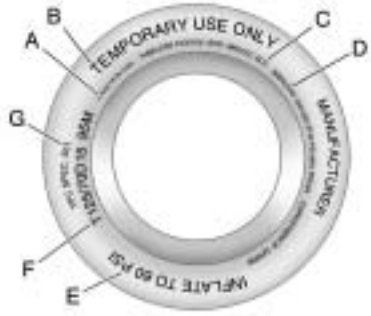


**Compact Spare Tire Example**

**(A) Tire Ply Material:** The type of cord and number of plies in the sidewall and under the tread.

**(B) Temporary Use Only:** The compact spare tire or temporary use tire has a tread life of approximately 5 000 km (3,000 miles) and should not be driven at speeds over 105 km/h (65 mph). The compact spare tire is for emergency use when a regular road tire has lost air and gone flat. If your vehicle has a compact spare tire, see *Compact Spare Tire on page 9-102* and *If a Tire Goes Flat on page 9-81* .

**(C) Tire Identification Number (TIN):** The letters and numbers following the DOT (Department of Transportation) code is the Tire Identification Number (TIN). The TIN shows the manufacturer and plant code, tire size, and date the tire was manufactured. The TIN is molded onto both sides of the tire, although only one side may have the date of manufacture.

**(D) Maximum Cold Inflation Load Limit:** Maximum load that can be carried and the maximum pressure needed to support that load.

**(E) Tire Inflation:** The temporary use tire or compact spare tire should be inflated to 420 kPa (60 psi). For more information on tire pressure and inflation see *Tire Pressure on page 9-66* .

**(F) Tire Size:** A combination of letters and numbers define a tire's width, height, aspect ratio, construction type, and service description. The letter T as the first character in the tire size means the tire is for temporary use only.

**(G) TPC Spec (Tire Performance Criteria Specification):** Original equipment tires designed to GM's specific tire performance criteria have a TPC specification code molded onto the sidewall. GM's TPC specifications meet or exceed all federal safety guidelines.

## Tire Designations

### Tire Size

The following illustration shows an example of a typical passenger vehicle tire size.

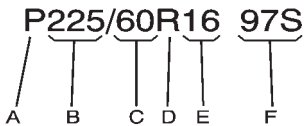


**(A) Passenger (P-Metric) Tire:** The United States version of a metric tire sizing system. The letter P as the first character in the tire size means a passenger vehicle tire engineered to standards set by the U.S. Tire and Rim Association.

**(B) Tire Width:** The three-digit number indicates the tire section width in millimeters from sidewall to sidewall.

**(C) Aspect Ratio:** A two-digit number that indicates the tire height-to-width measurements. For example, if the tire size aspect ratio is 60, as shown in item C of the illustration, it would mean that the tire's sidewall is 60 percent as high as it is wide.

**(D) Construction Code:** A letter code is used to indicate the type of ply construction in the tire. The letter R means radial ply construction; the letter D means diagonal or bias ply construction; and the letter B means belted-bias ply construction.

**(E) Rim Diameter:** Diameter of the wheel in inches.

**(F) Service Description:** These characters represent the load index and speed rating of the tire. The load index represents the load carry capacity a tire is certified to carry. The speed rating is the maximum speed a tire is certified to carry a load.

## Tire Terminology and Definitions

**Air Pressure:** The amount of air inside the tire pressing outward on each square inch of the tire. Air pressure is expressed in psi (pounds per square inch) or kPa (kilopascal).

**Accessory Weight:** This means the combined weight of optional accessories. Some examples of optional accessories are, automatic transmission, power steering, power brakes, power windows, power seats, and air conditioning.

**Aspect Ratio:** The relationship of a tire's height to its width.

**Belt:** A rubber coated layer of cords that is located between the plies and the tread. Cords may be made from steel or other reinforcing materials.

**Bead:** The tire bead contains steel wires wrapped by steel cords that hold the tire onto the rim.

**Bias Ply Tire:** A pneumatic tire in which the plies are laid at alternate angles less than 90 degrees to the centerline of the tread.

**Cold Tire Pressure:** The amount of air pressure in a tire, measured in psi (pounds per square inch) or kPa (kilopascal) before a tire has built up heat from driving. See *Tire Pressure on page 9-66* .

**Curb Weight:** The weight of a motor vehicle with standard and optional equipment including the maximum capacity of fuel, oil, and coolant, but without passengers and cargo.

**DOT Markings:** A code molded into the sidewall of a tire signifying that the tire is in compliance with the U.S. Department of Transportation (DOT) motor vehicle safety standards. The DOT code includes the Tire Identification Number (TIN), an alphanumeric designator which can also identify the tire manufacturer, production plant, brand, and date of production.

**GVWR:** Gross Vehicle Weight Rating. See *Vehicle Load Limits on page 8-12* .

**GAWR FRT:** Gross Axle Weight Rating for the front axle. See *Vehicle Load Limits on page 8-12* .

**GAWR RR:** Gross Axle Weight Rating for the rear axle. See *Vehicle Load Limits on page 8-12* .

**Intended Outboard Sidewall:** The side of an asymmetrical tire, that must always face outward when mounted on a vehicle.

**Kilopascal (kPa):** The metric unit for air pressure.

**Light Truck (LT-Metric) Tire:** A tire used on light duty trucks and some multipurpose passenger vehicles.

**Load Index:** An assigned number ranging from 1 to 279 that corresponds to the load carrying capacity of a tire.

**Maximum Inflation Pressure:** The maximum air pressure to which a cold tire can be inflated. The maximum air pressure is molded onto the sidewall.

**Maximum Load Rating:** The load rating for a tire at the maximum permissible inflation pressure for that tire.

**Maximum Loaded Vehicle Weight:** The sum of curb weight, accessory weight, vehicle capacity weight, and production options weight.

**Normal Occupant Weight:** The number of occupants a vehicle is designed to seat multiplied by 68 kg (150 lbs). See *Vehicle Load Limits on page 8-12* .

**Occupant Distribution:** Designated seating positions.

**Outward Facing Sidewall:** The side of an asymmetrical tire that has a particular side that faces outward when mounted on a vehicle. The side of the tire that contains a whitewall, bears white lettering, or bears manufacturer, brand, and/or model name molding that is higher or deeper than the same moldings on the other sidewall of the tire.

**Passenger (P-Metric) Tire:** A tire used on passenger cars and some light duty trucks and multipurpose vehicles.

**Recommended Inflation Pressure:** Vehicle manufacturer's recommended tire inflation pressure as shown on the tire placard. See *Tire Pressure on page 9-66* and *Vehicle Load Limits on page 8-12* .

**Radial Ply Tire:** A pneumatic tire in which the ply cords that extend to the beads are laid at 90 degrees to the centerline of the tread.

**Rim:** A metal support for a tire and upon which the tire beads are seated.

**Sidewall:** The portion of a tire between the tread and the bead.

**Speed Rating:** An alphanumeric code assigned to a tire indicating the maximum speed at which a tire can operate.

**Traction:** The friction between the tire and the road surface. The amount of grip provided.

**Tread:** The portion of a tire that comes into contact with the road.

**Treadwear Indicators:** Narrow bands, sometimes called wear bars, that show across the tread of a tire when only 1.6 mm (1/16 inch) of tread remains. See *When It Is Time for New Tires on page 9-74* .

**UTQGS (Uniform Tire Quality Grading Standards):** A tire information system that provides consumers with ratings for a tire's traction, temperature, and treadwear. Ratings are determined by tire manufacturers using government testing procedures. The ratings are molded into the sidewall of the tire. See *Uniform Tire Quality Grading on page 9-78* .

**Vehicle Capacity Weight:** The number of designated seating positions multiplied by 68 kg (150 lbs) plus the rated cargo load. See *Vehicle Load Limits on page 8-12* .

**Vehicle Maximum Load on the Tire:** Load on an individual tire due to curb weight, accessory weight, occupant weight, and cargo weight.

**Vehicle Placard:** A label permanently attached to a vehicle showing the vehicle's capacity weight and the original equipment tire size and recommended inflation pressure. See “Tire and Loading Information Label” under *Vehicle Load Limits on page 8-12* .

## Tire Pressure

Tires need the correct amount of air pressure to operate effectively.

***Notice:*** **Do not let anyone tell you that under-inflation or over-inflation is all right. It is not. If your tires do not have enough air (under-inflation), you can get the following:**

- **Too much flexing**
- **Too much heat**
- **Tire overloading**
- **Premature or irregular wear**
- **Poor handling**
- **Reduced fuel economy**

**If your tires have too much air (over-inflation), you can get the following:**

- **Unusual wear**
- **Poor handling**
- **Rough ride**
- **Needless damage from road hazards**

A vehicle specific Tire and Loading Information label is attached to your vehicle. This label shows your vehicle's original equipment tires and the correct inflation pressures for your tires when they are cold. The recommended cold tire inflation pressure, shown on the label, is the minimum amount of air pressure needed to support your vehicle's maximum load carrying capacity.

For additional information regarding how much weight your vehicle can carry, and an example of the Tire and Loading Information label, see *Vehicle Load Limits on page 8-12* .
How you load your vehicle affects vehicle handling and ride comfort. Never load your vehicle with more weight than it was designed to carry.

### When to Check

Check your tires once a month or more. Do not forget to check the compact spare tire, if the vehicle has one. The compact spare should be at 60 psi (420 kPa). For additional information regarding the compact spare tire, see *Compact Spare Tire on page 9-102* .

### How to Check

Use a good quality pocket-type gage to check tire pressure. You cannot tell if your tires are properly inflated simply by looking at them. Radial tires may look properly inflated even when they are under-inflated. Check the tire's inflation pressure when the tires are cold. Cold means your vehicle has been sitting for at least three hours or driven no more than 1.6 km (1 mile).

Remove the valve cap from the tire valve stem. Press the tire gage firmly onto the valve to get a pressure measurement. If the cold tire inflation pressure matches the recommended pressure on the Tire and Loading Information label, no further adjustment is necessary. If the inflation pressure is low, add air until you reach the recommended amount.

If you overfill the tire, release air by pushing on the metal stem in the center of the tire valve. Re-check the tire pressure with the tire gage.

Be sure to put the valve caps back on the valve stems. They help prevent leaks by keeping out dirt and moisture.

## Tire Pressure for High-Speed Operation

**⚠ WARNING**

Driving at high speeds, 160 km/h (100 mph) or higher, puts an additional strain on tires. Sustained high-speed driving causes excessive heat build up and can cause sudden tire failure. You could have a crash and you or others could be killed. Some high-speed rated tires require

(Continued)

**WARNING (Continued)**

inflation pressure adjustment for high speed operation. When speed limits and road conditions are such that a vehicle can be driven at high speeds, make sure the tires are rated for high speed operation, in excellent condition, and set to the correct cold tire inflation pressure for the vehicle load.

If your vehicle has 235/50ZR18, 255/40ZR19 or 285/35ZR19 size tires, they will require inflation pressure adjustment when driving your vehicle at speeds of 160 km/h (100 mph) or higher. Set the cold inflation pressure to the maximum inflation pressure shown on the tire sidewall, or 300 kPa (44 psi), whichever is lower. See the example following.

When you end this high-speed driving, return the tires to the cold tire inflation pressure shown on the Tire and Loading Information label. See *Vehicle Load Limits on page 8-12* and *Tire Pressure on page 9-66*.

Example:

You will find the maximum load and inflation pressure molded on the tire's sidewall, in small letters, near the rim flange. It will read something like this: Maximum load 690 kg (1521 lbs) 300 kPa (44 psi) Max. Press.

For this example, you would set the inflation pressure for high-speed driving at 44 psi (300 kPa).

## Tire Pressure Monitor System

The Tire Pressure Monitor System (TPMS) uses radio and sensor technology to check tire pressure levels. The TPMS sensors monitor the air pressure in your vehicle's tires and transmit tire pressure readings to a receiver located in the vehicle.

Each tire, including the spare (if provided), should be checked monthly when cold and inflated to the inflation pressure recommended by the vehicle manufacturer on the vehicle placard or tire inflation pressure label. (If your vehicle has tires of a different size than the size indicated on the vehicle placard or tire inflation pressure label, you should determine the proper tire inflation pressure for those tires.)

As an added safety feature, your vehicle has been equipped with a tire pressure monitoring system (TPMS) that illuminates a low tire pressure telltale when one or more of your tires is significantly under-inflated.

Accordingly, when the low tire pressure telltale illuminates, you should stop and check your tires as soon as possible, and inflate them to the proper pressure. Driving on a significantly under-inflated tire causes the tire to overheat and can lead to tire failure. Under-inflation also reduces fuel efficiency and tire tread life, and may affect the vehicle's handling and stopping ability.

Please note that the TPMS is not a substitute for proper tire maintenance, and it is the driver's responsibility to maintain correct tire pressure, even if under-inflation has not reached the level to trigger illumination of the TPMS low tire pressure telltale.

Your vehicle has also been equipped with a TPMS malfunction indicator to indicate when the system is not operating properly. The TPMS malfunction indicator is combined with the low tire pressure telltale. When the system detects a malfunction, the telltale will flash for approximately one minute and then remain continuously illuminated. This sequence will continue upon subsequent vehicle start-ups as long as the malfunction exists.

When the malfunction indicator is illuminated, the system may not be able to detect or signal low tire pressure as intended. TPMS malfunctions may occur for a variety of reasons, including the installation of replacement or alternate tires or wheels on the vehicle that prevent the TPMS from functioning properly. Always check the TPMS malfunction telltale after replacing one or more tires or wheels on your vehicle to ensure that the replacement or alternate tires and wheels allow the TPMS to continue to function properly.

See *Tire Pressure Monitor Operation on page 9-69* for additional information.

### Federal Communications Commission (FCC) and Industry and Science Canada

See *Radio Frequency Statement on page 12-16* for information regarding Part 15 of the Federal Communications Commission (FCC) Rules and RSS-210/211 of Industry and Science Canada.

## Tire Pressure Monitor Operation

This vehicle may have a Tire Pressure Monitor System (TPMS). The TPMS is designed to warn the driver when a low tire pressure condition exists. TPMS sensors are mounted onto each tire and wheel assembly, excluding the spare tire and wheel assembly, if the vehicle has one. The TPMS sensors monitor the air pressure in the vehicle's tires and transmits the tire pressure readings to a receiver located in the vehicle.

Using the Driver Information Center (DIC), the driver can also check tire pressure levels using the DIC. For additional information and details about the DIC operation and displays see *Driver Information Center (DIC) on page 4-31* and *Tire Messages on page 4-48*.

When a low tire pressure condition is detected, the TPMS illuminates the low tire pressure warning light located on the instrument panel cluster.

A DIC warning message to check the pressure in a specific tire is also shown on the DIC display screen. The low tire pressure warning light and the DIC warning message come at each ignition cycle until the tires are inflated to the correct inflation pressure.

The low tire pressure warning light may come on in cool weather when the vehicle is first started, and then turn off as you start to drive. This could be an early indicator that the air pressure in the tire(s) are getting low and need to be inflated to the proper pressure.

The Tire and Loading Information label, attached to your vehicle, shows the size of your vehicle's original equipment tires and the correct inflation pressure for the tires when they are cold. See *Vehicle Load Limits on page 8-12*, for an example of the Tire and Loading Information label and its location on your vehicle. Also see *Tire Pressure on page 9-66*.

Your vehicle's TPMS can warn you about a low tire pressure condition but it does not replace normal tire maintenance. See *Tire Inspection on page 9-73*, *Tire Rotation on page 9-73* and *Tires on page 9-58*.

***Notice:*** **Using non-approved tire sealants could damage the Tire Pressure Monitor System (TPMS) sensors. TPMS sensor damage caused by using an incorrect tire sealant is not covered by the vehicle warranty. Always use the GM approved tire sealant available through your dealer/ retailer.**

Factory-installed Tire Inflator Kits use a GM approved liquid tire sealant. Using non-approved tire sealants could damage the TPMS sensors. See *Tire Sealant and Compressor Kit on page 9-84* for information regarding the inflator kit materials and instructions.

### TPMS Malfunction Light and Message

The TPMS will not function properly if one or more of the TPMS sensors are missing or inoperable. When the system detects a malfunction, the low tire warning light flashes for about one minute and then stays on for the remainder of the ignition cycle. A DIC warning message is also displayed. The low tire warning light and DIC warning message come on at each ignition cycle until the problem is corrected. Some of the conditions that can cause the malfunction light and DIC message to come on are:

- One of the road tires has been replaced with the spare tire, if the vehicle has one. The spare tire does not have a TPMS sensor. The DIC message should go off once you re-install the road tire containing the TPMS sensor.
- The TPMS sensor matching process was not done or not completed successfully after rotating the vehicle's tires. The DIC message should go off after successfully completing the sensor matching process. See “TPMS Sensor Matching Process” later in this section.
- One or more TPMS sensors are missing or damaged. The DIC message and the TPMS malfunction light should go off when the TPMS sensors are installed and the sensor matching process is performed successfully. See your dealer/retailer for service.
- Replacement tires or wheels do not match your vehicle's original equipment tires or wheels. Tires and wheels other than those recommended for your vehicle could prevent the TPMS from functioning properly. See *Buying New Tires on page 9-75*.
- Operating electronic devices or being near facilities using radio wave frequencies similar to the TPMS could cause the TPMS sensors to malfunction.

If the TPMS is not functioning it cannot detect or signal a low tire condition. See your dealer/retailer for service if the TPMS malfunction light and DIC message comes on and stays on.

### TPMS Sensor Matching Process

Each TPMS sensor has a unique identification code. Any time you replace one or more of the TPMS sensors or rotate your vehicle's tires, the identification codes need to be matched to the new tire/wheel position. The sensors are matched to the tire/wheel positions in the following order: driver side front tire, passenger side front tire, passenger side rear tire, and driver side rear tire using a TPMS diagnostic tool. See your dealer/retailer for service.

The TPMS sensors can also be matched to each tire/wheel position by increasing or decreasing the tire's air pressure. If increasing the tire's air pressure, do not exceed the maximum inflation pressure indicated on the tire's sidewall. To decrease the tire's air-pressure use the pointed end of the valve cap, a pencil-style air pressure gage, or a key.

You have two minutes to match the first tire/wheel position, and five minutes overall, to match all four tire/wheel positions. If it takes longer than two minutes, to match the first tire and wheel, or more than five minutes to match all four tire and wheel positions, the matching process stops and you need to start over.

The TPMS matching process is outlined below:

1. Set the parking brake.
2. Turn the ignition switch to ON/RUN with the engine off.
3. Press the Remote Keyless Entry (RKE) transmitter's lock and unlock buttons at the same time for approximately five seconds. The horn sounds twice to signal the receiver is in relearn mode and Tire Learning Active message displays on the DIC screen.
4. Start with the driver side front tire.
5. Remove the valve cap from the valve stem. Activate the TPMS sensor by increasing or decreasing the tire's air pressure for 10 seconds, or until a horn chirp sounds. The horn chirp, which can take up to 30 seconds to sound, confirms that the TPMS sensor identification code has been matched to this tire position.
6. Proceed to the passenger side front tire, and repeat the procedure in Step 5.
7. Proceed to the passenger side rear tire, and repeat the procedure in Step 5.
8. Proceed to the driver side rear tire, and repeat the procedure in Step 5.
9. After hearing the confirming horn chirp, for the driver side rear tire, the horn sounds two more times to signal the tire learning mode is no longer active. Turn the ignition switch to LOCK/OFF.
10. Set all four tires to the recommended air pressure level as indicated on the tire and loading information label.
11. Put the valve caps back on the valve stems.

## Tire Inspection

We recommend that you regularly inspect your vehicle's tires, including the spare tire, if the vehicle has one, for signs of wear or damage. See *When It Is Time for New Tires on page 9-74* for more information.

## Tire Rotation

Tire rotation is not recommended if the vehicle has 255/40R19 size tires on the front wheels and 285/35R19 size tires on the rear wheels.

Different tire sizes should not be rotated front to rear. Each tire and wheel should only be used in its original front or rear position.

Tire rotation is recommended if the vehicle has the same size tires on all four wheel positions. These tires should be rotated every 5,000 to 8,000 miles (8 000 to 13 000 km). See *Scheduled Maintenance on page 10-3* .

The purpose of a regular tire rotation is to achieve a uniform wear for all tires on the vehicle. This will ensure that the vehicle continues to perform most like it did when the tires were new.

Any time you notice unusual wear, rotate the tires as soon as possible and check wheel alignment. Also check for damaged tires or wheels. See *When It Is Time for New Tires on page 9-74* and *Wheel Replacement on page 9-80* .

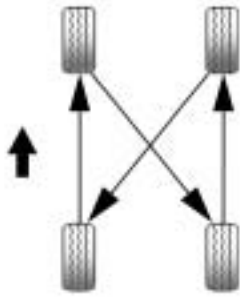

Use the rotation pattern shown here when rotating tires of the same size installed on all four wheel positions.

After the tires have been rotated, adjust the front and rear inflation pressures as shown on the Tire and Loading Information label. See *Tire Pressure on page 9-66* and *Vehicle Load Limits on page 8-12* .

Reset the Tire Pressure Monitor System. See *Tire Pressure Monitor Operation on page 9-69* .

Make certain that all wheel nuts are properly tightened. See “Wheel Nut Torque” under *Capacities and Specifications on page 11-2* .

**⚠ WARNING**

Rust or dirt on a wheel, or on the parts to which it is fastened, can make wheel nuts become loose after time. The wheel could come off and cause an accident. When changing a wheel, remove any rust or dirt from places where the wheel attaches to the vehicle.
In an emergency, use a cloth or a paper towel to do this; but be sure to use a scraper or wire brush later, if needed, to get all the rust or dirt off. See *If a Tire Goes Flat on page 9-81*.

## When It Is Time for New Tires

Various factors, such as maintenance, temperatures, driving speeds, vehicle loading, and road conditions influence when you need new tires.

One way to tell when it is time for new tires is to check the treadwear indicators, which appear when the tires have only 1.6 mm (1/16 inch) or less of tread remaining.

The vehicle needs new tires if any of the following statements are true:

- You can see the indicators at three or more places around the tire.
- You can see cord or fabric showing through the tire's rubber.
- The tread or sidewall is cracked, cut, or snagged deep enough to show cord or fabric.
- The tire has a bump, bulge, or split.
- The tire has a puncture, cut, or other damage that cannot be repaired well because of the size or location of the damage.

The rubber in tires degrades over time. This is also true for the spare tire, if the vehicle has one, even if it is not being used. Multiple conditions affect how fast this aging takes place, including temperatures, loading conditions, and inflation pressure maintenance. With proper care and maintenance tires typically wear out before they degrade due to age. If you are unsure about the need to replace the tires as they get older, consult the tire manufacturer for more information.

## Buying New Tires

GM has developed and matched specific tires for your vehicle. The original equipment tires installed on your vehicle, when it was new, were designed to meet General Motors Tire Performance Criteria Specification (TPC Spec) system rating. If you need replacement tires, GM strongly recommends that you get tires with the same TPC Spec rating. This way, your vehicle will continue to have tires that are designed to give the same performance and vehicle safety, during normal use, as the original tires.

GM's exclusive TPC Spec system considers over a dozen critical specifications that impact the overall performance of your vehicle, including brake system performance, ride and handling, traction control, and tire pressure monitoring performance. GM's TPC Spec number is molded onto the tire's sidewall near the tire size.
If the tires have an all-season tread design, the TPC Spec number will be followed by an MS for mud and snow. See *Tire Sidewall Labeling on page 9-60*, for additional information.

GM recommends replacing tires in sets of four. This is because uniform tread depth on all tires will help keep your vehicle performing most like it did when the tires were new. Replacing less than a full set of tires can affect the braking and handling performance of your vehicle. See *Tire Inspection on page 9-73* and *Tire Rotation on page 9-73*.

Winter tires with the same speed rating as your original equipment tires may not be available for H, V, W, Y and ZR speed rated tires.
If you choose snow tires with a lower speed rating, never exceed the tire's maximum speed capability.

**⚠ WARNING**

Mixing tires could cause you to lose control while driving. If you mix tires of different sizes (other than those originally installed on your vehicle), brands, or types (radial and bias-belted tires), the vehicle may not handle properly, and you could have a crash.
Using tires of different sizes (other than those originally installed on your vehicle), brands or types, may also cause damage to your vehicle. Be sure to use the correct size, brand, and type tires on all four wheels.

**⚠ WARNING**

If you use bias-ply tires on the vehicle, the wheel rim flanges could develop cracks after many miles of driving. A tire and/or wheel could fail suddenly, causing a crash. Use only radial-ply tires with the wheels on the vehicle.

If you must replace your vehicle's tires with those that do not have a TPC Spec number, make sure they are the same size, load range, speed rating, and construction type (radial and bias-belted tires) as your vehicle's original tires.

Vehicles that have a tire pressure monitoring system could give an inaccurate low-pressure warning if non-TPC Spec rated tires are installed on it. Non-TPC Spec rated tires may give a low-pressure warning that is higher or lower than the proper warning level you would get with TPC Spec rated tires. See *Tire Pressure Monitor Operation on page 9-69*.

Your vehicle's original equipment tires are listed on the Tire and Loading Information label. See *Vehicle Load Limits on page 8-12*, for more information about the Tire and Loading Information label and its location on your vehicle.

## Different Size Tires and Wheels

If you add wheels or tires that are a different size than your original equipment wheels and tires, this could affect the way your vehicle performs, including its braking, ride and handling characteristics, stability, and resistance to rollover. Additionally, if your vehicle has electronic systems such as anti-lock brakes, traction control, and electronic stability control, the performance of these systems can be affected.

See *Buying New Tires on page 9-75* and *Accessories and Modifications on page 9-3* for additional information.

## Uniform Tire Quality Grading

Quality grades can be found where applicable on the tire sidewall between tread shoulder and maximum section width. For example:

**Treadwear 200 Traction AA Temperature A**

The following information relates to the system developed by the United States National Highway Traffic Safety Administration (NHTSA), which grades tires by treadwear, traction, and temperature performance. This applies only to vehicles sold in the United States.

The grades are molded on the sidewalls of most passenger car tires. The Uniform Tire Quality Grading (UTQG) system does not apply to deep tread, winter-type snow tires, space-saver, or temporary use spare tires, tires with nominal rim diameters of 25 to 30 cm (10 to 12 inches), or to some limited-production tires.

While the tires available on General Motors passenger cars and light trucks may vary with respect to these grades, they must also conform to federal safety requirements and additional General Motors Tire Performance Criteria (TPC) standards.

**Treadwear**

The treadwear grade is a comparative rating based on the wear rate of the tire when tested under controlled conditions on a specified government test course. For example, a tire graded 150 would wear one and a half (1.5) times as well on the government course as a tire graded 100. The relative performance of tires depends upon the actual conditions of their use, however, and may depart significantly from the norm due to variations in driving habits, service practices, and differences in road characteristics and climate.

**Traction – AA, A, B, C**

The traction grades, from highest to lowest, are AA, A, B, and C. Those grades represent the tire's ability to stop on wet pavement as measured under controlled conditions on specified government test surfaces of asphalt and concrete. A tire marked C may have poor traction performance.

**Temperature – A, B, C**

The temperature grades are A (the highest), B, and C, representing the tire's resistance to the generation of heat and its ability to dissipate heat when tested under controlled conditions on a specified indoor laboratory test wheel. Sustained high temperature can cause the material of the tire to degenerate and reduce tire life, and excessive temperature can lead to sudden tire failure. The grade C corresponds to a level of performance which all passenger car tires must meet under the Federal Motor Vehicle Safety Standard No. 109. Grades B and A represent higher levels of performance on the laboratory test wheel than the minimum required by law. It should be noted that the temperature grade for this tire is established for a tire that is properly inflated and not overloaded. Excessive speed, underinflation, or excessive loading, either separately or in combination, can cause heat buildup and possible tire failure.

## Wheel Alignment and Tire Balance

The tires and wheels on your vehicle were aligned and balanced carefully at the factory to give you the longest tire life and best overall performance. Adjustments to wheel alignment and tire balancing will not be necessary on a regular basis. However, if you notice unusual tire wear or your vehicle pulling to one side or the other, the alignment might need to be checked. If you notice your vehicle vibrating when driving on a smooth road, the tires and wheels might need to be rebalanced. See your dealer/retailer for proper diagnosis.

CTS-V models should only use adhesive wheel weights to balance the tires and wheels.

## Wheel Replacement

Replace any wheel that is bent, cracked, or badly rusted or corroded. If wheel nuts keep coming loose, the wheel, wheel bolts, and wheel nuts should be replaced.
If the wheel leaks air, replace it (except some aluminum wheels, which can sometimes be repaired). See your dealer/retailer if any of these conditions exist.

Your dealer/retailer will know the kind of wheel you need.

Each new wheel should have the same load-carrying capacity, diameter, width, offset, and be mounted the same way as the one it replaces.

If you need to replace any of the wheels, wheel bolts, wheel nuts, or Tire Pressure Monitor System (TPMS) sensors, replace them only with new GM original equipment parts. This way, you will be sure to have the right wheel, wheel bolts, wheel nuts, and TPMS sensors for the vehicle.

**⚠ WARNING**

Using the wrong replacement wheels, wheel bolts, or wheel nuts on your vehicle can be dangerous. It could affect the braking and handling of your vehicle, make your tires lose air and make you lose control. You could have a collision in which you or others could be injured. Always use the correct wheel, wheel bolts, and wheel nuts for replacement.

***Notice:*** **The wrong wheel can also cause problems with bearing life, brake cooling, speedometer or odometer calibration, headlamp aim, bumper height, vehicle ground clearance, and tire or tire chain clearance to the body and chassis.**

See *If a Tire Goes Flat on page 9-81* for more information.

### Used Replacement Wheels

**⚠ WARNING**

Putting a used wheel on the vehicle is dangerous. You cannot know how it has been used or how far it has been driven.
It could fail suddenly and cause a crash. If you have to replace a wheel, use a new GM original equipment wheel.

## Tire Chains

**⚠ WARNING**

Do not use tire chains. There is not enough clearance. Tire chains used on a vehicle without the proper amount of clearance can cause damage to the brakes, suspension, or other vehicle parts. The area damaged by the tire chains could cause you to lose control of the vehicle and you or others may be injured in a crash. Use another type of

(Continued)

**WARNING (Continued)**

traction device only if its manufacturer recommends it for use on the vehicle and tire size combination and road conditions. Follow that manufacturer's instructions. To help avoid damage to the vehicle, drive slowly, re-adjust or remove the device if it is contacting the vehicle, and do not spin the wheels. If you do find traction devices that will fit, install them on the rear tires.

## If a Tire Goes Flat

It is unusual for a tire to blowout while you are driving, especially if you maintain your vehicle's tires properly. If air goes out of a tire, it is much more likely to leak out slowly. But if you should ever have a blowout, here are a few tips about what to expect and what to do:

If a front tire fails, the flat tire creates a drag that pulls the vehicle toward that side. Take your foot off the accelerator pedal and grip the steering wheel firmly. Steer to maintain lane position, and then gently brake to a stop well out of the traffic lane.

A rear blowout, particularly on a curve, acts much like a skid and may require the same correction you would use in a skid. In any rear blowout remove your foot from the accelerator pedal. Get the vehicle under control by steering the way you want the vehicle to go. It may be very bumpy and noisy, but you can still steer. Gently brake to a stop, well off the road if possible.

**⚠ WARNING**

Lifting a vehicle and getting under it to do maintenance or repairs is dangerous without the appropriate safety equipment and training. If a jack is provided with

(Continued)

**WARNING (Continued)**

the vehicle, it is designed only for changing a flat tire. If it is used for anything else, you or others could be badly injured or killed if the vehicle slips off the jack. If a jack is provided with the vehicle, only use it for changing a flat tire.

If a tire goes flat, avoid further tire and wheel damage by driving slowly to a level place. Turn on the hazard warning flashers. See *Hazard Warning Flashers on page 5-4*.

**⚠ WARNING**

Changing a tire can be dangerous. The vehicle can slip off the jack and roll over or fall on you or other people. You and they could be badly injured or even killed. Find a level place to change your tire. To help prevent the vehicle from moving:

1. Set the parking brake firmly.
2. Put an automatic transmission shift lever in P (Park), or shift a manual transmission to 1 (First) or R (Reverse).

(Continued)

**WARNING (Continued)**

3. Turn off the engine and do not restart while the vehicle is raised.
4. Do not allow passengers to remain in the vehicle.

To be certain the vehicle will not move, put blocks at the front and rear of the tire farthest away from the one being changed. That would be the tire on the other side, at the opposite end of the vehicle.

This vehicle may come with a jack and spare tire or a tire sealant and compressor kit. To use the jacking equipment to change a spare tire safely, follow the instructions below. Then see *Tire Changing on page 9-94*. To use the tire sealant and compressor kit, see *Tire Sealant and Compressor Kit on page 9-84*.

When the vehicle has a flat tire (B), use the following example as a guide to assist you in the placement of wheel blocks (A).

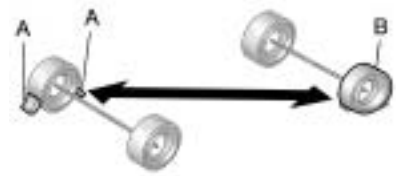


A. Wheel Block

B. Flat Tire

The following information explains how to repair or change a tire.

## Tire Sealant and Compressor Kit

**⚠ WARNING**

Idling a vehicle in an enclosed area with poor ventilation is dangerous. Engine exhaust may enter the vehicle. Engine exhaust contains Carbon Monoxide (CO) which cannot be seen or smelled. It can cause unconsciousness and even death. Never run the engine in an enclosed area that has no fresh air ventilation. For more information, see *Engine Exhaust on page 8-25*.

**⚠ WARNING**

Over-inflating a tire could cause the tire to rupture and you or others could be injured. Be sure to read and follow the tire sealant and compressor kit instructions and inflate the tire to its recommended pressure. Do not exceed the recommended pressure.

**⚠ WARNING**

Storing the tire sealant and compressor kit or other equipment in the passenger compartment of the vehicle could cause injury. In a sudden stop or collision, loose equipment could strike someone. Store the tire sealant and compressor kit in its original location.

If this vehicle has a tire sealant and compressor kit, there may not be a spare tire, tire changing equipment, and on some vehicles there may not be a place to store a tire.

The tire sealant and compressor can be used to temporarily seal punctures up to 6 mm (¼ inch) in the tread area of the tire. It can also be used to inflate an under inflated tire.

If the tire has been separated from the wheel, has damaged sidewalls, or has a large puncture, the tire is too severely damaged for the tire sealant and compressor kit to be effective. See *Roadside Service on page 12-6*.

Read and follow all of the tire sealant and compressor kit instructions.

This vehicle may have one of the following tire sealant and compressor kits. The kit includes:

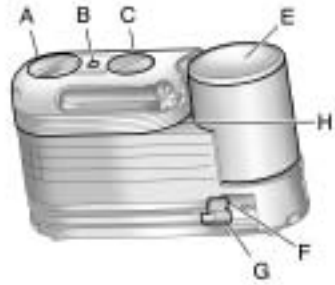


A. Selector Switch (Sealant/Air or Air Only)

B. On/Off Button

C. Pressure Gage

D. Pressure Deflation Button (If equipped)

E. Tire Sealant Canister

F. Sealant/Air Hose (Clear)

G. Air Only Hose (Black)

H. Power Plug

## Tire Sealant

Read and follow the safe handling instructions on the label adhered to the sealant canister.

Check the tire sealant expiration date on the sealant canister. The sealant canister should be replaced before its expiration date. Replacement sealant canisters are available at your local dealer/retailer. See “Removal and Installation of the Sealant Canister” following.

There is only enough sealant to seal one tire. After usage, the sealant canister and sealant/air hose assembly must be replaced. See “Removal and Installation of the Sealant Canister” following.

### Using the Tire Sealant and Compressor Kit to Temporarily Seal and Inflate a Punctured Tire

Follow the directions closely for correct sealant usage.

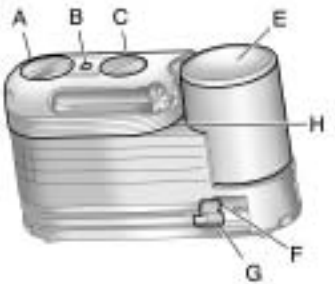


When using the tire sealant and compressor kit during cold temperatures, warm the kit in a heated environment for 5 minutes. This will help to inflate the tire faster.

Always do a safety check first. See *If a Tire Goes Flat on page 9-81*. Do not remove any objects that have penetrated the tire.

1. Remove the tire sealant and compressor kit from its storage location. See *Storing the Tire Sealant and Compressor Kit (Sedan) on page 9-92* or *Storing the Tire Sealant and Compressor Kit (Wagon) on page 9-93*.
2. Unwrap the sealant/air hose (F) and the power plug (H).
3. Place the kit on the ground.

   Make sure the tire valve stem is positioned close to the ground so the hose will reach it.
4. Remove the valve stem cap from the flat tire by turning it counterclockwise.
5. Attach the sealant/air hose (F) onto the tire valve stem. Turn it clockwise until it is tight.
6. Plug the power plug (H) into the accessory power outlet in the vehicle. Unplug all items from other accessory power outlets. See *Power Outlets on page 4-12*.

   If the vehicle has an accessory power outlet, do not use the cigarette lighter.

   If the vehicle only has a cigarette lighter, use the cigarette lighter.

   Do not pinch the power plug cord in the door or window.
7. Start the vehicle. The vehicle must be running while using the air compressor.
8. Turn the selector switch (A) counterclockwise to the Sealant + Air position.
9. Press the on/off (B) button to turn the tire sealant and compressor kit on.

   The compressor will inject sealant and air into the tire.

   The pressure gage (C) will initially show a high pressure while the compressor pushes the sealant into the tire. Once the sealant is completely dispersed into the tire, the pressure will quickly drop and start to rise again as the tire inflates with air only.

10. Inflate the tire to the recommended inflation pressure using the pressure gage (C). The recommended inflation pressure can be found on the Tire and Loading Information label. See *Tire Pressure on page 9-66*.

    The pressure gage (C) may read higher than the actual tire pressure while the compressor is on. Turn the compressor off to get an accurate pressure reading. The compressor may be turned on/off until the correct pressure is reached.

***Notice:*** **If the recommended pressure cannot be reached after approximately 25 minutes, the vehicle should not be driven farther. The tire is too severely damaged and the tire sealant and compressor kit cannot inflate the tire. Remove the power plug from the accessory power outlet and unscrew the inflating hose from the tire valve. See *Roadside Service on page 12-6*.**

11. Press the on/off button (B) to turn the tire sealant and compressor kit off.

    The tire is not sealed and will continue to leak air until the vehicle is driven and the sealant is distributed in the tire, therefore, Steps 12 through 18 must be done immediately after Step 11.

    Be careful while handling the tire sealant and compressor kit as it could be warm after usage.

12. Unplug the power plug (H) from the accessory power outlet in the vehicle.
13. Turn the sealant/air hose (F) counterclockwise to remove it from the tire valve stem.
14. Replace the tire valve stem cap.
15. Replace the sealant/air hose (F), and the power plug (H) back in their original location.

16. If the flat tire was able to inflate to the recommended inflation pressure, remove the maximum speed label from the sealant canister (E) and place it in a highly visible location.

    The label is a reminder not to exceed 90 km/h (55 mph) until the damaged tire is repaired or replaced.

17. Return the equipment to its original storage location in the vehicle.

18. Immediately drive the vehicle 8 km (5 miles) to distribute the sealant in the tire.

19. Stop at a safe location and check the tire pressure. Refer to Steps 1 through 11 under “Using the Tire Sealant and Compressor Kit without Sealant to Inflate a Tire (Not Punctured).”

    If the tire pressure has fallen more than 68 kPa (10 psi) below the recommended inflation pressure, stop driving the vehicle. The tire is too severely damaged and the tire sealant cannot seal the tire. See *Roadside Service on page 12-6*.

    If the tire pressure has not dropped more than 68 kPa (10 psi) from the recommended inflation pressure, inflate the tire to the recommended inflation pressure.

20. Wipe off any sealant from the wheel, tire, and vehicle.

21. Dispose of the used sealant canister (E) and sealant/air hose (F) assembly at a local dealer/retailer or in accordance with local state codes and practices.

22. Replace it with a new canister available from your dealer/retailer.

23. After temporarily sealing a tire using the tire sealant and compressor kit, take the vehicle to an authorized dealer/retailer within a 161 km (100 miles) of driving to have the tire repaired or replaced.

### Using the Tire Sealant and Compressor Kit without Sealant to Inflate a Tire (Not Punctured)

To use the air compressor to inflate a tire with air only and not sealant:

Always do a safety check first. See *If a Tire Goes Flat on page 9-81*.

1. Remove the tire sealant and compressor kit from its storage location. See *Storing the Tire Sealant and Compressor Kit (Sedan) on page 9-92* or *Storing the Tire Sealant and Compressor Kit (Wagon) on page 9-93*.
2. Unwrap the air only hose (G) and the power plug (H).

3. Place the kit on the ground.

   Make sure the tire valve stem is positioned close to the ground so the hose will reach it.

4. Remove the tire valve stem cap from the flat tire by turning it counterclockwise.

5. Attach the air only hose (G) onto the tire valve stem by turning it clockwise until it is tight.

6. Plug the power plug (H) into the accessory power outlet in the vehicle. Unplug all items from other accessory power outlets. See *Power Outlets on page 4-12*.

   If the vehicle has an accessory power outlet, do not use the cigarette lighter.

   If the vehicle only has a cigarette lighter, use the cigarette lighter.

   Do not pinch the power plug cord in the door or window.

7. Start the vehicle. The vehicle must be running while using the air compressor.

8. Turn the selector switch (A) clockwise to the Air Only position.

9. Press the on/off (B) button to turn the compressor on.

   The compressor will inflate the tire with air only.

10. Inflate the tire to the recommended inflation pressure using the pressure gage (C). The recommended inflation pressure can be found on the Tire and Loading Information label. See *Tire Pressure on page 9-66*.

    The pressure gage (C) may read higher than the actual tire pressure while the compressor is on. Turn the compressor off to get an accurate reading. The compressor may be turned on/off until the correct pressure is reached.

    If you inflate the tire higher than the recommended pressure you can adjust the excess pressure by pressing the pressure deflation button (D), if equipped, until the proper pressure reading is reached. This option is only functional when using the air only hose (G).

11. Press the on/off button (B) to turn the tire sealant and compressor kit off.

    Be careful while handling the tire sealant and compressor kit as it could be warm after usage.

12. Unplug the power plug (H) from the accessory power outlet in the vehicle.

13. Disconnect the air only hose (G) from the tire valve stem, by turning it counterclockwise, and replace the tire valve stem cap.

14. Replace the air only hose (G) and the power plug (H) and cord back in its original location.
15. Place the equipment in the original storage location in the vehicle.

The tire sealant and compressor kit has an accessory adapter located in a compartment on the bottom of its housing that may be used to inflate air mattresses, balls, etc.

### Removal and Installation of the Sealant Canister

To remove the sealant canister:

1. Unwrap the sealant hose.
2. Press the canister release button.
3. Pull up and remove the canister.
4. Replace with a new canister which is available from your dealer/retailer.
5. Push the new canister into place.

## Storing the Tire Sealant and Compressor Kit (Sedan)

The tire sealant and compressor kit is located in the trunk.

### Tire Sealant and Compressor Kit without Pressure Deflation Button

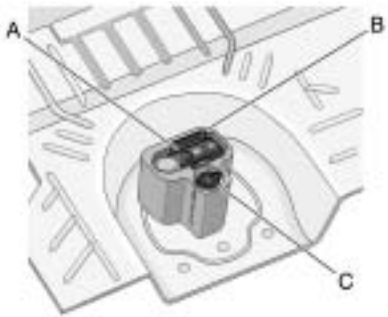


A. Tire Sealant and Compressor Kit
B. Foam Container
C. Wing Nut

1. Open the trunk. See *Trunk (Sedan) on page 1-17*.
2. Locate the tire sealant and compressor kit (A) in the center of the cargo area.
3. Remove the wing nut (C) that holds the tire sealant and compressor kit (A) in place.

4. Remove the tire sealant and compressor kit (A) from the foam container (B).

**Tire Sealant and Compressor Kit with Pressure Deflation Button**

1. Open the trunk. See *Trunk (Sedan) on page 1-17*.

2. Remove the retainer that holds the tire sealant and compressor kit in place.
3. Remove the tire sealant and compressor kit from the foam container.

To store the tire sealant and compressor kit, reverse the steps.

## Storing the Tire Sealant and Compressor Kit (Wagon)

The tire sealant and compressor kit is located in the rear of the vehicle.

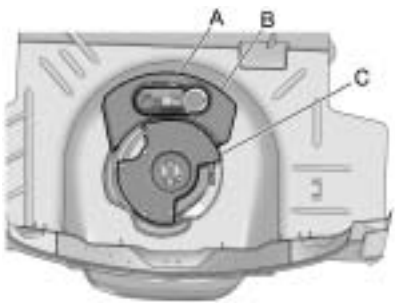


A. Tire Sealant and Compressor Kit
B. Foam Container
C. Subwoofer (Optional)

1. Open the liftgate. See *Liftgate (Wagon) on page 1-19*.
2. Pull up on the tire sealant and compressor kit (A) to remove it from the foam container (B).

   It is not necessary to remove the subwoofer (C) to access the tire sealant and compressor kit, however, if you want to remove it see *Tire Changing on page 9-94* for instructions.

To store the tire sealant and compressor kit, reverse the steps.

# Tire Changing

## Removing the Spare Tire and Tools (Sedan)

**Sedan**

A. Wing Nut
B. Spare Tire
C. Jack
D. Wheel Wrench
E. Extension
F. Strap

To access the spare tire and jacking equipment:

1. Remove the spare tire cover.
2. Remove the stow rod cap by pulling it straight up off of the rod.
3. Turn the wing nut (A) on the compact spare tire (B) counterclockwise to remove.
4. Remove the spare tire and place it next to the flat tire.
5. The tools you will be using next include the jack (C), wheel wrench (D), and extension (E).

## Removing the Spare Tire and Tools (Wagon)

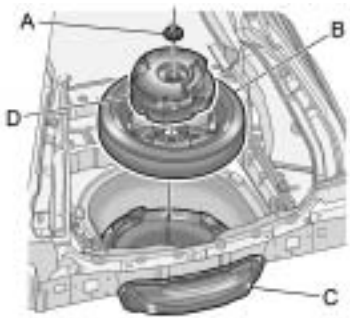

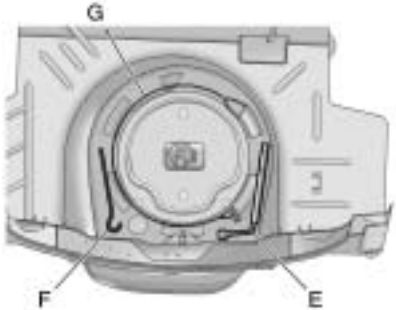


A. Wing Nut
B. Spare Tire
C. Jack
D. Subwoofer
E. Wheel Wrench
F. Extension
G. Cable

To access the spare tire and jacking equipment:

1. Remove the spare tire cover.
2. Remove the subwoofer (D), if the vehicle has one.

   To remove the subwoofer:

   2.1. Turn the nut (A) counterclockwise to remove.

   2.2. Disconnect the connector wire.

   2.3. Pull the subwoofer (D) up to remove it from the stow rod.
3. Remove the spare tire (B) and place it next to the flat tire.
4. Remove the jack (C), wheel wrench (E), and extension (F).

To remove the jack:

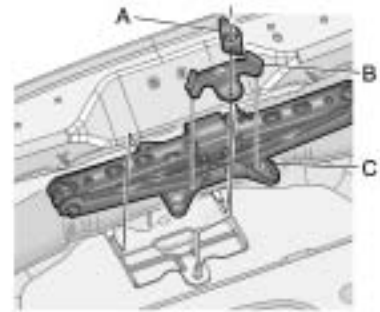


1. Remove the retainer nut (A).
2. Remove the jack stowage bracket (B).
3. Slide the jack (C) forward to remove it from the floor storage bracket.

## Removing the Flat Tire and Installing the Spare Tire

1. Do a safety check before proceeding. See *If a Tire Goes Flat on page 9-81* for more information.

2. Loosen the wheel nuts, but do not remove them yet, using the wheel wrench. Turn the handle about 180 degrees, then return the handle back to the starting position. This avoids taking the wrench off the lug nut for each turn.

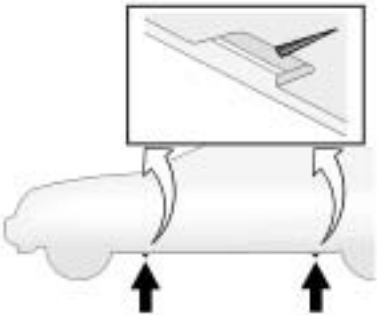

3. Find the jacking location using the diagram above and corresponding V-shaped locating notches located in the plastic molding.

4. Insert the hooked end of the extension handle through the jack and the flat end through the wheel wrench.

**⚠ WARNING**

Getting under a vehicle when it is jacked up is dangerous. If the vehicle slips off the jack, you could be badly injured or killed. Never get under a vehicle when it is supported only by a jack.

**⚠ WARNING**

Lifting a vehicle and getting under it to do maintenance or repairs is dangerous without the appropriate safety equipment and training. If a jack is provided with the vehicle, it is designed only for changing a flat tire. If it is used for anything else, you or others could be badly injured or killed if the vehicle slips off the jack. If a jack is provided with the vehicle, only use it for changing a flat tire.

**⚠ WARNING**

Raising your vehicle with the jack improperly positioned can damage the vehicle and even make the vehicle fall. To help avoid personal injury and vehicle damage, be sure to fit the jack lift head into the proper location before raising the vehicle.

***Notice:*** **If you position the jack under the rocker molding and attempt to raise the vehicle, you could break the molding and/or cause other damage to your vehicle. Always position the jack so that when the jack head is raised, it will fit firmly in the notch located inboard from the rocker molding.**

5. Turn the wheel wrench counterclockwise to lower the jack lift head until the jack fits under the vehicle.

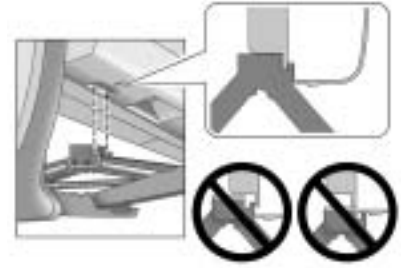

6. Raise the jack by turning the wheel wrench clockwise until the slots in the jack head fit into the metal flange located behind the V-shaped locating notches on the plastic molding as shown.
7. Put the compact spare tire near you.
8. Raise the vehicle by turning the wheel wrench clockwise. Raise the vehicle far enough off the ground for the compact spare tire to fit under the vehicle.

9. Remove all the wheel nuts and the flat tire.

**⚠ WARNING**

Rust or dirt on a wheel, or on the parts to which it is fastened, can make wheel nuts become loose after time. The wheel could come off and cause an accident. When

(Continued)

**WARNING (Continued)**

changing a wheel, remove any rust or dirt from places where the wheel attaches to the vehicle. In an emergency, use a cloth or a paper towel to do this; but be sure to use a scraper or wire brush later, if needed, to get all the rust or dirt off. See *If a Tire Goes Flat on page 9-81*.

**⚠ WARNING**

Never use oil or grease on bolts or nuts because the nuts might come loose. The vehicle's wheel could fall off, causing a crash.

10. Remove any rust or dirt from the wheel bolts, mounting surfaces, and spare wheel.
11. Install the spare tire.
12. Put the wheel nuts back on with the rounded end of the nuts toward the wheel.

13. Tighten each wheel nut by turning it clockwise with your hand until the wheel is held against the hub.
14. Lower the vehicle by turning the wheel wrench counterclockwise. Lower the jack completely.

**⚠ WARNING**

Wheel nuts that are improperly or incorrectly tightened can cause the wheels to become loose or come off. The wheel nuts should be tightened with a torque wrench to the proper torque specification after replacing. Follow the torque specification supplied by the aftermarket manufacturer when using accessory locking wheel nuts. See *Capacities and Specifications on page 11-2* for original equipment wheel nut torque specifications.

***Notice:* Improperly tightened wheel nuts can lead to brake pulsation and rotor damage. To avoid expensive brake repairs, evenly tighten the wheel nuts in the proper sequence and to the proper torque specification. See *Capacities and Specifications on page 11-2* for the wheel nut torque specification.**

15. Tighten the wheel nuts firmly in a crisscross sequence as shown.

## Storing a Flat or Spare Tire and Tools

**⚠ WARNING**

Storing a jack, a tire, or other equipment in the passenger compartment of the vehicle could cause injury. In a sudden stop or collision, loose equipment could strike someone. Store all these in the proper place.

### Storing the Flat Tire with a Flat Load Floor (Sedan)

1. Put back all tools as they were stored in the rear storage compartment and put the compartment cover back on.
2. Put the flat tire in the tire storage bag, if there is one.
3. Place the tire, lying flat, in the rear storage compartment.

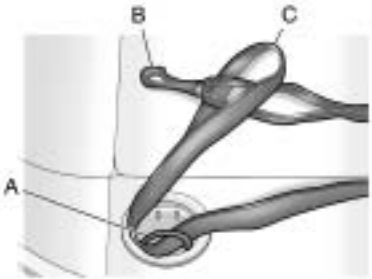


4. Route the loop end of the strap (C) through one of the cargo tie-downs (A) located in the rear of the vehicle.
5. Route the hook (B) through the loop (C).
6. Pull the strap to tighten it around the cargo tie-down (A).

7. Route the hook end of the strap through the wheel.
8. Attach the hook to the cargo tie-down in the rear of the vehicle.
9. Slide the buckle to tighten the cargo tie-down strap.

Use the following diagram as a guide for storing the compact spare tire in the trunk.

## Storing the Flat Tire with a Flat Load Floor (Wagon)

1. Return all tools as they were stored in the rear storage compartment and put the compartment cover on.
2. Put the flat tire in the tire storage bag, if there is one.
3. Place the tire, lying flat, in the rear storage compartment.

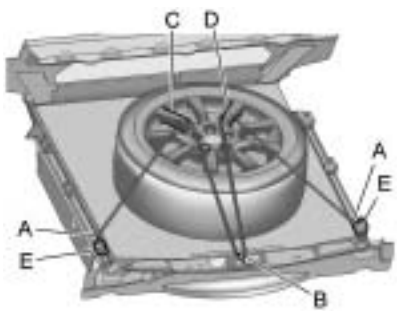


4. Route one of the hooks (A), at the end of the cable provided, through the liftgate striker (B).

5. Slide both D-rings (E) on each side of the vehicle as far rearward as they will go.
6. Route one hook (A) under the wheel spoke (C) and place the hook into the slot in the cargo rail on the driver side of the vehicle.
7. Slide the D-ring (E) on that side forward to engage the hook.
8. Route the other hook under the wheel spoke (D) and place the hook into the slot in the cargo rail on the passenger side of the vehicle.
9. Slide the D-ring (E) on that side forward to engage the hook.

## Compact Spare Tire and Tools (Sedan)

Use the following diagram as a guide for storing the compact spare tire and tools in the trunk:

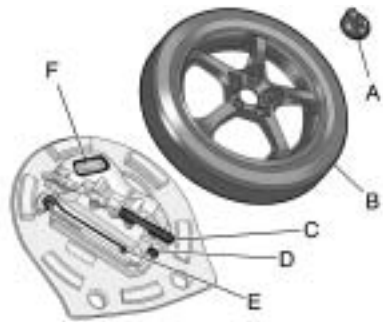


A. Wing Nut
B. Compact Spare Tire or Flat Tire (valve stem down)
C. Jack
D. Wheel Wrench
E. Extension
F. Strap

Reverse the instructions for removing the spare tire and tools to store the compact spare tire.

### Compact Spare Tire and Tools (Wagon)

Use the following diagram as a guide for storing the compact spare tire and tools in the rear compartment area:

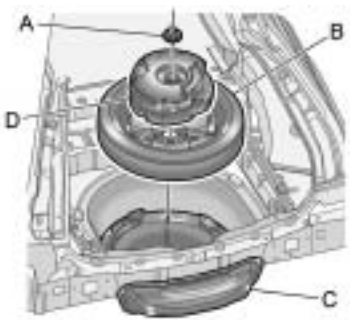


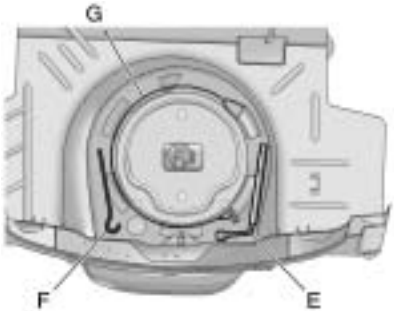


A. Wing Nut

B. Spare Tire

C. Jack

D. Subwoofer

E. Wheel Wrench

F. Extension

G. Strap

Reverse the instructions for removing the spare tire and tools to store the compact spare tire.

## Compact Spare Tire

**⚠ WARNING**

Driving with more than one compact spare tire at a time could result in loss of braking and handling. This could lead to a crash and you or others could be injured. Use only one compact spare tire at a time.

If your vehicle is equipped with a compact spare tire it was fully inflated when the vehicle was new, it can lose air after a time. Check the inflation pressure regularly. It should be 60 psi (420 kPa).

After installing the compact spare on the vehicle, stop as soon as possible and make sure the spare tire is correctly inflated. The compact spare is made to perform well at speeds up to 65 mph (105 km/h) for distances up to 3,000 miles (5 000 km), so you can finish your trip and have the full-size tire repaired or replaced at your

convenience. Of course, it is best to replace the spare with a full-size tire as soon as possible. The spare tire will last longer and be in good shape in case it is needed again.

***Notice:*** **When the compact spare is installed, do not take the vehicle through an automatic car wash with guide rails. The compact spare can get caught on the rails which can damage the tire, wheel and other parts of the vehicle.**

Do not use the compact spare on other vehicles.

And do not mix the compact spare tire or wheel with other wheels or tires. They will not fit. Keep the spare tire and its wheel together.

***Notice:*** **Tire chains will not fit the compact spare. Using them can damage the vehicle and can damage the chains too. Do not use tire chains on the compact spare.**

# Jump Starting

If the vehicle battery has run down, you may want to use another vehicle and some jumper cables to start your vehicle. Be sure to use the following steps to do it safely.

**⚠ WARNING**

Batteries can hurt you. They can be dangerous because:

- They contain acid that can burn you.
- They contain gas that can explode or ignite.
- They contain enough electricity to burn you.

If you do not follow these steps exactly, some or all of these things can hurt you.

***Notice:*** **Ignoring these steps could result in costly damage to the vehicle that would not be covered by the warranty.**

**Trying to start the vehicle by pushing or pulling it will not work, and it could damage the vehicle.**

1. Check the other vehicle. It must have a 12-volt battery with a negative ground system.

***Notice:*** **If the other vehicle's system is not a 12-volt system with a negative ground, both vehicles can be damaged. Only use vehicles with 12-volt systems with negative grounds to jump start your vehicle.**

2. Get the vehicles close enough so the jumper cables can reach, but be sure the vehicles are not touching each other. If they are, it could cause a ground connection you do not want. You would not be able to start your vehicle and the bad grounding could damage the electrical systems.

   To avoid the possibility of the vehicles rolling, set the parking brake firmly on both vehicles involved in the jump start procedure. Put an automatic transmission in P (Park) or a manual transmission in Neutral before setting the parking brake.

***Notice:*** **If you leave the radio or other accessories on during the jump starting procedure, they could be damaged. The repairs would not be covered by the warranty. Always turn off the radio and other accessories when jump starting the vehicle.**

3. Turn off the ignition on both vehicles. Unplug unnecessary accessories plugged into the cigarette lighter or the accessory power outlets. Turn off the radio and all lamps that are not needed. This will avoid sparks and help save both batteries. And it could save the radio!

4. Open the hoods and locate the positive (+) and negative (−) terminal locations or the remote positive (+) and remote negative (−) terminals of the other vehicle. Then locate the remote positive (+) location on your vehicle. See *Engine Compartment Overview on page 9-6* for more information on locations the terminals.

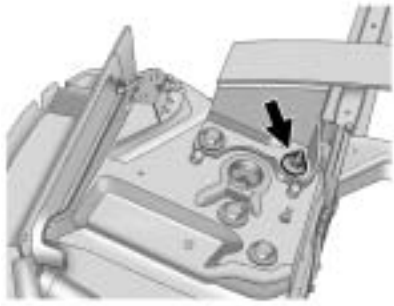

Your vehicle has a remote negative (−) ground location, as shown in the illustration. It is located on the rear passenger side of the vehicle . See *Engine Compartment Overview on page 9-6*. You should always use this remote ground location, instead of the terminal on the battery.

***Notice:*** **If you connect a negative cable to the Engine Control Module (ECM), ECM mounting bracket, or any cables that attach to the ECM bracket, you may damage the ECM. Always attach the negative cable to your vehicle's remote negative ground location, instead of the ECM, ECM bracket, or any cables attached to the ECM bracket.**

**⚠ WARNING**

An electric fan can start up even when the engine is not running and can injure you. Keep hands, clothing and tools away from any underhood electric fan.

**⚠ WARNING**

Using an open flame near a battery can cause battery gas to explode. People have been hurt doing this, and some have been blinded. Use a flashlight if you need more light.

Be sure the battery has enough water. You do not need to add water to the battery installed in your new vehicle. But if a battery has filler caps, be sure the right amount of fluid is there. If it is low, add water to take care of that first. If you do not, explosive gas could be present.

Battery fluid contains acid that can burn you. Do not get it on you. If you accidentally get it in your eyes or on your skin, flush the place with water and get medical help immediately.

**⚠ WARNING**

Fans or other moving engine parts can injure you badly. Keep your hands away from moving parts once the engine is running.

5. Check that the jumper cables do not have loose or missing insulation. If they do, you could get a shock. The vehicles could be damaged too.

   Before you connect the cables, here are some basic things you should know. Positive (+) will go to positive (+) or to a remote positive (+) terminal if the vehicle has one. Negative (−) will go to a heavy, unpainted metal engine part or to a remote negative (−) terminal if the vehicle has one.

Do not connect positive (+) to negative (−) or you will get a short that would damage the battery and maybe other parts too. And do not connect the negative (−) cable to the negative (−) terminal on the dead battery because this can cause sparks.

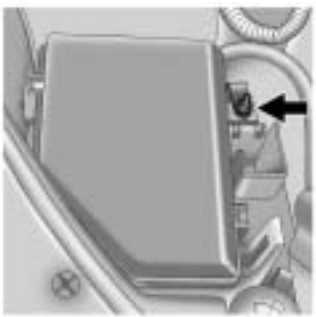

6. Connect the red positive (+) cable to the positive (+) terminal of the dead battery. Use a remote positive (+) terminal if the vehicle has one.
7. Do not let the other end touch metal. Connect it to the positive (+) terminal of the good battery. Use a remote positive (+) terminal if the vehicle has one.
8. Now connect the black negative (−) cable to the negative terminal of the good battery. Use a remote negative (−) terminal if the vehicle has one.

   Do not let the other end touch anything until the next step. The other end of the negative (−) cable does not go to the dead battery. It goes to a heavy, unpainted metal engine part or to a remote negative (−) terminal on the vehicle with the dead battery.
9. Connect the other end of the negative (−) cable at least 18 inches (45 cm) away from the dead battery, but not near engine parts that move. The electrical connection is just as good there, and the chance of sparks getting back to the battery is much less.

   Use a remote negative (−) terminal if the vehicle has one. Your vehicle's remote negative (−) ground location is for this purpose.
10. Now start the vehicle with the good battery and run the engine for a while.
11. Try to start the vehicle that had the dead battery. If it will not start after a few tries, it probably needs service.

***Notice:*** **If the jumper cables are connected or removed in the wrong order, electrical shorting may occur and damage the vehicle. The repairs would not be covered by the vehicle warranty. Always connect and remove the jumper cables in the correct order, making sure that the cables do not touch each other or other metal.**

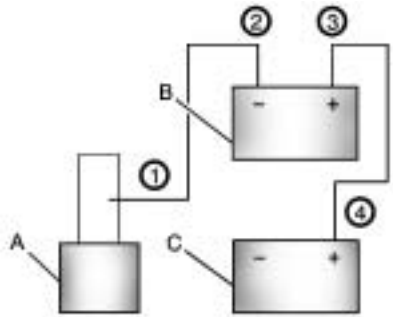


**Jumper Cable Removal**

A. Heavy, Unpainted Metal Engine Part or Remote Negative (−) Terminal

B. Good Battery or Remote Positive (+) and Remote Negative (−) Terminals

C. Dead Battery or Remote Positive (+) Terminal

To disconnect the jumper cables from both vehicles, do the following:

1. Disconnect the black negative (−) cable from the vehicle that had the dead battery.
2. Disconnect the black negative (−) cable from the vehicle with the good battery.
3. Disconnect the red positive (+) cable from the vehicle with the good battery.
4. Disconnect the red positive (+) cable from the other vehicle.

# Towing

## Towing the Vehicle

Consult your dealer/retailer or a professional towing service if the disabled vehicle needs to be towed. See *Roadside Service on page 12-6*.

To tow the vehicle behind another vehicle for recreational purposes (such as behind a motorhome), see Recreational Vehicle Towing following.

## Recreational Vehicle Towing

Recreational vehicle towing means towing the vehicle behind another vehicle – such as behind a motorhome. The two most common types of recreational vehicle towing are known as dinghy towing and dolly towing. Dingy towing is towing the vehicle with all four wheels on the ground. Dolly towing is towing the vehicle with two wheels on the ground and two wheels up on a device known as a dolly.

Here are some important things to consider before recreational vehicle towing:

- What is the towing capacity of the towing vehicle? Be sure to read the tow vehicle manufacturer's recommendations.
- What is the distance that will be travelled? Some vehicles have restrictions on how far and how long they can tow.
- Is the proper towing equipment going to be used? See your dealer/retailer or trailering professional for additional advice and equipment recommendations.
- Is the vehicle ready to be towed? Just as preparing the vehicle for a long trip, make sure the vehicle is prepared to be towed.

### Dinghy Towing

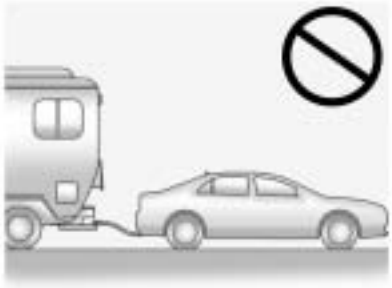

***Notice:*** **If the vehicle is towed with all four wheels on the ground, the drivetrain components could be damaged. The repairs would not be covered by the vehicle warranty. Do not tow the vehicle with all four wheels on the ground.**

The vehicle was not designed to be towed with all four wheels on the ground. If a rear-wheel-drive vehicle must be towed, a dolly or a trailer should be used. If an all-wheel-drive vehicle must be towed, a trailer should be used. See “Dolly Towing” following for more information.

## Dolly Towing (Rear-Wheel-Drive Vehicles)

Use the following procedure to dolly tow a rear-wheel-drive vehicle from the rear:

1. Attach the dolly to the tow vehicle following the dolly manufacturer's instructions.
2. Put the rear wheels on the dolly.
3. Firmly set the parking brake. See *Parking Brake (Manual) on page 8-34* or *Parking Brake (Electric) on page 8-35*.
4. Put the vehicle in P (Park) for an automatic transmission or in 1 (First) for a manual transmission.
5. Securely attach the vehicle being towed to the dolly.
6. Clamp the steering wheel in a straight-ahead position with a clamping device designed for towing.
7. Turn the ignition to LOCK/OFF.

### Dolly Towing (All-Wheel-Drive Vehicles)

***Notice:*** **Towing an all-wheel-drive vehicle with all four wheels on the ground, or even with only two of its wheels on the ground, will damage drivetrain components. Do not tow an all-wheel-drive vehicle with any of its wheels on the ground.**

All-wheel-drive vehicles can only be towed with all four wheels on a trailer.

# Appearance Care

## Exterior Care

### Cleaning Exterior Lamps/Lenses

Use only lukewarm or cold water, a soft cloth and a car washing soap to clean exterior lamps and lenses. Follow instructions under “Washing the Vehicle” later in this section.

### Finish Care

Occasional waxing or mild polishing of the vehicle by hand may be necessary to remove residue from the paint finish. Approved cleaning products can be obtained from your dealer/retailer.

If the vehicle has a basecoat/clearcoat paint finish, the clearcoat gives more depth and gloss to the colored basecoat. Always use waxes and polishes that are non-abrasive and made for a basecoat/clearcoat paint finish.

***Notice:*** **Machine compounding or aggressive polishing on a basecoat/clearcoat paint finish may damage it. Use only non-abrasive waxes and polishes that are made for a basecoat/clearcoat paint finish on the vehicle.**

Foreign materials such as calcium chloride and other salts, ice melting agents, road oil and tar, tree sap, bird droppings, chemicals from industrial chimneys, etc., can damage the vehicle's finish if they remain on painted surfaces. Wash the vehicle as soon as possible. If necessary, use non-abrasive cleaners that are marked safe for painted surfaces to remove foreign matter.

Exterior painted surfaces are subject to aging, weather and chemical fallout that can take their toll over a period of years. To keep the paint finish looking new, keep the vehicle garaged or covered whenever possible.

**Protecting Exterior Bright Metal Parts**

Bright metal parts should be cleaned regularly to keep their luster. Wash with water or use chrome polish on chrome or stainless steel trim, if necessary.

Use special care with aluminum trim. To avoid damaging protective trim, never use auto or chrome polish, steam or caustic soap to clean aluminum. A coating of wax, rubbed to high polish, is recommended for all bright metal parts.

## Washing the Vehicle

To preserve the vehicle's finish, keep it clean by washing it often.

Do not wash the vehicle in direct sunlight and use a car washing soap.

***Notice:*** **Certain cleaners contain chemicals that can damage the emblems or nameplates on the vehicle. Check the cleaning product label. If it states that it should not be used on plastic parts, do not use it on the vehicle or damage may occur and it would not be covered by the warranty.**

Do not use cleaning agents that are petroleum based or that contain acid or abrasives, as they can damage the paint, metal or plastic on the vehicle. Approved cleaning products can be obtained from your dealer/retailer. Follow all manufacturer directions regarding correct product usage, necessary safety precautions and appropriate disposal of any vehicle care product.

Rinse the vehicle well, before washing and after to remove all cleaning agents completely. If they are allowed to dry on the surface, they could stain.

Dry the finish with a soft, clean chamois or an all-cotton towel to avoid surface scratches and water spotting.

High pressure car washes could cause water to enter the vehicle. Avoid using high pressure washes closer than 30 cm (12 inches) to the surface of the vehicle. Use of power washers exceeding 8,274 kPa (1,200 psi) can result in damage or removal of paint and decals.

***Notice:*** **Conveyor systems on some automatic car washes could damage the vehicle. There may not be enough clearance for the undercarriage. Check with the car wash manager before using the automatic car wash.**

## Weatherstrips

Silicone grease on weatherstrips will make them last longer, seal better, and not stick or squeak. Apply silicone grease with a clean cloth. During very cold, damp weather frequent application may be required. See *Recommended Fluids and Lubricants on page 10-7*.

## Wheels and Trim — Aluminum or Chrome

The vehicle may have either aluminum or chrome-plated wheels.

Keep the wheels clean using a soft clean cloth with mild soap and water. Rinse with clean water. After rinsing thoroughly, dry with a soft clean towel. A wax may then be applied.

***Notice:*** **Chrome wheels and other chrome trim may be damaged if the vehicle is not washed after driving on roads that have been sprayed with magnesium, calcium or sodium chloride. These chlorides are used on roads for conditions such as ice and dust. Always wash the vehicle's chrome with soap and water after exposure.**

***Notice:*** **Using strong soaps, chemicals, abrasive polishes, cleaners, brushes, or cleaners that contain acid on aluminum or chrome-plated wheels, could damage the surface of the wheel(s). The repairs would not be covered by the vehicle warranty. Use only approved cleaners on aluminum or chrome-plated wheels.**

The surface of these wheels is similar to the painted surface of the vehicle. Do not use strong soaps, chemicals, abrasive polishes, abrasive cleaners, cleaners with acid, or abrasive cleaning brushes on them because the surface could be damaged. Do not use chrome polish on aluminum wheels.

***Notice:*** **Using chrome polish on aluminum wheels could damage the wheels. The repairs would not be covered by the vehicle warranty. Use chrome polish on chrome wheels only.**

Use chrome polish only on chrome-plated wheels, but avoid any painted surface of the wheel, and buff off immediately after application.

***Notice:*** **Driving the vehicle through an automatic car wash that has silicone carbide tire cleaning brushes, could damage the aluminum or chrome-plated wheels. The repairs would not be covered by the vehicle warranty. Never drive a vehicle that has aluminum or chrome-plated wheels through an automatic car wash that uses silicone carbide tire cleaning brushes.**

## Windshield and Wiper Blades

Clean the outside of the windshield with glass cleaner.

Clean the rubber blades using a lint free cloth or paper towel soaked with windshield washer fluid or a mild detergent. Wash the windshield thoroughly when cleaning the blades. Bugs, road grime, sap, and a buildup of vehicle wash/wax treatments may cause wiper streaking. Replace the wiper blades if they are worn or damaged.

Wipers can be damaged by:

- Extreme dusty conditions
- Sand and salt
- Heat and sun
- Snow and ice, without proper removal

## Tires

Use a stiff brush with tire cleaner to clean the tires.

***Notice:*** **Using petroleum-based tire dressing products on the vehicle may damage the paint finish and/or tires. When applying a tire dressing, always wipe off any overspray from all painted surfaces on the vehicle.**

## Sheet Metal Damage

If the vehicle is damaged and requires sheet metal repair or replacement, make sure the body repair shop applies anti-corrosion material to parts repaired or replaced to restore corrosion protection.

Original manufacturer replacement parts will provide the corrosion protection while maintaining the vehicle warranty.

### Finish Damage

Any stone chips, fractures or deep scratches in the finish should be repaired right away. Bare metal will corrode quickly and may develop into major repair expense.

Minor chips and scratches can be repaired with touch-up materials available from your dealer/retailer. Larger areas of finish damage can be corrected in your dealer's/retailer's body and paint shop.

### Underbody Maintenance

Chemicals used for ice and snow removal and dust control can collect on the underbody. If these are not removed, corrosion and rust can develop on the underbody parts such as fuel lines, frame, floor pan, and exhaust system even though they have corrosion protection.

At least every spring, flush these materials from the underbody with plain water. Clean any areas where mud and debris can collect. Dirt packed in close areas of the frame should be loosened before being flushed. Your dealer/retailer or an underbody car washing system can do this.

### Chemical Paint Spotting

Some weather and atmospheric conditions can create a chemical fallout. Airborne pollutants can fall upon and attack painted surfaces on the vehicle. This damage can take two forms: blotchy, ring-shaped discolorations, and small, irregular dark spots etched into the paint surface.

## Interior Care

The vehicle's interior will continue to look its best if it is cleaned often. Dust and dirt can accumulate on the upholstery and cause damage to the carpet, fabric, leather, and plastic surfaces. Stains should be removed quickly as extreme heat could cause them to set rapidly.

Lighter colored interiors may require more frequent cleaning. Newspapers and garments that can transfer color to home furnishings can also transfer color to the vehicle's interior.

Remove dust from small buttons and knobs with a small brush with soft bristles.

Your dealer/retailer has products for cleaning the vehicle's interior. When cleaning the vehicle's interior, only use cleaners specifically designed for the surfaces that are being cleaned. Permanent damage can result from using cleaners on surfaces for which they were not intended. Apply the cleaner directly to the cleaning cloth to prevent over-spray. Remove any accidental over-spray from other surfaces immediately.

***Notice:*** **Using abrasive cleaners when cleaning glass surfaces on the vehicle, could scratch the glass and/or cause damage to the rear window defogger. When cleaning the glass on the vehicle, use only a soft cloth and glass cleaner.**

Cleaners can contain solvents that can become concentrated in the vehicle's interior. Before using cleaners, read and adhere to all safety instructions on the label. While cleaning the vehicle's interior, maintain adequate ventilation by opening the vehicle's doors and windows.

Do not clean the interior using the following cleaners or techniques:

- Never use a knife or any other sharp object to remove a soil from any interior surface.
- Never use a stiff brush. It can cause damage to the vehicle's interior surfaces.
- Never apply heavy pressure or rub aggressively with a cleaning cloth. Use of heavy pressure can damage the interior and does not improve the effectiveness of soil removal.
- Use only mild, neutral-pH soaps. Avoid laundry detergents or dishwashing soaps with degreasers. Using too much soap will leave a residue that leaves streaks and attracts dirt. For liquid cleaners, about 20 drops per 3.78 L (1 gal) of water is a good guide.
- Do not heavily saturate the upholstery while cleaning.
- Damage to the vehicle's interior may result from the use of many organic solvents such as naptha, alcohol, etc.

## Fabric/Carpet

Use a vacuum cleaner with a soft brush attachment to remove dust and loose dirt. A canister vacuum with a beater bar in the nozzle may only be used on floor carpet and carpeted floor mats. For soils, always try to remove them first with plain water or club soda. Before cleaning, gently remove as much of the soil as possible using one of the following techniques:

- For liquids: gently blot the remaining soil with a paper towel. Allow the soil to absorb into the paper towel until no more can be removed.
- For solid dry soils: remove as much as possible and then vacuum.

To clean:

1. Saturate a lint-free, clean white cloth with water or club soda.
2. Remove excess moisture.
3. Start on the outside edge of the soil and gently rub toward the center. Continue cleaning, using a clean area of the cloth each time it becomes soiled.
4. Continue to gently rub the soiled area.
5. If the soil is not completely removed, use a mild soap solution and repeat the cleaning process with plain water.

If any of the soil remains, a commercial fabric cleaner or spot lifter may be necessary. Test a small hidden area for colorfastness before using a commercial upholstery cleaner or spot lifter. If the locally cleaned area gives any impression that a ring formation may result, clean the entire surface.

A paper towel can be used to blot excess moisture from the fabric or carpet after the cleaning process.

## Leather

To remove dust, a soft cloth dampened with water can be used. If a more thorough cleaning is necessary, a soft cloth dampened with a mild soap solution can be used. Allow the leather to dry naturally. Do not use heat, steam, or spot lifters or spot removers, or shoe polish on leather.
Many commercial leather cleaners and coatings that are sold to preserve and protect leather may permanently change the appearance and feel of the leather and are not recommended. Do not use silicone or wax-based products, or those containing organic solvents to clean the vehicle's interior because they can alter the appearance by increasing the gloss in a non-uniform manner.

### Instrument Panel, Vinyl, and Other Plastic Surfaces

To remove dust, a soft cloth dampened with water can be used. If a more thorough cleaning is necessary, a clean soft cloth dampened with a mild soap solution can be used to gently remove dust and dirt. Never use spot lifters or removers on plastic surfaces. Many commercial cleaners and coatings that are sold to preserve and protect soft plastic surfaces may permanently change the appearance and feel of the interior and are not recommended. Do not use silicone or wax-based products, or those containing organic solvents to clean the vehicle's interior because they can alter the appearance by increasing the gloss in a non-uniform manner. Some commercial products may increase gloss on the instrument panel. The increase in gloss may cause annoying reflections in the windshield and even make it difficult to see through the windshield under certain conditions.

### Care of Safety Belts

Keep belts clean and dry.

**⚠ WARNING**

Do not bleach or dye safety belts. It may severely weaken them. In a crash, they might not be able to provide adequate protection. Clean safety belts only with mild soap and lukewarm water.

## ✍ NOTES

# Service and Maintenance

**General Information**
General Information . . . . . 10-1

**Scheduled Maintenance**
Scheduled Maintenance . . . . . 10-3

**Recommended Fluids, Lubricants, and Parts**
Recommended Fluids and Lubricants . . . . . 10-7
Maintenance Replacement Parts . . . . . 10-9

**Maintenance Records**
Maintenance Records . . . . . 10-11

## General Information

***Notice:*** **Maintenance intervals, checks, inspections, recommended fluids, and lubricants are necessary to keep this vehicle in good working condition. Damage caused by failure to follow scheduled maintenance might not be covered by the vehicle warranty.**

Proper vehicle maintenance helps to keep the vehicle in good working condition, improves fuel economy, and reduces vehicle emissions for better air quality.

Because of all the different ways people use vehicles, maintenance needs vary. The vehicle might need more frequent checks and services.

Please read the information under Scheduled Maintenance. To keep the vehicle in good condition, see your dealer/retailer.

The maintenance schedule is for vehicles that:

- Carry passengers and cargo within recommended limits on the Tire and Loading Information label. See *Vehicle Load Limits on page 8-12*.
- Are driven on reasonable road surfaces within legal driving limits.
- Use the recommended fuel. See *Recommended Fuel on page 8-49*.

**⚠ WARNING**

Performing maintenance work can be dangerous. Some jobs can cause serious injury. Perform maintenance work only if you have the required know-how and the proper tools and equipment. If in doubt, see your dealer/retailer to have a qualified technician do the work. See *Doing Your Own Service Work on page 9-4*.

At your General Motors dealer/retailer, you can be certain that you will receive the highest level of service available. Your dealer/retailer has specially trained service technicians, uses genuine GM replacement parts, as well as, up to date tools and equipment to ensure fast and accurate diagnostics.

The proper replacement parts, fluids, and lubricants to use are listed in *Recommended Fluids and Lubricants on page 10-7* and *Maintenance Replacement Parts on page 10-9*. We recommend the use of genuine parts from your dealer/retailer.

**Rotation of New Tires**

Tire rotation is not recommended if the vehicle has different size tires on the front and rear wheels. If tire rotation is recommended for the vehicle, to maintain ride, handling, and performance of the vehicle, it is important that the first rotation service for new tires be performed when they have 8 000 to 13 000 km (5,000 to 8,000 miles). See *Tire Rotation on page 9-73*.

# Scheduled Maintenance

## When the Change Engine Oil Soon Message Displays

Change engine oil and filter. See *Engine Oil on page 9-10*. *An Emission Control Service.*

When the “Change Engine Oil Soon” message displays, service is required for the vehicle as soon as possible, within the next 1 000 km/ 600 miles. If driving under the best conditions, the engine oil life system might not indicate the need for vehicle service for more than a year. The engine oil and filter must be changed at least once a year and the oil life system must be reset. Your dealer/retailer has trained service technicians who will perform this work and reset the system.

If the engine oil life system is reset accidentally, service the vehicle within 5 000 km/3,000 miles since the last service. Reset the oil life system whenever the oil is changed. See *Engine Oil Life System on page 9-12*.

## Every Engine Oil Change

- Change engine oil and filter. See *Engine Oil on page 9-10*. *An Emission Control Service.*
- Engine coolant level check. See *Engine Coolant on page 9-18*.
- Engine cooling system inspection. Visual inspection of hoses, pipes, fittings, and clamps and replacement, if needed.
- Windshield washer fluid level check. See *Washer Fluid on page 9-25*.
- Windshield wiper blade inspection for wear, cracking, or contamination and windshield and wiper blade cleaning, if contaminated. See *Exterior Care on page 9-110*. Worn or damaged wiper blade replacement. See *Wiper Blade Replacement on page 9-33*.
- Tire inflation check. See *Tire Pressure on page 9-66*.
- Tire wear inspection. See *Tire Inspection on page 9-73*.
- If tire rotation is recommended for the vehicle, rotate tires. See *Tire Rotation on page 9-73*.
- Fluids visual leak check (or every 12 months, whichever occurs first). A leak in any system must be repaired and the fluid level checked.
- Engine air cleaner filter inspection. See *Engine Air Cleaner/Filter on page 9-15*.

- Brake system inspection (or every 12 months, whichever occurs first).
- Steering and suspension inspection. Visual inspection for damaged, loose, or missing parts or signs of wear.
- Body hinges and latches, key lock cylinders, folding seat hardware, and sunroof (if equipped) lubrication. See *Recommended Fluids and Lubricants on page 10-7*. More frequent lubrication may be required when vehicle is exposed to a corrosive environment. Applying silicone grease on weatherstrips with a clean cloth makes them last longer, seal better, and not stick or squeak.
- Restraint system component check. See *Safety System Check on page 2-25*.

## Additional Required Services

### At Each Fuel Stop

- Engine oil level check. See *Engine Oil on page 9-10*.
- Engine coolant level check. See *Engine Coolant on page 9-18*.
- Windshield washer fluid level check. See *Washer Fluid on page 9-25*.

### Once a Month

- Tire inflation check. See *Tire Pressure on page 9-66*.
- Tire wear inspection. See *Tire Inspection on page 9-73*.

### Once a Year

- See *Starter Switch Check on page 9-31*.
- See *Automatic Transmission Shift Lock Control System Check on page 9-32*.
- See *Ignition Transmission Lock Check on page 9-32*.
- See *Park Brake and P (Park) Mechanism Check on page 9-32*.
- Exhaust system and nearby heat shields inspection for loose or damaged components.
- Accelerator pedal check for damage, high effort, or binding. Replace if needed.
- If the vehicle has a Tire Sealant and Compressor Kit, check the sealant expiration date printed on the instruction label of the kit. See *Tire Sealant and Compressor Kit on page 9-84*.

**First Engine Oil Change After Every 40 000 km/25,000 Miles**

- Fuel system inspection for damage or leaks.
- Passenger compartment air filter replacement (or every 12 months, whichever occurs first). More frequent replacement may be required if vehicle is driven regularly under dusty conditions.
- CTS-V only: 6-speed manual transmission fluid change (severe service) for vehicles mainly driven in heavy city traffic in hot weather, in hilly or mountainous terrain, when frequently towing a trailer, or used for taxi, police, or delivery service.
- CTS-V only: Clutch hydraulic system drain, flush, and refill.
- CTS-V only: Brake hydraulic system drain, flush, and refill (severe service only) for vehicles used for high performance operation.

**First Engine Oil Change After Every 80 000 km/50,000 Miles**

- Engine air cleaner filter replacement. See *Engine Air Cleaner/Filter on page 9-15*.
- Automatic transmission fluid change (severe service) for vehicles mainly driven in heavy city traffic in hot weather, in hilly or mountainous terrain, when frequently towing a trailer, or used for taxi, police, or delivery service. See *Automatic Transmission Fluid on page 9-13*.
- CTS-V only: 6-speed manual transmission fluid change (normal service).
- All-wheel-drive vehicles only: Transfer case fluid change (severe service) for vehicles mainly driven in heavy city traffic in hot weather, in hilly or mountainous terrain, when frequently towing a trailer, or used for taxi, police, or delivery service. During any maintenance, if a power washer is used to clean mud and dirt from the underbody, care should be taken to not directly spray the transfer case output seals. High pressure water can overcome the seals and contaminate the transfer case fluid. Contaminated fluid will decrease the life of the transfer case and should be replaced.

- CTS-V only: Rear axle fluid change (severe service only) for vehicles mainly driven in hilly or mountainous terrain, when frequently towing a trailer, used for high speed or competitive driving, or used for taxi, police, or delivery service. See *Rear Axle on page 9-30*.

**First Engine Oil Change After Every 160 000 km/100,000 Miles**

- Automatic transmission fluid change (normal service). See *Automatic Transmission Fluid on page 9-13*.
- All-wheel-drive vehicles only: Transfer case fluid change (normal service). During any maintenance, if a power washer is used to clean mud and dirt from the underbody, care should be taken to not directly spray the transfer case output seals. High pressure water can overcome the seals and contaminate the transfer case fluid. Contaminated fluid will decrease the life of the transfer case and should be replaced.
- Spark plug replacement. *An Emission Control Service.*
- CTS-V only: Supercharger drive belt inspection for fraying, excessive cracks, or obvious damage and replacement, if needed.

**First Engine Oil Change After Every 240 000 km/150,000 Miles**

- Engine cooling system drain, flush, and refill, cooling system and cap pressure check, and cleaning of outside of radiator and air conditioning condenser (or every 5 years, whichever occurs first). See *Cooling System on page 9-18*. *An Emission Control Service.*
- 6.2L supercharged V8 engine only: Intercooler system drain, flush, and refill, cooling system and cap pressure check, and cleaning of outside of radiator and air conditioning condenser (or every 5 years, whichever occurs first). See *Cooling System on page 9-18*. *An Emission Control Service.*
- Engine accessory drive belt inspection for fraying, excessive cracks, or obvious damage and replacement, if needed. *An Emission Control Service.*

# Recommended Fluids, Lubricants, and Parts

## Recommended Fluids and Lubricants

| Usage | Fluid/Lubricant |
|---|---|
| Engine Oil | The engine requires a special engine oil meeting GM Standard GM4718M. Oils meeting this standard can be identified with the American Petroleum Institute (API) Certified for Gasoline Engines starburst symbol. However, not all synthetic API oils with the starburst symbol will meet this GM standard. Look for and use only an oil that meets GM Standard GM4718M. For the proper viscosity, see *Engine Oil on page 9-10*. |
| Engine Coolant | 50/50 mixture of clean, drinkable water and use only DEX-COOL® Coolant. See *Engine Coolant on page 9-18*. |
| Hydraulic Brake System | DOT 3 Hydraulic Brake Fluid (GM Part No. U.S. 88862806, in Canada 88862807). |
| Windshield Washer | Optikleen® Washer Solvent. |
| Hydraulic Power Steering System | GM Power Steering Fluid (GM Part No. U.S. 89021184, in Canada 89021186). |
| Hydraulic Clutch System | DOT 4 Hydraulic Clutch Fluid (GM Part No. U.S. 88958860, in Canada 88901244). |
| Manual Transmission (CTS) | SAE 75W-90 GL5 Gear Oil (GM Part No. U.S. 88862475, in Canada 88862476). |

| Usage | Fluid/Lubricant |
|---|---|
| Manual Transmission (CTS-V) | Manual Transmission Fluid (GM Part No. U.S. 88861800, in Canada 88861801). |
| Automatic Transmission | DEXRON®-VI Automatic Transmission Fluid. |
| Rear Drive Module and Transfer Case (All-Wheel Drive) | Transfer Case Fluid (GM Part No. U.S. 88861950, in Canada 88861951). |
| Chassis Lubrication | Chassis Lubricant (GM Part No. U.S. 12377985, in Canada 88901242) or lubricant meeting requirements of NLGI #2, Category LB or GC-LB. |
| Key Lock Cylinders | Multi-Purpose Lubricant, Superlube (GM Part No. U.S. 12346241, in Canada 10953474). |
| Hood Latch Assembly, Secondary Latch, Pivots, Spring Anchor, and Release Pawl | Lubriplate Lubricant Aerosol (GM Part No. U.S. 12346293, in Canada 992723) or lubricant meeting requirements of NLGI #2, Category LB or GC-LB. |
| Hood, Door, and Folding Seat Hinges | Multi-Purpose Lubricant, Superlube (GM Part No. U.S. 12346241, in Canada 10953474). |
| Power Liftgate Actuator Ball Joint | Multi-Purpose Lubricant (GM Part No. U.S. 89021668, in Canada 89021674). |
| Weatherstrip Conditioning | Weatherstrip Lubricant (GM Part No. U.S. 3634770, in Canada 10953518) or Dielectric Silicone Grease (GM Part No. U.S. 12345579, in Canada 992887). |

## Maintenance Replacement Parts

Replacement parts identified below by name, part number, or specification can be obtained from your retailer.

| Part | GM Part Number | ACDelco Part Number |
|---|---|---|
| Engine Air Cleaner/Filter | | |
| 3.0L V6 Engine | 15875795 | A3096C |
| 3.6L V6 Engine | 15875795 | A3096C |
| 6.2L V8 Engine | 25898499 | A3105C |
| Engine Oil Filter | | |
| 3.0L V6 Engine | 25177917 | PF2129 |
| 3.6L V6 Engine | 25177917 | PF2129 |
| 6.2L V8 Engine | 89017524 | PF48 |
| Passenger Compartment Air Filter Element | 19130403 | CF133 |
| Spark Plugs | | |
| 3.0L V6 Engine | 12622561 | 41–109 |
| 3.6L V6 Engine | 12597464 | 41-990 |
| 6.2L V8 Engine | 12571165 | 41-104 |

| Part | GM Part Number | ACDelco Part Number |
|---|---|---|
| Wiper Blades — Except CTS-V | | |
| Driver Side – 56.5 cm (22 in) | 15890062 | — |
| Passenger Side – 53.3 cm (21 in) | 15890064 | — |
| Wiper Blades — CTS-V | | |
| Driver Side – 56.5 cm (22 in) | 20791461 | — |
| Passenger Side – 53.3 cm (21 in) | 20791462 | — |

# Maintenance Records

After the scheduled services are performed, record the date, odometer reading, who performed the service, and the type of services performed in the boxes provided. Retain all maintenance receipts.

**Maintenance Record**

| Date | Odometer Reading | Serviced By | Maintenance Stamp | Services Performed |
|---|---|---|---|---|
| | | | | |
| | | | | |
| | | | | |
| | | | | |
| | | | | |
| | | | | |
| | | | | |
| | | | | |

## Maintenance Record (cont'd)

| Date | Odometer Reading | Serviced By | Maintenance Stamp | Services Performed |
|---|---|---|---|---|
| | | | | |
| | | | | |
| | | | | |
| | | | | |
| | | | | |
| | | | | |
| | | | | |
| | | | | |
| | | | | |
| | | | | |

## Maintenance Record (cont'd)

| Date | Odometer Reading | Serviced By | Maintenance Stamp | Services Performed |
|---|---|---|---|---|
| | | | | |
| | | | | |
| | | | | |
| | | | | |
| | | | | |
| | | | | |
| | | | | |
| | | | | |
| | | | | |
| | | | | |

## Maintenance Record (cont'd)

| Date | Odometer Reading | Serviced By | Maintenance Stamp | Services Performed |
|---|---|---|---|---|
| | | | | |
| | | | | |
| | | | | |
| | | | | |
| | | | | |
| | | | | |
| | | | | |
| | | | | |
| | | | | |

# Technical Data

**Vehicle Identification**
Vehicle Identification Number (VIN) . . . . . 11-1
Service Parts Identification Label . . . . . 11-1

**Vehicle Data**
Capacities and Specifications . . . . . 11-2
Engine Drive Belt Routing . . . . 11-4

# Vehicle Identification

## Vehicle Identification Number (VIN)

This legal identifier is in the front corner of the instrument panel, on the left side of the vehicle. It can be seen through the windshield from outside. The VIN also appears on the Vehicle Certification and Service Parts labels and certificates of title and registration.

### Engine Identification

The eighth character in the VIN is the engine code. This code identifies the vehicle's engine, specifications, and replacement parts. See “Engine Specifications” under *Capacities and Specifications on page 11-2* for the vehicle's engine code.

## Service Parts Identification Label

This label, on the spare tire cover, has the following information:

- Vehicle Identification Number (VIN)
- Model designation
- Paint information
- Production options and special equipment

Do not remove this label from the vehicle.

# Vehicle Data

## Capacities and Specifications

The following approximate capacities are given in metric and English conversions. See *Recommended Fluids and Lubricants on page 10-7* for more information.

| Application | Capacities | |
|---|---|---|
| | Metric | English |
| Air Conditioning Refrigerant R134a | For the air conditioning system refrigerant charge amount, see the refrigerant caution label located under the hood. See your dealer/retailer for more information. | |
| Cooling System — Engine | | |
| 3.0L V6 Engine | 10.3 L | 10.9 qt |
| 3.6L V6 Engine | 10.3 L | 10.9 qt |
| 6.2L V8 Engine | 11.8 L | 12.5 qt |
| Cooling System — Intercooler, 6.2L V8 Engine | 2.3 L | 2.4 qt |
| Engine Oil with Filter | | |
| 3.0L V6 Engine | 5.7 L | 6.0 qt |
| 3.6L V6 Engine | 5.7 L | 6.0 qt |
| 6.2L V8 Engine | 5.7 L | 6.0 qt |

| Application | Capacities | |
|---|---|---|
| | Metric | English |
| Fuel Tank | 68.1 L | 18.0 gal |
| Transfer Case — AWD | 1.0 L | 1.1 qt |
| Transmission Fluid (Pan Removal and Filter Replacement) | | |
| 3.0L V6 Engine, 6-Speed Automatic | 6.3 L | 6.7 qt |
| 3.6L V6 Engine, 6-Speed Automatic | 6.3 L | 6.7 qt |
| 6.2L V8 Engine, 6-Speed Automatic | 6.3 L | 6.7 qt |
| 3.0L, 3.6L V6 Engines, 6-Speed Manual | 1.8 L | 1.9 qt |
| 6.2L V8 Engine, 6-Speed Manual | 3.8 L | 4.0 qt |
| Wheel Nut Torque | 190 N•m | 140 lb ft |
| All capacities are approximate. When adding, be sure to fill to the approximate level, as recommended in this manual. Recheck fluid level after filling. | | |

## Engine Specifications

| Engine | VIN Code | Transmission | Spark Plug Gap |
|---|---|---|---|
| 3.0L V6 Engine | G | Automatic<br>Manual | 1.1 mm (0.043 in) |
| 3.6L V6 Engine | V | Automatic<br>Manual | 1.1 mm (0.043 in) |
| 6.2L V8 Engine | P | Automatic<br>Manual | 1.0 mm (0.040 in) |

## Engine Drive Belt Routing

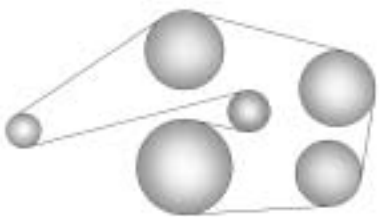

**CTS 3.0L V6 Engine**

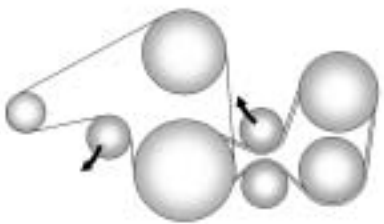

**CTS 3.6L V6 Engine**

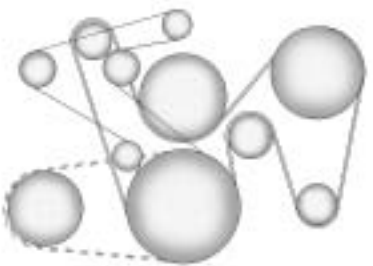

**CTS-V 6.2L V8 Engine**

# Customer Information

**Customer Information**
Customer Satisfaction Procedure . . . . . 12-1
Customer Assistance Offices . . . . . 12-3
Customer Assistance for Text Telephone (TTY) Users . . . . . 12-4
Online Owner Center . . . . . 12-4
GM Mobility Reimbursement Program . . . . . 12-5
Roadside Service . . . . . 12-6
Scheduling Service Appointments . . . . . 12-8
Courtesy Transportation Program . . . . . 12-8
Collision Damage Repair . . . 12-10
Service Publications Ordering Information . . . . . 12-12

**Reporting Safety Defects**
Reporting Safety Defects to the United States Government . . . . . 12-13
Reporting Safety Defects to the Canadian Government . . . . . 12-14
Reporting Safety Defects to General Motors . . . . . 12-14

**Vehicle Data Recording and Privacy**
Vehicle Data Recording and Privacy . . . . . 12-15
Event Data Recorders . . . . . 12-15
OnStar® . . . . . 12-16
Navigation System . . . . . 12-16
Radio Frequency Identification (RFID) . . . . . 12-16
Radio Frequency Statement . . . . . 12-16

# Customer Information

## Customer Satisfaction Procedure

Your satisfaction and goodwill are important to your dealer and to Cadillac. Normally, any concerns with the sales transaction or the operation of the vehicle will be resolved by the dealer's sales or service departments. Sometimes, however, despite the best intentions of all concerned, misunderstandings can occur. If your concern has not been resolved to your satisfaction, the following steps should be taken:

**STEP ONE:** Discuss your concern with a member of dealership management. Normally, concerns can be quickly resolved at that level. If the matter has already been reviewed with the sales, service or parts manager, contact the owner of the dealership or the general manager.

**STEP TWO:** If after contacting a member of dealership management, it appears your concern cannot be resolved by the dealership without further help, in the United States, call the Cadillac Customer Assistance Center, 24 hours a day, at 1-800-458-8006. In Canada, call the Canadian Cadillac Customer Communication Centre at 1-888-446-2000.

We encourage you to call the toll-free number in order to give your inquiry prompt attention. Have the following information available to give the Customer Assistance Representative:

- Vehicle Identification Number (VIN). This is available from the vehicle registration or title, or the plate at the top left of the instrument panel and visible through the windshield.
- Dealership name and location.
- Vehicle delivery date and present mileage.

When contacting Cadillac, remember that your concern will likely be resolved at a dealer's facility. That is why we suggest following Step One first.

**STEP THREE (U.S. Owners):** Both General Motors and your dealer are committed to making sure you are completely satisfied with your new vehicle. However, if you continue to remain unsatisfied after following the procedure outlined in Steps One and Two, you can file with the Better Business Bureau (BBB) Auto Line Program to enforce your rights.

The BBB Auto Line Program is an out of court program administered by the Council of Better Business Bureaus to settle automotive disputes regarding vehicle repairs or the interpretation of the New Vehicle Limited Warranty. Although you may be required to resort to this informal dispute resolution program prior to filing a court action, use of the program is free of charge and your case will generally be heard within 40 days. If you do not agree with the decision given in your case, you may reject it and proceed with any other venue for relief available to you.

You may contact the BBB Auto Line Program using the toll-free telephone number or write them at the following address:

BBB Auto Line Program
Council of Better Business Bureaus, Inc.
4200 Wilson Boulevard
Suite 800
Arlington, VA 22203-1838

Telephone: 1-800-955-5100
dr.bbb.org/goauto

This program is available in all 50 states and the District of Columbia. Eligibility is limited by vehicle age, mileage and other factors. General Motors reserves the right to change eligibility limitations and/or discontinue its participation in this program.

**STEP THREE (Canadian Owners):**

**General Motors Participation in the Mediation/Arbitration Program**

In the event that you do not feel your concerns have been addressed after the following the procedure outlined in Steps One and Two. General Motors of Canada Limited wants you to be aware of its participation in a no-charge mediation/Arbitration program. General Motors of Canada Limited has committed to binding arbitration of owner disputes involving factory-related vehicle service claims. The program provides for the review of the facts involved by an impartial third party arbiter, and may include an informal hearing before the arbiter. The program is designed so that the entire dispute settlement process, from the time you file your complaint to the final decision, should be completed in approximately 70 days. We believe our impartial program offers advantages over courts in most jurisdictions because it is informal, quick, and free of charge.

For further information concerning eligibility in the Canadian Motor Vehicle Arbitration Plan (CAMVAP), call toll-free 1-800-207-0685, or call the General Motors Customer Communication Centre, 1-800-263-3777 (English), 1-800-263-7854 (French), or write to the Mediation/Arbitration Program at the following address:

Mediation/Arbitration Program
c/o Customer Communication Centre
General Motors of Canada Limited
Mail Code: CA1–163–005
1908 Colonel Sam Drive
Oshawa, Ontario L1H 8P7

Your inquiry should be accompanied by the Vehicle Identification Number (VIN).

## Customer Assistance Offices

Cadillac encourages customers to call the toll-free number for assistance. However, if a customer wishes to write or e-mail Cadillac, the letter should be addressed to:

### United States — Customer Assistance

Cadillac Customer Assistance Center
Cadillac Motor Car Division
P.O. Box 33169
Detroit, MI 48232-5169
www.Cadillac.com

1-800-458-8006
1-800-833-2622 (For Text Telephone devices (TTYs))
Roadside Assistance:
1-800-882-1112

From Puerto Rico:

1-800-496-9992 (English)
1-800-496-9993 (Spanish)

From U.S. Virgin Islands:

1-800-496-9994

### Canada — Customer Assistance

General Motors of Canada Limited
Canadian Cadillac Customer Communication Centre,
CA1-163-005
1908 Colonel Sam Drive
Oshawa, Ontario L1H 8P7
www.gmcanada.com

1-888-446-2000
1-800-263-3830 (For Text Telephone devices (TTYs))
Roadside Assistance:
1-800-882-1112

### Overseas — Customer Assistance

Please contact the local General Motors Business Unit.

### Mexico, Central America and Caribbean Islands/Countries (Except Puerto Rico and U.S. Virgin Islands) — Customer Assistance

General Motors de Mexico,
S. de R.L. de C.V.
Customer Assistance Center
Paseo de la Reforma # 2740
Col. Lomas de Bezares
C.P. 11910, Mexico, D.F.

01-800-508-0000
Long Distance: 011-52-53 29 0 800

## Customer Assistance for Text Telephone (TTY) Users

To assist customers who are deaf, hard of hearing, or speech-impaired and who use Text Telephones (TTYs), Cadillac has TTY equipment available at its Customer Assistance Center. Any TTY user can communicate with Cadillac by dialing: 1-800-833-CMCC (2622). (TTY users in Canada can dial 1-800-263-3830.)

## Online Owner Center

### Online Owner Center (U.S.) — www.gmownercenter.com/cadillac

Information and services customized for your specific vehicle — all in one convenient place.

- Digital owner manual, warranty information, and more
- Online service and maintenance records
- Find Cadillac dealers for service nationwide
- Exclusive privileges and offers
- Recall notices for your specific vehicle
- OnStar® and GM Cardmember Services Earnings summaries

**Other Helpful Links:**

Cadillac — www.cadillac.com

Cadillac Merchandise — www.cadillaccollection.com

Help Center — www.cadillac.com/helpcenter

- FAQ
- Contact Us

### My GM Canada (Canada) — www.gm.ca

My GM Canada is a password-protected section of www.gm.ca where you can save information on GM vehicles, get personalized offers, and use handy tools and forms with greater ease.

Here are a few of the valuable tools and services you will have access to:

- My Showroom: Find and save information on vehicles and current offers in your area.
- My Dealers/Retailers: Save details such as address and phone number for each of your preferred GM dealers/retailers.
- My Driveway: Access quick links to parts and service estimates, check trade-in values, or schedule a service appointment by adding the vehicles you own to your driveway profile.
- My Preferences: Manage your profile and use tools and forms with greater ease.

To sign up, visit the My GM Canada section within www.gm.ca.

## GM Mobility Reimbursement Program

This program, available to qualified applicants for cost reimbursement of eligible aftermarket adaptive equipment required for your vehicle, such as hand controls or a wheelchair/scooter lift for the vehicle.

For more information on the limited offer visit gmmobility.com or call the GM Mobility Assistance Center at 1-800-323-9935. Text telephone (TTY) users, call 1-800-833-9935.

General Motors of Canada also has a Mobility Program. Call 1-800-GM-DRIVE (463-7483) for details. TTY users call 1-800-263-3830.

## Roadside Service

In the United States or Canada, call **1-800-882-1112**.

Text Telephone (TTY), U.S. only, call **1-888-889-2438**.

Service is available 24 hours a day, 365 days a year.

### Calling for Assistance

When calling Roadside Assistance, have the following information ready:

- Your name, home address, and home telephone number
- Telephone number of your location
- Location of the vehicle
- Model, year, color, and license plate number of the vehicle
- Odometer reading, Vehicle Identification Number (VIN), and delivery date of the vehicle
- Description of the problem

### Coverage

Services are provided up to 5 years/ 100,000 miles (160 000 km), whichever comes first.

In the U.S., anyone driving the vehicle is covered. In Canada, a person driving the vehicle without permission from the owner is not covered.

Roadside Assistance is not a part of the New Vehicle Limited Warranty. Cadillac and General Motors of Canada Limited reserve the right to make any changes or discontinue the Roadside Assistance program at any time without notification.

Cadillac and General Motors of Canada Limited reserve the right to limit services or payment to an owner or driver if they decide the claims are made too often, or the same type of claim is made many times.

### Cadillac Owner Privileges™

- **Emergency Fuel Delivery:** Delivery of enough fuel for the vehicle to get to the nearest service station.
- **Lock-Out Service:** Service is provided to unlock the vehicle if you are locked out. A remote unlock may be available if you have OnStar®. For security reasons, the driver must present identification before this service is given.
- **Emergency Tow From a Public Road or Highway:** Tow to the nearest Cadillac dealer for warranty service, or if the vehicle was in a crash and cannot be driven. Assistance is also given when the vehicle is stuck in the sand, mud, or snow.
- **Flat Tire Change:** Service is provided to change a flat tire with spare tire. The spare tire, if equipped, must be in good condition and properly inflated.

It is your responsibility for the repair or replacement of the tire if it is not covered by the warranty.

- **Battery Jump Start:** Service is provided to jump start a dead battery.
- **Trip Routing Service:** Detailed maps of North America are provided when requested either with the most direct route or the most scenic route. Additional travel information is also available. Allow three weeks for delivery.
- **Trip Interruption Benefits and Assistance:** If your trip is interrupted due to a warranty failure, incidental expenses may be reimbursed during the 5 year/ 100,000 miles (160 000 km) Powertrain warranty period. Items considered are hotel, meals, and rental car.

## Cadillac Technician Roadside Service (U.S. only)

Cadillac's exceptional Roadside Service is more than an auto club or towing service. It provides every Cadillac owner in the United States with the advantage of contacting a Cadillac advisor and, where available, a Cadillac trained dealer technician who can provide on-site service.

A dealer technician will travel to your location within a 30 mile radius of a participating Cadillac dealership. If beyond this radius, we will arrange to have your car towed to the nearest Cadillac dealership. Each technician travels with a specially equipped service vehicle complete with the necessary Cadillac parts and tools required to handle most roadside repairs.

## Services Not Included in Roadside Assistance

- Impound towing caused by violation of any laws.
- Legal fines.
- Mounting, dismounting or changing of snow tires, chains, or other traction devices.
- Towing or services for vehicles driven on a non-public road or highway.

## Services Specific to Canadian Purchased Vehicles

- **Fuel delivery:** Reimbursement is approximately $5 Canadian. Diesel fuel delivery may be restricted. Propane and other fuels are not provided through this service.
- **Lock-Out Service:** Vehicle registration is required.
- **Trip Routing Service:** Limit of six requests per year.

- **Trip Interruption Benefits and Assistance:** Pre-authorization, original detailed receipts, and a copy of the repair orders are required. Once authorization has been received, the Roadside Assistance advisor will help you make arrangements and explain how to receive payment.
- **Alternative Service:** If assistance cannot be provided right away, the Roadside Assistance advisor may give you permission to get local emergency road service. You will receive payment, up to $100, after sending the original receipt to Roadside Assistance. Mechanical failures may be covered, however any cost for parts and labor for repairs not covered by the warranty are the owner responsibility.

## Scheduling Service Appointments

When your vehicle requires warranty service, contact your dealer/retailer and request an appointment. By scheduling a service appointment and advising your service consultant of your transportation needs, your dealer/retailer can help minimize your inconvenience.

If your vehicle cannot be scheduled into the service department immediately, keep driving it until it can be scheduled for service, unless, of course, the problem is safety-related. If it is, please call your dealership/retailer, let them know this, and ask for instructions.

If the dealer/retailer requests you to bring the vehicle for service, you are urged to do so as early in the work day as possible to allow for the same day repair.

## Courtesy Transportation Program

To enhance your ownership experience, we and our participating dealers are proud to offer Courtesy Transportation, a customer support program for vehicles with the New Vehicle Limited Warranty (Base Warranty Coverage period in Canada) and extended powertrain, and hybrid specific warranty in both the U.S. and Canada.

Several courtesy transportation options are available to assist in reducing your inconvenience when warranty repairs are required.

Courtesy Transportation is not a part of the New Vehicle Limited Warranty. A separate booklet entitled “Warranty and Owner Assistance Information” furnished with each new vehicle provides detailed warranty coverage information.

## Transportation Options

Warranty service can generally be completed while you wait. However, if you are unable to wait, GM helps to minimize your inconvenience by providing several transportation options. Depending on the circumstances, your dealer can offer you one of the following:

### Shuttle Service

Shuttle service is the preferred means of offering Courtesy Transportation. Dealers may provide you with shuttle service to get you to your destination with minimal interruption of your daily schedule. This includes one-way or round trip shuttle service within reasonable time and distance parameters of the dealer's area.

### Public Transportation or Fuel Reimbursement

If your vehicle requires overnight warranty repairs, and public transportation is used instead of the dealer's shuttle service, the expense must be supported by original receipts and can only be up to the maximum amount allowed by GM for shuttle service. In addition, for U.S. customers, should you arrange transportation through a friend or relative, limited reimbursement for reasonable fuel expenses may be available. Claim amounts should reflect actual costs and be supported by original receipts. See your dealer for information regarding the allowance amounts for reimbursement of fuel or other transportation costs.

### Courtesy Rental Vehicle

Your dealer may arrange to provide you with a courtesy rental vehicle or reimburse you for a rental vehicle that you obtain if your vehicle is kept for an overnight warranty repair. Rental reimbursement will be limited and must be supported by original receipts. This requires that you sign and complete a rental agreement and meet state/provincial, local, and rental vehicle provider requirements. Requirements vary and may include minimum age requirements, insurance coverage, credit card, etc. You are responsible for fuel usage charges and may also be responsible for taxes, levies, usage fees, excessive mileage, or rental usage beyond the completion of the repair.

It may not be possible to provide a like-vehicle as a courtesy rental.

### Additional Program Information

All program options, such as shuttle service, may not be available at every dealer. Please contact your dealer for specific information about availability. All Courtesy Transportation arrangements will be administered by appropriate dealer personnel.

*General Motors reserves the right to unilaterally modify, change or discontinue Courtesy Transportation at any time and to resolve all questions of claim eligibility pursuant to the terms and conditions described herein at its sole discretion.*

## Collision Damage Repair

If your vehicle is involved in a collision and it is damaged, have the damage repaired by a qualified technician using the proper equipment and quality replacement parts. Poorly performed collision repairs diminish your vehicle's resale value, and safety performance can be compromised in subsequent collisions.

### Collision Parts

Genuine GM Collision parts are new parts made with the same materials and construction methods as the parts with which your vehicle was originally built. Genuine GM Collision parts are your best choice to ensure that your vehicle's designed appearance, durability, and safety are preserved. The use of Genuine GM parts can help maintain your GM New Vehicle Warranty.

Recycled original equipment parts may also be used for repair. These parts are typically removed from vehicles that were total losses in prior crashes. In most cases, the parts being recycled are from undamaged sections of the vehicle. A recycled original equipment GM part, may be an acceptable choice to maintain your vehicle's originally designed appearance and safety performance, however, the history of these parts is not known. Such parts are not covered by your GM New Vehicle Limited Warranty, and any related failures are not covered by that warranty.

Aftermarket collision parts are also available. These are made by companies other than GM and may not have been tested for your vehicle. As a result, these parts may fit poorly, exhibit premature durability/corrosion problems, and may not perform properly in subsequent collisions.

Aftermarket parts are not covered by your GM New Vehicle Limited Warranty, and any vehicle failure related to such parts are not covered by that warranty.

## Repair Facility

We recommend that you choose a collision repair facility that meets your needs before you ever need collision repairs. Your dealer/retailer may have a collision repair center with GM-trained technicians and state of the art equipment, or be able to recommend a collision repair center that has GM-trained technicians and comparable equipment.

## Insuring Your Vehicle

Protect your investment in your GM vehicle with comprehensive and collision insurance coverage. There are significant differences in the quality of coverage afforded by various insurance policy terms.

Many insurance policies provide reduced protection to your GM vehicle by limiting compensation for damage repairs by using aftermarket collision parts. Some insurance companies will not specify aftermarket collision parts. When purchasing insurance, we recommend that you assure your vehicle will be repaired with GM original equipment collision parts. If such insurance coverage is not available from your current insurance carrier, consider switching to another insurance carrier.

If your vehicle is leased, the leasing company may require you to have insurance that assures repairs with Genuine GM Original Equipment Manufacturer (OEM) parts or Genuine Manufacturer replacement parts. Read your lease carefully, as you may be charged at the end of your lease for poor quality repairs.

## If a Crash Occurs

If there has been an injury, call emergency services for help. Do not leave the scene of a crash until all matters have been taken care of. Move the vehicle only if its position puts you in danger, or you are instructed to move it by a police officer.

Give only the necessary information to police and other parties involved in the crash.

For emergency towing see *Roadside Service on page 12-6*.

Gather the following information:

- Driver's name, address, phone number
- Driver's license number
- Owner's name, address, phone number
- Vehicle license plate
- Vehicle make, model and model year

- Vehicle Identification Number (VIN)
- Insurance company and policy number
- General description of the damage to the other vehicle

Choose a reputable repair facility that uses quality replacement parts. See “Collision Parts” earlier in this section.

If the airbag has inflated, see *What Will You See After an Airbag Inflates? on page 2-33*.

### Managing the Vehicle Damage Repair Process

In the event that your vehicle requires damage repairs, GM recommends that you take an active role in its repair. If you have a pre-determined repair facility of choice, take your vehicle there, or have it towed there. Specify to the facility that any required replacement collision parts be original equipment parts, either new Genuine GM parts or recycled original GM parts. Remember, recycled parts will not be covered by your GM vehicle warranty.

Insurance pays the bill for the repair, but you must live with the repair. Depending on your policy limits, your insurance company may initially value the repair using aftermarket parts. Discuss this with your repair professional, and insist on Genuine GM parts. Remember if your vehicle is leased you may be obligated to have the vehicle repaired with Genuine GM parts, even if your insurance coverage does not pay the full cost.

If another party's insurance company is paying for the repairs, you are not obligated to accept a repair valuation based on that insurance company's collision policy repair limits, as you have no contractual limits with that company. In such cases, you can have control of the repair and parts choices as long as cost stays within reasonable limits.

## Service Publications Ordering Information

### Service Manuals

Service Manuals have the diagnosis and repair information on engines, transmission, axle, suspension, brakes, electrical, steering, body, etc.

### Service Bulletins

Service Bulletins give additional technical service information needed to knowledgeably service General Motors cars and trucks. Each bulletin contains instructions to assist in the diagnosis and service of your vehicle.

### Owner Information

Owner publications are written specifically for owners and intended to provide basic operational information about the vehicle. The owner manual includes the Maintenance Schedule for all models.

In-Portfolio: Includes a Portfolio, Owner Manual, and Warranty Booklet.

RETAIL SELL PRICE:
$35.00 (U.S.) plus processing fee

Without Portfolio: Owner Manual only.

RETAIL SELL PRICE:
$25.00 (U.S.) plus processing fee

### Current and Past Model Order Forms

Technical Service Bulletins and Manuals are available for current and past model GM vehicles. To request an order form, specify year and model name of the vehicle.

**ORDER TOLL FREE:**
**1-800-551-4123 Monday-Friday**
**8:00 AM - 6:00 PM Eastern Time**

For Credit Card Orders Only (VISA-MasterCard-Discover), visit Helm, Inc. on the World Wide Web at: helminc.com

Or you can write to:

Helm, Incorporated
P.O. Box 07130
Detroit, MI 48207

Prices are subject to change without notice and without incurring obligation. Allow ample time for delivery.

Note to Canadian Customers: All listed prices are quoted in U.S. funds. Canadian residents are to make checks payable in U.S. funds.

# Reporting Safety Defects

## Reporting Safety Defects to the United States Government

If you believe that your vehicle has a defect which could cause a crash or could cause injury or death, you should immediately inform the National Highway Traffic Safety Administration (NHTSA) in addition to notifying General Motors.

If NHTSA receives similar complaints, it may open an investigation, and if it finds that a safety defect exists in a group of vehicles, it may order a recall and remedy campaign.

However, NHTSA cannot become involved in individual problems between you, your dealer, or General Motors.

To contact NHTSA, you may call the Vehicle Safety Hotline toll-free at 1-888-327-4236 (TTY: 1-800-424-9153); go to *http://www.safecar.gov*; or write to:

Administrator, NHTSA
1200 New Jersey Avenue, S.E.
Washington D.C. 20590

You can also obtain other information about motor vehicle safety from *http://www.safecar.gov*.

## Reporting Safety Defects to the Canadian Government

If you live in Canada, and you believe that your vehicle has a safety defect, notify Transport Canada immediately, in addition to notifying General Motors of Canada Limited. Call them at 1-800-333-0510 or write to:

Transport Canada
Road Safety Branch
2780 Sheffield Road
Ottawa, Ontario K1B 3V9

## Reporting Safety Defects to General Motors

In addition to notifying NHTSA (or Transport Canada) in a situation like this, please notify General Motors.

Call 1-800-458-8006, or write:

Cadillac Customer Assistance Center
Cadillac Motor Car Division
P.O. Box 33169
Detroit, MI 48232-5169

In Canada, call 1-888-446-2000, or write:

Canadian Cadillac Customer Communication Centre, CA1-163-005
General Motors of Canada Limited
1908 Colonel Sam Drive
Oshawa, Ontario L1H 8P7

# Vehicle Data Recording and Privacy

Your GM vehicle has a number of sophisticated computers that record information about the vehicle's performance and how it is driven. For example, your vehicle uses computer modules to monitor and control engine and transmission performance, to monitor the conditions for airbag deployment and deploy airbags in a crash and, if so equipped, to provide antilock braking to help the driver control the vehicle. These modules may store data to help your dealer/retailer technician service your vehicle. Some modules may also store data about how you operate the vehicle, such as rate of fuel consumption or average speed. These modules may also retain the owner's personal preferences, such as radio pre-sets, seat positions, and temperature settings.

## Event Data Recorders

This vehicle has an Event Data Recorder (EDR). The main purpose of an EDR is to record, in certain crash or near crash-like situations, such as an airbag deployment or hitting a road obstacle, data that will assist in understanding how a vehicle's systems performed. The EDR is designed to record data related to vehicle dynamics and safety systems for a short period of time, typically 30 seconds or less. The EDR in this vehicle is designed to record such data as:

- How various systems in your vehicle were operating
- Whether or not the driver and passenger safety belts were buckled/fastened
- How far, if at all, the driver was pressing the accelerator and/or brake pedal
- How fast the vehicle was traveling

This data can help provide a better understanding of the circumstances in which crashes and injuries occur.

***Important:*** EDR data is recorded by your vehicle only if a non-trivial crash situation occurs; no data is recorded by the EDR under normal driving conditions and no personal data (e.g., name, gender, age, and crash location) is recorded. However, other parties, such as law enforcement, could combine the EDR data with the type of personally identifying data routinely acquired during a crash investigation.

To read data recorded by an EDR, special equipment is required, and access to the vehicle or the EDR is needed. In addition to the vehicle manufacturer, other parties, such as law enforcement, that have the special equipment, can read the information if they have access to the vehicle or the EDR.

GM will not access this data or share it with others except: with the consent of the vehicle owner or, if the vehicle is leased, with the consent of the lessee; in response to an official request of police or similar government office; as part of GM's defense of litigation through the discovery process; or, as required by law. Data that GM collects or receives may also be used for GM research needs or may be made available to others for research purposes, where a need is shown and the data is not tied to a specific vehicle or vehicle owner.

## OnStar®

If your vehicle has OnStar and you subscribe to the OnStar services, please refer to the OnStar Terms and Conditions for information on data collection and use. See also *OnStar® System on page 4-59* in this manual for more information.

## Navigation System

If your vehicle has a navigation system, use of the system may result in the storage of destinations, addresses, telephone numbers, and other trip information. Refer to the navigation system operating manual for information on stored data and for deletion instructions.

## Radio Frequency Identification (RFID)

RFID technology is used in some vehicles for functions such as tire pressure monitoring and ignition system security, as well as in connection with conveniences such as key fobs for remote door locking/unlocking and starting, and in-vehicle transmitters for garage door openers. RFID technology in GM vehicles does not use or record personal information or link with any other GM system containing personal information.

## Radio Frequency Statement

This vehicle has systems that operate on a radio frequency that comply with Part 15 of the Federal Communications Commission (FCC) Rules and with RSS-210/211 of Industry and Science Canada.

Operation is subject to the following two conditions:

1. The device may not cause interference.
2. The device must accept any interference received, including interference that may cause undesired operation of the device.

Changes or modifications to any of these systems by other than an authorized service facility could void authorization to use this equipment.

# A


Accessories and
Modifications . . . . . 9-3
Accessory Power . . . . . 8-19
Adaptive Forward
Lighting (AFL) . . . . . 5-4
Add-On Electrical
Equipment . . . . . 8-60
Adding Equipment to the
Airbag-Equipped Vehicle . . . . . 2-40
AdjustmentS
Thigh Support . . . . . 2-7
Adjustments
Lumbar, Front Seats . . . . . 2-6
Air Cleaner/Filter, Engine . . . . . 9-15
Air Filter, Passenger
Compartment . . . . . 7-6
Air Vents . . . . . 7-6
Airbag System
Check . . . . . 2-42
How Does an Airbag
Restrain? . . . . . 2-33
Airbag System (cont.)
Passenger Sensing
System . . . . . 2-35
What Makes an Airbag
Inflate? . . . . . 2-32
What Will You See After
an Airbag Inflates? . . . . . 2-33
When Should an Airbag
Inflate? . . . . . 2-31
Where Are the Airbags? . . . . . 2-29
Airbags
Adding Equipment to the
Vehicle . . . . . 2-40
Passenger Status Indicator . . . 4-22
Readiness Light . . . . . 4-21
Servicing Airbag-Equipped
Vehicles . . . . . 2-40
System Check . . . . . 2-27
Alarm System
Anti-Theft . . . . . 1-23
All-Wheel Drive . . . . . 8-32, 9-30
AM-FM Radio . . . . . 6-9
Anti-Theft
Alarm System . . . . . 1-23
Alarm System Messages . . . . . 4-48
Antilock Brake
System (ABS) . . . . . 8-33
Warning Light . . . . . 4-27
Appearance Care
Exterior . . . . . 9-110
Interior . . . . . 9-114
Ashtrays . . . . . 4-14
Audio Players . . . . . 6-16
CD . . . . . 6-16
MP3 . . . . . 6-23
Audio System
Diversity Antenna System . . . . 6-15
Hard Drive Device (HDD) . . . . . 6-27
Radio Reception . . . . . 6-15
Theft-Deterrent Feature . . . . . 6-2
Automatic
Door Locks . . . . . 1-15
Automatic Transmission . . . . . 8-26
Fluid . . . . . 9-13
Manual Mode . . . . . 8-28
Shiftlock Control System
Check . . . . . 9-32
Auxiliary Devices . . . . . 6-35
Axle, Rear . . . . . 9-30

## B


Battery . . . . . 9-29
Exterior Lighting Battery Saver . . . . . 5-7
Jump Starting . . . . . 9-103
Load Management . . . . . 5-6
Power Protection . . . . . 5-7
Voltage and Charging Messages . . . . . 4-37
Blade Replacement, Wiper . . . . 9-33
Bluetooth . . . . . 6-37
Boost Gage . . . . . 4-18
Brakes . . . . . 9-26
Antilock . . . . . 8-33
Assist . . . . . 8-37
Fluid . . . . . 9-27
Parking . . . . . 8-34, 8-35
System Messages . . . . . 4-38
Braking . . . . . 8-4
Break-In, New Vehicle . . . . . 8-17
Bulb Replacement . . . . . 9-39
Fog Lamps . . . . . 5-5, 9-37
Halogen Bulbs . . . . . 9-37
Headlamp Aiming . . . . . 9-34
Bulb Replacement (cont.)
Headlamps . . . . . 9-37
High Intensity Discharge (HID) Lighting . . . . . 9-37
License Plate Lamps . . . 9-38, 9-39
Buying New Tires . . . . . 9-75


## C


Calibration . . . . . 4-11
California
Fuel Requirements . . . . . 8-50
Perchlorate Materials Requirements . . . . . 9-3
Warning . . . . . 9-3
Camera, Rear Vision . . . . . 8-46
Canadian Vehicle Owners . . . . . iv
Capacities and Specifications . . . . . 11-2
Carbon Monoxide
Engine Exhaust . . . . . 8-25
Liftgate . . . . . 1-19
Trunk . . . . . 1-17
Winter Driving . . . . . 8-10
Cargo
Cover . . . . . 3-2
Management System . . . . . 3-3
Cargo Net . . . . . 3-4
Cautions, Danger, and Warnings . . . . . iv
CD
DVD Player . . . . . 6-19
CD Player . . . . . 6-16
Center Console Storage . . . . . 3-1
Central Door Unlock System . . . 1-15
Chains, Tire . . . . . 9-81
Charging System Light . . . . . 4-23
Check
Engine Lamp . . . . . 4-23
Ignition Transmission Lock . . . 9-32
Child Restraints
Infants and Young Children . . . . . 2-45
Lower Anchors and Tethers for Children . . . . . 2-51
Older Children . . . . . 2-43
Securing . . . . . 2-57, 2-59
Systems . . . . . 2-47
Where to Put the Restraint . . . 2-49
Cigarette Lighter . . . . . 4-13
Circuit Breakers . . . . . 9-41

Cleaning
Exterior Care .....9-110
Interior Care .....9-114
Climate Control Systems
Dual Automatic .....7-1
Clock .....4-12
Cluster, IP .....4-15
Clutch, Hydraulic .....9-14
Collision Damage Repair .....12-10
Compact Spare Tire .....9-102
Compass .....4-11
Compass Messages .....4-39
Competitive Driving .....8-8
Competitive Driving Mode .....8-40
Compressor Kit, Tire
Sealant.....9-84
Control of a Vehicle .....8-4
Convenience Net .....3-6
Convex Mirrors .....1-26
Coolant
Engine .....9-18
Engine Temperature Gage ....4-20
Engine Temperature
Warning Light .....4-29
Cooling System .....9-18
Engine Messages .....4-40
Courtesy Transportation
Program .....12-8
Covers
Cargo .....3-2
Engine .....9-9
Cruise Control .....8-41
Light .....4-31
Messages .....4-39
Cupholders .....3-1
Customer Assistance .....12-4
Offices .....12-3
Text Telephone (TTY)
Users .....12-4
Customer Information
Service Publications
Ordering Information .....12-12
Customer Satisfaction
Procedure .....12-1

## D

Damage Repair, Collision .....12-10
Danger, Warnings, and
Cautions .....iv
Data Recorders, Event .....12-15
Daytime Running
Lamps (DRL) .....5-3
Defensive Driving .....8-3
Delayed Locking .....1-15
Devices, Auxiliary .....6-35
Door
Ajar Messages .....4-39
Central Door Unlocking
System .....1-15
Delayed Locking .....1-15
Locks .....1-14
Power Locks .....1-15
Drive Systems
All-Wheel Drive .....8-32, 9-30
Driver Information
Center (DIC) .....4-31
Driving
Better Fuel Economy .....8-2
Characteristics and
Towing Tips .....8-54
Competitive .....8-8, 8-40
Defensive .....8-3
Drunk .....8-3
Highway Hypnosis .....8-9
Hill and Mountain Roads .....8-9
If the Vehicle is Stuck .....8-12
Loss of Control .....8-7

Driving (cont.)
Off-Road Recovery . . . . . 8-6
Vehicle Load Limits . . . . . 8-12
Winter . . . . . 8-10
Dual Automatic Climate
Control System . . . . . 7-1
DVD/CD Player . . . . . 6-19

## E

Electrical Equipment,
Add-On . . . . . 8-60
Electrical System
Engine
Compartment
Fuse Block . . . . . 9-41, 9-45, 9-48
Fuses and Circuit
Breakers . . . . . 9-41
Overload . . . . . 9-40
Rear
Compartment
Fuse Block . . . . . 9-51, 9-53, 9-55
Engine
Air Cleaner/Filter . . . . . 9-15
Check and Service Engine
Soon Lamp . . . . . 4-23
Compartment Overview . . . . . 9-6
Engine (cont.)
Coolant . . . . . 9-18
Coolant Heater . . . . . 8-22
Coolant Temperature Gage . . . 4-20
Coolant Temperature
Warning Light . . . . . 4-29
Cooling System . . . . . 9-18
Cooling System Messages . . . 4-40
Cover . . . . . 9-9
Drive Belt Routing . . . . . 11-4
Exhaust . . . . . 8-25
Oil Pressure Gage . . . . . 4-19
Overheated Protection
Operating Mode . . . . . 9-24
Overheating . . . . . 9-23
Power Messages . . . . . 4-41
Pressure Light . . . . . 4-30
Running While Parked . . . . . 8-25
Speed Limiter . . . . . 4-19
Starting . . . . . 8-20
Engine Oil
Life System . . . . . 9-12
Messages . . . . . 4-40
Entry Lighting . . . . . 5-6
Equipment, Towing . . . . . 8-59
Event Data Recorders . . . . . 12-15
Extender, Safety Belt . . . . . 2-25
Exterior Lamp Controls . . . . . 5-1
Exterior Lamps Off Reminder . . . 5-2
Exterior Lighting Battery
Saver . . . . . 5-7

## F

Filter
Engine Air Cleaner . . . . . 9-15
Flash-to-Pass . . . . . 5-2
Flashers, Hazard Warning . . . . . 5-4
Flat Tire . . . . . 9-81
Flat Tire, Changing . . . . . 9-94
Fluid
Automatic Transmission . . . . . 9-13
Brakes . . . . . 9-27
Power Steering . . . . . 9-25
Washer . . . . . 9-25
Fog Lamps
Bulb Replacement . . . . . 5-5, 9-37
Light . . . . . 4-31
Folding Mirrors . . . . . 1-27

Front Seats
Adjustment . . . . . 2-3
Heated and Ventilated . . . . . 2-9
Fuel . . . . . 8-49
Additives . . . . . 8-50
Economy Driving . . . . . 8-2
Filling a Portable Fuel Container . . . . . 8-53
Filling the Tank . . . . . 8-52
Fuels in Foreign Countries . . . . 8-50
Gage . . . . . 4-17
Gasoline Specifications . . . . . 8-50
Recommended . . . . . 8-49
Requirements, California . . . . . 8-50
System Messages . . . . . 4-42
Fuses
Engine Compartment Fuse Block . . . . . 9-41, 9-45, 9-48
Fuses and Circuit Breakers . . . . . 9-41
Rear Compartment Fuse Block . . . . . 9-51, 9-53, 9-55

## G

Gages
Boost . . . . . 4-18
Engine Coolant Temperature . . . . . 4-20
Engine Oil Pressure . . . . . 4-19
Fuel . . . . . 4-17
Odometer . . . . . 4-17
Speedometer . . . . . 4-17
Tachometer . . . . . 4-17
Trip Odometer . . . . . 4-17
Warning Lights and Indicators . . . . . 4-14
Garage Door Opener . . . . . 4-61
Programming . . . . . 4-61
Gasoline Specifications . . . . . 8-50
General Information
Service and Maintenance . . . . . 10-1
Towing . . . . . 8-54
Vehicle Care . . . . . 9-2
Glove Box . . . . . 3-1
GM Mobility Reimbursement Program . . . . . 12-5

## H

Halogen Bulbs . . . . . 9-37
Hard Drive Device (HDD) . . . . . 6-27
Hazard Warning Flashers . . . . . 5-4
Head Restraints . . . . . 2-2
Active . . . . . 2-3
Headlamps
Adaptive Forward Lighting (AFL) . . . . . 5-4
Aiming . . . . . 9-34
Bulb Replacement . . . . . 9-37
Daytime Running Lamps (DRL) . . . . . 5-3
Flash-to-Pass . . . . . 5-2
High Intensity Discharge (HID) Lighting . . . . . 9-37
High-Beam On Light . . . . . 4-30
High/Low Beam Changer . . . . . 5-2
Lamps On Reminder . . . . . 4-31
Washer . . . . . 4-10
Heated and Ventilated Front Seats . . . . . 2-9
Heated Mirrors . . . . . 1-27

Heater
Engine Coolant .....8-22
High-Beam On Light ..... 4-30
High-Speed Operation ..... 9-67
Highway Hypnosis ..... 8-9
Hill and Mountain Roads ..... 8-9
Hood ..... 9-5
Horn ..... 4-7
How to Wear Safety Belts
Properly ..... 2-15
Hydraulic Clutch ..... 9-14

## I

Ignition Positions ..... 8-18, 8-19
Ignition Transmission
Lock Check ..... 9-32
Illumination Control ..... 5-5
Immobilizer ..... 1-24
Infants and Young Children,
Restraints ..... 2-45
Instrument Cluster ..... 4-15
Instrument Panel ..... 5-5
Storage Area ..... 3-1
Introduction .....iii, 6-1

## J

Jump Starting .....9-103

## K

Key and Lock Messages ..... 4-42
Keyless Entry
Remote (RKE) System ... 1-5, 1-7
Keyless Entry System ..... 1-4
Keys ..... 1-2

## L

Labeling, Tire Sidewall ..... 9-60
Lamp Messages ..... 4-44
Lamps
Daytime Running (DRL) ..... 5-3
Exterior Controls ..... 5-1
Exterior Lamps Off
Reminder ..... 5-2
Exterior Lighting Battery
Saver ..... 5-7
License Plate .....9-38, 9-39
Malfunction Indicator .....4-23
On Reminder .....4-31
Reading ..... 5-5
Lap-Shoulder Belt ..... 2-20
LATCH System
Replacing Parts After a
Crash .....2-57
Latch, Lower Anchors and
Tethers for Children ..... 2-51
Liftgate
Carbon Monoxide .....1-19
Lighter, Cigarette ..... 4-13
Lighting
Adaptive Forward ..... 5-4
Entry ..... 5-6
Parade Dimming ..... 5-6
Lights
Airbag Readiness .....4-21
Antilock Brake System
(ABS) Warning .....4-27
Charging System .....4-23
Cruise Control .....4-31
Engine Coolant
Temperature Warning .....4-29
Engine Oil Pressure .....4-30
Flash-to-Pass ..... 5-2
Fog Lamps .....4-31
High-Beam On .....4-30
High/Low Beam Changer ..... 5-2

Lights (cont.)
Safety Belt Reminders .....4-21
Security .....4-30
Tire Pressure .....4-29
Traction Control System (TCS)/StabiliTrak® .....4-28
Up-Shift .....4-28
Limited-Slip Rear Axle ..... 8-41
Locks
Automatic Door .....1-15
Central Door Unlocking System .....1-15
Delayed Locking .....1-15
Door .....1-14
Lockout Protection .....1-16
Power Door .....1-15
Safety .....1-16
Loss of Control ..... 8-7
Low-Profile Tires ..... 9-59
Lower Anchors and Tethers for Children (LATCH SYSTEM) ..... 2-51
Lumbar Adjustment ..... 2-6
Front Seats ..... 2-6

# M

Magnetic Ride Control ..... 8-40
Maintenance
Records .....10-11
Maintenance Schedule
Recommended Fluids and Lubricants .....10-7
Scheduled Maintenance .....10-3
Malfunction Indicator Lamp .... 4-23
Manual Mode ..... 8-28
Manual Transmission ..... 8-30
Fluid .....9-14
Messages
Airbag System .....4-48
Anti-Theft Alarm System .....4-48
Battery Voltage and Charging .....4-37
Brake System .....4-38
Compass .....4-39
Door Ajar .....4-39
Engine Cooling System .....4-40
Engine Oil .....4-40
Engine Power .....4-41
Messages (cont.)
Fuel System .....4-42
Key and Lock .....4-42
Lamp .....4-44
Object Detection System .....4-45
Ride Control System .....4-45
Service Vehicle .....4-48
Tire .....4-48
Transmission .....4-49
Vehicle .....4-36
Vehicle Speed .....4-50
Washer Fluid .....4-50
Mirrors
Automatic Dimming Rearview .....1-27
Convex .....1-26
Folding .....1-27
Heated .....1-27
Power .....1-27
Monitor System, Tire Pressure ..... 9-68
MP3 ..... 6-23

## N

Navigation System
Vehicle Data Recording
and Privacy . . . . . 12-16
Net
Cargo . . . . . 3-4
Net, Convenience . . . . . 3-6
New Vehicle Break-In . . . . . 8-17

## O

Object Detection System
Messages . . . . . 4-45
Odometer . . . . . 4-17
Trip . . . . . 4-17
Off-Road
Recovery . . . . . 8-6
Oil
Engine . . . . . 9-10
Engine Oil Life System . . . . . 9-12
Engine Oil Pressure Gage . . . . 4-19
Messages . . . . . 4-40
Pressure Light . . . . . 4-30
Older Children, Restraints . . . . . 2-43
Online Owner Center . . . . . 12-4
OnStar® System . . . . . 4-59
Operation, Infotainment
System . . . . . 6-2
Outlets
Power . . . . . 4-12
Overheated Engine
Protection Operating Mode . . . 9-24
Overheating, Engine . . . . . 9-23

## P

Parade Dimming . . . . . 5-6
Park
Shifting Into . . . . . 8-22
Shifting Out of . . . . . 8-23
Parking . . . . . 8-24
Assist, Ultrasonic . . . . . 8-44
Brake . . . . . 8-34, 8-35
Brake and P (Park)
Mechanism Check . . . . . 9-32
Over Things That Burn . . . . . 8-24
Passenger Airbag Status
Indicator . . . . . 4-22
Passenger Compartment
Air Filter . . . . . 7-6
Passenger Sensing System . . . 2-35
Perchlorate Materials
Requirements, California . . . . . 9-3
Phone
Bluetooth . . . . . 6-37
Power
Door Locks . . . . . 1-15
Mirrors . . . . . 1-27
Protection, Battery . . . . . 5-7
Retained Accessory (RAP) . . . 8-19
Seat Adjustment . . . . . 2-4
Steering Fluid . . . . . 9-25
Windows . . . . . 1-28
Power Outlets . . . . . 4-12
Pregnancy,
Using Safety Belts . . . . . 2-25
Privacy
Radio Frequency
Identification (RFID) . . . . . 12-16
Program
Courtesy Transportation . . . . . 12-8
Proposition 65 Warning,
California . . . . . 9-3

## R

Radio Frequency
Identification (RFID) ..... 12-16
Statement ..... 12-16
Radios
AM-FM Radio ..... 6-9
CD/DVD Player ..... 6-19
Reception ..... 6-15
Satellite ..... 6-11
Reading Lamps ..... 5-5
Rear Axle ..... 9-30
Limited-Slip ..... 8-41
Rear Seats ..... 2-10
Rear Vision Camera (RVC) .... 8-46
Rear Window Washer/Wiper .... 4-9
Rearview Mirrors
Automatic Dimming ..... 1-27
Reclining Seatbacks ..... 2-7
Recommended Fluids and
Lubricants ..... 10-7
Recommended Fuel ..... 8-49
Records
Maintenance ..... 10-11
Recreational Vehicle
Towing ..... 9-108
Reimbursement Program,
GM Mobility ..... 12-5
Remote Keyless
Entry (RKE)
System ..... 1-4, 1-5, 1-7
Remote Vehicle Start ..... 1-12
Replacement Bulbs ..... 9-39
Replacement Parts
Airbags ..... 2-42
Maintenance ..... 10-9
Replacing Airbag System ..... 2-42
Replacing LATCH System
Parts After a Crash ..... 2-57
Replacing Safety Belt
System Parts After a
Crash ..... 2-26
Reporting Safety Defects
Canadian Government ..... 12-14
General Motors ..... 12-14
U.S. Government ..... 12-13
Retained Accessory
Power (RAP) ..... 8-19
Ride Control Systems
Limited Slip Rear Axle ..... 8-41
Magnetic ..... 8-40
Messages ..... 4-45
Roadside Service ..... 12-6
Roof
Sunroof ..... 1-31
Roof Rack System ..... 3-6
Rotation, Tires ..... 9-73
Routing, Engine Drive Belt ..... 11-4
Running the Vehicle While
Parked ..... 8-25

## S

Safety Belts ..... 2-11
Care ..... 2-26
Extender ..... 2-25
How to Wear Safety Belts
Properly ..... 2-15
Lap-Shoulder Belt ..... 2-20
Reminders ..... 4-21
Replacing After a Crash ..... 2-26
Use During Pregnancy ..... 2-25
Safety Defects Reporting
Canadian Government ..... 12-14
General Motors ..... 12-14
U.S. Government ..... 12-13
Safety Locks ..... 1-16

Safety System Check . . . . . 2-25
Satellite Radio . . . . . 6-11
Scheduled Maintenance . . . . . 10-3
Scheduling Appointments . . . . . 12-8
Sealant Kit, Tire . . . . . 9-84
Seats
  Adjustment, Front . . . . . 2-3
  Head Restraints . . . . . 2-2
  Heated and Ventilated Front . . . 2-9
  Lumbar Adjustment, Front . . . . . 2-6
  Power Adjustment, Front . . . . . 2-4
  Rear . . . . . 2-10
  Reclining Seatbacks . . . . . 2-7
Securing Child
  Restraints . . . . . 2-57, 2-59
Security
  Light . . . . . 4-30
  Vehicle . . . . . 1-23
Service
  Accessories and
    Modifications . . . . . 9-3
  Doing Your Own Work . . . . . 9-4
  Engine Soon Lamp . . . . . 4-23
  Maintenance Records . . . . . 10-11
Service (cont.)
  Maintenance, General
    Information . . . . . 10-1
  Parts Identification Label . . . . . 11-1
  Publications Ordering
    Information . . . . . 12-12
  Scheduling Appointments . . . . . 12-8
  Vehicle Messages . . . . . 4-48
Servicing the
  Airbag-Equipped Vehicle . . . . . 2-40
Shifting
  Into Park . . . . . 8-22
  Out of Park . . . . . 8-23
Signals, Turn and
  Lane-Change . . . . . 5-4
Spare Tire
  Compact . . . . . 9-102
Specifications and
  Capacities . . . . . 11-2
Speed Limiter, Engine . . . . . 4-19
Speedometer . . . . . 4-17
StabiliTrak System . . . . . 8-38
Start Vehicle, Remote . . . . . 1-12
Starter Switch Check . . . . . 9-31
Starting the Engine . . . . . 8-20
Steering . . . . . 8-5
  Fluid, Power . . . . . 9-25
  Wheel Adjustment . . . . . 4-6
  Wheel Controls . . . . . 4-7
Storage Areas
  Cargo Cover . . . . . 3-2
  Cargo Management System . . . 3-3
  Center Console . . . . . 3-1
  Convenience Net . . . . . 3-6
  Glove Box . . . . . 3-1
  Instrument Panel . . . . . 3-1
  Roof Rack System . . . . . 3-6
Storing the Tire
  Sealant and
  Compressor Kit . . . . . 9-92, 9-93
Stuck Vehicle . . . . . 8-12
Sun Visors . . . . . 1-31
Sunroof . . . . . 1-31
Symbols . . . . . iv
System
  Roof Rack . . . . . 3-6
System Check
  Automatic Transmission
    Shiftlock Control . . . . . 9-32

## T

Tachometer . . . . . 4-17
Text Telephone (TTY) Users . . . 12-4
Theft-Deterrent
  Systems . . . . . 1-24, 1-25
  Immobilizer . . . . . .1-24
Thigh Support Adjustment . . . . . 2-7
Time . . . . . 4-12
Tires
  Buying New Tires . . . . . .9-75
  Chains . . . . . .9-81
  Changing . . . . . .9-94
  Compact Spare . . . . . 9-102
  Designations . . . . . .9-62
  Different Size . . . . . .9-77
  If a Tire Goes Flat . . . . . .9-81
  Inflation Monitor System . . . . . .9-69
  Inspection . . . . . .9-73
  Low Profile . . . . . .9-59
  Messages . . . . . .4-48
  Pressure . . . . . .9-67
  Pressure Light . . . . . .4-29
  Pressure Monitor System . . . . .9-68
Tires (cont.)
  Rotation . . . . . .9-73
  Sealant and
    Compressor Kit . . . . . .9-84
  Sealant and
    Compressor Kit,
    Storing . . . . . .9-92, 9-93
  Sidewall Labeling . . . . . .9-60
  Terminology and
    Definitions . . . . . .9-63
  Uniform Tire Quality
    Grading . . . . . .9-78
  Wheel Alignment and
    Tire Balance . . . . . .9-79
  Wheel Replacement . . . . . .9-80
  When It Is Time for
    New Tires . . . . . .9-74
  Winter . . . . . .9-59
Towing
  Driving Characteristics . . . . . .8-54
  Equipment . . . . . .8-59
  General Information . . . . . .8-54
  Recreational Vehicle . . . . . 9-108
Towing (cont.)
  Trailer . . . . . .8-58, 8-59
  Vehicle . . . . . 9-108
Traction
  Control System (TCS) . . . . . .8-37
  Control System (TCS)/
    StabiliTrak® Light . . . . . .4-28
  Limited-Slip Rear Axle . . . . . .8-41
Trailer Towing . . . . . 8-58, 8-59
Transmission
  Automatic . . . . . .8-26
  Fluid, Automatic . . . . . .9-13
  Fluid, Manual . . . . . .9-14
  Messages . . . . . .4-49
Transportation Program,
  Courtesy . . . . . 12-8
Trip Odometer . . . . . 4-17
Trunk . . . . . 1-17
Turn and Lane-Change
  Signals . . . . . 5-4

## U

Ultrasonic Parking Assist ..... 8-44
Uniform Tire Quality
  Grading ..... 9-78
Universal Remote System ..... 4-61
  Operation .....4-65
  Programming .....4-61
Up-Shift Light ..... 4-28
Using this Manual ..... iv

## V

Vehicle
  Canadian Owners .....iv
  Control .....8-4
  Load Limits .....8-12
  Messages .....4-36
  Personalization .....4-51
  Remote Start .....1-12
  Security .....1-23
  Speed Messages .....4-50
  Towing ..... 9-108
Vehicle Care
  Storing the Tire
    Sealant and
    Compressor Kit .....9-92, 9-93
  Tire Pressure .....9-66
Vehicle Identification
  Number (VIN) ..... 11-1
  Service Parts
    Identification Label ..... 11-1
Ventilation, Air ..... 7-6
Visors ..... 1-31

## W

Warning Lights, Gages, and
  Indicators ..... 4-14
Warnings ..... iv
  Cautions and Danger .....iv
  Hazard Flashers ..... 5-4
Washer Fluid ..... 9-25
Washer Fluid Messages ..... 4-50
Washer, Headlamps ..... 4-10
Wheels
  Alignment and Tire
    Balance .....9-79
  Different Size .....9-77
  Replacement .....9-80
When It Is Time for
  New Tires ..... 9-74
Where to Put the Child
  Restraint ..... 2-49
Windows ..... 1-28
  Power .....1-28
Windshield
  Wiper/Washer ..... 4-8
Winter Driving ..... 8-10
Winter Tires ..... 9-59
Wiper Blade Replacement ..... 9-33
Wipers
  Rear Washer ..... 4-9