# AUTOMATIC TRANSMISSION PARTS CATALOG 2005

- PARTES DE TRANSMISIONES AUTOMATICAS
- AUTOMATIKGETRIEBETEILE
- PIÈCES DE TRANSMISSIONS AUTOMATIQUES
- PEÇAS PARA TRANSMISSÕES AUTOMÁTICAS
- Продукция автозапчастей


ALTO PRODUCTS CORP.

Alto Way • Atmore • AL • 36504 • USA • www.altousa.com
Tel: 251.368.7777 • Fax: 251.368.7774 • sales@altousa.com

# Abbreviations & Ordering Notes

| ORDERING NOTES |
|---|
| **Super Kits** - Add "SK" to Master Kit item number. Super Kits include Overhaul Kit, Friction/Steel Module and Band, Filter, Modulator, Bushing Kit, Washer Kit (subject to availability). |
| **Farpak®** - Add "F" to Gasket item number. |
| **Red Eagle Grooved Friction Clutches** - Add "WF" for Waffle Groove or "PL" for Parallel Line Groove to Red Eagle Friction item number. For Grooving charge and Min. qty. contact Customer Service. |

| ABBREVIATION | TERM | ABBREVIATION | TERM |
|---|---|---|---|
| 2wd | 2 Wheel Drive | KOL | Kolene® |
| 4wd | 4 Wheel Drive | LRG | Large |
| BND | Band | OD | Outer Diameter |
| BLK | Black | OEI | Original Equipment Improvement™ |
| BRK | Brake | OEM | Original Equipment Manufacturer |
| CORK & RUB | Cork & Rubber | PL | Parallel Line Grooved |
| DIR | Direct | PLNI | Parallel Line Non-Intersecting Grooved |
| DR | Drive | REV | Reverse |
| FLT | Filter | RR | Rear |
| F/D | Foward/Direct | | |
| FRT | Front | RWD | Rear Wheel Drive |
| F/R | Front/Rear | SAD | Single Adjustable Diaphragm |
| FWD | Front Wheel Drive | SB | Sunburst Grooved |
| GSK | Gasket | SEL | Selective |
| GOV | Governor | SML | Small |
| GRN | Green | SMOOTH | Not Grooved |
| HEG | Hi-Energy Graphitic | TURB | Turbulator Holes |
| HP | Hi-Performance | W/ | With |
| ID | Inisde Diameter | W/O | Without |
| INT | Intermediate | WF | Waffle Grooved |

**DISCLAIMER**

This catalog has been produced using the most up to date information available at the time of production. While the utmost care has been used to compile this information, we assume no responsibility for any errors, omissions, or the misapplications supplied to us. Not all parts listed in this catalog are stocked and are listed for reference only. Reference numbers and/or OEM numbers are listed solely for identification purposes, some numbers change frequently. Please check with your sales representative for more up to date information.

**MADE IN U.S.A.**

All Friction and Steel plates are manufactured by Alto Products Corp. in the USA. Overhaul kits may contain contents not of USA origin. Other than Friction and Steel plates, there are no representations made as to country of origin. For country of origin on a specific item, contact your sales representative.

**TRADEMARKS**

RED EAGLE®, POWERPACK®, and DRUMSAVER® are all registered trademarks of ALTO PRODUCTS CORP. KEVLAR® is a registered trademark of E.I. Dupont Corporation. KOLENE® is a registered trademark of Kolene Corporation. SHIFT KIT®, TRANSGO® Reprogramming Kit™ are registered trademarks of Transgo.

**COPYRIGHT**

Printed in the USA - All Rights Reserved. No part of this publication may be reproduced, stored in a retrieval system, or transmitted in any form or by any means; electronic, mechanical, photocopying, recording or otherwise without the express written consent of ALTO PRODUCTS CORP.

©2004 ALTO PRODUCTS CORP.

# Alto Products - 2005 Catalog
# Table of Contents

## DOMESTIC MANUFACTURERS


| GENERAL MOTORS | Series | Page |
|---|---|---|
| Dynaflow | 11000 | 31 |
| Buick Special | 12000 | 31 |
| Hydramatic (Standard & Dual Range) | 13000 | 31 |
| Jetaway 315 | 14000 | 32 |
| Roto-Hydramatic 240 (Model 05 / F85) | 15000 | 32 |
| Roto-Hydramtic 375 (Model 10 / Slim Jim) | 16000 | 32 |
| Cast Iron Powerglide | 18000 | 32 |
| Super Turbine 300 | 30000 | 33 |
| Aluminum Powerglide | 19000 | 38 |
| TH200, TH200C | 43000 | 56 |
| TH200-4R | 43000 | 60 |
| TH325, TH325-4L | 43000 | 64 |
| TH250C | 32000 | 68 |
| TH350, TH350C | 32000 | 68 |
| TH425, TH475 | 31000 | 72 |
| 3L30 (TH180, TH180C) | 38000 | 50 |
| 3T40 (TH125, TH125C) | 48000 | 42 |
| 3L80 (TH400, TH375) | 31000 | 72 |
| 4L30E | 38000 | 53 |
| 4L40E, 5L40E | 156000 | 49 |
| 4L60, 4L60E (TH700-R4) | 57000 | 86 |
| 4L80E | 31000 | 77 |
| 4T40E, 4T45E | 114000 | 46 |
| 4T60 (TH440-T4) | 62000 | 81 |
| 4T60E, 4T65E | 62000 | 81 |
| 4T80E | 111000 | 92 |
| 17R (F3A) | 63000 | 223 |
| JF403E (RT77) | 105000 | 98 |
| JR403E | 106000 | 274 |
| MK2, MH5 | 87000 | 41 |
| MX1 (A131) | 65000 | 327 |
| MX17 (A210) | 65000 | 327 |
| Saturn AF23-5 | 182000 | 95 |
| Saturn CVT | 167000 | 372 |
| Saturn TAAT | 102000 | 96 |

| ALLISON | Series | Page |
|---|---|---|
| AT540 Series | 55000 | 100 |
| MT640 Series | 56000 | 103 |
| HT740 Series | 56000 | 108 |
| 300, 400 World Series | 148000 | 111 |
| 1000, 2000 Series | 152000 | 114 |

| MISCELLANEOUS: LENCO | Series | Page |
|---|---|---|
| Lenco Racing | 143000 | 379 |

| FORD | Series | Page |
|---|---|---|
| Ford Small Case | 23000 | 33 |
| Ford Medium Case | 23000 | 33 |
| Ford Large Case | 23000 | 33 |
| Ford 2 Speed | 24000 | 34 |
| AOD, AOD-E (4R70W) | 49000 | 124 |
| ATX | 51000 | 130 |
| AXOD | 69000 | 133 |
| AXOD-E, AX4S | 69000 | 133 |
| AX4N, 4F50N | 69000 | 137 |
| A4LD, A4LD-E | 41000 | 117 |
| CD4E | 112000 | 152 |
| C3 | 41000 | 141 |
| C4, C5 | 25000 | 144 |
| C6 | 26000 | 148 |
| E4OD, 4R100 | 26000 | 154 |
| FMX | 23000 | 159 |
| F3A | 63000 | 223 |
| G4EAT, GF4EAT | 74000 | 228 |
| 4EAT-F | 81000 | 225 |
| 4F20E | 105000 | 285 |
| 4F27E | 133000 | 231 |
| 4R44E, 4R55E, 5R44E, 5R55E | 41000 | 117 |
| 5R55N, 5R55W | 137000 | 121 |
| 5R110W | 166000 | 123 |
| CTX1, CTX2 (CVT) | 82000 | 372 |

| CHRYSLER | Series | Page |
|---|---|---|
| Powerflite | 21000 | 34 |
| Cast Iron Torqueflite | 22000 | 34 |
| 30TH, 31TH (A404, 413, 470, 670) | 45000 | 162 |
| 30RH, 31RH, 32RH (TF6, A904) | 27000 | 180 |
| 36RH 37RH (TF8, A727) | 28000 | 177 |
| 40RH, 42RH, 42RE, 44RE (A500) | 27000 | 165 |
| 40TE, 41TE (A604) | 77000 | 173 |
| 42LE (A606) | 77000 | 173 |
| 45RFE | 128000 | 184 |
| 46RE, 46RH (A518) | 28000 | 169 |
| 47RE, 47RH, 48RE (A618) | 28000 | 169 |
| AR4 | 109000 | 294 |
| KM Series | 59000 | 252 |
| F4A33 | 108000 | 256 |
| AW4 | 73000 | 312 |
| ZF4HP18FL | 104000 | 359 |

# Alto Products - 2005 Catalog
# Table of Contents

## ASIAN MANUFACTURERS


| AISIN WARNER / BORG WARNER | Series | Page |
|---|---|---|
| BW Model 3 thru 8, 11 thru 12 Cast Iron | 23000 | 34 |
| Borg Warner 3 Band | 33000 | 35 |
| BW35, 37, 65, 66 | 29000 | 186 |
| AW55, BW55 | 44000 | 189 |
| AW70, AW71, AW72 | 44000 | 191 |
| AW30-40, AW30-43, AW30-80 | 73000 | 312 |
| AW50-40, AW50-41, AW50-42 | 110000 | 193 |
| AW55/50SN | 159000 | 194 |
| AW60-41, AW60-42 | 115000 | 195 |
| AW450-43LE | 153000 | 196 |
| A581 FL50, 60, 70 | 168000 | 197 |

| HONDA | Series | Page |
|---|---|---|
| Honda 2 Speed | 47000 | 35 |
| 3 Speed - with 106mm Clutches | 58000 | 198 |
| 4 Speed - 2 Shaft with 106mm Clutches | 58000 | 200 |
| 4 Speed - 2 Shaft with 110mm Clutches | 58000 | 202 |
| 4 Speed - 2 Shaft with 116mm Clutches | 58000 | 204 |
| 4 Speed - 2 Shaft with 125mm Clutches | 101000 | 206 |
| 4 Speed - 3 Shaft with 110mm Clutches | 58000 | 207 |
| 4 Speed - 3 Shaft with 116mm Clutches | 58000 | 209 |
| 4 Speed - 3 Shaft with 120mm Clutches | 78000 | 211 |
| 4 Speed - 3 Shaft with 116mm & 132mm | 116000 | 213 |
| 4 Speed - 3 Shaft with 116mm & 120mm | 119000 | 213 |
| 4 Speed - 3 Shaft with 123mm & 128mm | 134000 | 216 |
| 4 Speed - 3 Shaft with 120mm & 123mm | 164000 | 215 |
| 4 Speed NSX | 78000 | 218 |
| 5 Speed | 146000 | 221 |
| 5 Speed - 3 Shaft with 120mm & 123mm | 169000 | 215 |
| 5 Speed | 157000 | 221 |
| 5 Speed - MDX | 172000 | 217 |
| 5 Speed - RSX | 161000 | 219 |
| 5 Speed - TSX | 177000 | 220 |
| CVT | 118000 | 372 |

| DAIHATSU | Series | Page |
|---|---|---|
| A140 | 65000 | 330 |
| MX17 | 65000 | 327 |
| Mini | 127000 | 378 |

| DAEWOO | Series | Page |
|---|---|---|
| 3T40E (TH125) | 48000 | 42 |
| 4T40E, 4T45E | 114000 | 46 |
| 4T60E | 62000 | 81 |
| A44DL | 44000 | 308 |
| AW50-42LE | 110000 | 193 |
| MX17 | 65000 | 327 |
| ZF4HP14 | 103000 | 357 |

| HYUNDAI | Series | Page |
|---|---|---|
| KM170, 171, 172, 175, 176, 177 | 59000 | 252 |
| F4A33, W4A33 | 108000 | 256 |
| A4AF1, A4AF2, A4BF1, A4BF3 | 59000 | 252 |
| F4A41, F4A42 | 123000 | 259 |
| F4A51 | 124000 | 260 |
| 5 Speed - F5AH1 | 165000 | 261 |
| A40 | 44000 | 308 |

| ISUZU | Series | Page |
|---|---|---|
| RMC - F3A | 63000 | 223 |
| RMD - A44DL | 44000 | 308 |
| RMK - JR403E | 106000 | 274 |
| RML - JF403E | 105000 | 98 |
| RMQ - 4L30E | 38000 | 53 |
| RNJ - AW450-43LE | 153000 | 196 |
| MPJA (Honda 4 Speed) | 78000 | 211 |
| MDWA ( Honda 4 Speed) | 119000 | 213 |
| A40 | 44000 | 308 |
| TH200 | 43000 | 56 |
| 4L60E | 57000 | 86 |

| INFINITI | Series | Page |
|---|---|---|
| RL4F03A | 107000 | 282 |
| RE4F04A | 105000 | 285 |
| RE4R01A | 75000 | 268 |
| RE4R03A | 106000 | 274 |

| LEXUS | Series | Page |
|---|---|---|
| A340, A341, A343 | 73000 | 312 |
| A350E | 73000 | 312 |
| A540, A541 | 65000 | 336 |
| A650E | 142000 | 322 |
| U140E | 136000 | 330 |
| U150E | 163000 | 342 |

| MAZDA | Series | Page |
|---|---|---|
| F3A | 63000 | 223 |
| F4AEL | 81000 | 225 |
| FN4AEL | 133000 | 231 |
| G4AEL, GF4AEL | 74000 | 228 |
| LA4AEL (CD4E) | 112000 | 152 |
| LJ4AEL | 105000 | 233 |
| N4AEL, N4AHL, NC4AEL | 63000 | 235 |
| R4AEL, RA4AEL, RB4AEL | 75000 | 237 |
| A4LD, 4R44E, 4R55E | 41000 | 117 |
| 5R55E | 41000 | 117 |

| MITSUBISHI | Series | Page |
|---|---|---|
| 3 Speed - KM170, KM171, KM172 | 59000 | 252 |
| 3 Speed - F3A21, F3A22 | 59000 | 252 |
| 4 Speed - KM175, KM176, KM177 | 59000 | 252 |
| 4 Speed - F4A21, F4A22, F4A23 | 59000 | 252 |
| 4 Speed - F4A32, F4A33 | 108000 | 256 |
| 4 Speed - F4A33EV | 108000 | 256 |
| 4 Speed (AWD) - W4A32, W4A33 | 108000 | 256 |
| 4 Speed - F4A41, F4A42 | 123000 | 259 |
| 4 Speed - F4A51, F5A51 | 124000 | 260 |
| 4 Speed - F4AC1 (A604) | 77000 | 173 |
| 4 Speed - KM148 / V4AW2 - 2WD | 44000 | 308 |
| 4 Speed - AW372 / R4AW2 - 4WD | 44000 | 308 |
| 4 Speed - V4AW3-7, (A340) | 73000 | 312 |
| 4 Speed - R4A51, V4A51 | 124000 | 262 |
| 5 Speed - R5A51, V5A51 | 124000 | 262 |
| 5 Speed - F5AH1 | 165000 | 261 |

# Automotive Transmission Parts - Table of Contents

## ASIAN MANUFACTURERS


| MISCELLANEOUS | Series | Page |
|---|---|---|
| Asian Mini | 79000 | 378 |
| Daihatsu Mini | 127000 | 378 |
| BTR 74, 85, 91, 93, 95, 97 | 79000 | 377 |
| **NISSAN** | **Series** | **Page** |
| 3N71B, L3N71B | 42000 | 263 |
| E4N71B, L4N71B | 42000 | 266 |
| RE4R01A, RL4R01A, JR402E | 75000 | 268 |
| RE4R03A, RG4R01A, JR403E | 106000 | 274 |
| RE5R01A, JR502E | 122000 | 272 |
| RE5R05A G35 | 174000 | 273 |
| RN3F01A, RL3F01A | 61000 | 276 |
| RE4F02A, RL4F02A | 68000 | 278 |
| RE/RL4F03A, RE/RL4F03V | 107000 | 282 |
| RE4F04A | 105000 | 285 |
| RE5F01A, JF506E | 162000 | 354 |
| RE0F09A CVT | 181000 | 373 |
| **SUBARU** | **Series** | **Page** |
| 3 Speed - M41, M41A | 42000 | 299 |
| 4 Speed - R4AX-EL | 75000 | 302 |
| 4 Speed - 4AT-E (1998-On) | 135000 | 306 |
| CVT | 176000 | 373 |
| **SUZUKI** | **Series** | **Page** |
| 3L30 (TH180, TH180C) | 38000 | 50 |
| A44DE - 4 Speed RWD - Lockup (E) | 44000 | 308 |
| AW60-41, AW60-42 | 115000 | 195 |
| MX17 (A210) | 65000 | 327 |
| SR410, SR412 | 175000 | 307 |
| **TOYOTA** | **Series** | **Page** |
| Toyota A10 | 35000 | 35 |
| Toyota A20 | 37000 | 36 |
| Toyota A30 | 36000 | 36 |
| 3 Speed RWD - A40, A41, A43 | 44000 | 308 |
| 4 Speed RWD - No Lockup - A40D, A42D, A43D | 44000 | 308 |
| 4 Speed RWD - Lockup (L) - A42DL, A43DL | 44000 | 308 |
| 4 Speed RWD - Lockup (L) - A44DL, A44DF | 44000 | 308 |
| 4 Speed RWD - Lockup (E) - A43DE, A44DE, A46DE | 44000 | 308 |
| 4 Speed RWD - A340, A341, A343 | 73000 | 312 |
| 4 Speed RWD - A350E | 73000 | 312 |
| 4 Speed RWD - A340 Transfer Case | 73000 | 317 |
| 4 Speed RWD - A440F, A442F | 83000 | 319 |
| 4 Speed RWD - A650E | 142000 | 322 |
| 5 Speed RWD - A750E, A750F | 173000 | 324 |
| 3 Speed FWD - A55 | 44000 | 325 |
| 4 Speed FWD - A130 Series | 65000 | 327 |
| 4 Speed FWD - A140 Series | 65000 | 330 |
| 4 Speed FWD - A240 Series | 65000 | 333 |
| 4 Speed FWD - A540 Series | 65000 | 336 |
| 4 Speed FWD - U140E, U140F | 136000 | 340 |
| 5 Speed FWD - U151E, U151F | 163000 | 342 |
| 4 Speed FWD - U240E, U241E | 145000 | 343 |
| 4 Speed FWD - U340E, U341E | 144000 | 345 |


## EUROPEAN MANUFACTURERS


| MERCEDES | Series | Page |
|---|---|---|
| 722.0, 722.1, 722.4 (4 Bolt) | 54000 | 240 |
| 722.3 (6 Bolt) | 64000 | 242 |
| 722.4 (Baby 6 Bolt) | 71000 | 245 |
| 722.5 | 117000 | 247 |
| 722.6 | 141000 | 248 |
| 722.7 | 147000 | 251 |
| **MISCELLANEOUS** | **Series** | **Page** |
| AP I, II, IIIE | 79000 | 377 |
| VOITH | 125000 | 379 |
| **RENAULT** | **Series** | **Page** |
| MB101, MJ3, MJ5 | 66000 | 288 |
| 4139, ML1 | 72000 | 290 |
| 4141 Delorean | 72000 | 292 |
| AR4, AD4, AD8 | 109000 | 294 |
| AL4, DPO, STA | 155000 | 298 |
| **VOLKSWAGEN** | **Series** | **Page** |
| 3 Speed - 003 | 34000 | 36 |
| 3 Speed - 010, 087, 089, 090 | 46000 | 346 |
| 4 Speed - 095, 096, 097, 098 (AG4) | 109000 | 349 |
| 4 Speed - 01M, 01N, 01P | 109000 | 349 |
| 4 Speed - 01K (ZF4HP18FLE - 2WD) | 104000 | 359 |
| 4 Speed - 01F (ZF4HP18FLA - 4WD) | 104000 | 359 |
| 5 Speed - 01V (ZF5HP19) | 139000 | 367 |
| 5 Speed - 01L (ZF5HP24) | 132000 | 368 |
| CVT | 151000 | 374 |
| JF404E | 158000 | 353 |
| JF506E AG-5, 5F31J | 162000 | 354 |
| **VOLVO** | **Series** | **Page** |
| BW35 | 29000 | 186 |
| AW55 / BW55 | 44000 | 189 |
| AW70, AW71, AW72 | 44000 | 191 |
| ZF4HP22 | 53000 | 363 |
| 4T65E | 62000 | 81 |
| AW50-40 Series | 110000 | 193 |
| AW55/50SN | 159000 | 194 |
| AW60-41 Series | 115000 | 195 |
| **Z F** | **Series** | **Page** |
| ZF3HP12, ZF3HP20 | 52000 | 37 |
| ZF3HP22 - RWD | 53000 | 355 |
| ZF4HP14 - RWD | 103000 | 357 |
| ZF4HP18Q - FWD | 104000 | 359 |
| ZF4HP18FL, FLA, FLE | 104000 | 359 |
| ZF4HP20 | 154000 | 362 |
| ZF4HP22 - RWD | 53000 | 363 |
| ZF4HP24A - RWD | 53000 | 363 |
| ZF5HP18 | 104000 | 366 |
| ZF5HP19FL, FLA, HL | 139000 | 367 |
| ZF5HP24. ZF5HP24A | 132000 | 368 |
| ZF5HP30 | 113000 | 369 |
| ZF4HP590 Ecomat Series | 121000 | 370 |
| CVT MINI | 184000 | 374 |

# VEHICLE INDEX

## ACURA

| Model | Year | Engine | Trans. | Page |
|---|---|---|---|---|
| 2.2CL | 1997 | L4, 2.2L | A6VA | 211 |
| 2.3CL | 1998-99 | L4, 2.3L | B6VA | 213 |
| 2.5TL | 1995-98 | L5, 2.5L | M1WA | 204 |
| 3.0CL | 1997-00 | V6, 3.0L | M7ZA | 211 |
| 3.2CL | 2001-On | V6, 3.2L | MGFA | 221 |
| 3.2TL | 1996-98 | V6, 3.2L | M5HA | 206 |
| 3.2TL | 1999 | V6, 3.2L | B7VA | 216 |
| 3.2TL | 2000 | V6, 3.2L | M7WA | 221 |
| 3.2TL | 2001-On | V6, 3.2L | B7WA | 221 |
| 3.5RL | 1996-02 | V6, 3.5L | M5DA | 206 |
| Integra | 1986-87 | L4, 1.6L | CA | 202 |
| Integra | 1988-89 | L4, 1.6L | PI | 202 |
| Integra | 1990 | L4, 1.8L | RO | 209 |
| Integra | 1991-93 | L4, 1.8L | MPRA | 209 |
| Integra | 1994 | L4, 1.8L | MP7A | 209 |
| Integra | 1995 | L4, 1.8L | SP7A | 209 |
| Integra | 1996-99 | L4, 1.8L | S4XA | 209 |
| Integra | 2000-On | L4, 1.8L | SKWA | 209 |
| Legend | 1986-87 | V6, 2.5L | G4 | 204 |
| Legend | 1988-89 | V6, 2.7L | L5 | 204 |
| Legend | 1990 | V6, 2.7L | PL5X | 204 |
| Legend | 1991-95 | V6, 3.2L | MPYA | 206 |
| MDX | 2001 | | MGHA | 221 |
| MDX | 2002 | | BGHA | 221 |
| MDX | 2003-On | | MDKA | 217 |
| NSX | 1991-On | V6, 3.0L | M9RA | 218 |
| RSX | 2002-On | | MRMA | 219 |
| SLX | 1996-On | V6, 3.2L | 4L30E | 53 |
| Vigor | 1992-95 | L5, 2.5L | MPWA | 204 |

## ALFA ROMEO

| Model | Year | Engine | Trans. | Page |
|---|---|---|---|---|
| 164 | 1990-95 | V6, 3.0L | ZF4HP18Q | 359 |
| 2000 | 1971-76 | | ZF3HP12 | 37 |
| 2000 Milano 164 | 1976-78 | | ZF3HP22 | 355 |
| 2000 Milano 164 | 1984-93 | | ZF4HP22 | 363 |

## AM GENERAL

| Model | Year | Engine | Trans. | Page |
|---|---|---|---|---|
| H2 | 2002-On | | 4L65E | |
| Hummer (H1) | 1991-93 | | 3L80E | 72 |
| Hummer (H1) | 1993-On | | 4L80E | 77 |

## AMERICAN MOTORS CORP (AMC)

| Model | Year | Engine | Trans. | Page |
|---|---|---|---|---|
| Alliance | 1983-87 | | MB1 | 288 |
| Ambassador | 1963-71 | | BWT35 | 186 |
| Ambassador | 1972-74 | | TF6/904 | 180 |
| Ambassador | 1972-74 | | TF8/727 | 177 |
| AMC | 1957-62 | | BW8/12 | 34 |
| American | 1964-68 | | BWT35 | 186 |
| AMX | 1978-80 | | TF6/904 | 180 |
| Classic | 1963-66 | | BWT35 | 186 |
| Concord | 1978-78 | | TF8/727 | 177 |
| Concord | 1978-83 | | TF6/904 | 180 |
| Eagle | 1980-88 | | TF6/904 | 180 |
| Encore | 1983-87 | | MB1 | 288 |
| Gremlin | 1970-71 | | BWT35 | 186 |
| Gremlin | 1972-78 | | TF6/904 | 180 |
| Hornet | 1970-71 | | BWT35 | 186 |
| Hornet | 1973-77 | | TF6/904 | 180 |
| Hornet | 1973-77 | | TF8/727 | 177 |
| Javelin | 1968-71 | | BWT35 | 186 |

## AMERICAN MOTORS CORP (AMC)

| Model | Year | Engine | Trans. | Page |
|---|---|---|---|---|
| Javelin | 1972 | | TF8/727 | 177 |
| Javelin | 1972-74 | | TF6/904 | 180 |
| Marlin | 1965-67 | | BWT35 | 186 |
| Matador | 1971 | | BWT35 | 186 |
| Matador | 1972-74 | | TF8/727 | 177 |
| Matador | 1972-78 | | TF6/904 | 180 |
| Medallion | 1988-89 | | MJ3 | 288 |
| Pacer | 1975-80 | | TF6/904 | 180 |
| Rambler | 1962-71 | | BWT35 | 186 |
| Rebel | 1967-70 | | BWT35 | 186 |
| Rogue | 1968-69 | | BWT35 | 186 |
| Spirit | 1979-83 | | TF6/904 | 180 |
| Studebaker | 1951-71 | | BW8/12 | 34 |

## ASTON MARTIN

| Model | Year | Engine | Trans. | Page |
|---|---|---|---|---|
| DB6 | 1965-92 | | TBA | |
| DB7 | 1993-On | | ZF5HP30 | 369 |
| Loganda | 1995-On | | 3sp (TBA) | |
| Loganda | 1995-On | 3.5L | 4L80E | 77 |
| V8 Volante | 1995-On | | 4L80E | 77 |

## AUDI

| Model | Year | Engine | Trans. | Page |
|---|---|---|---|---|
| 100 | 1970-75 | L4, 1.9L | 003 | 36 |
| 100 | 1977-94 | L5, 2.3L | 087 | 346 |
| 100 | 1985-94 | L4, 1.9L | 089 | 346 |
| 100 | 1990-94 | L5, 2.8L | 097 | 349 |
| 100 Quattro | 1992-94 | V6, 2.8L | 4HP18FLA | 359 |
| 200 | 1980-83 | L5, 2.2L | 010 | 346 |
| 200 | 1984-91 | L5, 2.2L | 087 | 346 |
| 4000 | 1980-83 | L4, 1.6L | 087 | 346 |
| 4000 | 1980-87 | L5, 2.2L | 089 | 346 |
| 4000 | 1981-83 | L4, 1.7L | 087 | 346 |
| 5000 | 1978-88 | L5, 2.2L | 087 | 346 |
| 5000S | 1982-87 | L5, 2.2L | 087 | 346 |
| 5000S | 1987-88 | L5, 2.3L | 087 | 346 |
| 80 | 1973-76 | | 003 | 36 |
| 80 | 1977-81 | | 010 | 346 |
| 80 | 1982-87 | L4, 2.0L | 089 | 346 |
| 80 | 1985-91 | L5, 2.3L | 087 | 346 |
| 80, Avant | 1992-96 | L5, 2.3L | 097 | 349 |
| 90 | 1985-91 | L5, 2.3L | 087 | 346 |
| 90 | 1991-92 | L5, 2.3L | 097 | 349 |
| A3 | 1997-On | | 01M | 349 |
| A4 | 1995-On | 1.6/1.8/1.9 | 01N | 349 |
| A4 Multitronic | 2003-On | V6 3.0L | CVT | 374 |
| A4 Quattro | 1995-On | | 5HP19 | 367 |
| A4, Avant | 1995-On | 2.4/2.6/2.8 | 5HP19 | 367 |
| A6 Allroad | 2001-On | | 5HP19 | 367 |
| A6 Multritronic | 2002-On | | CVT | 374 |
| A6 Quattro | 1995-97 | 4.2 | 4HP24A | 363 |
| A6 Quattro | 1995-97 | exc. 4.2 | 4HP18FLA | 359 |
| A6 Quattro | 1998-On | 4.2 | 5HP24A | 368 |
| A6 Quattro | 1998-On | exc. 4.2 | 5HP19 | 367 |
| A6, Avant | 1994 | | 097 | 349 |
| A6, Avant | 1994-97 | 2.5/2.6/2.8 | 4HP18FLE | 359 |
| A6, Avant | 1995-On | 1.9/2.0/2.6 | 01N | 349 |
| A8 | 1994-99 | 2.8 | 4HP18FLE | 359 |
| A8 | 1994-On | 2.5/2.8/3.7 | 5HP19 | 367 |
| A8 Quattro | 1994-99 | 4.2 | 4HP24A | 363 |
| A8 Quattro | 1995 | 2.5/2.8/3.7 | 5HP19 | 367 |
| A8 Quattro | 1995 | 2.8 | 4HP18FLA | 359 |

# VEHICLE INDEX

## AUDI

| Model | Year | Engine | Trans. | Page |
|---|---|---|---|---|
| A8 Quattro | 1999-On | 4.2 | 5HP24A | 368 |
| Cabriolet | 1992-95 | V6, 2.8L | 097 | 349 |
| Cabriolet | 1995-On | | 01N | 349 |
| Coupe | 1981-90 | | 089 | 346 |
| Coupe | 1988-90 | L5 | 087 | 346 |
| Coupe | 1990-96 | | 097 | 349 |
| Coupe | 1996 | | 01N | 349 |
| Fox | 1973-75 | L4, 1.5L | 003 | 36 |
| Fox | 1976-79 | L4, 1.6L | 003 | 36 |
| V8 Quattro | 1989 | | 4HP24 | 363 |

## BMW

| Model | Year | Engine | Trans. | Page |
|---|---|---|---|---|
| 3 Series (E46) | 1997-On | | ZF5HP19 | 367 |
| 318i | 1991-95 | L4, 1.8L | 4L30E | 53 |
| 318i | 1996-On | L4, 1.9L | 4L30E | 53 |
| 320i | 1993-94 | V8, 3.0L | ZF5HP18 | 366 |
| 323i | 1997-98 | L6, 2.5L | 4L30E | 53 |
| 323i | 2000 | | 5L40E | 49 |
| 325i | 1992-95 | L6, 2.5L | 4L30E | 53 |
| 325i | 2001-02 | | 5L40E | 49 |
| 328i | 1996-On | L6, 2.8L | 4L30E | 53 |
| 328i | 2000 | | 5L40E | 49 |
| 330Ci | 2001-On | | 5L40E | 49 |
| 5 Series (E39) | 1995-On | | ZF5HP24 | 368 |
| 5 Series (E39) | 1997-On | | ZF5HP19 | 367 |
| 525i | 1989-91 | | ZF4HP22 | 363 |
| 525i | 1991-95 | L6, 2.5L | 4L30E | 53 |
| 525i | 2001-On | | 5L40E | 49 |
| 528i | 1996-On | L6, 2.8L | 4L30E | 53 |
| 528i | 2000 | | 5L40E | 53 |
| 530i | 1993-95 | V8, 3.0L | ZF5HP18 | 366 |
| 530i | 2001-On | | 5L40E | 49 |
| 530ia | 1990 | | ZF5HP18 | 366 |
| 530it | 1990 | | ZF5HP18 | 366 |
| 535i | 1989-93 | | ZF4HP22 | 363 |
| 540i | 1991-95 | V8, 4.0L | ZF5HP30 | 369 |
| 540i | 1996-98 | V8, 4.4L | ZF5HP24 | 368 |
| 7 Series (E38) | 1997-On | | ZF5HP19 | 367 |
| 7 Series (E38) | 1997-On | On | ZF5HP24 | 368 |
| 740i | 1992-96 | V8, 4.0L | ZF5HP30 | 369 |
| 740i | 1996-98 | V8, 4.4L | ZF5HP24 | 368 |
| 745i | 2002-On | | ZF6HP26 | |
| 750iL | 1988-94 | V12, 5.0L | ZF4HP24 | 363 |
| 750iL | 1995-98 | V12, 5.4L | ZF5HP30 | 369 |
| 8 Series (E31) | 1995-On | On | ZF5HP24 | 368 |
| 840Ci | 1992-96 | V8, 4.0L | ZF5HP30 | 369 |
| 840Ci | 1996-98 | V8, 4.4L | ZF5HP24 | 368 |
| 840Cia (E31) | 1993-99 | | ZF5HP30 | 369 |
| 850 | 1988-94 | V12, 5.0L | ZF4HP24 | 363 |
| 850 | 1995-98 | V12, 5.4L | ZF5HP30 | 369 |
| All 3 speed | 1966-76 | | ZF3HP12 | 37 |
| All 3 speed | 1976-83 | | ZF3HP22 | 355 |
| ALL EXC. BELOW | 1984-94 | | ZF4HP22 | 363 |
| M3 | 1995-On | L6, 3.2L | ZF5HP18 | 366 |
| X5 | 2000-On | V8 | 5L40E | 49 |
| X5 | 2001-On | V6 | ZF5HP18 | 366 |
| Z3 | 1996-On | L4, 1.9L | 4L30E | 53 |
| Z3 | 1997-On | L6, 2.8L | 4L30E | 53 |
| Z3 | 2001-02 | | 5L40E | 49 |
| Z4 | 2003-On | | 5L40E | 49 |

## BUICK

| Model | Year | Engine | Trans. | Page |
|---|---|---|---|---|
| All w/2 speed | 1965-67 | | ST300 | 33 |
| Apollo | 1973-80 | | TH350 | 68 |
| Century | 1973-77 | | TH400 | 72 |
| Century | 1978-81 | | TH200C | 56 |
| Century | 1982-94 | | TH125C | 42 |
| Century | 1984-93 | | TH440T4 | 81 |
| Century | 1994-99 | | 4T60E | 81 |
| Century | 2000-03 | | 4T65E | 81 |
| Electra | 1974-76 | | TH375 | 72 |
| Electra | 1974-81 | | TH400 | 72 |
| Electra | 1976-83 | | TH350C | 68 |
| Electra | 1977-85 | | TH200C | 56 |
| Electra | 1980-83 | | TH250 | 68 |
| Electra | 1981-84 | | TH200-4R | 60 |
| Electra | 1985-89 | | TH440T4 | 81 |
| Estate Wagon | 1981-90 | | TH200-4R | 60 |
| LeSabre | 1974-76 | | TH375 | 72 |
| LeSabre | 1974-81 | | TH400 | 72 |
| LeSabre | 1976-83 | | TH350C | 68 |
| LeSabre | 1977-79 | | TH200C | 56 |
| LeSabre | 1984-84 | | TH700R4 | 86 |
| LeSabre | 1986-91 | | TH440T4 | 81 |
| LeSabre | 1992-97 | | 4T60E | 81 |
| LeSabre | 1998-On | | 4T65E | 81 |
| Opel | 1969-75 | | TH180 | 50 |
| Opel | 1976-79 | | TH200 | 56 |
| Park Avenue | 1980-83 | | TH250 | 68 |
| Park Avenue | 1980-83 | | TH350C | 68 |
| Park Avenue | 1985-89 | | TH440T4 | 81 |
| Park Avenue | 1991-96 | | 4T60E | 81 |
| Park Avenue | 1997-On | V6 3.8L | 4T65E | 81 |
| Reatta | 1989-90 | | TH440T4 | 81 |
| Reatta | 1991-92 | | 4T60E | 81 |
| Regal | 1969-81 | | TH350 | 68 |
| Regal | 1969-81 | | TH400 | 72 |
| Regal | 1982-83 | | TH350C | 68 |
| Regal | 1982-87 | | TH200C | 56 |
| Regal | 1983-87 | | TH200-4R | 60 |
| Regal | 1988-93 | | TH440T4 | 81 |
| Regal | To 69 | | ST300 | 33 |
| Regal GS | 1997-On | | 4T65E | 81 |
| Regal LS | 1994-On | | 4T60E | 81 |
| Rendezvous | 2002-On | | 4T65E | 81 |
| Riviera | 1965-78 | | TH400 | 72 |
| Riviera | 1977 | | TH350 | 68 |
| Riviera | 1977-78 | | TH200 | 56 |
| Riviera | 1979-81 | | TH325 | 64 |
| Riviera | 1982-85 | | TH325-4L | 64 |
| Riviera | 1986-90 | | TH440T4 | 81 |
| Riviera | 1991-99 | | 4T60E | 81 |
| Roadmaster | 1991-93 | | 4L60 | 86 |
| Roadmaster | 1994-96 | | 4L60E | 86 |
| Skyhawk | 1974-80 | | TH350 | 68 |
| Skyhawk | 1976-77 | | TH200 | 56 |
| Skyhawk | 1982-89 | | TH125C | 42 |
| Skyhawk | To 69 | | ST300 | 33 |
| Skylark | 1969-79 | | TH350 | 68 |
| Skylark | 1980-82 | | TH125 | 42 |
| Skylark | 1983-98 | 2.3L | TH125C | 42 |
| Skylark | 1994-98 | 3.1L | 4T60E | 81 |
| Somerset | 1985-89 | | TH125C | 42 |
| Special | 1965-69 | | ST300 | 33 |

# VEHICLE INDEX

## BUICK

| Model | Year | Engine | Trans. | Page |
|---|---|---|---|---|
| Special | 1967-72 | | TH400 | 72 |
| Special | 1969-72 | | TH350 | 68 |

## CADILLAC

| Model | Year | Engine | Trans. | Page |
|---|---|---|---|---|
| Allante | 1987-90 | | F7 | 81 |
| Allante | 1991-92 | | 4T60 | 81 |
| Allante | To 93 | | 4T80E | 92 |
| Catera | 1997-01 | | 4L30E | 53 |
| Cimmaron | 1982-88 | | TH125C | 42 |
| Concours DeVille | 1994-On | | 4T80E | 92 |
| CTS | 2002-On | | 5L40E | 49 |
| DeVille | 1973-84 | | TH400 | 72 |
| DeVille | 1994-On | | 4T60E | 81 |
| Eldorado | 1967-78 | | TH425 | 72 |
| Eldorado | 1979-81 | | TH325 | 64 |
| Eldorado | 1982-85 | | TH325-4L | 64 |
| Eldorado | 1986-90 | | TH440T4 | 81 |
| Eldorado | 1991-92 | | 4T60E | 81 |
| Eldorado | 1993-On | | 4T80E | 92 |
| Escalade/EXT | 1999-On | | 4L60E | 86 |
| Fleetwood | 1974-84 | | TH400 | 72 |
| Fleetwood | 1980-81 | | TH200C | 56 |
| Fleetwood | 1981-84 | | TH200-4R | 60 |
| Fleetwood | 1982 | | TH350C | 68 |
| Fleetwood | 1985-89 | | TH440T4 | 81 |
| Fleetwood | 1991-96 | | 4T60E | 81 |
| Seville | 1980-81 | | TH325 | 64 |
| Seville | 1982-85 | | TH325-4L | 64 |
| Seville | 1986-90 | | TH440T4 | 81 |
| Seville | 1991-On | | 4T60E | 81 |
| Seville STS | 1993-On | | 4T80E | 92 |
| SRX | 2004-On | | 5L50E | |
| XLR | 2004-On | | 5L50E | |

## CHECKER

| Model | Year | Engine | Trans. | Page |
|---|---|---|---|---|
| Checker | 1959-74 | | BW8/12 | 34 |
| Checker | 1975-On | | TH400 | 72 |

## CHEVROLET

| Model | Year | Engine | Trans. | Page |
|---|---|---|---|---|
| Astro Van | 1989-92 | | TH700-R4 | 86 |
| Astro Van | 1993-On | | 4L60E | 86 |
| Avalanche 1500 | 2001-On | V8 (5.3L) | 4L60E | 86 |
| Avalanche 2500 | 2001-On | V8 (8.1L) | 1000 | 114 |
| Beretta | 1987-92 | | TH125C | 42 |
| Camaro | 1967-74 | | TH400 | 72 |
| Camaro | 1968-81 | | TH350C | 68 |
| Camaro | 1980-83 | | TH200C | 56 |
| Camaro | 1983-93 | | TH700R4 | 86 |
| Camaro | 1994-On | | 4L60E | 86 |
| Caprice | 1974-76 | | TH375 | 72 |
| Caprice | 1974-76 | | TH400 | 72 |
| Caprice | 1974-80 | | TH350 | 68 |
| Caprice | 1978-79 | | TH200 | 56 |
| Caprice | 1980-84 | | TH350C | 68 |
| Caprice | 1980-87 | | TH200C | 56 |
| Caprice | 1981-89 | | TH200-4R | 60 |
| Caprice | 1982-93 | | TH700R4 | 86 |
| Caprice | 1994-On | | 4L60E | 86 |
| Cavalier | 1982-On | | TH125C | 42 |
| Cavalier | 1995-On | | 4T40E | 46 |

## CHEVROLET

| Model | Year | Engine | Trans. | Page |
|---|---|---|---|---|
| Celebrity | 1982-90 | 2.5L | TH125C | 42 |
| Celebrity | 1984-90 | 2.8L | TH440T4 | 81 |
| Chevelle | 1965-72 | | Alum PG | 38 |
| Chevelle | 1967-75 | | TH400 | 72 |
| Chevelle | 1968-81 | | TH350C | 68 |
| Chevelle | 1973-75 | | TH250 | 68 |
| Chevelle | 1977-81 | | TH200C | 56 |
| Chevelle | 1980-81 | | TH250C | 68 |
| Chevette | 1976-84 | | TH200C | 56 |
| Chevette | 1977-87 | | TH180 | 50 |
| Citation | 1980-85 | | TH125C | 42 |
| CK Blazer | 1969-82 | | TH350C | 68 |
| CK Blazer | 1978-79 | | TH400 | 72 |
| CK Blazer | 1982-92 | | TH700R4 | 86 |
| CK Blazer | 1993-On | | 4L60E | 86 |
| CK Blazer | 1994-On | | 4L80E | 77 |
| Corsica | 1987-92 | | TH125C | 42 |
| Corvair | 1965-69 | | Alum PG | 38 |
| Corvette | 1965-67 | | Alum PG | 38 |
| Corvette | 1968-77 | | TH400 | 72 |
| Corvette | 1976-81 | | TH350C | 68 |
| Corvette | 1982-93 | | TH700 | 86 |
| Corvette | 1994-96 | | 4L60E | 86 |
| El Camino | 1982-87 | | TH200C | 56 |
| Express Van | 1996-On | | 4L60E | 86 |
| Impala | 2000-On | | 4T65E | 81 |
| Impala SS | 1994-97 | | 4L60E | 86 |
| Lumina Car | 1990-93 | 2.5L, 3.1L | TH125C | 42 |
| Lumina Car | 1991-92 | 3.4L | TH440T4 | 81 |
| Lumina Car | 1993-96 | 3.4L | 4T60E | 81 |
| Lumina Car | 1997-99 | 3.1L | 4T60E | 81 |
| Lumina Car | 1997-On | 3.4L | 4T65E | 81 |
| Lumina Van | 1990-95 | 3.1L | TH125C | 42 |
| Lumina Van | 1992-96 | 3.8L | 4T60E | 81 |
| Luv Truck | 1976-81 | | TH200C | 56 |
| Malibu | 1982-84 | | TH350C | 68 |
| Malibu | 1982-87 | | TH200C | 56 |
| Malibu | 1984-87 | | TH200-4R | 60 |
| Malibu | 1997-On | | 4T40E | 46 |
| Monte Carlo | 1965-72 | | Alum PG | 38 |
| Monte Carlo | 1973-75 | | TH250 | 68 |
| Monte Carlo | 1980-81 | | TH250C | 68 |
| Monte Carlo | 1982-84 | | TH350C | 68 |
| Monte Carlo | 1982-87 | | TH200C | 56 |
| Monte Carlo | 1984-88 | | TH200-4R | 60 |
| Monte Carlo | 1995-99 | 3.1L | 4T60E | 81 |
| Monte Carlo | 1997-On | 3.4L, 3.8L | 4T65E | 81 |
| Monza | 1975-77 | | TH250 | 68 |
| Monza | 1976-80 | | TH200 | 56 |
| Monza | 1978-80 | | TH350 | 68 |
| Nova | 1965-73 | | Alum PG | 38 |
| Nova | 1968-70 | | TH400 | 72 |
| Nova | 1968-79 | | TH350 | 68 |
| Nova | 1974-75 | | TH250 | 68 |
| Nova | 1976-77 | | TH200 | 56 |
| Nova (import) | 1985-88 | Carb | MX1 | 327 |
| Nova (import) | To 88 | EFI | MS7 | 327 |
| Prizm | 1989-On | | MX1 | 327 |
| Prizm | 1990-On | | MS7 | 327 |
| S10 Truck | 1982 | | TH200C | 56 |
| S10 Truck | 1983-91 | | TH700R4 | 86 |
| S10 Truck | 1992-On | | 4L60E | 86 |

# VEHICLE INDEX

## CHEVROLET

| Model | Year | Engine | Trans. | Page |
|---|---|---|---|---|
| Silverado 1500 | 1999-On | | 4L60E | 86 |
| Silverado 1500HD | 1999-On | | 4L80E | 77 |
| Silverado 2500 | 1999-On | 6.0L | 4L80E | 77 |
| Silverado 2500 | 1999-On | 6.6L/8.1L | 1000 | 114 |
| Silverado 3500 | 1999-On | 6.0L | 4L80E | 77 |
| Silverado 3500 | 1999-On | 6.6L/8.1L | 1000 | 114 |
| Spectrum | 1985-89 | | F3A | 223 |
| Sprint | 1985-88 | | MX17 | 330 |
| Suburban 1500 | 1987-92 | | TH700R4 | 86 |
| Suburban 1500 | 1993-On | | 4L60E | 86 |
| Suburban 2500 | 1987-90 | | TH400 | 72 |
| Suburban 2500 | 1991-On | | 4L80E | 77 |
| Suburban 2500 | 2002-On | 8.1L | 1000 | 114 |
| Tahoe | 1995-On | | 4L60E | 86 |
| Tiltmaster | 1988-On | | JR403E | 274 |
| TrailBlazer | 2001-On | | 4L60E | 86 |
| Truck (C/K series) | 1966-90 | | TH400 | 72 |
| Truck (C/K series) | 1969-86 | | TH350C | 68 |
| Truck (C/K series) | 1982-92 | | TH700 | 86 |
| Truck (C/K series) | 1991-On | | 4L80E | 77 |
| Truck (C/K series) | 1993-On | | 4L60E | 86 |
| Van (full size) | 1969-86 | | TH350C | 68 |
| Van (full size) | 1975-90 | | TH400 | 72 |
| Van (full size) | 1983-92 | | TH700R4 | 86 |
| Van (full size) | 1991-On | | 4L80E | 77 |
| Van (full size) | 1993-97 | | 4L60E | 86 |
| Vega | 1971-73 | | Alum PG | 38 |
| Vega | 1972-73 | | TH350 | 68 |
| Vega | 1973-77 | | TH250 | 68 |
| Venture (van) | 1997-On | | 4T60E | 81 |

## CHRYSLER

| Model | Year | Engine | Trans. | Page |
|---|---|---|---|---|
| 300 | 1979 | | TF8/727 | 177 |
| 300M | 1999-On | | A606 | 173 |
| Cirrus | 1995-00 | | A604 | 173 |
| Concorde | 1993-On | | A606 | 173 |
| Conquest | 1984-89 | | 4N71B | 266 |
| Cordoba | 1975-80 | | TF8/727 | 177 |
| Cordoba | 1975-83 | | TF6/904 | 180 |
| E class | 1983-84 | | A413 | 162 |
| Executive | 1983-85 | | A470 | 162 |
| Fifth Avenue | 1982-89 | | TF6/904 | 180 |
| Fifth Avenue | 1983 | | TF8/727 | 177 |
| Fifth Avenue | 1995-On | | A604 | 173 |
| Imperial | 1967-75 | | TF8/727 | 177 |
| Imperial | 1981-83 | | TF6/904 | 180 |
| Imperial | 1991-92 | | A604 | 173 |
| Laser | 1984-86 | | A413 | 162 |
| Laser | 1990-94 | L4, 1.8L | KM175-5 | 252 |
| Laser | 1990-94 | L4, 2.0L | KM175-5 | 252 |
| Laser | 1991-98 | Turbo | F4A33-1 | 256 |
| Laser AWD | 1992-98 | L4, 2.0L | W4A33-1 | 256 |
| LeBaron | 1977-81 | | TF6/904 | 180 |
| LeBaron | 1978-81 | | TF8/727 | 177 |
| LeBaron | 1982-85 | | A470 | 162 |
| LeBaron | 1982-92 | | A413 | 162 |
| LHS | 1993-On | | A606 | 173 |
| Neon | 1995-On | | A670 | 162 |
| New Yorker | 1981-82 | | TF6/904 | 180 |
| New Yorker | 1983-87 | | A413 | 162 |
| New Yorker | 1983-96 | | A470 | 162 |

## CHRYSLER

| Model | Year | Engine | Trans. | Page |
|---|---|---|---|---|
| New Yorker | 1989-96 | | A604 | 173 |
| Newport | 1981-88 | | TF6/904 | 180 |
| Prowler | 2002-On | | A604 | 173 |
| PT Cruiser | 2000-On | | A604 | 173 |
| Sebring | 1996-On | | A604 | 173 |
| Town & Country | 1977-88 | | TF6/904 | 180 |
| Town & Country | 1989-On | | A604 | 173 |

## DAEWOO

| Model | Year | Engine | Trans. | Page |
|---|---|---|---|---|
| Cielo | 1994-On | 1.5L | 3T40E | 42 |
| Cielo | 1996-On | 1.5L | 4T60E | 81 |
| Lanos | 1996-On | 1.5L | 4T60E | 81 |
| Lanos | 1998-On | | 4T40E | 46 |
| Legonzia | 1997-On | 1.8L | ZF4HP14 | 357 |
| Legonzia | 1997-On | 2.0L | ZF4HP14 | 357 |
| Legonzia | 1998-On | 2.2L | AW50-40LE | 193 |
| Musoo | | Early | W4A-040 | 242 |
| Musoo | | Late | BTR M74 | |
| Nexia | 1994-On | 1.5L | 3T40E | 42 |
| Nexia | 1996-On | 1.5L | 4T60E | 81 |
| Nubira | 1996-On | 1.5L | ZF4HP14 | 357 |
| Nubira | 1996-On | 1.8L | ZF4HP14 | 357 |
| Nubira | 1996-On | 2.0L | 4T60E | 81 |
| Nubira | 1999-On | 2.0L | 4T40E | 46 |
| Prince | 1994-On | | A44DL | 308 |

## DAIHATSU

| Model | Year | Engine | Trans. | Page |
|---|---|---|---|---|
| Applause | 1990-On | | A140 | 330 |
| Charade | 1988-93 | | MX17 | 327 |
| Charmant | 1978-82 | | A40 | 308 |
| Mira | 1989-On | | Mini | 378 |
| Rocky | 1989-92 | | MX17 | 327 |
| Sirion | 2001-On | 1.3L | A4LB-1 | 378 |
| Terios | 2002-On | | A4LB-1 | 378 |
| YRV | 2001-On | | A140 | 330 |

## DELOREAN

| Model | Year | Engine | Trans. | Page |
|---|---|---|---|---|
| Delorean | 1981-86 | | 4141 | 292 |

## DODGE

| Model | Year | Engine | Trans. | Page |
|---|---|---|---|---|
| 24 | 1981-82 | | A404 | 162 |
| 400 | 1982-83 | | A413 | 162 |
| 600 | 1983-88 | | A413 | 162 |
| Aries K car | 1981-89 | | A413 | 162 |
| Aspen | 1976-81 | | TF6/904 | 180 |
| Aspen | 1977-80 | | TF8/727 | 177 |
| Avenger | 1996-00 | | A604 | 173 |
| Caravan | 1984-On | 2.4L | A670 | 162 |
| Caravan | 1991-On | 3.3L | A604 | 173 |
| Challenger | 1970-72 | | TF6/904 | 180 |
| Challenger | 1970-74 | | TF8/727 | 177 |
| Challenger | 1978-83 | | TF6/904 | 180 |
| Charger | 1966-78 | | TF6/904 | 180 |
| Charger | 1966-78 | | TF8/727 | 177 |
| Colt | 1978-81 | L4, 1.4L | KM170 | 252 |
| Colt | 1981-84 | L4, 1.4L | KM170-1 | 252 |
| Colt | 1987-88 | L4, 1.5L | KM171-1 | 252 |
| Colt | 1987-88 | L4, 1.6L | KM171-2 | 252 |
| Colt | 1990-91 | L4, 1.5L | F3A21-2 | 252 |

# VEHICLE INDEX

## DODGE


| Model | Year | Engine | Trans. | Page |
|---|---|---|---|---|
| Colt | 1991-94 | L4, 1.5L | F3A21-2 | 252 |
| Colt | 1993 | L4, 1.8L | F4A22-2 | 252 |
| Colt 100 | 1989 | L4, 1.5L | F3A21-2 | 252 |
| Colt 100 | 1990 | L4, 1.6L | KM176-5 | 252 |
| Colt 200 | 1989-90 | L4, 1.6L | KM176-5 | 252 |
| Colt 200 | 1989-94 | L4, 1.5L | F3A21-2 | 252 |
| Colt LA | 1985-86 | L4, 1.5L | KM171-1 | 252 |
| Colt LA | 1985-86 | L4, 1.6L | KM171-2 | 252 |
| Colt LC | 1990 | L4, 1.6L | KM176-5 | 252 |
| Colt Summit | 1989-90 | L4, 1.5L | KM171-5 | 252 |
| Colt Summit | 1991-94 | L4, 1.5L | F4A21-2 | 252 |
| Colt Summit | 1991-96 | L4, 1.5L | F3A21-2 | 252 |
| Colt Summit | 1993-96 | L4, 1.8L | F4A22-2 | 252 |
| Colt Summit LC | 1989-90 | L4, 1.6L | KM176-5 | 252 |
| Colt Summit Wagon | 1995-96 | L4, 1.8L | F4A22-2 | 252 |
| Colt Summit Wagon | 1995-96 | L4, 2.4L | F4A23-2 | 252 |
| Colt Summit Wagon | 1995-96 | L4, 2.4L | W4A32-1 | 252 |
| Colt Vista Wagon | 1986-88 | L4, 2.0L | KM172-0 | 252 |
| Colt Vista Wagon | 1987-88 | L4, 1.5L | KM171-1 | 252 |
| Colt Vista Wagon | 1989-91 | L4, 2.0L | KM172-5 | 252 |
| Colt Vista Wagon | 1992-93 | L4, 1.8L | W4A32-1 | 252 |
| Colt Vista Wagon | 1992-94 | L4, 1.8L | F4A22-2 | 252 |
| Colt Vista Wagon | 1992-94 | L4, 2.4L | F4A23-2 | 252 |
| Colt Vista Wagon | 1992-94 | L4, 2.4L | W4A32-1 | 252 |
| Colt Wagon | 1987-88 | L4, 1.5L | KM171-1 | 252 |
| Colt Wagon | 1989-90 | L4, 1.5L | KM171-5 | 252 |
| Conquest | 1984-89 | L4, 2.6L | E4N71B | 266 |
| Coronet | 1974-76 | | TF6/904 | 180 |
| Coronet | 1974-76 | | TF8/727 | 177 |
| D50 pickup | 1979-On | | TF6/904 | 180 |
| D50 pickup | 1990-94 | L4, 3.9L | A500 | 165 |
| D50 pickup 2wd | 1987-89 | L4, 2.4L | AW372 | 308 |
| D50 pickup 4wd | 1987-89 | V6 3.0L | KM148 | 308 |
| Dakota | 1987-88 | | TF6/904 | 180 |
| Dakota | 1988-On | V6, 3.9L | 42RE | 165 |
| Dakota | 1999-On | V8, 4.7L | 45RFE | 184 |
| Dakota | 1999-On | V8, 5.9L | 46RE | 169 |
| Dart | 1966-76 | | TF6/904 | 180 |
| Dart | 1969-76 | | TF8/727 | 177 |
| Daytona | 1984-91 | | A413 | 162 |
| Daytona | 1986 | | A470 | 162 |
| Daytona | 1989-91 | | A604 | 173 |
| Diplomat | 1977-87 | | TF6/904 | 180 |
| Diplomat | 1978-89 | | TF8/727 | 177 |
| Diplomat | 1989-89 | | A999 | 180 |
| Durango | 1998-On | V8, 5.9L | 46RE | 169 |
| Durango | 1999-On | V8, 4.7L | 45RFE | 184 |
| Dynasty | 1988 | | A670 | 162 |
| Dynasty | 1989-91 | | A413 | 162 |
| Dynasty | 1989-91 | | A604 | 173 |
| Intrepid | 1993-On | | A606 | 173 |
| Lancer | 1985-89 | | A413 | 162 |
| Lancer | 1986 | | A470 | 162 |
| Magnum | 1978-79 | | TF6/904 | 180 |
| Magnum | 1978-79 | | TF8/727 | 177 |
| Mirada | 1980 | | TF8/727 | 177 |
| Mirada | 1980-83 | | TF6/904 | 180 |
| Monaco | 1974-83 | | TF6/904 | 180 |
| Monaco | 1984-80 | | TF8/727 | 177 |
| Monaco | 1988-89 | L4, 2.5L | AR4 | 294 |
| Monaco | 1988-92 | V6, 3.0L | ZF4HP18 | 359 |
| Neon | 1995-01 | | A413 | 162 |


## DODGE


| Model | Year | Engine | Trans. | Page |
|---|---|---|---|---|
| Neon | 2002-On | | 41T | 173 |
| Omni | 1978-83 | | A404 | 162 |
| Omni | 1981-90 | | A413 | 162 |
| Pickup | 1965-91 | | TF6/904 | 180 |
| Pickup | 1969-91 | | TF8/727 | 177 |
| Pickup | 1988-On | | A500 | 165 |
| Pickup | 1990-On | | A518 | 169 |
| Raider | 1987-89 | | AW372 | 308 |
| Raider pickup 2wd | 1987-89 | | AW372 | 308 |
| Raider pickup 4wd | 1987-89 | | KM148 | 308 |
| Ram 1500 | | V8, 5.9L | 46RE | 169 |
| Ram 2500 | | V10, 8.0L | 47RE | 169 |
| Ram 2500 | | V8, 5.9L | 46RE | 169 |
| Ram 3500 | | V10, 8.0L | 47RE | 169 |
| Ram 3500 | | V8, 5.9L | 46RE | 169 |
| Ram 50 | 1987-89 | | KM148 | 308 |
| Ram Charger | 1974-88 | | TF8/727 | 177 |
| Ram Charger | 1982-88 | | A999 | 180 |
| Ram Charger | 1988-91 | | A500 | 165 |
| Ram Charger | 1990-91 | | A518 | 169 |
| Royal Monaco | 1977 | | TF6/904 | 180 |
| Royal Monaco | 1977 | | TF8/727 | 177 |
| Shadow | 1987-91 | | A413 | 162 |
| Spirit | 1989-91 | | A413 | 162 |
| Spirit | 1990-91 | | A604 | 173 |
| St Regis | 1979-81 | | TF6/904 | 180 |
| St Regis | 1979-81 | | TF8/727 | 177 |
| Stealth | 1991-On | V6, 3.0L | F4A33-1 | 256 |
| Stratus | 1995-On | | A604 | 173 |
| Van | 1969-91 | | TF8/727 | 177 |
| Van | 1981-87 | | TF6/904 | 180 |
| Van | 1988-On | | A500 | 165 |
| Van | 1990-On | | A518 | 169 |
| Viper | 1993-On | | A618 | 169 |


## EAGLE


| Model | Year | Engine | Trans. | Page |
|---|---|---|---|---|
| 2000 GTX | 1989-93 | L4, 2.0L | F4A22-2 | 252 |
| 2000 GTX AWD | 1992-94 | L4, 2.0L | W4A32-1 | 252 |
| Medallion | 1988-89 | L4, 2.2L | MB1 | 288 |
| Premier | 1988 | L4, 2.5L | AR4 | 294 |
| Premier | 1988-92 | L6, 3.0L | ZF4HP18 | 359 |
| Premier | 1990-92 | | A604 | 173 |
| Summit | 1989-90 | | KM176-5 | 252 |
| Summit | 1989-97 | | KM171-5 | 252 |
| Summit | 1991-92 | | KM176-5 | 252 |
| Summit | 1991-92 | | W4A32 | 252 |
| Summit | 1993-97 | | KM175-5 | 252 |
| Summit Wagon | 1995-97 | | F4A22-2 | 252 |
| Summit Wagon | 1995-97 | | F4A23-2 | 252 |
| Summit Wagon | 1995-97 | | W4A32-1 | 252 |
| Talon | 1990-94 | Non Turbo | F4A22-2 | 252 |
| Talon | 1990-94 | Non Turbo | KM175-5 | 252 |
| Talon | 1991-97 | Turbo | F4A33-1 | 252 |
| Talon | 1991-98 | Turbo | F4A33-1 | 252 |
| Talon | 1992-98 | | W4A33-1 | 256 |
| Talon | 1993-94 | L4, 1.8L | F4A22-2 | 252 |
| Talon | 1995-97 | Non Turbo | A604 | 173 |
| Talon | 1995-98 | | A604 | 173 |
| Talon AWD | 1991-97 | Turbo | W4A33-1 | 256 |
| Vision | 1993-On | | A606 | 173 |
| Vista | 1987-88 | L4, 1.5L | KM171-1 | 252 |

# VEHICLE INDEX

## EAGLE

| Model | Year | Engine | Trans. | Page |
|---|---|---|---|---|
| Vista | 1987-88 | L4, 1.6L | KM171-2 | 252 |
| Vista | 1989 | L4, 1.5L | F3A21-2 | 252 |
| Vista | 1989 | L4, 1.6L | KM176-5 | 252 |
| Vista Wagon | 1991 | L4, 2.0L | F3A22-2 | 252 |
| Vista Wagon | 1992-94 | L4, 1.8L | F4A22-2 | 252 |
| Vista Wagon | 1992-94 | L4, 2.4L | F4A23-2 | 252 |
| Vista Wagon AWD | 1992-93 | L4, 1.8L | W4A32-1 | 252 |
| Vista Wagon AWD | 1992-93 | L4, 2.4L | W4A32-1 | 252 |

## FERRARI

| Model | Year | Engine | Trans. | Page |
|---|---|---|---|---|
| 456M | | | TBA | |
| GT400 | 1986-88 | | TH400 | 72 |

## FIAT

| Model | Year | Engine | Trans. | Page |
|---|---|---|---|---|
| 124 | 1971-83 | | TH180 | 50 |
| 131 | 1975-78 | | TH180 | 50 |
| 2000E | 1974 | | C4 | 144 |
| 2000E | 1975-81 | | C3 | 141 |
| 2300 Series | 1966-71 | | BW35 | 186 |
| Brava | 1975-81 | | TH180 | 50 |
| Brava | 1995-00 | | AW60-40 | 195 |
| Bravo | 1995-00 | | AW60-40 | 195 |
| Chroma | 1985-96 | | 3 sp. | |
| Chroma | 1991-96 | | ZF4HP18Q | 359 |
| Lancia Thesis | 2002-On | V6 3.0L | 55-50SN | 194 |
| Marea | 1996-On | | AW50-40 | 193 |
| Panda Selecta | 1991-On | | ECVT | |
| Punto Selecta | 1993-98 | | ECVT | |
| Punto Speedgear | 1999-On | 1.2L, 16V | ECVT | |
| Regata | 1983-90 | | VW010 | 346 |
| Spider 2000 | 1981-82 | | TH180 | 50 |
| Strada | 1979-81 | | VW010 | 346 |
| Tempra | 1990-96 | | ECVT | |
| Tempra | 1991-96 | 2.0L | AW50-40 | 193 |
| Tivo | 1985-95 | | 4 sp | |
| Tivo Selecta | 1989-95 | | ECVT | |
| Uno Selecta | 1987-95 | | ECVT | |
| X1/9 | 1976-82 | | VW010 | 346 |

## FORD

| Model | Year | Engine | Trans. | Page |
|---|---|---|---|---|
| Aerostar | 1982-86 | | C5 | 144 |
| Aerostar | 1985-95 | | A4LD | 117 |
| Aerostar | 1996 | | 4R44E | 117 |
| Aerostar | 1997 | | 5R55E | 117 |
| Aspire | 1994-97 | | F3A | 223 |
| Bronco | 1973-77 | | C4 | 144 |
| Bronco | 1978-91 | | C6 | 148 |
| Bronco | 1985-92 | | AOD | 124 |
| Bronco | 1985-92 | | AOD | 124 |
| Bronco | 1994-98 | | E4OD | 154 |
| Bronco | 1994-98 | | E4OD | 154 |
| Bronco II | 1984-84 | | C5 | 144 |
| Bronco II | 1984-90 | | A4LD | 117 |
| Contour | 1995-On | | CD4E | 152 |
| Cortina | 1968-73 | | BW35 | 186 |
| Cortina | 1974 | | C4 | 144 |
| Cortina | 1974-87 | | C3 | 141 |
| Courier | 1972-75 | | BW35 | 186 |
| Courier | 1973-82 | | L3N71B | 263 |
| Crown Victoria | 1983-92 | | AOD | 124 |

## FORD

| Model | Year | Engine | Trans. | Page |
|---|---|---|---|---|
| Crown Victoria | 1993-94 | | AODE | 124 |
| Crown Victoria | 1995-On | | 4R70W | 124 |
| Econoline E150 | 1981-92 | | AOD | 124 |
| Econoline E150 | 1993-98 | | 4R70W | 124 |
| Econoline E150 | 1999-On | | 4R100 | 154 |
| Econoline E250 | 1981-93 | | AOD | 124 |
| Econoline E250 | 1993-99 | | 4R70W | 124 |
| Econoline E250 | 2000-On | | 4R100 | 154 |
| Econoline E350 | 1981-98 | 6.8L | E4OD | 154 |
| Econoline E350 | 1981-On | 5.4L | AOD | 124 |
| Econoline E350 | 1999-02 | 6.8L | 4R100 | 154 |
| Econoline E350 | 2003 | 5 Sp | 5R110W | 123 |
| Escape | 2001-On | | CD4E | 152 |
| Escort | 1967-74 | | BW35 | 186 |
| Escort | 1981-90 | | ATX | 130 |
| Escort | 1991-99 | | 4EAT-F | 225 |
| Excursion | 2001-02 | | 4R100 | 154 |
| Excursion | 2003-On | 5 Sp | 5R110W | 123 |
| EXP | 1982-88 | | ATX | 130 |
| Expedition | 1997-98 | V8, 4.6L | E4OD | 154 |
| Expedition | 1997-On | V8, 5.4L | 4R70W | 124 |
| Expedition | 1999-On | V8, 4.6L | 4R100 | 154 |
| Explorer | 1991-94 | | A4LD | 117 |
| Explorer | 1995-96 | V6, 4.0L | 4R55E | 117 |
| Explorer | 1997-On | V6, 4.0L | 5R55E | 117 |
| Explorer | 1997-On | V8, 5.0L | 4R70W | 124 |
| F100 | 1965-72 | | C4 | 144 |
| F100 | 1973-83 | | C6 | 148 |
| F100 | 1981-83 | | AOD | 124 |
| F100 | 1982-83 | | C5 | 144 |
| F150 | 1975-91 | | C6 | 148 |
| F150 | 1982-86 | | C5 | 144 |
| F150 | 1985-92 | | AOD | 124 |
| F150 | 1992-98 | | E4OD | 154 |
| F150 | 1994-98 | | 4R70W | 124 |
| F150 | 1999-On | | 4R100 | 154 |
| F250 | 1964-72 | | C4 | 144 |
| F250 | 1968-98 | | C6 | 148 |
| F250 | 1981-93 | | AOD | 124 |
| F250 | 1990-98 | | E4OD | 154 |
| F250 | 1994-98 | | 4R70W | 124 |
| F250 | 1999-On | | 4R100 | 154 |
| F350 | 1965-72 | | FMX | 160 |
| F350 | 1968-98 | | C6 | 148 |
| F350 | 1989-98 | | E4OD | 154 |
| F350 | 1993-98 | | 4R70W | 124 |
| F350 | 1999-02 | | 4R100 | 154 |
| F350 | 2003-On | | 5R110W | 123 |
| F450 | 1989-98 | | E4OD | 154 |
| F450 | 1989-98 | | E4OD | 154 |
| F450 | 1992 | | C6 | 148 |
| F450 | 1992-On | | C6 | 148 |
| F450 | 2003-On | | 5R110W | 123 |
| F500/600 | 1970-78 | | C6 | 148 |
| F500/600 | 1970-78 | | C6 | 148 |
| Fairlane | 1964-70 | | C4 | 144 |
| Fairlane | 1966-70 | | C6 | 148 |
| Fairmont | 1978-81 | | C4 | 144 |
| Fairmont | 1978-83 | | C3 | 141 |
| Fairmont | 1982-83 | | C5 | 144 |
| Falcon | 1965-71 | | C4 | 144 |
| Falcon | 1971 | | C6 | 148 |

# VEHICLE INDEX

## FORD

| Model | Year | Engine | Trans. | Page |
|---|---|---|---|---|
| Falcon | 1971 | | FMX | 160 |
| Festiva | 1989-93 | | F3A | 223 |
| Fiesta (Europe) | 1997-On | | CTX | 372 |
| Focus | 2000-On | | 4F27E | 231 |
| Galaxy | 1999-On | | 5F31J | 354 |
| Galaxy (Europe) | 1997-On | | AG4 | 349 |
| Granada | 1975-80 | | L3N71B | 263 |
| Granada | 1975-81 | | C4 | 144 |
| Granada | 1981-82 | | C3 | 141 |
| Granada | 1982 | | C5 | 144 |
| Heritage | 2004-On | | 4R100 | 154 |
| LTD | 1975-80 | | C4 | 144 |
| LTD | 1975-80 | | C6 | 148 |
| LTD | 1975-81 | | FMX | 160 |
| LTD | 1980-86 | | AOD | 124 |
| LTD II | 1977-79 | | C4 | 144 |
| LTD II | 1977-79 | | C6 | 148 |
| LTD II | 1977-79 | | FMX | 160 |
| Maverick | 1970-77 | | C4 | 144 |
| Mondeo (Euro) | 2002-On | | 5F31J | 354 |
| Mustang | 1966-81 | | C4 | 144 |
| Mustang | 1969-73 | | FMX | 160 |
| Mustang | 1975-86 | L4, 2.3L | C3 | 141 |
| Mustang | 1975-86 | L4, 3.3L | C3 | 141 |
| Mustang | 1982-86 | L4, 3.8L | C5 | 144 |
| Mustang | 1984-93 | L4, 3.8L | AOD | 124 |
| Mustang | 1984-93 | V8, 5.0L | AOD | 124 |
| Mustang | 1987-93 | L4, 2.3L | A4LD | 117 |
| Mustang | 1994-95 | | AODE | 124 |
| Mustang | 1996-On | | 4R70W | 124 |
| Pinto | 1971-80 | | C4 | 144 |
| Pinto | 1974-80 | | C3 | 141 |
| Probe | 1989-92 | L4, 2.2L | 4EAT-G | 228 |
| Probe | 1993-97 | V6, 2.5L | 4EAT-G | 228 |
| Probe | 1994-97 | L4, 2.0L | CD4E | 152 |
| Ranchero | 1965-79 | | C4 | 144 |
| Ranchero | 1968-79 | | FMX | 160 |
| Ranchero | 1977-79 | | C6 | 148 |
| Ranger | 1982-86 | | C5 | 144 |
| Ranger | 1983-84 | | C3 | 141 |
| Ranger | 1985-94 | | A4LD | 117 |
| Ranger | 1995-96 | V6, 4.0L | 4R55E | 117 |
| Ranger | 1995-97 | L4, 2.3L | 4R44E | 117 |
| Ranger | 1995-On | V6, 3.0L | 4R44E | 117 |
| Ranger | 1997-On | V6, 4.0L | 5R55E | 117 |
| Ranger | 1998-On | L4, 2.5L | 4R44E | 117 |
| Sport Trac | 2001-On | | 5R55E | 117 |
| SVT | 2004-On | | 4R100 | 154 |
| Taurus | 1986-90 | V6, 3.0L | AXOD | 133 |
| Taurus | 1986-91 | L4, 2.5L | ATX | 130 |
| Taurus | 1988-90 | V6, 3.8L | AXOD | 133 |
| Taurus | 1991-93 | | AXODE | 133 |
| Taurus | 1994-On | | AX4S | 133 |
| Taurus SHO | 1993-94 | | AX4S | 133 |
| Taurus SHO | 1995 | | AX4N | 137 |
| Tempo | 1984-94 | | ATX | 130 |
| Thunderbird | 1956-60 | | Cruiseomatic | 33 |
| Thunderbird | 1961-66 | | MX | 33 |
| Thunderbird | 1966-81 | | C4 | 144 |
| Thunderbird | 1968-79 | | C6 | 148 |
| Thunderbird | 1975-79 | | FMX | 160 |
| Thunderbird | 1980-81 | | C3 | 141 |

## FORD

| Model | Year | Engine | Trans. | Page |
|---|---|---|---|---|
| Thunderbird | 1980-92 | | AOD | 124 |
| Thunderbird | 1982-86 | | C5 | 144 |
| Thunderbird | 1993-94 | | AODE | 124 |
| Thunderbird | 1995-97 | | 4R70W | 124 |
| Thunderbird | 2002-On | | 5R55N | 121 |
| Torino | 1968-76 | | C4 | 144 |
| Torino | 1968-76 | | C6 | 148 |
| Torino | 1969-76 | | FMX | 160 |
| Van | 1964-77 | | C4 | 144 |
| Van | 1975-98 | | C6 | 148 |
| Van | 1983-On | | AOD | 124 |
| Van | 1989-On | | E4OD | 154 |
| Windstar | 1994-On | | AX4S | 133 |
| ZX2 | 2001-On | | CD4E | 152 |

## FUSO

| Model | Year | Engine | Trans. | Page |
|---|---|---|---|---|
| FG, FE, FH, FK | 1988-On | | JR403E | 274 |

## GEO

| Model | Year | Engine | Trans. | Page |
|---|---|---|---|---|
| Metro | 1989-On | | MX1 | 327 |
| Nova | 1985-On | CARB | MX1 | 327 |
| Nova | 1988-92 | EFI | MS7 | 327 |
| Nova | 1993-On | L4, 1.8L | MS7 | 327 |
| Prizm | 1985-95 | CARB | MX1 | 327 |
| Prizm | 1988-92 | EFI | MS7 | 327 |
| Prizm | 1993-On | L4, 1.8L | MS7 | 327 |
| Spectrum | 1985-89 | L4, 1.5L | F3A | 223 |
| Storm | 1990-93 | | JF403E | 98 |
| Tracker | 1989-98 | L4, 1.6L | TH180C | 50 |
| Tracker | 1996-98 | L4, 2.0L | A44DE | 308 |

## GMC

| Model | Year | Engine | Trans. | Page |
|---|---|---|---|---|
| Caballero | 1978-79 | | TH200 | 56 |
| Caballero | 1978-80 | | TH350 | 68 |
| Caballero | 1980-84 | | TH250C | 68 |
| Caballero | 1980-84 | | TH350C | 68 |
| Caballero | 1980-87 | | TH200C | 56 |
| Caballero | 1985-87 | | TH200-4R | 60 |
| Envoy | 1998-On | | 4L60E | 86 |
| Jimmy | 1970-79 | | TH350 | 68 |
| Jimmy | 1978-79 | | TH400 | 72 |
| Jimmy | 1980-82 | | TH350C | 68 |
| Jimmy | 1982-93 | | TH700R4 | 86 |
| Jimmy | 1993-On | | 4L60E | 86 |
| S15/Sonoma | 1982 | | TH200C | 56 |
| S15/Sonoma | 1983-91 | | TH700R4 | 86 |
| S15/Sonoma | 1992-On | | 4L60E | 86 |
| Safari Van | 1985-89 | | TH700R4 | 86 |
| Safari Van | 1991-93 | | 4L60 | 86 |
| Safari Van | 1993-On | | 4L60E | 86 |
| Sierra Denali | 2002-On | 4.8L, 5.0L | 4L60E | 86 |
| Sierra Denali | 2002-On | 6.0L | 4L65E | |
| Sierra Denali | 2002-On | 6.0L | 4L80E | 77 |
| Suburban | 1992 | | 4L60 | 86 |
| Suburban | 1992-On | | 4L80E | 77 |
| Suburban | 1993-On | | 4L60E | 86 |
| Syclone | 1992 | | 4L60E | 86 |
| Truck (C/K series) | 1966-90 | | TH400 | 72 |
| Truck (C/K series) | 1969-86 | | TH350C | 68 |
| Truck (C/K series) | 1982-92 | | TH700R4 | 86 |

# VEHICLE INDEX

## GMC

| Model | Year | Engine | Trans. | Page |
|---|---|---|---|---|
| Truck (C/K series) | 1991-On | | 4L80E | 77 |
| Truck (C/K series) | 1993-On | | 4L60E | 86 |
| Typhoon | 1992 | | 4L60E | 86 |
| Van | 1970-79 | | TH350 | 68 |
| Van | 1975-88 | | TH400 | 72 |
| Van | 1980-86 | | TH350C | 68 |
| Van | 1983-90 | | TH700R4 | 86 |
| Van | 1991-On | | 4L80E | 77 |
| Van | 1993-On | | 4L60E | 86 |
| Various | 1965-69 | | Alum PG | 38 |
| Yukon 1500 | 1991-93 | | 4L60 | 86 |
| Yukon 1500 | 1993-On | | 4L60E | 86 |
| Yukon 2500 | 1992-On | 6.0L | 4L80E | 77 |
| Yukon 2500 | 2002-On | 8.1L | 1000 | 114 |
| Yukon Denali | 1999-01 | | 4L80E | 77 |

## HEAVY TRUCKS

| Model | Year | Engine | Trans. | Page |
|---|---|---|---|---|
| Bearing Truck | 2000-On | | AT542 | 100 |
| Ford F650 | 2000-On | | MD300 | 111 |
| Ford F750 | 2000-On | | MD300 | 111 |
| Freightliner FL50 | 1999-On | | 1000 | 114 |
| Freightliner L7500 | 1999-On | | MD300 | 111 |
| Freightliner L7500 | 2002-On | | A581 | 197 |
| Hino | 2000-On | | AT545 | 100 |
| Navistar 4700 | 2000-On | | AT545 | 100 |
| UD1200 | 2000-On | | 450-43LE | 196 |
| UD1400 | 2000-On | | 450-43LE | 196 |
| UD1800 | 2000-On | | 450-43LE | 196 |
| UD2000 | 2000-On | | AT545 | 100 |
| UD2300 | 2000-On | | AT545 | 100 |
| UD2600 | 2000-On | | AT545 | 100 |

## HOLDEN

| Model | Year | Engine | Trans. | Page |
|---|---|---|---|---|
| 308 Torana | 1967-69 | | BW35 | 186 |
| 308 Torana | 1969-On | | TH180 | 50 |
| 308 Torana | 1975-On | | TH400 | 72 |
| Apollo JM | 1993-On | 2.2L | A140E | 330 |
| Apollo JM | 1993-On | 3.0L | A540E | 336 |
| Berlina | 1988-91 | 2.0L | TH180 | 50 |
| Calais VR | 1993-On | | 4L60E | 86 |
| Caprice | 1990-92 | | TH700 | 86 |
| Caprice | 1993-On | | 4L60E | 86 |
| Commodore | 1988-On | 3.8L, 5.0L | 4L60E | 86 |
| Monaro CV8 | 2002-On | 3.7L, V8 | 4L60E | 86 |
| Rodeo T | 1988-On | | A43D | 308 |
| Some | 1975-86 | | TH350 | 68 |
| Some | 1986-90 | | TH125C | 42 |
| Statesman | 1993-On | | 4L60E | 86 |

## HONDA

| Model | Year | Engine | Trans. | Page |
|---|---|---|---|---|
| Accord | 1976-78 | | 2 speed | 35 |
| Accord | 1976-83 | | 3 speed | 198 |
| Accord | 1983 | | AK | 200 |
| Accord | 1984-85 | | AS | 202 |
| Accord | 1986-89 | | PF4 | 204 |
| Accord | 1990 | | PX4B | 211 |
| Accord | 1991 | | MPXA | 211 |
| Accord | 1991-92 | | APX4 | 211 |
| Accord | 1992 | | MPWA | 211 |
| Accord | 1993 | | MPXA | 211 |

## HONDA

| Model | Year | Engine | Trans. | Page |
|---|---|---|---|---|
| Accord | 1994-95 | | MPOA | 211 |
| Accord | 1994-97 | | A0YA | 211 |
| Accord | 1995-97 | V6, 2.7L | MPZA | 213 |
| Accord | 1996-97 | | BOYA | 211 |
| Accord | 1998-02 | V6, 3.0L | B7XA | 211 |
| Accord | 1998-On | L4, 2.3L | BAXA | 213 |
| Accord | 1999-On | L4, 2.3L | MAXA | 213 |
| Accord | 2003-On | L4, 2.3L | BCLA | 215 |
| Accord | 2003-On | V6, 3.0L | BAYA | 221 |
| Civic | 1973-80 | | 2 speed | 35 |
| Civic | 1981-85 | | 3 speed | 198 |
| Civic | 1986-87 | | CA | 202 |
| Civic | 1988-91 | exc. 1.6L | L4 | 202 |
| Civic | 1989-90 | 1.6L wagon | S5 | 202 |
| Civic | 1991 | 1.6L wagon | MPSA | |
| Civic | 1991 | exc. 1.6L | ML4A | 202 |
| Civic | 1992-94 | | M24A | 207 |
| Civic | 1992-95 | | A24A | 207 |
| Civic | 1996 | | A4RA | 202 |
| Civic | 1997-00 | | B4RA | 202 |
| Civic | 1997-99 | Sedan | M4RA | 202 |
| Civic | 2001-On | | BMXA | 202 |
| Civic | 2003-On | CVT | SLYA | 372 |
| Civic Del Sol | 1995-97 | | S24A | 207 |
| Civic GX | 1999 | | BDRA | 202 |
| Civic HX | 1996-99 | CVT | M4VA | 372 |
| Civic HX | 2000-On | CVT | MLYA | 372 |
| Civic Hybrid | 2003-On | CVT | SZCA | 372 |
| CR-V | 1997 | | SDMA | |
| CR-V | 1997-98 | | M4TA | 209 |
| CR-V | 1998-99 | | MDLA | 209 |
| CR-V | 2001 | | MDMA | 209 |
| CR-V | 2002-On | | MCVA | 215 |
| CR-V | 2002-On | | MRVA | 215 |
| Element | 2001 | 4WD | MZKA | 215 |
| Element | 2001-On | 2WD | BZKA | 215 |
| Insight | 2001-On | | MHTA | 372 |
| Odyssey | 1995-98 | 2.2L | MPJA | 211 |
| Odyssey | 1998 | 2.3L | MDWA | 213 |
| Odyssey | 1999-01 | 2.3L | B7TA | 216 |
| Odyssey | 2002-On | | BYBA | 221 |
| Passport | 1994-On | | 4L30E | 53 |
| Prelude | 1979 | | 2 speed | 35 |
| Prelude | 1980-83 | | 3 speed | 198 |
| Prelude | 1988-89 | | K4 | 204 |
| Prelude | 1990-91 | | PY8A | 204 |
| Prelude | 1991 | 2.0L only | MY8A | 204 |
| Prelude | 1992-96 | | MP1A | 211 |
| Prelude | 1997-On | | M6HA | 213 |
| Prelude DX | 1984-87 | | AS | 202 |
| Prelude Si | 1985-87 | | F4 | 204 |

## HYUNDAI

| Model | Year | Engine | Trans. | Page |
|---|---|---|---|---|
| Accent | 1995-00 | | A4AF1 | 252 |
| Accent | 2001-On | | A4AF3 | 252 |
| Accent | 2001-On | | A4BF3 | 252 |
| Elantra | 1991-95 | 1.6L | F4A21-2 | 252 |
| Elantra | 1991-95 | 1.8L | F4A22-2 | 252 |
| Elantra | 1996-99 | 1.8L | A4BF1 | 252 |
| Elantra | 1996-On | 2.0L | A4BF1 | 252 |
| Elantra | 1999-On | 1.8L | A4BF3 | 252 |

# VEHICLE INDEX

## HYUNDAI

| Model | Year | Engine | Trans. | Page |
|---|---|---|---|---|
| Excel | 1986 | | KM170-1 | 252 |
| Excel | 1987-89 | | KM171-1 | 252 |
| Excel | 1990-94 | | F4A22-2 | 252 |
| Santa Fe | 2000-On | | F4A51 | 233 |
| Scoupe | 1990-92 | | F4A22-2 | 252 |
| Scoupe | 1993-95 | | A4AF1 | 252 |
| Sonata | 1988 | | KM175-2 | 252 |
| Sonata | 1989-91 | | F4A21-2 | 252 |
| Sonata | 1990-91 | 3.0L | KM177-8 | 252 |
| Sonata | 1990-93 | 3.0L | KM177-8 | 252 |
| Sonata | 1992-94 | 3.0L | F4A23-2 | 252 |
| Sonata | 1992-98 | 2.0L | F4A21-2 | 252 |
| Sonata | 1995-98 | 3.0L | F4A33-1 | 256 |
| Sonata | 1999-On | 2.0L | F4A42-2 | 259 |
| Sonata | 1999-On | 3.0L | F4A42-2 | 259 |
| Tiburon | 1996-98 | | A4AF2 | 252 |
| Tiburon | 1999-01 | L4, 1.8L, 2.0L | A4BF3 | 252 |
| Tiburon | 1999-On | | A4BF2 | 252 |
| XG Grandeur | 1999-On | 2.0L, 2.5L | F4A42 | 259 |
| XG Grandeur | 2000-On | 3.0L | F5A51 | 260 |
| XG300 | 1999-01 | | F5A51 | 260 |
| XG350 | 2002-On | | F5A51 | 260 |

## INFINITI

| Model | Year | Engine | Trans. | Page |
|---|---|---|---|---|
| FX35 | 2003-On | | RE5R05A | 273 |
| FX45 | 2003-On | | RE5R05A | 273 |
| G20 | 1991-97 | | RL4F03A/V | 282 |
| G20 | 1998-On | | RL4F03A/V | 282 |
| G35 | 2003-On | | RE5R05A | 273 |
| I30 | 1995-00 | | RE4F04A/V | 285 |
| I35 | 2001-On | | RE4F04A/V | 285 |
| J30 | 1992-97 | | RE4R01A | 268 |
| M30 | 1990-92 | | RE4R01A | 268 |
| M45 | 2003-On | | RE5R05A | 273 |
| Q45 | 1990-01 | | RE4R03A | 274 |
| Q45 | 2002-On | | RE5R01A | 272 |
| QX4 | 1997-On | | RE4R01A | 268 |

## ISUZU

| Model | Year | Engine | Trans. | Page |
|---|---|---|---|---|
| Amigo | 1991-95 | | A44DL | 308 |
| Amigo | 1998-On | | 4L30E | 53 |
| Ascender | 2003-On | | 4L60E | 86 |
| Axiom | 2002-On | | 4L30E | 53 |
| FRR truck | 1995-On | | AT542 | 100 |
| Hombre | 1996-00 | | 4L60E | 86 |
| I-Mark | 1981-84 | | A40 | 308 |
| I-Mark | 1985-92 | | F3A | 223 |
| Impulse | 1983-89 | Non Turbo | A42D | 308 |
| Impulse | 1985-89 | Turbo | A44DL | 308 |
| Impulse | 1990-93 | | JF403E | 98 |
| NPR truck | 1988-97 | | JR403E | 274 |
| NPR truck | 1998-On | | A450-43LE | 196 |
| NQR truck | 1999-On | | A450-43LE | 196 |
| Oasis | 1995-97 | | MPJA | 211 |
| Oasis | 1998-On | | MDWA | 213 |
| Passenger Cars | 1965-75 | Various | BW35 | 186 |
| Passenger Cars | 1983-On | Various | TH125C | 42 |
| Pick-up | 1981-82 | | TH200 | 56 |
| Pick-up | 1983-87 | | A40 | 308 |
| Pick-up | 1988-93 | | A44DL | 308 |
| Rodeo | 1990-On | | 4L30E | 53 |

## ISUZU

| Model | Year | Engine | Trans. | Page |
|---|---|---|---|---|
| Stylus | 1991-93 | | F3A | 223 |
| Trooper | 1988-91 | 4 cyl | A340H | 312 |
| Trooper | 1990-On | V6 | 4L30E | 53 |
| Truck - some | 1972-On | | A727 | 177 |
| Vehicross | 1999-On | | 4L30E | 53 |

## JAGUAR

| Model | Year | Engine | Trans. | Page |
|---|---|---|---|---|
| 3.4S & 3.8S | 1963-66 | | BW DG | |
| 3.4S & 3.8S | 1963-68 | | BW35 | 186 |
| E type & Series II | 1964-71 | 4.2L, L6 | BW8/12 | 34 |
| E type Series III | 1971-74 | V12 | BW12 | 34 |
| MK10 & 420G | 1964-70 | 4.2L, L6 | BW8/12 | 34 |
| Vanden PLAS | 1998-On | 4.0L, V8 | ZF5HP24 | 368 |
| X | 1999-On | | JR506E | 354 |
| XJ12 | 1973-77 | 5.3L, V12 | BW12 | 34 |
| XJ12 | 1973-93 | 5.3L, V12 | TH400 | 72 |
| XJ12 | 1994-On | 5.3L, V12 | 4L80E | 77 |
| XJ6 | 1968-70 | 4.2L, L6 | BW8/12 | 34 |
| XJ6 | 1968-73 | 2.8L, L6 | BW35 | 186 |
| XJ6 | 1969-73 | 4.2L, L6 | BW12 | 34 |
| XJ6 | 1974-87 | 4.2L, L6 | BW65 | 186 |
| XJ6 | 1987-94 | 3.6L, L6 | ZF4HP22 | 363 |
| XJ6 | 1987-97 | 2.9L, L6 | ZF4HP22 | 363 |
| XJ6 | 1988-97 | 4.2L, L6 | ZF4HP22 | 363 |
| XJ6 | 1996-97 | 4.0L, L6 | ZF4HP24 | 363 |
| XJ8 | 1997-On | 4.0L, V8 | ZF5HP24 | 368 |
| XJ8 (X300) | 1997-On | | ZF5HP24 | 368 |
| XJL | 1998 | 4.0L, V8 | ZF5HP24 | 368 |
| XJS | 1976-92 | V12 | TH400 | 72 |
| XJS | 1993-98 | V12 | 4L80E | 77 |
| XJS | 1998-On | 4.0L, V8 SC | 4L80E | 77 |
| XK8 | 1996-98 | 4.0L, V8 | ZF5HP24 | 368 |
| XK8 | 2000-On | | 5R55N | 121 |
| XKR | 2001-On | | 5R55N | 121 |

## JEEP

| Model | Year | Engine | Trans. | Page |
|---|---|---|---|---|
| Cherokee | 1987-01 | | AW4 | 312 |
| Cherokee | 2002-On | | 45RFE | 184 |
| CJ5 | 1980-83 | | TF6 | 180 |
| CJ7 | 1976-79 | | TH400 | 72 |
| CJ7 | 1980-86 | | TF6 | 180 |
| CJ8 | 1981-85 | | TF6 | 180 |
| Comanche | 1980-86 | | TF6 | 180 |
| Comanche | 1987-93 | | AW4 | 312 |
| Grand Cherokee | 1991-93 | | AW4 | 312 |
| Grand Cherokee | 1991-98 | | A518 | 169 |
| Grand Cherokee | 1994-On | 4.0L, V6 | A500 | 165 |
| Grand Cherokee | 1999-On | 4.7L, V8 | 45RFE | 184 |
| Grand Wagoneer | 1972-93 | | TF6 | 180 |
| Grand Wagoneer | 1984-93 | | TF8 | 177 |
| Liberty | 2002-On | | 42RLE | 173 |
| Pickup | 1970-79 | | TH400 | 72 |
| Pickup | 1980-87 | | TF8 | 177 |
| Pickup | 1982-86 | | TF6 | 180 |
| Pickup | 1987-89 | | AW4 | 312 |
| Wagoneer | 1965-79 | | TH400 | 72 |
| Wagoneer | 1980-86 | | TF8 | 177 |
| Wagoneer | 1987-93 | | AW4 | 312 |
| Wrangler | 1987-On | | TF6 | 180 |

## KIA

# VEHICLE INDEX

## KIA

| Model | Year | Engine | Trans. | Page |
|---|---|---|---|---|
| Avella | 1994-On | | F4AEL | 225 |
| Clarus | 1995-96 | 2.0L, L4 | G4AEL | 228 |
| Concorde | | 2.0L, L4 | G4AEL | 228 |
| Credos (Clarus) | 1995-96 | | G4AEL | 228 |
| Joice (Carstar) | 1999-On | | G4AEL | 228 |
| Leo | | 1.5L, L4 | F4AEL | 225 |
| Optima | 2001-02 | | F4A42 | 259 |
| Potentia | 1992-95 | 2.2L, L4 | N4AHL | 235 |
| Pride | 1987-92 | | F3A | 223 |
| Rio/Rio Cinco | 1999-On | 1.5L, L4 | F4AEL | 225 |
| Sedona | 2001-On | 3.5L, V6 | F5A51 | 260 |
| Sephia | 1992-On | 1.8L, L4 | F4AEL | 225 |
| Shuma | 1997-On | | F4AEL | 225 |
| Spectra | 2001-On | 1.8L, L4 | F4AEL | 225 |
| Sportage | 1994-On | 2.0L, L4 | A43DL | 308 |

## LANCIA

| Model | Year | Engine | Trans. | Page |
|---|---|---|---|---|
| 4 x 4 | 1982-98 | | TF8/727 | 177 |
| Thesis | 2002-On | 3.0L, V6 | 55-50SN | 194 |
| Y9 | 1987-91 | | ZF3HP22 | 355 |

## LAND ROVER

| Model | Year | Engine | Trans. | Page |
|---|---|---|---|---|
| Discovery | 1994-02 | | ZF4HP22/24 | 363 |
| Freelander | 1999-On | | JF506E | 354 |
| Range Rover | 1987-02 | | ZF4HP22 | 363 |
| Range Rover | 2003-On | | ZF5HP24 | 368 |
| Rover 75 | 1999-On | | JR506E | 354 |

## LEXUS

| Model | Year | Engine | Trans. | Page |
|---|---|---|---|---|
| ES250 | 1989-91 | | A540E | 336 |
| ES300 | 1992-93 | | A540E | 336 |
| ES300 | 1994-On | | A541E | 336 |
| ES300 | 1998-01 | | U140E | 340 |
| ES300 | 2002-On | | U150 | 342 |
| GS300 | 1993-95 | | A340E | 312 |
| GS300 | 1996-On | | A350E | 312 |
| GS400 | 1998 | | A350E | 312 |
| GX470 | 2003-On | | A750F | 324 |
| IS300 | 2002-On | | A650E | 322 |
| LS400 | 1995-97 | | A341E | 312 |
| LS400 | 1998-On | | A650E | 322 |
| LX450 | 1996-97 | | A343F | 312 |
| LX470 | 1998-02 | | A343F | 312 |
| LX470 | 2003-On | | A750F | 324 |
| RX300 - 2wd | 1998-99 | | U140E | 340 |
| RX300 - 4wd | 1998-99 | | U140F | 340 |
| SC300 | 1992-98 | | A340E | 312 |
| SC400 | 1992-97 | | A341E | 312 |
| SC400 | 1998-On | | A650E | 322 |
| SC430 | 2002-On | | A650E | 322 |

## LINCOLN

| Model | Year | Engine | Trans. | Page |
|---|---|---|---|---|
| Aviator | 2003-On | | 5R110W | 123 |
| Blackwood | 2002-On | | 4R100 | 154 |
| Continental | 1984-86 | | ZF4HP22 | 363 |
| Continental | 1988-91 | | AXOD | 133 |
| Continental | 1991-94 | | AX4S | 133 |
| Continental | 1995-On | 4F50N | AX4N | 137 |
| LS | 2001-On | | 5R55N | 121 |

## LINCOLN

| Model | Year | Engine | Trans. | Page |
|---|---|---|---|---|
| Mark VII | 1988-92 | | AOD | 124 |
| Mark VII W/Diesel | 1984-86 | | ZF4HP22 | 363 |
| Mark VIII | 1993-95 | | AODE | 124 |
| Mark VIII | 1996-98 | | 4R70W | 124 |
| Navigator | 1998 | | E4OD | 154 |
| Navigator | 1999-On | | 4R100 | 154 |
| Town Car | 1987-92 | | AOD | 124 |
| Town Car | 1991-92 | | AOD | 124 |
| Town Car | 1992-01 | | AODE | 124 |
| Town Car | 1993-95 | | AODE | 124 |
| Town Car | 1996-On | | 4R70W | 124 |
| Various | 1951-71 | | FMX | 160 |
| Versailles | 1977-80 | | C4 | 144 |

## LOTUS

| Model | Year | Engine | Trans. | Page |
|---|---|---|---|---|
| All | 1974-89 | | BW65 | 186 |

## MASERATI

| Model | Year | Engine | Trans. | Page |
|---|---|---|---|---|
| All | 1982-89 | | TF8/727 | 177 |

## MAZDA

| Model | Year | Engine | Trans. | Page |
|---|---|---|---|---|
| 1500 | 1967-69 | | BW35 | 186 |
| 1800 | 1969-74 | | BW35 | 186 |
| 323 | 1986-88 | 1.6L, L4 | F3A | 223 |
| 323 | 1990-96 | 1.6L, L4 | F4AEL | 225 |
| 323 AWD | 1990-91 | 1.6L, L4 | G4AHL | 228 |
| 6 | 2002-On | V6, 3.0L | 5F31J | 354 |
| 6 | 2003-On | 2.3L, L4 | FN4AEL | 231 |
| 616 | 1967-70 | | BW35 | 186 |
| 616 | 1971-78 | | L3N71B | 263 |
| 626 | 1980-82 | 2.0L, L4 | L3N71B | 263 |
| 626 | 1983-86 | 2.0L, L4 | F3A | 223 |
| 626 | 1986-93 | | G4AEL | 228 |
| 626 | 1994-02 | 2.5L, V6 | GF4AEL | 228 |
| 626 | 1994-On | 2.0L, L4 | CD4E | 152 |
| 808 | 1972-77 | | L3N71B | 263 |
| 818 | 1972-76 | | L3N71B | 263 |
| 929 | 1988-91 | 3.0L, V6 | N4A-EL | 235 |
| 929 | 1992-95 | 3.0L, V6 | R4AEL | 237 |
| B2000 | 1982-84 | | L3N71B | 263 |
| B2200 | 1982-84 | | L3N71B | 263 |
| B2200 | 1990-93 | 2.2L | L4N71B | 266 |
| B2300 | 1994 | | A4LD | 117 |
| B2300 | 1995-On | | 4R44E | 117 |
| B2500 | 1998-01 | | 4R44E | 117 |
| B2600 | 1986-93 | 4wd | L3N71B | 263 |
| B2600 | 1992-93 | 2wd | L4N71B | 266 |
| B2600 | 1992-93 | 4wd | R4AEL | 237 |
| B3000 | 1994-On | | 4R44E | 117 |
| B4000 | 1994-96 | | 4R55E | 117 |
| B4000 | 1997-On | | 5R55E | 117 |
| Cosmo | 1976-78 | | L3N71B | 263 |
| GLC | 1977-83 | | L3N71B | 263 |
| GLC | 1981-86 | | F3A | 223 |
| Miata MX5 | 1991-97 | 1.8L, L4 | L4N71B | 266 |
| Miata MX5 | 1998-On | 1.8L, L4 | A44DE | 308 |
| Millenia | 1995-00 | 2.3L, V6 | LJ4AEL | 233 |
| Millenia | 1995-On | 2.5L, V6 | GF4AEL | 228 |
| Mizer | 1971-73 | | L3N71B | 263 |
| Montrose | 1974-77 | | L3N71B | 263 |

# VEHICLE INDEX

## MAZDA

| Model | Year | Engine | Trans. | Page |
|---|---|---|---|---|
| MPV (Van) | 1989-95 | | L4N71B | 266 |
| MPV (Van) | 1989-98 | | R4AEL | 237 |
| MPV (Van) | 2000-02 | | GF4AEL | 228 |
| MPV (Van) | 2002-On | | 5F31J | 354 |
| MX3 | 1992-95 | | F4AEL | 225 |
| MX6 | 1986-93 | | G4AEL | 228 |
| MX6 | 1986-93 | | G4AEL | 228 |
| MX6 | 1994-97 | | CD4E | 152 |
| MX6 | 1994-97 | | GF4AEL | 228 |
| Navajo | 1991-94 | | A4LD | 117 |
| Protégé | 1990-98 | | F4AEL | 225 |
| Protégé | 1999-On | | FN4AEL | 231 |
| Protégé5 | 2002-On | | FN4AEL | 231 |
| R100 | 1971-72 | | L3N71B | 263 |
| RX2 | 1971-74 | | L3N71B | 263 |
| RX3 | 1972-77 | | L3N71B | 263 |
| RX4 | 1974-78 | | L3N71B | 263 |
| RX7 | 1980-83 | | L3N71B | 263 |
| RX7 | 1984-88 | | L4N71B | 266 |
| RX7 | 1989-92 | | N4A-EL | 235 |
| RX7 | 1993-96 | | R4AEL | 237 |
| Titan truck (2 ton) | 1990-On | | JR403E | 274 |
| Tribute | 2001-On | | CD4E | 152 |

## MERCEDES

| Model | Year | Engine | Trans. | Page |
|---|---|---|---|---|
| 190 | 1984-93 | | 722 4 | 245 |
| 240D | 1974-83 | | 722 1 | 240 |
| 250D | 1990 | | 722 4 | 245 |
| 260E | 1987-91 | | 722 4 | 245 |
| 264 | 1974-78 | | 722 1 | 240 |
| 280 | 1974-81 | | 722 1 | 240 |
| 300 | 1975-81 | | 722 1 | 240 |
| 300 | 1981-93 | | 722 3 | 242 |
| 300 | 1985 | | 722 4 | 245 |
| 300 | 1991-94 | | 722 4 | 245 |
| 300SE/SL | 1990-93 | | 722 5 | 247 |
| 320/SL | 1994 | | 722 5 | 247 |
| 350 | 1990-91 | | 722 3 | 242 |
| 380 | 1981-85 | | 722 3 | 242 |
| 400 | 1992-93 | | 722 3 | 242 |
| 420 | 1986-90 | | 722 3 | 242 |
| 450SEL/SL | 1974-80 | | 722 1 | 240 |
| 564 | 1984-94 | | 722 3 | 242 |
| 600 | 1992-94 | | 722 3 | 242 |
| A140 | 1997-On | | 722.7 | 251 |
| A160 | 1997-On | | 722.7 | 251 |
| A170 | 1997-On | | 722.7 | 251 |
| A190 | 1997-On | | 722.7 | 251 |
| C220 | 1994 | | 722 4 | 245 |
| C280 | 1994 | | 722 4 | 245 |
| CL500 | 1998-On | | | |
| CL55 AMG | 2001-On | | | |
| CL600 | 1998-On | | | |
| CLK320 | 1998-On | | 722 5 | 247 |
| CLK430 | 1999-On | | | |
| CLK55 AMG | 2001-On | | | |
| E320 | 1994 | | 722 3 | 242 |
| E320 | 1995-On | | | |
| E430 | 1998-On | | | |
| E55 AMG | 1999-On | | | |
| ML320 | 1998-On | | 722 5 | 247 |

## MERCEDES

| Model | Year | Engine | Trans. | Page |
|---|---|---|---|---|
| ML430 | 1999-00 | | | |
| ML500 | 2002-On | | | |
| ML55 | 2000-On | | | |
| S430 | 2000-On | | | |
| S500 | 1994-On | | | |
| S55 AMG | 2001-On | | | |
| S600 | 1994-On | | | |
| SL320 | 1994-97 | | 722 5 | 247 |
| SL500 | 1994-On | | 722.5 | 247 |
| SL600 | 1994-On | | 722.5 | 247 |
| V Class | 2000-On | | ZF4HP20 | 362 |

## MERCURY

| Model | Year | Engine | Trans. | Page |
|---|---|---|---|---|
| Bobcat | 1974-87 | | C3 | 141 |
| Bobcat | 1974-87 | | C4 | 144 |
| Capri | 1972-81 | | C4 | 144 |
| Capri | 1979-86 | | C3 | 141 |
| Capri | 1982-86 | | C5 | 144 |
| Capri | 1991-94 | | G4EAT | 228 |
| Comet | 1964-76 | | C4 | 144 |
| Comet | 1966-69 | | C6 | 148 |
| Comet | 1969 | | FMX | 160 |
| Cougar | 1967-78 | | C6 | 148 |
| Cougar | 1967-81 | | C4 | 144 |
| Cougar | 1971-79 | | FMX | 160 |
| Cougar | 1980-92 | | AOD | 124 |
| Cougar | 1982-86 | | C5 | 144 |
| Cougar | 1993-95 | | AODE | 124 |
| Cougar | 1996-97 | | 4R70W | 124 |
| Cougar | 1999-On | | CD4E | 152 |
| Grand Marquis | 1983-92 | | AOD | 124 |
| Grand Marquis | 1993-95 | | AODE | 124 |
| Grand Marquis | 1996-On | | 4R70W | 124 |
| LN7 | 1982-83 | | ATX | 130 |
| Lynx | 1981-86 | | ATX | 130 |
| Marquis | 1983-86 | | AOD | 124 |
| Marquis | 1983-86 | | C3 | 141 |
| Marquis | 1983-86 | | C5 | 144 |
| Mervader | 2002-On | | 4R70W | 124 |
| Meteor | 1951-64 | | Fordomatic | 34 |
| Meteor | 1965-72 | | C4 | 144 |
| Meteor | 1966-72 | | C6 | 148 |
| Monarch | 1975-80 | | C4 | 144 |
| Monarch | 1977-80 | | L3N71B | 263 |
| Montego | 1968-76 | | C4 | 144 |
| Montego | 1968-76 | | C6 | 148 |
| Montego | 1970-76 | | FMX | 160 |
| Mountaineer | 1997-01 | 4.0L | 5R55E | 117 |
| Mountaineer | 1997-01 | 5.0L | 4R70W | 124 |
| Mountaineer | 2002-On | | 5R55W | 121 |
| Mystique | 1995-On | | CD4E | 152 |
| Sable | 1986-92 | | AXOD | 133 |
| Sable | 1991-95 | | AX4S | 133 |
| Sable | 1996-On | | AX4N | 137 |
| Topaz | 1987-94 | | ATX | 130 |
| Tracer | 1987-90 | | F3A | 223 |
| Tracer | 1991-98 | | F4EAT | 225 |
| Villager | 1993-On | | 4F20E | 285 |
| Zephyr | 1976-83 | | C3 | 141 |
| Zephyr | 1978-81 | | C4 | 144 |
| Zephyr | 1982-83 | | C5 | 144 |

# VEHICLE INDEX

## MERKUR

| Model | Year | Engine | Trans. | Page |
|---|---|---|---|---|
| Magnee MKIV | 1965-69 | | BW35 | 186 |
| MGB | | | | |
| Roadster GT | 1967-76 | | BW35 | 186 |
| Roadster GT | 1976-On | | BW65 | 186 |
| Scorpio | 1987-89 | | A4LD | 117 |
| XR4Ti | 1985-89 | | C3 | 141 |

## MITSUBISHI

| Model | Year | Engine | Trans. | Page |
|---|---|---|---|---|
| 1100, 1500 | All | | BW35 | 186 |
| 1800, 2000 | All | | BW35 | 186 |
| 3000GT | 1991-97 | | F4A33-1 | 256 |
| Cantor (2 ton truck) | 1990-On | | JR403E | 274 |
| Cordia | 1983 | | KM170 | 252 |
| Cordia | 1984-88 | | KM172 | 252 |
| Diamante | 1992-96 | | F4A33-1 | 256 |
| Diamante | 1997-On | | F4A51 | 260 |
| Eclipse | 1988-89 | Non Turbo | KM175-5 | 252 |
| Eclipse | 1990-94 | Non Turbo | F4A22-2 | 252 |
| Eclipse | 1991-98 | AWD | W4A32-1 | 252 |
| Eclipse | 1991-98 | Turbo | F4A33-1 | 256 |
| Eclipse | 1995-On | Non Turbo | A604 | 173 |
| Eclipse | 1996-02 | V6, 3.0L | F4A51 | 260 |
| Eclipse Spyder | 1996-98 | Non Turbo | F4A23-1 | 252 |
| Expo | 1992-95 | 2.4L | F4A23-2 | 252 |
| Expo | 1992-95 | AWD | F4A33-1 | 256 |
| Expo LRV | 1992-94 | 1.8L | F4A22-2 | 252 |
| Expo LRV | 1992-95 | 2.4L | F4A23-2 | 252 |
| Expo LRV | 1992-95 | AWD | W4A32-1 | 252 |
| Galant | 1985-87 | | KM175-1 | 252 |
| Galant | 1988-89 | | KM175-5 | 252 |
| Galant | 1990-93 | | F4A22-2 | 252 |
| Galant | 1993-94 | DOHC | F4A33-1 | 256 |
| Galant | 1994-97 | | F4A23-2 | 252 |
| Galant | 1995-On | 2.5L, V6 | A604 | 173 |
| Galant | 1998-On | | F4A42-2 | 259 |
| Galant | 1999-02 | V6, 3.0L | F4A51 | 260 |
| Galant Sigma | 1988 | | KM177 | 252 |
| Galant Sigma | 1989-90 | | F4A22-2 | 252 |
| Galant Sigma | 1990-93 | | F4A23-2 | 252 |
| Lancer | 1974-81 | | A904 | 180 |
| Lancer | 1988-89 | | KM170 | 252 |
| Lancer | 1990-91 | | F3A21-2 | 252 |
| Lancer | 2002-On | | F4A41 | 259 |
| Mirage | 1985-88 | 1.5L | KM171-1 | 252 |
| Mirage | 1985-88 | 1.6L | KM171-2 | 252 |
| Mirage | 1989-96 | 1.5L | F3A21-2 | 252 |
| Mirage | 1991-92 | 1.6L | F4A21-2 | 252 |
| Mirage | 1993-96 | 1.8L | F4A22-2 | 252 |
| Mirage | 1997-On | 1.5L | F4A41-1 | 259 |
| Mirage | 1997-On | 1.8L | F4A42-1 | 259 |
| Montero | 1972-86 | | A904 | 180 |
| Montero | 1987-91 | 4wd | KM148 | 308 |
| Montero | 1989 | 4wd | V4AW2 | 308 |
| Montero | 1990-94 | 2wd | AW372L | 308 |
| Montero | 1995 | | V4AW3 | 312 |
| Montero | 2000-On | 4wd | V5A51-7 | 262 |
| Montero Sport | 1999-On | 4wd | V4A51-5 | 262 |
| Outlander | 2003-On | | F4A42 | 259 |
| Pajero | 1989 | 4wd | V4AW2-7 | 308 |
| Pajero | 1994-99 | 4wd | V4AW3-7 | 312 |
| Pajero | 2000-On | 4wd | V5A51-7 | 262 |

## MITSUBISHI

| Model | Year | Engine | Trans. | Page |
|---|---|---|---|---|
| Pajero Pinin | 2000-On | 4wd | V4AW4 | 262 |
| Pajero Sport | 1999-On | 4wd | V4A51-5 | 262 |
| Pickup | 1983-86 | | A904 | 180 |
| Pickup | 1987-89 | 2wd | AW372L | 308 |
| Pickup | 1987-89 | 4wd | KM148 | 308 |
| Pickup | 1990-97 | | A500 | 165 |
| Precis | 1987-89 | | KM172 | 252 |
| Precis | 1990-94 | | KM175-7 | 252 |
| Sapporo | 1974-81 | | A904 | 180 |
| Starion | 1984-89 | | L4N71B | 266 |
| Tredia | 1984-88 | | KM172 | 252 |
| Van/Wagon | 1987-90 | 2wd | AW372L | 308 |

## MOTOR HOMES

| Model | Year | Engine | Trans. | Page |
|---|---|---|---|---|
| Lesharo | 1983-92 | | 4141 | 292 |
| Zimmer | 1981-94 | | 4141 | 292 |

## NISSAN

| Model | Year | Engine | Trans. | Page |
|---|---|---|---|---|
| 180B, 200B, 1600 | 1972-On | | BW35 | 186 |
| 200SX | 1980-83 | | L3N71B | 263 |
| 200SX | 1984-88 | | L4N71B | 266 |
| 200SX | 1995-98 | | RL4F03A | 282 |
| 240 | 1972-82 | | L3N71B | 263 |
| 240SX | 1989-98 | | RE4R01A | 268 |
| 260 | 1972-82 | | L3N71B | 263 |
| 280ZX | 1980-83 | | L3N71B | 263 |
| 300ZX | 1984-89 | | E4N71B | 266 |
| 300ZX | 1990-96 | Non Turbo | RE4R01A | 268 |
| 300ZX | 1990-96 | Turbo | RE4R03A | 274 |
| 350ZX | 2003-On | V6, 3.5L | RE5R05A | 273 |
| 576 | 1969-71 | | L3N71B | 263 |
| 610 | 1972-82 | | L3N71B | 263 |
| Altima | 1993-On | | RE4F04A | 285 |
| Axxess | 1990-93 | | RL4F02A | 278 |
| Frontier | 1998-On | | RL4R01A | 268 |
| Maxima | 1980-82 | | L3N71B | 263 |
| Maxima | 1983-84 | | L4N71B | 266 |
| Maxima | 1985-88 | | RL4F02A | 278 |
| Maxima | 1989-94 | SOHC | RE4F02A | 278 |
| Maxima | 1992-On | DOHC | RE4F04A | 285 |
| Murano | 2003-On | V6, 3.5L | CVT | 373 |
| NX | 1992-93 | | RL4F03A | 282 |
| Pathfinder | 1986 | 2wd | L4N71B | 266 |
| Pathfinder | 1986-87 | 4wd | L3N71B | 263 |
| Pathfinder | 1988-On | | RE4R01A | 268 |
| Pathfinder Armada | 2004-On | | RE5R05A | 273 |
| Pickup | 1980-85 | | L3N71B | 263 |
| Pickup | 1986 | 2wd | L4N71B | 266 |
| Pickup | 1986-87 | 4wd | L3N71B | 263 |
| Pickup | 1988-On | | RE4R01A | 268 |
| Pickup | 1990-On | 2wd, 4cyl. | RL4R01A | 268 |
| Pulsar | 1983-90 | SOHC | RL3F01A | 276 |
| Pulsar | 1988-90 | DOHC | RL4F02A | 278 |
| Quest | 1993-On | | RE4F04A | 285 |
| Sentra | 1982-92 | | RL3F01A | 276 |
| Sentra | 1991-On | | RL4F03A | 282 |
| Stanza | 1982-85 | | RL3F01A | 276 |
| Stanza | 1985-89 | | RL4F02A | 278 |
| Stanza | 1990-92 | | RE4F02A | 278 |
| Titan | 2004-On | | RE5R05A | 273 |
| Van | 1987-89 | | L4N71B | 266 |

# VEHICLE INDEX

## NISSAN

| Model | Year | Engine | Trans. | Page |
|---|---|---|---|---|
| Van | 1990 | | RE4R01A | 268 |
| Xterra | 2000-On | | RL4R01A | 268 |

## OLDSMOBILE

| Model | Year | Engine | Trans. | Page |
|---|---|---|---|---|
| 98 | 1972-76 | | TH375 | 72 |
| 98 | 1974-80 | | TH400 | 72 |
| 98 | 1977-81 | | TH200 | 56 |
| 98 | 1977-82 | | TH350 | 68 |
| 98 | 1980-83 | | TH250 | 68 |
| 98 | 1985-89 | | TH440T4 | 81 |
| 98 | 1990-96 | | 4T60E | 81 |
| Achieva | 1992-96 | 2.3L | 3T40 | 42 |
| Achieva | 1992-98 | 3.1L | 4T60E | 81 |
| Achieva | 1997-98 | 2.4L | 4T60E | 81 |
| Alero | 1999-On | 2.4L | 4T40E | 46 |
| Alero | 1999-On | 3.4L | 4T45E | 46 |
| Aurora | 1994-On | | 4T80E | 92 |
| Bravada | 1991 | | 4L60 | 86 |
| Bravada | 1993-On | | 4L60E | 86 |
| Calais | 1985-92 | | TH125C | 42 |
| Ciera | 1982-87 | 2.8L | TH125C | 42 |
| Ciera | 1985-88 | 3.8L | TH440T4 | 81 |
| Ciera | 1988-92 | 2.5L | TH125C | 42 |
| Ciera | 1989-93 | 3.3L | 4T60 | 81 |
| Ciera | 1994-96 | 3.1L | 4T60E | 81 |
| Custom Cruiser | 1986-90 | | TH200-4R | 60 |
| Custom Cruiser | 1991-92 | | 4L60 | 86 |
| Cutlass | 1973 | | TH375 | 72 |
| Cutlass | 1973-77 | | TH400 | 72 |
| Cutlass | 1973-83 | | TH350 | 68 |
| Cutlass | 1978-87 | | TH200C | 56 |
| Cutlass | 1981-88 | | TH200-4R | 60 |
| Cutlass | 1989-89 | | TH440T4 | 81 |
| Cutlass | 1990-92 | 3.1L | 4T60 | 81 |
| Cutlass | 1990-94 | | 3T40 | 42 |
| Cutlass | 1991-96 | 3.4L | 4T60E | 81 |
| Cutlass | 1993-99 | 3.1L | 4T60E | 81 |
| Delta 88 | 1984-90 | | TH440T4 | 81 |
| Delta Royale | 1991 | | TH440T4 | 81 |
| Delta Royale | 1992-96 | | 4T60E | 81 |
| Eighty Eight | 1997 | | 4T60E | 81 |
| Eighty Eight | 1997-On | | 4T65E | 81 |
| Firenza | 1982-88 | | TH125C | 42 |
| Intrigue | 1998-On | | 4T65E | 81 |
| Omega | 1973-79 | | TH350 | 68 |
| Omega | 1976-77 | | TH200 | 56 |
| Omega | 1980-84 | | TH125C | 42 |
| Silhouette | 1990-96 | 3.1L | TH125C | 42 |
| Silhouette | 1992-96 | 3.8L | 4T60E | 81 |
| Silhouette | 1997-98 | 3.4L | 4T60E | 81 |
| Silhouette | 1999-On | 3.4L | 4T65E | 81 |
| Starfire | 1975-80 | | TH350 | 68 |
| Starfire | 1976-77 | | TH250 | 68 |
| Starfire | 1976-86 | | TH200C | 56 |
| Toronado | 1966-78 | | TH425 | 72 |
| Toronado | 1979-81 | | TH325 | 64 |
| Toronado | 1982-85 | | TH325-4L | 64 |
| Toronado | 1985-89 | | TH440T4 | 81 |
| Toronado | 1991-92 | | 4T60E | 81 |

## OPEL

| Model | Year | Engine | Trans. | Page |
|---|---|---|---|---|

## OPEL

| Model | Year | Engine | Trans. | Page |
|---|---|---|---|---|
| 405 | 1989-91 | | ZF4HP14 | 357 |
| 504 | 1975-84 | | ZF3HP22 | 355 |
| 505 | 1980-86 | 2.0L 2.3L | ZF3HP22 | 355 |
| 505 | 1984-91 | 2.2L L4 | ZF4HP22 | 363 |
| 604 | 1977-79 | 2.7L, 2.8L | TH180 | 50 |
| 604 | 1982-85 | 2.3L | ZF3HP22 | 355 |
| Ascona | 1981-On | | TH125C | 42 |
| Ascona 1900 | 1969-75 | | TH180 | 50 |
| Kadette | 1976-79 | | TH200 | 56 |
| Kadette 1300 1600 | 1981-On | | TH125C | 42 |
| Olympia | 1979-84 | | TH180 | 50 |
| Senator/Monza/GSA | 1984-On | | AW71 | 191 |
| Station Wagon - 4dr | 1979-83 | | ZF3HP12 | 37 |

## PEUGEOT

| Model | Year | Engine | Trans. | Page |
|---|---|---|---|---|
| 205 | 2000-On | | ZF4HP14 | 357 |
| 206 | 2000-On | | AL4 | 298 |
| 406 | 2000-On | | AL4 | 298 |

## PLYMOUTH

| Model | Year | Engine | Trans. | Page |
|---|---|---|---|---|
| Acclaim | 1989-95 | | A470 | 162 |
| Acclaim | 1989-95 | | A604 | 173 |
| Arrow | 1976-80 | | TF6/904 | 180 |
| Barracuda | 1965-74 | | TF6/904 | 180 |
| Barracuda | 1965-74 | | TF8/727 | 177 |
| Breeze | 1996-00 | | A604 | 173 |
| Caravelle | 1985-88 | | A470 | 162 |
| Champ | 1980-82 | | KM170 | 252 |
| Conquest | 1984-86 | | L4N71B | 266 |
| Cricket | 1971-72 | | BWT35 | 186 |
| Fury | 1974-78 | | TF6/904 | 180 |
| Fury | 1974-78 | | TF8/727 | 177 |
| Gran Fury | 1975-83 | | TF8/727 | 177 |
| Gran Fury | 1975-88 | | TF6/904 | 180 |
| Gran Fury | 1989-89 | | A999 | 180 |
| Horizon | 1978-81 | | A404 | 162 |
| Horizon | 1982-90 | | A470 | 162 |
| Laser | 1984-86 | | A413 | 162 |
| Laser | 1989 | Non Turbo | F4A22-2 | 252 |
| Laser | 1991-98 | Turbo | F4A33-1 | 256 |
| Neon | 1995-01 | | A670 | 162 |
| Prowler | 1997-01 | | A500 | 165 |
| Reliant | 1981-89 | | A470 | 162 |
| Sapporo | 1978-83 | | TF6/904 | 180 |
| Satellite | 1974 | | TF6/904 | 180 |
| Satellite | 1974 | | TF8/727 | 177 |
| Sundance | 1987-92 | | A470 | 162 |
| Sundance | 1993-94 | | A604 | 173 |
| Trailduster | 1974-81 | | TF8/727 | 177 |
| Valiant | 1965-76 | | TF6/904 | 180 |
| Valiant | 1970-76 | | TF8/727 | 177 |
| Volare' | 1976-80 | | TF6/904 | 180 |
| Volare' | 1976-81 | | TF8/727 | 177 |
| Voyager | 1984-91 | | A470 | 162 |
| Voyager | 1987-90 | | A670 | 162 |
| Voyager | 1991-00 | | A604 | 173 |

## PONTIAC

| Model | Year | Engine | Trans. | Page |
|---|---|---|---|---|
| 6000 | 1982-91 | 2.5L | TH125C | 42 |
| 6000 | 1987-89 | 2.8L | TH125C | 42 |

# VEHICLE INDEX

## PONTIAC

| Model | Year | Engine | Trans. | Page |
|---|---|---|---|---|
| 6000 | 1988-91 | 3.1 | 4T60 | 81 |
| Aztek | 2001-On | | 4T65E | 81 |
| Bonneville | 1974-77 | | TH400 | 72 |
| Bonneville | 1974-83 | | TH350 | 68 |
| Bonneville | 1977-86 | | TH200C | 56 |
| Bonneville | 1987-91 | | TH440T4 | 81 |
| Bonneville | 1992-97 | | 4T60E | 81 |
| Bonneville | 1997-On | | 4T65E | 81 |
| Catalina | 1974-77 | | TH400 | 72 |
| Catalina | 1974-80 | | TH350 | 68 |
| Catalina | 1977-81 | | TH200C | 56 |
| Fiero | 1984-88 | | TH125C | 42 |
| Firebird | 1967-76 | | TH400 | 72 |
| Firebird | 1969-81 | | TH350 | 68 |
| Firebird | 1980-83 | | TH200C | 56 |
| Firebird | 1983-93 | | TH700R4 | 86 |
| Firebird | 1989-89 | | TH200-4R | 60 |
| Firebird | 1994-On | | 4L60E | 86 |
| Grand Am | 1985-96 | | TH125C | 42 |
| Grand Am | 1994-98 | | 4T60E | 81 |
| Grand Am | 1999-On | 2.4L | 4T40E | 46 |
| Grand Am | 1999-On | 3.4L | 4T45E | 46 |
| Grand Prix | 1969-77 | | TH400 | 72 |
| Grand Prix | 1976-83 | | TH350 | 68 |
| Grand Prix | 1977-87 | | TH200C | 56 |
| Grand Prix | 1980-84 | | TH250 | 68 |
| Grand Prix | 1981-87 | Turbo HO | TH200-4R | 60 |
| Grand Prix | 1988-92 | | 4T60 | 81 |
| Grand Prix | 1990-92 | 2.3L | TH125C | 42 |
| Grand Prix | 1993-On | 3.1L | 4T60E | 81 |
| Grand Prix | 1997-On | 3.8L | 4T65E | 81 |
| GTO | 2002-On | 3.7L, V8 | 4L60E | 86 |
| J2000 | 1982-88 | | TH125C | 42 |
| LeMans | 1972-77 | | TH400 | 72 |
| LeMans | 1972-81 | | TH350 | 68 |
| LeMans | 1978-81 | | TH200C | 56 |
| LeMans | 1988-93 | | TH125C | 42 |
| Montana | 1999-On | | 4T65E | 81 |
| Parisienne | 1983-86 | | TH200C | 56 |
| Parisienne | 1983-89 | | TH200 | 56 |
| Parisienne | 1984-88 | | TH700R4 | 86 |
| Phoenix | 1977-79 | | TH200C | 56 |
| Phoenix | 1977-79 | | TH350 | 68 |
| Phoenix | 1980-84 | | TH125C | 42 |
| Safari | 1987-89 | | TH700R4 | 86 |
| Sunbird | 1976-77 | | TH250 | 68 |
| Sunbird | 1985-94 | | TH125C | 42 |
| Sunfire | 1995-01 | 2.2L | 3T40 | 42 |
| Sunfire | 1995-On | 2.3L & 2.4L | 4T40E | 46 |
| T1000 | 1981-87 | | TH180C | 50 |
| Tempest | 1965-69 | | ST300 | 33 |
| Tempest | 1967-71 | | TH400 | 72 |
| Tempest | 1969-71 | | TH350 | 68 |
| TransSport | 1990-96 | | 3T40 | 42 |
| TransSport | 1992-98 | | 4T60E | 81 |
| Ventura | 1971-77 | | TH350 | 68 |
| Ventura | 1976-77 | | TH200 | 56 |

## PORSCHE

| Model | Year | Engine | Trans. | Page |
|---|---|---|---|---|
| 911 | 1991-96 | | ZF4HP22HL | 363 |
| 924 | 1976-91 | | VW010 | 346 |

## PORSCHE

| Model | Year | Engine | Trans. | Page |
|---|---|---|---|---|
| 928, S & S4 | 1978-82 | | 722.1 | 240 |
| 928, S & S4 | 1983-On | | 722.3 | 242 |
| 928S4, GTS | 1991-95 | | ZF4HP24HL | 363 |
| 944 | 1976-91 | | VW010 | 346 |
| 944 | 1991-92 | | ZF4HP18FLE | 359 |
| 986 Boxster | 1996-On | | ZF5HP19FL | 367 |
| 996 | 1997-On | | ZF5HP19HL | 367 |

## PROTON

| Model | Year | Engine | Trans. | Page |
|---|---|---|---|---|
| Perdana | 1999-On | DOHC | F4A23 | 252 |
| Perdana | 1999-On | SOHC | F4A22 | 252 |
| Persona | 2000-On | 1.6L | F4A22 | 252 |
| Satria | 1999-On | 1.5L | F3A21 | 252 |
| Waja | 2000-On | | F4A23 | 252 |
| Wira | 1999-On | 1.5L | F3A21 | 252 |

## RANGE ROVER

| Model | Year | Engine | Trans. | Page |
|---|---|---|---|---|
| 3.5 | 1988-On | | ZF4HP22 | 363 |
| 4.0, 4.6 | 1987-95 | | ZF4HP22 | 363 |
| Scimitar GTE 2.8 | 1975-On | | C3 | 141 |
| Scimitar GTE 3.0 | 1970-73 | | BW35 | 186 |
| Scimitar GTE 3.0 | 1974-On | | C4 | 144 |
| w/3 Speed | 1983-87 | | A727 | 177 |
| w/4Speed | 1985-On | | ZF4HP22 | 363 |

## RENAULT

| Model | Year | Engine | Trans. | Page |
|---|---|---|---|---|
| Alliance | 1983-On | | MB1 | 288 |
| Clio | 1991-On | | AD4 | 294 |
| Encore | 1983-On | | MB1 | 288 |
| Espace | 1998-On | Diesel | AD8 | 294 |
| Espace | 1998-On | Gas | AR4 | 294 |
| Fuego | 1984-85 | | MB1 | 288 |
| Fuego R18i | 1980-83 | | 4139 | 290 |
| Le Car | 1981-83 | | MB1 | 288 |
| Medallion | 1988-89 | | MJ3 | 288 |
| Megane Classic | 1997-On | | AD4 | 294 |
| Megane Scenic | 1997-On | | AD4 | 294 |
| Safrane | 1997-On | | AD8 | 294 |
| Sportswagon | 1984-86 | | MJ3 | 288 |
| Traffic | 1981-89 | | ML1 | 290 |
| Twingo | 1993-On | | TBA | |
| Velstatis | 2002-On | 3.0L, V6 | 55-50SN | 194 |

## ROLLS ROYCE

| Model | Year | Engine | Trans. | Page |
|---|---|---|---|---|
| Bentley | 1967-On | | TH400 | 72 |
| Bentley P6000B | 1998-99 | | ZF5HP30 | 369 |
| Corniche | 1967-87 | | TH400 | 72 |
| Corniche | 2000-On | | 4L80E | 77 |
| Rolls Royce | 1991-On | | 4L80E | 77 |
| Silver Dawn | 1996-On | | 4L80E | 77 |
| Silver Shadow | 1968-90 | | TH400 | 72 |
| Silver Spur | 1968-90 | | TH400 | 72 |
| T Series | 1968-72 | | TH400 | 72 |
| Turbo Coupe | 1991-92 | | 4L80E | 77 |
| V8 | 1979-82 | | 4139 | 290 |

## ROVER

| Model | Year | Engine | Trans. | Page |
|---|---|---|---|---|
| 2000, 2200 | 1966-77 | | BW35 | 186 |

# VEHICLE INDEX

## ROVER

| Model | Year | Engine | Trans. | Page |
|---|---|---|---|---|
| 213 | To 85 | | Honda 3sp | 198 |
| 214 / 248 | 1987-On | | ZF4HP18 | 359 |
| 2300, 2600 | To 84 | | TH180 | 50 |
| 248 | To 85 | | ZF4HP14 | 357 |
| 3500 | 1973-81 | | BW65 | 186 |
| 3500, 3.5 | 1967-73 | | BW35 | 186 |
| Vitesse | 1983-On | | TH180 | 50 |

## SAAB

| Model | Year | Engine | Trans. | Page |
|---|---|---|---|---|
| 900 | 1979-93 | | BW37TB | 186 |
| 9000 | 1986-98 | | ZF4HP18 | 359 |
| 9000S | 1987-98 | | ZF4HP14 | 357 |
| 9000S | 1987-98 | Turbo | ZF4HP18Q | 359 |
| 9-3 | 1999-On | | AW 50-42LE | 193 |
| 9-5 | 1999-01 | | AW 50-42LE | 193 |
| 9-5 | 2002-On | | AW55-50SN | 194 |
| 99 | 1969-80 | | BW35TB | 186 |

## SATURN

| Model | Year | Engine | Trans. | Page |
|---|---|---|---|---|
| Ion | 2003-On | CVT | VT25E | 372 |
| Ion | 2003-On | Sedan | AF-23 | 194 |
| LS100, LS200 | 2000-On | | 4T40E | 46 |
| LS100, LS200 | 2000-On | | 4T45E | 46 |
| SL1, SL2, SC2 | 1992-On | | TAAT | 96 |
| Vue | 2002-On | 5 SP V6, 3.0L | AW55-50SN | 194 |
| Vue | 2002-On | CVT L4, 2.2L | VT25E | 372 |

## SSANGYONG

| Model | Year | Engine | Trans. | Page |
|---|---|---|---|---|
| Chairman | | | 722.6 | 248 |
| Chairman | | | BTR74 | 369 |

## STERLING

| Model | Year | Engine | Trans. | Page |
|---|---|---|---|---|
| 825 | 1987-88 | | L5 | 204 |
| 827 | 1988-91 | | L5 | 204 |

## STUDEBAKER

| Model | Year | Engine | Trans. | Page |
|---|---|---|---|---|
| All | 1962-65 | | BW35 | 186 |

## SUBARU

| Model | Year | Engine | Trans. | Page |
|---|---|---|---|---|
| 1400 DL | 1975-91 | | M41A | 299 |
| 1600 DL | 1975-91 | | M41A | 299 |
| Brat | 1983-85 | | M41A | 299 |
| Forester | 1997-02 | | R4AXEL | 303 |
| Impreza | 1993-98 | | R4AXEL | 303 |
| Impreza | 1999-On | | 4sp. | 306 |
| Justy | 1989 | | ECVT | |
| Legacy | 1990-98 | | R4AXEL | 303 |
| Legacy | 1999-On | | 4sp. | 306 |
| Loyale | 1989 | | M41A | 299 |
| Loyale | 1990 | Turbo | R4AXEL | 303 |
| Outback | 1996-98 | | R4AXEL | 303 |
| Outback | 1999-On | | 4sp. | 306 |
| SVX | 1992-97 | | R4AXEL | 303 |
| XT | 1985-87 | | M41A | 299 |
| XT | 1987-91 | | R4AXEL | 303 |
| XT6 | 1987-91 | | R4AXEL | 303 |

## SUZUKI

| Model | Year | Engine | Trans. | Page |
|---|---|---|---|---|
| Aerio | 2003-On | | AW60-40 | 195 |
| Esteem | 1995-On | | AW60-40LE | 195 |
| Grand Vitara | 1999-On | | A44DE | 308 |
| Sidekick 2 Door | 1989-98 | | TH180C | 50 |
| Sidekick 4 Door | 1992-98 | | A44DE | 308 |
| Sidekick Sport | 1996-98 | | A44DE | 308 |
| Swift GTI | 1989-01 | | MX17 | 327 |
| Wagon R | 1999-On | | SR410 | 307 |
| X90 | 1996-98 | | A44DE | 308 |
| XL7 | 2001-03 | | A44DE | 308 |

## TOYOTA

| Model | Year | Engine | Trans. | Page |
|---|---|---|---|---|
| 4 Runner | 1985-89 | 4wd | A340H | 312 |
| 4 Runner | 1989-91 | 2.4L, L4 | A44D | 308 |
| 4 Runner | 1989-On | 3.0L, V6 | A340E | 312 |
| 4 Runner | 1996-02 | 4wd | A340F | 312 |
| 4 Runner | 2002-On | | A750 | 324 |
| 4 Runner SR5 | 1990-94 | 4wd | A340H | 312 |
| Avalon | 1995-On | | A541E | 336 |
| Camry | 1983-01 | 4 cyl. | A140E | 330 |
| Camry | 1985-86 | 4 cyl. | A140L | 330 |
| Camry | 1989-91 | 4wd | A540H | 336 |
| Camry | 1994-01 | V6 | A541E | 336 |
| Camry | 2002 | | U241E | 343 |
| Camry | 2002-On | | U140 | 340 |
| Camry | 2003 | | U151F | 342 |
| Carina | 1969-74 | | A20 | 36 |
| Carina | 1970-78 | | A30 | 36 |
| Carina | 1973-78 | | A40 | 308 |
| Celica | 1968-79 | | A30 | 36 |
| Celica | 1980 | | A40 | 308 |
| Celica | 1981-85 | | A40D | 308 |
| Celica | 1985-89 | ST, GT | A140L | 330 |
| Celica | 1986 | GTS | A140E | 330 |
| Celica | 1990-91 | 2.2L, GT | A241L | 333 |
| Celica | 1990-93 | 1.6L | A243L | 333 |
| Celica | 1990-93 | 2.2L | A241E | 333 |
| Celica | 1994-99 | 1.8L | A140E | 330 |
| Celica | 1994-99 | 2.2L | A246E | 333 |
| Celica | 2000-On | GT | U341E | 345 |
| Celica | 2000-On | GTS | U240E | 343 |
| Celsior | 1997-On | | A650E | 322 |
| Corolla | 1968-74 | | A20 | 36 |
| Corolla | 1968-76 | | A30 | 36 |
| Corolla | 1972-82 | | A40 | 308 |
| Corolla | 1982-83 | | A40D | 308 |
| Corolla | 1982-83 | | A41 | 308 |
| Corolla | 1984-85 | | A130L | 327 |
| Corolla | 1984-87 | 1.6L, F.I. | A42DL | 308 |
| Corolla | 1984-On | 1.6L, Carb | A131L | 327 |
| Corolla | 1985-92 | | A240L | 333 |
| Corolla | 1987-89 | | A240E | 333 |
| Corolla | 1990-92 | AWD | A241H | 333 |
| Corolla | 1993-01 | 1.8L | A245E | 333 |
| Corolla | 2002-On | | U341F | 345 |
| Corona | 1965-70 | | A10 | 35 |
| Corona | 1970-74 | | A20 | 36 |
| Cressida | 1978-80 | | A40D | 308 |
| Cressida | 1981 | | A43D | 308 |
| Cressida | 1982 | | A43DL | 308 |
| Cressida | 1983-86 | | A43DE | 308 |

# VEHICLE INDEX

## TOYOTA


| Model | Year | Engine | Trans. | Page |
|---|---|---|---|---|
| Cressida | 1987-92 | | A340E | 312 |
| Crown | 1965-70 | | A10 | 35 |
| Crown | 1966-73 | | A30 | 36 |
| Crown | 1973-78 | | A40 | 308 |
| Echo | 2000-On | | U340E | 345 |
| Highlander | 2000-On | 2wd, 4cyl | U140E | 340 |
| Highlander | 2000-On | 2wd, V6 | U241E | 343 |
| Highlander | 2000-On | 4wd, 4cyl | U140F | 340 |
| Hi-Lux Truck | 1966-73 | | A30 | 36 |
| Hi-Lux Truck | 1973-80 | | A40 | 308 |
| Landcruiser | 1986-92 | | A440F | 319 |
| Landcruiser | 1993-95 | | A442F | 319 |
| Landcruiser | 1996-02 | | A343F | 312 |
| Landcruiser | 2002-On | | A750 | 324 |
| Mark II | 1966-73 | | A30 | 36 |
| Matrix | 2002-On | | A246E | 333 |
| Matrix | 2002-On | | U341 | 345 |
| Matrix | 2002-On | 180HP | U240E | 343 |
| MR2 | 1986 | | A141E | 330 |
| MR2 | 1987-88 | | A240E | 333 |
| MR2 | 1988-95 | | A241E | 333 |
| Paseo | 1992-On | | A244E | 333 |
| Pickup | 1978-80 | | A40 | 308 |
| Pickup | 1981 | | A43 | 308 |
| Pickup | 1981-83 | | A40D | 308 |
| Pickup | 1982-95 | | A43D | 308 |
| Pickup | 1985-95 | | A340E | 312 |
| Pickup | 1985-95 | | A340H | 312 |
| Previa | 1991-97 | | A46DE | 308 |
| Previa | 1991-97 | | A46DF | 308 |
| Previa | 1993-97 | | A340F | 312 |
| Previa | 1993-97 | Supercharged | A340E | 312 |
| RAV4 | 1996-00 | 4wd | A540H | 336 |
| RAV4 | 1996-97 | 2wd | A241E | 333 |
| RAV4 | 1998-00 | 2wd | A247E | 333 |
| RAV4 | 2001-On | 2wd | U241E | 343 |
| RAV4 | 2001-On | 4wd | U140F | 340 |
| Sequoia | 2001-On | | A343E | 312 |
| Sienna | 1998-00 | | A540E | 336 |
| Sienna | 2001-02 | | A541E | 336 |
| Sienna | 2003-On | | U150 | 342 |
| Solara | 1998-01 | 3.0L, V6 | A541E | 336 |
| Solara | 1998-On | 2.2L, 4 cyl. | A140E | 330 |
| Solara | 2002-On | | U241E | 343 |
| Supra | 1977-80 | | A40D | 308 |
| Supra | 1980-81 | | A43D | 308 |
| Supra | 1982 | | A43DL | 308 |
| Supra | 1983-85 | | A43DE | 308 |
| Supra | 1986-98 | | A340E | 312 |
| Supra | 1993-98 | Twin Turbo | A341E | 312 |
| T100 | 1993-On | | A340E | 312 |
| T100 | 1993-On | | A340F | 312 |
| Tacoma | 1985-97 | | A43D | 308 |
| Tacoma | 1995-98 | | A340E | 312 |
| Tacoma | 1995-98 | | A340F | 312 |
| Tercel | 1979-86 | 2wd | A55 | 325 |
| Tercel | 1983-88 | 4wd | A55F | 325 |
| Tercel | 1987-98 | | A132L | 327 |
| Tercel | 1995-98 | | A242L | 333 |
| Tundra | 1999-00 | | A340E | 312 |
| Tundra | 2001-On | | A343E | 312 |
| Van | 1984-86 | | A44DL | 308 |


## TOYOTA


| Model | Year | Engine | Trans. | Page |
|---|---|---|---|---|
| Van | 1987-89 | | A45DF | 308 |
| Van | 1987-89 | | A45DL | 308 |


## TRIUMPH


| Model | Year | Engine | Trans. | Page |
|---|---|---|---|---|
| Acclaim | 1981 | | TH180 | 50 |
| Stag | 1970-74 | | BW35 | 186 |
| Stag, Dolomite | 1974-77 | | BW65 | 186 |
| TR7, 2000, 2500 | 1974-80 | | BW35 | 186 |
| TR7, TR8, Dolomite | 1981 | | BW66 | 186 |


## VOLKSWAGEN


| Model | Year | Engine | Trans. | Page |
|---|---|---|---|---|
| 1500 | 1969-75 | | 003 | 36 |
| 1600 | 1969-75 | | 003 | 36 |
| Beetle | 1969-75 | | 003 | 36 |
| Beetle | 1998-02 | | 01M | 349 |
| Bora 4Motion | 1999-On | | 01M | 349 |
| Bora Variant | 1999-On | | 01M | 349 |
| Cabrio | 1995-98 | | 096 | 349 |
| Cabrio | 1999-On | | 01M | 349 |
| Cabriolet | 1985-92 | | 010 | 346 |
| Cabriolet | 1993-95 | | 096 | 349 |
| Cabriolet | 1996-On | | 01M | 349 |
| Camper | 1975-92 | | 090 | 346 |
| Corrado | 1989-95 | | 096 | 349 |
| Dasher | 1969-75 | | 003 | 36 |
| Dasher | 1975-81 | | 010 | 346 |
| Eurovan | 1992-94 | | 098 | 349 |
| Eurovan | 1995-On | | 01P | 349 |
| Golf | 1985-92 | | 010 | 346 |
| Golf | 1993-96 | | 096 | 349 |
| Golf | 1995-On | | 01M | 349 |
| Golf | 2000-On | | JF506E | 354 |
| Golf 4Motion | 2000-On | | JF404E | 353 |
| Golf Variant | 2000-On | | JF404E | 353 |
| Jetta | 1975-92 | | 010 | 346 |
| Jetta | 1993-96 | | 096 | 349 |
| Jetta | 1995-On | | 01M | 349 |
| Jetta GLX | 1994-98 | | 096 | 349 |
| Kombi | 1975-92 | | 090 | 346 |
| Lupo | 1999-On | | JF404E | 353 |
| Passat | 1990-94 | | 096 | 349 |
| Passat | 1995-On | | 01N | 349 |
| Passat | 1995-On | | ZF5HP19FL | 367 |
| Passat 4 Motion | 1999-On | | ZF5HP19 | 367 |
| Pickup | 1975-91 | | 010 | 346 |
| Polo Coupe | 1995-On | | JF404E | 353 |
| Polo Variant | 1997-On | | 01M | 349 |
| Quantum | 1982-88 | 4 cyl. | 089 | 346 |
| Quantum | 1982-88 | 5 cyl. | 087 | 346 |
| Rabbit | 1980-93 | | 010 | 346 |
| Santana | 1974-86 | | 003 | 36 |
| Santana | 1985-86 | | 087 | 346 |
| Scirroco | 1975-89 | | 010 | 346 |
| Sharan | 1996-00 | | 098 | 349 |
| Sharan 4Motion | 2000-On | | JF506E | 354 |
| Transporter (T4) | 1991-On | | 098 | 349 |
| Type 2 Bus | 1968-79 | | 090 | 346 |
| Type IV | 1969-75 | | 003 | 36 |
| Vanagon | 1980-92 | | 090 | 346 |
| Vento | 1992-95 | | 096 | 349 |
| Vento | 1996-On | | 01M | 349 |

# VEHICLE INDEX

## VOLVO


| Model | Year | Engine | Trans. | Page |
|---|---|---|---|---|
| 140, 160 | 1968-75 | | BW35 | 186 |
| 240 | 1975-76 | | BW35 | 186 |
| 240 | 1977-85 | | BW55 | 189 |
| 240 | 1986-93 | | AW70 | 191 |
| 260 | 1976-93 | | AW70 | 191 |
| 260 | 1982-85 | Turbo | AW71 | 191 |
| 740 | 1985-92 | | AW70 | 191 |
| 760 | 1983-90 | | AW71 | 191 |
| 780 | 1983-88 | | ZF4HP22 | 363 |
| 780 | 1987-91 | | AW72 | 191 |
| 850 | 1993-97 | | AW50-40 | 193 |
| 940 | 1991-95 | Turbo | AW71 | 191 |
| 940 | 1992-95 | | AW70L | 191 |
| 960 | 1992-94 | | 30-40LE | 312 |
| 960 | 1995-97 | | 30-40LE | 312 |
| C70 | 1998-On | | 50-42LE | 193 |
| Cross Country | 2001-On | | 4T65E | 81 |
| S40 | 2000-On | | 50-40LE | 193 |
| S60 | 2001-On | | 55-50SN | 194 |
| S70 | 1998-On | | 50-42LE | 193 |
| S80 | 1999-On | | 4T65E | 81 |
| S90 | 1997-98 | | AW30-43 | 312 |
| V40 | 2000-On | | 50-40LE | 193 |
| V70 | 1998 | | 50-42LE | 193 |

# What's New in Our 2005 Catalog?

## General Motors...

| SERIES | DESCRIPTION | YEARS | PAGE |
|---|---|---|---|
| 156000 | 4L40E, 5L40E | 99+ | 49 |
| 167000 | Saturn Vue CVT | 02+ | 372 |
| 182000 | Saturn Ion 4 SP AF23-5, JATCO AW235 | 03+ | 95 |
| 171000 | NVG 125C, 225C Transfer Case | 02+ | 77 |

## Ford...

| SERIES | DESCRIPTION | YEARS | PAGE |
|---|---|---|---|
| 166000 | Ford 5R110W | 03+ | 123 |

## Aisin Warner/Borg Warner...

| SERIES | DESCRIPTION | YEARS | PAGE |
|---|---|---|---|
| 159000 | Volvo AW55/50SN | 99+ | 194 |
| 168000 | Aisin A581 Freightliner | 01+ | 197 |

## Honda...

| SERIES | DESCRIPTION | YEARS | PAGE |
|---|---|---|---|
| 161000 | Acura 5 SP RSX, MRMA | 02+ | 219 |
| 164000 | Honda CR-2 MRVA, MCVA | 02+ | 215 |
| 169000 | Honda Accord BCLA | 03+ | 215 |
| 172000 | Acura MDX MDKA | 03+ | 217 |
| 177000 | Honda Acura TSX | 04+ | 220 |

## Mitsubishi...

| SERIES | DESCRIPTION | YEARS | PAGE |
|---|---|---|---|
| 165000 | Hyundai F5AH1 | 01+ | 261 |

## Nissan...

| SERIES | DESCRIPTION | YEARS | PG/SECTION |
|---|---|---|---|
| 174000 | Nissan RE5R05A G35 | 02+ | 273 |
| 181000 | Jatco, Nissan RE0F09A CVT | 03+ | 373 |
| 162000 | 5F31J RE5F01A 4SP FWD | 01+ | 354 |

## Renault...

| SERIES | DESCRIPTION | YEARS | PG/SECTION |
|---|---|---|---|
| 155000 | AL4-DPO | 99+ | 298 |

## Subaru...

| SERIES | DESCRIPTION | YEARS | PG/SECTION |
|---|---|---|---|
| 176000 | Subaru CVT REX | 89+ | 373 |

## Suzuki...

| SERIES | DESCRIPTION | YEARS | PG/SECTION |
|---|---|---|---|
| 175000 | Suzuki Wagon R SR410, SR412 | 98+ | 307 |

## Toyota...

| SERIES | DESCRIPTION | YEARS | PG/SECTION |
|---|---|---|---|
| 163000 | Toyota U150 LEXUS | 02+ | 342 |
| 173000 | Toyota A750E, A750F, A750G | 03+ | 324 |

## Volkswagen...

| SERIES | DESCRIPTION | YEARS | PG/SECTION |
|---|---|---|---|
| 162000 | JF506E AG-5 | 01+ | 354 |
| 151000 | VW/Audi CVT | 01+ | 374 |

**Coming Soon...**

ZF6HP26, ZF CVT, VW Touareg, European "Mini" (Italy)

# TRANSMISSION SERIES CHART

| SERIES | DESCRIPTION |
|---|---|
| 11000 | GM Dynaflow |
| 12000 | GM Buick Special |
| 13000 | GM Hydramatic Standard & Dual Range |
| 14000 | GM Jetaway "315" |
| 15000 | GM F85 Model "05" |
| 16000 | GM Slim Jim Model "10" |
| 18000 | GM Powerglide Iron Case |
| 19000 | GM Powerglide Alum Case |
| 21000 | Chrysler Powerflite |
| 22000 | Chrysler Torqueflite Iron Case |
| 23000 | Ford FMX, SM, MED, LG BW 8/12 |
| 24000 | Ford 2 Speed |
| 25000 | Ford C4, C5 |
| 26000 | Ford C6, E4OD, 4R100 |
| 27000 | Chrysler TF6 A904, 998, 999 30RH, 31RH, 32RH |
| 27000 | Chrysler A500 40H, 42RH, 42RE, 44RE |
| 28000 | Chrysler TF8 A727 36RH, 37RH A518 46RE, 46RH, A618 47RE, 47RH |
| 29000 | BW T-35,T41,T-44 BW T-37 BW T-65,T-66 |
| 30000 | GM TH300 |
| 31000 | GM TH400 3L80, TH375 TH425, TH475 4L80E |
| 32000 | GM TH250 TH350, TH350C |
| 33000 | Studebaker (DG Bandless) |
| 34000 | Volkswagen Type 003 |
| 35000 | Toyota 2 Speed (A10) |
| 36000 | Toyota 3 Speed (A30) |
| 37000 | Toyota 2 Speed (A20) |
| 38000 | GM TH180, TH180C, 3L30 |
| 38000 | GM 4L30E |
| 41000 | Ford C3 A4LD, A4LDE 4R44, 4R55, 5R44, 5R55 |
| 42000 | Nissan 3N71B, 4N71B, N4A Subaru 3 Speed M41, M41A |
| 43000 | GM TH200, TH200-4R, TH325 TH325-4L |
| 44000 | Toyota A40 Series (3 & 4 Speed) Volvo AW70,71,72 |
| 45000 | Chrysler A404, 413, 470, 670 30TH,31TH |
| 46000 | Volkswagen Type 010, 087, 089, 090 |
| 47000 | Honda 2 Speed |

| SERIES | DESCRIPTION |
|---|---|
| 48000 | GM TH125 3T40 |
| 49000 | Ford AOD, AODE, 4R70W |
| 51000 | Ford ATX |
| 52000 | ZF3PH12, ZF3HP20 |
| 53000 | ZF3PH22, ZF4HP22, ZF4HP24 |
| 54000 | Mercedes 722,0, 722.1, 722.2 |
| 55000 | Allison AT540 Series |
| 56000 | Allison MT640, HT740 |
| 57000 | GM TH700R4,4L60, 4L60E |
| 58000 | Honda 3 & 4 Speed (With 110 mm & 116mm clutches) |
| 59000 | Mitsubishi KM 3 & 4 Speed |
| 61000 | Nissan RL3F01A, RN3F01A |
| 62000 | GM TH440T4 4T60, 4T60E, 4T65E |
| 63000 | Mazda F3A Spectrum/Nova |
| 64000 | Mercedes 722.3 |
| 65000 | Toyota FWD A130, A140, A240, A540 |
| 66000 | Renault MB-101 |
| 68000 | Nissan RE4F02A, RL4F02A |
| 69000 | Ford AXOD, AXOD-E. AX4S, AX4N, 4F50N |
| 71000 | Mercedes 722.4 (Baby 6 Bolt) |
| 72000 | Renault R18i |
| 73000 | Toyota A340, AW30-40, AW30-80 Jeep AW4 |
| 74000 | Mazda G4A-EL, 4EAT-G GF4A-EL |
| 75000 | Nissan RE4R01A, RL4R01A Subaru 4 Speed R4AX-EL |
| 77000 | Chrysler A604 40,41 A606 42LE, F4AC1 |
| 78000 | Honda (With 120mm Clutches) Accord 90-97, Prelude 92-96 |
| 79000 | BTR-85 Series (Australia) |
| 81000 | Mazda F4A-EL, 4EAT-F (Little ECAT-1 Pan) |
| 82000 | CVT UNOMATIC |
| 83000 | Toyota A440F, A442F |
| 87000 | GM MK2, MK5 Doug Nash |
| 101000 | Acura (With 125mm Clutches) MPYA, M5DA, M5HA, C35A-1 |
| 102000 | Saturn TAAT |
| 103000 | ZF4HP14 |
| 104000 | ZF4HP18, ZF5HP18 |
| 105000 | Isuzu JF403E, Nissan RE4FO4A, Ford 4F20E GM-RT77 |

# TRANSMISSION SERIES CHART

| SERIES | DESCRIPTION |
|---|---|
| 106000 | Nissan RE4R03A. Isuzu RG4R01A |
| 107000 | Nissan RE4F03A,RE4F03V, RL4F03A |
| 108000 | Mitsubishi F4A33/EV, W4A33 |
| 109000 | Volkswagen AG4, 095, 096, 097, 098, 01M, 01N, 01P Renault AR4, AD4, AD8 |
| 110000 | Aisin Warner AW50-40 |
| 111000 | GM 4T80E |
| 112000 | Ford CD4E, LA4AEL |
| 113000 | ZF5HP30 |
| 114000 | GM 4T40E, 4T45E |
| 115000 | Aisin Warner AW60-40, AF13 |
| 116000 | Honda V6 Accord 96-97 MPZA |
| 117000 | Mercedes 722.5 W5A030 |
| 118000 | Honda CVT |
| 119000 | Honda/Acura (With 116 & 120mm Clutches) BAXA, B6VA, MAXA, MDWA, M6HA |
| 121000 | Ecomat ZF 4HP590, 4HP600, 5HP590, 5HP600, 6HP590, 6HP600 |
| 122000 | Nissan RE5R01A |
| 123000 | Mitsubishi F4A-41 F4A-42 |
| 124000 | Mitsubishi F4A-51 |
| 125000 | Voith |
| 126000 | New Venture Gear Transfer Case NVG136, 236, 246, 247 |
| 127000 | Diahatsu Mini |
| 128000 | Chrysler 45RFE |
| 132000 | ZF5HP24 |
| 133000 | Mazda "FN" Ford 4F27E Focus |
| 134000 | Honda/Acura B7VA, B7YA |
| 135000 | Subaru 4 Speed 98+ |
| 136000 | Toyota U140E,U140F |
| 137000 | Ford 5R55N |
| 138000 | Borg Warner Transfer Case BW4405. BW4406 |
| 139000 | ZF5HP19, ZF5HP19FL, ZF5HP19FLA |
| 141000 | Mercedes 722.6 5 Speed |
| 142000 | Toyota A650 (5 speed) |
| 143000 | Lenco Racing |
| 144000 | Toyota U340E, U341E |
| 145000 | Toyota U240E |
| 146000 | Acura M7WA (5 Speed) |

| SERIES | DESCRIPTION |
|---|---|
| 147000 | Mercedes 722.7 (FWD) |
| 148000 | Allison World B300 / B400 |
| 149000 | Allison World B500 |
| 151000 | Audi CVT |
| 152000 | Allison 1000, 2000, 2400 Series |
| 153000 | Toyota A450-43LE, RNJ |
| 154000 | ZF4HP20 98+ |
| 155000 | Renault AL-4 DPO |
| 156000 | GM/BMW 5L40E/4L40E M-82 |
| 157000 | Acura MDX, Honda Odyssey BYBA, BGHA, MGHA |
| 158000 | Volkswagen/Audi JF404E Polo/Lupo |
| 159000 | Volvo AW55/50SN |
| 161000 | Acura 5 Speed RSX, MRMA |
| 162000 | VW/Nissan JF506-E AG-5, 5F31J RE5F01A 5 Speed FWD Rover Free VW Sharan |
| 163000 | Toyota U150 Lexus 02+ |
| 164000 | Honda CR-V MRVA, MCVA 02+ |
| 165000 | Hyundai F5AH1 |
| 166000 | Ford 5R110W |
| 167000 | Saturn Vue CVT 2002+ |
| 168000 | Aisin A581 (Freightliner) |
| 169000 | Honda Accord BCLA 2003+ |
| 171000 | GM Transfer Case NVG126C, 226C |
| 172000 | Acura MDX 03+ MDKA |
| 173000 | Toyota A750E, A750F, A750G |
| 174000 | Nissan RE5R05A (G35) |
| 175000 | Suzuki Wagon R SR410, SR412 98+ |
| 176000 | Subaru CVT REX |
| 177000 | Honda Acura TSX 04+ |
| 178000 | Miscellaneous |
| 179000 | Government Products |
| 181000 | Jatco, Nissan RE0F09A CVT 03+ |
| 182000 | Saturn 5 Speed AF23-5 ION, Jatco AW235 |
| 183000 | ZF6HP26 |
| 184000 | ZF CVT |
| | |
| | |
| | |
| | |
| | |

# ALTO Part Number Product Codes

| Product Group Range | | DESCRIPTION |
|---|---|---|
| **xxx000 to xxx099** | | **Kit Components** |
| **xxx100 to xxx149** | | **Sealing Rings - Bulk Numbers** |
| **xxx150 to xxx199** | | **Washers - Bulk Numbers** |
| **xxx200 to xxx249** | | **Bushings - Bulk Numbers** |
| **xxx250 to xxx299** | | **Snap-Rings - Bulk Numbers** |
| **xxx300 to xxx399** | | **Miscellaneous Hard Parts** |
| **xxx400 to xxx449** | | **Metal Clad Seals** |
| **xxx500 to xxx599** | | **Modulators** |
| **xxx600 to xxx699** | | **Kits** |
| xxx600 | | Sealing Ring Kits |
| xxx625 | | Bushing Kits |
| xxx630 | | Short Bushing Kits |
| xxx635 | | Washer Kits |
| xxx680 | | Snap Ring Kits |
| **xxx700 to xxx749** | | **Clutch Plates** |
| xxx700 | | even numbers =Friction (Internal Teeth) |
| xxx701 | | odd numbers = Steel (External Teeth) |
| xxx740 | | Hi-Performance Red Eagle® |
| **xxx750 to xxx759** | | **Clutch Plates Modules** |
| xxx750 | | Friction & Steel Module |
| xxx752 | | Friction Module |
| xxx753 | | Steel Module |
| **xxx754 to xxx759** | | **Powerpack® & Specialty Kits** |
| **xxx800 to xxx849** | | **Gasket kits & some components** |
| xxx800 | | even numbers = Overhaul Kits |
| xxx801 | | Odd numbers = paper & rubber kits |
| xxx815 | | Pan gasket - Fiber or Farpak |
| xxx816 | | Pan gaskets - Cork & rubber |
| **xxx900 to xxx939** | | **Master Overhaul & Banner Kits** |
| xxx901 | | Master Overhaul Kits |
| xxx901LS | | Banner Kits |
| xxx901SK | | Super Kits |
| **xxx940 to xxx949** | | **Filters** |
| xxx940FK | | Filter Kits |
| **xxx950 to xxx959** | | **Bands - Normal Duty** |
| **xxx960 to xxx969** | | **Bands - High Performance** |
| | | |
| | | |
| | | |

## *GLOSSARY OF TERMS: English to Spanish*

| TERMS (ENGLISH) | TERMINOLOGIA (ESPANOL) |
|---|---|
| 1ST | Primer |
| 2ND | Segundo |
| 2wd - 2 Wheel Drive | 2wd -Traccion / Impulsion de dos Ruedas |
| 3RD | Tercera |
| 4TH | Cuarta |
| 4wd - 4 Wheel Drive | 4wd - Traccion / Impulsion de cuatro Ruedas |
| AFTERMARKET | Mercado de Reposicion |
| ANTI-DRAG PLATE | Disco / Plato Anti Arrastre |
| AUTOMATIC | Automatico |
| AXLE SHAFTS | Ejes / Flechas Propulsores |
| B0 (Toyota) - Overdrive Brake | B0 (Toyota) - Freno de Sobremarcha / Sobremultiplicacion / supermarcha |
| B1 (Toyota) - No. 1 Brake / 2nd coast brake | B1 (Toyota) - Freno No. 1 / Freno del 2 de avanze sin esfuezo |
| B2 (Toyota) - No. 2 Brake / intermiadiate brake | B2 (Toyota) - Freno No. 2 / Freno intermedio |
| B3 (Toyota) - No. 3 Brake / 1st & Reverse Brake | B3 (Toyota) - Freno No. 3 / 1ra& Freno de Marcha atras |
| BAND NUT | Tuerca de banda |
| BAND, BND | Banda |
| BANNER KIT | Overhaul Kit y Juegos Discos de Friccion |
| BEARINGS | Baleros / Cojinetes / Caja de Bolas / Conchas |
| BLACK – BLK | Negro |
| BLUE | Azul |
| BODY | Carrocería / Cuerpo |
| BOTTOM | Abajo |
| BRAKE, BRK | Freno |
| BRASS | Bronce |
| BREAKING PLATE | Disco opresor |
| BUSHINGS | Bujes |
| C0 (Toyota) - Overdrive Direct | C0 (Toyota) - Sobremarcha / Sobremultiplicacion / Marcha Directa |
| C1 (Toyota) - Forward | C1 (Toyota) - Delantera (o) |
| C2 (Toyota) - Rear | C2 (Toyota) - Trasera (o) |
| CASE SAVER | Protector de Caja |
| CLUTCHES | Embragues |
| COMBO | combinacion de los tipos que abarca |
| COMPONENTS | Componentes |
| CORK & RUB, CORK AND RUBBER | Corcho & Hule / Goma / Caucho |
| COVER | Cubierta |
| CUTTING EDGE | Borde Cortado |
| DEEP | Profundo |
| DESIGN & ENGINEERING | Ingenieria y Diseño |
| DIR, DIRECT | Directa |
| DR | Drive / marcha |
| DRUM | Tambor |
| EARLY | Temprano / previo / anterior / antiguo |
| ELEC | Electrónica |
| F/D - Forward / Direct | Avance / Directa (o) |
| F/R Front/Rear | Delantero |
| FELT | Felpa |
| FILTER, FLT | Filtro |
| FINAL DRIVE | Marcha final |
| FLEX | Flexible |
| FORWARD, FOR | Delantero / avance / arranque |
| FR/MODULE | Juego de discos de fricción |

## *GLOSSARY OF TERMS: English to Spanish*

| TERMS (ENGLISH) | TERMINOLOGIA (ESPANOL) |
|---|---|
| FRICTION CLUTCHES | Discos de Fricción |
| FRONT, FRT | Front: delantera |
| FULL RING | Juego completo de anillos |
| FWD Front Wheel Drive | FWD- Transmission / Traccion delantera |
| GASKETS , GSK | Juntas de Carter |
| GEARING | Engranaje |
| GEARS | Engranes |
| GOV | Governador |
| GREEN, GRN | Verde |
| GROB | Rayado / acanalado / Estriado / Fresado |
| HARD PARTS | Partes Duras |
| HARDENED | Endurecido |
| HEAVY DUTY | Trabajo Pesado |
| HEAVY DUTY APPLICATION | Aplication uso pesado |
| HEG Hi-Energy Gray | HEG - Gris de Alta Energia |
| HIGH | Alta |
| HI-PERFORMANCE. HP | Alto Rendimento |
| ID - Inside diameeter | ID - Diametro Interior |
| IN-HOUSE | Produccion Interna |
| INN | Inner |
| INOVATIONS | Inovaciones |
| INPUT | Entrada |
| INT | Intermedia |
| KICK DOWN | Apresurar la marcha / Aceleron |
| KOL | Kolene® (material) |
| LARGE, LRG | Grande, largo |
| LATE | Posterior / reciente / tarde |
| LIGHT DUTY | Trabajo Ligero |
| LOW | Baja (o) |
| MASTER KIT | Banner Kit y El Juego de Discos de Acero |
| MEDIUM DUTY | Trabajo Mediano |
| METAL CLAD SEALS | Retenes |
| MISCELLANEOUS | Articulos Miscelaneous |
| MODULATORS , MDL | Moduladores |
| MODULES | Juegos de Discos |
| MOLDED PISTON | Pistones vulcanizados / moldeados |
| NEW DESIGN | Diseño nuevo |
| NYLON | Nylon |
| OD | Overdrive / sobre marcha |
| OD: | OD - Diametro exterior |
| OEI | Mejora de Equipo Original |
| OEM | Fabricante de Equipo Original |
| OIL PAN | Empaque de carter |
| OVERHAUL KIT | Cartera de Empagues y Ligas con retenes y anillos |
| PAN | Carter |
| PAN GASKETS | Empaques de carter |
| PAN GSK | Empaques de carter |
| PL - Parallel Lines (grooves) | PL - Lineas Paralelas (ranuras / estrias / acanalado / Fresado) |
| PLNI - Parallel lines non intersecting | PLNI - Lineas Paralelas sin Ranuras Intersectantes |
| POWER MANAGEMENT | Poder de Mando |
| POWERBAND | Banda especial / Banda más ancha |

## *GLOSSARY OF TERMS: English to Spanish*

| TERMS (ENGLISH) | TERMINOLOGIA (ESPANOL) |
|---|---|
| POWERPACK | Paquete de discos de poder |
| POWERSOLUTIONS | Articulos fabricados por Alto Products para solucionar un problema presentado |
| PRESSURE PLATES | platos de presion |
| PURPLE | Purpura / Morado (a) |
| PUSH IN | De presion |
| REAR, RR | Trasero |
| REAR AXLE SHAFT | Flecha / Eje Trasero |
| REBUILDING KITS | Juego de Reparacion |
| RED, ORANGE | Rojo o naranja |
| REVERSE, REV | Reversa |
| RIGID | Rígida (a) |
| RUBBER, RUB | Hule / Goma / Caucho |
| RWD - Rear Wheel Drive | RWD - Transmision / Traccion / Propulsion por las ruedas traseras |
| SAD | C / Diafragma sencillo |
| SB Sunburst grooves | SB - Ranuras / estrias / acanalado de broche en figura de sol |
| SCREW | Rosca |
| SEALING RINGS | Anillos |
| SEALS | Retenes |
| SEL | Selectivo |
| SHORT | Corto / pequeño / Chico |
| SHORT RING | Juego de anillos básico |
| SIDE | Lateral |
| SM - Smooth (no grooves) | SM - Suave / Liso sin ranuras / sin estria / sin acanalar / sin fresar |
| SMALL, SML | Pequeño / chico / corto |
| SNAP RINGS | Seguros |
| SPACER | Espaciador |
| SPLIT | Seccionada / Fraccionada / dividida |
| ST/MODULE | Juego de discos de acero |
| STANDARD | Estandar / Manual |
| STEEL | Disco de acero |
| STEEL CLUTCHES | Disco de acero |
| STRIPE | Franja o ralla |
| SUPER KIT | Master Kit y Filtro, Banda, Bujes Basicos, Moduladore |
| SYNCHRONIZER ASSEMBLIES | Ensamble Sincronizador |
| THIN | Delgado |
| TOP | Arriba |
| TRANSFER CASE | Caja de transferencia |
| TURB | Turbolator: rayado concéntrico |
| WITH, W/ | Con |
| W/HOLES | Con turbolator |
| W/O | Sin |
| WAFFLE, WF | Tipo de galleta / Ranura forma cuadriculada |
| WAVE | Ondulado |
| WHITE | Blanco |
| WITH ARROW | Con flecha |
| YELLOW | Amarillo |

# TRANSMISSION CODES

## GENERAL MOTORS CODES

| CODE | TRANSMISSION | NOTES | CODE | TRANSMISSION | NOTES |
|---|---|---|---|---|---|
| M13 | 4T60E | | MH1 | 4T80E | |
| M15 | 4T65E | 245mm Converter | ML4 | 4L30E | |
| M30 | 4L60E | | MN3 | 4T65E | 258mm Converter |
| M32 | 4L60E | Corvette | MN4 | 4T40E | |
| M40 | 3L80 | TH400 | MN5 | 4T45E | |
| M41 | A44DL | Tracker | MN7 | 4T65E | 258mm Converter |
| M74 | ALLISON 2000 | | MN8 | ALLISON 1000 | |
| M76 | 4T65E | 4 Wheel Drive | MT1 | 4L80E | |
| M82 | 5L40E | | MX1 | A131L | |
| M90 | 4L40E | | MX17 | A210 | |
| MD7 | 4T65E | 245mm Conv. For China | MS7 | A240E | |
| MD8 | 4L60 | TH700 | | | |
| MD9 | 3T40 | TH125C | | | |
| ME9 | 4T60 | TH440 | | | |

## CHRYSLER CODES

| CODE | TRANSMISSION | NOTES | CODE | TRANSMISSION | NOTES |
|---|---|---|---|---|---|
| 30RH | A904 | | 41TE | A604 | |
| 30TH | A404 | | 41AE | A604 | All Wheel Drive |
| 31RH | A998 | | 42LE | A606 | |
| 31TH | A413 | Turbo | 42RH | A500 | A999 |
| 32RH | A999 | | 42RE | A500SE | |
| 36RH | A727 | | 44RE | A500 | |
| 37RH | A727 | Heavy Duty (Diesel) | 46RH | A518 | |
| 40RH | A500 | A904 | 46RE | A518SE | |
| 40TE | A604 | Light | 47RH | A618 | |

## TOYOTA TAG NUMBERS

| CODE | TRANSMISSION |
|---|---|
| 03-50 | A40D |
| 03-51 | A40D |
| 03-55 | A40 / AW55 |
| 03-56 | A41 |
| 03-70 | A42D / AW70 |
| 03-70L | A42DL |
| 03-71 | A43D / AW71 |
| 03-71L | A43DL |
| 03-71LE | A43DE / A46DE |
| 03-72 | AW372 / KM148 |
| 03-72L | A44DL / A45DL |
| 03-72LE | A44DE |
| 03-75 | A43 |

# GENERAL MOTORS
## DYNAFLOW
### Except Buick Special
### 1948-63

| ILL | DESCRIPTION | YEARS | FRICTION MODULE | STEEL MODULE | OVERHAUL KIT | BANNER KIT | MASTER KIT |
|---|---|---|---|---|---|---|---|
| **KITS** | | | | | | | |
| KT | Rebuilding Kit | 48-54 | 011752 | 011753 | 011800 | 011901LS | 011901 |
| KT | Rebuilding Kit | 55-60 | 011752 | 011753 | 011802 | 011903LS | 011903 |
| KT | Rebuilding Kit - except Buick Special | 61-63 | 011752 | 011753 | 011804 | 011905LS | 011905 |

| ILL | ALTO NO | DESCRIPTION | SPEC | YEAR | QTY | NOTES |
|---|---|---|---|---|---|---|
| **FRICTION CLUTCHES** | | | | | | |
| NI | 011704 | Friction | .100 | 48-63 | 6 | Tan - 51T - OD: 5.318"-WF |
| NI | 011700BR | Friction - Bronze | .100 | 48-63 | 6 | Brz - 51T - OD: 5.318"-WF |
| **STEEL CLUTCHES** | | | | | | |
| NI | 011701 | Steel | .070 | 48-63 | 6 | 6T - ID: 4.070" |

# GENERAL MOTORS
## BUICK SPECIAL
### 1961-63

| ILL | DESCRIPTION | YEARS | FRICTION MODULE | STEEL MODULE | OVERHAUL KIT | BANNER KIT | MASTER KIT |
|---|---|---|---|---|---|---|---|
| **KITS** | | | | | | | |
| KT | Rebuilding Kit | 61-63 | 012752 | 012753 | 012800 | 012901LS | 012901 |

| ILL | ALTO NO | DESCRIPTION | SPEC | YEAR | QTY | NOTES |
|---|---|---|---|---|---|---|
| **FRICTION CLUTCHES** | | | | | | |
| NI | 012700 | Forward (Large) | .080 | 61-63 | 5 | Tan - 66T - OD: 5.438"-SM |
| NI | 012700 | Reverse (Large) | .080 | 61-63 | 4 | Tan - 66T - OD: 5.438"-SM |
| NI | 012702 | Coast (Small) | .080 | 61-63 | 5 | Tan - 28T - OD: 3.561"-PL |
| NI | 012702 | Split Torque (Small) | .080 | 61-63 | 4 | Tan - 28T - OD: 3.561"-PL |
| **STEEL CLUTCHES** | | | | | | |
| NI | 012701 | Forward (Large) | .070 | 61-63 | 5 | 17T - ID: 4.365" |
| NI | 012705 | Reverse (Large) | .070 | 61-63 | 3 | 17T - ID: 4.369" |
| NI | 012707 | Coast (Small) | .070 | 61-63 | 4 | 12T - ID: 2.430" |
| NI | 012707 | Split Torque (Small) | .070 | 61-63 | 3 | 12T - ID: 2.430" |

# GENERAL MOTORS
## HYDRAMATIC
### STANDARD & DUAL RANGE
### 1951-64

| ILL | DESCRIPTION | YEARS | FRICTION MODULE | STEEL MODULE | OVERHAUL KIT | BANNER KIT | MASTER KIT |
|---|---|---|---|---|---|---|---|
| **KITS** | | | | | | | |
| KT | Rebuilding Kit | 51-64 | 013752 | 013753 | 013800 | 013901LS | 013901 |

| ILL | ALTO NO | DESCRIPTION | SPEC | YEAR | QTY | NOTES |
|---|---|---|---|---|---|---|
| **FRICTION CLUTCHES** | | | | | | |
| NI | 013700 | Front & Rear - wave | .098 | 51-64 | 12 | Tan - 51T - OD: 5.318"-PL |
| **STEEL CLUTCHES** | | | | | | |
| NI | 013701 | Front & Rear | .067 | 51-64 | 12 | 12T - ID: 4.070" |
| NI | 013701A | Rear - wave | .050 | 51-64 | AR | 12T - ID: 4.070" |

# GENERAL MOTORS
## JETAWAY "315"
## 1956-64

| ILL | DESCRIPTION | YEARS | FRICTION MODULE | STEEL MODULE | OVERHAUL KIT | BANNER KIT | MASTER KIT |
|---|---|---|---|---|---|---|---|
| **KITS** | | | | | | | |
| KT | Rebuilding Kit | 56-64 | 014752 | 014753 | 014800 | 014901LS | 014901 |

| ILL | ALTO NO | DESCRIPTION | SPEC | YEAR | QTY | NOTES |
|---|---|---|---|---|---|---|
| **FRICTION CLUTCHES** | | | | | | |
| NI | 014700 | Neutral | .100 | 56-57 | 5 | Cork & Rubber |
| NI | 014702 | Neutral | .100 | 56-64 | 5 | Tan - 49T - OD: 6.408"-SM |
| NI | 014706 | Overrun | .120 | 56-64 | 1 | Tan - 4T - OD: 5.467"-SM |
| NI | 014710 | Rear | .100 | 59-64 | 7 | Tan - 45T - OD: 6.300"-SM |
| NI | 014714 | Rear | .100 | 56-58 | 7 | Cork & Rubber |
| **STEEL CLUTCHES** | | | | | | |
| NI | 014701 | Neutral | .050 | 56-64 | 7 | 6T - ID: 5.106" |
| NI | 014703 | Rear | .070 | 56-64 | 7 | 10T - ID: 4.716" |

# GENERAL MOTORS
## ROTO-HYDRAMATIC "240"
## Model 05 / F-85 1961-63

| ILL | DESCRIPTION | YEARS | FRICTION MODULE | STEEL MODULE | OVERHAUL KIT | BANNER KIT | MASTER KIT |
|---|---|---|---|---|---|---|---|
| **KITS** | | | | | | | |
| KT | Rebuilding Kit | 61-63 | 015752 | 015753 | 015800 | 015901LS | 015901 |

| ILL | ALTO NO | DESCRIPTION | SPEC | YEAR | QTY | NOTES |
|---|---|---|---|---|---|---|
| **FRICTION CLUTCHES** | | | | | | |
| NI | 015700 | Front | .096 | 61-63 | 5 | Bent Ears |
| **STEEL CLUTCHES** | | | | | | |
| NI | 015701 | Front | .070 | 61-63 | 5 | 21T - ID: 4.798" |

# GENERAL MOTORS
## ROTO-HYDRAMATIC "375"
## Model 10 / Slim Jim 1961-64

| ILL | DESCRIPTION | YEARS | FRICTION MODULE | STEEL MODULE | OVERHAUL KIT | BANNER KIT | MASTER KIT |
|---|---|---|---|---|---|---|---|
| **KITS** | | | | | | | |
| KT | Rebuilding Kit | 61-64 | 016752 | 016753 | 016800 | 016901LS | 016901 |

| ILL | ALTO NO | DESCRIPTION | SPEC | YEAR | QTY | NOTES |
|---|---|---|---|---|---|---|
| **FRICTION CLUTCHES** | | | | | | |
| NI | 016702 | Front | .098 | 61-64 | 7 | Bent Ears |
| NI | 016706 | Neutral | .098 | 61-64 | 4 | Tan - 47T - OD: 6.066"-SM |
| **STEEL CLUTCHES** | | | | | | |
| NI | 016701 | Front - wave | .070 | 61-64 | 7 | 21T - ID: 5.536" |
| NI | 016703 | Neutral | .050 | 61-64 | 4 | 18T - ID: 4.930" |

# GENERAL MOTORS
## POWERGLIDE
## CAST IRON CASE 1950-62

| ILL | DESCRIPTION | YEARS | FRICTION MODULE | STEEL MODULE | OVERHAUL KIT | BANNER KIT | MASTER KIT |
|---|---|---|---|---|---|---|---|
| **KITS** | | | | | | | |
| KT | Rebuilding Kit | 50-52 | 018752 | 018753 | 018800 | 018901LS | 018901 |
| KT | Rebuilding Kit | 53-54 | 018752 | 018753 | 018802 | 018903LS | 018903 |
| KT | Rebuilding Kit | 55 | 018752 | 018753C | 018804 | 018905ALS | 018905A |
| KT | Rebuilding Kit | 56-57 | 018752A | 018753 | 018804 | 018905LS | 018905 |

# GENERAL MOTORS
## POWERGLIDE
## CAST IRON CASE 1950-62

| ILL | DESCRIPTION | YEARS | FRICTION MODULE | STEEL MODULE | OVERHAUL KIT | BANNER KIT | MASTER KIT |
|---|---|---|---|---|---|---|---|
| **KITS** | | | | | | | ...Continued |
| KT | Rebuilding Kit | 58-62 | 018752B | 018753A | 018806 | 018907LS | 018907 |

| ILL | ALTO NO | DESCRIPTION | SPEC | YEAR | QTY | NOTES |
|---|---|---|---|---|---|---|
| **FRICTION CLUTCHES** | | | | | | |
| NI | 018700 | High / Low - wave | .098 | 61-62 | 2-4 | Tan - 43T - OD: 5.062"-SM |
| NI | 018708 | High / Low - flat | .098 | 56-60 | 4 | Tan - 43T - OD: 5.062"-SM |
| NI | 018710 | High / Low (lug type) | .098 | 50-55 | 4 | Tan - 8T - OD: 5.062"-SM |
| **STEEL CLUTCHES** | | | | | | |
| NI | 018707 | High / Low | .070 | 50-55 | 5 | 6T - ID: 3.755" |
| NI | 018703 | High / Low - wave | .070 | 56-60 | 3/5 | 6T - ID: 3.870" |
| NI | 018705 | High / Low - use with 3 Pc. 018703 | .090 | 57 | 2 | 6T - ID: 3.870" |
| NI | 019701A | High / Low | .060 | 61-62 | 5 | 12T - ID: 3.870" |

# GENERAL MOTORS
## SUPER TURBINE 300
## 1964-69

| ILL | DESCRIPTION | YEARS | FRICTION MODULE | STEEL MODULE | OVERHAUL KIT | BANNER KIT | MASTER KIT |
|---|---|---|---|---|---|---|---|
| **KITS** | | | | | | | |
| KT | Rebuilding Kit | 64-69 | 030752 | 030753 | 030800 | 030901LS | 030901 |

| ILL | ALTO NO | DESCRIPTION | SPEC | YEAR | QTY | NOTES |
|---|---|---|---|---|---|---|
| **FRICTION CLUTCHES** | | | | | | |
| NI | 018708 | Front | .068 | 64-69 | 4 | Tan - 43T - OD: 5.062"-SM |
| NI | 019702 | Rear | .098 | 64-69 | 5 | Tan - 25T - OD: 6.461"-SM |
| **STEEL CLUTCHES** | | | | | | |
| NI | 019701 | Front | .070 | 64-69 | 3-5 | 12T - ID: 3.874" |
| NI | 019703 | Rear | .070 | 64-69 | AR | 6T - ID: 5.727" |

# FORD
## SMALL CASE 1951-67, MEDIUM CASE 1955-69
## LARGE CASE 1958-65

| ILL | DESCRIPTION | YEARS | FRICTION MODULE | STEEL MODULE | OVERHAUL KIT | BANNER KIT | MASTER KIT |
|---|---|---|---|---|---|---|---|
| **KITS** | | | | | | | |
| KT | Rebuilding Kit - Small Case | 51-67 | 023752A | 023753A | 023802 | 023903LS | 023903 |
| KT | Rebuilding Kit - Medium Case | 55-69 | 023752B | 023753B | 023806 | 023905LS | 023905 |
| KT | Rebuilding Kit - Large Case | 58-65 | 023752C | 023753C | 023808 | 023907LS | 023907 |

| ILL | ALTO NO | DESCRIPTION | SPEC | YEAR | QTY | NOTES |
|---|---|---|---|---|---|---|
| **FRICTION CLUTCHES** | | | | | | |
| NI | 049700 | Front & Rear | .061 | 51-69 | 9 | Tan - 45T - OD: 5.250"-PL |
| NI | 023712 | Front & Rear (Large Case) | .061 | 58-65 | 9 | Tan - 52T - OD: 5.850"-PL |
| NI | 023712BR | Front & Rear | .061 | 58-65 | 9 | Brz - 52T - OD: 5.850"-SB |
| NI | 023736 | Front | .068 | 51-67 | 3 | Tan - 45T - OD: 5.250"-WF |
| **STEEL CLUTCHES** | | | | | | |
| NI | 023701 | Front & Rear | .068 | 51-69 | AR | 54T - ID: 3.898" |
| NI | 023701K | Front & Rear (Kolene®) | .068 | 51-69 | AR | 54T - ID: 3.898" |
| NI | 023703 | Rear - Dish | .065 | 51-69 | 4-6 | 54T - ID: 3.898" |
| NI | 023705 | Rear | .090 | 62-67 | 4-6 | 54T - ID: 3.898" |
| NI | 023719 | Front & Rear (Large Case) | .070 | 58-65 | 3 | 60T - ID: 4.490" |
| NI | 023767 | Front Dish Spring | .073 | 51-On | 1 | |

# FORD
## FORDOMATIC 2 SPEED
## 1959-64

| ILL | DESCRIPTION | YEARS | FRICTION MODULE | STEEL MODULE | OVERHAUL KIT | BANNER KIT | MASTER KIT |
|---|---|---|---|---|---|---|---|
| **KITS** | | | | | | | |
| KT | Rebuilding Kit | 59-64 | 024752 | 024753 | 024800 | 024901LS | 024901 |

| ILL | ALTO NO | DESCRIPTION | SPEC | YEAR | QTY | NOTES |
|---|---|---|---|---|---|---|
| **FRICTION CLUTCHES** | | | | | | |
| NI | 024700 | Front | .092 | 59-64 | 2-5 | Tan - 51T - OD: 5.959"-SM |
| **STEEL CLUTCHES** | | | | | | |
| NI | 024701 | Front | .068 | 59-64 | 3-5 | 12T - ID: 4.410" |

# CHRYSLER
## POWERFLITE
## 1953-61

| ILL | DESCRIPTION | YEARS | FRICTION MODULE | STEEL MODULE | OVERHAUL KIT | BANNER KIT | MASTER KIT |
|---|---|---|---|---|---|---|---|
| **KITS** | | | | | | | |
| KT | Rebuilding Kit | 53-E56 | 021752 | 021753 | 021800 | 021901LS | 021901 |
| KT | Rebuilding Kit | 56-61 | 021752A | 021753A | 021800 | 021901ALS | 021901A |

| ILL | ALTO NO | DESCRIPTION | SPEC | YEAR | QTY | NOTES |
|---|---|---|---|---|---|---|
| **FRICTION CLUTCHES** | | | | | | |
| NI | 021700 | Direct - wave | .100 | 53-E56 | 5-6 | Tan - 8T - OD: 5.13"-SM |
| NI | 021702 | Direct - wave | .100 | 56-61 | 5-6 | Tan - 12T - OD: 5.13"-SM |
| **STEEL CLUTCHES** | | | | | | |
| NI | 021701 | Direct | .070 | 53-61 | 5-6 | 8T - ID: 4.070" |

# CHRYSLER
## TORQUEFLITE
## CAST IRON CASE 1956-61

| ILL | DESCRIPTION | YEARS | FRICTION MODULE | STEEL MODULE | OVERHAUL KIT | BANNER KIT | MASTER KIT |
|---|---|---|---|---|---|---|---|
| **KITS** | | | | | | | |
| KT | Rebuilding Kit | 56-61 | 022752 | 022753 | 022800 | 022901LS | 022901 |

| ILL | ALTO NO | DESCRIPTION | SPEC | YEAR | QTY | NOTES |
|---|---|---|---|---|---|---|
| **FRICTION CLUTCHES** | | | | | | |
| NI | 022700 | Front | .063 | 56-61 | 3 | Tan - 45T - OD: 5.512"-PL |
| NI | 022702 | Front - selective | .077 | 56-61 | AR | Tan - 45T - OD: 5.512"-SP |
| NI | 022706 | Rear | .097 | 56-61 | 5 | Tan - 45T - OD: 5.512"-PL |
| **STEEL CLUTCHES** | | | | | | |
| NI | 022701 | Front | .070 | 56-61 | 3 | 8T - ID: 4.135" |
| NI | 022701 | Rear | .070 | 56-61 | 4 | 8T - ID: 4.135" |

# BORG WARNER
## MODELS 3 thru 8, 11 thru 12
## CAST IRON CASE 1956-61

| ILL | DESCRIPTION | YEARS | FRICTION MODULE | STEEL MODULE | OVERHAUL KIT | BANNER KIT | MASTER KIT |
|---|---|---|---|---|---|---|---|
| **KITS** | | | | | | | |
| KT | Rebuilding Kit | 56-61 | 023752B | 023753F | 023804 | 023903ALS | 023903A |

| ILL | ALTO NO | DESCRIPTION | SPEC | YEAR | QTY | NOTES |
|---|---|---|---|---|---|---|
| **FRICTION CLUTCHES** | | | | | | |
| NI | 049700 | Front & Rear | .061 | 56-74 | 3-4 | Tan - 45T - OD: 5.250"-PL |
| NI | 049700BR | Front & Rear - bronze | .061 | 56-74 | 3-4 | Brz - 45T - OD: 5.250"-SB |

# BORG WARNER
## MODELS 3 thru 8, 11 thru 12
## CAST IRON CASE 1956-61

| ILL | ALTO NO | DESCRIPTION | SPEC | YEAR | QTY | NOTES |
|---|---|---|---|---|---|---|
| **STEEL CLUTCHES** | | | | | | |
| NI | 023701 | Front | .068 | 56-74 | 2-3 | 54T - ID: 3.898" |
| NI | 023703 | Rear - dish | .068 | 56-74 | 4-5 | 54T - ID: 3.898" |

# BORG WARNER
## 3 BAND
## 1950-56

| ILL | DESCRIPTION |
|---|---|
| **KITS** | |
| KT | Rebu |

| ILL | ALTO NO | DESCRIPTION | SPEC | YEAR | QTY | NOTES |
|---|---|---|---|---|---|---|
| **FRICTION CLUTCHES** | | | | | | |
| NI | 033710 | Friction | .098 | 50-67 | 3-4 | Tan - 57T - OD: 5.037"-SM |
| **STEEL CLUTCHES** | | | | | | |
| NI | 033711 | Steel | .069 | 50-67 | 5 | 6T - ID: 3.720" |

# HONDA
## 2 SPEED (95mm Clutches)
## 1973-80

| ILL | DESCRIPTION | YEARS | FRICTION MODULE | STEEL MODULE | OVERHAUL KIT | BANNER KIT | MASTER KIT |
|---|---|---|---|---|---|---|---|
| **KITS** | | | | | | | |
| KT | Rebuilding Kit | 73-80 | 047752 | 047753 | 047800 | 047901LS | 047901 |

| ILL | ALTO NO | REF NO | DESCRIPTION | SPEC | YEAR | QTY | NOTES |
|---|---|---|---|---|---|---|---|
| **FRICTION CLUTCHES** | | | | | | | |
| NI | 047700 | 22535-639-010 | Drive | .075/1.9 | 73-80 | 4 | Tan - 38T - OD: 3.775"-PL |
| NI | 047700 | 22535-639-010 | Low | .075/1.9 | 73-80 | 4 | Tan - 38T - OD: 3.775"-PL |
| **STEEL CLUTCHES** | | | | | | | |
| NI | 047701 | 22536-639-000 | Drive | .079/2.0 | 73-80 | 4 | 36T - ID: 2.833" |
| NI | 047701 | 22536-639-000 | Low | .079/2.0 | 73-80 | 4 | 36T - ID: 2.833" |
| NI | 047701K | NA | Drive & Low - Kolene® | .079/2.0 | 73-80 | AR | 36T - ID: 2.833" |
| NI | 047701A | NA | Drive & Low - selective | .070/1.8 | 73-80 | AR | 36T - ID: 2.833" |

# TOYOTA
## A10 2 SPEED
## 1965-70

| ILL | DESCRIPTION | YEARS | FRICTION MODULE | STEEL MODULE | OVERHAUL KIT | BANNER KIT | MASTER KIT |
|---|---|---|---|---|---|---|---|
| **KITS** | | | | | | | |
| KT | Rebuilding Kit | 65-70 | 035752 | 035753 | 035800 | 035901LS | 035901 |

| ILL | ALTO NO | REF NO | DESCRIPTION | SPEC | YEAR | QTY | NOTES |
|---|---|---|---|---|---|---|---|
| **FRICTION CLUTCHES** | | | | | | | |
| NI | 035700 | 35633-10011 | Front | .110/2.8 | 65-70 | 3 | Tan - 6T - OD: 4.697"-PL |
| **STEEL CLUTCHES** | | | | | | | |
| NI | 035701 | 35634-31010 | Front | .067/1.7 | 65-70 | 7 | 6T - ID: 3.515" |

# TOYOTA
## A20 2 SPEED
## 1970-74

| ILL | DESCRIPTION | YEARS | FRICTION MODULE | STEEL MODULE | OVERHAUL KIT | BANNER KIT | MASTER KIT |
|---|---|---|---|---|---|---|---|
| **KITS** | | | | | | | |
| KT | Rebuilding Kit | 70-74 | 037752 | 037753 | 037800 | 037901LS | 037901 |

| ILL | ALTO NO | REF NO | DESCRIPTION | SPEC | YEAR | QTY | NOTES |
|---|---|---|---|---|---|---|---|
| **FRICTION CLUTCHES** | | | | | | | |
| NI | 037700 | 35633-12010 | Front | .100/2.5 | 70-74 | 3 | Tan - 8T - OD: 4.234"-PL |
| NI | 037702 | 35883-12010 | Rear | .100/2.5 | 70-74 | 4 | Tan - 22T - OD: 5.240"-SM |
| **STEEL CLUTCHES** | | | | | | | |
| NI | 037701 | 35634-12010 | Front | .067/1.7 | 70-74 | 4-6 | 6T - ID: 3.365" |
| NI | 037703 | 35884-12010 | Rear | .060/1.6 | 70-74 | 4-5 | 6T - ID: 4.570" |

# TOYOTA
## A30 3 SPEED
## 1968-78

| ILL | DESCRIPTION | YEARS | FRICTION MODULE | STEEL MODULE | OVERHAUL KIT | BANNER KIT | MASTER KIT |
|---|---|---|---|---|---|---|---|
| **KITS** | | | | | | | |
| KT | Rebuilding Kit | 68-78 | 036752 | 036753 | 036800 | 036901LS | 036901 |

| ILL | ALTO NO | REF NO | DESCRIPTION | SPEC | YEAR | QTY | NOTES |
|---|---|---|---|---|---|---|---|
| **FRICTION CLUTCHES** | | | | | | | |
| NI | 036700 | 35633-40010 | Front | .100/2.5 | 68-78 | 4 | Tan - 39T - OD: 4.240"-PL |
| NI | 036700 | 35633-40010 | Rear | .100/2.5 | 68-78 | 3 | Tan - 39T - OD: 4.240"-PL |
| **STEEL CLUTCHES** | | | | | | | |
| NI | 036701 | 35634-30020 | Front | .063/1.6 | 68-78 | 3 | 44T - ID: 3.354" |
| NI | 036703 | 35634-30040 | Front | .054/1.4 | 68-78 | 1 | 44T - ID: 3.354" |
| NI | 036705 | 35634-30050 | Front | .070/1.8 | 68-78 | AR | 44T - ID: 3.354" |
| NI | 036707 | 35674-30010 | Rear | .067/1.7 | 68-78 | 6 | 44T - ID: 3.354" |

# VOLKSWAGEN
## TYPE 003 3 SPEED
## 1969-76

| ILL | DESCRIPTION | YEARS | FRICTION MODULE | STEEL MODULE | OVERHAUL KIT | BANNER KIT | MASTER KIT |
|---|---|---|---|---|---|---|---|
| **KITS** | | | | | | | |
| KT | Rebuilding Kit | 69-76 | 034752 | 034753 | 034800 | 034901LS | 034901 |

| ILL | ALTO NO | REF NO | DESCRIPTION | SPEC | YEAR | QTY | NOTES |
|---|---|---|---|---|---|---|---|
| **FRICTION CLUTCHES** | | | | | | | |
| NI | 034700 | 003-323-241B | Forward - rear drum | .060/1.5 | 69-76 | 3 | Tan - 43T - OD: 4.156"-PL |
| NI | 034702 | 003-323-141 | Direct / Reverse - front drum | .090/2.3 | 69-76 | 2 | Tan - 43T - OD: 4.156"-WF |
| **STEEL CLUTCHES** | | | | | | | |
| NI | 034701 | 003-323-139 | Forward - rear drum | .079/2.0 | 69-76 | 3 | 16T - ID: 3.527" |
| NI | 034701 | 003-323-139 | Direct / Reverse - front drum | .079/2.0 | 69-76 | 2 | 16T - ID: 3.527" |

| ILL | DESCRIPTION |
|---|---|
| **KITS** | |
| KT | Rebu |

| ILL | ALTO NO | REF NO | DESCRIPTION | SPEC | YEAR | QTY | NOTES |
|---|---|---|---|---|---|---|---|
| **FRICTION CLUTCHES** | | | | | | | |
| NI | 052700 | 24231-201-062 | Front . . . . . | .070/1.8 | 66-81 | 7 | Tan - 56T - OD: 5.432"-PL |
| NI | 052702 | 24231-205-106 | Rear . . . . . | .076/1.9 | 66-81 | 8 | Tan - 56T - OD: 5.432"-PL |

# GENERAL MOTORS
## POWERGLIDE
## ALUMINUM CASE
## 1962-73

A ►

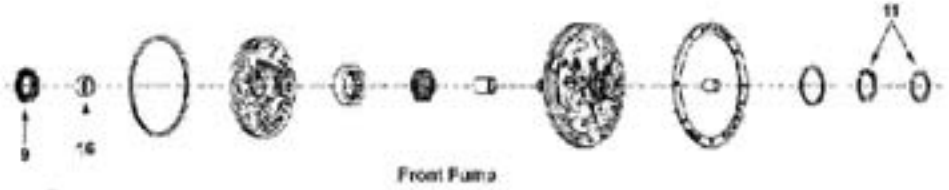


B ►

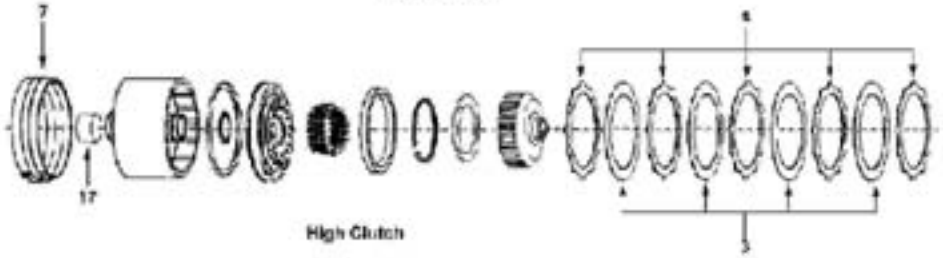


C ►

D ►

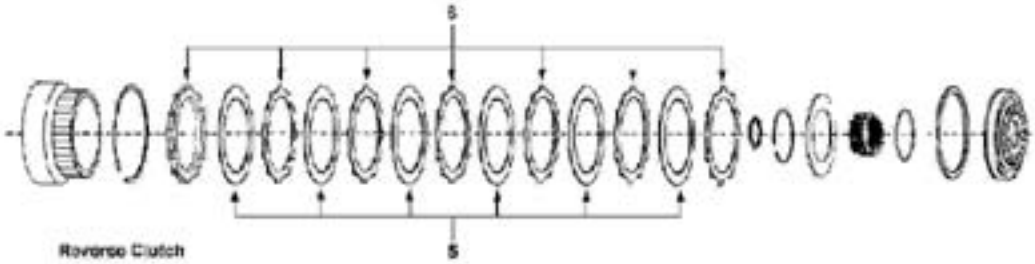


E ►

F ►

G ►

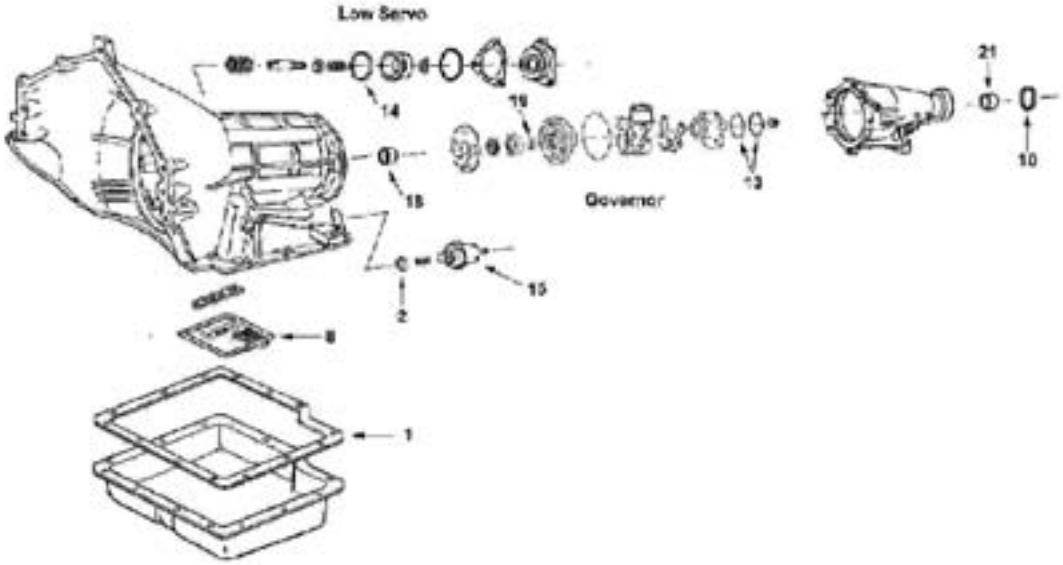

# GENERAL MOTORS
## POWERGLIDE
## ALUMINUM CASE
## 1962-73

| ILL | DESCRIPTION | YEARS | FRICTION MODULE | STEEL MODULE | OVERHAUL KIT | BANNER KIT | MASTER KIT |
|---|---|---|---|---|---|---|---|
| **KITS** | | | | | | | |
| KT | Rebuilder Kit | 62-73 | 019752 | 019753 | 019800 | 019901LS | 019901 |
| **HI-PERFORMANCE** | | | | | | | |
| KT | Rebuilder Kit | 62-73 | 019752HP | 019753HP | 019800HP | 019901HPLS | 019901HP |
| KT | Rebuilder Kit w/ Turbulator Front Steels | 62-73 | 019752HP | 019753HPH | 019800HP | 019901HPLS | 019901HPH |
| **HI-PERFORMANCE - with Powerpack™** | | | | | | | |
| KT | Rebuilder Kit | 62-73 | 019750D FR & ST | | 019800HP | NA | 019901AHP |
| KT | Rebuilder Kit w/ Turbulator Front Steels | 62-73 | 019750C FR & ST | | 019800HP | NA | 019901AHPH |

| ILL | ALTO NO | REF NO | DESCRIPTION | SPEC | YEAR | QTY | NOTES |
|---|---|---|---|---|---|---|---|
| **MISCELLANEOUS GASKETS & KIT COMPONENTS** | | | | | | | |
| 1G | 019816 | 3789148 | Gasket, Oil Pan | Cork/Rub | 62-73 | 1 | |
| 1G | 019816HP | 3789148HP | Gasket, Oil Pan | Select-a-Seal | 62-73 | 1 | |
| 2F | 010116A | 6257218 | O Ring, Modulator | | 62-73 | 1 | |
| **FRICTION CLUTCHES** | | | | | | | |
| 3B | 018708 | 3748703 | Front | .098 | 62-73 | 3-5 | Tan - 43T - OD: 5.062" - SM |
| 5D | 019702 | 3832396 | Reverse | .098 | 62-73 | 4-6 | Tan - 25T - OD: 6.461" - SM |
| 5D | 030702 | 3832396 | Reverse | .098 | 62-73 | 4-6 | Heg - 25T - OD: 6.461" - SM |
| **HI-PERFORMANCE - RED EAGLE®** | | | | | | | |
| 3B | 019740 | NA | Front | .098 | 62-73 | 3-5 | Red - 43T - OD: 5.062" - SM |
| 3B | 019740PL | NA | Front | .098 | 62-73 | 3-5 | Red - 43T - OD: 5.062" - PL |
| 3B | 018708A250 | NA | Front - KRYPTONITE™ | .098 | 62-73 | 3-5 | HEGHD |
| 3B | 019740SB | NA | Front | .098 | 62-73 | 3-5 | Red - 43T - OD: 5.062" - SB |
| 3B | 019740WF | NA | Front | .098 | 62-73 | 3-5 | Red - 43T - OD: 5.062" - WF |
| 3B | 019740BR | NA | Front - Bronze | .098 | 62-73 | 3-5 | Brz - 43T - OD: 5.062" - SB |
| 3B | 019740A | NA | Front - POWERPACK™ Component | .061 | 62-73 | AR | Red - 43T - OD: 5.062" - SM |
| 3B | 019740APL | NA | Front - POWERPACK™ Component | .061 | 62-73 | AR | Red - 43T - OD: 5.062" - PL |
| 3B | 019740ASB | NA | Front - POWERPACK™ Component | .061 | 62-73 | AR | Red - 43T - OD: 5.062" - SB |
| 3B | 019740B155 | NA | Front - POWERPACK™ Component | .061 | 62-73 | AR | Red - 43T - OD: 5.062" - WF |
| 3B | 019740D155 | NA | Front - KRYPTONITE™ thin | .061 | 62-73 | AR | HEGHD WF |
| 5D | 032744 | NA | Reverse | .098 | 62-73 | 5 | Red - 25T - OD: 6.461" - SM |
| **HI-PERFORMANCE - UNIT PACKS (ONE Rebuild)** | | | | | | | |
| KT | 019740UP5 | NA | Front clutch Frictions | .098 | 62-73 | 1 | 5 RED EAGLE® Friction |
| KT | 019740BRUP5 | NA | Front clutch Frictions - bronze | .098 | 62-73 | 1 | 5 Bronze Friction |
| KT | 019740AUP8 | NA | Front clutch Frictions - thin | .061 | 62-73 | 1 | 8 RED EAGLE® Friction |
| KT | 032744UP5 | NA | Reverse clutch Frictions | .098 | 62-73 | 1 | 5 RED EAGLE® Friction |
| **STEEL CLUTCHES** | | | | | | | |
| 4B | 019701 | 1366440 | Front | .070 | 62-73 | 3-5 | 12T - ID: 3.874" |
| 4B | 019701-100 | NA | Front - selective | .040 | 62-73 | AR | 12T - ID: 3.874" |
| 4B | 019701A | NA | Front - thin | .060 | 62-73 | AR | 12T - ID: 3.874" |
| 6D | 019703 | 6256553 | Reverse | .070 | 62-73 | 4-6 | 6T - ID: 5.727" |
| 6D | 019703-150 | NA | Reverse - selective | .060 | 62-73 | AR | 6T - ID: 5.727" |
| 6D | 019703-200 | NA | Reverse - selective | .078 | 62-73 | AR | 6T - ID: 5.727" |
| 6D | 019703-228 | NA | Reverse - selective | .090 | 62-73 | AR | 6T - ID: 5.727" |
| 6D | 019703-254 | NA | Reverse - selective | .100 | 62-73 | AR | 6T - ID: 5.727" |
| 6D | 019703-280 | NA | Reverse - selective | .110 | 62-73 | AR | 6T - ID: 5.727" |
| **HI-PERFORMANCE - KOLENE®** | | | | | | | |
| 4B | 019701K | NA | Front | .070 | 62-73 | 3-5 | 12T - ID: 3.874" |
| 4B | 019701HK | NA | Front with Turbulator Holes | .070 | 62-73 | 3-5 | 12T - ID: 3.874" |
| 4B | 019701AK | NA | Front - thin | .060 | 62-73 | AR | 12T - ID: 3.874" |
| 4B | 019701AHK | NA | Front - thin with Turbulator Holes | .060 | 62-73 | AR | 12T - ID: 3.874" |
| 6D | 019703K | NA | Reverse | .070 | 62-73 | 4-6 | 6T - ID: 5.727" |
| 6D | 019703K150 | NA | Reverse - selective | .060 | 62-73 | AR | 6T - ID: 5.727" |

# GENERAL MOTORS
## POWERGLIDE
## ALUMINUM CASE
## 1962-73

| ILL | ALTO NO | REF NO | DESCRIPTION | SPEC | YEAR | QTY | NOTES |
|---|---|---|---|---|---|---|---|
| **STEEL CLUTCHES** | | | | | | | ...Continued |
| **HI-PERFORMANCE - KOLENE®** | | | | | | | |
| 6D | 019703K200 | NA | Reverse - selective | .078 | 62-73 | AR | 6T - ID: 5.727" |
| 6D | 019703K228 | NA | Reverse - selective | .090 | 62-73 | AR | 6T - ID: 5.727" |
| 6D | 019703K254 | NA | Reverse - selective | .100 | 62-73 | AR | 6T - ID: 5.727" |
| 6D | 019703K280 | NA | Reverse - selective | .110 | 62-73 | AR | 6T - ID: 5.727" |
| **HI-PERFORMANCE - UNIT PACKS (ONE Rebuild)** | | | | | | | |
| KT | 019701KUP5 | NA | Front Clutch Steels | .070 | 62-73 | 1 | 5 KOLENE® Steel |
| KT | 019701AKUP8 | NA | Front Clutch Steels - thin | .060 | 62-73 | 1 | 8 KOLENE® Steel |
| KT | 019703KUP5 | NA | Reverse | .070 | 62-73 | 1 | 5 KOLENE® Steel |
| **OEI™ Original Equipment Improvements** | | | | | | | |
| KT | 019300UP6 | NA | Kit, Reverse Case Saver™ Clips | | 62-73 | 1 | Contains 6 Clips |
| KT | 019755HP | NA | Front Clutch POWERPACK™ Hi-Performance | | 62-73 | 1 | |
| KT | 019756 | NA | Front Clutch POWERPACK™ - inertia | | 62-73 | 1 | |
| KT | 019711KUP1 | NA | Front - Kolene w/ 6 separators | .070 | 62-73 | 1 | 1 KOLENE® Steel |
| KT | 019758 | NA | Reverse Clutch Anti-Drag POWERPACK™ | | 62-73 | 1 | |
| KT | 019713KUP1 | NA | Reverse - Kolene w/ 6 separators | .070 | 62-73 | 1 | 1 KOLENE® Steel |
| KT | 019985 | PG-2S | VB Shift Kit® | Transgo® | 62-73 | 1 | Standard, Tow & Competition |
| **PRESSURE PLATES** | | | | | | | |
| N I | 019761A800 | NA | Reverse | .317 | 62-73 | 1 | 6T - ID: 5.719" |
| **BANDS** | | | | | | | |
| 7B | 018950 | NA | Band Low Brake - Split | Tan | 62-73 | 1 | |
| **HI-PERFORMANCE - RED EAGLE® or KEVLAR®** | | | | | | | |
| 7B | 019961 | NA | Band Low Brake - Split Heavy Duty 2.245" Wide - Offset Lugs | Red | 62-73 | 1 | not grooved |
| 7B | 019962 | NA | Band Low Brake - Split Heavy Duty 2.245" Wide - Offset Lugs | Red | 62-73 | 1 | grooved |
| 7B | 019961K | NA | Band Low Brake - Split Super Duty 2.245" Wide - Offset Lugs | Kevlar® | 62-73 | 1 | not grooved |
| 7B | 019962K | NA | Band Low Brake - Split Super Duty 2.245" Wide - Offset Lugs | Kevlar® | 62-73 | 1 | grooved |
| **FILTERS** | | | | | | | |
| KT | FK019942 | NA | Filter Kit | | 62-73 | 1 | |
| 8G | 019942 | 6263001 | Filter | | 62-73 | 1 | |
| **METAL CLAD SEALS** | | | | | | | |
| 9A | 032400 | 8626916 | Front Pump | Silicone | 62-73 | 1 | |
| 9A | 055400 | 23015975 | Front Pump | Vamac® | 62-73 | 1 | |
| 10F | 032402 | 1243400 | Extension Housing with Flange | | 62-73 | 1 | |
| **SEALING RINGS** | | | | | | | |
| KT | 019600 | C309K | Sealing Ring Kit | | 62-73 | 1 | |
| 11A | 018101 | 3689808 | Front Pump stator to Front drum | Metal | 62-73 | 2 | |
| 11A | 018101X | 3689808 | Front Pump stator to Front drum | Chrome | 62-73 | 2 | |
| 12C | 018102 | 3817715 | Input shaft | Metal | 62-73 | 2 | |
| 12C | 018102X | 3817715 | Input shaft | Chrome | 62-73 | 2 | |
| 13F | 018101 | 3689808 | Governor Hub | Metal | 62-73 | 2 | |
| 14F | 019102 | 3789084 | Low Servo | Metal | 62-73 | 1 | |
| **MODULATORS** | | | | | | | |
| 15G | 019509 | 5638205 | Modulator - fully adjustable | | 62-73 | 1 | |
| **BUSHINGS** | | | | | | | |
| KT | 032630 | NA | Short Bushing Kit | | 62-73 | 1 | |
| 16A | 032200 | 8623940 | Front Pump Body | .613 | 62-73 | 1 | |
| 17B | 019201 | 3840760 | High Clutch drum | .500 | 62-73 | 1 | |
| 18F | 019203 | 3789009 | Case, Rear | .531 | 62-73 | 1 | |
| 19F | 019204 | 3789877 | Governor Support (Rear Pump) | .461 | 62-73 | 1 | can use 043204 |
| 20C | 032206 | 3789034 | Output shaft - pilot | | 62-73 | 1 | |
| 21F | 032208 | 6260048 | Extension Housing | | 62-73 | 1 | |

# GENERAL MOTORS
## HYDRAMATIC
## DOUG NASH MK2, MH5
## 1984-88

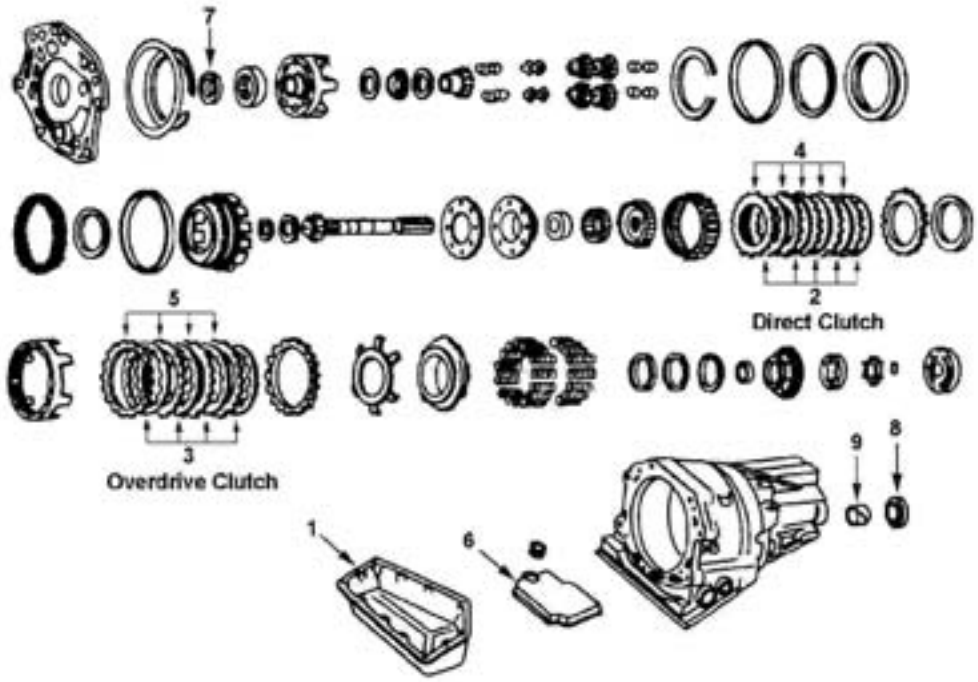


| ILL | DESCRIPTION | YEARS | FRICTION MODULE | STEEL MODULE | OVERHAUL KIT | BANNER KIT | MASTER KIT |
|---|---|---|---|---|---|---|---|
| **KITS** | | | | | | | |
| KT | Rebuilding Kit | 84-88 | 087752 | 087753 | 087800 | 087901LS | 087901 |

| ILL | ALTO NO | REF NO | DESCRIPTION | SPEC | YEAR | QTY | NOTES |
|---|---|---|---|---|---|---|---|
| **MISCELLANEOUS GASKETS & KIT COMPONENTS** | | | | | | | |
| 1 | 087816 | NA | Gasket, Oil Pan | Fiber | 84-88 | 1 | |
| **FRICTION CLUTCHES** | | | | | | | |
| 2 | 087700 | 14081192 | Direct | .072 | 84-85 | 5-6 | Tan - 48T - OD: 5.279" - SM |
| 2 | 087710 | 14105930 | Direct | .072 | 86-88 | 5-6 | Tan - 48T - OD: 5.279" - PLI |
| 3 | 087702 | 14082705 | Overdrive | .092 | 84-85 | 4-5 | Tan - 30T - OD: 6.560" - SM |
| 3 | 087712 | 14105933 | Overdrive | .092 | 86-88 | 4 | Tan - 30T - OD: 6.560" - PLI |
| **STEEL CLUTCHES** | | | | | | | |
| 4 | 087701 | 14081193 | Direct | .071 | 84-85 | 5-6 | 30T - ID: 4.103" |
| 4 | 087711 | 14105931 | Direct | .061 | 86-88 | 4 | 30T - ID: 4.103" |
| 4 | 087721 | 14105941 | Direct - selective | .051 | 84-88 | AR | 30T - ID: 4.103" |
| 5 | 087703 | 14082706 | Overdrive | .071 | 84-85 | 4 | 24T - ID: 5.696" |
| 5 | 087713 | 14105934 | Overdrive | .061 | 86-88 | 5 | 24T - ID: 5.696" |
| **FILTERS** | | | | | | | |
| KT | FK023944B | NA | Filter Kit | | 84-88 | 1 | |
| 6 | 023944B | 14082735 | Filter | | 84-88 | 1 | |
| **METAL CLAD SEALS** | | | | | | | |
| 7 | 087400 | 14082784 | Input | | 84-88 | 1 | |
| 8 | 032402 | 8673526 | Output | | 84-88 | 1 | |
| **BUSHINGS** | | | | | | | |
| 9 | 032208 | 6260048 | Bushing, case | | 84-88 | 1 | |

**NOTES**

# GENERAL MOTORS
## HYDRAMATIC
## TH125, TH125C (3T40)
## 1980-On

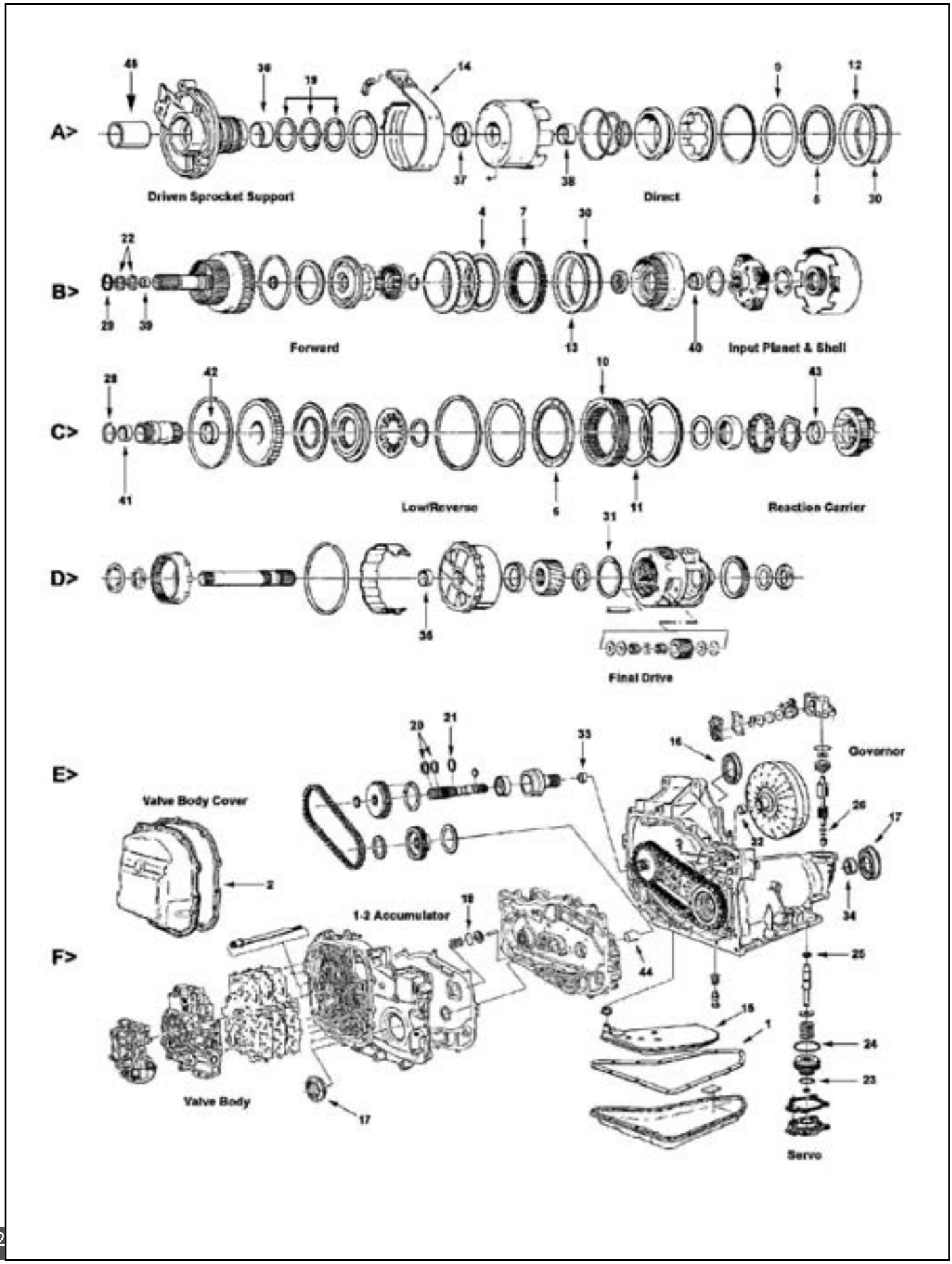

# GENERAL MOTORS
## HYDRAMATIC
## TH125, TH125C (3T40)
## 1980-On

| ILL | DESCRIPTION | YEARS | FRICTION MODULE | STEEL MODULE | OVERHAUL KIT | BANNER KIT | MASTER KIT |
|---|---|---|---|---|---|---|---|
| **KITS** | | | | | | | |
| KT | Rebuilder Kit (without Servo lipseals) | 80-84 | 048752 | 048753 | 048800 | 048901LS | 048901 |
| KT | Rebuilder Kit (with Servo lipseals) | 85-On | 048752A | 048753A | 048802 | 048903LS | 048903 |
| KT | Rebuilder Kit (with Servo lipseals) | 80-On | TBA | TBA | TBA | TBA | TBA |
| **HI-PERFORMANCE** | | | | | | | |
| KT | Rebuilder Kit | 80-84 | 048752HP | 048753HP | 048800 | 048901HPLS | 048901HP |
| KT | Rebuilder Kit | 85-On | 048752AHP | 048753AHP | 048802 | 048903HPLS | 048903HP |

| ILL | ALTO NO | REF NO | DESCRIPTION | SPEC | YEAR | QTY | NOTES |
|---|---|---|---|---|---|---|---|
| **MISCELLANEOUS GASKETS & KIT COMPONENTS** | | | | | | | |
| 1F | 048816 | 8631338 | Gasket, Oil Pan | Cork/Rub | 80-On | 1 | except AWD |
| 2F | 048818 | 8660039 | Gasket, Side Cover | Cork/Rub | 80-On | 1 | except AWD |
| KT | TBA | NA | Kit, External Seal | | 80-On | 1 | |
| KT | TBA | NA | Kit, Intermediate servo lipseals | | 85-On | 1 | |
| NI | 032072 | 1259475 | Filler Tube Seal | | 80-On | 1 | |
| NI | 032071 | 25518260 | Detent Seal | | 80-On | 1 | |
| **FRICTION CLUTCHES** | | | | | | | |
| 4B | 048700 | 8661380 | Forward | .080 | 80-84 | 4 | Tan - 32T - OD: 4.643" - SM |
| 4B | 048710 | 8660168 | Forward | .069 | 85-On | 4-5 | Tan - 32T - OD: 4.643" - SM |
| 5A | 048700 | 8661380 | Direct | .080 | 80-84 | 4 | Tan - 32T - OD: 4.643" - SM |
| 5A | 048710 | 8660168 | Direct | .069 | 85-On | 4-5 | Tan - 32T - OD: 4.643" - SM |
| 6C | 048702 | 8652029 | Low/Reverse | .080 | 80-84 | 5 | Tan - 40T - OD: 5.372" - SM |
| 6C | 048712 | 8677034 | Low/Reverse | .090 | 85-On | 5 | Tan - 40T - OD: 5.372" - SM |
| **HI-PERFORMANCE - RED EAGLE®** | | | | | | | |
| 4B | 048740 | NA | Forward & Direct | .080 | 80-84 | 4 | Red - 32T - OD: 4.643" - SM |
| 4B | 048744 | NA | Forward & Direct | .069 | 85-On | 4-5 | Red - 32T - OD: 4.643" - SM |
| 6C | 048742 | NA | Low/Reverse | .080 | 80-84 | 5 | Red - 40T - OD: 5.372" - SM |
| 6C | 048746 | NA | Low/Reverse | .090 | 85-On | 5 | Red - 40T - OD: 5.372" - SM |
| **HI-PERFORMANCE - UNIT PACKS (ONE Rebuild)** | | | | | | | |
| KT | 048740UP4 | NA | UNIT PACK - Forward & Direct | .080 | 80-84 | 1 | 4 RED EAGLE® Friction |
| KT | 048742UP5 | NA | UNIT PACK - Low/Reverse | .080 | 80-84 | 1 | 5 RED EAGLE® Friction |
| **STEEL CLUTCHES** | | | | | | | |
| 7B | 048701 | 8683084 | Forward | .076 | 80-On | 3-4 | 26T - ID: 3.517" |
| NI | 048707 | 8675257 | Forward - wave | .050 | 80-On | 1-2 | 26T - ID: 3.517" |
| 9A | 048703 | 8631026 | Direct | .090 | 80-On | 4 | 24T - ID: 3.517" |
| 10C | 048705 | 8631079 | Low/Reverse | .080 | 80-84 | 5 | 11T - ID: 4.375" |
| 10C | 048715 | 8652027 | Low/Reverse | .088 | 85-On | 4 | 11T - ID: 4.375" |
| 11C | 048709 | 8637574 | Low/Reverse - wave | .070 | 80-84 | 1 | 11T - ID: 4.375" |
| 11C | 048719 | 8664141 | Low/Reverse - wave | .078 | 80-On | 1-2 | 11T - ID: 4.375" |
| **HI-PERFORMANCE - KOLENE®** | | | | | | | |
| 7B | 048701K | NA | Forward | .076 | 80-On | 3-4 | 26T - ID: 3.517" |
| 9A | 048703K | NA | Direct | .090 | 80-On | 4 | 24T - ID: 3.517" |
| 10C | 048705K | NA | Low/Reverse | .080 | 80-84 | 5 | 11T - ID: 4.375" |
| **HI-PERFORMANCE - UNIT PACKS (ONE Rebuild)** | | | | | | | |
| KT | 048701KUP3 | NA | UNIT PACK - Forward | .076 | 80-On | 1 | 3 KOLENE® Steel |
| KT | 048703KUP4 | NA | UNIT PACK - Direct | .090 | 80-On | 1 | 4 KOLENE® Steel |
| KT | 048705KUP5 | NA | UNIT PACK - Low/Reverse | .080 | 80-84 | 1 | 5 KOLENE® Steel |
| **PRESSURE PLATES** | | | | | | | |
| 12A | 062760A482 | 8658146 | Direct clutch backing (4.89-4.99mm) | | 80-84 | 1 | |
| 12A | TBA | 8652562 | Direct clutch backing (4.74-4.84mm) | | 85-On | 1 | Step type |
| 13B | TBA | 8637881 | Forward clutch backing (5.29-5.39mm) | | 82-86 | 1 | |
| 13B | TBA | 8664160 | Forward clutch backing (4.862-5.012mm) | | 87-On | 1 | |
| 13B | TBA | 8664161 | Forward clutch backing (4.307-4.457mm) | | 87-On | 1 | |
| 13B | TBA | 8664162 | Forward clutch backing (3.752-3.902mm) | | 87-On | 1 | |
| 13B | TBA | 8664163 | Forward clutch backing (3.197-3.347mm) | | 87-On | 1 | |

# GENERAL MOTORS
## HYDRAMATIC
## TH125, TH125C (3T40)
## 1980-On

| ILL | ALTO NO | REF NO | DESCRIPTION | SPEC | YEAR | QTY | NOTES |
|---|---|---|---|---|---|---|---|
| **OEI™ Original Equipment Improvements** | | | | | | | |
| KT | 048985 | SK® 125 | Shift Kit® - corrects 3-2 clunk | | 80-On | 1 | Transgo |
| **BANDS** | | | | | | | |
| 14A | 048950 | 8631030 | Intermediate (Flex) | 1.490 | 80-81 | 1 | |
| 14A | 048951 | 8635538 | Intermediate (Flex | 1.750 | 82-On | 1 | |
| **HI-PERFORMANCE - RED EAGLE®** | | | | | | | |
| 14A | 048961 | NA | Intermediate (Flex | 1.750 | 82-On | 1 | |
| **FILTERS** | | | | | | | |
| KT | FK048940 | 8652910 | Filter Kit | | 80-On | 1 | |
| 15F | 048940 | 8666665 | Filter (with seal) | | 80-On | 1 | |
| **METAL CLAD SEALS** | | | | | | | |
| 16E | 048400 | 8685515 | Front Pump | Vamac® | 80-On | 1 | |
| 17F | 048401 | 24202835 | Axle (Left & Right) | | 80-On | 2 | |
| NI | 048402 | 8637588 | Manual Lever | | 80-83 | 1 | |
| NI | 048402A | 8644709 | Manual Lever | | 84-On | 1 | |
| **SEALING RINGS** | | | | | | | |
| KT | 048600 | NA | Sealing Ring Kit - Combo (17T) | | 80-On | 1 | |
| 18F | 048100 | NA | 1-2 Accumulator piston | Metal | 80-On | 1 | |
| 18F | 048100A | 8631895 | 1-2 Accumulator piston | Teflon | 80-On | 1 | |
| 19A | 048101 | 8652535 | Driven Sprocket support | Teflon | 80-On | 3 | |
| 19A | 048101X | NA | Driven Sprocket support | Metal | 80-On | 3 | |
| 20E | 048102 | 8631211 | Turbine Shaft (scarf cut) | Teflon | 80-81 | 1-3 | |
| 20E | 048110 | 8643058 | Turbine Shaft (solid) - front | Teflon | 82-On | 2 | will retro-fit |
| 21E | 048111 | 8637170 | Turbine Shaft (solid) - middle | Teflon | 82-On | 1 | |
| 22B | 048103 | 8652535 | Input Shaft | Teflon | 80-On | 2-3 | |
| 22B | 048103X | NA | Input Shaft | Metal | 80-On | 2-3 | |
| 23F | 048104 | 8631468 | Intermediate Servo piston - inner (1.260") | Teflon | 80-81 | 1 | |
| 23F | 048114 | 8631469 | Intermediate Servo piston - inner (1.500") | Teflon | 82-85 | 1 | |
| 23F | 048109 | 8631470 | Intermediate Servo piston - inner (1.675") | Teflon | 82-85 | 1 | |
| 24F | 043109 | 8631473 | Intermediate Servo piston - outer | Teflon | 80-85 | 1 | |
| 24F | 043109X | NA | Intermediate Servo piston - outer | Metal | 80-85 | 1 | |
| 25F | 048106 | 8631105 | Intermediate Servo apply pin | Teflon | 80-On | 1 | |
| 26E | 048107 | 8632588 | Governor | Teflon | 80-On | 1 | |
| NI | 048108 | 8631417 | Pump Slide to cover | Teflon | 80-On | 1 | |
| **SNAP RINGS** | | | | | | | |
| KT | 048680 | NA | Snap Ring Kit | | 80-On | 1 | |
| 28C | 048250-093 | 8631602 | Sun Gear to Shell - Selective | .093/2.36 | 80-On | AR | Pink |
| 28C | 048250-099 | 8631603 | Sun Gear to Shell - Selective | .099/2.51 | 80-On | AR | Brown |
| 28C | 048250-106 | 8631604 | Sun Gear to Shell - Selective | .106/2.69 | 80-On | AR | LT. Blue |
| 28C | 048250-113 | 8631605 | Sun Gear to Shell - Selective | .113/2.87 | 80-On | AR | White |
| 28C | 048250-120 | 8631606 | Sun Gear to Shell - Selective | .120/3.00 | 80-On | AR | Yellow |
| 28C | 048250-127 | 8631607 | Sun Gear to Shell - Selective | .127/3.23 | 80-On | AR | Green |
| 28C | 048250-134 | 8631608 | Sun Gear to Shell - Selective | .134/3.40 | 80-On | AR | Orange |
| 28C | 048250-140 | 8631609 | Sun Gear to Shell - Selective | .140/3.56 | 80-On | AR | |
| 29B | 048251-075 | 8631258 | Input shaft retainer (Driven Sprocket) | .075/1.90 | 80-On | AR | White |
| 29B | 048251-083 | 8631259 | Input shaft retainer (Driven Sprocket) | .083/2.11 | 80-On | AR | Blue |
| 29B | 048251-091 | 8631260 | Input shaft retainer (Driven Sprocket) | .091/2.31 | 80-On | AR | Red |
| 29B | 048251-099 | 8631261 | Input shaft retainer (Driven Sprocket) | .099/2.51 | 80-On | AR | Yellow |
| 29B | 048251-107 | 8631262 | Input shaft retainer (Driven Sprocket) | .107/2.72 | 80-On | AR | Green |
| 30A | 048252 | 8652055 | Forward & Direct clutch retainer | | 80-On | 2 | |
| 31D | 062253 | 11501326 | Final drive (spiral ring) | | 80-On | 1 | |
| **BUSHINGS** | | | | | | | |
| KT | 048625 | NA | Bushing Kit | | 80-On | 1 | |
| 32E | 048200 | 8631907 | Converter Hub | | 80-81 | 1 | |
| 32E | 048200A | 8637905 | Converter Hub | | 82-On | 1 | |
| 33A | 043201 | 8628915 | Drive Sprocket support to turbine shaft | | 80-On | 1 | |
| 34F | 048202 | 8631119 | Output Shaft | | 80-On | 1 | |

| ILL | ALTO NO | REF NO | DESCRIPTION | SPEC | YEAR | QTY | NOTES |
|---|---|---|---|---|---|---|---|
| **BUSHINGS** | | | | | | | ...Continued |
| 35D | 048202 | 8631119 | Case to Final drive Internal gear | | 80-On | 1 | |
| 36A | 048203 | 8631900 | Driven Sprocket support to input drum | | 80-On | 1 | |
| 37A | 048204 | 8631902 | Direct Clutch drum - Front | | 80-On | 1 | |
| 38A | 048205 | 8631901 | Direct Clutch drum - Rear | | 80-On | 1 | |
| 39B | 048206 | 8631903 | Input Shaft | | 80-On | 1 | |
| 40B | 048207 | 8631904 | Input Internal gear | | 80-On | 1 | |
| 41C | 048208 | 8631906 | Reaction Sun gear | | 80-On | 1 | |
| 42C | 048209 | 8631905 | Reaction Carrier | | 80-On | 1 | |
| 43C | 048209 | 8631905 | Low/Reverse clutch housing | | 80-On | 1 | |
| 44F | 048210 | NA | Case cover sleeve (channel plate) | | 80-On | 1 | |
| 45A | 048211 | NA | Driven Sprocket support sleeve | | 80-On | 1 | |
| **WASHERS** | | | | | | | |
| KT | 048635 | NA | Washer Kit | | 80-On | 1 | |
| **MISCELLANEOUS** | | | | | | | |
| NI | TBA | 8643931 | Axle Stablizer kit (bearing type) | | 80-On | 1 | |

**NOTES**

# GENERAL MOTORS

## HYDRAMATIC
## 4T40E 1995-On
## 4T45E 1998-On

A>

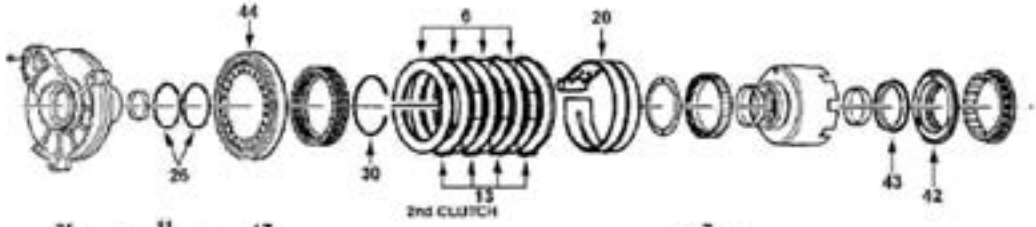


B>

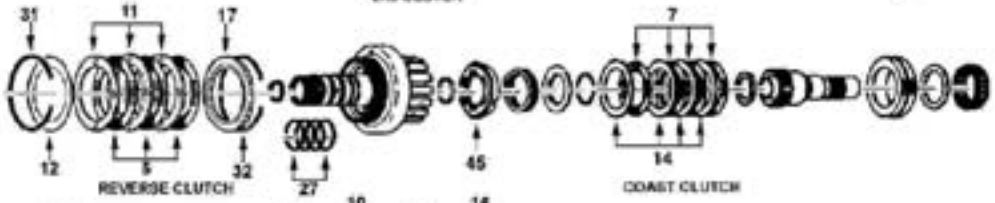


C>

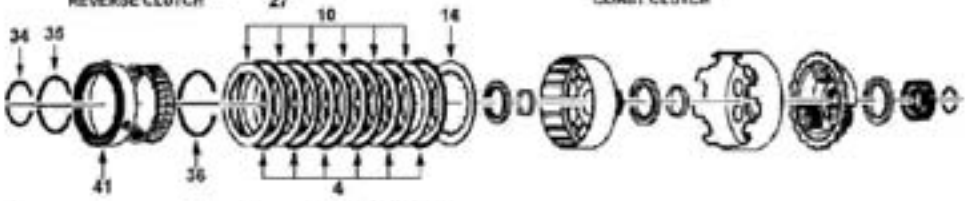


D>

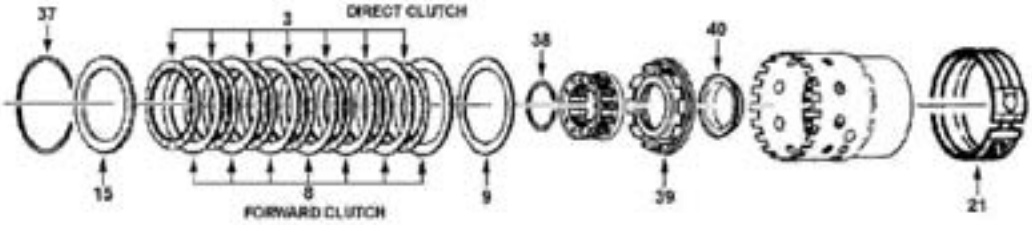


E>

F>

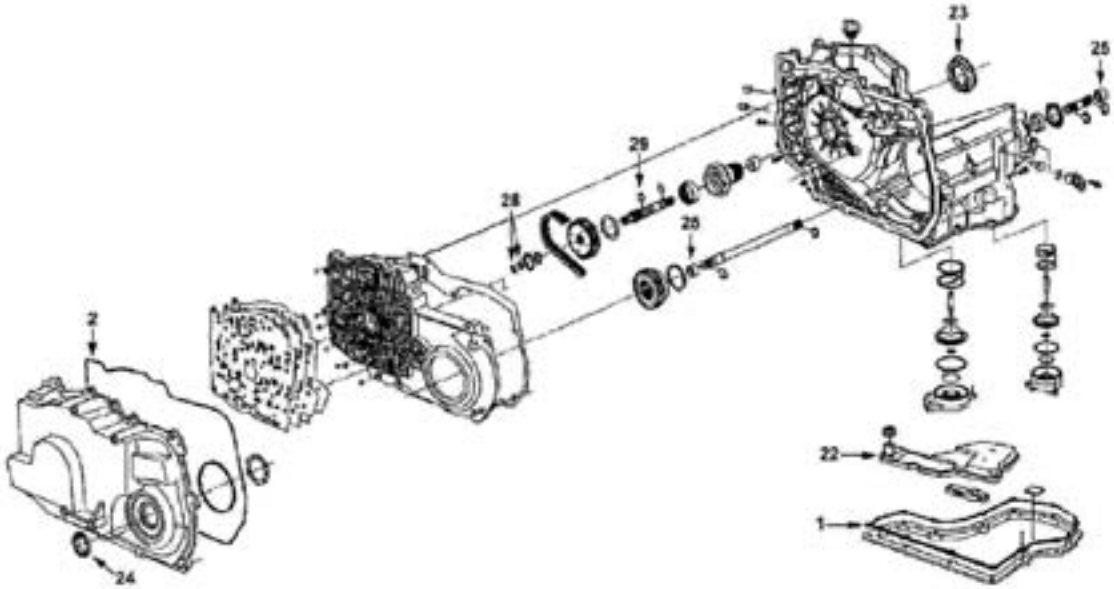

# GENERAL MOTORS
## HYDRAMATIC
## 4T40E 1995-On
## 4T45E 1998-On

| ILL | DESCRIPTION | YEARS | FRICTION MODULE | STEEL MODULE | OVERHAUL KIT | BANNER KIT | MASTER KIT |
|---|---|---|---|---|---|---|---|
| **KITS** | | | | | | | |
| KT | Rebuilding Kit - with 7 Pistons | 95-On | 114752 | 114753 | 114800 | 114901LS | 114901 |
| KT | Rebuilding Kit - without Molded Pistons | 95-On | 114752 | 114753 | 114800A | 114901XLS | 114901X |
| KT | Rebuilding Kit - Turbulator Steels & 7 Pistons | 98-On | 114752 | 114753A | 114800 | 114901LS | 114901A |

| ILL | ALTO NO | REF NO | DESCRIPTION | SPEC | YEAR | QTY | NOTES |
|---|---|---|---|---|---|---|---|
| **MISCELLANEOUS GASKETS & KIT COMPONENTS** | | | | | | | |
| 1F | 114816 | 24203590 | Gasket, Oil Pan | M. Rubber | 95-On | 1 | |
| 2F | 114818 | 24200478 | Gasket, Side Cover | M. Rubber | 95-On | 1 | |
| **FRICTION CLUTCHES** | | | | | | | |
| 3D | 114700 | 24209729 | Forward | .070 | 95-On | 7 | Tan - 30T - OD: 5.000" - PL |
| 4C | 114702 | 24209727 | Direct (external teeth) | .070 | 95-On | 6 | Heg - 36T - ID: 3.927" - SM |
| 5B | 114704 | 24209379 | Reverse Input | .070 | 95-On | 3 | Tan - 48T - OD: 5.305" - SM |
| 6A | 114706 | 24209723 | 2nd Clutch | .070 | 95-On | 3 | Tan - 36T - OD: 6.578" - SM |
| 7B | 114708 | 24209726 | Coast Clutch | .070 | 95-On | 4 | Tan - 20T - OD: 3.275" - PL |
| **STEEL CLUTCHES** | | | | | | | |
| 8D | 114701 | 8644445 | Forward | .069 | 95-On | 7 | 30T - ID: 4.075" |
| 9D | 114701W100 | 24200467 | Forward - wave | .039 | 95-02 | 1 | 8T - ID: 4.075" |
| 9D | 114701WA110 | 24223015 | Forward - wave | .043 | 03-On | 1 | 8T - ID: 4.075" |
| 10C | 114703 | 8685879 | Direct (internal teeth) | .074 | 95-On | 6 | 16T - OD: 4.965" |
| 11B | 114705 | 24200757 | Reverse Input | .088 | 95-97 | 3 | 30T - ID: 3.995" |
| 11B | 114705H | 24207081 | Reverse Input with Turbulator holes | .088 | 98-On | 3 | 30T - ID: 3.995" |
| 12B | 114705W110 | 24200466 | Reverse Input - wave | .043 | 95-On | 1 | 30T - ID: 3.995" |
| 13A | 114707 | 24200790 | 2nd Clutch | .089 | 95-On | 3 | 8T - ID: 4.793" |
| 18A | 114769 | 24200298 | 2nd Clutch - wave | | 95-On | 1 | |
| 14B | 114709 | 8685874 | Coast | .069 | 95-On | 4 | 12T - ID: 2.442" |
| **PRESSURE PLATES** | | | | | | | |
| 15D | 114760 | 24200595 | Forward - backing | .118 | 95-On | 1 | |
| 16C | TBA | 8685875 | Direct - backing | | 95-On | 1 | |
| 17B | TBA | 24200756 | Reverse Input - backing | .199 | 95-On | AR | |
| 17B | TBA | 24200950 | Reverse Input - backing | .177 | 95-On | AR | |
| 17B | TBA | 24200951 | Reverse Input - backing | .222 | 95-On | AR | |
| 19A | TBA | 8684324 | 2nd Clutch - backing | | 95-98 | 1 | |
| 19A | TBA | 24209271 | 2nd Clutch - backing | | 99-On | 1 | |
| **BANDS** | | | | | | | |
| 20A | 114950 | 8684403 | Intermediate (2-4) overdrive | Tan | 95-On | 1 | |
| 21E | 062951 | 8651614 | Forward (Low/Reverse) | Tan | 95-On | 1 | Double wrap MAJI |
| **FILTERS** | | | | | | | |
| KT | FK114940 | 24203770 | Filter Kit | | 95-On | 1 | |
| 22F | 114940 | 8685185 | Filter | | 95-On | 1 | |
| **METAL CLAD SEALS** | | | | | | | |
| 23E | 048400 | 8685515 | Converter | | 95-On | 1 | |
| 24F | 114425 | 24201936 | Axle LH & RH | | 95-On | 2 | |
| 25F | 114426 | 8684482 | Axle - inner sleeve | | 95-On | 2 | |
| N I | 048402A | 8644709 | Manual Lever | | 95-On | 1 | |
| **SEALING RINGS** | | | | | | | |
| KT | 114600 | NA | Sealing Ring Kit - 9T | | 95-On | 1 | |
| 26A | 114100 | 24201613 | Driven Sprocket Support | | 95-On | 2 | |
| N I | 114101 | 24204223 | Forward | | 95-On | 2 | |
| 27B | 114102 | 8684272 | Input Shaft (Direct drum) | | 95-On | 4 | |
| 28F | 048110 | 8643058 | Turbine Shaft (Front) | | 95-On | 2 | |
| 29F | 048111 | 8637170 | Turbine Shaft - middle | | 95-On | 1 | |
| N I | 048108 | 8631417 | Pump Slide | | 95-On | 1 | |
| **SNAP RINGS** | | | | | | | |
| 30A | TBA | 8684325 | 2nd Clutch spring retainer | | 95-On | 1 | |
| 31B | TBA | 8684283 | Reverse Clutch drum | | 95-On | 1 | |

# GENERAL MOTORS
## HYDRAMATIC
## 4T40E 1995-On
## 4T45E 1998-On

| ILL | ALTO NO | REF NO | DESCRIPTION | SPEC | YEAR | QTY | NOTES |
|---|---|---|---|---|---|---|---|
| **SNAP RINGS** | | | | | | | ...Continued |
| 32B | TBA | 24200764 | Reverse Clutch drum PP retainer | | 95-On | 1 | |
| 33B | TBA | 8684278 | Coast Clutch spring retainer | | 95-On | 1 | |
| 34C | TBA | 8658889 | Input sprag retainer - inner | | 95-On | 1 | |
| 35C | TBA | 8685878 | Input sprag retainer - outer | | 95-On | 1 | |
| 36C | TBA | 8684280 | Direct Clutch spring retainer | | 95-On | 1 | |
| 37D | TBA | 8684893 | Forward Clutch drum | | 95-On | 1 | |
| 38E | TBA | 24201612 | Front Differential Carrier | | 95-On | 1 | |
| **MISCELLANEOUS** | | | | | | | |
| 39D | 114330 | 24208641 | Molded Piston - Forward | M. Rubber | 95-On | 1 | |
| 40D | 114330A | 24208642 | Molded Piston - Forward sleeve | M. Rubber | 95-On | 1 | |
| 41C | 114332 | 24205044 | Molded Piston - Direct | M. Rubber | 95-On | 1 | |
| 42A | 114333 | 24205040 | Molded Piston - Reverse Input | M. Rubber | 95-On | 1 | |
| 43A | 114333A | 24205041 | Molded Piston - Reverse Input sleeeve | M. Rubber | 95-On | 1 | |
| 44A | 114331 | 24205042 | Molded Piston - 2nd Clutch | M. Rubber | 95-On | 1 | |
| 45B | 114334 | 24205043 | Molded Piston - Coast Clutch | M. Rubber | 95-On | 1 | |

**NOTES**

# GENERAL MOTORS
## HYDRAMATIC
## 4L40E, 5L40E 1999-On
## A5S390R, A5S360R

| ILL | DESCRIPTION | YEARS | FRICTION MODULE | OVERHAUL KIT | BANNER KIT | MASTER KIT |
|---|---|---|---|---|---|---|
| **KITS** | | | | | | |
| KT | Rebuilding Kit - with Molded Pistons | 99-On | 156750 FR & ST | 156800 | NA | 156901 |
| KT | Rebuilding Kit - without Molded Pistons | 99-On | 156750 FR & ST | 156800X | NA | 156901X |

| ILL | ALTO NO | REF NO | DESCRIPTION | SPEC | YEAR | QTY | NOTES |
|---|---|---|---|---|---|---|---|
| **FRICTION CLUTCHES** | | | | | | | |
| N I | 156700-160 | 96020156 | Direct #1 - internal spline | .063/1.6 | 99-On | 4 | Heg - 36T - OD: 6.792" |
| N I | 156701-160 | 96020157 | Direct #1 - external spline | .063/1.6 | 99-On | 4 | Heg - 36T - OD: 7.075" |
| N I | 156702-160 | 96020209 | Overdrive #2 - internal spline | .063/1.6 | 99-On | 2 | Heg - 36T - OD: 7.062" |
| N I | 156703-160 | 96020210 | Overdrive #2 - external spline | .063/1.6 | 99-On | 2 | Heg - 36T - OD: 7.306" |
| N I | 156704-160 | 96020322 | Coast #3 - internal spline | .063/1.6 | 99-On | 3 | Heg - 24T - OD: 4.848" |
| N I | 156705-160 | 96020323 | Coast #3 - external spline | .063/1.6 | 99-On | 3 | Heg - 12T - OD: 5.159" |
| N I | 156706-160 | 96020326 | Forward #4 - internal spline | .063/1.6 | 99-On | 4 | Heg - 24T - OD: 5.111" |
| N I | 156707-160 | 96020327 | Forward #4 - external spline | .063/1.6 | 99-On | 4 | Heg - 24T - OD: 5.367" |
| N I | 156702-160 | 96020209 | Reverse #5 - internal spline | .063/1.6 | 99-On | 2 | Heg - 36T - OD: 7.062" |
| N I | 156703-160 | 96020210 | Reverse #5 - external spline | .063/1.6 | 99-On | 2 | Heg - 36T - OD: 7.306" |
| N I | 156710-160 | 96020684 | Intermediate #6 - internal spline | .063/1.6 | 99-On | 3 | Heg - 24T - OD: 5.307" |
| N I | 156711-160 | 96020685 | Intermediate #6 - external spline | .063/1.6 | 99-On | 3 | Heg - 24T - OD: 5.549" |
| N I | 156700-160 | 96020156 | Lo/Reverse #7 - internal spline | .063/1.6 | 99-On | 5 | Heg - 36T - OD: 6.792" |
| N I | 156713-160 | 96020780 | Lo/Reverse #7 - external spline | .063/1.6 | 99-On | 5 | Heg - 29T - OD: 7.077" |
| N I | 156700-160 | 96020156 | 2nd Coast #8 - internal spline | .063/1.6 | 99-On | 3 | Heg - 36T - OD: 6.792" |
| N I | 156701-160 | 96020157 | 2nd Coast #8 - external spline | .063/1.6 | 99-On | 3 | Heg - 36T - OD: 7.075" |
| N I | 156716-160 | 96022840 | 2nd Clutch #9 - internal spline | .063/1.6 | 99-On | 5 | Heg - 24T - OD: 5.111" |
| N I | 156717-160 | 96022841 | 2nd Clutch #9 - external spline | .063/1.6 | 99-On | 5 | Heg - 24T - OD: 5.366" |
| **FILTERS** | | | | | | | |
| N I | 156940 | L96021284 | Filter | | 99-On | 1 | |

## NOTES

# GENERAL MOTORS
## HYDRAMATIC
## TH180, TH180C (3L30)
## 1969-98

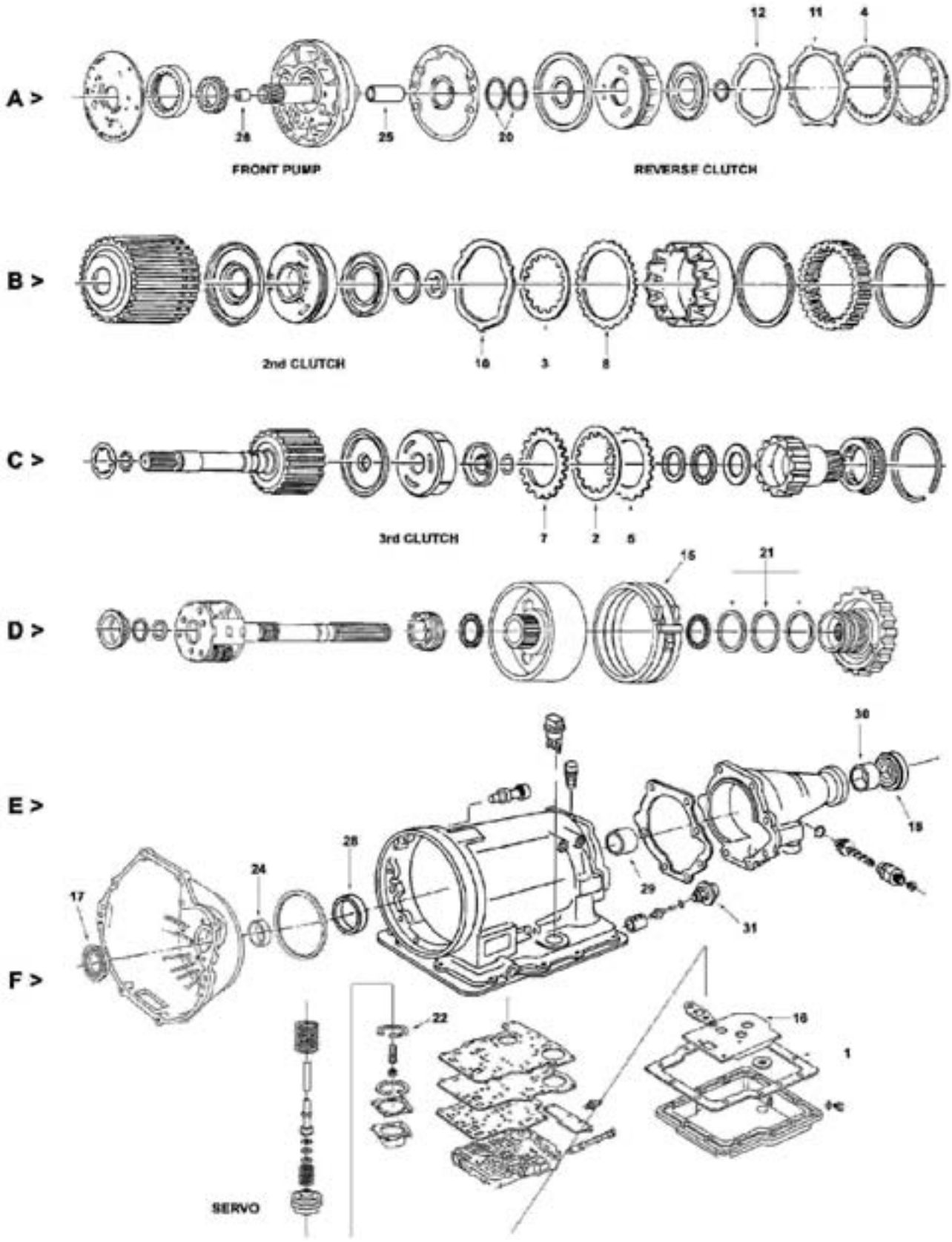

# GENERAL MOTORS
## HYDRAMATIC
## TH180, TH180C (3L30)
## 1969-98

| ILL | DESCRIPTION | YEARS | FRICTION MODULE | STEEL MODULE | OVERHAUL KIT | BANNER KIT | MASTER KIT |
|---|---|---|---|---|---|---|---|
| **KITS** | | | | | | | |
| KT | Rebuilder Kit - TH180/C except below | 69-98 | 038752 | 038753 | 038800 | 038903LS | 038903 |
| KT | Rebuilder Kit - TH180/C European | 69-On | 038752A | 038753A | 038800 | 038905LS | 038905 |
| KT | Rebuilder Kit - TH180/C Holden | 69-78 | 038752C | 038753C | 038804 | 038909LS | 038909 |
| **HI-PERFORMANCE - RED EAGLE®** | | | | | | | |
| KT | Rebuilder Kit - TH180/C European | 69-On | 038752AHP | 038753AHP | 038800 | 038905HPLS | 038905HP |

| ILL | ALTO NO | REF NO | DESCRIPTION | SPEC | YEAR | QTY | NOTES |
|---|---|---|---|---|---|---|---|
| **MISCELLANEOUS GASKETS & KIT COMPONENTS** | | | | | | | |
| 1F | 038816 | 14050668 | Gasket, Oil Pan | Cork/Rub | 69-98 | 1 | |
| **FRICTION CLUTCHES** | | | | | | | |
| 2C | 038700 | 96040597 | 3rd Clutch | .098 | 69-98 | 2-5 | Tan - 12T - OD: 3.872" - SM |
| 2C | 038700A250 | NA | 3rd Clutch | .098 | 69-98 | 2-5 | Heg - 12T - OD: 3.872" - SM |
| 3B | 038702 | 96040584 | 2nd Clutch | .098 | 69-98 | 2-5 | Tan - 30T - OD: 5.224" - SM |
| 4A | 038704 | 96040575 | Reverse Clutch | .098 | 69-98 | 2-5 | Tan - 36T - OD: 6.405" - SM |
| **HI-PERFORMANCE - RED EAGLE®** | | | | | | | |
| 2C | 038740 | NA | 3rd Clutch | .098 | 69-98 | 2-5 | Red - 12T - OD: 3.872" - SM |
| 3B | 038742 | NA | 2nd Clutch | .098 | 69-98 | 2-5 | Red - 30T - OD: 5.224" - SM |
| 4A | 038744 | NA | Reverse Clutch | .098 | 69-98 | 2-5 | Red - 36T - OD: 6.405" - SM |
| **HI-PERFORMANCE - UNIT PACKS (ONE Rebuild)** | | | | | | | |
| KT | 038740UP6 | NA | UNIT PACK - 3rd Clutch | .098 | 69-98 | 1 | 6 RED EAGLE® Friction |
| KT | 038742UP6 | NA | UNIT PACK - 2nd Clutch | .098 | 69-98 | 1 | 6 RED EAGLE® Friction |
| KT | 038744UP6 | NA | UNIT PACK - Reverse Clutch | .098 | 69-98 | 1 | 6 RED EAGLE® Friction |
| **STEEL CLUTCHES** | | | | | | | |
| 5C | 038701 | 96040595 | 3rd Clutch | .083 | 69-98 | 3-6 | 30T - ID: 2.848" |
| 5C | 038711 | 5258086 | 3rd Clutch - Selective | .070 | 69-98 | AR | 30T - ID: 2.848" |
| N I | 038701-050 | NA | 3rd Clutch - Shim | .020 | 69-98 | AR | 30T - ID: 2.848" |
| N I | 038701-080 | NA | 3rd Clutch - Shim | .030 | 69-98 | AR | 30T - ID: 2.848" |
| 7C | TBA | 96041270 | 3rd Clutch - wave | | 69-98 | 1 | 3T - ID: 2.848" |
| 8B | 038703 | 96040583 | 2nd Clutch | .080 | 69-98 | 3-6 | 36T - ID: 4.303" |
| 8B | 038713 | 5258057 | 2nd Clutch - Selective | .070 | 69-98 | AR | 36T - ID: 4.303" |
| N I | 038703-050 | NA | 2nd Clutch - Shim | .020 | 69-98 | AR | 36T - ID: 4.303" |
| N I | 038703-080 | NA | 2nd Clutch - Shim | .030 | 69-98 | AR | 36T - ID: 4.303" |
| 10B | TBA | 96040582 | 2nd Clutch - wave | | 69-98 | 1 | 3T - ID: 4.303" |
| 11A | 038705 | 96040574 | Reverse Clutch | .083 | 69-98 | 3-6 | 7T - ID: 5.679" |
| 11A | 038715 | 5258019 | Reverse Clutch | .070 | 69-98 | AR | 7T - ID: 5.679" |
| 12A | TBA | 96040573 | Reverse Clutch - wave | | 69-98 | 1 | 3T - ID: 4.303" |
| **HI-PERFORMANCE - KOLENE®** | | | | | | | |
| 5C | 038701K | NA | 3rd Clutch | .083 | 69-98 | 3-6 | 30T - ID: 2.848" |
| 8B | 038703K | NA | 2nd Clutch | .080 | 69-98 | 3-6 | 36T - ID: 4.303" |
| 11A | 038705K | NA | Reverse Clutch | .083 | 69-98 | 3-6 | 7T - ID: 5.679" |
| **HI-PERFORMANCE - UNIT PACKS (ONE Rebuild)** | | | | | | | |
| KT | 038701KUP6 | NA | UNIT PACK - 3rd Clutch | .083 | 69-98 | 1 | 6 KOLENE® Steel |
| KT | 038703KUP6 | NA | UNIT PACK - 2nd Clutch | .080 | 69-98 | 1 | 6 KOLENE® Steel |
| KT | 038705KUP6 | NA | UNIT PACK - Reverse Clutch | .083 | 69-98 | 1 | 6 KOLENE® Steel |
| **OEI™ Original Equipment Improvements** | | | | | | | |
| KT | 038985A | 180-C | VB Kit® - Postal Vehicle | | 69-98 | 1 | Transgo |
| **BANDS** | | | | | | | |
| 15D | 038950 | 96040183 | 1-2 (Low) | Tan | 69-98 | 1 | |
| **HI-PERFORMANCE - RED EAGLE® or KEVLAR®** | | | | | | | |
| 15D | 038960K | NA | 1-2 (Low) | Kevlar® | 69-98 | 1 | |
| **FILTERS** | | | | | | | |
| KT | FK038940 | NA | Filter Kit | | 69-98 | 1 | |
| 16F | 038940 | 96040620 | Filter | | 69-98 | 1 | |

# GENERAL MOTORS
## HYDRAMATIC
## TH180, TH180C (3L30)
## 1969-98

| ILL | ALTO NO | REF NO | DESCRIPTION | SPEC | YEAR | QTY | NOTES |
|---|---|---|---|---|---|---|---|
| **METAL CLAD SEALS** | | | | | | | |
| 17F | 032400 | 8670283 | Front Pump | | 69-98 | 1 | |
| 18E | 032402 | 1243402 | Extension Housing (with Flange) | | 69-98 | 1 | |
| 18E | 038405 | 96040762 | Extension Housing - Sidekick 2wd | | 69-98 | 1 | 24785-61A50 |
| 18E | 038402 | 96040460 | Extension Housing - Sidekick/Tracker 4wd | | 69-98 | 1 | 24772-61A00 |
| N I | 032410C | 96040528 | Manual Lever | | 69-98 | 1 | |
| **SEALING RINGS** | | | | | | | |
| KT | 038600 | NA | Sealing Ring Kit - except Holden | | 69-98 | 1 | |
| KT | 038600A | NA | Sealing Ring Kit - Holden only | | 69-On | 1 | |
| 20A | TBA | 96040549 | Front Pump | Metal | 69-98 | 2 | TAW-273 |
| 21D | 038101 | 96040605 | Governor - Thin wall - all except Holden | Metal | 69-98 | 3 | |
| 21D | 038102 | 5258100 | Governor - Thick wall - Holden only | Metal | 69-98 | 3 | |
| 22F | 038103 | 96040632 | Low Servo piston | Metal | 69-98 | 1 | |
| N I | 031105 | 8623653 | Accumulator piston | Metal | 69-98 | 1 | |
| **BUSHINGS** | | | | | | | |
| KT | 038625 | NA | Bushing Kit | | 69-98 | 1 | |
| 24F | 032200 | NA | Front Pump | | 69-98 | 1 | |
| 25A | 038201 | 8958621 | Stator Support - Rear | | 69-98 | 1 | |
| 26A | TBA | 8628915 | Stator Support - Front | | 69-98 | 1 | |
| N I | 038202 | 5258128 | 2nd Clutch drum | | 69-98 | 1 | |
| 28F | 038203 | 5258075 | Reaction Sun gear drum | | 69-98 | 1 | |
| 29E | 038204 | 5258191 | Case | | 69-98 | 1 | |
| 30E | 032208 | 6260048 | Extension Housing - bronze | | 69-98 | 1 | |
| 30E | 032208A | 3717682 | Extension Housing - babbit | | 69-98 | 1 | |
| **MODULATORS** | | | | | | | |
| 31F | 038500 | 9934495 | Modulator | Blue | 69-81 | 1 | Non-Adjustable |
| 31F | TBA | 96013028 | Modulator | Dual Blue | 69-79 | 1 | Adjustable |
| 31F | 038500B | 96013169 | Modulator | Green | 80-On | 1 | Adjustable |
| 31F | 038500C | 96040435 | Modulator - Sidekick/Tracker | Purple | 89-98 | 1 | Adjustable |

**NOTES**

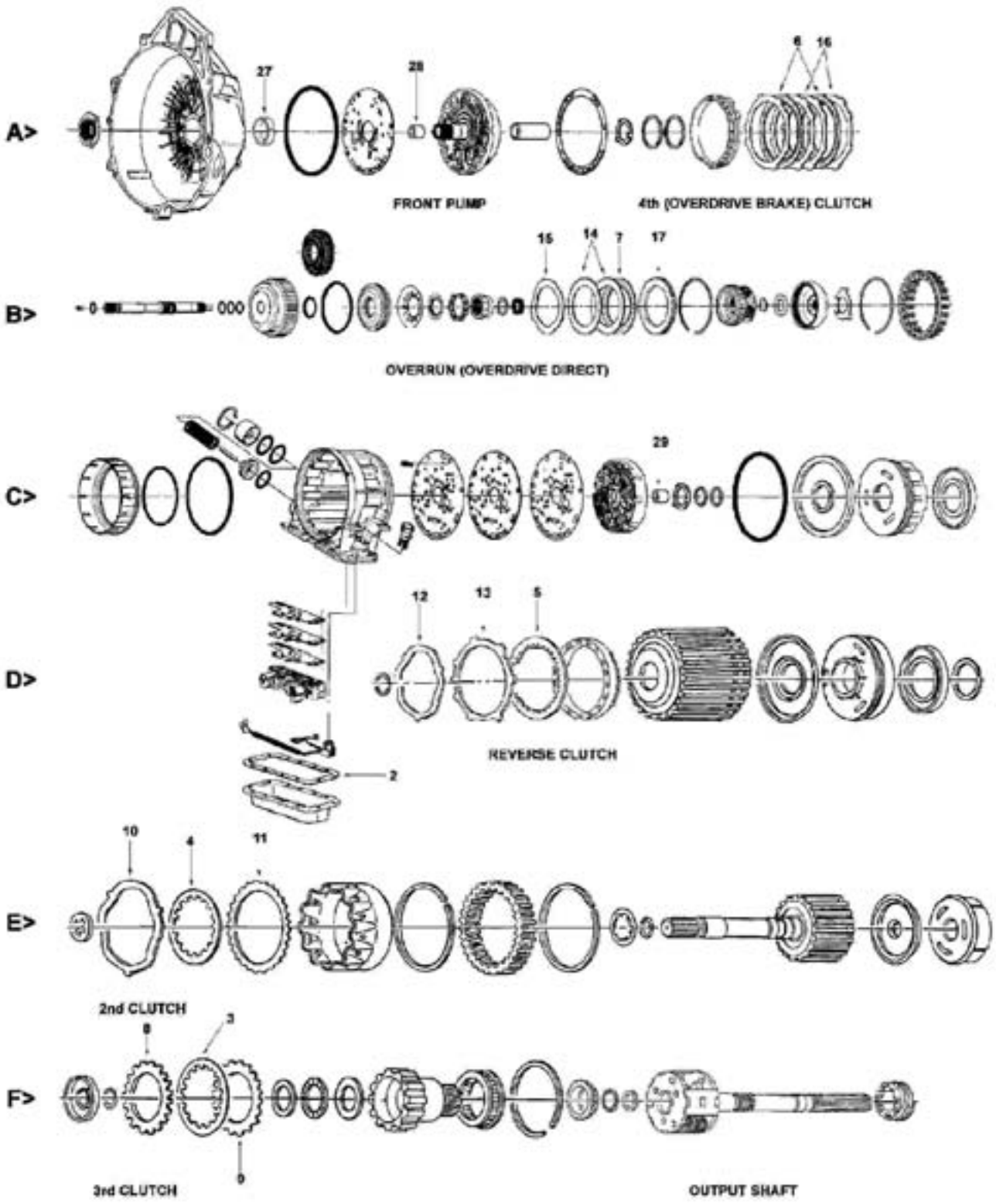
A>
27
28
6
16
FRONT PUMP
4th (OVERDRIVE BRAKE) CLUTCH
B>
15
14
7
17
OVERRUN (OVERDRIVE DIRECT)
C>
29
D>
12
13
5
REVERSE CLUTCH
2
E>
10
4
11
2nd CLUTCH
F>
8
3
9
3rd CLUTCH
OUTPUT SHAFT

# GENERAL MOTORS
## HYDRAMATIC
## 4L30E 1990-On
## OPEL AR25 (2.5L), AR35 (3.0L) & BMW THM1

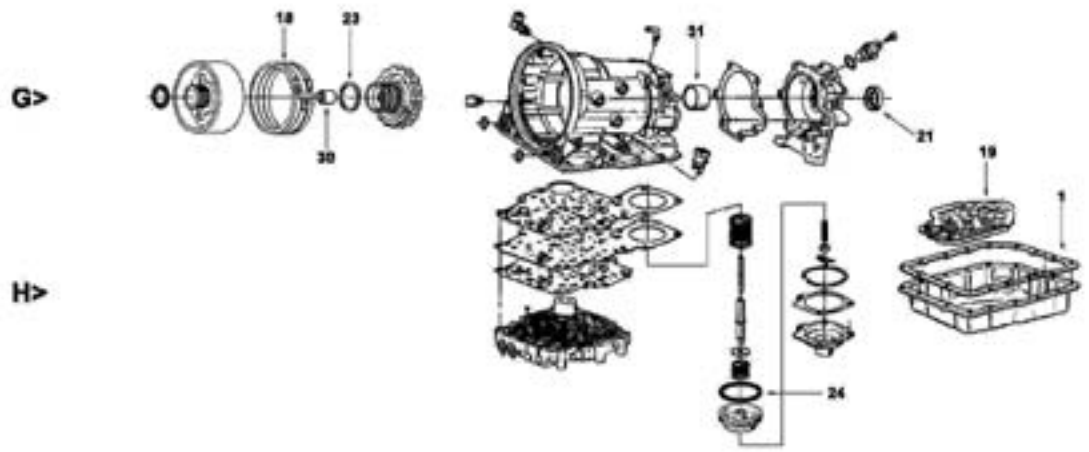


| ILL | DESCRIPTION | YEARS | FRICTION MODULE | STEEL MODULE | OVERHAUL KIT | BANNER KIT | MASTER KIT |
|---|---|---|---|---|---|---|---|
| **KITS** | | | | | | | |
| KT | Rebuilding Kit (combo) | 90-97 | 038752B | 038753D | 038802 | 038907LS | 038907 |
| KT | Rebuilding Kit (combo) | 98-On | 038752D | 038753D | 038802 | 038907ALS | 038907A |

| ILL | ALTO NO | REF NO | DESCRIPTION | SPEC | YEAR | QTY | NOTES |
|---|---|---|---|---|---|---|---|
| **MISCELLANEOUS GASKETS & KIT COMPONENTS** | | | | | | | |
| 1H | 038818 | 96014234 | Gasket, Oil pan - (GM, Isuzu, Opel, Honda) | Cork/Rub | 90-On | 1 | |
| 1H | 038818A | 24111-421367 | Gasket, Oil pan - (BMW) | Cork/Rub | 90-On | 1 | |
| 2D | 038819 | 96014235 | Gasket, Adapter case | Cork/Rub | 90-On | 1 | |
| **FRICTION CLUTCHES** | | | | | | | |
| 3F | 038700 | 96040597 | 3rd Clutch | .098 | 90-97 | 4 | Tan - 12T - OD: 3.872" - SM |
| 3F | 038700-160 | 96017371 | 3rd Clutch | .063 | 98-On | 5-6 | Heg - 12T - OD: 3.872" - PL |
| 4E | 038702 | 96040584 | 2nd Clutch | .098 | 90-On | 5-6 | Tan - 30T - OD: 5.224" - SM |
| 5D | 038704 | 96040575 | Reverse Clutch | .098 | 90-On | 5 | Tan - 36T - OD: 6.405" - SM |
| 6A | 038720 | 96014195 | Overrun (OD Direct) | .088 | 90-On | 2 | Tan - 40T - OD: 5.095" - PL |
| 7B | 038722 | 96014459 | 4th Clutch (Overdrive Brake) | .088 | 90-On | 3 | Tan - 36T - OD: 6.712" - SM |
| N I | 138730 | NA | Transfer Case (4x4) - 1 sided Friction | .065 | 96-On | 6 | Internal Spline |
| N I | 138731 | NA | Transfer Case (4x4) - 1 sided Friction | .065 | 96-On | 7 | External Spline |
| **HI-PERFORMANCE - RED EAGLE®** | | | | | | | |
| 3F | 038740 | NA | 3rd Clutch | .098 | 90-97 | 4 | Red - 12T - OD: 3.872" - SM |
| 4E | 038742 | NA | 2nd Clutch | .098 | 90-On | 5-6 | Red - 30T - OD: 5.224" - SM |
| 5D | 038744 | NA | Reverse Clutch | .098 | 90-On | 5 | Red - 36T - OD: 6.405" - SM |
| **HI-PERFORMANCE - UNIT PACKS (ONE Rebuild)** | | | | | | | |
| KT | 038740UP6 | NA | UNIT PACK - 3rd Clutch | .098 | 90-97 | 1 | 6 RED EAGLE® Friction |
| KT | 038742UP6 | NA | UNIT PACK - 2nd Clutch | .098 | 90-On | 1 | 6 RED EAGLE® Friction |
| KT | 038744UP6 | NA | UNIT PACK - Reverse Clutch | .098 | 90-On | 1 | 6 RED EAGLE® Friction |
| **STEEL CLUTCHES** | | | | | | | |
| 9F | 038701 | 96014955 | 3rd Clutch | .083 | 90-On | 5-6 | 30T - ID: 2.848" |
| 9F | 038711 | 5258086 | 3rd Clutch - Selective | .070 | 90-On | AR | 30T - ID: 2.848" |
| N I | 038701-050 | NA | 3rd Clutch - Shim | .020 | 90-On | AR | 30T - ID: 2.848" |
| N I | 038701-080 | NA | 3rd Clutch - Shim | .030 | 90-On | AR | 30T - ID: 2.848" |
| 8F | TBA | 96041270 | 3rd Clutch - wave | | 90-On | 1 | 3T - ID: 2.848" |
| 11E | 038703 | 96014956 | 2nd Clutch | .080 | 90-On | 6-7 | 36T - ID: 4.303" |
| 11E | 038713 | 5258057 | 2nd Clutch - Selective | .070 | 90-On | AR | 36T - ID: 4.303" |
| N I | 038703-050 | NA | 2nd Clutch - Shim | .020 | 90-On | AR | 36T - ID: 4.303" |
| N I | 038703-080 | NA | 2nd Clutch - Shim | .030 | 90-On | AR | 36T - ID: 4.303" |
| 10E | TBA | 96040582 | 2nd Clutch - wave | | 90-On | 1 | 3T - ID: 4.303" |
| 13D | 038705 | 96040574 | Reverse Clutch | | 90-On | 5-6 | 7T - ID:5.679" |

# GENERAL MOTORS
## HYDRAMATIC
## 4L30E 1990-On
## OPEL AR25 (2.5L), AR35 (3.0L) & BMW THM1

| ILL | ALTO NO | REF NO | DESCRIPTION | SPEC | YEAR | QTY | NOTES |
|---|---|---|---|---|---|---|---|
| **STEEL CLUTCHES** | | | | | | | ...Continued |
| 13D | 038715 | 5258019 | Reverse Clutch | .070 | 90-On | AR | 7T - ID: 5.679" |
| 12D | TBA | 96040573 | Reverse Clutch - wave | | 90-On | 1 | 3T - ID: 5.679" |
| 14B | 038721 | 96014194 | Overrun (OD Direct) | .083 | 90-On | 2 | 36T - ID: 3.959" |
| 15B | TBA | 96014983 | Overrun (OD Direct) - wave | | 90-On | 1 | 3T - ID: 3.959" |
| 16A | 038723 | 96014187 | 4th Clutch (OD Brake) | .083 | 90-On | 4 | 7T - ID: 5.840" |
| **HI-PERFORMANCE - KOLENE®** | | | | | | | |
| 9F | 038701K | NA | 3rd Clutch | .083 | 90-On | 3-6 | 30T - ID: 2.848" |
| 11E | 038703K | NA | 2nd Clutch | .080 | 90-On | 3-6 | 36T - ID: 4.303" |
| 13D | 038705K | NA | Reverse Clutch | .083 | 90-On | 3-6 | 7T - ID: 5.679" |
| **HI-PERFORMANCE - UNIT PACKS (ONE Rebuild)** | | | | | | | |
| KT | 038701KUP6 | NA | UNIT PACK - 3rd Clutch | .083 | 90-On | 1 | 6 KOLENE® Steel |
| KT | 038703KUP6 | NA | UNIT PACK - 2nd Clutch | .080 | 90-On | 1 | 6 KOLENE® Steel |
| KT | 038705KUP6 | NA | UNIT PACK - Reverse Clutch | .083 | 90-On | 1 | 6 KOLENE® Steel |
| **PRESSURE PLATES** | | | | | | | |
| 17B | TBA | 8634864 | Overrun (OD Direct) Backing | | 90-On | 1 | |
| **BANDS** | | | | | | | |
| 18G | 038950 | 96014805 | 1-2 (Low) | Tan | 90-On | 1 | |
| **HI-PERFORMANCE - RED EAGLE®** | | | | | | | |
| 18G | 038960K | NA | 1-2 (Low) | Kevlar® | 90-On | 1 | |
| **FILTERS** | | | | | | | |
| KT | FK038942 | NA | Filter Kit - Honda/Isuzu | | 90-On | 1 | |
| KT | FK038944 | NA | Filter Kit - BMW | | 90-On | 1 | |
| 19G | 038942 | 96015062 | Filter - Honda/Isuzu | | 90-On | 1 | |
| 19G | 038944 | 24111-218899 | Filter - BMW | | 90-On | 1 | |
| **METAL CLAD SEALS** | | | | | | | |
| 20 | 038401 | 96015187 | Front Pump | | 90-On | 1 | |
| 21G | 038403 | 96014416 | Ext. Hsg. - all except below | Poly | 90-On | 1 | use 038404 |
| 21G | 038404 | 24111-207426 | Ext. Hsg. - BMW | Viton® | 90-On | 1 | |
| **SEALING RINGS** | | | | | | | |
| KT | 038602 | C376 | Sealing Ring Kit - 4M/3T | | 90-On | 1 | |
| 22 | 038100 | 96040549 | Front Pump | Metal | 90-On | 2 | |
| 23G | 038101 | 96040605 | Output shaft to case | Metal | 90-On | 1 | |
| 24H | 038103 | 96040632 | Low Servo piston | Metal | 90-On | 1 | |
| 25 | 038112 | 96017484 | Turbine Shaft - cut | Teflon | 90-On | 2 | |
| 26 | 038113 | 96013953 | Turbine Shaft - solid | Teflon | 90-On | 1 | |
| **BUSHINGS** | | | | | | | |
| KT | 038625A | NA | Bushing Kit | | 90-On | 1 | |
| 27 | 032200 | NA | Front Pump | | 90-On | 1 | |
| 28 | 043201 | 8628915 | Stator Support - Front | | 90-On | 1 | |
| 29 | TBA | NA | Center Support | | 90-On | 1 | |
| N I | 038202 | 5258128 | 2nd Clutch drum | | 90-On | 1 | |
| 30G | 038203 | 5258075 | Reaction Sun gear drum | | 90-On | 1 | |
| 31G | 038204 | 5258191 | Case | | 90-On | 1 | |
| N I | 048209 | 8631905 | Overdrive (Front) Planet | | 90-On | 1 | |
| N I | 043210 | 8634908 | Overrun Clutch housing | | 90-On | 1 | |
| N I | 043215 | 8634925 | Input Shaft (3rd clutch drum) | | 90-On | 1 | |

**NOTES**

# GENERAL MOTORS
## HYDRAMATIC
## TH200, TH200C
## 1976-87

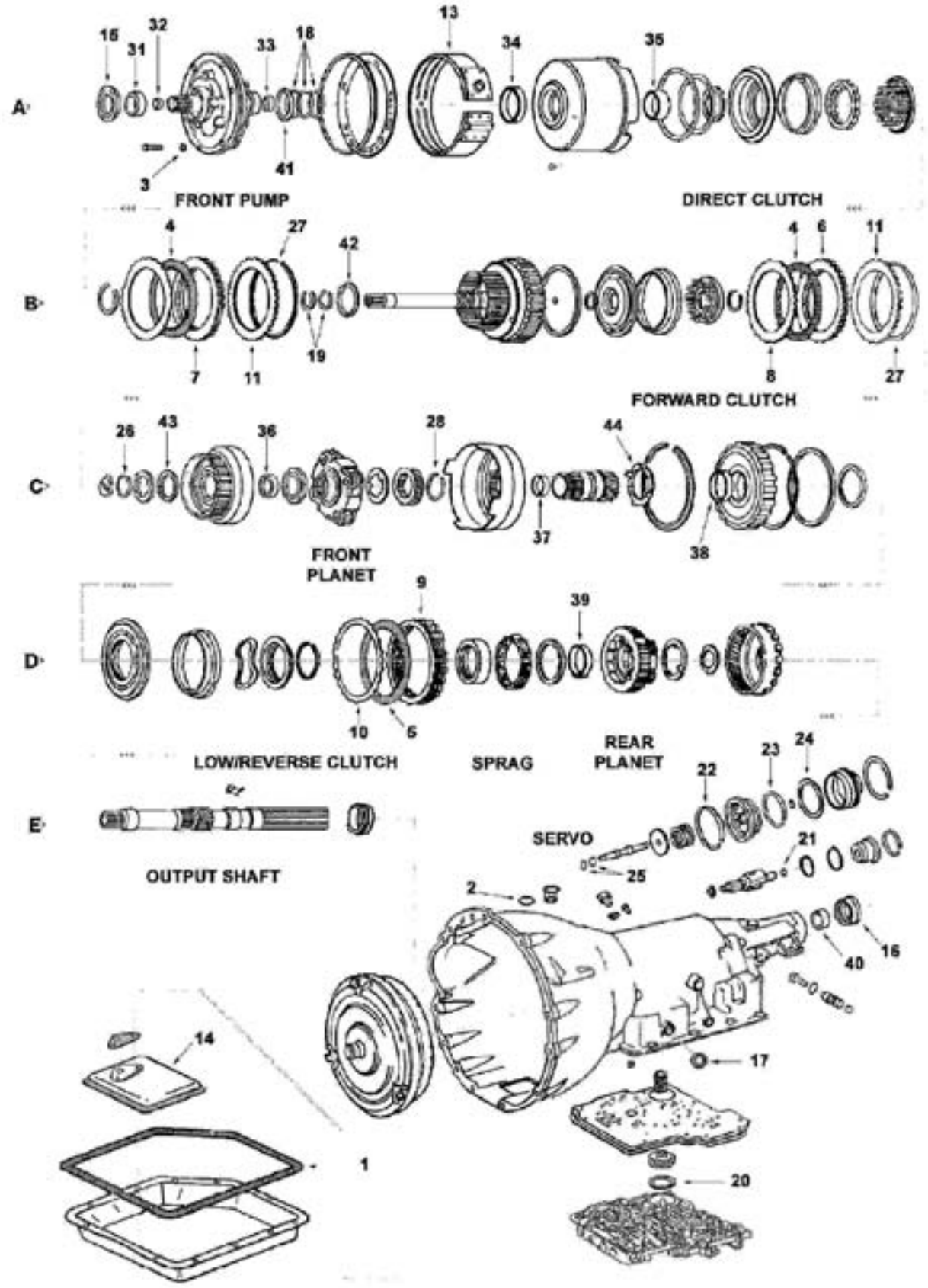

# GENERAL MOTORS
## HYDRAMATIC
## TH200, TH200C
## 1976-87

| ILL | DESCRIPTION | YEARS | FRICTION MODULE | STEEL MODULE | OVERHAUL KIT | BANNER KIT | MASTER KIT |
|---|---|---|---|---|---|---|---|
| **KITS** | | | | | | | |
| KT | Rebuilding Kit | 76-87 | 043752 | 043753 | 043800X | 043901LS | 043901 |
| **HI-PERFORMANCE - RED EAGLE®** | | | | | | | |
| KT | Rebuilding Kit | 76-87 | 043752HP | 043753HP | 043800X | 043901HPLS | 043901HP |

| ILL | ALTO NO | REF NO | DESCRIPTION | SPEC | YEAR | QTY | NOTES |
|---|---|---|---|---|---|---|---|
| **MISCELLANEOUS GASKETS & KIT COMPONENTS** | | | | | | | |
| 1E | 043816 | 8633380 | Gasket, Oil Pan | Cork/Rub | 76-87 | 1 | |
| 2E | 010113B | 6264902 | O Ring, Filler Tube | | 76-87 | 1 | |
| 3A | 032003 | 8626281 | Washer, Front pump | | 76-87 | 6 | |
| **FRICTION CLUTCHES** | | | | | | | |
| 4B | 043700 | 8657168 | Forward | .078 | 76-87 | 3-6 | Tan - 30T - OD: 5.226" - SM |
| 4B | 043700A | NA | Forward (thin) | .061 | 76-87 | AR | Tan - 30T - OD: 5.226" - SM |
| 4B | 043700 | 8657168 | Direct | .078 | 76-87 | 3-5 | Tan - 30T - OD: 5.226" - SM |
| 4B | 043700A | NA | Direct (thin) | .061 | 76-87 | AR | Tan - 30T - OD: 5.226" - SM |
| 5D | 043702 | 8669069 | Low/Reverse | .078 | 76-87 | 4-6 | Tan - 44T - OD: 5.529" - PL |
| 5D | 043722 | NA | Low/Reverse | .078 | 76-87 | 4-6 | Heg - 44T - OD: 5.529" - PL |
| **HI-PERFORMANCE - RED EAGLE®** | | | | | | | |
| 4B | 043740 | NA | Forward & Direct | .078 | 76-87 | 3-6 | RED EAGLE® |
| 4B | 043740A | NA | Forward & Direct (thin) | .061 | 76-87 | AR | RED EAGLE® |
| 5D | 043742 | NA | Low/Reverse | .078 | 76-87 | 4-6 | RED EAGLE® |
| **HI-PERFORMANCE - UNIT PACKS (ONE Rebuild)** | | | | | | | |
| KT | 043740UP6 | NA | UNIT PACK - Forward or Direct | .078 | 76-87 | 1 | 6 RED EAGLE® Friction |
| KT | 043740AUP8 | NA | UNIT PACK - Forward or Direct (thin) | .061 | 76-87 | 1 | 8 RED EAGLE® Friction |
| KT | 043742UP6 | NA | UNIT PACK - Low/Reverse | .078 | 76-87 | 1 | 6 RED EAGLE® Friction |
| **STEEL CLUTCHES** | | | | | | | |
| 6B | 043701 | 8678902 | Forward | .078 | 76-87 | 2-3 | 30T - ID: 4.340" |
| 6B | 043701A | NA | Forward (thin) | .060 | 76-87 | AR | 30T - ID: 4.340" |
| 8B | 043707 | 8678901 | Forward - wave | .063 | 76-87 | 1 | 30T - ID: 4.340" |
| 7B | 043703 | 8678923 | Direct | .090 | 76-87 | 3-5 | 26T - ID: 4.340" |
| 7B | 043717 | NA | Direct - oversized | .101 | 76-87 | AR | 30T - ID: 4.340" |
| 9D | 043705 | 8678922 | Low/Reverse | .077 | 76-87 | 5-7 | 22T - ID: 4.690" |
| 9D | 043705-230 | NA | Low/Reverse | .091 | 76-87 | AR | 22T - ID: 4.690" |
| 10D | 043719 | 8678926 | Low/Reverse - wave | .078 | 76-87 | 1 | 4T - ID: 4.690" |
| **HI-PERFORMANCE - KOLENE®** | | | | | | | |
| 6B | 043701K | NA | Forward | .078 | 76-87 | 2-3 | 30T - ID: 4.340" |
| 6B | 043701AK | NA | Forward (thin) | .060 | 76-87 | AR | 30T - ID: 4.340" |
| 7B | 043703K | NA | Direct | .090 | 76-87 | 3-5 | 26T - ID: 4.340" |
| 7B | 043717K | NA | Direct - oversized | .101 | 76-87 | AR | 30T - ID: 4.340" |
| 9D | 043705K | NA | Low/Reverse | .077 | 76-87 | 5-7 | 22T - ID: 4.690" |
| **HI-PERFORMANCE - UNIT PACKS (ONE Rebuild)** | | | | | | | |
| KT | 043701KUP3 | NA | UNIT PACK - Forward | .078 | 76-87 | 1 | 3 KOLENE® Steel |
| KT | 043701AKUP8 | NA | UNIT PACK - Forward (thin) | .060 | 76-87 | 1 | 8 KOLENE® Steel |
| KT | 043703KUP6 | NA | UNIT PACK - Direct | .090 | 76-87 | 1 | 6 KOLENE® Steel |
| KT | 043703KUP5 | NA | UNIT PACK - Direct | .090 | 76-87 | 1 | 5 KOLENE® Steel |
| KT | 043705KUP7 | NA | UNIT PACK - Low/Reverse | .077 | 76-87 | 1 | 7 KOLENE® Steel |
| **PRESSURE PLATES** | | | | | | | |
| 11B | TBA | 8628088 | Forward & Direct | .250 | 76-87 | 2 | |
| **OEI™ Original Equipment Improvements** | | | | | | | |
| KT | 043757 | NA | POWERPACK™ - Direct Clutch | | 76-87 | 1 | |
| KT | 043985 | SK® 200 | VB Shift Kit® - TH200 | Transgo® | 76-79 | 1 | |
| KT | 043986 | SK® 279 | VB Shift Kit® - TH200C | Transgo® | 79-87 | 1 | |
| 12A | 057501 | 8654491 | Retainer, Front pump seal | | 76-87 | 1 | Prevents front seal pop-out |
| **BANDS** | | | | | | | |
| 13A | 043950 | 8657210 | Intermediate (Flex) | Tan | 76-87 | 1 | |

# GENERAL MOTORS
## HYDRAMATIC
## TH200, TH200C
## 1976-87

| ILL | ALTO NO | REF NO | DESCRIPTION | SPEC | YEAR | QTY | NOTES |
|---|---|---|---|---|---|---|---|
| **BANDS** | | | | | | | ...Continued |
| **HI-PERFORMANCE - RED EAGLE® or KEVLAR®** | | | | | | | |
| 13A | 043960 | NA | Intermediate (Flex) | Red | 76-87 | 1 | RED EAGLE® |
| 13A | 043961 | NA | Intermediate (Flex) Heavy Duty POWERBAND™ | Red | 76-87 | 1 | RED EAGLE® |
| 13A | 043961K | NA | Intermediate (Flex) Super Duty POWERBAND™ | Kevlar® | 76-87 | 1 | |
| **FILTERS** | | | | | | | |
| KT | FK043940 | NA | Filter Kit, Brass screen | | 76-E79 | 1 | 2.250" pan |
| KT | FK043942 | 8638960 | Filter Kit, Nylon screen | | 79-87 | 1 | 2.563" pan |
| 14E | 043940 | 8628935 | Filter, Brass screen | | 76-E79 | 1 | |
| 14E | 043942 | 8632949 | Filter, Nylon screen | | 79-87 | 1 | |
| **METAL CLAD SEALS** | | | | | | | |
| 15A | 043400 | 24202535 | Front Pump | Vamac® | 76-87 | 1 | |
| 16E | 032402 | 3932255 | Extension Housing with Flange | | 76-87 | 1 | |
| 17E | 032410C | 8657163 | Manual Lever | | 76-87 | 1 | |
| **SEALING RINGS** | | | | | | | |
| KT | 043600 | NA | Sealing Ring Kit - 19T | | 76-87 | 1 | |
| KT | 043601 | NA | Sealing Ring Kit - Metal & Teflon | | 76-87 | 1 | |
| 18A | 043100 | 8628055 | Front Pump stator | Teflon | 76-87 | 3 | |
| 19B | 043101 | 8633874 | Turbine Shaft | Metal | 76-87 | 2 | |
| 19B | TBA | 8628090 | Turbine Shaft | Teflon | 76-87 | 2 | |
| 20E | 043103 | 8628275 | 1-2 Accumulator | Metal | 76-87 | 1 | |
| 20E | TBA | 8634161 | 1-2 Accumulator | Teflon | 76-87 | 1 | |
| 21E | TBA | 8633455 | Governor | Teflon | 76-87 | 1 | |
| 22E | 043108 | 8628123 | Intermediate Servo - Outer | Metal | 76-83 | 1 | |
| 22E | TBA | 8628123 | Intermediate Servo - Outer | Teflon | 76-83 | 1 | |
| 23E | 043114 | 8630568 | Intermediate Servo - Center | Metal | 79-83 | 1 | 1.96" |
| 23E | TBA | 8630568 | Intermediate Servo - Center | Teflon | 79-83 | 1 | |
| 23E | 043113 | 8632149 | Intermediate Servo - Center | Metal | 79-87 | 1 | 2.14" |
| 23E | TBA | 8632149 | Intermediate Servo - Center | Teflon | 79-87 | 1 | |
| 23E | 043111 | 8632150 | Intermediate Servo - Center | Metal | 79-87 | 1 | 2.28" |
| 23E | TBA | 8632150 | Intermediate Servo - Center | Teflon | 79-87 | 1 | |
| 24E | 043104 | 8628697 | Intermediate Servo - Inner | Metal | 76-83 | 1 | 2.36" |
| 24E | TBA | 8628697 | Intermediate Servo - Inner | Teflon | 76-83 | 1 | |
| 24E | 043110 | 8632151 | Intermediate Servo - Inner | Metal | 79-87 | 1 | 2.40" |
| 24E | TBA | 8632151 | Intermediate Servo - Inner | Teflon | 79-87 | 1 | |
| 24E | 043107 | 8630080 | Intermediate Servo - Inner | Metal | 76-83 | 1 | 2.54" |
| 24E | TBA | 8630080 | Intermediate Servo - Inner | Teflon | 76-83 | 1 | |
| 24E | 043105 | 8628124 | Intermediate Servo - Inner | Metal | 76-83 | 1 | 2.67" |
| 24E | TBA | 8628124 | Intermediate Servo - Inner | Teflon | 76-83 | 1 | |
| 24E | 043109 | 8631473 | Intermediate Servo - Inner | Metal | 79-83 | 1 | 2.79" |
| 24E | TBA | 8631473 | Intermediate Servo - Inner | Teflon | 79-83 | 1 | |
| 24E | 043106 | 8628125 | Intermediate Servo - Inner | Metal | 76-78 | 1 | 2.89" |
| 24E | TBA | 8628125 | Intermediate Servo - Inner | Teflon | 76-78 | 1 | |
| 25E | 043115 | 8630120 | Intermediate Servo pin | Teflon | 79-87 | 2 | |
| **SNAP RINGS** | | | | | | | |
| KT | 043680 | NA | Snap Ring Kit | | 76-87 | 1 | |
| 26C | 043250 | 8628170 | Front Internal gear to output shaft | | 76-87 | 1 | |
| 27B | 043251 | 8628089 | Forward & Direct clutch drum | | 76-87 | 2 | |
| 28C | 043252 | 8623105 | Input drum to sun gear (sun shell) | | 76-87 | 1 | |
| 29C | TBA | 8628210 | Low/Reverse Housing to case - Front | | 76-87 | 1 | |
| 30C | TBA | 8628221 | Low/Reverse Housing to case - Rear | | 76-87 | 1 | |
| **BUSHINGS** | | | | | | | |
| KT | 043625 | NA | Bushing Kit | | 76-87 | 1 | |
| 31A | 043200 | 8628913 | Front Pump - Body | Babbit | 76-87 | 1 | |
| 32A | 043201 | 8628915 | Front Pump stator - Front | | 76-87 | 1 | |
| 33A | 043202 | 8628916 | Front Pump stator - Rear | | 76-87 | 1 | |
| 34A | 043203 | 8628918 | Direct clutch drum - Front | | 76-87 | 1 | |

| ILL | ALTO NO | REF NO | DESCRIPTION | SPEC | YEAR | QTY | NOTES |
|---|---|---|---|---|---|---|---|
| **BUSHINGS** | | | | | | | ...Continued |
| 35A | 043204 | 8628917 | Direct clutch drum - Rear | | 76-87 | 1 | |
| 36C | 043205 | 8628925 | Front Internal gear (long) | | 76-87 | 1 | |
| 36C | 043209 | 8628990 | Front Internal gear (short) | | 76-87 | 1 | |
| 37C | 043206 | 8628928 | Rear Sun Gear | | 76-87 | 1 | |
| 38C | 043207 | 8628929 | Low/Reverse Clutch housing | | 76-87 | 1 | |
| 39D | 043208 | 8628947 | Rear Carrier | | 76-87 | 1 | |
| 40E | 032208 | 6260048 | Extension Housing | | 76-87 | 1 | |
| **WASHERS** | | | | | | | |
| KT | 043635 | NA | Washer Kit - no selectives | | 76-87 | 1 | |
| 41A | 043174 | 8628056 | Front pump to Direct drum | | 76-87 | 1 | |
| 42B | 043175 | 8628091 | Direct drum to Forward drum | | 76-87 | 1 | |
| 43C | 043176 | 8628765 | Front Internal gear to support | | 76-87 | 1 | |
| 44C | 043177 | 8628549 | Input Housing to Low/Reverse Housing | | 76-79 | 1 | Metal |
| 44C | 043177X | 8628766 | Input Housing to Low/Reverse Housing | .060 | 79-87 | 1 | Plastic |
| 44C | 043177B | NA | Input Housing to Low/Reverse Housing | .080 | 76-87 | 1 | Plastic |

## NOTES

# GENERAL MOTORS
## HYDRAMATIC
## TH200-4R
## 1981-90

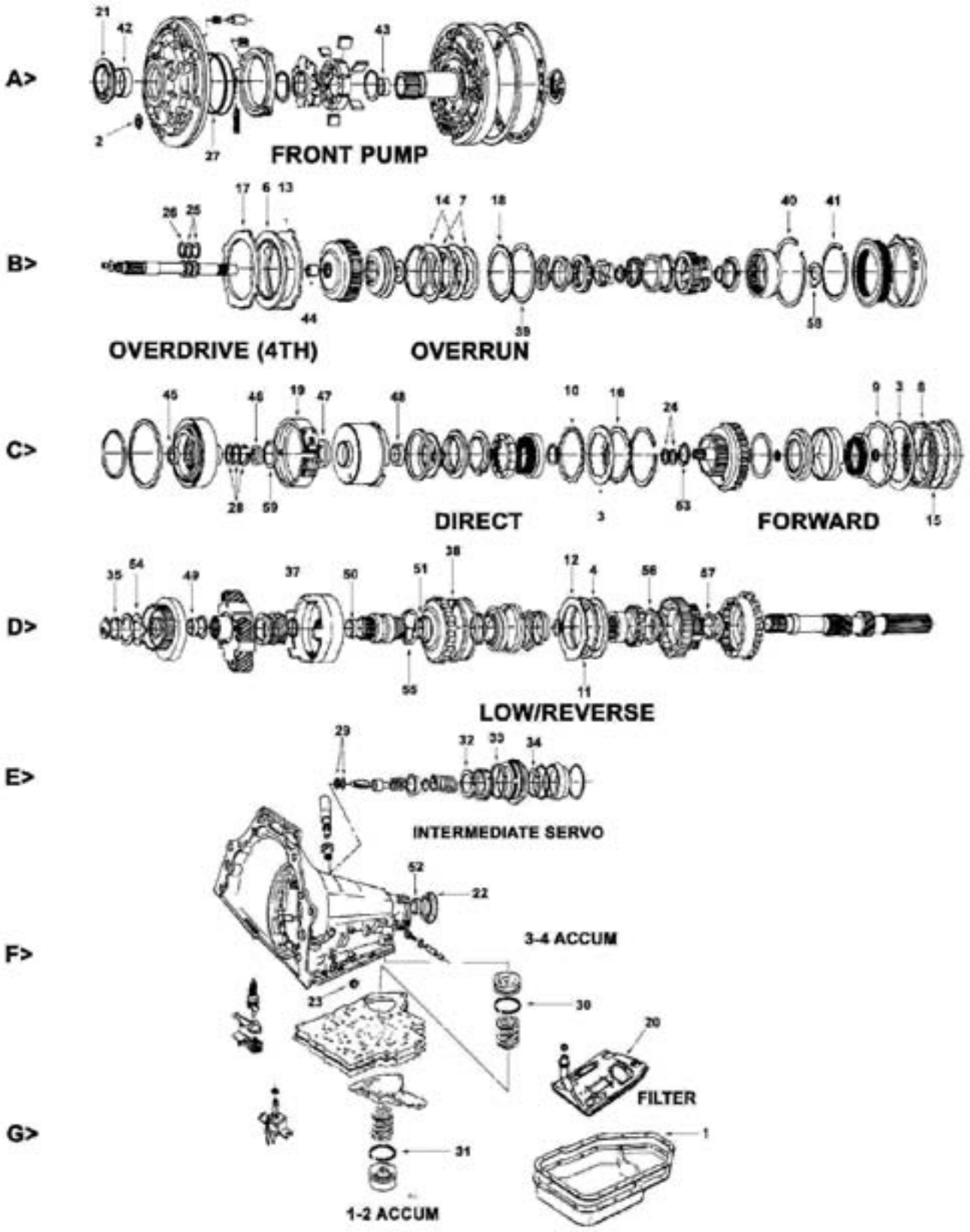

# GENERAL MOTORS
## HYDRAMATIC
## TH200-4R
## 1981-90

| ILL | DESCRIPTION | YEARS | FRICTION MODULE | STEEL MODULE | OVERHAUL KIT | BANNER KIT | MASTER KIT |
|---|---|---|---|---|---|---|---|
| **KITS** | | | | | | | |
| KT | Rebuilding Kit | 81-90 | 043752A | 043753A | 043804 | 043907LS | 043907 |
| **HI-PERFORMANCE - RED EAGLE®** | | | | | | | |
| KT | Rebuilding Kit | 81-90 | 043752AHP | 043753AHP | 043804 | 043907HPLS | 043907HP |

| ILL | ALTO NO | REF NO | DESCRIPTION | SPEC | YEAR | QTY | NOTES |
|---|---|---|---|---|---|---|---|
| **MISCELLANEOUS GASKETS & KIT COMPONENTS** | | | | | | | |
| 1G | 043820 | 8634198 | Gasket, Oil Pan | Cork/Rub | 81-90 | 1 | |
| KT | TBA | NA | Kit, Servo Lipseals | | 81-90 | 1 | |
| N I | 010115B | 6264903 | O Ring, Electrical connector | | 81-90 | 1 | |
| 2A | 032003 | 8626281 | Washer, Front pump bolts | | 81-90 | 6 | |
| **FRICTION CLUTCHES** | | | | | | | |
| 3C | 043700 | 8657168 | Forward | .078 | 81-90 | 3-6 | Tan - 30T - OD: 5.226" - SM |
| 3C | 043700 | 8657168 | Direct | .078 | 81-90 | 3-5 | Tan - 30T - OD: 5.226" - SM |
| 3C | 043700A | NA | Forward & Direct (thin) | .061 | 81-90 | AR | Tan - 30T - OD: 5.226" - SM |
| 4D | 043702 | 8669069 | Low/Reverse | .078 | 81-90 | 4-6 | Tan - 44T - OD: 5.529" - PL |
| 4D | 043722 | NA | Low/Reverse | .078 | 81-90 | 4-6 | Heg - 44T - OD: 5.529" - PL |
| 6B | 043708 | 8657170 | Overdrive (4th) Clutch | .080 | 81-90 | 2 | Tan - 36T - OD: 6.886" - SM |
| 7B | 043710 | 8657031 | Overrun | .080 | 81-90 | 2 | Tan - 40T - OD: 5.095" - SB |
| **HI-PERFORMANCE - RED EAGLE®** | | | | | | | |
| 3C | 043740 | NA | Forward & Direct | .078 | 81-90 | 3-6 | RED EAGLE® |
| 3C | 043740A | NA | Forward & Direct (thin) | .061 | 81-90 | AR | RED EAGLE® |
| 4D | 043742 | NA | Low/Reverse | .078 | 81-90 | 4-6 | RED EAGLE® |
| 6B | 043746 | NA | Overdrive (4th) Clutch | .080 | 81-90 | 2 | RED EAGLE® |
| 7B | 043748 | NA | Overrun | .080 | 81-90 | 2 | RED EAGLE® |
| **HI-PERFORMANCE - UNIT PACKS (ONE Rebuild)** | | | | | | | |
| KT | 043740UP6 | NA | UNIT PACK - Forward & Direct | .078 | 81-90 | 1 | 6 RED EAGLE® Friction |
| KT | 043740AUP8 | NA | UNIT PACK - Forward or Direct (thin) | .061 | 81-90 | 1 | 8 RED EAGLE® Friction |
| KT | 043742UP6 | NA | UNIT PACK - Low/Reverse | .078 | 81-90 | 1 | 6 RED EAGLE® Friction |
| KT | 043746UP2 | NA | UNIT PACK - Overdrive (4th) Clutch | .080 | 81-90 | 1 | 2 RED EAGLE® Friction |
| KT | 043748UP2 | NA | UNIT PACK - Overrun | .080 | 81-90 | 1 | 2 RED EAGLE® Friction |
| **STEEL CLUTCHES** | | | | | | | |
| 8C | 043701 | 8678902 | Forward | .078 | 81-90 | 2-3 | 30T - ID: 4.340" |
| 8C | 043701A | NA | Forward - thin | .060 | 81-90 | AR | 30T - ID: 4.340" |
| 9C | 043707 | 8678901 | Forward - wave | .063 | 81-90 | 1 | 30T - ID: 4.340" |
| 10C | 043703 | 8678923 | Direct | .090 | 81-90 | 3-6 | 26T - ID: 4.340" |
| 10C | 043717 | NA | Forward & Direct - oversize | .101 | 81-90 | AR | 30T - ID: 4.340" |
| 11D | 043705 | 8678922 | Low/Reverse | .077 | 81-90 | 5-7 | 22T - ID: 4.690" |
| 11D | 043705-230 | NA | Low/Reverse - oversize | .092 | 81-90 | AR | 22T - ID: 4.690" |
| 12D | 043719 | 8678926 | Low/Reverse - wave | .078 | 81-90 | 1 | 4T - ID: 4.690" |
| 13B | 043713 | 8678928 | Overdrive (4th) Clutch | .080 | 81-90 | 3 | 6T - ID: 5.844" |
| 14B | 043715 | 8678930 | Overrun | .080 | 81-90 | 2 | 36T - ID: 3.959" |
| **HI-PERFORMANCE - KOLENE®** | | | | | | | |
| 8C | 043701K | NA | Forward | .078 | 81-90 | 2-3 | 30T - ID: 4.340" |
| 8C | 043701AK | NA | Forward (thin) | .060 | 81-90 | AR | 30T - ID: 4.340" |
| 10C | 043703K | NA | Direct | .090 | 81-90 | 3-6 | 26T - ID: 4.340" |
| 10C | 043717K | NA | Forward & Direct - oversize | .101 | 81-90 | AR | 30T - ID: 4.340" |
| 11D | 043705K | NA | Low/Reverse | .077 | 81-90 | 5-7 | 22T - ID: 4.690" |
| 13B | 043713K | NA | Overdrive (4th) Clutch | .080 | 81-90 | 3 | 6T - ID: 5.844" |
| 14B | 043715K | NA | Overrun | .080 | 81-90 | 2 | 36T - ID: 3.959" |
| **HI-PERFORMANCE - UNIT PACKS (ONE Rebuild)** | | | | | | | |
| KT | 043701KUP3 | NA | UNIT PACK - Forward | .078 | 81-90 | 1 | 3 KOLENE® Steel |
| KT | 043701AKUP8 | NA | UNIT PACK - Forward (thin) | .060 | 81-90 | 1 | 8 KOLENE® Steel |
| KT | 043703KUP6 | NA | UNIT PACK - Direct | .090 | 81-90 | 1 | 6 KOLENE® Steel |
| KT | 043703KUP5 | NA | UNIT PACK - Direct | .090 | 81-90 | 1 | 5 KOLENE® Steel |
| KT | 043705KUP7 | NA | UNIT PACK - Low/Reverse | .077 | 81-90 | 1 | 7 KOLENE® Steel |

# GENERAL MOTORS
## HYDRAMATIC
## TH200-4R
## 1981-90

| ILL | ALTO NO | REF NO | DESCRIPTION | SPEC | YEAR | QTY | NOTES |
|---|---|---|---|---|---|---|---|
| **STEEL CLUTCHES** | | | | | | | ...Continued |
| **HI-PERFORMANCE - UNIT PACKS (ONE Rebuild)** | | | | | | | |
| KT | 043713KUP3 | NA | UNIT PACK - Overdrive (4th) Clutch | .080 | 81-90 | 1 | 3 KOLENE® Steel |
| KT | 043715KUP2 | NA | UNIT PACK - Overrun | .080 | 81-90 | 1 | 2 KOLENE® Steel |
| **PRESSURE PLATES** | | | | | | | |
| 15C | TBA | 8628088 | Forward - backing | | 81-90 | 1 | |
| 16C | 043760A | 8678925 | Direct - backing | .177 | 81-90 | 1 | |
| 17B | 043762A500 | 8634866 | Overdrive (4th) Clutch - backing | .197 | 81-90 | 1 | |
| 18B | TBA | 8634864 | Overrun | | 81-90 | 1 | |
| **OEI™ Original Equipment Improvements** | | | | | | | |
| KT | 043757 | NA | POWERPACK™ - Direct Clutch | | 81-90 | 1 | |
| N I | 057501 | 8654491 | Retainer, Front pump seal | | 81-90 | 1 | prevents front seal pop-out |
| KT | 043990 | SK® 200-4R | Shift Kit® - Corrects 3-2 cutloose, shift timing | Transgo® | 81-90 | 1 | |
| KT | 043991 | 200-4R-HD2 | Reprogramming Kit™ - converts to manual shift | Transgo® | 81-90 | 1 | |
| **BANDS** | | | | | | | |
| 19C | 043950 | 8657210 | Intermediate (Flex) | Tan | 81-90 | 1 | |
| **HI-PERFORMANCE - RED EAGLE® or KEVLAR®** | | | | | | | |
| 19C | 043960 | NA | Intermediate (Flex) | RED | 81-90 | 1 | RED EAGLE® |
| 19C | 043961 | NA | Intermediate (Flex) Heavy Duty POWERBAND™ | RED | 81-90 | 1 | RED EAGLE® |
| 19C | 043961K | NA | Intermediate (Flex) Super Duty POWERBAND™ | Kevlar® | 81-90 | 1 | |
| **FILTERS** | | | | | | | |
| KT | FK043946 | 8639951 | Filter Kit | | 81-90 | 1 | |
| 20G | 043946 | 8657789 | Filter - with multi-lip seal included | | 81-90 | 1 | |
| **METAL CLAD SEALS** | | | | | | | |
| 21A | 043400 | 24202535 | Front pump | Vamac® | 81-90 | 1 | |
| 22F | 032402 | 1243402 | Extension Housing - with flange | | 81-90 | 1 | |
| 23F | 032410C | 8657163 | Manual Lever | | 81-90 | 1 | |
| **SEALING RINGS** | | | | | | | |
| KT | 043603 | NA | Sealing Ring Kit - 3M/13T | | 81-90 | 1 | |
| 24C | 043101 | 8628090 | Forward Clutch drum | Teflon | 81-90 | 2 | |
| 25B | 043101 | 8628090 | Turbine Shaft - Scarf cut | Teflon | 81-90 | 2 | |
| 26B | TBA | 8634598 | Turbine Shaft - Solid | Teflon | 81-90 | 1 | |
| 27A | 043120 | 8634079 | Pump Slide to pump | Metal | 81-90 | 1 | Not in Kit |
| 28C | 043116 | 8634156 | Center Support | Metal | 81-90 | 3 | |
| 29E | 043115 | 8630120 | Intermediate Servo pin | Teflon | 81-90 | 2 | |
| 30F | 043103 | 8634161 | 3-4 Accumulator | Teflon | 81 | 1 | Replaced by Lathe Cut |
| 31G | 043118 | 8634390 | 1-2 Accumulator | Teflon | 81-90 | 1 | |
| 32E | 043108 | 8628123 | Intermediate Servo Outer - Release | Teflon | 81-84 | 1 | |
| 33E | 043104 | 8628697 | Intermediate Servo Inner - Apply | Teflon | 81-84 | 1 | |
| 34E | 043114 | 8630568 | Intermediate Servo Middle | Teflon | 81-84 | 1 | |
| N I | 048107 | 8632588 | Governor | Teflon | 81-90 | 1 | |
| **SNAP RINGS** | | | | | | | |
| KT | 043680 | NA | Snap Ring Kit | | 81-90 | 1 | |
| 35D | 043250 | 8628170 | Front Internal gear to output shaft | | 81-90 | 1 | |
| 36C | 043251 | 8628089 | Forward & Direct clutch drum | | 81-90 | 2 | |
| 37D | 043252 | 8623105 | Input drum to sun gear (sun shell) | | 81-90 | 1 | |
| N I | TBA | 8628210 | Low/Reverse Housing to case - Front | | 81-90 | 1 | |
| 38D | TBA | 8628221 | Low/Reverse Housing to case - Rear | | 81-90 | 1 | |
| N I | TBA | 8634158 | Overdrive (4th) piston | | 81-90 | 1 | |
| 39B | TBA | 8634056 | Overrun piston | | 81-90 | 1 | |
| 40B | TBA | 8634029 | Center Support to case | | 81-90 | 1 | |
| 41B | TBA | 8634024 | Center Support to Overdrive clutch | | 81-90 | 1 | |
| **BUSHINGS** | | | | | | | |
| KT | 043625A | NA | Bushing Kit | | 81-90 | 1 | |
| 42A | 057200 | 8687987 | Front Pump body | | 81-90 | 1 | |
| 43A | 043201 | 8628915 | Front Pump stator support - front | | 81-90 | 1 | |

| ILL | ALTO NO | REF NO | DESCRIPTION | SPEC | YEAR | QTY | NOTES |
|---|---|---|---|---|---|---|---|
| **BUSHINGS** | | | | | | | ...Continued |
| 44B | 043210 | 8634908 | Overrun Clutch housing | | 81-90 | 1 | |
| N I | 048209 | 8631905 | Overdrive planetary carrier | | 81-90 | 1 | |
| 45C | 043211 | 8634907 | Center Support - Front | 29.8mm | 81-90 | 1 | |
| 46C | 043212 | 8634913 | Center Support - Rear | 33.8mm | 81-90 | 1 | |
| 47C | 043213 | 8634919 | Direct Drum - Front | 58mm | 81-90 | 1 | |
| 48C | 043214 | 8634918 | Direct Drum - Rear | 47.64mm | 81-90 | 1 | |
| 49D | 043209 | 8630990 | Front Internal Gear | | 81-90 | 1 | |
| 50D | 043206 | 8628928 | Rear Sun Gear | | 81-90 | 1 | |
| 51D | 043207 | 8628929 | Low/Reverse Housing | | 81-90 | 1 | |
| N I | 043208 | 8628947 | Rear planetary carrier | | 81-90 | 1 | |
| 52F | 032208 | 6260048 | Extension Housing | | 81-90 | 1 | |
| **WASHERS** | | | | | | | |
| KT | 043635A | NA | Washer Kit | | 81-90 | 1 | |
| 53C | 043175 | 8628091 | Direct drum to Forward drum | | 81-90 | 1 | |
| 54D | 043176 | 8628765 | Front Internal gear to support | | 81-90 | 1 | |
| 55D | 043177 | 8626372 | Input Housing to Low/Reverse Housing | | 81-90 | 1 | Metal |
| 55D | 043177X | 8628766 | Input Housing to Low/Reverse Housing | .060 | 81-90 | 1 | Plastic |
| 55D | 043177B | NA | Input Housing to Low/Reverse Housing | .080 | 81-90 | 1 | Plastic |
| 56D | 043184 | 8628182 | Rear Carrier to Low Race | | 81-87 | 1 | |
| 57D | 043185 | 8628188 | Rear Carrier to Internal gear | | 81-90 | 1 | |
| 58B | 043187 | 8634146 | Internal gear to Support | | 81-90 | 1 | |
| 59C | 043188 | 8634157 | Center Support to direct drum | | 81-90 | 1 | |

## NOTES

# GENERAL MOTORS

## HYDRAMATIC

**TH325 1979-81**

**TH325-4L 1982-85**

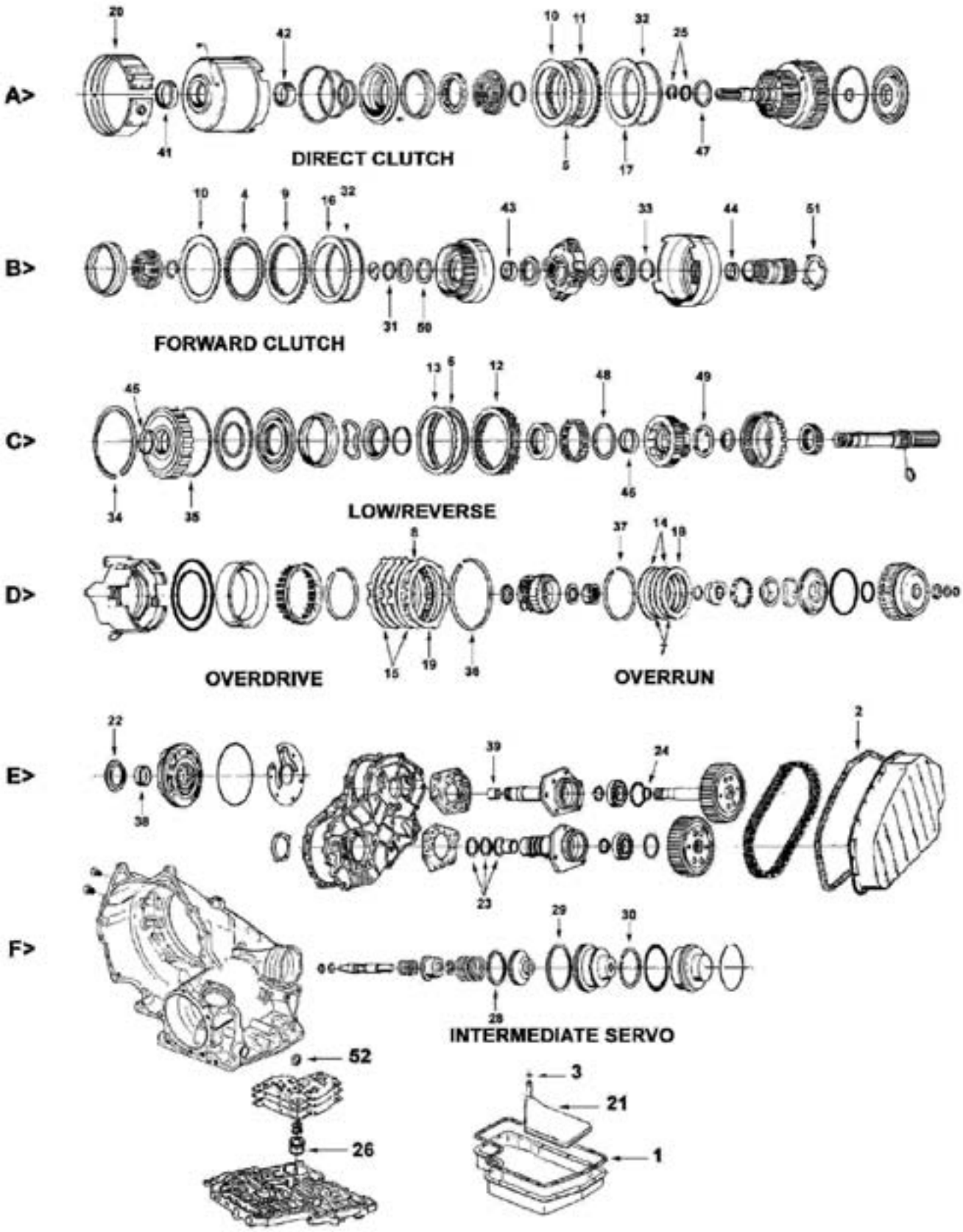

# GENERAL MOTORS
## HYDRAMATIC
## TH325 1979-81
## TH325-4L 1982-85

| ILL | DESCRIPTION | YEARS | FRICTION MODULE | STEEL MODULE | OVERHAUL KIT | BANNER KIT | MASTER KIT |
|---|---|---|---|---|---|---|---|
| **KITS** | | | | | | | |
| KT | Rebuilding Kit - TH325 | 79-81 | 043752B | 043753B | 043802 | 043905LS | 043905 |
| KT | Rebuilding Kit - TH325-4L | 82-85 | 043752A | 043753A | 043806 | 043909LS | 043909 |

| ILL | ALTO NO | REF NO | DESCRIPTION | SPEC | YEAR | QTY | NOTES |
|---|---|---|---|---|---|---|---|
| **MISCELLANEOUS GASKETS & KIT COMPONENTS** | | | | | | | |
| 1F | 043818 | 8635014 | Gasket, Oil Pan | Cork/Rub | 79-85 | 1 | |
| 2E | 043826 | 8632032 | Gasket, Sprocket cover - TH325 | Cork/Rub | 79-81 | 1 | |
| 2E | 043826A | 8635154 | Gasket, Sprocket cover - TH325-4L | Cork/Rub | 82-85 | 1 | |
| KT | TBA | NA | Kit, Servo Lipseals | | 84-85 | 1 | |
| 3F | 010116B | 1363951 | O Ring, Filter | | 79-85 | 1 | |
| **FRICTION CLUTCHES** | | | | | | | |
| 4B | 043700 | 8657168 | Forward | .078 | 79-85 | 3-6 | Tan - 30T - OD: 5.226" - SM |
| 5A | 043700 | 8657168 | Direct | .078 | 79-85 | 3-5 | Tan - 30T - OD: 5.226" - SM |
| 4B | 043700A | NA | Forward & Direct - Selective | .061 | 79-85 | AR | Tan - 30T - OD: 5.226" - SM |
| 6C | 043702 | 8669069 | Low/Reverse | .078 | 79-85 | 4-6 | Tan - 44T - OD: 5.529" - PL |
| 6C | 043722 | NA | Low/Reverse | .078 | 79-85 | 4-6 | Heg - 44T - OD: 5.529" - PL |
| 7D | 043708 | 8657170 | Overdrive (4th) | .080 | 82-85 | 2 | Tan - 36T - OD: 6.886" - M |
| 8D | 043710 | 8657031 | Overrun | .080 | 82-85 | 2 | Tan - 40T - OD: 5.095" - SM |
| **HI-PERFORMANCE - RED EAGLE®** | | | | | | | |
| 4B | 043740 | NA | Forward & Direct | .078 | 79-85 | 3-6 | RED EAGLE® |
| 4B | 043740A | NA | Forward & Direct (thin) | .061 | 79-85 | AR | RED EAGLE® |
| 6C | 043742 | NA | Low/Reverse | .078 | 79-85 | 4-6 | RED EAGLE® |
| 7D | 043746 | NA | Overdrive (4th) Clutch | .080 | 82-85 | 2 | RED EAGLE® |
| 8D | 043748 | NA | Overrun | .080 | 82-85 | 2 | RED EAGLE® |
| **HI-PERFORMANCE - UNIT PACKS (ONE Rebuild)** | | | | | | | |
| KT | 043740UP6 | NA | UNIT PACK - Forward or Direct | .078 | 79-85 | 1 | 6 RED EAGLE® Friction |
| KT | 043740AUP8 | NA | UNIT PACK - Forward or Direct (thin) | .061 | 79-85 | 1 | 8 RED EAGLE® Friction |
| KT | 043742UP6 | NA | UNIT PACK - Low/Reverse | .078 | 79-85 | 1 | 6 RED EAGLE® Friction |
| KT | 043746UP2 | NA | UNIT PACK - Overdrive (4th) Clutch | .080 | 82-85 | 1 | 2 RED EAGLE® Friction |
| KT | 043748UP2 | NA | UNIT PACK - Overrun | .080 | 82-85 | 1 | 2 RED EAGLE® Friction |
| **STEEL CLUTCHES** | | | | | | | |
| 9B | 043701 | 8678902 | Forward | .078 | 79-85 | 2-3 | 30T - ID: 4.340" |
| 9B | 043701A | NA | Forward - thin | .060 | 79-85 | AR | 30T - ID: 4.340" |
| 10B | 043707 | 8678901 | Forward - wave | .063 | 79-85 | 1 | 30T - ID: 4.340" |
| 11A | 043703 | 8678923 | Direct | .090 | 79-85 | 3-6 | 26T - ID: 4.340" |
| 9B | 043717 | NA | Forward & Direct - oversize | .101 | 79-85 | AR | 30T - ID: 4.340" |
| 12C | 043705 | 8678922 | Low/Reverse | .077 | 79-85 | 5-7 | 22T - ID: 4.690" |
| 12C | 043705-230 | NA | Low/Reverse - oversize | .092 | 79-85 | AR | 22T - ID: 4.690" |
| 13C | 043719 | 8678926 | Low/Reverse - wave | .078 | 79-85 | 1 | 4T - ID: 4.690" |
| 14D | 043713 | 8678928 | Overdrive (4th) Clutch | .080 | 82-85 | 3 | 6T - ID: 5.844" |
| 15D | 043715 | 8678930 | Overrun | .080 | 82-85 | 2 | 36T - ID: 3.959" |
| **HI-PERFORMANCE - KOLENE®** | | | | | | | |
| 9B | 043701K | NA | Forward | .078 | 79-85 | 2-3 | 30T - ID: 4.340" |
| 9B | 043701AK | NA | Forward (thin) | .060 | 79-85 | AR | 30T - ID: 4.340" |
| 10A | 043703K | NA | Direct | .090 | 79-85 | 3-6 | 26T - ID: 4.340" |
| 9B | 043717K | NA | Forward & Direct - oversize | .101 | 79-85 | AR | 30T - ID: 4.340" |
| 12C | 043705K | NA | Low/Reverse | .077 | 79-85 | 5-7 | 22T - ID: 4.690" |
| 14D | 043713K | NA | Overdrive (4th) Clutch | .080 | 82-85 | 3 | 6T - ID: 5.844" |
| 15D | 043715K | NA | Overrun | .080 | 82-85 | 2 | 36T - ID: 3.959" |
| **HI-PERFORMANCE - UNIT PACKS (ONE Rebuild)** | | | | | | | |
| KT | 043701KUP3 | NA | UNIT PACK - Forward | .078 | 79-85 | 1 | 3 KOLENE® Steel |
| KT | 043701AKUP8 | NA | UNIT PACK - Forward (thin) | .060 | 79-85 | 1 | 8 KOLENE® Steel |
| KT | 043703KUP6 | NA | UNIT PACK - Direct | .090 | 79-85 | 1 | 6 KOLENE® Steel |
| KT | 043703KUP5 | NA | UNIT PACK - Direct | .090 | 79-85 | 1 | 5 KOLENE® Steel |
| KT | 043705KUP7 | NA | UNIT PACK - Low/Reverse | .077 | 79-85 | 1 | 7 KOLENE® Steel |

# GENERAL MOTORS
## HYDRAMATIC
## TH325 1979-81
## TH325-4L 1982-85

| ILL | ALTO NO | REF NO | DESCRIPTION | SPEC | YEAR | QTY | NOTES |
|---|---|---|---|---|---|---|---|
| **STEEL CLUTCHES** | | | | | | | ...Continued |
| **HI-PERFORMANCE - UNIT PACKS (ONE Rebuild)** | | | | | | | |
| KT | 043713KUP3 | NA | UNIT PACK - Overdrive (4th) Clutch | .080 | 82-85 | 1 | 3 KOLENE® Steel |
| KT | 043715KUP2 | NA | UNIT PACK - Overrun | .080 | 82-85 | 1 | 2 KOLENE® Steel |
| **PRESSURE PLATES** | | | | | | | |
| 16B | TBA | 8628088 | Forward - backing | | 79-85 | 1 | |
| 17A | 043760A | 8678925 | Direct - backing | .177 | 79-85 | 1 | |
| 18D | TBA | 8634866 | Overdrive (4th) Clutch - backing | | 82-85 | 1 | |
| 19D | TBA | 8634864 | Overrun | | 82-85 | 1 | |
| **OEI™ Original Equipment Improvements** | | | | | | | |
| N I | 057501 | 8654491 | Retainer, Front pump seal | | 79-85 | 1 | Prevents front seal pop-out |
| KT | 043988 | SK® 325 | VB Shift Kit® - TH325 | Transgo® | 79-81 | 1 | |
| KT | 043989 | SK® 325-4L | VB Shift Kit® - TH325-4L | Transgo® | 82-85 | 1 | |
| **BANDS** | | | | | | | |
| 20A | 043950 | 8657210 | Intermediate (Flex) | Tan | 79-85 | 1 | |
| **HI-PERFORMANCE - RED EAGLE® or KEVLAR®** | | | | | | | |
| 20A | 043960 | NA | Intermediate (Flex) | Red | 79-85 | 1 | RED EAGLE® |
| 20A | 043961 | NA | Intermediate (Flex) Heavy Duty POWERBAND™ | Red | 79-85 | 1 | RED EAGLE® |
| 20A | 043961K | NA | Intermediate (Flex) Super Duty POWERBAND™ | Kevlar® | 79-85 | 1 | |
| **FILTERS** | | | | | | | |
| KT | FK043944 | NA | Filter Kit - TH325 | | 79-81 | 1 | |
| KT | FK043948 | NA | Filter Kit - TH325-4L | | 82-85 | 1 | |
| 21F | 043944 | 8632996 | Filter - TH325 | | 79-81 | 1 | |
| 21F | 043948 | 8657789 | Filter - TH325-4L | | 82-85 | 1 | |
| **METAL CLAD SEALS** | | | | | | | |
| 22E | 032400 | 8641300 | Front Pump - TH325 | Silicone | 79-81 | 1 | |
| 22E | 055400 | 24202535 | Front Pump - TH325 | Vamac® | 79-81 | 1 | |
| 22E | 043400 | 8641300 | Front Pump - TH325-4L | Vamac® | 82-85 | 1 | |
| 52F | 032410C | 8623056 | Manual Lever | | 79-85 | 1 | |
| **SEALING RINGS** | | | | | | | |
| KT | 043606 | NA | Sealing Ring Kit - TH325 | 1M/14T | 79-81 | 1 | |
| KT | 043607 | NA | Sealing Ring Kit - TH325-4L | 18T | 82-85 | 1 | |
| 23E | 043100X | 8628055 | Drum Support | Teflon | 79-85 | 3 | |
| 24E | 031106 | 8627565 | Turbine Shaft | Metal | 79-81 | 1 | |
| 25A | 043101 | 8628090 | Input Shaft | Teflon | 79-85 | 2 | |
| 26F | 043118 | 8634161 | 1-2 Accumulator | Teflon | 79-81 | 1 | |
| N I | 048107 | 8632588 | Governor | Teflon | 79-85 | 1 | |
| 27F | 043115 | 8630120 | Intermediate Servo pin | Teflon | 79-85 | 2 | |
| 28F | 043113 | 8632149 | Intermediate Servo piston - inner (2.14") | Teflon | 79-85 | 1 | |
| 28F | 043114 | 8630568 | Intermediate Servo piston - inner (1.94") | Teflon | 79-85 | 1 | |
| 29F | 043108 | 8628123 | Intermediate Servo piston - Outer | Teflon | 79-85 | 1 | |
| 30F | 043107 | 8630080 | Intermediate Servo piston to cover (2.54") | Teflon | 79-85 | 1 | |
| 30F | 043104 | 8628697 | Intermediate Servo piston to cover (2.36") | Teflon | 79-85 | 1 | |
| **SNAP RINGS** | | | | | | | |
| KT | 043680 | NA | Snap Ring Kit | | 79-85 | 1 | |
| 31B | 043250 | 8628170 | Front Internal gear to output shaft | | 79-85 | 1 | |
| 32A | 043251 | 8628089 | Forward & Direct clutch drum | | 79-85 | 2 | |
| 33B | 043252 | 8623105 | Input drum to sun gear (sun shell) | | 79-85 | 1 | |
| 34C | TBA | 8628210 | Low/Reverse Housing to case - Front | | 79-85 | 1 | |
| 35C | TBA | 8628221 | Low/Reverse Housing to case - Rear | | 79-85 | 1 | |
| 36D | TBA | 8634158 | Overdrive (4th) piston | | 82-85 | 1 | |
| 37D | TBA | 8634056 | Overrun piston | | 82-85 | 1 | |
| **BUSHINGS** | | | | | | | |
| KT | 043627 | NA | Bushing Kit - TH325 | | 79-81 | 1 | |
| KT | 043627A | NA | Bushing Kit - TH325-4L | | 82-85 | 1 | |
| 38E | 032200 | 8623940 | Front Pump body - TH325 | Bronze | 79-81 | 1 | |

# GENERAL MOTORS
## HYDRAMATIC
## TH325 1979-81
## TH325-4L 1982-85

| ILL | ALTO NO | REF NO | DESCRIPTION | SPEC | YEAR | QTY | NOTES |
|---|---|---|---|---|---|---|---|
| **BUSHINGS** | | | | | | | ...Continued |
| 38E | 043200 | 8628913 | Front Pump body - TH325-4L | Babbit | 82-85 | 1 | |
| 39E | 031201 | 8623944 | Drive Sprocket support - TH325 | | 79-81 | 1 | |
| 39E | 043201 | 8628915 | Drive Sprocket support - TH325-4L | | 82-85 | 1 | |
| 40E | 043202 | 8628916 | Driven Sprocket support | | 79-85 | 1 | |
| 41A | 043214 | 8628918 | Direct Drum - Front | | 79-85 | 1 | |
| 42A | 043204 | 8628917 | Direct Drum - Rear | | 79-85 | 1 | |
| 43B | 043209 | 8630990 | Front Internal Gear assembly | Short | 79-85 | 1 | |
| 43B | 043205 | 8628925 | Front Internal Gear assembly | Long | 79-85 | 1 | |
| 44B | 043206 | 8628925 | Rear Sun Gear | | 79-85 | 1 | |
| 45C | 043207 | 8628929 | Low/Reverse Clutch housing | | 79-85 | 1 | |
| 46C | 043208 | 8628947 | Rear Carrier | | 79-85 | 1 | |
| N I | 043210 | 8634908 | Overrun Drum | | 82-85 | 1 | |
| N I | 048209 | 8631905 | Overdrive Carrier | | 82-85 | 1 | |
| **WASHERS** | | | | | | | |
| KT | 043637 | NA | Washer kit - without selectives | | 79-85 | 1 | |
| 47A | 043175A | 8632504 | Direct to Forward drum - thrust | | 79-85 | 1 | |
| 48C | 043184 | 8628182 | Reaction Carrier to Low Race - thrust | | 79-85 | 1 | |
| 49C | 043185 | 8628188 | Reaction Carrier to Internal gear - thrust | | 79-85 | 1 | |
| 50B | 043176 | 8628765 | Internal gear - thrust | | 79-85 | 1 | |
| 51B | 043177 | 8628549 | Input drum to Housing | | 79-85 | 1 | Metal |
| 51B | 043177X | 8628766 | Input drum to Housing | .060 | 79-85 | 1 | Plastic |
| 51B | 043177B | NA | Input drum to Housing | .080 | 79-85 | 1 | Plastic |

## NOTES

# GENERAL MOTORS

## HYDRAMATIC
## TH250C 1980-84
## TH350/C 1969-86

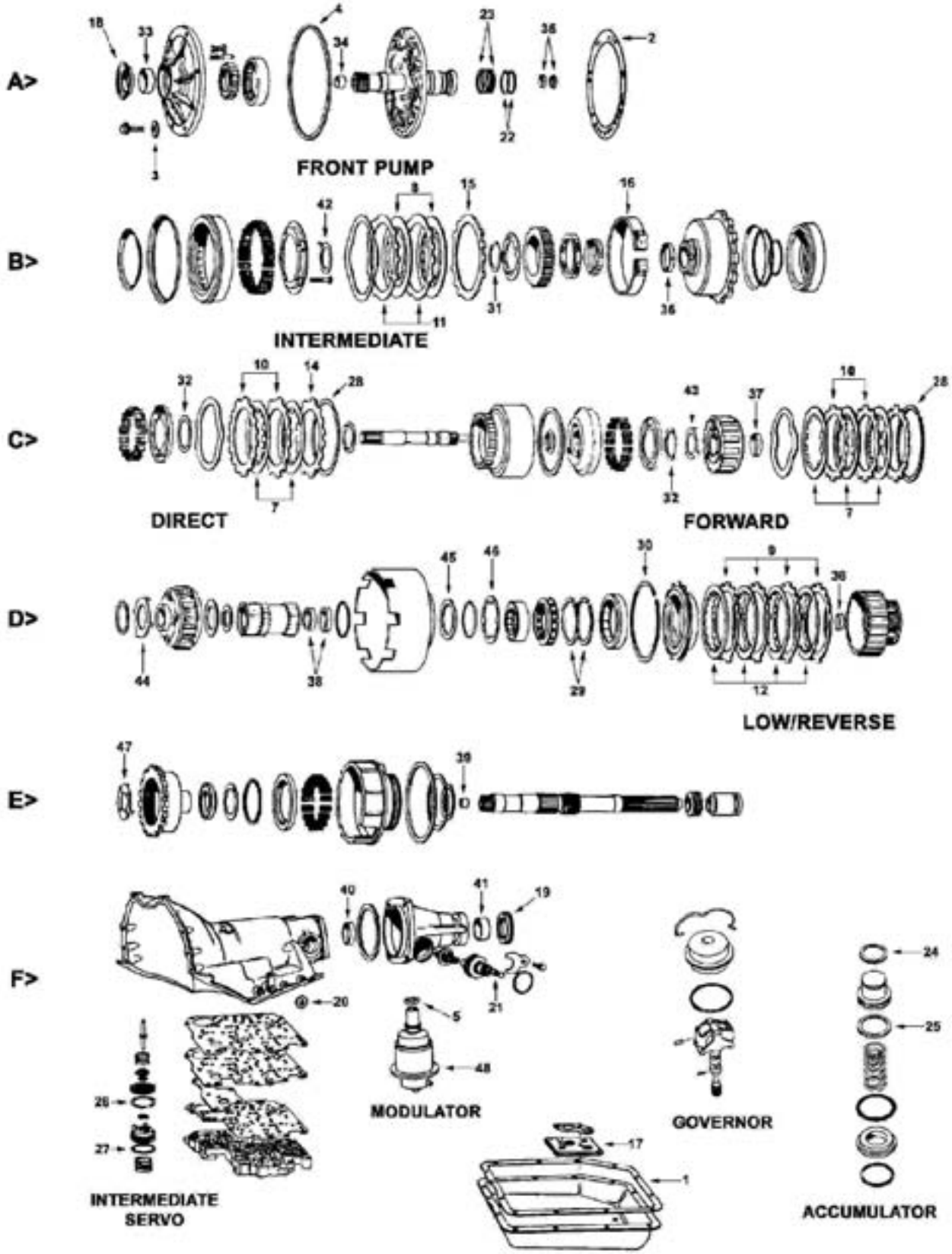

# GENERAL MOTORS
## HYDRAMATIC
## TH250C 1980-84
## TH350/C 1969-86

| ILL | DESCRIPTION | YEARS | FRICTION MODULE | STEEL MODULE | OVERHAUL KIT | BANNER KIT | MASTER KIT |
|---|---|---|---|---|---|---|---|
| **KITS** | | | | | | | |
| KT | Rebuilding Kit - TH350 | 69-79 | 032752 | 032753 | 032800 | 032901LS | 032901 |
| KT | Rebuilding Kit - TH350 with Short Ring kit | 69-79 | 032752 | 032753 | 032800X | 032901XLS | 032901X |
| KT | Rebuilding Kit - TH350c | 80-86 | 032752 | 032753 | 032802 | 032903LS | 032903 |
| KT | Rebuilding Kit - Combo | 69-86 | 032752 | 032753 | 032804 | 032905LS | 032905 |
| KT | Rebuilding Kit - Combo with Heg Frictions | 69-86 | 032752B | 032753 | 032804 | TBA | TBA |
| KT | Rebuilding Kit - TH250c | 80-84 | 032752A | 032753A | 032806 | 032907ALS | 032907A |
| **HI-PERFORMANCE - RED EAGLE®** | | | | | | | |
| KT | Rebuilding Kit - Combo | 69-86 | 032752HP | 032753HP | 032804HP | 032905HPLS | 032905HP |

| ILL | ALTO NO | REF NO | DESCRIPTION | SPEC | YEAR | QTY | NOTES |
|---|---|---|---|---|---|---|---|
| **MISCELLANEOUS GASKETS & KIT COMPONENTS** | | | | | | | |
| 1F | 032816 | 6261649 | Gasket, Oil Pan | Cork/Rub | 69-86 | 1 | |
| 2A | 032001 | 8640671 | Gasket, Front pump to case | Paper | 69-86 | 1 | |
| N I | 032306 | NA | VB Checkball - .250 | Steel | 69-86 | 4-5 | |
| N I | 032306C | 6261179 | VB Checkball - .250 | Viton® | 69-86 | 4-5 | |
| 3A | 032003 | 3884683 | Washer, Front pump bolts | | 69-86 | 8 | |
| 4A | 031050 | 6261413 | Lathe Cut, Front pump to case | | 69-86 | 1 | |
| 5F | 010115B | 6264903 | O Ring, Modulator & Electrical connector | | 69-86 | 2 | |
| **FRICTION CLUTCHES** | | | | | | | |
| 7C | 032702 | 8647577 | Forward | .098 | 69-86 | 5 | Tan - 20T - OD: 5.920" - PL |
| 7C | 032714 | NA | Forward | .098 | 69-86 | 5 | Heg - 20T - OD: 5.920" - PL |
| 7C | 032722 | 8647576 | Forward - TH250c | .088 | 80-84 | 5 | Tan - 20T - OD: 5.913" - PL |
| 7C | 032702 | 8647577 | Direct | .098 | 69-86 | 4 | Tan - 20T - OD: 5.920" - PL |
| 7C | 032714 | NA | Direct | .098 | 69-86 | 5 | Heg - 20T - OD: 5.920" - PL |
| 7C | 032722 | 8647576 | Direct - TH250c | .088 | 80-84 | 5 | Tan - 20T - OD: 5.913" - PL |
| 8B | 032700 | 8647522 | Intermediate | .098 | 69-86 | 3 | Tan - 60T - OD: 7.444" - PL |
| 8B | 032712 | NA | Intermediate | .098 | 69-86 | 3 | Heg - 60T - OD: 7.444" - PL |
| 9D | 019702 | 8651513 | Low/Reverse | .098 | 69-86 | 5 | Tan - 25T - OD: 6.461" - SM |
| 9D | 030702 | NA | Low/Reverse | .098 | 69-86 | 5 | Heg - 25T - OD: 6.461" - SM |
| 9D | 057708 | 8684089 | Low/Reverse - TH250c | .087 | 69-86 | 5 | Tan - 25T - OD: 6.461" - SM |
| **HI-PERFORMANCE - RED EAGLE®** | | | | | | | |
| 7C | 032742 | NA | Forward & Direct | .098 | 69-86 | 4/5 | Red - 20T - OD: 5.920" - SM |
| 8B | 032740 | NA | Intermediate | .098 | 69-86 | 3 | Red - 60T - OD: 7.444" - SM |
| 9D | 032744 | NA | Low/Reverse | .098 | 69-86 | 5 | Red - 25T - OD: 6.461" - SM |
| **HI-PERFORMANCE - UNIT PACKS (ONE Rebuild)** | | | | | | | |
| KT | 032742UP9 | NA | UNIT PACK - Forward & Direct | .098 | 69-86 | 1 | 9 RED EAGLE® Friction |
| KT | 032740UP3 | NA | UNIT PACK - Intermediate | .098 | 69-86 | 1 | 3 RED EAGLE® Friction |
| KT | 032744UP5 | NA | UNIT PACK - Low/Reverse | .098 | 69-86 | 1 | 5 RED EAGLE® Friction |
| **STEEL CLUTCHES** | | | | | | | |
| 10C | 032705 | 6261071 | Forward | .068 | 69-86 | 5 | 12T - ID: 4.863" |
| 10C | 032705 | 6261071 | Direct | .068 | 69-86 | 4 | 12T - ID: 4.863" |
| 10C | 032729 | NA | Forward & Direct - oversize | .090 | 69-86 | AR | 12T - ID: 4.863" |
| 11B | 032703 | 8640672 | Intermediate | .068 | 69-86 | 3 | 7T - ID: 6.175" |
| 11B | 032713 | 6261450 | Intermediate - original style | .068 | 69-86 | 3 | 9T - ID: 6.175" |
| 11B | 032703X | NA | Intermediate - oversize | .089 | 69-86 | AR | 7T - ID: 6.175" |
| 12D | 032701 | 8680439 | Low/Reverse | .068 | 69-86 | 5 | 17T - ID: 5.727" |
| 12D | 032701H | NA | Low/Reverse with Turbulator holes | .068 | 69-86 | 5 | 17T - ID: 5.727" |
| 12D | 032731 | NA | Low/Reverse - oversize | .080 | 69-86 | AR | 17T - ID: 5.727" |
| 12D | 032721 | 6260236 | Low/Reverse - Dish | .068 | 69-86 | AR | 17T - ID: 5.727" |
| **HI-PERFORMANCE - KOLENE®** | | | | | | | |
| 10C | 032705K | NA | Forward & Direct | .068 | 69-86 | 5/4 | 12T - ID: 4.863" |
| 10C | 032705HK | NA | Forward & Direct with Turbulator holes | .068 | 69-86 | 5/4 | 12T - ID: 4.863" |
| 11B | 032703K | NA | Intermediate | .068 | 69-86 | 2-3 | 7T - ID: 6.175" |
| 12D | 032701K | NA | Low/Reverse | .068 | 69-86 | 5 | 17T - ID: 5.727" |
| 12D | 032701HK | NA | Low/Reverse with Turbulator holes | .068 | 69-86 | 5 | 17T - ID: 5.727" |

# GENERAL MOTORS
## HYDRAMATIC
## TH250C 1980-84
## TH350/C 1969-86

| ILL | ALTO NO | REF NO | DESCRIPTION | SPEC | YEAR | QTY | NOTES |
|---|---|---|---|---|---|---|---|
| **STEEL CLUTCHES** | | | | | | | ...Continued |
| **HI-PERFORMANCE - UNIT PACKS (ONE Rebuild)** | | | | | | | |
| KT | 032705KUP9 | NA | UNIT PACK - Forward & Direct | .068 | 69-86 | 1 | 9 KOLENE® Steel |
| KT | 032703KUP3 | NA | UNIT PACK - Intermediate | .068 | 69-86 | 1 | 3 KOLENE® Steel |
| KT | 032701KUP5 | NA | UNIT PACK - Low/Reverse | .068 | 69-86 | 1 | 5 KOLENE® Steel |
| KT | 032701HKUP5 | NA | UNIT PACK - Low/Rev with Turbulator holes | .068 | 69-86 | 1 | 5 KOLENE® Steel |
| **PRESSURE PLATES** | | | | | | | |
| 13C | TBA | 6261072 | Forward | .250 | 69-86 | 1 | |
| 13C | TBA | 6261349 | Forward | .280 | 69-86 | 1 | |
| 13C | TBA | 6261350 | Forward | .310 | 69-86 | 1 | |
| 14C | TBA | 6261350 | Direct | .310 | 69-86 | 1 | |
| 15B | TBA | 8640673 | Intermediate | | 69-86 | 1 | |
| **OEI™ Original Equipment Improvements** | | | | | | | |
| KT | 032985 | SK® 350 | VB Shift Kit® | Transgo® | 69-86 | 1 | |
| KT | 032987 | 350-1&2 | Reprogramming Kit™- Tow & Go, Competition | Transgo® | 69-79 | 1 | |
| KT | 032988 | 350C-1&2 | Reprogramming Kit™- Tow & Go, Competition | Transgo® | 80-86 | 1 | |
| KT | 032988A | 350-3 | Reprogramming Kit™- Tow & Go, Competition | Transgo® | 69-86 | 1 | |
| **BANDS** | | | | | | | |
| 16B | 032950 | 6261132 | Intermediate | Tan | 69-86 | 1 | |
| 16B | 032961 | 8641196 | Intermediate - TH250c (Double wrap) | Tan | 80-84 | 1 | |
| **HI-PERFORMANCE - RED EAGLE® or KEVLAR®** | | | | | | | |
| 16B | 032960 | NA | Intermediate | Red | 69-86 | 1 | RED EAGLE® |
| 16B | 032960K | NA | Intermediate | Kevlar® | 69-86 | 1 | |
| **FILTERS** | | | | | | | |
| KT | FK032940 | NA | Filter Kit - Brass filter | | 69-86 | 1 | |
| KT | FK032946 | NA | Filter Kit - Nylon filter | | 69-86 | 1 | |
| KT | FK032948 | NA | Filter Kit - Dacron (felt) filter | | 69-86 | 1 | |
| 17F | 032940 | 6438816 | Filter, Brass | | 69-86 | 1 | |
| 17F | 032946 | 8640848 | Filter, Nylon | | 69-86 | 1 | |
| 17F | 032948 | 8641910 | Filter, Dacron (felt) | | 69-86 | 1 | |
| **METAL CLAD SEALS** | | | | | | | |
| 18A | 032400 | 8641300 | Front Pump | Silicone | 69-86 | 1 | |
| 18A | 055400 | 23015975 | Front Pump | Vamac® | 69-86 | 1 | |
| 19E | 032402 | 1243402 | Extension Housing with Flange | | 69-86 | 1 | |
| 20F | 032410C | 8657163 | Manual Lever | Vamac® | 69-86 | 1 | |
| 21F | 031057 | 1240382 | Speedometer without spring | | 69-86 | 1 | |
| 21F | 031057A | 25519078 | Speedometer with spring | | 69-86 | 1 | |
| **SEALING RINGS** | | | | | | | |
| KT | 032600A | C321 | Sealing Ring Kit - 5M/4T | | 69-86 | 1 | |
| KT | 032601 | C325 | Sealing Ring Kit - 9M/1T | | 74-86 | 1 | |
| KT | 032601A | C362 | Sealing Ring Kit, TH250c - 11M | | 80-84 | 1 | |
| KT | 032609 | C323 | Sealing Ring Kit - 12M/1T | | 69-86 | 1 | |
| KT | 032609T | C328 | Sealing Ring Kit - 9T | | 74-86 | 1 | |
| KT | 032609X | C322 | Sealing Ring Kit - 5M | | 69-86 | 1 | |
| 22A | 032100 | 6261570 | Front Pump stator - small | 1.957 | 69-86 | 2 | Metal |
| 23A | 032101 | 6261746 | Front Pump stator - Large | 2.137 | 69-86 | 2 | Metal |
| 24F | 032102 | 6261138 | Intermediate Accumulator inner (apply) | | 69-72 | 1 | Metal |
| 24F | 032106 | 6260257 | Intermediate Accumulator inner (apply) | | 73-86 | 1 | Teflon |
| 25F | 032103 | 6261139 | Intermediate Accumulator outer (release) | | 69-72 | 1 | Metal |
| 25F | 032107 | 6260258 | Intermediate Accumulator outer (release) | | 73-86 | 1 | Teflon |
| 26F | 032104 | 6261150 | Direct Clutch Accumulator | | 69-72 | 1 | Metal |
| 26F | 032108 | 6260320 | Direct Clutch Accumulator | | 73-86 | 1 | Teflon |
| 27F | 032105 | 6261151 | Intermediate Servo piston | | 69-72 | 1 | Metal |
| 27F | 032108 | 6260320 | Intermediate Servo piston | | 73-On | 1 | Teflon |
| 27F | 032109 | 330164 | Intermediate Servo piston - TH250 | 1.500 | 73-76 | 1 | Metal |
| 27F | 032114 | 8641472 | Intermediate Servo piston - TH250c | 1.985 | 80-84 | 1 | Metal |
| N I | 032115 | 8641473 | Intermediate Servo piston cushion | | 80-84 | 1 | Teflon |

# GENERAL MOTORS
## HYDRAMATIC
## TH250C 1980-84
## TH350/C 1969-86

| ILL | ALTO NO | REF NO | DESCRIPTION | SPEC | YEAR | QTY | NOTES |
|---|---|---|---|---|---|---|---|
| **SEALING RINGS** | | | | | | | ...Continued |
| N I | 048106 | 8631105 | Intermediate Servo band pin - TH250c | | 80-84 | 2 | Teflon |
| N I | 032113 | 8640186 | Input shaft to Output shaft | | 77-81 | 1 | Teflon |
| **SNAP RINGS** | | | | | | | |
| KT | 032680 | NA | Snap Ring Kit | | 69-86 | 1 | |
| 28C | 032250 | 6261048 | Forward & Direct drum | | 69-86 | 2 | |
| N I | 032251 | 6261049 | Input/Output shaft support | | 69-86 | 1 | |
| 29D | 032252 | 6261051 | Low/Reverse overrun clutch | | 69-86 | 2 | |
| 30D | 032253 | 6261416 | Low/Reverse overrun clutch support | | 69-86 | 1 | |
| 31B | 032254 | 6261038 | Intermediate Sprag retainer | | 69-86 | 1 | |
| 32C | 032255 | 6261037 | Forward & Direct spring retainer | | 69-86 | 2 | |
| **BUSHINGS** | | | | | | | |
| KT | 032625 | NA | Bushing Kit | | 69-86 | 1 | |
| 33A | 032200 | 8623940 | Front Pump body | Babbit | 69-86 | 1 | |
| 34A | 032201 | 1381366 | Pump Stator - Front | .485 | 69-86 | 1 | |
| 34A | 032212 | 8642909 | Pump Stator - Front | .655 | 80-86 | 1 | |
| 35A | 032202 | 6261022 | Pump Stator - Rear | | 69-86 | 2 | |
| 36B | 032203 | 6261026 | Direct drum to pump cover (short) | Bronze | 69-86 | 1 | |
| 37C | 032204 | 6261029 | Input Ring Gear | | 69-86 | 1 | |
| 38C | 032205 | 6261033 | Sun Gear to Output shaft & Planetary carrier | | 69-86 | 1 | |
| 39E | 032206 | 3789034 | Output pilot shaft | | 69-86 | 1 | |
| 40F | 032207 | 6261016 | Case to output shaft | | 69-86 | 1 | |
| 41F | 032208 | 6260048 | Extension Housing | | 69-86 | 1 | |
| N I | 031206 | NA | Governor bore repair bushing | | 69-86 | 1 | Special tool required |
| **WASHERS** | | | | | | | |
| KT | 032635 | NA | Washer Kit | | 69-86 | 1 | |
| 42B | 032150 | 6261015 | Direct drum to Pump cover | .066 | 69-86 | 1 | |
| 42B | 032151 | 6261013 | Direct drum to Pump cover | .083 | 69-86 | 1 | |
| 42B | 032152 | 6261014 | Direct drum to Pump cover | .100 | 69-86 | 1 | |
| 43C | 032154 | 6261027 | Forward Housing to Input ring gear (3 tang) | | 69-86 | 1 | Metal |
| 43C | 032154A | 8640060 | Forward Housing to Input ring gear (3 tang) | | 79-86 | 1 | Plastic |
| 44D | 032155 | 6260374 | Input Ring gear Support (4 tang) | | 69-86 | 1 | |
| 45D | 032156 | 6261034 | Front Planet (4 tang) | | 69-86 | 1 | |
| 46D | 032157 | 6261184 | Sun Gear shell - Rear (4 tang) | | 69-86 | 1 | |
| 47E | 032158 | 6261124 | Output Ring gear - Front (3 tang) | | 69-86 | 1 | |
| **MODULATORS** | | | | | | | |
| 48F | 031525 | Various | White Stripe | | 69-86 | 1 | |
| 48F | 031540 | Various | Red Stripe | | 69-86 | 1 | |

**NOTES**

# GENERAL MOTORS

## HYDRAMATIC

**TH400, 375 (3L80) 1964-95**

**TH425, 475 1966-78**

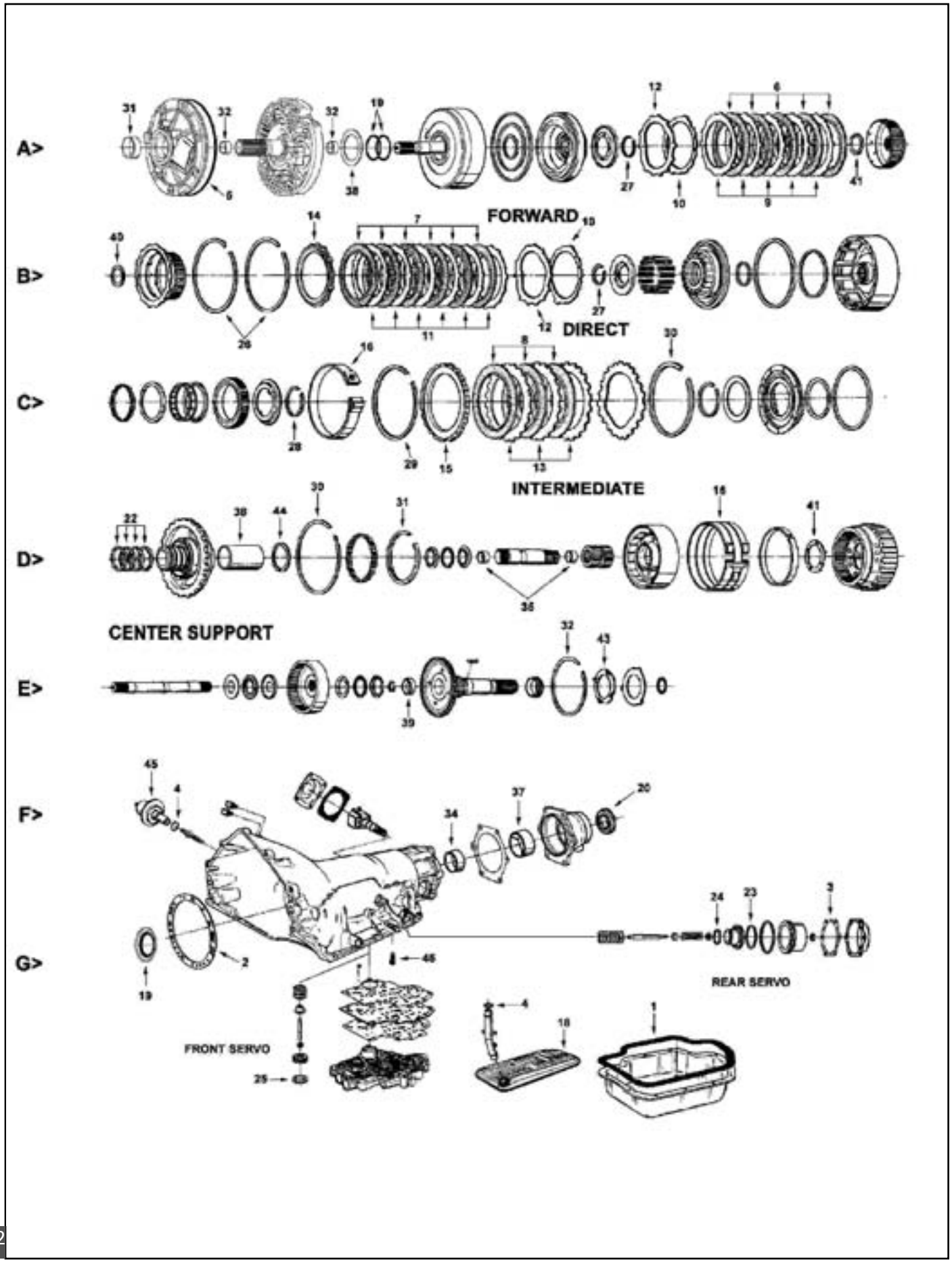

# GENERAL MOTORS
## HYDRAMATIC
## TH400, 375 (3L80) 1964-95
## TH425, 475 1966-78

| ILL | DESCRIPTION | YEARS | FRICTION MODULE | STEEL MODULE | OVERHAUL KIT | BANNER KIT | MASTER KIT |
|---|---|---|---|---|---|---|---|
| **KITS** | | | | | | | |
| KT | Rebuilding Kit - TH400 | 65-95 | 031752 | 031753 | 031800 | 031901LS | 031901 |
| KT | Rebuilding Kit - TH400 with Heg Frictions | 65-95 | 031752C | 031753 | 031800 | TBA | TBA |
| KT | Rebuilding Kit - TH400 (short ring kit) | 65-95 | 031752 | 031753 | 031800X | 031901XLS | 031901X |
| KT | Rebuilding Kit - TH425 | 66-78 | 031752 | 031753 | 031806 | 031905LS | 031905 |
| **Specialty Kit - with Powerpack™** | | | | | | | |
| KT | Rebuilding Kit - TH400 with Intermediate Powerpack | 65-95 | 031750PWR FR & ST | | 031800 | NA | 031901PWR |
| **HI-PERFORMANCE - RED EAGLE®** | | | | | | | |
| KT | Rebuilding Kit - TH400 with Turbulator steels | 65-95 | 031752HP | 031753HP | 031800HP | 031901HPLS | 031901HP |
| **HI-PERFORMANCE - with Powerpack™** | | | | | | | |
| KT | Rebuilding Kit - TH400 with Turbulator steels and Intermediate POWERPACK | 65-95 | 031750AHPPWR FR & ST | | 031800HP | NA | 031901HPPWR |

| ILL | ALTO NO | REF NO | DESCRIPTION | SPEC | YEAR | QTY | NOTES |
|---|---|---|---|---|---|---|---|
| **MISCELLANEOUS GASKETS & KIT COMPONENTS** | | | | | | | |
| 1G | 031816 | 8655625 | Gasket, Oil Pan - TH400 | Cork/Rub | 65-95 | 1 | |
| N I | 031816B | 8625089 | Gasket, Oil Pan - TH425 | Cork/Rub | 66-78 | 1 | |
| N I | 031820 | 8625031 | Gasket, Sprocket Cover - TH425 | Cork/Rub | 66-78 | 1 | |
| 2F | 031001 | 8623978 | Gasket, Front pump to case | | 65-95 | 1 | |
| 3F | 031006 | 8623174 | Gasket, Rear Servo | Metal | 65-95 | 1 | |
| 4F | 010115B | 6264903 | O Ring, Modulator & Electrical connector | | 65-95 | 2 | |
| N I | 032003 | 3884683 | Washer, Front Pump bolts | | 65-95 | 6-8 | |
| 5A | 031050 | 23016599 | Lathe Cut, Front Pump to case | | 65-95 | 1 | |
| **FRICTION CLUTCHES** | | | | | | | |
| 6A | 031700 | 8623483 | Forward | .080 | 65-95 | 5 | Tan - 42T - OD: 5.901" - PL |
| 6A | 031702 | 8655619 | Forward | .080 | 65-95 | 5 | Tan - 42T - OD: 5.893" - SM |
| 6A | 031716 | 23042197 | Forward | .080 | 65-95 | 5 | Heg - 42T - OD: 5.901" - WF |
| 7B | 031700 | 8623483 | Direct | .080 | 65-95 | 5 | Tan - 42T - OD: 5.901" - PL |
| 7B | 031702 | 8655619 | Direct | .080 | 65-95 | 5 | Tan - 42T - OD: 5.893" - SM |
| 7B | 031716 | 23042197 | Direct | .080 | 65-95 | 5 | Heg - 42T - OD: 5.901" - WF |
| 8C | 031704 | 8655620 | Intermediate - wave | .080 | 65-95 | 3 | Tan - 47T - OD: 6.561" - SM |
| 8C | 031714B203 | NA | Intermediate - wave | .080 | 65-95 | 3 | Tan - 47T - OD: 6.561" - WF |
| 8C | 031718 | 8655620 | Intermediate - flat | .090 | 65-95 | 3 | Heg - 47T - OD: 6.561" - SM |
| 8C | 031714-160 | NA | Intermediate - POWERPACK™ component | .060 | 65-95 | AR | Tan - 47T - OD: 6.561" - SM |
| **HI-PERFORMANCE - RED EAGLE®** | | | | | | | |
| 6A | 031740 | NA | Forward & Direct | .080 | 65-95 | 10 | Red - 42T - OD: 5.901" - SM |
| 6A | 031740A | NA | Forward & Direct | .061 | 65-95 | AR | Red - 42T - OD: 5.901" - SM |
| 8C | 031742 | NA | Intermediate | .080 | 65-95 | 3 | Red - 47T - OD: 6.561" - SM |
| 8C | 031742A | NA | Intermediate | .060 | 65-95 | AR | Red - 47T - OD: 6.561" - SM |
| **HI-PERFORMANCE - UNIT PACKS (ONE Rebuild)** | | | | | | | |
| KT | 031740UP5 | NA | UNIT PACK - Forward & Direct | .080 | 65-95 | 1 | 5 RED EAGLE® Friction |
| KT | 031740AUP6 | NA | UNIT PACK - Forward & Direct | .061 | 65-95 | 1 | 6 RED EAGLE® Friction |
| KT | 031742UP3 | NA | UNIT PACK - Intermediate | .080 | 65-95 | 1 | 3 RED EAGLE® Friction |
| KT | 031742AUP5 | NA | UNIT PACK - Intermediate | .060 | 65-95 | 1 | 5 RED EAGLE® Friction |
| **STEEL CLUTCHES** | | | | | | | |
| 9A | 031701 | 8623113 | Forward - wave | .068 | 64 | 5 | 12T - ID: 4.585" |
| 9A | 031703 | 8623849 | Forward - flat | .077 | 65-95 | 4 | 12T - ID: 4.585" |
| 9A | 031711 | 8625197 | Forward | .090 | 68-95 | 4 | 12T - ID: 4.575" |
| 9A | 031701A | NA | Forward - selective | .060 | 65-95 | AR | 12T - ID: 4.585" |
| 12A | 031707 | 8679940 | Forward - wave | .060 | 65-95 | AR | 12T - ID: 4.585" |
| 11B | 031701 | 8623113 | Direct - wave | .068 | 64 | 5 | 12T - ID: 4.585" |
| 11B | 031711 | 8625197 | Direct | .090 | 68-95 | 4-5 | 12T - ID: 4.575" |
| 11B | 031701A | NA | Direct - selective | .060 | 65-95 | AR | 12T - ID: 4.585" |
| 12B | 031707 | 8679940 | Direct - wave | .060 | 65-95 | AR | 12T - ID: 4.585" |
| 10A | 031767D137 | 8680816 | Forward & Direct cushion spring - belleville | .054 | 65-95 | 2 | 2T |

# GENERAL MOTORS
## HYDRAMATIC
## TH400, 375 (3L80) 1964-95
## TH425, 475 1966-78

| ILL | ALTO NO | REF NO | DESCRIPTION | SPEC | YEAR | QTY | NOTES |
|---|---|---|---|---|---|---|---|
| **STEEL CLUTCHES** | | | | | | | ...Continued |
| 13C | 031705 | 8655621 | Intermediate | .100 | 65-95 | 3 | 21T - ID: 5.000" |
| 13C | 031705-160 | NA | Intermediate | .063 | 65-95 | AR | 21T - ID: 5.000" |
| 13C | 031715 | NA | Intermediate - POWERPACK™ component | .076 | 65-95 | AR | 21T - ID: 5.000" |
| 13C | 031709 | 8624199 | Intermediate - wave | .070 | 66-95 | AR | 21T - ID: 5.000" |
| **HI-PERFORMANCE - KOLENE®** | | | | | | | |
| 9A | 031701K | NA | Forward & Direct - wave | .068 | 64-95 | 5/4 | 12T - ID: 4.585" |
| 9A | 031701HK | NA | Forward & Direct - wave with Turbulator holes | .068 | 64-95 | 5/4 | 12T - ID: 4.585" |
| 9A | 031703K | NA | Forward - flat | .077 | 65-95 | 4 | 12T - ID: 4.585" |
| 9A | 031711K | NA | Forward & Direct | .090 | 68-95 | 4 | 12T - ID: 4.575" |
| 9A | 031711HK | NA | Forward & Direct with Turbulator holes | .090 | 68-95 | 4 | 12T - ID: 4.575" |
| 9A | 031701AK | NA | Forward & Direct - POWERPACK™ component | .060 | 65-95 | AR | 12T - ID: 4.585" |
| 13C | 031705K | NA | Intermediate | .100 | 65-95 | 3 | 21T - ID: 5.000" |
| 13C | 031705HK | NA | Intermediate with Turbulator holes | .100 | 65-95 | 3 | 21T - ID: 5.000" |
| 13C | 031705K160 | NA | Intermediate | .063 | 65-95 | AR | 21T - ID: 5.000" |
| 13C | 031715K | NA | Intermediate - POWERPACK™ component | .076 | 65-95 | AR | 21T - ID: 5.000" |
| 13C | 031715HK | NA | Intermediate - POWERPACK™ component | .076 | 65-95 | AR | 21T - ID: 5.000" |
| **HI-PERFORMANCE - UNIT PACKS (ONE Rebuild)** | | | | | | | |
| KT | 031701AKUP6 | NA | UNIT PACK - Forward & Direct | .060 | 64-95 | 1 | 6 KOLENE® Steel |
| KT | 031703KUP4 | NA | UNIT PACK - Forward & Direct | .077 | 65-95 | 1 | 4 KOLENE® Steel |
| KT | 031711KUP5 | NA | UNIT PACK - Forward & Direct | .090 | 68-95 | 1 | 5 KOLENE® Steel |
| KT | 031705KUP3 | NA | UNIT PACK - Intermediate | .100 | 64-95 | 1 | 3 KOLENE® Steel |
| KT | 031705K160UP5 | NA | UNIT PACK - Intermediate | .063 | 64-95 | 1 | 5 KOLENE® Steel |
| **PRESSURE PLATES** | | | | | | | |
| 14B | 031761AP102 | 8661575 | Direct - backing | .400 | 64-95 | 1 | 14T - ID: 4.565" |
| 14B | 031761A939 | NA | Direct - POWERPACK™ Component | .370 | 64-95 | 1 | 14T - ID: 4.565" |
| 15C | TBA | 8623152 | Intermediate - backing | .430 | 64-95 | 1 | |
| **OEI™ Original Equipment Improvements** | | | | | | | |
| KT | 031755HP | NA | POWERPACK™ - Forward clutch | | 64-95 | 1 | RED EAGLE® & KOLENE® |
| KT | 031756HP | NA | POWERPACK™ - Direct Clutch | | 64-95 | 1 | RED EAGLE® & KOLENE® |
| KT | 031757 | NA | POWERPACK™ - Intermediate Clutch | | 64-95 | 1 | Tan Frictions |
| KT | 031757HP | NA | POWERPACK™ - Intermediate Clutch | | 64-95 | 1 | RED EAGLE® & KOLENE® |
| KT | 031985 | SK® 400 | VB Shift Kit® | Transgo® | 64-95 | 1 | |
| KT | 031986 | SK® 425 | VB Shift Kit® | Transgo® | 64-95 | 1 | |
| KT | 031988 | 400-1&2 | Reprogramming Kit™ - tow & go & HP | Transgo® | 64-95 | 1 | |
| KT | 031988A | 400-3 | Reprogramming Kit™ - converts to manual shift | Transgo® | 64-95 | 1 | |
| KT | 031989 | 425-1 | Reprogramming Kit™ | Transgo® | 66-78 | 1 | |
| **BANDS** | | | | | | | |
| 16C | 031950 | 24202631 | Front band | Tan | 64-95 | 1 | |
| 17D | 031952 | 24200468 | Rear band - double wrap | Tan | 64-95 | 1 | |
| **HI-PERFORMANCE - RED EAGLE® or KEVLAR®** | | | | | | | |
| 16C | 031960 | NA | Front Band | Red | 64-95 | 1 | |
| 16C | 031960K | NA | Front Band | Kevlar® | 64-95 | 1 | |
| **FILTERS** | | | | | | | |
| KT | FK031940 | NA | Filter Kit, with tube TH400 | | 64-67 | 1 | |
| KT | FK031942 | NA | Filter Kit, TH425 | | 66-78 | 1 | |
| KT | FK031944 | 12337210 | Filter Kit, TH400 with Dacron screen | | 67-95 | 1 | |
| KT | FK031946 | NA | Filter Kit, TH400 with stainless steel screen | | 67-95 | 1 | |
| KT | FK031948A | NA | Filter Kit, TH400 with brass screen | | 67-95 | 1 | |
| N I | 031940 | 5579822 | Filter with tube TH400 | | 64-67 | 1 | |
| N I | 031942 | 6435766 | Filter - TH425 | | 66-78 | 1 | |
| 18G | 031944 | 6438326 | Filter with Dacron (felt) screen TH400, 3L80 | | 67-95 | 1 | |
| 18G | 031946 | 6438326 | Filter with stainless steel screen TH400, 3L80 | | 67-95 | 1 | |
| 18G | 031948A | NA | Filter with brass screen TH400, 3L80 | | 67-95 | 1 | |
| **METAL CLAD SEALS** | | | | | | | |
| 19G | 032400 | 8654716 | Front Pump | Silicone | 67-95 | 1 | |
| 19G | 055400 | 8670283 | Front Pump | Vamac® | 64-95 | 1 | |

# GENERAL MOTORS
## HYDRAMATIC
## TH400, 375 (3L80) 1964-95
## TH425, 475 1966-78

| ILL | ALTO NO | REF NO | DESCRIPTION | SPEC | YEAR | QTY | NOTES |
|---|---|---|---|---|---|---|---|
| **METAL CLAD SEALS** | | | | | | | ...Continued |
| 20F | 031401 | 8625892 | Extension Housing | 2.500 | 64-77 | 1 | |
| 20F | 031402 | 8675730 | Extension Housing | 2.700 | 64-95 | 1 | |
| 20F | 031403 | 8675731 | Extension Housing (TH475) | | 64-95 | 1 | |
| 20F | 032402 | 3932255 | Extension Housing (TH375) | 2.380 | 72-76 | 1 | |
| N I | 032410C | 8657163 | Manual Lever | | 64-95 | 1 | |
| N I | 031057 | 1240382 | Speedo seal without spring | Silicone | 64-95 | 1 | |
| N I | 031057A | 25519078 | Speedo seal with spring | Vamac® | 64-95 | 1 | |
| **SEALING RINGS** | | | | | | | |
| KT | 031600 | C312 | Sealing Ring Kit - 10M | | 71-95 | 1 | |
| KT | 031600A | C311 | Sealing Ring Kit - 6M | | 64-95 | 1 | |
| KT | 031600T | C316 | Sealing Ring Kit - 10T | | 64-95 | 1 | |
| 21A | 031100 | 8626356 | Front Pump stator | 2.062 | 64-95 | 2 | Metal |
| 22D | 031100 | 8626356 | Center Support | 2.062 | 64-95 | 4 | Metal |
| 21A | 031110 | NA | Front Pump stator & Center support | Teflon | 64-95 | 6 | |
| 23F | 031101 | 8623672 | Accumulator Piston - outer | Metal | 64-70 | 1 | |
| 23F | 031107 | NA | Accumulator Piston - outer | Metal | 71-95 | 1 | |
| 23F | 031108 | 8627153 | Accumulator Piston - outer | Teflon | 71-95 | 1 | |
| 24F | 031102 | 8623671 | Accumulator Piston - inner | Metal | 64-95 | 1 | |
| 24F | 031112 | NA | Accumulator Piston - inner | Teflon | 64-95 | 1 | |
| 25G | 031104 | 8623131 | Front Servo piston | Metal | 64-95 | 1 | |
| N I | 031105 | 8623653 | Accumulator piston control valve | Metal | 64-95 | 1 | |
| N I | 031106 | 8623296 | Turbine Shaft | Metal | 65-67 | 1 | |
| **SNAP RINGS** | | | | | | | |
| KT | 031680 | NA | Snap ring Kit | | 64-95 | 1 | |
| 26B | 031250 | 8623112 | Forward & Direct drum | | 64-95 | 2 | |
| 27A | 043252 | 8623105 | Forward & Direct spring retainer | | 64-95 | 2 | |
| 28C | TBA | 8623120 | Intermediate Sprag | | 64-95 | 1 | |
| 29C | TBA | 8623149 | Intermediate clutch retainer | | 64-95 | 1 | |
| 30C | 028252-106 | 8623437 | Center support to case (Intermediate) | | 64-95 | 2 | |
| 31D | TBA | 8627657 | Reaction drum spacer | | 64-95 | 1 | |
| 32E | TBA | 8626173 | Output shaft | | 64-95 | 1 | |
| **BUSHINGS** | | | | | | | |
| KT | 031625 | NA | Bushing Kit | | 64-95 | 1 | |
| 33A | 032200 | 8623940 | Front Pump body | | 64-95 | 1 | |
| 34A | 031201 | 8623944 | Stator support - Front & Rear | | 64-95 | 2 | |
| 35D | 031201 | 8623944 | Sun Gear shaft - Front & Rear | | 64-95 | 2 | |
| 36F | 031202 | 8623941 | Case | | 64-95 | 1 | |
| 37F | 031203 | 8619943 | Extension Housing | 1.240 | 64-70 | 1 | |
| 37F | 029201 | 8618167 | Extension Housing - Cadillac | .875 | 64-67 | 1 | |
| 37F | TBA | 8626901 | Extension Housing | 1.000 | 64-95 | 1 | |
| 37F | 031207 | 8623966 | Extension Housing | 1.500 | 64-95 | 1 | |
| 37F | 032208 | 6260048 | Extension Housing (TH375) | | 64-95 | 1 | |
| 38D | 031205 | 8623942 | Center Support | | 64-95 | 1 | |
| 39E | 031208 | 8653985 | Output Shaft - narrow | | 74-95 | 1 | |
| 39E | 031208A | 8623943 | Output Shaft - wide | | 64-95 | 1 | |
| N I | 031210 | NA | Reaction Carrier | | 64-95 | 1 | |
| **WASHERS** | | | | | | | |
| KT | 031635 | NA | Washer Kit | | 64-95 | 1 | |
| 40A | 031150 | 8623300 | Front Pump cover to Forward drum | .063 | 64-95 | 1 | Yellow |
| 40A | 031151 | 8623301 | Front Pump cover to Forward drum | .075 | 64-95 | 1 | Blue |
| 40A | 031152 | 8623302 | Front Pump cover to Forward drum | .083 | 64-95 | 1 | Red |
| 40A | 031153 | 8623303 | Front Pump cover to Forward drum | .094 | 64-95 | 1 | Brown |
| 40A | 031154 | 8623304 | Front Pump cover to Forward drum | .106 | 64-95 | 1 | Green |
| 40A | 031155 | 8623305 | Front Pump cover to Forward drum | .118 | 64-95 | 1 | Black |
| 40A | 031156 | 8623306 | Front Pump cover to Forward drum | .130 | 64-95 | 1 | Purple |
| 41A | TBA | 8624196 | Forward clutch hub to Direct drum | | 64-95 | 1 | |
| 42B | 031157 | 8624781 | Forward clutch hub to Direct clutch hub | | 64-95 | 1 | |

# GENERAL MOTORS
## HYDRAMATIC
## TH400, 375 (3L80) 1964-95
## TH425, 475 1966-78

| ILL | ALTO NO | REF NO | DESCRIPTION | SPEC | YEAR | QTY | NOTES |
|---|---|---|---|---|---|---|---|
| **WASHERS** | | | | | | | ...Continued |
| 43D | 031160 | 8626372 | Output Shaft to case front (4 tangs) | Metal | 64-95 | 1 | |
| 44D | 031172 | 8623211 | Center Support to reaction drum | | 64-95 | 1 | |
| **MODULATORS** | | | | | | | |
| 45F | 031525 | NA | Modulator - White stripe | | 64-95 | 1 | |
| 45F | 031540 | NA | Modulator - Red stripe | | 64-95 | 1 | |
| **MISCELLANEOUS** | | | | | | | |
| 46G | TBA | 8670757 | Bolt, Center Support to case | | 64-95 | 1 | |

**NOTES**

A>

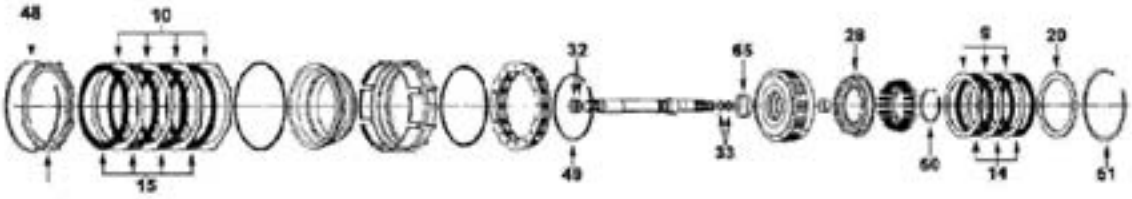


OVERDRIVE (4th) OVERRUN

B>

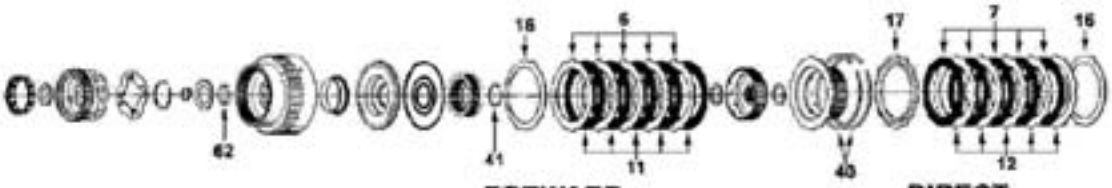


FORWARD DIRECT

C>

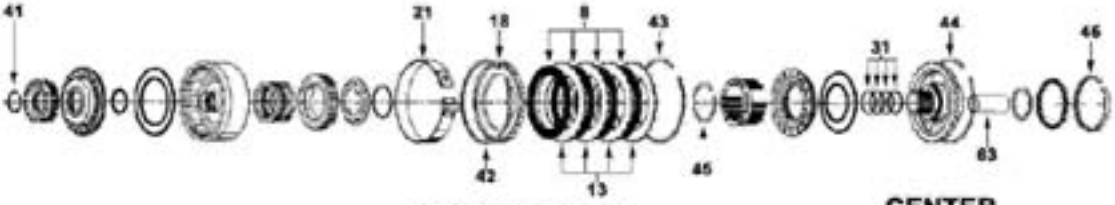


INTERMEDIATE CENTER SUPPORT

D>

OUTPUT SHAFT

E>

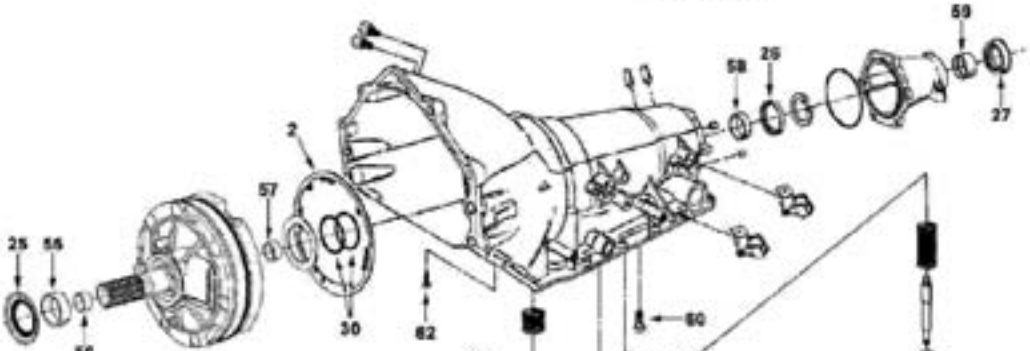


FRONT PUMP

F>

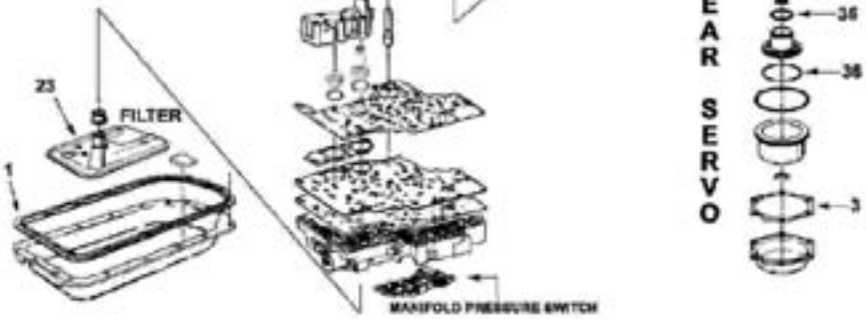

# GENERAL MOTORS
## HYDRAMATIC
## 4L80E
## 1990-On

| ILL | DESCRIPTION | YEARS | FRICTION MODULE | STEEL MODULE | OVERHAUL KIT | BANNER KIT | MASTER KIT |
|---|---|---|---|---|---|---|---|
| **KITS** | | | | | | | |
| KT | Rebuilding Kit without Molded Pistons | 90-96 | 031752A | 031753A | 031804 | 031903LS | 031903 |
| KT | Rebuilding Kit without Molded Pistons | 97-On | 031752B | 031753B | 031804A | 031903ALS | 031903A |
| **Specialty Kit - with Powerpack™** | | | | | | | |
| KT | Rebuilding Kit with Intermediate POWERPACK without Molded Pistons | 90-96 | 031750APWR FR & ST | | 031804 | NA | 031903PWR |

| ILL | ALTO NO | REF NO | DESCRIPTION | SPEC | YEAR | QTY | NOTES |
|---|---|---|---|---|---|---|---|
| **MISCELLANEOUS GASKETS & KIT COMPONENTS** | | | | | | | |
| 1F | 031816A | NA | Gasket, Oil Pan except Jaguar | Cork/Rub | 90-On | 1 | |
| 1F | 031816F | NA | Gasket, Oil Pan except Jaguar | Fiber | 90-On | 1 | |
| 1F | 031816B | 8677743 | Gasket, Oil Pan - except Jaguar (OE) | Plastic | 90-On | 1 | |
| 1F | 031816C | JLM010975 | Gasket, Oil Pan - Jaguar only | | 93-On | 1 | |
| 2E | 031001A | 8677782 | Gasket, Front Pump Gasket | | 90-On | 1 | |
| 3F | 031006A | 8675728 | Gasket, Rear Servo cover | Metal | 90-On | 1 | |
| N I | M001001 | 24205103 | Cooler line Retainer clip | | 96-On | 2 | |
| 60F | TBA | 8661762 | Bolt, Case to Center Support | | 90-On | 1 | 3/8 - 16 x 1.07 |
| 61F | TBA | 8686124 | Bolt, Case to Overdrive (4th) | | 90-On | 1 | 5/16 - 18 x .96 |
| **FRICTION CLUTCHES** | | | | | | | |
| 6B | 031702 | 24204439 | Forward | .080 | 90-On | 5 | Tan - 42T - OD: 5.893" - SM |
| 7B | 031702 | 24204439 | Direct | .080 | 90-On | 5 | Tan - 42T - OD: 5.893" - SM |
| 8C | 031714 | 8675521 | Intermediate | .080 | 90-96 | 4 | Tan - 47T - OD: 6.561" - SM |
| 8C | 031714-160 | NA | Intermediate - POWERPACK™ component | .060 | 90-On | 5 | Tan - 47T - OD: 6.561" - PL |
| 8C | 031718 | NA | Intermediate | .090 | 90-96 | AR | Heg - 47T - OD: 6.561" - SM |
| 8C | 031714A200 | NA | Intermediate | .080 | 90-96 | 4 | Tan - 47T - OD: 6.561" - PL |
| 8C | 031714K180 | 24202966 | Intermediate | .071 | 97-On | 4 | Kev - 47T - OD: 6.561" - SM |
| 9A | 031720 | 8661571 | Overrun | .080 | 90-On | 3 | Tan - 45T - OD: 5.374" - SM |
| 10A | 031722 | 8682802 | Overdrive (4th) | .080 | 90-On | 4 | Tan - 60T - OD: 7.299" - SM |
| N I | 171700-170 | 88935701 | Transfer Case (NVG 125C. 225C) 1sided-Int. Spline | .067/1.7 | 02-On | 9 | Heg - 50T - SB |
| N I | 171701-170 | 88935700 | Transfer Case (NVG 125C. 225C) 1sided-Ext. Spline | .067/1.7 | 02-On | 9 | Heg - 16T - SB |
| N I | 126700 | 12547607 | Transfer case (NVG 246) | .087 | 98-On | 10 | Heg - 54T - OD: 6.080" - SM |
| **HI-PERFORMANCE - RED EAGLE®** | | | | | | | |
| 6B | 031740 | NA | Forward & Direct | .080 | 90-On | 5/5 | Red - 42T - OD: 5.893" - SM |
| 6B | 031740A | NA | Forward & Direct - Thin | .061 | 90-On | AR | Red - 42T - OD: 5.893" - SM |
| 8C | 031742 | NA | Intermediate | .090 | 90-96 | AR | Red - 47T - OD: 6.561" - SM |
| 8C | 031742A | NA | Intermediate - POWERPACK™ component | .060 | 90-On | AR | Red - 47T - OD: 6.561" - SM |
| **HI-PERFORMANCE - UNIT PACKS (ONE Rebuild)** | | | | | | | |
| KT | 031740UP5 | NA | UNIT PACK - Forward & Direct | .080 | 90-On | 1 | 5 RED EAGLE® Friction |
| KT | 031740AUP6 | NA | UNIT PACK - Forward & Direct - thin | .061 | 90-On | 1 | 6 RED EAGLE® Friction |
| KT | 031742UP3 | NA | UNIT PACK - Intermediate | .090 | 90-96 | 1 | 3 RED EAGLE® Friction |
| KT | 031742AUP5 | NA | UNIT PACK - Intermediate | .060 | 90-On | 1 | 5 RED EAGLE® Friction |
| **STEEL CLUTCHES** | | | | | | | |
| 11B | 031703 | 8623849 | Forward | .077 | 90-On | 5 | 12T - ID: 4.585" |
| 12B | 031711 | 8625197 | Direct | .090 | 90-On | 5 | 12T - ID: 4.575" |
| 11B | 031701A | NA | Direct - POWERPACK™ component | .060 | 90-On | AR | 12T - ID: 4.585" |
| 13C | 031715 | 8675522 | Intermediate | .076 | 90-On | 4 | 21T - ID: 5.000" |
| 13C | 031705-160 | NA | Intermediate - POWERPACK™ component | .063 | 90-On | AR | 21T - ID: 5.000" |
| N I | TBA | 24204497 | Intermediate - wave | | 97-On | 1 | |
| 14A | 031721 | 8661569 | Overrun | .099 | 90-96 | 3 | 14T - ID: 4.520" |
| 14A | 031721H | 24204287 | Overrun with Turbulator holes (does retro) | .099 | 97-On | 3 | 14T - ID: 4.520" |
| 15A | 031723 | 8661579 | Overdrive | .099 | 90-96 | 4 | 8T - ID: 6.300" |
| 15A | 031723H | 24204283 | Overdrive with Turbulator holes (does retro) | .099 | 97-On | 4 | 8T - ID: 6.300" |
| N I | 126701 | 12547608 | Transfer Case (NVB 246) | .067 | 98-On | 10 | 12T - ID: 5.023" |
| **HI-PERFORMANCE - KOLENE®** | | | | | | | |
| 11B | 031703K | NA | Forward | .077 | 90-On | 5 | 12T - ID: 4.585" |
| 11B | 031703HK | NA | Forward - with Turbulator holes | .077 | 90-On | 5 | 12T - ID: 4.585" |

| ILL | ALTO NO | REF NO | DESCRIPTION | SPEC | YEAR | QTY | NOTES |
|---|---|---|---|---|---|---|---|
| **STEEL CLUTCHES** | | | | | | | ...Continued |
| **HI-PERFORMANCE - KOLENE®** | | | | | | | |
| 11B | 031701AK | NA | Forward - POWERPACK™ Component | .060 | 90-On | AR | 12T - ID: 4.585" |
| 12B | 031711K | NA | Direct | .090 | 90-On | 5 | 12T - ID: 4.575" |
| 12B | 031711HK | NA | Direct - with Turbulator holes | .090 | 90-On | 5 | 12T - ID: 4.575" |
| 13C | 031715K | NA | Intermediate | .076 | 90-On | 4 | 21T - ID: 5.000" |
| 13C | 031715HK | NA | Intermediate - with Turbulator holes | .076 | 90-On | 4 | 21T - ID: 5.000" |
| 13C | 031705K160 | NA | Intermediate | .063 | 90-On | AR | POWERPACK® Component |
| 13C | 031705HK160 | NA | Intermediate - with Turbulator holes | .063 | 90-On | AR | POWERPACK® Component |
| 14A | 031721K | NA | Overrun | .099 | 90-96 | 3 | 14T - ID: 4.520" |
| 15A | 031723K | NA | Overdrive | .099 | 90-96 | 4 | 8T - ID: 6.300" |
| **HI-PERFORMANCE - UNIT PACKS (ONE Rebuild)** | | | | | | | |
| KT | 031703KUP5 | NA | UNIT PACK - Forward | .077 | 90-On | 1 | 5 KOLENE® Steel |
| KT | 031711KUP5 | NA | UNIT PACK - Direct | .090 | 90-On | 1 | 5 KOLENE® Steel |
| KT | 031705K160UP5 | NA | UNIT PACK - Intermediate | .063 | 90-On | 1 | 5 KOLENE® Steel |
| **PRESSURE PLATES** | | | | | | | |
| 16B | 031767D137 | 8680816 | Forward & Direct cushion spring - belleville | .054 | 90-97 | 1 | 2T - ID: 4.808" |
| 16B | 031767A | 24205559 | Forward & Direct cushion spring - wave | .042 | 98-On | 1 | 12T - ID: 4.825" |
| 16B | 031767B | 24205560 | Forward & Direct cushion spring - wave | .042 | 98-On | 1 | 6T - ID: 4.728" |
| 16B | 031767C | 24205561 | Forward & Direct cushion spring - wave | .042 | 98-On | 1 | 14T - ID: 4.577" |
| 17B | 031761AP102 | 8675557 | Direct Clutch - backing | .400 | 90-On | 1 | 14T - ID: 4.565" |
| 18C | TBA | 8675519 | Intermediate Clutch - backing | | 90-99 | 1 | |
| 18C | TBA | 24205827 | Intermediate Clutch - backing | | 99-On | 1 | |
| 19A | TBA | 8661582 | Overdrive Clutch - backing | | 90-99 | 1 | |
| 19A | TBA | 24205818 | Overdrive Clutch - backing | | 99-On | 1 | |
| 20A | 031721-420 | 8681449 | Overrun Clutch - backing | .166 | 90-On | 1 | 14T - ID: 4.520" |
| **OEI™ Original Equipment Improvements** | | | | | | | |
| KT | 031755AHP | NA | POWERPACK™ - Forward clutch | | 90-On | 1 | Hi-Performance |
| KT | 031756HP | NA | POWERPACK™ - Direct clutch | | 90-On | 1 | Hi-Performance |
| KT | 031757A | NA | POWERPACK™ - Intermediate Clutch | Tan | 90-On | 1 | |
| KT | 031757AHP | NA | POWERPACK™ - Intermediate Clutch | Red | 90-On | 1 | Hi-Performance |
| KT | 031987 | SK® 4L80 | VB Shift Kit® | Transgo® | 90-On | 1 | Corrects Hi/Low pressure |
| KT | 031987A | 4L80E-HTRK | VB Shift Kit® | Transgo® | 90-On | 1 | Corrects non-lockup&cl burn |
| KT | 031991 | 4L80E-HD2 | Reprogramming Kit™ | Transgo® | 90-On | 1 | |
| KT | 031991A | 4L80E-3 | Reprogramming Kit™ | Transgo® | 90-On | 1 | Converts to full manual |
| **BANDS** | | | | | | | |
| 21C | 031953 | 24210080 | Front (Manual 2-1) | Tan | 90-On | 1 | 1 1/4" wide |
| 22D | 031952 | 24202229 | Rear (Low/Reverse) | Tan | 90-On | 1 | |
| **HI-PERFORMANCE - RED EAGLE® or KEVLAR®** | | | | | | | |
| 21C | 031960 | NA | Front (Manual 2-1) | Red | 90-On | 1 | RED EAGLE® |
| 21C | 031960K | NA | Front (Manual 2-1) | Kevlar® | 90-On | 1 | |
| **FILTERS** | | | | | | | |
| KT | FK031944A | NA | Filter Kit | | 90-96 | 1 | |
| KT | FK031944B | NA | Filter Kit | | 97-On | 1 | |
| 23F | 031944A | 8678757 | Filter | | 90-96 | 1 | |
| 23F | 031944B | 24210468 | Filter | | 97-On | 1 | |
| 62E | TBA | 8661834 | Screen, PWM Solenoid | | 90-On | 1 | |
| **METAL CLAD SEALS** | | | | | | | |
| 25E | 031400A | 24209839 | Front Pump | | 90-On | 1 | |
| 26E | 031402A | 8675517 | Case Seal (Rear Lube) | | 90-On | 1 | |
| 27E | 031403 | 8675731 | Extension Housing without boot-heavy duty | | 90-On | 1 | |
| 27E | 031404 | 8675730 | Extension Housing without boot | | 90-On | 1 | |
| 27E | 031405 | 8677463 | Extension Housing with boot | | 90-On | 1 | |
| N I | 032410C | 8623056 | Manual Lever | | 90-On | 1 | |
| **SEALING RINGS** | | | | | | | |
| KT | 031601 | C375 | Sealing Ring Kit - 13T | | 90-On | 1 | |
| 30E | 031120 | 8661789 | Front Pump | Teflon | 90-97 | 2 | |

# GENERAL MOTORS
## HYDRAMATIC
## 4L80E
## 1990-On

| ILL | ALTO NO | REF NO | DESCRIPTION | SPEC | YEAR | QTY | NOTES |
|---|---|---|---|---|---|---|---|
| **SEALING RINGS** | | | | | | | ...Continued |
| 30E | 031120A | 24205833 | Front Pump | Peak® | 98-On | 2 | |
| 31C | 031121 | 8675729 | Center Support | Teflon | 90-97 | 4 | |
| 31C | 031121A | 24205722 | Center Support | Peak® | 98-On | 4 | |
| 32A | 031122 | 8661894 | Turbine Shaft to Stator housing | | 90-On | 2 | |
| 33A | 031123 | 8661893 | Turbine Shaft to Forward housing | | 90-On | 2 | |
| 34F | 031104 | 8623131 | Front Servo | Metal | 90-On | 1 | |
| 34F | 031124 | 8626423 | Front Servo | Teflon | 90-On | 1 | |
| 35F | 031102 | 8623671 | Rear Servo Accumulator - inner | | 90-On | 1 | |
| 36F | 031108 | 8627153 | Rear Servo Accumulator - outer | | 90-On | 1 | |
| **SNAP RINGS** | | | | | | | |
| KT | TBA | NA | Snap Ring Kit | | 90-On | 1 | |
| 40B | 031250 | 8623112 | Forward & Direct Drum | | 90-On | 2 | |
| 41B | 043252 | 8623105 | Forward & Direct spring retainer | | 90-On | 2 | |
| 42C | TBA | 8623149 | Intermediate clutch retainer | | 90-On | 1 | |
| 43C | 028252-106 | 8623437 | Center support to case - Front | | 90-On | 1 | |
| 44C | TBA | 8626816 | Center support to case - Rear | | 90-On | 1 | |
| 45C | TBA | 8623153 | Intermediate Spring retainer | | 90-On | 1 | |
| 46C | TBA | 8627657 | Reaction drum spacer | | 90-On | 1 | |
| 47D | TBA | 8626173 | Output shaft | | 90-On | 1 | |
| 48A | TBA | 8677887 | Overdrive clutch retainer | | 90-On | 1 | |
| 49A | TBA | 8661578 | Overdrive clutch spring retainer | | 90-On | 1 | |
| 50A | TBA | 8661568 | Overrun spring retainer | | 90-On | 1 | |
| 51A | TBA | 8661572 | Overrun clutch Drum | | 90-On | 1 | |
| **BUSHINGS** | | | | | | | |
| KT | 031625A | NA | Bushing Kit | | 90-96 | 1 | |
| KT | 031625B | NA | Bushing Kit | | 97-On | 1 | |
| 55E | 031200A | 8682195 | Front Pump body - narrow | .559 | 90-96 | 1 | |
| 55E | 031200B | 24205783 | Front Pump body - wide | .699 | 97-On | 1 | |
| 56E | 031211 | 8683008 | Front Pump stator - Front | | 90-On | 1 | |
| 57E | 031214 | 8661614 | Front Pump stator - Rear | | 90-On | 1 | |
| 58E | 031212 | 8677221 | Case | | 90-On | 1 | |
| 59E | 031213 | 8661368 | Extension Housing | | 90-On | 1 | |
| 62B | 031215 | 8661284 | Forward Clutch Housing | | 90-On | 1 | |
| 63C | 031216 | 8655622 | Center Support | 3.500 | 90-96 | 1 | |
| 63C | 031216A | 24203510 | Center Support | 4.000 | 97-On | 1 | |
| 64D | 031201 | 8623075 | Sun Gear Shaft | | 90-96 | 2 | |
| 64D | 031217 | 24207201 | Sun Gear Shaft - with oil grooves | | 97-On | 2 | |
| 65A | 031218 | 8661604 | Overrun Clutch Housing | | 90-On | 1 | |
| **WASHERS** | | | | | | | |
| KT | 031635A | NA | Washer Kit | | 90-On | 1 | |
| **MISCELLANEOUS** | | | | | | | |
| 28A | 031333 | 8661567 | Molded Piston - Overrun clutch drum | | 90-On | 1 | |
| N I | 031326 | 24204957 | Molded Piston - Forward drum | | 97-On | 1 | |
| N I | 031331 | 24207501 | Molded Piston - Forward center sleeve | | 97-On | 1 | |
| N I | 031325 | 24204961 | Molded Piston - Direct drum | | 97-On | 1 | |

**NOTES**

# GENERAL MOTORS

**TH440-T4 (4T60) 1983-93**
**4T60E 1992-99**
**4T65E 1997-On**

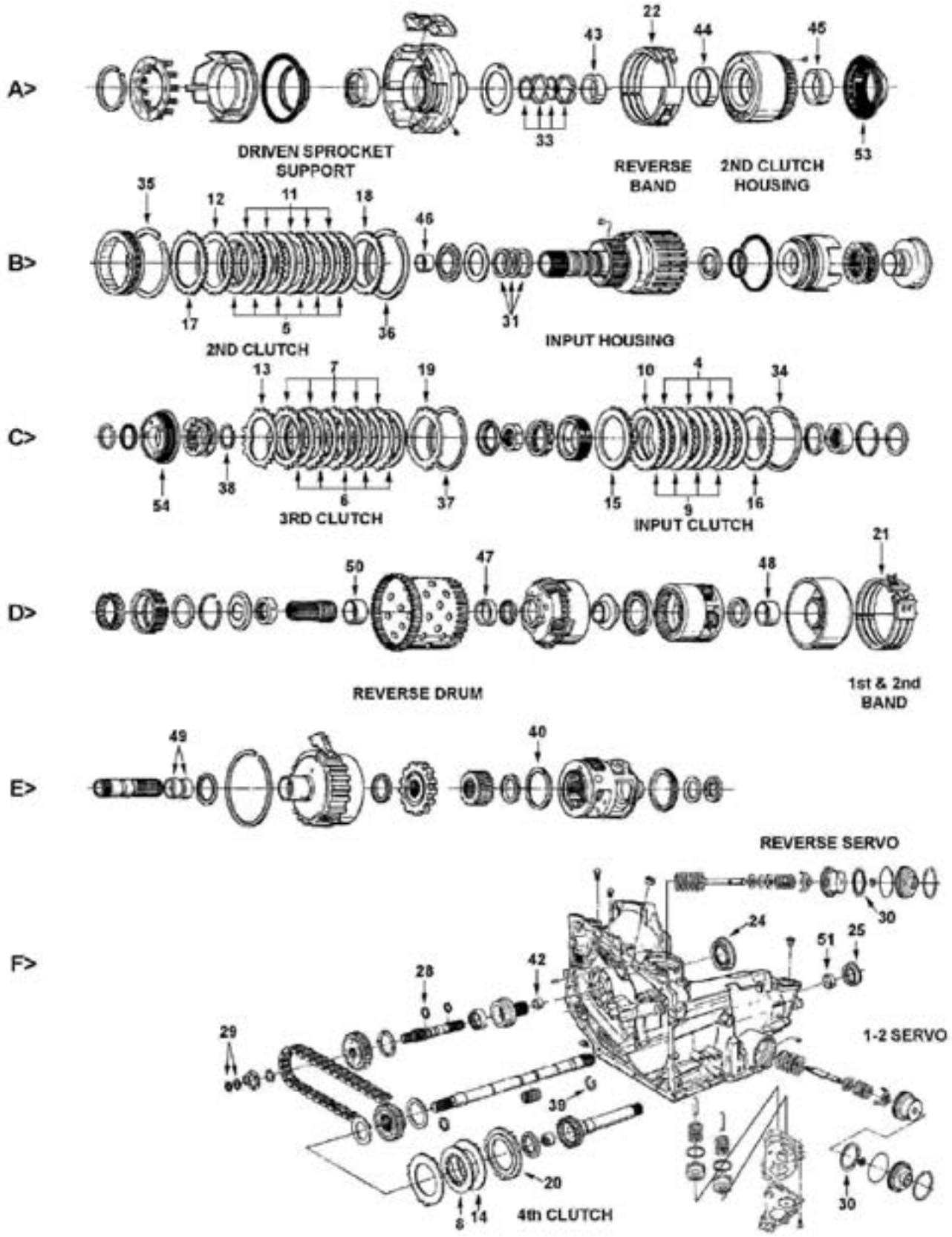

# GENERAL MOTORS

## TH440-T4 (4T60) 1983-93
## 4T60E 1992-99
## 4T65E 1997-On

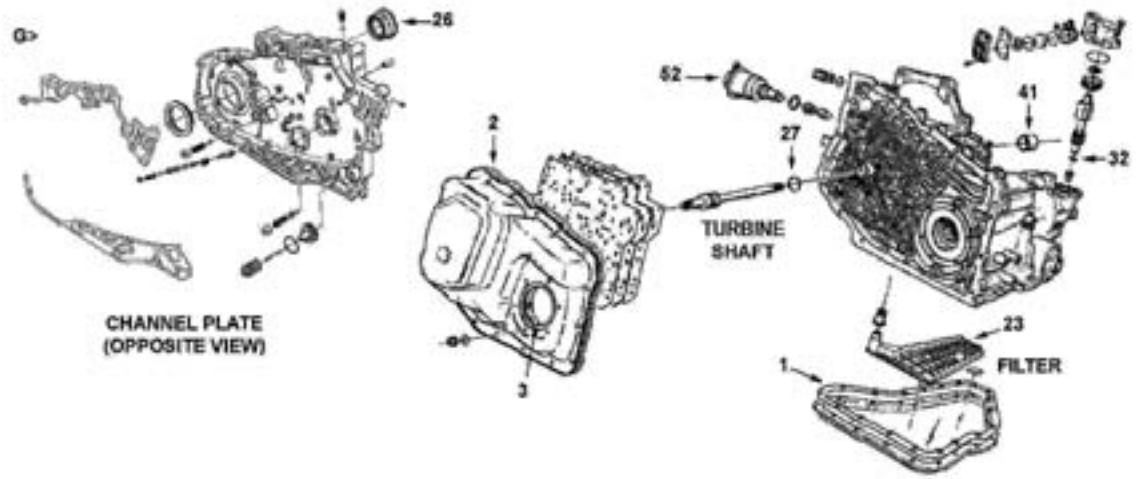


| ILL | DESCRIPTION | YEARS | FRICTION MODULE | STEEL MODULE | OVERHAUL KIT | BANNER KIT | MASTER KIT |
|---|---|---|---|---|---|---|---|
| **KITS** | | | | | | | |
| KT | Rebuilding Kit - 4T60 | 83-86 | 062752E | 062753E | 062800 | 062901LS | 062901 |
| KT | Rebuilding Kit - 4T60 | 87-88 | 062752C | 062753A | 062800 | 062905LS | 062905 |
| KT | Rebuilding Kit - 4T60 | 89-90 | 062752A | 062753A | 062800 | 062905ALS | 062905A |
| KT | Rebuilding Kit - 4T60 | 91-93 | 062752A | 062753D | 062800 | 062905ALS | 062905B |
| KT | Rebuilding Kit - 4T60 (combo) | 89-93 | 062752A | 062753X | 062800 | 062905ALS | 062905AX |
| KT | Rebuilding Kit - 4T60E | 91-92 | 062752B | 062753B | 062804 | 062907LS | 062907 |
| KT | Rebuilding Kit - 4T60E | 93-8/94 | 062752B | 062753G | 062804 | 062907LS | 062907B |
| KT | Rebuilding Kit - 4T60E | 8/94-99 | 062752F | 062753C | 062804 | 062907ALS | 062907A |
| KT | Rebuilding Kit - 4T60E (combo) | 91-99 | 062752H | 062753H | 062804 | 062907XLS | 062907X |
| KT | Rebuilding Kit - 4T65E | 97-00 | 062750L FR & ST | | 062810 | NA | 062909 |
| KT | Rebuilding Kit - 4T65E | 01-On | 062750K FR & ST | | 062810 | NA | 062909A |
| KT | Rebuilding Kit - 4T65E Volvo Only | 99-On | 062750M FR & ST | | 062810 | NA | 062911 |
| **Specialty Kit - with Powerpack™** | | | | | | | |
| KT | Rebuilding Kit - 4T60 with 2nd Clutch POWERPACK | 83-93 | 062750 FR & ST | | 062800 | NA | 062903 |

| ILL | ALTO NO | REF NO | DESCRIPTION | SPEC | YEAR | QTY | NOTES |
|---|---|---|---|---|---|---|---|
| **MISCELLANEOUS GASKETS & KIT COMPONENTS** | | | | | | | |
| 1G | 062816 | 8656396 | Gasket, Oil Pan - TH440/4T60 | Cork/Rub | 83-93 | 1 | |
| 1G | 062816-OE | 8678681 | Gasket, Oil Pan - TH440/4T60 | M.Rubber | 90-93 | 1 | |
| 1G | 062816A | NA | Gasket, Oil Pan - 4T60E/4T65E | Cork/Rub | 91-On | 1 | |
| 1G | 062816A-OE | 8676250 | Gasket, Oil Pan - 4T60E/4T65E | M.Rubber | 91-On | 1 | |
| 2G | 062818 | 8656397 | Gasket, Side Cover - TH440/4T60/4T60E | Cork/Rub | 83-On | 1 | |
| 2G | 062818-OE | 8683803 | Gasket, Side Cover - 4T60E | M.Rubber | 94-99 | 1 | Aluminum Side cover |
| 2G | 062817 | 24206959 | Gasket, Side Cover - 4T65E | M.Rubber | 97-On | 1 | |
| 3G | 062818A | 8656398 | Gasket, Side Cover (inner) - all except below | Cork/Rub | 83-On | 1 | Steel Side cover |
| 3G | 062818A-OE | 24200061 | Gasket, Side Cover (inner) - 4T60E/4T65E | M.Rubber | 94-On | 1 | Aluminum Side cover |
| **FRICTION CLUTCHES** | | | | | | | |
| 4C | 062700 | 8662850 | Forward Input | .090 | 83-8/94 | 4 | Tan - 32T - OD: 4.643" - PL |
| 4C | 062700-165 | 24202333 | Forward Input | .065 | 8/94-On | 4 | Tan - 32T - OD: 4.643" - SB |
| 5B | 062702 | 8685539 | 2nd Clutch - 4T60, 4T60E | .070 | 83-93 | 5-6 | Tan - 38T - OD: 5.122" - SM |
| 5B | 062702B177 | 8658539 | 2nd Clutch - 4T60E | .070 | 94-On | 5-6 | Tan - 38T - OD: 5.122" - PLNI |
| 5B | 062702A | NA | 2nd Clutch - POWERPACK™ Component | .060 | 83-On | AR | Tan - 38T - OD: 5.122" - SM |
| 5B | 062722 | 24205361 | 2nd Clutch - 4T65E | .070 | 97-On | 6 | Tan - 42T - OD: 5.453" - SM |
| 6C | 062704 | 8662911 | 3rd Clutch | .089 | 83-86 | 4 | Heg - 32T - OD: 4.409" - SM |
| 6C | 062714B210 | 8658042 | 3rd Clutch (1 sided) - internal spline 4T60,4T60E | .083 | 86-88 | 4 | Heg - 32T - OD: 4.409" - SM |

# GENERAL MOTORS

## TH440-T4 (4T60) 1983-93
## 4T60E 1992-99
## 4T65E 1997-On

| ILL | ALTO NO | REF NO | DESCRIPTION | SPEC | YEAR | QTY | NOTES |
|---|---|---|---|---|---|---|---|
| **FRICTION CLUTCHES** | | | | | | | ...Continued |
| 6C | 062724 | 8668361 | 3rd Clutch (1 sided) - internal spline 4T60E | .079 | 89-On | 5 | Heg - 32T - OD: 4.409" - SM |
| 6C | 062724 | 8668361 | 3rd Clutch (1 sided) - internal spline 4T65E | .079 | 97-00 | 5 | Heg - 32T - OD: 4.409" - SM |
| 6C | 062714B210 | 24216287 | 3rd Clutch (1 sided) - internal spline 4T65E | .083 | 01-On | 5 | Heg - 32T - OD: 4.409" - SM |
| 6C | 062724 | 8668361 | 3rd Clutch (1 sided) - internal spline | .079 | 89-On | 5 | Heg - 32T - OD: 4.409" - SM |
| 7B | 062715 | 8658043 | 3rd Clutch (1 sided) - external spline | .083 | 86-88 | 4 | Heg - 12T - ID:3.373" - SM |
| 7B | 062725 | 8668362 | 3rd Clutch (1 sided) - external spline 4T60E | .079 | 89-On | 5 | Heg - 12T - ID:3.373" - SM |
| 7B | 062725 | 8668362 | 3rd Clutch (1 sided) - external spline 4T65E | .079 | 97-00 | 5 | Heg - 12T - ID:3.373" - SM |
| 7B | 062725-195 | 24216288 | 3rd Clutch (1 sided) - external spline 4T65E | .077 | 01-On | 5 | Heg - 12T - ID:3.373" - SM |
| 8F | 062706 | 8649873 | 4th Clutch | .080 | 83-84 | 1 | Heg - 18T - OD: 5.312" - SM |
| 8F | 062726 | 8662172 | 4th Clutch - 4T60 | .090 | 84-93 | 1 | Heg - 18T - OD: 5.312" - SM |
| 8F | 062716 | 8685066 | 4th Clutch - 4T60E | .070 | 91-98 | 2 | Heg - 18T - OD: 5.312" - SM |
| 8F | 062708 | 24218248 | 4th Clutch - 4T60E (99-On) / 4T65E | .069 | 97-99 | 2 | Heg - 32T - OD: 5.312" - SB |
| 8F | 062708A155 | NA | 4th Clutch (1 sided) - internal spline 4T65E Volvo | .060 | 99-On | 2 | Heg - 32T - OD: 5.312" - SB |
| 14F | 062709A155 | NA | 4th Clutch (1 sided) - external spline 4T65E Volvo | .060 | 99-On | 2 | Heg - 3T - ID: 3.513" - SB |
| | | | Bent tooth Friction to reuse 4th Clutch hub - NOT AVAILABLE SEPARATELY (Patent No. 496789) | | | | |
| 8F | 062736 | NA | 4th Clutch - (Bent Tooth) | .090 | 83-93 | 1 | POWERPACK™ Component |
| 8F | 062736A | NA | 4th Clutch - (Bent Tooth) 4T60E/F7 | .070 | 91-98 | 2 | POWERPACK™ Component |
| **HI-PERFORMANCE - RED EAGLE®** | | | | | | | |
| 4C | 062740-165 | NA | Forward Input | .065 | 8/94-On | 4 | Red - 32T - OD: 4.643" -SB |
| 5B | 062742A | NA | 2nd Clutch - 4T60, 4T60E | .060 | 83-On | 6-7 | Red - 38T - OD: 5.122" - SM |
| 6C | 062744C | NA | 3rd Clutch (1 sided) - internal spline | .079 | 89-On | 5 | Red - 32T- ID:3.373" - SM |
| 7C | 062744D | NA | 3rd Clutch (1 sided) - external spline | .079 | 89-On | 5 | Heg - 12T - ID:3.373" - SM |
| 8F | 062746A | NA | 4th Clutch - 4T60 | .090 | 84-93 | 1 | Red - 18T - OD: 5.312" - SM |
| | | | Bent tooth Friction to reuse 4th Clutch hub - NOT AVAILABLE SEPARATELY (Patent No. 496789) | | | | |
| 8F | 062746X | NA | 4th Clutch - (Bent Tooth) | .090 | 83-93 | 1 | POWERPACK™ Component |
| 8F | 062746XA | NA | 4th Clutch - (Bent Tooth) 4T60E/F7 | .070 | 91-98 | 2 | POWERPACK™ Component |
| **STEEL CLUTCHES** | | | | | | | |
| 9C | 048701 | 8683084 | Forward Input - 4T60 | .076 | 83-E90 | 3 | 26T - ID: 3.517" |
| 9C | 062711 | 8651446 | Forward Input - 4T60 | .050 | 90-93 | 4 | 26T - ID: 3.517" |
| 9C | 062711 | 8651446 | Forward Input - 4T60E / 4T65E | .050 | 91-8/94 | 4 | 26T - ID: 3.517" |
| 9C | 048701 | 8683084 | Forward Input - 4T60E / 4T65E | .076 | 8/94-On | 4 | 26T - ID: 3.517" |
| 10C | 048707 | 8675257 | Forward Input - wave | .050 | 90-On | 1 | 26T - ID: 3.517" |
| 11B | 062703K | 8662309 | 2nd Clutch - 4T60 KOLENE® | .090 | 83-86 | 5 | 36T - ID: 3.790" |
| 11B | 062713K | 8662006 | 2nd Clutch - 4T60/4T60E KOLENE® | .077 | 87-99 | 6 | 34T - ID: 3.790" |
| 11B | 062733 | 24204104 | 2nd Clutch - 4T65E | .068 | 97-On | 5 | 36T - ID: 3.880" |
| 11B | 062733-228 | NA | 2nd Clutch - 4T65E selective | .090 | 97-On | AR | 36T - ID: 3.880" |
| 11B | 062703A | NA | 2nd Clutch - POWERPACK™ Component | .067 | 83-On | AR | 36T - ID: 3.790" |
| 11B | 062703AK | NA | 2nd Clutch - KOLENE® POWERPK™ Comp. | .067 | 83-On | AR | 36T - ID: 3.790" |
| 12B | 062723 | 8658463 | 2nd Clutch - wave | .044 | 83-96 | 1 | 36T - ID: 3.790" |
| 12B | 062768 | 24202950 | 2nd Clutch - wave | .065 | 97-On | 1 | 36T - ID: 4.460" |
| 7C | 062705 | 8656313 | 3rd Clutch | .090 | 83-85 | 4 | 12T - ID: 3.371" |
| 13C | 062705 | 8656313 | 3rd Clutch | .090 | 83-91 | 1 | 12T - ID: 3.371" |
| 13C | 062767 | 8656645 | 3rd Clutch - wave | .030 | 92-97 | 1 | 12T - ID: 3.371" |
| 13C | 062766 | 24208918 | 3rd Clutch - wave | | 98-On | 1 | |
| 14F | 062707 | 8656767 | 4th Clutch | .077 | 83-96 | 1-2 | 5T- ID: 3.471" |
| 14F | 062717 | 8661006 | 4th Clutch | .074 | 90-93 | 1-2 | 5T- ID: 3.471" |
| 14F | 062727 | 8680771 | 4th Clutch | .133 | 94-On | 1 | 5T- ID: 3.471" |
| 14F | 062709 | 24208013 | 4th Clutch - 4T60E | .083 | 97-99 | 2 | 3T - ID: 3.513" |
| 14F | 062709 | 24208013 | 4th Clutch - 4T65E | .083 | 97-On | 2 | 3T - ID: 3.513" |
| 14F | 062707A | NA | 4th Clutch - POWERPACK™ Component | .077 | 83-93 | 1-2 | Not Sold Separate |
| 14F | 062717A | NA | 4th Clutch - POWERPACK™ Component | .074 | 87-93 | 2 | Not Sold Separate |
| 14F | 062727A | NA | 4th Clutch - POWERPACK™ Component | .133 | 93-On | 2 | Not Sold Separate |
| **PRESSURE PLATES** | | | | | | | |
| 15C | TBA | 8682801 | Forward Input - Apply | | 83-On | 1 | |
| 16C | 062760A482 | 8658146 | Forward Input - Backing | .192 | 83-On | 1 | |

# GENERAL MOTORS

## TH440-T4 (4T60) 1983-93
## 4T60E 1992-99
## 4T65E 1997-On

| ILL | ALTO NO | REF NO | DESCRIPTION | SPEC | YEAR | QTY | NOTES |
|---|---|---|---|---|---|---|---|
| **PRESSURE PLATES** | | | | | | | ...Continued |
| 17B | TBA | 8680367 | 2nd Clutch - Apply | .135 | 91-99 | 1 | |
| 17B | TBA | 24204103 | 2nd Clutch - Apply | | 97-On | 1 | Tapered |
| 18B | 062761B | 8668566 | 2nd Clutch - Backing | .390 | 83-On | 1 | |
| 18B | TBA | 24204105 | 2nd Clutch - Backing | | 97-On | 1 | |
| 19C | 062762-382 | 8658083 | 3rd Clutch - Backing | .150 | 83-On | 1 | |
| 20F | TBA | 8649831 | 4th clutch - Apply | .205 | 83-89 | 1 | with step |
| 20F | TBA | 8661004 | 4th Clutch - Apply | .160 | 90-92 | 1 | |
| 20F | 062765 | 24208014 | 4th Clutch - Apply | .128 | 97-On | 1 | |
| **OEI™ Original Equipment Improvements** | | | | | | | |
| KT | 062756 | NA | 2nd Clutch POWERPACK™ | Tan | 83-On | 1 | Increased Clutch capacity |
| KT | 062756HP | NA | 2nd Clutch POWERPACK™ | Red | 83-On | 1 | Hi-Performance |
| KT | 062758 | NA | 4th Clutch POWERPACK™ - 4T60 | Tan | 83-93 | 1 | Bent Tooth Friction |
| KT | 062758HP | NA | 4th Clutch POWERPACK™ - 4T60 | Red | 83-93 | 1 | Bent Tooth Frict - Hi Perf |
| KT | 062758A | NA | 4th Clutch POWERPACK™ - 4T60E, F7 | Tan | 87-93 | 1 | Bent Tooth Friction |
| KT | 062758AHP | NA | 4th Clutch POWERPACK™ - 4T60E, F7 | Red | 87-93 | 1 | Bent Tooth Frict - Hi Perf |
| KT | 062758B | NA | 4th Clutch POWERPACK™ - 4T60E | Tan | 92-98 | 1 | Bent Tooth Friction |
| KT | 062758BHP | NA | 4th Clutch POWERPACK™ - 4T60E | Red | 92-98 | 1 | Bent Tooth Frict - Hi Perf |
| KT | 062985 | SK® 440-3 | Shift Kit® Tri-Pack (Fixes 3 trans.) - 4T60 | Transgo® | 83-93 | 1 | 2nd Clutch |
| KT | 062986 | SK® 440-JR | Shift Kit® Junior - 4T60 | Transgo® | 83-93 | 1 | 3rd Clutch |
| KT | 062987 | SK® 4T60E-JR | Shift Kit® Junior - 4T60E | Transgo® | 91-99 | 1 | Prevents Lockup shudder |
| **BANDS** | | | | | | | |
| 21D | 062950 | 8675987 | 1-2 (Rear) Band - 4T60 | Tan | 83-93 | 1 | |
| 21D | 062951 | 8651614 | Forward (Rear) Band - 4T60E, 4T65E | Tan | 91-On | 1 | |
| N I | 062952 | 8685155 | Man 2-1 Band - 4T60E, 4T65E | Tan | 91-On | 1 | |
| 22A | 062955 | 8675986 | Reverse (Front) Band - 4T60 | Tan | 83-93 | 1 | |
| 22A | 062956 | 24202815 | Reverse (Front) Band - 4T60E, 4T65E | Tan | 91-On | 1 | |
| **HI-PERFORMANCE - RED EAGLE®** | | | | | | | |
| 21D | 062960 | NA | 1-2 (Rear) Band - 4T60 | Red | 83-93 | 1 | |
| **FILTERS** | | | | | | | |
| KT | FK062940 | NA | Filter Kit - 4T60, F7 | | 83-93 | 1 | |
| KT | FK062942 | NA | Filter Kit - 4T60E, 4T65E | | 91-On | 1 | |
| 23G | 062940 | 8682471 | Filter - 4T60, F7 | | 83-93 | 1 | |
| 23G | 062942 | 24205416 | Filter - 4T60E, 4T65E | | 91-On | 1 | |
| **METAL CLAD SEALS** | | | | | | | |
| 24F | 048400 | 24204772 | Converter Housing | | 83-On | 1 | |
| 25F | 048401 | 24202835 | Right Axle | | 83-On | 1 | |
| 26G | 062402 | 8679744 | Left Axle - 4T60, 4T60E | | 83-99 | 1 | |
| 26G | 062403 | 24204330 | Left Axle - 4T65E | | 97-On | 1 | |
| N I | 048402A | 8644709 | Manual Lever | | 83-On | 1 | |
| **SEALING RINGS** | | | | | | | |
| KT | 062600 | C358 | Sealing Ring Kit, 4T60 - 2M/10T | | 83-86 | 1 | |
| KT | 062600A | C359 | Sealing Ring Kit, 4T60 - 2M/10T | | 87-On | 1 | with Quad seals & Rings |
| KT | 062601 | C361E | Sealing RIng Kit, 4T60E, 4T65E - 2P/2Q/7T | | 91-On | 1 | with Quad seals & Rings |
| 27G | 048102 | 8631211 | Turbine Shaft (Oil pump shaft) | Teflon | 83-On | 1 | |
| 28F | 048111 | 8637170 | Turbine Shaft to Support - middle | Teflon | 83-On | 1 | |
| 29F | 048110 | 8643058 | Turbine Shaft to support - end (solid) | Teflon | 83-On | 2 | |
| 30F | 062100 | 8658160 | 1-2 & Reverse Band Servo piston | Teflon | 83-93 | 2 | |
| 31B | 062101 | 8656342 | Input Shaft | Teflon | 83-On | 3 | |
| 32G | 048107 | 8632588 | Governor | Teflon | 83-93 | 1 | |
| 33A | 062104 | 8658098 | Center Support | Metal | 83-86 | 2 | |
| 33A | 062104A | 8662330 | Center Support (with Tabs) | Peak® | 87-On | 2 | Vespel® |
| 33A | 062114 | 8662329 | Center Support expander | Rubber | 87-On | 2 | Quad Seal |
| **SNAP RINGS** | | | | | | | |
| KT | 062680 | NA | Snap Ring Kit | | 83-On | 1 | |
| 34C | TBA | 8631028 | Forward input clutch drum | | 83-On | 1 | |
| 35B | TBA | 8644110 | 2nd Clutch - inner | | 83-99 | 1 | |

# GENERAL MOTORS

## TH440-T4 (4T60) 1983-93
## 4T60E 1992-99
## 4T65E 1997-On

| ILL | ALTO NO | REF NO | DESCRIPTION | SPEC | YEAR | QTY | NOTES |
|---|---|---|---|---|---|---|---|
| **SNAP RINGS** | | | | | | | ...Continued |
| 35B | TBA | 24206171 | 2nd Clutch - inner - 4T65E | | 97-On | 1 | |
| 36B | TBA | 8644110 | 2nd Clutch - outer | | 83-89 | 1 | |
| 36B | 062252A | 8668567 | 2nd Clutch - outer | | 90-99 | 1 | |
| 36B | TBA | 24202951 | 2nd Clutch - outer - 4T65E | | 97-On | 1 | |
| 37C | 048252 | 8644165 | 3rd Clutch drum retainer | | 83-On | 1 | |
| 38C | 062250 | 8644726 | 3rd Clutch spring retainer | | 83-On | 1 | |
| 39F | 062251 | 8631136 | Output Shaft to driven sprocket | | 83-99 | 1 | |
| 39F | TBA | 24205145 | Output Shaft to driven sprocket - 4T65E | | 97-On | 1 | |
| 40E | 062253 | 11501326 | Spiral Ring, Final drive retainer | | 83-On | AR | |
| **BUSHINGS** | | | | | | | |
| KT | 062625 | NA | Bushing Kit - 4T60 | | 83-93 | 1 | |
| KT | 062625A | NA | Bushing Kit - 4T60E | | 91-95 | 1 | |
| KT | 062625B | NA | Bushing Kit - 4T60E, 4T65E | | 96-On | 1 | |
| 41G | 048200A | 8637905 | Converter Hub - All | | 83-On | 1 | |
| 42F | 043201 | 8628915 | Drive Sprocket support | | 83-On | 1 | |
| 43A | 062200 | 8649702 | Driven Sprocket Support (Input & 3rd Clutch) | | 83-On | 1 | |
| 44A | 062206 | 8644098 | 2nd Clutch Housing - Front | | 83-On | 1 | |
| 45A | 062207 | 8644099 | 2nd Clutch Housing - Rear | | 83-On | 1 | |
| 46B | 062201 | 8649661 | Input Shaft | | 83-On | 1 | |
| 47D | 062203 | 8658803 | Internal Reaction gear (Input Carrier) | | 83-On | 1 | |
| 48D | 062204 | 8644203 | Reaction Sun gear, Front - 4T60 | | 83-93 | 1 | |
| 48D | 062204A | 8651447 | Reaction Sun gear, Front - 4T60E, 4T65E | | 91-On | 1 | |
| N I | 062213 | 8651448 | Reaction Sun gear, Rear - 4T60E, 4T65E | | 91-On | 1 | |
| 49E | 062205 | 8649537 | Final Drive Internal gear | | 83-On | 2 | |
| 50D | 062202 | 8644518 | Input Sun Gear | | 83-On | 1 | |
| N I | 062214 | 5606004 | Forward Drum (1-2 Support) - Narrow | | 91-95 | 1 | |
| N I | 062214A | NA | Forward Drum (1-2 Support) - Wide | | 96-On | 1 | |
| 51F | 048202 | 8631119 | Case | | 83-On | 1 | |
| N I | 062215 | 24204478 | Front Wheel Shaft - 4T65E | | 97-On | 1 | |
| **WASHERS** | | | | | | | |
| KT | 062635 | NA | Washer Kit - 4T60, 4T60E | | 83-99 | 1 | w/o selectives |
| KT | 062635A | NA | Washer Kit - 4T65E | | 97-On | 1 | w/o selectives |
| **MODULATORS** | | | | | | | |
| 52G | 062500 | 7866 | Modulator, Dual Red Stripe | | 83-86 | 1 | |
| 52G | 062501 | 7865 | Modulator, Dual Black Stripe | | 87-99 | 1 | |
| **MISCELLANEOUS** | | | | | | | |
| 53A | 062330 | 8676387 | Bonded Piston, 2nd Clutch - 4T60, 4T60E | | 91-99 | 1 | |
| 53A | 062330A | 24208336 | Bonded Piston, 2nd Clutch - 4T65E | | 97-On | 1 | |
| 54C | 062331 | 8668453 | Bonded Piston, 3rd Clutch - 4T60, 4T60E | | 91-99 | 1 | |
| 54C | 062331A | 24205378 | Bonded Piston, 3rd Clutch - 4T65E | | 97-On | 1 | |

**NOTES**

# GENERAL MOTORS

## HYDRAMATIC

## TH700-R4 / 4L60 1982-92

## 4L60E 1992-On, 4L65E 2001-On

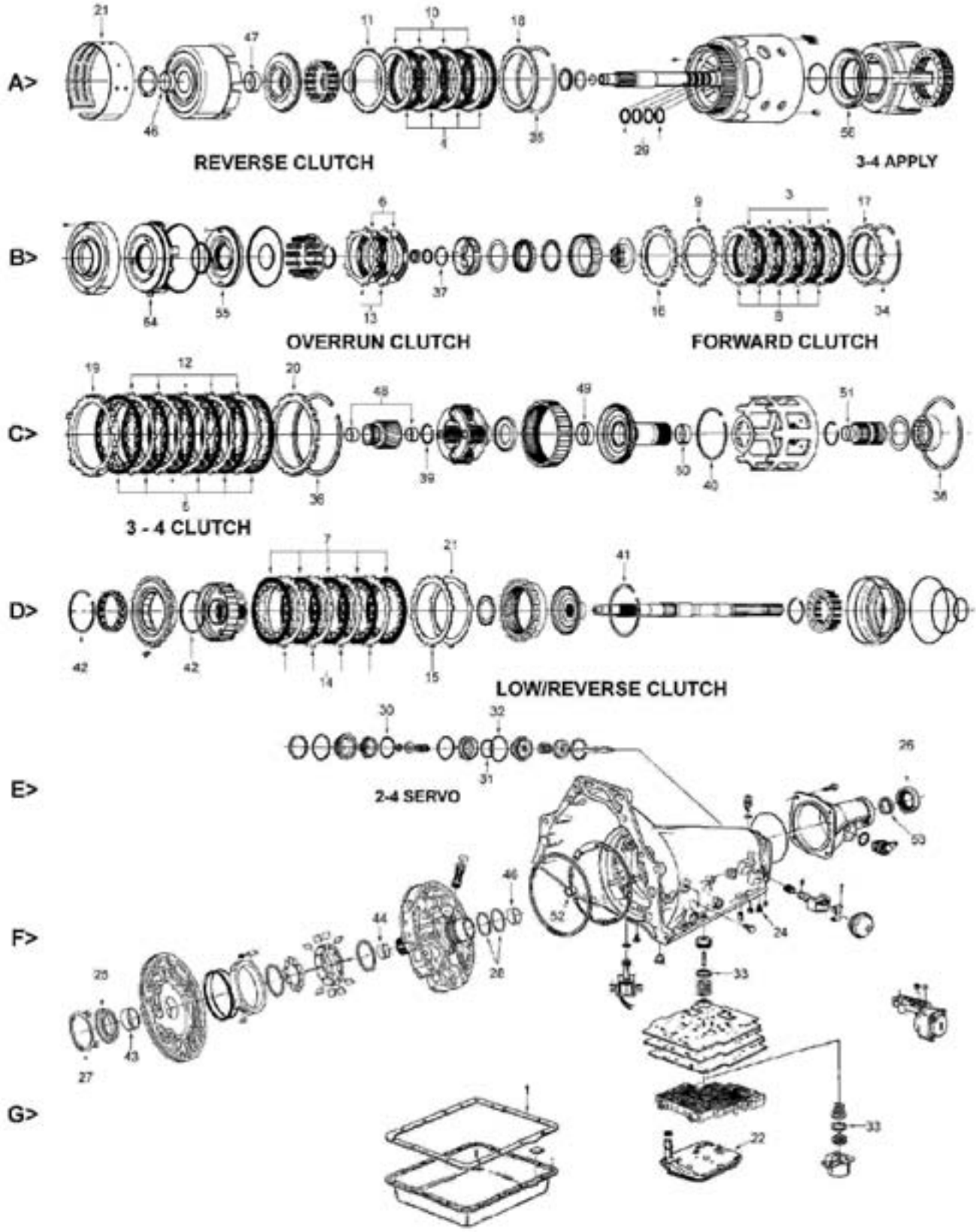

# GENERAL MOTORS
## HYDRAMATIC
## TH700-R4 / 4L60 1982-92
## 4L60E 1992-On, 4L65E 2001-On

| ILL | DESCRIPTION | YEARS | FRICTION MODULE | STEEL MODULE | OVERHAUL KIT | BANNER KIT | MASTER KIT |
|---|---|---|---|---|---|---|---|
| **KITS** | | | | | | | |
| KT | Rebuilding Kit - 4L60 | 82-84 | 057752E | 057753E | 057800 | 057901LS | 057901 |
| KT | Rebuilding Kit - 4L60 with Heg Frictions | 82-84 | 057752L | 057753E | 057800 | 057901HEGLS | 057901HEG |
| KT | Rebuilding Kit - 4L60 | 85-E87 | 057752 | 057753 | 057800 | 057901ALS | 057901A |
| KT | Rebuilding Kit - 4L60 | 1987 | 057752C | 057753A | 057802 | NA | 057907 |
| KT | Rebuilding Kit - 4L60 | 87-92 | 057752A | 057753A | 057802 | 057901BLS | 057901B |
| KT | Rebuilding Kit - 4L60 (combo- 4VB Gsk) | 85-92 | 057752C | 057753A | 057800X | NA | 057901X |
| KT | Rebuilding Kit - 4L60 (combo- 4VB Gsk) with Heg Fr | 85-92 | 057752J | 057753A | 057800X | TBA | TBA |
| KT | Rebuilding Kit - 4L60E | 92-1/93 | 057752A | 057753A | 057804 | 057905LS | 057905 |
| KT | Rebuilding Kit - 4L60E | 2/93-96 | 057752A | 057753B | 057804 | 057905LS | 057905A |
| KT | Rebuilding Kit - 4L60E with Heg Frictions | 87-96 | 057752K | TBA | TBA | TBA | TBA |
| KT | Rebuilding Kit - 4L60E with Turbulator Steels | 97-On | 057752G | 057753G | 057806 | 057905DLS | 057905D |
| KT | Rebuilding Kit - 4L65E with HEG Frictions (Heavy Duty) | 01-On | 057752D | 057753D | 057806 | 057905ELS | 057905E |
| **Specialty Kit - with Powerpack™** | | | | | | | |
| KT | Rebuilding Kit - 4L60 with 3/4 POWERPACK | 85-87 | 057750PWR FR & ST | | 057800 | NA | 057901APWR |
| KT | Rebuilding Kit - 4L60 with 3/4 POWERPACK and POWERBAND | 85-87 | 057750PWR FR & ST | | 057800 | NA | 057901APWR-4 |
| KT | Rebuilding Kit - 4L60 with 3/4 POWERPACK | 87-92 | 057750APWR FR & ST | | 057802 | NA | 057901BPWR |
| KT | Rebuilding Kit - 4L60 with 3/4 POWERPACK and POWERBAND | 87-92 | 057750APWR FR & ST | | 057802 | NA | 057901BPWR-4 |
| KT | Rebuilding Kit - 4L60E with 3/4 POWERPACK | 92-On | 057750APWR FR & ST | | 057804 | NA | 057905PWR |
| KT | Rebuilding Kit - 4L60E with 3/4 POWERPACK and POWERBAND | 92-On | 057750APWR FR & ST | | 057804 | NA | 057905PWR-4 |
| **HI-PERFORMANCE - RED EAGLE®** | | | | | | | |
| KT | Rebuilding Kit - 4L60 | 82-84 | 057750EHP FR & ST | | 057800 | NA | 057901HP |
| KT | Rebuilding Kit - 4L60 | 85-E87 | 057750HP FR & ST | | 057800 | NA | 057901AHP |
| **HI-PERFORMANCE - with Powerpack™** | | | | | | | |
| KT | Rebuilding Kit - 4L60 with 3/4 POWERPACK | 87-92 | 57750AHPPWR FR & ST | | 057802 | NA | 057901BHPPWR |
| KT | Rebuilding Kit - 4L60 with 3/4 POWERPACK and POWERBAND | 87-92 | 57750AHPPWR FR & ST | | 057802 | NA | 57901BHPPWR-4 |
| KT | Rebuilding Kit - 4L60E with 3/4 POWERPACK | 92-On | 57750AHPPWR FR & ST | | 057804 * | NA | 057905HPPWR |
| KT | Rebuilding Kit - 4L60E with 3/4 POWERPACK and POWERBAND | 92-On | 57750AHPPWR FR & ST | | 057804 * | NA | 57905HPPWR-4 |
| | * For 1997 and On applications, Molded pistons must be ordered separately | | | | | | |

| ILL | ALTO NO | REF NO | DESCRIPTION | SPEC | YEAR | QTY | NOTES |
|---|---|---|---|---|---|---|---|
| **MISCELLANEOUS GASKETS & KIT COMPONENTS** | | | | | | | |
| 1G | 057816 | 8642360 | Gasket, Oil Pan | Cork/Rub | 82-On | 1 | |
| 2F | 031050 | 24210605 | Lathe Cut, Front Pump to case | | 82-On | 1 | |
| N I | 010115B | 6264903 | O Ring, Electrical Connector | | 82-On | 1 | |
| N I | 032003 | 8626281 | Washer, Front Pump bolts | | 82-86 | 7 | |
| N I | M001001 | 24205103 | Clip, Cooler line Retainer | | 96-On | 2 | |
| **FRICTION CLUTCHES** | | | | | | | |
| 3B | 057700 | 8647350 | Forward | .078 | 82-84 | 5 | Tan - 41T - OD: 5.310" - SM |
| 3B | 057720 | 8673254 | Forward | .070 | 85-On | 5 | Tan - 41T - OD: 5.310" - SM |
| 3B | 057730-200 | NA | Forward | .078 | 82-84 | 5 | Heg - 41T - OD: 5.310" - SM |
| 3B | 057730-180 | 24210765 | Forward | .070 | 85-On | 5 | Heg - 41T - OD: 5.310" - SM |
| 4A | 057702 | 8654306 | Reverse Input | .078 | 82-87 | 4 | Tan - 41T - OD: 6.039" - PL |
| 4A | 057712 | 8673605 | Reverse Input | .070 | 87-On | 4 | Tan - 41T - OD: 6.039" - PL |

# GENERAL MOTORS
## HYDRAMATIC
## TH700-R4 / 4L60 1982-92
## 4L60E 1992-On, 4L65E 2001-On

| ILL | ALTO NO | REF NO | DESCRIPTION | SPEC | YEAR | QTY | NOTES |
|---|---|---|---|---|---|---|---|
| **FRICTION CLUTCHES** | | | | | | | ...Continued |
| 4A | 057732-200 | NA | Reverse Input | .078 | 82-87 | 4 | Heg - 41T - OD: 6.039" - PL |
| 4A | 057732-180 | NA | Reverse Input | .070 | 87-On | 4 | Heg - 41T - OD: 6.039" - PL |
| 5C | 057704 | 8679390 | 3/4 Clutch | .080 | 82-On | 6 | Tan - 20T - OD: 5.742" - SM |
| 5C | 057704A | NA | 3/4 Clutch - POWERPACK™ Component | .062 | 82-On | AR | Tan - 20T - OD: 5.742" - SM |
| 5C | 057734-200 | NA | 3/4 Clutch | .080 | 82-On | 6 | Heg - 20T - OD: 5.742" - SM |
| 5C | 057734-158 | 24216932 | 3/4 Clutch - POWERPACK™ Component | .062 | 82-On | AR | Heg - 20T - OD: 5.742" - SM |
| 5C | 057734-158 | 24216932 | 3/4 Clutch - 4L65E | .062 | 01-On | 7 | Heg - 20T - OD: 5.742" - SM |
| 6B | 057706 | 8673253 | Overrun | .075 | 82-On | 2 | Tan - 36T - OD: 5.037" - PL |
| 6B | 057736-200 | NA | Overrun | .078 | 82-On | 2 | Heg - 36T - OD: 5.037" - PL |
| 7D | 057708 | 24216946 | Low/Reverse | .087 | 82-On | 5 | Tan - 25T - OD: 6.461" - SM |
| 7D | 057708A220 | NA | Low/Reverse | .087 | 82-On | 5 | Tan - 25T - OD: 6.461" - WF |
| 7D | 057738-220 | NA | Low/Reverse | .087 | 82-On | 5 | Heg - 25T - OD: 6.461" - PL |
| N I | 171700-170 | 88935701 | Transfer Case (NVG 125C. 225C) 1sided-Int. Spline | .067/1.7 | 02-On | 9 | Heg - 50T - SB |
| N I | 171701-170 | 88935700 | Transfer Case (NVG 125C. 225C) 1sided-Ext. Spline | .067/1.7 | 02-On | 9 | Heg - 16T - SB |
| N I | 126700 | 12547607 | Transfer Case (NVG 136, 236) | .087 | 98-On | 8-10 | Heg - 54T - OD: 6.080" - SM |
| **HI-PERFORMANCE - RED EAGLE®** | | | | | | | |
| 3B | 057740 | NA | Forward (Hardened Spline) | .078 | 82-84 | 5 | Red - 41T - OD: 5.310" - SM |
| 3B | 057740A | NA | Forward (Hardened Spline) | .070 | 85-On | 5 | Red - 41T - OD: 5.310" - SM |
| 4A | 057742 | NA | Reverse Input | .078 | 82-87 | 4 | Red - 41T - OD: 6.039" - SM |
| 4A | 057742A | NA | Reverse Input | .070 | 87-On | 4 | Red - 41T - OD: 6.039" - SM |
| 5C | 057744 | NA | 3/4 Clutch | .080 | 82-On | 6 | Red - 20T - OD: 5.742" - SM |
| 5C | 057744A | NA | 3/4 Clutch - POWERPACK™ Component | .062 | 82-On | AR | Red - 20T - OD: 5.742" - SM |
| 6B | 057746 | NA | Overrun | .075 | 82-On | 2 | Red - 36T - OD: 5.037" - SM |
| 7D | 057748 | NA | Low/Reverse | .087 | 82-On | 5 | Red - 25T - OD: 6.461" - SM |
| **HI-PERFORMANCE - UNIT PACKS (ONE Rebuild)** | | | | | | | |
| KT | 057740UP5 | NA | Forward | .078 | 82-84 | 1 | 5 RED EAGLE® Friction |
| KT | 057740AUP5 | NA | Forward | .070 | 85-On | 1 | 5 RED EAGLE® Friction |
| KT | 057742UP4 | NA | Reverse Input | .078 | 82-87 | 1 | 4 RED EAGLE® Friction |
| KT | 057742AUP4 | NA | Reverse Input | .070 | 87-On | 1 | 4 RED EAGLE® Friction |
| KT | 057744UP6 | NA | 3/4 Clutch | .080 | 82-On | 1 | 6 RED EAGLE® Friction |
| KT | 057744AUP9 | NA | 3/4 Clutch - POWERPACK™ Component | .062 | 82-On | 1 | 9 RED EAGLE® Friction |
| KT | 057746UP2 | NA | Overrun | .075 | 82-On | 1 | 2 RED EAGLE® Friction |
| KT | 057748UP5 | NA | Low/Reverse | .087 | 82-On | 1 | 5 RED EAGLE® Friction |
| **STEEL CLUTCHES** | | | | | | | |
| 8B | 057701 | 8642167 | Forward | .078 | 82-84 | 4 | 20T - ID: 4.257" |
| 8B | 057721 | 8654325 | Forward | .090 | 85-On | 4-5 | 20T - ID: 4.257" |
| 8B | 057717 | 8642711 | Forward - 6 cylinder engines | .078 | 82-86 | 1 | 10T - ID: 4.257" |
| 9B | 057729 | 8647058 | Forward - wave | .069 | 84-3/95 | 1 | 20T - ID: 4.257" |
| 9B | 057729A | 24203903 | Forward - wave | .069 | 4/95-On | AR | 12T - ID: 4.257" |
| 9B | 057729A110 | 8685050 | Forward - wave | .044 | 94-On | AR | 12T - ID: 4.257" |
| 9B | 057729A130 | 8686010 | Forward - wave | .052 | 94-On | AR | 12T - ID: 4.257" |
| 10A | 057703 | 8673601 | Reverse Input | .078 | 82-On | 3-4 | 36T - ID: 5.084" |
| 10A | 057703H | 24205267 | Reverse Input with Turbulator Holes | .078 | 82-On | 3-4 | 36T - ID: 5.084" |
| 10A | 057703-230 | NA | Reverse Input - oversize | .090 | 82-On | AR | 36T - ID: 5.084" |
| 11A | 057711 | 8642060 | Reverse Input - wave | .088 | 82-83 | 1 | 36T - ID: 5.084" |
| 11A | 057731 | 8647067 | Reverse Input - wave | .080 | 84-87 | 1 | 36T - ID: 5.084" |
| 11A | 057766 | 8663074 | Reverse Input - dish | .091 | 87-On | AR | 36T - ID: 5.084" |
| 11A | 057766-130 | 8685893 | Reverse Input - dish | .051 | 88-On | AR | 36T - ID: 5.084" |
| 11A | 057703A089 | NA | DRUMSAVER™ - reverse input | | 87-On | 1 | |
| 11A | 057766-180 | 8685892 | Reverse Input - dish | .071 | 88-On | AR | 36T - ID: 5.084" |
| 12C | 057705 | 8678054 | 3/4 Clutch (1987-92 = 1) | .077 | 82-92 | 5/1 | 15T - ID: 4.995" |
| 12C | 057725 | 8678053 | 3/4 Clutch with notch (does retro) | .076 | 82-1/93 | 5 | 20T - ID: 4.995" |
| 12C | 057725-270 | 8685045 | 3/4 Clutch | .106 | 1/93-On | 5 | 20T - ID: 4.995" |
| 12C | 057725A270 | 8685045 | 3/4 Clutch - OE surface finish | .106 | 1/93-On | 5 | 20T - ID: 4.995" |
| 12C | 057725A242 | 24216939 | 3/4 Clutch -OE surface finish | .095 | 01-On | 6 | 20T - ID: 4.995" |
| 12C | 057725A | NA | 3/4 Clutch - POWERPACK™ Component | .060 | 82-On | AR | 20T - ID: 4.995" |
| 13B | 057707 | 8642154 | Overrun | .092 | 82-On | 2 | 10T - ID: 4.262" |

# GENERAL MOTORS
## HYDRAMATIC
## TH700-R4 / 4L60 1982-92
## 4L60E 1992-On, 4L65E 2001-On

| ILL | ALTO NO | REF NO | DESCRIPTION | SPEC | YEAR | QTY | NOTES |
|---|---|---|---|---|---|---|---|
| **STEEL CLUTCHES** | | | | | | | ...Continued |
| 14D | 032701 | 8680439 | Low/Reverse | .068 | 82-On | 5 | 17T - ID: 5.727" |
| 14D | 032701H | 24205268 | Low/Reverse with Turbulator Holes | .068 | 82-On | 5 | 17T - ID: 5.727" |
| 21D | 057761 | 8676362 | Low/Reverse - wave | .095 | 87-On | 1 | 17T - ID: 5.727" |
| N I | 126701 | 12547608 | Transfer Case (NVG 136, 236) | .067 | 98-On | 8-9 | 12T - ID: 5.023" |
| **HI-PERFORMANCE - KOLENE®** | | | | | | | |
| 8B | 057701K | NA | Forward | .078 | 82-84 | 4 | 20T - ID: 4.257" |
| 8B | 057721K | NA | Forward | .090 | 85-On | 4-5 | 20T - ID: 4.257" |
| 10A | 057703K | NA | Reverse Input | .078 | 82-On | 3-4 | 36T - ID: 5.084" |
| 10A | 057703HK | NA | Reverse Input with Turbulator Holes | .078 | 82-On | 3-4 | 36T - ID: 5.084" |
| 12C | 057725K | NA | 3/4 Clutch | .076 | 82-1/93 | 5 | 20T - ID: 4.995" |
| 12C | 057725K270 | NA | 3/4 Clutch | .106 | 1/93-On | 5 | 20T - ID: 4.995" |
| 12C | 057725AK | NA | 3/4 Clutch - POWERPACK™ Component | .060 | 82-On | AR | 20T - ID: 4.995" |
| 13B | 057707K | NA | Overrun | .092 | 82-On | 2 | 10T - ID: 4.262" |
| 14D | 032701K | NA | Low/Reverse | .068 | 82-On | 5 | 17T - ID: 5.727" |
| 14D | 032701HK | NA | Low/Reverse with Turbulator Holes | .068 | 69-86 | 5 | 17T - ID: 5.727" |
| **HI-PERFORMANCE - UNIT PACKS (ONE Rebuild)** | | | | | | | |
| KT | 057701KUP4 | NA | UNIT PACK - Forward | .078 | 82-84 | 1 | 4 KOLENE® Steel |
| KT | 057721KUP5 | NA | UNIT PACK - Forward | .090 | 85-On | 1 | 5 KOLENE® Steel |
| KT | 057703KUP4 | NA | UNIT PACK - Reverse Input | .078 | 82-On | 1 | 4 KOLENE® Steel |
| KT | 057703HKUP4 | NA | UNIT PACK - Reverse Input with Turbulator Holes | .078 | 82-95 | 1 | 4 KOLENE® Steel |
| KT | 057725KUP5 | NA | UNIT PACK - 3/4 Clutch | .076 | 82-1/93 | 1 | 5 KOLENE® Steel |
| KT | 057725AKUP10 | NA | UNIT PACK - 3/4 Clutch POWERPACK™ Comp | .060 | 82-On | 1 | 10 KOLENE® Steel |
| KT | 057713UP1 | NA | UNIT PACK - 3/4 Clutch POWERPACK™ Comp | .128 | 82-On | 1 | 1 PRESSURE PLATE |
| KT | 057707KUP2 | NA | UNIT PACK - Overrun | .092 | 82-On | 1 | 2 KOLENE® Steel |
| KT | 032701KUP5 | NA | UNIT PACK - Low/Reverse | .068 | 82-On | 1 | 5 KOLENE® Steel |
| KT | 032701HKUP5 | NA | UNIT PACK - Low/Reverse with Turbulator Holes | .068 | 69-86 | 1 | 5 KOLENE® Steel |
| **PRESSURE PLATES** | | | | | | | |
| 16B | TBA | NA | Forward - apply | .250 | 82-86 | 1 | |
| 16B | 057760K | 8682866 | Forward - apply | .170 | 87-On | 1 | |
| 17B | 057760-675 | 8642169 | Forward - backing | .265 | 82-86 | AR | |
| 17B | 057760A947 | 8682867 | Forward - backing (A) | .275 | 87-On | AR | |
| 17B | 057760A898 | 8682868 | Forward - backing (B) | .253 | 87-On | AR | |
| 17B | 057760A829 | 8682869 | Forward - backing (C) | .229 | 87-On | AR | |
| 17B | 057760A770 | 8682870 | Forward - backing (D) | .205 | 87-On | AR | |
| 17B | 057760A462 | 8682871 | Forward - backing (E) | .182 | 87-On | AR | |
| 18A | 057761-630 | 8663654 | Reverse Input - backing | .250 | 82-86 | 1 | |
| 18A | 057761-752 | 8682863 | Reverse Input - backing | .296 | 87-On | AR | |
| 18A | 057761-660 | 8682864 | Reverse Input - backing | .269 | 87-On | AR | |
| 18A | 057761-600 | 8682865 | Reverse Input - backing | .218 | 87-On | AR | |
| 19C | 057713 | 8642172 | 3/4 Clutch - apply | .128 | 82-89 | 1 | |
| 19C | TBA | 8685044 | 3/4 Clutch - apply | .218 | 90-On | 1 | |
| 20C | 057764-700 | 8642621 | 3/4 Clutch - backing (#1) | .280 | 82-86 | AR | |
| 20C | 057764-600 | 8642622 | 3/4 Clutch - backing (#2) | .241 | 82-86 | AR | |
| 20C | 057764A500 | 8642623 | 3/4 Clutch - backing (#3) | .202 | 82-86 | AR | |
| 20C | 057764A400 | 8642624 | 3/4 Clutch - backing (#4) | .163 | 82-86 | AR | |
| 20C | 057764A650 | 8667535 | 3/4 Clutch - backing | .255 | 87-93 | AR | |
| 20C | 057764A564 | 8667536 | 3/4 Clutch - backing | .222 | 87-93 | AR | |
| 20C | 057764A483 | 8667537 | 3/4 Clutch - backing | .190 | 87-93 | AR | |
| 20C | 057764A399 | 8667538 | 3/4 Clutch - backing | .157 | 87-93 | AR | |
| 20C | 057764B584 | 8685046 | 3/4 Clutch - backing (A) | .230 | 91-On | AR | |
| 20C | 057764-490 | 8685047 | 3/4 Clutch - backing (B) | .193 | 93-On | AR | |
| 20C | 057764B406 | 8685048 | 3/4 Clutch - backing (C) | .160 | 91-On | AR | |
| 15D | 057719B | 8667584 | Low/Reverse - Spacer | .097 | 87 | AR | 17T - ID: 5.727" |
| 15D | 057719C | 8667585 | Low/Reverse - Spacer | .125 | 87 | AR | 17T - ID: 5.727" |
| 15D | 057719D | 8680440 | Low/Reverse - Spacer | .049 | 88-On | AR | 17T - ID: 5.727" |
| 15D | 057719DH | 24205269 | Low/Reverse - Spacer with Turb. Holes | .049 | 99-On | AR | 17T - ID: 5.727" |
| 15D | 057719E | 8680441 | Low/Reverse - Spacer | .089 | 88-On | AR | 17T - ID: 5.727" |

# GENERAL MOTORS
## HYDRAMATIC
## TH700-R4 / 4L60 1982-92
## 4L60E 1992-On, 4L65E 2001-On

| ILL | ALTO NO | REF NO | DESCRIPTION | SPEC | YEAR | QTY | NOTES |
|---|---|---|---|---|---|---|---|
| **PRESSURE PLATES** | | | | | | | ...Continued |
| 15D | 057719EH | NA | Low/Reverse - Spacer with Turb. Holes | .089 | 99-On | AR | 17T - ID: 5.727" |
| **OEI™ Original Equipment Improvements** | | | | | | | |
| KT | 057757B | NA | 3/4 Clutch POWERPACK™ | | 82-On | 1 | Higher clutch capacity |
| KT | 057757BHP | NA | 3/4 Clutch POWERPACK™ - HI PERFORMANCE | | 82-On | 1 | |
| KT | 057757C | NA | 3/4 Clutch HEG POWERPACK™ | | 82-On | 1 | |
| KT | 057758 | NA | DRUMSAVER™ Kit - Reverse Input | | 87-On | 1 | |
| KT | 057985 | SK® 700 | Shift Kit® - 4L60 | Transgo® | 82-93 | 1 | |
| KT | 057986 | SK® 700JR | Shift Kit® JRT - 4L60 | Transgo® | 82-93 | 1 | |
| KT | 057987 | SK® 4L60E | Shift Kit® - 4L60E | Transgo® | 92-On | 1 | |
| KT | 057988 | 700-2&3 | Reprogramming Kit™ | Transgo® | 82-On | 1 | |
| KT | 057991 | 4L60E-HD2 | Reprogramming Kit™ | Transgo® | 92-On | 1 | Heavy Duty |
| KT | 057991A | 4L60E-3 | Reprogramming Kit™ | Transgo® | 92-On | 1 | Racing |
| **BANDS** | | | | | | | |
| 21A | 057950 | 24201131 | 2-4 Intermediate | Tan | 82-On | 1 | |
| **HI-PERFORMANCE - RED EAGLE® or KEVLAR®** | | | | | | | |
| 21A | 057960 | NA | 2-4 Intermediate - Heavy Duty | Red | 82-On | 1 | |
| 21A | 057961 | NA | 2-4 Intermediate - Heavy Duty POWERBAND™ | Red | 82-On | 1 | |
| 21A | 057961K | NA | 2-4 Intermediate - Super Duty POWERBAND™ | Kevlar® | 82-On | 1 | |
| **FILTERS** | | | | | | | |
| KT | FK057940 | NA | Filter Kit - 4L60, TH700-R4 | | 82-93 | 1 | |
| KT | FK057942 | NA | Filter Kit - 4L60E | | 92-96 | 1 | |
| KT | FK057944 | NA | Filter Kit - 4L60E - Corvette | | 97-On | 1 | |
| KT | FK057946 | NA | Filter Kit - 4L60E - Truck (2 7/8" thick) all 4WD, Van | | 98-On | 1 | |
| KT | FK057948 | NA | Filter Kit - 4L60E - Cars (2 1/4" thick) | | 97-On | 1 | |
| 22G | 057940 | 8667689 | Filter - 4L60, TH700-R4 | | 82-93 | 1 | |
| 22G | 057942 | 8685774 | Filter - 4L60E | | 92-96 | 1 | |
| 22G | 057944 | 24208149 | Filter - 4L60E - Corvette | | 97-On | 1 | |
| 22G | 057946 | 24208576 | Filter - 4L60E - Truck (2 7/8" thick) all 4WD, Van | | 98-On | 1 | |
| 22G | 057948 | 24208148 | Filter - 4L60E - Car (2 1/4" thick) | | 97-On | 1 | |
| 23F | 057551 | 8642912 | Screen - Pump Cover | | 82-On | 1 | |
| 24F | 057552 | 12338044 | Screen - TCC & Governor feed | | 82-On | 1 | |
| **METAL CLAD SEALS** | | | | | | | |
| 25F | 043400 | 24202535 | Front Pump | Vamac® | 82-On | 1 | |
| 26E | 032402 | 8673526 | Extension Housing - Flange / No boot | | 82-On | 1 | |
| 26E | 057405 | 24201470 | Extension Housing - Flange / with boot | | 94-On | 1 | |
| 26E | 057406 | 24207010 | Extension Housing - Corvette | | 97-On | 1 | |
| N I | 032410C | 8623056 | Manual Lever | | 82-On | 1 | |
| 27F | 057501 | 8654491 | Front Pump seal retainer | | 82-On | 1 | |
| **SEALING RINGS** | | | | | | | |
| KT | 057600 | C355 | Sealing Ring Kit, 4L60 - 19T | | 82-92 | 1 | |
| KT | 057601 | C377 | Sealing Ring Kit, 4L60E - 11T | | 92-On | 1 | |
| KT | 057602 | NA | Sealing Ring Kit - servo D-Ring (5) | | 82-On | 1 | |
| 28F | 043100 | 8628055 | Stator Support - scarf cut | | 82-92 | 2 | |
| 28F | 043100A | 8681292 | Stator Support - solid | | 92-On | 2 | |
| 29A | 057100 | 8667035 | Turbine Shaft - solid | | 82-On | 4 | |
| 30E | 057105 | 8642480 | 4th Apply piston - outer | | 82-On | 1 | |
| 31E | 057103 | 8642458 | 2nd Apply piston - inner | 2.324 | 82-On | 1 | |
| 31E | 057102 | 8642084 | 2nd Apply piston - inner | 1.804 | 82-On | 1 | |
| 31E | 057103A | 8642459 | 2nd Apply piston - inner | 2.530 | 82-On | 1 | |
| 32E | 057104 | 8642081 | 2nd Apply piston - outer | | 82-On | 1 | |
| 33F | 043117 | 8634161 | 3-4 / 1-2 Accumulator piston | | 82-92 | 2 | |
| N I | 043115 | 8630120 | 2nd Servo pin | | 82-On | 2 | |
| **SNAP RINGS** | | | | | | | |
| KT | 057680 | NA | Snap Ring Kit | | 82-On | 1 | |
| 34B | 057255 | 8642170 | Forward Clutch drum | | 82-On | 1 | |
| 35A | 057252 | 8667022 | Reverse Input Drum | | 82-On | 1 | |

# GENERAL MOTORS
## HYDRAMATIC
## TH700-R4 / 4L60 1982-92
## 4L60E 1992-On, 4L65E 2001-On

| ILL | ALTO NO | REF NO | DESCRIPTION | SPEC | YEAR | QTY | NOTES |
|---|---|---|---|---|---|---|---|
| **SNAP RINGS** | | | | | | | ...Continued |
| 36C | 057254-128 | 8642177 | 3/4 Clutch Drum | .128 | 82-86 | 1 | |
| 36C | 057254-093 | 8663636 | 3/4 Clutch Drum | .093 | 87-On | 1 | |
| 36C | 057254-062 | NA | 3/4 Clutch Drum - Selective | .062 | 87-On | AR | |
| 37B | 057251 | 8647083 | Overrun Clutch hub retainer | | 82-On | 1 | |
| 38C | 057256 | 24200278 | Low/Reverse Support retainer | | 82-On | 1 | |
| 39C | 057253 | 8654141 | Output shaft to Input Planet | | 82-On | 1 | |
| 40C | 057257 | 8642201 | Reaction shaft to Internal gear retainer | | 82-On | 1 | |
| 41D | 057258 | 8642220 | Reaction gear to Support | | 82-On | 1 | |
| 41D | 057258HD | 8642220HD | Reaction gear to Support - Heavy Duty | | 82-On | 1 | |
| 42D | 032252 | 6261051 | Low/Reverse overrun clutch | | 82-On | 2 | |
| **BUSHINGS** | | | | | | | |
| KT | 057625 | NA | Bushing Kit - 30 spline | | 84-On | 1 | |
| 43F | 057200 | 24206030 | Front Pump Body | Bronze | 82-On | 1 | |
| 43F | 057200A | 8687987 | Front Pump Body | Babbit | 82-On | 1 | |
| 44F | 043201 | 8628915 | Front Pump Stator - Front | 27 spline | 82-84 | 1 | |
| 44F | 032212 | 8647954 | Front Pump Stator - Front | 30 spline | 84-On | 1 | |
| 45F | 057202 | 8642904 | Front Pump Stator - Rear | | 82-On | 1 | |
| 46A | 057204 | 8647035 | Reverse Input drum - Front | | 82-On | 1 | |
| 47A | 043204 | 8628917 | Reverse Input drum - Rear | | 82-On | 1 | |
| 48C | 057205 | 8642181 | Input Sun gear - Front & Rear | | 82-On | 2 | |
| 49C | 057206 | 8642908 | Reaction Carrier Shaft - Front | | 82-On | 1 | |
| 50C | 057207 | 8642907 | Reaction Carrier Shaft - Rear | | 82-On | 1 | |
| 51C | 057208 | 8642909 | Reaction Sun Gear | | 82-On | 1 | |
| 52F | 032207 | 8641118 | Case | Babbit | 82-On | 1 | |
| 52F | 032207A | 8680027 | Case | Bronze | 82-On | 1 | |
| 53E | 032208 | 6260048 | Extension Housing | Bronze | 82-On | 1 | |
| 53E | 032208A | 3717682 | Extension Housing | Babbit | 82-On | 1 | |
| **WASHERS** | | | | | | | |
| KT | 057635 | NA | Washer Kit | | 82-On | 1 | |
| **MISCELLANEOUS** | | | | | | | |
| N I | 057315 | 24203265 | Bolt, Bell Housing to Case - Torx Plus® | M10 | 82-On | 8 | Does Retro-fit |
| KT | 057315UP8 | NA | Bolt, Bell Housing to Case - Torx Plus® (Pack) | M10 | 82-On | 1 | 8 Bolt Pack |
| 54B | 057338 | 24205272 | Molded Piston, Forward Clutch | | 97-On | 1 | |
| 55B | 057337 | 24205273 | Molded Piston, Overrun Clutch | | 97-On | 1 | |
| 56B | 057339 | 24200290 | Molded Piston, 3/4 Clutch | | 97-On | 1 | |
| N I | 057248S | NA | 1/16" Hex Plug | Steel | 82-On | AR | |
| N I | 057249 | NA | 1/8" Hex Plug | Brass | 82-On | AR | |
| N I | 057249S | NA | 1/8" Hex Plug | Steel | 82-On | AR | |

## NOTES

# GENERAL MOTORS
## HYDRAMATIC
## 4T80E 1993-On

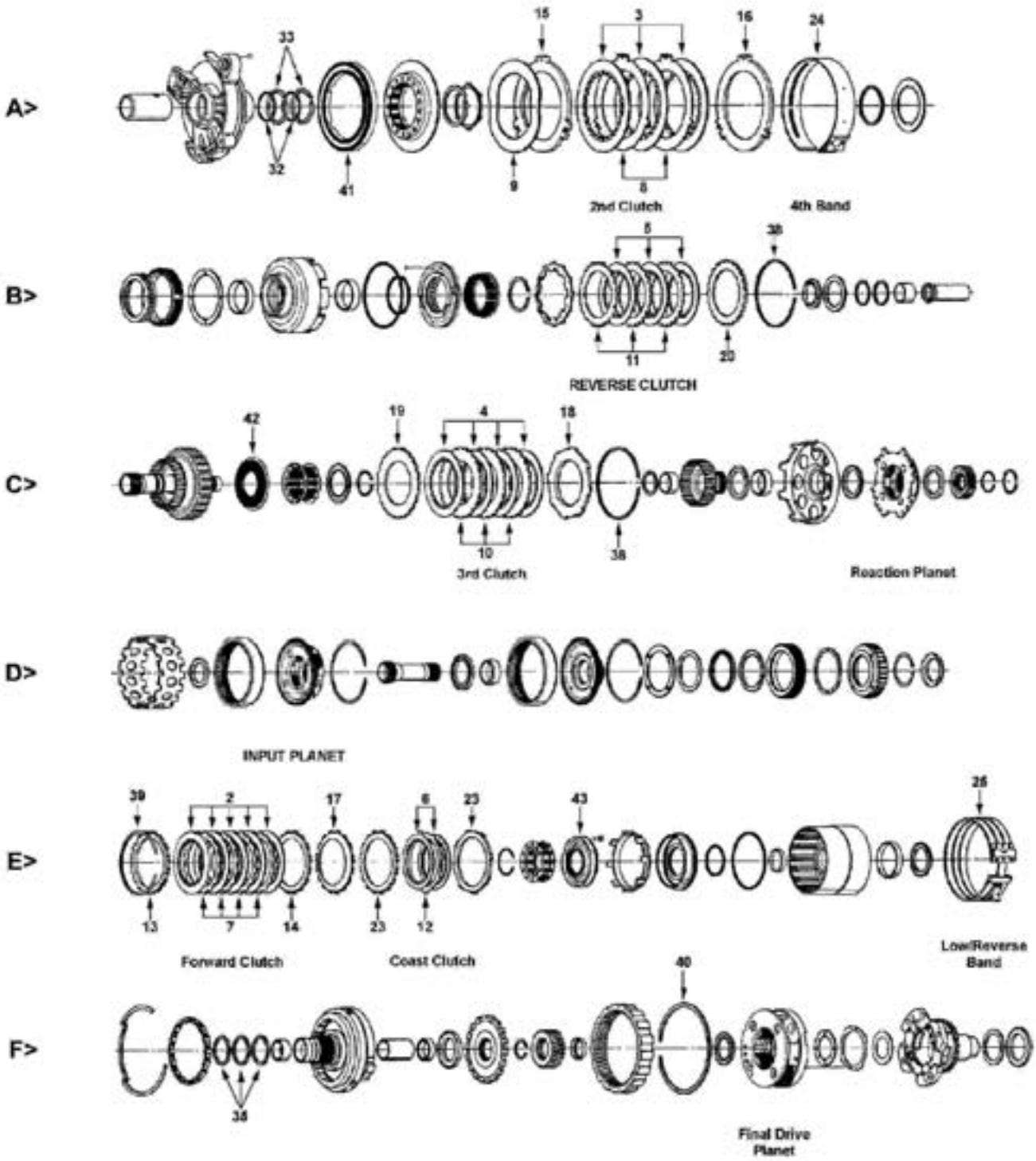

# GENERAL MOTORS
## HYDRAMATIC
## 4T80E 1993-On

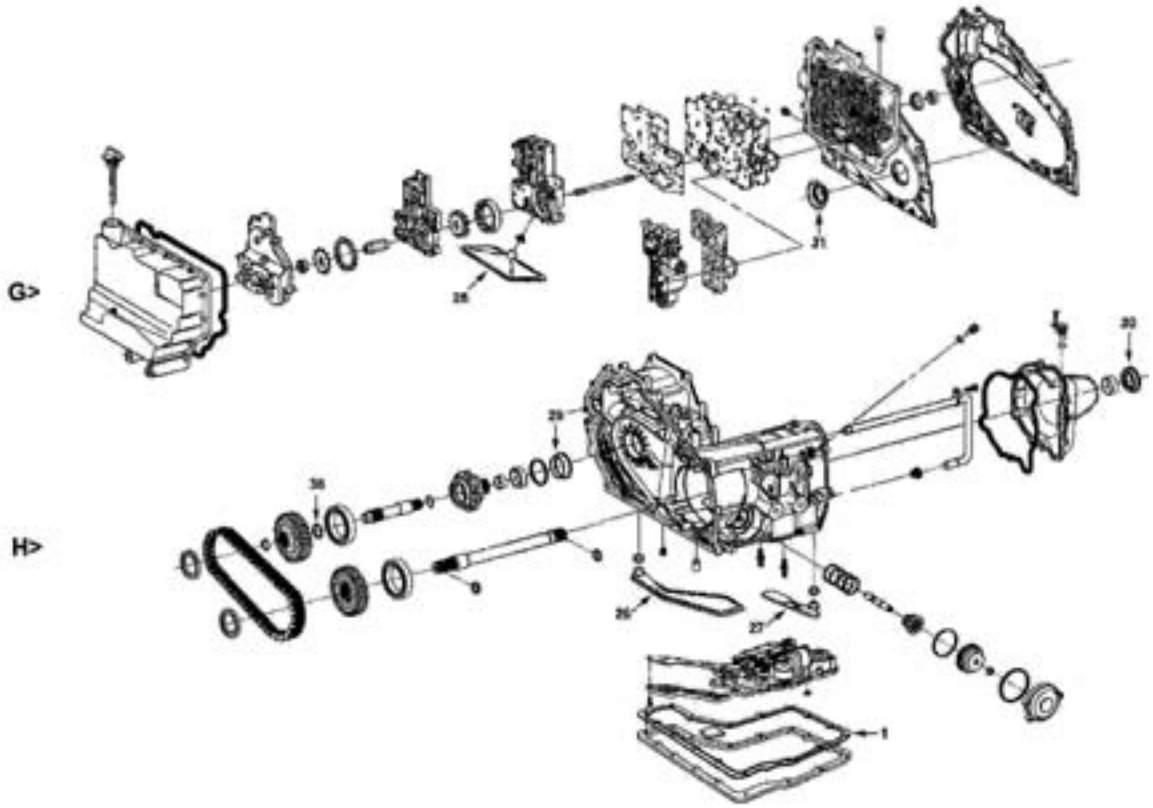


| ILL | DESCRIPTION | YEARS | FRICTION MODULE | STEEL MODULE | OVERHAUL KIT | BANNER KIT | MASTER KIT |
|---|---|---|---|---|---|---|---|
| **KITS** | | | | | | | |
| KT | Rebuilding Kit - without Molded Pistons | 93-94 | 111752 | 111753 | 111800 | 111901LS | 111901 |
| KT | Rebuilding Kit - without Molded Pistons | 95-On | 111752A | 111753A | 111800 | 111901ALS | 111901A |

| ILL | ALTO NO | REF NO | DESCRIPTION | SPEC | YEAR | QTY | NOTES |
|---|---|---|---|---|---|---|---|
| **MISCELLANEOUS GASKETS & KIT COMPONENTS** | | | | | | | |
| 1H | 111816 | 24209512 | Gasket, Oil Pan | M.Rubber | 93-On | 1 | |
| **FRICTION CLUTCHES** | | | | | | | |
| 2E | 111700 | 24206898 | Forward Clutch | .081 | 93-On | 5 | Tan - 53T - OD: 6.416" - SB |
| 3A | 111702 | 8681371 | 2nd Clutch | .081 | 93-94 | 3 | Heg - 54T - OD: 7.522" - SM |
| 3A | 111702-180 | 24201546 | 2nd Clutch | .071 | 95-On | 4 | Heg - 54T - OD: 7.522" - SM |
| 4C | 111704 | 8684832 | 3rd Clutch | .081 | 93-On | 4 | Tan - 26T - OD: 5.941" - SB |
| 5B | 111706 | 24206838 | Reverse Clutch | .081 | 93-On | 3 | Tan - 26T - OD: 5.941" - SB |
| 6E | 111708 | 8677829 | Coast Clutch | .081 | 93-94 | 2 | Tan - 51T - OD: 6.258" - SB |
| 6E | 111708A | 24206896 | Coast Clutch | .081 | 95-On | 2 | Tan - 53T - OD: 6.258" - SB |
| **STEEL CLUTCHES** | | | | | | | |
| 7E | 111701 | 8679584 | Forward Clutch | .077 | 93-On | 4 | 16T - ID: 5.188" |
| 17E | TBA | 8684654 | Forward Clutch - belleville | | 94-On | 1 | |
| 8A | 111703 | 8681834 | 2nd Clutch | .091 | 93-94 | 2 | 5T - ID: 5.560" |
| 8A | 111703-205 | 8684721 | 2nd Clutch | .081 | 95-On | 3 | 5T - ID: 5.560" |
| 9A | TBA | 8681832 | 2nd Clutch - wave | | 93-94 | 1 | |
| 9A | TBA | 24201542 | 2nd Clutch - wave | | 95-On | 1 | |
| 10C | 111705 | 8677612 | 3rd Clutch | .091 | 93-On | 3 | 22T - ID: 3.980" |
| 11B | 111707 | 8677616 | Reverse Clutch | .091 | 93-On | 3 | 22T - ID: 4.695" |
| 12E | 111709 | 8677808 | Coast Clutch | .123 | 93-On | 1 | 8T - ID: 5.187" |
| **PRESSURE PLATES** | | | | | | | |
| 13E | TBA | 8684655 | Forward Clutch - backing | .290 | 93-On | AR | |
| 13E | TBA | 8684662 | Forward Clutch - backing | .361 | 93-98 | AR | |
| 13E | TBA | 8684663 | Forward Clutch - backing | .371 | 93-98 | AR | |

# GENERAL MOTORS
## HYDRAMATIC
## 4T80E 1993-On

| ILL | ALTO NO | REF NO | DESCRIPTION | SPEC | YEAR | QTY | NOTES |
|---|---|---|---|---|---|---|---|
| **PRESSURE PLATES** | | | | | | | ...Continued |
| 13E | TBA | 24202648 | Forward Clutch - backing | .300 | 93-On | AR | |
| 13E | TBA | 24202649 | Forward Clutch - backing | .310 | 93-On | AR | |
| 13E | TBA | 24202650 | Forward Clutch - backing | .320 | 93-On | AR | |
| 13E | TBA | 24202651 | Forward Clutch - backing | .330 | 93-On | AR | |
| 13E | TBA | 24202652 | Forward Clutch - backing | .340 | 93-On | AR | |
| 13E | TBA | 24202653 | Forward Clutch - backing | .350 | 93-On | AR | |
| 14E | TBA | 8680622 | Forward Clutch - apply | | 93 | 1 | |
| 14E | TBA | 8684653 | Forward Clutch - apply | | 94-On | 1 | |
| 15A | TBA | 8684720 | 2nd Clutch - backing | | 93-94 | 1 | |
| 15A | 111762-680 | 24201544 | 2nd Clutch - backing | .268 | 95-On | 1 | |
| 16A | TBA | 8684719 | 2nd Clutch - apply | | 93-94 | 1 | |
| 16A | 111761-460 | 24201543 | 2nd Clutch - apply | .181 | 95-On | 1 | |
| 18C | 111763-800 | 8678722 | 3rd Clutch - backing | .315 | 93-On | 1 | |
| 19C | 111762L358 | 8677613 | 3rd Clutch - apply | .140 | 93-On | 1 | |
| 20B | TBA | 8680118 | Reverse Clutch - backing | .177 | 93-98 | AR | 1st Design |
| 20B | TBA | 8680119 | Reverse Clutch - backing | .200 | 93-98 | AR | 1st Design |
| 20B | TBA | 8680120 | Reverse Clutch - backing | .220 | 93-98 | AR | 1st Design |
| 20B | TBA | 24212649 | Reverse Clutch - backing (C) | | 98-On | AR | 2nd Design |
| 20B | TBA | 24212650 | Reverse Clutch - backing (D) | | 98-On | AR | 2nd Design |
| 20B | TBA | 24212651 | Reverse Clutch - backing (E) | | 98-On | AR | 2nd Design |
| 21B | TBA | 24200288 | Reverse Clutch - apply | | 93-98 | 1 | 1st Design |
| 21B | TBA | 24212652 | Reverse Clutch - apply | | 98-On | 1 | 2nd Design |
| 22E | 111764A | 8684653 | Coast Clutch - backing | | 93-On | 1 | |
| 23E | TBA | 8679837 | Coast Clutch - apply | | 93-On | 1 | |
| **BANDS** | | | | | | | |
| 24A | 111950 | 8684246 | 4th Clutch | Tan | 93-On | 1 | |
| 25E | 111951 | 24204502 | Low/Reverse (Double wrap) | Tan | 93-On | 1 | |
| **FILTERS** | | | | | | | |
| KT | FK111940 | NA | Filter Kit, contains Left & Right scav. filters | | 93-On | 1 | |
| 26H | 111940 | 24207361 | Left Scavenger Filter | | 93-On | 1 | |
| 27H | 111942 | 8679416 | Right Scavenger Filter | | 93-On | 1 | |
| 28G | 111944 | 8681416 | Filter in side cover | | 93-On | 1 | |
| **METAL CLAD SEALS** | | | | | | | |
| 29H | 111400 | 8677749 | Front Pump | | 93-On | 1 | |
| 30H | 111425 | 8677554 | Right Axle | | 93-On | 1 | |
| 31G | 111426 | 8679679 | Left Axle | | 93-On | 1 | |
| N I | 048402A | 8644709 | Manual Lever | | 93-On | 1 | |
| **SEALING RINGS** | | | | | | | |
| KT | 111600 | C390 | Sealing Ring Kit - 5P/2R/3T | | 93-On | 1 | |
| 32A | 111100 | 8678234 | Driven Sprocket Support (2nd Clutch) | Peak® | 93-On | 2 | Vespel® may be substituted |
| 33A | 111050 | 8678234 | Quad Seal expander for Above | Rubber | 93-On | 2 | |
| 34B | 062101 | 8656342 | Input Shaft | | 93-On | 2 | |
| 35F | 062102 | 8679587 | Input & Coast Support | | 93-On | 3 | |
| 36H | 062103 | 8679881 | Drive sprocket rear | | 93-On | 1 | |
| **SNAP RINGS** | | | | | | | |
| 37B | TBA | 8683742 | Reverse Clutch Drum | | 93-On | 1 | |
| 38C | TBA | 8683742 | 3rd Clutch Drum | | 93-On | 1 | |
| 39E | TBA | 8678880 | Forward Clutch Drum | | 93-On | 1 | |
| 40F | TBA | 8681080 | Final Drive Differential Carrier | | 93-On | 1 | |
| **MISCELLANEOUS** | | | | | | | |
| 41A | 111330 | 24207753 | Bonded Piston, 2nd Clutch | | 93-On | 1 | |
| 42C | 111331 | 24207754 | Bonded Piston, 3rd Clutch | | 93-On | 1 | |
| 43E | 111332 | 24207755 | Bonded Piston, Coast Clutch | | 93-On | 1 | |

**NOTES**

# GENERAL MOTORS
## SATURN AF23-5 5 SPEED
## JATCO AW235
## 2003-On

| ILL | DESCRIPTION | YEARS | FRICTION MODULE | STEEL MODULE | OVERHAUL KIT | BANNER KIT | MASTER KIT |
|---|---|---|---|---|---|---|---|
| **KITS** | | | | | | | |
| KT | Rebuilding Kit - use with Differential #24226999 & 24228580 | 03-On | 182752 | 182753 | 182800 | 182901LS | 182901 |
| KT | Rebuilding Kit - use with Differential #24219881, 24224464 & 24224483 | 03-On | 182752A | 182753 | 182800 | 18290A1LS | 182901A |

| ILL | ALTO NO | REF NO | DESCRIPTION | SPEC | YEAR | QTY | NOTES |
|---|---|---|---|---|---|---|---|
| **FRICTION CLUTCHES** | | | | | | | |
| N I | 159702-175 | 24220650 | Forward | .068/1.73 | 03-On | 4 | Heg - 49T - OD: 5.375" - SB |
| N I | 110704A160 | 24220537 | 2nd Brake (B2) | .067/1.7 | 03-On | 3 | Heg - 40T - OD: 6.302" - SM |
| N I | 110700C175 | 24220532 | 2nd Coast (B1) | .068/1.73 | 03-On | 3 | Heg - 34T - OD: 4.258" - SM |
| N I | 110700B150 | 24228586 | Direct (C2) - use with differential# 24226999 & 24228580 | .059/1.5 | 03-On | 4 | Heg - 34T - OD: 4.254" - SB |
| N I | 110700B175 | 24220648 | Direct (C2) - use with differential# 24219881, 24224464 & 24224483 | .068/1.73 | 03-On | 4 | Heg - 34T - OD: 4.254" - SB |
| N I | 110700A170 | 24220778 | 4-5 Clutch (C1) | .067/1.7 | 03-On | 4 | Heg - 34T - OD: 4.482" - SM |
| N I | 110704 | 24220499 | Low/Reverse (B3) | .067/1.7 | 03-On | 4 | Tan - 33T - OD: 6.298" - SM |
| N I | 159712-175 | 24220563 | Reverse (B5) | .068/1.73 | 03-On | 6 | Heg - 47T - OD: 5.551" - SB |
| **STEEL CLUTCHES** | | | | | | | |
| N I | 110703-195 | 24220649 | Forward | .077/1.96 | 03-On | 4 | 12T - ID: 4.481" |
| N I | 110707B250 | 24224385 | 2nd Brake (B2) | .098/2.49 | 03-On | 2 | 10T - ID: 5.538" |
| N I | 110709 | 24220531 | 2nd Coaast (B1) | .071/1.8 | 03-On | 3 | 8T - ID: 3.582" |
| N I | 110701 | 24220647 | Direct (C2) | .071/1.8 | 03-On | 4 | 12T - ID: 3.582" |
| N I | 110701A180 | 24220777 | 4-5 Clutch (C1) | .071/1.8 | 03-On | 4 | 18T - ID: 3.582" |
| N I | 159705-180 | 24220500 | Low/Reverse (B3) | .071/1.8 | 03-On | 3 | 12T - ID: 5.657" |
| N I | 159713-180 | 24220562 | Reverse (B5) | .071/1.8 | 03-On | 6 | 12T - ID: 4.898" |

## NOTES

# GENERAL MOTORS

## SATURN TAAT
## MP6. MP7
## 1991-On

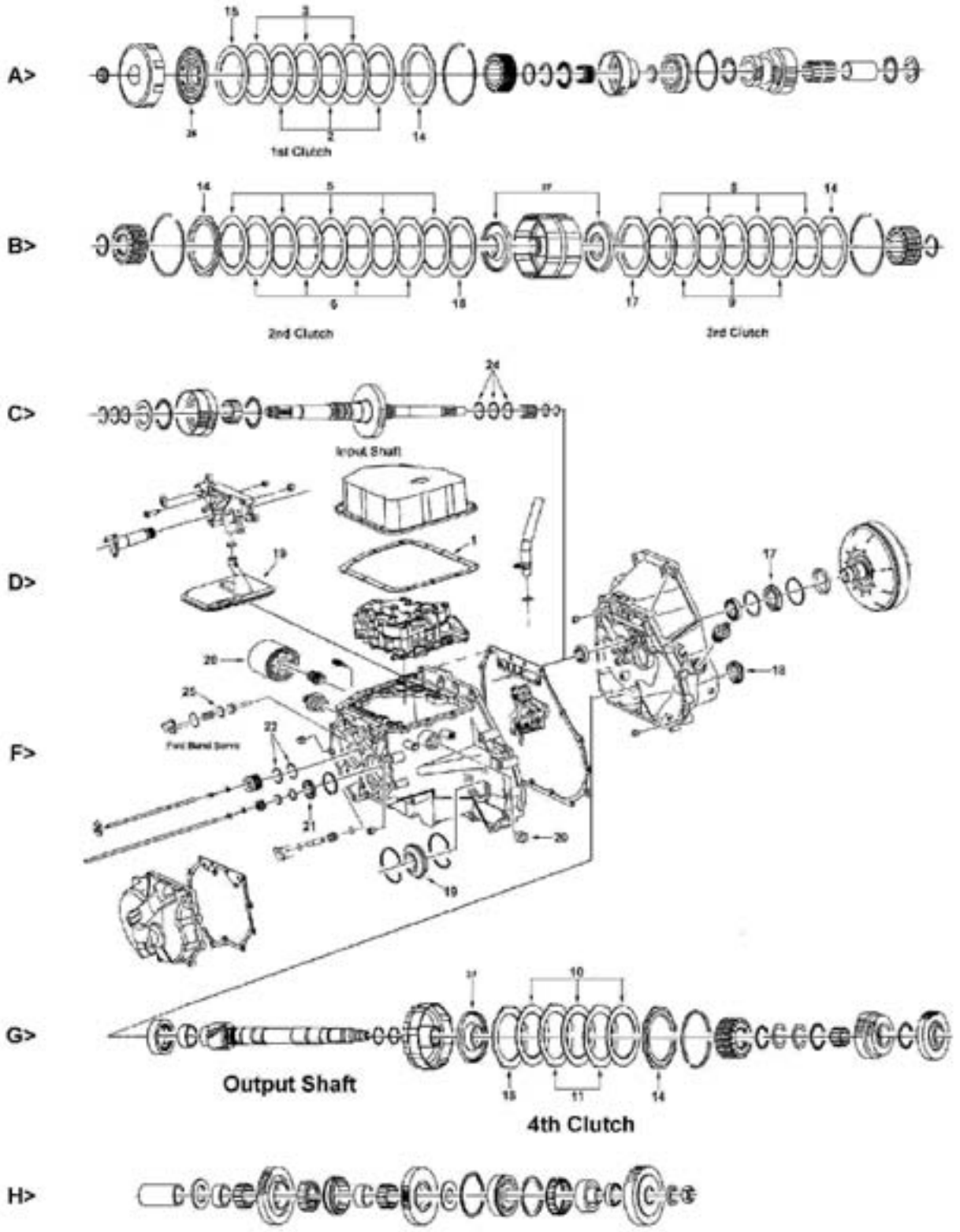

# GENERAL MOTORS
## SATURN TAAT
## MP6. MP7
## 1991-On

| ILL | DESCRIPTION | YEARS | FRICTION MODULE | OVERHAUL KIT | BANNER KIT | MASTER KIT |
|---|---|---|---|---|---|---|
| **KITS** | | | | | | |
| KT | Rebuilding Kit | 91-On | 102750 FR & ST | 102800 | NA | 102901 |

| ILL | ALTO NO | REF NO | DESCRIPTION | SPEC | YEAR | QTY | NOTES |
|---|---|---|---|---|---|---|---|
| **MISCELLANEOUS GASKETS & KIT COMPONENTS** | | | | | | | |
| 1D | 102816 | 21001683 | Gasket, VB cover | Cork/Rub | 91-96 | 1 | |
| 1D | 102816-OE | 21003202 | Gasket, VB cover | M.Rubber | 97-On | 1 | |
| **FRICTION CLUTCHES** | | | | | | | |
| | | | (All Clutches are 1 Sided Friction) | | | | |
| 2A | 102700 | 21002870 | 1st - internal spline | .061 | 91-On | 3 | Tan - 36T - OD: 4.486" - SM |
| 3A | 102701 | 21002871 | 1st - external spline | .061 | 91-On | 3 | Tan - 8T - ID: 3.490" - PL |
| 5B | 102700 | 21002870 | 2nd - internal spline | .061 | 91-On | 5 | Tan - 36T - OD: 4.486" - SM |
| 6B | 102701 | 21002871 | 2nd - external spline | .061 | 91-On | 5 | Tan - 8T - ID: 3.490" - PL |
| 8B | 102700 | 21002870 | 3rd - internal spline | .061 | 91-On | 4 | Tan - 36T - OD: 4.486" - SM |
| 9B | 102701 | 21002871 | 3rd - external spline | .061 | 91-On | 4 | Tan - 8T - ID: 3.490" - PL |
| 10G | 102700 | 21002870 | 4th - internal spline | .061 | 91-On | 3 | Tan - 36T - OD: 4.486" - SM |
| 11G | 102701 | 21002871 | 4th - external spline | .061 | 91-On | 2 | Tan - 8T - ID: 3.490" - PL |
| **PRESSURE PLATES** | | | | | | | |
| 14 | TBA | 21001597 | all Clutches - backing | | 91-98 | 4 | |
| 14 | TBA | 21003585 | all Clutches - backing | | 99-On | 4 | |
| 15A | TBA | 21002581 | 1st Clutch - apply | | 91-On | 1 | |
| 16B | TBA | 21003173 | 2nd Clutch - apply | | 91-On | 1 | |
| 17B | 102703 | 21002567 | 3rd Clutch - apply | .130 | 91-On | 1 | 8T - ID: 3.490" |
| 18G | 102703 | 21002567 | 4th Clutch- apply | .130 | 91-On | 1 | 8T - ID: 3.490" |
| **FILTERS** | | | | | | | |
| KT | FK102940 | NA | Filter Kit (internal filter) | | 91-On | 1 | |
| 19D | 102940 | 21002346 | Filter - internal | | 91-On | 1 | |
| 20D | 102942 | 21002303 | Filter - external (spin-on) | | 91-On | 1 | |
| **METAL CLAD SEALS** | | | | | | | |
| 17D | 102400 | 21002873 | Front Pump | | 91-On | 1 | |
| 18F | 102425 | 21002873 | Right Axle (converter side) | | 91-On | 1 | |
| 19F | 102426 | 21002872 | Lext Axle (case side) | | 91-On | 1 | |
| 20F | 102410 | 21002778 | Manual Lever | | 91-94 | 1 | |
| 20F | 102410A | 21002853 | Manual Lever | | 94-On | 1 | |
| 21F | 102402 | 21001662 | Output Shaft | | 91-On | 1 | |
| **SEALING RINGS** | | | | | | | |
| KT | 102600 | C-392 | Sealing RIng Kit - 6T | | 91-On | 1 | |
| 22F | 102100 | 21002684 | Input Shaft hub | | 91-On | 2 | |
| 24C | 102101 | 21002685 | Input Shaft to Stator shaft | | 91-On | 3 | |
| 25F | 102102 | 21002298 | Forward/Reverse Servo piston | | 91-On | 1 | |
| **MISCELLANEOUS** | | | | | | | |
| 26A | 102330 | 21001581 | Bonded Piston - 1st | M.Rubber | 91-On | 1 | |
| 27 | 102331 | 21001582 | Bonded Piston - 2nd, 3rd, & 4th | M.Rubber | 91-On | 3 | |

**NOTES**

# GENERAL MOTORS

## GM / ISUZU
## JF403E
## 1990-93

A>

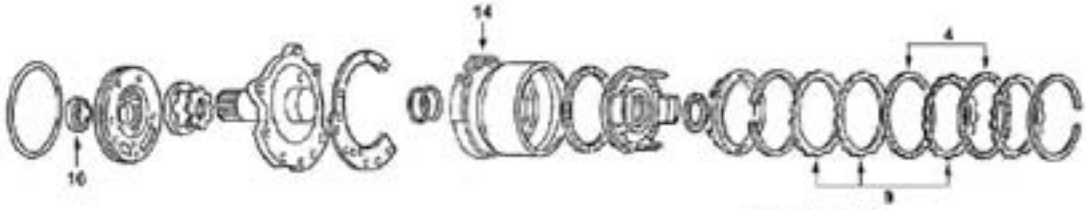


B>

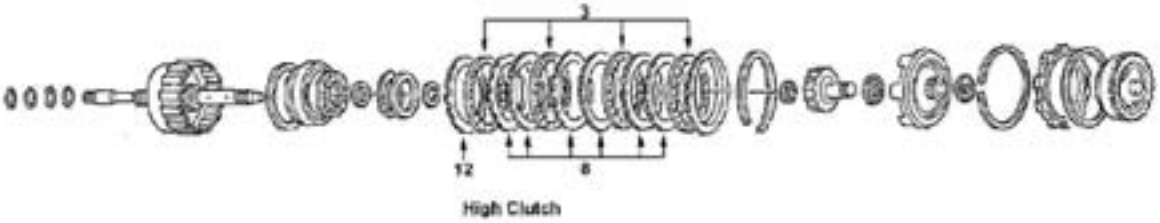


C>

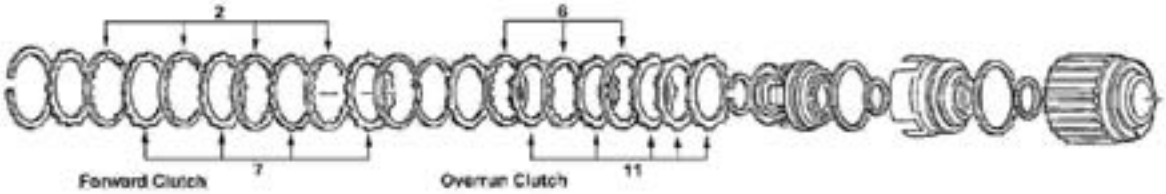


D>

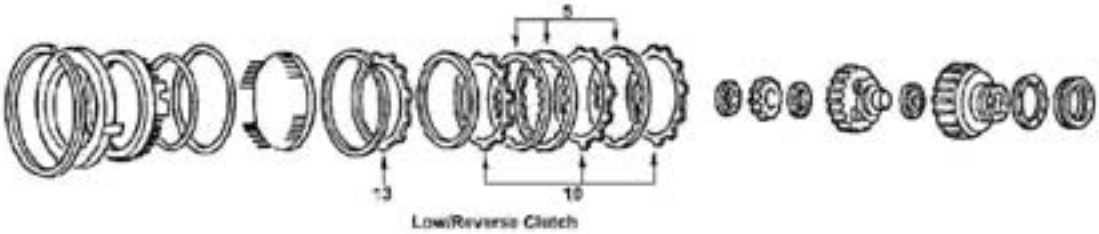


E>

F>

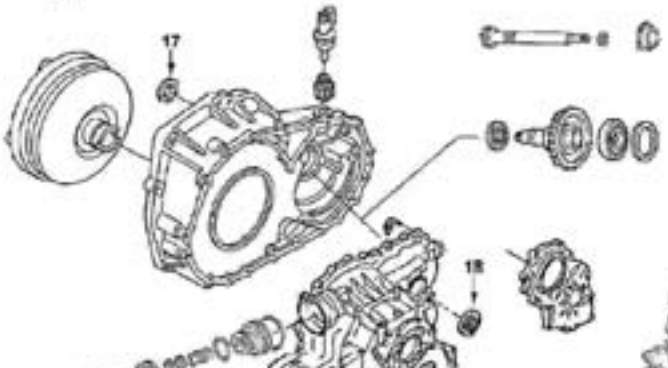


G>

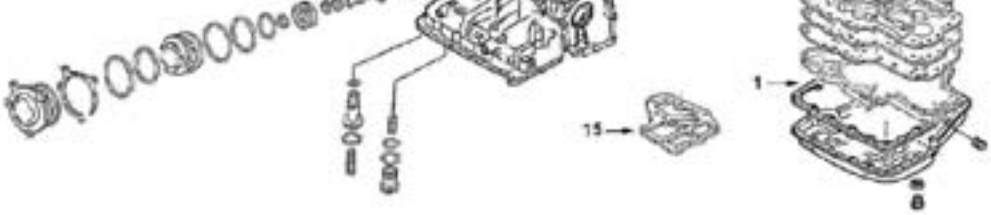

# GENERAL MOTORS
## GM / ISUZU
## JF403E
## 1990-93

| ILL | DESCRIPTION | YEARS | FRICTION MODULE | STEEL MODULE | OVERHAUL KIT | BANNER KIT | MASTER KIT |
|---|---|---|---|---|---|---|---|
| **KITS** | | | | | | | |
| KT | Rebuilding Kit | 90-93 | 105752 | 105753 | 105800 | 105901LS | 105901 |

| ILL | ALTO NO | REF NO | DESCRIPTION | SPEC | YEAR | QTY | NOTES |
|---|---|---|---|---|---|---|---|
| **MISCELLANEOUS GASKETS & KIT COMPONENTS** | | | | | | | |
| 1G | 105816 | 94385731 | Gasket, Oil Pan | Cork/Rub | 90-93 | 1 | |
| **FRICTION CLUTCHES** | | | | | | | |
| 2C | 105700 | 94385824 | Forward | .063/1.6 | 90-93 | 4 | Heg - 32T - OD: 5.424" - PL |
| 3B | 105702A | 94385851 | High | .063/1.6 | 90-93 | 3 | Heg - 20T - OD: 4.416" - PL |
| 4A | 105704 | 97066813 | Reverse | .063/1.6 | 90-93 | 2 | Heg - 28T - OD: 5.480" - PL |
| 5D | 105706 | 97069350 | Low / Reverse | .063/1.6 | 90-93 | 7-8 | Heg - 32T - OD: 6.455" - PL |
| 6C | 105708 | 94385834 | Overrun | .063/1.6 | 90-93 | 3 | Tan - 20T - OD: 4.940" - PL |
| **STEEL CLUTCHES** | | | | | | | |
| 7C | 105701 | 94385825 | Forward | .071/1.8 | 90-93 | 6 | 32T - ID: 4.928" |
| 8B | 105703A | 94385852 | High | .087/2.2 | 90-91 | 4 | 28T - ID: 4.686" |
| 8B | 105703A | 94385852 | High | .087/2.2 | 92-93 | 1 | 28T - ID: 4.686" |
| 8B | 105703A200 | 97043655 | High | .078/2.0 | 92-93 | 6 | 28T - ID: 4.686" |
| 8B | 105703A140 | NA | High - selective | .055/1.4 | 90-93 | AR | 28T - ID: 4.686" |
| 9A | 105705 | 94385872 | Reverse | .071/1.8 | 90-93 | 2 | 30T - ID: 4.957" |
| 10D | 105707A | 94385691 | Low / Reverse (wide Tooth) | .071/1.8 | 90-93 | 6 | 10T - ID: 5.900" |
| 11C | 105709 | 94387815 | Overrun | .063/1.6 | 90-93 | 3 | 8T - ID: 4.447" |
| **PRESSURE PLATES** | | | | | | | |
| 12B | 105761-310 | 97043657 | High - backing | .122/3.1 | 90-93 | AR | |
| 12B | 105761-330 | 97043665 | High - backing | .130/3.3 | 90-93 | AR | |
| 12B | 105761-350 | 97043659 | High - backing | .138/3.5 | 90-93 | AR | |
| 12B | 105761-370 | 97048619 | High - backing | .146/3.7 | 90-93 | AR | |
| 12B | 105761-400 | 94385855 | High - backing | .157/4.0 | 90-93 | AR | |
| 13D | 105707A200 | 94385694 | Low / Reverse - apply | .078/2.0 | 90-93 | AR | |
| 13D | 105707A220 | 94385695 | Low / Reverse - apply | .086/2.2 | 90-93 | AR | |
| 13D | 105707A240 | 94385696 | Low / Reverse - apply | .095/2.4 | 90-93 | AR | |
| 13D | 105707A260 | 94385697 | Low / Reverse - apply | .102/2.6 | 90-93 | AR | |
| 13D | 105707A280 | 94385698 | Low / Reverse - apply | .110/2.8 | 90-93 | AR | |
| 13D | 105707A300 | 94385699 | Low / Reverse - apply | .118/3.0 | 90-93 | AR | |
| 13D | 105707A320 | 94385700 | Low / Reverse - apply | .126/3.2 | 90-93 | AR | |
| 13D | 105707A340 | 94385701 | Low / Reverse - apply | .134/3.4 | 90-93 | AR | |
| **BANDS** | | | | | | | |
| 14A | 105950 | 94385793 | Brake | Tan | 90-93 | 1 | |
| **FILTERS** | | | | | | | |
| KT | FK105940 | NA | Filter Kit | | 90-93 | 1 | |
| 15G | 105940 | 94385937 | Filter | | 90-93 | 1 | |
| **METAL CLAD SEALS** | | | | | | | |
| 16A | 107400 | 94385707 | Front Pump | | 90-93 | 1 | |
| 17F | 063401A | 97070182 | Axle, Right & Left | 2.157 | 90-93 | 1 | |
| **SEALING RINGS** | | | | | | | |
| KT | 105600 | E512 | Sealing Ring Kit - 2M / 10T | | 90-93 | 1 | |

**NOTES**

# ALLISON

## AT540, 542, 543, 545, 1545, VS
## 1970-On

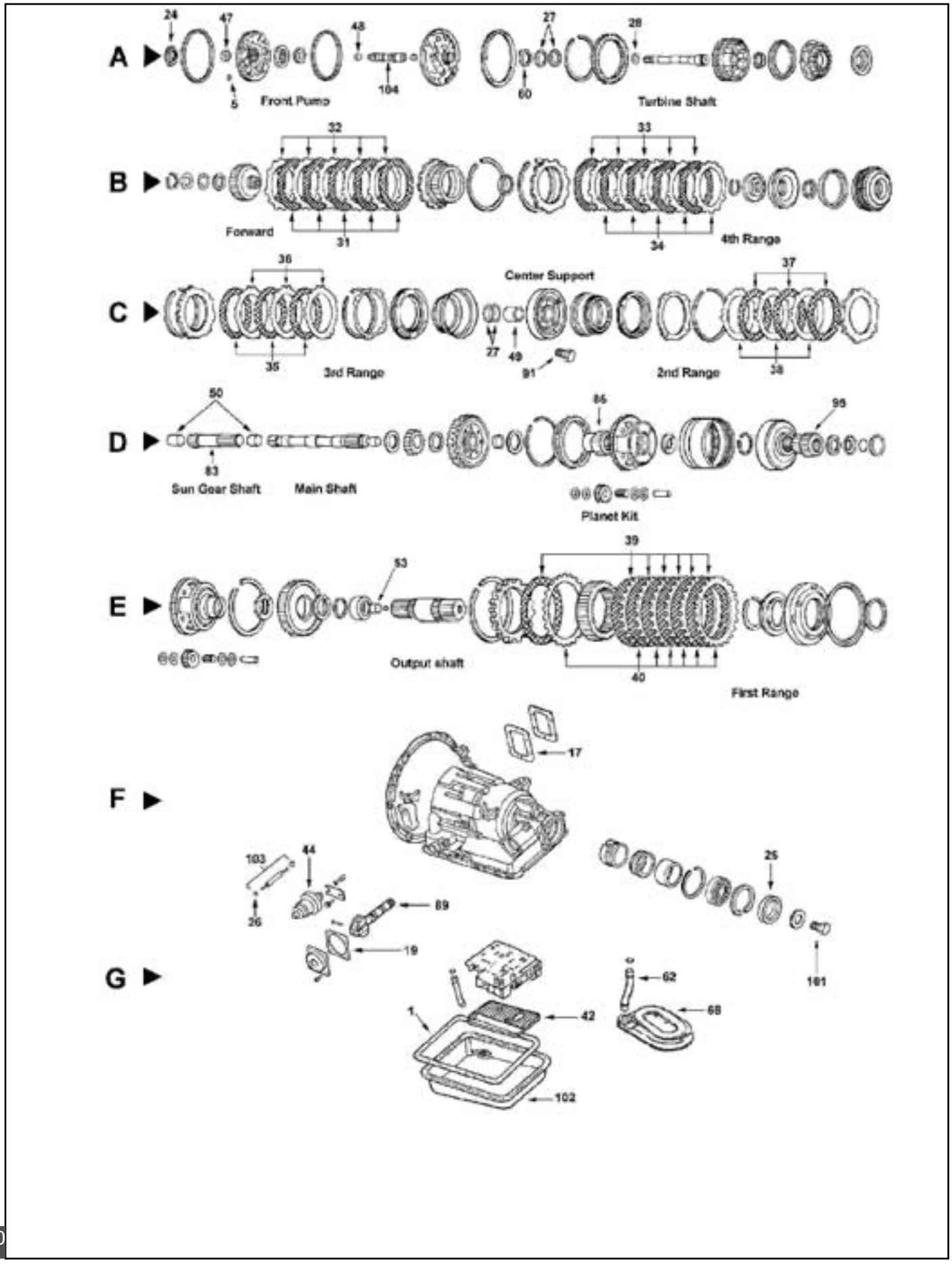

# ALLISON
## AT540, 542, 543, 545, 1545, VS
## 1970-On

| ILL | DESCRIPTION | YEARS | FRICTION MODULE | STEEL MODULE | OVERHAUL KIT | BANNER KIT | MASTER KIT |
|---|---|---|---|---|---|---|---|
| **KITS** | | | | | | | |
| KT | Rebuilding Kit - AT540, 542, 545 | 70-91 | 055752C | 055753 | 055800 | 055901LS | 055901 |
| KT | Rebuilding Kit - AT540, 542, 545 | 92-On | 055752B | 055753A | 055800 | 055907LS | 055907 |
| KT | Rebuilding Kit - AT540, 542, 545 with OE Style Gasket Set | 70-91 | 055752C | 055753 | 055800A | 055901ALS | 055901A |
| KT | Rebuilding Kit - AT540, 542, 545 with OE Style Gasket Set | 92-On | 055752B | 055753A | 055800A | 055907ALS | 055907A |

| ILL | ALTO NO | REF NO | DESCRIPTION | SPEC | YEAR | QTY | NOTES |
|---|---|---|---|---|---|---|---|
| **MISCELLANEOUS GASKETS & KIT COMPONENTS** | | | | | | | |
| 1G | 055816 | 29501160 | Gasket, oil pan | Cork/Rub | 70-On | 1 | |
| 1G | 055815A | 29501160 | Gasket, oil pan - Armstrong | Fiber | 70-On | 1 | |
| 17F | 055006 | 23016683 | Gasket, PTO cover | Cork/Rub | 70-On | 1 | |
| 17F | 055006A | 23016683 | Gasket, PTO cover - Armstrong | Fiber | 70-On | 1 | |
| 19G | 055007 | 23018625 | Gasket, Governor cover | Cork/Rub | 70-On | 1 | |
| 19G | 055007A | 23018625 | Gasket, Governor cover - Armstrong | Fiber | 70-On | 1 | |
| **FRICTION CLUTCHES *Featuring KRYPTONITE II™ Friction Material** | | | | | | | |
| 31B | 055700-200 | 23042197 | Forward * | .080/2.03 | 70-On | 5 | HEGHD - 42T - OD: 5.89" |
| 40E | 055702B246 | 23042198 | 1st Range * | .097/2.46 | 70-On | 7 | HEGHD - 60T - OD: 8.15" |
| 37C | 055724A255 | 23042199 | 2nd Range * | .100/2.55 | 70-On | 3-4 | HEGHD - 80T - OD: 9.100" |
| 35C | 055724A255 | 23042199 | 3rd Range * | .100/2.55 | 70-On | 3-4 | HEGHD - 80T - OD: 9.100" |
| 35/37 C | 055704B250 | 29537887 | 2nd & 3rd Range - Hardened spline * | .100/2.55 | 70-On | 6-8 | HEGHD - 80T - OD: 9.100" |
| 33B | 055700-200 | 23042197 | 4th Range * | .080/2.03 | 70-On | 5 | HEGHD - 42T - OD: 5.89" |
| N I | 055710 | NA | VS series | .107/2.70 | ALL | AR | Heg - 59T - OD: 8.38" |
| **STEEL CLUTCHES** | | | | | | | |
| 32B | 055701-230 | 6836518 | Forward | .091/2.30 | 70-On | 4-5 | 14T - ID: 4.6" |
| N I | 055701W250 | 29505875 | Forward - wave | .098/2.55 | 92-On | 1 | 14T - ID: 4.6" |
| 40E | 055703 | 6831705 | 1st Range | .098/2.55 | 70-On | 7 | 30T - ID: 6.5" |
| 38C | 055705 | 29515399 | 2nd Range | .098/2.55 | 70-On | 3 | 9T - ID: 7.25" |
| 36C | 055705 | 29515399 | 3rd Range | .098/2.55 | 70-On | 3 | 9T - ID: 7.25" |
| 34B | 055701-230 | 6836518 | 4th Range | .091/2.30 | 70-On | 5-6 | 14T - ID: 4.6" |
| N I | 055711 | NA | VS series | .089/2.25 | ALL | AR | 15T - ID: 6.15" |
| **FILTERS** | | | | | | | |
| KT | FK031946 | 6884270 | Filter Kit, thin Stainless Steel Filter with OE Style Gsk | | 70-On | 1 | |
| KT | FK031946A | 6884270 | Filter Kit, thin Stainless Steel Filter with Cork Gsk | | 70-On | 1 | |
| KT | FK056940A | 23019201 | Filter Kit, thick filter OE Style Gsk without tube | | 70-On | 1 | Aftermarket style |
| KT | FK056940B | 23019201 | Filter Kit, thick filter Cork Gsk without tube | | 70-On | 1 | Aftermarket style |
| KT | FKF153A | 29502302 | Filter Kit, thick filter OE Style Gsk without tube | | 70-On | 1 | OE style |
| KT | FKF153B | 29502302 | Filter Kit, thick filter Cork Gsk without tube | | 70-On | 1 | OE style |
| 42G | 031946 | 29502295 | Filter - thin with stainless steel screen | | 70-On | 1 | |
| 42G | 031948A | 6259423 | Filter - Brass | | 70-On | 1 | |
| 68G | 056940A | 6883044 | Filter - thick without filter tube | | 70-On | 1 | Aftermarket style |
| 68G | F153A | 6883044 | Filter - thick without filter tube | | 70-On | 1 | OE style |
| | | | Note: To convert AT540 to AT545 requires filter tube and thick filter | | | | |
| **METAL CLAD SEALS** | | | | | | | |
| 24A | 055400 | 23015975 | Front Pump | Vamac® | 70-On | 1 | |
| 25F | 055405 | 6778050 | Extension Housing | | 70-On | 1 | |
| 26G | 032410C | 23010610 | Manual Lever | | 70-On | 1 | |
| **SEALING RINGS** | | | | | | | |
| KT | 055600 | NL | Sealing Ring Kit (with Teflon) | | 70-On | 1 | |
| KT | 055600A | NL | Sealing Ring Kit (with Vespelr) | | 70-On | 1 | |
| 27A | 055100 | 23046598 | Sealing Ring, Front pump | Teflon | 70-On | 2 | |
| 27A | 055100A | 23046598 | Sealing Ring, Front pump | Vespel® | 70-On | 2 | |
| 28A | 055101 | 8616052 | Sealing Ring, Input Shaft | Metal | 70-On | 1 | |
| 27C | 055100 | 23046598 | Sealing Ring, Center Support | Teflon | 70-On | 2 | |

# ALLISON
## AT540, 542, 543, 545, 1545, VS
## 1970-On

| ILL | ALTO NO | REF NO | DESCRIPTION | SPEC | YEAR | QTY | NOTES |
|---|---|---|---|---|---|---|---|
| **SEALING RINGS** | | | | | | | ...Continued |
| 27C | 055100A | 23046598 | Sealing Ring, Center Support | Vespel® | 70-On | 2 | |
| **MODULATORS** | | | | | | | |
| 44F | 055500 | 8629941 | Modulator - Large Black cannister | | 70-On | 1 | with O Ring |
| 44F | 055502 | 3039092 | Modulator - Dual Diaphragm | | 70-On | 1 | with O Ring |
| **BUSHINGS** | | | | | | | |
| KT | 055625 | NL | Bushing Kit | | 70-On | 1 | |
| 47A | 055200 | 23018806 | Front Pump | Babbit | 70-On | 1 | |
| 48A | 031201 | 6836272 | Stator Shaft - Front | | 70-On | 1 | |
| 49C | 055205 | 23012990 | Center Support | | 70-On | 1 | |
| 50D | 031201 | 6836272 | Sun Gear Shaft (Front & Rear) | | 70-On | 2 | |
| 53E | 055208 | 8622947 | Output Shaft | | 70-On | 1 | |
| **WASHERS** | | | | | | | |
| 60A | 055150-147 | 6831620 | TW, Front Pump - "0" | .058 | 70-On | AR | |
| 60A | 055150-188 | 6831621 | TW, Front Pump - "1" | .074 | 70-On | AR | |
| 60A | 055150-230 | 6831622 | TW, Front Pump - "2" | .091 | 70-On | AR | |
| 60A | 055150-272 | 6831623 | TW, Front Pump - "3" | .107 | 70-On | AR | |
| 60A | 055150-312 | 6831624 | TW, Front Pump - "4" | .123 | 70-On | AR | |
| 60A | 055150-355 | 6831625 | TW, Front Pump - "5" | .140 | 70-On | AR | |
| N I | 055152-015 | 6837429 | TW, Turbine Brg. shim - Gold | .015 | 70-On | AR | AT543 |
| N I | 055152-030 | 6837430 | TW, Turbine Brg. shim - Chrome | .030 | 70-On | AR | AT543 |
| N I | 055152-042 | 6837431 | TW, Turbine Brg. shim - Plain | .042 | 70-On | AR | AT543 |
| N I | 055152-060 | 6837432 | TW, Turbine Brg. shim - Black | .060 | 70-On | AR | AT543 |
| N I | 055152-075 | 6837433 | TW, Turbine Brg. shim - Copper | .075 | 70-On | AR | AT543 |
| N I | 031157 | 23013454 | Washer, 4th clutch driving hub | | 70-On | AR | |
| **MISCELLANEOUS** | | | | | | | |
| N I | 055557 | 23010915 | Torque Converter bolt - Metric | M8 | 70-On | AR | |
| N I | 055558 | 6885391 | Torque Converter bolt - English | 3/8" - 16 | 70-On | AR | |
| 5A | 055003 | 29512113 | Washer, Front pump bolts | | 70-On | 17 | |
| N I | 055552 | 3909063 | Washer (Lock), Center support retainer | | 70-On | 8 | |
| 91C | 055554 | 6836587 | Bolt, Center support to case | | 70-On | 1 | |
| 101F | 056557 | 29510838 | Bolt, Output shaft | | 70-On | 1 | |
| **HARD PARTS** | | | | | | | |
| KT | TBA | NA | Manual Control lever repair kit | | 70-On | 1 | |
| KT | TBA | 6883938 | Governor gear kit | | 70-On | 1 | |
| 89G | TBA | 6881466 | Governor assembly - ID no 460 | | 70-On | 1 | |
| 89G | 055351 | 6885570 | Governor assembly - ID no 461 | | 70-On | 1 | |
| 89G | 055352 | 6885571 | Governor assembly - ID no 462 | | 70-On | 1 | |
| 85D | TBA | 6835936 | Sun Gear - Center | | 70-On | 1 | |
| 95D | TBA | 6884902 | Sun Gear - Rear | | 70-On | 1 | |
| 83D | TBA | 6835937 | Sun Gear Shaft | | 70-On | 1 | |
| 104A | TBA | 23014304 | Ground Sleeve - with bushing & bearing | | 70-On | 1 | |
| 102G | TBA | 23045906 | Deep oil pan - ribbed with heater hole | | 70-On | 1 | |
| 102G | TBA | 29501358 | Deep oil pan - dual fill tube locations | | 70-On | 1 | |
| 62G | 056565 | 6883046 | Oil Filter tube | | 70-On | 1 | |
| N I | TBA | 9436642 | Plug for heater hole | | 70-On | 1 | |

**NOTES**

# ALLISON

**MT640, 643, 644 - 4sp**
**MT650, 653, 654 - 5sp**

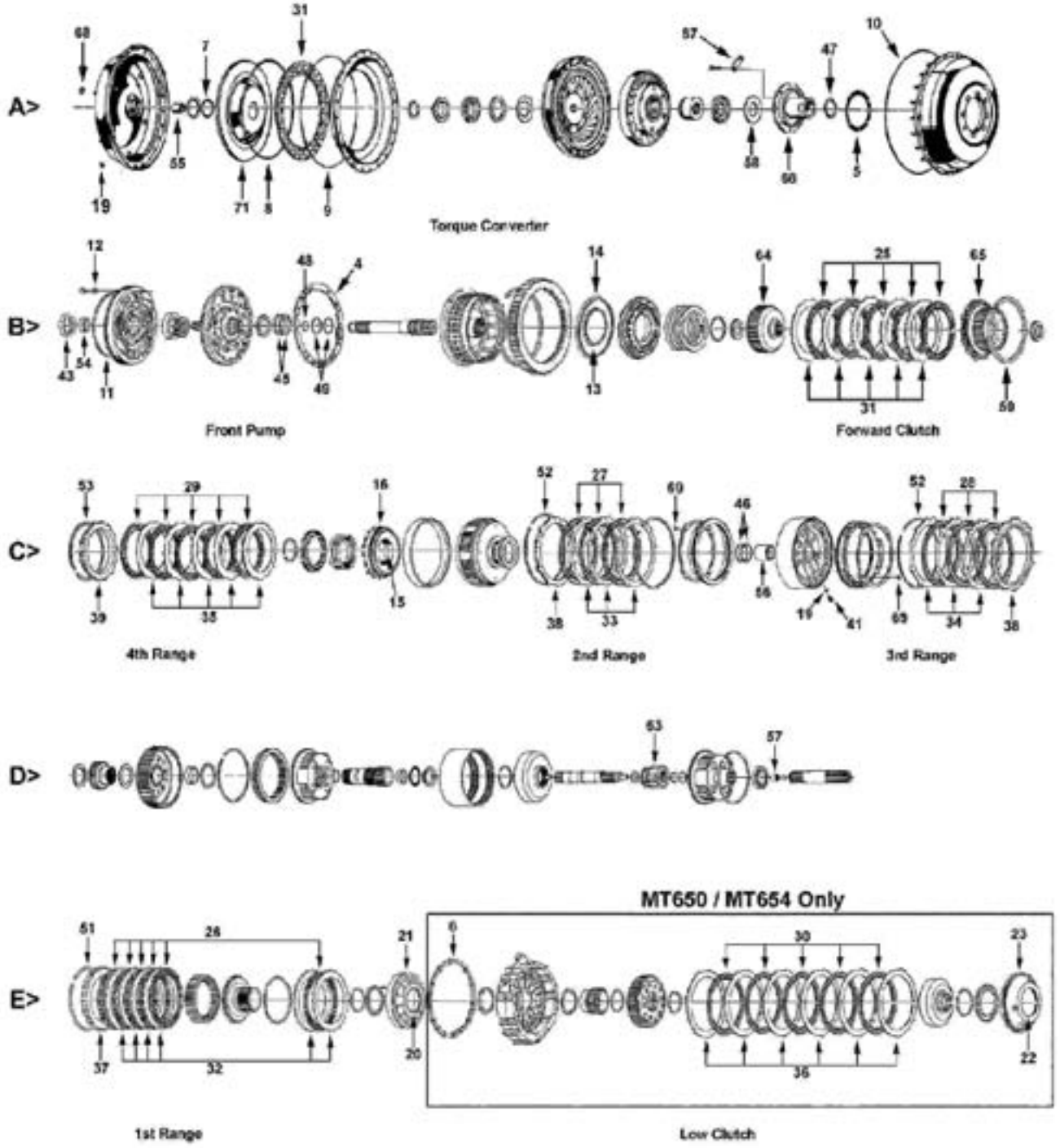

# ALLISON

## MT640, 643, 644 - 4sp
## MT650, 653, 654 - 5sp

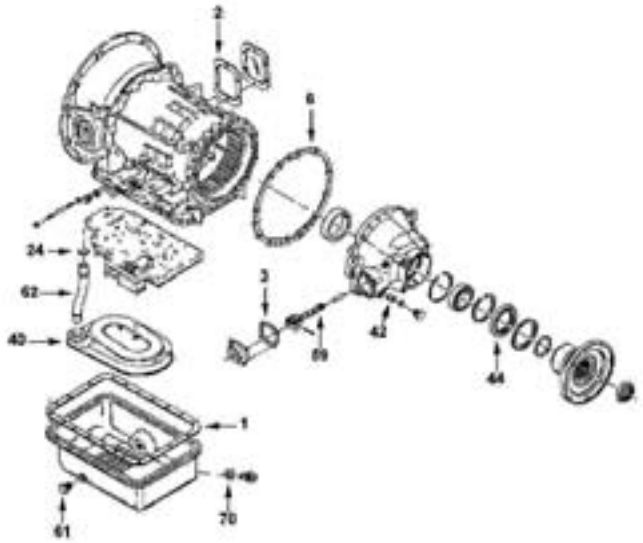


| ILL | DESCRIPTION | YEARS | FRICTION MODULE | STEEL MODULE | OVERHAUL KIT | BANNER KIT | MASTER KIT |
|---|---|---|---|---|---|---|---|
| **KITS** | | | | | | | |
| KT | Rebuilding Kit - MT640, 643, 650, 653 (contains 1 front pump seal #056401) | 72-On | 056752D | 056753 | 056800 | 056901LS | 056901 |
| KT | Rebuilding Kit - MT640, 643, 650, 653 (contains 2 front pump seals #056400A & 056401) | 72-On | 056752D | 056753 | 056800B | 056901BLS | 056901B |
| KT | Rebuilding Kit - MT640, 643, 650, 653 with OE Style Gasket Set (contains 2 front pump seals #056400A & 056401) | 72-On | 056752D | 056753 | 056800A | 056901ALS | 056901A |
| KT | Rebuilding Kit - MT644, 654 (Phase 1) | 72-On | 056752E | 056753A | 056802 | 056903LS | 056903 |
| KT | Rebuilding Kit - MT654 (Phase 2) | 72-On | 056752F | 056753B | 056802 | 056903ALS | 056903A |

| ILL | ALTO NO | REF NO | DESCRIPTION | SPEC | YEAR | QTY | NOTES |
|---|---|---|---|---|---|---|---|
| **MISCELLANEOUS GASKETS & KIT COMPONENTS** | | | | | | | |
| 1F | 055816 | 29501160 | Gasket, Oil pan | Cork/Rub | 72-On | 1 | |
| 1F | 055815A | 29501160 | Gasket, Oil pan - Armstrong | Fiber | 72-On | 1 | |
| 2F | 055006 | 29501161 | Gasket, PTO cover | Cork/Rub | 72-On | 1 | |
| 2F | 055006A | 29501161 | Gasket, PTO cover - Armstrong | Fiber | 72-On | 1 | |
| 3F | 055007 | 23018625 | Gasket, Governor cover | Cork/Rub | 72-On | 1 | |
| 3F | 055007A | 23018625 | Gasket, Governor cover - Armstrong | Fiber | 72-On | 1 | |
| 4B | 056001 | 23046344 | Gasket, Front Pump | | 72-On | 1 | |
| N I | 056008 | 6884872 | Gasket, Lube valve adapter | | 72-On | 1 | |
| 5A | 055008 | 6759971 | Gasket, TC Hub - except MT644/654 | | 72-On | 1 | |
| 5A | 056005 | 6771366 | Gasket, TC Hub - MT644/654 | | 72-On | 1 | |
| 6EF | 056007 | 23045099 | Gasket, Adapter to case | | 72-On | 2 | |
| 7A | 010136B | 6770820 | O Ring, Lockup clutch - inner | Poly | 72-On | 1 | |
| N I | 056835 | NA | Kit, Torque Converter Seal MT643 | | 72-On | 1 | contains 5 seals |
| 8A | 056061 | 6758036 | Lathe Cut, Lockup clutch - outer | | 72-On | 1 | |
| 9A | 055055 | 23016564 | Lathe Cut, Lockup clutch backing plate | | 72-On | 1 | |
| 10A | 055055 | 23016564 | Lathe Cut, TC pump cover - except MT644/654 | | 72-On | 1 | |
| 11B | 056050 | 23016347 | Lathe Cut, Front pump to case | | 72-On | 1 | |
| 12B | 056006 | 6834908 | Washer, Front pump bolt | | 72-On | 12 | |
| KT | 001015 | NA | Kit, Lipseal | | 72-On | 1 | contains 12 Lipseals |
| 13B | 031052 | 23015880 | Lipseal, Forward clutch - inner | | 72-On | 1 | |
| 14B | 056058 | 6833981 | Lipseal, Forward clutch - outer | | 72-On | 1 | |
| 15C | 031052 | 23015880 | Lipseal, 4th Clutch - inner | | 72-On | 1 | |
| 16C | 056058 | 6833981 | Lipseal, 4th Clutch - outer | | 72-On | 1 | |

# ALLISON

## MT640, 643, 644 - 4sp
## MT650, 653, 654 - 5sp

| ILL | ALTO NO | REF NO | DESCRIPTION | SPEC | YEAR | QTY | NOTES |
|---|---|---|---|---|---|---|---|
| **MISCELLANEOUS GASKETS & KIT COMPONENTS** | | | | | | | ...Continued |
| 17C | 056055 | 23011471 | Lipseal, 2nd & 3rd Clutch - inner | | 72-On | 1 | |
| 18C | 056056 | 6883035 | Lipseal, 2nd & 3rd Clutch - outer | | 72-On | 1 | |
| 20E | 056053 | 6883031 | Lipseal, 1st Clutch - inner | | 72-On | 1 | |
| 21E | 056054 | 6883033 | Lipseal, 1st Clutch - outer | | 72-On | 1 | |
| 22E | 056053 | 6883031 | Lipseal, Low Clutch - inner | | 72-On | 1 | |
| 23E | 056056 | 6883035 | Lipseal, Low Clutch - outer | | 72-On | 1 | |
| 24F | 010216B | 6762127 | O Ring, Filter tube | | 72-On | 1 | |
| N I | 010115B | 8658110 | O Ring, Modulator | | 72-On | 1 | |
| N I | 010116B | 6882689 | O Ring, Governor feed filter | | 72-On | 1 | |
| 68A | 056552A | 23014462 | Nut, Flexplate bolt | | 72-On | 6 | |
| 19A | 056566 | 190139 | Nut, Torque Converter | | 72-On | 24 | |
| **FRICTION CLUTCHES *Featuring KRYPTONITE II™ Friction Material** | | | | | | | |
| 25B | 056700C255 | 23042200 | Forward Clutch * | .100 | 72-On | 5-6 | HEGHD 30T - OD:7.182" - PLI |
| 26E | 055704B250 | 59537887 | 1st Range - Hardened spline * | .100 | 72-On | 6 | HEGHD 80T - OD:9.119" - PLI |
| 26E | 055724A255 | 23042199 | 1st Range * | .100 | 72-On | 6 | HEGHD 80T - OD:9.119" - PLI |
| 27C | 056702C325 | 6835720 | 2nd Range * | .128 | 72-On | 3-4 | HEGHD 50T- OD:10.841" - PLI |
| 28C | 056702C325 | 6835720 | 3rd Range * | .128 | 72-On | 3 | HEGHD 50T- OD:10.841" - PLI |
| 29C | 056700C255 | 23042200 | 4th Range * | .100 | 72-On | 4-5 | HEGHD 30T - OD:7.182" - PLI |
| 30E | 056702C325 | 6835720 | Low Range except phase 2 * | .128 | 72-On | 5-6 | HEGHD 50T -OD:10.841" - PLI |
| 30E | 056722B315 | 23042210 | Low Range phase 2 only * | .125 | 72-On | 7 | HEGHD 71T -OD:10.481" - PLI |
| 31A | 056712 | 23048511 | Lockup Clutch (TC) - MT644/654 | .205 | 72-On | 1 | Heg - 73T- OD:14.600" - PLI |
| 31A | 056712A | 23046108 | Lockup Clutch (TC) - except MT644/654 | .186 | 72-On | 1 | Heg - 56T - OD:12.389" - PLI |
| **STEEL CLUTCHES** | | | | | | | |
| 31B | 056701 | 23016610 | Forward | .100 | 72-On | 4-6 | 18T - ID: 5.530" |
| 32E | 056703 | 23016606 | 1st Range | .100 | 72-On | 6 | 36T - ID: 7.333" |
| 33C | 056705 | 23016608 | 2nd Range | .100 | 72-On | 3-4 | 11T - ID: 8.825" |
| 34C | 056705 | 23016608 | 3rd Range | .100 | 72-On | 3 | 11T - ID: 8.825" |
| 35C | 056701 | 23016610 | 4th Range | .100 | 72-On | 5-6 | 18T - ID: 5.530" |
| 36E | 056705 | 23016608 | Low Range except Phase 2 | .100 | 72-On | 6-7 | 11T - ID: 8.825" |
| 36E | 056705A | 23045054 | Low Range Phase 2 only | .100 | 72-On | 8 | 11T - ID: 9.198" |
| **PRESSURE PLATES** | | | | | | | |
| 37E | TBA | 23046721 | 1st Range backing (#5) | .676 | 72-On | 1 | |
| 38C | TBA | 23046745 | 2nd & 3rd Range backing - selective (#7) | .482 | 72-On | 1 | |
| 38C | TBA | 23046746 | 2nd & 3rd Range backing - selective (#8) | .455 | 72-On | 1 | |
| 38C | TBA | 23046718 | 2nd & 3rd Range backing - selective (#9) | .468 | 72-On | 1 | |
| 39C | 056763A | 29516333 | 4th Range backing | | 72-On | 1 | |
| N I | 055761 | 23016957 | Backing Plate | | 72-On | 1 | |
| **FILTERS** | | | | | | | |
| KT | FK056940A | NA | Filter Kit - thick filter OE Style Gsk without tube | | 72-On | 1 | |
| KT | FK056940B | NA | Filter Kit - thick filter Cork Gsk without tube | | 72-On | 1 | |
| KT | FKF153A | NA | Filter Kit - thick filter OE Style Gsk without tube - SPX | | 72-On | 1 | |
| KT | FKF153B | 29502302 | Filter Kit, thick filter Cork Gsk without tube | | 72-On | 1 | OE style |
| KT | FK056940C | NA | Filter Kit - thick filter for Shallow Pan with tube - OE Style Gsk | | 72-On | 1 | |
| KT | FK056940E | NA | Filter Kit - thick filter for Deep Pan with tube - OE Style Gsk | | 72-On | 1 | |
| 40F | 056940A | 6883044 | Filter without tube - AFTMKT | | 72-On | 1 | |
| 40F | F153A | 6883044 | Filter without tube - SPX | | 72-On | 1 | |
| N I | 056942 | NA | Filter - Deep pan with pipe | | 72-On | 1 | |
| N I | 056942X | NL | Filter - Shallow pan with pipe | | 72-On | 1 | |
| 41C | 056560 | 23010654 | Screen - Center Support | | 72-On | 1 | |
| 42F | 055553 | 8624471 | Screen - Governor oil (early) | | 72-On | 1 | Thimble type |
| 42F | 056559 | 6882687 | Screen - Governor oil (late) | | 72-On | 1 | Barrel type |
| **METAL CLAD SEALS** | | | | | | | |
| 43B | 056400A | 23016643 | Front Pump | 3.885 | 72-On | 1 | |
| 43B | 056401 | 23045556 | Front Pump | 3.378 | 72-On | 1 | |
| 43B | 056402 | 6837228 | Front Pump | 3.362 | 72-On | 1 | |

# ALLISON

## MT640, 643, 644 - 4sp
## MT650, 653, 654 - 5sp

| ILL | ALTO NO | REF NO | DESCRIPTION | SPEC | YEAR | QTY | NOTES |
|---|---|---|---|---|---|---|---|
| **METAL CLAD SEALS** | | | | | | | ...Continued |
| 44F | 055405 | 6778050 | Extension Housing | 3.632 | 72-On | 1 | MT640/643/644 |
| 44F | 056405 | 6773311 | Extension Housing | 4.758 | 72-On | 1 | MT650/653/654 |
| **SEALING RINGS** | | | | | | | |
| KT | 056600 | NA | Sealing RIng Kit - 4T/4M | | 72-On | 1 | AFTMKT |
| KT | 056600A | NA | Sealing Ring Kit - 4V/4M | | 72-On | 1 | OE (Vespel®) |
| KT | 056100A | 23014632 | Sealing Ring Kit - Front Pump/Center Support 4V | | 72-On | 1 | OE (Vespel) |
| 45B | 056100 | NA | Front Pump stator | Teflon | 72-On | 2 | |
| 46C | TBA | 23015617 | Front Pump Stator | Vespel® | 72-On | 2 | Not available separate |
| 46C | 056100 | NA | Center Support | Teflon | 72-On | 2 | |
| 46C | TBA | 23015617 | Center Support | Vespel® | 72-On | 2 | Not available separate |
| 47A | 056101 | 6830187 | Torque Converter Hub | Metal | 72-On | 1 | |
| 48B | 056102 | 6839163 | Input Shaft | Metal | 72-On | 1 | |
| 49B | 056103 | 6833999 | Input Shaft to Forward drum | Metal | 72-On | 2 | |
| **SNAP RINGS** | | | | | | | |
| N I | 056259 | 6836676 | Internal Torque Convertor | | 72-On | 1 | |
| 50B | TBA | 23018867 | Forward Drum | | 72-On | 1 | |
| 51E | TBA | 6884275 | 1st Range Drum | | 72-On | 1 | |
| 52C | TBA | 6836267 | 2nd & 3rd Range Drum | | 72-On | 1 | |
| 53C | TBA | 23018867 | 4th Range Drum | | 72-On | 1 | |
| **BUSHINGS** | | | | | | | |
| KT | 056625 | NA | Bushing Kit | | 72-On | 1 | with early front pump |
| KT | 056625A | NA | Bushing Kit - MT640, 650, 653 | | 72-On | 1 | with OEM front pump |
| KT | 056625B | NA | Bushing Kit - MT644, 654 | | 72-On | 1 | with OEM front pump |
| KT | 056630 | NA | Bushing Kit - MT640 Series | | 72-On | 1 | without front pump |
| 54B | 056200 | 23046153 | Front Pump body - MT640, 650, 653 | | 72-On | 1 | |
| 54B | 056200A | 23046152 | Front Pump body - MT644, 654 | | 72-On | 1 | |
| 56C | 056201 | 23011924 | Center Support | | 72-On | 1 | |
| N I | 056202 | 6834503 | Sun Gear | | 72-On | 2 | |
| 55A | 056203 | 6756782 | Torque Converter cover | | 72-On | 1 | |
| 57D | TBA | 23016859 | Output Shaft | | 72-On | 1 | |
| **WASHERS** | | | | | | | |
| N I | 056151 | 6839364 | Washer - Front Planetary Sun Gear | | 72-On | AR | Bronze |
| 58A | 055152-015 | 6837429 | Spacer, TC turbine | .015 | 72-On | AR | Gold |
| 58A | 055152-030 | 6837430 | Spacer, TC turbine | .030 | 72-On | AR | Silver |
| 58A | 055152-042 | 6837431 | Spacer, TC turbine | .042 | 72-On | AR | Plain |
| 58A | 055152-060 | 6837432 | Spacer, TC turbine | .060 | 72-On | AR | Black |
| 58A | 055152-075 | 6837433 | Spacer, TC turbine | .075 | 72-On | AR | Copper |
| **MISCELLANEOUS** | | | | | | | |
| 59F | 055351 | 6885570 | Governor Assembly - ID # 461 | | 72-On | 1 | |
| 59F | 055352 | 6885571 | Governor Assembly - ID # 462 | | 72-On | 1 | |
| 59F | 056302 | 6885572 | Governor Assembly - ID # 463 | | 72-On | 1 | |
| 59F | 056303 | 6881471 | Governor Assembly - ID # 465 | | 72-On | 1 | |
| 59F | 056304 | 6882737 | Governor Assembly - ID # 738 | | 72-On | 1 | Brass |
| 59F | 056305 | 6882736 | Governor Assembly - ID # 739 | | 72-On | 1 | Brass |
| KT | 056465 | NA | Governor Gear (Brass) & Pin | | 72-On | 1 | For 738/739 governors |
| 60F | 056350 | 23045906 | Deep oil pan - ribbed with heater hole | | 72-On | 1 | |
| 60F | 056350A | 29501358 | Deep oil pan - dual fill tube locations | | 72-On | 1 | |
| 61F | 056306 | 29501131 | Plug for heater hole | | 72-On | 1 | |
| 62F | 056564 | 6883045 | Oil Filter tube (updates prior to S/N 58071) | | 72-On | 1 | |
| 63D | 056352 | 6883901 | Sun Gear - rear planetary (except MT653) | | 72-On | 1 | |
| 64B | 056353 | 6834222 | Forward clutch drive hub | | 72-On | 1 | |
| 65B | 056354 | 6834221 | 4th Range clutch drive hub | | 72-On | 1 | |
| 65B | 056354A | 23017267 | 4th Range clutch drive hub | | 72-On | 1 | use with 18T piston |
| 66A | 056356 | 23016722 | Converter Hub, (bolt on) MT643/653 | | 72-On | 1 | |
| 66A | 056357 | 23017446 | Converter Hub, MT654 | | 72-On | 1 | |
| N I | 056672 | 23013906 | Converter Hub, MT654 | | 72-On | 1 | |

# ALLISON

## MT640, 643, 644 - 4sp
## MT650, 653, 654 - 5sp

| ILL | ALTO NO | REF NO | DESCRIPTION | SPEC | YEAR | QTY | NOTES |
|---|---|---|---|---|---|---|---|
| **MISCELLANEOUS** | | | | | | | ...Continued |
| N I | 056358 | 23014527 | Ground sleeve with bearing - use with 056356 | | 72-On | 1 | |
| N I | 056359 | 29507674 | Ground sleeve with bearing - MT644/654 | | 72-On | 1 | (23014306) |
| 67A | 055555 | 6769631 | Lock strip, TC hub bolt | | 72-On | 4 | |
| 69C | 055552A | 3909063 | Retainer, center support bolts | | 72-On | 8 | Black |
| N I | 056553 | 23013398 | Bolt, Center support to case | 2.5 | 72-On | 1 | |
| N I | 056555 | 23045343 | Bolt, Center support to case | 3.0" | 72-On | 1 | |
| N I | 056557 | 29510838 | Bolt, Output shaft | | 72-On | 1 | |
| N I | 056558 | 29500739 | Washer, Output shaft bolt | | 72-On | 1 | |
| 70F | 056009 | 29507909 | Washer, Drain plug | | 72-On | 1 | |
| 71A | 056301 | 6770845 | Piston, Lockup clutch (TC) | | 72-On | 1 | |
| N I | 056307 | 29513517 | Accordian Spring, TC stator freewheel unit | .896" | 72-On | 1 | |
| KT | 056466 | 23017610 | Manual Control Lever repair kit | | 72-On | 1 | Shaft & Nut |
| N I | 001033 | 23018535Kit | Spring, Stator Freewheel Unit - 10 Pc. Kit | | 72-On | 1 | |

**NOTES**

# ALLISON

## HT740, 747, 750, 754, V730
## 1972-On

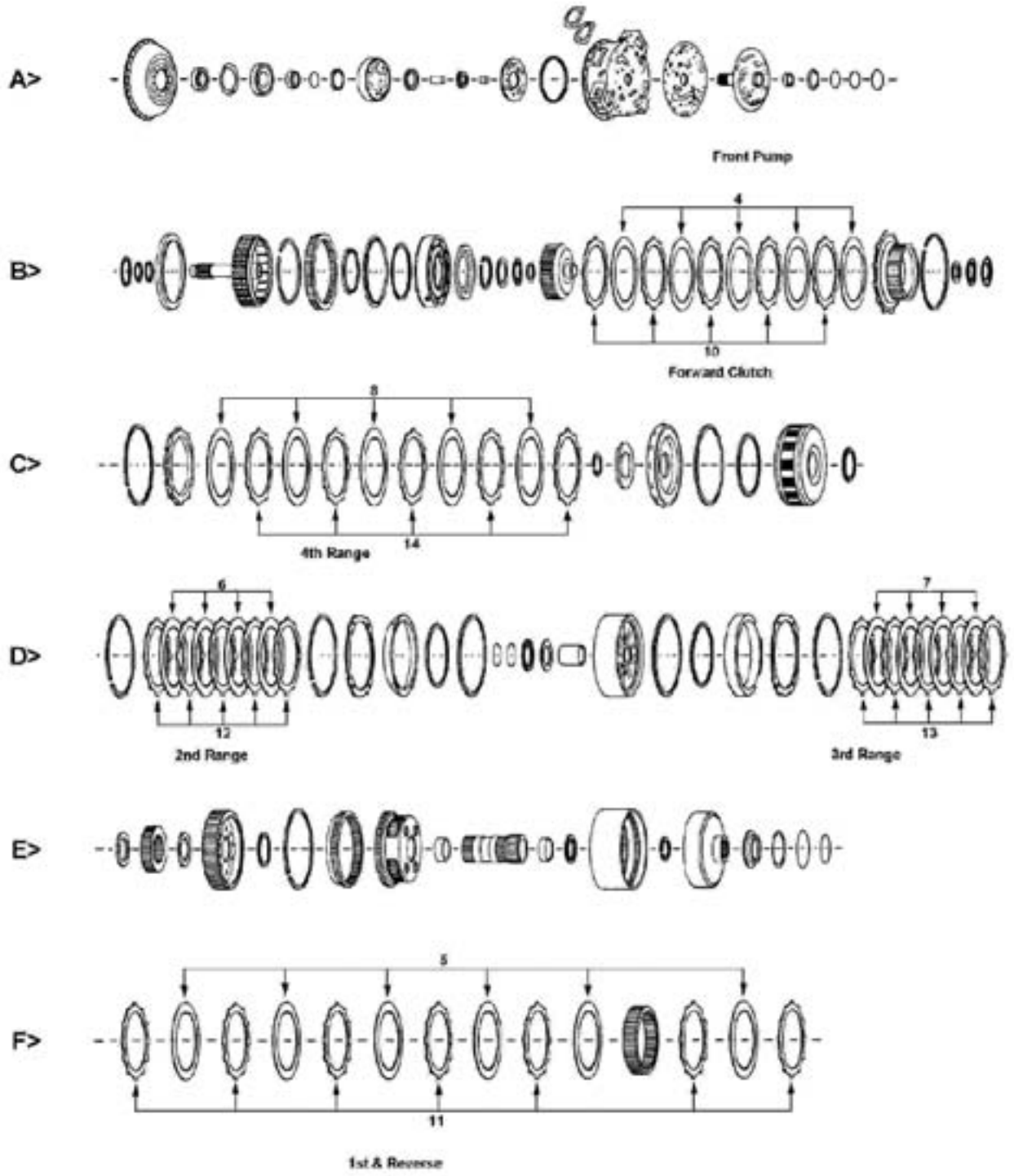

# ALLISON
## HT740, 747, 750, 754, V730
## 1972-On

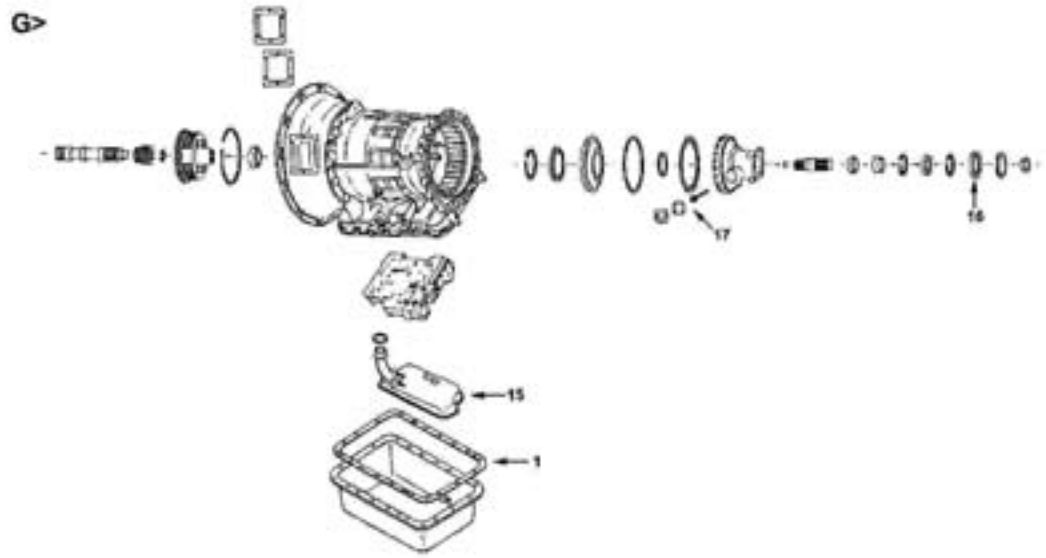


| ILL | DESCRIPTION | YEARS | FRICTION MODULE | STEEL MODULE | OVERHAUL KIT | BANNER KIT | MASTER KIT |
|---|---|---|---|---|---|---|---|
| **KITS** | | | | | | | |
| KT | Rebuilding Kit | 72-On | 056752G | 056753C | 056804B | 056905LS | 056905 |

| ILL | ALTO NO | REF NO | DESCRIPTION | SPEC | YEAR | QTY | NOTES |
|---|---|---|---|---|---|---|---|
| **MISCELLANEOUS GASKETS & KIT COMPONENTS** | | | | | | | |
| 1G | 056816 | 23010652 | Gasket, Oil Pan | | 72-On | 1 | |
| 2G | 055006 | 29501161 | Gasket, PTO cover | Cork/Rub | 72-On | 1 | |
| 2G | 055006A | 29501161 | Gasket, PTO cover - Armstrong | Fiber | 72-On | 1 | |
| 3G | 055007 | 23018625 | Gasket, Governor cover | Cork/Rub | 72-On | 1 | |
| 3G | 055007A | 23018625 | Gasket, Governor cover | Fiber | 72-On | 1 | |
| **FRICTION CLUTCHES *Featuring KRYPTONITE II™ Friction Material** | | | | | | | |
| 4B | 055724A255 | 23042199 | Forward * | .100 | 72-On | 6 | HEGHD 80T -OD: 9.119" - PLI |
| 4B | 055704B250 | 59537887 | Forward with hardened spline * | .100 | 72-On | 5 | HEGHD 80T -OD: 9.119" - PLI |
| 5F | 056710B380 | 23010439 | 1st Range * | .148 | 72-On | 6 | HEGHD 62T -OD:12.557" - PLI |
| 6D | 056710B380 | 23010439 | 2nd Range * | .148 | 72-On | 6 | HEGHD 62T -OD:12.557" - PLI |
| 7D | 056710B380 | 23010439 | 3rd Range * | .148 | 72-On | 4 | HEGHD 62T -OD:12.557" - PLI |
| 8C | 055704B250 | 59537887 | 4th Range with hardened spline * | .100 | 72-On | 5 | HEGHD 80T -OD: 9.119" - PLI |
| **STEEL CLUTCHES** | | | | | | | |
| 10B | 056713 | 6834679 | Forward | .103 | 72-On | 5 | 14T - ID: 7.206" |
| 11F | 056711 | 23047771 | 1st Range | .103 | 72-On | 7 | 38T - ID: 10.825" |
| 11F | 056711A | 23047772 | 1st Range - selective | .120 | 72-On | AR | 38T - ID: 10.825" |
| 12D | 056715 | 6834488 | 2nd Range | .103 | 72-On | AR | 16T - ID: 10.746" |
| 12D | 056715A | 6834720 | 2nd Range | .120 | 72-On | AR | 16T - ID: 10.746" |
| 13D | 056715 | 6834488 | 3rd Range | .103 | 72-On | AR | 16T - ID: 10.746" |
| 13D | 056715A | 6834720 | 3rd Range | .120 | 72-On | AR | 16T - ID: 10.746" |
| 14C | 056713 | 6834679 | 4th Range | .103 | 72-On | 5 | 14T - ID: 7.206" |
| **FILTERS** | | | | | | | |
| N I | 056942A | 29532584 | Filter - lo aluminum pan w/8" Tube | | 72-On | 1 | |
| 15G | 056944 | 6839636 | Filter - w/6" Tube | | 72-On | 1 | |
| 15G | 056944A | 23013625 | Filter - w/7" Tube | | 72-On | 1 | |
| **METAL CLAD SEALS** | | | | | | | |
| N I | 056403 | 23016947 | Front Pump | | 72-On | 1 | |
| G16 | 056405 | 6773311 | Rear Cover | | 72-On | 1 | |
| N I | 032410C | 23010610 | Manual Lever | | 72-On | 1 | |

# ALLISON
## HT740, 747, 750, 754, V730
## 1972-On

| ILL | ALTO NO | REF NO | DESCRIPTION | SPEC | YEAR | QTY | NOTES |
|---|---|---|---|---|---|---|---|
| **MISCELLANEOUS** | | | | | | | |
| 17G | 055351 | 6885570 | Governor Assembly - ID # 461 | | 72-On | 1 | |
| 17G | 055352 | 6885571 | Governor Assembly - ID # 462 | | 72-On | 1 | |
| 17G | 056302 | 6885572 | Governor Assembly - ID # 463 | | 72-On | 1 | |
| N I | 001033 | 23018535Kit | Spring, Stator Freewheel Unit - 10 Pc. Kit | | 72-On | 1 | |
| N I | 001034 | 6837976Kit | Roller, Stator Freewheel Unit - 10 Pc. Kit | | 72-On | 1 | |

**NOTES**

A>

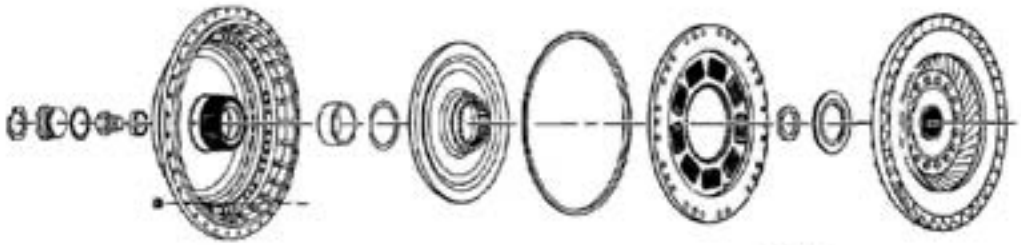

B>

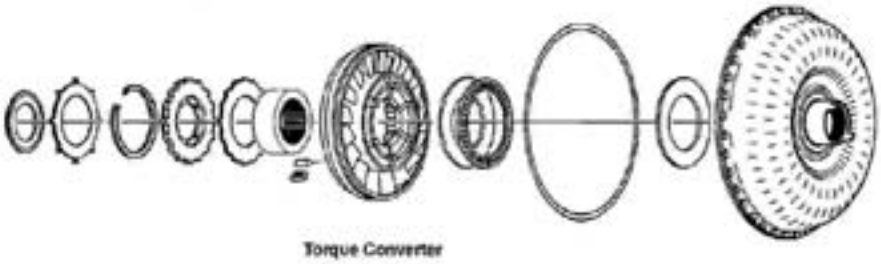
Torque Converter

C>

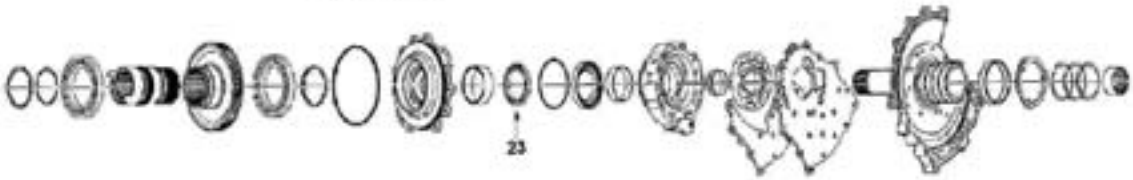
23

D>

E>

15
1
8
16
C1 Clutch

F>

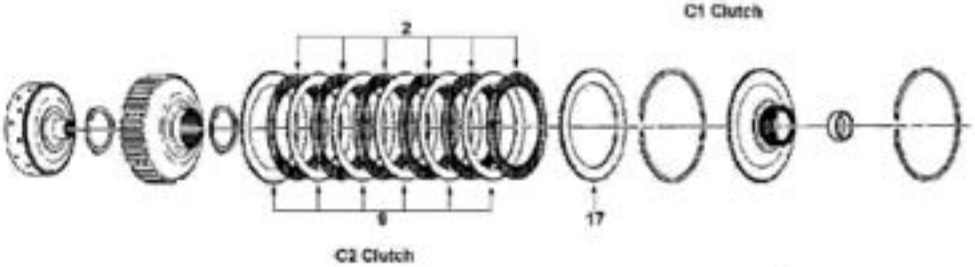
2
9
17
C2 Clutch

G>

3
10
18
C3 Clutch
4
11
18
C4 Clutch

# ALLISON
## WORLD
## MD3060, 3066, 3070, 3560
## B300, 400, 3000MH 1995-On

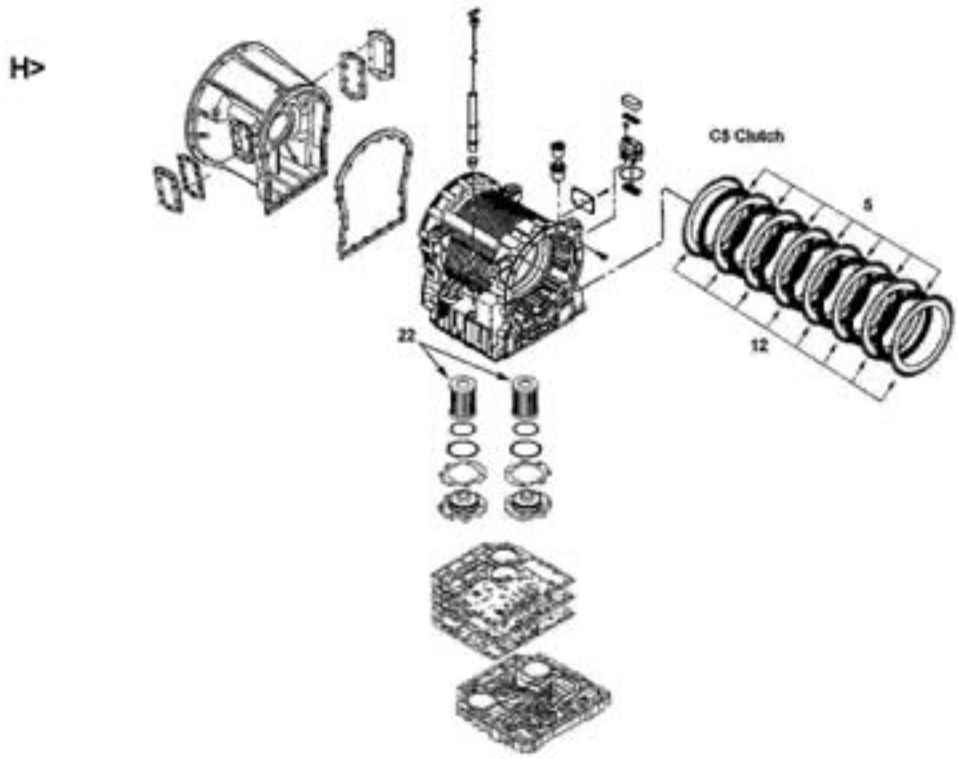


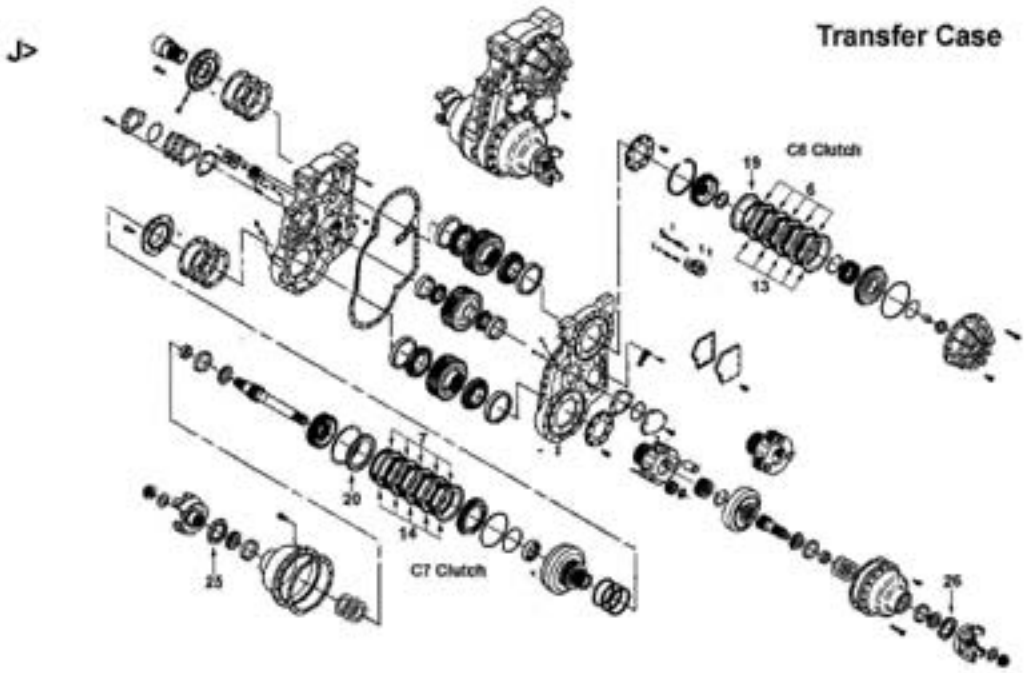


| ILL | DESCRIPTION | YEARS | FRICTION MODULE | STEEL MODULE | OVERHAUL KIT | BANNER KIT | MASTER KIT |
|---|---|---|---|---|---|---|---|
| **KITS** | | | | | | | |
| KT | Rebuilding Kit - Transmission only with OE style gasket set | 95-On | 148752 | 148753 | 148800 | 148901LS | 148901 |
| KT | Rebuilding Kit - Transmission only with OE style gasket set & valve body kit | 95-On | 148752 | 148753 | 148800X | 148901XLS | 148901X |

# ALLISON
## WORLD
## MD3060, 3066, 3070, 3560
## B300, 400, 3000MH 1995-On

| ILL | DESCRIPTION | YEARS | FRICTION MODULE | STEEL MODULE | OVERHAUL KIT | BANNER KIT | MASTER KIT |
|---|---|---|---|---|---|---|---|
| **KITS** | | | | | | | ...Continued |
| KT | Rebuilding Kit - Transfer Case | 95-On | TBA | TBA | TBA | TBA | TBA |

| ILL | ALTO NO | REF NO | DESCRIPTION | SPEC | YEAR | QTY | NOTES |
|---|---|---|---|---|---|---|---|
| **FRICTION CLUTCHES** | | | | | | | |
| 1E | 148700-250 | 23045588 | C1 Clutch | .098 | 95-On | 6 | Heg - 44T - OD: 7.072" - PLI |
| 2F | 148702-250 | 29516170 | C2 Clutch | .098 | 95-On | 6 | Heg - 84T - OD: 9.950" - PLI |
| 3G | 148704-250 | 29516171 | C3 Clutch | .098 | 95-On | 5 | Heg - 76T - OD: 9.550" - SM |
| 4G | 148704-250 | 29516171 | C4 Clutch | .098 | 95-On | 5 | Heg - 76T - OD: 9.550" - SM |
| 5H | 148706-320 | 29516172 | C5 Clutch | .127 | 95-On | 7 | Heg - 81T - OD: 10.00" - PLI |
| 6J | 148710-400 | 23048735 | C6 Clutch (Transfer Case) | .157 | 95-On | 5 | Heg - 34T - OD: 8.589" - PLI |
| 7J | 055702A246 | 23042198 | C7 Clutch (Transfer Case) | .098 | 95-On | 5 | Heg - 60T - OD: 8.150" - PLI |
| **STEEL CLUTCHES** | | | | | | | |
| 8E | 148701-245 | 23045589 | C1 Clutch | .095 | 95-On | 5 | 44T - ID: 4.231" |
| 9F | 148703-245 | 29503141 | C2 Clutch | .095 | 95-On | 6 | 48T - ID: 8.540" |
| 10G | 148705-250 | 29501423 | C3 Clutch | .098 | 95-On | 5 | 24T - ID: 7.700" |
| 11G | 148705-250 | 29501423 | C4 Clutch | .098 | 95-On | 5 | 24T - ID: 7.700" |
| 12H | 148707-248 | 23045573 | C5 Clutch | .097 | 95-On | 8 | 48T - ID: 8.165" |
| 13J | 148711-250 | 29506073 | C6 Clutch (Transfer Case) | .098 | 95-On | 5 | 40T - ID: 7.090" |
| 14J | 148709-220 | 29502156 | C7 Clutch (Transfer Case) | .086 | 95-On | 5 | 67T - ID: 6.580" |
| **PRESSURE PLATES** | | | | | | | |
| 15E | TBA | 29534575 | C1 Clutch - backing (MD models) | .315 | 98-On | 1 | stepped (retros) |
| 15E | TBA | 29534572 | C1 Clutch - backing (HD models) | .315 | 98-On | 1 | stepped (retros) |
| 16E | TBA | 29534574 | C1 Clutch - apply (MD models) | .157 | 98-On | 1 | flat (retros) |
| 16E | TBA | 29534573 | C1 Clutch - apply (HD models) | .157 | 98-On | 1 | flat (retros) |
| 17F | TBA | 23049224 | C2 Clutch - apply (without PTO) | | 95-On | 1 | |
| 17F | TBA | 23048530 | C2 Clutch - apply (with PTO) | | 95-On | 1 | |
| 18G | TBA | 29501424 | C3/C4 Clutch - apply | | 95-On | 2 | |
| 19J | TBA | 29506074 | C6 Clutch - backing | | 95-On | 1 | |
| 20J | TBA | 29508167 | C7 Clutch - backing | | 95-On | 1 | |
| **FILTERS** | | | | | | | |
| KT | FK148942A | 29540493 | Filter Kit - 4" | | 95-On | 2 | |
| KT | FK148942B | 29540494 | Filter Kit - 6" | | 95-On | 2 | |
| N I | 148940 | 29536860 | Filter | | 95-On | 1 | |
| 22H | 148942 | 23049248 | Filter - 2" | | 95-On | 2 | |
| 22H | 148942A | 29501202 | Filter - 4" | | 95-On | 2 | |
| 22H | 148942B | 29509723 | Filter - 6" | | 95-On | 2 | |
| **METAL CLAD SEALS** | | | | | | | |
| 23C | 148400 | 29507528 | Front Pump | | 95-On | 1 | |
| 24H | 148405 | 29515690 | Extension Housing | | 95-On | 1 | |
| 25J | 148425 | 29503336 | Front Output (Transfer Case) | | 95-On | 1 | |
| 26J | 148425 | 29503336 | Rear Output ( Transfer Case) | | 95-On | 1 | |

**NOTES**

# ALLISON

## 1000, 2000, 2400 SERIES™
## 1999-On

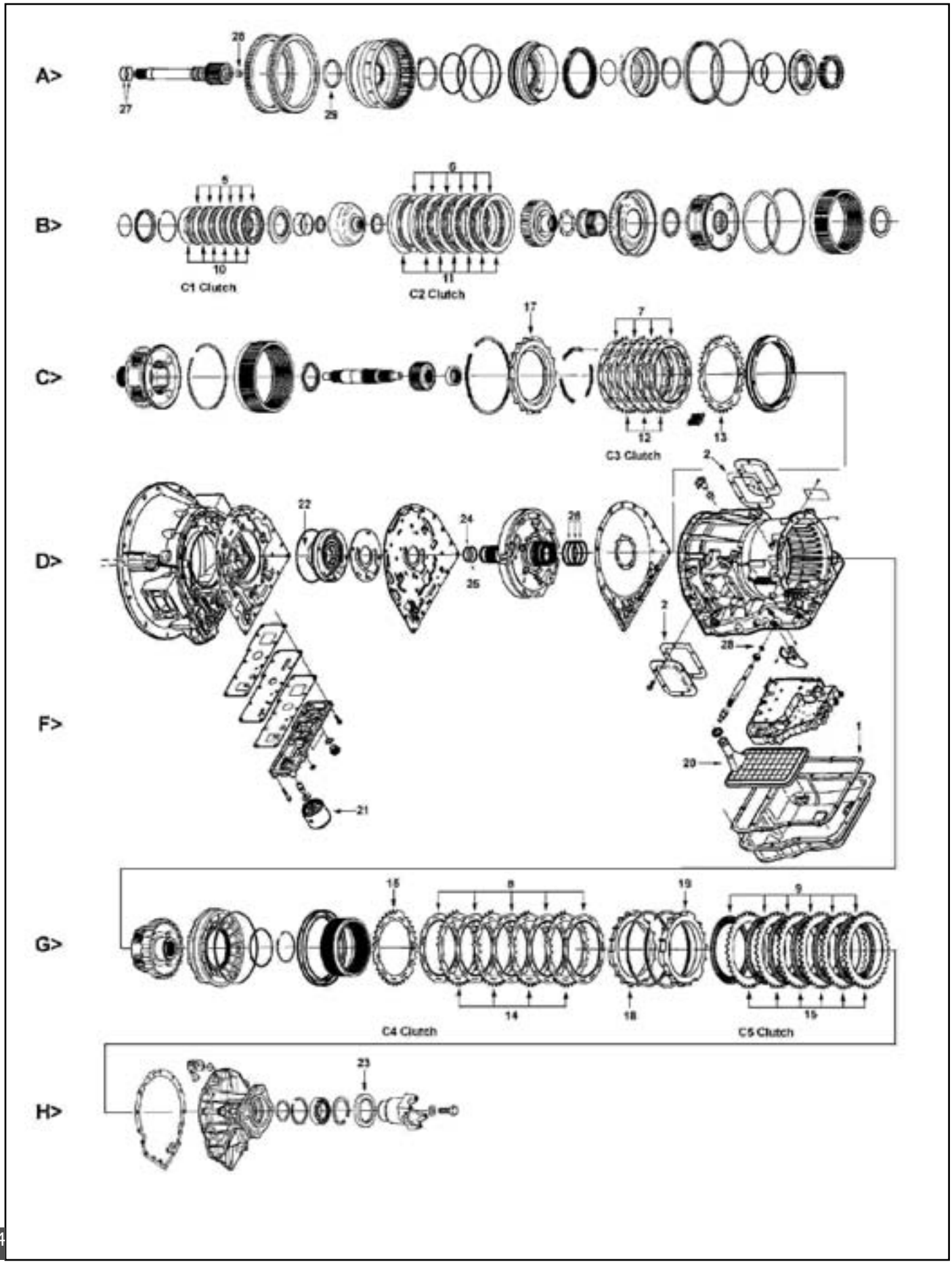

# ALLISON
## 1000, 2000, 2400 SERIES™
## 1999-On

| ILL | DESCRIPTION | YEARS | FRICTION MODULE | STEEL MODULE | OVERHAUL KIT | BANNER KIT | MASTER KIT |
|---|---|---|---|---|---|---|---|
| **KITS** | | | | | | | |
| KT | Rebuilding Kit | 99-On | 152752 | 152753 | 152800 | 152901LS | 152901 |

| ILL | ALTO NO | REF NO | DESCRIPTION | SPEC | YEAR | QTY | NOTES |
|---|---|---|---|---|---|---|---|
| **MISCELLANEOUS GASKETS & KIT COMPONENTS** | | | | | | | |
| 1F | 152816 | 29536526 | Gasket, Oil Pan | | 99-On | 1 | |
| 2D | 055006 | 29501161 | Gasket, PTO cover | Cork/Rub | 99-On | 2 | |
| 2D | 055006A | 29501161 | Gasket, PTO cover - Armstrong | Fiber | 99-On | opt. | |
| **FRICTION CLUTCHES** | | | | | | | |
| 5B | 152700-250 | 29530312 | C1 Clutch - external Teeth | .098 | 99-On | 6 | Red - 36T - ID: 3.230" - PLNI |
| 6B | 152702-248 | 29530313 | C2 Clutch | .097 | 99-On | 6 | Red - 24T - OD: 7.500" - PLNI |
| 7C | 152704-246 | 29531049 | C3 Clutch | .097 | 99-On | 4 | Red - 117T - OD: 8.670" - SM |
| 8G | 152704-246 | 29531049 | C4 Clutch | .097 | 99-On | 5 | Red - 117T - OD: 8.670" - SM |
| 9G | 152706-250 | 29537393 | C5 Clutch | .098 | 99-On | 6 | Red - 115T - OD: 8.670" - SB |
| **STEEL CLUTCHES** | | | | | | | |
| 10B | 152701-218 | 29530314 | C1 Clutch - Internal Teeth | .086 | 99-On | 6 | 34T - OD: 4.743" |
| 11B | 152703-218 | 29530315 | C2 Clutch | .086 | 99-On | 7 | 42T - ID: 6.302" |
| 11B | 152703-170 | NA | C2 Clutch - selective | .067 | 99-On | AR | 42T - ID: 6.302" |
| 12C | 152705-250 | 29531048 | C3 Clutch | .098 | 99-On | 3 | 27T - ID: 7.111" |
| 14G | 152705-250 | 29531048 | C4 Clutch | .098 | 99-On | 4 | 27T - ID: 7.111" |
| 15G | TBA | 29531046 | C4 Clutch - wave | | 99-On | 1 | 27T |
| 16G | 152707-250 | 29536482 | C5 Clutch | .098 | 99-On | 5-6 | 36T - ID: 7.108" |
| 16G | 152707-200 | 29536481 | C5 Clutch - selective | .078 | 99-On | AR | 36T - ID: 7.108" |
| 16G | 152707-300 | 29536483 | C5 Clutch - selective | .118 | 99-On | AR | 36T - ID: 7.108" |
| **PRESSURE PLATES** | | | | | | | |
| 13C | 152761L3175 | 29535637 | C3 Clutch, C4 Clutch - apply | .125 | 99-On | 1 | 30T |
| 17C | TBA | 29535639 | C3 Clutch - backing | | 99-On | 1 | |
| 18G | TBA | 29535640 | C4 Clutch - backing | | 99-On | 1 | |
| 19G | TBA | 29531058 | C5 Clutch - backing | | 99-On | 1 | |
| **OEI™ Original Equipment Improvements** | | | | | | | |
| KT | 152755 | NA | POWERPACK™ C1 Clutch | | 99-On | 1 | |
| KT | 152756 | NA | POWERPACK™ C2 Clutch | | 99-On | 1 | |
| KT | 152757 | NA | POWERPACK™ C3 Clutch | | 99-On | 1 | |
| KT | 152758 | NA | POWERPACK™ C4 Clutch | | 99-On | 1 | |
| **FILTERS** | | | | | | | |
| 20F | 152940 | 29537617 | Filter - Deep pan | | 99-On | 1 | |
| 20F | 152940A | NA | Filter - Shallow pan | | 99-On | 1 | |
| 20F | 152941 | 29537514 | Filter - Black Sump | | 99-On | 1 | |
| 21F | 152942 | 29537268 | Filter - Spin on | | 99-On | 1 | |
| **METAL CLAD SEALS** | | | | | | | |
| 22D | 152400 | 29536299 | Front Pump | | 99-On | 1 | |
| 23H | 152405 | 29536379 | Extension Housing | | 99-On | 1 | |
| 28D | 032410C | 23010610 | Manual Lever | | 99-On | 1 | |
| **SEALING RINGS** | | | | | | | |
| KT | 152600 | NA | Kit | | 99-On | 1 | |
| 24D | 152100 | 29531037 | Front Pump stator - Front | Vespel® | 99-On | 1 | comes in kit 29536405 |
| 25D | 152101 | 29531038 | Front Pump stator - Front | Vespel® | 99-On | 1 | |
| 26D | 152102 | 29531036 | Front Pump stator - Rear | Vespel® | 99-On | 3 | |
| 27A | 152100 | 29531037 | Input Shaft | Vespel® | 99-On | 2 | comes in kit 29536405 |
| **BUSHINGS** | | | | | | | |
| N I | 152200 | 29536703 | Front Pump body | | 99-On | 1 | |
| N I | 152201 | 29534369 | Stator Support - rear | 33.8mm | 99-On | 1 | |
| 28A | 152202 | 29531084 | Input Shaft - rear | 20mm | 99-On | 1 | |
| 29A | 152203 | 39531072 | C1/C2 Clutch drum | | 99-On | 1 | |

# ALLISON
## 1000, 2000, 2400 SERIES™
## 1999-On

NOTES

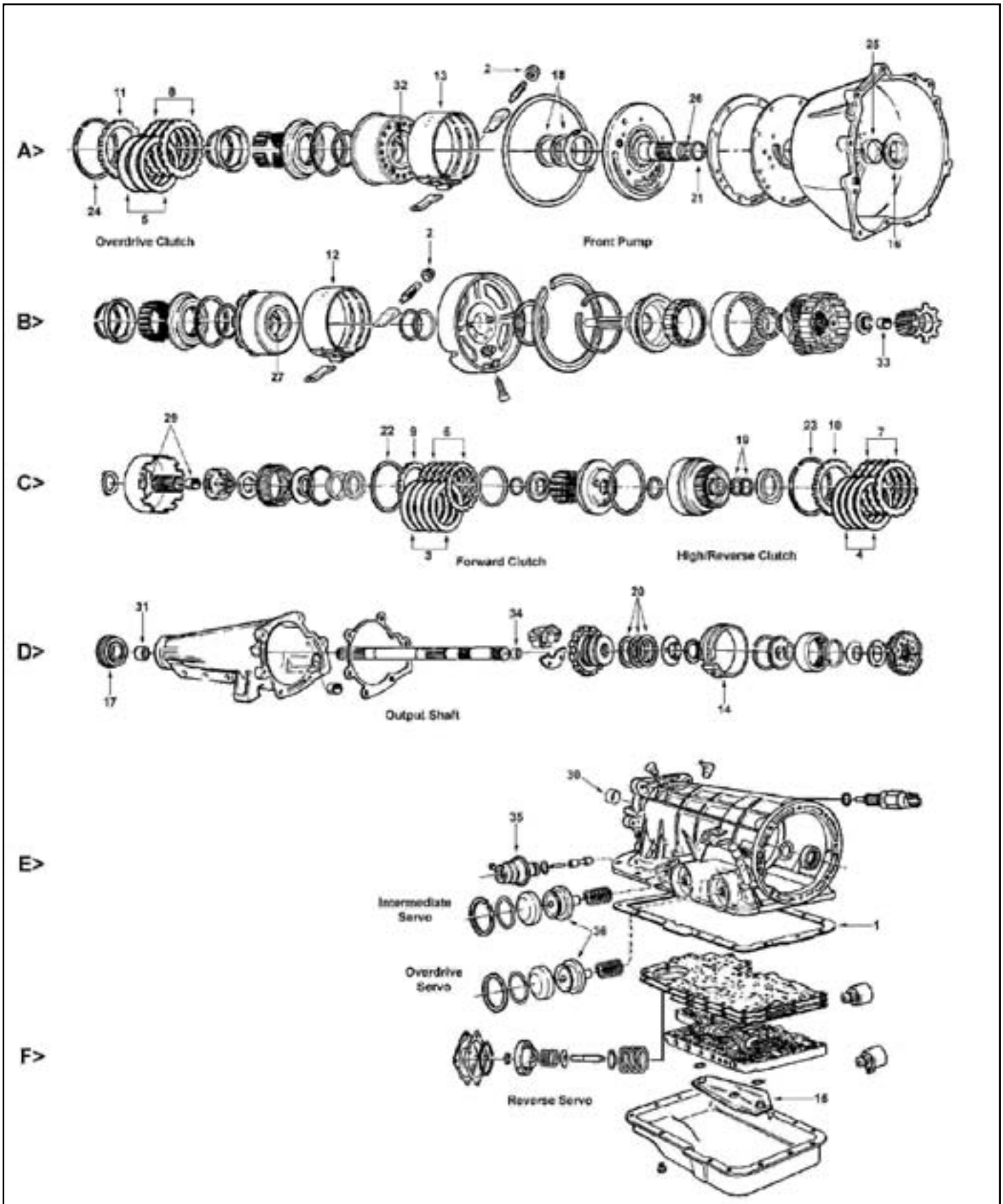
A>
Overdrive Clutch
Front Pump
B>
C>
Forward Clutch
High/Reverse Clutch
D>
Output Shaft
E>
Intermediate Servo
Overdrive Servo
F>
Reverse Servo

# FORD

## A4LD, A4LDE, 4R44E, 4R55E
## 5R44E, 5R55E 1985-On

| ILL | DESCRIPTION | YEARS | FRICTION MODULE | STEEL MODULE | OVERHAUL KIT | BANNER KIT | MASTER KIT |
|---|---|---|---|---|---|---|---|
| **KITS** | | | | | | | |
| KT | Rebuilding Kit - A4LD | 85-89 | 041752A | 041753A | 041802 | 041903LS | 041903 |
| KT | Rebuilding Kit - A4LD | 90-95 | 041752C | 041753C | 041802A | 041905LS | 041905 |
| KT | Rebuilding Kit - A4LDE, 4R44E, 4R55E | 95-96 | 041752C | 041753C | 041804 | 041907LS | 041907 |
| KT | Rebuilding Kit - All | 97-On | 041752D | 041753D | 041806 | 041909LS | 041909 |

| ILL | ALTO NO | REF NO | DESCRIPTION | SPEC | YEAR | QTY | NOTES |
|---|---|---|---|---|---|---|---|
| **MISCELLANEOUS GASKETS & KIT COMPONENTS** | | | | | | | |
| 1E | 041816A | E5TZ-7A191A | Gasket, Oil Pan | Cork/Rub | 85-On | 1 | |
| 2A | 025507 | 380850-S | Nut, Band Adjusting | | 85-On | 2 | |
| **FRICTION CLUTCHES** | | | | | | | |
| 3C | 041700 | E3ZZ-7B164A | Forward | .075 | 85-89 | 4-5 | Tan - 72T - OD: 4.650" - WF |
| 3C | 041710 | F0TZ-7B164A | Forward | .069 | 90-96 | 6 | Tan - 72T - OD: 4.650" - PL |
| 3C | 041710A | 1L5Z-7B164AA | Forward with Directional Grooves | .069 | 97-On | 5-6 | Tan - 72T - OD: 4.650" - SP |
| 4C | 041702 | E3ZZ-7B164B | High & Reverse | .075 | 85-89 | 4-5 | Tan - 48T - OD: 4.893" - WF |
| 4C | 041712 | F0TZ-7B164B | High & Reverse | .069 | 90-96 | 6 | Tan - 48T - OD: 4.893" - WF |
| 4C | 041712A | F7ZZ-7B164BA | High & Reverse with Directional Grooves | .069 | 97-On | 4-6 | Tan - 48T - OD: 4.893" - SP |
| 4C | 041702A | NA | High & Reverse - POWERPACK™ Comp. | .059 | 85-On | AR | Tan - 48T - OD: 4.893" - SM |
| 5A | 041704 | E5TZ-7B164A | Overdrive/Coast | .078 | 85-89 | 2-3 | Tan - 32T - OD: 4.893" - WF |
| 5A | 041714 | F0TZ-7B164C | Overdrive/Coast | .069 | 90-96 | 2-3 | Tan - 16T - OD: 4.893" - WF |
| 5A | 041714A | F7ZZ-7B164CA | Overdrive/Coast with Directional Grooves | .069 | 97-On | 2-3 | Tan - 16T - OD: 4.893" - SP |
| **STEEL CLUTCHES** | | | | | | | |
| 6C | 041705 | D8ZZ-7B442A | Forward | .068 | 85-89 | 4-5 | 19T - ID: 3.80" |
| 6C | 041709 | F0TZ-7B442A | Forward | .065 | 90-On | 5-6 | 19T - ID: 3.80" |
| 6C | 041701-250 | NA | Forward Oversize (Selective) | .100 | 85-On | AR | 19T - ID: 3.80" |
| 7C | 041707 | D8ZZ-7B442B | High & Reverse | .068 | 85-89 | 5 | 20T - ID: 3.970" |
| 7C | 041711 | F0TZ-7B442B | High & Reverse | .065 | 90-96 | 6 | 20T - ID: 3.970" |
| 7C | 041711-210 | F77Z-7B442AA | High & Reverse | .082 | 97-On | 4-6 | 20T - ID: 3.970" |
| 7C | 041703-250 | NA | High & Reverse Oversize (Selective) | .100 | 85-On | AR | 20T - ID: 3.970" |
| 7C | 041703A | NA | High & Reverse - POWERPACK™ Comp. | .059 | 85-On | AR | 20T - ID: 3.970" |
| 8A | 041707 | D8ZZ-7B442B | Overdrive/Coast | .075 | 85-89 | 2-3 | 20T - ID: 3.970" |
| 8A | 041711 | F0TZ-7B442B | Overdrive/Coast | .065 | 90-96 | 2-3 | 20T - ID: 3.970" |
| 8A | 041703-250 | NA | Overdrive/Coast Oversize (Selective) | .100 | 85-On | AR | 20T - ID: 3.970" |
| **PRESSURE PLATES** | | | | | | | |
| 9C | TBA | D4ZZ-7B066A | Forward - backing | .215 | 85-89 | 1 | |
| 9C | 041760A500 | F0TZ-7B066A | Forward - backing | .200 | 90-On | 1 | |
| 10C | 041761A565 | D4ZZ-7B066B | High & Reverse - backing | .220 | 85-89 | 1 | |
| 10C | 041761A500 | F0TZ-7B066B | High & Reverse - backing | .200 | 90-On | 1 | |
| 11A | 041761A565 | D4ZZ-7B066B | Overdrive - backing | .220 | 85-89 | 1 | |
| 11A | 041761A500 | F0TZ-7B066B | Overdrive - backing | .200 | 90-On | 1 | |
| **OEI™ Original Equipment Improvements** | | | | | | | |
| KT | 041756 | NA | POWERPACK™ - High Reverse | | 85-On | 1 | Adds Torq. capacity |
| KT | 041986 | SK® A4LD-jr | Shift Kit® - A4LD | Transgo® | 85-95 | 1 | |
| KT | 041987 | SK® 44-55E | Shift Kit® - A4LDE, 4R44E, 4R55E | Transgo® | 95-On | 1 | |
| **BANDS** | | | | | | | |
| 12B | 041950 | E6TZ-7D034A | Intermediate | Tan | 85-On | 1 | |
| 13A | 041950 | E6TZ-7D034A | Overdrive | Tan | 85-On | 1 | |
| 13A | 041953 | F0TZ-7F196A | Overdrive - 4.0 & 2.9L only | Tan | 90-91 | 1 | |
| 14D | 041955 | 1Z5Z-7D095AA | Reverse | Tan | 85-On | 1 | |
| **FILTERS** | | | | | | | |
| KT | FK041942 | NA | Filte Kitr - 2wd screen all metal | | 86-88 | 1 | |
| KT | FK041942A | NA | Filter Kit - 2wd screen all metal with lip | | 89-95 | 1 | |
| KT | FK041942B | XL2Z-7A098CA | Filter Kit - 2wd dacron plastic | | 96-On | 1 | |
| KT | FK041948 | NA | Filter Kit - 4wd screen all metal | | 86-95 | 1 | |
| KT | FK041944 | XL2X-7A098DA | Filter Kit- 2wd dacron plastic | | 96-On | 1 | |
| 15F | TBA | NA | Filter - 2wd | | 85 | 1 | |

# FORD
## A4LD, A4LDE, 4R44E, 4R55E 5R44E, 5R55E 1985-On

| ILL | ALTO NO | REF NO | DESCRIPTION | SPEC | YEAR | QTY | NOTES |
|---|---|---|---|---|---|---|---|
| **FILTERS** | | | | | | | ...Continued |
| 15F | 041942 | E6TZ-7A098B | Filter - 2wd screen all metal | | 86-88 | 1 | |
| 15F | 041942A | E9TZ-7A098C | Filter - 2wd screen all metal with lip | | 89-95 | 1 | |
| 15F | 041942B | XL2Z-7A098AA | Filter - 2wd dacron plastic | | 96-On | 1 | will retro-fit with short bolt |
| 15F | TBA | NA | Filter - 4wd | | 85 | 1 | |
| 15F | 041948 | E6TZ-7A098A | Filter - 4wd screen all metal | | 86-95 | 1 | |
| 15F | 041944 | XL2Z-7A098BA | Filter - 2wd dacron plastic | | 96-On | 1 | |
| **METAL CLAD SEALS** | | | | | | | |
| 16A | 041400A | E5TZ-7A248A | Front Pump | | 85-96 | 1 | |
| 16A | 041400B | F77Z-7A248AA | Front Pump | | 97-On | 1 | |
| 17D | 041405 | D5ZZ-7052A | Extension Housing with Boot | | 85-On | 1 | |
| 17D | 041405A | E2ZZ-7052A | Extension Housing without Boot | | 85-On | 1 | |
| N I | 023406 | D5AZ-7B498A | Manual Lever | | 85-On | 1 | |
| **SEALING RINGS** | | | | | | | |
| KT | 041601 | B228 | Sealing Ring Kit - 3T/5M | | 85-On | 1 | |
| 18A | 041100 | D4ZZ-7D025A | Front Pump support to Overdrive drum | Metal | 85-On | 2 | |
| 18A | 041100A | E5TZ-7D025A | Front Pump support to Overdrive drum | Teflon | 85-On | 2 | Not in Kit |
| 19C | 041101 | D4ZZ-7D019A | Forward clutch drum | Metal | 85-96 | 2 | design change in 1997+ |
| 20D | 041102 | D4ZZ-7D011B | Governor | Metal | 85-On | 3 | |
| 20D | 041102A | F0TZ-7D011A | Governor - seal plated | Metal | 85-On | 3 | |
| 20D | 041102B | E7TZ-7D011A | Governor - viton | Rubber | 85-On | 3 | |
| 21A | 041103 | E5TZ-7L323A | Front Pump support - front | Teflon | 85-On | 1 | |
| **SNAP RINGS** | | | | | | | |
| KT | 041680 | NA | Kit | | 85-On | 1 | |
| 22C | 041251-054 | E860115-S | Forward Drum | .054 | 85-On | AR | |
| 22C | 041251-066 | E860116-S | Forward Drum | .066 | 85-On | AR | |
| 22C | 041251-082 | E860117-S | Forward Drum | .082 | 85-On | AR | |
| 22C | 041251-096 | E860118-S | Forward Drum | .096 | 85-On | AR | |
| 23C | 041250-054 | E860126-S | High & Reverse | .054 | 85-On | AR | |
| 23C | 041250-068 | E860127-S | High & Reverse | .068 | 85-On | AR | |
| 23C | 041250-082 | E860128-S | High & Reverse | .082 | 85-On | AR | |
| 23C | 041250-096 | E860129-S | High & Reverse | .096 | 85-On | AR | |
| 24A | 041250-054 | E860126-S | Overdrive | .054 | 85-On | AR | |
| 24A | 041250-068 | E860127-S | Overdrive | .068 | 85-On | AR | |
| 24A | 041250-082 | E860128-S | Overdrive | .082 | 85-On | AR | |
| 24A | 041250-096 | E860129-S | Overdrive | .096 | 85-On | AR | |
| **BUSHINGS** | | | | | | | |
| KT | 041625A | NA | Bushing Kit | | 85-On | 1 | |
| 25A | 041200A | NA | Converter Housing | Bronze | 85-On | 1 | |
| 25A | 041200X | NA | Converter Housing | Babbit | 85-On | 1 | |
| 26A | 041201 | NA | Front Pump stator support - Front | Steel | 85-89 | 1 | |
| 26A | 041201A | NA | Front Pump stator support - Front | Bronze | 90-On | 1 | |
| N I | 041200 | NA | Front Pump stator support - Rear | | 85-On | 1 | |
| 27B | 041203* | NA | High Drum - Steel Drum | 2.368 | 85-96 | 1 | |
| 27B | 041203A* | NA | High Drum - Cast Iron Drum | 2.345 | 85-96 | 1 | |
| N I | 041204* | NA | Reverse Brake drum | | 85-96 | 1 | |
| 29C | 041205 | NA | Sun Gear | | 85-On | 2 | |
| 30E | 041206* | NA | Case | | 85-96 | 1 | |
| 31D | 041207 | D7FZ-7A034A | Extension Housing | | 85-On | 1 | |
| 32A | 041203A | NA | Overdrive Drum | | 85-On | 1 | |
| 33B | 041208 | NA | Overdrive Sun gear | | 85-On | 1 | |
| 34D | 041209 | NA | Output Shaft | Bronze | 85-91 | 1 | |
| 34D | 041210 | NA | Output Shaft (enclosed bearing /bushing) | | 92-On | 1 | |
| | | | *Bushing replaced by bearing | | | | |
| **WASHERS** | | | | | | | |
| KT | 041635 | NA | Washer Kit - no selectives | | 85-90 | 1 | |
| KT | 041635A | NA | Washer Kit - no selectives | | 91-On | 1 | |

# FORD

## A4LD, A4LDE, 4R44E, 4R55E
## 5R44E, 5R55E 1985-On

| ILL | ALTO NO | REF NO | DESCRIPTION | SPEC | YEAR | QTY | NOTES |
|---|---|---|---|---|---|---|---|
| **MODULATORS** | | | | | | | |
| 35E | 041501 | E5TZ-7A377C | Modulator | | 85-On | 1 | |
| 35E | 041502 | E4SZ-7A377A | Modulator - Turbo | White | 85-88 | 1 | |
| **MISCELLANEOUS** | | | | | | | |
| 36E | 041302A | E3ZZ-7D021A | Intermediate Servo piston | M.Rubber | 85-89 | 1 | 1.845" |
| 36E | 041301 | D4ZZ-7D021A | Intermediate & Overdrive Servo piston | M.Rubber | 85-96 | 1 | |
| 36E | 041302 | D8DZ-7D021A | Intermediate & Overdrive Servo piston | M.Rubber | 90-96 | 1 | |
| 36E | 041303 | F2ZZ-7D021A | Intermediate & Overdrive Servo piston | M.Rubber | 90-96 | 1 | 1.945" |
| 36E | 041304 | F0TZ-7D021A | Intermediate & Overdrive Servo piston | M.Rubber | 90-96 | 1 | |
| 36E | 041304A | F0TZ-7D021B | Intermediate & Overdrive Servo piston | M.Rubber | 90-96 | 1 | 1.655" |
| 36E | 041305 | F77Z-7D021A2A | Intermediate & Overdrive Servo piston | M.Rubber | 97-00 | 1 | 2.100" |
| 36E | 041306 | F77Z-7D021BA | Intermediate & Overdrive Servo piston | M.Rubber | 97-On | 1 | |
| 36E | 041307 | F77Z-7D021CA | Intermediate & Overdrive Servo piston | M.Rubber | 97-99 | 1 | |
| 36E | 041308 | F77Z-7D021DA | Intermediate & Overdrive Servo piston | M.Rubber | 97-99 | 1 | 1.775". |

**NOTES**

# FORD
## 5R55N 1999-On
## 5R55W 2002-On

| ILL | DESCRIPTION | YEARS | FRICTION MODULE | OVERHAUL KIT | BANNER KIT | MASTER KIT |
|---|---|---|---|---|---|---|
| **KITS** | | | | | | |
| KT | Rebuilding Kit - 5R55N | 99-On | 137750 FR & ST | 137800 | NA | 137901 |
| KT | Rebuilding Kit - 5R55W | 02-On | 137750A FR & ST | 137802 | NA | 137903 |

| ILL | ALTO NO | REF NO | DESCRIPTION | SPEC | YEAR | QTY | NOTES |
|---|---|---|---|---|---|---|---|
| **MISCELLANEOUS GASKETS & KIT COMPONENTS** | | | | | | | |
| N I | 137816 | XW4Z-7A191CA | Gasket, Oil pan - 5R55N | M.Rubber | 99-On | 1 | |
| N I | 137818 | 1L2Z-7A191BA | Gasket, Oil pan - 5R55W | M.Rubber | 02-On | 1 | |
| **FRICTION CLUTCHES** | | | | | | | |
| N I | 137700-170 | XW4Z-7B164AA | Forward | .068/1.7 | 99-On | 4-5 | Tan - 89T - OD: 5.231" - SP |
| N I | 137702-205 | XW4Z-7B164BA | Direct - Internal teeth | .081/2.1 | 99-On | 4-5 | Tan - 48T - OD: 4.893" - SP |
| N I | 137703-205 | XW4Z-7B442BA | Direct - External teeth | .081/2.1 | 99-On | 4-5 | Tan - 30T - ID: 3.970" - SP |
| N I | 137704-245 | XW4Z-7B164CA | Intermediate - Internal teeth (5R55N only) | .096/2.45 | 99-On | 3-4 | Heg - 24T - OD: 5.708" - SP |
| N I | 137705-245 | XW4Z-7B442CA | Intermediate - External teeth (5R55N only) | .096/2.45 | 99-On | 3-4 | Heg - 33T - ID: 4.323" - SP |
| N I | 041714A | F77Z-7B164CA | Overdrive/Coast | .069/1.75 | 99-On | 2 | Tan - 16T - OD: 4.894" - SP |
| N I | 138730-195 | NA | Transfer Case (BW4405) - internal teeth | .078 | 99-On | 5 | Tan - 19T - OD: 5.590" - PL |
| N I | 138731-195 | NA | Transfer Case (BW4405) - external teeth | .078 | 99-On | 6 | Tan - 31T - ID: 4.727" - PL |
| N I | 138730 | NA | Transfer Case (BW4406) - internal teeth | .065 | 99-On | 5 | Tan - 19T - OD: 5.590" - PL |
| N I | 138731 | NA | Transfer Case (BW4406) - external teeth | .065 | 99-On | 7 | Tan - 31T - ID: 4.727" - PL |
| **STEEL CLUTCHES** | | | | | | | |
| N I | 137701-167 | XW4Z-7B442AB | Forward | .067 | 99-On | 5 | 27T - ID: 4.638" |
| N I | 041711 | F0TZ-7B442B | Overdrive/Coast | .065/1.65 | 99-On | 2 | 20T - ID: 3.970" |
| **PRESSURE PLATES** | | | | | | | |
| N I | TBA | XW4Z-7B066B | Forward - backing | .154 | 99-On | 1 | |
| N I | TBA | F0TZ-7B066B | Direct - backing | .200 | 99-On | 1 | |
| N I | TBA | NA | Intermediate - apply (stepped) | .360 | 99-On | 1 | |
| N I | TBA | F0TZ-7B066A | Overdrive - backing | .200 | 99-On | 1 | |
| **BANDS** | | | | | | | |
| N I | 041950 | XW4Z-7D034BA | Intermediate | | 99-On | 1 | |
| N I | 041950 | XW4Z-7D034BA | Overdrive | | 99-On | 1 | |
| N I | 137950 | XW4Z-7D034BA | Intermediate & Overdrive | | 99-On | 1 | |
| N I | 137951 | XW4Z-7D095AA | Reverse Brake | | 99-On | 1 | |
| **FILTERS** | | | | | | | |
| N I | 137940 | XW4Z-7A098AA | Filter - 5R55N | | 99-On | 1 | |
| N I | 137941 | 1L2Z-7A098AB | Filter - 5R55W | | 02-On | 1 | |
| **METAL CLAD SEALS** | | | | | | | |
| N I | 041400B | F77Z-7A248AA | Front Pump | | 99-On | 1 | |
| N I | 041405 | XW4S-7052AA | Extension Housing - 5R55N | 2.362 | 99-On | 1 | |
| N I | 041406 | F6UZ-7052A | Extension Housing - 5R55W | | 02-On | 1 | |
| N I | 041407 | 1L2Z-7052BA | Extension Housing - 5R55W | | 02-On | 1 | |
| N I | 023406 | D5AZ-7B498A | Manual Lever | | 99-On | 1 | |
| **SEALING RINGS** | | | | | | | |
| KT | 137601 | NA | Sealing Ring Kit | | 99-On | 1 | |
| N I | 041100A | E5TZ-7D025A | Front Pump Support to Overdrive drum | Teflon | 99-On | 2 | |
| N I | 041103 | F77Z-7L323A | Front Pump Support - front | Teflon | 99-On | 1 | |
| N I | TBA | XW4Z-7D019BA | Output Shaft | Teflon | 99-On | 1 | |
| **SNAP RINGS** | | | | | | | |
| N I | TBA | XW4Z-7D483AA | Forward | .054 | 99-On | AR | |
| N I | TBA | XW4Z-7D483AB | Forward | .068/1.73 | 99-On | AR | |
| N I | TBA | XW4Z-7D483AC | Forward | .082/2.08 | 99-On | AR | |
| N I | TBA | XW4Z-7D483AD | Forward | .096/2.44 | 99-On | AR | |
| N I | 041250-054 | E860126-S | Direct & Overdrive | .054/1.67 | 99-On | AR | |
| N I | 041250-068 | E860127-S | Direct & Overdrive | .068/1.73 | 99-On | AR | |
| N I | 041250-082 | E860128-S | Direct & Overdrive | .082/2.08 | 99-On | AR | |

# FORD

## 5R55N 1999-On
## 5R55W 2002-On

| ILL | ALTO NO | REF NO | DESCRIPTION | SPEC | YEAR | QTY | NOTES |
|---|---|---|---|---|---|---|---|
| **SNAP RINGS** | | | | | | | ...Continued |
| N I | 041250-096 | E860129-S | Direct & Overdrive | .096/2.44 | 99-On | AR | |
| **MISCELLANEOUS** | | | | | | | |
| N I | 137330 | XW4Z-7E005BA | Bonded Piston - Intermediate Clutch | | 99-On | 1 | |
| N I | 137331 | 1L2Z-7A262AA | Bonded Piston - Forward Cushion | | 99-On | 1 | |
| N I | 137332 | XW4Z-7D021HA | Bonded Piston - Intermediate Servo | 2.580 | 99-On | 1 | |
| N I | 137333 | XW4Z-7D021JA | Bonded Piston - Intermediate Servo | 2.780 | 99-On | 1 | |
| N I | 137334 | 1L2Z-7D021CA | Bonded Piston - Intermediate Servo | | 02-On | 1 | 5R55W |
| N I | 137335 | XW4Z-7D021KA | Bonded Piston - Overdrive Servo | 2.580 | 99-On | 1 | |
| N I | 137336 | XW4Z-7D021LA | Bonded Piston - Overdrive Servo | 2.900 | 99-On | | |
| N I | 137337 | XW4Z-7D189AA | Bonded Piston - Reverse Servo | | 99-On | 1 | |

**NOTES**

# FORD
## 5R110W
## 2003-On

| ILL | DESCRIPTION | YEARS | FRICTION MODULE | STEEL MODULE | OVERHAUL KIT | BANNER KIT | MASTER KIT |
|---|---|---|---|---|---|---|---|
| **KITS** | | | | | | | |
| KT | Rebuilding Kit | 03-On | 166752 | 166753 | 166800 | 166901LS | 166901 |

| ILL | ALTO NO | REF NO | DESCRIPTION | SPEC | YEAR | QTY | NOTES |
|---|---|---|---|---|---|---|---|
| **FRICTION CLUTCHES** | | | | | | | |
| N I | 026722ASM | F81Z-7B164BA | #1 Overdrive Brake | .078 | 03-On | 3 | Tan - 32T - OD: 8.691" - SM |
| N I | 166706-198 | NA | #2 Coast - 167mm | .078 | 03-On | 3 | Heg - 59T - OD: 6.000" - SB |
| N I | 166708-198 | NA | #3 Intermediate - 198mm | .078 | 03-On | 3 | Heg - 24T - OD: 7.795" - SB |
| N I | 166702-198 | NA | #4 Direct - 159mm | .078 | 03-On | 4 | Heg - 48T - OD: 6.266" - SB |
| N I | 026720A198 | NA | #5 Forward | .078 | 03-On | 4 | Heg - 90T - OD: 6.358" - SM |
| N I | 026734A198 | NA | #6 Low / Reverse | .078 | 03-On | 6 | Heg - 72T - OD: 6.796" - WF |
| **STEEL CLUTCHES** | | | | | | | |
| N I | 026723 | 3C3Z-7B442AA | #1 Overdrive Brake | .078 | 03-On | 3 | 6T - ID: 7.467" |
| N I | 166707-200 | 3C3Z-7B442EA | #2 Coast | .078 | 03-On | 3 | 32T - ID: 5.850" |
| N I | 166709-375 | NA | #3 Intermediate | .125 | 03-On | 3 | 26T - Flat - ID:6.5" |
| N I | 166703-203 | NA | #4 Forward / Direct | .080 | 03-On | 8 | 25T - Flat - ID:5.12" |
| N I | 026703 | E9TZ-7B442E | #6 Low / Reverse | .068 | 03-On | 6 | 18T - ID: 5.800" |
| **PRESSURE PLATES** | | | | | | | |
| N I | 166765P116 | 3C3Z-7B066EA | #1 Overdrive Brake | .459 | 04-On | 1 | |
| **OEI™ Original Equipment Improvements** | | | | | | | |
| KT | 166757 | NA | POWERPACK™ - Direct | | 03-On | 1 | |

## NOTES

# FORD

**AOD 1980-93**
**AODE 1992-95**
**4R70W 1993-On**

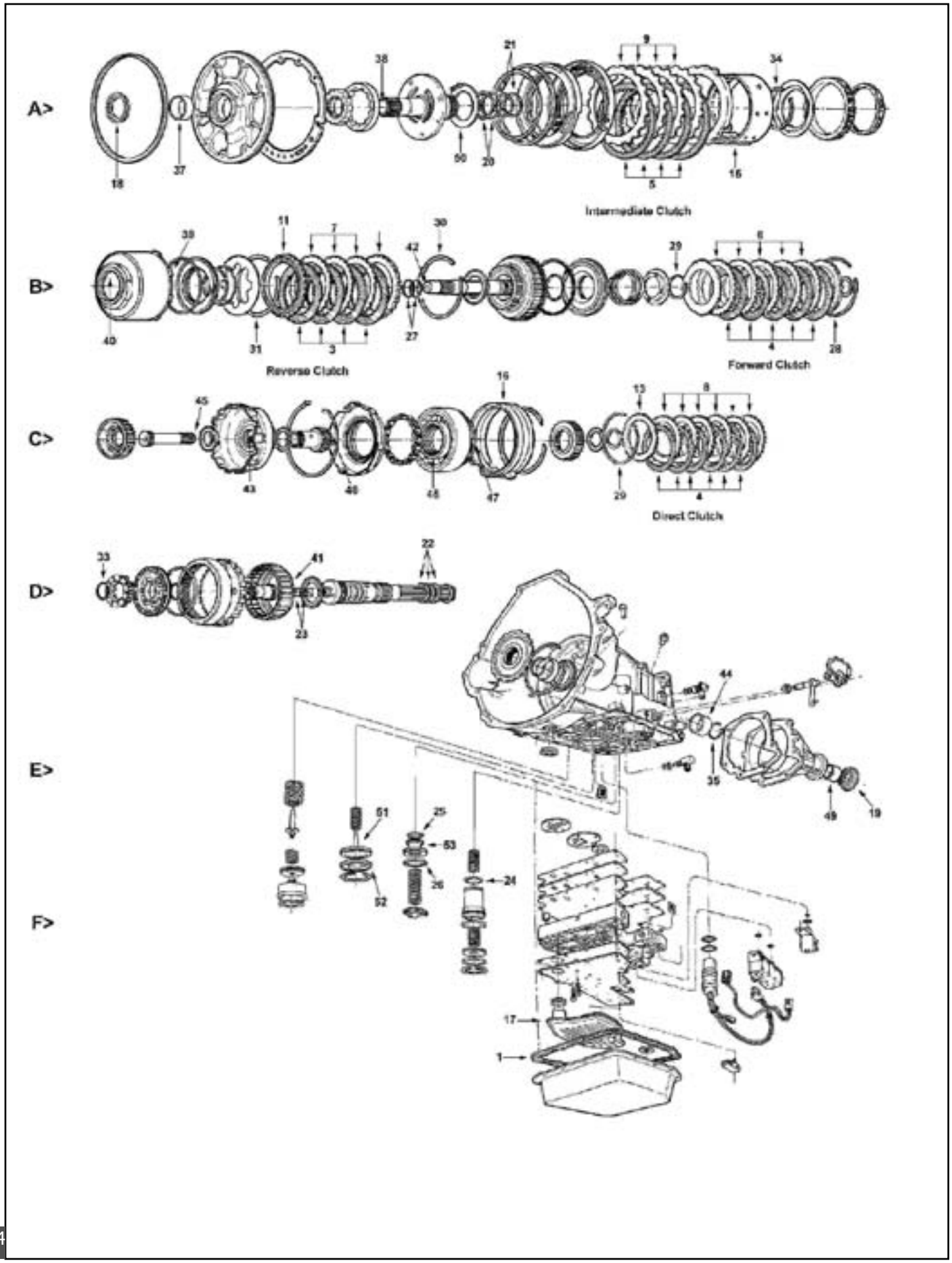

# FORD

**AOD 1980-93**
**AODE 1992-95**
**4R70W 1993-On**

| ILL | DESCRIPTION | YEARS | FRICTION MODULE | STEEL MODULE | OVERHAUL KIT | BANNER KIT | MASTER KIT |
|---|---|---|---|---|---|---|---|
| **KITS** | | | | | | | |
| KT | Rebuilding Kit - AOD | 80-E83 | 049752F | 049753 | 049800 | 049901LS | 049901 |
| KT | Rebuilding Kit - AOD | E83-90 | 049752G | 049753 | 049800 | 049903LS | 049903 |
| KT | Rebuilding Kit - AOD (combo) | 80-90 | 049752 | 049753 | 049800 | 049905LS | 049905 |
| KT | Rebuilding Kit - AOD with Grob steels | 90-93 | 049752B | 049753B | 049800 | 049907LS | 049907 |
| KT | Rebuilding Kit - AOD (combo) | 90-93 | 049752B | 049753C | 049800 | 049907LS | 049907A |
| KT | Rebuilding Kit - AODE | 92-95 | 049752C | 049753K | 049802 | 049909LS | 049909 |
| KT | Rebuilding Kit - 4R70W | 93-95 | 049752D | 049753E | 049802 | 049909ALS | 049909A |
| KT | Rebuilding Kit - 4R70W | 96-97 | 049752H | 049753H | 049804A | 049911LS | 049911 |
| KT | Rebuilding Kit - 4R70W | 98-On | 049752J | 049753J | 049804A | 049911ALS | 049911A |
| **Specialty Kit - with Powerpack™** | | | | | | | |
| KT | Rebuilding Kit - AOD with Direct POWERPACK | 80-93 | 049750PWR FR & ST | | 049800 | NA | 049905PWR |
| KT | Rebuilding Kit - AODE with Direct POWERPACK | 92-95 | 049750DPWR FR & ST | | 049802 | NA | 049909PWR |
| **HI-PERFORMANCE - with Powerpack™** | | | | | | | |
| KT | Rebuilding Kit - AOD with Direct POWERPACK | 80-93 | 049750HPPWR FR & ST | | 049800 | NA | 049905HPPWR |
| KT | Rebuilding Kit - AODE with Direct POWERPACK | 92-95 | 049750APWR FR & ST | | 049802 | NA | 049909HPPWR |

| ILL | ALTO NO | REF NO | DESCRIPTION | YEARS | SPEC | YEAR | QTY | NOTES |
|---|---|---|---|---|---|---|---|---|
| **MISCELLANEOUS GASKETS & KIT COMPONENTS** | | | | | | | | |
| 1F | 049816 | E0AZ-7A191A | Gasket, Oil pan - AOD | | Cork/Rub | 80-93 | 1 | |
| 1F | 049816A | NA | Gasket, Oil pan - AODE | | Cork/Rub | 92-On | 1 | |
| 1F | 049816B | F2VY-7A248A | Gasket, Oil pan - AODE | | M.Rubber | 92-On | 1 | |
| N I | 010115B | 87036-S94 | Speedometer - AOD | | | 80-93 | 1 | |
| N I | 032306C | E0AZ-7E195B | VB Checkball - .250" | | Viton® | 80-On | 7 | |
| **FRICTION CLUTCHES** | | | | | | | | |
| 2B | 049700 | E0AZ-7B164A | Forward | | .061 | 80-89 | 5 | Tan - 45T - OD: 5.250" - PL |
| 2B | 049710 | F8AZ-7B164AA | Forward - Grob drum | | .061 | 90-On | 5 | Tan - 45T - OD: 5.359" - PL |
| 2B | 049700-250 | NA | Forward - Selective | | .098 | 80-89 | AR | Tan - 45T - OD: 5.250" - PL |
| 2B | 049700BR | NA | Forward - Bronze clutch | | .061 | 80-89 | AR | Brz - 45T - OD: 5.250" - PL |
| 3B | 049702 | E0AZ-7B164B | Reverse | | .080 | 80-82 | 4 | Tan - 45T - OD: 5.250" - PL |
| 3B | 049700 | E0AZ-7B164A | Reverse | | .061 | 83-On | 5 | Tan - 45T - OD: 5.250" - PL |
| 3B | 049720A147 | NA | Reverse - POWERPACK™ Component | | .058 | 80-89 | AR | Heg - 45T - OD: 5.250" - PL |
| 4C | 049704 | F1SV-7B164A | Direct | | .075 | 80-98 | 5-6 | Tan - 42T - OD: 4.654" - PL |
| 4C | 049714 | F8AZ-7B164BA | Direct - 4R70W | | .066 | 94-On | 6 | Tan - 42T - OD: 4.676" - PL |
| 4C | 049704A | NA | Direct - POWERPACK™ Component | | .059 | 80-On | AR | Tan - 42T - OD: 4.654" - PL |
| 5A | 049706 | E0AZ-7B164D | Intermediate - some | | .080 | 80-97 | 3-4 | Tan - 60T - OD: 7.062" - SM |
| 5A | 049706-170 | F3LY-7B164A | Intermediate - some | | .066 | 93-On | 4 | Tan - 60T - OD: 7.062" - SM |
| 5A | 049706A170 | F75Z-7B164CA | Intermediate | | .066 | 98-On | 4 | Heg - 60T - OD: 7.062" - PL |
| N I | 138730-195 | NA | Transfer Case (BW4405) - internal spline | | .077 | 95-On | 5 | Tan - 19T - OD: 5.590" - PL |
| N I | 138731-195 | NA | Transfer Case (BW4405) - external spline | | .077 | 95-On | 6 | Tan - 31T - ID: 4.727" - PL |
| N I | 138730 | NA | Transfer Case (BW4406) - internal spline | | .065 | 97-On | 6 | Tan - 19T - OD: 5.590" - PL |
| N I | 138731 | NA | Transfer Case( BW4406) - external spline | | .065 | 97-On | 7 | Tan - 31T - ID: 4.727" - PL |
| **HI-PERFORMANCE - RED EAGLE®** | | | | | | | | |
| 2B | 049740 | NA | Forward & Reverse | | .061 | Various | 5/4 | RED EAGLE® |
| 2B | 049740A | NA | Forward | | .061 | 90-On | 5 | RED EAGLE® |
| 3B | 049742 | NA | Reverse | | .080 | 80-83 | 4 | RED EAGLE® |
| 3B | 049742PL | NA | Reverse | | .080 | 80-83 | 4 | RED EAGLE®-PL |
| 4C | 049744 | NA | Direct | | .075 | 80-On | 5 | RED EAGLE® |
| 4C | 049744A | NA | Direct - POWERPACK™ Component | | .059 | 80-On | AR | RED EAGLE® |
| 5A | 049746 | NA | Intermediate - some | | .080 | 80-93 | 3-4 | RED EAGLE® |
| 5A | 049746-170 | NA | Intermediate - some | | .066 | 92-On | 4 | RED EAGLE® |
| **HI-PERFORMANCE - UNIT PACKS (ONE Rebuild)** | | | | | | | | |
| KT | 049740UP5 | NA | UNIT PACK - Forward & Reverse | | .061 | Various | 1 | 5 RED EAGLE® Friction |

# FORD

## AOD 1980-93
## AODE 1992-95
## 4R70W 1993-On

| ILL | ALTO NO | REF NO | DESCRIPTION | YEARS | SPEC | YEAR | QTY | NOTES |
|---|---|---|---|---|---|---|---|---|
| **FRICTION CLUTCHES** | | | | | | | | ...Continued |
| **HI-PERFORMANCE - UNIT PACKS (ONE Rebuild)** | | | | | | | | |
| KT | 049742UP5 | NA | UNIT PACK - Reverse | | .080 | 80-83 | 1 | 5 RED EAGLE® Friction |
| KT | 049744UP6 | NA | UNIT PACK - Direct | | .075 | 80-On | 1 | 5 RED EAGLE® Friction |
| KT | 049744AUP8 | NA | UNIT PACK - Direct POWERPACK™ Comp. | | .059 | 80-On | 1 | 8 RED EAGLE® Friction |
| KT | 049746UP3 | NA | UNIT PACK - Intermediate | | .080 | 80-97 | 1 | 3 RED EAGLE® Friction |
| **STEEL CLUTCHES** | | | | | | | | |
| 6B | 023701 | C8AZ-7B442A | Forward - cast iron drum | | .068 | 80-89 | 5 | 54T - ID: 3.900" |
| 6B | 023701-140 | NA | Forward - selective Powerpack™ Component | | .055 | 80-89 | AR | 54T - ID: 3.900" |
| 6B | 049711 | F0SZ-7B442A | Forward - Grob (stamped steel drum) | | .069 | 90-On | 5 | 34T - ID: 3.900" |
| 7B | 023701 | C8AZ-7B442A | Reverse - cast iron drum | | .068 | 80-89 | 3 | 54T - ID: 3.900" |
| 7B | 049711A | F2TZ-7B442A | Reverse - Grob (stamped steel drum) | | .069 | 90-On | 3 | 32T - ID: 3.900" |
| 8C | 049705 | E0AZ-7B442A | Direct | | .070 | 80-89 | 4 | 28T - ID: 3.662" |
| 8C | 049715 | E9SZ-7B442A | Direct - Grob except Lincoln Mark & Truck | | .070 | 90-99 | 5-6 | 34T - ID: 3.662" |
| 8C | 049715-200 | F6AZ-7B442AA | Direct - Grob Lincoln Mark & Truck | | .079 | 90-On | 6 | 34T - ID: 3.662" |
| 8C | 049705A | NA | Direct - POWERPACK™ Component | | .060 | 80-89 | AR | 28T - ID: 3.662" |
| 8C | 049715A | NA | Direct - POWERPACK™ Component | | .060 | 90-On | AR | 34T - ID: 3.662" |
| 9A | 049707 | E0AZ-7B442B1 | Intermediate | | .069 | 80-98 | 3-4 | 18T - ID: 5.864" |
| 9A | 049707A | E0AZ-7B442B2 | Intermediate - Selective | | .079 | 80-98 | AR | 18T - ID: 5.864" |
| 9A | 049707B | E0AZ-7B442B3 | Intermediate - Selective | | .089 | 80-98 | AR | 18T - ID: 5.864" |
| 9A | 049707C | E0AZ-7B442B4 | Intermediate - Selective | | .099 | 80-98 | AR | 18T - ID: 5.864" |
| 9A | 049717-175 | XL3Z-7B442AA | Intermediate 4R70W New Design | | .069 | 80-On | 3 | 18T - ID: 5.864" |
| 9A | 049717-200 | XL3Z-7B442BA | Intermediate 4R70W Sel. New Design | | .079 | 80-On | AR | 18T - ID: 5.864" |
| 9A | 049717-225 | XL3Z-7B442CA | Intermediate 4R70W Sel. New Design | | .089 | 80-On | AR | 18T - ID: 5.864" |
| 9A | 049717-250 | XL3Z-7B442DA | Intermediate 4R70W Sel. New Design | | .099 | 80-On | AR | 18T - ID: 5.864" |
| **HI-PERFORMANCE - KOLENE®** | | | | | | | | |
| 6B | 023701K | NA | Forward & Reverse | | .068 | 80-89 | 5/3 | 54T - ID: 3.900" |
| 6B | 049711K | NA | Forward - Grob (stamped steel drum) | | .069 | 90-On | 5 | 34T - ID: 3.900" |
| 7B | 049711AK | NA | Reverse - Grob (stamped steel drum) | | .069 | 90-On | 3 | 32T - ID: 3.900" |
| 8C | 049705K | NA | Direct | | .070 | 80-89 | 4 | 28T - ID: 3.662" |
| 8C | 049715K | NA | Direct -Grob except Lincoln Mark & Truck | | .070 | 90-99 | 5-6 | 34T - ID: 3.662" |
| 8C | 049705AK | NA | Direct - POWERPACK™ Component | | .060 | 80-89 | AR | 28T - ID: 3.662" |
| 8C | 049715AK | NA | Direct - POWERPACK™ Component | | .059 | 90-On | AR | 34T - ID: 3.662" |
| 9A | 049707K | NA | Intermediate | | .069 | 80-On | 3-4 | 18T - ID: 5.864" |
| **HI-PERFORMANCE - UNIT PACKS (ONE Rebuild)** | | | | | | | | |
| KT | 023701KUP4 | NA | UNIT PACK - Forward & Reverse | | .068 | 80-89 | 1 | 4 KOLENE® Steel |
| KT | 049711AKUP3 | NA | UNIT PACK - Reverse | | .069 | 90-On | 1 | 3 KOLENE® Steel |
| KT | 049705KUP4 | NA | UNIT PACK - Direct | | .070 | 80-89 | 1 | 4 KOLENE® Steel |
| KT | 049705AKUP11 | NA | UNIT PACK - Direct POWERPACK™ Comp. | | .060 | 80-89 | 1 | 11 KOLENE Steel |
| KT | 049715KUP6 | NA | UNIT PACK - Direct (except Licoln & Truck) | | .070 | 90-99 | 1 | 6 KOLENE® Steel |
| KT | 049715AKUP8 | NA | UNIT PACK - Direct POWERPACK™ Comp. | | .059 | 90-On | 1 | 8 KOLENE® Steel |
| KT | 049713UP1 | NA | UNIT PACK - Direct POWERPACK™ Comp. | | .128 | 80-92 | 1 | 1 Pressure Plate |
| KT | 049707KUP3 | NA | UNIT PACK - Intermediate | | .069 | 80-On | 1 | 3 KOLENE® Steel |
| **PRESSURE PLATES** | | | | | | | | |
| 10B | TBA | E0AZ-7B066A | Forward, backing - AOD | | .272 | 80-83 | 1 | 27T |
| 10B | 049760A500 | E0AZ-7B066C | Forward, backing - AOD | | .200 | 83-90 | 1 | 27T |
| 10B | TBA | F0SZ-7B066A | Forward, backing - AOD | | .264 | 90-93 | 1 | |
| 10B | 049760B700 | F0SZ-7B066B | Forward, backing - All | | .275 | 90-On | 1 | 34T |
| 6B | 023701-350 | NA | Forward - Powerpack™ Component | | .138 | 80-89 | AR | 54T - ID: 3.900" |
| 11B | 023760 | E0AZ-7B066B | Reverse, apply - AOD | | .322 | 80-93 | 1 | 54T |
| 11B | 049764A944 | F2TZ-7B066B | Reverse, apply - AODE / 4R70W | | | 92-On | 1 | 32T |
| 12B | 049760A500 | E0AZ-7B066C | Reverse, backing - AOD | | .200 | 80-93 | 1 | 27T |
| 12B | 049764-500 | F2TZ-7B066A | Reverse, backing - AODE / 4R70W | | .200 | 92-98 | 1 | |
| 12B | TBA | XL3Z-7B066AA | Reverse, backing - 4R70W | | .323 | 99-On | 1 | |
| 13C | 049762 | E0AZ-7B066E | Direct, apply - AOD | | .219 | 80-92 | 1 | |
| 13C | 049713 | NA | Direct, apply - AOD Powerpack Comp. | | .128 | 80-92 | 1 | Cast Iron Drum |
| 13C | 049723 | NA | Direct, apply - AOD Powerpack Comp. | | .123 | 90-On | 1 | Grob (Stamped Steel Drum) |

# FORD
## AOD 1980-93
## AODE 1992-95
## 4R70W 1993-On

| ILL | ALTO NO | REF NO | DESCRIPTION | YEARS | SPEC | YEAR | QTY | NOTES |
|---|---|---|---|---|---|---|---|---|
| **PRESSURE PLATES** | | | | | | | | ...Continued |
| 13C | TBA | E9SZ-7B066A | Direct, apply - AOD (Mustang) / AODE | | .219 | 92-On | 1 | 9T |
| 13C | TBA | F7AZ-7B066AA | Direct, apply - AODE / 4R70W | | .399 | 97-99 | 1 | |
| 13C | TBA | F7AZ-7B066BA | Direct, apply - AODE / 4R70W | | .239 | 97-99 | 1 | |
| 14A | TBA | E0AZ-7B066D | Intermediate, apply - AOD | | .406 | 80-89 | 1 | 8 cyl. engines |
| 14A | TBA | E9SZ-7B066A | Intermediate, apply - AOD | | .563 | 80-89 | 1 | 6 cyl. engines |
| 14A | TBA | F2AZ-7B066A | Intermediate, apply - AOD / AODE | | .406 | 90-99 | 1 | (3 pack drum) |
| 14A | TBA | F3LY-7B066A | Intermediate, apply - AODE / 4R70W | | .255 | 94-On | 1 | (4 pack drum) |
| 14A | 049761D | F7AZ-7B066AA | Intermediate, apply - 4R70W | | .244 | 95-97 | 1 | (4 pack drum) |
| **OEI™ Original Equipment Improvements** | | | | | | | | |
| KT | 049750A | NA | POWERPACK™ Direct (cast iron drum) | | | 80-89 | 1 | Increased capacity |
| KT | 049754A | NA | POWERPACK™ Direct Grob (stamped drum) | | | 90-On | 1 | Increased capacity |
| KT | 049756 | NA | Clearance Kit™, Intermediate Clutch | | | 92-On | 1 | converts 3 pack into 4 |
| KT | 049758 | NA | POWERPACK™ Reverse (Cast Iron Drum) | | | 80-89 | 1 | |
| KT | 049758A | NA | POWERPACK™ Reverse Grob (Stamped) | | | 90-On | 1 | |
| KT | 049985 | SK® AOD | Shift Kit® - AOD | | Transgo® | 80-93 | 1 | |
| KT | 049986 | SK® AODE | Shift Kit® - AODE / 4R70W | | Transgo® | 92-On | 1 | |
| **HI-PERFORMANCE** | | | | | | | | |
| KT | 049750AHP | NA | POWERPACK™ Direct (cast iron drum) | | | 80-89 | 1 | RED EAGLE® & KOLENE® |
| KT | 049754AHP | NA | POWERPACK™ Direct Grob (stamped drum) | | | 90-On | 1 | RED EAGLE® & KOLENE® |
| KT | 049756HP | NA | Clearance Kit™, Intermediate Clutch | | | 92-On | 1 | RED EAGLE® & KOLENE® |
| KT | 049991 | AOD-HP | Reprogramming Kit™ - AOD | | | 80-93 | 1 | Increase max. shift 5000+ |
| KT | 049991A | AODE-HD2 | Reprogramming Kit™ - AODE | | | 92-On | 1 | Hot Rod / Off road |
| KT | 049991B | AODE-3 | Reprogramming Kit™ - AODE | | | 92-On | 1 | Full Manual - "Stick shift" |
| **BANDS** | | | | | | | | |
| 15A | 049950 | E0AZ-7F196A | Overdrive - with Cast iron drum | | 1.500 | 80-90 | 1 | Tan |
| 15A | 049951 | F2TZ-7F196A | Overdrive - with Grob (stamped steel) drum | 2.000 | | 90-On | 1 | Tan |
| 16C | 049955 | F0AZ-7D095A | Reverse - split band | | | 80-On | 1 | Tan |
| **HI-PERFORMANCE - RED EAGLE®** | | | | | | | | |
| 15A | 049960 | NA | Overdrive - with Cast iron drum | | 1.500 | 80-90 | 1 | RED EAGLE® |
| 15A | 049961 | NA | Overdrive - with Grob (stamped steel) drum | | 2.000 | 90-On | 1 | RED EAGLE® |
| **FILTERS** | | | | | | | | |
| KT | FK049940 | NA | Filter Kit - AOD (2wd) | | | 80-93 | 1 | |
| KT | FK049944 | NA | Filter Kit - AODE (2wd) | | | 92-95 | 1 | |
| KT | FK049946 | NA | Filter Kit - AODE / 4R70W (2wd) | | | 96-On | 1 | |
| KT | FK049942 | NA | Filter Kit - AOD (4wd) | | | 84-93 | 1 | |
| KT | FK049946 | NA | Filter Kit - AODE / 4R70W (4wd) | | | 94-On | 1 | |
| 17F | 049940 | E1AZ-7A098A | Filter - AOD (2wd) | | | 80-93 | 1 | |
| 17F | 049944 | F2VY-7A098A | Filter - AODE (2wd) | | | 92-95 | 1 | |
| 17F | 049946 | F6AZ-7A098A | Filter - AODE / 4R70W (2wd) | | | 96-On | 1 | |
| 17F | 049942 | E5TZ-7A098C | Filter - AOD (4wd) | | | 84-93 | 1 | |
| 17F | 049946 | F6AZ-7A098A | Filter - AODE / 4R70W (4wd) | | | 94-On | 1 | |
| **METAL CLAD SEALS** | | | | | | | | |
| 18A | 024400 | C2AZ-7A248A | Front pump without flange | | Silicone | 80-91 | 1 | |
| 18A | 026400 | F2VY-7A248A | Front pump with flange | | Viton® | 92-On | 1 | |
| 19E | 032402 | D5AZ-7052A | Extension Housing without boot | | 2.381 | 80-91 | 1 | |
| 19E | 023405 | E2DZ-7052A | Extension Housing with long boot | | 2.381 | 80-91 | 1 | |
| 19E | 023404 | D5AZ-7052B | Extension Housing with short boot | | 2.381 | 80-91 | 1 | |
| 19E | 049407 | D9BZ-7052A | Extension Housing AODE / 4R70W | | 2.381 | 92-94 | 1 | with short boot |
| 19E | 049405 | F7AZ-7052A | Extension Housing AODE / 4R70W | | 2.485 | 95-On | 1 | with short boot |
| 19E | 049406 | F6UZ-7052A | Extension Housing 4R70W - Trucks | | 2.485 | 96-On | 1 | with long boot |
| N I | 049402 | E0AZ-7F337A | Throttle Shaft seal | | | 80-On | 1 | |
| N I | 023406 | D5AZ-7B498A | Manual Lever seal | | | 80-On | 1 | |
| **SEALING RINGS** | | | | | | | | |
| KT | 049600 | B230 | Sealing Ring Kit, AOD - 8M/5T | | | 80-93 | 1 | |
| KT | 049600A | B233 | Sealing Ring Kit, AOD - 8M/5T | | | 80-93 | 1 | with plated gov. rings |
| KT | 049600T | B235C | Sealing Ring Kit, AOD - 13T | | | 80-93 | 1 | |

# FORD

## AOD 1980-93
## AODE 1992-95
## 4R70W 1993-On

| ILL | ALTO NO | REF NO | DESCRIPTION | YEARS | SPEC | YEAR | QTY | NOTES |
|---|---|---|---|---|---|---|---|---|
| **SEALING RINGS** | | | | | | | | ...Continued |
| KT | 049601 | B263 | Sealing Ring Kit, AODE / 4R70W - 7M/4T | | | 92-On | 1 | |
| KT | 049601A | B264 | Sealing Ring Kit, AODE / 4R70W - 7M/4T | | | 92-On | 1 | with plated gov. rings |
| 20A | 049100 | E0AZ-7D020A | Reverse Clutch drum | | | 80-On | 2 | |
| 21A | 049101 | E0AZ-7D019A | Forward Clutch drum - Cast Iron drum | | | 80-92 | 2 | |
| 21A | 049101A | F3LY-7D019A | Forward Clutch drum - Grob (stamped drum) | | | 92-On | 2 | seal plated rings |
| 22D | 049102 | E0AZ-7F273A | Governor | | | 80-On | 3-4 | |
| 22D | 049102A | E6AZ-7F273A | Governor | | | 80-On | 3-4 | seal plated rings |
| 23D | 049103 | E3AZ-7F274A | Direct Drum | | | 80-On | 2 | |
| 24F | 049104 | E0AZ-7F248A | 3-4 Accumulator - upper | | Teflon | 80-93 | 1 | |
| 25F | 049105 | E0AZ-7F249A | 2-3 Accumulator - lower | | Teflon | 80-93 | 1 | |
| 26F | 049106 | E0AZ-7F250A | 2-3 Accumulator - upper | | Teflon | 80-93 | 1 | |
| 27B | 049107 | F2VY-7B497A | Input shaft, AODE / 4R70W - scarf cut | | Teflon | 92-On | 2 | |
| 27B | 049107A | NA | Input shaft, AODE / 4R70W - solid | | Teflon | 92-On | 2 | |
| **SNAP RINGS** | | | | | | | | |
| KT | 049680HP | NA | Kit, complete | | | 80-On | 1 | includes Interm. retainer |
| KT | 049681HP | NA | Kit, Intermediate sprag retainer & snap ring | | | 80-On | 1 | |
| 28B | 049250-062 | C8AZ-7D483C | Forward - cast iron drum | | .062 | 80-90 | AR | |
| 28B | 049250-076 | C7AZ-7D483A | Forward - cast iron drum | | .076 | 80-90 | AR | |
| 28B | 049250-090 | C8AZ-7D483B | Forward - cast iron drum | | .090 | 80-90 | AR | |
| 28B | 049250-104 | C8AZ-7D483A | Forward - cast iron drum | | .104 | 80-90 | AR | |
| 29B | TBA | 388099-S | Forward spring retainer | | | 80-On | 1 | |
| 30B | 049250-062 | C8AZ-7D483C | Reverse Drum | | .062 | 80-On | AR | |
| 30B | 049250-076 | C7AZ-7D483A | Reverse Drum | | .076 | 80-On | AR | |
| 30B | 049250-090 | C8AZ-7D483B | Reverse Drum | | .090 | 80-On | AR | |
| 30B | 049250-104 | C8AZ-7D483A | Reverse Drum | | .104 | 80-On | AR | |
| 31B | TBA | E0AZ-7A577A | Reverse spring retainer | | | 80-On | 1 | |
| 32C | 049251-052 | E0AZ-7D483A | Direct Drum | | .052 | 80-On | AR | |
| 32C | 049251-066 | E0AZ-7D483B | Direct Drum | | .066 | 80-On | AR | |
| 32C | 049251-080 | E0AZ-7D483C | Direct Drum | | .080 | 80-On | AR | |
| 32C | 049251-094 | E0AZ-7D483D | Direct Drum | | .094 | 80-On | AR | |
| 33D | 049252 | 388104-S | Direct spring retainer | | | 80-On | 1 | |
| 34A | 049253 | 389790-S | Intermediate (overruning clutch) retainer | | | 80-On | 1 | OE style |
| 35A | 049254 | NA | Intermediate (overruning clutch) retainer | | Spiral | 80-On | 1 | Aftermarket style |
| N I | 049254A | NA | Intermediate spiral snap ring retainer | | | 90-On | 1 | |
| 36E | 049252 | 388104-S | Output shaft | | | 80-On | 1 | |
| **BUSHINGS** | | | | | | | | |
| KT | 049625 | NA | Bushing Kit - AOD (Short) | | | 80-93 | 1 | |
| KT | 049625B | NA | Bushing Kit - AODE / 4R70W | | | 92-On | 1 | |
| 37A | 026202 | E0AZ-7B258B | Front Pump - Bronze | | .755 | 80-On | 1 | |
| 37A | 049200 | E9TZ-7B258A | Front Pump - Bronze | | .695 | 80-On | 1 | |
| 44E | 049207 | E0AZ-7B025A | Case | | | 80-On | 1 | |
| 38A | 049214 | C6AZ-7B261C | Stator Support, Front - AODE | | | 92-93 | 1 | |
| 38A | 049214A | F2VP-7B261AA | Stator Support, Front | | | 94-On | 1 | |
| N I | 049201 | E0AZ-7D018A | Stator Support, Rear - AOD | | | 80-93 | 1 | |
| N I | 049215 | C6AZ-7B261C | Stator Support, Rear - AODE | | | 92-93 | 1 | |
| N I | 049215A | F4AP-7B261AA | Stator Support, Rear with notch | | | 94-On | 1 | |
| 39B | 049202 | E0AZ-7F218A | Reverse Drum, Rear | | | 80-On | 1 | |
| 40B | 049204 | E0AZ-7F217A | Reverse Drum, Front | | | 80-On | 1 | |
| 41D | 049203 | NA | Direct Drum with oil hole | | | 80-On | 1 | |
| 42B | 049205 | E0AZ-7E214A | Turbine Shaft - AOD | | | 80-93 | 1 | |
| 43C | 049206 | E0AZ-7A193A | Reverse Sun shell | | | 80-On | 2 | |
| 44E | 049207 | E0AZ-7B025A | Case | | | 80-On | 1 | |
| 44E | 049212 | NA | Case - special flanged case saver | | | 80-On | 1 | |
| 45C | 049208 | C4AZ-7A132A | Planet support | | | 80-On | 1 | |
| 46C | 049209 | E0AZ-7A374A | Planet carrier - Front | | 2.77 | 80-On | 1 | |
| 47C | 049210 | E0AZ-7A375A | Planet carrier - Rear | | 1.38 | 80-On | 1 | |
| 48C | 049213 | E0AZ-7B262A | Forward Sun gear shaft | | | 80-On | 1 | |

# FORD
## AOD 1980-93
## AODE 1992-95
## 4R70W 1993-On

| ILL | ALTO NO | REF NO | DESCRIPTION | YEARS | SPEC | YEAR | QTY | NOTES |
|---|---|---|---|---|---|---|---|---|
| **BUSHINGS** | | | | | | | | ...Continued |
| 49E | 023224 | B3TZ-7A034A | Extension Housing - AOD / AODE | | | 80-95 | 1 | |
| 49E | 049214 | NA | Extension Housing - 4R70W | | | 93-On | 1 | |
| **WASHERS** | | | | | | | | |
| KT | 049635 | NA | Washer Kit | | | 80-On | 1 | |
| 50A | 049151 | E0AZ-7D014A | Pump Support #1 - Green | | .052 | 80-On | 1 | |
| 50A | 049152 | E0AZ-7D014B | Pump Support #2 - Yellow | | .070 | 80-On | 1 | |
| 50A | 049153 | E0AZ-7D014C | Pump Support #3 - Natural | | .087 | 80-On | 1 | |
| 50A | 049154 | E0AZ-7D014D | Pump Support #4 - Red | | .104 | 80-On | 1 | |
| 50A | 049155 | E0AZ-7D014E | Pump Support #5 - Blue | | .121 | 80-On | 1 | |
| N I | 049158 | E0AZ-7A166A | Forward clutch (6 tabs) | | | 80-86 | 1 | |
| N I | 049196 | E1TZ-7A166A | Forward clutch (bearing) | | | 86-On | 1 | |
| **MISCELLANEOUS** | | | | | | | | |
| 51E | 049301 | E0AZ-7D189A | Bonded piston - Reverse Servo piston | | 2.328 | 80-On | 1 | 1 groove |
| 51E | 049302 | E0AZ-7D189B | Bonded piston - Reverse Servo piston | | 3.000 | 80-On | 1 | 2 grooves |
| 51E | 049303 | E0AZ-7D189C | Bonded piston - Reverse Servo piston | | 3.031 | 80-On | 1 | 3 grooves |
| 52E | 049304 | E0AZ-7D036A | Bonded piston - Reverse Servo cover | | | 80-On | 1 | |
| 53E | 049305 | F7AZ-7H292A | Bonded piston - Direct (2-3) Accumulator | | | 80-On | 1 | Does retro-fit |

## NOTES

# FORD
## ATX
## 1981-94

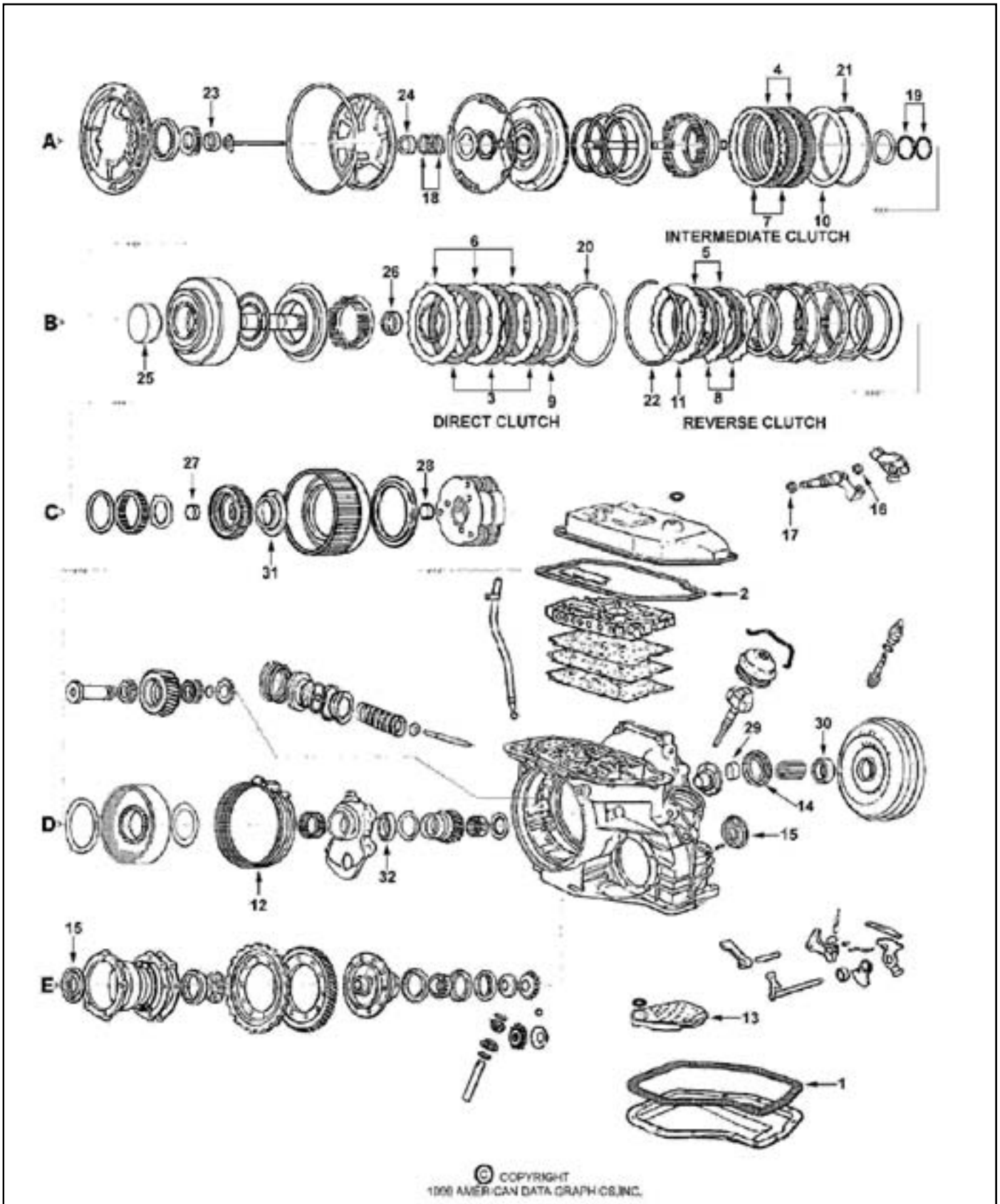

| ILL | DESCRIPTION | YEARS | FRICTION MODULE | STEEL MODULE | OVERHAUL KIT | BANNER KIT | MASTER KIT |
|---|---|---|---|---|---|---|---|
| **KITS** | | | | | | | |
| KT | Rebuilding Kit with Teflon Rings | 81-91 | 051752 | 051753 | 051800 | 051901LS | 051901 |
| KT | Rebuilding Kit with Teflon Rings | 92-94 | 051752A | 051753A | 051800 | 051903LS | 051903 |
| KT | Rebuilding Kit with Metal Rings | 81-94 | NA | NA | 051800A | NA | NA |

| ILL | ALTO NO | REF NO | DESCRIPTION | SPEC | YEAR | QTY | NOTES |
|---|---|---|---|---|---|---|---|
| **MISCELLANEOUS GASKETS & KIT COMPONENTS** | | | | | | | |
| 1E | 051816 | E1FZ-7A191A | Gasket, Oil pan | Cork/Rub | 81-94 | 1 | |
| 2C | 051818 | E1FZ-7F396A | Gasket, VB cover | Cork/Rub | 81-94 | 1 | |
| **FRICTION CLUTCHES** | | | | | | | |
| 3B | 051700 | F23Z-7B164A | Direct | .076 | 81-94 | 3-4 | Tan - 36T - OD: 5.053" - PL |
| 4A | 051702 | E1FZ-7B164B | Intermediate | .078 | 81-91 | 2-3 | Tan - 40T - OD: 7.228" - PL |
| 4A | 051702A | F23Z-7B164B | Intermediate (Larger Friction paper ID) | .078 | 92-94 | 3 | Tan - 40T - OD: 7.228" - PL |
| 5B | 051702A | F23Z-7B164B | Reverse (Larger Friction paper ID) | .078 | 92-94 | 3 | Tan - 40T - OD: 7.228" - PL |
| **STEEL CLUTCHES** | | | | | | | |
| 6B | 051701 | E1FZ-7B442A | Direct | .070 | 81-94 | 3-4 | 18T - ID: 3.882" |
| 7A | 051703 | E2FZ-7B442B | Intermediate | .070 | 81-91 | 2-3 | 36T - ID: 6.383" |
| 7A | 051703A | F23Z-7B442A | Intermediate | .070 | 92-94 | 3 | 36T - ID: 6.080" |
| 8B | 051705 | E1FZ-7B442C | Reverse | .070 | 81-91 | 2-3 | 11T - ID: 6.376" |
| 8B | 051705A | F23Z-7B442B | Reverse | .070 | 92-94 | 3 | 11T - ID: 6.146" |
| **PRESSURE PLATES** | | | | | | | |
| 9B | TBA | E1FZ-7B066A | Direct | | 81-94 | 1 | |
| 10A | TBA | E1FZ-7B066B | Intermediate | | 81-89 | 1 | |
| 10A | TBA | F23Z-7B066A | Intermediate | | 90-94 | 1 | |
| 11B | TBA | E1FZ-7B066C | Reverse | | 81-89 | 1 | |
| 11B | TBA | F23Z-7B066B | Reverse | | 90-94 | 1 | |
| **OEI™ Original Equipment Improvements** | | | | | | | |
| KT | 051985 | SK® FX | Shift Kit® - Corrects cutloose, late shifts | Transgo® | 81-94 | 1 | |
| **BANDS** | | | | | | | |
| 12D | 051950 | E1FZ-7D034B | Low & Intermediate | Tan | 81-85 | 1 | use with long band strut |
| 12D | 051951 | E9FZ-7D034A | Low & Intermediate | Tan | 86-94 | 1 | use with short band strut |
| **FILTERS** | | | | | | | |
| KT | FK051940 | NA | Filter Kit | | 81-94 | 1 | |
| 13E | 051940 | E9FZ-7A098A | Filter | | 81-94 | 1 | |
| **METAL CLAD SEALS** | | | | | | | |
| 14D | 051400 | E6FZ-7F401A | Converter Housing | | 81-94 | 1 | |
| 15DE | 051405 | E1FZ-1177A | Axle (Differential) | | 81-94 | 2 | |
| 16C | 049402 | E0AZ-7F337A | Manual Lever | .635 | 81-94 | 1 | |
| 17C | 051406 | E1FZ-7B498A | Throttle shaft | 1.330 | 81-94 | 1 | |
| **SEALING RINGS** | | | | | | | |
| KT | 051600 | B238 | Sealing Ring Kit - 5M | | 81-94 | 1 | |
| KT | 051600T | B236 | Sealing Ring Kit - 5T | | 81-94 | 1 | |
| 18A | 051100 | NA | Stator Support (Intermediate clutch) | Teflon | 81-94 | 3 | |
| 18A | 051110 | E1FZ-7D019A | Stator Support (Intermediate clutch) | Metal | 81-94 | 3 | |
| 19A | 051101 | NA | Intermediate Drum (Direct clutch) | Teflon | 81-94 | 2 | |
| 19A | 051111 | E1FZ-7D020A | Intermediate Drum (Direct clutch) | Metal | 81-94 | 2 | |
| **SNAP RINGS** | | | | | | | |
| KT | 051680 | NA | Kit | | 81-94 | 1 | |
| 20B | 051252-052 | E1FZ-7D483A | Direct clutch drum - selective | .052 | 81-94 | AR | |
| 20B | 051252-064 | E1FZ-7D483B | Direct clutch drum - selective | .064 | 81-94 | AR | |
| 20B | 051252-076 | E1FZ-7D483C | Direct clutch drum - selective | .076 | 81-94 | AR | |
| 21A | 051251-050 | E1FZ-7D483D | Intermediate clutch drum - selective | .050 | 81-94 | AR | |
| 21A | 051251-061 | E1FZ-7D483E | Intermediate clutch drum - selective | .061 | 81-94 | AR | |
| 21A | 051251-072 | E1FZ-7D483F | Intermediate clutch drum - selective | .072 | 81-94 | AR | |
| 22B | 051250-076 | E1FZ-7D483G | Reverse clutch drum | .076 | 81-85 | 1 | |
| 22B | 051250-051 | E6FZ-7D483A | Reverse clutch drum - selective | .051 | 86-94 | AR | |

# FORD
## ATX
## 1981-94

| ILL | ALTO NO | REF NO | DESCRIPTION | SPEC | YEAR | QTY | NOTES |
|---|---|---|---|---|---|---|---|
| **SNAP RINGS** | | | | | | | ...Continued |
| 22B | 051250-072 | E6FZ-7D483B | Reverse clutch drum - selective | .072 | 86-94 | AR | |
| 22B | 051250-085 | E6FZ-7D483C | Reverse clutch drum - selective | .085 | 86-94 | AR | |
| 22B | 051250-102 | E6FZ-7D483D | Reverse clutch drum - selective | .102 | 86-94 | AR | |
| **BUSHINGS** | | | | | | | |
| KT | 051625 | NA | Bushing Kit | | 81-94 | 1 | |
| 23A | 051200 | E1EP-7B259A | Front Pump | | 81-94 | 1 | |
| 24A | 051201 | E1EP-7N817A | Stator Support | | 81-94 | 1 | |
| 25B | 051202 | E1EP-7F233A | Direct clutch drum | 3/8" | 81-94 | 1 | |
| 25B | 051202A | NA | Direct clutch drum - oversize | 1/5" | 81-94 | 1 | |
| 26B | 051203 | E1EP-7F214A | Turbine Shaft | | 81-94 | 1 | |
| 27C | 051204 | E1EP-7D065A | Sun Gear | | 81-94 | 1 | |
| 28C | 051204 | E1EP-7D065A | Reverse Planet | | 81-94 | 1 | |
| 29D | 051206 | E1EP-7F437A | Converter reaction shaft support | | 81-94 | 1 | Converter sun gear |
| 30D | 051207 | E1EP-7N805A | Converter Hub | | 81-94 | 1 | |
| 31C | 051208 | E1EP-7F440A | Ring Gear (Lip type bushing) | | 81-94 | 1 | |
| 32D | 051209 | E1EP-7F366A | Transfer Housing | | 81-94 | 1 | |
| **WASHERS** | | | | | | | |
| KT | 051635 | NA | Washer Kit | | 81-94 | 1 | |

**NOTES**

A>

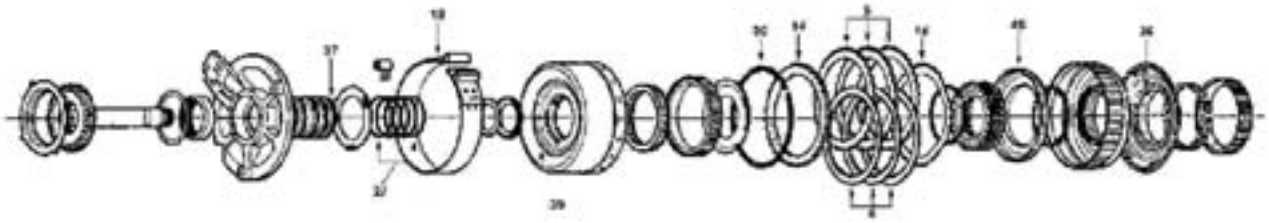

FORWARD CLUTCH

B>

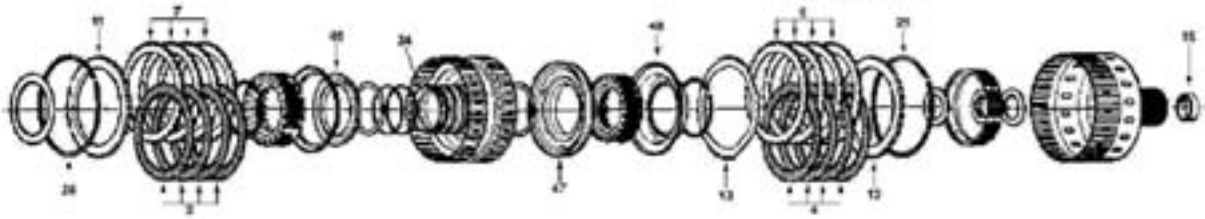

DIRECT CLUTCH

INTERMEDIATE CLUTCH

C>

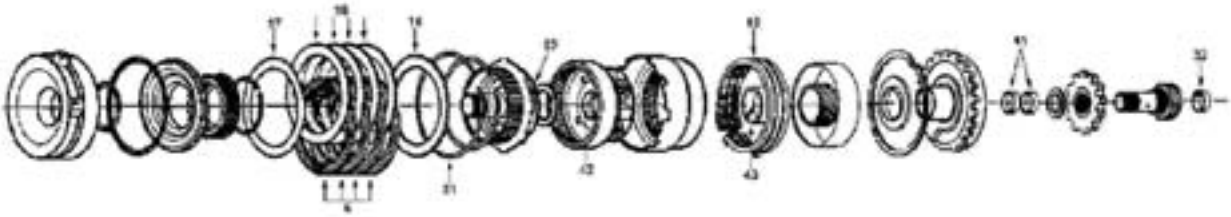

REVERSE CLUTCH

D>

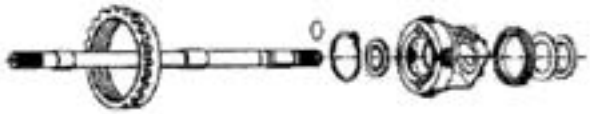

E>

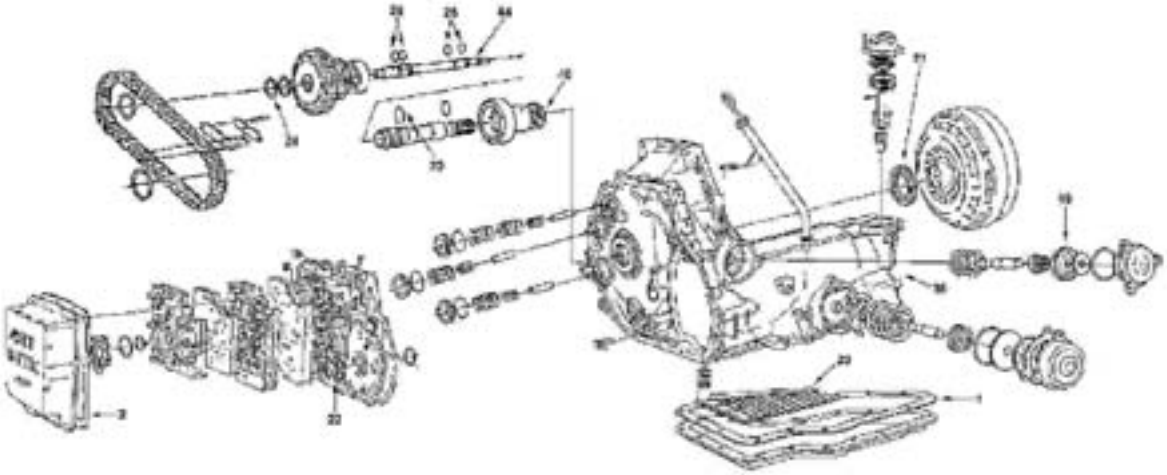

# FORD

## AXOD 1986-90
## AXODE 1991-93
## AX4S 1994-On

| ILL | DESCRIPTION | YEARS | FRICTION MODULE | STEEL MODULE | OVERHAUL KIT | BANNER KIT | MASTER KIT |
|---|---|---|---|---|---|---|---|
| **KITS** | | | | | | | |
| KT | Rebuilding Kit - AXOD | 86-90 | 069752 | 069753 | 069800 | 069901LS | 069901 |
| KT | Rebuilding Kit - AXODE | 91 | 069752 | 069753 | 069802 | 069903ELS | 069903E |
| KT | Rebuilding Kit - AXODE / AX4S | 92-98 | 069752A | 069753A | 069802 | 069903LS | 069903 |
| KT | Rebuilding Kit - AX4S | 99-On | 069752C | 069753C | 069802 | 069907LS | 069907 |

| ILL | ALTO NO | REF NO | DESCRIPTION | SPEC | YEAR | QTY | NOTES |
|---|---|---|---|---|---|---|---|
| **MISCELLANEOUS GASKETS & KIT COMPONENTS** | | | | | | | |
| 1E | 069816 | E6DZ-7A191A | Gasket, Oil pan | Cork/Rub | 86-95 | 1 | |
| 1E | 069816A | NA | Gasket, Oil pan - AX4S | Cork/Rub | 96-On | 1 | |
| 1E | 069816B | F6DZ-7A191A | Gasket, Oil pan - AX4S | M.Rubber | 96-On | 1 | |
| 2E | 069818 | E6DZ-7F396A | Gasket, Main control (VB) cover | Cork/Rub | 86-95 | 1 | |
| 2E | 069818B | F6DZ-7F396A | Gasket, Main control (VB) cover | M.Rubber | 96-On | 1 | |
| N I | 010115B | N-802927-S | O Ring, Electrical connector & Speedometer | | 86-On | 2 | |
| **FRICTION CLUTCHES** | | | | | | | |
| 3B | 069700 | E6DZ-7B164A | Direct | .065 | 86-On | 4 | Tan - 63T - OD: 5.753" - PL |
| 3B | 069730 | XF2Z-7B164CA | Direct - with hardened steel spline | .065 | 86-On | 4 | Heg - 63T - OD: 5.753" - PL |
| 4B | 069700 | E6DZ-7B164A | Intermediate | .065 | 86-On | 5 | Tan - 63T - OD: 5.753" - PL |
| 4B | 069730 | XF2Z-7B164CA | Intermediate - with hardened steel spline | .065 | 86-On | 5 | Heg - 63T - OD: 5.753" - PL |
| 5A | 069702 | E6DZ-7B164B | Forward | .065 | 86-91 | 3-4 | Tan - 52T - OD: 5.750" - SM |
| 5A | 069712 | F8DZ-7B164AC | Forward | .065 | 92-On | 3-4 | Tan - 57T - OD: 5.750" - SM |
| 6C | 069704 | F8DZ-7B164CA | Reverse | .069 | 86-On | 4 | Tan - 49T - OD: 5.980" - PL |
| **STEEL CLUTCHES** | | | | | | | |
| 7B | 069701 | E6DZ-7B442A | Direct | .069 | 86-95 | 4 | 34T - ID: 4.716" |
| 7B | 069701K | F7DZ-7B442AA | Direct - KOLENE® | .069 | 96-98 | 4 | 34T - ID: 4.716" |
| 7B | 069709K | F7DZ-7B442BA | Direct - KOLENE® | .093 | 99-On | 4 | 34T - ID: 4.716" |
| 8B | 069703 | E6DZ-7B442B | Intermediate | .089 | 86-87 | 4 | 34T - ID: 4.716" |
| 8B | 069701 | E6DZ-7B442A | Intermediate | .069 | 88-95 | 4 | 34T - ID: 4.716" |
| 8B | 069701K | F7DZ-7B442AA | Intermediate - KOLENE® | .069 | 96-98 | 4 | 34T - ID: 4.716" |
| 8B | 069709A | XF2Z-7B442BA | Intermediate | .093 | 99-On | 4 | 32T - ID: 4.716" |
| 9A | 069701 | E6DZ-7B442A | Forward | .069 | 86-91 | 4 | 34T - ID: 4.716" |
| 9A | 069711 | XF1Z-7B442BA | Forward | .069 | 92-On | 4 | 34T - ID: 4.933" |
| 10C | 069705 | XF1Z-7B442AA | Reverse | .068 | 86-On | 4 | 54T - ID: 4.817" |
| **PRESSURE PLATES** | | | | | | | |
| 11B | 069760B400 | E6DZ-7B066A | Direct - backing | .156 | 86-99 | 1 | except below |
| 11B | TBA | F3DZ-7B066B | Direct - backing | .134 | 83-85 | 1 | SHO |
| 11B | TBA | F7DZ-7B066AA | Direct - backing | | 00-On | 1 | |
| 12B | TBA | E8DZ-7B066A | Intermediate - backing | .125 | 86-On | 1 | |
| 13B | 069713 | E8DZ-7B437A | Intermediate - spacer | .115 | 86-90 | 1 | |
| 13B | 069768 | E8DZ-7E085A | Intermediate - wave spring | .060 | 88-On | 1 | used in place of above |
| 14A | 069760B725 | E6DZ-7B066C | Forward - backing | .285 | 86-91 | 1 | |
| 14A | 069760A | F2DZ-7B066A | Forward - backing | .278 | 92-On | 1 | |
| 14A | TBA | F3DZ-7B066A | Forward - backing | .165 | 93-95 | 1 | SHO |
| 15A | 069769 | E6DZ-7E085B | Forward - wave | .062 | 86-89 | 1 | |
| 15A | 069768A | F0DZ-7E085A | Forward - wave | .073 | 90-92 | 1 | |
| 15A | 069768B | F2DZ-7E085A | Forward - wave | .083 | 93-On | 1 | |
| 16C | 069763A500 | E6DZ-7B066D | Reverse - backing | .203 | 86-On | 1 | |
| 17C | TBA | E6DZ-7B085A | Reverse - wave | | 86-On | 1 | |
| **OEI™ Original Equipment Improvements** | | | | | | | |
| KT | 069985 | SK® AXOD | Shift Kit® - AXOD | Transgo® | 86-92 | 1 | |
| KT | 069986 | SK® AXODE | Shift Kit® - AXODE / AX4S | Transgo® | 91-On | 1 | |
| **BANDS** | | | | | | | |
| 18C | 069950 | F8DZ-7D034A | Low / Intermediate | Tan | 86-On | 1 | |
| 19A | 069955 | F8DZ-7F196AB | Overdrive | Tan | 86-On | 1 | |
| **HI-PERFORMANCE - RED EAGLE®** | | | | | | | |
| 19A | 069965 | NA | Overdrive | Red | 86-On | 1 | |

# FORD
## AXOD 1986-90
## AXODE 1991-93
## AX4S 1994-On

| ILL | ALTO NO | REF NO | DESCRIPTION | SPEC | YEAR | QTY | NOTES |
|---|---|---|---|---|---|---|---|
| **FILTERS** | | | | | | | |
| KT | FK069940A | NA | Filter Kit - AXOD, AXODE, AX4S (short orange) | | 86-95 | 1 | |
| KT | FK069942 | NA | Filter Kit - AX4S (tall orange seal) | | 96-On | 1 | |
| KT | FK069944 | NA | Filter Kit - AX4S SHO only (green seal) | | 93-95 | 1 | |
| 20E | 069940A | F5TZ-7A098BA | Filter - AXOD, AXODE, AX4S (short orange) | | 86-95 | 1 | retros back |
| 20E | 069942 | F5DZ-7A098AA | Filter - AX4S (tall orange seal) | | 96-On | 1 | |
| 20E | 069944 | F6DZ-7A098AA | Filter - AX4S SHO only (green seal) | | 93-95 | 1 | |
| **METAL CLAD SEALS** | | | | | | | |
| 21E | 069400 | F2DZ-7F401A | Converter Hub | | 86-On | 1 | |
| 22E | 069425 | E6DZ-1177A | Axle | | 86-On | 2 | |
| N I | 069410 | E6DZ-7F337A | Manual Lever | | 86-On | 1 | |
| N I | 069411 | F1DZ-7N089A | Pump shaft seal | | 86-On | 1 | |
| **SEALING RINGS** | | | | | | | |
| KT | 069601 | B240E | Sealing Ring Kit - 2M / 11T | | 86-On | 1 | |
| 23E | 069100 | E6DZ-7G091A | Turbine Shaft - Front | | 86-On | 1 | |
| 24E | 069101 | F2DZ-7G090A | Turbine Shaft - Rear | | 86-On | 1 | |
| 25E | 069102 | E6DZ-7G092A | Pump Shaft - Front (scarf cut) | | 86-On | 2 | |
| 26E | 069103 | E6DZ-7G093A | Pump Shaft - Rear (solid) | | 86-On | 2 | |
| 27A | 069104 | E8DZ-7G019A | Driven Sprocket Support | | 86-On | 5 | |
| N I | 069105 | E6DZ-7G281A | Pump Slide | | 86-On | 1 | |
| N I | 069106 | NA | Governor - AXOD | | 86-90 | 1 | |
| **SNAP RINGS** | | | | | | | |
| KT | 069680 | NA | Kit | | 86-On | 1 | |
| 28B | TBA | E6DZ-7D483K | Direct - Selective | .051 | 86-On | AR | |
| 28B | TBA | E6DZ-7D483A | Direct - Selective | .067 | 86-On | AR | |
| 28B | TBA | E6DZ-7D483B | Direct - Selective | .084 | 86-On | AR | |
| 28B | TBA | E6DZ-7D483C | Direct - Selective | .100 | 86-On | AR | |
| 28B | TBA | E6DZ-7D483D | Direct - Selective | .117 | 86-On | AR | |
| 29B | 069250-049 | E8DZ-7D483A | Intermediate - Selective | .049 | 86-On | AR | |
| 29B | 069250-068 | E8DZ-7D483B | Intermediate - Selective | .068 | 86-On | AR | |
| 29B | 069250-086 | E8DZ-7D483C | Intermediate - Selective | .086 | 86-On | AR | |
| 29B | 069250-106 | E8DZ-7D483D | Intermediate - Selective | .106 | 86-On | AR | |
| 29B | 069250-122 | E8DZ-7D483E | Intermediate - Selective | .122 | 86-On | AR | |
| 30A | TBA | E6DZ-7D483K | Forward - Selective | .051 | 86-On | AR | |
| 30A | TBA | E6DZ-7D483L | Forward - Selective | .065 | 86-On | AR | |
| 30A | TBA | E6DZ-7D483M | Forward - Selective | .079 | 86-On | AR | |
| 30A | TBA | E6DZ-7D483N | Forward - Selective | .092 | 86-On | AR | |
| 30A | TBA | E6DZ-7D483P | Forward - Selective | .106 | 86-On | AR | |
| 31C | 069251-062 | E6DZ-7D483R | Reverse - Selective | .062 | 86-On | AR | |
| 31C | 069251-080 | E6DZ-7D483S | Reverse - Selective | .080 | 86-On | AR | |
| 31C | 069251-098 | E6DZ-7D483T | Reverse - Selective | .098 | 86-On | AR | |
| 31C | 069251-117 | E6DZ-7D483U | Reverse - Selective | .117 | 86-On | AR | |
| **BUSHINGS** | | | | | | | |
| KT | 069625 | NA | Bushing Kit | | 86-On | 1 | |
| N I | 069200 | E6SP-7N805AA | Converter Hub | | 86-On | 1 | |
| 32C | 069201 | E6SP-7G344AA | Final Drive Sun Gear | | 86-On | 1 | |
| 33C | 069202 | E6SP-7G220AA | Front Planet Carrier | | 86-91 | 1 | |
| 34B | 069203 | E6SP-7G123AA | Direct / Intermediate Drum | | 86-On | 1 | |
| 35B | 069204 | E6SP-7F209AA | Front Sun Gear Shell - small O.D. | 1.590 | 86-92 | 2 | |
| 35B | 069204A | F3DP-7F209AA | Front Sun Gear Shell - large O.D. | 1.620 | 93-On | 1 | |
| 36A | 069205 | E6SP-7G138AC | Direct Overrun clutch - narrow | .560 | 86-On | 1 | |
| 36A | 069205A | F3DP-7G138BB | Direct Overrun clutch - wide (SHO) | .660 | 93-95 | 1 | |
| 37A | 069206 | E6SP-7G170AA | Driven Sprocket Support | | 86-On | 1 | |
| 38E | 069207 | E6SP-7E110AA | Case - Rear | | 86-On | 1 | |
| 39A | 069208 | E8DP-7G210AA | Overdrive Drum | | 86-On | 1 | |
| 40E | 048206 | E6SP-7G096AA | Stator Support | | 86-On | 1 | |
| 41C | 069210 | E6SP-7A132AA | Rear Planet Support - narrow | | 86-87 | 2 | |
| 41C | 069210A | E8SP-7A132AA | Rear Planet Support - long | | 88-On | 1 | replaces 2 |

# FORD

## AXOD 1986-90
## AXODE 1991-93
## AX4S 1994-On

| ILL | ALTO NO | REF NO | DESCRIPTION | SPEC | YEAR | QTY | NOTES |
|---|---|---|---|---|---|---|---|
| **BUSHINGS** | | | | | | | ...Continued |
| 42C | 069211 | E6SP-7B375AA | Rear Planet | | 86-On | 1 | |
| 43C | 069212 | E6SP-7G065A | Sun Gear Drum - small O.D. | 1.980 | 86-92 | 1 | |
| 43C | 069212A | E3DP-7G065BA | Sun Gear Drum - large O.D. | 2.000 | 93-On | 1 | |
| **WASHERS** | | | | | | | |
| KT | 069635 | NA | Washer Kit | | 86-On | 1 | |
| **MISCELLANEOUS** | | | | | | | |
| 45A | 069330 | F8DZ-7A262AB | Bonded piston - Forward | | 96-97 | 1 | Windstar 3.8L eng. |
| 45A | 069330A | F88Z-7A262AB | Bonded piston - Forward | | 98-On | 1 | Windstar 3.8L eng. |
| 46B | 069331 | F4DZ-7A262BA | Bonded piston - Direct | | 96-On | 1 | Windstar 3.8L eng. |
| 47B | 069332 | F88Z-7E005AA | Bonded piston - Intermediate | | 96-On | 1 | Windstar 3.8L eng. |
| 48B | 069333 | F3DZ-7H185A | Bonded piston - Intermediate balance | | 96-On | 1 | Windstar 3.8L eng. |
| 49E | 069334 | E6DZ-7F200A | Bonded piston - Overdrive Servo | | 86-97 | 1 | |
| 50E | 069334A | F88Z-7F200A | Bonded piston - Overdrive Servo | | 98-On | 1 | |

**NOTES**

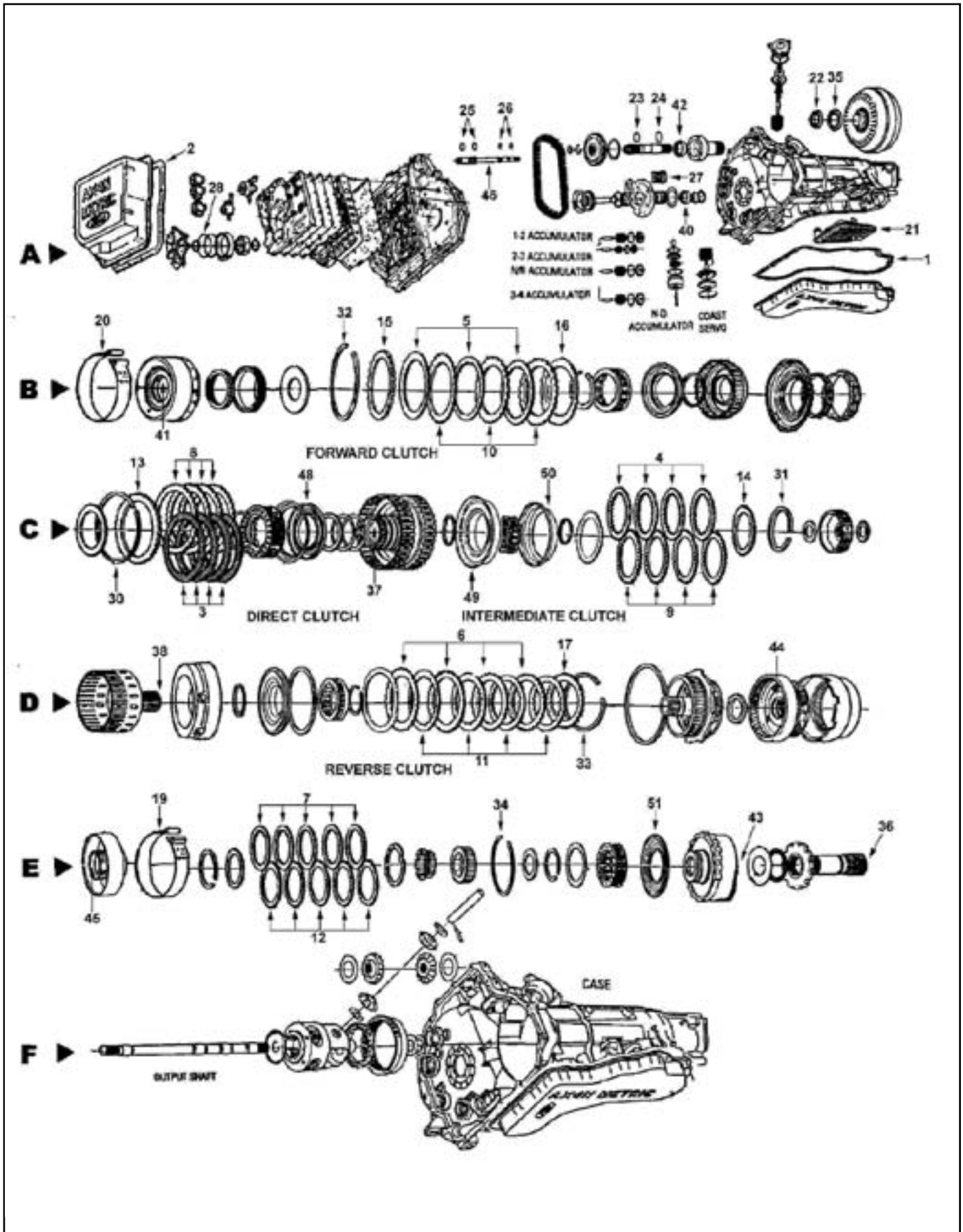
A
B
C
D
E
F
1-2 ACCUMULATOR
2-3 ACCUMULATOR
N/R ACCUMULATOR
3-4 ACCUMULATOR
N-D ACCUMULATOR
COAST SERVO
FORWARD CLUTCH
DIRECT CLUTCH
INTERMEDIATE CLUTCH
REVERSE CLUTCH
CASE
OUTPUT SHAFT

# FORD
## AX4N / 4F50N
## 1995-On

| ILL | DESCRIPTION | YEARS | FRICTION MODULE | STEEL MODULE | OVERHAUL KIT | BANNER KIT | MASTER KIT |
|---|---|---|---|---|---|---|---|
| **KITS** | | | | | | | |
| KT | Rebuilding Kit - all except below (without Molded Pistons) | 95-99 | 069752B | 069753B | 069804 | 069905LS | 069905 |
| KT | Rebuilding Kit - all except below (with Molded Pistons) | 95-99 | 069752B | 069753B | 069804X | TBA | TBA |
| KT | Rebuilding Kit - Taurus SHO (without Molded Pistons) | 96-98 | 069752B | 069753D | 069804 | 069905LS | 069905A |
| KT | Rebuilding Kit - Taurus SHO (with Molded Pistons) | 96-98 | 069752B | 069753D | 069804X | TBA | TBA |
| KT | Rebuilding Kit - Lincoln 98+ / SHO 99+ (without Molded Pistons) | 98-00 | 069752B | 069753E | 069804 | 069905LS | 069905B |
| KT | Rebuilding Kit - Lincoln 98+ / SHO 99+ (with Molded Pistons) | 98-00 | 069752B | 069753E | 069804X | TBA | TBA |
| KT | Rebuilding Kit - (without Molded Pistons) | 00-On | 069752B | 069753E | 069804A | 069905CLS | 069905C |
| KT | Rebuilding Kit - (with Molded Pistons) | 00-On | 069752B | 069753E | 069804AX | TBA | TBA |

| ILL | ALTO NO | REF NO | DESCRIPTION | SPEC | YEAR | QTY | NOTES |
|---|---|---|---|---|---|---|---|
| **MISCELLANEOUS GASKETS & KIT COMPONENTS** | | | | | | | |
| 1A | 069816C | F5DZ-7A191A | Gasket, Oil pan | Cork/Rub | 95 | 1 | |
| 1A | 069816E | NA | Gasket, Oil pan | Cork/Rub | 96-On | 1 | |
| 1A | 069816D | F6DZ-7A191B | Gasket, Oil pan - | M. Rubber | 96-On | 1 | |
| 2A | 069818A | F5DZ-7A396A | Gasket, Side Cover | Cork/Rub | 95 | 1 | |
| 2A | 069818B | F6DZ-7A396B | Gasket, Side Cover - molded rubber | | 96-On | 1 | |
| N I | 010118B | NA | O Ring, Electrical connector | | 95-On | 1 | |
| **FRICTION CLUTCHES** | | | | | | | |
| 3C | 069730 | XF2Z-7B164CA | Direct - with hardened steel spline | .065 | 95-On | 4 | Heg - 63T - OD: 5.753" - PL |
| 4C | 069730 | XF2Z-7B164CA | Intermediate - with hardened steel spline | .065 | 95-On | 5 | Heg - 63T - OD: 5.753" - PL |
| 5B | 069712 | F8DZ-7B164AC | Forward | .065 | 95-On | 3-4 | Tan - 57T - OD: 5.750" - SM |
| 6D | 069704 | F8DZ-7B164CA | Reverse | .069 | 95-On | 4 | Tan - 49T - OD: 5.980" - PL |
| 7E | 069706 | F8DZ-7B164DB | Low / Intermediate | .063 | 95-On* | 5 | Tan - 59T - OD: 5.954" - SM |
| **STEEL CLUTCHES** | | | | | | | |
| 8C | 069701 | E6DZ-7B442A | Direct | .069 | 95 | 4 | 34T - ID: 4.716" |
| 8C | 069701K | F7DZ-7B442AA | Direct - KOLENE® | .069 | 96-On | 4 | 34T - ID: 4.716" |
| 9C | 069701 | E6DZ-7B442A | Intermediate | .069 | 95 | 4 | 34T - ID: 4.716" |
| 9C | 069701K | F7DZ-7B442AA | Intermediate - KOLENE® | .069 | 96-On | 4 | 34T - ID: 4.716" |
| 9C | 069709K | F7DZ-7B442BA | Intermediate - KOLENE® (3.4L & SHO only) | .093 | 97-On | 4 | 34T - ID: 4.716" |
| 10B | 069711 | XF1Z-7B442BA | Forward | .069 | 95-On | 4 | 34T - ID: 4.933" |
| 11D | 069705 | XF1Z-7B442AA | Reverse - except below | .068 | 95-On | 4 | 54T - ID: 4.817" |
| 11D | 069715 | F8OZ-7B442BA | Reverse - 3.4L & 4.6L engine | .059 | 95-On | AR | 52T - ID: 4.817" |
| 12E | 069707 | XF1Z-7B442EA | Low / Intermediate | .069 | 95-On* | 5 | 32T - ID: 4.875" |
| | | | * For 1995 - On Applications, 069706 & 069707 must be used as a matched set. | | | | |
| **PRESSURE PLATES** | | | | | | | |
| 13C | TBA | F3DZ-7B066B | Direct - backing | .134 | 95 | 1 | Lincoln |
| 13C | 069762B | F5DZ-7B066A | Direct - backing | | 96-On | 1 | |
| 13C | 069762C | NA | Direct - backing | | 95-On | 1 | |
| 13C | TBA | F5DZ-7B066D | Direct - backing | | 95-99 | 1 | 3.0L vulcan engine |
| 13C | TBA | XF1Z-7B066BA | Direct - backing | | 00-On | 1 | |
| 14C | TBA | E8DZ-7B066A | Intermediate - backing | .125 | 95-On | 1 | |
| 14C | TBA | F5DZ-7B066C | Intermediate - backing | | 95-On | 1 | 3.0L vulcan engine |
| 14C | 069768 | NA | Intermediate - Cushion Spring -wave | .062 | 95 | 1 | |
| 15B | TBA | F3DZ-7B066A | Forward - backing | .165 | 95-On | 1 | |
| 15B | 069760A | F2DZ-7B066A | Forward - backing | .278 | 95-99 | 1 | 3.0L vulcan engine |
| 16B | 069768B | F2DZ-7E085A | Forward - wave | .083 | 95-On | 1 | |
| N I | 069768C | F5OP-7G159AA | Forward - Cushion Spring -wave | .071 | 95-On | 1 | |
| 17D | TBA | E6DZ-7B066D | Reverse - backing | .203 | 95-97 | 1 | |
| 17D | TBA | F8DZ-7B066AA | Reverse - backing | | 98-99 | 1 | 3.0L vulcan engine |
| 17D | TBA | F8OZ-7B066AA | Reverse - backing | | 98-On | 1 | |
| 18E | TBA | F5DZ-7B066B | Low / Intermediate - backing | | 95 | 1 | |
| 18E | TBA | F6DZ-7B066A | Low / Intermediate - backing | | 96-97 | 1 | |
| 18E | TBA | XF1Z-7B066EA | Low / Intermediate - backing | | 98-On | 1 | 28T |

| ILL | ALTO NO | REF NO | DESCRIPTION | SPEC | YEAR | QTY | NOTES |
|---|---|---|---|---|---|---|---|
| **OEI™ Original Equipment Improvements** | | | | | | | |
| KT | 069986A | SK® AX4N | Shift Kit® | | 95-On | 1 | |
| **BANDS** | | | | | | | |
| 19E | 069951 | F8DZ-7F162BA | Coast | Tan | 95-On | 1 | |
| 20B | 069955 | F8DZ-7F196AB | Overdrive | Tan | 95-On | 1 | |
| **HI-PERFORMANCE - RED EAGLE®** | | | | | | | |
| 20B | 069965 | NA | Overdrive | Red | 95-On | 1 | |
| **FILTERS** | | | | | | | |
| KT | FK069944 | NA | Filter Kit | | 95-On | 1 | |
| 21A | 069944 | F6DZ-7A098AA | Filter (green seal) | | 95-On | 1 | |
| **METAL CLAD SEALS** | | | | | | | |
| 22A | 069400 | F2DZ-7F401A | Converter Hub | | 95-On | 1 | |
| N I | 069425 | E6DZ-1177A | Axle | | 95-On | 2 | |
| N I | 069410 | E6DZ-7F337A | Manual Lever | | 95-On | 1 | |
| N I | 069411 | F1DZ-7N089A | Pump shaft seal | | 95-On | 1 | |
| **SEALING RINGS** | | | | | | | |
| KT | 069601 | B240E | Sealing Ring Kit - 2M / 11T | | 95-On | 1 | |
| 23A | 069100 | E6DZ-7G091A | Turbine Shaft - Front | | 95-On | 1 | |
| 24A | 069101 | F2DZ-7G090A | Turbine Shaft - Rear | | 95-On | 1 | |
| 25A | 069102 | E6DZ-7G092A | Pump Shaft - Front (scarf cut) | | 95-On | 2 | |
| 26A | 069103 | E6DZ-7G093A | Pump Shaft - Rear (solid) | | 95-On | 2 | |
| 27A | 069104 | E8DZ-7G019A | Driven Sprocket Support | | 95-On | 5 | |
| 28A | 069105 | E6DZ-7G281A | Pump Slide | | 95-On | 1 | |
| **SNAP RINGS** | | | | | | | |
| 30C | TBA | E6DZ-7D483K | Direct - Selective | .051 | 95-On | AR | |
| 30C | TBA | E6DZ-7D483L | Direct - Selective | .065 | 95-On | AR | |
| 30C | TBA | E6DZ-7D483M | Direct - Selective | .079 | 95-On | AR | |
| 30C | TBA | E6DZ-7D483N | Direct - Selective | .092 | 95-On | AR | |
| 30C | TBA | E6DZ-7D483P | Direct - Selective | .106 | 95-On | AR | |
| 31C | TBA | E6DZ-7D483K | Intermediate - Selective | .051 | 95-On | AR | |
| 31C | TBA | E6DZ-7D483L | Intermediate - Selective | .065 | 95-On | AR | |
| 31C | TBA | E6DZ-7D483M | Intermediate - Selective | .079 | 95-On | AR | |
| 31C | TBA | E6DZ-7D483N | Intermediate - Selective | .092 | 95-On | AR | |
| 31C | TBA | E6DZ-7D483P | Intermediate - Selective | .106 | 95-On | AR | |
| 32B | TBA | E6DZ-7D483K | Forward - Selective | .051 | 95-On | AR | |
| 32B | TBA | E6DZ-7D483L | Forward - Selective | .065 | 95-On | AR | |
| 32B | TBA | E6DZ-7D483M | Forward - Selective | .079 | 95-On | AR | |
| 32B | TBA | E6DZ-7D483N | Forward - Selective | .092 | 95-On | AR | |
| 32B | TBA | E6DZ-7D483P | Forward - Selective | .106 | 95-On | AR | |
| 33D | 069251-062 | E6DZ-7D483R | Reverse - Selective | .062 | 95-On | AR | |
| 33D | 069251-080 | E6DZ-7D483S | Reverse - Selective | .080 | 95-On | AR | |
| 33D | 069251-098 | E6DZ-7D483T | Reverse - Selective | .098 | 95-On | AR | |
| 33D | 069251-117 | E6DZ-7D483U | Reverse - Selective | .117 | 95-On | AR | |
| 34E | TBA | F5DZ-7D483F | Low / Intermediate - Selective | .062 | 95-On | AR | |
| 34E | TBA | F5DZ-7D483G | Low / Intermediate - Selective | .083 | 95-On | AR | |
| 34E | TBA | F5DZ-7D483H | Low / Intermediate - Selective | .105 | 95-On | AR | |
| 34E | TBA | F5DZ-7D483J | Low / Intermediate - Selective | .126 | 95-On | AR | |
| 34E | TBA | F5DZ-7D483K | Low / Intermediate - Selective | .146 | 95-On | AR | |
| **BUSHINGS** | | | | | | | |
| KT | 069625 | NA | Bushing Kit | | 95-On | 1 | |
| 35A | 069200 | E6SP-7N805AA | Converter Hub | | 95-On | 1 | |
| 36E | 069201 | E6SP-7G344AA | Final Drive Sun Gear | | 95-On | 1 | |
| 37C | 069203 | E6SP-7G123AA | Direct / Intermediate Drum | | 95-On | 1 | |
| 38D | 069204A | F3DP-7F209AA | Front Sun Gear Shell - large O.D. | 1.620 | 95-On | 1 | |
| 39B | 069205 | E6SP-7G138AC | Direct Overrun clutch - narrow | .560 | 95-On | 1 | |
| 39B | 069205A | F3DP-7G138BB | Direct Overrun clutch - wide (SHO) | .660 | 95-On | 1 | |
| 40A | 069206 | E6SP-7G170AA | Driven Sprocket Support | | 95-On | 1 | |

# FORD
## AX4N / 4F50N
## 1995-On

| ILL | ALTO NO | REF NO | DESCRIPTION | SPEC | YEAR | QTY | NOTES |
|---|---|---|---|---|---|---|---|
| **BUSHINGS** | | | | | | | ...Continued |
| N I | 069207 | E6SP-7E110AA | Case - Rear | | 95-On | 1 | |
| 41B | 069208 | E8DP-7G210AA | Overdrive Drum | | 95-On | 1 | |
| 42A | 048206 | E6SP-7G096AA | Stator Support | | 95-On | 1 | |
| 43E | 069210A | E8SP-7A132AA | Rear Planet Support - long | | 95-On | 1 | |
| 44D | 069211 | E6SP-7B375AA | Rear Planet | | 95-On | 1 | |
| 45E | 069212A | E3DP-7G065BA | Sun Gear Drum - large O.D. | 2.000 | 95-On | 1 | |
| **WASHERS** | | | | | | | |
| KT | 069635 | NA | Washer Kit | | 95-On | 1 | |
| 47B | 069330 | F8DZ-7A262AB | Bonded piston - Forward | | 95-97 | 1 | |
| 47B | 069330A | F88Z-7A262AB | Bonded piston - Forward | | 98-On | 1 | |
| 48C | 069331 | F4DZ-7A262BA | Bonded piston - Direct | | 95-On | 1 | |
| 49C | 069332 | F88Z-7E005AA | Bonded piston - Intermediate | | 95-On | 1 | |
| 50C | 069333 | F3DZ-7H185A | Bonded piston - Intermediate balance | | 95-On | 1 | |
| 51E | 069335 | F5DZ-7H290A | Bonded piston - Low / Intermediate | | 95-On | 1 | |
| N I | 069334 | E6DZ-7F200A | Bonded piston - Overdrive Servo | | 95-97 | 1 | |
| N I | 069334A | F88Z-7F200A | Bonded piston - Overdrive Servo | | 98-On | 1 | |

**NOTES**

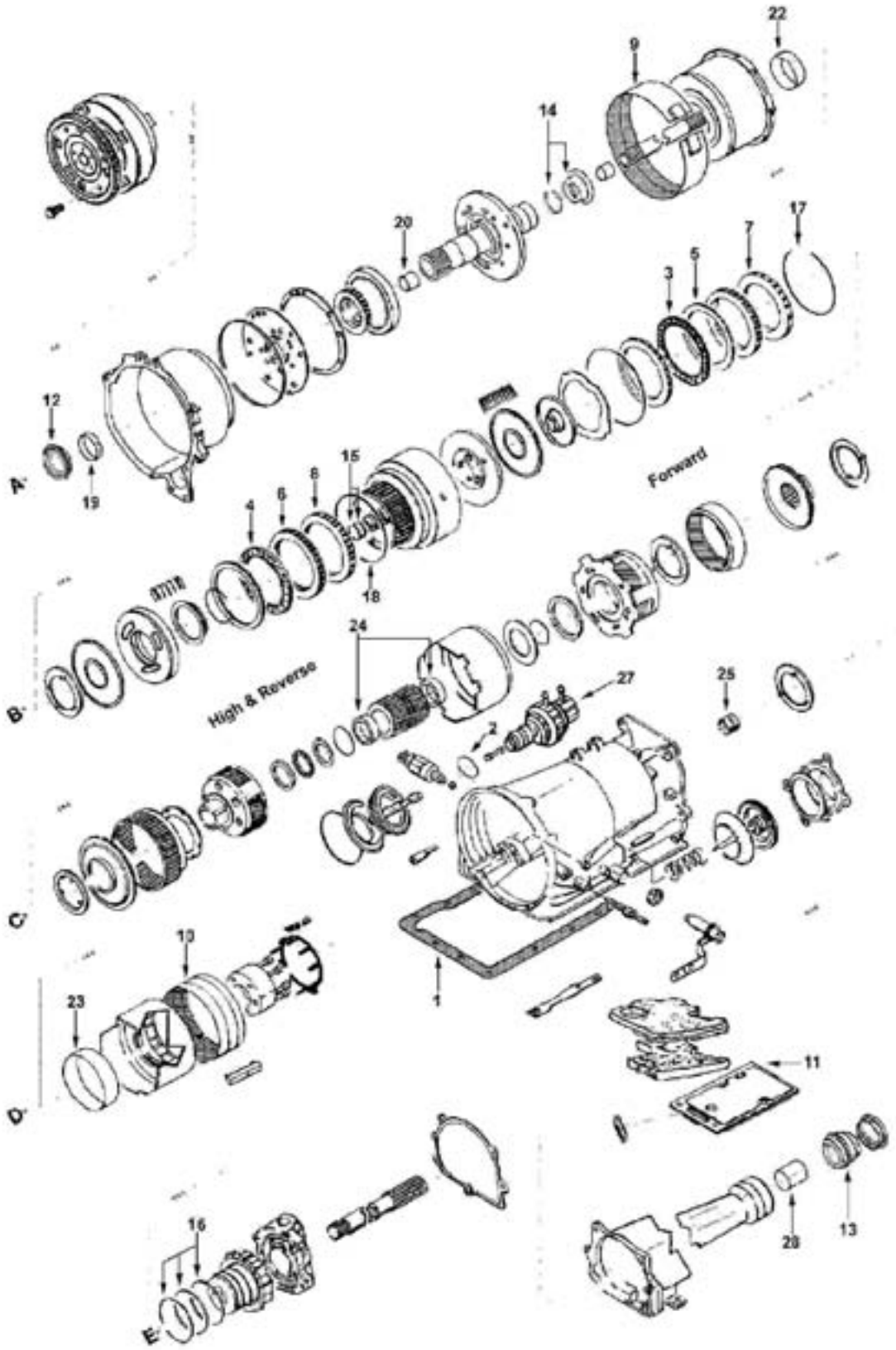
22
9
14
20
17
7
5
3
12
A
19
15
8
6
4
Forward
18
B
High & Reverse
24
27
25
2
C
10
23
1
11
D
16
E
28
13

# FORD
## C3
## 1974-87

| ILL | DESCRIPTION | YEARS | FRICTION MODULE | STEEL MODULE | OVERHAUL KIT | BANNER KIT | MASTER KIT |
|---|---|---|---|---|---|---|---|
| **KITS** | | | | | | | |
| KT | Rebuilding Kit | 74-77 | 041752 | 041753 | 041800 | 041901LS | 041901 |
| KT | Rebuilding Kit | 78-87 | 041752 | 041753B | 041800 | 041901LS | 041901A |

| ILL | ALTO NO | REF NO | DESCRIPTION | SPEC | YEAR | QTY | NOTES |
|---|---|---|---|---|---|---|---|
| **MISCELLANEOUS GASKETS & KIT COMPONENTS** | | | | | | | |
| 1D | 041816 | D5ZZ-7A191B | Gasket, Oil pan | Cork/Rub | 74-87 | 1 | |
| 2D | 010113B | 87034-S94 | O Ring, Modulator | | 74-87 | 1 | |
| N I | 010115B | 87036-S94 | O Ring, Speedometer | | 74-87 | 1 | |
| **FRICTION CLUTCHES** | | | | | | | |
| 3B | 041700 | E3ZZ-7B164A | Forward | .075/1.9 | 74-87 | 4-5 | Tan - 72T - OD: 4.650" - WF |
| 4B | 041702 | E3ZZ-7B164B | High & Reverse | .075/1.9 | 74-87 | 4-5 | Tan - 48T - OD: 4.893" - WF |
| 4B | 041722-190 | NA | High & Reverse | .075/1.9 | 74-87 | 4-5 | Heg - 48T - OD: 4.893" - WF |
| **STEEL CLUTCHES** | | | | | | | |
| 5B | 041701 | D4ZZ-7B442A | Forward | .078/1.98 | 74-77 | 3-5 | 19T - ID: 3.800" |
| 5B | 041705 | D8ZZ-7B442A | Forward | .068/1.73 | 78-87 | 4-5 | 19T - ID: 3.800" |
| 5B | 041701-250 | NA | Forward - selective | .100/2.54 | 74-87 | AR | 19T - ID: 3.800" |
| 6B | 041703 | D4ZZ-7B442B | High & Reverse | .078/1.98 | 74-77 | 4-5 | 20T - ID: 3.970" |
| 6B | 041707 | D8ZZ-7B442B | High & Reverse | .068/1.73 | 78-87 | 4-5 | 20T - ID: 3.970" |
| 6B | 041703-250 | NA | High & Reverse - Selective | .100/2.54 | 74-87 | AR | 20T - ID: 3.970" |
| **PRESSURE PLATES** | | | | | | | |
| 7B | 041760 | D4ZZ-7B066A | Forward - backing | .215 | 74-87 | 1 | |
| 8B | TBA | D4ZZ-7B066B | High & Reverse - backing | .220 | 74-87 | 1 | |
| **OEI™ Original Equipment Improvements** | | | | | | | |
| KT | 041985 | SK® C3 | Shift Kit® | Transgo® | 74-87 | 1 | |
| **BANDS** | | | | | | | |
| 9A | 041950 | E6TZ-7D034A | Intermediate (Flex) | Tan | 74-87 | 1 | |
| 10D | 041955 | E3ZZ-7D095A | Reverse (Rigid) | Tan | 74-87 | 1 | |
| **FILTERS** | | | | | | | |
| KT | FK041940 | NA | Filter Kit | | 74-87 | 1 | |
| 11E | 041940 | D4ZZ-7A098A | Filter | | 74-87 | 1 | |
| **METAL CLAD SEALS** | | | | | | | |
| 12A | 041400 | D4ZZ-7A248A | Front Pump | | 74-87 | 1 | |
| 13E | 041405 | D5ZZ-7052A | Extension Housing with Boot | | 74-87 | 1 | |
| 13E | 041405A | E2ZZ-7052A | Extension Housing without Boot | | 74-87 | 1 | |
| N I | 023406 | D5AZ-7B498A | Manual Lever | | 74-87 | 1 | |
| **SEALING RINGS** | | | | | | | |
| KT | 041600 | B225 | Sealing Ring Kit - 7M | | 74-87 | 1 | |
| 14A | 041100 | D4ZZ-7D025A | Front Pump support to Overdrive drum | Metal | 74-87 | 2 | |
| 15B | 041101 | D4ZZ-7D019A | Forward clutch drum | Metal | 74-87 | 2 | |
| 16E | 041102 | D4ZZ-7D011B | Governor | Metal | 74-87 | 3 | |
| 16E | 041102A | F0TZ-7D011A | Governor - seal plated | Metal | 74-87 | 3 | |
| 16E | 041102B | E7TZ-7D011A | Governor - viton | Rubber | 74-87 | 3 | |
| **SNAP RINGS** | | | | | | | |
| KT | 041680 | NA | Kit | | 74-87 | 1 | |
| 17B | 041251-054 | E860115-S | Forward Drum | .054/1.37 | 74-87 | AR | |
| 17B | 041251-066 | E860116-S | Forward Drum | .066/1.73 | 74-87 | AR | |
| 17B | 041251-082 | E860117-S | Forward Drum | .082/2.08 | 74-87 | AR | |
| 17B | 041251-096 | E860118-S | Forward Drum | .096/2.44 | 74-87 | AR | |
| 18B | 041250-054 | E860126-S | High & Reverse | .054/1.67 | 74-87 | AR | |
| 18B | 041250-068 | E860127-S | High & Reverse | .068/1.73 | 74-87 | AR | |
| 18B | 041250-082 | E860128-S | High & Reverse | .082/2.08 | 74-87 | AR | |
| 18B | 041250-096 | E860129-S | High & Reverse | .096/2.44 | 74-87 | AR | |
| **BUSHINGS** | | | | | | | |
| KT | 041625 | NA | Bushing Kit | | 74-87 | 1 | |

| ILL | ALTO NO | REF NO | DESCRIPTION | SPEC | YEAR | QTY | NOTES |
|---|---|---|---|---|---|---|---|
| **BUSHINGS** | | | | | | | ...Continued |
| 19A | 041200A | NA | Converter Housing | Bronze | 74-87 | 1 | |
| 19A | 041200X | NA | Converter Housing | Babbit | 74-87 | 1 | |
| 20A | 041201 | NA | Front Pump stator support - Front | Steel | 74-87 | 1 | |
| 21A | 041200 | NA | Front Pump stator support - Rear | | 74-87 | 1 | |
| 22A | 041203 | NA | High Drum - Steel Drum | 2.368 | 74-87 | 1 | |
| 23D | 041204 | NA | Reverse Brake drum | | 74-87 | 1 | |
| 24C | 041205 | NA | Sun Gear | | 74-87 | 2 | |
| 25D | 041206 | NA | Case | | 74-87 | 1 | |
| 26E | 041207 | D7FZ-7A034A | Extension Housing | | 74-87 | 1 | |
| **WASHERS** | | | | | | | |
| KT | 041635 | NA | Washer Kit | | 74-87 | 1 | |
| **MODULATORS** | | | | | | | |
| 27D | 041500 | E3ZZ-7A377A | Blue Stripe | | 74-87 | 1 | |

**NOTES**

# FORD

**C4 1964-81**
**C5 1982-86**

A>

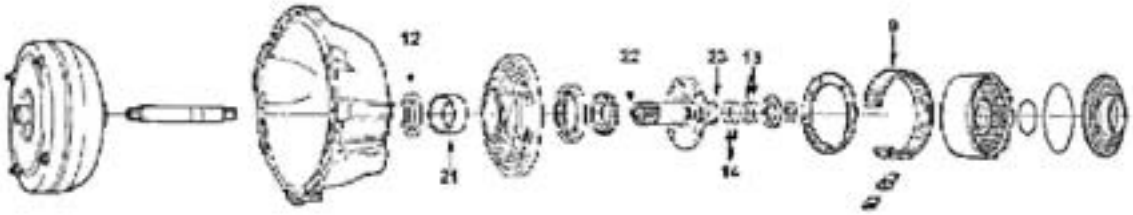

B>

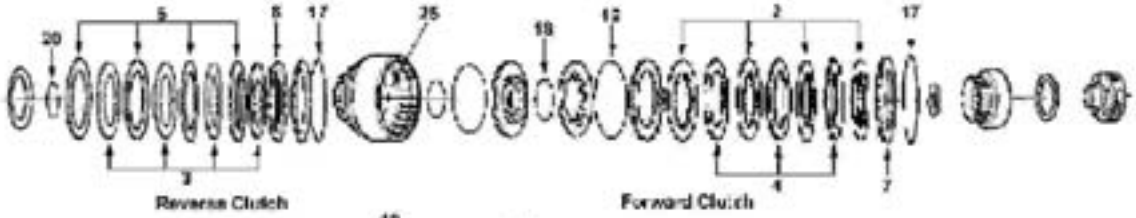


C>

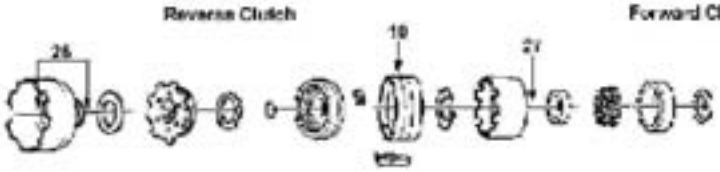

D>

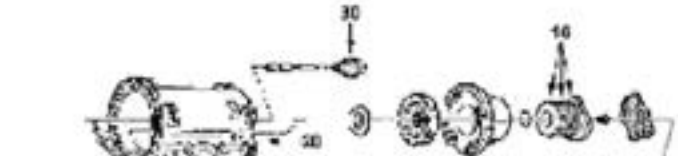

E>

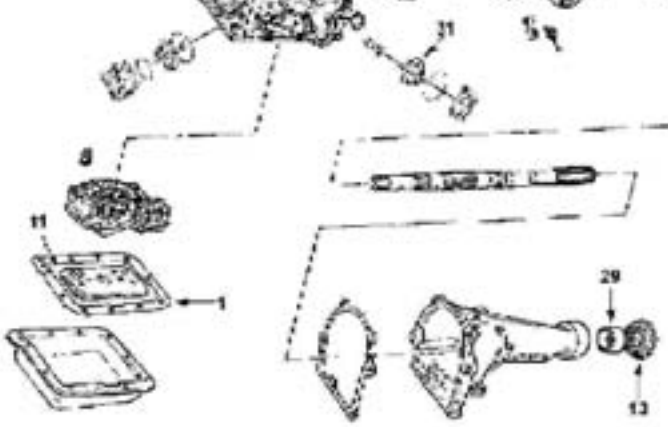

# FORD
## C4 1964-81
## C5 1982-86

| ILL | DESCRIPTION | YEARS | FRICTION MODULE | STEEL MODULE | OVERHAUL KIT | BANNER KIT | MASTER KIT |
|---|---|---|---|---|---|---|---|
| **KITS** | | | | | | | |
| KT | Rebuilding Kit | 64 | 025752E | 025753 | NA | NA | NA |
| KT | Rebuilding Kit | 65-69 | 025752 | 025753 | 025802X | 025901LS | 025901 |
| KT | Rebuilding Kit | 70-81 | 025752 | 025753 | 025804X | 025903LS | 025903 |
| KT | Rebuilding Kit - C5 | 82-86 | 025752 | 025753A | 025806X | 025905LS | 025905 |
| **HI-PERFORMANCE - RED EAGLE®** | | | | | | | |
| KT | Rebuilding Kit | 70-81 | 025752HP | 025753HP | 025804HP | 025903HPLS | 025903HP |

| ILL | ALTO NO | REF NO | DESCRIPTION | SPEC | YEAR | QTY | NOTES |
|---|---|---|---|---|---|---|---|
| **MISCELLANEOUS GASKETS & KIT COMPONENTS** | | | | | | | |
| 1E | 025823 | D6OZ-7A191A | Gasket, Oil pan | Cork/Rub | 64-86 | 1 | |
| N I | 010115B | 87036-S94 | O Ring, Speedometer | | 64-86 | 1 | |
| N I | 025507 | 380850-S | Nut, Band Adjusting | | 64-82 | 1-2 | |
| N I | 025544 | 389049-S102 | Nut, Band Adjusting | | 82-86 | 1 | |
| **FRICTION CLUTCHES** | | | | | | | |
| 2B | 025706 | C8AZ-7B164D | Forward (rear) | .061 | 64-86 | 4-5 | Tan - 42T - OD: 4.556" - SM |
| 3B | 025702 | C4AZ-7B164D | Reverse (front) | .090 | 64 | 3-4 | Tan - 42T - OD: 4.556" - WF |
| 3B | 025720 | E2SZ-7B164A | Reverse (front) | .078 | 65-86 | 3-4 | Tan - 42T - OD: 4.556" - PL |
| **HI-PERFORMANCE - RED EAGLE®** | | | | | | | |
| 2B | 025740 | NA | Forward (rear) | .061 | 64-86 | 4-5 | Red - 42T - OD: 4.556" - SM |
| 3B | 025742 | NA | Reverse (front) | .078 | 65-86 | 3-4 | Red - 42T - OD: 4.556" - SM |
| 3B | 025744-150 | NA | Reverse (front) POWERPACK™ Comp. | .059 | 65-86 | AR | Red - 42T - OD: 4.556" - SM |
| **HI-PERFORMANCE - UNIT PACKS (ONE Rebuild)** | | | | | | | |
| KT | 025740UP5 | NA | UNIT PACK - Forward (rear) | .061 | 64-86 | 1 | 5 RED EAGLE® Friction |
| KT | 025742UP4 | NA | UNIT PACK - Reverse (front) | .078 | 65-86 | 1 | 4 RED EAGLE® Friction |
| **STEEL CLUTCHES** | | | | | | | |
| 4B | 025703 | C4AZ-7B442C | Forward (rear) - rough finish | .078 | 64-86 | 3-4 | 26T - ID: 3.596" |
| 5B | 025701 | C4AZ-7B442B | Reverse (front) - smooth finish | .078 | 64-86 | 3-4 | 26T - ID: 3.596" |
| 5B | 025701-150 | NA | Reverse - thin | .060 | 64-86 | 3-4 | 26T - ID: 3.596" |
| 4/5B | 025721 | NA | Forward / Reverse - selective | .095 | 64-86 | AR | 26T - ID: 3.596" |
| 4/5B | 025723 | NA | Forward / Reverse - selective | .090 | 64-86 | AR | 26T - ID: 3.596" |
| **HI-PERFORMANCE - KOLENE®** | | | | | | | |
| 4/5B | 025701K | NA | Forward / Reverse - smooth finish | .078 | 64-86 | 3-4 | KOLENE® |
| 5B | 025701K150 | NA | Reverse - thin | .060 | 64-86 | 3-4 | KOLENE® |
| 5B | 025701HK150 | NA | Reverse - thin with Turbulator Holes | .060 | 64-86 | 3-4 | KOLENE® |
| **HI-PERFORMANCE - UNIT PACKS (ONE Rebuild)** | | | | | | | |
| KT | 025701KUP4 | NA | UNIT PACK - Forward / Reverse | .078 | 64-86 | 1 | 4 KOLENE® Steel |
| **PRESSURE PLATES** | | | | | | | |
| 6B | TBA | C8AZ-7B066C | Forward - backing | .281 | 64-81 | 1 | |
| 6B | TBA | E1AZ-7B066A | Forward - backing | .313 | 82-86 | 1 | |
| 7B | TBA | C4AZ-7B066A | Forward - apply | .219 | 64-81 | 1 | |
| 7B | TBA | E1AZ-7B066B | Forward - apply | .141 | 82-86 | 1 | |
| 8B | 025701-330 | NA | Reverse - C4 backing POWERPACK™ Comp. | .130 | 64-86 | 1 | 26T - ID: 3.596" |
| 8B | 025701-444 | NA | Reverse - C5 backing POWERPACK™ Comp. | .174 | 82-86 | 1 | 14T - ID: 3.596" |
| 8B | TBA | C4AZ-7B066A | Reverse - backing | .220 | 64-82 | 1 | use with 6 plate pack |
| 8B | TBA | E2SZ-7B066B | Reverse - backing | .297 | 82-86 | 1 | use with 6 plate pack |
| 8B | TBA | E1AZ-7B066B | Reverse - backing | .141 | 82 | 1 | use with 8 plate pack |
| **OEI™ Original Equipment Improvements** | | | | | | | |
| KT | 025755A | NA | POWERPACK™ - C4 Reverse | | 64-86 | 1 | RED EAGLE® & KOLENE® |
| KT | 025755 | NA | POWERPACK™ - C5 Reverse | | 82-86 | 1 | RED EAGLE® & KOLENE® |
| KT | 025958 | SK® 4L | Shift Kit® - except 1965 Mustang | Transgo® | 65-66 | 1 | |
| KT | 025958A | SK® 4 | Shift Kit® - Mustang only | Transgo® | 64-65 | 1 | |
| KT | 025958B | SK® 4SL | Shift Kit® | Transgo® | 67-70 | 1 | |
| KT | 025959 | SK® 4S | Shift Kit® - 6 cylinder | Transgo® | 67-70 | 1 | |
| KT | 025986 | SK® 4-71 | Shift Kit® | Transgo® | 71-72 | 1 | |
| KT | 025985A | SK® C5 | Shift Kit® - C4 & C5 | Transgo® | 73-86 | 1 | corrects no reverse hot |

# FORD

## C4 1964-81
## C5 1982-86

| ILL | ALTO NO | REF NO | DESCRIPTION | SPEC | YEAR | QTY | NOTES |
|---|---|---|---|---|---|---|---|
| **OEI™ Original Equipment Improvements** | | | | | | | ...Continued |
| KT | 025992 | 45-01 | Reprogramming Kit™ | Transgo® | 65-66 | 1 | |
| KT | 025993 | 47-1 | Reprogramming Kit™ | Transgo® | 65-66 | 1 | Full Manual |
| KT | 025993A | 47-2 | Reprogramming Kit™ | Transgo® | 67-69 | 1 | |
| KT | 025993B | 47-3 | Reprogramming Kit™ | Transgo® | 67-69 | 1 | Full Manual |
| KT | 025991 | 40-2 | Reprogramming Kit™ | Transgo® | 70-On | 1 | |
| KT | 025991A | 40-3 | Reprogramming Kit™ | Transgo® | 70-On | 1 | Full Manual |
| **BANDS** | | | | | | | |
| 9A | TBA | NA | Intermediate (front) - without arrow | 1.250 | 64-65 | 1 | |
| 9A | 025957A | C5AZ-7D034A | Intermediate (front) - with arrow | 1.250 | 65-66 | 1 | |
| 9A | 025957 | D9AZ-7D034C | Intermediate (front) - flex | 2.125 | 67-86 | 1 | |
| 10C | 025953 | D0AZ-7D095A | Reverse (rear) | | 64-86 | 1 | |
| **HI-PERFORMANCE - RED EAGLE® or KEVLAR®** | | | | | | | |
| 9A | 025957HP | NA | Intermediate (front) - flex | 2.125 | 67-86 | 1 | RED EAGLE® |
| 9A | 025957K | NA | Intermediate (front) - flex | 2.125 | 67-86 | 1 | KEVLAR® |
| 9A | 025960 | NA | Intermediate (front) - rigid | 2.125 | 67-86 | 1 | RED EAGLE® |
| 9A | 025960K | NA | Intermediate (front) - rigid | 2.125 | 67-86 | 1 | KEVLAR® |
| 10C | 025961K | NA | Reverse (rear) - split | | 64-86 | 1 | KEVLAR® |
| **FILTERS** | | | | | | | |
| KT | FK025942 | NA | Filter Kit | | 65-70 | 1 | |
| KT | FK025944 | NA | Filter Kit - 6 & 8 cylinder (shallow pan) | | 70-81 | 1 | |
| KT | FK025946 | NA | Filter Kit - 4 cylinder (deep pan) | | 74-81 | 1 | |
| KT | FK025948 | NA | Filter Kit - Bronco | | 73-77 | 1 | |
| KT | FK025934 | NA | Filter Kit - C5 4wd (deep) with neck | | 82-86 | 1 | |
| KT | FK025936 | NA | Filter Kit - C5 | | 82-86 | 1 | |
| 11E | 025942 | C5AZ-7A098C | Filter | | 65-70 | 1 | |
| 11E | 025944 | D0DZ-7A098B | Filter - 6 & 8 cylinder (shallow pan) | | 70-81 | 1 | |
| 11E | 025946 | D4FZ-7A098B | Filter - 4 cylinder (deep pan) | | 74-81 | 1 | |
| 11E | 025948 | D3BZ-7A098A | Filter - Bronco | | 73-77 | 1 | |
| 11E | 025934 | E3TZ-7A098A | Filter - C5 4wd (deep) with neck | | 82-86 | 1 | |
| 11E | 025936 | E2DZ-7A098A | Filter - C5 | | 82-86 | 1 | |
| **METAL CLAD SEALS** | | | | | | | |
| 12A | 024400 | C2AZ-7A248A | Front Pump without flange | Silicone | 82-86 | 1 | |
| 13E | 032402 | NA | Extension Housing without boot | 2.381 | 64-86 | 1 | |
| 13E | 023405 | E2DZ-7052A | Extension Housing with long boot | 2.381 | 64-86 | 1 | |
| 13E | 023404 | D5AZ-7052B | Extension Housing with short boot | 2.381 | 64-86 | 1 | |
| 13E | 025405 | C4UZ-7052A | Extension Housing - Econoline | 3.130 | 64-86 | 1 | |
| N I | 023406 | D5AZ-7B498A | Manual Lever | | 64-86 | 1 | |
| **SEALING RINGS** | | | | | | | |
| KT | 025600 | B207 | Sealing Ring Kit - 7M | | 64-69 | 1 | |
| KT | 025602 | B208 | Sealing Ring Kit - 7M | | 70-77 | 1 | |
| KT | 025601 | B215 | Sealing Ring Kit - 9M | | 70-86 | 1 | |
| KT | 025601T | B215T | Sealing Ring Kit - 9T | | 70-86 | 1 | |
| KT | 025603 | B211 | Sealing Ring Kit - 7M | | 78-86 | 1 | |
| 14A | 025100 | C4AZ-7D020A | Stator Support - Reverse (front) | | 64-69 | 2 | |
| 14A | 025103 | D0AZ-7D020A | Stator Support - Reverse (front) | | 70-86 | 2 | |
| 15A | 025101 | C4AZ-7D019B | Stator Support - Forward (rear) | | 64-69 | 2 | |
| 15A | 025104 | D0AZ-7D019A | Stator Support - Forward (rear) - narrow | .093 | 70-77 | 2 | |
| 15A | 025105 | D7AZ-7D019A | Stator Support - Forward (rear) - wide | .125 | 78-86 | 2 | |
| 16D | 025102 | C4AZ-7D011A | Governor | | 64-86 | 3 | |
| **SNAP RINGS** | | | | | | | |
| KT | 025680 | NA | Kit | | 64-86 | 1 | |
| 17B | 025256-052 | D0AZ-7A577B | Forward & Reverse - selective | .052 | 64-86 | AR | |
| 17B | 025256-066 | D0AZ-7A577A | Forward & Reverse - selective | .066 | 64-86 | AR | |
| 17B | 025256-080 | D0AZ-7A577C | Forward & Reverse - selective | .080 | 64-86 | AR | |
| 17B | 025256-094 | D0AZ-7A577D | Forward & Reverse - selective | .094 | 64-86 | AR | |
| 17B | 025256-106 | E1AZ-7A577B | Forward & Reverse - selective | .106 | 81-86 | AR | |

| ILL | ALTO NO | REF NO | DESCRIPTION | SPEC | YEAR | QTY | NOTES |
|---|---|---|---|---|---|---|---|
| **SNAP RINGS** | | | | | | | ...Continued |
| 18B | 025260 | C4AZ-7D256A | Forward Clutch retainer | | 64-86 | 1 | |
| 19B | TBA | E1AZ-7A577A | Forward clutch - wave | | 64-86 | 1 | |
| 20B | TBA | 383691-S | Reverse clutch retainer | | 64-86 | 1 | |
| **BUSHINGS** | | | | | | | |
| KT | 025625 | NA | Kit | | 64-86 | 1 | |
| 21A | 025201 | C0AP-7B258A | Front Pump | Babbit | 64-86 | 1 | |
| 21A | 025201X | NA | Front Pump | Bronze | 64-86 | 1 | |
| 22A | 025202 | C4AZ-7B261A | Stator Support - Front | | 64-69 | 1 | |
| 22A | 025210 | D0AZ-7B261A | Stator Support - Front | | 70-86 | 1 | |
| 23A | 025203 | C4AZ-7D018B | Stator Support - Rear | | 64-69 | 1 | |
| 23A | 025211 | D0AZ-7D018A | Stator Support - Rear | | 70-86 | 1 | |
| N I | 025204 | C4AZ-7D046A | Reverse clutch drum - lip type | Babbit | 64-69 | 1 | |
| N I | 025212 | D0AZ-7D046B | Reverse clutch drum | Bronze | 70-86 | 1 | |
| 25B | 025200 | C6AZ-7E059A | Forward clutch hub | | 64-86 | 1 | |
| 26C | 025205 | C4AZ-7D065A | Sun Gear | | 64-86 | 2 | |
| 27C | 025206 | C4AZ-7D001A | Reverse Brake drum | | 64-86 | 1 | |
| 28D | 025207 | C4AZ-7025A | Case | | 64-86 | 1 | |
| 29E | 023224 | B3TZ-7A034A | Extension Housing | | 64-86 | 1 | |
| **WASHERS** | | | | | | | |
| KT | 025635 | NA | Washer Kit | | 64-86 | | |
| **MODULATORS** | | | | | | | |
| 30D | 025504 | C4AZ-7A377B | Modulator - White stripe | | 64-72 | 1 | |
| 30D | 025520 | D3OZ-7A377A | Modulator - Red stripe | | 73-76 | 1 | |
| 30D | 025521 | D2AZ-7A377A | Modulator - Yellow stripe | | 76-86 | 1 | |
| 30D | 025522 | E2TZ-7A377A | Modulator - Green stripe | | 75-86 | 1 | |
| **MISCELLANEOUS** | | | | | | | |
| 31D | 025302 | D1AZ-7D189A | Bonded Piston - Reverse Servo | | 64-86 | 1 | |
| N I | 025319 | E1AZ-7B070A | Diaphragm Spring - forward clutch | | 64-86 | 1 | |

**NOTES**

# FORD
## C6
## 1966-96

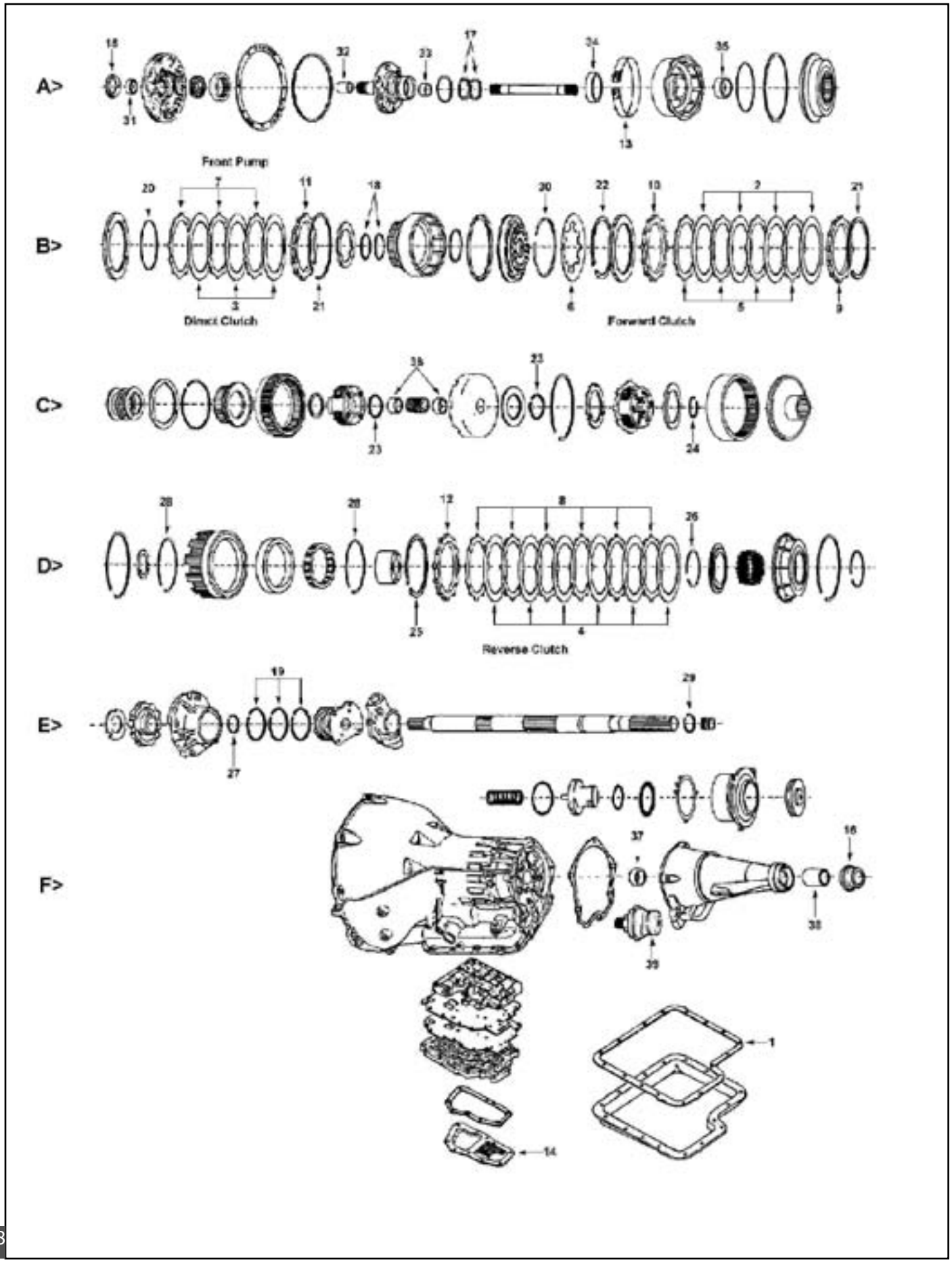

| ILL | DESCRIPTION | YEARS | FRICTION MODULE | STEEL MODULE | OVERHAUL KIT | BANNER KIT | MASTER KIT |
|---|---|---|---|---|---|---|---|
| **KITS** | | | | | | | |
| KT | Rebuilding Kit | 66-E67 | 026752E | 026753 | 026800 | 026901ELS | 026901E |
| KT | Rebuilding Kit | 67-76 | 026752 | 026753 | 026800 | 026901LS | 026901 |
| KT | Rebuilding Kit | 76-96 | 026752A | 026753 | 026802X | 026903LS | 026903 |
| KT | Rebuilding Kit - with Heg Frictions | 76-96 | 026752D | 026753 | 026802X | TBA | TBA |
| KT | Rebuilding Kit - combo | 67-96 | 026752C | 026753 | 026800A | 026901ALS | 026901A |
| **HI-PERFORMANCE - RED EAGLE®** | | | | | | | |
| KT | Rebuilding Kit | 67-76 | 026752HP | 026753HP | 026800 | 026901HPLS | 026901HP |
| KT | Rebuilding Kit | 76-96 | 026752AHP | 026753HP | 026802X | 026903HPLS | 026903HP |

| ILL | ALTO NO | REF NO | DESCRIPTION | SPEC | YEAR | QTY | NOTES |
|---|---|---|---|---|---|---|---|
| **MISCELLANEOUS GASKETS & KIT COMPONENTS** | | | | | | | |
| 1F | 026816 | C6AZ-7A191B | Gasket, Oil pan | Cork/Rub | 66-96 | 1 | |
| N I | 010110B | 386078-S | O Ring, Modulator & Throttle control lever | | 66-96 | 2 | |
| N I | 010115B | 86036-S94 | O Ring, Speedometer | | 66-96 | 1 | |
| N I | 026506 | 375185-S100 | Nut, Band Adjusting | | 66-96 | 1 | |
| **FRICTION CLUTCHES** | | | | | | | |
| 2B | 026702 | C6AZ-7B164B | Forward (coarse) | .060 | 66-67 | 4-5 | Tan - 57T - OD: 6.358" - PL |
| 2B | 026710 | D2AZ-7B164A | Forward | .061 | 67-76 | 3-5 | Tan - 90T - OD: 6.358" - SM |
| 2B | 026720 | E9TZ-7B164E | Forward | .075 | 76-96 | 4 | Tan - 90T - OD: 6.358" - SM |
| 2B | 026730 | F2TZ-7B164A | Forward - hardened spline | .075 | 76-96 | 4 | Tan - 90T - OD: 6.358" - SM |
| 2B | 026736 | NA | Forward | .075 | 76-96 | 4 | Heg - 90T - OD: 6.358" - SM |
| 3B | 026712 | F6TZ-7B164B | Direct | .075 | 66-96 | 3-4 | Tan - 63T - OD: 6.364" - WF |
| 3B | 026732 | NA | Direct | .075 | 66-96 | 3-4 | Heg - 63T - OD: 6.364" - WF |
| 3B | 026712A | NA | Direct - POWERPACK™ Component | .062 | 66-96 | AR | Tan - 63T - OD: 6.364" - SM |
| 4D | 026704 | D6AZ-7B164A | Reverse | .075 | 66-96 | 4-6 | Tan - 72T - OD: 6.796" - WF |
| 4D | 026734 | NA | Reverse | .075 | 66-96 | 4-6 | Heg - 72T - OD: 6.796" - WF |
| **HI-PERFORMANCE - RED EAGLE®** | | | | | | | |
| 2B | 026740 | NA | Forward | .061 | 67-76 | 3-5 | Red - 90T - OD: 6.358" - SM |
| 2B | 026740SB | NA | Forward | .061 | 67-76 | 3-5 | Red - 90T - OD: 6.358" - SB |
| 2B | 026746 | NA | Forward - hardened spline | .075 | 76-96 | 4 | Red - 90T - OD: 6.358" - SM |
| 3B | 026742 | NA | Direct | .075 | 66-96 | 3-4 | Red - 63T - OD: 6.364" - SM |
| 3B | 026742PL | NA | Direct | .075 | 66-96 | 3-4 | Red - 63T - OD: 6.364" - PL |
| 3B | 026742SB | NA | Direct | .075 | 66-96 | 3-4 | Red - 63T - OD: 6.364" - SB |
| 3B | 026742A | NA | Direct - POWERPACK™ Component | .062 | 66-96 | AR | Red - 63T - OD: 6.364" - SM |
| 4D | 026744 | NA | Reverse | .075 | 66-96 | 4-6 | Red - 72T - OD: 6.796" - SM |
| 4D | 026744SB | NA | Reverse | .075 | 66-96 | 4-6 | Red - 72T - OD: 6.796" - SB |
| **HI-PERFORMANCE - UNIT PACKS (ONE Rebuild)** | | | | | | | |
| KT | 026740UP5 | NA | UNIT PACK - Forward | .061 | 67-76 | 1 | 5 RED EAGLE® Friction |
| KT | 026746UP4 | NA | UNIT PACK - Forward | .075 | 76-96 | 1 | 4 RED EAGLE® Friction |
| KT | 026742UP5 | NA | UNIT PACK - Direct | .075 | 66-96 | 1 | 5 RED EAGLE® Friction |
| KT | 026744UP6 | NA | UNIT PACK - Reverse | .075 | 66-96 | 1 | 6 RED EAGLE® Friction |
| **STEEL CLUTCHES** | | | | | | | |
| 5B | 026701 | E9TZ-7B442D | Forward | .078 | 66-96 | 4 | 26T - ID: 5.121" |
| 5B | 026711 | C6AZ-7B442C | Forward - wave | .080 | 66-76 | 3-4 | 26T - ID: 5.121" |
| 5B | 026717 | NA | Forward - selective | .095 | 66-96 | AR | 26T - ID: 5.121" |
| 5B | 026717A | NA | Forward - POWERPACK™ Component | .090 | 66-96 | AR | 26T - ID: 5.121" |
| 6B | 026767 | C6AZ-7B070B | Forward diaphragm spring | .075 | 66-76 | 1 | |
| 6B | 026767A | D9AZ-7B070A | Forward diaphragm spring | .094 | 76-96 | 1 | |
| 7B | 026701 | E9TZ-7B442D | Direct | .078 | 66-96 | 4 | 26T - ID: 5.121" |
| 7B | 026701A | NA | Direct - POWERPACK™ Component | .059 | 66-96 | AR | 26T - ID: 5.121" |
| 8D | 026703 | E9TZ-7B442E | Reverse | .068 | 66-96 | 4-6 | 18T - ID: 5.697" |
| 5B | 026701K | NA | Forward & Direct | .078 | 66-96 | 4/4 | 26T - ID: 5.121" |
| **HI-PERFORMANCE - KOLENE®** | | | | | | | |
| 5B | 026701AK | NA | Forward POWERPACK™ Component | .059 | 66-96 | AR | 26T - ID: 5.121" |
| 5B | 026701AHK | NA | Direct POWERPK™ Comp.- w/Turbulator holes | .059 | 66-96 | 4 | 26T - ID: 5.121" |

# FORD
## C6
## 1966-96

| ILL | ALTO NO | REF NO | DESCRIPTION | SPEC | YEAR | QTY | NOTES |
|---|---|---|---|---|---|---|---|
| **STEEL CLUTCHES** | | | | | | | ...Continued |
| **HI-PERFORMANCE - KOLENE®** | | | | | | | |
| 8D | 026703K | NA | Reverse | .068 | 66-96 | 4-6 | 18T - ID: 5.697" |
| **HI-PERFORMANCE - UNIT PACKS (ONE Rebuild)** | | | | | | | |
| KT | 026701KUP4 | NA | UNIT PACK - Forward or Direct | .078 | 66-96 | 1 | 4 KOLENE® Steel |
| KT | 026703KUP6 | NA | UNIT PACK - Reverse | .068 | 66-96 | 1 | 6 KOLENE® Steel |
| **PRESSURE PLATES** | | | | | | | |
| 9B | 026760 | C6AZ-7B066B | Forward - apply (top) | .340 | 66-96 | 1 | |
| 9B | 026760-630 | NA | Forward - apply (top) Powerpack™ Comp. | .189 | 66-96 | 1 | |
| 10B | 026760A | C6AZ-7B066A | Forward - backing (bottom) with bevel | .300 | 66-96 | 1 | |
| 10B | 026760A673 | NA | Forward - backing (bottom) with bevel POWEPACK™ Comp. | .300 | 66-96 | 1 | |
| 11B | 026760 | C6AZ-7B066B | Direct - apply (top) | .340 | 66-96 | 1 | |
| 11B | 026713 | NA | Direct - apply (top) POWERPACK Comp. | .125 | 66-96 | 1 | |
| 12D | TBA | C6AZ-7B066C | Reverse - backing | .438 | 66-96 | 1 | |
| **OEI™ Original Equipment Improvements** | | | | | | | |
| KT | 026755A | NA | POWERPACK™ - Forward clutch | | 66-96 | 1 | |
| KT | 026755 | NA | POWERPACK™ - Forward clutch - Hi Perf. | | 66-96 | 1 | RED EAGLE® & KOLENE® |
| KT | 026757 | NA | POWERPACK™ - Direct Clutch | | 66-96 | 1 | |
| KT | 026757HP | NA | POWERPACK™ - Direct clutch - Hi Perf. | | 66-96 | 1 | RED EAGLE® & KOLENE® |
| KT | 026985 | SK® 6 | Shift Kit® | Transgo® | 66-96 | 1 | |
| KT | 026991 | 67-1&2 | Reprogramming Kit™ Tow & Go / Competition | Transgo® | 67-96 | 1 | |
| KT | 026991A | 67-3 | Reprogramming Kit™ convets to manual shift | Transgo® | 67-96 | 1 | |
| **BANDS** | | | | | | | |
| 13A | 026959 | D9AZ-7D034B | Intermediate - Flex | Tan | 66-96 | 1 | |
| 13A | 026974 | NA | Intermediate - Snap in | Tan | 66-96 | 1 | |
| **HI-PERFORMANCE - RED EAGLE® or KEVLAR®** | | | | | | | |
| 13A | 026969 | D9AZ-7D034B | Intermediate - Flex | Red | 66-96 | 1 | |
| 13A | 026968 | D9AZ-7D034B | Intermediate - Flex POWERBAND™ | Red | 66-96 | 1 | |
| 13A | 026968K | D9AZ-7D034B | Intermediate - Flex POWERBAND™ | Kevlar® | 66-96 | 1 | |
| **FILTERS** | | | | | | | |
| KT | FK026940 | NA | Filter Kit - flat | | 66-74 | 1 | |
| KT | FK026944 | NA | Filter Kit - 2wd | | 75-96 | 1 | |
| KT | FK026946 | NA | Filter Kit - 4wd | | 75-96 | 1 | |
| 14F | 026940 | C6AZ-7A098B | Filter - flat | | 66-74 | 1 | |
| 14F | 026944 | D5AZ-7A098B | Filter - 2wd | | 75-96 | 1 | |
| 14F | 026946 | D3TZ-7A098B | Filter - 4wd (with rubber grommet) | | 74-96 | 1 | |
| **METAL CLAD SEALS** | | | | | | | |
| 15A | 024400 | C2AZ-7A248A | Front Pump | | 66-91 | 1 | |
| 15A | 026400 | F2VY-7A248A | Front pump with flange | Viton® | 92-On | 1 | |
| 16F | 031401 | D5AZ-7052A | Extension Housing without boot | | 66-96 | 1 | |
| 16F | 023405 | F6TZ-7052A | Extension Housing with boot | | 66-96 | 1 | |
| 16F | 023402 | B3TZ-7A011A | Extension Housing - bolt on yoke | 3.066 | 68-96 | 1 | |
| N I | 023406 | D5AZ-7B498A | Manual Lever | | 66-96 | 1 | |
| **SEALING RINGS** | | | | | | | |
| KT | 026600 | B220 | Sealing Ring Kit - 7M | | 66-96 | 1 | |
| KT | 026600T | B223 | Sealing Ring Kit - 7T | | 66-96 | 1 | |
| 17A | 026100 | C6AZ-7D025A | Front pump stator | | 66-96 | 2 | |
| 18B | 026101 | C6AZ-7D019B | Forward drum | | 66-96 | 2 | |
| 19E | 025102 | C4AZ-7D011A | Governor | | 66-96 | 3 | |
| **SNAP RINGS** | | | | | | | |
| KT | 026680 | NA | Snap Ring Kit | | 66-96 | 1 | |
| 20B | 026251-050 | 377136-S | Direct clutch spring retainer | .050 | 66-96 | 1 | |
| 21B | 026251-058 | 377437-S | Forward & Direct PP retainer - selective | .058 | 66-96 | AR | |
| 21B | 026251-062 | 377126-S | Forward & Direct PP retainer - selective | .062 | 66-96 | AR | |
| 21B | 026251-076 | 377127-S | Forward & Direct PP retainer - selective | .076 | 66-96 | AR | |
| 21B | 026251-090 | 377128-S | Forward & Direct PP retainer - selective | .090 | 66-96 | AR | |

| ILL | ALTO NO | REF NO | DESCRIPTION | SPEC | YEAR | QTY | NOTES |
|---|---|---|---|---|---|---|---|
| **SNAP RINGS** | | | | | | | ...Continued |
| 21B | 026251-094 | 377444-S | Forward & Direct PP retainer - selective | .094 | 66-96 | AR | |
| 21B | 026251-112 | 386841-S | Forward & Direct PP retainer - selective | .112 | 66-96 | AR | |
| 21B | 026251-130 | 386127-S | Forward spring retainer | .076 | 66-96 | AR | |
| 23C | 026256 | 377300-S | Sun Gear | | 66-96 | 2 | |
| 24C | 026258 | 377137-S | Output shaft hub | .048 | 66-76 | 1 | |
| 24C | 026258A | 387031-S5 | Output shaft hub | .075 | 77-96 | 1 | |
| 25D | 026260 | 377134-S | Reverse PP retainer | | 66-96 | 1 | |
| 26D | 026261 | 377133-S | Reverse spring retainer | | 66-96 | 1 | |
| 27E | 026262 | 377138-S | Output shaft to governor | | 66-96 | 1 | |
| 28D | 026263 | 377135-S | 1 way clutch to outer race | | 66-96 | 2 | |
| 29E | 026264 | 387035-S5 | Governor support | | 66-96 | 1 | |
| 30B | 026265 | C6AZ-7D256B | Forward clutch piston retainer | | 66-96 | 1 | |
| **BUSHINGS** | | | | | | | |
| KT | 026625 | NA | Bushing Kit | | 66-96 | 1 | |
| 31A | 026202 | C6AZ-7B258A | Front Pump body | Bronze | 66-96 | 1 | |
| 31A | 026202X | NA | Front Pump body | Babbit | 66-96 | 1 | |
| 32A | 026200 | C6AZ-7B261C | Stator Support - Front | | 66-96 | 1 | |
| 33A | 026201 | C6AZ-7D018A | Stator Support - Rear | | 66-96 | 1 | |
| 34A | 026203 | C6AZ-7D046B | Intermediate Brake drum - Front | .375 | 66-96 | 1 | |
| 35A | 026204 | C6AZ-7D046A | Intermediate Brake drum - Rear | 1.250 | 66-96 | 1 | |
| 36C | 026205 | C6AZ-7D065A | Sun Gear | | 66-96 | 2 | |
| 37F | 026207 | F2TZ-7025A | Case - Front (with oil grooves) | | 66-96 | 1 | |
| 37F | 026207A | 36008A | Case - Front - oversize | Sonnax | 66-96 | 1 | |
| N I | 026208 | F2TZ-7025B | Case - Rear (without oil grooves) | | 66-96 | 1 | |
| N I | 026210 | 36008B | Case - oversize / replaces 2pc with 1 | Sonnax | 66-96 | 1 | with oil grooves |
| 38F | 026209 | C1VY-7A034A | Extension Housing - Lincoln only | | 66-69 | 1 | |
| 38F | 023225 | B5AZ-7A034D | Extension Housing - except Lincoln & Truck | | 66-96 | 1 | |
| **WASHERS** | | | | | | | |
| KT | 026635 | NA | Washer Kit | | 66-96 | 1 | |
| **MODULATORS** | | | | | | | |
| 39F | 025504 | C4AZ-7A377B | Modulator - White stripe | | 66-72 | 1 | Screw-in |
| 39F | 026522 | D4TZ-7A377A | Modulator - Black stripe | | 73-96 | 1 | Push-in |
| 39F | 026523 | D4AZ-7A377B | Modulator - Pink stripe | | 73-76 | 1 | Push-in |
| 39F | 026524 | D5AZ-7A377A | Modulator - Purple stripe | | 75-96 | 1 | Push-in |
| 39F | 026525 | D7OZ-7A377A | Modulator - Green stripe | | 77-96 | 1 | Push-in |

**NOTES**

# FORD

## FORD - CD4E
## MAZDA - LA4AEL
## 1994-On

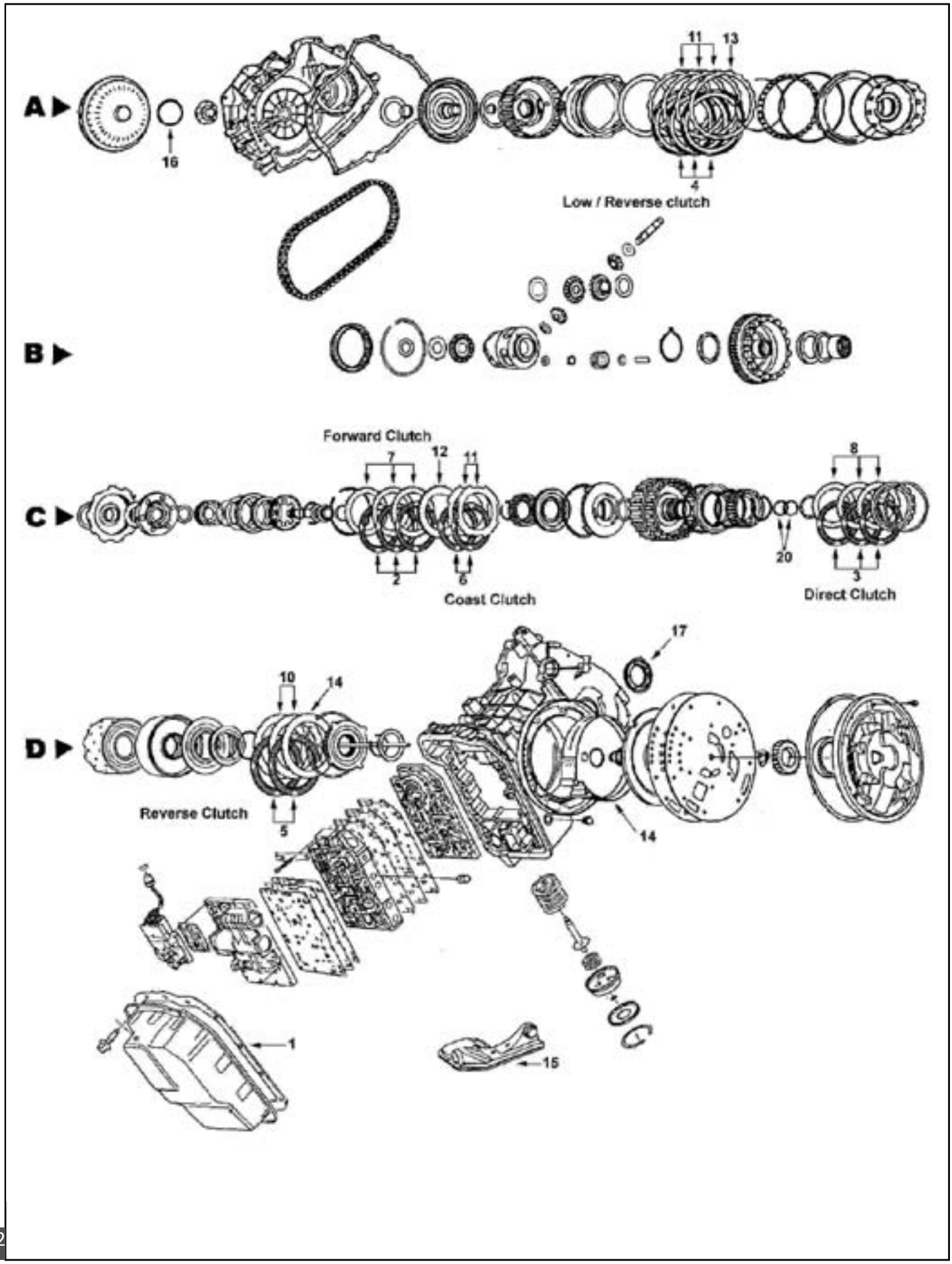

# FORD
## FORD - CD4E
## MAZDA - LA4AEL
## 1994-On

| ILL | DESCRIPTION | YEARS | FRICTION MODULE | STEEL MODULE | OVERHAUL KIT | BANNER KIT | MASTER KIT |
|---|---|---|---|---|---|---|---|
| **KITS** | | | | | | | |
| KT | Rebuilding Kit - thin & thick direct steels | 94-On | 112752 | 112753 | 112800 | 112901LS | 112901 |

| ILL | ALTO NO | REF NO | DESCRIPTION | SPEC | YEAR | QTY | NOTES |
|---|---|---|---|---|---|---|---|
| **MISCELLANEOUS GASKETS & KIT COMPONENTS** | | | | | | | |
| 1D | 112816 | F3RZ-7F396A | Gasket, VB cover | | 94-On | 1 | |
| **FRICTION CLUTCHES** | | | | | | | |
| 2C | 112700 | F3RZ-7B164B | Forward | .065 | 94-On | 3 | Tan - 32T - OD: 5.275" - PL |
| 3C | 112702 | F6RZ-7B164A | Direct | .065 | 94-On | 3-4 | Tan - 24T - OD: 5.275" - PL |
| 4A | 112704 | F3RZ-7B164C | Low / Reverse | .065 | 94-On | 3-4 | Tan - 32T - OD: 8.611" - PL |
| 5D | 112706 | F3RZ-7B164A | Reverse | .065 | 94-On | 2 | Tan - 36T - OD: 6.075" - PL |
| 6C | 112708 | F7RZ-7B164AA | Coast | .065 | 94-On | 2 | Heg - 24T - OD: 4.842" - PL |
| **STEEL CLUTCHES** | | | | | | | |
| 7C | 112701 | F3RZ-7B442C | Forward | .069 | 94-On | 3 | 32T - ID: 4.263" |
| 8C | 112703 | F3RZ-7B442E | Direct - use with F4RZ-7G120A drum | .079 | 94-3/96 | 3-4 | 32T - ID: 4.105" |
| 8C | 112703A300 | F5RZ-7B442A | Direct - use with F5RZ-7G120A drum | .118 | 3/96-On | 3 | 28T - ID: 4.105" |
| 9A | 112705 | F3RZ-7B442B | Low / Reverse | .069 | 94-On | 3-4 | 18T - ID: 7.800" |
| 10D | 112707 | F3RZ-7B442A | Reverse | .069 | 94-On | 2 | 32T - ID: 4.759" |
| 11C | 112709 | F3RZ-7B442D | Coast | .069 | 94-On | 2 | 20T - ID: 3.769" |
| **PRESSURE PLATES** | | | | | | | |
| 12C | 112760 | F3RZ-7B066A | Forward | .157 | 94-98 | 1 | |
| 12C | TBA | F8RZ-7B066BA | Forward | | 98-On | 1 | |
| 13A | 112705-210 | F3RZ-7B066F | Low / Reverse - selective | .082 | 94-On | 1 | |
| 13A | 112705-230 | F3RZ-7B066E | Low / Reverse - selective | .090 | 94-On | 1 | |
| 13A | 112705-250 | F3RZ-7B066D | Low / Reverse - selective | .098 | 94-On | 1 | |
| 13A | 112705-270 | NA | Low / Reverse - selective | .106 | 94-On | 1 | |
| 13D | 112762 | F3RZ-7D408A | Reverse | .157 | 94-On | 1 | |
| 13D | 112762A576 | NA | Reverse -oversize | .227 | 94-On | 1 | |
| **OEI™ Original Equipment Improvements** | | | | | | | |
| KT | 112985 | SK®CD4E-Jr | Shift Kit® | Transgo® | 94-96 | 1 | |
| **BANDS** | | | | | | | |
| 14D | 112950 | F3RZ-7D034A | Intermediate / Overdrive - 1.653" wide | Tan | 94-95 | 1 | |
| 14D | 112952 | F4RZ-7D034A | Intermediate / Overdrive - 2.047" wide | Tan | 96-On | 1 | |
| **FILTERS** | | | | | | | |
| KT | FK112940 | NA | Filter Kit | | 94-On | 1 | |
| 15D | 112940 | F3RZ-7A098AA | Filter - Aftermarket | | 94-On | 1 | |
| 15D | 112940A | F3RZ-7A098AA | Filter - OE | | 94-On | 1 | |
| **METAL CLAD SEALS** | | | | | | | |
| 16A | 112400 | F3RZ-7F401A | Converter Housing | | 94-On | 1 | |
| 17D | 112425 | F3RZ-1177A | Axle | | 94-On | 2 | |
| N I | 051406 | E1FZ-7B498A | Manual Lever - large | | 94-On | 1 | |
| N I | 069410 | E6DZ-7F337A | Manual Lever - small | | 94-On | 1 | |
| **SEALING RINGS** | | | | | | | |
| KT | 112600 | B271 | Sealing Ring Kit - 10T | | 94-On | 1 | |
| **BUSHINGS** | | | | | | | |
| KT | 112625 | NA | Bushing Kit | | 94-On | 1 | |

**NOTES**

# FORD

**E4OD 1989-98**
**4R100 1999-On**

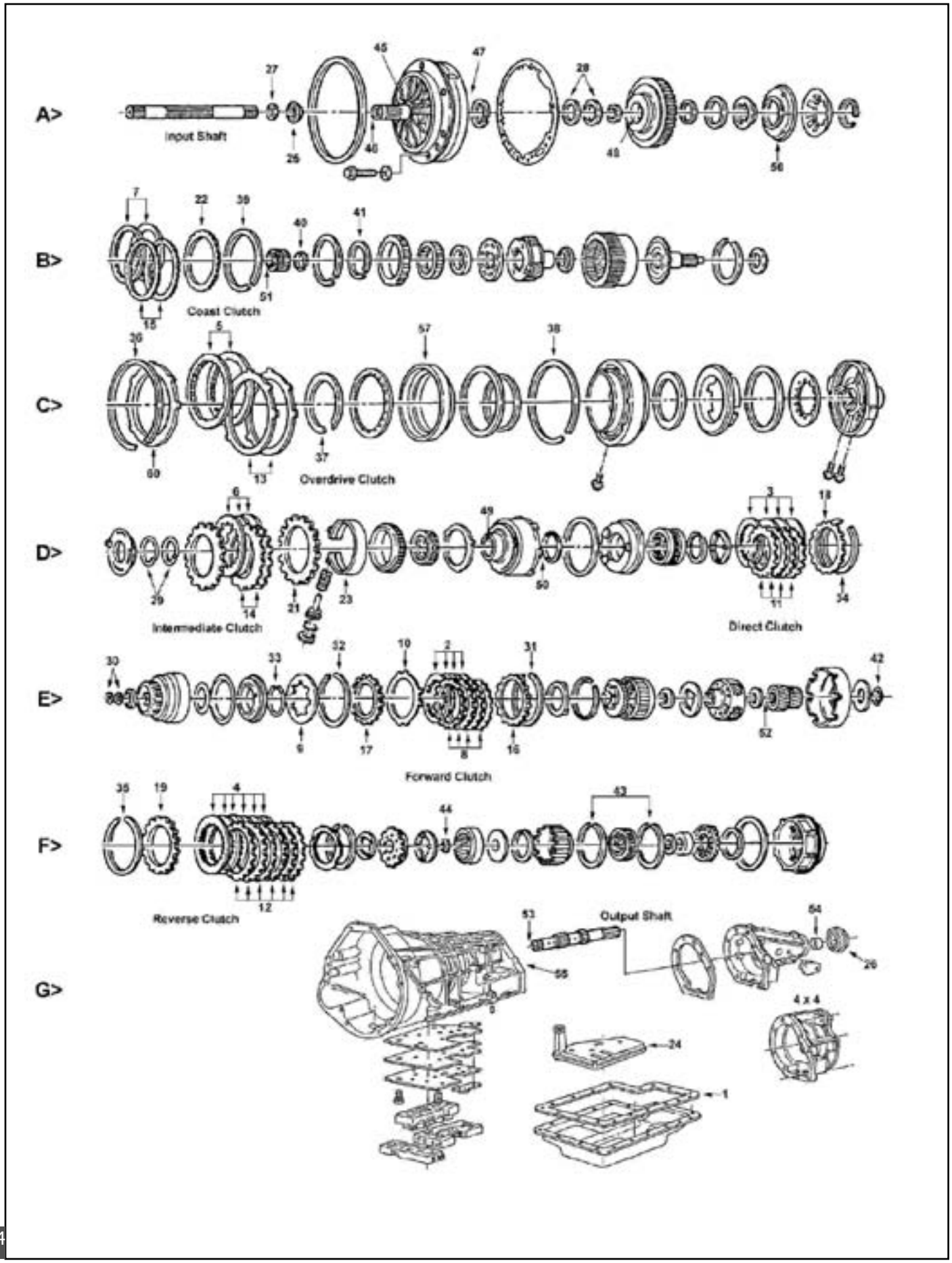

# FORD

## E4OD 1989-98
## 4R100 1999-On

| ILL | DESCRIPTION | YEARS | FRICTION MODULE | STEEL MODULE | OVERHAUL KIT | BANNER KIT | MASTER KIT |
|---|---|---|---|---|---|---|---|
| **KITS** | | | | | | | |
| KT | Rebuilding Kit | 89-95 | 026752B | 026753A | 026804 | 026907LS | 026907 |
| KT | Rebuilding Kit | 94-4/97 | 026752B | 026753A | 026804A | 026907ALS | 026907A |
| KT | Rebuilding Kit | 5/97-98 | 026752F | 026753F | 026804A | 026907BLS | 026907B |
| KT | Rebuilding Kit - 4R100 | 99-00 | 026752F | 026753F | 026806 | 026909LS | 026909 |
| KT | Rebuilding Kit - 4R100 | 01-On | 026752G | 026753F | 026806 | 026909ALS | 026909A |
| **HI-PERFORMANCE - RED EAGLE®** | | | | | | | |
| KT | Rebuilding Kit | 89-95 | 026752BHP | 026753AHP | 026804 | 026907HPLS | 026907HP |
| **HI-PERFORMANCE - with Powerpack™** | | | | | | | |
| KT | Rebuilding Kit - with Direct Powerpak™ | 88-95 | 26750BHPPWR FR & ST | NA | 026804FT | NA | 026907HPPWR |
| KT | Rebuilding Kit - with Direct Powerpak™ | 94-4/97 | 26750BHPPWR FR & ST | NA | 026804AFT | NA | 26907AHPPWR |
| KT | Rebuilding Kit - with Direct Powerpak™ | 5/97-98 | 26750FHPPWR FR & ST | NA | 026804AFT | NA | 26907BHPPWR |
| KT | Rebuilding Kit - 4R100 with Direct Powerpak™ | 99-00 | 26750FHPPWR FR & ST | NA | 026806FT | NA | 026909HPPWR |
| KT | Rebuilding Kit - 4R100 with Direct Powerpak™ | 01-On | 26750GHPPWR FR & ST | NA | 026806FT | NA | 26909AHPPWR |
| | All above kits with hardened steel Forward Frictions | | | | | | |

| ILL | ALTO NO | REF NO | DESCRIPTION | SPEC | YEAR | QTY | NOTES |
|---|---|---|---|---|---|---|---|
| **MISCELLANEOUS GASKETS & KIT COMPONENTS** | | | | | | | |
| 1G | 026816A | E9TZ-7A191A | Gasket, Oil pan | Cork/Rub | 89-95 | 1 | |
| 1G | 026816B | F6TZ-7A191A | Gasket, Oil pan | M.Rubber | 96-On | 1 | |
| N I | 010115B | 87036-S94 | O Ring, Speedometer | | 89-On | 1 | |
| **FRICTION CLUTCHES** | | | | | | | |
| 2E | 026720 | E9TZ-7B164E | Forward | .075 | 89-On | 4 | Tan - 90T - OD: 6.358" - SM |
| 2E | 026730 | F2TZ-7B164A | Forward with hardened spline | .075 | 89-On | 4 | Tan - 90T - OD: 6.358" - SM |
| 2E | 026736 | NA | Forward | .075 | 89-On | 4 | Heg - 90T - OD: 6.358" - SM |
| 3D | 026712 | F6TZ-7B164B | Direct | .077 | 89-On | 4-5 | Tan - 63T - OD: 6.364" - WF |
| 3D | 026712SM | E9TZ-7B164D | Direct | .077 | 89-On | 4-5 | Tan - 63T - OD: 6.360" - SM |
| 3D | 026732 | F6TZ-7B164B | Direct | .077 | 89-On | 4-5 | Heg - 63T - OD: 6.364" - WF |
| 3D | 026712A | NA | Direct - POWERPACK™ Component | .062 | 89-On | AR | Tan - 63T - OD: 6.360" - SM |
| 4F | 026704 | D6AZ-7B164A | Reverse | .075 | 89-4/97 | 6 | Tan - 72T - OD: 6.796" - WF |
| 4F | 026734 | NA | Reverse | .075 | 89-4/97 | 6 | Heg - 72T - OD: 6.796" - WF |
| 4F | 026704A | F7TZ-7B164AA | Reverse - Grob (stamped steel) drum | .078 | 5/97-On | 5-6 | Tan - 24T - OD: 6.796" - WF |
| 4F | 026704AA | F81Z-7B164DA | Reverse - Grob drum (anti skid groove) | .078 | 5/97-On | 5-6 | Tan - 24T - OD: 6.796" - SP |
| 5C | 026722 | E9TZ-7B164A | Overdrive | .078 | 89-4/97 | 2-3 | Tan - 64T - OD: 8.700" - WF |
| 5C | 026722SM | F81Z-7B164CA | Overdrive | .078 | 5/97-99 | 2-3 | Tan - 64T - OD: 8.691" - SM |
| 5C | 026722ASM | F81Z-7B164BA | Overdrive | .078 | 5/97-On | 2-3 | Tan - 32T - OD: 8.691" - SM |
| 5C | 026722A | F81Z-7B164AA | Overdrive - Super Duty PU trucks | .078 | 99 | 3 | Tan - 32T - OD: 8.691" - PL |
| 5C | 026722B177 | NA | Overdrive - Powerpack™ Component | .070 | 98-On | AR | Red - 32T - OD: 8.691" - WF |
| 6D | 026724 | E9TZ-7B164B | Intermediate | .078 | 89-4/97 | 3-4 | Tan - 50T - OD: 7.800" - WF |
| 6D | 026724A | 1C3Z-7B164BA | Intermediate | .078 | 5/97-0n | 3-4 | Heg - 50T - OD: 7.800" - SP |
| 6D | 026724B190 | 1C3Z-7B164AA | Intermediate - Diode clutch | .076 | 01-On | 3 | Heg - 60T - OD: 7.800" - SP |
| 7B | 026726 | E9TZ-7B164C | Coast | .078 | 89-On | 2 | Tan - 60T - OD: 6.600" - PL |
| **HI-PERFORMANCE - RED EAGLE®** | | | | | | | |
| 2E | 026746 | NA | Forward - hardened spline | .075 | 89-On | 4 | Red - 90T - OD: 6.358" - SM |
| 3D | 026742 | NA | Direct | .077 | 89-On | 4-5 | Red - 63T - OD: 6.358" - SM |
| 3D | 026742PL | NA | Direct | .077 | 89-On | 4-5 | Red - 63T - OD: 6.358" - PL |
| 3D | 026742SB | NA | Direct | .077 | 89-On | 4-5 | Red - 63T - OD: 6.358" - SB |
| 3D | 026742A | NA | Direct - POWERPACK™ Component | .062 | 89-On | AR | Red - 63T - OD: 6.358" - SM |
| 4F | 026744 | NA | Reverse | .075 | 89-4/97 | 6 | Red - 72T - OD: 6.796" - SM |
| 4F | 026744SB | NA | Reverse | .075 | 89-4/97 | 6 | RED EAGLE® - SB |
| 4F | 026744AA | NA | Reverse - Grob drum (anti skid groove) | .078 | 5/97-On | 3 | Red - 24T - OD: 6.805" - 8SBR |
| 5C | 026722B | NA | Overdrive - Super Duty PU trucks | .078 | 99 | 3 | Red - 23T - OD: 8.691" - PL |

# FORD

## E4OD 1989-98
## 4R100 1999-On

| ILL | ALTO NO | REF NO | DESCRIPTION | SPEC | YEAR | QTY | NOTES |
|---|---|---|---|---|---|---|---|
| **FRICTION CLUTCHES** | | | | | | | ...Continued |
| **HI-PERFORMANCE - RED EAGLE®** | | | | | | | |
| 5C | 026722BSM | NA | Overdrive - w/ grob smooth | .079 | 5/97-On | 2-3 | RED EAGLE® |
| 5C | 026722C | NA | Overdrive | .078 | 89-4/97 | 2-3 | Red - 64T - OD: 8.700" - WF |
| 5C | 026722C177 | NA | Overdrive - Powerpack™ Component | .070 | 89-4/97 | 2-3 | RED EAGLE® |
| 5C | 026722CSM | NA | Overdrive - w/ cast iron smooth | .079 | 5/97-99 | 2-3 | Red - 64T - OD: 8.700" - SM |
| 6D | 026724C190 | NA | Intermediate - anti-skid | .076 | 01-On | 3 | Red - 60T - OD: 7.793" - 8SBR |
| 6D | 026724D | NA | Intermediate | .078 | 89-4/97 | 3-4 | Red - 50T - OD: 7.793" - WF |
| 6D | 026724E | NA | Intermediate | .078 | 5/97-00 | 3-4 | Red - 50T - OD: 7.793" - 8SBR |
| 7B | 026726A | NA | Coast | .078 | 89-On | 2 | RED EAGLE® |
| **HI-PERFORMANCE - UNIT PACKS (ONE Rebuild)** | | | | | | | |
| KT | 026746UP4 | NA | Forward | .075 | 89-On | 1 | 4 RED EAGLE® Friction |
| KT | 026742UP5 | NA | Direct | .077 | 89-On | 1 | 5 RED EAGLE® Friction |
| KT | 026744UP6 | NA | Reverse | .075 | 89-4/97 | 1 | 6 RED EAGLE® Friction |
| **STEEL CLUTCHES** | | | | | | | |
| 8E | 026701 | E9TZ-7B442D | Forward | .078 | 89-On | 4 | 26T - ID: 5.121" |
| 8E | 026717A | NA | Forward - POWERPACK™ Component | .090 | 89-On | AR | 26T - ID: 5.121" |
| 9E | 026767A | D9AZ-7B070A | Forward diaphragm spring | .094 | 89-On | 1 | |
| 10E | 026767C | D6AZ-7E085B | Forward cushion (wave) | .039 | 89-On | 1 | |
| 11D | 026701 | E9TZ-7B442D | Direct | .078 | 89-On | 4 | 26T - ID: 5.121" |
| 11D | 026701A | NA | Direct - POWERPACK™ Component | .059 | 89-On | AR | 26T - ID: 5.121" |
| 12F | 026703 | E9TZ-7B442E | Reverse | .068 | 89-On | 6 | 18T - ID: 5.800" |
| 12F | 026703A | NA | Reverse - POWERPACK™ Component | .081 | 89-On | AR | 18T - ID: 5.800" |
| 13C | 026723 | E9TZ-7B442A | Overdrive | .080 | 89-On | 2 | 6T - ID: 7.467" |
| 14D | 026725 | E9TZ-7B442B | Intermediate | .080 | 89-98 | 2 | 30T - ID: 6.210" |
| 14D | 026761 | E9TZ-7B066C | Intermediate | .123 | 99-On | 3 | 26T - ID: 6.210" |
| 15B | 026727 | E9TZ-7B442C | Coast | .080 | 89-99 | 2 | 60T - ID: 5.850" |
| 15B | 026727A | F81Z-7B442AA | Coast | .080 | 99-On | 2 | 32T - ID: 5.850" |
| **HI-PERFORMANCE - KOLENE®** | | | | | | | |
| 8E | 026701K | NA | Forward | .078 | 89-On | 4 | 26T - ID: 5.121" |
| 8E | 026717AK | NA | Forward - POWERPACK™ Component | .090 | 89-On | AR | 26T - ID: 5.121" |
| 11D | 026701K | NA | Direct | .078 | 89-On | 4 | 26T - ID: 5.121" |
| 11D | 026701AK | NA | Direct - POWERPACK™ Component | .059 | 89-On | AR | 26T - ID: 5.121" |
| 11D | 026701AHK | NA | Direct - thin with Turbulator holes | .059 | 89-On | AR | 26T - ID: 5.121" |
| 13C | 026723K200 | NA | Overdrive | .080 | 89-On | AR | 18T - ID: 5.800" |
| 14D | 026725K | NA | Intermediate | .080 | 89-98 | 2 | 30T - ID: 6.210" |
| 14D | 026761K | NA | Intermediate | .123 | 89-98 | 1 | 26T - ID: 6.210" |
| 12F | 026703K | NA | Reverse | .068 | 89-On | 6 | 18T - ID: 5.800" |
| 15B | 026727K | NA | Coast | .080 | 89-99 | 2 | 60T - ID: 5.850" |
| 15B | 026727AK | NA | Coast | .079 | 99-On | 2 | 32T - ID: 5.850" |
| **HI-PERFORMANCE - UNIT PACKS (ONE Rebuild)** | | | | | | | |
| KT | 026701KUP4 | NA | UNIT PACK - Forward or Direct | .078 | 89-On | 1 | 4 KOLENE® Steel |
| KT | 026703KUP6 | NA | UNIT PACK - Reverse | .068 | 89-On | 1 | 6 KOLENE® Steel |
| **PRESSURE PLATES** | | | | | | | |
| 16E | 026760 | C6AZ-7B066B | Forward - apply (top) | .340 | 89-On | 1 | |
| 16E | 026760-630 | NA | Forward - apply (top) POWERPACK™ Comp. | .189 | 66-96 | 1 | |
| 17E | 026760A | C6AZ-7B066A | Forward - backing (bottom) with bevel | .300 | 89-On | 1 | |
| 17E | 026760A673 | NA | Forward - backing (bottom) with bevel POWERPACK™ Comp. | .265 | 89-On | 1 | |
| 18D | 026760 | C6AZ-7B066B | Direct - apply (top) | .340 | 89-On | 1 | |
| 18D | TBA | F5TZ-7B066A | Direct - apply (top) | .341 | 99-On | 1 | |
| 18D | 026713 | NA | Direct - apply (top) POWERPACK Comp. | .125 | 89-On | 1 | |
| 60C | 026763 | F3TZ-7B066A | Overdrive | .318 | 93-On | 1 | |
| 60C | 026763-487 | NA | Overdrive - POWERPACK™ Comp. | .192 | 97-On | 1 | |
| 19F | 026764 | E9TZ-7B066A | Reverse - backing | .550 | 89-On | 1 | |
| 19F | TBA | F7TZ-7B066AA | Reverse - backing | .710 | 97-On | 1 | |
| 20D | 026761 | E9TZ-7B066C | Intermediate - apply (top) | .123 | 89-98 | 1 | |
| 21D | 026765P107 | E9TZ-7B066D | Intermediate - backing (bottom) | .421 | 89-98 | 1 | |

| ILL | ALTO NO | REF NO | DESCRIPTION | SPEC | YEAR | QTY | NOTES |
|---|---|---|---|---|---|---|---|
| **PRESSURE PLATES** | | | | | | | ...Continued |
| 21D | 026765P146 | F1TZ-7B066A | Intermediate - backing (bottom) | .578 | 90-98 | 1 | |
| 21D | 026765P083 | F81Z-7B066BA | Intermediate - backing (bottom) | .326 | 99-On | 1 | |
| 22B | 026766 | E9TZ-7B066E | Coast - backing (bottom) | .250 | 89-98 | 1 | |
| 22B | TBA | F81Z-7B066AA | Coast - backing (bottom) | | 99-On | 1 | |
| **OEI™ Original Equipment Improvements** | | | | | | | |
| KT | 026755 | NA | POWERPACK™ - Forward Clutch | | 99-On | 1 | RED EAGLE® & KOLENE® |
| KT | 026756 | NA | POWERPACK™ - Intermediate | | 89-On | 1 | |
| KT | 026757 | NA | POWERPACK™ - Direct Clutch | | 89-On | 1 | Increased capacity |
| KT | 026757HP | NA | POWERPACK™ - Direct Clutch (Hi - Perf.) | | 89-On | 1 | |
| KT | 026758A | NA | POWERPACK™ - Overdrive Clutch-Early | | 89-98 | 1 | |
| KT | 026758 | NA | POWERPACK™ - Overdrive Clutch-Late | | 99-On | 1 | |
| KT | 026759 | NA | CLEARANCE KIT™ | | 89-On | 1 | Fixes delayed Reverse |
| KT | 026986 | SK® E4OD | Shift Kit® | Transgo® | 89-On | 1 | |
| KT | 026992 | E4OD-HD2 | Reprogramming Kit™ | Transgo® | 89-On | 1 | |
| KT | 026993 | 4R100-HD2 | Reprogramming Kit™ | Transgo® | 98-03 | 1 | |
| **BANDS** | | | | | | | |
| 23D | 026951 | E9TZ-7D034A | Intermediate (coast) | Tan | 89-On | 1 | |
| **FILTERS** | | | | | | | |
| KT | FK026948A | NA | Filter Kit - 2wd | | 89-On | 1 | |
| KT | FK026948B | NA | Filter Kit - 4wd | | 89-On | 1 | |
| 24G | 026948A | YC3Z-7A098AA | Filter - 2wd | | 89-On | 1 | |
| 24G | 026948B | YC3Z-7A098BA | Filter - 4wd | | 89-On | 1 | |
| 24G | 026948C | NA | Filter - 2wd | | 89-On | 1 | New Design |
| 24G | 026948D | NA | Filter - 4wd | | 89-On | 1 | New Design |
| **METAL CLAD SEALS** | | | | | | | |
| 25A | 026400 | E9TZ-7A248B | Front Pump | | 89-On | 1 | |
| 26G | 031401 | NA | Extension Housing without boot | 2.508 | 89-97 | 1 | |
| 26G | 023405 | D5AZ-7052A | Extension Housing with boot | 2.508 | 89-97 | 1 | |
| 26G | 026402 | F81Z-7052AA | Extension Housing with boot | 3.180 | 98-On | 1 | |
| N I | 023406 | D5AZ-7B498A | Manual Lever | | 89-On | 1 | |
| **SEALING RINGS** | | | | | | | |
| KT | 026601 | B247 | Sealing Ring Kit - 4M / 3T | | 89-On | 1 | |
| KT | 026601T | B246 | Sealing Ring Kit - 7T | | 89-On | 1 | |
| 27A | 026103 | E9TZ-7L323A | Input Shaft (Lock-up) | Teflon | 89-On | 1 | |
| 28A | 026104 | E9TZ-7G402A | Front Pump stator | Teflon | 89-On | 2 | |
| 29D | 026100 | C6AZ-7D025A | Center Support | Metal | 89-On | 2 | |
| 30E | 026101 | C6AZ-7D019B | Forward drum | Metal | 89-On | 2 | |
| **SNAP RINGS** | | | | | | | |
| KT | 026681 | NA | Kit | | 89-On | 1 | |
| 31E | 026251-058 | 377437-S | Forward PP retainer - selective | .058 | 89-On | AR | |
| 31E | 026251-076 | 377127-S | Forward PP retainer - selective | .076 | 89-On | AR | |
| 31E | 026251-094 | 377444-S | Forward PP retainer - selective | .094 | 89-On | AR | |
| 31E | 026251-112 | 386841-S | Forward PP retainer - selective | .112 | 89-On | AR | |
| 31E | 026251-130 | 386842-S | Forward PP retainer - selective | .130 | 89-On | AR | |
| 32E | 026251-076 | 377127-S | Forward clutch spring retainer | .076 | 89-On | 1 | |
| 33E | 026265 | C6AZ-7D256B | Forward clutch piston retainer | | 66-96 | 1 | |
| 34D | 026251-058 | 377437-S | Direct PP retainer - selective | .058 | 89-On | AR | |
| 34D | 026251-062 | 377126-S | Direct PP retainer - selective | .062 | 89-On | AR | |
| 34D | 026251-076 | 377127-S | Direct PP retainer - selective | .076 | 89-On | AR | |
| 34D | 026251-090 | 377128-S | Direct PP retainer - selective | .090 | 89-On | AR | |
| 34D | 026251-094 | 377444-S | Direct PP retainer - selective | .094 | 89-On | AR | |
| 35F | 026268 | E9TZ-7D483J | Reverse PP retainer | .078 | 89-On | 1 | |
| 36C | 026267-059 | E9TZ-7D483D | Overdrive PP retainer - selective | .059 | 89-On | AR | |
| 36C | 026267-079 | E9TZ-7D483E | Overdrive PP retainer - selective | .079 | 89-On | AR | |
| 36C | 026267-100 | E9TZ-7D483F | Overdrive PP retainer - selective | .100 | 89-On | AR | |
| 36C | 026267-117 | E9TZ-7D483G | Overdrive PP retainer - selective | .117 | 89-On | AR | |

# FORD

## E4OD 1989-98
## 4R100 1999-On

| ILL | ALTO NO | REF NO | DESCRIPTION | SPEC | YEAR | QTY | NOTES |
|---|---|---|---|---|---|---|---|
| **SNAP RINGS** | | | | | | | ...Continued |
| 36C | 026267-139 | E9TZ-7D483H | Overdrive PP retainer - selective | .139 | 89-On | AR | |
| 37C | 026269HD | F0TZ-7A527A | Overdrive spring retainer | .059 | 89-On | 1 | heavy duty |
| 38C | 026267-059 | E9TZ-7D483D | Intermediate PP retainer - selective | .059 | 89-On | AR | |
| 38C | 026267-079 | E9TZ-7D483E | Intermediate PP retainer - selective | .079 | 89-On | AR | |
| 38C | 026267-100 | E9TZ-7D483F | Intermediate PP retainer - selective | .100 | 89-On | AR | |
| 39B | 026266-055 | E9TZ-7D483A | Coast PP retainer - selective | .055 | 89-On | AR | |
| 39B | 026266-071 | E9TZ-7D483B | Coast PP retainer - selective | .071 | 89-On | AR | |
| 39B | 026266-086 | E9TZ-7D483C | Coast PP retainer - selective | .086 | 89-On | AR | |
| 40B | 026256 | 377300-S | Overdrive Sun Gear | | 89-On | 1 | |
| 41B | 026263 | 377135-S | Overdrive Sprag | | 89-On | 1 | |
| 42E | 026256 | 377300-S | Forward Sun Gear | | 89-On | 1 | |
| 43F | 026263 | 377135-S | Overrunning (low) Sprag | | 89-On | 2 | |
| 44F | 026258A | 387031-S | Output shaft hub | | 89-On | 1 | |
| N I | 026262 | F0TZ-7393A | Output shaft | | 89-On | 1 | |
| **BUSHINGS** | | | | | | | |
| KT | 026630 | NA | Bushing Kit Short | | 89-On | 1 | |
| 45A | 026202 | C6AZ-7B258A | Front Pump body | Bronze | 89-On | 1 | |
| 45A | 026202X | NA | Front Pump body | Babbit | 89-On | 1 | |
| 45A | 049200 | E9TZ-7B258A | Front Pump body - Bronze | .695 | 89-On | 1 | anti - walkout |
| 46A | 026200 | C6AZ-7B261C | Stator Support - Front | | 89-On | 1 | |
| 47A | 026201 | C6AZ-7D018A | Stator Support - Rear | | 89-On | 1 | Some 4R100 uses bearing |
| 48A | 041203 | NA | Coast Clutch drum (cast iron) | 2.368 | 89-97 | 1 | |
| 48A | 026204A | NA | Coast Clutch drum (stamped steel) | | 98-On | 1 | |
| 49D | 026203 | C6AZ-7D046B | Intermediate Brake drum - Front | .375 | 89-On | 1 | |
| 50D | 026204 | C6AZ-7D046A | Intermediate Brake drum - Rear | 1.250 | 89-On | 1 | |
| 51B | 026200 | C6AZ-7B261C | Overdrive Sun Gear | | 89-On | 1 | |
| 52E | 026205 | C6AZ-7D065A | Forward Sun Gear | | 89-On | 2 | |
| 53G | 041209 | NA | Output Shaft | Bronze | 89-94 | 1 | |
| 54G | 023225 | F2TZ-7A034A | Extension Housing | | 89-On | 1 | |
| 54G | 023225A | F81Z-7A034AB | Extension Housing - Large OD / Trucks | | 99-On | 1 | |
| 55G | 026207 | F2TZ-7025A | Case - with oil grooves | | 89-On | 1 | |
| 55G | 026207A | 36008A | Case - oversize | Sonnax | 89-On | 1 | |
| **WASHERS** | | | | | | | |
| KT | 026636 | NA | Washer Kit (12 plastic) | | 89-On | 1 | use w/ 4 pinion planets |
| **MISCELLANEOUS** | | | | | | | |
| 56A | 026306 | F81Z-7A262A | Bonded Piston - Coast Clutch | | 99-On | 1 | |
| 57C | 026305 | F6TZ-7A262AA | Bonded Piston - Overdrive | | 99-On | 1 | |
| N I | 026767 | C6AZ-7B070B | Diaphragm Spring - forward clutch | .071 | 89-98 | 1 | |

**NOTES**

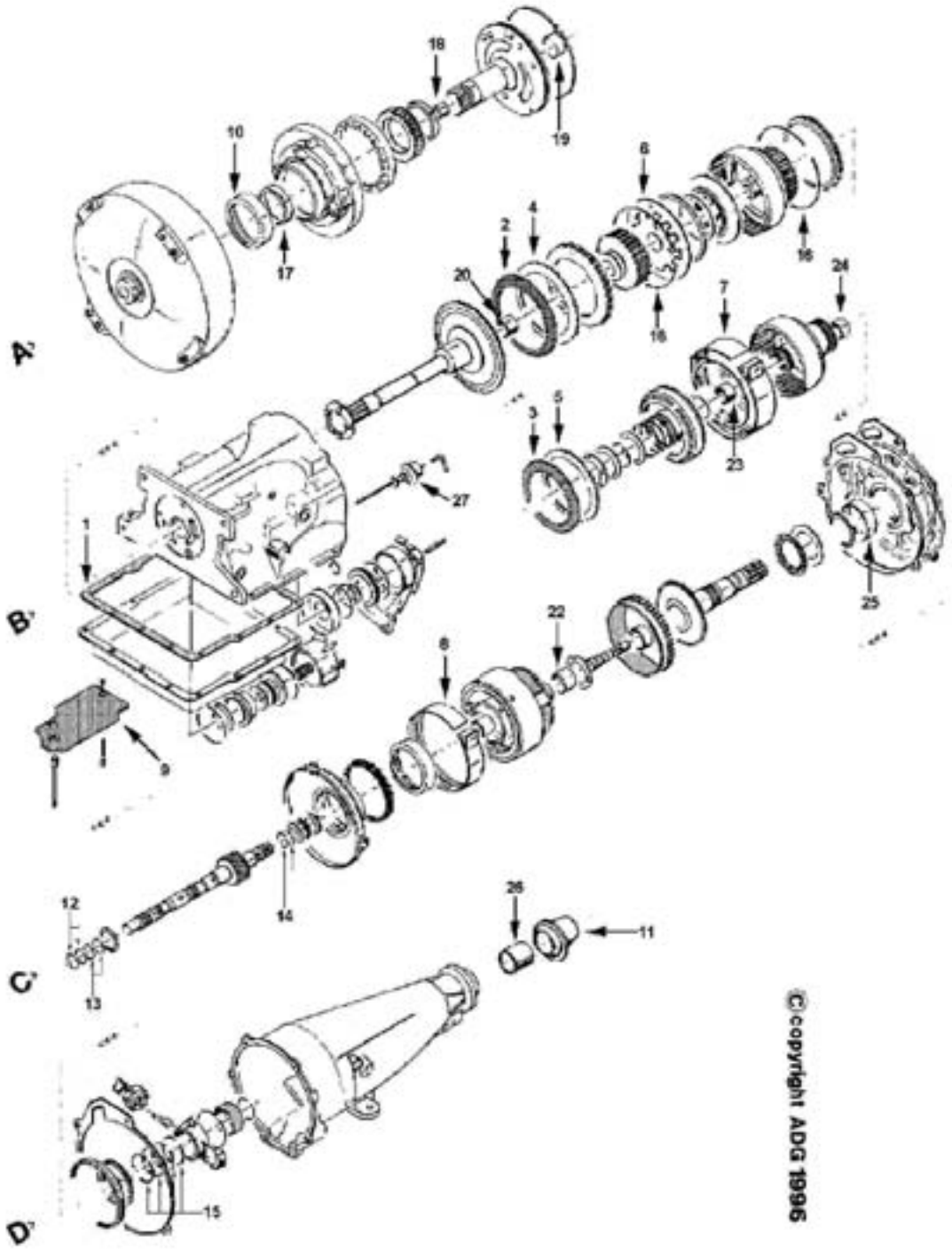
A
B
C
D
1
2
3
4
5
6
7
8
9
10
11
12
13
14
15
16
17
18
19
20
22
23
24
25
26
27
© copyright ADG 1996

# FORD
## FMX
## 1968-81

| ILL | DESCRIPTION | YEARS | FRICTION MODULE | STEEL MODULE | OVERHAUL KIT | BANNER KIT | MASTER KIT |
|---|---|---|---|---|---|---|---|
| **KITS** | | | | | | | |
| KT | Rebuilding Kit | 68-81 | 023752 | 023753 | 023800 | 023913LS | 023913 |

| ILL | ALTO NO | REF NO | DESCRIPTION | SPEC | YEAR | QTY | NOTES |
|---|---|---|---|---|---|---|---|
| **MISCELLANEOUS GASKETS & KIT COMPONENTS** | | | | | | | |
| 1B | 023816 | B5AZ-7A191B | Gasket, Oil pan | | 68-81 | 1 | |
| **FRICTION CLUTCHES** | | | | | | | |
| 2B | 049700 | E0AZ-7B164A | Front | .061 | 68-81 | 5 | Tan - 45T - OD: 5.250" - PL |
| 2B | 049700BR | 6204A | Front | .060 | 68-81 | 5 | Brz - 45T - OD: 5.250"- PL |
| 3B | 049702 | E0AZ-7B164B | Rear | .080 | 68-81 | 4 | Tan - 45T - OD: 5.250" - PL |
| **HI-PERFORMANCE - RED EAGLE®** | | | | | | | |
| 2B | 049740 | NA | Front | .061 | 68-81 | 5 | Red - 45T - OD: 5.250" - SM |
| 3B | 049742 | NA | Rear | .080 | 68-81 | 4 | Red - 45T - OD: 5.250" - SM |
| 3B | 049742PL | NA | Rear | .080 | 68-81 | 4 | Red - 45T - OD: 5.250" - PL |
| **HI-PERFORMANCE - UNIT PACKS (ONE Rebuild)** | | | | | | | |
| KT | 049740UP5 | NA | Front | .061 | 68-81 | 1 | 5 RED EAGLE® Friction |
| KT | 049742UP5 | NA | Rear | .080 | 68-81 | 1 | 5 RED EAGLE® Friction |
| **STEEL CLUTCHES** | | | | | | | |
| 4B | 023701 | C8AZ-7B442A | Front | .068 | 68-81 | 3-4 | 54T - ID: 3.900" |
| 5B | 023701 | C8AZ-7B442A | Rear | .068 | 68-81 | 4-5 | 54T - ID: 3.900" |
| 6B | 023767 | C0AZ-7B070A | Front - Bellville | .073 | 68-81 | 1 | |
| **HI-PERFORMANCE - KOLENE®** | | | | | | | |
| 4B | 023701K | NA | Front | .068 | 68-81 | 3-4 | 54T - ID: 3.900" |
| 5B | 023701K | NA | Rear | .068 | 68-81 | 4-5 | 54T - ID: 3.900" |
| **HI-PERFORMANCE - UNIT PACKS (ONE Rebuild)** | | | | | | | |
| KT | 023701KUP4 | NA | UNIT PACK - Front or Rear | .068 | 68-81 | 1 | 4 KOLENE® Steel |
| **OEI™ Original Equipment Improvements** | | | | | | | |
| KT | 023987 | SK® 3-67 | Shift Kit® | Transgo® | 68-72 | 1 | |
| KT | 023963 | SK® 3-73 | Shift Kit® | Transgo® | 73-81 | 1 | |
| KT | 023991 | 37-1 | Reprogramming Kit™ | Transgo® | 68-72 | 1 | |
| KT | 023991A | 33-1 | Reprogramming Kit™ | Transgo® | 73-81 | 1 | |
| **BANDS** | | | | | | | |
| 7B | 023985 | D2AZ-7A162A | Front - rigid | Tan | 68-72 | 1 | |
| 7B | 023957 | D7AZ-7A162A | Front - flex | Tan | 73-81 | 1 | |
| 8C | 023972 | B5SZ-7A176B | Rear | Tan | 68-81 | 1 | |
| **FILTERS** | | | | | | | |
| KT | FK023944 | NA | Filter Kit - Brass | | 68-81 | 1 | |
| KT | FK023946 | NA | Filter Kit - Felt | | 68-81 | 1 | |
| 9B | 023944 | D0AZ-7A098A | Filter - Brass | | 68-81 | 1 | |
| 9B | 023946 | D8AZ-7A098A | Filter - Felt | | 68-81 | 1 | |
| **METAL CLAD SEALS** | | | | | | | |
| 10A | 024400 | C3AZ-7A248A | Front pump | | 68-81 | 1 | |
| 11D | 031401 | NA | Extension Housing without Boot | | 68-81 | 1 | |
| 11D | 023405 | D5AZ-7052A | Extension Housing with Boot | | 68-81 | 1 | |
| N I | 023406 | D5AZ-7B498A | Manual Lever | | 68-81 | 1 | |
| **SEALING RINGS** | | | | | | | |
| KT | 023603 | B204 | Sealing Ring Kit - 10M | | 68-81 | 1 | |
| 12C | 027104 | 1P-77542A | Primary Sun gear - front | 1.0625 | 68-81 | 1-2 | |
| 13C | 028103 | C0AZ-7C169A | Primary Sun Gear - intermediate | 1.125 | 68-81 | 1-2 | |
| 14C | 023104 | 1P - 77543B | Primary Sun Gear - Rear | .9375 | 68-81 | 1 | |
| 15D | 027109 | C6AZ-7D019A | Governor - oil distributor sleeve | | 68-81 | 3 | |
| **SNAP RINGS** | | | | | | | |
| KT | 023681 | NA | Kit | | 68-81 | 1 | |
| N I | 023264-055 | B1AZ-7C122A | Output shaft Ring gear retaining | .055 | 68-81 | 1 | |
| 16B | 049250-062 | C8AZ-7D483C | Front & Rear PP retainer - selective | .062 | 68-81 | AR | |

| ILL | ALTO NO | REF NO | DESCRIPTION | SPEC | YEAR | QTY | NOTES |
|---|---|---|---|---|---|---|---|
| **SNAP RINGS** | | | | | | | ...Continued |
| 16B | 049250-076 | C7AZ-7D483A | Front & Rear PP retainer - selective | .076 | 68-81 | AR | |
| 16B | 049250-090 | C8AZ-7D483B | Front & Rear PP retainer - selective | .090 | 68-81 | AR | |
| 16B | 049250-104 | C8AZ-7D483A | Front & Rear PP retainer - selective | .104 | 68-81 | AR | |
| **BUSHINGS** | | | | | | | |
| KT | 023625 | NA | Kit | | 68-81 | 1 | |
| 17A | 023201 | NA | Front Pump | Bronze | 68-81 | 1 | |
| 17A | 023206 | C6AZ-7A162A | Front Pump | Babbit | 68-81 | 1 | |
| 18A | 023246 | C8AZ-7B261A | Stator Support (pump cover) | | 68-81 | 1 | |
| 19A | 023226 | B5AZ-7025A | Case | | 68-81 | 1 | |
| 20B | 023227 | B1AZ-7120A | Input Shaft | | 68-81 | 1 | |
| 21C | 023212 | B1AZ-7B257B | Planet assembly - inner (1.00" x .875") | | 68-81 | 1 | |
| 22C | 023215 | B5AZ-7B256A | Planet assembly - outer (1.50" x .750") | | 68-81 | 1 | |
| 23B | 023208 | C8AZ-7D480A | Rear clutch brake drum (sun gear) | | 68-81 | 1 | |
| 24B | 023210 | B1AZ-7B262A | Rear clutch drum (rear) | | 68-81 | 1 | |
| 25C | 023223 | B5AZ-7B260A | Rear pump body | | 68-81 | 1 | |
| 26D | 023225 | B5AZ-7A034A | Extension Housing | | 68-81 | 1 | |
| **WASHERS** | | | | | | | |
| KT | 023635 | NA | Kit | | 68-81 | 1 | |
| **MODULATORS** | | | | | | | |
| 27B | 023505 | C1AZ-7A377A | Modulator - Blue Stripe | | 68-81 | 1 | |
| 27B | 023520 | D3AZ-7A377A | Modulator - Black Stripe | | 73-76 | 1 | |
| 27B | 023521 | D3ZZ-7A377A | Modulator - Orange Stripe | | 73-74 | 1 | |
| 27B | 023522 | D5AZ-7A377C | Modulator - Green Stripe | | 75-81 | 1 | |
| **MISCELLANEOUS** | | | | | | | |
| N I | 023301 | C0AP-7B070A | Diaphragm Spring- front clutch | | 68-81 | 1 | |

**NOTES**

# CHRYSLER

## A404, 413, 470, 670
## 30TH, 31TH 1978-On

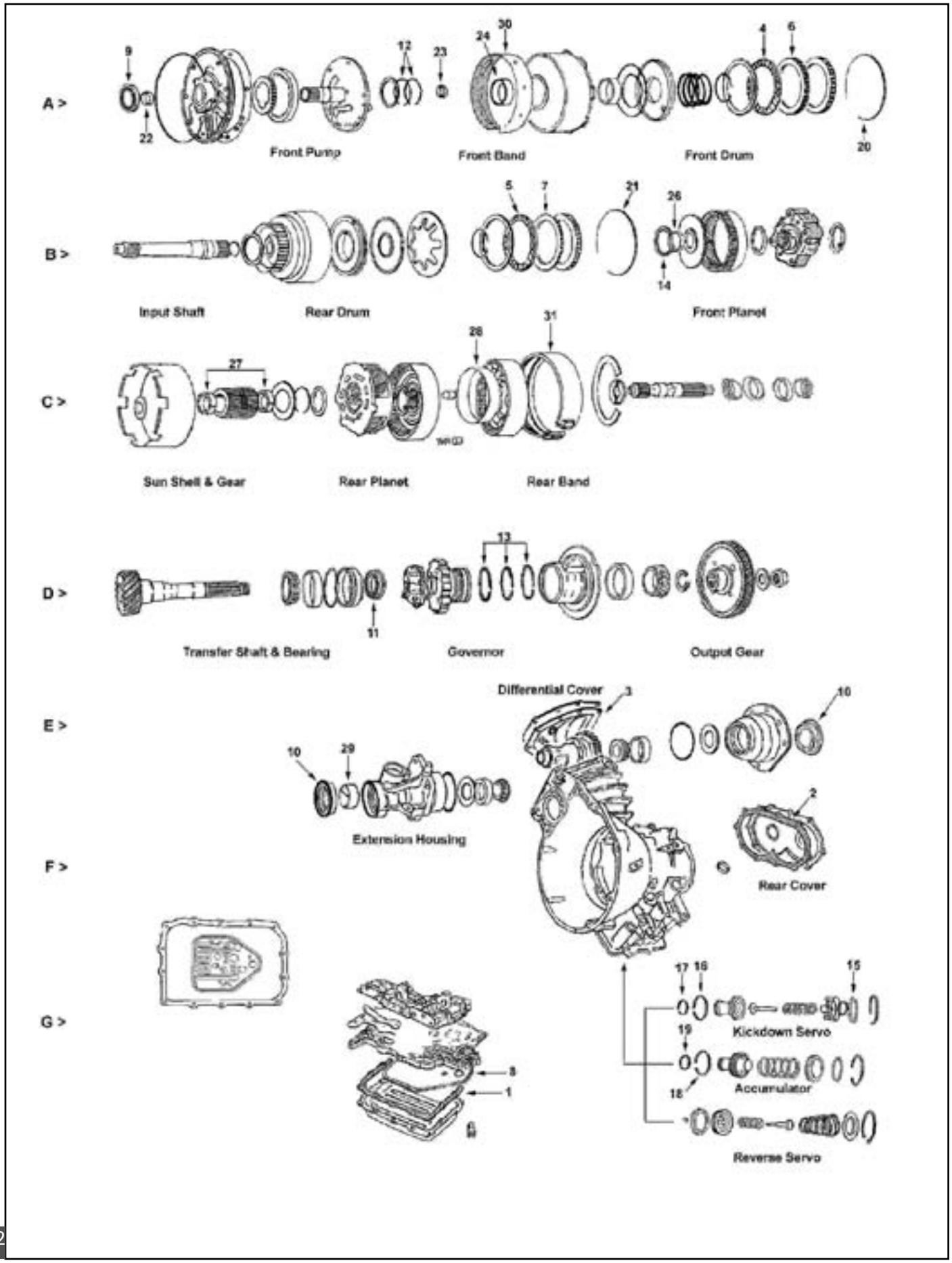

# CHRYSLER
## A404, 413, 470, 670
## 30TH, 31TH 1978-On

| ILL | DESCRIPTION | YEARS | FRICTION MODULE | STEEL MODULE | OVERHAUL KIT | BANNER KIT | MASTER KIT |
|---|---|---|---|---|---|---|---|
| **KITS** | | | | | | | |
| KT | Rebuilding Kit - A404 only | 78-80 | 045752A | 045753A | 045800 | 045901LS | 045901 |
| KT | Rebuilding Kit - A413, A470, A670 | 81-On | 045752 | 045753 | 045802 | 045903LS | 045903 |
| **HI-PERFORMANCE - RED EAGLE®** | | | | | | | |
| KT | Rebuilding Kit - A413, A470, A670 | 81-On | 045750HP FR & ST | | 045802HP | NA | 045903HP |
| **HI-PERFORMANCE - with Powerpack™** | | | | | | | |
| KT | Rebuilding Kit - A413, A470, A670 with Reverse Powerpack™ | 81-On | 045750HPPWR FR & ST | | 045802HP | NA | 045903HPPWR |

| ILL | ALTO NO | REF NO | DESCRIPTION | SPEC | YEAR | QTY | NOTES |
|---|---|---|---|---|---|---|---|
| **MISCELLANEOUS GASKETS & KIT COMPONENTS** | | | | | | | |
| 1G | 045816 | 5224052 | Gasket, Oil Pan | Cork/Rub | 78-On | 1 | |
| 2F | 045818 | 5222142 | Gasket, End (rear) cover | Cork/Rub | 78-On | 1 | |
| 3E | 045820 | 5212276 | Gasket, Differential (side) cover | Cork/Rub | 78-On | 1 | |
| N I | 077006 | NA | Washer, Front Pump bolts | Brass | 78-On | 7 | |
| **FRICTION CLUTCHES** | | | | | | | |
| 4A | 045700 | 5205675 | Front | .083 | 78-On | 2-4 | Tan - 47T - OD: 4.887" - PL |
| 5B | 045702 | 5222185 | Rear | .071 | 78-80 | 2 | Tan - 47T - OD: 4.887" - PL |
| 5B | 045704 | 5224084 | Rear | .071 | 81-On | 2-4 | Heg - 49T - OD: 4.898" - SM |
| **HI-PERFORMANCE - RED EAGLE®** | | | | | | | |
| N I | 045740-210 | NA | Front | .083 | 78-On | 2-4 | Red - 47T - OD: 4.887" |
| N I | 045744-180 | NA | Rear | .071 | 81-On | 2-4 | Red - 49T - OD: 4.898" |
| **STEEL CLUTCHES** | | | | | | | |
| 6A | 045701 | 5205677 | Front | .065 | 78-80 | 4 | 8T - 4.100" |
| 6A | 045703 | 4659379 | Front | .101 | 81-On | 3-4 | 8T - 4.100" |
| 7B | 045701 | 5205677 | Rear | .065 | 78-80 | 1 | 8T - 4.100" |
| 7B | 045705 | 5224073 | Rear | .068 | 81-On | 2-3 | 8T - 4.255" |
| **HI-PERFORMANCE - KOLENE®** | | | | | | | |
| 6A | 045703K | NA | Front | .101 | 81-On | 3-4 | 8T - 4.100" |
| 7B | 045705K | NA | Rear | .068 | 81-On | 2-3 | 8T - 4.255" |
| **PRESSURE PLATES** | | | | | | | |
| N I | 045701-520 | 4207209 | Front | .204 | 81-86 | 1 | 8T - 4.100" |
| N I | 045701-470 | 4348888 | Front | .185 | 87-On | 1 | 8T - 4.100" |
| N I | 045760A500 | 4269619 | Forward Top | .197 | 78-On | 1 | 8T - 4.253" |
| N I | 045760B900 | 4269618 | Forward Bottom | .356 | 78-On | 1 | 8T |
| **OEI™ Original Equipment Improvements** | | | | | | | |
| KT | 045755 | NA | Forward POWERPACK™ | | 81-On | 1 | |
| KT | 045756 | NA | Hi-Reverse POWERPACK™ | | 81-On | 1 | |
| **BANDS** | | | | | | | |
| 30A | 045950 | 5212312 | Kickdown (Front) | Tan | 78-On | 1 | |
| 31C | 045951 | 5205765 | Reverse (Rear) | Tan | 78-On | 1 | |
| **HI-PERFORMANCE - RED EAGLE® or KEVLAR®** | | | | | | | |
| 30A | 045960 | 4659732 | Kickdown (Front) | Red | 78-On | 1 | |
| 30A | 045963 | NA | Kickdown (Front) - Heavy Duty POWERBAND™ | Red | 78-On | 1 | |
| 30A | 045963K | NA | Kickdown (Front) - Super Duty POWERBAND™ | Kevlar® | 78-On | 1 | |
| **FILTERS** | | | | | | | |
| KT | FK045940 | NA | Filter Kit - A404 only | | 78-80 | 1 | |
| KT | FK045942 | NA | Filter Kit - A413, 470, 670 | | 81-On | 1 | |
| 8G | 045940 | 4207219 | Filter - A404 only | | 78-80 | 1 | |
| 8G | 045942 | 4269649 | Filter - A413, 470, 670 | | 81-On | 1 | |
| **METAL CLAD SEALS** | | | | | | | |
| 9A | 027400 | 4412475 | Front Pump | Silicone | 78-97 | 1 | |
| 9A | 027400A | 4269057 | Front Pump | Vamac® | 98-On | 1 | |
| 10E | 045401 | 4641263 | Axle | | 78-On | 2 | |

# CHRYSLER
## A404, 413, 470, 670
## 30TH, 31TH 1978-On

| ILL | ALTO NO | REF NO | DESCRIPTION | SPEC | YEAR | QTY | NOTES |
|---|---|---|---|---|---|---|---|
| **METAL CLAD SEALS** | | | | | | | ...Continued |
| 11D | 045403 | 5222015 | Transfer Shaft | | 78-81 | 1 | |
| N I | 027406 | 4505098 | Manual Lever | | 78-On | 1 | |
| **SEALING RINGS** | | | | | | | |
| KT | 045601 | A118 | Sealing Ring Kit - 12M / 3T | | 78-On | 1 | |
| KT | 045601T | A120B | Sealing Ring Kit - 13T / 2M | | 78-On | 1 | |
| 12A | 045100 | 5212305 | Stator Support - Reaction shaft | | 78-On | 2 | |
| N I | 027104 | 1401221 | Input Shaft | Metal | 78-85 | 1 | |
| N I | 045113 | 4377047 | Input Shaft | Teflon | 86-On | 2-3 | |
| 13D | 045107 | 5212092 | Governor Support | | 78-On | 3 | |
| 14B | 045102 | 5205697 | Rear Clutch retainer | | 78-On | 1 | |
| 15G | 045104 | 5212049 | Kickdown Servo Guide | 1.898 | 78-80 | 1 | |
| 16G | 045104 | 5212049 | Kickdown Servo Piston - Release | 1.898 | 78-80 | 1 | |
| 16G | 027108* | 1636470 | Kickdown Servo Piston - Release | 2.125 | 81-On | 1 | |
| 17G | 027107 | 1824541 | Kickdown Servo Piston - Apply | 1.250 | 78-80 | 1 | |
| 17G | 018102* | 3410374 | Kickdown Servo Piston - Apply | 1.000 | 81-On | 1 | |
| 18G | 018101* | 3743013 | Accumulator Piston - Release | 2.000 | 78-On | 1 | |
| 19G | 027101* | 1401221 | Accumulator Piston - Apply | 1.063 | 78-On | 1 | |
| **SNAP RINGS** | | | | | | | |
| KT | 045680 | NA | Kit | | 78-On | 1 | |
| 20A | 027260W043 | 2466283 | Forward Clutch - wave | .043 | 78-81 | 1 | |
| 20A | 045251W | 4567194 | Forward Clutch - wave | .042 | 82-On | 1 | |
| 21B | 027260-048 | 4269670 | Forward Clutch - Selective | .048 | 78-On | AR | |
| 21B | 027260-060 | 1942421 | Forward Clutch - Selective | .060 | 78-On | AR | |
| 21B | 027260-076 | 1942423 | Forward Clutch - Selective | .076 | 78-On | AR | |
| 21B | 027260-087 | 4130775 | Forward Clutch - Selective | .087 | 78-On | AR | |
| N I | 027261W054 | 4659652 | Direct - wave | .054 | 78-On | AR | |
| **BUSHINGS** | | | | | | | |
| KT | 045625A | NA | Kit | | 82-On | 1 | |
| 22A | 027202 | 2466796 | Front Pump Housing | Bronze | 78-On | 1 | |
| 22A | 027202A | 1853585 | Front Pump Housing | Babbit | 78-On | opt. | |
| 23A | 027208 | 2801728 | Reaction Shaft | | 78-11/85 | 1 | |
| 23A | 027211 | 4058635 | Reaction Shaft | | 11/86-On | 1 | |
| 24A | 045202 | 5222405 | Front Clutch Retainer - Front (large) | | 78-On | 1 | |
| 25A | 045203 | 5222406 | Front Clutch Retainer - Rear (Small) | | 78-On | 1 | |
| 26B | 045204 | 5205728 | Annulus Gear | | 78-On | 1 | |
| 27C | 045205 | 5205735 | Sun Gear | | 78-On | 2 | |
| 28C | 045206 | 5222137 | Low / Reverse Drum | | 78-On | 1 | |
| 29E | 045207 | 5212223 | Extension Housing Axle | | 78-On | 1 | |
| **WASHERS** | | | | | | | |
| KT | 045635A | NA | Kit | | 78-80 | 1 | |
| KT | 045635 | NA | Kit | | 81-On | 1 | |

**NOTES**

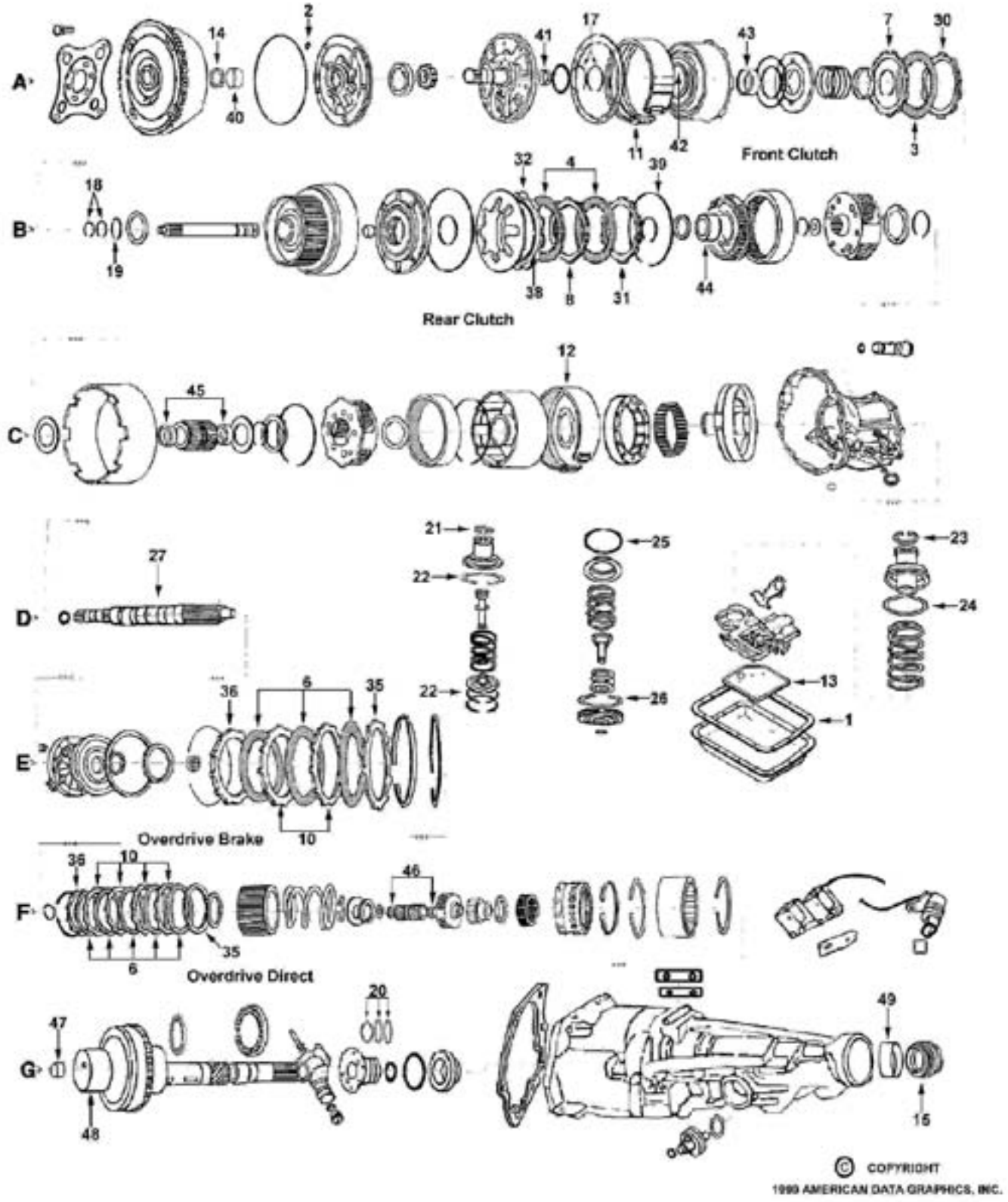
A
B
C
D
E
F
G
Front Clutch
Rear Clutch
Overdrive Brake
Overdrive Direct
© COPYRIGHT
1999 AMERICAN DATA GRAPHICS, INC.

# CHRYSLER
## A500 (40RH, 42RH, 42RE, 44RE)
## 1989-On

| ILL | DESCRIPTION | YEARS | FRICTION MODULE | STEEL MODULE | OVERHAUL KIT | BANNER KIT | MASTER KIT |
|---|---|---|---|---|---|---|---|
| **KITS** | | | | | | | |
| KT | Rebuilding Kit - 40RH only | 89-On | 027752A | 027753A | 027804 | 027905LS | 027905 |
| KT | Rebuilding Kit - All | 89-On | 027752B | 027753B | 027804 | 027905ALS | 027905A |
| **HI-PERFORMANCE - RED EAGLE®** | | | | | | | |
| KT | Rebuilding Kit - 40RH only | 89-On | 027752AHP | 027753AHP | 027804 | 027905HPLS | 027905HP |
| KT | Rebuilding Kit - All | 89-On | 027752BHP | 027753BHP | 027804 | 027905AHPLS | 027905AHP |
| **OVERDRIVE (only) REPAIR KITS** | | | | | | | |
| KT | Overdrive section Only | 89-On | 027758A FR & ST | | 027835 | NA | NA |
| KT | Overdrive section Only - Hi Performance | 89-On | 027758AHP FR & ST | | 027835 | NA | NA |

| ILL | ALTO NO | REF NO | DESCRIPTION | SPEC | YEAR | QTY | NOTES |
|---|---|---|---|---|---|---|---|
| **MISCELLANEOUS GASKETS & KIT COMPONENTS** | | | | | | | |
| 1E | 027816 | 4295875 | Gasket, Oil pan | Cork/Rub | 89-On | 1 | |
| 2A | 032003 | 6023943 | Washer, Front Pump bolts | | 89-On | 8 | |
| **FRICTION CLUTCHES** | | | | | | | |
| 3A | 027700 | 2400625 | Front | .086 | 89-On | 3-4 | Tan - 45T - OD: 4.940" - PL |
| 3A | 027712 | NA | Front | .086 | 89-On | 3-4 | Heg - 45T - OD: 4.940" - PL |
| 4B | 027706PL | 4713880 | Rear - Parallel Lines | .061 | 89-On | 3-4 | Tan - 45T - OD: 4.940" - PL |
| 4B | 027706 | 4531068 | Rear - Smooth | .061 | 89-On | Opt. | Tan - 45T - OD: 4.940" - SM |
| 4B | 027710 | NA | Rear - Smooth | .061 | 89-On | Opt. | Heg - 45T - OD: 4.940" - SM |
| 5F | 027720 | 4461042 | Overdrive Direct | .063 | 89-On | 6-8 | Tan - 54T - OD: 5.475" - SM |
| 6E | 027722 | 4462153 | Overdrive Brake- flat | .087 | 89-95 | 2-4 | Tan - 54T - OD: 6.077" - SM |
| 6E | 027722A | 4461181 | Overdrive Brake - wave | .087 | 96-On | 3-5 | Tan - 54T - OD: 6.077" - SM |
| **HI-PERFORMANCE - RED EAGLE®** | | | | | | | |
| 3A | 027740 | NA | Front | .086 | 89-On | 3-4 | Red - 45T - OD: 4.940" - SM |
| 4B | 027742 | NA | Rear - Smooth | .061 | 89-On | 3-4 | Red - 45T - OD: 4.940" - SM |
| 5F | 027744 | NA | Overdrive Direct | .063 | 89-On | 6-8 | Red - 54T - OD: 5.475" - SM |
| 6E | 027746 | NA | Overdrive Brake | .087 | 89-On | 2-5 | Red - 54T - OD: 6.077" - SM |
| **HI-PERFORMANCE - UNIT PACKS (ONE Rebuild)** | | | | | | | |
| KT | 027740UP4 | NA | UNIT PACK - Front | .086 | 89-On | 1 | 4 RED EAGLE® Friction |
| KT | 027742UP4 | NA | UNIT PACK - Rear | .061 | 89-On | 1 | 4 RED EAGLE® Friction |
| KT | 027744UP8 | NA | UNIT PACK - Overdrive Direct | .063 | 89-On | 1 | 8 RED EAGLE® Friction |
| KT | 027746UP5 | NA | UNIT PACK - Overdrive Brake | .087 | 89-On | 1 | 5 RED EAGLE® Friction |
| **STEEL CLUTCHES** | | | | | | | |
| 7A | 027701 | 4617325 | Front | .068 | 89-On | 4 | 12T - ID: 3.950" |
| 8B | 027701 | 4617325 | Rear | .068 | 89-On | 3-4 | 12T - ID: 3.950" |
| 8B | 027717 | NA | Front & Rear - selective | .085 | 89-On | AR | 12T - ID: 3.950" |
| 9F | 027721 | 4461054 | Overdrive Direct | .069 | 89-On | 5-7 | 12T - ID: 4.685" |
| 10E | 027723 | 4461047 | Overdrive Brake | .068 | 89-On | 1-3 | 12T - ID: 5.024" |
| **HI-PERFORMANCE - KOLENE®** | | | | | | | |
| 7A | 027701K | NA | Front & Rear | .068 | 89-On | 4 | 12T - ID: 3.950" |
| 7A | 027701K200 | NA | Front & Rear - Selective | .079 | 89-On | AR | 12T - ID: 3.950" |
| 8B | 027717K216 | NA | Front & Rear - selective | .085 | 89-On | AR | 12T - ID: 3.950" |
| 9F | 027721K | NA | Overdrive Direct | .069 | 89-On | 5-7 | 12T - ID: 4.685" |
| 10E | 027723K | NA | Overdrive Brake | .068 | 89-On | 1-3 | 12T - ID: 5.024" |
| **HI-PERFORMANCE - UNIT PACKS (ONE Rebuild)** | | | | | | | |
| KT | 027701KUP4 | NA | UNIT PACK - Front or Rear | .068 | 89-On | 1 | 4 KOLENE® Steel |
| **SPRINGS: WAVE, DISH, FINGER** | | | | | | | |
| NA | 027763X | NA | Overdrive Brake - wave | | 89-On | 1 | Cushion Spring |
| **PRESSURE PLATES** | | | | | | | |
| 30A | 027760A548 | 4617176AB | Front Clutch - flat | .216 | 89-On | 1 | |
| 31B | 027760A548 | 4617176AB | Rear Clutch - flat | .216 | 89-On | 1 | |
| 32B | 027760B300 | 2466281 | Rear Clutch - backing (bevel) | .118 | 89-On | 1 | |
| 33F | 027762-550 | 4461030 | Overdrive Direct - top | .216 | 89-On | 1 | |

# CHRYSLER
## A500 (40RH, 42RH, 42RE, 44RE)
## 1989-On

| ILL | ALTO NO | REF NO | DESCRIPTION | SPEC | YEAR | QTY | NOTES |
|---|---|---|---|---|---|---|---|
| **PRESSURE PLATES** | | | | | | | ...Continued |
| 34F | 027762A550 | 4461031 | Overdrive Direct - bottom | | 89-On | 1 | |
| 35E | 027762J790 | 4461081 | Overdrive Brake - top | .312 | 89-On | 1 | Not Available |
| 36E | 027763-540 | 4461033 | Overdrive Brake - bottom | .215 | 89-95 | 1 | |
| 35E | 027763-956 | 4461048 | Overdrive Brake - top & bottom | .376 | 89-On | 1 | 12T - ID: 5.024" |
| **OEI™ Original Equipment Improvements** | | | | | | | |
| KT | 028985C | SK® TFOD-JR | Shift Kit® | Transgo® | 89-On | 1 | |
| KT | 028985B | TFOD-Diesel | Shift Kit® | Transgo® | 89-On | 1 | |
| KT | 028992 | TFOD-HD2 | Reprogramming Kit™ - Tow & Go | Transgo® | 89-On | 1 | |
| KT | 028992A | TFOD-3 | Reprogramming Kit™ - Competition | Transgo® | 89-On | 1 | Full "stick" shift |
| **SHAFTS** | | | | | | | |
| 27D | 027381 | 4431913 | Intermediate Shaft - OE Style | | 88-89 | 1 | |
| 27D | 027381PS | 4431913X | Intermediate Shaft - Modified | | 88-89 | 1 | |
| 27D | 027381A | 4617604 | Intermediate Shaft - OE Style | | 90-On | 1 | |
| 27D | 027381APS | 4617604X | Intermediate Shaft - Modified | | 90-On | 1 | |
| **BANDS** | | | | | | | |
| 11A | 027954 | 4617849 | Front (Intermediate) - Flex (1.600" wide) | Tan | 89-On | 1 | |
| 12C | 027953 | 4431406 | Rear (Reverse) - Split (2.000" wide) | Tan | 89-On | 1 | |
| **FILTERS** | | | | | | | |
| KT | FK028944 | NA | Filter Kit - Large Felt | | 89-98 | 1 | |
| KT | FK028948 | NA | Filter Kit - Metal & Plastic | | 99-On | 1 | |
| 13E | 028944 | 3515996 | Filter - Large Felt | | 89-98 | 1 | |
| 13E | 028948 | 52118789 | Filter - Metal & Plastic | | 99-On | 1 | |
| **METAL CLAD SEALS** | | | | | | | |
| 14A | 027400 | 4412475 | Front Pump with Flange | Silicone | 89-97 | 1 | |
| 14A | 027400A | 4269057 | Front Pump with Flange | Vamac® | 98-On | 1 | Does retro-fit |
| 15G | 031401 | 3515383 | Extension Housing without boot | | 89-On | 1 | |
| 15G | 023405 | 4531216 | Extension Housing with boot | | 89-On | 1 | |
| 15G | 028402 | 4269956 | Adapter Housing (4 x 4) | | 89-On | 1 | |
| 16C | 027406 | 4505098 | Manual Control Lever | | 89-On | 1 | |
| **SEALING RINGS** | | | | | | | |
| KT | 027602A | A135A | Sealing Ring Kit - 6M / 9T | | 89-On | 1 | with SSP stator rings |
| 17A | 027103 | 1942389 | Front Pump Stator (reaction shaft) | | 89-On | 2 | |
| 17A | 027103A | 4471874 | Front Pump Stator (reaction shaft) | | 89-On | 2 | seal-plated (SSP) |
| 18B | 027104 | 1401221 | Input Shaft (small) | Metal | 89-On | 2 | |
| 18B | 027114 | 4269592 | Input Shaft (small) | Teflon | 89-On | 2 | |
| 19B | 027110 | 4028333 | Input Shaft (large) - Rear clutch retainer | | 89-On | 1 | |
| 20G | 027112 | 4461011 | Governor support | | 89-On | 3 | |
| 21D | 027105 | 3410374 | Kickdown Servo - apply (small) | Metal | 89-On | 1 | |
| 21D | 027115 | 3743033 | Kickdown Servo - apply (small) | Teflon | 89-On | 1 | |
| 21D | 027107 | M4295965 | Kickdown Servo - apply (small) | Metal | 90-On | 1 | Mitsubishi-not in kits |
| 22D | 027106 | 3410372 | Kickdown Servo - release (large) | Metal | 89-On | 2 | |
| 22D | 027116 | 4295966 | Kickdown Servo - release (large) | Teflon | 89-On | 2 | |
| 22D | 027108 | M3743014 | Kickdown Servo - release (large) | Metal | 90-On | 2 | Mitsubishi-not in kits |
| 23D | 027120 | 4431959 | 3-4 Accumulator - apply (small) | Teflon | 89-On | 1 | |
| 24D | 027121 | 4431958 | 3-4 Accumulator - release (large) | Teflon | 89-On | 1 | |
| 25D | 027122 | 3743010 | Accumulator - apply (small) | Teflon | 89-On | 1 | |
| 26D | 027123 | 3743013 | Accumulator - release (large) | Teflon | 89-On | 1 | |
| **SNAP RINGS** | | | | | | | |
| 37A | 027260W | 3410571 | Forward Clutch PP retainer | | 89-On | 1 | |
| 38B | 027260W043 | 2466283 | Forward Clutch PP retainer - inner | | 89-On | 1 | |
| 39B | 027260-060 | 4130761 | Forward Clutch PP retainer - outer / selective | .060" | 89-On | AR | |
| 39B | 027260-076 | 4539121 | Forward Clutch PP retainer - outer / selective | .076 | 89-On | AR | |
| 39B | 027260-098 | 4539122 | Forward Clutch PP retainer - outer / selective | .098 | 89-On | AR | |
| N I | 028253W | 4461032 | Overdrive Direct | | 89-On | AR | |
| N I | 027261W054 | 4659652 | Direct - wave | .054 | 89-On | AR | |

# CHRYSLER
## A500 (40RH, 42RH, 42RE, 44RE)
## 1989-On

| ILL | ALTO NO | REF NO | DESCRIPTION | SPEC | YEAR | QTY | NOTES |
|---|---|---|---|---|---|---|---|
| **BUSHINGS** | | | | | | | |
| KT | 027630 | NA | Kit | | 89-On | 1 | |
| 40A | 027202 | 2466796 | Front Pump housing | Bronze | 89-On | 1 | |
| 40A | 027202A | 2204953 | Front Pump housing | Babbit | 89-On | 1 | |
| 41A | 027211 | 4058635 | Reaction Shaft | | 89-On | 1 | |
| 42A | 027206 | 2801727 | Front Clutch drum - rear | 2.056 | 89-93 | 1 | |
| 42A | 027206A | 4617159 | Front Clutch drum - rear | 2.06 | 94-On | 1 | |
| 43A | 027214 | 4617157 | Front Clutch drum - front | 2.20 | 94-On | 1 | |
| 44B | 027212 | 3681967 | Annulus gear support - front | | 89-On | 1 | |
| 45C | 027207 | 1942436 | Reverse Sun Gear | | 89-On | 2 | |
| 46F | 027215 | 4461025 | Overdrive Sun Gear | | 89-96 | 1 | |
| 46F | 027215A | NA | Overdrive Sun Gear with Flange | | 97-On | 1 | |
| 47G | 027216 | 4461007 | Output Shaft - pilot | | 89-On | 1 | |
| 48G | 027217 | 4461006 | Output Shaft - inner | | 89-On | 1 | |
| 49G | 023225 | 2801724 | Extension Housing | 1.81 | 89-On | 1 | |
| 49G | 027210 | 2801726 | Extension Housing | 1.69 | 89-On | 1 | |

**NOTES**

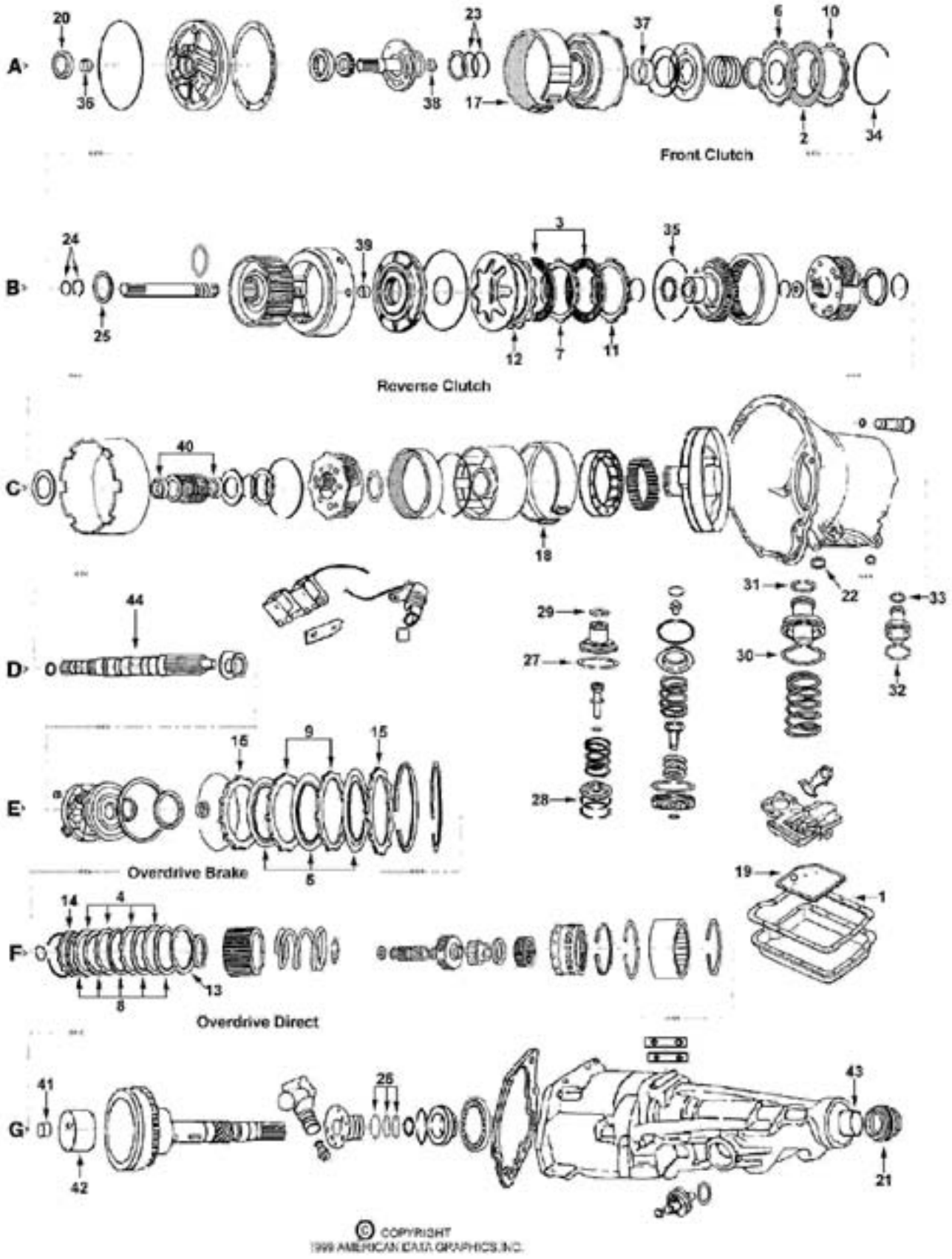
A
20
36
23
38
17
37
6
10
2
34
Front Clutch
B
24
25
39
3
35
12
7
11
Reverse Clutch
C
40
18
31
22
33
D
44
29
27
30
32
E
16
9
15
28
Overdrive Brake
5
19
1
F
14
4
13
8
Overdrive Direct
G
41
42
26
43
21
© COPYRIGHT
1999 AMERICAN DATA GRAPHICS, INC.

# CHRYSLER

## A518 (46RE, 46RH) 1990-On
## A618 (47RE, 47RH) 1994-On
## A618 (48RE) 2003-On

| ILL | DESCRIPTION | YEARS | FRICTION MODULE | STEEL MODULE | OVERHAUL KIT | BANNER KIT | MASTER KIT |
|---|---|---|---|---|---|---|---|
| **KITS** | | | | | | | |
| KT | Rebuilding Kit - A518 | 90-93 | 028752A | 028753A | 028806 | 028905LS | 028905 |
| KT | Rebuilding Kit - A518/A618 | 94-97 | 028752B | 028753B | 028806 | 028907BLS | 028907B |
| KT | Rebuilding Kit - A518/A618 | 98-On | 028752D | 028753D | 028806 | 028907CLS | 028907C |
| KT | Rebuilding Kit - A618/48RE | 03-On | 028750F FR & ST | | 028806 | NA | 028907F |
| **HI-PERFORMANCE - RED EAGLE®** | | | | | | | |
| KT | Rebuilding Kit - A518 | 90-93 | 028752AHP | 028753AHP | 028806 | 028905HPLS | 028905HP |
| KT | Rebuilding Kit - A518/A618 | 94-97 | 028752BHP | 028753BHP | 028806 | 028907BHPLS | 028907BHP |
| KT | Rebuilding Kit - A518/A618 | 94-02 | 028752EHP | 028753EHP | 028806 | 028907EHPLS | 028907EHP |
| **OVERDRIVE (only) REPAIR KITS** | | | | | | | |
| KT | Overdrive section Only | 90-On | 028758 FR & ST | | 027835 | NA | NA |
| KT | Overdrive section Only - Hi Performance | 90-On | 028758HP FR & ST | | 027835 | NA | NA |

| ILL | ALTO NO | REF NO | DESCRIPTION | SPEC | YEAR | QTY | NOTES |
|---|---|---|---|---|---|---|---|
| **MISCELLANEOUS GASKETS & KIT COMPONENTS** | | | | | | | |
| 1F | 028816 | 2464324 | Gasket, Oil Pan | Cork/Rub | 90-On | 1 | |
| N I | 032003 | 6023943 | Washer, Front Pump bolt | | 90-On | 8 | |
| **FRICTION CLUTCHES** | | | | | | | |
| 2A | 028712 | 2801992 | Front - A518 | .095 | 90-97 | 3-4 | Tan - 62T - OD: 6.700" - WF |
| 2A | 028718 | 4617202 | Front - A518 (High Energy) | .095 | 90-97 | opt. | Heg - 62T - OD: 6.700" - WF |
| 2A | 028712PL | 4617487 | Front - A618 | .095 | 94-97 | 3-4 | Tan - 62T - OD: 6.700" - PL |
| 2A | 028714 | 4617201AB | Front - All | .085 | 98-On | 3-5 | Tan - 62T - OD: 6.700" - PL |
| 3B | 028710 | 2801992AB | Rear | .061 | 90-On | 4 | Tan - 62T - OD: 6.700" - SM |
| 3B | 028716 | NA | Rear (High Energy) | .061 | 90-On | opt. | Heg - 62T - OD: 6.700" - SM |
| 3B | 028710A155 | NA | Rear | .061 | 90-On | 4 | Tan - 62T - OD: 6.700" - 8PL |
| 3B | 028708-160 | 52854030AA | Rear - 48RE | .063 | 03-On | 4 | Heg - 93T - OD: 6.700" - 8PL |
| 4F | 027720 | 4461042 | Overdrive Direct | .063 | 90-On | 6-8 | Tan - 54T - OD: 5.475" - SM |
| 4F | 027720B120 | 05093167AA | Overdrive Direct - internal spline 48RE | .047 | 03-On | 12 | Tan - 54T - OD: 5.475" - 8PL |
| 4F | 027721B120 | 05093168AA | Overdrive Direct - external spline 48RE | .047 | 03-On | 11 | Tan - 12T - ID: 4.685" - 8PL |
| 5E | 027722 | 4462153 | Overdrive Brake- flat | .087 | 90-95 | 2-4 | Tan - 54T - OD: 6.077" - SM |
| 5E | 027722A | 4461181 | Overdrive Brake - wave | .087 | 96-On | 3-5 | Tan - 54T - OD: 6.077" - SM |
| 5E | 027722 | 4462153 | Overdrive Brake - flat 48RE | .087 | 03-On | 6 | Tan - 54T - OD: 6.077" - SM |
| **HI-PERFORMANCE - RED EAGLE®** | | | | | | | |
| 2A | 028740 | NA | Front - All | .095 | 90-97 | 3-4 | Red - 62T - OD: 6.700" - SM |
| 2A | 028740A | NA | Front - All | .085 | 98-On | 3-4 | Red - 62T - OD: 6.700" - SM |
| 3B | 028742 | NA | Rear | .061 | 90-On | 4 | Red - 62T - OD: 6.700" - SM |
| 3B | 028742A155 | NA | Rear | .061 | 90-On | 4 | Red - 62T - OD: 6.700" - PL |
| 4F | 027744 | NA | Overdrive Direct | .063" | 90-On | 8-9 | Red - 54T - OD: 5.475" - SM |
| 5E | 027746 | NA | Overdrive Brake | .087 | 90-On | 2-4 | Red - 54T - OD: 6.077" - SM |
| **HI-PERFORMANCE - UNIT PACKS (ONE Rebuild)** | | | | | | | |
| KT | 028740UP4 | NA | UNIT PACK - Front | .095 | 90-97 | 1 | 4 RED EAGLE® Friction |
| KT | 028742UP4 | NA | UNIT PACK - Rear | .061 | 90-On | 1 | 4 RED EAGLE® Friction |
| KT | 027744UP8 | NA | UNIT PACK - Overdrive Direct | .063 | 90-On | 1 | 8 RED EAGLE® Friction |
| KT | 027746UP5 | NA | UNIT PACK - Overdrive Brake | .087 | 90-On | 1 | 5 RED EAGLE® Friction |
| **STEEL CLUTCHES** | | | | | | | |
| 6A | 028701 | 52118812AB | Front | .068 | 90-97 | 4 | 12T - ID: 5.342" |
| 6A | 028701-216 | 2124826AB | Front | .085 | 98-On | 4 | 12T - ID: 5.342" |
| 6A | 028701 | 52118812AB | Front - 48RE | .068 | 03-On | 4 | 12T - ID: 5.342" |
| 7B | 028701 | 52118812AB | Rear | .068 | 90-97 | 3-4 | 12T - ID: 5.342" |
| 7B | 028701-216 | 2124826AB | Rear | .085 | 98-On | 3-4 | 12T - ID: 5.342" |
| 7B | 028701 | 52118812AB | Rear - 48RE | .068 | 03-On | 3 | 12T - ID: 5.342" |
| 6A | 028701-200 | NA | Front & Rear - selective | .079 | 90-On | AR | 12T - ID: 5.342" |
| 6A | 028707 | 2124826OS | Front & Rear - oversized | .090 | 90-On | AR | 12T - ID: 5.342" |
| 8F | 027721 | 4461054 | Overdrive Direct except A618 1998-On | .069 | 90-97 | 7-8 | 12T - ID: 4.685" |

# CHRYSLER

## A518 (46RE, 46RH) 1990-On
## A618 (47RE, 47RH) 1994-On
## A618 (48RE) 2003-On

| ILL | ALTO NO | REF NO | DESCRIPTION | SPEC | YEAR | QTY | NOTES |
|---|---|---|---|---|---|---|---|
| **STEEL CLUTCHES** | | | | | | | ...Continued |
| 8F | 027721A | 4864053 | Overdrive Direct - A618 | .053 | 98-On | 9 | 12T - ID: 4.685" |
| 9E | 027723 | 4461047 | Overdrive Brake | .068 | 90-On | 3-6 | 12T - ID: 5.024" |
| **HI-PERFORMANCE - KOLENE®** | | | | | | | |
| 6A | 028701K | NA | Front & Rear | .068 | 90-97 | AR | 12T - ID: 5.342" |
| 6A | 028701K216 | NA | Front & Rear | .085 | 98-On | AR | 12T - ID: 5.342" |
| 6A | 028701K200 | NA | Front & Rear - selective | .079 | 90-On | AR | 12T - ID: 5.342" |
| 8F | 027721K | NA | Overdrive Direct | .069 | 90-On | 7-8 | 12T - ID: 4.685" |
| 8F | 027721AK137 | NA | Overdrive Direct - A618 | .053 | 98-On | 9 | 12T - ID: 4.685" |
| 9E | 027723K | NA | Overdrive Brake | .068 | 90-On | 3-4 | 12T - ID: 5.024" |
| **HI-PERFORMANCE - UNIT PACKS (ONE Rebuild)** | | | | | | | |
| KT | 028701KUP4 | NA | Front or Rear | .068 | 90-97 | 1 | 4 KOLENE® Steel |
| **SPRINGS: WAVE, DISH, FINGER** | | | | | | | |
| NA | 027763X | NA | Overdrive Brake - wave | | 90-On | 1 | Cushion Spring |
| **PRESSURE PLATES** | | | | | | | |
| 10A | TBA | 2801961 | Front - apply | | 90-93 | 1 | |
| 10A | TBA | 4617567 | Front - apply | | 94-On | 1 | |
| 11B | TBA | 2801961 | Rear - apply | | 90-93 | 1 | |
| 11B | TBA | 4617567 | Rear - apply | | 94-On | 1 | |
| 12B | TBA | 2466803 | Rear - backing (bevel) | | 90-On | 1 | |
| 13F | 027762-550 | 4461030 | Overdrive Direct - backing (stepped) | .216 | 90-On | 1 | internal teeth |
| 13F | 027762J540 | 4461183 | Overdrive Direct - backing (A618) | .215 | 94-On | 1 | |
| 14F | TBA | 4461031 | Overdrive Direct - apply | | 90-On | 1 | |
| 15E | 027763-540 | 4461033 | Overdrive Brake - Top | .215 | 90-On | 1 | |
| 16E | 027763-540 | 4461033 | Overdrive Brake - Bottom | 215 | 90-95 | 1 | |
| 15E | 027763-956 | 4461048 | Overdrive Brake - Top & Bottom | .376 | 90-On | 1 | 12T - ID: 5.024" |
| **OEI™ Original Equipment Improvements** | | | | | | | |
| KT | 028985C | SK® TFOD-JR | Shift Kit® | Transgo® | 90-On | 1 | |
| KT | 028985B | TFOD-Diesel | Shift Kit® | Transgo® | 90-On | 1 | |
| KT | 028992 | TFOD-HD2 | Reprogramming Kit™ - Tow & Go | Transgo® | 90-On | 1 | |
| KT | 028992A | TFOD-3 | Reprogramming Kit™ - Competition | Transgo® | 90-On | 1 | Full "stick" shift |
| **SHAFTS** | | | | | | | |
| 44D | 028381 | 4746942 | Intermediate - OE Style | | 90-93 | 1 | |
| 44D | 028381PS | 4746942X | Intermediate - Modified | | 90-93 | 1 | |
| 44D | 028381A | 4617611 | Intermediate - OE Style | | 94-On | 1 | |
| 44D | 028381APS | 4617611X | Intermediate - Modified | | 94-On | 1 | |
| **BANDS** | | | | | | | |
| 17A | 028961 | 4329853 | Front (Kickdown) - Flex | Tan | 90-On | 1 | |
| 18C | 028952 | 4505091 | Rear (Reverse) - A518 only | Tan | 90-91 | 1 | thick lug 1-5/8" OD |
| 18C | 028952B | 4471476AB | Rear (Reverse) - Rigid - A518 only | Tan | 92-On | 1 | thick lug - larger OD |
| 18C | 028952A | 4531231 | Rear (Reverse) - Split A618 only | Tan | 90-On | 1 | |
| **FILTERS** | | | | | | | |
| KT | FK028944 | NA | Filter Kit - Large Felt | | 90-97 | 1 | |
| KT | FK028948 | NA | Filter Kit - Metal & Plastic | | 98-On | 1 | |
| 19F | 028944 | 3515996 | Filter - Large Felt | | 90-97 | 1 | |
| 19F | 028948 | 52118789 | Filter - Metal & Plastic | | 98-On | 1 | |
| **METAL CLAD SEALS** | | | | | | | |
| 20A | 028400 | 3515137 | Front Pump | Silicone | 90-93 | 1 | |
| 20A | 028400A | 4531225 | Front Pump | Vamac® | 94-On | 1 | Does Retro-fit |
| 21G | 031401 | 3515383 | Extension Housing without boot | | 90-On | 1 | |
| 21G | 023405 | 4531216 | Extension Housing with boot | | 90-On | 1 | |
| 21G | 028415 | 4412507 | Adapter Housing (4 x 4) | | 90-On | 1 | |
| 22C | 027406 | 4505098 | Manual Lever | | 90-On | 1 | |
| **SEALING RINGS** | | | | | | | |
| KT | 028601A | A137 | Sealing Ring Kit - 8M / 9T | | 90-On | 1 | with SSP rings |
| 23A | 028111 | 3743689 | Front Pump stator (Reaction Shaft) | | 90-On | 2 | Seal Plated (SSP) |

# CHRYSLER

## A518 (46RE, 46RH) 1990-On
## A618 (47RE, 47RH) 1994-On
## A618 (48RE) 2003-On

| ILL | ALTO NO | REF NO | DESCRIPTION | SPEC | YEAR | QTY | NOTES |
|---|---|---|---|---|---|---|---|
| **SEALING RINGS** | | | | | | | ...Continued |
| 24B | 028104 | 2801054 | Input Shaft - small | 1.175 | 90-93 | 2 | |
| 24B | 028104A | 4741836 | Input Shaft - small | 1.245 | 94-On | 1-2 | |
| 25B | 028110 | 4058443 | Input Shaft - Large (Rear Clutch retainer) | | 90-On | 1 | |
| 26G | 027112 | 4461011 | Governor Support | | 90-On | 3 | |
| 27D | 028102 | 1942123 | Kickdown Servo - Large | | 90-On | 1 | |
| 28E | 028102 | 1942123 | Kickdown Servo cover | | 90-On | 1 | |
| 29D | 027119 | 4412444 | Kickdown Servo - Small | Teflon | 90-On | 1 | |
| 29D | 027109 | 2124851 | Kickdown Servo - Small | Metal | 90-On | opt. | |
| 30D | 027123 | 3743013 | Accumulator - release (large) | Teflon | 90-On | 1 | |
| 30D | 027101 | 1315158 | Accumulator - release (large) | Metal | 90-On | opt. | |
| 31D | 027122 | 3743010 | Accumulator - apply (small) | Teflon | 90-On | 1 | |
| 31D | 027104 | 1401221 | Accumulator - apply (small) | Metal | 90-On | opt. | |
| 32D | 027121 | 4431958 | 3-4 Accumulator - release (large) | Teflon | 90-On | 1 | |
| 33D | 027120 | 4431959 | 3-4 Accumulator - apply (small) | Teflon | 90-On | 1 | |
| **SNAP RINGS** | | | | | | | |
| 34A | TBA | 3410570 | Front Clutch PP retainer | | 90-On | 1 | |
| 35B | 028252-060 | 1942063 | Rear Clutch PP retainer - rear | .060 | 90-On | AR | |
| 35B | 028252-074 | 1942064 | Rear Clutch PP retainer - rear | .074 | 90-On | AR | |
| 35B | 028252B088 | 1942065 | Rear Clutch PP retainer - rear | .088 | 90-On | AR | |
| 35B | 028252-106 | 2466811 | Rear Clutch PP retainer - rear | .106 | 90-On | AR | |
| N I | 028253W | 4461032 | Overdrive Direct | | 90-On | AR | |
| **BUSHINGS** | | | | | | | |
| KT | 028630 | NA | Kit | | 90-On | 1 | |
| 36A | 028201 | 2205031 | Front Pump body | Babbit | 90-On | 1 | |
| 36A | 028200 | 2466324 | Front Pump body | Bronze | 90-On | opt. | |
| 37A | 028208 | 4058647 | Front Clutch retainer | | 90-On | 1 | |
| 38A | 028206 | 2801348 | Stator Support | 1.125 | 90-93 | 1 | |
| 38A | 028206A | 4617416 | Stator Support | 1.250 | 94-On | 1 | |
| 39B | 028203 | 3681709 | Input Shaft | | 90-On | 1 | |
| 40C | 028205 | 1736520 | Reverse Sun Gear | | 90-On | 2 | |
| 41G | 027216 | 4461007 | Output Shaft - pilot | | 90-On | 1 | |
| 42G | 027217 | 4461006 | Output Shaft - inner | | 90-On | 1 | |
| 43G | 023225 | 2801724 | Extension Housing | | 90-On | 1 | |
| **WASHERS** | | | | | | | |
| KT | 028635 | NA | Kit | | 90-On | 1 | |

**NOTES**

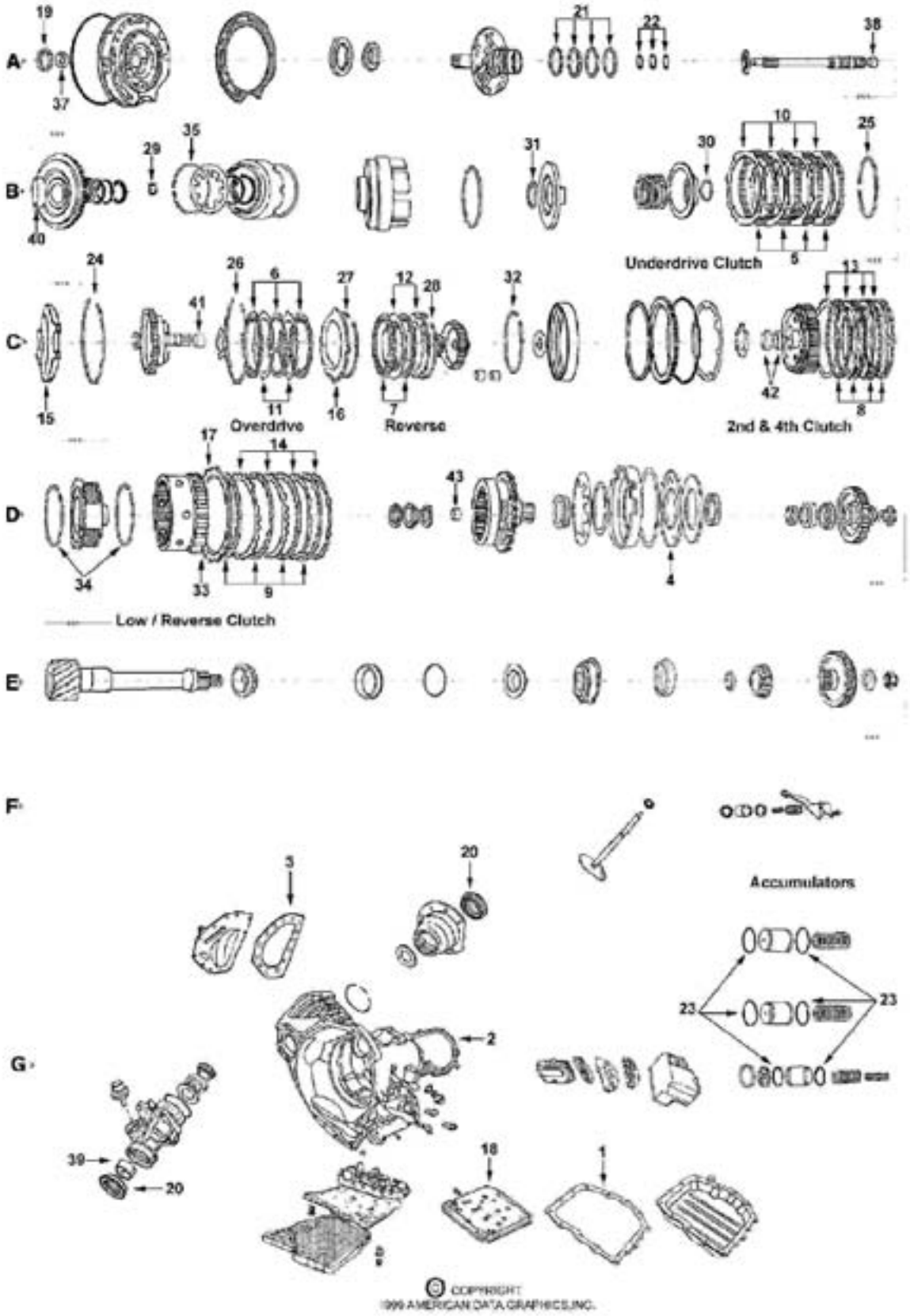
A
B
C
D
E
F
G
Underdrive Clutch
Overdrive
Reverse
2nd & 4th Clutch
Low / Reverse Clutch
Accumulators
© COPYRIGHT
1999 AMERICAN DATA GRAPHICS INC.

# CHRYSLER

## A604 (40TE, 41TE, F4AC1) 1988-On
## A606 (42LE) 1993-On

| ILL | DESCRIPTION | YEARS | FRICTION MODULE | STEEL MODULE | OVERHAUL KIT | BANNER KIT | MASTER KIT |
|---|---|---|---|---|---|---|---|
| **KITS** | | | | | | | |
| KT | Rebuilding Kit 40TE | 88-89 | 077752E | 077753E | 077800R* | 077901ELS | 077901E |
| KT | Rebuilding Kit 40TE | 90-On | 077752 | 077753 | 077800R* | 077901LS | 077901 |
| KT | Rebuilding Kit - 40TE with Kevlar Frictions | 90-On | 077752A | 077753 | 077800R* | 077905LS | 077905 |
| KT | Rebuilding Kit - Combo 40TE | 88-On | 077752X | 077753X | 077800R* | 077901XLS | 077901X |
| KT | Rebuilding Kit - A606, 42LE | 93-97 | 077752 | 077753 | 077802R* | 077903LS | 077903 |
| KT | Rebuilding Kit - A606, 42LE | 98-On | 077752B | 077753A | 077802R* | 077903ALS | 077903A |
| KT | Rebuilding Kit - A606,42LE with Kevlar Frictions | 93-97 | 077752A | 077753 | 077802R* | 077907LS | 077907 |
| KT | Rebuilding Kit - A606, 42LE with Kevlar Frictions | 98-On | 077752C | 077753A | 077802R* | 077907ALS | 077907A |
| KT | Rebuilding Kit - 42RLE with Kevlar Frictions (without Pan Gaskets) | 01-On | 077752A | 077753 | 077804RLPG | 077909LS | 077909 |
| | *OH kits contain cork & rubber pan gaskets | | | | | | |

| ILL | ALTO NO | REF NO | DESCRIPTION | SPEC | YEAR | QTY | NOTES |
|---|---|---|---|---|---|---|---|
| **MISCELLANEOUS GASKETS & KIT COMPONENTS** | | | | | | | |
| 1G | 077816 | NA | Gasket, Oil pan - A604 | Cork/Rub | 88-On | 1 | |
| N I | 077816B | NA | Gasket, Oil pan - A606 | Cork/Rub | 93-On | 1 | |
| 2G | 077816A | NA | Gasket, Side cover - A604 | Cork/Rub | 88-On | 1 | |
| N I | 077816C | NA | Gasket, Side cover - A606 | Cork/Rub | 93-On | 1 | |
| 3F | 077818 | NA | Gasket, Differential cover | Cork/Rub | 88-On | 1 | |
| N I | 077006 | NA | Washer, Front pump bolts | Brass | 88-On | 5 | |
| 4D | 077360 | 4431648 | Retainer, Low / Reverse piston | | 88-On | 1 | |
| N I | 077315 | 6501819 | Screw, Low / Reverse retainer to housing | | 88-On | 3 | |
| **FRICTION CLUTCHES** | | | | | | | |
| 5B | 077700 | 4659635 | Underdrive | .071 | 88-On | 4 | Heg - 28T - OD: 5.432" - PL |
| 5B | 077710 | NA | Underdrive - KEVLAR® | .071 | 88-On | 4 | Kev - 28T - OD: 5.432" - PL |
| 6C | 077700A | 4377137 | Overdrive | .086 | 88-89 | 3 | Tan- 27T - OD: 5.432" - PL |
| 6C | 077700 | 4659635 | Overdrive | .071 | 90-On | 4 | Heg - 28T - OD: 5.432" - PL |
| 6C | 077710 | NA | Overdrive - KEVLAR® | .071 | 90-On | 4 | Kev - 28T - OD: 5.432" - PL |
| 6C | 077710-230 | NA | Overdrive - KEVLAR® Heavy Duty Oversize | .090 | 90-On | AR | Kev - 28T - OD: 5.432" - PL |
| 7C | 077700 | 4659635 | Reverse | .071 | 88-97 | 2 | Heg - 28T - OD: 5.432" - PL |
| 7C | 077700 | 4659635 | Reverse | .071 | 98-On | 4 | Heg - 28T - OD: 5.432" - PL |
| 7C | 077710 | NA | Reverse - KEVLAR® | .071 | 88-On | 2 | Kev - 28T - OD: 5.432" - PL |
| 8C | 077702 | 4567212 | 2nd & 4th | .086 | 88-On | 4 | Heg - 31T - OD: 6.064" - PL |
| 8C | 077712 | NA | 2nd & 4th - KEVLAR® | .086 | 88-On | 4 | Kev - 31T - OD: 6.064" - PL |
| 9D | 077704 | 4377134 | Low / Reverse | .072 | 88-On | 5 | Heg - 32T - OD: 6.064" - PL |
| 9D | 077714 | NA | Low / Reverse - KEVLAR® | .072 | 88-On | 5 | Kev - 32T - OD: 6.064" - PL |
| **HI-PERFORMANCE - RED EAGLE®** | | | | | | | |
| 6C | 077740A | NA | Overdrive - POWERPACK™ Component | .085 | 88-On | AR | RED EAGLE® |
| 6C | 077740-160 | NA | Overdrive - POWERPACK™ Component | .062 | 88-On | AR | RED EAGLE® |
| **STEEL CLUTCHES** | | | | | | | |
| 10B | 077701 | 4659053 | Underdrive | .067 | 88-On | 4 | 8T - ID: 4.528" |
| 11C | 077701A | 4377190 | Overdrive | .101 | 88-89 | 2 | 8T - ID: 4.528" |
| 11C | 077701 | 4659053 | Overdrive | .067 | 90-On | 3 | 8T - ID: 4.528" |
| 11C | 077701-150 | NA | Overdrive - POWERPACK™ Component | .060 | 88-On | AR | |
| 12C | 077701 | 4659053 | Reverse | .067 | 88-97 | 1-2 | 8T - ID: 4.528" |
| 12C | 077701 | 4659053 | Reverse | .067 | 98-On | 4 | 8T - ID: 4.528" |
| 13C | 077703 | 4659054 | 2nd & 4th | .101 | 88-On | 4 | 14T - ID: 5.255" |
| 14D | 077705 | 4659055 | Low / Reverse | .068 | 88-On | 5 | 14T - ID: 5.255" |
| **PRESSURE PLATES** | | | | | | | |
| 16C | TBA | 4377190 | Overdrive - 8 lug design | | 88-89 | 1 | supercedes to 4 lug design |
| 16C | 077760A | 4531925 | Reverse | .340 | 88-On | 1 | ID - 4.528 |
| 16C | 077761 | 4531556 | Overdrive - 4 lug design | .356 | 88-On | 1 | retro-fit w/077258 snap ring |
| 16C | 077761-750 | NA | Overdrive - 4 lug - POWERPACK® comp | .295 | 88-On | 1 | |
| **PP KITS - includes PP and Snap ring** | | | | | | | |
| KT | 077765-217 | 4723684 | Underdrive - selective | .217 | 88-96 | 1 | |
| KT | 077765-236 | 4723683 | Underdrive - selective | .236 | 88-96 | 1 | |

| ILL | ALTO NO | REF NO | DESCRIPTION | SPEC | YEAR | QTY | NOTES |
|---|---|---|---|---|---|---|---|
| **PRESSURE PLATES** | | | | | | | ...Continued |
| **PP KITS - includes PP and Snap ring** | | | | | | | |
| KT | 077765-255 | 4723682 | Underdrive - selective | .255 | 88-96 | 1 | |
| KT | 077765-275 | 4723681 | Underdrive - selective | .275 | 88-96 | 1 | |
| KT | 077765A228 | 4883013 | Underdrive - selective | .228 | 97-On | 1 | |
| KT | 077765A248 | 4883014 | Underdrive - selective | .248 | 97-On | 1 | |
| KT | 077765A268 | 4883015 | Underdrive - selective | .268 | 97-On | 1 | |
| KT | 077763-536 | 4412265KT | Low / Reverse - selective | .211 | 88-96 | 1 | |
| KT | 077763-563 | 4412266KT | Low / Reverse - selective | .221 | 88-96 | 1 | |
| KT | 077763-588 | 4412267KT | Low / Reverse - selective | .231 | 88-96 | 1 | |
| KT | 077763-614 | 4412267KT | Low / Reverse - selective | .242 | 88-96 | 1 | |
| KT | 077763-640 | 43377148KT | Low / Reverse - selective | .252 | 88-96 | 1 | |
| KT | 077763-666 | 43377149KT | Low / Reverse - selective | .262 | 88-96 | 1 | |
| KT | 077763-692 | 43377150KT | Low / Reverse - selective | .272 | 88-96 | 1 | |
| KT | 077763A536 | 4897452AA | Low / Reverse - selective | .211 | 97-On | 1 | |
| KT | 077763A562 | 4567895KT | Low / Reverse - selective | .221 | 97-On | 1 | |
| KT | 077763A588 | 4567896KT | Low / Reverse - selective | .231 | 97-On | 1 | |
| KT | 077763A614 | 4897453AA | Low / Reverse - selective | .242 | 97-On | 1 | |
| KT | 077763A640 | 4897454AA | Low / Reverse - selective | .252 | 97-On | 1 | |
| KT | 077763A666 | 4897455AA | Low / Reverse - selective | .262 | 97-On | 1 | |
| KT | 077763A692 | 4897456AA | Low / Reverse - selective | .272 | 97-On | 1 | |
| **OEI™ Original Equipment Improvements** | | | | | | | |
| KT | 077757 | NA | POWERPACK™- Overdrive Clutch | | 88-On | 1 | Prevents Clutch burnup |
| KT | 077758 | NA | Kit, Low/Reverse Case Saver™ | | 88-On | 1 | |
| KT | 077670 | NA | Low / Reverse retainer with screws | | 88-On | 1 | |
| KT | 077985 | SK® 604 | Shift Kit® | Transgo® | 88-On | 1 | |
| **FILTERS** | | | | | | | |
| KT | FK077940 | NA | Filter Kit - A604 | | 88-On | 1 | |
| KT | FK077942 | NA | Filter Kit - A606 | | 93-On | 1 | |
| 18G | 077940 | 4864505 | Filter - A604 | | 88-On | 1 | |
| 18G | 077942 | 4626449 | Filter - A606 | | 93-On | 1 | |
| **METAL CLAD SEALS** | | | | | | | |
| 19A | 027400 | 4269057 | Front Pump | Silicone | 88-97 | 1 | |
| 19A | 027400A | 4412475 | Front Pump | Vamac® | 98-On | 1 | |
| 20F | 045401 | 4567496AB | Axle | | 88-On | 2 | |
| N I | 028402 | 4269956 | Adapter Housing (4 x 4) | | 01-On | 1 | |
| **SEALING RINGS** | | | | | | | |
| KT | 077600 | A136 | Sealing Ring Kit - 4M / 11T | | 88-On | 1 | |
| 21A | 077100 | 4471874 | Front Pump stator - seal plated (SSP) | Metal | 88-On | 4 | |
| 22A | 077101 | 4446543 | Input Shaft | Teflon | 88-On | 3 | |
| 23G | 077102 | 4446544 | Accumulator piston | Teflon | 88-On | 8 | |
| **SNAP RINGS** | | | | | | | |
| KT | 077680 | NA | Kit, complete | | 88-On | 1 | |
| KT | 077681 | NA | Kit, Underdrive / Overdrive / Reverse only | | 88-96 | 1 | |
| KT | 077681A | NA | Kit, Underdrive / Overdrive / Reverse only | | 97-On | 1 | |
| 24C | 077250T | 4377189 | Underdrive PP - Red Stripe / Taper | .068 | 88-90 | 1 | |
| 24C | 077251T | 4531411 | Underdrive PP - Blue Stripe / Taper | .060 | 91-92 | 1 | |
| 24C | 077253T | 4567602 | Underdrive PP - Turquoise Stripe / Taper | .077 | 93-96 | 1 | |
| 24C | 077253AT | 4659934 | Underdrive PP - Flat | .086 | 97-On | 1 | |
| 25B | 077251 | 4412307 | Underdrive Clutch retainer | .061 | 88-96 | 1 | |
| 25B | 077251-076 | 4659980 | Underdrive Clutch retainer | .076 | 97-On | 1 | |
| 30B | 077261 | 6501715 | Underdrive Spring retainer | .075 | 88-On | 1 | |
| 31B | 077262 | 6501812 | Input Clutch retainer | .088 | 88-On | 1 | |
| 26C | 077259W | 4505621 | Overdrive Clutch retainer | | 88-On | 1 | wave |
| 27C | 077258 | 4505622 | Overdrive PP retainer | .070 | 88-On | 1 | |
| 28C | 077252-060 | 4377195 | Reverse Clutch retainer | .060 | 88-On | AR | |
| 28C | 077252-070 | 4412871 | Reverse clutch retainer | .070 | 88-On | AR | |

# CHRYSLER

## A604 (40TE, 41TE, F4AC1) 1988-On
## A606 (42LE) 1993-On

| ILL | ALTO NO | REF NO | DESCRIPTION | SPEC | YEAR | QTY | NOTES |
|---|---|---|---|---|---|---|---|
| **SNAP RINGS** | | | | | | | ...Continued |
| 28C | 077252-080 | 4412872 | Reverse clutch retainer | .080 | 88-On | AR | |
| 28C | 077252-090 | 4412873 | Reverse clutch retainer | .090 | 88-On | AR | |
| 29B | 077260 | 6501702 | Input Shaft | .062 | 88-On | 1 | |
| 32D | 077254 | 4412395 | Low / Reverse PP retainer | .039 | 88-On | 1 | |
| 33D | 077254T | 4412269 | Low / Reverse PP retainer - red stripe | .068 | 88-98 | 1 | taper |
| 33D | 077254AT | 4799858 | Low / Reverse PP retainer | | 99-On | 1 | flat |
| 34D | 077255 | 4130513 | Front Planet | .060 | 88-95 | 2 | |
| 34D | TBA | 6035238 | Front Planet | | 96-On | 2 | |
| 35B | 077256 | 4412203 | Reverse Input return spring retainer | .060 | 88-On | 1 | |
| 36C | 077257 | 4505591 | 2nd & 4th Clutch retainer | .060 | 88-On | 1 | |
| **BUSHINGS** | | | | | | | |
| KT | 077625 | NA | Bushing Kit - (13) | | 88-On | 1 | |
| KT | 077630 | NA | Short Bushing Kit - (4) | | 88-On | 1 | |
| 37A | 027202 | 2466796 | Front Pump body | | 88-On | 1 | |
| 37A | 077200A | 12502-01 | Front Pump body | Sonnax | 88-On | opt. | restores clearance |
| 38A | 077201 | 4412211 | Input Shaft - rear | | 88-On | 1 | |
| 39G | 045207 | 4269961 | Extension Housing - some models | | 88-On | 1 | |
| 40B | 077203 | 4377170 | Input Clutch Hub | | 88-On | 1 | |
| 40B | 077203A | 92003-01K | Input Clutch Hub | Sonnax | 88-On | opt. | restores clearance |
| 41C | 077204 | 4412219 | Overdrive Clutch Hub | | 88-On | 2 | |
| 41C | 077204A | 92004-L | Overdrive Clutch Hub - 1pc design | Sonnax | 96-On | opt. | |
| 42C | 077205 | 4412222 | 2nd & 4th Clutch Hub - small I.D. | | 89-93 | 2 | |
| 42C | 077205A | 4659619 | 2nd & 4th Clutch Hub - large I.D. | | 94-On | 2 | |
| 43D | 077206 | 4412230 | Rear Planetary carrier | | 88-On | 1 | |
| **WASHERS** | | | | | | | |
| KT | 077635 | NA | Kit | | 88-On | 1 | |
| **MISCELLANEOUS** | | | | | | | |
| N I | 077550 | NA | Plug, Parking Pawl | | 88-On | 1 | |
| NI | 077301 | 4431612 | Piston, Spring retainer | | 88-On | 1 | |

**NOTES**

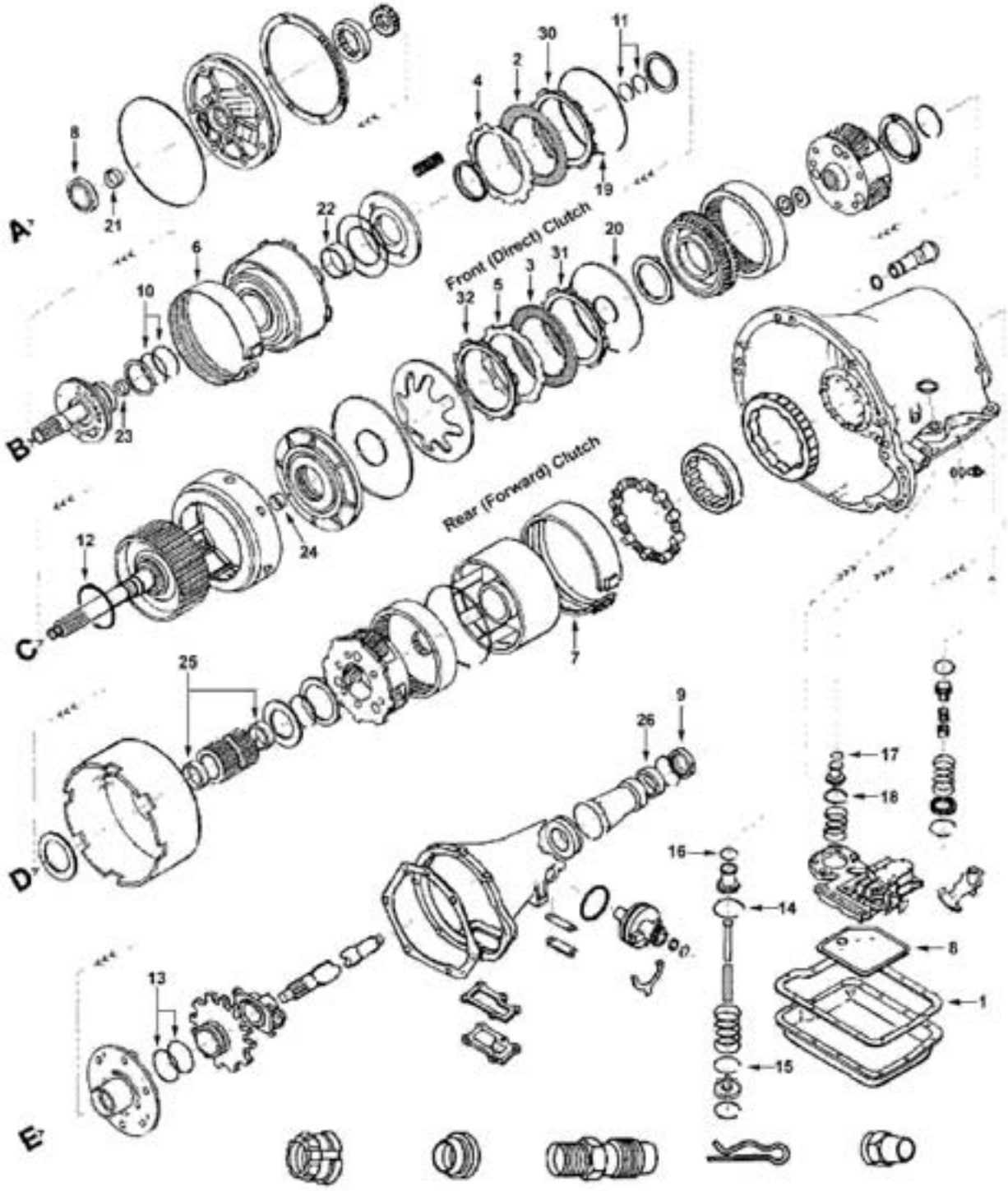


© COPYRIGHT
1999 AMERICAN DATA GRAPHICS, INC.

# CHRYSLER
## TF8 - A727 (36RH, 37RH)
## 1962-97

| ILL | DESCRIPTION | YEARS | FRICTION MODULE | STEEL MODULE | OVERHAUL KIT | BANNER KIT | MASTER KIT |
|---|---|---|---|---|---|---|---|
| **KITS** | | | | | | | |
| KT | Rebuilding Kit | 62-70 | 028752 | 028753 | 028800 | 028901LS | 028901 |
| KT | Rebuilding Kit | 71-97 | 028752 | 028753 | 028802 | 028903LS | 028903 |
| KT | Rebuilding Kit - with Heg Frictions | 71-97 | 028752G | 028753 | 028802 | TBA | TBA |
| **HI-PERFORMANCE - RED EAGLE®** | | | | | | | |
| KT | Rebuilding Kit | 71-97 | 028752HP | 028753HP | 028802 | 028903HPLS | 028903HP |

| ILL | ALTO NO | REF NO | DESCRIPTION | SPEC | YEAR | QTY | NOTES |
|---|---|---|---|---|---|---|---|
| **MISCELLANEOUS GASKETS & KIT COMPONENTS** | | | | | | | |
| 1E | 028816 | 2464324 | Gasket, Oil Pan | Cork/Rub | 62-97 | 1 | |
| N I | 032003 | 6023943 | Washer, Front Pump bolts | | 62-97 | 8 | |
| **FRICTION CLUTCHES** | | | | | | | |
| 2B | 028712 | 4617202 | Front (Direct) | .095 | 62-97 | 3-4 | Tan - 62T - OD: 6.700" - WF |
| 3C | 028710 | 5252259 | Rear (Forward) | .061 | 62-97 | 4 | Tan - 62T - OD: 6.700" - SM |
| 3C | 028710A155 | NA | Rear (Forward) | .061 | 62-97 | 4 | Tan - 62T - OD: 6.700" - 8PL |
| **HI-PERFORMANCE - RED EAGLE®** | | | | | | | |
| 2B | 028740 | NA | Front (Direct) | .095 | 62-97 | 3-4 | Red - 62T - OD: 6.700" - SM |
| 3B | 028742 | NA | Rear (Forward) | .061 | 62-97 | 4 | Red - 62T - OD: 6.700" - SM |
| 3B | 028742A155 | NA | Rear (Forward) | .061 | 62-97 | 4 | Red - 62T - OD: 6.700" - PL |
| **HI-PERFORMANCE - UNIT PACKS (ONE Rebuild)** | | | | | | | |
| KT | 028740UP4 | NA | UNIT PACK - Front | .095 | 62-97 | 1 | 4 RED EAGLE® Friction |
| KT | 028742UP4 | NA | UNIT PACK - Rear | .061 | 62-97 | 1 | 4 RED EAGLE® Friction |
| **STEEL CLUTCHES** | | | | | | | |
| 4B | 028701 | 52118812AB | Front (Direct) | .068 | 62-97 | 4 | 12T - ID: 5.342" |
| 5C | 028701 | 52118812AB | Rear (Forward) | .068 | 62-97 | 4 | 12T - ID: 5.342" |
| 4B | 028701-200 | NA | Front & Rear - selective | .079 | 62-97 | AR | 12T - ID: 5.342" |
| 4B | 028707 | 2124826OS | Front & Rear - oversize | .090 | 62-97 | AR | 12T - ID: 5.342" |
| **HI-PERFORMANCE - KOLENE®** | | | | | | | |
| 4B | 028701K | NA | Front & Rear | .068 | 62-97 | 4/4 | 12T - ID: 5.342" |
| 4B | 028701K200 | NA | Front & Rear - selective | .079 | 62-97 | AR | 12T - ID: 5.342" |
| **HI-PERFORMANCE - UNIT PACKS (ONE Rebuild)** | | | | | | | |
| KT | 028701KUP4 | NA | Front or Rear | .068 | 62-97 | 1 | 4 KOLENE® Steel |
| **PRESSURE PLATES** | | | | | | | |
| 30B | TBA | 2801961 | Front - apply | | 62-93 | 1 | |
| 30B | TBA | 4617567 | Front - apply | | 94-97 | 1 | |
| 31C | TBA | 2801961 | Rear - apply | | 62-93 | 1 | |
| 31C | TBA | 4617567 | Rear - apply | | 94-97 | 1 | |
| 32C | TBA | 2466803 | Rear - backing (bevel) | | 62-97 | 1 | |
| **OEI™ Original Equipment Improvements** | | | | | | | |
| KT | 028985A | SK® TF-SC | Shift Kit® | Transgo® | 62-97 | 1 | No Yo Yo |
| KT | 028991 | TF-1 | Reprogramming Kit™ | Transgo® | 62-97 | 1 | Heavy Duty & Hi Perf. |
| KT | 028991A | TF-2 | Reprogramming Kit™ | Transgo® | 62-97 | 1 | Competition |
| KT | 028991B | TF-3 | Reprogramming Kit™ | Transgo® | 62-97 | 1 | Converts to manual shift |
| **BANDS** | | | | | | | |
| 6B | 028960K | 2124342K | Front (Kickdown) - Solid 2" | Kevlar® | 62-97 | 1 | |
| 6B | 028961 | 4329853 | Front (Kickdown) - Flex | Tan | 62-97 | 1 | |
| 7D | 028952E | 4412588 | Rear (Reverse) - Rigid | Tan | 62-89 | 1 | |
| 7D | 028952 | 4505091 | Rear (Reverse) - Rigid | Tan | 89-91 | 1 | thick lug 1-5/8" OD |
| 7D | 028952B | 4471476 | Rear (Reverse) - Rigid | Tan | 92-97 | 1 | thick lug - larger OD |
| **FILTERS** | | | | | | | |
| KT | FK028940 | NA | Filter Kit - small felt | | 62-65 | 1 | |
| KT | FK028944 | NA | Filter Kit - large felt | | 66-97 | 1 | Does Retro-fit to 1962 |
| KT | FK028946 | NA | Filter Kit - large brass | | 66-97 | 1 | |
| 8E | 028940 | 3621456 | Filter - small felt | | 62-65 | 1 | |
| 8E | 028944 | 3515996 | Filter - large felt | | 66-97 | 1 | Does Retro-fit to 1962 |

# CHRYSLER
## TF8 - A727 (36RH, 37RH)
## 1962-97

| ILL | ALTO NO | REF NO | DESCRIPTION | SPEC | YEAR | QTY | NOTES |
|---|---|---|---|---|---|---|---|
| **FILTERS** | | | | | | | ...Continued |
| 8E | 028946 | NA | Filter - large brass | | 66-97 | 1 | |
| **METAL CLAD SEALS** | | | | | | | |
| 8A | 028400 | 3515137 | Front Pump | Silicone | 62-97 | 1 | |
| 8A | 028400A | 4531225 | Front Pump | Vamac® | 62-97 | opt. | Does Retro-fit |
| 9E | 031401 | 3515383 | Extension Housing without boot | | 62-97 | 1 | |
| 9E | 023405 | 4531216 | Extension Housing with boot | | 62-97 | 1 | |
| N I | 027406 | 4505098 | Manual Lever | | 62-97 | 1 | |
| **SEALING RINGS** | | | | | | | |
| KT | 028600 | A108 | Sealing Ring Kit - 13M | | 62-70 | 1 | |
| KT | 028601 | A109 | Sealing Ring Kit - 12M | | 71-97 | 1 | |
| KT | 028601T | A109F | Sealing Ring Kit - | | 71-97 | 1 | |
| 10B | 028108 | 2124813 | Front Pump Stator | | 62-70 | 2 | |
| 10B | 028109 | 3515321 | Front Pump Stator | | 71-97 | 2 | Does Retro-Fit |
| 10B | 028111 | 3743689 | Front Pump stator (Reaction Shaft) | | 71-97 | opt. | Seal Plated (SSP) |
| 11B | 028103 | 1942041 | Input Shaft - small | 1.125 | 62-66 | 2 | |
| 11B | 028104 | 2801054 | Input Shaft - small | 1.175 | 67-93 | 2 | |
| 11B | 028104A | 4741836 | Input Shaft - small | 1.245 | 94-97 | 1-2 | |
| 12C | 028110 | 4058443 | Input Shaft - Large (Rear Clutch retainer) | | 62-97 | 1 | |
| 13E | 027100 | 1942109 | Governor | | 62-97 | 2 | |
| 14E | 028102 | 1942123 | Kickdown Servo - Large | | 62-97 | 1 | |
| 15E | 028102 | 1942123 | Kickdown Servo - Guide | | 62-97 | 1 | |
| 16E | 027109 | 2124851 | Kickdown Servo - Small | Metal | 62-97 | 1 | |
| 17E | 027104 | 1401221 | Accumulator - apply (small) | Metal | 62-97 | 1 | |
| 18E | 027101 | 1315158 | Accumulator - release (large) | Metal | 62-97 | 1 | |
| **SNAP RINGS** | | | | | | | |
| KT | 028680 | NA | Kit | | 62-97 | 1 | |
| 19B | TBA | 3410570 | Front Clutch PP retainer | | 62-97 | 1 | |
| 20C | 028252-060 | 1942063 | Rear Clutch PP retainer - rear | .060 | 62-97 | AR | |
| 20C | 028252-074 | 1942064 | Rear Clutch PP retainer - rear | .074 | 62-97 | AR | |
| 20C | 028252B088 | 1942065 | Rear Clutch PP retainer - rear | .088 | 62-97 | AR | |
| 20C | 028252-106 | 2466811 | Rear Clutch PP retainer - rear | .106 | 62-97 | AR | |
| **BUSHINGS** | | | | | | | |
| KT | 028625 | NA | Kit | | 62-97 | 1 | |
| 21A | 028200 | 2466324 | Front Pump body | Bronze | 62-97 | 1 | |
| 21A | 028201 | 2205031 | Front Pump body | Babbit | 62-97 | opt. | |
| 22B | 028202 | 2205241 | Front Clutch retainer - narrow | | 62-70 | 1 | |
| 22B | 028208 | 4058647 | Front Clutch retainer - wide w/ oil groove | | 71-97 | 1 | |
| 23B | TBA | 2205240 | Stator Support | | 62-66 | 1 | |
| 23B | 028206 | 2801348 | Stator Support | 1.125 | 67-93 | 1 | |
| 23B | 028206A | 4617416 | Stator Support | 1.250 | 94-97 | 1 | |
| 24C | 028203 | 3681709 | Input Shaft | | 62-97 | 1 | |
| 25D | 028205 | 1736520 | Reverse Sun Gear | | 62-97 | 2 | |
| 26E | 023225 | 2801724 | Extension Housing | | 62-97 | 1 | |
| **WASHERS** | | | | | | | |
| KT | 028635 | NA | Washer Kit | | 62-97 | 1 | |

**NOTES**

# CHRYSLER

## TF6 - A904, 998, 999 (30RH, 31RH, 32RH)

## 1960-On

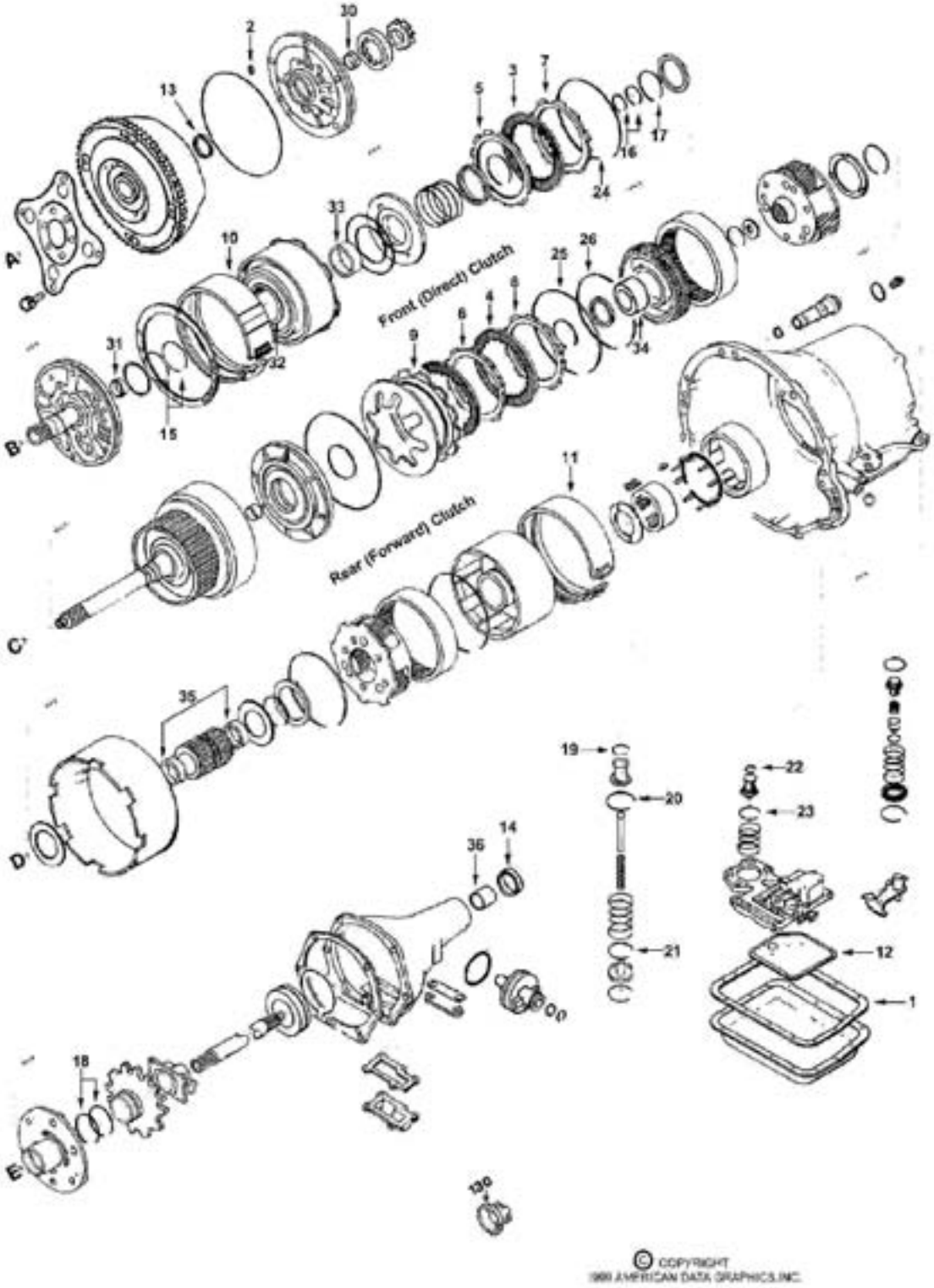

# CHRYSLER
## TF6 - A904, 998, 999 (30RH, 31RH, 32RH)
## 1960-On

| ILL | DESCRIPTION | YEARS | FRICTION MODULE | STEEL MODULE | OVERHAUL KIT | BANNER KIT | MASTER KIT |
|---|---|---|---|---|---|---|---|
| **KITS** | | | | | | | |
| KT | Rebuilding Kit | 60-71 | 027752 | 027753 | 027800 | 027901LS | 027901 |
| KT | Rebuilding Kit | 72-On | 027752 | 027753 | 027802 | 027903LS | 027903 |
| KT | Rebuilding Kit - with Heg Frictions | 72-On | 027752D | 027753 | 027802 | TBA | TBA |
| KT | Rebuilding Kit - 30RH (Jeep) | 99-On | 027752C | 027753C | 027802 | 027903ALS | 027903A |
| KT | Rebuilding Kit - Baby 904 (Colt-Arrow) | 74-80 | 027752 | 027753 | 027806 | 027907LS | 027907 |
| **HI-PERFORMANCE - RED EAGLE®** | | | | | | | |
| KT | Rebuilding Kit - TF6 | 72-On | 027752HP | 027753HP | 027802 | 027903HPLS | 027903HP |

| ILL | ALTO NO | REF NO | DESCRIPTION | SPEC | YEAR | QTY | NOTES |
|---|---|---|---|---|---|---|---|
| **MISCELLANEOUS GASKETS & KIT COMPONENTS** | | | | | | | |
| 1E | 027816 | 4295875 | Gasket, Oil Pan | Cork/Rub | 60-On | 1 | |
| 1E | 027818 | 3681438 | Gasket, Oil Pan - Colt, Arrow | Cork/Rub | 72-On | 1 | |
| 22A | 032003 | 6023943 | Washer, Front Pump bolts | | 60-On | 8 | |
| **FRICTION CLUTCHES** | | | | | | | |
| 3B | 027700 | 4617362 | Front (Direct) | .086 | 60-On | 3-5 | Tan - 45T - OD: 4.940" - PL |
| 4C | 027706 | 4531068 | Rear (Forward) - Smooth | .061 | 60-On | 3-4 | Tan - 45T - OD: 4.940" - SM |
| 4C | 027706PL | 4713880 | Rear (Forward) - Parallel Lines | .061 | 60-On | 3-4 | Tan - 45T - OD: 4.940" - PL |
| **HI-PERFORMANCE - RED EAGLE®** | | | | | | | |
| 3B | 027740 | NA | Front (Direct) | .086 | 60-On | 3-5 | Red - 45T - OD: 4.940" - SM |
| 4C | 027742 | NA | Rear (Forward) | .061 | 60-On | 3-4 | Red - 45T - OD: 4.940" - SM |
| **HI-PERFORMANCE - UNIT PACKS (ONE Rebuild)** | | | | | | | |
| KT | 027740UP4 | NA | UNIT PACK - Front (Direct) | .086 | 60-On | 1 | 4 RED EAGLE® Friction |
| KT | 027742UP4 | NA | UNIT PACK - Rear (Forward) | .061 | 60-On | 1 | 4 RED EAGLE® Friction |
| **STEEL CLUTCHES** | | | | | | | |
| 5B | 027701 | 19402403 | Front (Direct) | .068 | 60-On | 4 | 12T - ID: 3.950" |
| 6C | 027701 | 19402403 | Rear (Forward) | .068 | 60-On | 4 | 12T - ID: 3.950" |
| 5B | 027701-200 | NA | Front & Rear - selective | .079 | 60-On | AR | 12T - ID: 3.950" |
| 5B | 027701A217 | 1942403AC | Front - Jeep | .085 | 99-On | 4 | |
| 5B | 027717 | NA | Front & Rear - selective | .085 | 60-On | AR | 12T - ID: 3.950" |
| **HI-PERFORMANCE - KOLENE®** | | | | | | | |
| 5B | 027701K | NA | Front & Rear | .068 | 60-On | 4/4 | 12T - ID: 3.950" |
| 5B | 027701K200 | NA | Front & Rear - selective | .079 | 60-On | AR | 12T - ID: 3.950" |
| 5B | 027717K216 | NA | Front & Rear - selective | .085 | 60-On | AR | 12T - ID: 3.950" |
| **HI-PERFORMANCE - UNIT PACKS (ONE Rebuild)** | | | | | | | |
| KT | 027701KUP4 | NA | UNIT PACK - Front or Rear | .068 | 60-On | 1 | 4 KOLENE® Steel |
| **PRESSURE PLATES** | | | | | | | |
| 7B | 027760A548 | 4617176AB | Front Clutch - flat | .216 | 60-On | 1 | |
| 8C | 027760A548 | 4617176AB | Rear Clutch - flat | .216 | 60-On | 1 | |
| 9C | 027760B300 | 2466281 | Rear Clutch - backing (bevel) | .118 | 60-On | 1 | |
| **OEI™ Original Equipment Improvements** | | | | | | | |
| KT | 027755HP | NA | Front POWERPACK™ - Hi-Performance inertia | | 60-On | 1 | |
| KT | 028985A | SK® TF-SC | Shift Kit® | Transgo® | 60-On | 1 | No Yo Yor |
| KT | 028991 | TF-1 | Reprogramming Kit™ | Transgo® | 60-On | 1 | Heavy Duty & Hi Perf. |
| KT | 028991A | TF-2 | Reprogramming Kit™ | Transgo® | 60-On | 1 | Competition |
| KT | 028991B | TF-3 | Reprogramming Kit™ | Transgo® | 60-On | 1 | Converts to manual shift |
| **BANDS** | | | | | | | |
| 10B | 027950 | 4419646 | Front (Kickdown) - Solid, thin lining | Tan | 60-On | 1 | |
| 10B | 027954 | 4058863 | Front (Kickdown) - Flex / 1.375" wide | Tan | 60-On | 1 | |
| 10B | 027954A | 4617849 | Front (Kickdown) - Flex / 1.600" wide | Tan | 60-On | 1 | |
| 11D | 027952 | 4431405 | Rear (Reverse) - Solid / 1.375" wide | Tan | 60-On | 1 | 6 cylinder |
| 11D | 027953 | 4431406 | Rear (Reverse) - Solid / 2.000" wide | Tan | 60-On | 1 | 8 cylinder |
| **FILTERS** | | | | | | | |
| KT | FK028940 | NA | Filter Kit - Small Felt | | 60-65 | 1 | |
| KT | FK028942 | NA | Filter Kit - Small Brass | | 60-65 | 1 | |

# CHRYSLER
## TF6 - A904, 998, 999 (30RH, 31RH, 32RH)
## 1960-On

| ILL | ALTO NO | REF NO | DESCRIPTION | SPEC | YEAR | QTY | NOTES |
|---|---|---|---|---|---|---|---|
| **FILTERS** | | | | | | | ...Continued |
| KT | FK028944 | NA | Filter Kit - Large Felt | | 66-On | 1 | Does Retro-fit to 1960 |
| KT | FK028946 | NA | Filter Kit - Large Brass | | 66-On | 1 | |
| 12E | 028940 | 3621456 | Filter - Small Felt | | 60-65 | 1 | |
| 12E | 028942 | 3410253 | Filter - Small Brass | | 60-65 | opt. | |
| 12E | 028944 | 3515996 | Filter - Large Felt | | 66-On | 1 | Does Retro-fit to 1960 |
| 12E | 028946 | NA | Filter - Large Brass | | 66-On | opt. | |
| **METAL CLAD SEALS** | | | | | | | |
| 13A | 027400 | 4412475 | Front Pump (with Flange) | Silicone | 60-97 | 1 | |
| 13A | 027400A | 4269057 | Front Pump (with Flange) | Vamac® | 98-On | 1 | |
| 14E | 027403 | 2400163 | Extension Housing with Long boot | | 66-72 | 1 | |
| 14E | 027404 | 4058047 | Extension Housing with Short boot | | 73-On | 1 | |
| 14E | 027404A | 3515384 | Extension Housing without boot | | 73-On | 1 | |
| **SEALING RINGS** | | | | | | | |
| KT | 027602 | A101 | Sealing Ring Kit - 16M | | 60-On | 1 | |
| KT | 027602T | A101T | Sealing Ring Kit - 16T | | 60-On | 1 | |
| KT | 027602X | A103 | Sealing Ring Kit - 8M | | 60-On | 1 | |
| 15B | 027103 | 1942389 | Front Pump Stator (reaction shaft) | | 60-88 | 2 | |
| 15B | 027103A | 4471874 | Front Pump Stator (reaction shaft) | | 89-On | 2 | seal-plated (SSP) |
| 16B | 027104 | 1323593 | Input Shaft (small) - Butt Joint | Metal | 66-67 | 2 | |
| 16B | 027104A | 1401221 | Input Shaft (small) - Hook Joint | Metal | 68-On | 2 | |
| 16B | 027114 | 4269592 | Input Shaft (small) | Teflon | 66-On | Opt. | |
| 17B | 027109 | 1323593 | Input Shaft (large) - Rear clutch retainer | | 60-77 | 1 | |
| 17B | 027110 | 4028333 | Input Shaft (large) - Rear clutch retainer | | 78-On | 1 | |
| 18E | 027100 | 1942109 | Governor Support | | 60-On | 2 | |
| 19E | 027107 | 1672287 | Kickdown Servo - apply (small) | Metal | 60-88 | 1 | 6 Cylinder |
| 19E | 027117 | 4295965 | Kickdown Servo - apply (small) | Teflon | 89-On | 1 | 6 Cylinder |
| 19E | 027105 | 3410374 | Kickdown Servo - apply (small) | Metal | 60-88 | 1 | 8 Cylinder |
| 19E | 027115 | 3743033 | Kickdown Servo - apply (small) | Teflon | 89-On | 1 | 8 Cylinder |
| 20E | 027108 | 1636470 | Kickdown Servo - release (large) | Metal | 60-On | 2 | 6 Cylinder |
| 20E | 027106 | 3410372 | Kickdown Servo - release (large) | Metal | 60-88 | 2 | 8 Cylinder |
| 20E | 027116 | 4295966 | Kickdown Servo - release (large) | Teflon | 89-On | 2 | 8 Cylinder |
| 21E | 027108 | 1636470 | Kickdown Servo - guide | Metal | 60-88 | 1 | 6 Cylinder |
| 21E | 027118 | 3743014 | Kickdown Servo - guide | Teflon | 89-On | 1 | 6 Cylinder |
| 21E | 027106 | 3410372 | Kickdown Servo - guide | Metal | 60-88 | 1 | 8 Cylinder |
| 21E | 027116 | 4295966 | Kickdown Servo - guide | Teflon | 89-On | 1 | 8 Cylinder |
| 22E | 027104 | 1941831 | Accumulator Piston - apply (small) | Metal | 60-88 | 1 | |
| 22E | 027122 | 3743010 | Accumulator Piston - apply (small) | Teflon | 89-On | 1 | |
| 23E | 027101 | 2124255 | Accumulator Piston - release (large) | Metal | 60-88 | 1 | |
| 23E | 027123 | 3743013 | Accumulator Piston - release (large) | Teflon | 89-On | 1 | |
| **SNAP RINGS** | | | | | | | |
| KT | 027680 | NA | Kit | | 60-On | 1 | |
| 24A | 027260W | 3410571 | Forward Clutch PP retainer | | 60-On | 1 | |
| 25B | 027260W043 | 2466283 | Forward Clutch PP retainer - inner | | 60-On | 1 | |
| 26B | 027260-060 | 4130761 | Forward Clutch PP retainer - outer / selective | .060 | 60-On | AR | |
| 26B | 027260-076 | 4539121 | Forward Clutch PP retainer - outer / selective | .076 | 60-On | AR | |
| 26B | 027260-098 | 4539122 | Forward Clutch PP retainer - outer / selective | .098 | 60-On | AR | |
| N I | 027261W054 | 4659652 | Direct - wave | .054 | 60-On | AR | |
| **BUSHINGS** | | | | | | | |
| KT | 027625 | NA | Kit | | 60-On | 1 | |
| 30A | 027202 | 2466796 | Front Pump housing | Bronze | 60-On | 1 | |
| 30A | 027202A | 2204953 | Front Pump housing | Babbit | 60-On | 1 | |
| 31B | 027208 | 2801728 | Reaction Shaft | | 68-77 | 1 | |
| 31B | 027211 | 4058635 | Reaction Shaft | | 68-On | 1 | |
| 32B | 027206 | 2801727 | Front Clutch drum - rear | 2.056 | 60-93 | 1 | |
| 32B | 027206A | 4617159 | Front Clutch drum - rear | 2.060 | 94-On | 1 | |
| 33B | 027214 | 4617157 | Front Clutch drum - front | 2.200 | 94-On | 1 | |
| 34C | 027212 | 3681967 | Annulus gear support - front | | 60-On | 1 | |

# CHRYSLER
## TF6 - A904, 998, 999 (30RH, 31RH, 32RH)
## 1960-On

| ILL | ALTO NO | REF NO | DESCRIPTION | SPEC | YEAR | QTY | NOTES |
|---|---|---|---|---|---|---|---|
| **BUSHINGS** | | | | | | | ...Continued |
| 35D | 027207 | 1942436 | Reverse Sun Gear | | 60-On | 2 | |
| 36E | 023225 | 2801724 | Extension Housing | 1.81 | 60-On | 1 | |
| 36E | 027210 | 2801726 | Extension Housing | 1.69 | 60-On | 1 | Bronze |
| **WASHERS** | | | | | | | |
| KT | 027635 | NA | Kit | | 60-On | 1 | |
| **MODULATORS** | | | | | | | |
| N I | 027618 | 1704283 | Neutral Safety Switch - 1 prong | | 60-64 | 1 | |
| N I | 027618A | 2495537 | Neutral Safety Switch - 2 prong | | 65-68 | 1 | |
| N I | 027618B | 2932820 | Neutral Safety Switch - 3 prong (long) | | 69-On | 1 | |
| N I | 027618C | 3747361 | Neutral Safety Switch - 3 prong (short) | | 69-On | 1 | |

**NOTES**

# CHRYSLER
## 45RFE, 545RFE
## 1999-On

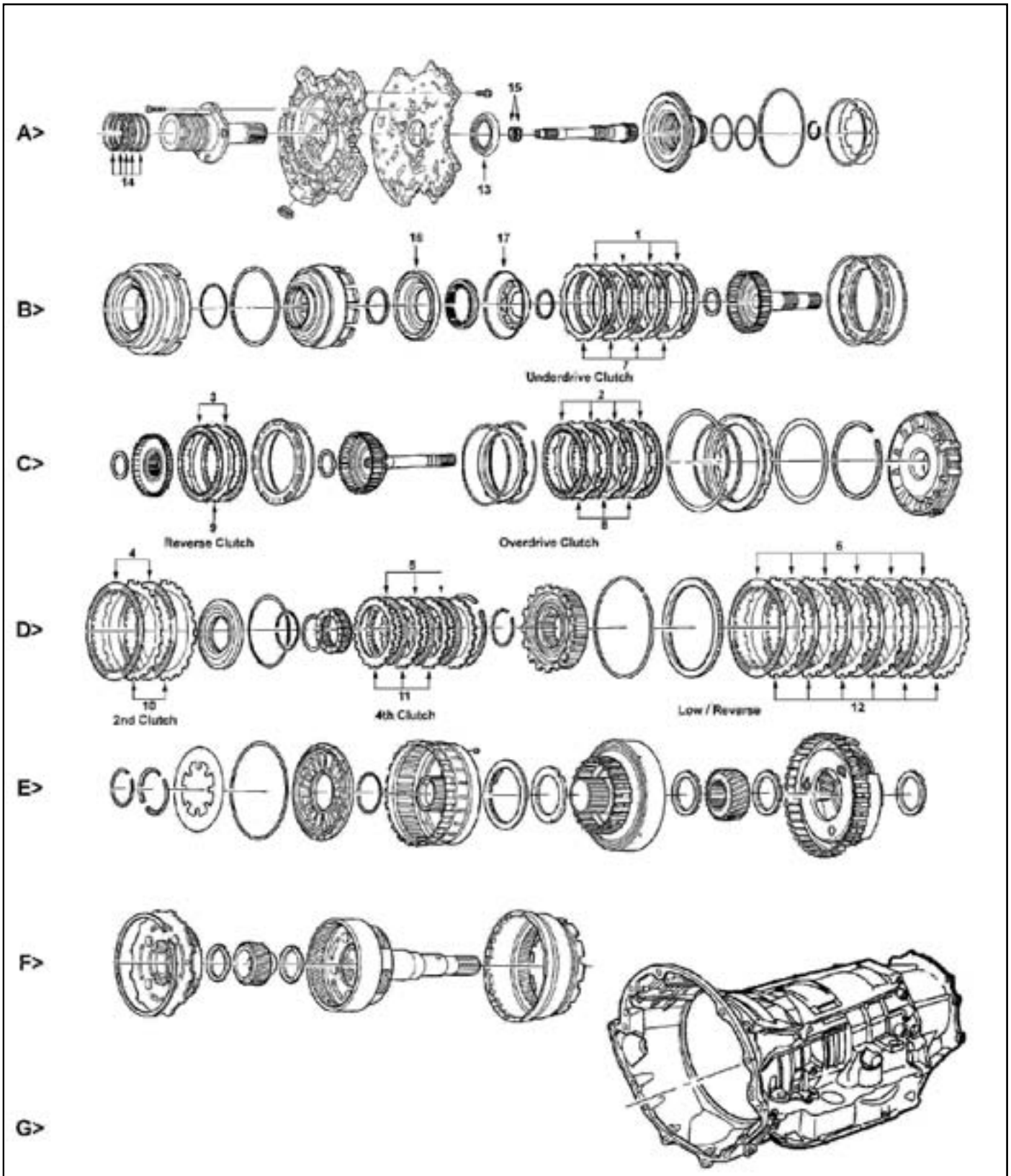

# CHRYSLER
## 45RFE, 545RFE
## 1999-On

| ILL | DESCRIPTION | YEARS | FRICTION MODULE | STEEL MODULE | OVERHAUL KIT | BANNER KIT | MASTER KIT |
|---|---|---|---|---|---|---|---|
| **KITS** | | | | | | | |
| KT | Rebuilding Kit | 99-On | 128752 | 128753 | 128800 | 128901LS | 128901 |

| ILL | ALTO NO | REF NO | DESCRIPTION | SPEC | YEAR | QTY | NOTES |
|---|---|---|---|---|---|---|---|
| **MISCELLANEOUS GASKETS & KIT COMPONENTS** | | | | | | | |
| N I | 128816 | NA | Gasket, Oil Pan | Cork/Rub | 99-On | 1 | |
| **FRICTION CLUTCHES** | | | | | | | |
| 1B | 128700-200 | 04799106 | Underdrive | .078 | 99-On | 4 | Tan - 32T - OD: 6.364" - PL |
| 2C | 128700A230 | 04799114 | Overdrive | .090 | 99-On | 4 | Heg - 32T - OD: 6.364" - SB |
| 3C | 128700B200 | 04799757 | Reverse | .078 | 99-On | 2 | Heg - 32T - OD: 6.364" - PL |
| 4D | 128702-230 | 04799244 | 2nd | .090 | 99-On | 2 | Tan - 40T - OD: 8.107" - SB |
| 5D | 128704-230 | 04799530 | 4th | .090 | 99-On | 3 | Tan - 24T - OD: 5.331" - SB |
| 6D | 128706-200 | 04799461AB | Low / Reverse | .078 | 99-On | 6 | Heg - 32T - OD: 6.844" - PL |
| **STEEL CLUTCHES** | | | | | | | |
| 7B | 128701-170 | 04799105AB | Underdrive | .068 | 99-On | 4 | 12T - ID: 5.400" |
| 8C | 128701-220 | 04799398AB | Overdrive | .086 | 99-On | 3-4 | 12T - ID: 5.400" |
| 9C | 128701-170 | 04799105AB | Reverse | .068 | 99-On | 1-2 | 12T - ID: 5.400" |
| 10D | 128703-323 | 04799243 | 2nd | .127 | 99-On | 2 | 10T - ID: 6.771" |
| 11D | 128705-250 | 04799529 | 4th | .099 | 99-On | 3 | 20T - ID: 4.239" |
| 12D | 128707-170 | 04799460 | Low / Reverse | .078 | 99-On | 6 | 45T - ID: 5.697" |
| **FILTERS** | | | | | | | |
| N I | 128940 | 4800029AA | Filter - 2wd | | 99-On | 1 | |
| N I | 128942 | 5013470AC | Filter - 4wd | | 99-On | 1 | |
| N I | 128944 | 4799662 | Filter - External spin on | | 99-On | 1 | |
| **METAL CLAD SEALS** | | | | | | | |
| 13A | 128400 | 04617919 | Front Pump | | 99-On | 1 | |
| N I | 128405 | 4531216 | Extension Housing - 2wd | | 99-On | 1 | |
| N I | 128406 | 4167929 | Adapter Housing - 4wd | | 99-On | 1 | |
| **SEALING RINGS** | | | | | | | |
| KT | 128600 | NA | Sealing Ring Kit - 5M / 12T | | 99-On | 1 | |
| 14A | 128100 | 4799056 | Reaction Shaft Support | | 99-On | 5 | SSP |
| N I | 128101 | 4446544 | Accumulator Pistons | Teflon | 99-On | 10 | |
| 15A | 128102 | 4799539 | Input Shaft | Teflon | 99-On | 2 | |
| **BUSHINGS** | | | | | | | |
| KT | 128625 | NL | Bushing Kit | | 99-On | 1 | |
| **MISCELLANEOUS** | | | | | | | |
| 16B | 128300 | 4799650 | Bonded Piston - Underdrive | | 99-On | 1 | |
| 17B | 128301 | 4799652 | Bonded Piston - Underdrive (balance) | | 99-On | 1 | |

**NOTES**

# AISAN WARNER / BORG WARNER

## BORG WARNER

**T35, TA, TB, TC, T37 (UK) 1962-On**
**T65, 66 (UK). BW40/51 1971-On**

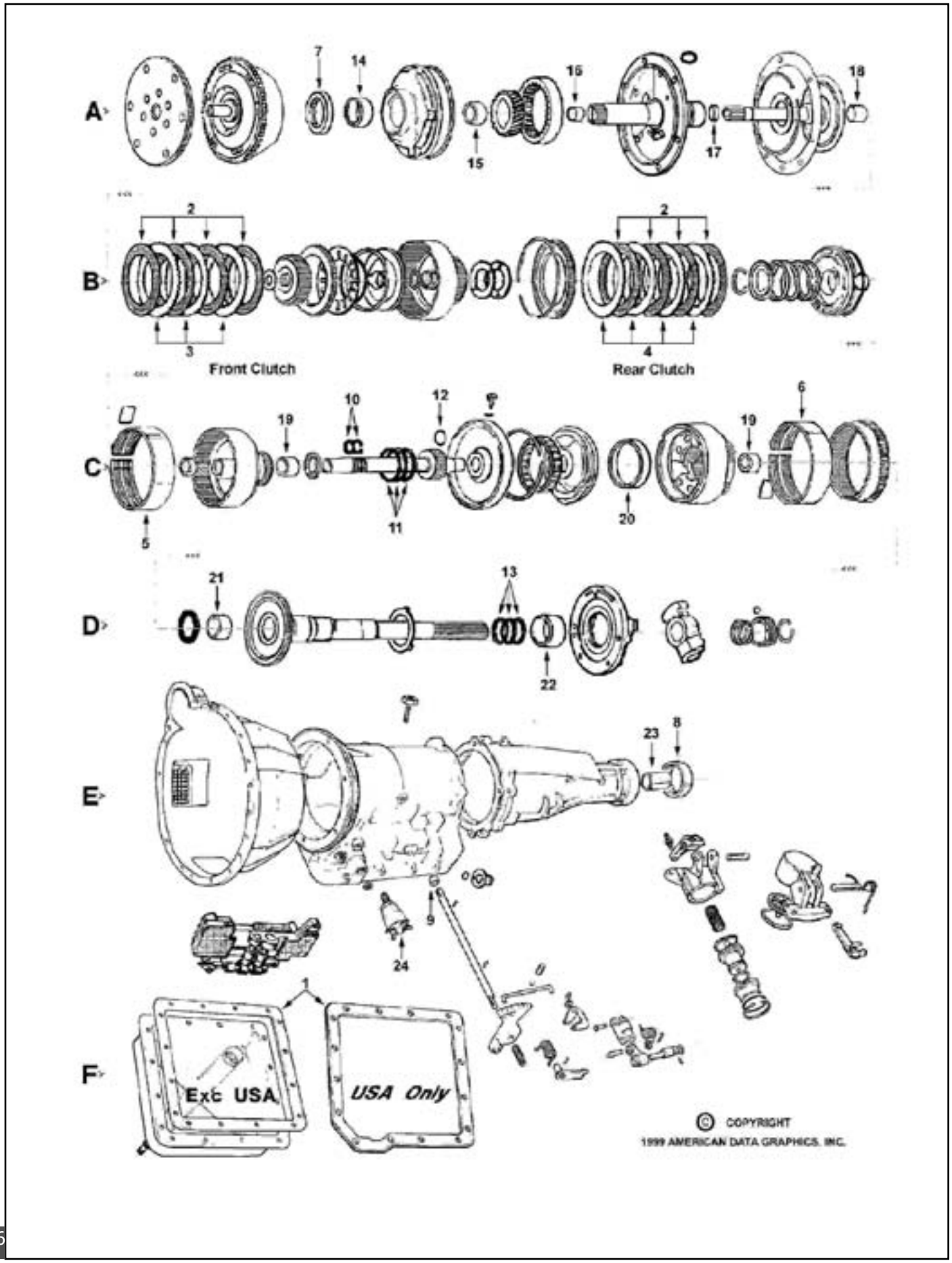

# AISAN WARNER / BORG WARNER

## BORG WARNER

## T35, TA, TB, TC, T37 (UK) 1962-On
## T65, 66 (UK). BW40/51 1971-On

| ILL | DESCRIPTION | YEARS | FRICTION MODULE | STEEL MODULE | OVERHAUL KIT | BANNER KIT | MASTER KIT |
|---|---|---|---|---|---|---|---|
| **KITS** | | | | | | | |
| KT | Rebuilding Kit - T35 USA models | 62-71 | 029752 | 029753 | 029800 | 029901LS | 029901 |
| KT | Rebuilding Kit - T35 Non USA models | 63-On | 029752 | 029753 | 029802 | 029903LS | 029903 |
| KT | Rebuilding Kit - T65 / T66 | 71-On | 029752 | 029753 | 029804 | 029905LS | 029905 |
| KT | Rebuilding Kit - T35TB / T37 | 81-93 | 029752 | 029753 | 029806 | 029909LS | 029909 |

| ILL | ALTO NO | REF NO | DESCRIPTION | SPEC | YEAR | QTY | NOTES |
|---|---|---|---|---|---|---|---|
| **MISCELLANEOUS GASKETS & KIT COMPONENTS** | | | | | | | |
| 1F | 029816 | 3164825 | Gasket, Oil pan - T35 USA models | Cork/Rub | 62-71 | 1 | |
| 1F | 029820 | 211E-7A191A | Gasket, Oil pan - T35 Non USA models | Cork/Rub | 63-On | 1 | |
| 1F | 029822 | 0565-141008 | Gasket, Oil pan - T65/66 | Cork/Rub | 71-On | 1 | |
| **FRICTION CLUTCHES** | | | | | | | |
| 2B | 029712 | Various | Front & Rear | .061 | 62-On | 4-5 | Tan - 36T - OD: 4.248" - PL |
| 2B | 029712SM | Various | Front & Rear | .061 | 62-On | 4-5 | Tan - 36T - OD: 4.248" - SM |
| 2B | 029710 | Various | Front & Rear | .061 | 62-On | 4-5 | Heg - 36T - OD: 4.248" - PL |
| 2B | 029710SM | Various | Front & Rear | .061 | 62-On | 4-5 | Heg - 36T - OD: 4.248" - SM |
| 2B | 029712BR | Various | Front & Rear - special Bronze | .061 | 62-On | 4-5 | Brz - 36T - OD: 4.248" - SB |
| **HI-PERFORMANCE - RED EAGLE®** | | | | | | | |
| 2B | 029740 | NA | Front & Rear | .061 | 62-On | 4-5 | Red - 36T - OD: 4.248" - SM |
| **STEEL CLUTCHES** | | | | | | | |
| 3B | 029701 | Various | Front | .068 | 62-On | 4 | 44T - ID: 3.134" |
| 3B | 029701-050 | NA | Front - Shim | .020 | 62-On | AR | 44T - ID: 3.134" |
| 3B | 029701-080 | NA | Front - Shim | .030 | 62-On | AR | 44T - ID: 3.134" |
| 4B | 029701 | Various | Rear | .068 | 62-On | 5 | 44T - ID: 3.134" |
| 4B | 029703 | Various | Rear - T35 dish | .068 | 62-On | 5 | 40T - ID: 3.125" |
| 4B | 029713 | Various | Rear - T65 dish | .068 | 71-On | 5 | 40T - ID: 3.125" |
| 3B | 029701-200 | Various | Front & Rear - Selective | .078 | 62-On | AR | 44T - ID: 3.134" |
| 3B | 029701-230 | Various | Front & Rear - Selective | .091 | 62-On | AR | 44T - ID: 3.134" |
| 3B | 029711 | Various | Front & Rear - Selective | .053 | 62-On | AR | 44T - ID: 3.134" |
| **HI-PERFORMANCE - KOLENE®** | | | | | | | |
| 3B | 029701K | NA | Front & Rear | .068 | 62-On | 4-5 | 44T - ID: 3.134" |
| **BANDS** | | | | | | | |
| 5C | 029952 | Various | Front - Rigid 1.53" wide | Tan | 62-On | 1 | |
| 5C | 029954 | Various | Front - Rigid 1.84" wide | Tan | 62-On | 1 | |
| 5C | 029976 | Various | Front - Flex | Tan | 62-On | 1 | |
| 6C | 029956 | Various | Rear - Rigid 2.13" wide | Tan | 62-On | 1 | |
| **FILTERS** | | | | | | | |
| KT | FK029940 | NA | Filter Kit - Front with extended shroud | | 62-On | 1 | |
| KT | FK029944 | NA | Filter Kit - Front with extended shroud Brass | | 62-On | 1 | |
| KT | FK029946 | NA | Filter Kit - Front with shroud | | 62-On | 1 | |
| N I | 029940 | 3170356 | Filter - Front with extended shroud | | 62-On | 1 | |
| N I | 029944 | NA | Filter - Front with extended shroud Brass | | 62-On | 1 | |
| N I | 029946 | 3188896 | Filter - Front with shroud | | 62-On | 1 | |
| N I | 029942 | NA | Filter - Rear (T35) | | 62-On | 1 | |
| **METAL CLAD SEALS** | | | | | | | |
| 7A | 029400 | Various | Front Pump - Thick type | | 62-On | 1 | |
| 7A | 029406 | Various | Front Pump - Thin type | | 62-On | 1 | |
| 8E | 031401 | 3155168 | Extension Housing - T35 Various USA models | 2.500 | 62-On | 1 | |
| 8E | 032402 | Various | Extension Housing - T35 Various USA models | 2.382 | 62-On | 1 | |
| 8E | 029404 | D2RY-7052B | Extension Housing - T35 Various | 1.718 | 62-On | 1 | |
| 8E | 029405 | BWA00011 | Extension Housing - T35 Jaguar | 1.950 | 62-On | 1 | |
| 8E | 029407 | 235728-3 | Extension Housing - T65 Jaguar & Rover | 1.950 | 62-On | 1 | |
| 8E | 029409 | 04-65-0-440-002 H | Extension Housing - T65 BMW | 2.430 | 62-On | 1 | |
| 9E | 029403 | Various | Manual Lever | | 62-On | 1 | |

# AISAN WARNER / BORG WARNER

## BORG WARNER

## T35, TA, TB, TC, T37 (UK) 1962-On
## T65, 66 (UK). BW40/51 1971-On

| ILL | ALTO NO | REF NO | DESCRIPTION | SPEC | YEAR | QTY | NOTES |
|---|---|---|---|---|---|---|---|
| **SEALING RINGS** | | | | | | | |
| KT | 029600 | G742B | Sealing Ring Kit - 10M / 1T (BW35/BW65) | | 62-On | 1 | |
| 10C | 029100 | 3165007 | Primary Sun Gear (Front) with small shaft | Metal | 62-E69 | 2 | |
| 10C | 023104 | 3150877 | Primary Sun Gear (Front) with large shaft | Metal | L69-On | 2 | |
| 11C | 029104 | 3164858 | Rear Clutch drum | Metal | 62-On | 3 | |
| 12C | 029105 | 3176130 | Primary Sun Gear (Rear) | Teflon | 62-On | 1 | |
| 12C | 029101 | 3165008 | Primary Sun Gear (Rear) | Metal | 62-On | opt. | |
| 13D | 027109 | 3165806 | Output Shaft | Metal | 62-On | 3 | |
| **BUSHINGS** | | | | | | | |
| KT | 029625 | NA | Bushing Kit | | 62-On | 1 | |
| KT | 029630 | NA | Short Bushing Kit | | 62-On | 1 | |
| 14A | 029205 | 3205306 | Front Pump Body | | 62-On | 1 | |
| 15A | 029208 | 3205308 | Front Pump Drive Gear | | 62-On | 1 | |
| 16A | 029211 | 3205309 | Stator Support Front (22 & 23 spline) | | 62-On | 1 | |
| 16A | 029211A | NA | Stator Support Front (26 spline) | | 69-On | 1 | |
| 17A | 029209 | 3205307 | Stator Support Rear | | 62-On | 1 | |
| 18A | 029204 | 3205301 | Input Shaft | | 62-On | 1 | |
| 19C | 029207 | 3205303 | Sun Gear & Rear Clutch drum | | 62-On | 2 | |
| 20C | 029206 | 3205304 | Planetary Support | | 62-On | 1 | |
| 21D | 029203 | 3205305 | Output Shaft | | 62-On | 1 | |
| 22D | 029200 | 3203639 | Case | | 62-On | 1 | |
| 23E | 029201 | 3202124 | Extension Housing - closed drive | | 62-On | 1 | |
| 23E | 023224 | 3203640 | Extension Housing - open drive | | 62-On | 1 | |
| 23E | 041207 | NA | Extension Housing - 2.500" OD | | 62-On | 1 | |
| **MODULATORS** | | | | | | | |
| 24E | 033504 | 4485870 | Modulator | | 62-On | 1 | |

**NOTES**

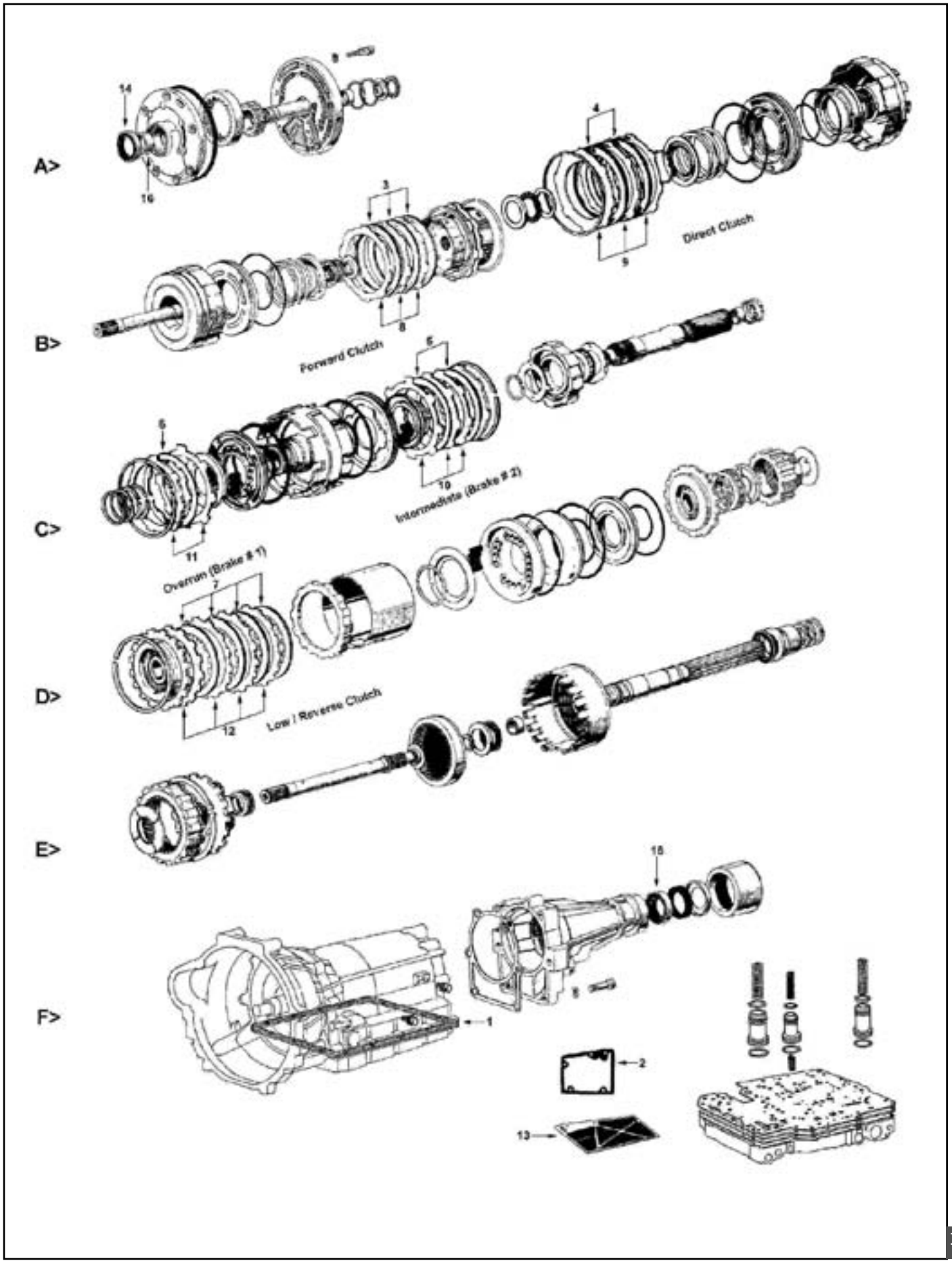
A>
B>
C>
D>
E>
F>
Direct Clutch
Forward Clutch
Intermediate (Brake # 2)
Overrun (Brake # 1)
Low / Reverse Clutch

# AISAN WARNER / BORG WARNER

## AW55 / BW55

## 1974-81

| ILL | DESCRIPTION | YEARS | FRICTION MODULE | STEEL MODULE | OVERHAUL KIT | BANNER KIT | MASTER KIT |
|---|---|---|---|---|---|---|---|
| **KITS** | | | | | | | |
| KT | Rebuilding Kit | 74-81 | 044752 | 044753 | 044808 | 044901ALS | 044901A |

| ILL | ALTO NO | REF NO | DESCRIPTION | SPEC | YEAR | QTY | NOTES |
|---|---|---|---|---|---|---|---|
| **MISCELLANEOUS GASKETS & KIT COMPONENTS** | | | | | | | |
| 1F | 044816 | 1239683-4 | Gasket, Oil Pan | Cork/Rub | 74-81 | 1 | |
| 2F | 044004 | 1233337-3 | Gasket, Filter | | 74-81 | 1 | |
| **FRICTION CLUTCHES** | | | | | | | |
| 3B | 044700 | 1377647-1 | Forward | .091 | 74-81 | 3-4 | Tan - 24T - OD: 5.00" - SM |
| 4B | 044700 | 1377647-1 | Direct | .091 | 74-81 | 3 | Tan - 24T - OD: 5.00" - SM |
| 5C | 044700 | 1377647-1 | Intermediate (Brake # 2) | .091 | 74-81 | 3 | Tan - 24T - OD: 5.00" - SM |
| 6C | 044700 | 1377647-1 | Overrun (Brake #1) | .091 | 74-81 | 1 | Tan - 24T - OD: 5.00" - SM |
| 6C | 044700W230 | 1377647-1 | * Waved Friction - replaces 044700 | | 74-81 | AR | Wave |
| 7C | 044702 | 6843255-8 | Low / Reverse | .091 | 74-81 | 4-5 | Tan - 16T - OD: 5.00" - SM |
| 7C | 044702W230 | 6843255-8 | * Waved Friction - replaces 044702 | | 74-81 | AR | Wave |
| **HI-PERFORMANCE - RED EAGLE®** | | | | | | | |
| 3B | 044740 | NA | All except Low / Reverse | .091 | 74-81 | AR | Red - 24T - OD: 5.00" - SM |
| 7C | 044742 | NA | Low / Reverse | .091 | 74-81 | 4-5 | Red - 16T - OD: 5.00" - SM |
| **HI-PERFORMANCE - UNIT PACKS (ONE Rebuild)** | | | | | | | |
| KT | 044740UP4 | NA | UNIT PACK - All except Low / Reverse | .091 | 74-81 | 1 | 4 RED EAGLE® Friction |
| KT | 044742UP5 | NA | UNIT PACK - Low / Reverse | .091 | 74-81 | 1 | 5 RED EAGLE® Friction |
| **STEEL CLUTCHES** | | | | | | | |
| 8B | 044701 | 1233029-6 | Forward | .071 | 74-81 | 3-4 | 8T - ID: 4.012" |
| 9B | 044701 | 1233029-6 | Direct | .071 | 74-81 | 3 | 8T - ID: 4.012" |
| 10C | 044705 | 1340039-5 | Intermediate (Brake # 2) | .071 | 74-81 | 3 | 8T - ID: 4.012" |
| 11C | 044705 | 1340039-5 | Overrun (Brake # 1) | .071 | 74-81 | 1 | 8T - ID: 4.012" |
| 12C | 044703 | 6814809-7B | Low / Reverse | .071 | 74-81 | 4 | 15T - ID: 4.012" |
| **HI-PERFORMANCE - KOLENE®** | | | | | | | |
| 8B | 044701K180 | NA | Forward or Direct | .071 | 74-81 | 3-4 | 8T - ID: 4.012" |
| 10C | 044705K180 | NA | Intermediate or Overrun | .071 | 74-81 | 3/1 | 8T - ID: 4.012" |
| 12C | 044703K180 | NA | Low / Reverse | .071 | 74-81 | 4 | 15T - ID: 4.012" |
| **HI-PERFORMANCE - UNIT PACKS (ONE Rebuild)** | | | | | | | |
| KT | 044701KUP4 | NA | UNIT PACK - Forward or Direct | .071 | 74-81 | 1 | 4 KOLENE® Steel |
| KT | 044705KUP4 | NA | UNIT PACK - Intermediate or Overrun | .071 | 74-81 | 1 | 4 KOLENE® Steel |
| KT | 044703KUP4 | NA | UNIT PACK - Low / Reverse | .071 | 74-81 | 1 | 4 KOLENE® Steel |
| **FILTERS** | | | | | | | |
| KT | FK044940 | NA | Filter Kit | .071 | 74-81 | 1 | |
| 13F | 044940 | 35303-22020 | Filter | .071 | 74-81 | 1 | |
| **METAL CLAD SEALS** | | | | | | | |
| 14A | 044400 | 1340096-5 | Front Pump | | 74-81 | 1 | |
| 15F | 044415 | 235728-3 | Extension Housing | | 74-81 | 1 | |
| N I | 044410 | 1233064-3 | Manual Lever | | 74-81 | 1 | |
| **SEALING RINGS** | | | | | | | |
| KT | 044600A | D415 | Kit | | 74-81 | 1 | |
| **BUSHINGS** | | | | | | | |
| KT | 044625 | NA | Bushing Kit | | 74-81 | 1 | |
| 16A | 044200 | NA | Front Pump | | 74-81 | 1 | |

**NOTES**

# AISAN WARNER / BORG WARNER

## AW70, 71, 72
## 4 SPEED
## 1981-87

| ILL | DESCRIPTION | YEARS | FRICTION MODULE | STEEL MODULE | OVERHAUL KIT | BANNER KIT | MASTER KIT |
|---|---|---|---|---|---|---|---|
| **KITS** | | | | | | | |
| KT | Rebuilding Kit - AW70 / AW71 | 81-97 | 044752F | 044753F | 044810 | 044911LS | 044911 |

| ILL | ALTO NO | REF NO | DESCRIPTION | SPEC | YEAR | QTY | NOTES |
|---|---|---|---|---|---|---|---|
| **MISCELLANEOUS GASKETS & KIT COMPONENTS** | | | | | | | |
| 1G | 044816 | 1233383-7 | Gasket, Oil Pan | Cork/Rub | 81-97 | 1 | |
| 2F | 044004B | 3520329-8 | Gasket, Filter - AW70 / AW71 | | 81-97 | 1 | |
| 3F | 044004D | 3520330-6 | Gasket, Filter - AW72 | | 81-97 | 1 | |
| **FRICTION CLUTCHES** | | | | | | | |
| 4C | 044700 | 1340040-3 | Forward | .091 | 81-97 | 3-4 | Tan - 24T - OD: 5.000" - SM |
| 4C | 044710 | 3520341-3 | Forward - some AW71 | .080 | 81-97 | 3-4 | Tan - 24T - OD: 5.000" - SM |
| 5C | 044700 | 1340040-3 | Direct | .091 | 81-97 | 3 | Tan - 24T - OD: 5.000" - SM |
| 6A | 044700 | 1340040-3 | Overdrive Direct | .091 | 81-97 | 1 | Tan - 24T - OD: 5.000" - SM |
| 7B | 065702 | 1239992-9 | Overdrive Brake | .067 | 81-97 | 3 | Heg - 33T - OD: 5.589" - SM |
| 8D | 044700 | 1340040-3 | Overrun (Brake # 1) | .091 | 81-97 | 1 | Tan - 24T - OD: 5.000" - SM |
| 9D | 044700 | 1340040-3 | Intermediate (Brake # 2) | .091 | 81-97 | 3 | Tan - 24T - OD: 5.000" - SM |
| 9D | 044710 | 3520341-3 | Intermediate (Brake # 2) - some AW71 | .080 | 81-97 | 3 | Tan - 24T - OD: 5.000" - SM |
| 10E | 044702 | 6814810-5 | Low / Reverse | .091 | 81-97 | 4-5 | Tan - 16T - OD: 5.000" - SM |
| 4C | 044700W230 | 1340040-3 | * Waved Friction - replaces 044700 | | 81-97 | AR | Wave |
| 10E | 044702W230 | 6814810-5 | * Waved Friction - replaces 044702 | | 81-97 | AR | Wave |
| **HI-PERFORMANCE - RED EAGLE®** | | | | | | | |
| 4C | 044740 | NA | Various | .091 | 81-97 | AR | Red - 24T - OD: 5.000" - SM |
| 10E | 044742 | NA | Low / Reverse | .091 | 81-97 | 4-5 | Red - 16T - OD: 5.000" - SM |
| **HI-PERFORMANCE - UNIT PACKS (ONE Rebuild)** | | | | | | | |
| KT | 044740UP4 | NA | UNIT PACK - Various | .091 | 81-97 | 1 | 4 RED EAGLE® Friction |
| KT | 044742UP5 | NA | UNIT PACK - Various | .091 | 81-97 | 1 | 5 RED EAGLE® Friction |
| **STEEL CLUTCHES** | | | | | | | |
| 11C | 044701 | 1233029-6 | Forward | .071 | 81-97 | 3-4 | 8T - ID: 4.012" |
| 11C | 044701-140 | 1340057-7 | Forward - some AW71 | .055 | 81-97 | 3-4 | 8T - ID: 4.012" |
| 11C | 044711 | 1239723-8 | Forward - AW72 | .079 | 90-97 | 3-4 | 8T - ID: 4.012" |
| 12C | 044701 | 1233029-6 | Direct | .071 | 81-88 | 3 | 8T - ID: 4.012" |
| 12C | 044711 | 1239723-8 | Direct | .079 | 89-97 | 3 | 8T - ID: 4.012" |
| 13A | 044701 | 1233029-6 | Overdrive Direct - AW70 | .071 | 81-97 | 1 | 8T - ID: 4.012" |
| 13A | 044711 | 1239723-8 | Overdrive Direct - AW71 | .079 | 88-97 | 1 | 8T - ID: 4.012" |
| 13A | 044767 | 3502188-0 | Overdrive Direct (dish) - AW72 | .055 | 90-97 | 1 | 8T - ID: 4.012" |
| 14B | 044705 | 1340028-8 | Overdrive Brake (long tooth) | .071 | 81-97 | 4 | 8T - ID: 4.012" |
| 14B | 044707 | 1239738-6 | Overdrive Brake | .079 | 88-97 | 3 | 7T - ID: 4.578" |
| 15D | 044705 | 1340028-8 | Overrun (Brake # 1) | .071 | 81-97 | 1 | 8T - ID: 4.012" |
| 16D | 044725 | NA | Intermediate (Brake # 2) | .091 | 81-97 | 3 | 8T - ID: 4.012" |
| 17E | 044703 | 6814809-7 | Low / Reverse | .071 | 81-97 | 4 | 15T - ID: 4.012" |
| **HI-PERFORMANCE - KOLENE®** | | | | | | | |
| 11C | 044701K180 | NA | Various | .071 | 81-97 | AR | 8T - ID: 4.012" |
| 14B | 044705K180 | NA | Various (long tooth) | .071 | 81-97 | AR | 8T - ID: 4.012" |
| 17E | 044703K180 | NA | Low / Reverse | .071 | 81-97 | 4 | 15T - ID: 4.012" |
| **HI-PERFORMANCE - UNIT PACKS (ONE Rebuild)** | | | | | | | |
| KT | 044701KUP4 | NA | UNIT PACK - Various | .071 | 81-97 | 1 | 4 KOLENE® Steel |
| KT | 044705KUP4 | NA | UNIT PACK - Various (long tooth) | .071 | 81-97 | 1 | 4 KOLENE® Steel |
| KT | 044703KUP4 | NA | UNIT PACK - Low / Reverse | .071 | 81-97 | 1 | 4 KOLENE® Steel |
| **FILTERS** | | | | | | | |
| KT | FK044946 | NA | Filter Kit - AW70 / AW71 | | 81-97 | 1 | |
| KT | FK044948 | NA | Filter Kit - AW72 | | 81-97 | 1 | |
| 18G | 044946 | 1239829-3 | Filter - AW70 / AW71 | | 81-97 | 1 | |
| 18G | 044948 | NA | Filter - AW72 | | 81-97 | 1 | |
| **METAL CLAD SEALS** | | | | | | | |
| 19A | 044400 | 1340096-5 | Front Pump | | 81-97 | 1 | |
| 20G | 044408 | 235728-3 | Extension Housing - AW70 / AW72 | | 79-97 | 1 | |

# AISAN WARNER / BORG WARNER

## AW70, 71, 72
## 4 SPEED
## 1981-87

| ILL | ALTO NO | REF NO | DESCRIPTION | SPEC | YEAR | QTY | NOTES |
|---|---|---|---|---|---|---|---|
| **METAL CLAD SEALS** | | | | | | | ...Continued |
| 20G | TBA | 3549226-3 | Extension Housing - AW71 | | 92-97 | 1 | |
| N I | 044410 | 3549669-4 | Manual Lever | | 81-97 | 1-2 | |
| **SEALING RINGS** | | | | | | | |
| KT | 044602 | NA | Sealing Ring Kit | | 81-97 | 1 | |
| 21A | 044111A | 3549632-2 | Front Pump Stator | Teflon | 81-97 | 2 | |
| 22B | 044111A | 3549632-2 | Overdrive Stator | Teflon | 81-97 | 2 | |
| N I | 044111A | 3549632-2 | Center Support | Teflon | 81-97 | 3 | |
| 23D | 044103 | 1239534-9 | Sun Gear - AW70 | Metal | 81-97 | 2 | |
| 23D | 044106 | 1239770-9 | Sun Gear - AW71 / AW72 | Metal | 81-97 | 2 | |
| 24F | 044104 | 1233102-1 | Output Shaft - AW70 / AW71 | Metal | 81-97 | 3 | |
| 24F | 044108 | NA | Output Shaft - AW72 | Metal | 81-97 | 3 | |
| 25F | 044107 | 1239780-8 | Intemerdiate Shaft | Teflon | 81-97 | 1 | |
| **BUSHINGS** | | | | | | | |
| KT | 044625 | NA | Bushing Kit | | 81-97 | 1 | |
| N I | 044200 | NA | Front Pump body | | 81-97 | 1 | |

**NOTES**

# AISAN WARNER / BORG WARNER

## AISIN WARNER

## AW50-40LE, AW50-41LE 1989-On
## AW50-42LE, LM 1999-On

| ILL | DESCRIPTION | YEARS | FRICTION MODULE | STEEL MODULE | OVERHAUL KIT | BANNER KIT | MASTER KIT |
|---|---|---|---|---|---|---|---|
| **KITS** | | | | | | | |
| KT | Rebuilding Kit - LE | 89-E97 | 110752 | 110753 | 110800 | 110901LS | 110901 |
| KT | Rebuilding Kit - LE | L97-99 | 110752 | 110753 | 110802 | 110903LS | 110903 |
| KT | Rebuilding Kit - LE | 99-On | 110752A | 110753A | 110802 | 110903ALS | 110903A |
| KT | Rebuilding Kit - LE 2.5L KIA | 00-On | 110750D | | 110802 | NA | 110903B |
| KT | Rebuilding Kit - LM | 99-On | FR & ST 110752C | 110753C | 110802 | 110905LS | 110905 |

| ILL | ALTO NO | REF NO | DESCRIPTION | SPEC | YEAR | QTY | NOTES |
|---|---|---|---|---|---|---|---|
| **FRICTION CLUTCHES** | | | | | | | |
| N I | 110700 | 90542422 | Direct (C2) | .067 | 89-98 | 2-4 | Heg - 34T - OD: 4.260" - SM |
| N I | 110700A170 | NA | Direct (C2) | .067 | 99-On | 4 | Heg - 34T - OD:4.482" - SM |
| N I | 110700 | 90542422 | Coast (B1) | .067 | 89-On | 3-4 | Heg - 34T - OD: 4.260" - SM |
| N I | 110700 | 90542422 | Underdrive (C3) - LE | .067 | 89-On | 3-4 | Heg - 34T - OD: 4.260" - SM |
| N I | 110700A170 | NA | Underdrive (C3) - LM | .067 | 99-On | 3-4 | Heg - 34T - OD:4.482" - SM |
| N I | 110702 | 90542936 | Forward (C1) | .067 | 89-On | 4 | Tan - 46T - OD: 5.374" - SM |
| N I | 110704 | 90348808 | Low / Reverse (B3) | .067 | 89-On | 5-6 | Tan - 33T - OD: 6.302" - SM |
| N I | 110704A160 | NA | 2nd Brake (B2) - LE | .067 | 99-On | 5-6 | Heg - 40T - OD: 6.302" - SM |
| N I | 110704A190 | NA | 2nd Brake (B2) - LM | .075 | 99-On | 4 | Heg - 40T - OD: 6.302" - SM |
| N I | 110706 | 90542947 | 2nd Brake (B2) | .067 | 89-98 | 3 | Tan - 33T - OD: 6.302" - PL |
| N I | 110710-150 | NA | Transfer Case | .059 | 89-On | AR | Heg - 61T - OD: 5.870" - PL |
| **STEEL CLUTCHES** | | | | | | | |
| N I | 110701 | 90348774 | Direct (C2) | .071 | 89-98 | 4 | 12T - ID: 3.582" |
| N I | 110701A180 | NA | Direct (C2) | .071 | 99-On | 4 | 18T - ID: 3.582" |
| N I | 110709 | 90348787 | Coast (B1) | .071 | 89-On | 2-3 | 8T - ID: 3.582" |
| N I | 110709 | 90348787 | Underdrive (C3) - LE | .071 | 89-98 | 3-4 | 8T - ID: 3.582" |
| N I | 110709A250 | NA | Underdrive (C3) - LE, LM | .098 | 99-On | 3 | 18T - ID: 3.582" |
| N I | 110703 | 90348778 | Forward (C1) | .071 | 89-On | 4 | 12T - ID: 4.491" |
| N I | 110703-195 | 90542937 | Forward (C1) - selective | .077 | 89-On | AR | 12T - ID: 4.491" |
| N I | 110705 | 90348807 | Low / Reverse (B3) | .071 | 89-On | 5 | 15T - ID: 5.661" |
| N I | 110707 | 90348795 | 2nd Brake (B2) - LE | .098 | 89-98 | 2 | 10T - ID: 5.661" |
| N I | 110707-180 | NA | 2nd Brake (B2) - LE selective | .071 | 89-98 | AR | 10T - ID: 5.661" |
| N I | 110707B250 | NA | 2nd Brake (B2) - LE | .098 | 99-On | 4 | 10T - ID: 5.538" |
| N I | 110707B180 | NA | 2nd Brake (B2) - LM | .071 | 99-On | 4 | 10T - ID: 5.538" |
| N I | 110711-150 | NA | Transfer Case | .059 | 89-On | AR | 66T - ID: 5.220" |
| **PRESSURE PLATES** | | | | | | | |
| N I | 110701-380 | NA | Direct | .150 | 89-On | AR | 12T - ID: 3.584" |
| N I | TBA | 0711756 | Forward (C1) | .142 | 89-On | 1 | |
| N I | 110703-380 | 0711757 | Forward (C1) | .150 | 89-On | 1 | 12T - ID: 4.491" |
| N I | TBA | 0711758 | Forward (C1) | .158 | 89-On | 1 | |
| N I | 110765-380 | 90348809 | Low / Reverse (B3) | .150 | 89-On | 2 | 15T |
| **BANDS** | | | | | | | |
| N I | 110950 | 90348844 | Band - B3 | | 89-On | 1 | |
| **FILTERS** | | | | | | | |
| N I | 110940 | 90348728 | Filter | | 89-On | 1 | |
| **METAL CLAD SEALS** | | | | | | | |
| N I | 110400 | 90348749 | Front Pump | | 89-On | 1 | |
| N I | 110425 | 90348718 | Axle - with flange (Opel) | | 89-On | 1 | |
| N I | 110426 | 6843112-1 | Axle - without flange (Volvo) | | 89-On | 1 | |
| N I | 044410 | NA | Manual Lever | | 89-On | 1 | |

**NOTES**

# AISAN WARNER / BORG WARNER

## AISIN WARNER
## AW55-50SN
## 1999-On

| ILL | DESCRIPTION | YEARS | FRICTION MODULE | STEEL MODULE | OVERHAUL KIT | BANNER KIT | MASTER KIT |
|---|---|---|---|---|---|---|---|
| **KITS** | | | | | | | |
| KT | Rebuilding Kit | 99-On | 159752 | 159753 | 159800 | 159901LS | 159901 |

| ILL | ALTO NO | REF NO | DESCRIPTION | SPEC | YEAR | QTY | NOTES |
|---|---|---|---|---|---|---|---|
| **FRICTION CLUTCHES** | | | | | | | |
| N I | 110700 | 90542422 | B1 Coast - Brake | .067 | 99-On | 3 | Heg - 34T - OD: 4.260" - SM |
| N I | 110704A160 | NA | B2 - 2nd Brake | .067 | 99-On | 4 | Heg - 34T - OD: 6.302" - SM |
| N I | 110704 | 90348808 | B3 - Lo/Rev | .067 | 99-On | 4 | Tan - 33T - OD: 6.302" - SM |
| N I | 110700B175 | NA | C2 - Direct | .068 | 99-On | 4 | Heg - 34T - OD: 4.260" - SB |
| N I | 159702-175 | NA | C1 - Forward | .068 | 99-On | 4 | Heg - 49T - OD: 5.375" - SB |
| N I | 110700A170 | NA | C3 - Underdrive | .067 | 99-On | 4 | Heg - 34T - OD:4.482" - SM |
| N I | 159712-175 | NA | B4 - 5th Brake | .068 | 99-On | 6 | Heg - 47T - OD:5.551" - SB |
| **STEEL CLUTCHES** | | | | | | | |
| N I | 110709 | 90348787 | B1 Coast - Brake | .071 | 99-On | 3 | 8T - ID: 3.582" |
| N I | 110707B180 | NA | B2 - 2nd Brake | .071 | 99-On | 4 | 10T - ID: 5.538" |
| N I | 159705-180 | NA | B3 - Lo/Rev | .071 | 99-On | 3 | 13T - ID: 5.657" |
| N I | 110701 | 90348774 | C2 - Direct | .071 | 99-On | 4 | 12T - ID: 3.582" |
| N I | 110703-195 | 90542937 | C1 - Forward | .073 | 99-On | 4 | 12T - ID: 4.491" |
| N I | 110701A180 | NA | C3 - Underdrive | .071 | 99-On | 4 | 18T - ID: 3.582" |
| N I | 159713-180 | NA | B4 - 5th Brake | .071 | 99-On | 6 | 12T - ID: 4.898" |
| **FILTERS** | | | | | | | |
| N I | 159940 | NA | Filter | | 99-On | 1 | |

**NOTES**

# AISAN WARNER / BORG WARNER

## AISIN WARNER

## AW60-40, AW60-42LE (AF-13) 1995-On
## AW60-40SN 1998-On

| ILL | DESCRIPTION | YEARS | FRICTION MODULE | STEEL MODULE | OVERHAUL KIT | BANNER KIT | MASTER KIT |
|---|---|---|---|---|---|---|---|
| **KITS** | | | | | | | |
| KT | Rebuilding Kit - 60-42LE | 95-On | 115752 | 115753 | 115800 | 115901LS | 115901 |
| KT | Rebuilding Kit - 60-41SN | 98-On | 115752A | 115753A | TBA | 115903LS | 115903 |

| ILL | ALTO NO | REF NO | DESCRIPTION | SPEC | YEAR | QTY | NOTES |
|---|---|---|---|---|---|---|---|
| **FRICTION CLUTCHES** | | | | | | | |
| N I | 115700 | 90444669 | Forward | .067 | 95-On | 2 | Heg - 51T - OD: 5.600" - SM |
| N I | 115700 | 90444669 | 3-4 Clutch | .067 | 95-On | 2 | Heg - 51T - OD: 5.600" - SM |
| N I | 115702 | 90444546 | Reverse - 60-42LE | .071 | 95-On | 2 | Tan - 44T - OD: 4.962" - SM |
| N I | 115702A180 | 09120553 | Reverse - 60-41SN | .071 | 98-On | 2 | Tan - 44T - OD: 5.250" - SM |
| N I | 110704 | NA | Low / Reverse | .067 | 95-On | 4 | Tan - 33T - OD: 6.300" - SM |
| N I | 115708 | 90444685 | Coast | .067 | 95-On | 2 | Tan - 44T - OD: 4.962" - SM |
| **STEEL CLUTCHES** | | | | | | | |
| N I | 115701 | 90444670 | Forward | .071 | 95-On | 3 | 20T - ID: 4.680" |
| N I | 115707 | 90444885 | 3-4 Clutch | .071 | 95-97 | 2-3 | 36T - ID: 4.680" |
| N I | 115707-250 | NA | 3-4 Clutch | .098 | 98-On | 1 | 36T - ID: 4.680" |
| N I | 115703 | 90444686 | Reverse - 60-42LE | .071 | 95-On | 2 | 6T - ID: 4.100" |
| N I | 115703A180 | 09120554 | Reverse - 60-41SN | .071 | 98-On | 2 | 6T - ID: 4.100" |
| N I | 115705 | 90444973 | Low / Reverse | .071 | 95-On | 2 | 15T - ID: 5.660" |
| N I | 115709 | 90444863 | Coast | .071 | 95-On | 2-3 | 16T - ID: 4.092" |
| **PRESSURE PLATES** | | | | | | | |
| N I | 115701-360 | NA | Forward | .141 | 95-On | 1 | |
| N I | 115707-360 | NA | 3-4 Clutch | .141 | 95-On | AR | |
| N I | 115707-390 | NA | 3-4 Clutch | .153 | 95-On | AR | |
| N I | 115705-360 | NA | Low / Reverse | .141 | 95-On | 1 | |
| N I | 115709-325 | 90444550 | Coast | .126 | 95-On | AR | |
| N I | 115709-360 | NA | Coast | .141 | 95-On | AR | |
| N I | 115709-383 | NA | Coast | .148 | 95-On | AR | |
| N I | 115709-400 | NA | Coast | .157 | 95-On | AR | |
| **BANDS** | | | | | | | |
| N I | 115950 | 26971-65G10 | Band | | 95-On | 1 | |
| **FILTERS** | | | | | | | |
| N I | 115940 | 26445-60G10 | Filter | | 95-On | 1 | |
| **METAL CLAD SEALS** | | | | | | | |
| N I | 044400 | 22881-60G10 | Front Pump | | 95-On | 1 | |
| N I | 115425 | 27431-73B20 | Axle - Right | 2.285 | 95-On | 1 | |
| N I | 115426 | 09283-35037 | Axle - Left | 2.125 | 95-On | 1 | |
| N I | 044410 | 25981-60G10 | Manual Lever | | 95-On | 1 | |

# AISAN WARNER / BORG WARNER

## AISIN WARNER 450-43LE
## ISUZU RNJ
## 1998-On

| ILL | DESCRIPTION | YEARS | FRICTION MODULE | STEEL MODULE | OVERHAUL KIT | BANNER KIT | MASTER KIT |
|---|---|---|---|---|---|---|---|
| **KITS** | | | | | | | |
| KT | Rebuilding Kit | 98-On | 153752 | 153753 | 153800 | 153901LS | 153901 |

| ILL | ALTO NO | REF NO | DESCRIPTION | SPEC | YEAR | QTY | NOTES |
|---|---|---|---|---|---|---|---|
| **MISCELLANEOUS GASKETS & KIT COMPONENTS** | | | | | | | |
| N I | 083816 | NA | Gasket, Oil Pan | Cork/Rub | 98-On | 1 | |
| **FRICTION CLUTCHES** | | | | | | | |
| N I | 083700 | 8-97256-973-0 | Forward | .083 | 98-On | 7 | Tan - 46T - OD: 4.987" - SM |
| N I | 083700A210 | 8-97256-973-0 | Forward | .083 | 98-On | 7 | Heg - 46T - OD: 4.987" - SM |
| N I | 083700-180 | NA | Forward - selective | .071 | 98-On | AR | Heg - 46T - OD: 4.990" - SM |
| N I | 083700 | 8-97256-973-0 | Direct | .083 | 98-On | 5 | Tan - 46T - OD: 4.987" - SM |
| N I | 083700A210 | 8-97256-973-0 | Direct | .083 | 98-On | 5 | Heg - 46T - OD: 4.987" - SM |
| N I | 083700-198 | NA | Direct - selective | .078 | 98-On | 5 | Heg - 46T - OD: 4.987" - SM |
| N I | 083702 | 8-97256-938-0 | 2nd Brake | .083 | 98-On | 5 | Tan - 70T - OD: 6.890" - SM |
| N I | 083702B210 | 8-97256-938-0 | 2nd Brake | .083 | 98-On | 5 | Heg - 70T - OD: 6.890" - SM |
| N I | 083704 | 8-97256-954-0 | Low / Reverse | .067 | 98-On | 6 | Tan - 70T - OD: 6.300" - SM |
| N I | 083704A170 | 8-97256-954-0 | Low / Reverse | .067 | 98-On | 6 | Heg - 70T - OD: 6.300" - SM |
| N I | 083710-210 | 8-97257-043-0 | Overdrive Direct | .083 | 98-On | 3 | Tan - 47T - OD: 4.987" - SM |
| N I | 083710A210 | 8-97257-043-0 | Overdrive Direct | .083 | 98-On | 3 | Heg - 47T - OD: 4.987" - SM |
| N I | 083712-160 | 8-97257-023-0 | Overdrive Brake | .063 | 98-On | 3 | Heg - 20T - OD: 7.230" - SM |
| N I | 083712-210 | NA | Overdrive Brake- selective | .082 | 98-On | 3 | Tan - 20T - OD: 7.230" - SM |
| N I | 083712A210 | NA | Overdrive Brake- selective | .082 | 98-On | 3 | Heg - 20T - OD: 7.230" - SM |
| **STEEL CLUTCHES** | | | | | | | |
| N I | 083701 | 8-97256-967-0 | Forward | .071 | 98-On | 7 | 10T - ID: 3.997" |
| N I | 083701-190 | NA | Forward - selective | .075 | 98-On | AR | 10T - ID: 3.997" |
| N I | 083701-200 | 8-97256-970-0 | Forward - selective | .079 | 98-On | AR | 10T - ID: 3.997" |
| N I | 083701-220 | 8-97256-971-0 | Forward - selective | .087 | 98-On | AR | 10T - ID: 3.997" |
| N I | 083701-240 | 8-97256-972-0 | Forward - selective | .095 | 98-On | AR | 10T - ID: 3.997" |
| N I | 083701-240 | 8-97256-972-0 | Direct | .095 | 98-On | 5 | 10T - ID: 3.400" |
| N I | 083701 | 8-97256-967-0 | Direct - selective | .071 | 98-On | AR | 10T - ID: 3.997 |
| N I | 083701-190 | NA | Direct - selective | .075 | 98-On | AR | 10T - ID: 3.400 |
| N I | 083701-200 | 8-97256-970-0 | Direct - selective | .079 | 98-On | AR | 10T - ID: 3.997 |
| N I | 083701-220 | 8-97256-971-0 | Direct - selective | .087 | 98-On | AR | 10T - ID: 3.997 |
| N I | 083703-280 | 8-97256-939-0 | 2nd Brake | .110 | 98-On | 5 | 6T - ID: 5.995" |
| N I | 083705-280 | 8-97256-951-0 | Low / Reverse | .110 | 98-On | 6 | 16T - ID: 5.995" |
| N I | 083711-200 | 8-97256-969-0 | Overdrive Direct | .078 | 98-On | 3 | 20T - ID: 4.050" |
| N I | 083703A240 | 8-97257-021-0 | Overdrive Brake | .095 | 98-On | 2 | 6T - ID: 6.402 |
| **FILTERS** | | | | | | | |
| N I | 153940 | 97202067 | Filter | | 98-On | 1 | |

**NOTES**

# AISAN WARNER / BORG WARNER

## AISIN A581
## FL50, FL60, FL70 FREIGHTLINER
## 2001-On

| ILL | DESCRIPTION | YEARS | FRICTION MODULE | STEEL MODULE | OVERHAUL KIT | BANNER KIT | MASTER KIT |
|---|---|---|---|---|---|---|---|
| **KITS** | | | | | | | |
| KT | Rebuilding Kit | 01-On | 168752 | 168753 | 168800 | 168901LS | 168901 |

| ILL | ALTO NO | REF NO | DESCRIPTION | SPEC | YEAR | QTY | NOTES |
|---|---|---|---|---|---|---|---|
| **FRICTION CLUTCHES** | | | | | | | |
| N I | 168700-243 | NA | D-1 Clutch | .096 | 01-On | 5 | Heg - 74T - OD: 9.01" |
| N I | 168702-233 | NA | D-2, D-3 Clutch | .092 | 01-On | 12 | Heg - 48T - OD: 6.275" |
| N I | 168704-230 | NA | B-1, B-2, B-3 Clutch | .092 | 01-On | 16 | Heg - 74T - OD: 9.396" |
| N I | 168712-315 | NA | Torque Converter | .124 | 01-On | 1 | Heg - 50T - OD: 9.800" |
| **STEEL CLUTCHES** | | | | | | | |
| N I | 168701-250 | NA | D-1 Clutch | .098 | 01-On | 5 | 6T - ID: 7.604" |
| N I | 168703-220 | NA | D-2, D-3 Clutch | .087 | 01-On | 12 | 16T - ID: 5.040" |
| N I | 168705-250 | NA | B-1, B-2 Clutch | .098 | 01-On | 11 | 8T - ID: 7.639" |
| N I | 168705-285 | NA | B-1, B-2 Clutch - selective | .112 | 01-On | 2 | 8T - ID: 7.639" |
| N I | 168707-250 | NA | B-3 Clutch | .098 | 01-On | 7 | 24T - ID: 7.606" |
| N I | 168707-330 | NA | B-3 Clutch - selective | .130 | 01-On | 1 | 24T - ID: 7.606" |

**NOTES**

# HONDA

## 3 SPEED - 106mm Clutch
## 1976-85

A>

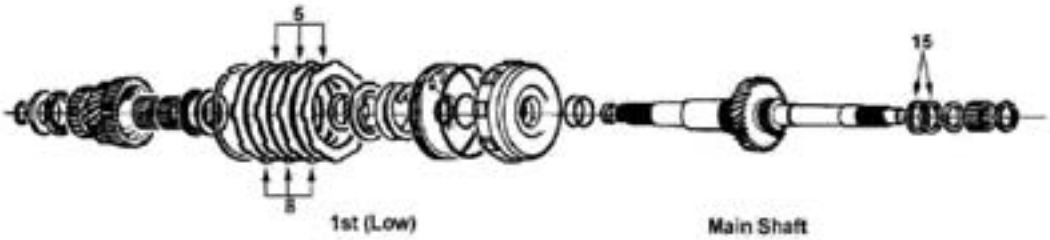


B>

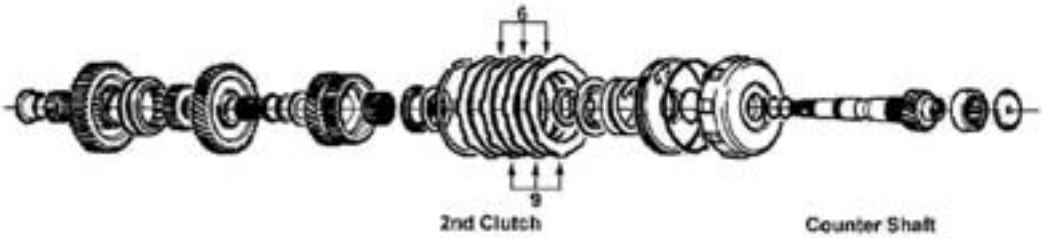


C>

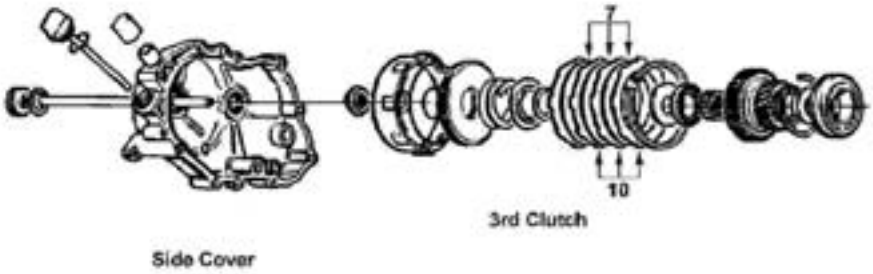


D>

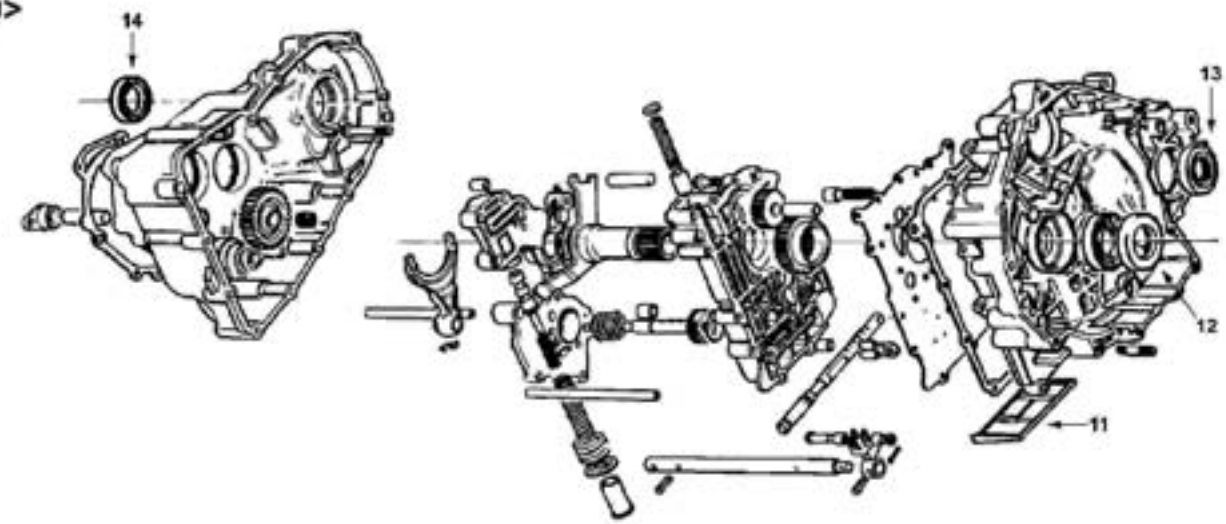

# HONDA
## 3 SPEED - 106mm Clutch
## 1976-85

| ILL | DESCRIPTION | YEARS | FRICTION MODULE | STEEL MODULE | OVERHAUL KIT | BANNER KIT | MASTER KIT |
|---|---|---|---|---|---|---|---|
| **KITS** | | | | | | | |
| KT | Rebuilding Kit | 76-85 | 058752 | 058753 | 058800 | 058901LS | 058901 |

| ILL | ALTO NO | REF NO | DESCRIPTION | SPEC | YEAR | QTY | NOTES |
|---|---|---|---|---|---|---|---|
| **FRICTION CLUTCHES** | | | | | | | |
| 5A | 058700 | 22544-PA9-000 | 1st | .075/1.9 | 76-85 | 3 | Tan - 38T - OD: 4.171" - PL |
| 6B | 058700 | 22544-PA9-000 | 2nd | .075/1.9 | 76-85 | 3 | Tan - 38T - OD: 4.171" - PL |
| 7C | 058700 | 22544-PA9-000 | 3rd | .075/1.9 | 76-85 | 3 | Tan - 38T - OD: 4.171" - PL |
| **STEEL CLUTCHES** | | | | | | | |
| 8A | 058701 | 22543-PA9-010 | 1st | .078/2.0 | 76-85 | 3 | 8T - ID: 3.220" |
| 9B | 058701 | 22543-PA9-010 | 2nd | .078/2.0 | 76-85 | 3 | 8T - ID: 3.220" |
| 10C | 058701 | 22543-PA9-010 | 3rd | .078/2.0 | 76-85 | 3 | 8T - ID: 3.220" |
| N I | 058701A | NA | 1st, 2nd & 3rd - selective | .071/1.8 | 76-85 | AR | 8T - ID: 3.220" |
| N I | 058701-210 | NA | 1st, 2nd & 3rd - selective | .083/2.1 | 76-85 | AR | 8T - ID: 3.220" |
| **FILTERS** | | | | | | | |
| 11D | 058940 | 25420-PA9-000 | Filter | | 76-85 | 1 | |
| **METAL CLAD SEALS** | | | | | | | |
| 12D | 047401 | 91207-639-015 | Converter Housing | | 76-85 | 1 | |
| 13D | 047402 | 91206-639-005 | Left Axle | 68mm | 76-85 | 1 | |
| 14D | 047400 | 91205-611-005 | Right Axle | 56mm | 76-85 | 1 | |
| N I | 047415 | 91209-551-015 | Speedometer | | 76-85 | 1 | |
| N I | 058401 | 91201-PA9-004 | Throttle Shaft | 18mm | 76-85 | 1 | |
| N I | 047410 | 91209-612-003 | Manual Lever | 22mm | 76-85 | 1 | |
| **SEALING RINGS** | | | | | | | |
| KT | 058601 | F601A | Sealing Ring Kit - 3M | | 76-85 | 1 | |
| 15A | 058100 | 22814-PA9-023 | Mainshaft | Metal | 76-85 | 2-3 | |

**NOTES**

# HONDA

## 4 SPEED
## 2 SHAFT (106mm Clutch)
## 1983-85

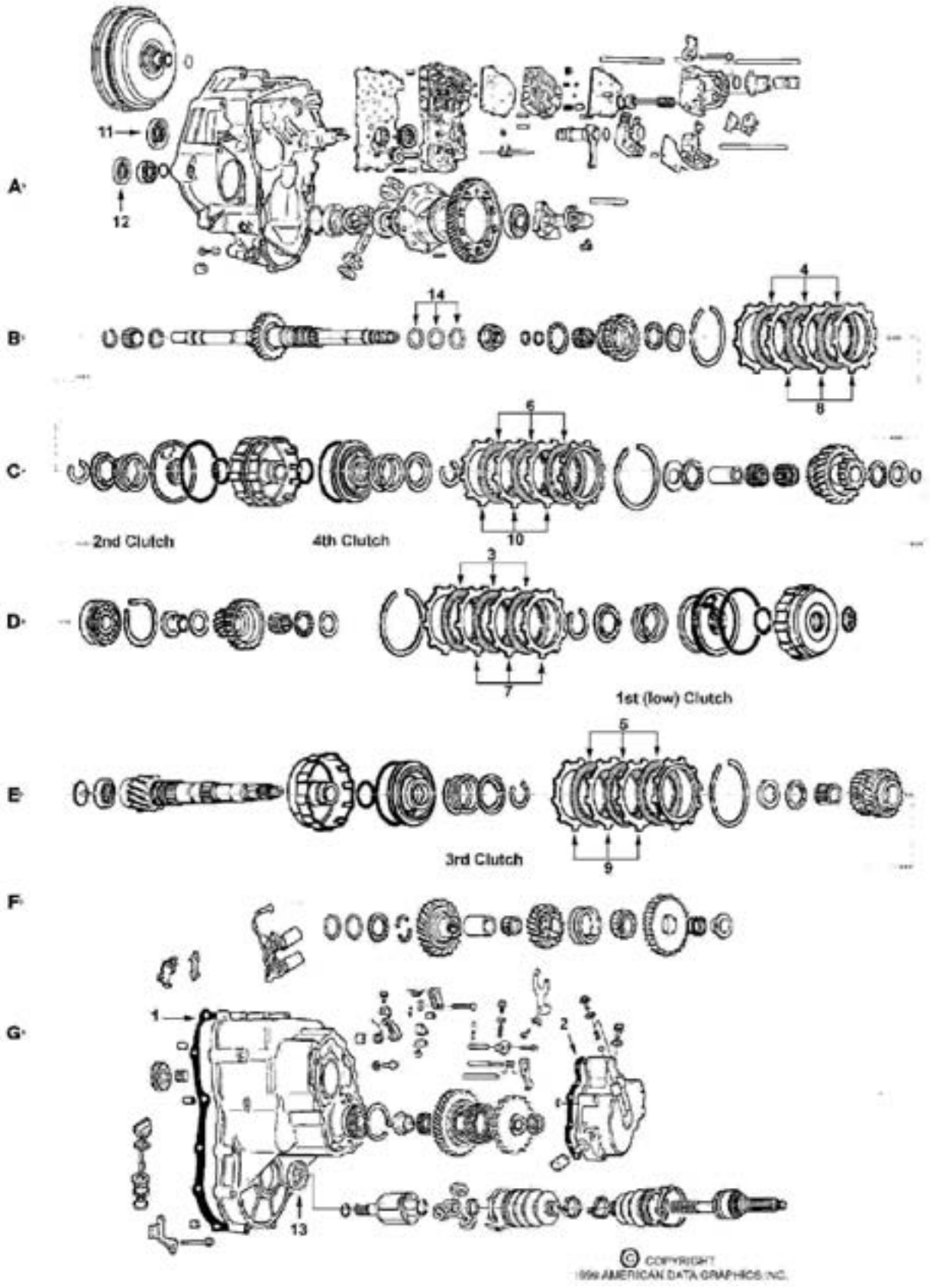

# HONDA
## 4 SPEED
## 2 SHAFT (106mm Clutch)
## 1983-85

| ILL | DESCRIPTION | YEARS | FRICTION MODULE | STEEL MODULE | OVERHAUL KIT | BANNER KIT | MASTER KIT |
|---|---|---|---|---|---|---|---|
| **KITS** | | | | | | | |
| KT | Rebuilding Kit - AK | 83-85 | 058752A | 058753A | 058802 | 058901ALS | 058901A |

| ILL | ALTO NO | REF NO | DESCRIPTION | SPEC | YEAR | QTY | NOTES |
|---|---|---|---|---|---|---|---|
| **MISCELLANEOUS GASKETS & KIT COMPONENTS** | | | | | | | |
| 1G | TBA | 21811-PC9-000 | Gasket, Case | | 83-85 | 1 | |
| 2G | TBA | 21812-PC9-000 | Gasket, Right Side | | 83-85 | 1 | |
| **FRICTION CLUTCHES** | | | | | | | |
| 3D | 058700 | Various | 1st | .075/1.9 | 83-85 | 3 | Tan - 38T - OD: 4.171" - PL |
| 4B | 058700 | Various | 2nd | .075/1.9 | 83-85 | 3 | Tan - 38T - OD: 4.171" - PL |
| 5E | 058700 | Various | 3rd | .075/1.9 | 83-85 | 3 | Tan - 38T - OD: 4.171" - PL |
| 6C | 058700 | Various | 4th | .075/1.9 | 83-85 | 3 | Tan - 38T - OD: 4.171" - PL |
| **STEEL CLUTCHES** | | | | | | | |
| 7D | 058701 | Various | 1st | .078/2.0 | 83-85 | 3 | 8T - ID: 3.220" |
| 8B | 058701 | Various | 2nd | .078/2.0 | 83-85 | 3 | 8T - ID: 3.220" |
| 9E | 058701 | Various | 3rd | .078/2.0 | 83-85 | 3 | 8T - ID: 3.220" |
| 10C | 058701 | Various | 4th | .078/2.0 | 83-85 | 3 | 8T - ID: 3.220" |
| N I | 058701A | NA | 1st, 2nd, 3rd & 4th - selective | .071/1.8 | 83-85 | AR | 8T - ID: 3.220" |
| N I | 058701-210 | NA | 1st, 2nd, 3rd & 4th - selective | .083/2.1 | 83-85 | AR | 8T - ID: 3.220" |
| **FILTERS** | | | | | | | |
| N I | 058942 | 25420-PC9-010 | Filter | | 83-85 | 1 | |
| **METAL CLAD SEALS** | | | | | | | |
| 11A | 047401 | 91207-639-015 | Converter Housing | | 83-85 | 1 | |
| 12A | 058400 | 91206-PC9-005 | Left Axle | 76mm | 83-85 | 1 | |
| 13G | 058402 | 91205-PC9-005 | Right Axle | 62mm | 83-85 | 1 | |
| N I | 047415 | 91209-551-015 | Speedometer | | 83-85 | 1 | |
| N I | 058401 | 91201-PA9-004 | Throttle Shaft | 18mm | 83-85 | 1 | |
| N I | 047410 | 91209-612-003 | Manual Lever | 22mm | 83-85 | 1 | |
| **SEALING RINGS** | | | | | | | |
| KT | 058600 | NA | Sealing Ring Kit - 3M | | 83-85 | 1 | |
| 14B | 058100 | 22814-PA9-023 | Mainshaft | 32mm | 83-85 | 3 | |

**NOTES**

# HONDA
## 4 SPEED
## 2 SHAFT (110mm Clutch)
## 1984-On

| ILL | DESCRIPTION | YEARS | FRICTION MODULE | STEEL MODULE | OVERHAUL KIT | BANNER KIT | MASTER KIT |
|---|---|---|---|---|---|---|---|
| **KITS** | | | | | | | |
| **HONDA ACCORD** | | | | | | | |
| KT | Rebuilding Kit - AS | 84-85 | 058752B | 058753B | 058802 | 058903LS | 058903 |
| **HONDA CIVIC** | | | | | | | |
| KT | Rebuilding Kit - CA | 86-87 | 058752B | 058753C | 058808 | 058903BLS | 058903B |
| KT | Rebuilding Kit - L4, ML4A | 88-91 | 058752B | 058753F | 058808 | 058903BLS | 058903C |
| KT | Rebuilding Kit - A4RA, B4RA, BDRA, M4RA | 96-00 | 058752B | 058753P | 058802A | 058903FLS | 058903F |
| KT | Rebuilding Kit - BMXA, SLXA | 01-On | 058752B | 058753P | 058802D | 058903GLS | 058903G |
| **HI-PERFORMANCE** | | | | | | | |
| KT | Rebuilding Kit - A4RA, B4RA | 96-00 | 058750PA FR & ST | | 058802AT | NA | 058903FA |
| **HONDA PRELUDE DX** | | | | | | | |
| KT | Rebuilding Kit - AS (with Carb) | 84-87 | 058752B | 058753B | 058802 | 058903LS | 058903 |
| **ACURA INTEGRA** | | | | | | | |
| KT | Rebuilding Kit - CA | 86-87 | 058752B | 058753C | 058804 | 058903ALS | 058903A |
| KT | Rebuilding Kit - P1 | 88-89 | 058752B | 058753F | 058804A | 058903DLS | 058903D |

| ILL | ALTO NO | REF NO | DESCRIPTION | SPEC | YEAR | QTY | NOTES |
|---|---|---|---|---|---|---|---|
| **MISCELLANEOUS GASKETS & KIT COMPONENTS** | | | | | | | |
| 1G | TBA | 21811-PC9-000 | Gasket, Case - AS | | 84-87 | 1 | |
| 1G | TBA | 21811-PC9-910 | Gasket, Case - CA | | 86-87 | 1 | |
| 1G | TBA | 21811-PL4-000 | Gasket, Case - L4, ML4A | | 88-91 | 1 | |
| 1G | TBA | 21811-P56-000 | Gasket, Case - Civic (all) | | 92-On | 1 | |
| 1G | TBA | 21811-PP1-010 | Gasket, Case - P1 | | 88-89 | 1 | |
| 2G | TBA | 21812-PC9-000 | Gasket, Right Side - AS, CA | | 84-87 | 1 | |
| 2G | TBA | 21812-PL4-000 | Gasket, Right Side - L4, ML4A, P1 | | 88-91 | 1 | |
| 2G | TBA | 21812-P24-J01 | Gasket, Right Side - Civic (all) | | 92-On | 1 | |
| **FRICTION CLUTCHES** | | | | | | | |
| 3D | 058710G | Various | 1st | .075/1.9 | 84-On | 3 | Heg - 38T - OD: 4.323" - PL |
| 4B | 058710G | Various | 2nd | .075/1.9 | 84-On | 3 | Heg - 38T - OD: 4.323" - PL |
| 5E | 058710G | Various | 3rd | .075/1.9 | 84-On | 3 | Heg - 38T - OD: 4.323" - PL |
| 6C | 058710G | Various | 4th | .075/1.9 | 84-On | 3 | Heg - 38T - OD: 4.323" - PL |
| **HI-PERFORMANCE - RED EAGLE®** | | | | | | | |
| 1G | 058740-190 | NA | 1st, 2nd, 3rd, 4th | .075/1.9 | 84-On | AR | RED EAGLE® |
| **STEEL CLUTCHES** | | | | | | | |
| 7D | 058711 | 22543-PC9-000 | 1st - except below | .078/2.0 | 84-On | 3 | 8T - ID: 3.230" |
| 7D | 058713 | 22543-PH0-850 | 1st - L4, ML4A, P1 | .063/1.6 | 88-91 | 3 | 8T - ID: 3.230" |
| 7D | 058713A160 | 22543-P4R-003 | Low - Civic | .063/1.6 | 96-On | 3 | 18T - ID:3.229" |
| 8B | 058711 | 22543-PC9-000 | 2nd | .078/2.0 | 84-On | 3 | 8T - ID: 3.230" |
| 8B | 058713A | 22643-P4R-003 | 2nd - Civic | .079/2.0 | 96-On | 3 | 18T - ID:3.229" |
| 9E | 058711 | 22543-PC9-000 | 3rd | .078/2.0 | 84-On | 3 | 8T - ID: 3.230" |
| 9E | 058713A | 22643-P4R-003 | 3rd - Civic | .079/2.0 | 96-On | 3 | 18T - ID:3.229" |
| 10C | 058711 | 22543-PC9-000 | 4th | .078/2.0 | 84-On | 3 | 8T - ID: 3.230" |
| 10C | 058713A | 22643-P4R-003 | 4th - Civic | .079/2.0 | 96-On | 3 | 18T - ID:3.229" |
| N I | 058711-210 | 22543-PJ4-000 | 1st, 2nd, 3rd & 4th - selective | .083/2.1 | 84-On | AR | 8T - ID: 3.230" |
| N I | 058711A | NA | 1st, 2nd, 3rd & 4th - selective | .070/1.8 | 84-On | AR | 8T - ID: 3.230" |
| **HI-PERFORMANCE - KOLENE®** | | | | | | | |
| 7D | 058711K200 | NA | 1st, 2nd, 3rd, 4th | .078/2.0 | 84-On | AR | 8T - ID: 3.230" |
| 7D | 058713AK160 | NA | 1st - L4, ML4A, P1 | .063/1.6 | 88-91 | 3 | 8T - ID: 3.230" |
| 8B | 058713AK200 | NA | 2nd, 3rd, 4th - Civic | .079/2.0 | 96-On | AR | 18T - ID:3.229" |
| **OEI™ Original Equipment Improvements** | | | | | | | |
| N I | 058767-110 | NA | DRUMSAVER™ replaces belleville spring | | 84-On | AR | |
| **FILTERS** | | | | | | | |
| N I | 058942 | 25420-PC9-010 | Filter - all except below | | 84-On | 1 | |
| N I | 058944 | 25420-PL4-010 | Filter - P1 | | 88-89 | 1 | |

# HONDA
## 4 SPEED
## 2 SHAFT (110mm Clutch)
## 1984-On

| ILL | ALTO NO | REF NO | DESCRIPTION | SPEC | YEAR | QTY | NOTES |
|---|---|---|---|---|---|---|---|
| **METAL CLAD SEALS** | | | | | | | |
| 11A | 047401 | 91207-639-015 | Converter Housing | | 84-On | 1 | |
| 12A | 058400 | 91206-PC9-005 | Left Axle - AS, Civic CA | 76mm | 84-87 | 1 | |
| 12A | TBA | 91205-PL3-A02 | Left Axle - Civic (all) | 56mm | 88-On | 1 | |
| 12A | 058400A | 91206-PC9-711 | Left Axle - Integra CA | 76mm | 86-87 | 1 | |
| 12A | 058402E | 91205-PL3-B02 | Left Axle - Integra P1 | 56mm | 88-89 | 1 | |
| 13G | 058402 | 91205-PC9-005 | Right Axle - AS, Civic CA | 62mm | 84-87 | 1 | |
| 13G | TBA | 91206-689-005 | Right Axle - Civic (all) | 76mm | 88-On | 1 | |
| 13G | 058402A | 91205-PC9-711 | Right Axle - Integra CA | 62mm | 86-87 | 1 | |
| 13G | 058402D | 91206-PC8-005 | Right Axle - Integra P1 | 76mm | 88-89 | 1 | |
| N I | 047415 | 91209-551-015 | Speedometer | | 84-On | 1 | |
| N I | 058401 | 91201-PA9-004 | Throttle Shaft | 18mm | 84-On | 1 | |
| N I | 047410 | 91209-612-003 | Manual Lever | 22mm | 84-On | 1 | |
| **SEALING RINGS** | | | | | | | |
| KT | 058601 | NA | Sealing Ring Kit - 3M | | 84-On | 1 | |
| 14B | 058100 | 22814-PA9-023 | Mainshaft | 32mm | 84-On | 3 | |

**NOTES**

# HONDA
## 4 SPEED
## 2 SHAFT (116mm Clutch)
## 1985-98

| ILL | DESCRIPTION | YEARS | FRICTION MODULE | STEEL MODULE | OVERHAUL KIT | BANNER KIT | MASTER KIT |
|---|---|---|---|---|---|---|---|
| **KITS** | | | | | | | |
| **HONDA ACCORD** | | | | | | | |
| KT | Rebuilding Kit - PF4 (F4) | 86-89 | 058752C | 058753D | 058802B | 058905LS | 058905 |
| **HONDA PRELUDE** | | | | | | | |
| KT | Rebuilding Kit - F4 (Fuel Inj) | 85-87 | 058752C | 058753D | 058802B | 058905LS | 058905 |
| KT | Rebuilding Kit - K4, PY8A, MY8A | 88-91 | 058752C | 058753D | 058810 | 058905BLS | 058905B |
| **ACURA LEGEND** | | | | | | | |
| KT | Rebuilding Kit - G4, L5, PL5X | 86-90 | 058752D | 058753E | 058806 | 058905ALS | 058905A |
| **ACURA VIGOR** | | | | | | | |
| KT | Rebuilding Kit - MPWA | 92-94 | 058752K | 058753K | 058812 | 058905DLS | 058905D |
| **ACURA 2.5TL** | | | | | | | |
| KT | Rebuilding Kit - M1WA | 95-98 | 058752K | 058753K | 058812A | 058905HLS | 058905H |

| ILL | ALTO NO | REF NO | DESCRIPTION | SPEC | YEAR | QTY | NOTES |
|---|---|---|---|---|---|---|---|
| **MISCELLANEOUS GASKETS & KIT COMPONENTS** | | | | | | | |
| 1G | TBA | 21811-PF4-000 | Gasket, Case - PF4 (F4) | | 85-89 | 1 | |
| 1G | TBA | 21811-PK4-000 | Gasket, Case - K4 | | 88-89 | 1 | |
| 1G | TBA | 21811-PY8-S10 | Gasket, Case - PY8A, MY8A | | 90-91 | 1 | |
| 1G | TBA | 21811-PG4-010 | Gasket, Case - G4 | | 86-87 | 1 | |
| 1G | TBA | 21811-PL5-020 | Gasket, Case - L5, PL5X | | 88-90 | 1 | |
| 1G | TBA | 21811-PW7-000 | Gasket, Case - MPWA, M1WA | | 92-98 | 1 | |
| 2G | TBA | 21812-PF4-000 | Gasket, Right Side - PF4 (F4) | | 85-89 | 1 | |
| 2G | TBA | 21812-PK4-S00 | Gasket, Right Side - K4, PY8A, MY8A | | 88-91 | 1 | |
| 2G | TBA | 21812-PG4-010 | Gasket, Right Side - G4 | | 86-87 | 1 | |
| 2G | TBA | 21812-PL5-S00 | Gasket, Right Side - L5, PL5X | | 86-90 | 1 | |
| 2G | TBA | 21812-PW7-000 | Gasket, Right Side - MPWA, M1WA | | 92-98 | 1 | |
| N I | TBA | 21813-PW7-000 | Gasket, Oil Pan - MPWA, M1WA | | 92-98 | 1 | |
| **FRICTION CLUTCHES** | | | | | | | |
| 3D | 058720G | Various | 1st | .075/1.9 | 85-98 | 3-4 | Heg - 41T - OD: 4.558" - PL |
| 4B | 058720G | Various | 2nd except below | .075/1.9 | 85-91 | 3-4 | Heg - 41T - OD: 4.558" - PL |
| 4B | 058720R | 22545-PW7-A01 | 2nd - MPWA, M1WA | .075/1.9 | 92-98 | 4 | Red - 41T - OD: 4.558" - PL |
| 5E | 058720G | Various | 3rd | .075/1.9 | 85-98 | 3-4 | Heg - 41T - OD: 4.558" - PL |
| 6C | 058720G | Various | 4th | .075/1.9 | 85-98 | 3-4 | Heg - 41T - OD: 4.558" - PL |
| **STEEL CLUTCHES** | | | | | | | |
| 7D | 058721 | 22543-PF4-000 | 1st | .078/2.0 | 85-98 | 3-4 | 10T - ID: 3.438" |
| 8B | 058721 | 22543-PF4-000 | 2nd except below | .078/2.0 | 85-98 | 3-4 | 10T - ID: 3.438" |
| 8B | 058723-230 | 22544-PR0-000 | 2nd - MPWA, M1WA | .091/2.3 | 92-98 | 4 | 24T - ID: 3.438" |
| 9E | 058721 | 22543-PF4-000 | 3rd | .078/2.0 | 85-98 | 3-4 | 10T - ID: 3.438" |
| 10C | 058721 | 22543-PF4-000 | 4th - except below | .078/2.0 | 85-98 | 3-4 | 10T - ID: 3.438" |
| 10C | 058723-230 | 22544-PR0-000 | 4th - MPWA, M1WA | .091/2.3 | 92-98 | 4 | 24T - ID: 3.438" |
| N I | 058721-210 | NA | 1st, 2nd, 3rd & 4th - selective | .083/2.1 | 85-98 | AR | 10T - ID: 3.438" |
| N I | 058721-260 | NA | 1st, 2nd, 3rd & 4th - selective | .102/2.6 | 85-98 | AR | 10T - ID: 3.438" |
| N I | 058721A | NA | 1st, 2nd, 3rd & 4th - selective | .070/1.8 | 85-98 | AR | 10T - ID: 3.438" |
| **HI-PERFORMANCE - KOLENE®** | | | | | | | |
| 7D | 058721K200 | NA | 1st, 2nd, 3rd & 4th | .078/2.0 | 85-98 | 3-4 | 10T - ID: 3.438" |
| **OEI™ Original Equipment Improvements** | | | | | | | |
| N I | 058767-116 | NA | DRUMSAVER™ replaces belleville spring | | 85-98 | AR | |
| **FILTERS** | | | | | | | |
| N I | 058942 | 25420-PC9-010 | Filter - F4 (Accord, Prelude) | | 85-89 | 1 | |
| N I | 058946 | 25420-PL5-000 | Filter - G4, L5, PL5X (Legend) | | 86-90 | 1 | |
| N I | TBA | 25420-PK4-000 | Filter - K4 (Prelude) | | 88-89 | 1 | |
| N I | TBA | 25420-PY8-000 | Filter - MY8A, PY8A (Prelude) | | 90-91 | 1 | |
| N I | 058944B | 25420-PW4-000 | Filter - MPWA, M1WA | | 92-98 | 1 | |
| **METAL CLAD SEALS** | | | | | | | |
| 11A | 047401 | 91207-639-015 | Converter Housing - except Legend | | 85-98 | 1 | |

# HONDA
## 4 SPEED
## 2 SHAFT (116mm Clutch)
## 1985-98

| ILL | ALTO NO | REF NO | DESCRIPTION | SPEC | YEAR | QTY | NOTES |
|---|---|---|---|---|---|---|---|
| **METAL CLAD SEALS** | | | | | | | ...Continued |
| 11A | 058400B | 91207-PG4-005 | Converter Housing - Legend | | 86-90 | 1 | |
| 12A | 058400A | 91206-PC9-711 | Left Axle - PF4 (F4) | 76mm | 85-89 | 1 | Accord/Prelude |
| 12A | 058402B | 91205-PC8-935 | Left Axle - K4 | 54mm | 88-89 | 1 | Prelude |
| 12A | TBA | 91205-PL3-A02 | Left Axle -PY8A, MY8A | 54mm | 90-91 | 1 | Prelude |
| 12A | 058401A | 91206-PG2-005 | Left Axle - G4, L5, PL5X | 56mm | 86-90 | 1 | Legend |
| 12A | TBA | 91206-PW5-015 | Left Axle - MPWA, M1WA | 56mm | 92-98 | 1 | Vigor/2.5TL |
| 13G | 058402A | 91205-PC9-711 | Right Axle - PF4 (F4) | 62mm | 85-89 | 1 | Accord/Prelude |
| 13G | 058402F | 91206-PK4-003 | Right Axle - K4, PY8A, MY8A | 66mm | 88-91 | 1 | Prelude |
| 13G | 058401A | 91206-PG2-005 | Right Axle - G4, L5, PL5X | 56mm | 86-91 | 1 | Legend |
| 13G | TBA | 91207-639-015 | Right Axle - MPWA, M1WA | 68mm | 92-98 | 1 | Vigor/2.5TL |
| **SEALING RINGS** | | | | | | | |
| KT | 058603 | NA | Sealing Ring Kit - 6M | | 85-98 | 1 | |
| 14B | 058103 | 22814-PF4-003 | Mainshaft | 35mm | 85-98 | 3-4 | Legend requires 4 |
| 15B | 058104 | 22814-PK4-003 | Mainshaft | 29mm | 85-98 | 1 | |
| **BUSHINGS** | | | | | | | |
| KT | 058625 | NA | Bushing Kit | | 85-98 | 1 | 3 Bushings |

**NOTES**

# HONDA
## 4 SPEED
## 2 SHAFT (125mm Clutch)
## 1991-On

| ILL | DESCRIPTION | YEARS | FRICTION MODULE | STEEL MODULE | OVERHAUL KIT | BANNER KIT | MASTER KIT |
|---|---|---|---|---|---|---|---|
| **KITS** | | | | | | | |
| **ACURA LEGEND** | | | | | | | |
| KT | Rebuilding Kit - MPYA | 91-95 | 101752 | 101753 | 101800 | 101901LS | 101901A |
| **ACURA 3.2TL** | | | | | | | |
| KT | Rebuilding Kit - M5HA | 96-98 | 101752A | 101753A | 101802 | 101903LS | 101903 |
| **ACURA 3.5RL** | | | | | | | |
| KT | Rebuilding Kit - M5DA | 96-On | 101752A | 101753A | 101802 | 101903LS | 101903 |

| ILL | ALTO NO | REF NO | DESCRIPTION | SPEC | YEAR | QTY | NOTES |
|---|---|---|---|---|---|---|---|
| **MISCELLANEOUS GASKETS & KIT COMPONENTS** | | | | | | | |
| N I | TBA | 21811-PY4-010 | Gasket, Case - all | | 91-On | 1 | |
| N I | TBA | 21812-PY4-000 | Gasket, Right Side - all | | 91-On | 1 | |
| N I | 101816 | 21813-PY4-000 | Gasket, Oil Pan - MPYA | | 91-95 | 1 | |
| N I | TBA | 21813-P5H-000 | Gasket, Oil Pan - M5DA, M5HA | | 96-On | 1 | |
| **FRICTION CLUTCHES** | | | | | | | |
| N I | 101700G | Various | 1st | .078/2.0 | 91-On | 4 | Heg - 45T - OD: 5.041" - PL |
| N I | 101700R | Various | 2nd | .078/2.0 | 91-On | 4 | Red - 45T - OD: 5.041" - PL |
| N I | 101700G235 | 22644-PY4-E01 | 3rd | .094/2.3 | 91-95 | 4 | Heg - 45T - OD: 5.041" - PL |
| N I | 101700R235 | 22644-P5D-003 | 3rd | .094/2.3 | 96-On | 4 | Red - 45T - OD: 5.041" - PL |
| N I | 101700G235 | 22644-PY4-E01 | 4th | .094/2.3 | 91-95 | 4 | Heg - 45T - OD: 5.041" - PL |
| N I | 101700R235 | 22644-P5D-003 | 4th | .094/2.3 | 96-On | 4 | Red - 45T - OD: 5.041" - PL |
| N I | 101700G | Various | Reverse | .078/2.0 | 91-On | 4 | Heg - 45T - OD: 5.041" - PL |
| N I | 101700G | Various | Low-Hold | .078/2.0 | 91-On | 4 | Heg - 45T - OD: 5.041" - PL |
| **STEEL CLUTCHES** | | | | | | | |
| N I | 101701 | 22543-PY4-003 | 1st | .078/2.0 | 91-On | 4 | 20T - ID: 3.756" |
| N I | 101701 | 22543-PY4-003 | 2nd | .078/2.0 | 91-On | 4 | 20T - ID: 3.756" |
| N I | 101701-260 | 22643-PY4-003 | 3rd | .102/2.6 | 91-95 | 4 | 20T - ID: 3.756" |
| N I | 101701 | 22543-PY4-003 | 3rd | .078/2.0 | 96-On | 4 | 20T - ID: 3.756" |
| N I | 101701-260 | 22643-PY4-003 | 4th | .102/2.6 | 91-On | 4 | 20T - ID: 3.756" |
| N I | 101701 | 22543-PY4-003 | Reverse | .078/2.0 | 91-On | 4 | 20T - ID: 3.756" |
| N I | 101701 | 22543-PY4-003 | Low-Hold | .078/2.0 | 91-On | 4 | 20T - ID: 3.756" |
| **FILTERS** | | | | | | | |
| N I | 101940 | 25420-PY4-000 | Filter | | 91-On | 1 | |
| **METAL CLAD SEALS** | | | | | | | |
| N I | 101400 | 91207-PR9-003 | Converter Housing | 70mm | 91-On | 1 | |
| N I | 101425 | 91205-PY5-003 | Left Axle | 61mm | 91-On | 1 | |
| N I | 101426 | 91201-PY5-003 | Right Axle | 75mm | 91-On | 1 | |
| N I | 047410 | 91209-612-003 | Manual Lever | 22mm | 91-On | 1 | |
| **SEALING RINGS** | | | | | | | |
| KT | 101600 | NA | Sealing Ring Kit - 6M | | 91-95 | 1 | |
| KT | 101600A | NA | Sealing Ring Kit - 6T | | 96-On | 1 | |
| N I | 101100 | 22814-PR9-003 | Mainshaft - Metal | 37mm | 91-95 | 4 | |
| N I | 101110 | 22814-P5H-003 | Mainshaft - Teflon | 37mm | 96-On | 4 | |
| N I | 101101 | 22814-PY4-003 | Countershaft - Metal | 42mm | 91-95 | 2 | |
| N I | 101111 | 22815-P5H-003 | Countershaft - Teflon | 42mm | 96-On | 2 | |

**NOTES**

A>

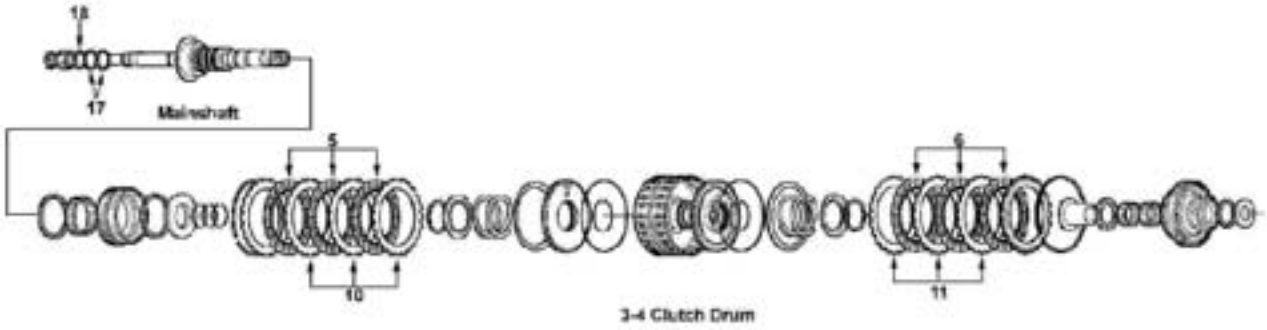


B>

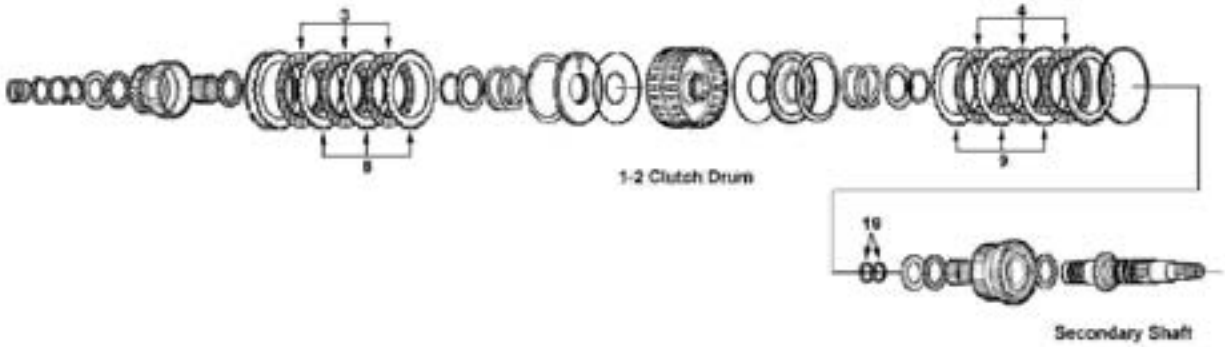


C>

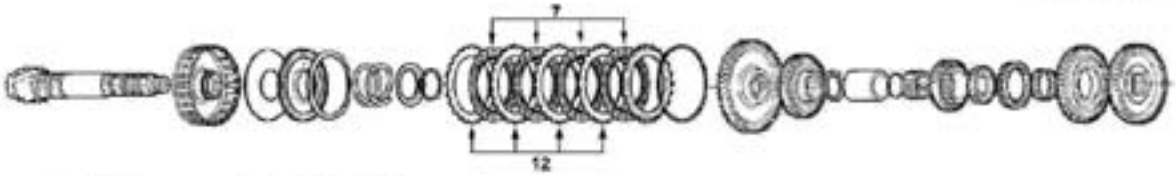


Countershaft Low-Hold Clutch

D>

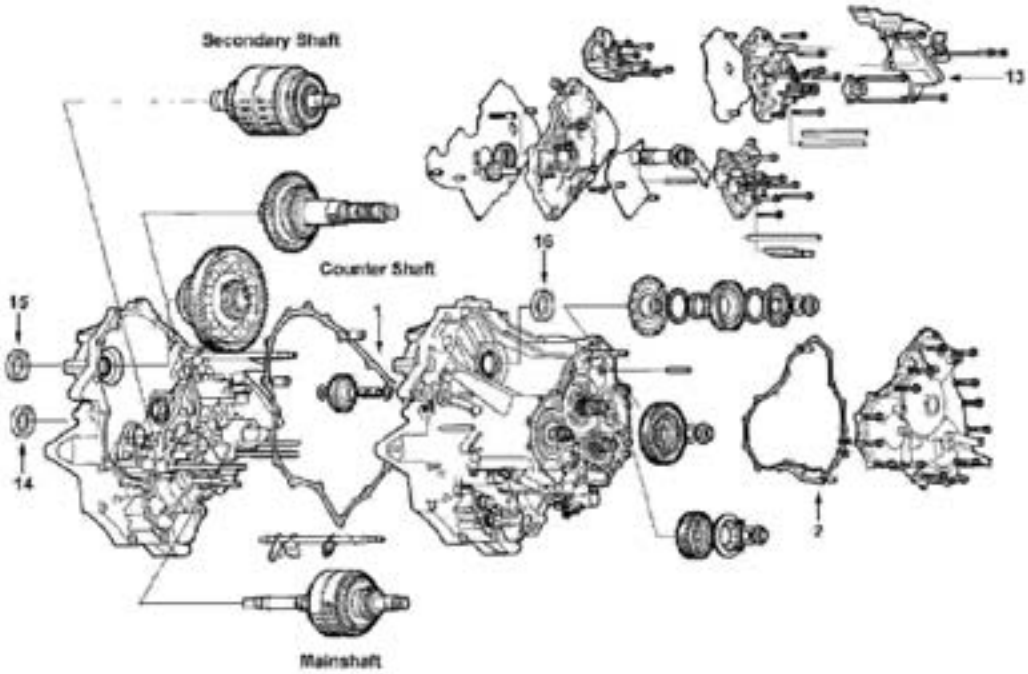

# HONDA
## 4 SPEED
## 3 SHAFT (110mm Clutch)
## 1992-97

| ILL | DESCRIPTION | YEARS | FRICTION MODULE | STEEL MODULE | OVERHAUL KIT | BANNER KIT | MASTER KIT |
|---|---|---|---|---|---|---|---|
| **KITS** | | | | | | | |
| **HONDA CIVIC** | | | | | | | |
| KT | Rebuilding Kit - A24A, M24A, S24A | 92-97 | 058752L | 058753L | 058802A | 058903ELS | 058903E |
| **HI-PERFORMANCE** | | | | | | | |
| KT | Rebuilding Kit - A24A, M24A, S24A | 92-97 | 058750LA FR & ST | | 058802AT | NA | 058903EA |

| ILL | ALTO NO | REF NO | DESCRIPTION | SPEC | YEAR | QTY | NOTES |
|---|---|---|---|---|---|---|---|
| **MISCELLANEOUS GASKETS & KIT COMPONENTS** | | | | | | | |
| 1G | TBA | 21811-P24-000 | Gasket, Case - all | | 92-97 | 1 | 21811-P56-000 (combo) |
| 2G | TBA | 21812-P24-J01 | Gasket, Side - all | | 92-97 | 1 | |
| **FRICTION CLUTCHES** | | | | | | | |
| 3B | 058710G | Various | 1st (low) | .075/1.9 | 92-97 | 3 | Heg - 38T - OD: 4.323" - PL |
| 4B | 058710G | Various | 2nd | .075/1.9 | 92-97 | 3 | Heg - 38T - OD: 4.323" - PL |
| 5A | 058710G | Various | 3rd | .075/1.9 | 92-97 | 3 | Heg - 38T - OD: 4.323" - PL |
| 6A | 058710G | Various | 4th | .075/1.9 | 92-97 | 3 | Heg - 38T - OD: 4.323" - PL |
| 7C | 058724 | 22544-P24-S00 | Low-Hold | .078/2.0 | 92-97 | 3 | Tan - 38T - OD: 3.928" - PL |
| **HI-PERFORMANCE - RED EAGLE®** | | | | | | | |
| 3B | 058740-190 | NA | 1st, 2nd, 3rd, 4th | .075/1.9 | 89+ | AR | RED EAGLE® |
| 7C | 058744-198 | NA | Low-Hold | .078/2.0 | 89+ | AR | RED EAGLE® |
| **STEEL CLUTCHES** | | | | | | | |
| 8B | 058713 | 22543-PH0-850 | 1st (low) | .063/1.6 | 92-97 | 3 | 8T - ID: 3.230" |
| 9B | 058711 | 22543-PC9-000 | 2nd | .078/2.0 | 92-97 | 3 | 8T - ID: 3.230" |
| 10A | 058711 | 22543-PC9-000 | 3rd | .078/2.0 | 92-97 | 3 | 8T - ID: 3.230" |
| 11A | 058711 | 22543-PC9-000 | 4th | .078/2.0 | 92-97 | 3 | 8T - ID: 3.230" |
| 12C | 058725 | 22543-PS5-003 | Low-Hold | .078/2.0 | 92-97 | 3 | 18T - ID: 2.800" |
| **HI-PERFORMANCE - KOLENE®** | | | | | | | |
| 9B | 058711K200 | NA | 2nd, 3rd, 4th | .078/2.0 | 92-97 | 3 | 8T - ID: 3.230" |
| 12C | 058725K200 | NA | Low-Hold | .078/2.0 | 92-97 | 3 | 18T - ID: 2.800" |
| **FILTERS** | | | | | | | |
| 13D | 058942A | 25420-P24-J01 | Filter | | 92-97 | 1 | |
| **METAL CLAD SEALS** | | | | | | | |
| 14D | 047401 | 91207-639-015 | Converter Housing | | 92-97 | 1 | |
| 15D | TBA | 91205-PL3-A02 | Left Axle | 54mm | 92-97 | 1 | |
| 16D | TBA | 91206-689-005 | Right Axle | 76mm | 92-97 | 1 | |
| N I | 047415 | 91209-551-015 | Speedometer | | 92-97 | 1 | |
| N I | 058401 | 91201-PA9-004 | Throttle Shaft | 18mm | 92-97 | 1 | |
| N I | 047410 | 91209-612-003 | Manual Lever | 22mm | 92-97 | 1 | |
| **SEALING RINGS** | | | | | | | |
| KT | 058603 | NA | Sealing Ring Kit - 6M | | 92-97 | 1 | |
| 17A | 058103 | 22814-PF4-003 | Mainshaft | 35mm | 92-97 | 3 | |
| 18A | 058104 | 22814-PK4-003 | Mainshaft | 29mm | 92-97 | 1 | |
| **BUSHINGS** | | | | | | | |
| KT | 058625A | NA | Bushing Kit - A24A, M24A, S24A | | 92-97 | 1 | |

**NOTES**

# HONDA
## 4 SPEED
## 3 SHAFT (116mm Clutch)
## 1990-On

| ILL | DESCRIPTION | YEARS | FRICTION MODULE | STEEL MODULE | OVERHAUL KIT | BANNER KIT | MASTER KIT |
|---|---|---|---|---|---|---|---|
| **KITS** | | | | | | | |
| **HONDA CR-V** | | | | | | | |
| KT | Rebuilding Kit - M4TA, MDMA, MDLA | 97-On | 058752N | 058753N | 058804C | 058905GLS | 058905G |
| **ACURA INTEGRA** | | | | | | | |
| KT | Rebuilding Kit - RO | 90 | 058752C | 058753G | 058804B | 058905CLS | 058905C |
| KT | Rebuilding Kit - MPRA | 91-93 | 058752C | 058753H | 058804B | 058905CLS | 058905E |
| KT | Rebuilding Kit - Combo RO, MPRA | 90-93 | 058752C | 058753J | 058804B | 058905CLS | 058905EX |
| KT | Rebuilding Kit - MP7A, SP7A | 94-95 | 058752M | 058753M | 058804C | 058905FLS | 058905F |
| KT | Rebuilding Kit - S4XA, SKWA | 96-On | 058752N | 058753N | 058804C | 058905GLS | 058905G |

| ILL | ALTO NO | REF NO | DESCRIPTION | SPEC | YEAR | QTY | NOTES |
|---|---|---|---|---|---|---|---|
| **MISCELLANEOUS GASKETS & KIT COMPONENTS** | | | | | | | |
| 1D | TBA | 21811-P24-000 | Gasket, Case - all except below | | 92-On | 1 | 21811-P56-000 (combo) |
| 1D | TBA | 21811-P4T-000 | Gasket, Case - MDMA, M4TA | | 97-On | 1 | 4wd only |
| 1D | TBA | 21811-PR0-010 | Gasket, Case - RO, MPRA | | 90-93 | 1 | |
| 2D | TBA | 21812-P24-J01 | Gasket, Side - all except below | | 92-On | 1 | |
| 2D | TBA | 21812-PR0-010 | Gasket, Side - RO, MPRA | | 90-93 | 1 | |
| **FRICTION CLUTCHES** | | | | | | | |
| 3B | 058720G | Various | 1st (low) - R0, MPRA, MP7A, SP7A | .075/1.9 | 90-95 | 3 | Heg - 41T - OD: 4.558" - PL |
| 3B | 058730G | Various | 1st (low) | .075/1.9 | 96-On | 3 | Heg - 38T - OD: 4.558" - PL |
| 4B | 058720G | Various | 2nd - R0 & MPRA | .075/1.9 | 90-93 | 3 | Heg - 41T - OD: 4.558" - PL |
| 4B | 058730 | Various | 2nd | .075/1.9 | 94-On | 3 | Tan - 38T - OD: 4.558" - PL |
| 5A | 058720G | Various | 3rd - R0 & MPRA | .075/1.9 | 90-93 | 3 | Heg - 41T - OD: 4.558" - PL |
| 5A | 058730 | Various | 3rd | .075/1.9 | 94-On | 3 | Tan - 38T - OD: 4.558" - PL |
| 6A | 058720G | Various | 4th - R0 & MPRA | .075/1.9 | 90-93 | 3 | Heg - 41T - OD: 4.558" - PL |
| 6A | 058730 | Various | 4th | .075/1.9 | 94-On | 3 | Tan - 38T - OD: 4.558" - PL |
| 7C | 058720G | Various | Low-Hold | .075/1.9 | 90-93 | 3 | Heg - 41T - OD: 4.558" - PL |
| 7C | 058724 | 22544-P24-S00 | Low-Hold | .078/2.0 | 94-On | 3 | Tan - 38T - OD: 3.928" - PL |
| **HI-PERFORMANCE - RED EAGLE®** | | | | | | | |
| 7C | 058744-198 | NA | Low-Hold | .078/2.0 | 94-On | 3 | RED EAGLE® |
| **STEEL CLUTCHES** | | | | | | | |
| 8B | 058721 | 22543-PF4-000 | 1st (low) - R0, MPRA, MP7A, SP7A | .078/2.0 | 90-95 | 3 | 10T - ID: 3.438" |
| 8B | 058731-160 | 22543-P4X-000 | 1st (low) | .063/1.6 | 96-On | 3 | 10T - ID: 3.220" |
| 9B | 058721 | 22543-PF4-000 | 2nd - R0, MPRA | .078/2.0 | 90-93 | 3 | 10T - ID: 3.438" |
| 9B | 058731 | 22543-P56-N00 | 2nd | .078/2.0 | 94-On | 3 | 10T - ID: 3.220" |
| 10A | 058721 | 22543-PF4-000 | 3rd - R0, MPRA | .078/2.0 | 90-93 | 3 | 10T - ID: 3.438" |
| 10A | 058731 | 22543-P56-N00 | 3rd | .078/2.0 | 94-On | 3 | 10T - ID: 3.220" |
| 11A | 058721 | 22543-PF4-000 | 4th- R0, MPRA | .078/2.0 | 90-93 | 3 | 10T - ID: 3.438" |
| 11A | 058731 | 22543-P56-N00 | 4th | .078/2.0 | 94-On | 3 | 10T - ID: 3.220" |
| 12C | 058723-300 | 22644-PR0-003 | Low-Hold - R0 | .118/3.0 | 90 | 3 | 24T - ID: 3.438" |
| 12C | 058723-200 | 22643-PR0-003 | Low-Hold - MPRA | .078/2.0 | 91-93 | 3 | 24T - ID: 3.438" |
| 12C | 058725 | 22543-PS5-003 | Low-Hold | .078/2.0 | 94-95 | 3 | 18T - ID: 2.800" |
| 12C | 058725-160 | 22543-PS5-013 | Low-Hold | .063/1.6 | 96-On | 3 | 18T - ID: 2.800" |
| **HI-PERFORMANCE - KOLENE®** | | | | | | | |
| 8B | 058721K200 | NA | 1st, 2nd, 3rd & 4th | .078/2.0 | 90-95 | AR | 10T - ID: 3.438" |
| 12C | 058725K200 | NA | Low-Hold | .078/2.0 | 94-95 | 3 | 18T - ID: 2.800" |
| **OEI™ Original Equipment Improvements** | | | | | | | |
| N I | 058767-116 | NA | DRUMSAVER™ replaces belleville spring | | 90-On | 1 | |
| **FILTERS** | | | | | | | |
| 13D | 058944A | 25420-PR0-030 | Filter - Integra RO | | 90 | 1 | |
| 13D | TBA | 25420-PR0-020 | Filter - Integra | | 91-93 | 1 | |
| 13D | TBA | 25420-P56-003 | Filter - Integra (94-On), CRV (97-98) | | 94-On | 1 | |
| 13D | TBA | 25420-P4R-003 | Filter - CRV | | 99-On | 1 | |
| **METAL CLAD SEALS** | | | | | | | |
| 14D | 047401 | 91207-639-015 | Converter Housing | | 90-On | 1 | |
| 15D | 058401A | 91206-PG2-005 | Left Axle - Integra | 56mm | 90-93 | 1 | |

# HONDA
## 4 SPEED
## 3 SHAFT (116mm Clutch)
## 1990-On

| ILL | ALTO NO | REF NO | DESCRIPTION | SPEC | YEAR | QTY | NOTES |
|---|---|---|---|---|---|---|---|
| **METAL CLAD SEALS** | | | | | | | ...Continued |
| 15D | TBA | 91205-PL3-A02 | Left Axle - Integra, CRV | 54mm | 94-On | 1 | |
| 16D | 058402D | 91206-PC8-005 | Right Axle - all | 76mm | 90-On | 1 | |
| N I | 047415 | 91209-551-015 | Speedometer | | 90-On | 1 | |
| N I | 058401 | 91201-PA9-004 | Throttle Shaft | 18mm | 90-On | 1 | |
| N I | 047410 | 91209-612-003 | Manual Lever | 22mm | 90-On | 1 | |
| **SEALING RINGS** | | | | | | | |
| KT | 058603 | NA | Sealing Ring Kit - 6M | | 90-95 | 1 | |
| KT | 058603A | NA | Sealing Ring Kit - 4T | | 96-On | 1 | |
| 17A | 058103 | 22814-PF4-003 | Mainshaft - Metal | 35mm | 90-95 | 2-3 | |
| 17A | 058113 | 22814-P4P-003 | Mainshaft - Teflon | 35mm | 96-On | 3 | |
| 18A | 058104 | 22814-PK4-003 | Mainshaft - Metal | 29mm | 90-95 | 1 | |
| 18A | 058114 | 22815-P4P-003 | Mainshaft - Teflon | 29mm | 96-On | 1 | |
| 19B | 058105 | 22814-PR0-003 | Secondary Shaft - Integra only | 27mm | 90-On | 3 | Not in Kit |

**NOTES**

# HONDA
## 4 SPEED
## 3 SHAFT (120mm Clutch)
## 1990-On

| ILL | DESCRIPTION | YEARS | FRICTION MODULE | STEEL MODULE | OVERHAUL KIT | BANNER KIT | MASTER KIT |
|---|---|---|---|---|---|---|---|
| **KITS** | | | | | | | |
| **HONDA ACCORD** | | | | | | | |
| KT | Rebuilding Kit - APXA, AOYA, MPOA, MPWA, MPXA, PX4B | 90-97 | 078752 | 078753 | 078804 | 078901LS | 078901 |
| KT | Rebuilding Kit - BOYA | 96-97 | 078752 | 078753D | 078804 | 078901BLS | 078901B |
| KT | Rebuilding Kit - B7XA (V6 Eng.) | 98-01 | 078752D | 078753E | 078804A | 078901CLS | 078901C |
| **HONDA ODYSSEY 2.2L Engine** | | | | | | | |
| KT | Rebuilding Kit - MPJA | 95-97 | 078752 | 078753D | 078804 | 078901BLS | 078901B |
| **PRELUDE** | | | | | | | |
| KT | Rebuilding Kit - MP1A | 92-96 | 078752A | 078753A | 078804 | 078901ALS | 078901A |
| **ACURA 2.2CL Engine** | | | | | | | |
| KT | Rebuilding Kit - A6VA | 97 | 078752 | 078753D | 078804 | 078901BLS | 078901B |
| **ACURA 3.0CL Engine** | | | | | | | |
| KT | Rebuilding Kit - M7ZA | 97-00 | 078752D | 078753E | 078804A | 078901CLS | 078901C |
| **ISUZU OASIS** | | | | | | | |
| KT | Rebuilding Kit | 95-97 | 078752 | 075753D | 078804 | 078901BLS | 078901B |

| ILL | ALTO NO | REF NO | DESCRIPTION | SPEC | YEAR | QTY | NOTES |
|---|---|---|---|---|---|---|---|
| **MISCELLANEOUS GASKETS & KIT COMPONENTS** | | | | | | | |
| 1D | TBA | 21811-P0X-000 | Gasket, Case - all except below | | 90-97 | 1 | |
| 1D | TBA | 21811-P7Z-000 | Gasket, Case - B7XA, M7ZA | | 97-On | 1 | |
| 2D | TBA | 21812-P0X-000 | Gasket, Side - all except below | | 90-97 | 1 | |
| 2D | TBA | 21812-PX4-000 | Gasket, Side - PX4B | | 90 | 1 | |
| 2D | TBA | 21812-P7Z-000 | Gasket, Side - B7XA, M7XA | | 97-On | 1 | |
| **FRICTION CLUTCHES** | | | | | | | |
| 3B | 078700G | Various | 1st (low) | .075/1.9 | 90-On | 3/6* | Heg - 44T - OD: 4.732" - PL |
| 4B | 078700G | Various | 2nd | .075/1.9 | 90-On | 3-4/6* | Heg - 44T - OD: 4.732" - PL |
| 5A | 078700G | Various | 3rd | .075/1.9 | 90-On | 3/4* | Heg - 44T - OD: 4.732" - PL |
| 6A | 078700G | Various | 4th | .075/1.9 | 90-On | 3/4* | Heg - 44T - OD: 4.732" - PL |
| 7C | 078700G | Various | Low-Hold | .075/1.9 | 90-On | 3 | Heg - 44T - OD: 4.732" - PL |
| **STEEL CLUTCHES** | | | | | | | |
| 8B | 078701 | Various | 1st (low) | .078/2.0 | 90-On | 3/6* | 24T - ID: 3.677" |
| 8B | 078701-160 | 22543-P0X-003 | 1st (low) - Prelude | .063/1.6 | 95-96 | 3 | 24T - ID: 3.677" |
| 9B | 078703 | Various | 2nd - all & Prelude S model | .102/2.6 | 90-On | 3 | 24T - ID: 3.677" |
| 9B | 078701 | Various | 2nd - Prelude except S model | .078/2.0 | 92-96 | 3/6* | 24T - ID: 3.677" |
| 10A | 078705 | Various | 3rd | .091/2.3 | 90-On | 3/4* | 24T - ID: 3.677" |
| 11A | 078705 | Various | 4th | .091/2.3 | 90-On | 3 | 24T - ID: 3.677" |
| 11A | 078701 | Various | 4th | .078/2.0 | 97-On | 4* | 24T - ID: 3.677" |
| 12C | 078701 | Various | Low-Hold | .078/2.0 | 92-95 | 3 | 24T - ID: 3.677" |
| 12C | 078701-160 | 22543-P0X-003 | Low-Hold | .063/1.6 | 95-On | 3 | 24T - ID: 3.677" |
| ALL | 078701-210 | NA | All - selective | .083/2.1 | 90-On | AR | 24T - ID: 3.677" |
| ALL | 078701A | NA | All - selective | .070/1.8 | 90-On | AR | 24T - ID: 3.677" |
| | | | * Higher Qty used in B7XA & M7ZA | | | | |
| **OEI™ Original Equipment Improvements** | | | | | | | |
| N I | 078767 | NA | DRUMSAVER™ replaces belleville spring | | 90-On | AR | |
| **FILTERS** | | | | | | | |
| 13D | 078940 | 25420-PX4-023 | Filter - Accord | | 90-91 | 1 | |
| 13D | 078942 | 25420-PX4-701 | Filter - Accord, Prelude, Odyssey, 2.2CL | | 92-97 | 1 | |
| 13D | TBA | 25420-P7Z-010 | Filter - 3.0CL | | 97-00 | 1 | |
| 13D | TBA | 25420-P7Z-003 | Filter - Accord (98+) & 3.0CL | | 97-00 | 1 | |
| **METAL CLAD SEALS** | | | | | | | |
| 14D | 047401 | 91207-639-015 | Converter Housing | | 90-On | 1 | |
| 15D | 058401A | 91206-PG2-005 | Left Axle - all except below | 56mm | 90-On | 1 | |
| 15D | TBA | 91205-PL3-A02 | Left Axle - Odyssey | 54mm | 95-97 | 1 | |
| 16D | 058402F | 91206-PK4-003 | Right Axle - all except below | 66mm | 90-On | 1 | |
| 16D | TBA | 91207-PH8-005 | Right Axle - 3.0CL | 54mm | 97-00 | 1 | |

# HONDA
## 4 SPEED
## 3 SHAFT (120mm Clutch)
## 1990-On

| ILL | ALTO NO | REF NO | DESCRIPTION | SPEC | YEAR | QTY | NOTES |
|---|---|---|---|---|---|---|---|
| **METAL CLAD SEALS** | | | | | | | ...Continued |
| N I | 047415 | 91209-551-015 | Speedometer | | 90-On | 1 | |
| N I | 058401 | 91201-PA9-004 | Throttle Shaft | 18mm | 90-On | 1 | |
| N I | 047410 | 91209-612-003 | Manual Lever | 22mm | 90-On | 1 | |
| **SEALING RINGS** | | | | | | | |
| KT | 058603 | NA | Sealing Ring Kit - 6M | | 90-95 | 1 | works for all |
| KT | 058603B | NA | Sealing RIng Kit - 5T | | 96-97 | 1 | works for all |
| KT | 119601 | NA | Sealing Ring Kit - 3T/2P | | 98-On | 1 | works for all |
| 17A | 058103 | 22814-PF4-003 | Mainshaft Large - Metal | 35mm | 90-95 | 3 | |
| 17A | 058113 | 22814-P4P-003 | Mainshaft Large - Teflon | 35mm | 96-97 | 3 | |
| 17A | 058113A | 22814-PAX-005 | Mainshaft Large - Teflon | 32mm | 98-On | 1 | |
| 18A | 058104 | 22814-PK4-003 | Mainshaft Small - Metal | 29mm | 90-95 | 1 | |
| 18A | 058114 | 22815-P4P-003 | Mainshaft Small - Teflon | 29mm | 96-On | 1 | |
| 19B | 058100 | 22814-PA9-003 | Secondary Shaft - Metal | 32mm | 90-95 | 2 | |
| 19B | 058113A | 22814-P0X-003 | Secondary Shaft - Teflon | 32mm | 96-97 | 2 | |
| 19B | 058113B | 22816-P6H-003 | Secondary Shaft - Peak® | 35mm | 98-On | 2 | |

**NOTES**

# HONDA
## 4 SPEED
## 3 SHAFT (116, 120, 132mm Clutch)
## 1995-On

| ILL | DESCRIPTION | YEARS | FRICTION MODULE | STEEL MODULE | OVERHAUL KIT | BANNER KIT | MASTER KIT |
|---|---|---|---|---|---|---|---|
| **KITS** | | | | | | | |
| **HONDA ACCORD** | | | | | | | |
| KT | Rebuilding Kit - MPZA (V6 eng.) | 95-97 | 116752 | 116753 | 116800 | 116901LS | 116901 |
| KT | Rebuilding Kit - BAXA, MAXA (4 cyl. eng.) | 98-99 | 119752 | 119753 | 119800 | 119901LS | 119901 |
| **HONDA ODYSSEY 2.3L Engine** | | | | | | | |
| KT | Rebuilding Kit - MDWA | 98 | 119752 | 119753 | 119800 | 119901LS | 119901 |
| **HONDA PRELUDE** | | | | | | | |
| KT | Rebuilding Kit - M6HA | 97-01 | 119752 | 119753A | 119800 | 119901LS | 119901A |
| **ACURA 2.3CL** | | | | | | | |
| KT | Rebuilding Kit - B6VA | 98-99 | 119752 | 119753A | 119802 | 119903LS | 119903 |
| **ISUZU OASIS** | | | | | | | |
| KT | Rebuilding Kit | 98 | 119752 | 119753 | 119800 | 119901LS | 119901 |

| ILL | ALTO NO | REF NO | DESCRIPTION | SPEC | YEAR | QTY | NOTES |
|---|---|---|---|---|---|---|---|
| **MISCELLANEOUS GASKETS & KIT COMPONENTS** | | | | | | | |
| 1D | 119816A | 21811-P0Z-000 | Gasket, Case - MPZA | | 95-97 | 1 | |
| 1D | 119816 | 21811-P6H-000 | Gasket, Case - all others | | 97-On | 1 | |
| 2D | 119818 | 21812-P0Z-000 | Gasket, Side - MPZA | | 95-97 | 1 | |
| 2D | 119818A | 21812-PCJ-000 | Gasket, Side - MAXA, MDWA, M6HA (97) | | 97-01 | 1 | |
| 2D | 119818B | 21812-P6H-000 | Gasket, Side - BAXA, B6VA, M6HA (98+) | | 98-99 | 1 | |
| **FRICTION CLUTCHES** | | | | | | | |
| **MPZA** | | | | | | | |
| 3B | 116702 | 22544-P0Z-003 | 1st (low) | .075/1.9 | 95-97 | 4 | Heg - 49T - OD: 5.190" - PL |
| 4B | 078700G | Various | 2nd | .075/1.9 | 95-97 | 5 | Heg - 44T - OD: 4.732" - PL |
| 5A | 078700G | Various | 3rd | .075/1.9 | 90-On | 4 | Heg - 44T - OD: 4.732" - PL |
| 6A | 078700G | Various | 4th | .075/1.9 | 90-On | 4 | Heg - 44T - OD: 4.732" - PL |
| 7C | 116700 | 22674-P0Z-003 | Low-Hold | .075/1.9 | 90-On | 3 | Heg - 44T - OD: 4.564" - PL |
| **MDWA, M6HA, B6VA, MAXA, BAXA** | | | | | | | |
| 3B | 119700 | Various | 1st (low) | .075/1.9 | 97-On | 5-6 | Heg - 44T - OD: 4.560" - SB |
| 4B | 119702 | Various | 2nd | .075/1.9 | 97-On | 4-5 | Tan - 44T - OD: 4.560" - SB |
| 5A | 078700G | Various | 3rd | .075/1.9 | 97-On | 3 | Heg - 44T - OD: 4.732" - PL |
| 6A | 078700G | Various | 4th | .075/1.9 | 97-On | 3 | Heg - 44T - OD: 4.732" - PL |
| **STEEL CLUTCHES** | | | | | | | |
| **MPZA** | | | | | | | |
| 8B | 116703 | 22543-P0Z-003 | 1st (low) | .078/2.0 | 95-97 | 4 | 18T - ID: 4.070" |
| 8B | 116703-180 | NA | 1st (low) - selective | .071/1.8 | 95-97 | AR | 18T - ID: 4.070" |
| 8B | 116703-220 | NA | 1st (low) - selective | .083/2.2 | 95-97 | AR | 18T - ID: 4.077" |
| 9B | 078701 | Various | 2nd | .078/2.0 | 95-97 | 5 | 24T - ID: 3.677" |
| 10A | 078701 | Various | 3rd | .078/2.0 | 95-97 | 4 | 24T - ID: 3.677" |
| 11A | 078701 | Various | 4th | .078/2.0 | 95-97 | 4 | 24T - ID: 3.677" |
| N I | 078701-210 | Various | 2nd, 3rd, & 4th - selective | .083/2.1 | 95-97 | AR | 24T - ID: 3.677" |
| 12C | 116701 | 22683-P0Z-003 | Low-Hold | .078/2.0 | 95-97 | 2 | 6T - ID: 3.680" |
| 12C | 116701-160 | 22681-P0Z-003 | Low-Hold - selective | .063/1.6 | 95-97 | AR | 6T - ID: 3.680" |
| 12C | 116701-180 | 22682-P0Z-003 | Low-Hold - selective | .070/1.8 | 95-97 | AR | 6T - ID: 3.680" |
| 12C | 116701-220 | 22683-P0Z-003 | Low-Hold - selective | .087/2.2 | 95-97 | AR | 6T - ID: 3.680" |
| 12C | 116701-240 | 22684-P0Z-003 | Low-Hold - selective | .094/2.4 | 95-97 | AR | 6T - ID: 3.680" |
| **MDWA, M6HA, B6VA, MAXA, BAXA** | | | | | | | |
| 8B | 119701 | Various | 1st (low) | .078/2.0 | 97-On | 5 | 24T - ID: 3.600" |
| 9B | 119701-160 | 22543-P6H-003 | 2nd - B6VA & M6HA | .063/1.6 | 97-On | 6 | 24T - ID: 3.600" |
| 9B | 119701-230 | Various | 2nd - BAXA, MAXA, MDWA | .091/2.3 | 98-On | 5 | 24T - ID: 3.600" |
| 10A | 078703 | Various | 3rd | .102/2.6 | 97-On | 3 | 24T - ID: 3.680" |
| 11A | 078705 | Various | 4th | .091/2.3 | 97-On | 3 | 24T - ID: 3.680" |
| **FILTERS** | | | | | | | |
| 13D | 116940 | 25420-P0Z-003 | Filter - MPZA | | 95-97 | 1 | |
| 13D | 119940 | 25420-PAX-003 | Filter - B6VA | | 98-99 | 1 | |

# HONDA
## 4 SPEED
## 3 SHAFT (116, 120, 132mm Clutch)
## 1995-On

| ILL | ALTO NO | REF NO | DESCRIPTION | SPEC | YEAR | QTY | NOTES |
|---|---|---|---|---|---|---|---|
| **METAL CLAD SEALS** | | | | | | | |
| 14D | 047401 | 91207-639-015 | Converter Housing | | 92-97 | 1 | |
| 15D | 058401A | 91206-PG2-005 | Left Axle - all except below | 56mm | 95-97 | 1 | |
| 15D | TBA | 91205-PL3-A02 | Left Axle - Odyssey / Oasis | 54mm | 98 | 1 | |
| 16D | 058402F | 91206-PK4-003 | Right Axle - all except below | 66mm | 97-On | 1 | |
| 16D | TBA | 91207-PH8-005 | Right Axle - MPZA | 54mm | 95-97 | 1 | |
| N I | 047415 | 91209-551-015 | Speedometer | | 92-97 | 1 | |
| N I | 058401 | 91201-PA9-004 | Throttle Shaft | 18mm | 92-97 | 1 | |
| N I | 047410 | 91209-612-003 | Manual Lever | 22mm | 92-97 | 1 | |
| **SEALING RINGS** | | | | | | | |
| KT | 058603 | NA | Sealing Ring Kit, MPZA - 6M | | 95-97 | 1 | |
| KT | 119601 | NA | Sealing Ring Kit, all others - 3T/2P | | 97-On | 1 | |
| **MPZA** | | | | | | | |
| 17A | 058100 | 22814-PA9-023 | Mainshaft Large - Metal | 32mm | 95-97 | 2 | |
| 18A | 058104 | 22814-PK4-003 | Mainshaft Small - Metal | 29mm | 95-97 | 1 | |
| 19B | 058103 | 22814-PF4-003 | Secondary Shaft - Metal | 35mm | 95-97 | 3 | |
| **MDWA, M6HA, B6VA, MAXA, BAXA** | | | | | | | |
| 17A | 058113A | 22814-PAX-005 | Mainshaft Large - Teflon | 32mm | 97-On | 1 | |
| 18A | 058114 | 22815-P4P-003 | Mainshaft Small - Teflon | 29mm | 97-On | 1 | |
| 19B | 058113B | 22816-P6H-003 | Secondary Shaft - Peak® | 35mm | 97-On | 2 | |

**NOTES**

# HONDA
## 4 & 5 SPEED
## 3 SHAFT (120 & 123 Clutch)
## 2003-On

| ILL | DESCRIPTION | YEARS | FRICTION MODULE | STEEL MODULE | OVERHAUL KIT | BANNER KIT | MASTER KIT |
|---|---|---|---|---|---|---|---|
| **KITS** | | | | | | | |
| KT | Rebuilding Kit - MRVA, MCVA | 02-On | 164752 | 164753 | TBA | 164901LS | 164901 |
| KT | Rebuilding Kit - BZKA, MZKA | 03-On | 164752 | 164753 | TBA | TBA | TBA |
| KT | Rebuilding Kit - BCLA | 03-On | 169752 | 169753 | TBA | 169901LS | 169901 |

| ILL | ALTO NO | REF NO | DESCRIPTION | SPEC | YEAR | QTY | NOTES |
|---|---|---|---|---|---|---|---|
| **FRICTION CLUTCHES** | | | | | | | |
| **MRVA, MCVA** | | | | | | | |
| N I | 078700G | 22544-PRP-003 | Low | .076/1.93 | 02-On | 5 | Heg - 44T - OD: 4.732" - PL |
| N I | 078700G | 22545-PPV-003 | 2nd | .076/1.93 | 02-On | 5 | Heg - 44T - OD: 4.732" - PL |
| N I | 134700-195 | 22546-PPV-A01 | 3rd / 4th | .077/1.96 | 02-On | 6 | Heg - 44T - OD: 4.833" - SB |
| **BCLA** | | | | | | | |
| N I | 078700G | 22544-PRP-003 | Low / 3rd | .076/1.93 | 03-On | 10 | Heg - 44T - OD: 4.732" - PL |
| N I | 078700G | 22545-PRP-013 | 2nd | .076/1.93 | 03-On | 5 | Heg - 44T - OD: 4.732" - PL |
| N I | 134700-195 | 22546-PPV-A01 | 4th / 5th | .077/1.96 | 03-On | 6 | Heg - 44T - 4.833" - SB |
| **STEEL CLUTCHES** | | | | | | | |
| **MRVA, MCVA** | | | | | | | |
| N I | 078701-160 | 22543-RCL-901 | Low | .063/1.6 | 02-On | 5 | 24T - ID: 3.677 |
| N I | 078701 | 22643-PRP-003 | 2nd | .078/2.0 | 02-On | 4 | 24T - ID: 3.677 |
| N I | 161701A230 | 22653-PPV-A01 | 3rd / 4th | .090/2.3 | 02-On | 6 | |
| **BCLA** | | | | | | | |
| N I | TBA | 22543-RCL-003 | Low / 3rd | .063/1.6 | 03-On | 8 | Wave - 24T - ID: 3.677 |
| N I | 078701-160 | 22543-RCL-901 | Low / 3rd | .063/1.6 | 03-On | 8/2 | 24T - ID: 3.677 |
| N I | TBA | 22643-RCL-003 | 2nd | .063/1.6 | 03-On | 3 | Wave - 24T - ID: 3.677 |
| N I | 078701 | 22653-P7Z-003 | 2nd | .063/1.6 | 03-On | 3/1 | 24T - ID: 3.677 |
| N I | 169701-230 | 22653-RCL-003 | 4th / 5th | .090/2.3 | 03-On | 6 | Wave - 20T |

## NOTES

# HONDA
## 4 SPEED
## 3 SHAFT (123 & 128 Clutch)
## 1999-On

| ILL | DESCRIPTION | YEARS | FRICTION MODULE | STEEL MODULE | OVERHAUL KIT | BANNER KIT | MASTER KIT |
|---|---|---|---|---|---|---|---|
| **KITS** | | | | | | | |
| **HONDA ODYSSEY** | | | | | | | |
| KT | Rebuilding Kit - B7TA | 99-On | 134752 | 134753 | 078804A | 134901LS | 134901 |
| **ACURA 3.2TL** | | | | | | | |
| KT | Rebuilding Kit - B7VA | 99 | 134752 | 134753 | 078804A | 134901LS | 134901 |
| **ISUZU OASIS** | | | | | | | |
| KT | Rebuilding Kit | 99-On | 134752 | 134753 | 078804A | 134901LS | 134901 |

| ILL | ALTO NO | REF NO | DESCRIPTION | SPEC | YEAR | QTY | NOTES |
|---|---|---|---|---|---|---|---|
| **MISCELLANEOUS GASKETS & KIT COMPONENTS** | | | | | | | |
| 1D | TBA | 21811-P7T-000 | Gasket, Case | | 99-On | 1 | |
| 2D | TBA | 21812-P7T-000 | Gasket, Side | | 99-On | 1 | |
| **FRICTION CLUTCHES** | | | | | | | |
| 3B | 134700-195 | 22545-P7T-003 | 1st (low) | .077/1.95 | 99-On | 6 | Heg - 44T - OD: 4.833" - SB |
| 4B | 134700-195 | 22545-P7T-003 | 2nd | .077/1.95 | 99-On | 6 | Heg - 44T - OD: 4.833" - SB |
| 5A | 134702-195 | 22644-P7T-003 | 3rd | .077/1.95 | 99-On | 4 | Tan - 44T - OD: 5.040" - SB |
| 6A | 134702-195 | 22644-P7T-003 | 4th | .077/1.95 | 99-On | 4 | Tan - 44T - OD: 5.040" - SB |
| **STEEL CLUTCHES** | | | | | | | |
| 8B | 134701-200 | 22543-P7T-003 | 1st (low) - wide tooth | .078/2.0 | 99-On | 6 | 20T - ID: 3.675" |
| 9B | 134701-200 | 22543-P7T-003 | 2nd - wide tooth | .078/2.0 | 99-On | 6 | 20T - ID: 3.675" |
| 10A | 134703-230 | 22656-P7T-003 | 3rd - narrow tooth | .091/2.3 | 99-On | 4 | 20T - ID: 3.675" |
| 11A | 134703-200 | 22653-P7T-003 | 4th - narrow tooth | .078/2.0 | 99-On | 4 | 20T - ID: 3.675" |
| **FILTERS** | | | | | | | |
| 13D | 134940 | 25420-P7X-003 | Filter | | 99-On | 1 | |
| **METAL CLAD SEALS** | | | | | | | |
| 14D | 134400 | 91206-P0Z-005 | Converter Housing | 54mm | 99-On | 1 | |
| 15D | 134425 | 91205-P0X-005 | Left Axle | 56mm | 99-On | 1 | |
| 16D | 134426 | 91207-P7Z-003 | Right Axle | 68mm | 99-On | 1 | |
| N I | 047415 | 91209-551-015 | Speedometer | | 99-On | 1 | |
| N I | 058401 | 91201-PA9-004 | Throttle Shaft | 18mm | 99-On | 1 | |
| N I | 047410 | 91209-612-003 | Manual Lever | 22mm | 99-On | 1 | |
| **SEALING RINGS** | | | | | | | |
| KT | 119601 | NA | Sealing Ring Kit - 3T/2P | | 99-On | 1 | |
| 17A | 058113A | 22814-P0X-003 | Mainshaft Large - Teflon | 32mm | 99-On | 2 | |
| 18A | 058114 | 22815-P4P-003 | Mainshaft Small - Teflon | 29mm | 99-On | 1 | |
| 19B | 058113B | 22816-P6H-003 | Secondary Shaft - Peak® | 35mm | 99-On | 2 | |

**NOTES**

# HONDA
## 5 SPEED
## ACURA MDX
## 2003-On

| ILL | DESCRIPTION | YEARS | FRICTION MODULE | STEEL MODULE | OVERHAUL KIT | BANNER KIT | MASTER KIT |
|---|---|---|---|---|---|---|---|
| **KITS** | | | | | | | |
| KT | Rebuilding Kit - MDKA | 03-On | 172752 | 172753 | TBA | 172901LS | 172901 |

| ILL | ALTO NO | REF NO | DESCRIPTION | SPEC | YEAR | QTY | NOTES |
|---|---|---|---|---|---|---|---|
| **FRICTION CLUTCHES** | | | | | | | |
| N I | 078700G | 22544-PX4-701 | Low Hold | .075/1.9 | 03-On | 3 | Heg - 44T - OD: 4.732" - PL |
| N I | 116702 | 22544-P7W-003 | Low | .075/1.9 | 03-On | 5 | Heg - 49T - OD: 5.190" - PL |
| N I | 172704-190 | 22545-RDK-013 | 2nd | .076/1.9 | 03-On | 7 | Tan - 28T - OD: 4.700 - SB |
| N I | 172706-190 | 22544-RDK-003 | 3rd | .076/1.9 | 03-On | 5 | Tan - 42T - OD: 5.300 - SB |
| N I | 172708-190 | 22645-RDK-003 | 4th / 5th | .076/1.9 | 03-On | 8 | Tan - 44T - OD: 5.120 - SB |
| **STEEL CLUTCHES** | | | | | | | |
| N I | 146703-180 | 22673-P7W-003 | Low Hold | .071/1.8 | 03-On | 3 | 6T - ID: 3.677" |
| N I | 146701-160 | 22543-P7W-003 | Low | .062/1.6 | 03-On | 5 | 24T - ID: 4.070" |
| N I | 172705-180 | 22643-RDK-013 | 2nd | .071/1.8 | 03-On | 7 | 24T - ID: 3.3900 |
| N I | 172707-200 | 22653-RDK-003 | 3rd | .079/2.0 | 03-On | 5 | 20T |
| N I | 172709-200 | 22656-RDK-003 | 4th / 5th | .079/2.0 | 03-On | 8 | 24T - ID: 3.680 |

**NOTES**

# HONDA
## 4 SPEED
## ACURA NSX
## 1991-On

| ILL | DESCRIPTION | YEARS | FRICTION MODULE | STEEL MODULE | OVERHAUL KIT | BANNER KIT | MASTER KIT |
|---|---|---|---|---|---|---|---|
| **KITS** | | | | | | | |
| KT | Rebuilding Kit - with Differential clutches MR9A | 91-On | 078752C | 078753C | 078802 | 078905LS | 078905 |
| KT | Rebuilding Kit - without Differential clutches MR9A | 91-On | 078752B | 078753B | 078802 | 078903LS | 078903 |

| ILL | ALTO NO | REF NO | DESCRIPTION | SPEC | YEAR | QTY | NOTES |
|---|---|---|---|---|---|---|---|
| **MISCELLANEOUS GASKETS & KIT COMPONENTS** | | | | | | | |
| 1G | TBA | 21811-PR9-000 | Gasket, Case - all | | 91-On | 1 | |
| 2G | TBA | 21812-PR9-000 | Gasket, Side - all | | 91-On | 1 | |
| **FRICTION CLUTCHES** | | | | | | | |
| 3B | 058720G | Various | 1st (low) | .075/1.9 | 91-On | 5 | Heg - 41T - OD: 4.558" - PL |
| 4B | 078700G | Various | 2nd | .075/1.9 | 91-On | 5 | Heg - 44T - OD: 4.732" - PL |
| 5A | 078700G | Various | 3rd | .075/1.9 | 91-On | 5 | Heg - 44T - OD: 4.732" - PL |
| 6A | 078700-230 | Various | 4th | .091/2.3 | 91-On | 5 | Heg - 44T - OD: 4.720" - PL |
| 7C | 078700G | Various | Low-Hold | .075/1.9 | 91-On | 3 | Heg - 44T - OD: 4.732" - PL |
| N I | 078718 | 41252-PR8-000 | Differential | .067/1.7 | 91-On | 7 | Heg - 17T - OD: 3.933" - PL |
| **STEEL CLUTCHES** | | | | | | | |
| 8B | 058723-200 | 22643-PR0-003 | 1st (low) | .079/2.0 | 91-On | 5 | 24T - ID: 3.440" |
| 9B | 078705 | Various | 2nd | .091/2.3 | 91-On | 5 | 24T - ID: 3.677" |
| 10A | 078705 | Various | 3rd | .091/2.3 | 91-On | 5 | 24T - ID: 3.677" |
| 11A | 078705 | Various | 4th | .091/2.3 | 91-On | 5 | 24T - ID: 3.677" |
| 12C | 078701-210 | 22543-PX4-003 | Low-Hold | .083/2.1 | 91-On | 3 | 24T - ID: 3.677" |
| N I | 078719 | 41251-PR8-000 | Differential | .100/2.55 | 91-On | 6 | 26T - ID: 2.825" |
| **OEI™ Original Equipment Improvements** | | | | | | | |
| N I | 058767-116 | NA | DRUMSAVER™ replaces belleville spring | | 91-On | 1 | used with 116mm clutch |
| N I | 078767 | NA | DRUMSAVER™ replaces belleville spring | | 91-On | 1 | used with 120mm clutch |
| **FILTERS** | | | | | | | |
| 13D | 078944 | 25420-PR9-010 | Filter | | 91-On | 1 | |
| **METAL CLAD SEALS** | | | | | | | |
| 14D | 101400 | 91207-PR9-003 | Converter Housing | 68mm | 91-On | 1 | |
| 15D | TBA | 91207-PR8-005 | Left Axle | 63mm | 91-On | 1 | |
| 16D | TBA | 91206-PR8-003 | Right Axle | 70mm | 91-On | 1 | |
| N I | 047415 | 91209-551-015 | Speedometer | | 91-On | 1 | |
| N I | 058401 | 91201-PA9-004 | Throttle Shaft | 18mm | 91-On | 1 | |
| N I | 047410 | 91209-612-003 | Manual Lever | 22mm | 91-On | 1 | |
| **SEALING RINGS** | | | | | | | |
| KT | 078601 | NA | Sealing Ring Kit - 5M | | 91-On | 1 | |
| 17A | 101100 | 22814-PR9-003 | Mainshaft | 37mm | 91-On | 3 | |
| 19B | 058103 | 22814-PF4-003 | Secondary shaft | 35mm | 91-On | 2 | |

**NOTES**

# HONDA
## 5 SPEED
## ACURA RSX
## 2002-On

| ILL | DESCRIPTION | YEARS | FRICTION MODULE | STEEL MODULE | OVERHAUL KIT | BANNER KIT | MASTER KIT |
|---|---|---|---|---|---|---|---|
| **KITS** | | | | | | | |
| KT | Rebuilding Kit - MRMA | 02-On | 161752 | 161753 | 161800 | 161901LS | 161901 |

| ILL | ALTO NO | REF NO | DESCRIPTION | SPEC | YEAR | QTY | NOTES |
|---|---|---|---|---|---|---|---|
| **FRICTION CLUTCHES** | | | | | | | |
| N I | 078700G | 22544-PRP-003 | 3rd / Lo | .075/1.9 | 02-On | 8 | Heg - 44T - OD: 4.732" - PL |
| N I | 078700G | 22544-PRP-003 | 2nd | .075/1.9 | 02-On | 4 | Heg - 44T - OD: 4.732" - PL |
| N I | 134700-195 | 22546-PRP-003 | 4th / 5th | .077/1.95 | 02-On | 6 | Heg - 44T - OD: 4.833" - SB |
| **STEEL CLUTCHES** | | | | | | | |
| N I | 161701A200 | 22543-PRP-003 | 3rd / Lo | .079/2.0 | 02-On | 7 | Wave - 20T |
| N I | 161701-200 | 22543-PRP-901 | 3rd / Lo | .079/2.0 | 02-On | 1 | Flat - 20T |
| N I | TBA | 22643-PRP-003 | 2nd | .079/2.0 | 02-On | 3 | Wave |
| N I | 078701 | 22653-P7Z-003 | 2nd | .079/2.0 | 02-On | 1/4 | Flat 24T - ID: 3.677" |
| N I | 134701A200 | 22653-PRP-003 | 4th / 5th | .079/2.0 | 02-On | 6 | Wave |
| **PRESSURE PLATES** | | | | | | | |
| N I | TBA | 22551-PRP-003 | 3rd | | 02-On | AR | |
| N I | TBA | 22571-PRP-003 | 2nd | | 02-On | 1 | Stepped |
| N I | TBA | 22581-PRP-003 | 4th / 5th | | 02-On | 2 | |

**NOTES**

# HONDA
## 5 SPEED
## ACURA TSX
## 2004-On

| ILL | DESCRIPTION | YEARS | FRICTION MODULE | STEEL MODULE | OVERHAUL KIT | BANNER KIT | MASTER KIT |
|---|---|---|---|---|---|---|---|
| **KITS** | | | | | | | |
| KT | Rebuilding Kit | 04-On | 177752 | 177753 | 177800 | 177901LS | 177901 |

| ILL | ALTO NO | REF NO | DESCRIPTION | SPEC | YEAR | QTY | NOTES |
|---|---|---|---|---|---|---|---|
| **FRICTION CLUTCHES** | | | | | | | |
| N I | 078700G | 22544-RCT-004 | 3rd / Lo | .075/1.9 | 04-On | 10 | Heg - 44T - 4.720" - PL |
| N I | 078700G | 22545-PRP-013 | 2nd | .075/1.9 | 04-On | 5 | Heg - 44T - 4.720" - PL |
| N I | 078700G | 22544-PRP-003 | 4th / 5th | .075/1.9 | 04-On | 8 | Heg - 44T - 4.720" - PL |
| **STEEL CLUTCHES** | | | | | | | |
| N I | 177701-160 | 22543-RCT-004 | 3rd / Lo | .063/1.6 | 04-On | 10 | 30T |
| N I | 078701 | 22643-RCL-003 | 2nd | .079/2.0 | 04-On | 4 | Flat 24T - ID: 3.677" |
| N I | 078701-400 | 22643-RCL-801 | 2nd | .157/4.0 | 04-On | 1 | Flat 24T - ID: 3.677" |
| N I | 078701 | 22643-RCL-003 | 4th / 5th | .079/2.0 | 04-On | 8 | Flat 24T - ID: 3.677" |

# HONDA
## 5 SPEED
## 2000-On

| ILL | DESCRIPTION | YEARS | FRICTION MODULE | STEEL MODULE | OVERHAUL KIT | BANNER KIT | MASTER KIT |
|---|---|---|---|---|---|---|---|
| **KITS** | | | | | | | |
| KT | Rebuilding Kit- B7WA, MGFA, M7WA | 00-On | 146752 | 146753 | 146800 | 146901LS | 146901 |
| KT | Rebuilding Kit- BGHA, MGHA (MDX) | 01-02 | 157752 | 157753 | 157800 | 157901LS | 157901 |
| KT | Rebuilding Kit- BYBA (Odyssey) | 01-03 | 157752 | 157753 | 157800 | 157901LS | 157901 |

| ILL | ALTO NO | REF NO | DESCRIPTION | SPEC | YEAR | QTY | NOTES |
|---|---|---|---|---|---|---|---|
| **MISCELLANEOUS GASKETS & KIT COMPONENTS** | | | | | | | |
| N I | TBA | 21811-P7W-000 | Gasket, Case - except MGHA, BGHA, BYBA | | 00-On | 1 | |
| N I | TBA | 21811-PGH-000 | Gasket, Case - MGHA, BGHA, BYBA only | | 01-On | 1 | |
| N I | TBA | 21812-P7W-000 | Gasket, Side - all | | 00-On | 1 | |
| **FRICTION CLUTCHES** | | | | | | | |
| N I | 116702 | Various | 1st (low) | .075/1.9 | 00-On | 5 | Heg - 49T - OD: 5.190" - PL |
| N I | 146704-195 | Various | 2nd | .077/1.95 | 00-On | 6 | Heg - 30T - OD: 5.020" - SB |
| N I | 146706-195 | Various | 3rd - Except MGHA, BGHA, BYBA | .077/1.95 | 00-On | 5 | Tan - 42T - OD: 4.727" - SB |
| N I | 157706-195 | 22644-PGH-003 | 3rd - MGHA, BGHA, BYBA only | .077/1.95 | 01-On | 5 | Tan - 42T - OD: 4.890" - SB |
| N I | 134702-195 | Various | 4th | .077/1.95 | 00-On | 4 | Tan - 44T - OD: 5.040" - SB |
| N I | 134702-195 | Various | 5th | .077/1.95 | 00-On | 4 | Tan - 44T - OD: 5.040" - SB |
| N I | 078700G | Various | Low-Hold | .075/1.9 | 00-On | 3 | Heg - 44T - OD: 4.732" - PL |
| **STEEL CLUTCHES** | | | | | | | |
| N I | 146701-160 | Various | 1st (low) | .063/1.6 | 00-On | 5 | 24T - ID: 4.070" |
| N I | 146705-160 | Various | 2nd | .063/1.6 | 00-On | 6 | 20T - ID: 3.751" |
| N I | 146707-230 | Various | 3rd - Except MGHA, BGHA, BYBA | .091/2.3 | 00-On | 5 | 24T - ID: 3.463" |
| N I | 157707-230 | 22653-PGH-003 | 3rd - MGHA, BHGA,BYBA only | .091/2.3 | 01-On | 5 | 20T - ID: 3.463" |
| N I | 134703-200 | Various | 4th | .078/2.0 | 00-On | 4 | 20T - ID: 3.677" |
| N I | 134703-230 | Various | 5th | .091/2.3 | 00-On | 4 | 20T - ID: 3.677" |
| N I | 146703-180 | Various | Low-Hold | .071/1.8 | 00-On | 3 | 6T- ID: 3.677" |
| **PRESSURE PLATES** | | | | | | | |
| N I | 146762-210 | 22551-P7W-003 | 2nd | .083/2.1 | 00-On | 1 | |
| N I | 146762-220 | 22552-P7W-003 | 2nd | .087/2.2 | 00-On | 1 | |
| N I | 146762-230 | NA | 2nd | .091/2.3 | 00-On | 1 | |
| N I | 146762-240 | NA | 2nd | .094/2.4 | 00-On | 1 | |
| N I | 146762-250 | 22555-PY4-003 | 2nd | .098/2.5 | 00-On | 1 | |
| N I | 146762-260 | 22556-PY4-003 | 2nd | .102/2.6 | 00-On | 1 | |
| N I | 146762-270 | 22557-PY4-003 | 2nd | .106/2.7 | 00-On | 1 | |
| N I | 146762-280 | 22558-PY4-003 | 2nd | .110/2.8 | 00-On | 1 | |
| N I | 146762-290 | 22559-P7W-003 | 2nd | .114/2.9 | 00-On | 1 | |
| N I | 146763-210 | 22551-PX4-003 | 3rd | .083/2.1 | 00-On | 1 | |
| N I | 146763-220 | 22552-PX4-003 | 3rd | .087/2.2 | 00-On | 1 | |
| N I | 146763-230 | 22553-PX4-003 | 3rd | .091/2.3 | 00-On | 1 | |
| N I | 146763-240 | 22554-PX4-003 | 3rd | .094/2.4 | 00-On | 1 | |
| N I | 146763-250 | 22555-PX4-003 | 3rd | .098/2.5 | 00-On | 1 | |
| N I | 146763-260 | 22556-PX4-003 | 3rd | .102/2.6 | 00-On | 1 | |
| N I | 146763-270 | 22557-PX4-003 | 3rd | .106/2.7 | 00-On | 1 | |
| N I | 146763-280 | 22558-PX4-003 | 3rd | .110/2.8 | 00-On | 1 | |
| N I | 146763-290 | 22559-PX4-003 | 3rd | .114/2.9 | 00-On | 1 | |
| N I | 134765-210 | 22561-P7T-003 | 4th, 5th | .082/2.1 | 00-On | 1 | 11T - ID: 3.662" |
| N I | 134765-220 | 22562-P7T-003 | 4th, 5th | .087/2.2 | 00-On | 1 | 11T - ID: 3.662" |
| N I | 134765-230 | 22563-P7T-003 | 4th, 5th | .090/2.3 | 00-On | 1 | 11T - ID: 3.662" |
| N I | 134765-240 | 22564-P7T-003 | 4th, 5th | .094/2.4 | 00-On | 1 | 11T - ID: 3.662" |
| N I | 134765-250 | 22565-P7T-003 | 4th, 5th | .098/2.5 | 00-On | 1 | 11T - ID: 3.662" |
| N I | 134765-260 | 22566-P7T-003 | 4th, 5th | .102/2.6 | 00-On | 1 | 11T - ID: 3.662" |
| N I | 134765-270 | 22567-P7T-003 | 4th, 5th | .107/2.7 | 00-On | 1 | 11T - ID: 3.662" |
| N I | 134765-280 | 22568-P7T-003 | 4th, 5th | .110/2.8 | 00-On | 1 | 11T - ID: 3.662" |
| N I | 134765-290 | 22569-P7T-003 | 4th, 5th | .114/2.9 | 00-On | 1 | 11T - ID: 3.662" |
| N I | 146760-350 | 22551-P7W-003 | Low | .138/3.5 | 00-On | 1 | |
| N I | 146760-360 | 22553-P7W-003 | Low | .142/3.6 | 00-On | 1 | |
| N I | 146760-370 | 22555-P7W-003 | Low | .146/3.7 | 00-On | 1 | |

# HONDA
## 5 SPEED
## 2000-On

| ILL | ALTO NO | REF NO | DESCRIPTION | SPEC | YEAR | QTY | NOTES |
|---|---|---|---|---|---|---|---|
| **PRESSURE PLATES** | | | | | | | ...Continued |
| N I | 146760-380 | 22557-P7W-003 | Low | .150/3.8 | 00-On | 1 | |
| N I | 146760-390 | 22559-P7W-003 | Low | .154/3.9 | 00-On | 1 | |
| N I | 146761-500 | 22675-P7W-003 | Low/Hold | .197/5.0 | 00-On | 1 | |
| **FILTERS** | | | | | | | |
| N I | TBA | 25420-P7W-003 | Filter - except MGHA | | 00-On | 1 | |
| N I | TBA | 25420-PGH-003 | Filter - MGHA only | | 01-On | 1 | |
| **METAL CLAD SEALS** | | | | | | | |
| N I | 134400 | 91206-P0Z-005 | Converter Housing | 54mm | 00-On | 1 | |
| N I | 134425 | 91205-P0X-005 | Left Axle | 56mm | 00-On | 1 | |
| N I | 134426 | 91207-P7Z-003 | Right Axle | 68mm | 00-On | 1 | |
| N I | 047415 | 91209-551-015 | Speedometer | | 00-On | 1 | |
| N I | 058401 | 91201-PA9-004 | Throttle Shaft | 18mm | 00-On | 1 | |
| N I | 047410 | 91209-612-003 | Manual Lever | 22mm | 00-On | 1 | |
| **SEALING RINGS** | | | | | | | |
| KT | 119601 | NA | Sealing Ring Kit - 3T/2P | | 00-On | 1 | |
| 17A | 058113A | 22814-P0X-003 | Mainshaft Large - Teflon | 32mm | 00-On | 2 | |
| 18A | 058114 | 22815-P4P-003 | Mainshaft Small - Teflon | 29mm | 00-On | 1 | |
| 19B | 058113B | 22816-P6H-003 | Secondard Shaft - Peakr | 35mm | 00-On | 2 | |

**NOTES**

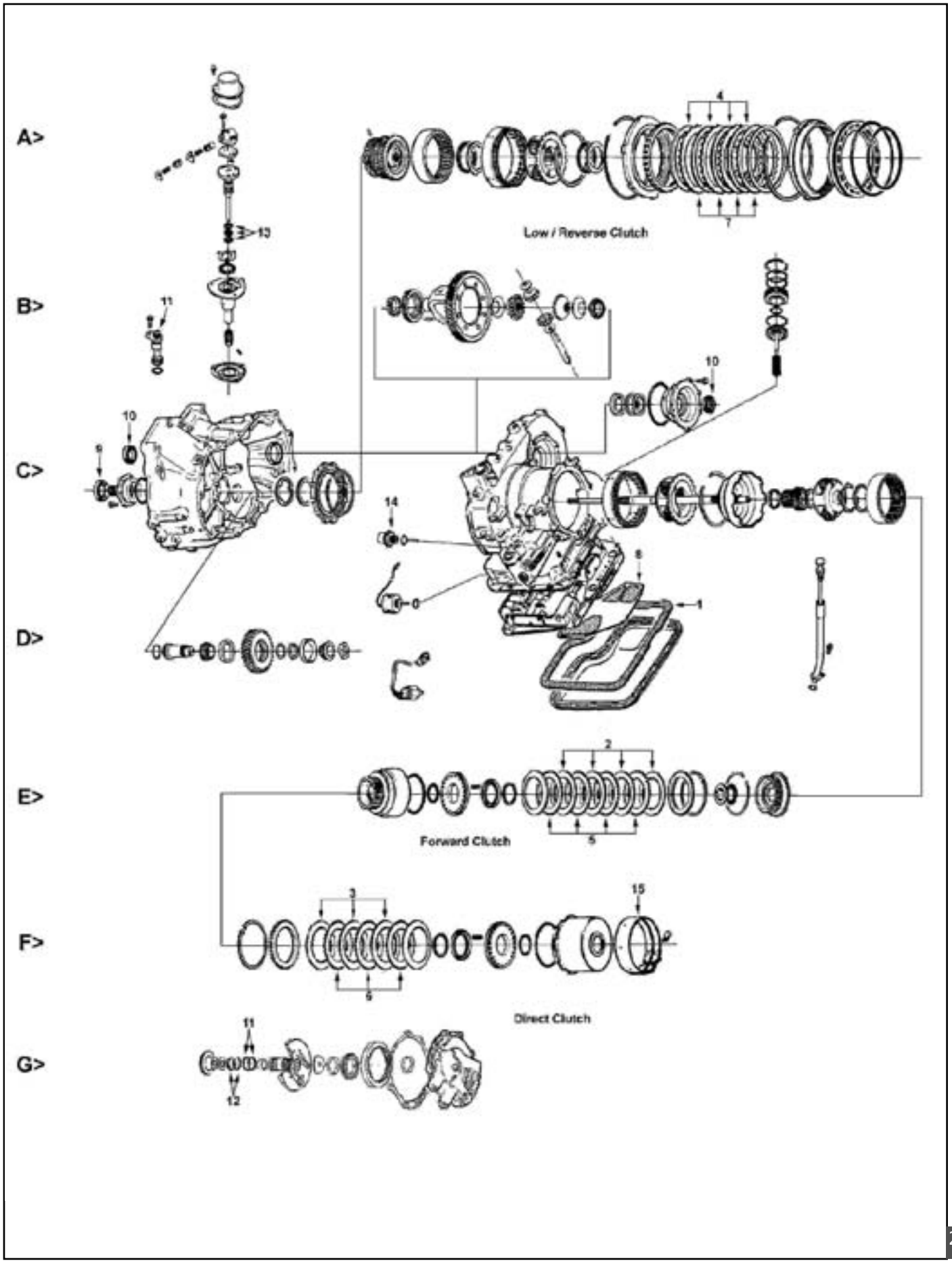
A>
B>
C>
D>
E>
F>
G>
Low / Reverse Clutch
Forward Clutch
Direct Clutch

# MAZDA
## MAZDA, GM, FORD, ISUZU
## F3A
## 1981-97

| ILL | DESCRIPTION | YEARS | FRICTION MODULE | STEEL MODULE | OVERHAUL KIT | BANNER KIT | MASTER KIT |
|---|---|---|---|---|---|---|---|
| **KITS** | | | | | | | |
| KT | Rebuilding Kit - F3A combo | 81-93 | 063752 | 063753 | 063800 | 063901LS | 063901 |
| KT | Rebuilding Kit - Ford Aspire | 94-97 | 063752B | 063753B | 063802 | 063901ALS | 063901A |

| ILL | ALTO NO | REF NO | DESCRIPTION | SPEC | YEAR | QTY | NOTES |
|---|---|---|---|---|---|---|---|
| **MISCELLANEOUS GASKETS & KIT COMPONENTS** | | | | | | | |
| 1D | 063816 | FT01-19-835 | Gasket, Oil pan - all | Cork/Rub | 81-97 | 1 | |
| **FRICTION CLUTCHES** | | | | | | | |
| 2E | 042700 | Various | Forward | .061/1.55 | 81-97 | 3-4 | Tan - 44T - OD: 4.530" - WF |
| 3F | 042700 | Various | Direct | .061/1.55 | 81-97 | 3 | Tan - 44T - OD: 4.530" - WF |
| 4A | 063702 | Various | Low / Reverse | .061/1.55 | 81-97 | 4-5 | Heg - 62T - OD: 5.790" - WF |
| **HI-PERFORMANCE - RED EAGLE®** | | | | | | | |
| 2E | 042740 | NA | Forward or Direct | .061/1.55 | 81-97 | 3-4 | Red - 44T - OD: 4.530" - SM |
| **STEEL CLUTCHES** | | | | | | | |
| 5E | 063701 | Various | Forward | .063/1.6 | 81-97 | 3-4 | 28T - ID: 3.625" |
| 6F | 063701 | Various | Direct | .063/1.6 | 81-97 | 3 | 28T - ID: 3.625" |
| 7A | 063703 | Various | Low / Reverse | .059/1.5 | 81-97 | 4-5 | 37T - ID: 5.123" |
| **BANDS** | | | | | | | |
| 15F | 063950 | 0338-19-360B | Brake | Tan | 81-97 | 1 | |
| **FILTERS** | | | | | | | |
| KT | FK063940 | NA | Filter Kit - Shallow pan | | 81-88 | 1 | |
| 8D | FK063944 | NA | Filter - (Mazda/Ford) | | 87-90 | 1 | |
| KT | FK063942 | NA | Filter Kit - GM with Tube | | 87-93 | 1 | |
| KT | FK063946 | NA | Filter Kit - GM without Tube | | 85-86 | 1 | |
| KT | FK063948 | NA | Filter Kit - Ford Festiva, Lazer, & Tracer | | 89-93 | 1 | |
| KT | FK063948A | NA | Filter Kit - Ford Aspire | | 94-97 | 1 | |
| 8D | 063940 | FT01-19-815 | Filter - Shallow pan (Mazda/Ford) | | 81-88 | 1 | with oval intake |
| 8D | 063944 | E7GZ-7A098A | Filter - (Mazda/Ford) | | 87-90 | 1 | |
| 8D | 063942 | 94428489 | Filter - Deep pan (Isuzu/GM) with Tube | | 87-93 | 1 | |
| 8D | 063946 | 94413320 | Filter - Deep pan (Isuzu/GM) without Tube | | 85-86 | 1 | |
| 8D | 063948 | E9BZ-7A098A | Filter - Deep pan (Ford Festiva, Lazer, Tracer) | | 89-93 | 1 | |
| 8D | 063948A | F4BZ-7A098A | Filter - Deep pan (Ford Aspire) | | 94-97 | 1 | |
| **METAL CLAD SEALS** | | | | | | | |
| 9C | 063400 | FT01-19-223 | Front Pump | | 81-97 | 1 | |
| 10C | 063401 | F003-27-238A | Axle (except GM) - without flange | | 81-97 | 2 | can substitute 059401 |
| 10C | 063401A | 97070182 | Axle (GM) - with flange | | 89-93 | 2 | can substitute 048401 |
| 11B | 063402 | 99586-08166 | Speedometer | | 81-97 | 1 | |
| **SEALING RINGS** | | | | | | | |
| KT | 063600 | G700 | Sealing Ring Kit - 4M/4T | | 81-97 | 1 | |
| 11G | 042100 | 0338-19-256 | Oil Pump Stator - Front (Direct clutch) | 1.7323 | 81-97 | 2 | |
| 12G | 042101 | 0338-19-257 | Oil Pump Stator - Rear (Forward clutch) | 1.6929 | 81-97 | 2 | |
| 13B | 063100 | FT01-19-655 | Governor | Teflon | 81-97 | 3 | |
| N I | 063101 | FT01-19-538 | Lube Seal | Teflon | 81-97 | 1 | |
| **BUSHINGS** | | | | | | | |
| KT | 063625 | NA | Kit | | 81-97 | 1 | |
| **MODULATORS** | | | | | | | |
| 14C | 042500 | 1758-19-823 | Modulator - except Aspire | | 81-93 | 1 | |
| 14C | 063500 | F4BZ-7A377A | Modulator - Aspire | | 94-97 | 1 | |

**NOTES**

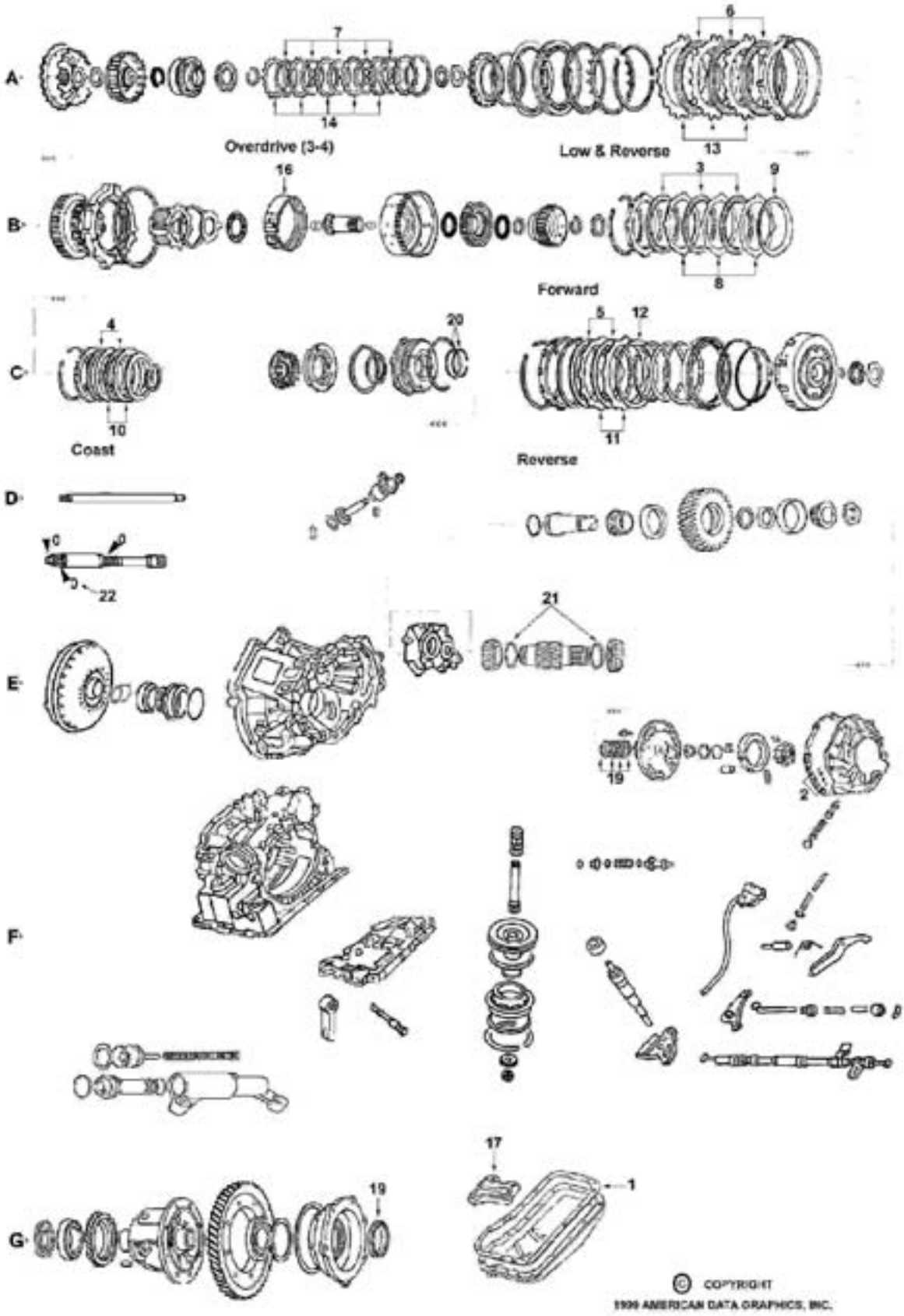
A
7
6
14
13
Overdrive (3-4)
Low & Reverse
B
16
3
9
8
Forward
C
4
20
5
12
10
11
Coast
Reverse
D
22
E
21
19
2
F
G
19
17
1
© COPYRIGHT
1999 AMERICAN DATA GRAPHICS, INC.

# MAZDA

## MAZDA - F4AEL
## FORD - 4EAT Type F
## 1990-99

| ILL | DESCRIPTION | YEARS | FRICTION MODULE | STEEL MODULE | OVERHAUL KIT | BANNER KIT | MASTER KIT |
|---|---|---|---|---|---|---|---|
| **KITS** | | | | | | | |
| **MAZDA** | | | | | | | |
| KT | Rebuilding Kit - with 2.3mm 3/4 Steels | 90-91 | 081752 | 081753A | 081802 | 081901LS | 081901A |
| KT | Rebuilding Kit - with 1.8mm 3/4 Steels | 91-94 | 081752 | 081753 | 081802 | 081901LS | 081901 |
| KT | Rebuilding Kit - with 3.3mm 3/4 Steel | 95-99 | 081752 | 081753B | 081802 | 081901LS | 081903 |
| **FORD** | | | | | | | |
| KT | Rebuilding Kit - with F1CZ-7A262A piston | 90-96 | 081752 | 081753 | 081802 | 081901LS | 081901 |
| KT | Rebuilding Kit - with F1CZ-7A262B piston | 90-97 | 081752 | 081753A | 081802 | 081901LS | 081901A |
| KT | Rebuilding Kit - with 3.3mm 3/4 Steels | 98-99 | 081752 | 081753B | 081802 | 081901LS | 081903 |

| ILL | ALTO NO | REF NO | DESCRIPTION | SPEC | YEAR | QTY | NOTES |
|---|---|---|---|---|---|---|---|
| **MISCELLANEOUS GASKETS & KIT COMPONENTS** | | | | | | | |
| 1G | 081816 | FU60-21-512B | Gasket, Oil pan | Cork/Rub | 90-99 | 1 | |
| **FRICTION CLUTCHES** | | | | | | | |
| 3B | 081700 | FW01-19-610 | Forward | .063/1.6 | 90-99 | 3 | Tan - 42T - OD: 4.974" - PL |
| 3B | 081700-150 | NA | Forward - Powerpack™ Component | .058/1.47 | 90-99 | AR | Tan - 42T - OD: 4.974" |
| 4C | 081702 | FW01-19-590 | Coast | .063/1.6 | 90-99 | 2 | Tan - 16T - OD: 4.533" - PL |
| 5C | 081704 | FW01-19-5J0 | Reverse | .063/1.6 | 90-99 | 2 | Tan - 45T - OD: 6.891" - PL |
| 6A | 081706 | FW01-19-4F0 | Low / Reverse | .063/1.6 | 90-99 | 4 | Tan - 48T - OD: 7.073" - PL |
| 6A | 081706A160 | FW01-19-4F0 | Low / Reverse | .063/1.6 | 90-99 | 4 | Grn - 48T - OD: 7.073" - PL |
| 7A | 081708 | FW30-19-370A | 3/4 Clutch | .063/1.6 | 90-99 | 4 | Tan - 22T - OD: 4.331" - SM |
| **STEEL CLUTCHES** | | | | | | | |
| 8B | 081701 | MFU61-19-571 | Forward | .063/1.6 | 90-99 | 3 | 31T - ID: 4.353" |
| 8B | 081701-140 | NA | Forward - Powerpack™ Component | .055/1.4 | 90-99 | AR | 31T - ID: 4.353" |
| 10C | 081703 | MFU60-19-621 | Coast | .063/1.6 | 90-99 | 2 | 26T - ID: 3.861" |
| 11C | 081705 | MFU61-19-561 | Reverse | .063/1.6 | 90-99 | 2 | 32T - ID: 6.320" |
| 13A | 081707 | FU61-19-451A | Low / Reverse | .063/1.6 | 90-99 | 4 | 16T - ID: 6.545" |
| 14A | 081709-180 | FU64-19-334B | 3/4 Clutch - use with F1CZ-7A262A piston | .071/1.8 | 90-96 | 4 | 38T - ID: 3.670" |
| 14A | 081709-230 | | 3/4 Clutch - use with F1CZ-7A262C piston | .091/2.3 | 90-97 | 4 | 38T - ID: 3.670" |
| 14A | 081709-330 | FW30-19-334 | 3/4 Clutch | .130/3.3 | 98-99 | 3 | 38T - ID: 3.670" |
| 14A | 081709 | FU64-19-334A | 3/4 Clutch - selective | .061/1.6 | 90-99 | 4 | 38T - ID: 3.670" |
| **PRESSURE PLATES** | | | | | | | |
| 15B | 081760-340 | NA | Forward - backing Powerpack™ Component | .133/3.4 | 90-99 | 1 | |
| 15B | 081760-460 | FU60-19-572A | Forward - backing | .181/4.6 | 90-99 | 1 | |
| N I | 081764-380 | NA | 3/4 Clutch | .150/3.8 | 90-99 | 1 | |
| N I | 081764-444 | NA | 3/4 Clutch | .175/4.44 | 90-99 | 1 | |
| **OEI™ Original Equipment Improvements** | | | | | | | |
| KT | 081755 | NA | DRUMSAVER™ Kit - Forward Clutch | | 90-99 | 1 | Allows Reuse of worn drum |
| N I | 081701XW | NA | DRUMSAVER™ - Forward Clutch | | 90-99 | 1 | Allows Reuse of worn drum |
| N I | 081985 | SK®F4AEL | Shift Kit® | Transgo® | 90-99 | 1 | |
| **BANDS** | | | | | | | |
| 16B | 081950 | FU60-21-310E | Brake | Tan | 90-99 | 1 | |
| **FILTERS** | | | | | | | |
| KT | FK081940 | NA | Filter Kit | | 90-99 | 1 | |
| 17G | 081940 | FU61-21-500B | Filter | | 90-99 | 1 | |
| **METAL CLAD SEALS** | | | | | | | |
| 18E | 074400 | FU01-19-241A | Front Pump | | 90-99 | 1 | |
| 18G | 063401 | F003-27-238A | Axle | | 90-99 | 2 | |
| N I | 063402 | 99586-08166 | Speedometer | | 90-99 | 1 | |
| **SEALING RINGS** | | | | | | | |
| KT | 081600 | B270 | Sealing Ring Kit - 6M/9T | | 90-99 | 1 | |
| KT | 081600A | B270B | Sealing Ring Kit - 6M | | 90-99 | 1 | without Accum. rings |
| KT | 081601 | NA | Sealing Ring Kit - Accum. Pistons - 6T | | 90-99 | 1 | Teflon rings |
| KT | 081601A | NA | Sealing Ring Kit - Accum. Pistons - 6R | | 90-99 | 1 | Rubber rings |

## NOTES

# MAZDA

## MAZDA - G4AEL, G4AHL, GF4AEL
## FORD - G4EAT, GF4EAT
## 1986-On

A>

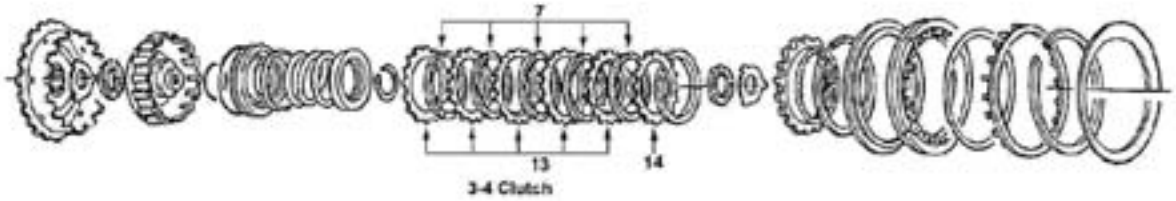


B>

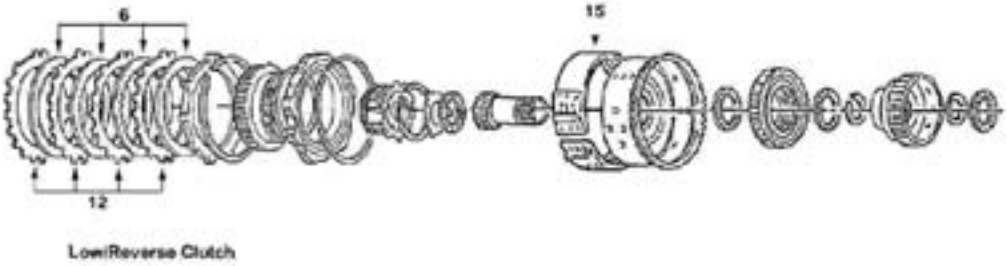


C>

D>

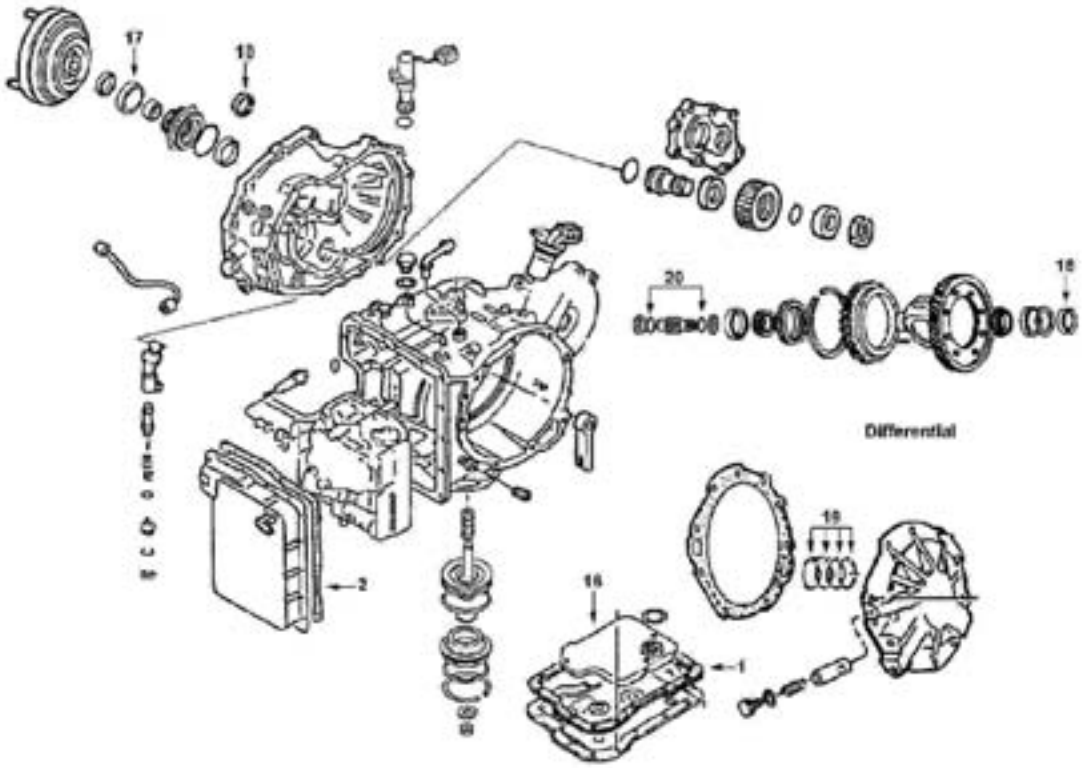


E>

F>

# MAZDA

## MAZDA - G4AEL, G4AHL, GF4AEL
## FORD - G4EAT, GF4EAT
## 1986-On

| ILL | DESCRIPTION | YEARS | FRICTION MODULE | STEEL MODULE | OVERHAUL KIT | BANNER KIT | MASTER KIT |
|---|---|---|---|---|---|---|---|
| **KITS** | | | | | | | |
| **MAZDA 626 & MX6** | | | | | | | |
| KT | Rebuilding Kit | 86-87 | 074752 | 074753 | 074800 | 074901LS | 074901 |
| KT | Rebuilding Kit - Non Turbo | 88-92 | 074752A | 074753A | 074802 | 074903LS | 074903 |
| KT | Rebuilding Kit - Turbo | 88-92 | 074752B | 074753B | 074802 | 074905LS | 074905 |
| KT | Rebuilding Kit - 2.0L | 93-94 | 074752A | 074753X | 074802 | 074903LS | 074903X |
| KT | Rebuilding Kit - 2.5L | 93-On | 074752D | 074753C | 074804 | 074907LS | 074907 |
| **MILLENIA** | | | | | | | |
| KT | Rebuilding Kit - 2.5L | 97-00 | 074752D | 074753C | 074804 | 074907LS | 074907 |
| KT | Rebuilding Kit - 2.5L | 01-On | 074752C | 074753C | 074804 | 074907ALS | 074907A |
| **MPV** | | | | | | | |
| KT | Rebuilding Kit | 00-On | 074752D | 074753C | 074804 | 074907LS | 074907 |
| **PROTEGE** | | | | | | | |
| KT | Rebuilding Kit - 4wd | 90-91 | 074752B | 074753B | 074802 | 074905LS | 074905 |
| **FORD CAPRI** | | | | | | | |
| KT | Rebuilding Kit | 91-94 | 074752A | 074753A | 074802 | 074903LS | 074903 |
| **FORD PROBE** | | | | | | | |
| KT | Rebuilding Kit - 2.2L | 89-92 | 074752A | 074753A | 074802 | 074903LS | 074903 |
| KT | Rebuilding Kit - 3.0L & Turbo | 89-92 | 074752B | 074753B | 074802 | 074905LS | 074905 |
| KT | Rebuilding Kit - 2.0L | 93 | 074752A | 074753X | 074802 | 074903LS | 074903X |
| KT | Rebuilding Kit - 2.5L | 93-97 | 074752D | 074753C | 074804 | 074907LS | 074907 |

| ILL | ALTO NO | REF NO | DESCRIPTION | SPEC | YEAR | QTY | NOTES |
|---|---|---|---|---|---|---|---|
| **MISCELLANEOUS GASKETS & KIT COMPONENTS** | | | | | | | |
| 1F | 074816 | FU31-21-512 | Gasket, Oil Pan - Non Turbo | Cork/Rub | 86-On | 1 | |
| 1F | 074816A | FU32-21-512 | Gasket, Oil Pan - Turbo | Cork/Rub | 88-92 | 1 | |
| 2F | 074818 | BN97-21-531 | Gasket, VB (side) Cover - Non Turbo | Cork/Rub | 86-On | 1 | |
| 2F | 074818A | FU32-21-531 | Gasket, VB (side) Cover - Turbo | Cork/Rub | 88-92 | 1 | |
| **FRICTION CLUTCHES** | | | | | | | |
| 3C | 074700 | FU9A-19-580 | Forward | .063/1.6 | 86-On | 3-4 | Heg - 48T - OD: 5.711" - PL |
| 4C | 074712 | FU01-19-590 | Coast - "V" tooth | .061/1.55 | 86-87 | 2 | Tan - 44T - OD: 5.162" - PL |
| 4C | 074702 | FU50-19-590 | Coast - Square tooth | .061/1.55 | 88-On | 2 | Heg - 44T - OD: 5.162" - PL |
| 5C | 074714 | FU01-19-460 | Reverse - "V" tooth | .063/1.6 | 86-87 | 2 | Tan - 58T - OD: 7.718" - PL |
| 5C | 074704 | FU50-19-4F0 | Reverse - Square tooth | .063/1.6 | 88-00 | 2 | Heg - 58T - OD: 7.718" - PL |
| 5C | 074704A156 | GF30-19-5J0 | Reverse | .063/1.6 | 01-On | 2 | Heg - 32T - OD:7.718 - PLNI |
| 6B | 074714 | FU01-19-460 | Low - "V" tooth | .063/1.6 | 86-87 | 2 | Tan - 58T - OD: 7.718" - PL |
| 6B | 074704 | FU50-19-4F0 | Low - Square tooth | .063/1.6 | 88-On | 2 | Heg - 58T - OD: 7.718" - PL |
| 7A | 074708 | FU9A-19-370 | 3/4 (Overdrive) | .063/1.6 | 87-92 | 4-5 | Heg - 50T - OD: 4.644" - PL |
| 7A | 074708SM | FU2G-19-370 | 3/4 (Overdrive) | .063-1.6 | 93-On | 5 | Heg - 50T - OD: 4.644" - SM |
| **STEEL CLUTCHES** | | | | | | | |
| 8C | 074701 | FU01-19-571 | Forward | .063/1.6 | 86-92 | 3-4 | 8T - ID: 4.810" |
| 8C | 074711 | FU9A-19-571A | Forward | .063/1.6 | 93-On | 3 | 32T - ID: 4.810" |
| 9C | 074703 | FU01-19-621A | Coast | .063/1.6 | 86-On | 2-3 | 32T - ID: 4.416" |
| 10C | 074705 | FU50-19-561A | Reverse | .063/1.6 | 86-92 | 2 | 12T - ID: 7.100" |
| 10C | 074705-180 | NA | Reverse - selective | .071/1.8 | 86-92 | AR | 12T - ID: 7.100" |
| 10C | 074715 | FU9A-19-561 | Reverse | .063/1.6 | 93-On | 2 | 30T - ID: 7.083" |
| 11C | 074705XW | NA | DRUMSAVER™ - replace belleville spring | | 86-92 | 1 | |
| 12B | 074707 | FU01-19-451B | Low | .063/1.6 | 86-On | 3-5 | 15T - ID: 7.126" |
| 13A | 074719 | FU01-19-334 | 3/4 (Overdrive) | .063/1.6 | 86-87 | 5 | 16T - ID: 4.020" |
| 13A | 074709 | FU50-19-334 | 3/4 (Overdrive) - 2.0 & 2.2L engines | .063/1.6 | 88-92 | 5 | 29T - ID: 4.020" |
| 13A | 074709A | FU32-19-334 | 3/4 (Overdrive) | .091/2.3 | 88-On | 5 | 30T - ID: 4.020" |
| 13A | 074709-330 | FU2G-19-334 | 3/4 (Overdrive) - 2.5L | .130/3.3 | 93-On | 4 | 29T - ID: 4.020" |
| **PRESSURE PLATES** | | | | | | | |
| 14A | 074762-380 | FU50-19-362A | 3/4 (Overdrive) - backing | .148/3.8 | 90-95 | AR | |
| 14A | 074762-400 | FU50-19-364A | 3/4 (Overdrive) - backing | .156/4.0 | 90-95 | AR | |
| 14A | 074762-420 | FU50-19-365A | 3/4 (Overdrive) - backing | .165/4.2 | 90-95 | AR | |

# MAZDA

## MAZDA - G4AEL, G4AHL, GF4AEL
## FORD - G4EAT, GF4EAT
## 1986-On

| ILL | ALTO NO | REF NO | DESCRIPTION | SPEC | YEAR | QTY | NOTES |
|---|---|---|---|---|---|---|---|
| **PRESSURE PLATES** | | | | | | | ...Continued |
| 14A | 074762-440 | FU50-19-366A | 3/4 (Overdrive) - backing | .172/4.4 | 90-95 | AR | |
| 14A | 074762-460 | FU50-19-367A | 3/4 (Overdrive) - backing | .180/4.6 | 90-95 | AR | |
| 14A | 074762-480 | FU50-19-368A | 3/4 (Overdrive) - backing | .188/4.8 | 90-95 | AR | |
| 14A | 074762-500 | NA | 3/4 (Overdrive) - backing | .196/5.0 | 90-95 | AR | |
| 14A | 074762-520 | NA | 3/4 (Overdrive) - backing | .204/5.2 | 90-95 | AR | |
| N I | 074764A660 | E92Z-7B066N | Reverse | .260/6.6 | 86-92 | AR | |
| N I | 074764A700 | E92Z-7B066P | Reverse | .276/7.0 | 86-92 | AR | |
| N I | 074764A720 | E92Z-7B066Q | Reverse | 283/7.2 | 86-92 | AR | |
| **OEI™ Original Equipment Improvements** | | | | | | | |
| 11C | 074705XW | NA | DRUMSAVER™ - replace belleville spring | | 86-92 | 1 | |
| KT | 074985 | SK® G4A | Shift Kit® | Transgo® | 86-92 | 1 | |
| KT | 074985A | SK® GF4EL | Shift Kit® | Transgo® | 93-On | 1 | |
| **BANDS** | | | | | | | |
| 15B | 074950 | FU08-21-310B | Brake - Non Turbo (1.500") | Tan | 86-92 | 1 | |
| 15B | 074951 | FU32-21-310C | Brake - Turbo (1.750") | Tan | 88-On | 1 | |
| **FILTERS** | | | | | | | |
| 16F | 074940 | FU01-21-500E | Filter - 4 bolts | .625 | 86-87 | 1 | |
| 16F | 074942 | FU31-21-500 | Filter - 3 bolts | 1.000 | 88-92 | 1 | |
| 16F | 074942A | FU3A-21-500 | Filter - 3 bolts short pickup | 1.250 | 88-92 | 1 | |
| 16F | 074942B | F0JY-7A098A | Filter - 3 bolts 1-1/2" Pickup | 1.500 | 89-90 | 1 | |
| 16F | 074944 | FU9A-21-500 | Filter - Plastic & Metal with pickup tube | | 93-On | 1 | |
| **METAL CLAD SEALS** | | | | | | | |
| 17D | 074400 | FU01-19-241A | Front Pump | Poly | 86-On | 1 | |
| 17D | 074400A | NA | Front Pump | Vamac® | 86-On | 1 | |
| 18D | 063401 | F003-27-238A | Axle | | 86-On | 2 | |
| N I | 063402 | 99586-08166 | Speedometer | | 90-99 | 1 | |
| **SEALING RINGS** | | | | | | | |
| KT | 074600 | G702A | Sealing Ring Kit - 10T | | 86-On | 1 | without Accum. rings |
| KT | 074601 | G702X | Sealing Ring Kit - 25T | | 86-On | 1 | Includes Accum. rings |
| KT | 074602 | NA | O Ring Kit - Accumulator rings | | 86-On | 1 | Aftermarket |
| KT | 074602A | NA | D Ring Kit - Accumulator rings | | 86-On | 1 | Aftermarket |
| 19F | 074100 | FU01-19-701A | Stator Shaft (Pump) | Teflon | 86-On | 4 | |
| 19F | 074100A | NA | Stator Shaft (Pump) | SSP | 86-On | opt. | |
| 20E | 074101 | FU01-19-212B | Output Gear | Teflon | 86-On | 2 | |
| 20E | 074101A | NA | Output Gear | Metal | 86-On | opt. | |
| 21C | 074102 | FU01-19-603A | Forward Clutch - inner | Teflon | 86-On | 2 | |
| **BUSHINGS** | | | | | | | |
| KT | 074625 | NA | Kit | | 86-On | 1 | |

**NOTES**

# MAZDA
## MAZDA - FN4AEL
## FORD - 4F27E
## 1999-On

| ILL | DESCRIPTION | YEARS | FRICTION MODULE | STEEL MODULE | OVERHAUL KIT | BANNER KIT | MASTER KIT |
|---|---|---|---|---|---|---|---|
| **KITS** | | | | | | | |
| KT | Rebuilding Kit - Mazda | 99-02 | 133752 | 133753A | 133800 | 133901LS | 133901 |
| KT | Rebuilding Kit - Mazda | 03-On | 133750B FR & ST | | 133800 | | 133901A |
| KT | Rebuilding Kit - Ford | 00-On | 133752 | 133753A | 133802 | 133903LS | 133903 |
| **HI-PERFORMANCE - RED EAGLE®** | | | | | | | |
| KT | Rebuilding Kit - Ford wo/Pistons | 00-On | 133752HP | 133753AHP | 133802X | 133903HPLS | 133903HP |
| KT | Rebuilding Kit - Ford wo/Pistons with POWERPACK® | 00-On | 133750AHPPWR FR & ST | | 133802X | NA | 133903HPPWR |

| ILL | ALTO NO | REF NO | DESCRIPTION | SPEC | YEAR | QTY | NOTES |
|---|---|---|---|---|---|---|---|
| **MISCELLANEOUS GASKETS & KIT COMPONENTS** | | | | | | | |
| N I | 133816 | NA | Gasket, Oil Pan | Cork/Rub | 99-On | 1 | OE is RTV |
| **FRICTION CLUTCHES** | | | | | | | |
| N I | 133700-160 | FN11-19-370 | Forward | .063/1.6 | 99-On | 4 | Heg - 32T - OD: 4.527" - PL |
| N I | 133704-160 | FN01-19-5JX | Reverse | .063/1.6 | 99-On | 2 | Heg - 32T - OD: 5.515" - PL |
| N I | 133700-160 | FN11-19-370 | 3rd & 4th (Direct) | .063/1.6 | 99-On | 3 | Heg - 32T - OD: 4.527" - PL |
| N I | 133700A250 | FNE1-19-370 | 3rd & 4th (Direct) - internal spline (Mazda only) | .099/2.5 | 03-On | 3 | Heg - 32T - OD: 4.527" - PLNI |
| N I | 133701A250 | FNE1-19-33Y | 3rd & 4th (Direct) - external spline (Mazda only) | .099/2.5 | 03-On | 3 | Heg - 32T - ID: 3.715" - PLNI |
| N I | 133706-160 | FN01-19-4FX | Low / Reverse | .063/1.6 | 99-On | 5 | Heg - 42T - OD: 6.079" - PL |
| **HI-PERFORMANCE - RED EAGLE®** | | | | | | | |
| N I | 133740-160 | NA | Forward / Direct | .063/1.6 | 99-On | 7 | RED EAGLE® |
| N I | 133744-160 | NA | Reverse | .063/1.6 | 99-On | 2 | RED EAGLE® |
| N I | 133746-160 | NA | Low / Reverse | .063/1.6 | 99-On | 5 | RED EAGLE® |
| **STEEL CLUTCHES** | | | | | | | |
| N I | 133701-160 | FN11-19-61X | Forward | .063/1.6 | 99-On | 4 | 32T - ID: 3.715" |
| N I | 133705-160 | XSFZ-7B442AB | Reverse | .063/1.6 | 99-On | 2 | 36T - ID: 5.022" |
| N I | 133701-345 | XS4Z-7B442DB | 3rd & 4th (Direct) | .136/3.45 | 99-On | 3 | 32T - ID: 3.715" |
| N I | 133707-160 | XS4Z-7B442BB | Low / Reverse | .063/1.6 | 99-On | 5 | 12T - ID: 5.621" |
| **HI-PERFORMANCE - KOLENE®** | | | | | | | |
| N I | 133701K160 | NA | Forward / Direct | .063/1.6 | 99-On | 7 | KOLENE® |
| N I | 133705K160 | NA | Reverse | .063/1.6 | 99-On | 2 | KOLENE® |
| N I | 133701K345 | NA | 3rd & 4th (Direct) | .136/3.45 | 00-On | 3 | KOLENE® |
| N I | 133707K160 | NA | Low / Reverse | .063/1.6 | 99-On | 5 | KOLENE® |
| **PRESSURE PLATES** | | | | | | | |
| N I | 133760-390 | FN11-19-362A | Forward - backing | .153/3.9 | 99-On | 1 | |
| N I | 133762-580 | FN11-19-5K2 | Reverse - backing | .228/5.8 | 99-On | 1 | |
| N I | 133760-390 | FN11-19-362A | 3rd & 4th (Direct) - backing | .153/3.9 | 99-On | 1 | |
| N I | TBA | FN11-19-453 | Low / Reverse - backing | | 99-On | 1 | |
| **OEI™ Original Equipment Improvements** | | | | | | | |
| N I | 133757 | NL | Direct POWERPACK™ - HI-PERFORMANCE | | 99-On | 1 | Red Eagle® |
| **BANDS** | | | | | | | |
| N I | 133950 | FN01-21-310A | Brake | Tan | 99-On | 1 | |
| **HI-PERFORMANCE - RED EAGLE® or KEVLAR®** | | | | | | | |
| N I | 133960 | NL | Brake | Red | 99-On | 1 | |
| N I | 133961 | NL | Brake - Heavy Duty wide | Red | 99-On | 1 | |
| N I | 133961K | NL | Brake - Super Duty wide | Kevlar® | 99-On | 1 | |
| **FILTERS** | | | | | | | |
| N I | 133940 | FN01-21-500 | Filter | | 99-On | 1 | |
| **METAL CLAD SEALS** | | | | | | | |
| N I | TBA | FN11-19-241 | Front Pump | | 99-On | 1 | |
| N I | 063401 | F003-27-238A | Axle | | 99-On | 2 | |
| N I | 063402 | 99586-08166 | Speedometer | | 99-On | 1 | |
| **SEALING RINGS** | | | | | | | |
| KT | 133600 | NA | Sealing Ring Kit | | 99-On | 1 | |

# MAZDA

## MAZDA - FN4AEL
## FORD - 4F27E
## 1999-On

### NOTES

A>

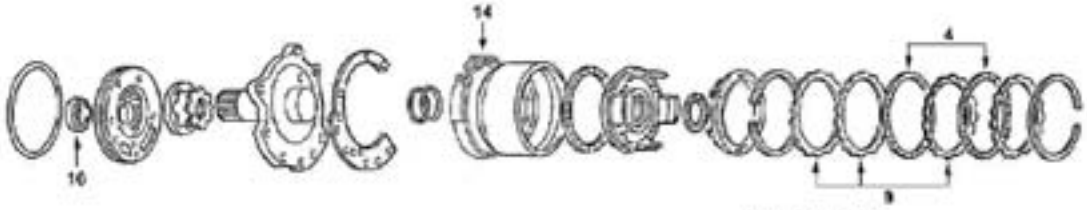


Reverse Clutch

B>

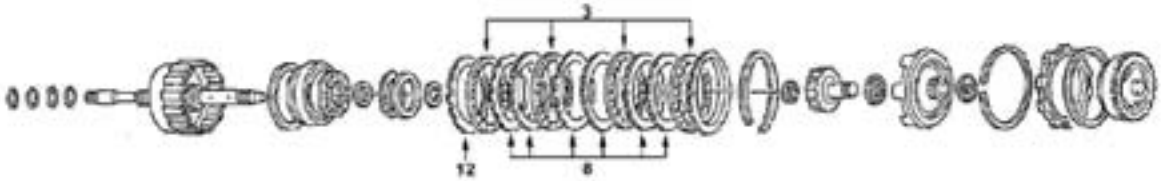


High Clutch

C>

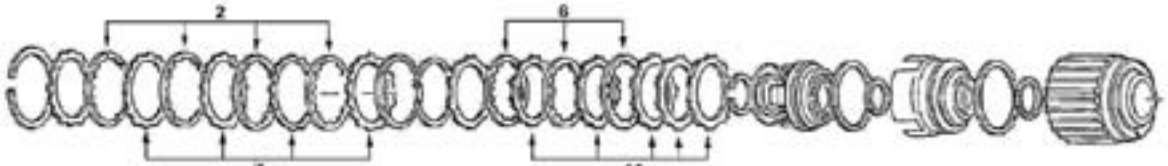


Forward Clutch

Overrun Clutch

D>

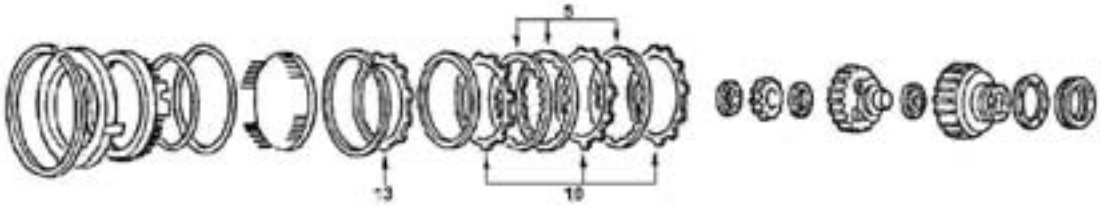


Low/Reverse Clutch

E>

F>

G>

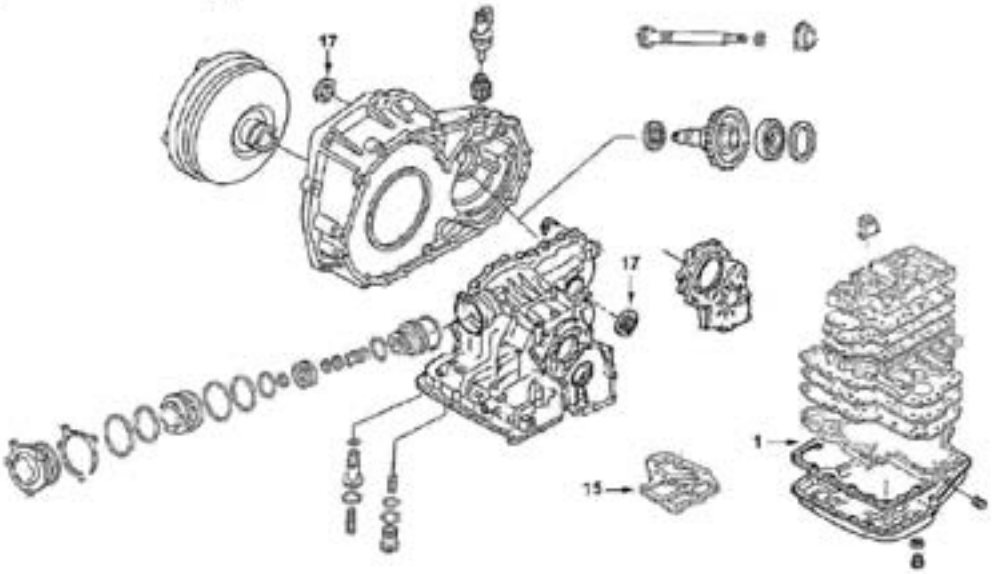

# MAZDA
## LJ4AEL
## 1995-On

| ILL | DESCRIPTION | YEARS | FRICTION MODULE | STEEL MODULE | OVERHAUL KIT | BANNER KIT | MASTER KIT |
|---|---|---|---|---|---|---|---|
| **KITS** | | | | | | | |
| KT | Rebuilding Kit | 95-On | 105752B | 105753B | 105804 | 105905LS | 105905 |

| ILL | ALTO NO | REF NO | DESCRIPTION | SPEC | YEAR | QTY | NOTES |
|---|---|---|---|---|---|---|---|
| **MISCELLANEOUS GASKETS & KIT COMPONENTS** | | | | | | | |
| 1G | 105816A | NA | Gasket, Oil Pan | Cork/Rub | 95-On | 1 | OE is RTV |
| **FRICTION CLUTCHES** | | | | | | | |
| 2C | 105700-140 | FX01-19-590A | Forward | .055/1.4 | 95-On | 6 | Heg - 32T - OD: 5.424" - PL |
| 3B | 105702 | FX01-19-5J0 | High | .063/1.6 | M95 | 4 | Heg - 21T - OD: 4.416" - PL |
| 3B | 105702B | FX02-19-5J0 | High | .063/1.6 | M95-On | 4 | Tan - 24T - OD: 4.416" - PL |
| 4A | 105704 | FX01-19-620 | Reverse | .063/1.6 | 95-On | 2 | Heg - 28T - OD: 5.480" - PL |
| 5D | 105706 | FX01-19-610 | Low / Reverse | .063/1.6 | 95-On | 7 | Heg - 32T - OD: 6.455" - PL |
| 6C | 105708 | FX01-19-4F0 | Overrun | .063/1.6 | 95-On | 3 | Tan - 20T - OD: 4.940" - PL |
| **STEEL CLUTCHES** | | | | | | | |
| 7C | 105701-140 | FX01-19-561A | Forward | .055/1.4 | 95-On | 6 | 32T - ID: 4.928" |
| 8B | 105703-140 | FX01-19-334 | High | .055/1.4 | 95-On | 6 | 28T - ID: 4.681" |
| 9A | 105705 | FX01-19-571 | Reverse | .071/1.8 | 95-On | 3 | 30T - ID: 4.957" |
| 10D | 105707 | FX01-19-609 | Low / Reverse | .071/1.8 | 95-On | 7 | 10T - ID: 5.905" |
| 11C | 105709 | FX01-19-587 | Overrun | .063/1.6 | 95-On | 5 | 8T - ID: 4.447" |
| **PRESSURE PLATES** | | | | | | | |
| 12B | 105703-200 | FX01-19-499 | High - backing | .078/2.0 | 95-On | AR | |
| 12B | 105703-258 | FX01-19-499A | High - backing | .101/2.58 | 95-On | AR | |
| 13D | 105707-200 | FX01-19-613 | Low / Reverse - apply | .078/2.0 | 95-On | AR | |
| 13D | 105707-220 | FX01-19-615 | Low / Reverse - apply | .086/2.2 | 95-On | AR | |
| 13D | 105707-240 | FX01-19-616 | Low / Reverse - apply | .095/2.4 | 95-On | AR | |
| 13D | 105707-260 | FX01-19-617 | Low / Reverse - apply | .102/2.6 | 95-On | AR | |
| 13D | 105707-280 | FX01-19-618 | Low / Reverse - apply | .110/2.8 | 95-On | AR | |
| 13D | 105707-300 | FX01-19-623 | Low / Reverse - apply | .118/3.0 | 95-On | AR | |
| 13D | 105707-320 | FX01-19-625 | Low / Reverse - apply | .126/3.2 | 95-On | AR | |
| 13D | 105707-340 | FX01-19-626 | Low / Reverse - apply | .134/3.4 | 95-On | AR | |
| **BANDS** | | | | | | | |
| 14A | 105950 | FX01-19-360 | Brake | Tan | 95-On | 1 | |
| **FILTERS** | | | | | | | |
| 15G | 105944 | FX01-19-815 | Filter | | 95-On | 1 | |
| **METAL CLAD SEALS** | | | | | | | |
| 16A | 105400 | FX01-19-241A | Front Pump | | 95-On | 1 | |
| 17G | 063401 | F003-27-238A | Axle | | 95-On | 2 | |
| **SEALING RINGS** | | | | | | | |
| KT | 105600 | E512 | Sealing Ring Kit - 2M / 10T | | 95-On | 1 | |

**NOTES**

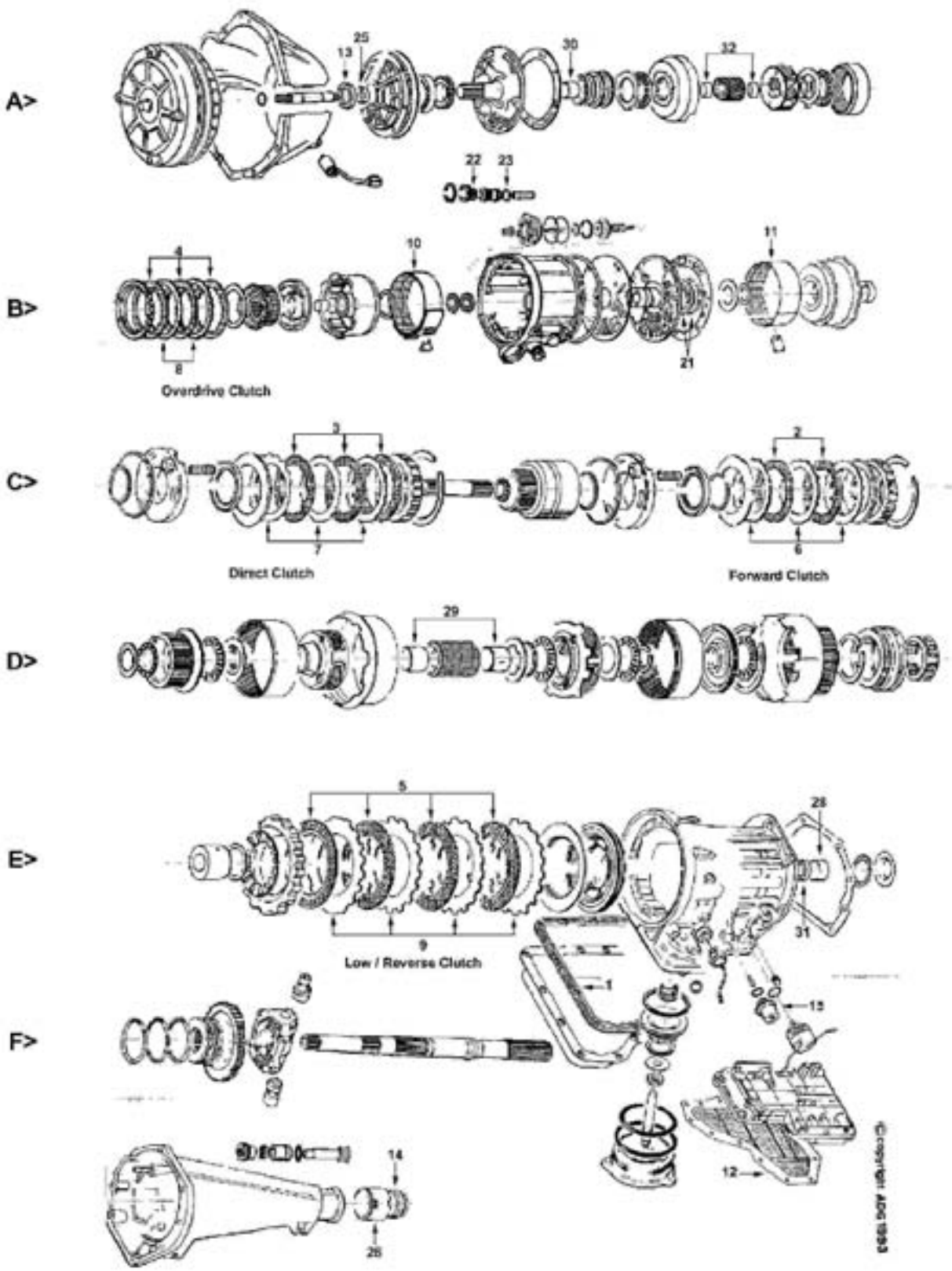
A>
13
25
30
32
22
23
B>
4
10
11
8
21
Overdrive Clutch
C>
3
2
7
6
Direct Clutch
Forward Clutch
D>
29
E>
5
28
9
31
Low / Reverse Clutch
F>
1
15
14
12
26
©copyright ADG 1993

# MAZDA
## N4AEL, N4AHL, NC4AEL
## 1986-97

| ILL | DESCRIPTION | YEARS | FRICTION MODULE | STEEL MODULE | OVERHAUL KIT | BANNER KIT | MASTER KIT |
|---|---|---|---|---|---|---|---|
| **KITS** | | | | | | | |
| **929 & RX7** | | | | | | | |
| KT | Rebuilding Kit | 86-92 | 063752A | 063753A | 063804 | 063903LS | 063903 |
| **MIATA, MPV & B2600** | | | | | | | |
| KT | Rebuilding Kit | 89-97 | 063752A | 063753C | 063804 | 063903LS | 063903A |

| ILL | ALTO NO | REF NO | DESCRIPTION | YEARS | SPEC | YEAR | QTY | NOTES |
|---|---|---|---|---|---|---|---|---|
| **MISCELLANEOUS GASKETS & KIT COMPONENTS** | | | | | | | | |
| 1F | 042816 | BT28-19-836A | Gasket, Oil Pan | | Cork/Rub | 86-97 | 1 | |
| **FRICTION CLUTCHES** | | | | | | | | |
| 2C | 042700 | BU55-19-5J0 | Forward | | .061/1.55 | 86-97 | 5-7 | Tan - 44T - OD: 4.530" - WF |
| 3C | 042700 | BU55-19-5J0 | Direct | | .061/1.55 | 86-97 | 4-5 | Tan - 44T - OD: 4.530" - WF |
| 4B | 042700 | BU55-19-5J0 | Overdrive | | .061/1.55 | 86-97 | 2 | Tan - 44T - OD: 4.530" - WF |
| 5E | 042702 | BU17-19-610 | Low / Reverse | | .075/1.9 | 86-97 | 6 | Tan - 51T - OD: 5.117" - WF |
| **HI-PERFORMANCE - RED EAGLE®** | | | | | | | | |
| AR | 042740 | NA | Forward, Direct, & Overdrive | | .061/1.55 | 86-97 | AR | Red - 44T - OD: 4.530" - SM |
| AR | 042740SB | NA | Forward, Direct, & Overdrive | | .061/1.55 | 86-97 | AR | Red - 44T - OD: 4.530" - SB |
| **STEEL CLUTCHES** | | | | | | | | |
| 6C | 063701 | FT01-19-499 | Forward - except MPV & Truck | | .063/1.6 | 86-97 | 5-6 | 28T - ID: 3.625" |
| 6C | 042701 | BU55-19-499 | Forward - MPV & Truck | | .078/2.0 | 89-94 | 5 | 28T - ID: 3.625" |
| 7C | 063701 | FT01-19-499 | Direct - 929 & RX7 | | .063/1.6 | 86-90 | 2-5 | 28T - ID: 3.625" |
| 7C | 063701-250 | BV01-19-499 | Direct - 929 & RX7 | | .098/2.5 | 91-92 | 3 | 28T - ID: 3.625" |
| 7C | 042701 | BU55-19-499 | Direct- Miata, MPV & Truck | | .078/2.0 | 86-97 | 4-5 | 28T - ID: 3.625" |
| AR | 042701A | NA | Forward & Direct - selective | | .032/.8 | 86-97 | AR | 28T - ID: 3.625" |
| 8B | 063701 | FT01-19-499 | Overdrive - except MPV & Truck | | .063/1.6 | 86-97 | 2 | 28T - ID: 3.625" |
| 8B | 042701 | BU55-19-499 | Overdrive - MPV & Truck | | .078/2.0 | 89-94 | 2 | 28T - ID: 3.625" |
| 9E | 042703 | 0338-19-609 | Low & Reverse | | .078/2.0 | 86-97 | 6 | 13T - ID: 4.212" |
| **OEI™ Original Equipment Improvements** | | | | | | | | |
| KT | 063985 | SK® N4AEL | Shift Kit® | | Transgo® | 86-97 | 1 | |
| **BANDS** | | | | | | | | |
| 10B | 042951 | 0338-19-360B | Overdrive Brake | | Tan | 86-97 | 1 | |
| 11B | 042951 | 0338-19-360B | Intermediate Brake | | Tan | 86-97 | 1 | |
| **FILTERS** | | | | | | | | |
| 12F | 042946 | BV01-19-815 | Filter | | | 86-97 | 1 | |
| **METAL CLAD SEALS** | | | | | | | | |
| 13A | 042400 | 0338-19-223A | Front Pump | | | 86-97 | 1 | |
| 14F | TBA | M502-17-335A | Extension Housing without Boot | | 2.020 | 86-97 | 1 | |
| 14F | TBA | R501-17-335A | Extension Housing with Boot | | 2.020 | 86-97 | 1 | |
| 14F | TBA | M507-17-335A | Extension Housing - Miata | | 1.900 | 90-97 | 1 | |
| 14F | TBA | M504-17-335 | Adapter Housing - 4wd | | 2.575 | 86-94 | 1 | |
| N I | 063402 | 99586-08166 | Speedometer | | | 86-97 | 1 | |
| **SEALING RINGS** | | | | | | | | |
| KT | 042604 | E501B | Sealing Ring Kit - 2R / 9T | | | 86-97 | 1 | |
| **BUSHINGS** | | | | | | | | |
| KT | 042626 | NA | Kit | | | 86-97 | 1 | |
| **MODULATORS** | | | | | | | | |
| 15F | 042500 | BT07-19-823 | Modulator | | | 86-97 | 1 | |

**NOTES**

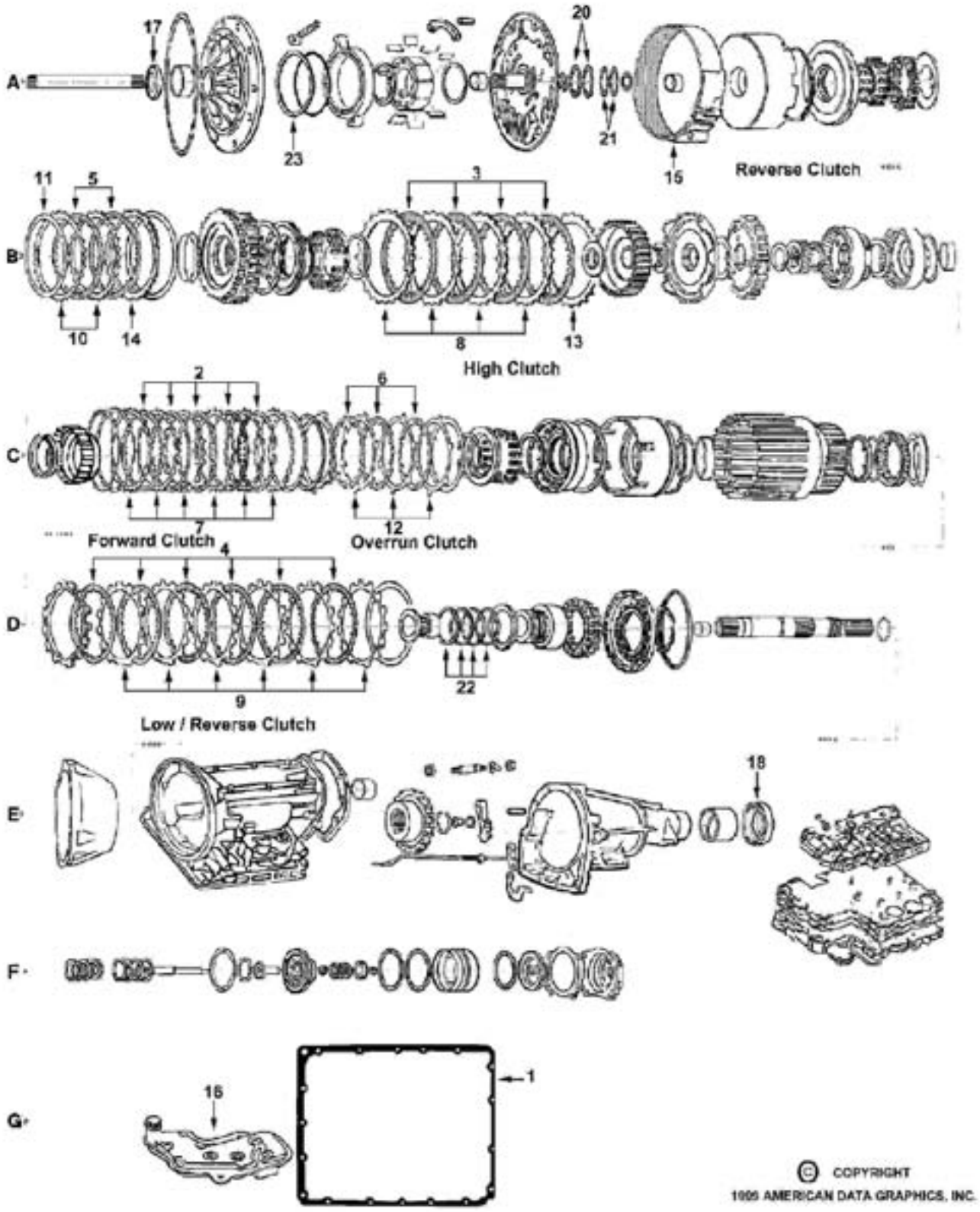
A
17
23
20
21
15
Reverse Clutch
B
11
5
10
14
3
8
13
High Clutch
C
2
7
Forward Clutch
6
12
Overrun Clutch
D
4
9
22
Low / Reverse Clutch
E
18
F
G
16
1
© COPYRIGHT
1995 AMERICAN DATA GRAPHICS, INC.

# MAZDA
## R4AEL, RA4AEL, RB4AEL
## 1988-99

| ILL | DESCRIPTION | YEARS | FRICTION MODULE | STEEL MODULE | OVERHAUL KIT | BANNER KIT | MASTER KIT |
|---|---|---|---|---|---|---|---|
| **KITS** | | | | | | | |
| KT | Rebuilding Kit | 88-94 | 075752D | 075753D | 075806 | 075901BLS | 075901B |
| KT | Rebuilding Kit | 94-99 | 075752P | 075753R | 075806 | 075901FLS | 075901F |

| ILL | ALTO NO | REF NO | DESCRIPTION | SPEC | YEAR | QTY | NOTES |
|---|---|---|---|---|---|---|---|
| **MISCELLANEOUS GASKETS & KIT COMPONENTS** | | | | | | | |
| 1G | 075816 | BV60-19-835 | Gasket, Oil Pan | Cork/Rub | 88-On | 1 | |
| **FRICTION CLUTCHES** | | | | | | | |
| 2C | 075700 | BV11-19-5J0 | Forward | .078/2.0 | 88-93 | 5 | Tan - 36T - OD: 5.845" - PL |
| 2C | 075700A | BV56-19-5J0 | Forward | .063/1.6 | 94-99 | 6 | Heg - 36T - OD: 5.845" - PL |
| 3B | 075702 | BV11-19-590 | High | .063/1.6 | 88-99 | 4-5 | Heg - 30T - OD: 5.233" - PL |
| 3B | 075742 | NA | High - RED EAGLE® Powerpack™ Component | .063/1.6 | 88-99 | 4-5 | Red - 30T - OD: 5.233" - PL |
| 4D | 075704 | BV71-19-590 | Low / Reverse | .078/2.0 | 88-99 | 6-7 | Heg - 30T - OD: 5.805" - PL |
| 5B | 075706 | BV11-19-690 | Reverse - narrow | .078/2.0 | 88-90 | 2 | Tan - 34T - OD: 5.880" - PL |
| 5B | 075706A | BV11-19-620 | Reverse - wide | .078/2.0 | 91-99 | 2 | Heg - 30T - OD: 5.880" - PL |
| 5B | 075706-190 | NA | DRUMSAVER™ Comp. - Reverse narrow | .075/1.9 | 88-90 | AR | Tan - 34T - OD: 5.880" - PL |
| 5B | 075706A190 | NA | DRUMSAVER™ Comp. - Reverse wide | .075/1.9 | 91-99 | AR | Heg - 30T - OD: 5.880" - PL |
| 6C | 075708 | BV11-19-587 | Overrun | .078/2.0 | 88-99 | 3 | Heg - 18T - OD: 5.259" - PL |
| **STEEL CLUTCHES** | | | | | | | |
| 7C | 075701 | BV45-19-499 | Forward | .078/2.0 | 88-93 | 5 | 24T - ID: 5.355" |
| 7C | 075701A | BV56-19-499 | Forward | .071/1.8 | 94-99 | 5-6 | 24T - ID: 5.355" |
| 8B | 075703 | BV11-19-451 | High - except 929 | .067/1.7 | 88-99 | 7 | 27T - ID: 4.414" |
| 8B | 075703K170 | NA | High - except 929 - KOLENE® | .067/1.7 | 88-99 | opt. | 27T - ID: 4.414" |
| 8B | 075713 | BV58-19-5D0 | High - 929 | .078/2.0 | 94-95 | 5 | 27T - ID: 4.414" |
| 8B | 075713K200 | NA | High - 929 - Kolene® | .078/2.0 | 94-95 | 5 | 27T - ID: 4.414" |
| 8B | 075703K152 | NA | High - Kolene® Powerpack™ Component | .060/1.52 | 88-99 | AR | 27T - ID: 4.414" |
| 8B | 075723 | NA | High - selective | .108/2.7 | 88-99 | AR | 27T - ID: 4.414" |
| 8B | 075743 | NA | High - selective | .095/2.4 | 88-99 | AR | 27T - ID: 4.414" |
| 9D | 075705 | BV45-19-609A | Low / Reverse | .078/2.0 | 88-99 | 6-7 | 14T - ID: 5.086" |
| 9D | 075705-130 | NA | Low / Reverse - selective | .051/1.3 | 88-99 | AR | 14T - ID: 5.086" |
| 9D | 075705-160 | NA | Low / Reverse - selective | .063/1.6 | 88-99 | AR | 14T - ID: 5.086" |
| 9D | 075705-180 | NA | Low / Reverse - selective | .071/1.8 | 88-99 | AR | 14T - ID: 5.086" |
| 9D | 075705-225 | NA | Low / Reverse - selective | .089/2.25 | 88-99 | AR | 14T - ID: 5.086" |
| 10B | 075707 | BV45-19-561 | Reverse - narrow | .078/2.0 | 88-90 | 2 | 30T - ID: 5.356" |
| 10B | 075707A | BV45-19-561A | Reverse - wide | .078/2.0 | 91-99 | 2 | 30T - ID: 5.084" |
| 10B | 075707-170 | NA | DRUMSAVER™ Comp. - Reverse narrow | .067/1.7 | 88-90 | AR | 30T - ID: 5.356" |
| 10B | 075707A170 | NA | DRUMSAVER™ Comp. - Reverse wide | .067/1.7 | 91-99 | AR | 30T - ID: 5.084" |
| 11B | 075707XW | BV71-19-544 | DRUMSAVER™ Comp. - All | | 88-99 | 1 | replaces belleville spring |
| 12C | 075709 | BV11-19-499 | Overrun | .078/2.0 | 88-99 | 3-5 | 6T - ID: 4.701" |
| 12C | 075709-225 | NA | Overrun - selective | .089/2.25 | 88-99 | AR | 6T - ID: 4.701" |
| **PRESSURE PLATES** | | | | | | | |
| 13B | 075733 | BV11-19-368 | High - backing | .118/3.0 | 88-99 | AR | |
| 13B | 075760-320 | BV11-19-369 | High - backing | .126/3.2 | 88-99 | AR | |
| 13B | 075760-340 | BV11-19-371 | High - backing | .134/3.4 | 88-99 | AR | |
| 13B | 075760-360 | BV11-19-362 | High - backing | .142/3.6 | 88-99 | AR | |
| 13B | 075760-380 | BV11-19-364 | High - backing | .150/3.8 | 88-99 | AR | |
| 13B | 075760-400 | BV11-19-365 | High - backing | .157/4.0 | 88-99 | AR | |
| 13B | 075760-420 | BV11-19-366 | High - backing | .165/4.2 | 88-99 | AR | |
| 13B | 075760-440 | BV11-19-367 | High - backing | .173/4.4 | 88-99 | AR | |
| 13B | 075760-460 | NA | High - backing | .181/4.6 | 88-99 | AR | |
| 13B | 075760-480 | NA | High - backing | .189/4.8 | 88-99 | AR | |
| 13B | 075760-500 | NA | High - backing | .197/5.0 | 88-99 | AR | |
| 14B | TBA | BV71-19-454 | Reverse - backing | .189/4.8 | 88-99 | AR | |
| 14B | TBA | BV71-19-456 | Reverse - backing | .197/5.0 | 88-99 | AR | |
| 14B | TBA | BV71-19-458 | Reverse - backing | .209/5.3 | 88-99 | AR | |
| 14B | TBA | BV71-19-459 | Reverse - backing | .220/5.6 | 88-99 | AR | |

# MAZDA
## R4AEL, RA4AEL, RB4AEL
## 1988-99

| ILL | ALTO NO | REF NO | DESCRIPTION | SPEC | YEAR | QTY | NOTES |
|---|---|---|---|---|---|---|---|
| **OEI™ Original Equipment Improvements** | | | | | | | |
| KT | 075758 | NA | DRUMSAVER™ Kit - Reverse Drum | | 88-90 | 1 | 34T Friction |
| KT | 075758A | NA | DRUMSAVER™ Kit- Reverse Drum | | 91-99 | 1 | 30T Friction |
| KT | 075985 | SK® RE4R01A | Shift Kit® | Transgo® | 88-99 | 1 | |
| **HI-PERFORMANCE** | | | | | | | |
| KT | 075757HP | NA | DRUMSAVER™ - High Drum | | 88-99 | 1 | |
| **BANDS** | | | | | | | |
| 15A | 075950 | BV35-19-360 | Brake | Tan | 88-99 | 1 | |
| **FILTERS** | | | | | | | |
| **MPV** | | | | | | | |
| KT | FK075942A | NA | Filter Kit - 1/4" tube | | 88-99 | 1 | |
| 16G | 075942A | BV11-19-815 | Filter - 1/4" tube | | 88-99 | 1 | F325 |
| **B2600 (Truck)** | | | | | | | |
| KT | FK106940 | NA | Filter Kit | | 90-93 | 1 | |
| 16G | 106940 | BV50-19-815 | Filter | | 90-93 | 1 | F247 |
| **929** | | | | | | | |
| KT | FK075942A | NA | Filter Kit - 1/4" tube | | 92-95 | 1 | |
| 16G | 075942A | BV11-19-815 | Filter - 1/4" tube | | 92-95 | 1 | F325 |
| KT | FK075942G | NA | Filter Kit - 13/16" tube | | 92-95 | 1 | |
| 16G | 075942F | BV56-19-815 | Filter - 13/16" tube | | 92-95 | 1 | |
| **RX7** | | | | | | | |
| KT | FK075942A | NA | Filter Kit - 1/4" tube | | 92-93 | 1 | |
| KT | FK075944 | NA | Filter Kit | | 94-95 | 1 | |
| 16G | 075942A | BV11-19-815 | Filter - 1/4" tube | | 92-93 | 1 | F325 |
| 16G | 075944 | BV65-19-815 | Filter | | 94-95 | 1 | F295 |
| **METAL CLAD SEALS** | | | | | | | |
| 17A | 068400 | BV45-19-241 | Front Pump | | 88-99 | 1 | |
| 18E | TBA | R501-17-335A | Extension Housing - MPV 2wd & 929 | 51mm | 88-99 | 1 | |
| 18E | TBA | BV65-19-437 | Extension Housing - RX7 | 58mm | 92-95 | 1 | |
| 18E | TBA | M504-17-335 | Adapter Housing - all 4wd | 65mm | 88-99 | 1 | |
| N I | 063402 | 99586-08166 | Speedometer | | 88-99 | 1 | |
| N I | TBA | NA | Manual Lever | | 88-99 | 1 | |
| **SEALING RINGS** | | | | | | | |
| KT | 075600 | | Sealing Ring Kit - 1M / 8T | | 88-99 | 1 | without Gov. rings |
| KT | 075600A | E504A | Sealing Ring Kit - 1M / 11T | | 88-99 | 1 | with Gov. rings |
| **BUSHINGS** | | | | | | | |
| KT | 075625 | NA | Bushing Kit | | 88-99 | 1 | |

**NOTES**

# MERCEDES

## 722.0, 722.1, 722.2, (4 Bolt)
## W3A040, W4B025, K4A40, K4C025

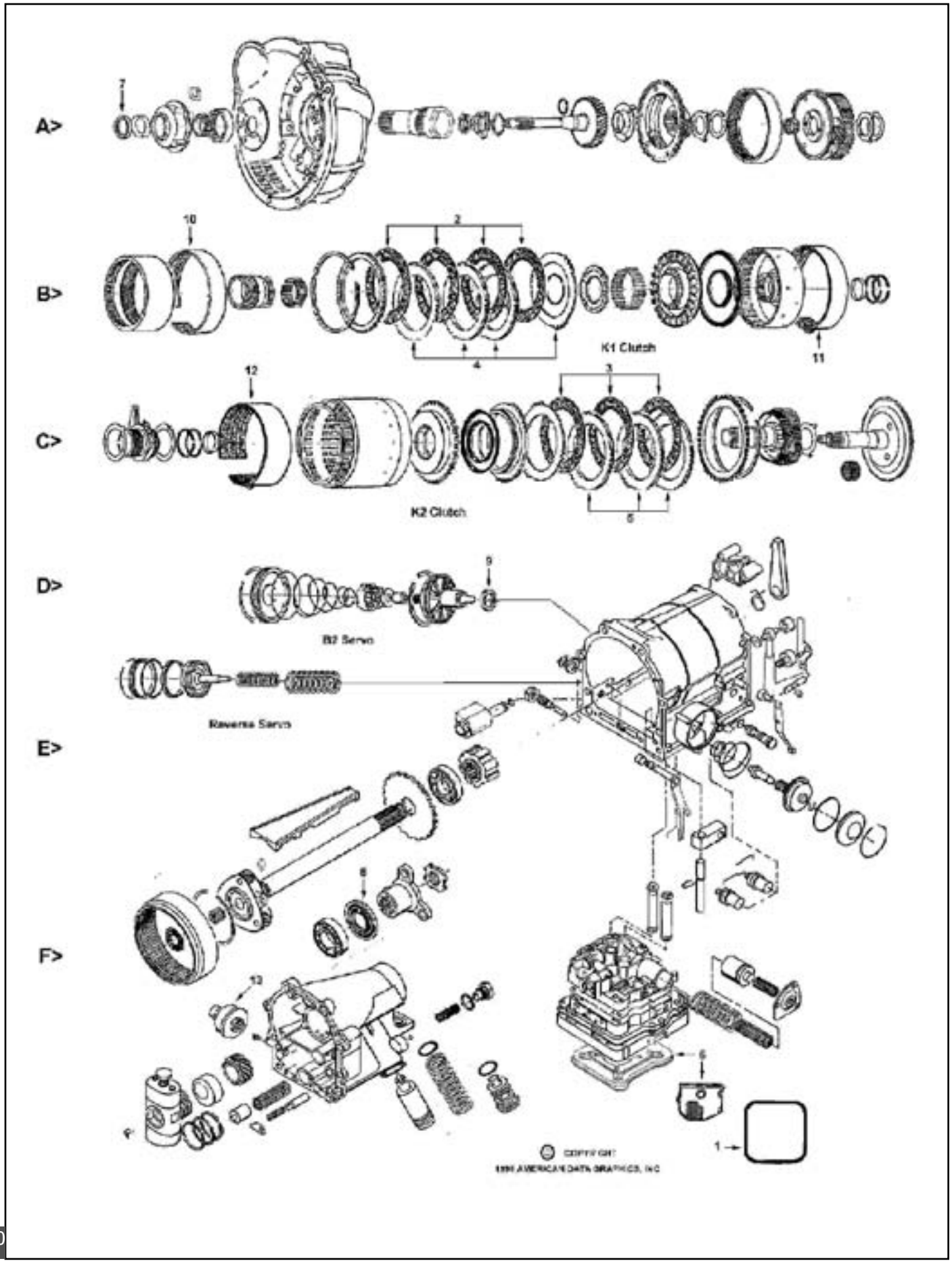

# MERCEDES

## 722.0, 722.1, 722.2, (4 Bolt)
## W3A040, W4B025, K4A40, K4C025

| ILL | DESCRIPTION | YEARS | FRICTION MODULE | STEEL MODULE | OVERHAUL KIT | BANNER KIT | MASTER KIT |
|---|---|---|---|---|---|---|---|
| **KITS** | | | | | | | |
| KT | Rebuilding Kit | 70-82 | 054752 | NA | 054800 | 054901LS | NA |

| ILL | ALTO NO | REF NO | DESCRIPTION | SPEC | YEAR | QTY | NOTES |
|---|---|---|---|---|---|---|---|
| **MISCELLANEOUS GASKETS & KIT COMPONENTS** | | | | | | | |
| 1F | 054816 | 115-271-1580 | Gasket, Oil Pan | M. Rubber | 70-82 | 1 | |
| **FRICTION CLUTCHES** | | | | | | | |
| 2B | 054700 | 112-272-0225 | K1 clutch 722.0 & 722.2 - wave | .098/2.5 | 70-82 | 3-4 | Tan - 51T - OD: 5.318" - PL |
| 2B | 054702 | 112-272-0025 | K1 clutch 722.1 (some 722.0) - wave | .083/2.1 | 70-82 | 3-6 | Tan - 51T - OD: 5.318" - PL |
| 2B | 054702SM | NA | K1 clutch 722.1 (some 722.0) - wave | .083/2.1 | 70-82 | 3-6 | Tan - 51T - OD: 5.318" - SM |
| 3C | 054700 | 112-272-0225 | K2 clutch 722.0 & 722.2 - wave | .098/2.5 | 70-82 | 2-4 | Tan - 51T - OD: 5.318" - PL |
| 3C | 054702 | 112-272-0025 | K2 clutch 722.1 (some 722.0) - wave | .083/2.1 | 70-82 | 3-6 | Tan - 51T - OD: 5.318" - PL |
| 3C | 054702SM | NA | K2 clutch 722.1 (some 722.0) - wave | .083/2.1 | 70-82 | 3-6 | Tan - 51T - OD: 5.318" - SM |
| **STEEL CLUTCHES** | | | | | | | |
| 4B | 054701 | 109-272-1526 | K1 clutch - all | .078/2.0 | 70-82 | 1 | 12T - ID: 4.073" |
| 4B | 054703 | 109-272-0626 | K1 clutch - selective | .118/3.0 | 70-82 | 3-6 | 12T - ID: 4.073" |
| 4B | 054705 | 109-272-0826 | K1 clutch - selective | .137/3.5 | 70-82 | 3-6 | 12T - ID: 4.073" |
| 5C | 054701 | 109-272-1526 | K2 clutch - all | .078/2.0 | 70-82 | 1 | 12T - ID: 4.073" |
| 5C | 054703 | 109-272-0626 | K2 clutch - selective | .118/3.0 | 70-82 | 3-6 | 12T - ID: 4.073" |
| 5C | 054705 | 109-272-0826 | K2 clutch - selective | .137/3.5 | 70-82 | 3-6 | 12T - ID: 4.073" |
| **BANDS** | | | | | | | |
| 10B | 054950 | 116-270-1762 | Front (Reverse) | Tan | 70-82 | 1 | |
| 11B | 054951 | NA | Center (B1) - 2" wide with round holes | Tan | 70-82 | AR | |
| 11B | 054953 | 126-270-1262 | Center (B1) - 1.5" wide with round holes | Tan | 70-82 | AR | |
| 11B | 054954 | 115-270-5662 | Center (B1) - 1.5" wide with oval holes | Tan | 70-82 | AR | |
| 12C | 054952 | 115-270-6062 | Rear (B2) - 1.5" wide with oval holes | Tan | 70-82 | AR | |
| 12C | 054956 | 115-270-7362 | Rear (B2) - 1.5" wide with round holes | Tan | 70-82 | AR | |
| **FILTERS** | | | | | | | |
| KT | FK054940 | NA | Filter Kit without pipe | | 70-82 | 1 | |
| KT | FK054942 | NA | Filter Kit with 1" pipe | | 70-82 | 1 | |
| KT | FK054944 | NA | Filter Kit with 3/4" pipe | | 70-82 | 1 | |
| 6F | 054940 | 115-270-0398 | Filter without pipe - 722.1 & 722.2 | | 70-82 | 1 | |
| 6F | 054942 | 109-270-0298 | Filter with 1" pipe - 722.0 | | 70-82 | 1 | |
| 6F | 054944 | 123-270-0098 | Filter with 3/4 pipe - some 722.1 | | 70-82 | 1 | 280E,CE, SE & 300SD |
| **METAL CLAD SEALS** | | | | | | | |
| 7A | 054400 | 008-997-9146 | Front Pump - 722.2 | 2.06/52 | 70-82 | 1 | |
| 7A | 054400A | 004-997-0547 | Front Pump - 722.0 & 722.1 | 2.37/60 | 70-82 | 1 | |
| 8F | 054402 | 008-997-9246 | Extension Housing - 722.0, 722.1, 722.2 | 2.45/62 | 70-82 | 1 | Nitrile |
| 8F | 054402A | 012-997-8747 | Extension Housing - 722.1 (some) | 2.45/62 | 70-82 | 1 | Poly |
| 9D | 054403 | 115-272-1192 | B2 Servo piston | | 70-82 | 1 | |
| N I | 054410 | 011-997-06447 | Speedometer | | 70-82 | 1 | |
| N I | 054401 | 006-997-6146 | Manual Lever | | 70-82 | 1 | |
| **SEALING RINGS** | | | | | | | |
| KT | 054600 | NA | Sealing Ring Kit - complete | | 70-82 | 1 | |
| KT | 054601 | NA | Sealing Ring Kit - Accumulator rings only | | 70-82 | 1 | |
| **MODULATORS** | | | | | | | |
| 13F | 054500 | 000-270-0179 | Steel top* with green dot | | 70-82 | 1 | *Can use plastic top |
| 13F | 054501 | 123-270-0079 | White plastic top - Gas | | 70-82 | 1 | |
| 13F | 054502 | 123-270-0679 | Red plastic top - Diesel | | 70-82 | 1 | |

**NOTES**

# MERCEDES

**722.3 (6 Bolt)**
**W4A040 1981-97**

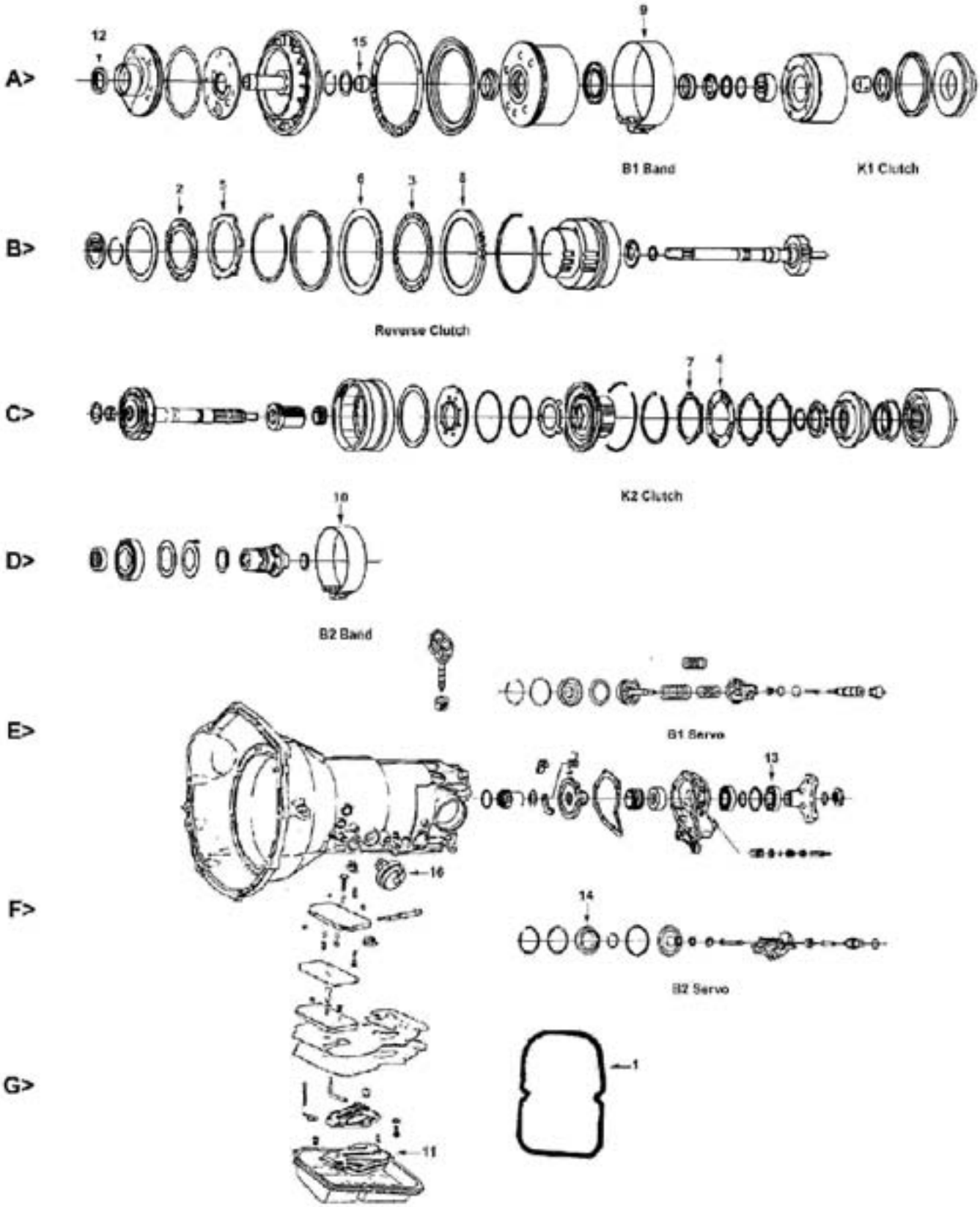

# MERCEDES
## 722.3 (6 Bolt)
## W4A040 1981-97

| ILL | DESCRIPTION | YEARS | FRICTION MODULE | STEEL MODULE | OVERHAUL KIT | BANNER KIT | MASTER KIT |
|---|---|---|---|---|---|---|---|
| **KITS** | | | | | | | |
| KT | Rebuilding Kit - Fits Transmissions: 722.301, 303, 304, 310, 312, 315, 317, 319, 320, 321, 342, 351, 355, 358, 359, 361, 367, 369 | 81-97 | 064752 | 064753 | 064800 | 064901LS | 064901 |
| KT | Rebuilding Kit - Fits Transmissions: 722.311, 313, 323, 350, 353, 362, 364, 365, 370 | 81-97 | 064752 | 064753A | 064800 | 064901LS | 064901A |
| KT | Rebuilding Kit - Fits Transmissions: 722.324, 354, 366 | 81-97 | 064752 | 064753B | 064800 | 064901LS | 064901B |

| ILL | ALTO NO | REF NO | DESCRIPTION | SPEC | YEAR | QTY | NOTES |
|---|---|---|---|---|---|---|---|
| **MISCELLANEOUS GASKETS & KIT COMPONENTS** | | | | | | | |
| 1G | 064816 | 126-271-1180 | Gasket, Oil Pan | M. Rubber | 81-97 | 1 | |
| **FRICTION CLUTCHES** | | | | | | | |
| 2B | 064700 | 126-272-0625 | K1 (Front) - wave | .084/2.14 | 81-97 | 4-5 | Heg - 24T - OD: 5.265" - PL |
| 2B | 064700A214 | 126-272-0625 | K1 (Front) - wave | .084/2.14 | 81-97 | 4-5 | Tan - 24T - OD: 5.265" - PL |
| 3B | 064702 | 126-272-0925 | B3 (Reverse) - wave | .082/2.05 | 81-97 | 4 | Heg - 36T - OD: 6.678" - PL |
| 3B | 064702A205 | 126-272-0925 | B3 (Reverse) - wave | .082/2.05 | 81-97 | 4 | Tan - 36T - OD: 6.678" - PL |
| 4C | 064704 | 126-272-0725 | K2 (Rear) - wave | .084/2.14 | 81-97 | 4-5 | Heg - 24T - OD: 4.870" - PL |
| 4C | 064704A214 | 126-272-0725 | K2 (Rear) - wave | .084/2.14 | 81-97 | 4-5 | Tan - 24T - OD: 4.870" - PL |
| **STEEL CLUTCHES** | | | | | | | |
| 5B | 064701-200 | 126-272-4926 | K1 (Front) - selective | .078/2.0 | 81-97 | AR | 6T - ID: 4.094" |
| 5B | 064701-350 | 126-272-5026 | K1 (Front) - selective | .138/3.5 | 81-97 | AR | 6T - ID: 4.094" |
| 5B | 064701-400 | 126-272-5126 | K1 (Front) - selective | .157/4.0 | 81-97 | AR | 6T - ID: 4.094" |
| 5B | 064701-450 | 126-272-3226 | K1 (Front) - selective | .177/4.5 | 81-97 | AR | 6T - ID: 4.094" |
| 5B | 064701-500 | 126-272-3326 | K1 (Front) - selective | .197/5.0 | 81-97 | AR | 6T - ID: 4.094" |
| 5B | 064701-550 | NA | K1 (Front) - selective | .217/5.5 | 81-97 | AR | 6T - ID: 4.094" |
| 6B | 064703-230 | 126-272-6726 | B3 (Reverse) - selective | .091/2.3 | 81-97 | AR | 36T - ID: 5.787" |
| 6B | 064703-280 | 126-272-6826 | B3 (Reverse) - selective | .110/2.8 | 81-97 | AR | 36T - ID: 5.787" |
| 6B | 064703-330 | 126-272-6426 | B3 (Reverse) - selective | .130/3.3 | 81-97 | AR | 36T - ID: 5.787" |
| 6B | 064703-380 | 126-272-6526 | B3 (Reverse) - selective | .150/3.8 | 81-97 | AR | 36T - ID: 5.787" |
| 7C | 064705-200 | 126-272-4726 | K2 (Rear) - selective | .078/2.0 | 81-97 | AR | 6T - ID: 3.464" |
| 7C | 064705-300 | 126-272-3626 | K2 (Rear) - selective | .118/3.0 | 81-97 | AR | 6T - ID: 3.464" |
| 7C | 064705-350 | 126-272-4826 | K2 (Rear) - selective | .138/3.5 | 81-97 | AR | 6T - ID: 3.464" |
| 7C | 064705-450 | 126-272-3426 | K2 (Rear) - selective | .177/4.5 | 81-97 | AR | 6T - ID: 3.464" |
| 7C | 064705-500 | 126-272-3526 | K2 (Rear) - selective | .197/5.0 | 81-97 | AR | 6T - ID: 3.464" |
| 7C | 064705-550 | NA | K2 (Rear) - selective | .217/5.5 | 81-97 | AR | 6T - ID: 3.464" |
| **PRESSURE PLATES** | | | | | | | |
| 8B | 064703-770 | 126-272-6926 | B3 (Reverse) - Backing | .303/7.7 | 81-97 | 1 | Not Available |
| **BANDS** | | | | | | | |
| 9A | 064950 | 126-270-1862 | B1 (Intermediate) | Tan | 81-97 | 1 | |
| 10D | 064955 | 126-270-2062 | B2 (Rear) | Tan | 81-97 | 1 | |
| **FILTERS** | | | | | | | |
| KT | FK064940 | NA | Filter Kit - except V8 engine | | 81-97 | 1 | |
| KT | FK064942 | NA | Filter Kit - V8 engine only | | 81-97 | 1 | |
| 11G | 064940 | 126-277-0295 | Filter - all except V8 engine | | 81-97 | 1 | |
| 11G | 064942 | 126-277-0195 | Filter - V8 engine only | | 81-97 | 1 | |
| **METAL CLAD SEALS** | | | | | | | |
| 12A | 064400 | 010-997-4947 | Front Pump | | 81-97 | 1 | |
| 13E | 054402A | 012-997-8747 | Extension Housing | 2.45/62 | 81-97 | 1 | Poly |
| 14F | 064404 | 006-997-7347 | B2 Servo | | 81-97 | 1 | |
| N I | 064410 | 006-997-0147 | Manual Lever | | 81-97 | 1 | |
| **SEALING RINGS** | | | | | | | |
| KT | 064600 | NA | Sealing Ring Kit - except Accum. rings | | 81-97 | 1 | |
| KT | 064600A | NA | Sealing Ring Kit - VB Accumulators | | 81-97 | 1 | |
| **BUSHINGS** | | | | | | | |
| 15A | 064200 | NA | Front Pump | | 81-97 | 1 | |

# MERCEDES

## 722.3 (6 Bolt)

## W4A040 1981-97

| ILL | ALTO NO | REF NO | DESCRIPTION | SPEC | YEAR | QTY | NOTES |
|---|---|---|---|---|---|---|---|
| **MODULATORS** | | | | | | | |
| 16F | 064500 | 126-270-2579 | Red Plastic Top | | 81-97 | 1 | |
| 16F | 064501 | 126-270-0079 | Green Plastic Top | | 81-97 | 1 | |
| 16F | 064502 | 126-270-4379 | Black Plastic Top | | 81-97 | 1 | |
| 16F | 064503 | 126-270-2779 | Brown Plastic Top | | 81-97 | 1 | |
| N I | TBA | 126-277-2075 | Modulator Pin | | 81-97 | 1 | |

**NOTES**

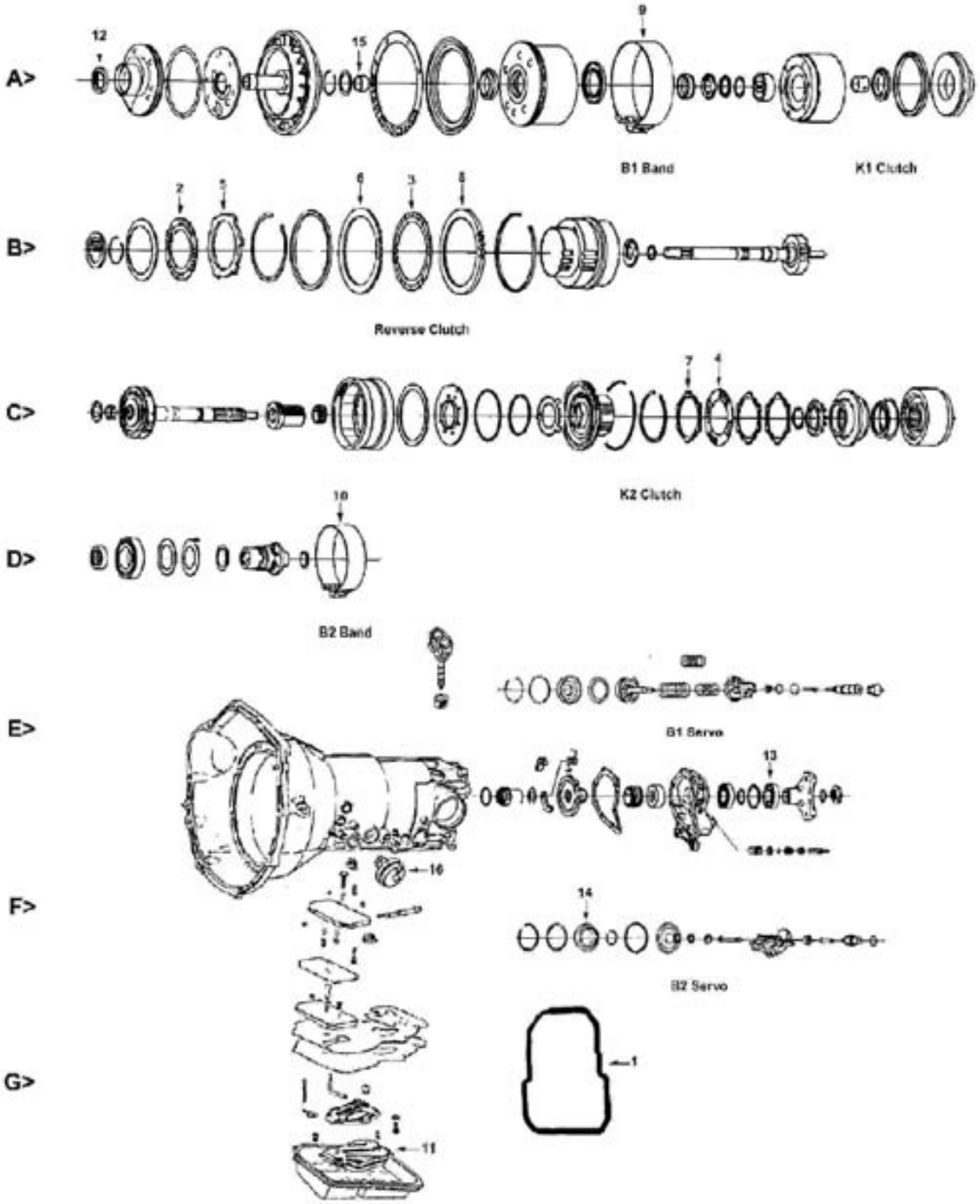
A>
12
15
9
B1 Band
K1 Clutch
B>
2
5
6
3
8
Reverse Clutch
C>
7
4
K2 Clutch
D>
10
B2 Band
E>
B1 Servo
13
F>
16
14
B2 Servo
G>
1
11

# MERCEDES

## 722.4 (BABY 6 Bolt)
## W4A020 1983-97

| ILL | DESCRIPTION | YEARS | FRICTION MODULE | STEEL MODULE | OVERHAUL KIT | BANNER KIT | MASTER KIT |
|---|---|---|---|---|---|---|---|
| **KITS** | | | | | | | |
| KT | Rebuilding Kit - Fits Transmissions: 722.400, 408, 414, 423 | 83-97 | 071752 | 071753 | 071800 | 071901LS | 071901 |
| KT | Rebuilding Kit - Fits Transmissions: 722.409, 413, 416 | 83-97 | 071752 | 071753A | 071800 | 071901LS | 071901A |
| KT | Rebuilding Kit - Fits Transmissions: 722.403 | 83-97 | 071752 | 071753B | 071800 | 071901LS | 071901B |

| ILL | ALTO NO | REF NO | DESCRIPTION | SPEC | YEAR | QTY | NOTES |
|---|---|---|---|---|---|---|---|
| **MISCELLANEOUS GASKETS & KIT COMPONENTS** | | | | | | | |
| 1G | 071816 | 201-271-0380 | Gasket, Oil Pan | M. Rubber | 83-97 | 1 | |
| **FRICTION CLUTCHES** | | | | | | | |
| 2B | 071700 | 123-272-0225 | K1 (Front) - wave | .084/2.14 | 83-97 | 3-5 | Heg - 40T - OD: 4.678" - PL |
| 3B | 071702 | 201-272-0025 | B3 (Reverse) - wave | .082/2.05 | 83-97 | 3-4 | Heg - 30T - OD: 6.016" - PL |
| 4C | 071704 | 123-272-0125 | K2 (Rear) - wave | .084/2.14 | 83-97 | 3-5 | Heg - 36T - OD: 4.241" - PL |
| **STEEL CLUTCHES** | | | | | | | |
| 5B | 071701-200 | 201-272-0726 | K1 (Front) - selective | .078/2.0 | 83-97 | AR | 6T - ID: 3.524" |
| 5B | 071701-300 | 201-272-0826 | K1 (Front) - selective | .118/3.0 | 83-97 | AR | 6T - ID: 3.524" |
| 5B | 071701-350 | 201-272-0926 | K1 (Front) - selective | .138/3.5 | 83-97 | AR | 6T - ID: 3.524" |
| 5B | 071701-400 | 201-272-1026 | K1 (Front) - selective | .157/4.0 | 83-97 | AR | 6T - ID: 3.524" |
| 5B | 071701-450 | 201-272-1126 | K1 (Front) - selective | .177/4.5 | 83-97 | AR | 6T - ID: 3.524" |
| 6B | 071703-250 | 201-272-2526 | B3 (Reverse) - OEM surface finish Selective | .098/2.5 | 83-97 | AR | 36T - ID: 5.060" |
| 6B | 071703-300 | 201-272-2126 | B3 (Reverse) - OEM surface finish Selective | .118/3.0 | 83-97 | AR | 36T - ID: 5.060" |
| 6B | 071703-350 | 201-272-2226 | B3 (Reverse) - OEM surface finish Selective | .138/3.5 | 83-97 | AR | 36T - ID: 5.060" |
| 6B | 071703-400 | 201-272-2626 | B3 (Reverse) - OEM surface finish Selective | .157/4.0 | 83-97 | AR | 36T - ID: 5.060" |
| 7C | 071705-200 | 201-272-0126 | K2 (Rear) - selective | .078/2.0 | 83-97 | AR | 6T - ID: 3.250" |
| 7C | 071705-300 | 201-272-0226 | K2 (Rear) - selective | .118/3.0 | 83-97 | AR | 6T - ID: 3.250" |
| 7C | 071705-350 | 201-272-0326 | K2 (Rear) - selective | .138/3.5 | 83-97 | AR | 6T - ID: 3.250" |
| 7C | 071705-400 | 201-272-0426 | K2 (Rear) - selective | .157/4.0 | 83-97 | AR | 6T - ID: 3.250" |
| 7C | 071705-450 | 201-272-0526 | K2 (Rear) - selective | .177/4.5 | 83-97 | AR | 6T - ID: 3.250" |
| **PRESSURE PLATES** | | | | | | | |
| 8C | 071703-650 | 201-272-2326 | B3 (Reverse) - backing | .256/6.5 | 83-97 | 1 | Not Available |
| **BANDS** | | | | | | | |
| 9A | 071950 | 124-270-0062 | B1 (Intermediate) | Tan | 83-97 | 1 | |
| 10D | 071955 | 201-270-1062 | B2 (Rear) | Tan | 83-97 | 1 | |
| **FILTERS** | | | | | | | |
| KT | FK064940 | NA | Filter Kit | | 83-97 | 1 | |
| 11G | 064940 | 126-277-0295 | Filter | | 83-97 | 1 | |
| **METAL CLAD SEALS** | | | | | | | |
| 12A | 071400 | 010-997-4547 | Front Pump | | 83-97 | 1 | |
| 13E | 054402A | 012-997-8747 | Extension Housing | 2.45/62 | 83-97 | 1 | Poly |
| 14F | 064404 | 006-997-7347 | B2 Servo | | 83-97 | 1 | |
| **SEALING RINGS** | | | | | | | |
| KT | 071600 | NA | Sealing Ring Kit - except Accum. rings | | 83-97 | 1 | |
| KT | 064600A | NA | Sealing Ring Kit - VB Accumulators | | 83-97 | 1 | |
| **MODULATORS** | | | | | | | |
| 16F | 064500 | 126-270-2579 | Red Plastic Top | | 83-97 | 1 | |
| 16F | 064502 | 126-270-4379 | Black Plastic Top | | 81-97 | 1 | |
| 16F | 064503 | 126-270-2779 | Brown Plastic Top | | 81-97 | 1 | |

**NOTES**

# MERCEDES
## 722.5 (W5A030)
## 5 SPEED with OVERDRIVE 1990-On

| ILL | DESCRIPTION | YEARS | FRICTION MODULE | STEEL MODULE | OVERHAUL KIT | BANNER KIT | MASTER KIT |
|---|---|---|---|---|---|---|---|
| **KITS** | | | | | | | |
| KT | Rebuilding Kit - Fits Transmissions: 722.500, 502, 507, 508 | 90-On | 117752 | 117753 | 117800 | 117901LS | 117901 |

| ILL | ALTO NO | REF NO | DESCRIPTION | SPEC | YEAR | QTY | NOTES |
|---|---|---|---|---|---|---|---|
| **MISCELLANEOUS GASKETS & KIT COMPONENTS** | | | | | | | |
| N I | 064816 | 126-271-1180 | Gasket, Oil Pan | M. Rubber | 90-On | 1 | |
| **FRICTION CLUTCHES** | | | | | | | |
| N I | 064700 | 126-272-0625 | K1 (Front) - wave | .084/2.14 | 90-On | 4 | Heg - 24T - OD: 5.265" - PL |
| N I | 064700A214 | 126-272-0625 | K1 (Front) - wave | .084/2.14 | 90-On | 4 | Tan - 24T - OD: 5.265" - PL |
| N I | 064702 | 126-272-0925 | B3 (Reverse) - wave | .082/2.05 | 90-On | 4 | Heg - 36T - OD: 6.678" - PL |
| N I | 064702A205 | 126-272-0925 | B3 (Reverse) - wave | .082/2.05 | 90-On | 4 | Tan - 36T - OD: 6.678" - PL |
| N I | 064704 | 126-272-0725 | K2 (Rear) - wave | .084/2.14 | 90-On | 4 | Heg - 24T - OD: 4.870" - PL |
| N I | 064704A214 | 126-272-0725 | K2 (Rear) - wave | .084/2.14 | 90-On | 4 | Tan - 24T - OD: 4.870" - PL |
| N I | 117708 | 124-272-0125 | KS - Overrun | .084/2.14 | 90-On | 4 | Tan - 22T - OD:4.18" - PLNI |
| N I | 117706 | 124-272-0025 | BS - Overdrive | .084/2.14 | 90-On | 4 | Tan - 28T - OD:5.50" - PLNI |
| **STEEL CLUTCHES** | | | | | | | |
| N I | 064701-200 | 126-272-4926 | K1 (Front) - selective | .078/2.0 | 90-On | AR | 6T - ID: 4.094" |
| N I | 064701-350 | 126-272-5026 | K1 (Front) - selective | .138/3.5 | 90-On | AR | 6T - ID: 4.094" |
| N I | 064701-400 | 126-272-5126 | K1 (Front) - selective | .157/4.0 | 90-On | AR | 6T - ID: 4.094" |
| N I | 064701-450 | 126-272-3226 | K1 (Front) - selective | .177/4.5 | 90-On | AR | 6T - ID: 4.094" |
| N I | 064701-500 | 126-272-3326 | K1 (Front) - selective | .197/5.0 | 90-On | AR | 6T - ID: 4.094" |
| N I | 064701-550 | NA | K1 (Front) - selective | .217/5.5 | 90-On | AR | 6T - ID: 4.094" |
| N I | 064703-230 | 126-272-6726 | B3 (Reverse) - selective | .091/2.3 | 90-On | AR | 36T - ID: 5.787" |
| N I | 064703-280 | 126-272-6826 | B3 (Reverse) - selective | .110/2.8 | 90-On | AR | 36T - ID: 5.787" |
| N I | 064703-330 | 126-272-6426 | B3 (Reverse) - selective | .130/3.3 | 90-On | AR | 36T - ID: 5.787" |
| N I | 064703-380 | 126-272-6526 | B3 (Reverse) - selective | .150/3.8 | 90-On | AR | 36T - ID: 5.787" |
| N I | 064705-200 | 126-272-4726 | K2 (Rear) - selective | .078/2.0 | 90-On | AR | 6T - ID: 3.464" |
| N I | 064705-300 | 126-272-3626 | K2 (Rear) - selective | .118/3.0 | 90-On | AR | 6T - ID: 3.464" |
| N I | 064705-350 | 126-272-4826 | K2 (Rear) - selective | .138/3.5 | 90-On | AR | 6T - ID: 3.464" |
| N I | 064705-450 | 126-272-3426 | K2 (Rear) - selective | .177/4.5 | 90-On | AR | 6T - ID: 3.464" |
| N I | 064705-500 | 126-272-3526 | K2 (Rear) - selective | .197/5.0 | 90-On | AR | 6T - ID: 3.464" |
| N I | 064705-550 | NA | K2 (Rear) - selective | .217/5.5 | 90-On | AR | 6T - ID: 3.464" |
| N I | 117709-200 | 124-272-0226 | KS (Overrun) | .078/2.0 | 90-On | 4 | 28T - ID: 3.504" |
| N I | 117709-350 | 124-272-0326 | KS (Overrun) | .138/3.5 | 90-On | 1 | 28T - ID: 3.504" |
| N I | 117707-250 | 129-272-0126 | BS (Overdrive) | .098/2.5 | 90-On | 1 | 8T - ID: 4.786" |
| N I | 117707-545 | 129-272-0226 | BS (Overdrive) | .215/5.5 | 90-On | 3 | 8T - ID: 4.786" |
| **PRESSURE PLATES** | | | | | | | |
| N I | 064703-770 | 126-272-6926 | B3 (Reverse) - Backing | .303/7.7 | 90-On | 1 | Not Available |
| **BANDS** | | | | | | | |
| N I | 064950 | 126-270-1862 | B1 (Intermediate) | Tan | 90-On | 1 | |
| N I | 064955 | 126-270-2062 | B2 (Rear) | Tan | 90-On | 1 | |
| **FILTERS** | | | | | | | |
| N I | 117940 | 129-277-0195 | Filter | | 90-On | 1 | |
| **METAL CLAD SEALS** | | | | | | | |
| N I | 064400 | 010-997-4947 | Front Pump | | 90-On | 1 | |
| N I | 054402A | 012-997-8747 | Extension Housing | 2.45/62 | 90-On | 1 | Poly |
| N I | 064404 | 006-997-7347 | B2 Servo | | 90-On | 1 | |
| N I | 064410 | 006-997-0147 | Manual Lever | | 90-On | 1 | |
| **MODULATORS** | | | | | | | |
| N I | 064502 | 126-270-4379 | Black Plastic Top | | 90-On | 1 | |

**NOTES**

# MERCEDES

## 722.6 (W5A580)

## 5 SPEED with OVERDRIVE 1996-On

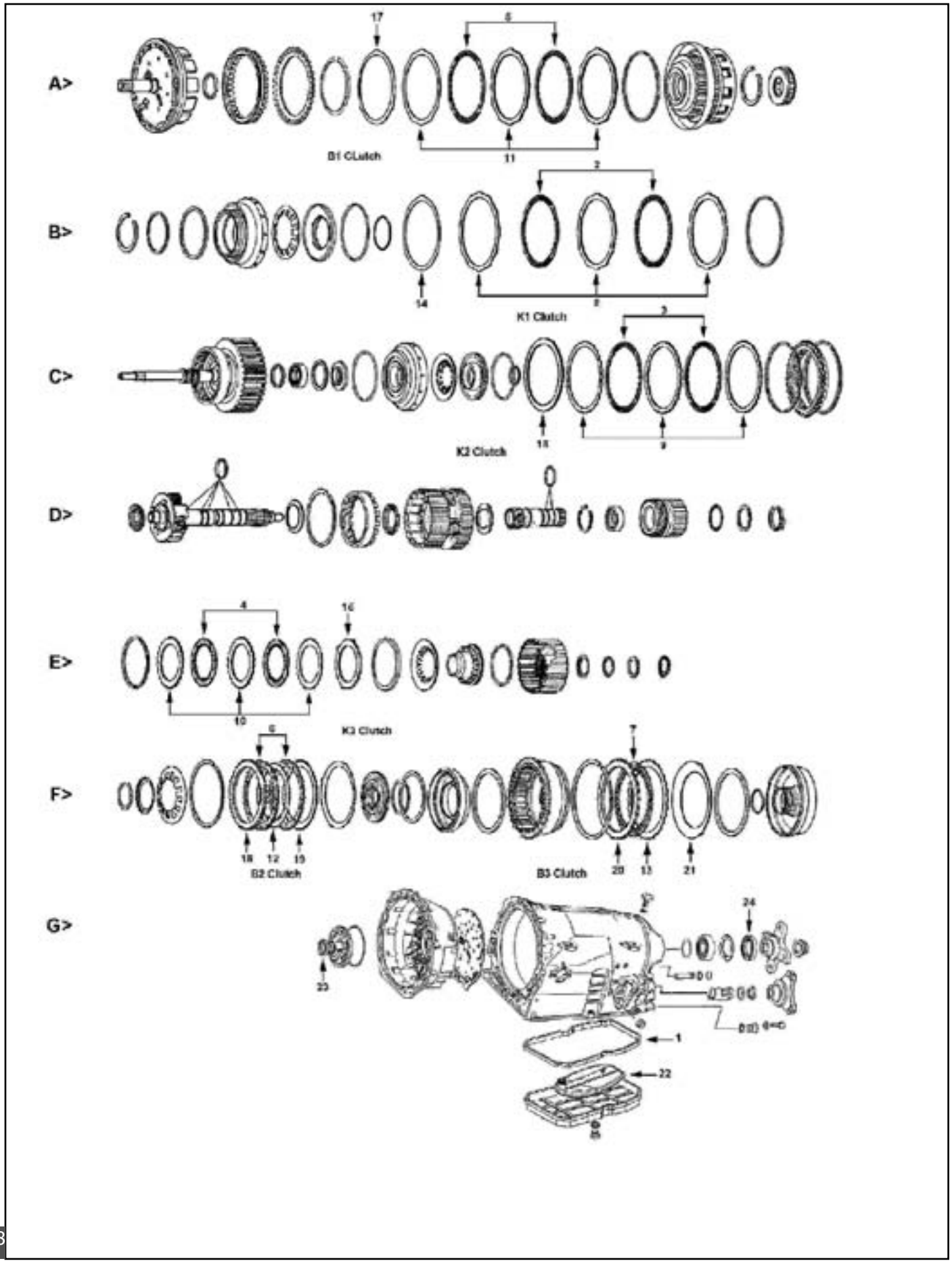

# MERCEDES
## 722.6 (W5A580)
## 5 SPEED with OVERDRIVE 1996-On

| ILL | DESCRIPTION | YEARS | FRICTION MODULE | STEEL MODULE | OVERHAUL KIT | BANNER KIT | MASTER KIT |
|---|---|---|---|---|---|---|---|
| **KITS** | | | | | | | |
| KT | Rebuilding Kit | 96-97 | 141752 | 141753 | 141800 | 141901LS | 141901 |
| KT | Rebuilding Kit | 98-01 | 141752A | 141753A | 141800 | 141901ALS | 141901A |
| KT | Rebuilding Kit | 02-On | 141752B | 141753B | 141800 | 141901BLS | 141901B |
| KT | Overhaul Kit - without Molded Pistons | 02-On | | | 141800X | | |

| ILL | ALTO NO | REF NO | DESCRIPTION | SPEC | YEAR | QTY | NOTES |
|---|---|---|---|---|---|---|---|
| **MISCELLANEOUS GASKETS & KIT COMPONENTS** | | | | | | | |
| 1G | 141816 | NA | Gasket, Oil Pan | M. Rubber | 96-On | 1 | |
| **FRICTION CLUTCHES** | | | | | | | |
| 2B | 141700-210 | 140-272-0025 | K1 | .084/2.14 | 96-On | 4-6 | Heg - 30T - OD: 6.796" - PL |
| 3C | 141706-214 | 210-272-0025 | K2 | .084/2.14 | 96-01 | 4-5 | Heg - 36T - OD: 6.475" - PL |
| 3C | 141706-160 | NA | K2 - selective | .062/1.6 | 96-01 | AR | Heg - 36T - OD: 6.475" - PL |
| 3C | 141706A214 | 140-272-0125 | K2 | .084/2.14 | 96-On | 6 | Heg - 36T - OD: 6.475" - PL |
| 4E | 141708-160 | 140-272-0225 | K3 | .063/1.6 | 96-97 | 3-4 | Heg - 24T - OD: 4.486" - PL |
| 4E | 141708-216 | 140-272-0725 | K3 | .085/2.16 | 98-On | 5 | Heg - 24T - OD: 4.486" - PL |
| 5A | 141700-210 | 140-272-0025 | B1 | .084/2.14 | 96-01 | 3-4 | Heg - 30T - OD: 6.796" - PL |
| 6F | 141702-160 | 140-272-0026 | B2 (external spline) | .063/1.6 | 96-On | 4-5 | Heg - 40T - OD: 6.519" - PL |
| 7F | 141704-160 | 140-272-0625 | B3 | .063/1.6 | 96-On | 3-4 | Heg - 46T - OD: 7.086" - PL |
| N I | 141714 | NA | Torque Converter | .107/2.7 | 96-On | AR | Red - 34T - OD: 6.929" - SB |
| N I | 141714-232 | NA | Torque Converter sel. | .091/2.32 | 96-On | AR | Red - 34T - OD: 6.929" - SB |
| **STEEL CLUTCHES** | | | | | | | |
| 8B | 141701-180 | 140-272-0226 | K1 | .071/1.8 | 96-On | 1 | 12T - ID: 6.065" |
| 8B | 141701-280 | 140-272-2826 | K1 | .110/2.8 | 02-On | 5 | 12T - ID: 6.065" |
| 8B | 141701-350 | 140-272-0326 | K1 | .138/3.5 | 96-01 | 3-5 | 12T - ID: 6.065" |
| 8B | 141701-400 | 140-272-0426 | K1 | .157/4.0 | 96-On | 1 | 12T - ID: 6.065" |
| 9C | 141707-180 | 140-272-0626 | K2 | .071/1.8 | 96-On | 1 | 30T - ID: 5.770" |
| 9C | 141707-280 | 140-272-2926 | K2 | .110/2.8 | 02-On | 5 | 30T - ID: 5.770" |
| 9C | 141707-350 | 140-272-0726 | K2 | .138/3.5 | 96-01 | 2-3 | 30T - ID: 5.770" |
| 10E | 141709-180 | 140-272-1026 | K3 | .063/1.8 | 96-On | 1 | 24T - ID: 3.465" |
| 10E | 141709-278 | 140-272-2726 | K3 | .109/2.78 | 98-On | 4 | 24T - ID: 3.465" |
| 10E | 141709-350 | 140-272-1126 | K3 | .138/3.5 | 96-97 | 3-4 | 24T - ID: 3.465" |
| 11A | 141701-180 | 140-272-0226 | B1 | .071/1.8 | 96-On | 1 | 12T - ID: 6.065" |
| 11A | 141701-280 | 140-272-2826 | B1 | .110/2.8 | 02-On | 3 | 12T - ID: 6.065" |
| 11A | 141701-350 | 140-272-0326 | B1 | .138/3.5 | 96-01 | 2-3 | 12T - ID: 6.065" |
| 11A | 141701-400 | 140-272-0426 | B1 | .157/4.0 | 96-On | 1 | 12T - ID: 6.065" |
| 12F | 141703-180 | 140-272-0425 | B2 (internal spline) | .071/1.8 | 96-On | 3-4 | 24T - ID: 4.825" |
| 13F | 141705-180 | 140-272-1826 | B3 | .071/1.8 | 96-On | 3-4 | 30T - ID: 6.100" |
| N I | 141715-177 | NA | Torque Converter | .069/1.75 | 96-On | AR | 20T - ID: 5.629" |
| N I | 141715-390 | NA | Torque Converter | .155/3.95 | 96-On | AR | 20T - ID: 5.629" |
| N I | 141715-497 | NA | Torque Converter | .196/4.97 | 96-On | AR | 20T - ID: 5.629" |
| **PRESSURE PLATES** | | | | | | | |
| 14B | TBA | NA | K1 - Cushion spring (Belleville) | .059/1.5 | 96-On | 1 | |
| 15C | 141707-400 | 140-272-0826 | K2 - Apply plate | .157/4.0 | 96-On | 1 | |
| 16E | 141709-400 | 140-272-1226 | K3 - Apply plate | .157/4.0 | 96-On | 1 | |
| 17A | TBA | NA | B1 - Cushion spring (Belleville) | .059/1.5 | 96-On | 1 | |
| 18F | 141702SC180 | 140-272-1426 | B2 - Backing plate | .071/1.8 | 96-On | 1 | |
| 19F | 141703-650 | 140-272-2326 | B2 - Apply plate | .252/6.4 | 96-On | 1 | |
| 20F | 141705-650 | 140-272-2426 | B3 - Backing plate | .252/6.4 | 96-On | 1 | |
| 21F | TBA | NA | B3 - Cushion spring (Belleville) | .110/2.8 | 96-On | 1 | |
| **FILTERS** | | | | | | | |
| 22G | 141940 | 140-277-0095 | Filter | | 96-On | 1 | |
| **METAL CLAD SEALS** | | | | | | | |
| 23G | 064400 | 010-997-4947 | Front Pump | | 96-On | 1 | |
| 24G | 141405 | 140-997-0846 | Extension Housing | | 96-On | 1 | |
| N I | 064410 | 006-997-0147 | Manual Lever | | 96-On | 1 | |

# MERCEDES

## 722.6 (W5A580)

## 5 SPEED with OVERDRIVE 1996-On

### NOTES

# MERCEDES
## 722.7 (W5A180)
## 4 SPEED with OVERDRIVE 1998-On

| ILL | DESCRIPTION | YEARS | FRICTION MODULE | OVERHAUL KIT | BANNER KIT | MASTER KIT |
|---|---|---|---|---|---|---|
| **KITS** | | | | | | |
| KT | Rebuilding Kit | 98-On | 147750 FR & ST | 147800 | NA | 147901 |

| ILL | ALTO NO | REF NO | DESCRIPTION | SPEC | YEAR | QTY | NOTES |
|---|---|---|---|---|---|---|---|
| **FRICTION CLUTCHES** | | | | | | | |
| N I | 147700-160 | 168-372-0925 | 1st - 1sided friction / internal spline | .063/1.6 | 98-On | 3 | Heg - 24T - OD: 4.522" - PL |
| N I | 147701-160 | 168-372-0426 | 1st - 1sided friction / external spline | .063/1.6 | 98-On | 3 | Heg - 30T - ID: 3.950" - PL |
| N I | 147700-160 | 168-372-0925 | 2nd - 1sided friction / internal spline | .063/1.6 | 98-On | 4 | Heg - 24T - OD: 4.522" - PL |
| N I | 147701-160 | 168-372-0426 | 2nd - 1sided friction / external spline | .063/1.6 | 98-On | 4 | Heg - 30T - ID: 3.950" - PL |
| N I | 147702-160 | 168-372-0725 | 3rd - 1sided friction / internal spline | .063/1.6 | 98-On | 3 | Heg - 24T - OD: 4.361" - PL |
| N I | 147703-160 | 168-372-1126 | 3rd - 1sided friction / external spline | .063/1.6 | 98-On | 3 | Heg - 24T - ID: 3.518" - PL |
| N I | 147702-160 | 168-372-0725 | 4th - 1sided friction / internal spline | .063/1.6 | 98-On | 3 | Heg - 24T - OD: 4.361" - PL |
| N I | 147703-160 | 168-372-1126 | 4th - 1sided friction / external spline | .063/1.6 | 98-On | 3 | Heg - 24T - ID: 3.518" - PL |
| N I | 147704-160 | 168-372-0825 | 5th - 1sided friction / internal spline | .063/1.6 | 98-On | 3 | Heg - 32T - OD: 4.242" - PL |
| N I | 147705-160 | 168-372-1026 | 5th - 1sided friction / external spline | .063/1.6 | 98-On | 3 | Heg - 24T - ID: 3.675" - PL |
| N I | 147700-160 | 168-372-0925 | Reverse - 1sided friction / internal spline | .063/1.6 | 98-On | 3 | Heg - 24T - OD: 4.522" - PL |
| N I | 147701-160 | 168-372-0426 | Reverse - 1sided friction / external spline | .063/1.6 | 98-On | 3 | Heg - 30T - ID: 3.950" - PL |

**NOTES**

# MITSUBISHI

## MITSUBISHI, HYUNDAI, CHRYSLER
## KM 3 & 4 SPEED
## 1979-On

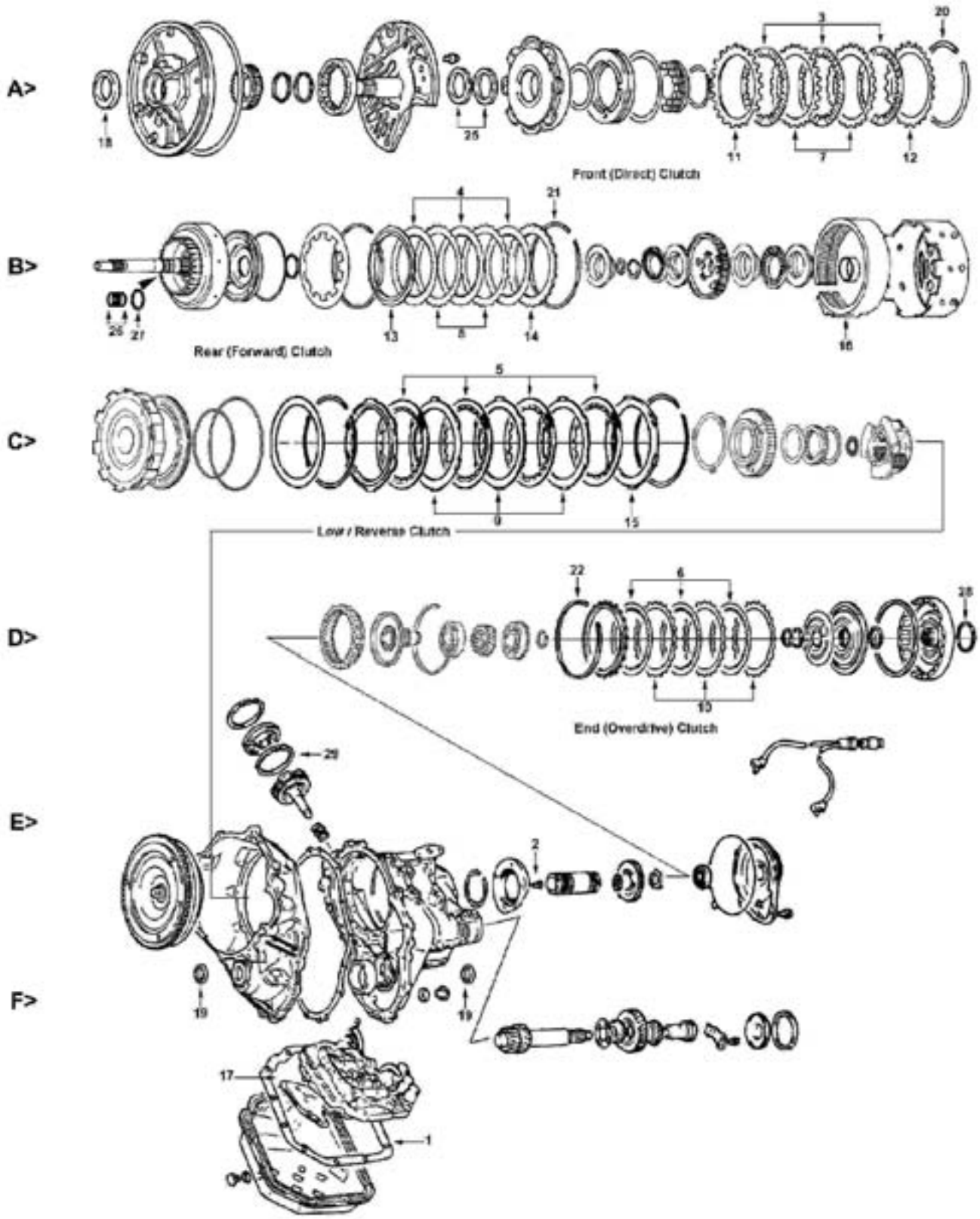

# MITSUBISHI

## MITSUBISHI, HYUNDAI, CHRYSLER
## KM 3 & 4 SPEED
## 1979-On

| ILL | DESCRIPTION | YEARS | FRICTION MODULE | STEEL MODULE | OVERHAUL KIT | BANNER KIT | MASTER KIT |
|---|---|---|---|---|---|---|---|
| **KITS** | | | | | | | |
| **3 Speed Units:** | | | | | | | |
| KT | Rebuilding Kit - KM170, 171 | 79-84 | 059752A | 059753A | 059802 | 059901LS | 059901 |
| KT | Rebuilding Kit - KM170, 171, 172 | 79-88 | 059752B | 059753B | 059802 | 059903LS | 059903 |
| KT | Rebuilding Kit - KM171, 172, F3A21, F3A22 | 89-On | 059752G | 059753G | 059804 | 059913LS | 059913 |
| **4 Speed Units:** | | | | | | | |
| KT | Rebuilding Kit - KM175, 177 | 85-88 | 059752D | 059753D | 059802A | 059907LS | 059907 |
| KT | Rebuilding Kit - KM177 | 87-88 | 059752E | 059753E | 059802A | 059909LS | 059909 |
| KT | Rebuilding Kit - KM175-5, 176, 177-5,6,7, F4A21, F4A22, F4A23 | 89-On | 059752H | 059753H | 059806 | 059915LS | 059915 |
| KT | Rebuilding Kit - KM175-5, 176, 177-5,6,7, F4A21, F4A22, F4A23 with Metal Gaskets | 89-On | 059752H | 059753H | 059806M | 059915MLS | 059915M |
| KT | Rebuilding Kit - W4A32 (AWD) | 91-On | 059752H | 059753K | 108802 | 059919LS | 059919 |
| **HYUNDAI** | | | | | | | |
| KT | Rebuilding Kit - A4AF1 | 93-On | 059752J | 059753J | 059806A | 059917LS | 059917 |
| KT | Rebuilding Kit - A4AF2, A4BF1, F4A32 | 96-On | 059752L | 059753L | 059808 | 059917ALS | 059917A |
| KT | Rebuilding Kit - A4AF3, A4BF3 Accent | 00-On | 059752M | 059753M | 059808A | 059917BLS | 059917B |
| KT | Rebuilding Kit - A4BF3 Elantra | 99-On | 059752N | 059753N | 059808A | 059917CLS | 059917C |
| **Specialty Kits - with Anti Warp** | | | | | | | |
| KT | Rebuilding Kit - KM175, 177 | 85-88 | 059750DPWR FR & ST | | 059802A | NA | 059907PWR |
| KT | Rebuilding Kit - KM177 (only) | 87-88 | 059750EPWR FR & ST | | 059802A | NA | 059909PWR |
| KT | Rebuilding Kit - Overdrive Clutch only | 85-On | 059757 FR & ST | | 059835 | NA | 059935PWR |

| ILL | ALTO NO | REF NO | DESCRIPTION | SPEC | YEAR | QTY | NOTES |
|---|---|---|---|---|---|---|---|
| **MISCELLANEOUS GASKETS & KIT COMPONENTS** | | | | | | | |
| 1F | 059816 | MD739235 | Gasket, Oil pan except KM177 (12 holes) | Cork/Rub | 79-On | 1 | |
| 1F | 059816A | MD722527 | Gasket, Oil pan KM177 (13 holes) | Cork/Rub | 85-On | 1 | |
| 2E | 059315 | MD734702 | Bolt - End (overdrive) clutch retainer | M8 x 20 | 79-On | 3-5 | |
| KT | TBA | MD728665 | Servo repair kit - 78mm bore | | 85-On | 1 | |
| KT | TBA | NA | Servo repair kit - 83mm bore | | 87-On | 1 | |
| **FRICTION CLUTCHES** | | | | | | | |
| 3A | 059700 | MD713655 | Front (Direct) clutch - small ID | .075/1.9 | 79-88 | 2-3 | Heg - 38T - OD: 4.996" - PL |
| 3A | 059710 | MD737892 | Front (Direct) clutch - large ID | .075/1.9 | 89-On | 2-3 | Heg - 38T - OD: 4.996" - PL |
| 4B | 059702 | MD714345 | Rear (Forward) clutch (KM170, 171) | .075/1.9 | 79-84 | 2 | Tan - 10T - OD: 4.996" - PL |
| 4B | 059700 | MD713655 | Rear (Forward) clutch (KM172) - small ID | .075/1.9 | 79-88 | 2-3 | Heg - 38T - OD: 4.996" - PL |
| 4B | 059710 | MD737892 | Rear (Forward) clutch (All) - large ID | .075/1.9 | 89-On | 2-3 | Heg - 38T - OD: 4.996" - PL |
| 4B | 059710-170 | 45449-22770 | Rear (Forward) clutch | .066/1.7 | 00-On | 3 | Heg - 38T - OD: 4.998" - PL |
| 5C | 059704 | MD728108 | Low/Reverse - all except KM177 | .072/1.8 | 79-88 | 4-6 | Tan - 48T - OD: 5.984" - PL |
| 5C | 059714 | MD719833 | Low/Reverse - KM177 & all others (89-On) | .072/1.8 | 87-On | 6 | Heg - 51T - OD: 5.997" - PL |
| 6D | 059706 | MD739092 | End (Overdrive) | .072/1.8 | 85-On | 3-4 | Tan - 40T - OD: 4.839" - PL |
| 6D | 059706A165 | 45560-22761 | End (Overdrive) | .065/1.65 | 00-On | 3-4 | Heg - 36T - OD: 4.841" - PL |
| **HI-PERFORMANCE - RED EAGLE®** | | | | | | | |
| 6D | 059746-150 | NA | End (Overdrive) - POWERPACK® Comp. | .059/1.5 | 85-On | AR | Red - 40T - OD: 4.839" - PL |
| **STEEL CLUTCHES** | | | | | | | |
| 7A | 059701 | MD707256 | Front (Direct) clutch | .150/3.8 | 79-88 | 3-4 | 24T - ID: 3.970" |
| 7A | 059731 | MD722559 | Front (Direct) clutch | .146/3.7 | 89-92 | 2-3 | 24T - ID: 4.117" |
| 7A | 059731-310 | MD739509 | Front (Direct) clutch | .122/3.1 | 93-On | 2-3 | 24T - ID: 4.117" |
| 8B | 059703 | MD707255 | Rear (Forward) clutch | .071/1.8 | 79-88 | 2 | 24T - ID: 3.970" |
| 8B | 059733 | MD722556 | Rear (Forward) clutch | .071/1.8 | 89-On | 2-3 | 24T - ID: 4.117" |
| 8B | 059733-200 | 45451-22700 | Rear (Forward) clutch | .078/2.0 | 00-On | 2-3 | 24T - ID: 4.117" |
| 8B | 059733-220 | 45451-28000 | Rear (Forward) clutch - Elantra | .087/2.2 | 99-On | 5 | 24T - ID: 4.117" |
| 9C | 059705 | MD707401 | Low / Reverse - KM170, 171 | .071/1.8 | 79-81 | 3 | 6T - ID: 4.996" |
| 9C | 059707 | MD707425 | Low / Reverse - KM170, 171 | .071/1.8 | 82-84 | 3 | 12T - ID: 4.996" |
| 9C | 059711 | MD704948 | Low / Reverse - KM171, 175 | .039/1.0 | 84-88 | 5 | 24T - ID: 4.996" |

# MITSUBISHI

## MITSUBISHI, HYUNDAI, CHRYSLER
## KM 3 & 4 SPEED
## 1979-On

| ILL | ALTO NO | REF NO | DESCRIPTION | SPEC | YEAR | QTY | NOTES |
|---|---|---|---|---|---|---|---|
| **STEEL CLUTCHES** | | | | | | | ...Continued |
| 9C | 059721 | MD715438 | Low / Reverse - KM172 | .071/1.8 | 85-88 | 3 | 24T - ID: 4.996" |
| 9C | 059715 | MD719834 | Low / Reverse - KM177 | .039/1.0 | 87-88 | 5 | 24T - ID: 5.284" |
| 9C | 059725 | MD727798 | Low / Reverse - KM172, 175, 177 | .039/1.0 | 89-On | 5 | 20T - ID: 5.284" |
| 9C | 059725A | MD727799 | Low / Reverse - KM171, 176, W4A32 | .071/1.8 | 89-On | 3-5 | 20T - ID: 5.284" |
| 10D | 059713 | MD712528 | Overdrive - except Hyundai | .032/.8 | 85-On | 3-4 | 25T - ID: 4.162" |
| 10D | 059713-100 | 45561-37001 | Overdrive - Hyundai only | .039/1.0 | 94-On | 3 | 25T - ID: 4.162" |
| 10D | 059713A250 | 45561-28801 | Overdrive - Elantra | .098/2.5 | 99-On | 4 | 25T - ID: 3.773" |
| 10D | 059713A400 | 45561-22701 | Overdrive | .156/4.0 | 00-On | 3-4 | 25T - ID: 3.773" |
| **HI-PERFORMANCE - KOLENE®** | | | | | | | |
| 10D | 059713K120 | NA | Overdrive - POWERPACK™ Component | .047/1.2 | 85-On | AR | 25T - KOLENE® - ID: 4.162" |
| 10D | 059713K080 | NA | Overdrive - POWERPACK™ Component | .032/.81 | 85-On | AR | 25T - KOLENE® - ID: 4.162" |
| **PRESSURE PLATES** | | | | | | | |
| 11A | 059731 | MD722559 | Front (Direct) - apply (KM177, F4A23) | .146/3.7 | 87-On | 1 | |
| 12A | 059760 | MD727157 | Front (Direct) - Top except KM177, F4A23 | .146/3.7 | 79-88 | 1 | stamped "S" |
| 12A | 059760A | MD722557 | Front (Direct) - Top except KM177, F4A23 | .150/3.8 | 89-On | 1 | stamped "R" |
| 13B | TBA | MD707251 | Rear (Forward) - apply with bevel | | 79-88 | 1 | |
| 13B | 059761 | MD732408 | Rear (Forward) - apply with bevel | .200/5.1 | 89-On | 1 | |
| 14B | 059760 | MD727157 | Rear (Forward) - Top | .146/3.7 | 79-88 | 1 | |
| 14B | 059760A | MD722557 | Rear (Forward) - Top | .150/3.8 | 89-On | 1 | |
| 15C | 059709 | MD707402 | Low / Reverse - Top | .150/3.8 | 79-83 | 1 | 6T |
| 15C | TBA | MD715148 | Low / Reverse - Top | .146/3.7 | 84-88 | 1 | 24T |
| 15C | TBA | MD727800 | Low / Reverse - Top | | 89-93 | 1 | 20T |
| 15C | TBA | MD736565 | Low / Reverse - Top | | 93-On | 1 | 20T |
| **OEI™ Original Equipment Improvements** | | | | | | | |
| KT | 059757 | NA | POWERPACK™ - Overdrive Anti-Warp kit | | 85-On | 1 | clutches only |
| KT | 059985A | SK® KM175 | Shift Kit® | Transgo® | 85-On | 1 | |
| **BANDS** | | | | | | | |
| 16B | 059950 | MD725287 | Kickdown - narrow (1.570") | Tan | 79-On | 1 | |
| 16B | 059951 | MD721408 | Kickdown - wide (1.750") | Tan | 87-On | 1 | |
| **FILTERS** | | | | | | | |
| 17F | 059940 | MD707786 | Filter | | 79-81 | 1 | |
| 17F | 059942 | MD707787 | Filter | | 82-87 | 1 | |
| 17F | 059946 | MD737840 | Filter - can replace 059944 (uses 4 bolts) | | 87-On | 1 | |
| 17F | 059946A | MD729954 | Filter - .700" thick | | 87-92 | 1 | |
| 17F | 059946B | 46321-22040 | Filter - F4A32 (uses 13 bolts) | | 93-97 | 1 | |
| 17F | 059946C | 46321-22731 | Filter - A4BF3 | | 00-On | 1 | |
| 17F | 059948 | MD729955 | Filter - .300" thick | | 82-96 | 1 | |
| 17F | 108940 | MD735572 | Filter - W4A32 | | 91-On | 1 | |
| **METAL CLAD SEALS** | | | | | | | |
| 18A | 059400 | MD707575 | Front Pump | | 79-On | 1 | |
| 19F | 059401 | MD707184 | Axle | | 79-On | 2 | |
| N I | TBA | MD729745 | Speedometer | | 79-On | 1 | |
| N I | 059062 | NA | End Clutch drum to shaft | | 85-89 | 1 | |
| N I | 059063 | MD722531 | End Clutch drum to shaft | | 90-On | 1 | |
| **SEALING RINGS** | | | | | | | |
| KT | 059601 | G704 | Sealing Ring Kit, 3 speed - 10M / 8T | | 79-88 | 1 | |
| KT | 059601A | G704D | Sealing Ring Kit, 3 speed - 5M / 11T | | 89-On | 1 | |
| KT | 059602 | G705Q | Sealing Ring Kit, 4 speed - 3M / 6T | | 85-88 | 1 | |
| KT | 059602A | G705J | Sealing Ring Kit, 4 speed - 2m / 8T | | 89-On | 1 | |
| 25A | 059103 | MD707646 | Front Pump stator | Metal | 79-On | 2 | |
| 25A | 059113 | MD713991 | Front Pump stator | Teflon | 79-On | 2 | |
| 26B | 059106 | MD707236 | Input Shaft - Front - 24mm | Metal | 79-88 | 1-3 | Except KM177 |
| 26B | 059116 | MD722551 | Input Shaft - Front - 26mm | Teflon | 87-On | 3 | KM177 (87-On) |
| 27B | 059107 | MD707235 | Input Shaft - Rear - 13mm | Metal | 79-88 | 1 | |
| 27B | 059117 | NA | Input Shaft - Rear - 13mm | Teflon | 79-88 | 1 | |
| 27B | 059109 | MD722639 | Input Shaft - Rear - 35mm | Metal | 87-On | 1 | |

# MITSUBISHI
## MITSUBISHI, HYUNDAI, CHRYSLER
## KM 3 & 4 SPEED
## 1979-On

| ILL | ALTO NO | REF NO | DESCRIPTION | SPEC | YEAR | QTY | NOTES |
|---|---|---|---|---|---|---|---|
| **SEALING RINGS** | | | | | | | ...Continued |
| 27B | 059119 | 35712-30020 | Input Shaft - Rear - 35mm | Teflon | 87-On | 1 | |
| 28B | 059108 | MD711875 | End (Overdrive) Clutch retainer | Metal | 85-On | 1 | |
| N I | 059102 | MD707520 | Governor (3 speed) | Metal | 79-On | 3 | |
| 29E | 059110 | MD716881 | Kickdown Servo, 3sp with 1.5L engine | Teflon | 79-On | 1 | |
| 29E | 059111 | MD715047 | Kickdown Servo, 3sp with 1.6, 2.0L engine | Teflon | 79-On | 1 | |
| 29E | 059112 | MD727799 | Kickdown Servo, 4sp with 78mm bore | Teflon | 79-On | 1 | |
| 29E | TBA | NA | Kickdown Servo, 4sp with 78mm bore | Rubber | 79-On | 1 | |
| 29E | TBA | MD722769 | Kickdown Servo, 4sp with 83mm bore | Teflon | 87-On | 1 | |
| 29E | TBA | NA | Kickdown Servo, 4sp with 83mm bore | Rubber | 87-On | 1 | |
| N I | 059114 | MD722278 | Reverse Sun Gear | Teflon | 87-On | 1 | |
| N I | 059115 | MD707204 | Accumulator Piston - apply side | Metal | 79-On | 1 | |
| N I | TBA | MD707202 | Accumulator Piston - release side | Metal | 79-On | 1 | |
| **SNAP RINGS** | | | | | | | |
| KT | 059682 | NL | Kit - Front, Rear & Overdrive selectives | | 79-On | 1 | |
| KT | 059683 | NL | Kit - Overdrive only | | 85-On | 1 | |
| 20A | 059250-170 | MD731751 | Front (Direct) Drum - selective | .067/1.7 | 79-On | AR | |
| 20A | 059250-180 | MD955631 | Front (Direct) Drum - selective | .071/1.8 | 79-On | AR | |
| 20A | 059250-190 | MD730931 | Front (Direct) Drum - selective | .075/1.9 | 79-On | AR | |
| 20A | 059250-200 | MD955632 | Front (Direct) Drum - selective | .078/2.0 | 79-On | AR | |
| 20A | 059250-210 | MD730932 | Front (Direct) Drum - selective | .083/2.1 | 79-On | AR | |
| 20A | 059250-220 | MD955633 | Front (Direct) Drum - selective | .087/2.2 | 79-On | AR | |
| 20A | 059250-230 | MD730933 | Front (Direct) Drum - selective | .091/2.3 | 79-On | AR | |
| 20A | 059250-240 | MD955634 | Front (Direct) Drum - selective | .095/2.4 | 79-On | AR | |
| 20A | 059250-250 | MD730934 | Front (Direct) Drum - selective | .099/2.5 | 79-On | AR | |
| 21B | 059250-170 | MD731751 | Rear (Forward) Drum - selective | .067/1.7 | 79-On | AR | |
| 21B | 059250-180 | MD955631 | Rear (Forward) Drum - selective | .071/1.8 | 79-On | AR | |
| 21B | 059250-190 | MD730931 | Rear (Forward) Drum - selective | .075/1.9 | 79-On | AR | |
| 21B | 059250-200 | MD955632 | Rear (Forward) Drum - selective | .078/2.0 | 79-On | AR | |
| 21B | 059250-210 | MD730932 | Rear (Forward) Drum - selective | .083/2.1 | 79-On | AR | |
| 21B | 059250-220 | MD955633 | Rear (Forward) Drum - selective | .087/2.2 | 79-On | AR | |
| 21B | 059250-230 | MD730933 | Rear (Forward) Drum - selective | .091/2.3 | 79-On | AR | |
| 21B | 059250-240 | MD955634 | Rear (Forward) Drum - selective | .095/2.4 | 79-On | AR | |
| 21B | 059250-250 | MD730934 | Rear (Forward) Drum - selective | .099/2.5 | 79-On | AR | |
| 22C | 059251-105 | MD756033 | End (Overdrive) Drum - selective | .041/1.05 | 85-93 | AR | |
| 22C | 059251-205 | MD756037 | End (Overdrive) Drum - selective | .081/2.05 | 85-93 | AR | |
| 22C | 059251-120 | MD757421 | End (Overdrive) Drum - selective | .047/1.2 | 85-On | AR | |
| 22C | 059251-130 | MD756034 | End (Overdrive) Drum - selective | .051/1.3 | 85-On | AR | |
| 22C | 059251-140 | MD758167 | End (Overdrive) Drum - selective | .055/1.4 | 85-On | AR | |
| 22C | 059251-155 | MD756035 | End (Overdrive) Drum - selective | .061/1.55 | 85-On | AR | |
| 22C | 059251-165 | MD757424 | End (Overdrive) Drum - selective | .065/1.65 | 85-On | AR | |
| 22C | 059251-180 | MD756036 | End (Overdrive) Drum - selective | .071/1.8 | 85-On | AR | |
| 22C | 059251-195 | MD757544 | End (Overdrive) Drum - selective | .077/1.95 | 85-On | AR | |
| **BUSHINGS** | | | | | | | |
| KT | NA | NA | Bushing Kit - 3 speed (small powertrain) | | 79-88 | 1 | Use 059627 Combo Kit |
| KT | 059625A | NA | Bushing Kit - 3 speed (large powertrain) | | 82-88 | 1 | |
| KT | 059626 | NA | Bushing Kit - 4 speed | | 85-88 | 1 | |
| KT | 059627 | NA | Bushing Kit - All | | 89-On | 1 | |
| KT | 059630 | NA | Short Bushing Kit - 3 speed | | 79-On | 1 | |
| KT | 059630A | NA | Short Bushing Kit - 4 speed | | 85-On | 1 | |

**NOTES**

# MITSUBISHI

## MITSUBISHI, HYUNDAI, CHRYSLER
## F4A33, F4A33EV, W4A33
## 1991-On

A>

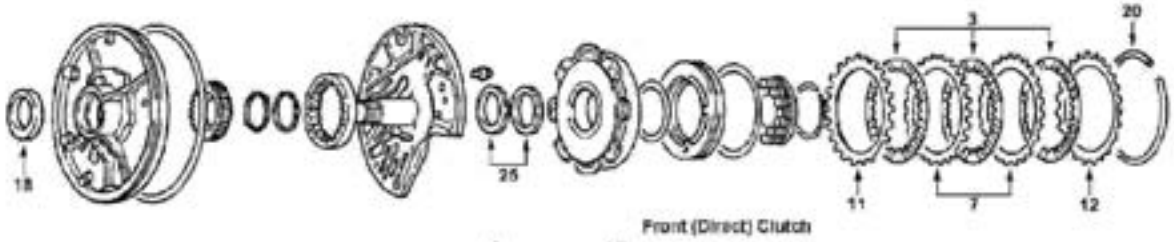


Front (Direct) Clutch

B>

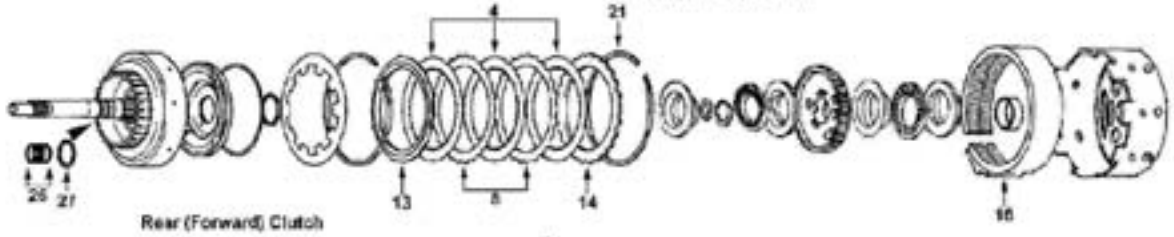


Rear (Forward) Clutch

C>

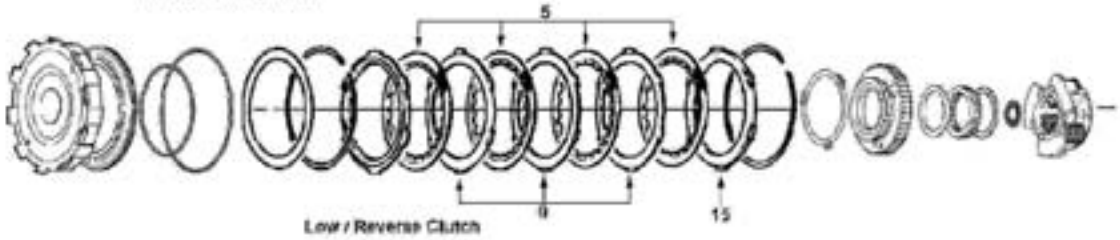


Low / Reverse Clutch

D>

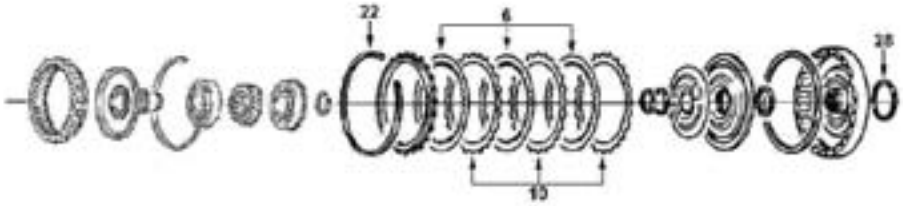


End (Overdrive) Clutch

E>

F>

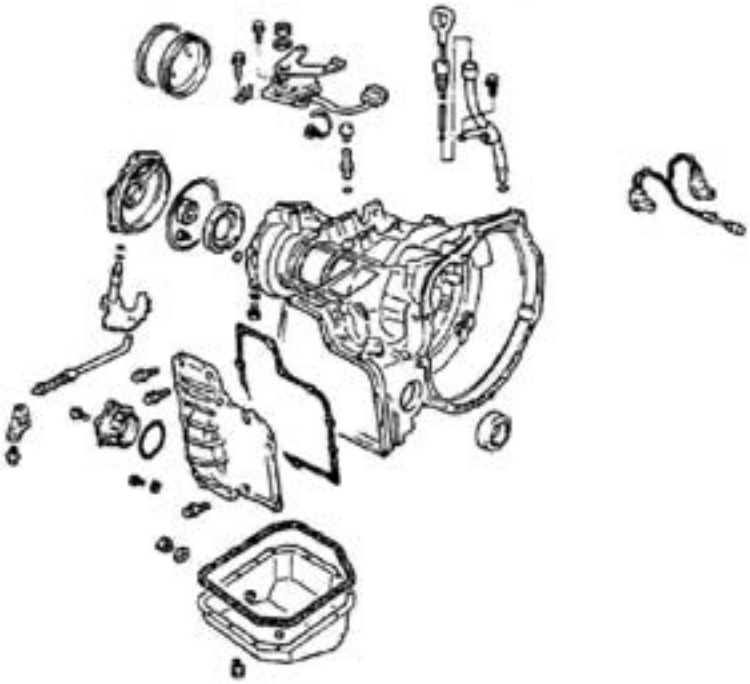

# MITSUBISHI

## MITSUBISHI, HYUNDAI, CHRYSLER
## F4A33, F4A33EV, W4A33
## 1991-On

| ILL | DESCRIPTION | YEARS | FRICTION MODULE | STEEL MODULE | OVERHAUL KIT | BANNER KIT | MASTER KIT |
|---|---|---|---|---|---|---|---|
| **KITS** | | | | | | | |
| KT | Rebuilding Kit - F4A33 (2wd) | 91-On | 108752 | 108753 | 108800 | 108901LS | 108901 |
| KT | Rebuilding Kit - W4A33 (4wd) | 91-On | 108752 | 108753 | 108802 | 108903LS | 108903 |
| **Specialty Hi-Perf w/OD Anti Warp** | | | | | | | |
| KT | Rebuilding Kit - F4A33 (2wd) with OD Anti-Warp | 91-On | NA | NA | NA | NA | 108901HP |
| KT | Rebuilding Kit - W4A33 (4wd) with OD Anti-Warp | 91-On | NA | NA | NA | NA | 108903HP |
| KT | Rebuilding Kit - F4A33/W4A33 Overdrive Clutch only | 91-On | 059757 FR & ST | | 059835 | NA | 059935PWR |

| ILL | ALTO NO | REF NO | DESCRIPTION | SPEC | YEAR | QTY | NOTES |
|---|---|---|---|---|---|---|---|
| **MISCELLANEOUS GASKETS & KIT COMPONENTS** | | | | | | | |
| 1F | 108816 | MD739243 | Gasket, Oil Pan | Cork/Rub | 91-On | 1 | |
| 2F | 108818 | MD739241 | Gasket, Side Cover | Fiber | 91-On | 1 | |
| **FRICTION CLUTCHES** | | | | | | | |
| 3A | 108700 | MD735828 | Front (Direct) except F4A33EV | .067/1.7 | 91-On | 4 | Heg - 38T - OD: 5.430" - PL |
| 3A | 108700A | MD738358 | Front (Direct) F4A33EV | .067/1.7 | 91-96 | 4 | Heg - 38T - OD: 5.234" - PL |
| 4B | 108702 | MD731582 | Rear (Forward) except F4A33EV | .067/1.7 | 91-On | 5 | Heg - 42T - OD: 5.430" - PL |
| 4B | 108702A | MD738367 | Rear (Forward) F4A33EV | .067/1.7 | 91-96 | 5 | Heg - 42T - OD: 5.234" - PL |
| 5C | 108704 | MD731586 | Low / Reverse - all | .067/1.7 | 91-On | 5-6 | Heg - 54T - OD: 6.205" - PL |
| 6D | 059706 | MD739092 | End (Overdrive) - all | .075/1.9 | 91-On | 4 | Tan - 40T - OD: 4.839" - PL |
| **HI-PERFORMANCE - RED EAGLE®** | | | | | | | |
| 3A | 108740-170 | NA | Front (Direct) except F4A33EV | .067/1.7 | 91-On | 4 | Red - 38T - OD: 5.430" - PL |
| 3A | 108740-152 | NA | Front (Direct) POWERPACK™ Component | .059/1.5 | 91-On | AR | Red - 38T - OD: 5.430" - PL |
| 4B | 108742-170 | NA | Rear (Forward) except F4A33EV | .067/1.7 | 91-On | 5 | Red - 42T - OD: 5.430" - PL |
| 5C | 108744-170 | NA | Low / Reverse - all | .067/1.7 | 91-On | 5-6 | Red - 54T - OD: 6.205" - PL |
| 6D | 059746-150 | NA | End (Overdrive) - POWERPACK® Comp. | .059/1.5 | 91-On | AR | Red - 40T - OD: 4.839" - PL |
| **STEEL CLUTCHES** | | | | | | | |
| 7A | 108701 | MD739384 | Front (Direct) except F4A33EV | .088/2.2 | 91-On | 3 | 26T - ID: 4.115 / OD: 5.693 |
| 7A | 108701A | MD739570 | Front (Direct) F4A33EV | .088/2.2 | 91-96 | 3 | 26T - ID: 4.115 / OD: 5.503 |
| 8B | 108703 | MD731604 | Rear (Forward) except F4A33EV | .071/1.8 | 91-On | 5 | 26T - ID: 4.363 / OD: 5.693 |
| 8B | 108703A | MD738368 | Rear (Forward) F4A33EV | .071/1.8 | 91-96 | 4-5 | 24T - ID: 4.363 / OD: 5.503 |
| 9C | 108705 | MD738587 | Low / Reverse - all | .039/1.0 | 91-On | 5-6 | 20T - ID: 5.540 |
| 9C | 108705-200 | NL | Low / Reverse - all | .079/2.0 | 91-On | AR | 20T - ID: 5.540 |
| 10D | 059713 | MD712528 | End (Overdrive) | .032/.8 | 91-On | 3-4 | 25T - ID: 4.162" |
| **HI-PERFORMANCE - KOLENE®** | | | | | | | |
| 7A | 108701K220 | NA | Front (Direct) except F4A33EV | .088/2.2 | 91-On | 3 | 26T - ID: 4.115 / OD: 5.693 |
| 7A | 108701K152 | NA | Front (Direct) POWERPACK™ Component | .059/1.2 | 91-On | AR | 26T - ID: 4.115 / OD: 5.693 |
| 7A | 108701K380 | NA | Front (Direct) POWERPACK™ Component | .150/3.8 | 91-On | AR | 26T - ID: 4.115 / OD: 5.693 |
| 8B | 108703K180 | NA | Rear (Forward) except F4A33EV | .071/1.8 | 91-On | 5 | 26T - ID: 4.363 / OD: 5.693 |
| 9C | 108705K100 | NA | Low / Reverse - all | .039/1.0 | 91-On | 5-6 | 20T - ID: 5.540 |
| 10D | 059713K120 | NA | End (Overdrive) - POWERPACK® Comp. | .047/1.2 | 91-On | AR | 25T - KOLENE® - ID: 4.162" |
| 10D | 059713K080 | NA | End (Overdrive - POWERPACK® Comp. | .032/.81 | 91-On | AR | 25T - KOLENE® - ID: 4.162" |
| **PRESSURE PLATES** | | | | | | | |
| 11A | 108701-380 | MD739385 | Front (Direct) - apply | .150/3.8 | 91-On | 1 | |
| N I | 108762-495 | NL | Direct (Top) selective | .195 | 91-On | 1 | |
| **OEI™ Original Equipment Improvements** | | | | | | | |
| KT | 059757 | NA | POWERPACK™ - Overdrive Anti-Warp Kit | | 91-On | 1 | Clutches only |
| KT | 108754 | NA | POWERPACK™ - Direct | | 91-On | 1 | Hi Performance |
| **BANDS** | | | | | | | |
| 16B | 108950 | MD736920 | Kickdown | Tan | 91-On | 1 | |
| **HI-PERFORMANCE - RED EAGLE®** | | | | | | | |
| 16B | 108960 | NA | Kickdown | Red | 91-On | 1 | |
| **FILTERS** | | | | | | | |
| KT | FK108940 | NA | Filter Kit | | 91-On | 1 | |
| 17F | 108940 | MD735572 | Filter | | 91-On | 1 | |

# MITSUBISHI

## MITSUBISHI, HYUNDAI, CHRYSLER
## F4A33, F4A33EV, W4A33
## 1991-On

| ILL | ALTO NO | REF NO | DESCRIPTION | SPEC | YEAR | QTY | NOTES |
|---|---|---|---|---|---|---|---|
| **METAL CLAD SEALS** | | | | | | | |
| 18A | 059400 | MD707575 | Front Pump | | 91-On | 1 | |
| 19F | 059401 | MD707184 | Axle - F4A33 | | 91-92 | 2 | |
| 19F | 059401A | MD742053 | Axle - F4A33 | | 93-On | 2 | |
| 19F | 108401 | MD719710 | Axle - W4A33 (Left) | | 91-On | 1 | |
| 19F | 059401 | MD707184 | Axle - W4A33 (Right) | | 91-On | 1 | |
| N I | 059062 | MD722531 | End Clutch drum to shaft | | 91-On | 1 | |
| N I | 059063 | MD736847 | End Clutch drum to shaft | | 93-On | 1 | |
| N I | TBA | MD731793 | Drive Shaft rear - W4A33 | | 91-On | 1 | |
| N I | TBA | MD701430 | Extension Housing - W4A33 | | 91-On | 1 | |
| N I | TBA | MB837030 | Drive Gear shaft - W4A33 | | 91-On | 1 | |
| N I | TBA | MD719710 | Output Shaft - W4A33 | | 91-On | 1 | |
| **SEALING RINGS** | | | | | | | |
| KT | 108600 | G731B | Sealing Ring Kit - 2M / 9T | | 91-On | 1 | |
| 25A | 059113 | MD713991 | Front Pump stator | Teflon | 91-On | 2 | |
| 26B | 059116 | MD722551 | Input Shaft - Front - 26mm | Teflon | 91-On | 3 | |
| 27B | 059119 | 35712-30020 | Input Shaft - Rear - 35mm | Teflon | 91-On | 1 | |
| 28B | 059108 | MD711875 | End (Overdrive) Clutch retainer | Metal | 91-On | 1 | |
| N I | 108101 | MD752527 | Reverse Sun Gear | Metal | 91-On | 1 | |
| 29E | 108102 | MD731133 | Kickdown Servo piston | Teflon | 91-On | 1 | |
| **SNAP RINGS** | | | | | | | |
| KT | 059683 | NL | Kit - Overdrive only | | 85-On | 1 | |
| 22C | 059251-105 | MD756033 | End (Overdrive) Drum - selective | .041/1.05 | 91-93 | AR | |
| 22C | 059251-205 | MD756037 | End (Overdrive) Drum - selective | .081/2.05 | 91-93 | AR | |
| 22C | 059251-120 | MD757421 | End (Overdrive) Drum - selective | .047/1.2 | 91-On | AR | |
| 22C | 059251-130 | MD756034 | End (Overdrive) Drum - selective | .051/1.3 | 91-On | AR | |
| 22C | 059251-140 | MD758167 | End (Overdrive) Drum - selective | .055/1.4 | 91-On | AR | |
| 22C | 059251-155 | MD756035 | End (Overdrive) Drum - selective | .061/1.55 | 91-On | AR | |
| 22C | 059251-165 | MD757424 | End (Overdrive) Drum - selective | .065/1.65 | 91-On | AR | |
| 22C | 059251-180 | MD756036 | End (Overdrive) Drum - selective | .071/1.8 | 91-On | AR | |
| 22C | 059251-195 | MD757544 | End (Overdrive) Drum - selective | .077/1.95 | 91-On | AR | |

**NOTES**

# MITSUBISHI

## MITSUBISHI, HYUNDAI
## F4A41, F4A42
## 1996-On

| ILL | DESCRIPTION | YEARS | FRICTION MODULE | STEEL MODULE | OVERHAUL KIT | BANNER KIT | MASTER KIT |
|---|---|---|---|---|---|---|---|
| **KITS** | | | | | | | |
| KT | Rebuilding Kit - F4A41 only | 96-On | 123752 | 123753 | 123800 | 123901LS | 123901 |
| KT | Rebuilding Kit - F4A41 & F4A42 combo | 96-On | 123752A | 123753A | 123800 | 123901ALS | 123901A |

| ILL | ALTO NO | REF NO | DESCRIPTION | SPEC | YEAR | QTY | NOTES |
|---|---|---|---|---|---|---|---|
| **FRICTION CLUTCHES** | | | | | | | |
| N I | 123700 | Various | Underdrive - wave | .067/1.7 | 96-On | 3-4 | Tan - 30T - OD: 5.357" - PL |
| N I | 123702 | Various | 2nd Brake (thick paper) | .067/1.7 | 96-On | 2-3 | Tan - 30T - OD: 6.183" - PL |
| N I | 123704 | Various | Reverse | .067/1.7 | 96-On | 2 | Tan - 30T - OD: 5.869" - PL |
| N I | 123706 | Various | Low / Reverse (thin paper) | .067/1.7 | 96-On | 4-5 | Tan - 30T - OD: 6.183" - PL |
| N I | 123708 | Various | Overdrive | .067/1.7 | 96-On | 3-4 | Tan - 30T - OD: 5.357" - PL |
| **STEEL CLUTCHES** | | | | | | | |
| N I | 123701 | Various | Underdrive | .071/1.8 | 96-On | 3 | 20T - ID: 4.655" |
| N I | 123703 | Various | 2nd Brake | .099-2.5 | 96-On | 1 | 17T - ID: 5.127" |
| N I | 123703-160 | Various | 2nd Brake - selective | .063/1.6 | 96-On | AR | 17T - ID: 5.127" |
| N I | 123703-200 | Various | 2nd Brake - selective | .079/2.0 | 96-On | AR | 17T - ID: 5.127" |
| N I | 123705 | Various | Reverse | .071/1.8 | 96-On | 2 | 20T - ID: 5.250" |
| N I | 123705-200 | Various | Reverse - selective | .078/2.0 | 96-On | AR | 20T - ID: 5.250" |
| N I | 123707 | Various | Low / Reverse | .039/1.0 | 96-On | 3-5 | 17T - ID: 5.541" |
| N I | 123709 | Various | Overdrive | .099/2.5 | 96-On | 3 | 20T - ID: 4.655" |
| **PRESSURE PLATES** | | | | | | | |
| N I | 123760 | NA | Underdrive | .161/4.1 | 96-On | 1 | |
| N I | 123761 | NA | 2nd Brake | .099/2.5 | 96-On | 1 | |
| **FILTERS** | | | | | | | |
| N I | 123940 | MD758691 | Filter - Internal | | 96-On | 1 | |
| N I | 123941 | MD752072 | Filter - Spin On | | 96-On | 1 | |
| **METAL CLAD SEALS** | | | | | | | |
| N I | 059400 | MD707575 | Front Pump | | 96-On | 1 | |
| N I | 123425 | MD755526 | Axle | | 96-On | 1 | MD755904 |

## NOTES

# MITSUBISHI

## F4A51, F5A51 (FWD)

## 1997-On

| ILL | DESCRIPTION | YEARS | FRICTION MODULE | STEEL MODULE | OVERHAUL KIT | BANNER KIT | MASTER KIT |
|---|---|---|---|---|---|---|---|
| **KITS** | | | | | | | |
| KT | Rebuilding Kit - F4A51 4 speed | 97-On | 124752 | 124753 | 124800 | 124901LS | 124901 |
| KT | Rebuilding Kit - F5A51 5 speed | 99-00 | 124752A | 124753A | 124800A | 124901ALS | 124901A |
| KT | Rebuilding Kit - F5A51 5 speed | 01-On | 124752B | 124753B | TBA | 124901BLS | 124901B |

| ILL | ALTO NO | REF NO | DESCRIPTION | SPEC | YEAR | QTY | NOTES |
|---|---|---|---|---|---|---|---|
| **FRICTION CLUTCHES** | | | | | | | |
| N I | 124700 | Various | Underdrive - wave | .067/1.7 | 97-On | 4 | Tan - 30T - OD: 5.827" - PL |
| N I | 124702 | Various | 2nd Brake (thick paper) | .067/1.7 | 97-On | 4 | Tan - 30T - OD: 7.030" - PL |
| N I | 124704 | Various | Reverse | .067/1.7 | 97-On | 2 | Tan - 30T - OD: 6.535" - PL |
| N I | 124706 | Various | Low / Reverse (thin paper) - 4 speed | .067/1.7 | 97-On | 6 | Tan - 30T - OD: 7.030" - PL |
| N I | 124706 | Various | Low / Reverse (thin paper) - 5 speed | .067/1.7 | 97-On | 5 | Tan - 30T - OD: 7.030" - PL |
| N I | 124708 | Various | Overdrive | .067/1.7 | 97-On | 4 | Tan - 30T - OD: 5.827" - PL |
| N I | 124710-170 | Various | Direct - 5 speed only | .067/1.7 | 99-On | 3-5 | Heg - 30T - OD: 4.800" - PL |
| **STEEL CLUTCHES** | | | | | | | |
| N I | 124701 | Various | Underdrive | .071/1.8 | 97-On | 4 | 20T - ID: 4.850" |
| N I | 124703 | Various | 2nd Brake | .099/2.5 | 97-On | 2 | 16T - ID: 6.031" |
| N I | 124703-390 | Various | 2nd Brake | .153/3.9 | 97-On | 3 | 16T - ID: 6.031" |
| N I | 124705 | Various | Reverse | .071/1.8 | 97-On | 2 | 20T - ID: 6.031" |
| N I | 124707 | Various | Low / Reverse - 4 speed | .039/1.0 | 97-On | 5 | 16T - ID: 6.294" |
| N I | 124707 | Various | Low / Reverse - 5 speed | .039/1.0 | 97-On | 4 | 16T - ID: 6.294" |
| N I | 124709 | Various | Overdrive | .099/2.5 | 97-On | 3 | 20T - ID: 4.850" |
| N I | 124711-250 | Various | Direct - 5 speed only | .099/2.5 | 99-00 | 3-4 | 20T - ID: 3.470" |
| N I | 124709-300 | Various | Direct - 5 speed only | .118/3.0 | 01-On | 3-4 | 20T - ID: 4.850" |
| **PRESSURE PLATES** | | | | | | | |
| N I | 124760 | NA | Underdrive | .157/4.0 | 97-On | 1 | |
| N I | 124761 | NA | 2nd Brake | .099/2.5 | 97-On | AR | |
| N I | 124762-160 | MD759568F | 2nd Brake & Reverse | .063/1.6 | 97-On | AR | |
| N I | 124762-180 | MD759425E | 2nd Brake & Reverse | .071/1.8 | 97-On | AR | |
| N I | 124762-200 | MD759426D | 2nd Brake & Reverse | .078/2.0 | 97-On | AR | |
| N I | 124762-220 | MD759427C | 2nd Brake & Reverse | .087/2.2 | 97-On | AR | |
| N I | 124762-240 | MD759428B | 2nd Brake & Reverse | .094/2.4 | 97-On | AR | |
| N I | 124762-260 | MD759429A | 2nd Brake & Reverse | .102/2.6 | 97-On | AR | |
| N I | 124762-280 | MD759430O | 2nd Brake & Reverse | .110/2.8 | 97-On | AR | |
| N I | 124762-300 | MD759431I | 2nd Brake & Reverse | .118/3.0 | 97-On | AR | |
| N I | 124763-590 | NA | Low / Reverse | .232/5.9 | 97-On | 1 | |
| N I | 124764A | NA | Overdrive - Apply | .157/4.0 | 97-On | 1 | |
| N I | 124764B | NA | Overdrive - Reaction | .236/6.0 | 97-On | 1 | |
| N I | 124761-400 | NA | Direct - F5A51 | .158/4.0 | 97-On | AR | |
| **FILTERS** | | | | | | | |
| N I | 124940 | MD758684 | Filter - Internal | | 97-On | 1 | |
| N I | 123941 | MD752072 | Filter - Spin On | | 97-On | 1 | |
| **METAL CLAD SEALS** | | | | | | | |
| N I | 059400 | MD707575 | Front Pump | | 97-On | 1 | |
| N I | 123425 | MD755526 | Axle | | 97-On | 1 | MD755904 |

**NOTES**

# MITSUBISHI
## F5AH1 (RM-45)
## 2001-On

| ILL | DESCRIPTION | YEARS | FRICTION MODULE | STEEL MODULE | OVERHAUL KIT | BANNER KIT | MASTER KIT |
|---|---|---|---|---|---|---|---|
| **KITS** | | | | | | | |
| KT | Rebuilding Kit | 01-On | 165752 | 165753 | 165800 | 165901LS | 165901 |

| ILL | ALTO NO | REF NO | DESCRIPTION | SPEC | YEAR | QTY | NOTES |
|---|---|---|---|---|---|---|---|
| **FRICTION CLUTCHES** | | | | | | | |
| N I | 165700-170 | 45524-39800KIT | Underdrive | .067/1.7 | 01-On | 4 | 30T |
| N I | 165702-170 | 45444-39800KIT | Reverse | .067/1.7 | 01-On | 2 | 30T |
| N I | 165704-170 | 45561-39810KIT | Direct | .067/1.7 | 01-On | 4 | 30T |
| N I | 165706-170 | 45631-39800KIT | Brake | .067/1.7 | 01-On | 7 | |
| N I | 165706A170 | 45624-39800KIT | 2nd Brake | .067/1.7 | 01-On | 5 | 30T |
| N I | 165700-170 | 45524-39800KIT | Overdrive | .067/1.7 | 01-On | 5 | 30T |
| **STEEL CLUTCHES** | | | | | | | |
| N I | 165701-180 | 45524-39800KIT | Underdrive | .070/1.8 | 01-On | 4 | 20T - ID: 5.090" |
| N I | 165703-180 | 45444-39800KIT | Reverse | .070/1.8 | 01-On | 2 | 20T - ID: 6.332" |
| N I | 165705-400 | 45561-39810KIT | Direct | .157/4.0 | 01-On | 4 | 20T - ID: 3.593" |
| N I | 165707-107 | 45631-39800KIT | Brake | .042/1.07 | 01-On | 6 | 16T - ID: 6.530" |
| N I | 165709-360 | 45624-39800KIT | 2nd Brake | .141/3.6 | 01-On | 4 | |
| N I | 165701-300 | 45421-39800KIT | Overdrive | .118/3.0 | 01-On | 5 | 20T - ID: 5.090" |
| **PRESSURE PLATES** | | | | | | | |
| N I | TBA | 45524-39800KIT | Underdrive | .157/4.0 | 01-On | 1 | |
| N I | TBA | 45444-39800KIT | Reverse | .157/4.0 | 01-On | 1 | |
| N I | TBA | 45561-39800KIT | Direct with step | | 01-On | 1 | |
| N I | TBA | 45624-39800KIT | 2nd Brake with step | | 01-On | 1 | |
| N I | TBA | TBA | Overdrive | | 01-On | 1 | |

## NOTES

# MITSUBISHI

## R4A51, V4A51, R5A51, V5A51 (RWD)
## 1997-On

| ILL | DESCRIPTION | YEARS | FRICTION MODULE | STEEL MODULE | OVERHAUL KIT | BANNER KIT | MASTER KIT |
|---|---|---|---|---|---|---|---|
| **KITS** | | | | | | | |
| KT | Rebuilding Kit R4A51, V4A51 4 speed | 97-On | 124752 | 124753 | 124802 | 124903LS | 124903 |
| KT | Rebuilding Kit R5A51, V5A51 5 speed | 99-On | 124752A | 124753A | 124802 | 124903ALS | 124903A |

| ILL | ALTO NO | REF NO | DESCRIPTION | SPEC | YEAR | QTY | NOTES |
|---|---|---|---|---|---|---|---|
| **FRICTION CLUTCHES** | | | | | | | |
| N I | 124700 | Various | Underdrive | .067/1.7 | 97-On | 4 | Tan - 30T - OD: 5.827" - PL |
| N I | 124702 | Various | 2nd Brake (thick paper) | .067/1.7 | 97-On | 4 | Tan - 30T - OD: 7.030" - PL |
| N I | 124704 | Various | Reverse | .067/1.7 | 97-On | 2 | Tan - 30T - OD: 6.535" - PL |
| N I | 124706 | Various | Low / Reverse (thin paper) - 4 speed | .067/1.7 | 97-On | 6 | Tan - 30T - OD: 7.030" - PL |
| N I | 124706 | Various | Low / Reverse (thin paper) - 5 speed | .067/1.7 | 99-On | 5 | Tan - 30T - OD: 7.030" - PL |
| N I | 124708 | Various | Overdrive | .067/1.7 | 97-On | 4 | Tan - 30T - OD: 5.810" - PL |
| N I | 124710-170 | Various | Direct - 5 speed only | .067/1.7 | 99-On | 3-5 | Heg - 30T - OD: 4.800" - PL |
| **STEEL CLUTCHES** | | | | | | | |
| N I | 124701 | Various | Underdrive | .071/1.8 | 97-On | 4 | 20T - ID: 4.850" |
| N I | 124703-390 | Various | 2nd Brake | .153/3.9 | 97-On | 3 | 16T - ID: 6.031" |
| N I | 124705 | Various | Reverse | .071/1.8 | 97-On | 2 | 20T - ID: 6.031" |
| N I | 124707 | Various | Low / Reverse - 4 speed | .039/1.0 | 97-On | 5 | 16T - ID: 6.294" |
| N I | 124707 | Various | Low / Reverse - 5 speed | .039/1.0 | 99-On | 4 | 16T - ID: 6.294" |
| N I | 124709 | Various | Overdrive | .099/2.5 | 97-On | 3 | 20T - ID: 4.850" |
| N I | 124711-250 | Various | Direct - 5 speed only | .099/2.5 | 99-On | 3-4 | 20T - ID: 3.470" |
| **PRESSURE PLATES** | | | | | | | |
| N I | 124760 | NA | Underdrive | .157/4.0 | 97-On | 1 | |
| N I | 124762A390 | NA | 2nd Brake - Bottom | .153/3.9 | 97-On | 3 | |
| N I | TBA | MR246249 | 2nd Brake - Bottom | .233/5.9 | 97-On | AR | |
| N I | 124703-240 | NA | 2nd Brake - Apply | .094/2.4 | 99-On | 1 | |
| N I | 124762-160 | MR336390 | 2nd Brake & Reverse - apply | .063/1.6 | 97-On | AR | |
| N I | 124762-180 | MR336391 | 2nd Brake & Reverse - apply | .071/1.8 | 97-On | AR | |
| N I | 124762-200 | MR336392 | 2nd Brake & Reverse - apply | .078/2.0 | 97-On | AR | |
| N I | 124762-220 | MR336393 | 2nd Brake & Reverse - apply | .087/2.2 | 97-On | AR | |
| N I | 124762-240 | MR336394 | 2nd Brake & Reverse - apply | .094/2.4 | 97-On | AR | |
| N I | 124762-260 | MR336395 | 2nd Brake & Reverse - apply | .102/2.6 | 97-On | AR | |
| N I | 124762-280 | MR336396 | 2nd Brake & Reverse - apply | .110/2.8 | 97-On | AR | |
| N I | 124762-300 | MR336397 | 2nd Brake & Reverse - apply | .118/3.0 | 97-On | AR | |
| N I | 124764B | NA | Overdrive - Reaction | .236/6.0 | 97-On | 1 | |
| N I | 124764C | NA | Overdrive - V4A51 | .130/3.3 | 97-On | AR | |
| **BANDS** | | | | | | | |
| N I | 124950 | MD762016 | Brake | Tan | 97-On | 1 | |
| **FILTERS** | | | | | | | |
| N I | 124942 | MR357710 | Filter | | 97-On | 1 | |
| N I | 124942A | MR528836 | Filter - late | | 97-On | 1 | |
| **METAL CLAD SEALS** | | | | | | | |
| N I | 059400 | MD707575 | Front Pump | | 97-On | 1 | |
| N I | 124406 | MR446308 | Extension Housing - R4A51 | | 97-On | 1 | |
| N I | 124405 | MR350599 | Adapter Housing - V4A51 | | 97-On | 1 | |
| N I | TBA | MR145792 | Transfer Case - input | | 97-On | 1 | |
| N I | TBA | MD731708 | Transfer Case - Front Output | | 97-On | 1 | |
| N I | TBA | MB919210 | Transfer Case - Rear Output | | 97-On | 1 | |

**NOTES**

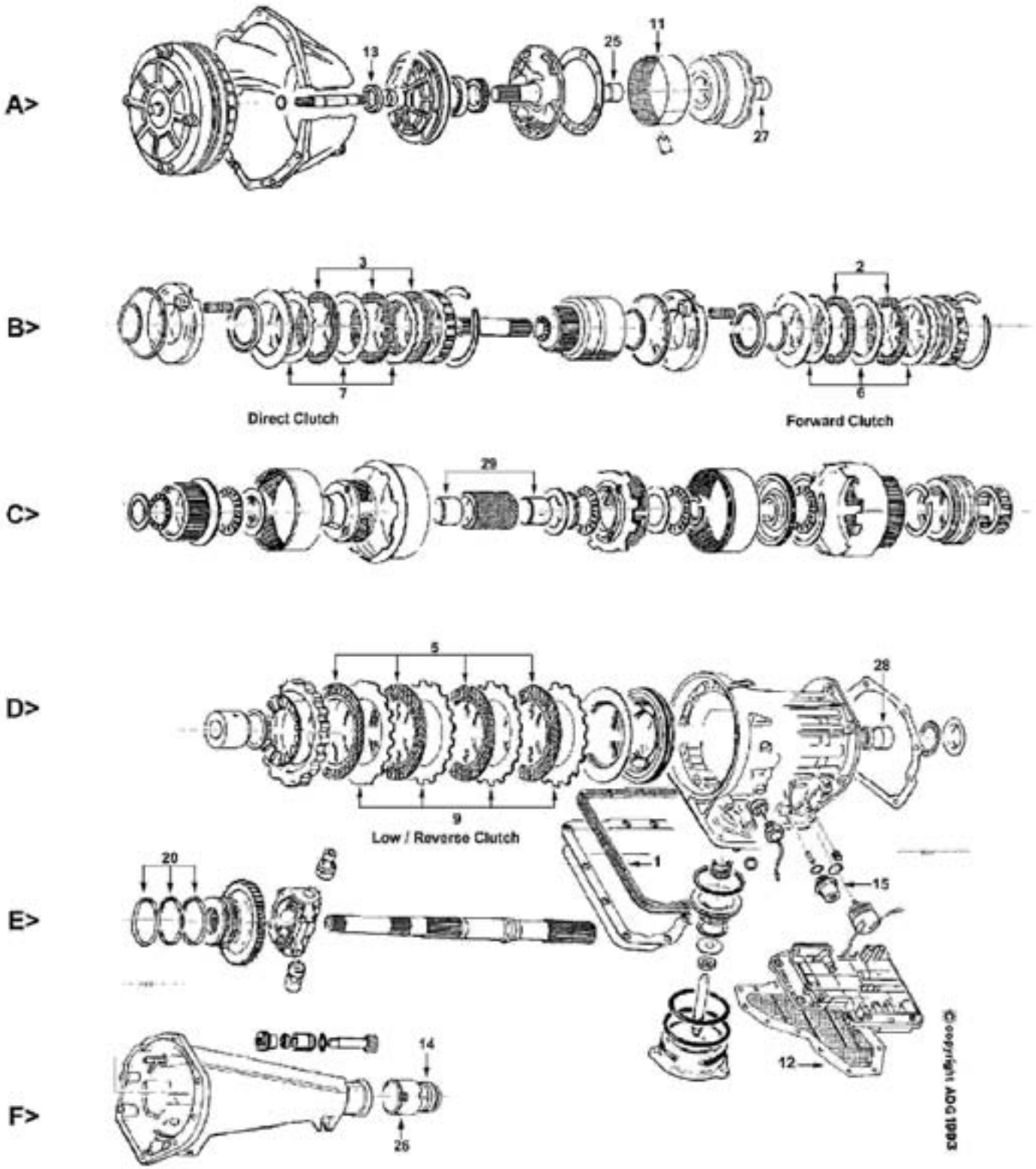
A>
13
25
11
27
B>
3
7
Direct Clutch
2
6
Forward Clutch
C>
29
D>
5
9
Low / Reverse Clutch
28
1
E>
20
15
12
F>
14
26
©copyright ADC 1983

# NISSAN
## 3N71B, L3N71B
## 1971-87

| ILL | DESCRIPTION | YEARS | FRICTION MODULE | STEEL MODULE | OVERHAUL KIT | BANNER KIT | MASTER KIT |
|---|---|---|---|---|---|---|---|
| **KITS** | | | | | | | |
| KT | Rebuilding Kit - Jatco (internal servo) ony | 71-87 | 042752A | 042753 | 042800 | 042901LS | 042901 |
| KT | Rebuilding Kit - Combo Jatco & Ford | 71-87 | 042752J | 042753J | 042800A | 042903LS | 042903 |

| ILL | ALTO NO | REF NO | DESCRIPTION | SPEC | YEAR | QTY | NOTES |
|---|---|---|---|---|---|---|---|
| **MISCELLANEOUS GASKETS & KIT COMPONENTS** | | | | | | | |
| 1E | 042816 | 31397-X0102 | Gasket, Oil pan - internal servo | Cork/Rub | 71-87 | 1 | |
| 1E | 042818 | D7DZ-7A191A | Gasket, Oil pan - external servo | Cork/Rub | 71-81 | 1 | |
| **FRICTION CLUTCHES** | | | | | | | |
| 2B | 042700 | 31532-X8000 | Rear (Forward) | .061/1.6 | 71-87 | 3-6 | Tan - 44T - OD: 4.530" - WF |
| 3B | 042700 | 31532-X8000 | Front (Direct) | .061/1.6 | 71-87 | 3-5 | Tan - 44T - OD: 4.530" - WF |
| 5D | 042702 | 31662-X8175 | Low / Reverse | .075/1.9 | 71-87 | 4-8 | Tan - 51T - OD: 5.117" - WF |
| **HI-PERFORMANCE - RED EAGLE®** | | | | | | | |
| 2B | 042740 | NA | Forward & Direct | .061/1.6 | 71-87 | AR | Red - 44T - OD: 4.530" - SM |
| 2B | 042740SB | NA | Forward & Direct | .061/1.6 | 71-87 | AR | Red - 44T - OD: 4.530" - SB |
| **STEEL CLUTCHES** | | | | | | | |
| 6B | 042701 | 31536-X0101 | Rear (Forward) | .078/2.0 | 71-87 | 3-5 | 28T - ID: 3.625" |
| 6B | 063701 | 31536-X5001 | Rear (Forward) - some models | .063/1.6 | 71-87 | 6 | 28T - ID: 3.625" |
| 7B | 042701 | 31536-X0101 | Front (Direct) | .078/2.0 | 71-87 | 3-5 | 28T - ID: 3.625" |
| 6B | 042701A | NA | Forward & Direct - selective | .032/.8 | 71-87 | AR | 28T - ID: 3.625" |
| 9D | 042703 | 31666-X0101 | Low / Reverse | .078/2.0 | 71-87 | 4-7 | 13T - ID: 4.212" |
| 9D | 042703A | NA | Low / Reverse - selective | .071/1.8 | 71-87 | AR | 13T - ID: 4.212" |
| **BANDS** | | | | | | | |
| 11A | 042950 | NA | Brake - Rigid | Tan | 71-87 | 1 | |
| 11A | 042951 | 31630-X0110 | Brake - Flex | Tan | 71-87 | 1 | |
| **FILTERS** | | | | | | | |
| KT | FK042940 | NA | Filter Kit - External Servo (Jatco) | | 71-87 | 1 | |
| KT | FK042942 | NA | Filter Kit - Internal Servo (Ford) | | 71-81 | 1 | |
| 12F | 042940 | 31728-X0900 | Filter - External Servo (Jatco) | | 71-87 | 1 | |
| 12F | 042942 | D7DZ-7A098B | Filter - Internal Servo (Ford) | | 71-81 | 1 | |
| **METAL CLAD SEALS** | | | | | | | |
| 13A | 042400 | 31344-X6901 | Front Pump | | 71-87 | 1 | |
| 14F | 042404 | 31336-X0101 | Extension Housing - Jatco (Nissan) | 1.976 | 71-87 | 1 | |
| 14F | 042405 | 0437-17-335A | Extension Housing - Jatco (Mazda) | 1.896 | 74-83 | 1 | |
| 14F | 023405 | E2DZ-7052A | Extension Housing - Ford | 2.381 | 71-81 | 1 | with Boot |
| 14F | 032402 | NA | Extension Housing - Ford | 2.381 | 71-81 | 1 | without Boot |
| N I | 042420 | 31336-X6901 | Adapter Housing (4x4) | 2.455 | 71-87 | 1 | |
| N I | 042410 | 32709-14600 | Speedometer - Nissan (.150 thick) | .637 | 71-86 | 1 | |
| N I | 042410A | 32709-58S00 | Speedometer - Nissan (.200 thick) | .637 | 87 | 1 | |
| N I | 042411 | 9958-60-8166 | Speedometer - Mazda (.235 thick) | .640 | 74-83 | 1 | |
| **SEALING RINGS** | | | | | | | |
| KT | 042600 | E501 | Sealing Ring Kit - 7M | | 71-87 | 1 | |
| N I | 042100 | 31361-X0100 | Front Pump stator (Direct Drum) | 1.732 | 71-87 | 2 | |
| N I | 042101 | 31362-X0100 | Front Pump stator (Forward Drum) | 1.693 | 71-87 | 2 | |
| 20E | 042102 | 31487-X0100 | Governor | | 71-87 | 3 | |
| **BUSHINGS** | | | | | | | |
| KT | 042625 | NA | Bushing Kit | | 71-87 | 1 | |
| 25A | 042201 | 31341-X0100 | Front Pump | | 71-87 | 1 | |
| 26F | 042203 | 31332-X0100 | Extension Housing - Jatco | | 71-87 | 1 | |
| 26F | 042203A | B3TZ-7A034A | Extension Housing - Ford | | 71-81 | 1 | |
| N I | 042204 | 31353-X0101 | Stator Support | | 71-87 | 2 | |
| 27A | 042205 | 31513-X0100 | Front (Direct) Drum | | 71-87 | 1 | |
| 28D | 042207 | NA | Case | | 71-87 | 1 | |
| 29C | 042208 | 31462-X0101 | Sun Gear | | 71-87 | 2 | |
| **WASHERS** | | | | | | | |
| KT | 042635 | NA | Washer Kit | | 71-87 | 1 | |

# NISSAN
## 3N71B, L3N71B
## 1971-87

| ILL | ALTO NO | REF NO | DESCRIPTION | SPEC | YEAR | QTY | NOTES |
|---|---|---|---|---|---|---|---|
| **MODULATORS** | | | | | | | |
| 15E | 042500 | 31931-X0102 | .84" Diaphram | | 71-87 | 1 | |
| 15E | 042501 | 31931-X0110 | .91" Diaphram | | 71-87 | 1 | |

**NOTES**

# NISSAN
## E4N71B, L4N71B
## 1983-93

| ILL | DESCRIPTION | YEARS | FRICTION MODULE | STEEL MODULE | OVERHAUL KIT | BANNER KIT | MASTER KIT |
|---|---|---|---|---|---|---|---|
| **KITS** | | | | | | | |
| KT | Rebuilding Kit | 83-85 | 042752H | 042753H | 042802 | 042909LS | 042909 |
| KT | Rebuilding Kit | 1986 | 042752K | 042753K | 042802 | 042909ALS | 042909A |
| KT | Rebuilding Kit | 87-93 | 042752L | 042753L | 042802 | 042909BLS | 042909B |

| ILL | ALTO NO | REF NO | DESCRIPTION | YEARS | SPEC | YEAR | QTY | NOTES |
|---|---|---|---|---|---|---|---|---|
| **MISCELLANEOUS GASKETS & KIT COMPONENTS** | | | | | | | | |
| 1F | 042816 | 31397-X0102 | Gasket, Oil Pan | | Cork/Rub | 83-93 | 1 | |
| **FRICTION CLUTCHES** | | | | | | | | |
| 2C | 042700 | 31532-X8000 | Forward | | .061/1.55 | 83-93 | 3-6 | Tan - 44T - OD: 4.530" - WF |
| 3C | 042700 | 31532-X8000 | Direct | | .061/1.55 | 83-93 | 3-5 | Tan - 44T - OD: 4.530" - WF |
| 4B | 042700 | 31532-X8000 | Overdrive | | .061/1.55 | 83-93 | 2-4 | Tan - 44T - OD: 4.530" - WF |
| 5E | 042702 | 31662-X8175 | Low / Reverse | | .075/1.9 | 83-93 | 4-8 | Tan - 51T - OD: 5.117" - WF |
| **HI-PERFORMANCE - RED EAGLE®** | | | | | | | | |
| AR | 042740 | NA | Forward, Direct, & Overdrive | | .061/1.55 | 83-93 | AR | Red - 44T - OD: 4.530" - SM |
| AR | 042740SB | NA | Forward, Direct, & Overdrive | | .061/1.55 | 83-93 | AR | Red - 44T - OD: 4.530" - SB |
| **STEEL CLUTCHES** | | | | | | | | |
| 6C | 042701 | 31536-X0101 | Forward | | .078/2.0 | 83-86 | 6 | 28T - ID: 3.625" |
| 6C | 063701 | 31536-X5001 | Forward | | .063/1.6 | 87-93 | 6 | 28T - ID: 3.625" |
| 7C | 042701 | 31536-X0101 | Direct | | .078/2.0 | 83-93 | 3-5 | 28T - ID: 3.625" |
| 8B | 042701 | 31536-X0101 | Overdrive | | .078/2.0 | 83-86 | 2 | 28T - ID: 3.625" |
| 8B | 063701 | 31536-X5001 | Overdrive | | .063/1.6 | 87-93 | 2 | 28T - ID: 3.625" |
| AR | 042701A | NA | Forward, Direct & Overdrive - selective | | .032/.8 | 83-93 | AR | 28T - ID: 3.625" |
| 9E | 042703 | 0338-19-609 | Low & Reverse | | .078/2.0 | 83-93 | 4-7 | 13T - ID: 4.212" |
| **BANDS** | | | | | | | | |
| 10B | 042951 | 31630-X0110 | Overdrive Brake | | Tan | 83-93 | 1 | |
| 11B | 042951 | 31630-X0110 | Intermediate Brake | | Tan | 83-93 | 1 | |
| **FILTERS** | | | | | | | | |
| 12F | 042944 | 31728-X8600 | Filter | | | 83-93 | 1 | |
| **METAL CLAD SEALS** | | | | | | | | |
| 13A | 042400 | 31344-X6901 | Front Pump | | | 83-93 | 1 | |
| 14F | 042407 | 31336-X8000 | Extension Housing | | 1.980 | 83-93 | 1 | |
| N I | 042410 | 32709-14600 | Speedometer - Nissan (.150 thick) | | .637 | 83-86 | 1 | |
| N I | 042410A | 32709-58S00 | Speedometer - Nissan (.200 thick) | | .637 | 87-93 | 1 | |
| **SEALING RINGS** | | | | | | | | |
| KT | 042601 | E505B | Sealing Ring Kit - 9M / 3T | | | 86-97 | 1 | |
| N I | 042100 | 31361-X0100 | Front Pump stator (Direct Drum) | | 1.732 | 83-93 | 2 | Metal |
| N I | 042110 | 31361-X8600 | Front Pump stator (Direct Drum) | | 1.732 | 83-93 | 2 | Teflon |
| N I | 042101 | 31362-X0100 | Front Pump stator (Forward Drum) | | 1.693 | 83-93 | 2 | Metal |
| N I | 042111 | 31362-X8600 | Front Pump stator (Forward Drum) | | 1.693 | 83-93 | 2 | Teflon |
| 21B | 042100 | 31361-X0100 | Overdrive stator (Overdrive Drum) | | 1.732 | 83-93 | 2 | Metal |
| 21B | 042110 | 31361-X8600 | Overdrive stator (Overdrive Drum) | | 1.732 | 83-93 | 2 | Teflon |
| 20E | 042102 | 31487-X0100 | Governor | | | 83-93 | 3 | Metal |
| 20E | 042112 | 31487-X8000 | Governor | | | 83-93 | 3 | Teflon |
| 22B | 042113 | 31672-X8600 | Overdrive Accumulator - Release | | | 83-93 | 1 | Teflon |
| 23B | 042114 | 31673-X8610 | Overdrive Accumulator - Apply | | | 83-93 | 1 | Teflon |
| 22B | 042114A | 31673-X8682 | Overdrive Accumulator - Apply | | | 83-93 | 1 | Teflon - .25" gap |
| **BUSHINGS** | | | | | | | | |
| KT | 042626 | NA | Kit | | | 83-93 | 1 | |
| 25A | 042201 | 31341-X0100 | Front Pump | | | 83-93 | 1 | |
| N I | TBA | 31532-X6100 | Stator Shaft - Front | | | 83-93 | 1 | |
| 30A | TBA | 31354-X8600 | Stator Shaft - Rear | | | 83-93 | 1 | |
| N I | TBA | 31353-X6100 | Stator Shaft - Center | | | 83-93 | 1 | |
| 27A | 042205 | 31513-X0100 | Front (Direct) Drum | | | 83-93 | 1 | |
| 28D | 042207 | 31373-X0101 | Case - wide | | | 83-93 | 1 | |
| 31D | 042207A | 31375-X0101 | Case - narrow | | | 83-93 | 1 | |

| ILL | ALTO NO | REF NO | DESCRIPTION | YEARS | SPEC | YEAR | QTY | NOTES |
|---|---|---|---|---|---|---|---|---|
| **BUSHINGS** | | | | | | | | ...Continued |
| 29C | 042208A | 31462-X6100 | Sun Gear | | | 83-93 | 2 | |
| 26F | 042203B | 31332-X8000 | Extension Housing | | | 83-93 | 1 | |
| N I | 042210 | 31503-X8601 | Overdrive Drum | | | 83-93 | 1 | |
| 32A | 042211 | 31592-X8600 | Overdrive Sun Gear | | 1.35 | 83-93 | 2 | |
| 32A | 042211A | 31592-X9000 | Overdrive Sun Gear | | 1.26 | 83-93 | 2 | |
| **WASHERS** | | | | | | | | |
| KT | 042636 | NA | Washer Kit | | | 83-93 | 1 | |
| **MODULATORS** | | | | | | | | |
| 15E | 042500 | 31931-X0102 | .84" Diaphram | | | 83-93 | 1 | |
| 15E | 042501 | 31931-X0110 | .91" Diaphram | | | 83-93 | 1 | |

## NOTES

# NISSAN

## RE4R01A, RL4R01A
## 1988-On

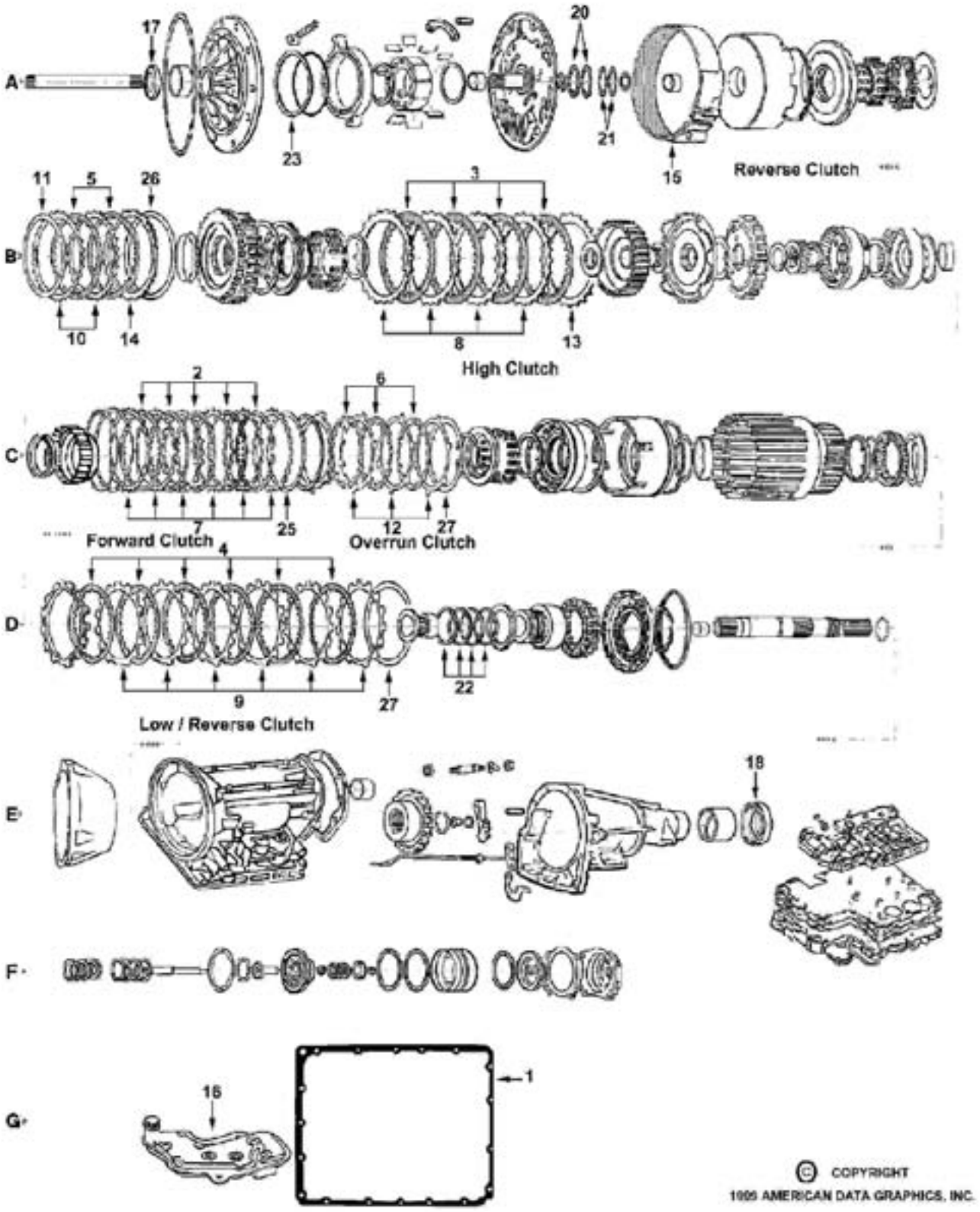

# NISSAN
## RE4R01A, RL4R01A
## 1988-On

| ILL | DESCRIPTION | YEARS | FRICTION MODULE | STEEL MODULE | OVERHAUL KIT | BANNER KIT | MASTER KIT |
|---|---|---|---|---|---|---|---|
| **KITS** | | | | | | | |
| **NISSAN PATHFINDER** | | | | | | | |
| KT | Rebuilding Kit - 4wd | 88-89 | 075752 | 075753 | 075800 | 075901LS | 075901 |
| KT | Rebuilding Kit - 4wd | 90-92 | 075752H | 075753L | 075800 | 075901CLS | 075901CX |
| KT | Rebuilding Kit - 4wd | 93-95 | 075752N | 075753Q | 075800 | 075901ELS | 075901E |
| KT | Rebuilding Kit - 2wd | 90-94 | 075752D | 075753J | 075800 | 075901DLS | 075901D |
| KT | Rebuilding Kit - 2wd | 1995 | 075752N | 075753Q | 075800 | 075901ELS | 075901E |
| KT | Rebuilding Kit - All | 96-On | 075752R | 075753Q | 075800 | 075901GLS | 075901G |
| **NISSAN PICKUP** | | | | | | | |
| KT | Rebuilding Kit - 4wd | 88-91 | 075752 | 075753 | 075800 | 075901LS | 075901 |
| KT | Rebuilding Kit - 4wd | 88-92 | 075752H | 075753L | 075800 | 075901CLS | 075901CX |
| KT | Rebuilding Kit- 4wd | 93-96 | 075752N | 075753Q | 075800 | 075901ELS | 075901E |
| KT | Rebuilding Kit - 2wd V6 | 90-96 | 075752D | 075753J | 075800 | 075901DLS | 075901D |
| KT | Rebuilding Kit - 2wd 4cyl. (RL4R01A) | 90-92 | 075752K | 075753K | 075800 | 075909LS | 075909 |
| KT | Rebuilding Kit - 2wd 4cyl. (RL4R01A) | 93-95 | 075752D | 075753J | 075800 | 075901DLS | 075901D |
| KT | Rebuilding Kit - 2wd 4cyl. (RL4R01A) | 96-On | 075752R | 075753Q | 075800 | 075901GLS | 075901G |
| **NISSAN FRONTIER** | | | | | | | |
| KT | Rebuilding Kit - All (RL4R01A) | 98-On | 075752R | 075753Q | 075800 | 075901GLS | 075901G |
| **NISSAN Xterra** | | | | | | | |
| KT | Rebuilding Kit | 00-On | 075752R | 075753Q | 075800 | 075901GLS | 075901G |
| **NISSAN Van** | | | | | | | |
| KT | Rebuilding Kit | 1989 | 075752D | 075753J | 075800 | 075901DLS | 075901D |
| **NISSAN 240SX** | | | | | | | |
| KT | Rebuilding Kit | 89-92 | 075752B | 075753B | 075800 | 075901ALS | 075901A |
| KT | Rebuilding Kit | 89-95 | 075752Q | 075753M | 075800 | 075901DXLS | 075901DX |
| KT | Rebuilding Kit | 1996 | 075752P | TBA | 075800 | TBA | TBA |
| KT | Rebuilding Kit | 97-On | 075752R | TBA | 075800 | 075901GLS | 075901G |
| **NISSAN 300ZX NonTurbo** | | | | | | | |
| KT | Rebuilding Kit | 89-92 | 075752H | 075753L | 075800 | 075901CLS | 075901CX |
| KT | Rebuilding Kit | 93-97 | 075752N | 075753Q | 075800 | 075901ELS | 075901E |
| **INFINITI J30** | | | | | | | |
| KT | Rebuilding Kit | 1992 | 075752H | 075753H | 075800 | 075901CLS | 075901C |
| KT | Rebuilding Kit | 93-95 | 075752N | 075753Q | 075800 | 075901ELS | 075901E |
| KT | Rebuilding Kit | 96-On | 075752R | 075753Q | 075800 | 075901GLS | 075901G |
| **INFINITI M30** | | | | | | | |
| KT | Rebuilding Kit | 90-91 | 075752B | 075753B | 075800 | 075901ALS | 075901A |
| **INIFINTI QX4** | | | | | | | |
| KT | Rebuilding Kit | 97-On | 075752R | 075753Q | 075800 | 075901GLS | 075901G |
| **COMBO** | | | | | | | |
| KT | 4WD Truck and Turbo fits: | | 075752H | 075753L | 075800 | 075901CLS | 075901CX |
| | Pathfinder 4wd | 90-92 | | | | | |
| | Pickup 4wd | 88-92 | | | | | |
| | 300ZX | 89-92 | | | | | |
| | Infiniti J30 | 1992 | | | | | |
| **COMBO** | | | | | | | |
| KT | 2WD Truck and 240SX fits: | | 075752Q | 075753M | 075800 | 075901DXLS | 075901DX |
| | 240SX | 89-95 | | | | | |
| | Pickup 2wd 4cyl. (RL4R01A) | 92-On | | | | | |
| | Pickup 2wd V6 | 90-96 | | | | | |
| | Pathfinder 2wd | 90-95 | | | | | |

| ILL | ALTO NO | REF NO | DESCRIPTION | SPEC | YEAR | QTY | NOTES |
|---|---|---|---|---|---|---|---|
| **MISCELLANEOUS GASKETS & KIT COMPONENTS** | | | | | | | |
| 1G | 075816 | 31397-41X05 | Gasket, Oil Pan | Cork/Rub | 88-On | 1 | |

# NISSAN
## RE4R01A, RL4R01A
## 1988-On

| ILL | ALTO NO | REF NO | DESCRIPTION | SPEC | YEAR | QTY | NOTES |
|---|---|---|---|---|---|---|---|
| **FRICTION CLUTCHES** | | | | | | | |
| 2C | 075700 | 31532-41X12 | Forward | .078/2.0 | 88-On | 5-7 | Tan - 36T - OD: 5.845" - PL |
| 2C | 075700A | 31532-41X63 | Forward | .063/1.6 | 88-On | 5-7 | Heg - 36T - OD: 5.845" - PL |
| 3B | 075702 | 31532-41X11 | High | .063/1.6 | 88-On | 4-5 | Heg - 30T - OD: 5.233" - PL |
| 3B | 075742 | NA | High - Red Eagle® Powerpack™ Component | .063/1.6 | 87-97 | AR | Red - 30T - OD: 5.233" - PL |
| 4D | 075704 | 31532-41X67 | Low / Reverse | .078/2.0 | 88-94 | 4-7 | Heg - 30T - OD: 5.805" - PL |
| 4D | 075704-160 | 31532-41X69 | Low / Reverse | .063/1.6 | 95-On | 4-6 | Heg - 30T - OD: 5.805" - PL |
| 5B | 075706 | 31532-41X10 | Reverse - narrow | .078/2.0 | 88-92 | 2 | Tan - 34T - OD: 5.880" - PL |
| 5B | 075706A | 31532-41X24 | Reverse - wide | .078/2.0 | 92-On | 2 | Heg - 30T - OD: 5.880" - PL |
| 5B | 075706-190 | NA | DRUMSAVER™ Comp. - Reverse narrow | .075/1.9 | 88-92 | AR | Tan - 34T - OD: 5.880" - PL |
| 5B | 075706A190 | NA | DRUMSAVER™ Comp. - Reverse wide | .075/1.9 | 92-On | AR | Heg - 30T - OD: 5.880" - PL |
| 6C | 075708 | 31532-41X13 | Overrun | .078/2.0 | 88-On | 3 | Heg - 18T - OD: 5.259" - PL |
| N I | 075712 | 31532-0W410 | Transfer Case (QX4) - external teeth | .078/2.0 | 97-On | 8 | Heg - 40T - OD: 6.338" - WF |
| **STEEL CLUTCHES** | | | | | | | |
| 7C | 075701 | 31536-41X12 | Forward | .078/2.0 | 88-On | 5-7 | 24T - ID: 5.355" |
| 7C | 075701A | 31536-41X13 | Forward | .071/1.8 | 88-On | 5-7 | 24T - ID: 5.355" |
| 8B | 075703 | 31536-41X21 | High | .067/1.7 | 88-On | 4-7 | 27T - ID: 4.414" |
| 8B | 075703K170 | NA | High - KOLENE® | .067/1.7 | 88-On | opt. | 27T - ID: 4.414" |
| 8B | 075703K152 | NA | High - KOLENE® Powerpack™ Component | .060/1.52 | 87-97 | AR | 27T - ID: 4.414" |
| 8B | 075713 | 31536-41X19 | High | .078/2.0 | 89-On | 3-5 | 27T - ID: 4.414" |
| 8B | 075713K200 | NA | High - Kolene® | .078/2.0 | 89-On | 3-5 | 27T - ID: 4.414" |
| 8B | 075733 | 31536-41X02 | High | .118/3.0 | 88-96 | 3 | 27T - ID: 4.414" |
| 8B | 075743 | 31536-21X04 | High - selective | .095/2.4 | 88-On | AR | 27T - ID: 4.414" |
| 8B | 075723 | NA | High - selective | .108/2.7 | 88-On | AR | 27T - ID: 4.414" |
| 9D | 075705 | 31666-41X02 | Low / Reverse | .078/2.0 | 88-On | 4-7 | 14T - ID: 5.086" |
| 9D | 075705-130 | NA | Low / Reverse - selective | .051/1.3 | 88-On | AR | 14T - ID: 5.086" |
| 9D | 075705-160 | NA | Low / Reverse - selective | .063/1.6 | 88-On | AR | 14T - ID: 5.086" |
| 9D | 075705-180 | NA | Low / Reverse - selective | .071/1.8 | 88-On | AR | 14T - ID: 5.086" |
| 9D | 075705-225 | NA | Low / Reverse - selective | .089/2.25 | 88-On | AR | 14T - ID: 5.086" |
| 10B | 075707 | 31536-41X06 | Reverse - narrow | .078/2.0 | 88-92 | 2 | 30T - ID: 5.356" |
| 10B | 075707A | 31536-41X15 | Reverse - wide | .078/2.0 | 92-On | 2 | 30T - ID: 5.084" |
| 10B | 075707A280 | 31536-41X20 | Reverse - wide | .110/2.8 | 92-On | AR | 30T - ID: 5.084" |
| 10B | 075707-170 | NA | DRUMSAVER™ Comp. - Reverse narrow | .067/1.7 | 88-92 | AR | 30T - ID: 5.356" |
| 10B | 075707A170 | NA | DRUMSAVER™ Comp. - Reverse wide | .067/1.7 | 92-99 | AR | 30T - ID: 5.084" |
| 11B | 075707XW | 31535-41X10 | DRUMSAVER™ Comp. - All | | 88-On | 1 | replaces belleville spring |
| 12C | 075709 | 31536-41X10 | Overrun | .078/2.0 | 88-On | 3-5 | 6T - ID: 4.701" |
| 12C | 075709-225 | NA | Overrun - selective | .089/2.25 | 88-On | AR | 6T - ID: 4.701" |
| N I | 075715K | 31536-0W410 | Transfer Case (QX4) - internal teeth | .078/2.0 | 97-On | 14 | 32T - ID: 4.633" |
| **PRESSURE PLATES** | | | | | | | |
| 13B | 075733 | 31536-41X02 | High - backing | .118/3.0 | 88-On | AR | |
| 13B | 075760-320 | NA | High - backing | .126/3.2 | 88-On | AR | |
| 13B | 075760-340 | 31537-41X71 | High - backing | .134/3.4 | 88-On | AR | |
| 13B | 075760-360 | 31537-41X61 | High - backing | .142/3.6 | 88-On | AR | |
| 13B | 075760-380 | 31537-41X62 | High - backing | .150/3.8 | 88-On | AR | |
| 13B | 075760-400 | 31537-41X63 | High - backing | .157/4.0 | 88-On | AR | |
| 13B | 075760-420 | 31537-41X64 | High - backing | .165/4.2 | 88-On | AR | |
| 13B | 075760-440 | 31537-41X65 | High - backing | .173/4.4 | 88-On | AR | |
| 13B | 075760-460 | 31537-41X66 | High - backing | .181/4.6 | 88-On | AR | |
| 13B | 075760-480 | 31537-41X67 | High - backing | .189/4.8 | 88-On | AR | |
| 13B | 075760-500 | NA | High - backing | .197/5.0 | 88-On | AR | |
| 14B | 075707A480 | 31537-42X02 | Reverse - backing | .189/4.8 | 88-On | AR | |
| 14B | 075707A500 | 31537-42X03 | Reverse - backing | .197/5.0 | 88-On | AR | |
| 14B | 075707A520 | 31537-42X04 | Reverse - backing | .205/5.2 | 88-On | AR | |
| 14B | 075707A540 | 31537-42X05 | Reverse - backing | .213/5.4 | 88-On | AR | |
| 14B | 075707A560 | 31537-42X06 | Reverse - backing | .220/5.6 | 88-On | AR | |
| **OEI™ Original Equipment Improvements** | | | | | | | |
| KT | 075758 | NA | DRUMSAVER™ Kit - Reverse Drum | | 88-92 | 1 | 34T Friction |
| KT | 075758A | NA | DRUMSAVER™ Kit - Reverse Drum | | 92-On | 1 | 30T Friction |

# NISSAN
## RE4R01A, RL4R01A
## 1988-On

| ILL | ALTO NO | REF NO | DESCRIPTION | SPEC | YEAR | QTY | NOTES |
|---|---|---|---|---|---|---|---|
| **OEI™ Original Equipment Improvements** | | | | | | | ...Continued |
| KT | 075985 | SK® RE4R01A | Shift Kit® | Transgo® | 88-On | 1 | |
| **HI-PERFORMANCE** | | | | | | | |
| KT | 075757HP | NA | DRUMSAVER™ - High Clutch | | 88-On | 1 | |
| **BANDS** | | | | | | | |
| 15A | 075950 | 31630-41X08 | Brake | Tan | 88-On | 1 | |
| N I | 068950 | 31630-21X00 | Brake (without struts) | Tan | 96-On | 1 | |
| **FILTERS** | | | | | | | |
| KT | FK075942 | NA | Filter Kit - all except below | | 88-On | 1 | |
| KT | FK075942C | NA | Filter Kit | | 90-On | 1 | |
| 16G | 075942 | 31728-41X02 | Filter - .300" tube | | 88-On | 1 | F325 |
| 16G | 075942C | 31728-48X01 | Filter - .150" tube (RL4R01A) | | 90-On | 1 | |
| 16G | 075944 | 31728-41X03 | Filter - 1.020" tube | | 88-On | 1 | |
| **METAL CLAD SEALS** | | | | | | | |
| 17A | 068400 | 31375-51X00 | Front Pump | | 88-On | 1 | |
| 18E | 042407 | 31375-41X06 | Extension Housing | | 88-On | 1 | |
| 18E | 075401 | 31336-X6901 | Adapter Housing - all 4wd | | 88-On | 1 | |
| N I | 042410A | 32709-58S00 | Speedometer | | 88-On | 1 | |
| N I | 075410 | 31375-41X00 | Manual Lever | | 88-On | 1 | |
| **SEALING RINGS** | | | | | | | |
| KT | 075600 | NA | Sealing Ring Kit - 1M / 8T | | 88-On | 1 | without Gov. rings |
| KT | 075600A | E504A | Sealing Ring Kit - 1M / 11T | | 88-On | 1 | with Gov. rings |
| 20A | 068100 | 31361-21X00 | Stator Support - Reverse drum | | 88-On | 2 | |
| 21A | 068101 | 31558-21X00 | Stator Support - Direct drum | | 88-On | 2 | |
| 22D | 075101 | 31525-41X00 | Forward & Overrun drum | | 88-On | 4 | |
| N I | 075102 | 31525-48X00 | Governor (RL only) | | 88-On | 3 | |
| 23A | 075103 | 31363-41X00 | Pump Slide | | 88-On | 1 | |
| **BUSHINGS** | | | | | | | |
| KT | 075625 | NA | Bushing Kit | | 88-99 | 1 | |

**NOTES**

# NISSAN
## RE5R01A
## 1991-On

| ILL | DESCRIPTION | YEARS | FRICTION MODULE | STEEL MODULE | OVERHAUL KIT | BANNER KIT | MASTER KIT |
|---|---|---|---|---|---|---|---|
| **KITS** | | | | | | | |
| KT | Rebuilding Kit - Turbo / Non-Turbo Combo | 91-On | 122752 | 122753 | 122800 | 122901LS | 122901 |

| ILL | ALTO NO | REF NO | DESCRIPTION | SPEC | YEAR | QTY | NOTES |
|---|---|---|---|---|---|---|---|
| **FRICTION CLUTCHES** | | | | | | | |
| N I | 075700 | 31532-41X12 | Forward - without Turbo | .078/2.0 | 91-On | 4-5 | Tan - 36T - OD: 5.845" - PL |
| N I | 075700A | 31532-41X63 | Forward - with Turbo | .063/1.6 | 91-On | 7 | Heg - 36T - OD: 5.845" - PL |
| N I | 075702 | 31532-41X11 | High | .063/1.6 | 91-On | 5 | Heg - 30T - OD: 5.233" - PL |
| N I | 075704 | 31532-41X67 | Low / Reverse | .078/2.0 | 91-On | 4-8 | Heg - 30T - OD: 5.805" - PL |
| N I | 075706 | 31532-41X10 | Reverse | .078/2.0 | 91-On | 2 | Tan - 34T - OD: 5.880" - PL |
| N I | 075706A | 31532-41X24 | Reverse | .078/2.0 | 91-On | 2 | Heg - 30T - OD: 5.880" - PL |
| N I | 075708 | 31532-41X13 | Overrun | .078/2.0 | 91-On | 3 | Heg - 18T - OD: 5.260" - PL |
| N I | 122712 | 31532-60X03 | Reduction Direct | .078/2.0 | 91-On | 3 | Heg - 30T - OD: 4.805" - PL |
| N I | 122710 | 31532-60X02 | Reduction Brake | .063/1.6 | 91-On | 3 | Heg - 30T - OD: 5.387" - PL |
| **STEEL CLUTCHES** | | | | | | | |
| N I | 075701 | 31536-41X12 | Forward - without Turbo | .078/2.0 | 91-On | 4-5 | 24T - ID: 5.355" |
| N I | 075701A | 31536-41X13 | Forward - with Turbo | .071/1.8 | 91-On | 7 | 24T - ID: 5.355" |
| N I | 075703 | 31536-41X21 | High | .067/1.7 | 91-On | 7 | 27T - ID: 4.414" |
| N I | 075713 | 31536-41X19 | High | .078/2.0 | 91-On | 5 | 27T - ID: 4.414" |
| N I | 075713K200 | NA | High - Kolene® | .078/2.0 | 91-On | 5 | 27T - ID: 4.414" |
| N I | 075705 | 31666-41X02 | Low / Reverse | .078/2.0 | 91-On | 4-7 | 14T - ID: 5.086" |
| N I | 075707 | 31536-41X06 | Reverse | .078/2.0 | 91-On | 2 | 30T - ID: 5.355" |
| N I | 075707A | 31536-41X15 | Reverse | .078/2.0 | 91-On | 2 | 30T - ID: 5.084" |
| N I | 075709 | 31536-41X10 | Overrun | .078/2.0 | 91-On | 5 | 6T - ID: 4.700" |
| N I | 122713 | 31536-60X00 | Reduction Direct | .078/2.0 | 91-On | 5 | 28T - ID: 3.822" |
| N I | 122711 | 31536-60X03 | Reduction Brake | .078/2.0 | 91-On | 1 | 8T - ID: 4.700" |
| N I | 122711A | 31536-60X02 | Reduction Brake | .102/2.6 | 91-On | 2 | 8T - ID: 4.700" |
| **BANDS** | | | | | | | |
| N I | 122950 | 31630-51X00 | Band | | 91-On | 1 | |
| **FILTERS** | | | | | | | |
| N I | 122940 | 24341-1-423-109 | Filter | | 91-On | 1 | |

**NOTES**

# NISSAN
## RE5R05A
## 2002-On

| ILL | DESCRIPTION | YEARS | FRICTION MODULE | STEEL MODULE | OVERHAUL KIT | BANNER KIT | MASTER KIT |
|---|---|---|---|---|---|---|---|
| **KITS** | | | | | | | |
| KT | Rebuilding Kit | 02-On | 174752 | 174753 | 174800 | 174901LS | 174901 |

| ILL | ALTO NO | REF NO | DESCRIPTION | SPEC | YEAR | QTY | NOTES |
|---|---|---|---|---|---|---|---|
| **FRICTION CLUTCHES** | | | | | | | |
| N I | 174700-170 | NA | K-1 Input | .069/1.7 | 02-On | 6-7 | Tan - 60T - OD: 6.300" |
| N I | 174702-160 | NA | K-2 Hi - Lo Rev | .063/1.6 | 02-On | 4-5 | Tan - 30T - OD: 4.900" |
| N I | 174704-170 | NA | B-1 Reverse Brake | .069/1.7 | 02-On | 6 | Tan - 50T - OD: 6.600" |
| N I | 174706-160 | NA | B-2 Low Coast | .063/1.6 | 02-On | 3 | Tan - 30T - OD: 5.200" |
| N I | 174708-155 | NA | B-3 Forward | .061/1.55 | 02-On | 5 | Tan - 39T - OD: 5.700" |
| N I | 174710-180 | NA | Direct | .071/1.8 | 02-On | 5 | Tan - 24T - OD: 6.200" |
| **STEEL CLUTCHES** | | | | | | | |
| N I | 174701-200 | NA | K-1 Input | .079/2.0 | 02-On | 6 | 24T - ID: 5.624" |
| N I | 174703-240 | NA | K-2 Hi - Lo Rev | .094/2.4 | 02-On | 4 | 24T - ID: 3.700" |
| N I | 174705-200 | NA | B-1 Reverse Brake | .079/2.0 | 02-On | 6 | 18T - ID: 5.900" |
| N I | 174707-200 | NA | B-2 Low Coast | .079/2.0 | 02-On | 4 | 18T - ID: 4.400" |
| N I | 174709-200 | NA | B-3 Forward | .079/2.0 | 02-On | 5 | 18T - ID: 4.900" |
| N I | 174711-240 | NA | Direct | .094/2.4 | 02-On | 5 | 24T - ID: 5.500" |

## NOTES

# NISSAN

## NISSAN RE4R03A 1989-On
## NISSAN RG4R01A 1988-On
## ISUZU JR403E 1988-On

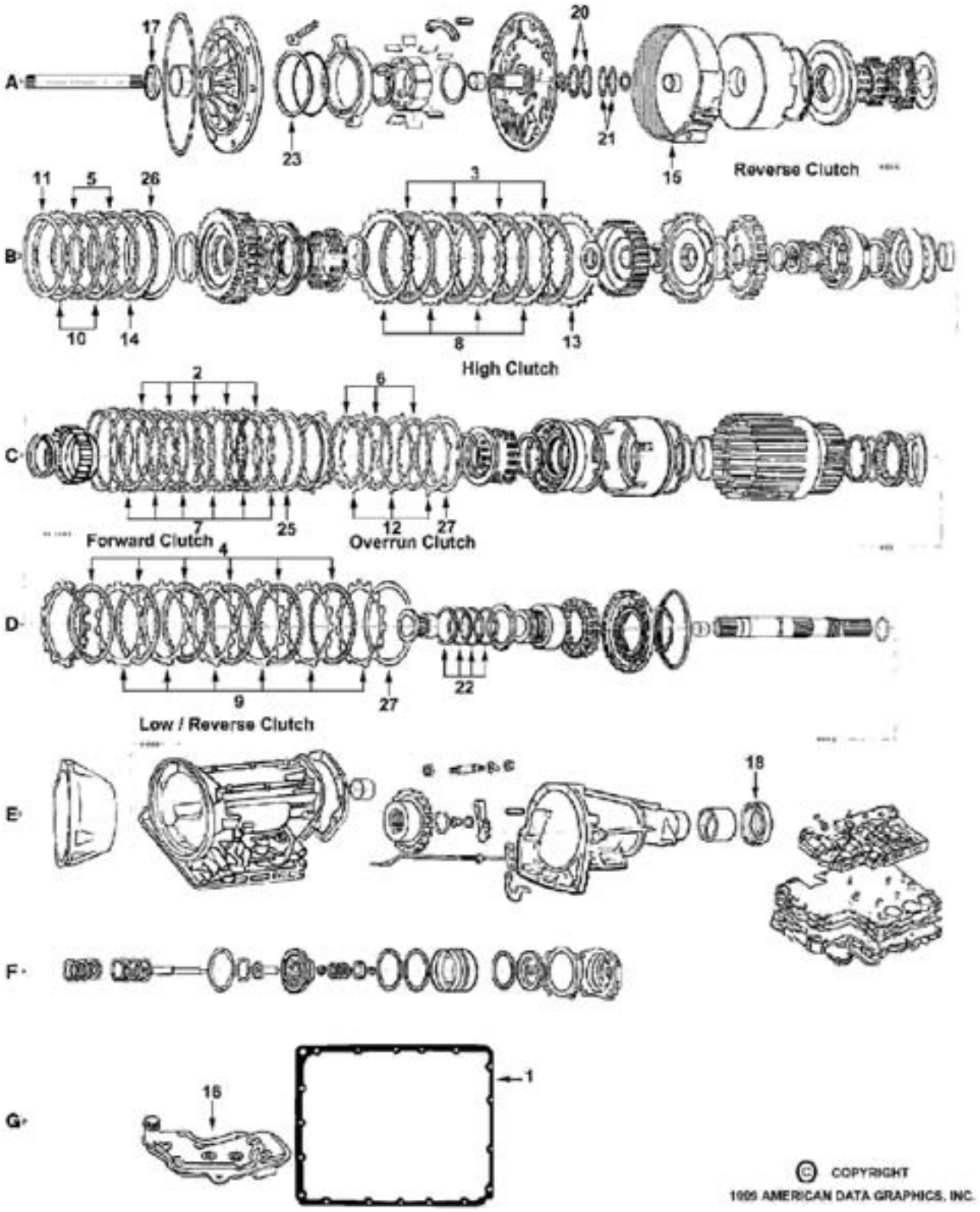


© COPYRIGHT
1995 AMERICAN DATA GRAPHICS, INC.

# NISSAN

## NISSAN RE4R03A 1989-On
## NISSAN RG4R01A 1988-On
## ISUZU JR403E 1988-On

| ILL | DESCRIPTION | YEARS | FRICTION MODULE | STEEL MODULE | OVERHAUL KIT | BANNER KIT | MASTER KIT |
|---|---|---|---|---|---|---|---|
| **KITS** | | | | | | | |
| KT | Rebuilding Kit - RE4R03A | 89-On | 106752 | 106753 | 106800 | 106901LS | 106901 |
| KT | Rebuilding Kit - RG4R01A / JR403E | 88-4/92 | 106752A | 106753A | 106802 | 106903LS | 106903 |
| KT | Rebuilding Kit - RG4R01A / JR403E | 5/92-On | 106752B | 106753B | 106802 | 106903ALS | 106903A |

| ILL | ALTO NO | REF NO | DESCRIPTION | SPEC | YEAR | QTY | NOTES |
|---|---|---|---|---|---|---|---|
| **MISCELLANEOUS GASKETS & KIT COMPONENTS** | | | | | | | |
| 1G | 106816 | 31397-51X00 | Gasket, Oil Pan | Cork/Rub | 88-On | 1 | |
| **FRICTION CLUTCHES** | | | | | | | |
| 2C | 106700 | 31532-51X01 | Forward | .078/2.0 | 88-On | 7-9 | Heg - 50T - OD: 6.610" - PL |
| 3B | 106702-160 | 31532-51X04 | High | .063/1.6 | 88-On | 6-7 | Heg - 64T - OD: 6.140" - PL |
| 3B | 106742-160 | NA | High - RED EAGLE® | .063/1.6 | 88-On | 6-7 | Red - 64T - OD: 6.140" - PL |
| 4D | 106706 | 31532-51X10 | Low / Reverse | .063/1.6 | 88-On | 4/8 | Heg - 33T - OD: 6.140" - PL |
| 5B | 106702-190 | 31532-51X05 | Reverse | .075/1.9 | 88-On | 3 | Heg - 64T - OD: 6.140" - PL |
| 5B | 106702A190 | NA | Reverse | .075/1.9 | 90-On | 3 | Heg - 64T - OD: 6.140" - PL |
| 6C | 106708 | 31532-51X02 | Overrun - RE4R03A | .063/1.6 | 89-On | 4 | Heg - 20T - OD: 6.091" - PL |
| 6C | 106708-200 | 31532-51X06 | Overrun - RG4R01A & JR403E | .078/2.0 | 88-On | 5 | Heg - 20T - OD: 6.091" - PL |
| **STEEL CLUTCHES** | | | | | | | |
| 7C | 106701 | 31536-51X07 | Forward | .078/2.0 | 88-On | 8/14 | 36T - ID: 6.107" |
| 25C | TBA | 31535-51X00 | Forward cushion | | 88-On | 1 | |
| 8B | 106703 | 31536-51X00 | High | .078/2.0 | 88-On | 6-7 | 40T - ID: 5.200" |
| 8B | 106703-280 | 31536-51X06 | High RE4R03A only | .110/2.8 | 88-On | 1 | 40T - ID: 5.200" |
| 8B | 106703-300 | 31536-51X04 | High - RG4R01A & JR403E | .118/3.0 | 88-92 | 3 | 40T - ID: 5.200" |
| 9D | 106707 | 31666-51X01 | Low / Reverse | .078/2.0 | 88-On | 8-9 | 11T - ID: 5.519" |
| 27D | TBA | 31535-51X04 | Low / Reverse cushion | | 88-On | 1 | |
| 10B | 106703 | 31536-51X00 | Reverse | .078/2.0 | 88-On | 3 | 40T - ID: 5.200" |
| 26B | TBA | 31535-51X05 | Reverse cushion | | 88-On | 1 | |
| 12C | 106709 | 31536-51X02 | Overrun | .078/2.0 | 88-On | 5-7 | 6T - ID: 5.379" |
| 27C | TBA | 31535-51X02 | Overrun cushion | | 88-On | 1 | |
| **BANDS** | | | | | | | |
| 15A | 106950 | 31630-51X04 | Brake | Tan | 88-On | 1 | |
| **FILTERS** | | | | | | | |
| KT | FK106940 | NA | Filter Kit - RE4R03A | | 89-On | 1 | |
| KT | FK106942 | NA | Filter Kit - RG4R01A & JR403E | | 88-On | 1 | |
| 16G | 106940 | 31728-51X05 | Filter - RE4R03A | | 89-On | 1 | |
| 16G | 106942 | NA | Filter - RG4R01A & JF403E | | 88-On | 1 | |
| **METAL CLAD SEALS** | | | | | | | |
| 17A | 068400 | 31375-51X00 | Front Pump | | 88-On | 1 | |
| 18E | 106401 | 31375-51X01 | Extension Housing - RE4R03A | | 89-On | 1 | |
| 18E | 106402 | 94483329 | Extension Housing - RG4R01A & JR403E | | 88-On | 1 | |
| 18E | 075401 | 31336-X6901 | Adapter Housing 4wd | | 88-On | 1 | |
| N I | 075410 | 31375-41X00 | Manual Lever | | 88-On | 1 | |
| **SEALING RINGS** | | | | | | | |
| KT | 075600 | NA | Sealing Ring Kit - 1M / 8T | | 88-On | 1 | |
| 20A | 068100 | 31361-21X00 | Stator Support - Reverse drum | | 88-On | 2 | |
| 21A | 068101 | 31558-21X00 | Stator Support - Direct drum | | 88-On | 2 | |
| 22D | 075101 | 31525-41X00 | Forward & Overrun drum | | 88-On | 4 | |
| 23A | 075103 | 31363-41X00 | Pump Slide | | 88-On | 1 | |
| **BUSHINGS** | | | | | | | |
| KT | 106625 | NA | Bushing Kit | | 88-On | 1 | |

# NISSAN

## RN3F01A, RL3F01A

## 1982-92

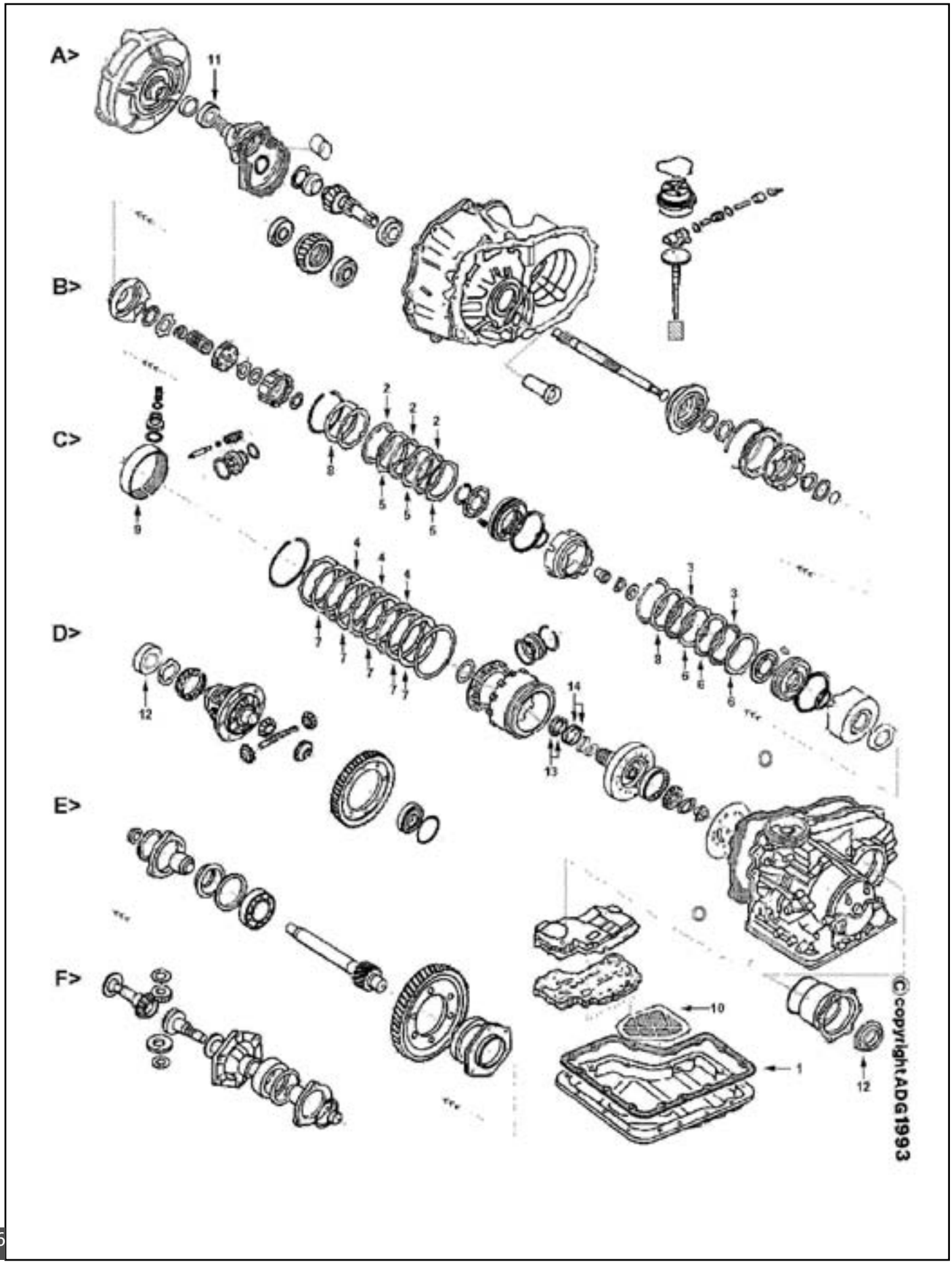

# NISSAN
## RN3F01A, RL3F01A
## 1982-92

| ILL | DESCRIPTION | YEARS | FRICTION MODULE | STEEL MODULE | OVERHAUL KIT | BANNER KIT | MASTER KIT |
|---|---|---|---|---|---|---|---|
| **KITS** | | | | | | | |
| **PULSAR** | | | | | | | |
| KT | Rebuilding Kit - Non Turbo (1.5L) | 83-90 | 061752 | 061753 | 061800 | 061901LS | 061901 |
| KT | Rebuilding Kit - Turbo (1.6L) | 83-90 | 061752A | 061753 | 061800 | 061901ALS | 061901A |
| **SENTRA** | | | | | | | |
| KT | Rebuilding Kit - All | 82-84 | 061752 | 061753 | 061800 | 061901LS | 061901 |
| KT | Rebuilding Kit - Diesel engine | 85 | 061752 | 061753 | 061800 | 061901LS | 061901 |
| KT | Rebuilding Kit - Gas engine | 85 | 061752A | 061753 | 061800 | 061901ALS | 061901A |
| KT | Rebuilding Kit - All | 86-92 | 061752A | 061753 | 061800 | 061901ALS | 061901A |
| **STANZA** | | | | | | | |
| KT | Rebuilding Kit - Fuel Injected | 82-85 | 061752 | 061753 | 061800 | 061901LS | 061901 |
| KT | Rebuilding Kit - Carbureted | 82-85 | 061752A | 061753 | 061800 | 061901ALS | 061901A |
| **COMBO** | | | | | | | |
| KT | Rebuilding Kit - Combo | 82-92 | 061752B | 061753 | 061800 | 061901BLS | 061901B |

| ILL | ALTO NO | REF NO | DESCRIPTION | SPEC | YEAR | QTY | NOTES |
|---|---|---|---|---|---|---|---|
| **MISCELLANEOUS GASKETS & KIT COMPONENTS** | | | | | | | |
| 1F | 061816 | 31397-01X01 | Gasket, Oil Pan | Cork/Rub | 82-92 | 1 | |
| **FRICTION CLUTCHES** | | | | | | | |
| 2B | 061700 | 31532-01X00 | Front (Forward) - used in 061752 | .071/1.8 | 82-92 | 3-4 | Heg - 8T - OD: 5.044" - PL |
| 2B | 061704 | 31532-01X02 | Front (Forward) - used in 061752A | .063/1.6 | 82-92 | 4-6 | Tan - 8T - OD: 5.044" - PL |
| 3B | 061700 | 31532-01X00 | Rear (High / Reverse) - used in 061752 | .071/1.8 | 82-92 | 2-4 | Heg - 8T - OD: 5.044" - PL |
| 3B | 061704 | 31532-01X02 | Rear (High / Reverse) - used in 061752A | .063/1.6 | 82-92 | 2-4 | Tan - 8T - OD: 5.044" - PL |
| 4C | 061702 | 31662-01X01 | Low / Reverse | .078/2.0 | 82-92 | 3-5 | Heg - 8T - OD: 6.945" - PL |
| **STEEL CLUTCHES** | | | | | | | |
| 5B | 061701 | 31536-01X00 | Front (Forward) | .078/2.0 | 82-92 | 2-3 | 12T - ID: 4.416" |
| 6B | 061701 | 31536-01X00 | Rear (High / Reverse) | .078/2.0 | 82-92 | 3-4 | 12T - ID: 4.416" |
| 7C | 061703 | 31666-01X00 | Low / Reverse | .078/2.0 | 82-92 | 3-5 | 8T - ID: 6.302" |
| **PRESSURE PLATES** | | | | | | | |
| 8B | 061760-340 | 31537-01X05 | Front - reaction | .134/3.4 | 82-92 | AR | |
| 8B | 061760-360 | 31537-01X00 | Front & Rear reaction | .142/3.6 | 82-92 | AR | |
| 8B | 061760-380 | 31537-01X01 | Front & Rear reaction | .150/3.8 | 82-92 | AR | |
| 8B | 061760-400 | 31537-01X02 | Front & Rear reaction | .157/4.0 | 82-92 | AR | |
| 8B | 061760-420 | 31537-01X03 | Front & Rear reaction | .165/4.2 | 82-92 | AR | |
| 8B | 061760-440 | 31537-01X04 | Front & Rear reaction | .173/4.4 | 82-92 | AR | |
| **BANDS** | | | | | | | |
| 9C | 061950 | 31630-01X00 | Brake | Tan | 82-92 | 1 | |
| **FILTERS** | | | | | | | |
| KT | FK061940 | NA | Filter Kit | | 82-86 | 1 | |
| KT | FK061942 | NA | Filter Kit | | 87-92 | 1 | |
| 10F | 061940 | 31728-01X09 | Filter | | 82-86 | 1 | |
| 10F | 061942 | 31728-01X10 | Filter | | 87-92 | 1 | |
| **METAL CLAD SEALS** | | | | | | | |
| 11A | 061400 | 31197-01X01 | Converter Housing | | 82-92 | 1 | |
| 12D | 061405 | 38342-M8001 | Axle - Right & Left | | 82-92 | 2 | |
| N I | 042410 | 32709-14600 | Speedometer | | 82-92 | 1 | |
| **SEALING RINGS** | | | | | | | |
| KT | 061600 | E507 | Sealing Ring Kit - 4M | | 82-92 | 1 | |
| 13C | 061100 | 31361-01X00 | Oil Pump stator - Hi / Reverse drum | 1.929 | 82-92 | 2 | |
| 14C | 061101 | 31362-01X00 | Oil Pump stator - Forward drum | 1.776 | 82-92 | 2 | |
| **BUSHINGS** | | | | | | | |
| KT | 061625 | NA | Kit | | 82-92 | 1 | |

**NOTES**

# NISSAN

## RE4F02A, RL4F02A
## 1985-94

A>

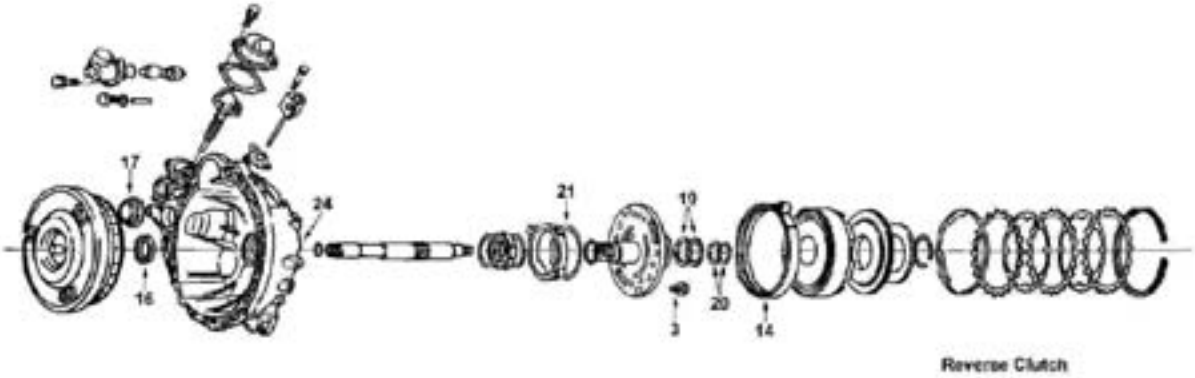


B>

C>

D>

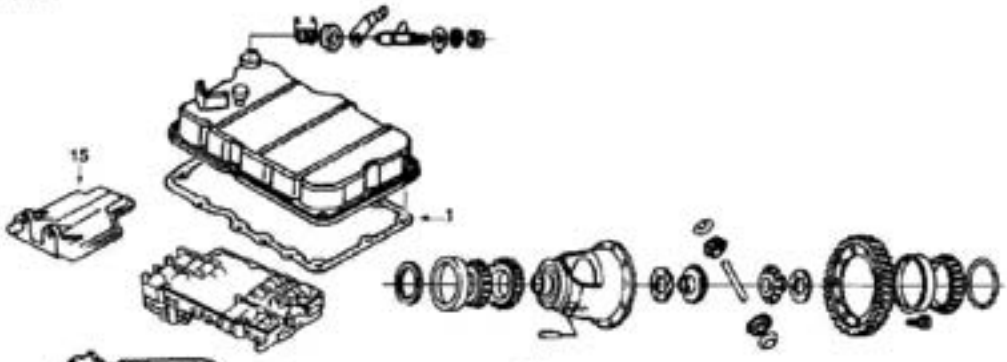


E>

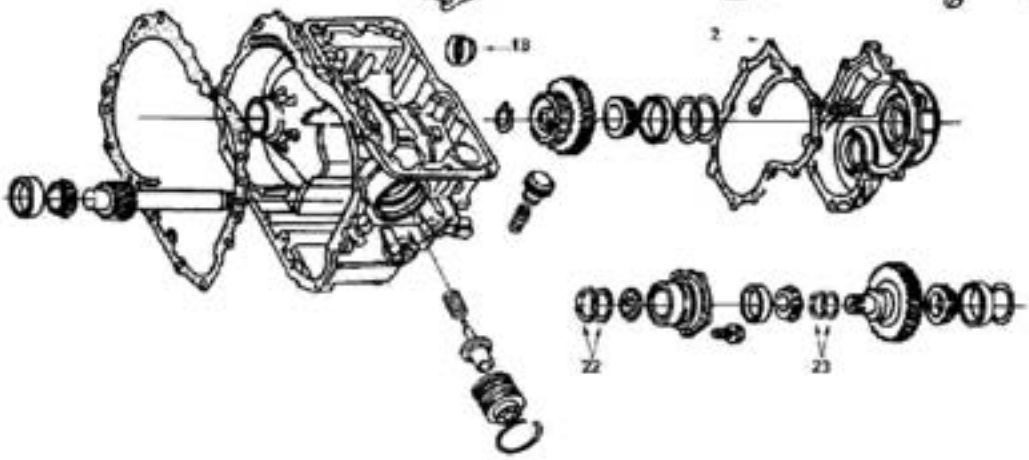


F>

# NISSAN
## RE4F02A, RL4F02A
## 1985-94

| ILL | DESCRIPTION | YEARS | FRICTION MODULE | STEEL MODULE | OVERHAUL KIT | BANNER KIT | MASTER KIT |
|---|---|---|---|---|---|---|---|
| **KITS** | | | | | | | |
| **MAXIMA** | | | | | | | |
| KT | Rebuilding Kit - RL4F02A | 85 | 068752 | 068753 | 068800 | 068901LS | 068901 |
| KT | Rebuilding Kit - RL4F02A | 86-88 | 068752A | 068753A | 068800 | 068901ALS | 068901A |
| KT | Rebuilding Kit - RE4F02A | 89-94 | 068752E | 068753E | 068800 | 068901BLS | 068901B |
| **STANZA** | | | | | | | |
| KT | Rebuilding Kit - RL4F02A | 86-89 | 068752B | 068753B | 068800 | 068903LS | 068903 |
| KT | Rebuilding Kit - RL4F02A (combo) | 85-89 | 068752D | 068753B | 068800 | 068903XLS | 068903X |
| KT | Rebuilding Kit - RE4F02A | 90-92 | 068752F | 068753F | 068800 | 068903ALS | 068903A |
| **PULSAR (NX)** | | | | | | | |
| KT | Rebuilding Kit - RL4F02A | 87-90 | 068752C | 068753C | 068800 | 068905LS | 068905 |
| **AXXESS** | | | | | | | |
| KT | Rebuilding Kit - Order VB gaskets seperate | 89-93 | 068752F | 068753F | 068800 | 068907LS | 068907 |

| ILL | ALTO NO | REF NO | DESCRIPTION | SPEC | YEAR | QTY | NOTES |
|---|---|---|---|---|---|---|---|
| **MISCELLANEOUS GASKETS & KIT COMPONENTS** | | | | | | | |
| 1D | 068816 | 31396-21X01 | Gasket, VB (Top) cover | Cork/Rub | 85-94 | 1 | |
| 2E | 068818 | 31397-21X00 | Gasket, Rear cover | Cork/Rub | 85-94 | 1 | |
| KT | 068801V | NA | Valve Body gasket kit - Axxess | | 89-93 | 1 | |
| 3F | 068315 | 31353-21X00 | Bolt, Front pump & Output bearing retainer | M8 | 85-94 | 11 | |
| **FRICTION CLUTCHES** | | | | | | | |
| 4A | 068704 | 31532-21X01 | Reverse | .078/2.0 | 85-89 | 2 | Tan - 8T - OD: 5.880" - PL |
| 4A | 075706 | 31532-41X10 | Reverse | .078/2.0 | 90-94 | 2 | Tan - 34T - OD: 5.880" - PL |
| 4A | 068704-190 | NA | Reverse - POWERPACK™ Component | .074/1.9 | 85-89 | AR | Tan - 8T - OD: 5.880" - PL |
| 4A | 075706-190 | NA | Reverse - POWERPACK™ Component | .074/1.9 | 90-94 | AR | Tan - 34T - OD: 5.880" - PL |
| 5C | 068700 | 31532-21X09 | Low | .078/2.0 | 85-94 | 4-6 | Tan - 30T - OD: 5.667" - PL |
| 6C | 068706 | 31662-21X01 | Low / Reverse | .078/2.0 | 85-94 | 5-7 | Tan - 12T - OD: 7.165" - PL |
| **MAXIMA** | | | | | | | |
| 7B | 068702 | 31562-21X01 | High - Narrow spline | .067/1.7 | 7/84-9/84 | 4 | Tan - 30T - OD: 5.035" - PL |
| 7B | 068712 | 31532-21X10 | High - Wide spline | .063/1.6 | 85-89 | 4 | Tan - 30T - OD: 5.035" - PL |
| 7B | 075702 | 31532-41X11 | High - Wide spline | .063/1.6 | 90-94 | 4 | Heg - 30T - OD: 5.233" - PL |
| **STANZA** | | | | | | | |
| 7B | 068702A | 31562-21X00 | High - Narrow spline | .078/2.0 | 85-2/88 | 3 | Tan - 30T - OD: 5.035" - PL |
| 7B | 068712 | 31532-21X10 | High - Wide spline | .063/1.6 | 2/88-89 | 3-4 | Tan - 30T - OD: 5.035" - PL |
| 7B | 068712A | NA | High - Wide spline | .079/2.0 | 85-89 | 4 | Tan - 30T - OD: 5.041" - PL |
| 7B | 075702 | 31532-41X11 | High - Wide spline | .063/1.6 | 90-94 | 4 | Heg - 30T - OD: 5.233" - PL |
| **PULSAR (NX)** | | | | | | | |
| 7B | 075702 | 31532-41X11 | High - Wide spline | .063/1.6 | 87-90 | 4 | Heg - 30T - OD: 5.233" - PL |
| **AXXESS** | | | | | | | |
| 7B | 075702 | 31532-41X11 | High - Wide spline | .063/1.6 | 90-94 | 4 | Heg - 30T - OD: 5.233" - PL |
| **STEEL CLUTCHES** | | | | | | | |
| 8A | 068705 | 31536-21X01 | Reverse | .078/2.0 | 85-89 | 2 | 30T - ID: 5.360" |
| 8A | 075707 | 31536-41X06 | Reverse | .078/2.0 | 90-94 | 2 | 30T - ID: 5.355" |
| 8A | 068705-170 | NA | Reverse - POWERPACK™ Component | .067/1.7 | 85-89 | AR | 30T - ID: 5.360" |
| 8A | 075707-170 | NA | Reverse - POWERPACK™ Component | .067/1.7 | 90-94 | AR | 30T - ID: 5.355" |
| 9A | 068705XW | 31535-21X01 | Reverse wave spring (replaces belleville) | .078/2.0 | 85-89 | 1 | |
| 9A | 075707XW | 31535-21X05 | Reverse wave spring (replaces belleville) | .078/2.0 | 90-94 | 1 | |
| 10C | 068701 | 31596-21X01 | Low | .078/2.0 | 85-94 | 5-7 | 12T - ID: 4.851" |
| 11C | 068707 | 31666-23X00 | Low / Reverse | .078/2.0 | 85-94 | 5-7 | 12T - ID: 6.498" |
| **MAXIMA** | | | | | | | |
| 12B | 068713 | 31566-21X00 | High | .078/2.0 | 85-10/85 | 1 | 24T - ID: 4.412" |
| 12B | 068733 | 31566-21X01 | High | .118/3.0 | 85-10/85 | 3 | 24T - ID: 4.412" |
| 12B | 068723 | 31566-21X02 | High | .108/2.75 | 85 | 3 | 24T - ID: 4.412" |
| 12B | 068703 | 31566-21X03 | High | .067/1.6 | 86-88 | 7 | 24T - ID: 4.412" |
| 12B | 068743 | 31536-21X03 | High | .055/1.4 | 89-90 | 7 | 24T - ID: 4.412" |
| 12B | 075743 | 31536-21X04 | High | .095/2.4 | 91-94 | 4 | 24T - ID: 4.412" |

# NISSAN
## RE4F02A, RL4F02A
## 1985-94

| ILL | ALTO NO | REF NO | DESCRIPTION | SPEC | YEAR | QTY | NOTES |
|---|---|---|---|---|---|---|---|
| **STEEL CLUTCHES** | | | | | | | ...Continued |
| **STANZA** | | | | | | | |
| 12B | 068713 | 31536-21X00 | High | .078/2.0 | 86-2/88 | 5 | 24T - ID: 4.412" |
| 12B | 068723 | 31566-21X02 | High | .108/2.75 | 2/88-90 | 5-6 | 24T - ID: 4.412" |
| 12B | 075743 | 31536-21X04 | High | .095/2.4 | 91-92 | 4 | 24T - ID: 4.412" |
| **PULSAR (NX)** | | | | | | | |
| 12B | 075713 | 31536-41X19 | High | .078/2.0 | 87-90 | 1 | 27T - ID: 4.412" |
| 12B | 075713K200 | NA | High - Kolene® | .078/2.0 | 87-90 | 1 | 27T - ID: 4.412" |
| 12B | 075733 | 31536-41X02 | High | .118/3.0 | 87-90 | 3 | 27T - ID: 4.412" |
| **AXXESS** | | | | | | | |
| 12B | 075743 | 31536-21X04 | High | .095/2.4 | 91-93 | 4 | 24T - ID: 4.412" |
| **PRESSURE PLATES** | | | | | | | |
| 13B | 068760-340 | NA | High Backing- selective | .134/3.4 | 85-94 | AR | 24T |
| 13B | 068760-360 | 31567-21X00 | High Backing- selective | .142/3.6 | 85-94 | AR | 24T |
| 13B | 068760-380 | 31567-21X01 | High Backing- selective | .150/3.8 | 85-94 | AR | 24T |
| 13B | 068760-400 | 31567-21X02 | High Backing- selective | .157/4.0 | 85-94 | AR | 24T |
| 13B | 068760-420 | 31567-21X03 | High Backing- selective | .165/4.2 | 85-94 | AR | 24T |
| 13B | 068760-440 | 31567-21X04 | High Backing- selective | .173/4.4 | 85-94 | AR | 24T |
| 13B | 068760-460 | 31567-21X05 | High Backing- selective | .181/4.6 | 85-94 | AR | 24T |
| 13B | 068760-480 | 31567-21X06 | High Backing- selective | .189/4.8 | 85-94 | AR | 24T |
| 13B | 068760-500 | NA | High Backing- selective | .197/5.0 | 85-94 | AR | 24T |
| 13B | 075760-320 | NA | High Backing- selective | .126/3.2 | 91-93 | AR | 27T |
| 13B | 075760-340 | 31537-41X71 | High Backing- selective | .134/3.4 | 91-93 | AR | 27T |
| 13B | 075760-360 | 31537-41X61 | High Backing- selective | .142/3.6 | 91-93 | AR | 27T |
| 13B | 075760-380 | 31537-41X62 | High Backing- selective | .150/3.8 | 91-93 | AR | 27T |
| 13B | 075760-400 | 31537-41X63 | High Backing- selective | .157/4.0 | 91-93 | AR | 27T |
| 13B | 075760-420 | 31537-41X64 | High Backing- selective | .165/4.2 | 91-93 | AR | 27T |
| 13B | 075760-440 | 31537-41X65 | High Backing- selective | .173/4.4 | 91-93 | AR | 27T |
| 13B | 075760-460 | 31537-41X66 | High Backing- selective | .181/4.6 | 91-93 | AR | 27T |
| 13B | 075760-480 | 31537-41X67 | High Backing- selective | .189/4.8 | 91-93 | AR | 27T |
| 13B | 075760-500 | NA | High Backing- selective | .197/5.0 | 91-93 | AR | 27T |
| **OEI™ Original Equipment Improvements** | | | | | | | |
| KT | 068758 | NA | DRUMSAVER™ - Reverse (8T friction pack) | | various | 1 | allows reuse of worn drum |
| KT | 075758 | NA | DRUMSAVER™ - Reverse (34T friction pack) | | various | 1 | allows reuse of worn drum |
| KT | 075986 | NA | Shift Kit® | Transgo® | various | 1 | |
| **BANDS** | | | | | | | |
| 14A | 068950 | 31630-21X00 | Brake (Overdrive) | Tan | 85-94 | 1 | |
| **FILTERS** | | | | | | | |
| KT | FK068940 | NA | Filter Kit | | 85-94 | 1 | |
| 15D | 068940 | 31728-21X02 | Filter | | 85-94 | 1 | |
| **METAL CLAD SEALS** | | | | | | | |
| 16A | 068400 | 31344-21X00 | Converter Housing | | 85-94 | 1 | |
| N I | 042410 | 32709-14600 | Speedometer | | 85-94 | 1 | |
| N I | TBA | NA | Throttle Valve seal | | 85-94 | 1 | |
| **MAXIMA** | | | | | | | |
| 17A | 068425 | 38342-03E01 | Right Axle | 2.333 | 85-94 | 1 | |
| 18E | 068427 | 38342-21X01 | Left Axle (.433 thick) | 2.250 | 85-94 | 1 | |
| **STANZA** | | | | | | | |
| 17A | 068425 | 38342-03E01 | Right Axle Except 4wd wagon | 2.333 | 85-92 | 1 | |
| 17A | 068428 | 38342-06R01 | Right Axle 4wd wagon | 2.495 | 87-88 | 1 | |
| 18E | 068426 | 38342-21X00 | Left Axle without limited slip | 2.250 | 85-92 | 1 | |
| 18E | 068426A | 38342-21X03 | Left Axle with limited slip | 3.557 | 85-92 | 1 | |
| **PULSAR (NX)** | | | | | | | |
| 17A | 068425 | 38342-03E01 | Right Axle | 2.333 | 87-90 | 1 | |
| 18E | 068426 | 38342-21X00 | Left Axle | 2.250 | 87-90 | 1 | |

| ILL | ALTO NO | REF NO | DESCRIPTION | SPEC | YEAR | QTY | NOTES |
|---|---|---|---|---|---|---|---|
| **METAL CLAD SEALS** | | | | | | | ...Continued |
| **AXXESS** | | | | | | | |
| 17A | 068425 | 38342-03E01 | Right Axle (2wd) | 2.333 | 90-93 | 1 | |
| 18E | 068426 | 38342-21X00 | Left Axle | 2.250 | 87-90 | 1 | |
| **SEALING RINGS** | | | | | | | |
| KT | 068600 | NA | Sealing Ring Kit - 9T | | 85-94 | 1 | |
| 19A | 068100 | 31361-21X00 | Stator Support - Reverse drum | | 85-94 | 2 | |
| 20A | 068101 | 31558-21X00 | Stator Support - Direct drum | | 85-94 | 2 | |
| 21A | 068102 | 31366-21X04 | Pump Slide | | 85-94 | 1 | |
| 22F | 068103 | 31313-21X01 | Bearing Retainer to Low clutch | | 85-94 | 2 | |
| 23F | 068104 | 31487-21X00 | Output Shaft | | 85-94 | 2 | |
| **BUSHINGS** | | | | | | | |
| KT | 068625 | NA | Bushing Kit | | 85-94 | 1 | |
| 24A | 068200 | 31343-21X01 | Converter Housing | | 85-94 | 1 | |
| N I | 068201 | 31354-21X01 | Oil Pump shaft - Front | | 85-94 | 1 | |
| N I | 068202 | 31352-21X00 | Oil Pump shaft - Center | | 85-94 | 1 | |
| N I | 068203 | 31363-21X01 | Oil Pump shaft - Rear | | 85-94 | 1 | |
| N I | 068204 | 31483-21X01 | Output Shaft | | 85-94 | 1 | |

## NOTES

# NISSAN

## RE4F03A, RL4F03A, RL4F03V
## 1991-On

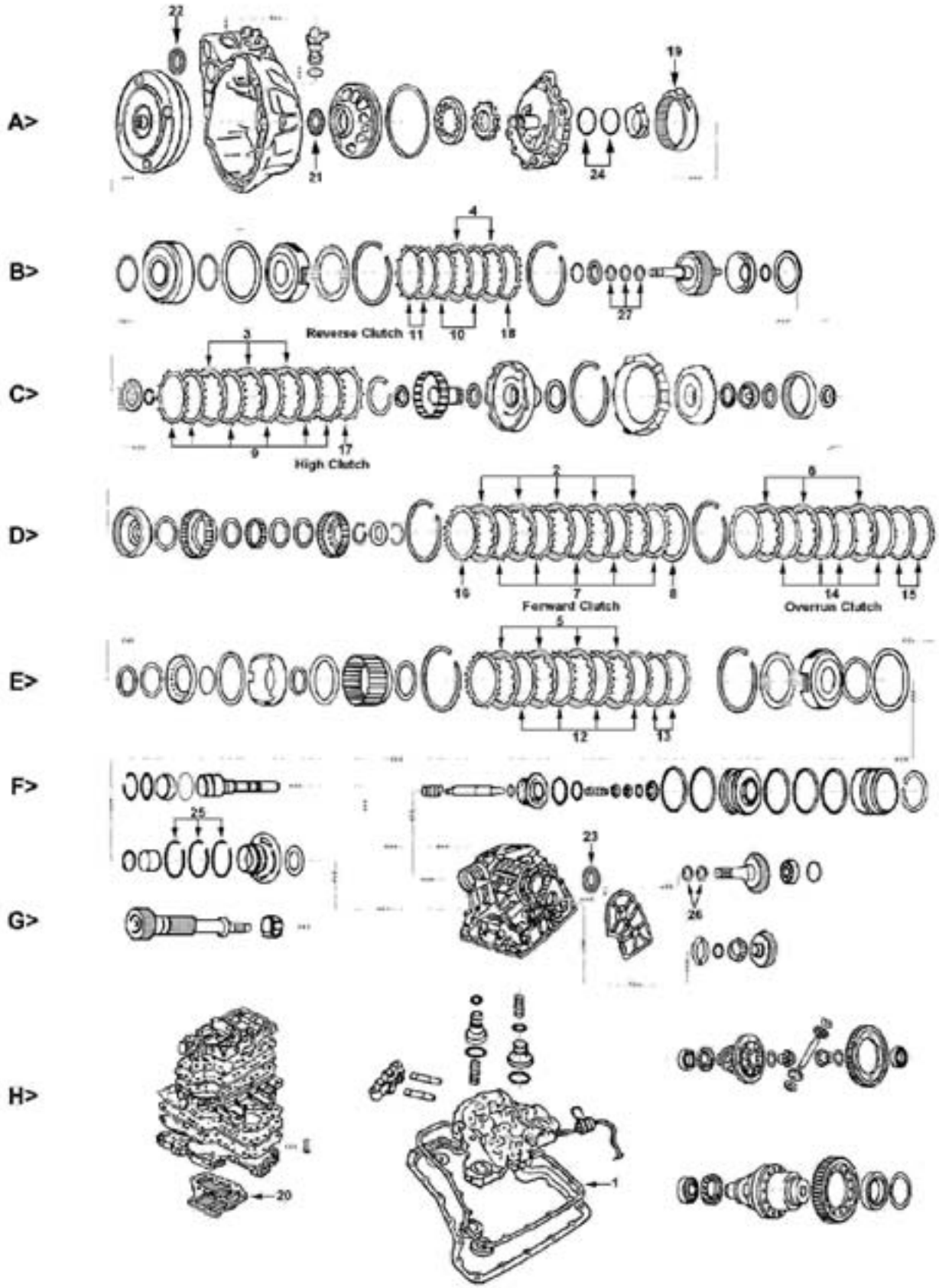

# NISSAN
## RE4F03A, RL4F03A, RL4F03V
## 1991-On

| ILL | DESCRIPTION | YEARS | FRICTION MODULE | STEEL MODULE | OVERHAUL KIT | BANNER KIT | MASTER KIT |
|---|---|---|---|---|---|---|---|
| **KITS** | | | | | | | |
| KT | Rebuilding Kit - 1.6L engine | 91-94 | 107752 | 107753 | 107800 | 107901LS | 107901 |
| KT | Rebuilding Kit - 1.6L engine | 95-On | 107752A | 107753 | 107800 | 107901ALS | 107901A |
| KT | Rebuilding Kit - 2.0L engine | 91-94 | 107752 | 107753A | 107800 | 107901LS | 107901B |
| KT | Rebuilding Kit - 2.0L engine | 95-On | 107752A | 107753A | 107800 | 107901ALS | 107901C |

| ILL | ALTO NO | REF NO | DESCRIPTION | SPEC | YEAR | QTY | NOTES |
|---|---|---|---|---|---|---|---|
| **MISCELLANEOUS GASKETS & KIT COMPONENTS** | | | | | | | |
| 1H | 107816 | 31397-31X02 | Gasket, Oil Pan | Cork/Rub | 91-On | 1 | |
| **FRICTION CLUTCHES** | | | | | | | |
| 2D | 107700 | 31532-31X02 | Forward | .071/1.8 | 91-On | 5 | Heg - 30T - OD: 4.976" - PL |
| 3C | 107702A | 31532-31X01 | High - 1.6L engine | .078/2.0 | 91-On | 4 | Heg - 20T - OD: 4.096" - PL |
| 3C | 107702 | 31532-31X08 | High - 2.0L engine | .063/1.6 | 91-On | 4 | Heg - 20T - OD: 4.096" - PL |
| 4B | 107704 | 31532-31X00 | Reverse | .077/1.95 | 91-On | 2 | Heg - 18T - OD: 5.142" - PL |
| 5E | 107706 | 31532-31X04 | Low / Reverse | .077/1.95 | 91-94 | 3 | Heg - 30T - OD: 5.906" - PL |
| 5E | 107706A200 | 31532-31X10 | Low / Reverse | .078/2.0 | 95-On | 3 | Heg - 30T - OD: 5.906" - PL |
| 6D | 107708 | 31532-31X16 | Overrun | .063/1.6 | 91-On | 3 | Heg - 18T - OD: 4.608" - PL |
| **STEEL CLUTCHES** | | | | | | | |
| 7D | 107701 | 31536-31X14 | Forward | .078/2.0 | 91-On | 5 | 30T - ID: 4.262" |
| 8D | TBA | 31535-31X02 | Forward - dish | | 91-On | 1 | 30T - ID: 4.262" |
| 9C | 107703 | 31536-31X12 | High - 1.6L engine | .078/2.0 | 91-On | 5-6 | 18T - ID: 3.425" |
| 9C | 107703 | 31536-31X12 | High - 2.0L engine | .078/2.0 | 91-On | 1 | 18T - ID: 3.425" |
| 9C | 107703-150 | 31536-31X13 | High - 2.0L engine | .059/1.5 | 91-On | 5 | 18T - ID: 3.425" |
| 10C | 107705 | 31536-31X15 | Reverse | .078/2.0 | 91-On | 2 | 30T - ID: 5.649" |
| 11C | TBA | 31535-31X11 | Reverse - dish | | 91-On | 2 | 30T - ID: 5.649" |
| 12E | 107707 | 31666-31X03 | Low / Reverse | .078/2.0 | 91-On | 5 | 10T - ID: 5.477" |
| 13E | TBA | 31535-31X10 | Low / Reverse - dish | | 91-On | 2 | 10T - ID: 5.477" |
| 14D | 107709 | 31536-31X16 | Overrun | .078/2.0 | 91-On | 5 | 6T - ID: 4.138" |
| 15D | TBA | 31535-31X03 | Overrun - dish | | 91-On | 1-2 | 6T - ID: 4.138" |
| **PRESSURE PLATES** | | | | | | | |
| 16D | 107760-360 | 31537-31X60 | Forward backing - selective | 3.60 | 91-On | AR | |
| 16D | 107760-380 | 31537-31X61 | Forward backing - selective | 3.80 | 91-On | AR | |
| 16D | 107760-400 | 31537-31X62 | Forward backing - selective | 4.00 | 91-On | AR | |
| 16D | 107760-420 | 31537-31X63 | Forward backing - selective | 4.20 | 91-On | AR | |
| 16D | 107760-440 | 31537-31X64 | Forward backing - selective | 4.40 | 91-On | AR | |
| 16D | 107760-460 | 31537-31X65 | Forward backing - selective | 4.60 | 91-On | AR | |
| 17C | 107761-335 | NA | High backing - selective | 3.35 | 91-On | AR | |
| 17C | 107761-395 | 31537-32X01 | High backing - selective | 3.95 | 91-On | AR | |
| 17C | 107761-415 | 31537-32X02 | High backing - selective | 4.15 | 91-On | AR | |
| 17C | 107761-435 | 31537-32X03 | High backing - selective | 4.35 | 91-On | AR | |
| 17C | 107761-455 | 31537-32X04 | High backing - selective | 4.55 | 91-On | AR | |
| 17C | 107761-475 | 31537-32X05 | High backing - selective | 4.75 | 91-On | AR | |
| 18B | TBA | 31537-31X00 | Reverse backing - selective | 4.40 | 91-On | AR | |
| 18B | TBA | 31537-31X01 | Reverse backing - selective | 4.60 | 91-On | AR | |
| 18B | TBA | 31537-31X02 | Reverse backing - selective | 4.80 | 91-On | AR | |
| 18B | TBA | 31537-31X03 | Reverse backing - selective | 5.00 | 91-On | AR | |
| 18B | TBA | 31537-31X04 | Reverse backing - selective | 5.20 | 91-On | AR | |
| **PP KITS - includes PP and Snap ring** | | | | | | | |
| N I | 107765-355 | 31537-32X12 | High backing - selective | 3.55 | 91-On | AR | |
| N I | 107765-495 | 31537-32X06 | High backing - selective | 4.95 | 91-On | AR | |
| **BANDS** | | | | | | | |
| 19A | 107950 | 31630-31X01 | Brake | Tan | 91-On | 1 | |
| **FILTERS** | | | | | | | |
| KT | FK107940 | NA | Filter Kit | | 91-On | 1 | |
| 20H | 107940 | 31728-31X01 | Filter | | 91-On | 1 | |
| N I | 107551 | 31726-41X00 | Filter - VB thimble | | 91-On | 1 | |

# NISSAN

## RE4F03A, RL4F03A, RL4F03V
## 1991-On

| ILL | ALTO NO | REF NO | DESCRIPTION | SPEC | YEAR | QTY | NOTES |
|---|---|---|---|---|---|---|---|
| **METAL CLAD SEALS** | | | | | | | |
| 21A | 107400 | 31375-31X00 | Front Pump | | 91-On | 1 | |
| N I | 107420 | 31375-31X01 | Manual Lever | | 91-On | 1 | |
| N I | 042410A | 32709-58S00 | Speedometer | .637 | 91-On | 1 | |
| 22A | 107425 | 38342-31X00 | Right Axle - 1.6L | 2.220 | 91-On | 1 | Large ID |
| 22A | 107425A | 38342-31X01 | Right Axle - 2.0L | 2.220 | 91-On | 1 | Small ID |
| 23G | 107425 | 38342-31X00 | Left Axle - 1.6L | 2.220 | 91-On | 1 | |
| 23G | 107425 | 38342-31X00 | Left Axle - 2.0L with viscous coupling | 2.220 | 91-On | 1 | |
| 23G | 107427 | 38342-31X02 | Left Axle - 2.0L without viscous coupling | 3.560 | 91-On | 1 | |
| **SEALING RINGS** | | | | | | | |
| KT | 107600 | E511 | Sealing Ring Kit - 2M / 12T | | 91-On | 1 | |
| 24A | 107100 | 31525-31X11 | Stator Support (Reverse drum) | Metal | 91 | 2 | |
| 24A | 107110 | 31525-31X12 | Stator Support (Reverse drum) | Teflon | 92-On | 2 | |
| 25G | 107101 | 31525-31X03 | Bearing Retainer (Forward/Overrun drum) | Teflon | 91-On | 3 | |
| 26G | 107102 | 31525-31X04 | Output shaft - 1.6L engine | Teflon | 91-On | 2 | |
| 26G | 107103 | 31525-31X05 | Output shaft - 2.0L engine | Teflon | 91-On | 2 | |
| 27B | 107104 | 31525-31X02 | Input shaft | Teflon | 91-On | 3 | |

**NOTES**

A>

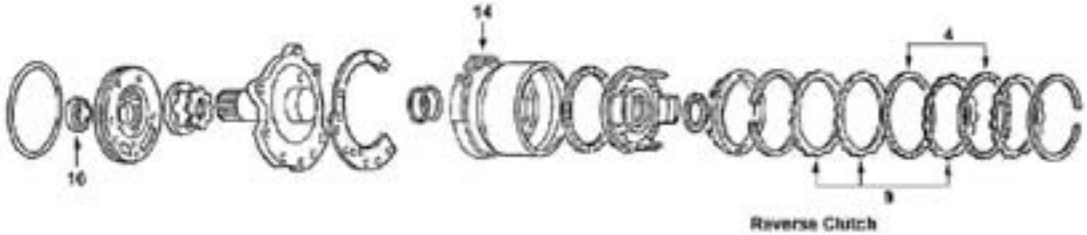
14
4
10
9
Reverse Clutch

B>

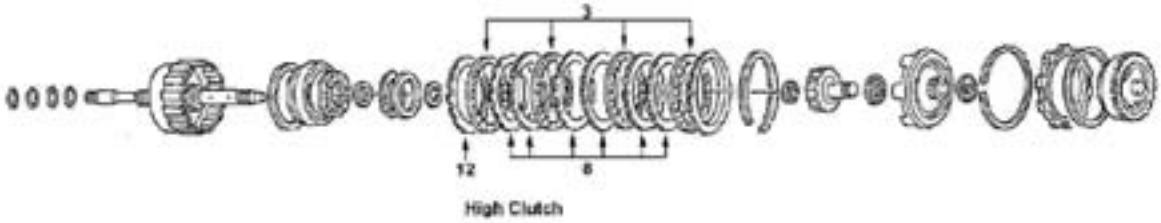
3
12
8
High Clutch

C>

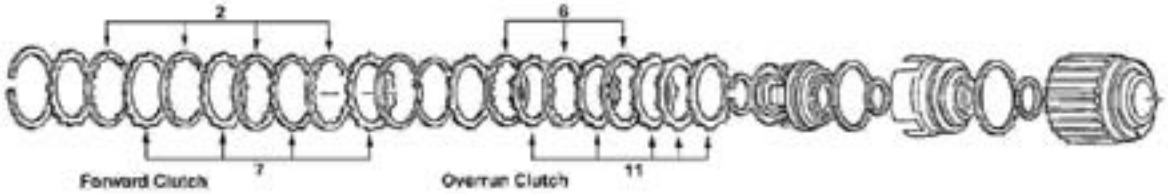
2
6
Forward Clutch
7
Overrun Clutch
11

D>

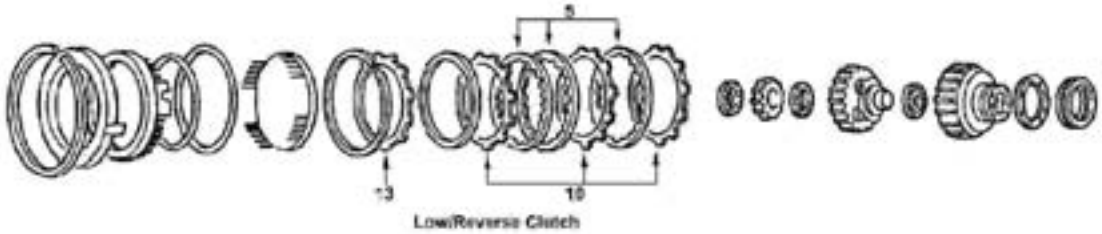
5
13
10
Low/Reverse Clutch

E>

F>

17
18

G>

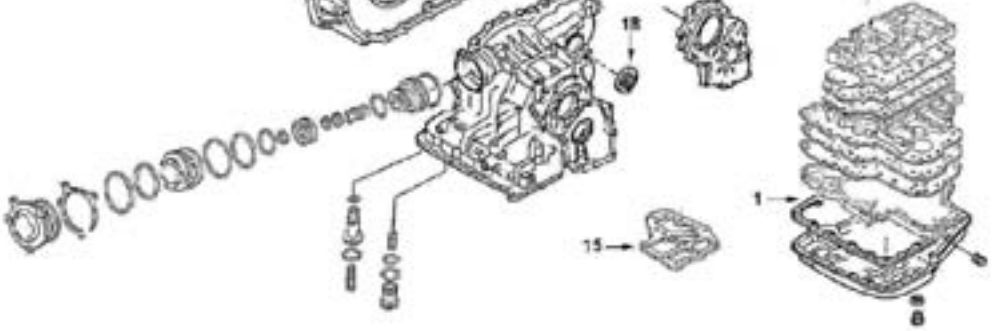
1
15
8

# NISSAN

## NISSAN - RE4F04A
## FORD - 4F20E
## 1992-On

| ILL | DESCRIPTION | YEARS | FRICTION MODULE | STEEL MODULE | OVERHAUL KIT | BANNER KIT | MASTER KIT |
|---|---|---|---|---|---|---|---|
| **KITS** | | | | | | | |
| KT | Rebuilding Kit | 92-02 | 105752A | 105753A | 105802 | 105903LS | 105903 |
| KT | Rebuilding Kit | 93-On | 105752D | 105753D | 105802 | 105903ALS | 105903A |

| ILL | ALTO NO | REF NO | DESCRIPTION | SPEC | YEAR | QTY | NOTES |
|---|---|---|---|---|---|---|---|
| **MISCELLANEOUS GASKETS & KIT COMPONENTS** | | | | | | | |
| 1G | 105818 | 31397-80X01 | Gasket, Oil Pan | Cork/Rub | 92-On | 1 | |
| **FRICTION CLUTCHES** | | | | | | | |
| 2C | 105700 | 31532-80X02 | Forward | .063/1.6 | 92-On | 5 | Heg - 32T - OD: 5.424" - PL |
| 3B | 105702 | 31532-80X05 | High | .063/1.6 | 92-94 | 4 | Heg - 21T - OD: 4.416" - PL |
| 3B | 105702B | 31532-80X10 | High | .063/1.6 | 95-02 | 4 | Tan - 24T - OD: 4.416" - PL |
| 3B | 105702C150 | 31532-89X01 | High | .059/1.5 | 95-02 | 5 | Heg - 24T - OD: 4.416" - PL |
| 4A | 105704 | 31532-80X06 | Reverse | .063/1.6 | 92-02 | 2 | Heg - 28T - OD: 5.480" - PL |
| 4A | 105704A160 | 31532-89X00 | Reverse | .063/1.6 | 93-On | 2 | Heg - 28T - OD: 5.800" - PL |
| 5D | 105706-180 | 31662-88X03 | Low / Reverse | .071/1.8 | 92-On | 6-7 | Heg - 32T - OD: 6.455" - PL |
| 6C | 105708 | 31532-80X16 | Overrun | .063/1.6 | 92-On | 3 | Tan - 20T - OD: 4.940" - PL |
| **STEEL CLUTCHES** | | | | | | | |
| 7C | 105701 | 31536-80X08 | Forward | .071/1.8 | 92-On | 5 | 32T - ID: 4.928" |
| 8B | 105703-140 | 31536-80X14 | High | .055/1.4 | 92-On | 6 | 28T - ID: 4.681" |
| 8B | 105703-200 | 31536-80X13 | High | .078/2.0 | 92-On | 1 | 28T - ID: 4.681" |
| 9A | 105705 | 31536-80X09 | Reverse | .071/1.8 | 92-02 | 2 | 30T - ID: 4.957" |
| 9A | 105705B180 | 31536-89X00 | Reverse | .071/1.8 | 93-On | 2 | 32T - ID: 4.957" |
| 10D | 105707 | 31666-80X03 | Low / Reverse | .071/1.8 | 92-On | 6-8 | 10T - ID: 5.905" |
| 11C | 105709 | 31536-80L04 | Overrun | .063/1.6 | 92-On | 5 | 8T - ID: 4.447" |
| **PRESSURE PLATES** | | | | | | | |
| 12B | 105761-310 | 31537-81X10 | High - backing | .122/3.1 | 92-On | AR | |
| 12B | 105761-330 | 31537-81X11 | High - backing | .130/3.3 | 92-On | AR | |
| 12B | 105761-350 | 31537-81X12 | High - backing | .138/3.5 | 92-On | AR | |
| 12B | 105761-370 | 31537-81X13 | High - backing | .146/3.7 | 92-On | AR | |
| 12B | 105761-400 | 31537-81X14 | High - backing | .157/4.0 | 92-On | AR | |
| 13D | 105707-200 | 31667-80X00 | Low / Reverse - apply | .078/2.0 | 92-On | AR | |
| 13D | 105707-220 | 31667-80X01 | Low / Reverse - apply | .086/2.2 | 92-On | AR | |
| 13D | 105707-240 | 31667-80X02 | Low / Reverse - apply | .095/2.4 | 92-On | AR | |
| 13D | 105707-260 | 31667-80X03 | Low / Reverse - apply | .102/2.6 | 92-On | AR | |
| 13D | 105707-280 | 31667-80X04 | Low / Reverse - apply | .110/2.8 | 92-On | AR | |
| 13D | 105707-300 | 31667-80X05 | Low / Reverse - apply | .118/3.0 | 92-On | AR | |
| 13D | 105707-320 | 31667-80X06 | Low / Reverse - apply | .126/3.2 | 92-On | AR | |
| 13D | 105707-340 | 31667-80X07 | Low / Reverse - apply | .134/3.4 | 92-On | AR | |
| N I | 105705A272 | NA | DRUMSAVER™ Comp - Reverse Cushion Spring | | 92-On | 1 | Wave |
| N I | 105705-272 | NA | DRUMSAVER™ Comp - Reverse Spacer Plate | | 92-On | 1 | |
| **OEI™ Original Equipment Improvements** | | | | | | | |
| N I | 105757X | NA | DRUMSAVER™ Kit - Reverse Drum | | 92-On | 1 | |
| N I | 075986A | NA | Shift Kit® | Transgo® | 92-On | 1 | |
| **BANDS** | | | | | | | |
| 14A | 105952 | 31630-80X02 | Brake | Tan | 92-On | 1 | |
| **FILTERS** | | | | | | | |
| KT | FK105942 | NA | Filter Kit | | 92-On | 1 | |
| 15G | 105942 | 31728-80X04 | Filter | | 92-On | 1 | |
| **METAL CLAD SEALS** | | | | | | | |
| 16A | 068400 | 31344-21X00 | Front Pump | | 92-On | 1 | |
| 17F | 068425 | 38342-03E01 | Right Axle | 2.335 | 92-On | 1 | |
| 18F | 105425 | 38342-03E00 | Left Axle without viscous coupling | 2.335 | 92-On | 1 | |
| 18F | 068426A | 38342-80X00 | Left Axle with viscous coupling | 3.560 | 92-On | 1 | |
| **SEALING RINGS** | | | | | | | |
| KT | 105600 | E512 | Sealing Ring Kit - 2M / 10T | | 92-On | 1 | |

## NOTES

# RENAULT

## MB101 / ML1 - FWD (Transaxle)
## MJ3, MJ5 - FWD (Inline)

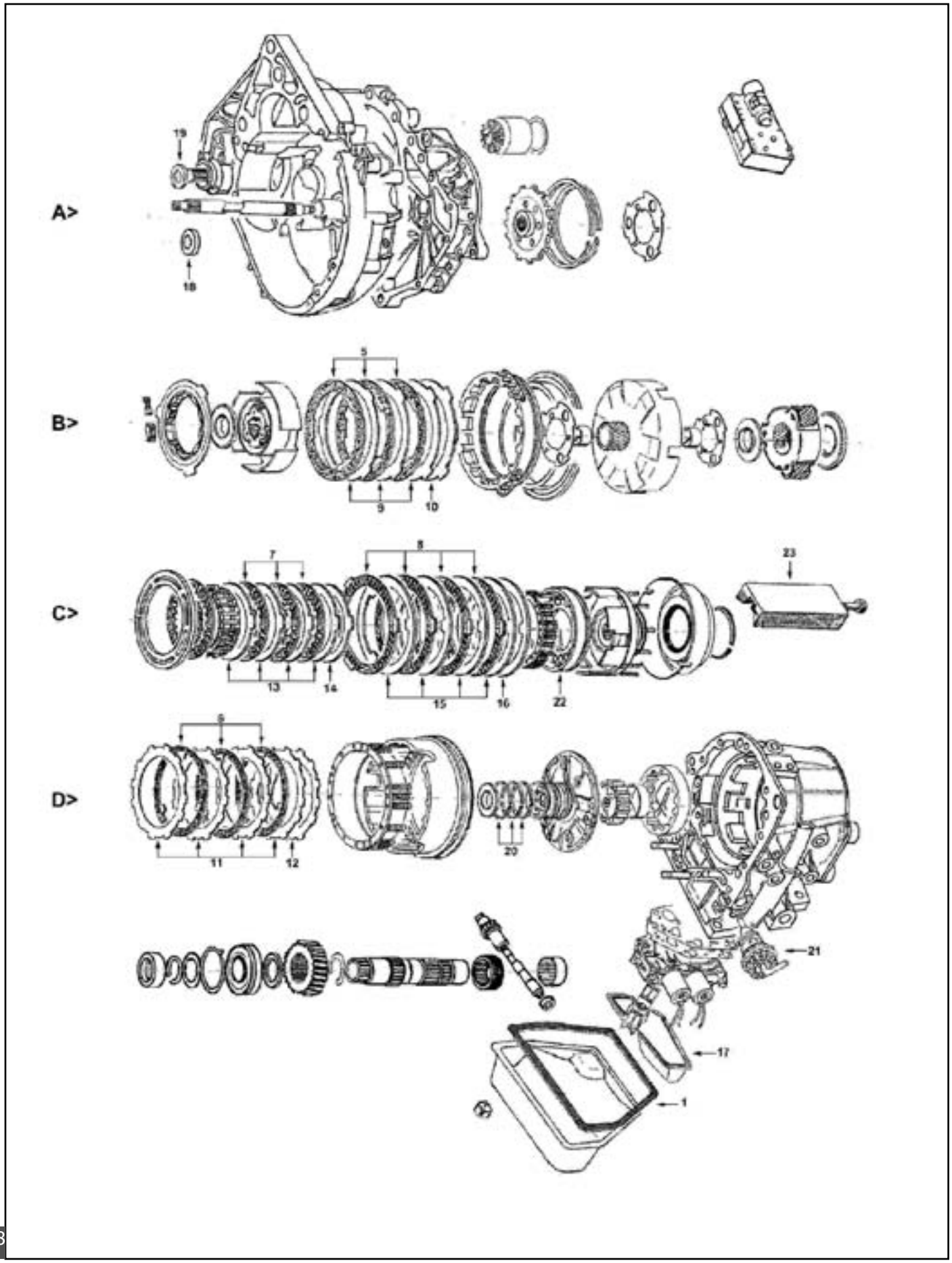

# RENAULT
## MB101 / ML1 - FWD (Transaxle)
## MJ3, MJ5 - FWD (Inline)

| ILL | DESCRIPTION | YEARS | FRICTION MODULE | STEEL MODULE | OVERHAUL KIT | BANNER KIT | MASTER KIT |
|---|---|---|---|---|---|---|---|
| **KITS** | | | | | | | |
| KT | Rebuilding Kit - MB101 without E1/E2 | 83-90 | 066752A | 066753A | 066800A | 066901LS | 066901 |
| KT | Rebuilding Kit - MB101 with E1/E2 (Flat Steels Only) | 83-90 | 066752B | 066753B | 066800 | 066903LS | 066907 |
| KT | Rebuilding Kit - MB101 with E1/E2 (Flat & Wave Steels) | 83-90 | 066752B | 066753 | 066800 | 066903LS | 066903 |
| KT | Rebuilding Kit - MJ3, MJ5 | 86-90 | 066752B | 066753 | 066802 | 066905LS | 066905 |

| ILL | ALTO NO | REF NO | DESCRIPTION | SPEC | YEAR | QTY | NOTES |
|---|---|---|---|---|---|---|---|
| **MISCELLANEOUS GASKETS & KIT COMPONENTS** | | | | | | | |
| 1D | 066818 | 7700-680-106 | Gasket, Oil Pan | M.Rubber | 83-90 | 1 | |
| **FRICTION CLUTCHES** | | | | | | | |
| 5B | 066702 | 7701-635-538 | Front | .078/2.0 | 83-90 | 4 | Tan - 3T - OD: 7.486" - SM |
| 6D | 066700 | 7701-635-537 | Rear | .078/2.0 | 83-90 | 4-5 | Tan - 3T - OD: 7.006" - SM |
| 7C | 066704 | NA | E1 | .078/2.0 | 83-90 | 4-5 | Tan - 21T - OD: 4.841" - PL |
| 8C | 066706 | NA | E2 | .078/2.0 | 83-90 | 4-5 | Tan - 3T - OD: 6.158" - PL |
| **STEEL CLUTCHES** | | | | | | | |
| 9B | 066703 | 7701-463-363 | Front - Flat | .059/1.5 | 83-90 | 5 | 3T - ID: 6.739" |
| 10B | 066713 | NA | Front - Wave | .059/1.5 | 83-90 | 1 | 3T - ID: 6.739" |
| 11D | 066701 | 7701-463-364 | Rear - Flat | .059/1.5 | 83-90 | 3-4 | 12T - ID: 7.006" |
| 12D | 066711 | NA | Rear - Wave | .059/1.5 | 83-90 | 1 | 12T - ID: 7.006" |
| 13C | 066705 | NA | E1 - Flat | .059/1.5 | 83-90 | 4 | 3T - ID: 4.291" |
| 14C | 066715 | NA | E1 - Wave | .059/1.5 | 83-90 | 1 | 3T - ID: 4.291" |
| 15C | 066707 | NA | E2 - Flat | .059/1.5 | 83-90 | 4 | 3T - ID: 4.965" |
| 16C | 066717 | NA | E2 - Wave | .059/1.5 | 83-90 | 1 | 3T - ID: 4.965" |
| **FILTERS** | | | | | | | |
| 17D | 066940 | 7700-712-751 | Filter - MB1, MJ3 | | 83-88 | 1 | 7700-727-43 |
| 17D | 066942 | 7700-739-883 | Filter - MJ5 (middle pickup) | | 86-90 | 1 | |
| 17D | 066944 | 7700-723-786 | Filter - MB1 (end pickup) | | 83-90 | 1 | |
| **METAL CLAD SEALS** | | | | | | | |
| 18A | 066400 | 7701-033-422 | Front Pump - MB1 | 2.608 | 83-90 | 1 | |
| 18A | 066402 | 7703-087-024 | Front Pump - MJ3/MJ5 | 2.570 | 83-90 | 1 | |
| 19A | 066425 | 7703-087-146 | Axle - MB1 | 2.218 | 83-90 | 1 | |
| N I | 066425A | 7703-087-142 | Axle - MB1 | | 83-90 | 1 | |
| 19A | 066426 | 7703-087-106 | Axle - MJ3 (tag # 760 & 761) | 1.660 | 83-90 | 2 | |
| 19A | 066427 | 7700-737-000 | Right Axle - MJ3 (tag # 762) | 1.785 | 83-90 | 1 | |
| N I | 066428 | 7700-736-999 | Left Axle - MJ3 (tag # 762) | 1.725 | 83-90 | 1 | |
| **SEALING RINGS** | | | | | | | |
| KT | 066601 | G718 | Sealing Ring Kit - 3M | | 83-90 | 1 | |
| 20D | 066100 | 7701-462-295 | Pump Stator to E1/E2 clutch | | 83-90 | 3 | |
| **BUSHINGS** | | | | | | | |
| KT | 066625 | NA | Bushing Kit | | 83-90 | 1 | |
| **MODULATORS** | | | | | | | |
| 21D | 066500 | 7700-714-199 | Modulator | | 83-90 | 1 | |
| **MOLDED PISTONS** | | | | | | | |
| 22C | 066331 | 7700-715-990 | E1/E2 Clutch | M.Rubber | 83-90 | 1 | |
| **MISCELLANEOUS** | | | | | | | |
| 23C | TBA | T5299 | Tool, opens & closes E1/E2 clutch drum | | 83-90 | 1 | |

**NOTES**

# RENAULT

## 4139 / ML1 - FWD (Inline)

## 1973-89

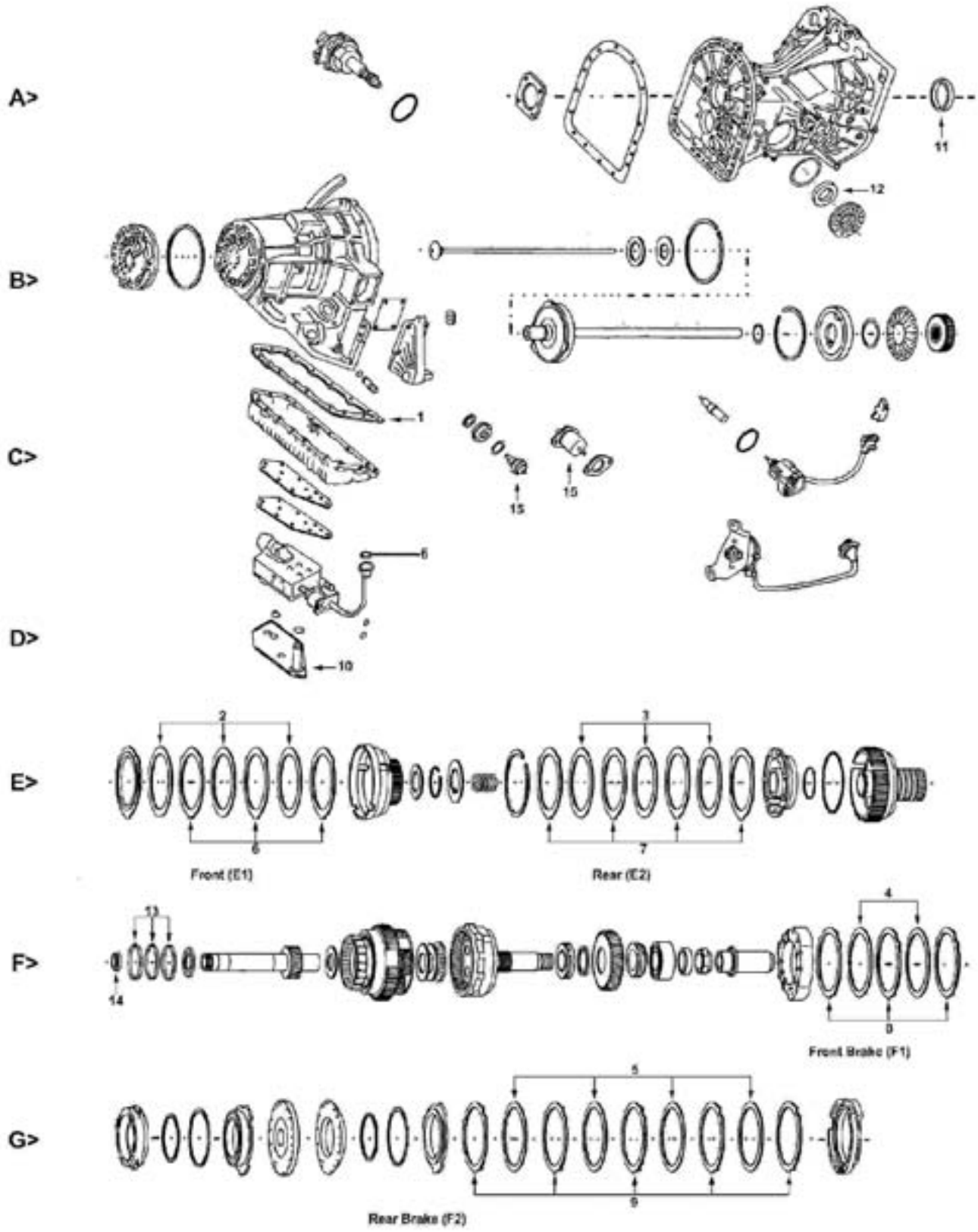

# RENAULT
## 4139 / ML1 - FWD (Inline)
## 1973-89

| ILL | DESCRIPTION | YEARS | FRICTION MODULE | STEEL MODULE | OVERHAUL KIT | BANNER KIT | MASTER KIT |
|---|---|---|---|---|---|---|---|
| **KITS** | | | | | | | |
| KT | Rebuilding Kit | 73-89 | 072752 | 072753 | 072800 | 072901LS | 072901 |

| ILL | ALTO NO | REF NO | DESCRIPTION | SPEC | YEAR | QTY | NOTES |
|---|---|---|---|---|---|---|---|
| **MISCELLANEOUS GASKETS & KIT COMPONENTS** | | | | | | | |
| 1C | 072816 | 7701-460-396 | Gasket, Oil Pan | Fiber | 73-89 | 1 | |
| 1C | 072816A | NA | Gasket, Oil Pan - Fuego | Fiber | 82-89 | 1 | |
| **FRICTION CLUTCHES** | | | | | | | |
| 2E | 029712 | 7701-452-915 | Front (E1) | .061/1.55 | 73-89 | 2-3 | Tan - 36T - OD: 4.248" - PL |
| 3E | 029712 | 7701-452-915 | Rear (E2) | .061/1.55 | 73-89 | 2-3 | Tan - 36T - OD: 4.248" - PL |
| 4F | 072700 | 7701-457-135 | Front Brake (F1) | .061/1.55 | 73-89 | 3 | Tan - 45T - OD: 6.081" - PL |
| 5G | 072700 | 7701-457-135 | Rear Brake (F2) | .061/1.55 | 73-89 | 3 | Tan - 45T - OD: 6.081" - PL |
| **STEEL CLUTCHES** | | | | | | | |
| 6E | 072703 | 7701-452-915 | Front (E1) | .059/1.5 | 73-89 | 3 | 3T - ID: 3.110" |
| 7E | 072703 | 7701-452-915 | Rear (E2) | .059/1.5 | 73-89 | 3 | 3T - ID: 3.110" |
| 6/7E | 072713 | NA | Front (E1) & Rear (E2) - selective | .100/2.55 | 73-89 | AR | 3T - ID: 3.110" |
| 8F | 072701 | 7701-457-135 | Front Brake (F1) | .059/1.5 | 73-89 | 3 | 3T - ID: 4.977" |
| 9G | 072701 | 7701-457-135 | Rear Brake (F1) | .059/1.5 | 73-89 | 4 | 3T - ID: 4.977" |
| 8F | 072711 | NA | F1 & F2 - selective | .078/2.0 | 73-89 | AR | 3T - ID: 4.977" |
| **FILTERS** | | | | | | | |
| 10D | 072940 | 7700-730-181 | Filter | | 73-89 | 1 | |
| **METAL CLAD SEALS** | | | | | | | |
| 11A | 066402 | 7703-087-024 | Converter Housing - some | 66mm | 73-89 | 1 | |
| 11A | 072400 | NA | Converter Housing - some | 60mm | 73-89 | 1 | |
| 12A | 066425 | 7703-087-146 | Axle (Differential) | 54mm | 73-89 | 2 | |
| 12A | 066426 | 7703-087-106 | Axle (Differential) | 42mm | 73-89 | 2 | |
| **SEALING RINGS** | | | | | | | |
| KT | 072600 | NA | Sealing Ring Kit - 4M | | 73-89 | 1 | |
| 13F | 072100 | 7700-676-814 | Output shaft to Rear Brake - large | | 73-89 | 3 | |
| 14F | 072101 | 7700-676-813 | Output shaft to Rear Brake - small | | 73-89 | 1 | |
| **MODULATORS** | | | | | | | |
| 15D | 066500 | 7700-714-199 | Modulator - screw in | | 73-89 | 1 | |
| 15D | 072500 | NA | Modulator - flange type | | 73-89 | 1 | |

**NOTES**

# RENAULT

## 4141 Delorean, Alpine
## Zimmer Motor Home 1981-On

A>

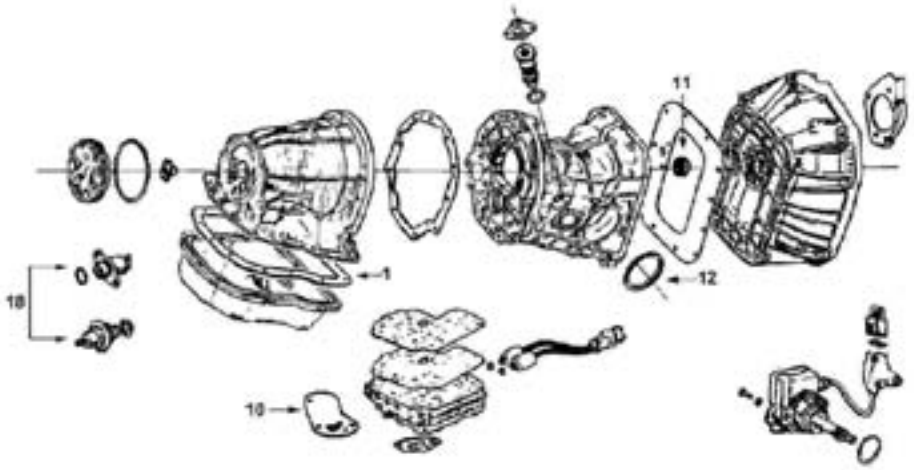


B>

C>

D>

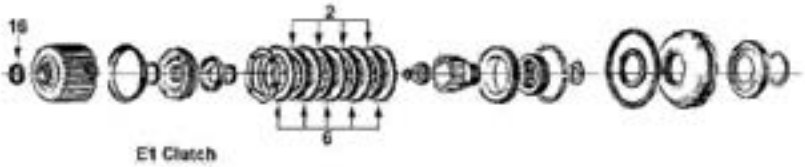


E>

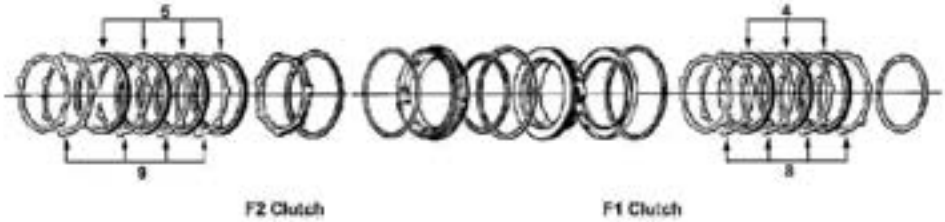


F>

G>

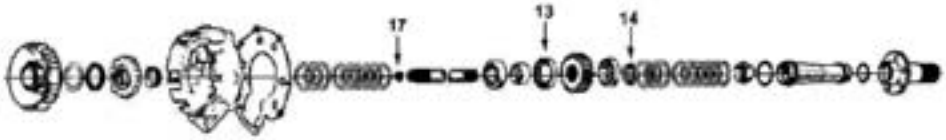

# RENAULT

## 4141 Delorean, Alpine
## Zimmer Motor Home 1981-On

| ILL | DESCRIPTION | YEARS | FRICTION MODULE | STEEL MODULE | OVERHAUL KIT | BANNER KIT | MASTER KIT |
|---|---|---|---|---|---|---|---|
| **KITS** | | | | | | | |
| KT | Rebuilding Kit | 81-On | 072752A | 072753A | 072802 | 072903LS | 072903 |

| ILL | ALTO NO | REF NO | DESCRIPTION | SPEC | YEAR | QTY | NOTES |
|---|---|---|---|---|---|---|---|
| **MISCELLANEOUS GASKETS & KIT COMPONENTS** | | | | | | | |
| 1A | 072818 | NA | Gasket, Oil Pan | Cork/Rub | 81-On | 1 | |
| **FRICTION CLUTCHES** | | | | | | | |
| 2D | 038700 | NA | E1 (3rd) | .098/2.5 | 81-On | 4 | Tan - 12T - OD: 3.872" - SM |
| 3C | 038702 | NA | E2 (2nd) | .098/2.5 | 81-On | 4 | Tan - 30T - OD: 5.224" - SM |
| 4E | 038704 | NA | F1 | .098/2.5 | 81-On | 3 | Tan - 36T - OD: 6.405" - SM |
| 5E | 038704 | NA | F2 | .098/2.5 | 81-On | 4 | Tan - 36T - OD: 6.405" - SM |
| **STEEL CLUTCHES** | | | | | | | |
| 6D | 038701 | NA | E1 (3rd) | .078/2.0 | 81-On | 5 | 30T - ID: 2.848" |
| 7C | 038703 | NA | E2 (2nd) | .078/2.0 | 81-On | 5 | 36T - ID: 4.303" |
| 8E | 038705 | NA | F1 | .083/2.1 | 81-On | 4 | 7T - ID: 5.429" |
| 9E | 038705 | NA | F2 | .083/2.1 | 81-On | 4 | 7T - ID: 5.429" |
| **FILTERS** | | | | | | | |
| 10B | 072942 | NA | Filter - except below | | 81-On | 1 | |
| 10B | 072944 | NA | Filter - Delorean | | 81-83 | 1 | |
| **METAL CLAD SEALS** | | | | | | | |
| 11A | 072402 | NA | Converter Housing | 70mm | 81-On | 1 | |
| 12A | 072425 | NA | Differential - Metal case | 58mm | 81-On | 1 | |
| 12A | 072425A | NA | Differential - Rubber case | 58mm | 81-On | 1 | |
| 13G | 072403 | NA | Planetary shaft | 65mm | 81-On | 1 | |
| 14G | 072404 | NA | Planetary shaft | 42mm | 81-On | 1 | |
| **SEALING RINGS** | | | | | | | |
| KT | 072601 | NA | Sealing Ring Kit - 4M | | 81-On | 1 | |
| 15C | TBA | NA | E2 drum | | 81-On | 2 | |
| 16D | 072103 | NA | E1 drum - outer | | 81-On | 1 | |
| 17G | 072104 | NA | Mainshaft to E1 drum | | 81-On | 1 | |
| **MODULATORS** | | | | | | | |
| 18A | 072502 | NA | Clamp type | | 81-On | 1 | |
| 18A | 072503 | NA | Screw in | | 81-On | 1 | |

## NOTES

# RENAULT
## AR4, AD4, AD8
## 1988-On

A>

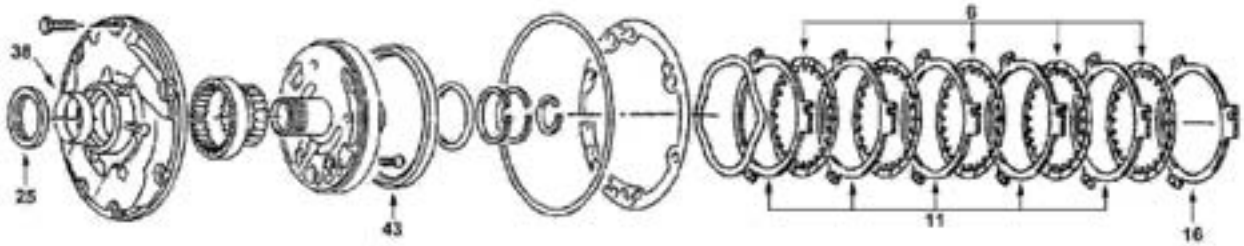


B2 (2-4 Clutch)

B>

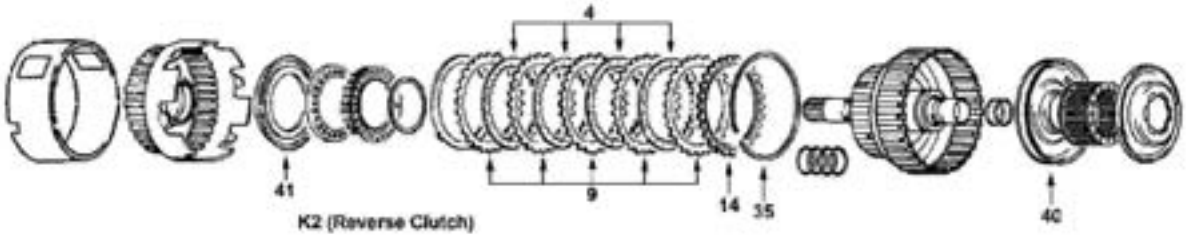


K2 (Reverse Clutch)

C>

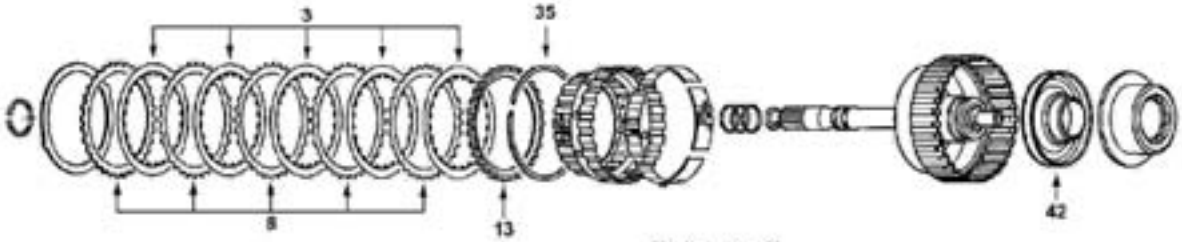


K1 (1-3 Clutch)

D>

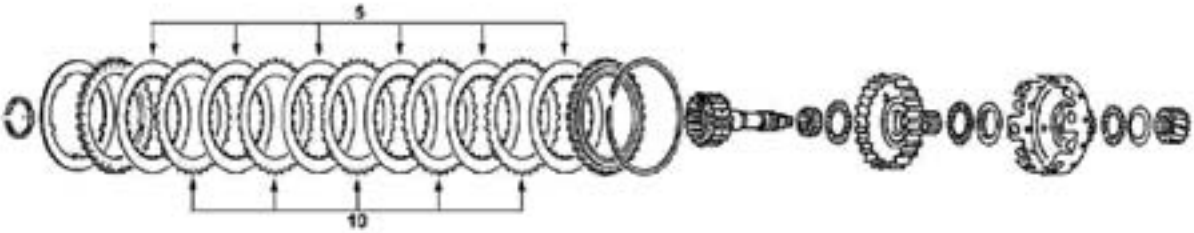


K3 (3-4 Clutch)

E>

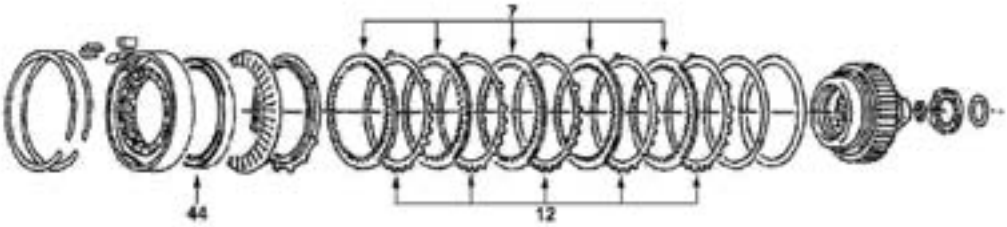


B1 (Low / Reverse Clutch)

# RENAULT
## AR4, AD4, AD8
## 1988-On

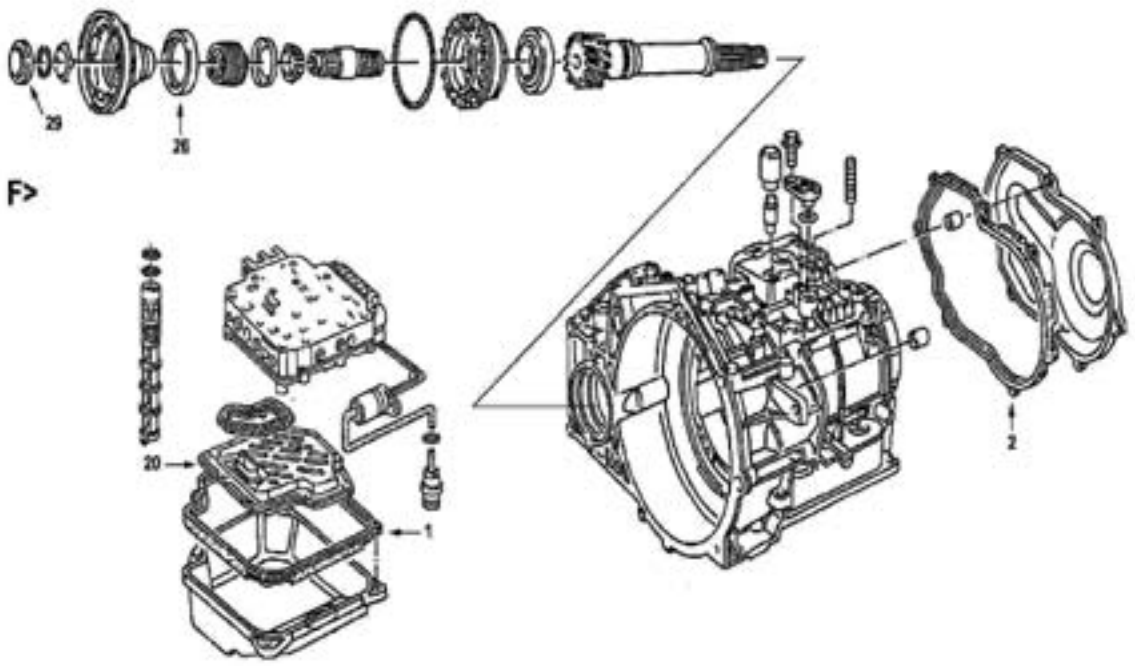


| ILL | DESCRIPTION | YEARS | FRICTION MODULE | STEEL MODULE | OVERHAUL KIT | BANNER KIT | MASTER KIT |
|---|---|---|---|---|---|---|---|
| **KITS** | | | | | | | |
| KT | Rebuilding Kit - AR4 with Molded pistons | 88-On | 109752B | 109753B | 109804 | 109905LS | 109905 |
| KT | Rebuilding Kit - AR4 without Molded pistons | 88-On | 109752B | 109753B | 109804A | 109905ALS | 109905A |
| KT | Rebuilding Kit - AD4 with Molded pistons | 90-On | 109752F | 109753F | 109804B | 109905BLS | 109905B |
| KT | Rebuilding Kit - AD4 without Molded pistons | 90-On | 109752F | 109753F | 109804C | 109905CLS | 109905C |
| KT | Rebuilding Kit - AD8 with Molded pistons | 90-On | 109752B | 109753B | 109804D | 109905DLS | 109905D |
| KT | Rebuilding Kit - AD8 without Molded pistons | 90-On | 109752B | 109753B | 109804E | 109905ELS | 109905E |

| ILL | ALTO NO | REF NO | DESCRIPTION | SPEC | YEAR | QTY | NOTES |
|---|---|---|---|---|---|---|---|
| **MISCELLANEOUS GASKETS & KIT COMPONENTS** | | | | | | | |
| 1F | 109818 | 7700-733-198 | Gasket, Oil Pan - AR4 | M.Rubber | 88-On | 1 | |
| 1F | 109819 | 7700-863-737 | Gasket, Oil Pan - AD4 | M.Rubber | 90-On | 1 | 7700-735-752 |
| 1F | 109820 | 7700-749-967 | Gasket, Oil Pan - AD8 | M.Rubber | 90-On | 1 | |
| 2F | 109821 | 7700-735-572 | Gasket, Rear Cover - AD4 | M.Rubber | 90-On | 1 | |
| KT | 109672 | NA | Kit, clips for K1/K3 drum | | 88-On | 1 | |
| **FRICTION CLUTCHES** | | | | | | | |
| 3C | 109700 | NA | K1 (Forward - 1st/3rd shift) | .063/1.6 | 88-On | 4-5 | Heg - 24T - OD: 4.800" - PL |
| 4B | 109700 | NA | K2 (Reverse) | .063/1.6 | 88-On | 4-5 | Heg - 24T - OD: 4.800" - PL |
| 5D | 109716 | NA | K3 (Overdrive - 3rd/4th shift) | .063/1.6 | 88-On | 6-8 | Heg - 22T - OD: 4.057" - PL |
| 5D | 109716-180 | NA | K3 (Overdrive - 3rd/4th shift) | .071/1.8 | 90-On | 6-7 | Heg - 22T - OD: 4.057" - PL |
| 6A | 109702 | NA | B2 (Front Brake - 2nd/4th shift) | .063/1.6 | 88-On | 4-6 | Tan - 32T - OD: 6.096" - PL |
| 7E | 109704 | NA | B1 (Low / Reverse) | .063/1.6 | 88-On | 4-6 | Heg - 50T - OD: 5.743" - SM |
| **STEEL CLUTCHES** | | | | | | | |
| 8C | 109701 | NA | K1 (Forward - 1st/3rd shift) | .078/2.0 | 88-95 | 4-5 | 32T - ID: 4.095" |
| 8C | 109701-145 | NA | K1 (Forward - 1st/3rd shift) | .057/1.45 | 95-On | 4-5 | 32T - ID: 4.095" |
| 9B | 109701 | NA | K2 (Reverse) | .078/2.0 | 88-On | 4-5 | 32T - ID: 4.095" |
| 10D | 109717 | NA | K3 (Overdrive - 3rd/4th shift) - AR4 only | .078/2.0 | 88-On | 5-7 | 28T - ID: 2.835" |
| 10D | 109717-160 | NA | K3 (Overdrive - 3rd/4th shift) | .063/1.6 | 90-On | 5-7 | 28T - ID: 2.835" |
| 11A | 109703 | NA | B2 (Front Brake - 2nd/4th shift) | .078/2.0 | 88-On | 5-7 | 3T - ID: 5.361" |
| 12E | 109705 | NA | B1 (Low / Reverse) | .078/2.0 | 88-On | 4-6 | 26T - ID: 2.835" |
| **HI-PERFORMANCE - KOLENE®** | | | | | | | |
| 8C | 109701K | NA | K1 (Forward - 1st/3rd shift) | .078/2.0 | 88-95 | 4-5 | 32T - ID: 4.095" |
| 8C | 109701K145 | NA | K1 (Forward - 1st/3rd shift) | .057/1.45 | 95-On | 4-5 | 32T - ID: 4.095" |

# RENAULT
## AR4, AD4, AD8
## 1988-On

| ILL | ALTO NO | REF NO | DESCRIPTION | SPEC | YEAR | QTY | NOTES |
|---|---|---|---|---|---|---|---|
| **STEEL CLUTCHES** | | | | | | | ...Continued |
| **HI-PERFORMANCE - KOLENE®** | | | | | | | |
| 9B | 109701K | NA | K2 (Reverse) | .078/2.0 | 88-On | 4-5 | 32T - ID: 4.095" |
| **PRESSURE PLATES** | | | | | | | |
| 13C | 109760 | NA | K1 - selective (bevel) | .118/3.0 | 88-On | AR | |
| 13C | 109760A520 | NA | K1 - selective (bevel) | .205/5.2 | 88-On | AR | |
| 14B | 109760 | NA | K2 - selective (bevel) | .118/3.0 | 88-On | AR | |
| 14B | 109760A520 | NA | K2 - selective (bevel) | .205/5.2 | 88-On | AR | |
| 16A | 109703-225 | NA | B2 - selective (flat) | .089/2.25 | 88-On | AR | |
| 16A | 109703-250 | NA | B2 - selective (flat) | .095/2.5 | 88-On | AR | |
| 16A | 109703-275 | NA | B2 - selective (flat) | .108/2.75 | 88-On | AR | |
| 16A | 109703-300 | NA | B2 - selective (flat) | .118/3.0 | 88-On | AR | |
| **OEI™ Original Equipment Improvements** | | | | | | | |
| KT | 109757B | NA | POWERPACK™ - K-3 (3-4 Clutch) | | 88-On | 1 | |
| **FILTERS** | | | | | | | |
| 20F | 109942 | NA | Filter - AR4 | | 88-On | 1 | |
| 20F | 109944 | 7701-468-818 | Filter - AD4 - Megane classic | | 90-On | 1 | |
| 20F | 109944A | 7701-467-106 | Filter - AD4 - Clio & Scenic | | 90-On | 1 | |
| 20F | 109946 | 7701-467-105 | Filter - AD8 (internal) | | 90-On | 1 | |
| 20F | 109948 | 7701-041-118 | Filter - AD4, AD8 (external - spin on) | | 90-On | 1 | |
| **METAL CLAD SEALS** | | | | | | | |
| 25A | 109400A | 7703-087-157 | Front Pump - All (Viton) | 65mm | 88-On | 1 | |
| 26F | 109427 | 7703-087-144 | Left Axle - AR4 | 65mm | 88-On | 1 | |
| 26F | 109425A | 7703-087-142 | Left Axle - AD4 | 65mm | 90-On | 1 | |
| 26F | 109425B | 7700-852-549 | Left Axle - AD8 (with boot) | 52mm | 90-On | 1 | |
| N I | 109426A | 7703-087-143 | Right Axle - AR4 | 48mm | 88-On | 1 | |
| N I | 109425A | 7703-087-142 | Right Axle - AD4 | 65mm | 90-On | 1 | |
| N I | 109404B | 7703-067-154 | Differential - AR4 | | 88-On | 1 | |
| N I | 109404A | 7703-087-142 | Differential - AD4 | | 90-On | 1 | |
| 29F | 109405 | 7700-730-093 | Differential Cover (cap) | | 90-On | 2 | |
| **SEALING RINGS** | | | | | | | |
| KT | 109601 | NA | Sealing Ring Kit | | 88-On | 1 | |
| **SNAP RINGS** | | | | | | | |
| 35C | 109250-160 | NA | K1 - selective | .063/1.6 | 88-On | AR | |
| 35B | 109250-160 | NA | K2 - selective | .063/1.6 | 88-On | AR | |
| 35C | 109250-180 | NA | K1 - selective | .071/1.8 | 88-On | AR | |
| 35B | 109250-180 | NA | K2 - selective | .071/1.8 | 88-On | AR | |
| 35C | 109250-200 | NA | K1 - selective | .078/2.0 | 88-On | AR | |
| 35B | 109250-200 | NA | K2 - selective | .078/2.0 | 88-On | AR | |
| 35C | 109250-220 | NA | K1 - selective | .087/2.2 | 88-On | AR | |
| 35B | 109250-220 | NA | K2 - selective | .087/2.2 | 88-On | AR | |
| **BUSHINGS** | | | | | | | |
| 38A | 109200 | NA | Front Pump | | 88-On | 1 | |
| **MOLDED PISTONS** | | | | | | | |
| KT | 109671E | NA | Molded Piston Kit - AR4 | | 88-On | 1 | |
| KT | 109671F | NA | Molded Piston Kit - AD4 | | 90-On | 1 | |
| KT | 109671G | NA | Molded Piston Kit - AD8 | | 90-On | 1 | |
| 40B | 109330 | NA | K1 (Forward - 1st/3rd shift) | 3.612 | 88-On | 1 | |
| 41B | 109332 | NA | K2 (Reverse) - AR4 | 4.580 | 88-89 | 1 | |
| 41B | 046317A | NA | K2 (Reverse) - AD4/AD8 | 4.337 | 90-On | 1 | |
| 42C | 109333B | 7700-856-233 | K3 (Overdrive - 3rd/4th shift) | 3.550 | 88-On | 1 | |
| 43A | 109331A | 7700-736-490 | B2 (Front Brake - 2nd/4th shift) | 5.750 | 88-On | 1 | |
| 44E | 109334 | NA | B1 (Low / Reverse) | 5.851 | 88-On | 1 | |
| N I | TBA | 7700-859-596 | Rear Cover - AD8 | 2.884 | 90-On | 1 | |
| N I | TBA | 7700-869-101 | Output Shaft - AD4 small ID | 1.975 | 90-On | 1 | |

| ILL | ALTO NO | REF NO | DESCRIPTION | SPEC | YEAR | QTY | NOTES |
|---|---|---|---|---|---|---|---|
| **MOLDED PISTONS** | | | | | | | ...Continued |
| N I | TBA | NA | Output Shaft - AD4 large ID | 2.059 | 90-On | 1 | |

## NOTES

# RENAULT

## RENAULT, CITROEN, PEUGEOT
## AL4, DPO (STA)
## 1999-On

| ILL | DESCRIPTION | YEARS | FRICTION MODULE | OVERHAUL KIT | BANNER KIT | MASTER KIT |
|---|---|---|---|---|---|---|
| **KITS** | | | | | | |
| KT | Rebuilding Kit | 99-On | 155750 FR & ST | 155800 | NA | 155901 |
| KT | Rebuilding Kit - without Molded Pistons | 99-On | 155750 FR & ST | 155800X | NA | TBA |

| ILL | ALTO NO | REF NO | DESCRIPTION | SPEC | YEAR | QTY | NOTES |
|---|---|---|---|---|---|---|---|
| **FRICTION CLUTCHES** | | | | | | | |
| N I | 155700-160 | NA | Reverse - 1 sided internal spline | .063/1.6 | 99-On | 3 | Heg - 8T - OD:6.270" - PLNI |
| N I | 155701-160 | NA | Reverse - 1 sided external spline | .063/1.6 | 99-On | 3 | Heg - 12T - ID:5.220" - PLNI |
| N I | 155701A160 | NA | Reverse - 1 sided external wide spline (Peugeot) | .063/1.6 | 99-On | 3 | Heg - 12T - ID:5.220" - PLNI |
| N I | 155702-160 | NA | Brake - 1 sided internal spline | .063/1.6 | 99-On | 3 | Heg - 6T - OD:6.720" - PLNI |
| N I | 155703-160 | NA | Brake - 1 sided external spline | .063/1.6 | 99-On | 3 | Heg - 3T - ID: 5.750" - PLNI |
| N I | 155704-160 | NA | 4th Clutch - 1 sided internal spline | .063/1.6 | 99-On | 7 | Heg - 20T - OD:4.650 - PLNI |
| N I | 155705-160 | NA | 4th Clutch - 1 sided external spline | .063/1.6 | 99-On | 7 | Heg - 8T - ID:3.235" - PLNI |
| N I | 155714 | NA | Torque Converter - External Spline | .139/3.53 | 99-On | AR | Red - 24T - ID: 6.64" - SM |
| **BANDS** | | | | | | | |
| N I | 155950 | NA | Brake | | 99-On | 1 | |
| **FILTERS** | | | | | | | |
| N I | 155940 | NA | Filter | | 99-On | 1 | |

**NOTES**

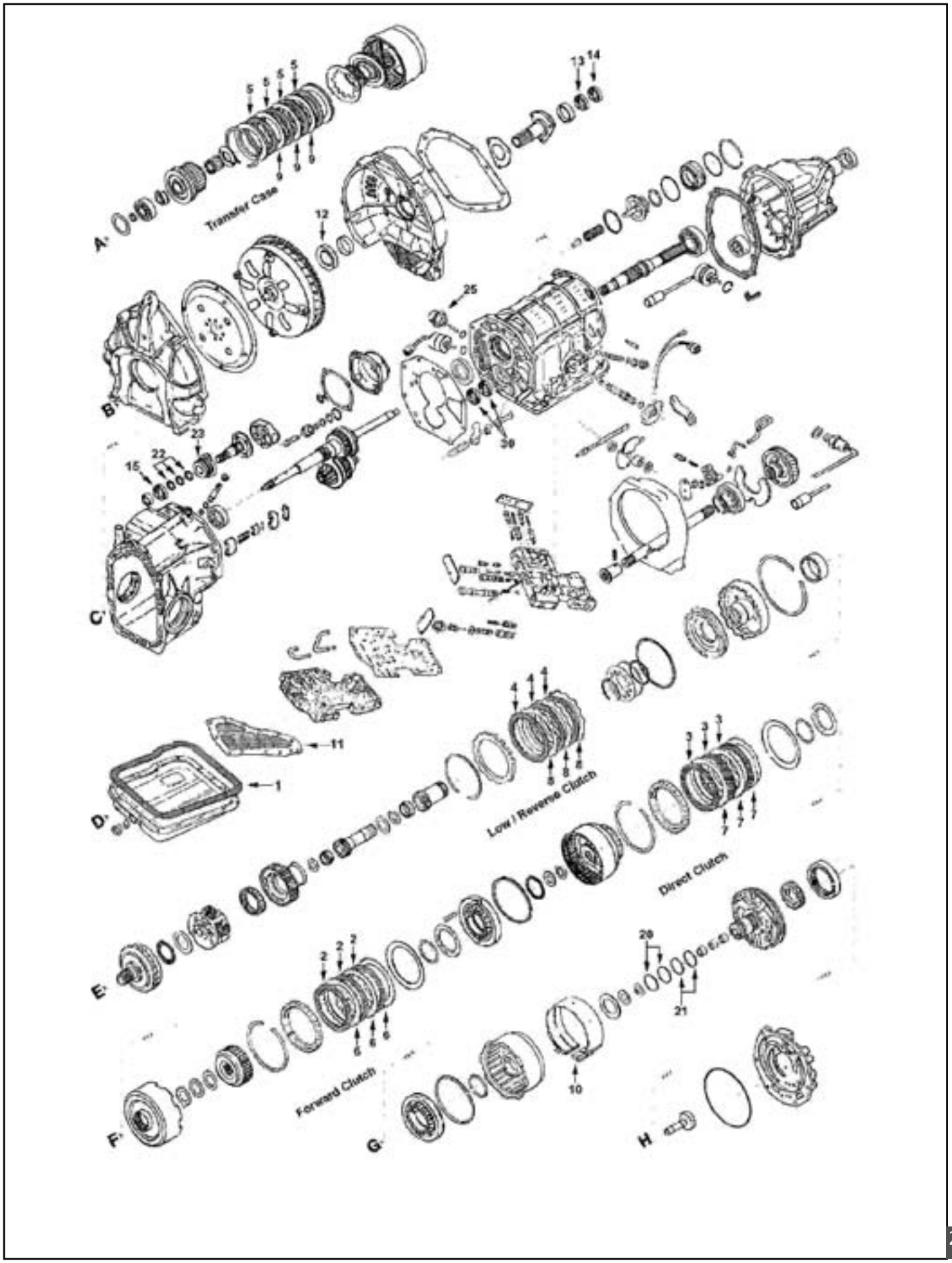
A
Transfer Case
B
C
D
E
Low / Reverse Clutch
Direct Clutch
F
Forward Clutch
G
H

# SUBARU
## M41, M41A (3AT)
## 1975-94

| ILL | DESCRIPTION | YEARS | FRICTION MODULE | STEEL MODULE | OVERHAUL KIT | BANNER KIT | MASTER KIT |
|---|---|---|---|---|---|---|---|
| **KITS** | | | | | | | |
| KT | Rebuilding Kit - 2wd | 75-82 | 042752A | 042753A | 042804 | 042905LS | 042905 |
| KT | Rebuilding Kit - 4wd w/Transfer plates | 85-94 | 042752F | 042753F | 042806 | 042907DLS | 042907D |
| KT | Rebuilding Kit - 4wd w/o Transfer plates | 85-94 | 042752G | 042753G | 042806 | 042907ELS | 042907E |
| KT | Rebuilding Kit - 4wd w/Transfer plates | 83-94 | 042752C | 042753C | 042806 | 042907ALS | 042907A |
| KT | Rebuilding Kit - 4wd w/o Transfer plates | 83-94 | 042752B | 042753B | 042806 | 042907LS | 042907 |

| ILL | ALTO NO | REF NO | DESCRIPTION | SPEC | YEAR | QTY | NOTES |
|---|---|---|---|---|---|---|---|
| **MISCELLANEOUS GASKETS & KIT COMPONENTS** | | | | | | | |
| 1D | 042820 | 34539-3600 | Gasket, Oil Pan - 13 bolt holes | Cork/Rub | 75-82 | 1 | |
| 1D | 042822 | 44539-7000 | Gasket, Oil Pan - 14 bolt holes | Cork/Rub | 83-90 | 1 | |
| 1D | 042824 | 31397-AA050 | Gasket, Oil Pan - 14 bolt holes (indented) | Cork/Rub | 91-94 | 1 | |
| **FRICTION CLUTCHES** | | | | | | | |
| 2F | 042700 | 45321-X0103 | Forward | .061/1.55 | 75-94 | 3-4 | Tan - 44T - OD: 4.530" - WF |
| 3F | 042700 | 45321-X0103 | Reverse (Direct) | .061/1.55 | 75-94 | 3 | Tan - 44T - OD: 4.530" - WF |
| 4E | 042712 | 34079-8710 | Low / Reverse | .092/2.35 | 75-82 | 3-4 | Tan - 51T - OD: 5.117" - SM |
| 4E | 042722 | 34079-8720 | Low / Reverse | .095/2.4 | 83-84 | 3-4 | Tan - 45T - OD: 5.117" - PL |
| 4E | 042732 | 31662-AA010 | Low / Reverse | .095/2.4 | 85-94 | 5 | Tan - 48T - OD: 5.331" - SM |
| 4E | 042732A | 31662-AA020 | Low / Reverse | .091/2.3 | 85-94 | 5 | Tan - 48T - OD: 5.331" - SM |
| 5A | 042706 | 31588-AA041 | Transfer Case | .115/2.9 | 83-94 | 3-4 | Tan - 33T - OD: 3.702" - SM |
| **STEEL CLUTCHES** | | | | | | | |
| 6F | 042701 | 45361-X0101 | Forward | .063/1.6 | 75-94 | 3 | 28T - ID: 3.625" |
| 7F | 042701 | 45361-X0101 | Reverse (Direct) | .063/1.6 | 75-94 | 3-4 | 28T - ID: 3.625" |
| 8E | 042703A | 34425-X8700 | Low / Reverse | .071/1.8 | 75-82 | 4-7 | 13T - ID: 4.212" |
| 8E | 042723 | 34425-X8710 | Low / Reverse | .071/1.8 | 83-84 | 4-5 | 13T - ID: 4.412" |
| 8E | 042733 | 31666-AA010 | Low / Reverse | .091/2.3 | 85-94 | 5 | 13T - ID: 4.665" |
| 9A | 042707 | 31589-AA000 | Transfer Case | .071/1.8 | 83-94 | 2-3 | 48T - ID: 2.837" |
| **BANDS** | | | | | | | |
| 10G | 063950 | 31630-AA000 | Brake | Tan | 75-94 | 1 | |
| **FILTERS** | | | | | | | |
| 11D | 042940 | 31728-X0F00 | Filter | | 75-94 | 1 | |
| **METAL CLAD SEALS** | | | | | | | |
| 12B | 042400 | 8067-42110 | Torque Converter Housing | 60mm | 75-94 | 1 | |
| 13B | 042403 | 8067-28040 | Stator Shaft - Front | 42mm | 75-94 | 1 | |
| 14B | 042400A | 8067-32020 | Stator Shaft - Rear (thick) | 48mm | 75-79 | 1 | |
| 14B | 042400B | 8067-28030 | Stator Shaft - Rear (thin) | 48mm | 80-81 | 1 | |
| 14B | 042400C | 8067-28050 | Stator Shaft - Rear | 44mm | 82-On | 1 | |
| N I | 042406 | 8067-42130 | Differential & Reduction case | 64mm | 75-82 | 1 | |
| 30C | 042404 | 8067-21020 | Intermediate Shaft | 33mm | 83-On | 2 | |
| 15C | 042419 | 8067-22040 | Governor to case | 40mm | 75-94 | 1 | |
| N I | 042410B | 8067-12030 | Speedometer shaft | 17.5mm | 75-94 | 1 | |
| 16C | 042408 | 8067-40030 | Reduction Drive gear support | 58mm | 75-94 | 2 | |
| N I | 042425 | 8067-27070 | Axle - inner | 45mm | 75-94 | 1 | |
| N I | 042426 | 8067-27080 | Axle - outer | 45mm | 75-94 | 1 | |
| 17C | 042405 | 8067-35070 | Extension Housing | 50mm | 75-94 | 1 | |
| **SEALING RINGS** | | | | | | | |
| KT | 042602 | G707 | Sealing Ring Kit - 4M / 6T | | 75-94 | 1 | |
| 20G | 042101 | 31362-X0101 | Pump Stator to Forward Drum | 1.692 | 75-94 | 2 | Metal |
| 21G | 042100 | 31361-X0100 | Pump Stator to Direct Drum | 1.732 | 75-94 | 2 | Metal |
| 22C | 042107 | 31879-AA000 | Governor Sleeve - small | .9375 | 75-94 | 3 | Teflon |
| 23C | 042106 | 31880-AA000 | Governor Sleeve - large | 1.732 | 75-94 | 1 | Teflon |
| N I | 042108 | 31337-AA000 | Output Shaft | | 75-94 | 1 | Teflon |
| **BUSHINGS** | | | | | | | |
| KT | 042627 | NA | Bushing Kit | | 75-94 | 1 | |
| **MODULATORS** | | | | | | | |
| 25C | 042500 | 31931-X0102 | .84" Diaphram (Non Turbo) | | 75-94 | 1 | |

| ILL | ALTO NO | REF NO | DESCRIPTION | SPEC | YEAR | QTY | NOTES |
|---|---|---|---|---|---|---|---|
| **MODULATORS** | | | | | | | ...Continued |
| 25C | 042501 | 31931-X0110 | .91" Diaphram (Turbo) | | 75-94 | 1 | |

## NOTES

# SUBARU
## R4AX-EL (4AT)
## 1987-98

A>

Differential / Axle Shaft

B>

Reverse Clutch

High Clutch

C>

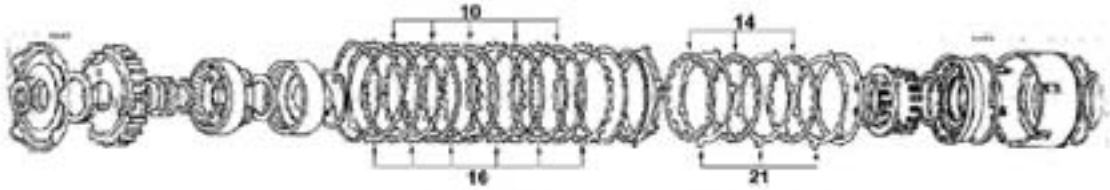


Forward Clutch

Overrun Clutch

D>

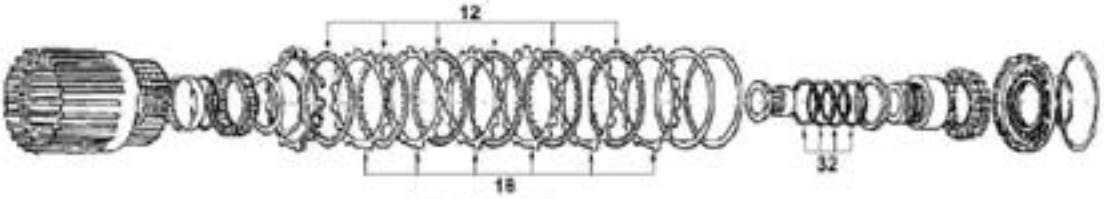


Low / Reverse

E>

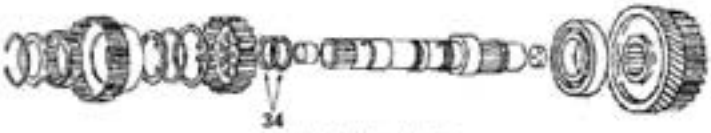


Reduction Shaft

F>

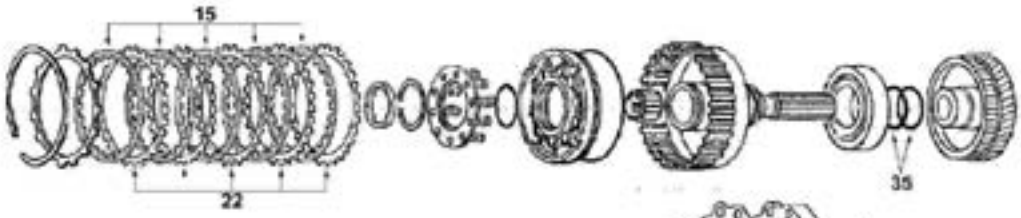


Transfer Case

G>

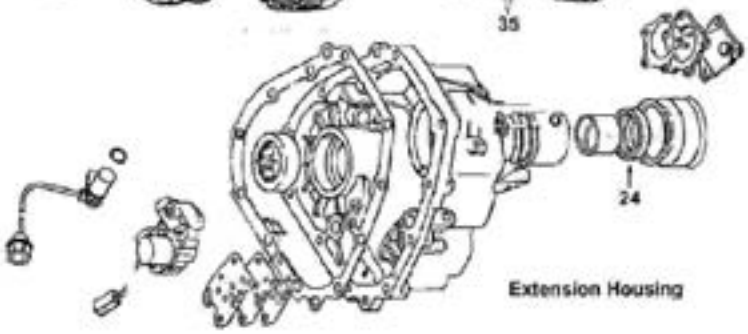


Extension Housing

# SUBARU
## R4AX-EL (4AT)
## 1987-98

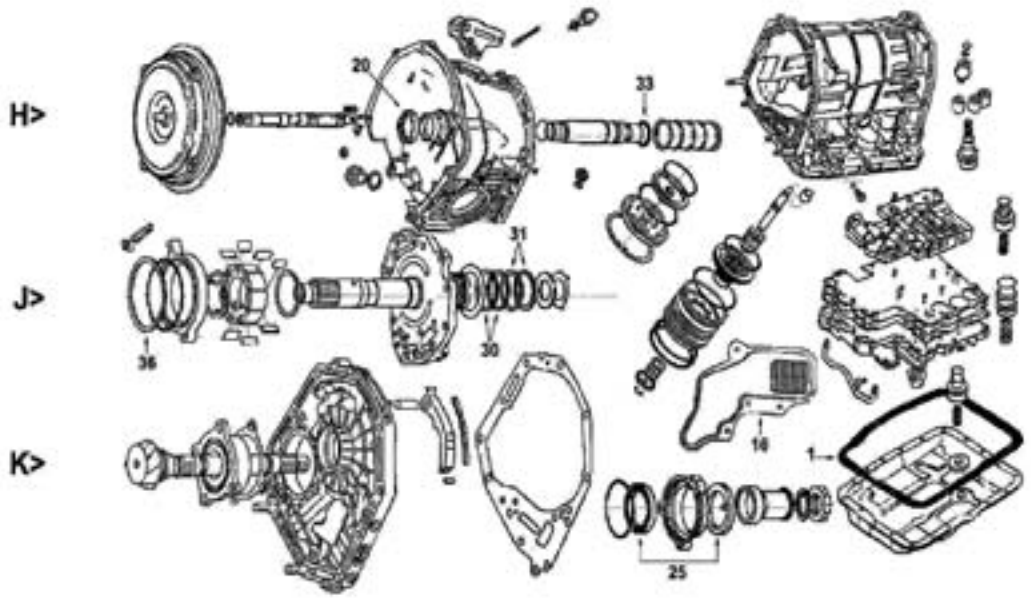


| ILL | DESCRIPTION | YEARS | FRICTION MODULE | STEEL MODULE | OVERHAUL KIT | BANNER KIT | MASTER KIT |
|---|---|---|---|---|---|---|---|
| **KITS** | | | | | | | |
| **DL, GL, XT** | | | | | | | |
| KT | Rebuilding Kit - without Transfer case | 87-89 | 075752A | 075753A | 075804 | 075903LS | 075903 |
| KT | Rebuilding Kit - with Transfer case | 87-89 | 075752E | 075753E | 075804 | 075907LS | 075907 |
| **Forester** | | | | | | | |
| KT | Rebuilding Kit - without Transfer case | 98 | 075752T | TBA | 075804 | 075903CLS | TBA |
| KT | Rebuilding Kit - with Transfer case | 98 | 075752S | TBA | 075804 | 075907CLS | TBA |
| **Impreza** | | | | | | | |
| KT | Rebuilding Kit - without Transfer case | 92-96 | TBA | TBA | 075804 | TBA | TBA |
| KT | Rebuilding Kit - with Transfer case | 92-96 | 075752M | 075753P | 075804 | 075907BLS | 075907B |
| KT | Rebuilding Kit - without Transfer case | 97-98 | 075752T | TBA | 075804 | 075903CLS | TBA |
| KT | Rebuilding Kit - with Transfer case | 97-98 | 075752S | TBA | 075804 | 075907CLS | TBA |
| **Legacy** | | | | | | | |
| KT | Rebuilding Kit - Non Turbo w/o Transfer case | 89-94 | 075752A | 075753A | 075804 | 075903LS | 075903 |
| KT | Rebuidling Kit - Non Turbo w/ Transfer case | 89 | 075752E | 075753E | 075804 | 075907LS | 075907 |
| KT | Rebuilding Kit - Turbo w/o Transfer case | 89-91 | 075752F | 075753F | 075804 | 075903ALS | 075903A |
| KT | Rebuilding Kit - Turbo w/ Transfer case | 89-94 | TBA | TBA | 075804 | TBA | TBA |
| KT | Rebuilding Kit - Turbo w/o Transfer case | 92-94 | 075752L | 075753N | 075804 | 075903BLS | 075903B |
| KT | Rebuilding Kit - 2.2L, 2.5L w/o Transfer case | 95-98 | 075752T | 075753T | 075804 | 075903CLS | 075903C |
| KT | Rebuilding Kit - 2.2L, 2.5L w/o Transfer case | 95-98 | 075752S | 075753S | 075804 | 075907CLS | 075907C |
| **Loyale** | | | | | | | |
| KT | Rebuilding Kit - without Transfer case | 90-93 | 075752A | 075753F | 075804 | 075903LS | 075903 |
| KT | Rebuilding Kit - with Transfer case | 90-93 | 075752E | 075753E | 075804 | 075907LS | 075907 |
| **SVX** | | | | | | | |
| KT | Rebuilding Kit - without Transfer case | 92-93 | 075752F | 075753F | 075804 | 075903ALS | 075903A |
| KT | Rebuilding Kit - with Transfer case | 92-93 | 075752G | 075753G | 075804 | 075907ALS | 075907A |
| KT | Rebuilding Kit - without Transfer case | 94 | TBA | 075753F | 075804 | TBA | TBA |
| KT | Rebuilding Kit - with Transfer case | 94 | TBA | 075753G | 075804 | TBA | TBA |
| KT | Rebuilding Kit - without Transfer case | 95-98 | TBA | TBA | 075804 | TBA | TBA |
| KT | Rebuilding Kit - with Transfer case | 95-98 | TBA | TBA | 075804 | TBA | TBA |

# SUBARU
## R4AX-EL (4AT)
## 1987-98

| ILL | ALTO NO | REF NO | DESCRIPTION | SPEC | YEAR | QTY | NOTES |
|---|---|---|---|---|---|---|---|
| **MISCELLANEOUS GASKETS & KIT COMPONENTS** | | | | | | | |
| 1K | 075816A | 31397-AA040 | Gasket, Oil Pan | Cork/Rub | 87-98 | 1 | |
| **FRICTION CLUTCHES** | | | | | | | |
| 10C | 075700 | 31532-AA100 | Forward | .078/2.0 | 87-95 | 5-6 | Tan - 36T - OD: 5.845" - PL |
| 10C | 075700A | 31532-AA111 | Forward | .063/1.6 | 96-On | 5 | Heg - 36T - OD: 5.845" - PL |
| 11B | 075702 | 31532-AA120 | High | .063/1.6 | 87-98 | 4-5 | Heg - 30T - OD: 5.233" - PL |
| 11B | 075742 | NA | High - Red Eagle® Powerpack™ Component | .063/1.6 | 87-98 | AR | Red - 30T - OD: 5.233" - PL |
| 12D | 075704 | 31662-AA050 | Low / Reverse | .078/2.0 | 87-94 | 6 | Heg - 30T - OD: 5.805" - PL |
| 12D | 075704-160 | 31662-AA060 | Low / Reverse | .063/1.6 | 89-94 | 8 | Heg - 30T - OD: 5.805" - PL |
| 12D | 075704-180 | 31662-AA090 | Low / Reverse | .071/1.8 | 92-98 | 5-7 | Heg - 30T - OD: 5.805" - PL |
| 13B | 075706 | 31532-AA040 | Reverse | .078/2.0 | 87-91 | 2 | Tan - 34T - OD: 5.880" - PL |
| 13B | 075706A | 31532-AA080 | Reverse | .078/2.0 | 92-96 | 2 | Heg - 30T - OD: 5.880" - PL |
| 13B | 075706B200 | 31532-AA140 | Reverse | .078/2.0 | 97-98 | 2 | Heg - 38T - OD: 5.880" - PL |
| 13B | 075706-190 | NA | Reverse - POWERPACK™ Component | .074/1.9 | 87-91 | AR | Tan - 34T - OD: 5.880" - PL |
| 13B | 075706A190 | NA | Reverse - POWERPACK™ Component | .074/1.9 | 92-96 | AR | Heg - 34T - OD: 5.880" - PL |
| 14C | 075708 | 31532-AA070 | Overrun | .078/2.0 | 87-98 | 3 | Heg - 18T - OD: 5.260" - PL |
| 15F | 075710 | 31588-AA020 | Transfer Case | .078/2.0 | 87-93 | 5 | Tan - 24T - OD: 4.646" - PL |
| 15F | 075710-180 | 31588-AA060 | Transfer Case | .071/1.8 | 91-98 | 6 | Tan - 24T - OD: 4.646" - SM |
| 15F | 075720-180 | 31588-AA070 | Transfer Case | .071/1.8 | Various | AR | Tan - 50T - OD: 4.646" - SM |
| **STEEL CLUTCHES** | | | | | | | |
| 16C | 075701 | 31536-AA110 | Forward | .078/2.0 | 87-95 | 5-6 | 24T - ID: 5.355" |
| 16C | 075701A | 31536-AA120 | Forward | .071/1.8 | 96-98 | 5 | 24T - ID: 5.355" |
| 17B | 075733 | 31536-AA060 | High | .118/3.0 | 87-97 | 3 | 27T - ID: 4.414" |
| 17B | 075713 | 31536-AA040 | High | .078/2.0 | 87-97 | 1/5 | 27T - ID: 4.414" |
| 17B | 075713K200 | NA | High - Kolene® | .078/2.0 | 87-97 | 1/5 | 27T - ID: 4.414" |
| 17B | 075723 | 31536-AA070 | High | .108/2.75 | 90-94 | 1/5 | 27T - ID: 4.414" |
| 17B | 075703K152 | NA | High - Kolene® Powerpack™ Component | .060/1.52 | 87-97 | AR | 27T - ID: 4.414" |
| 17B | 075703A | 31536-AA170 | High | .078/2.0 | 95-98 | 1/5 | 24T - ID: 4.414" |
| 17B | 075703A300 | 31536-AA160 | High | .118/3.0 | 95-98 | 3 | 24T - ID: 4.414" |
| 18D | 075705 | 31666-AA050 | Low / Reverse | .078/2.0 | 87-94 | 6 | 14T - ID: 5.086" |
| 18D | 075705-160 | 31666-AA060 | Low / Reverse | .063/1.6 | 92-98 | 5 | 14T - ID: 5.086" |
| 18D | 075705-180 | 31666-AA030 | Low / Reverse | .071/1.8 | 89-94 | 8 | 14T - ID: 5.086" |
| 18D | 075705-130 | NA | Low / Reverse - selective | .051/1.3 | 87-98 | AR | 14T - ID: 5.086" |
| 18D | 075705-225 | NA | Low / Reverse - selective | .086/2.25 | 87-98 | AR | 14T - ID: 5.086" |
| 19B | 075707 | 31536-AA050 | Reverse | .078/2.0 | 87-91 | 2 | 30T - ID: 5.355" |
| 19B | 075707A | 31536-AA100 | Reverse | .078/2.0 | 92-98 | 2 | 30T - ID: 5.084" |
| 19B | 075707-170 | NA | Reverse - selective | .067/1.7 | 87-91 | AR | 30T - ID: 5.355" |
| 19B | 075707-225 | NA | Reverse - selective | .086/2.25 | 87-91 | AR | 30T - ID: 5.355" |
| 19B | 075707A170 | NA | Reverse - selective | .067/1.7 | 92-98 | AR | 30T - ID: 5.084" |
| 20B | 075707XW | 31668-AA032 | DRUMSAVER™ - Reverse (replaces belleville) | | 87-98 | 1 | 5 waves |
| 21C | 075709 | 31536-AA090 | Overrun | .078/2.0 | 87-98 | 3 | 6T - ID: 4.700" |
| 21C | 075709-225 | NA | Overrun - selective | .086/2.25 | 87-98 | AR | 6T - ID: 4.700" |
| 22F | 075711 | 31589-AA030 | Transfer Case | .071/1.8 | 87-93 | 5 | 30T - ID: 4.117" |
| 22F | 075711-160 | 31589-AA041 | Transfer Case | .063/1.6 | 90-94 | 5 | 30T - ID: 4.117" |
| 22F | 075711K200 | NA | Transfer Case - Kolene® selective | .078/2.0 | 87-97 | AR | 30T - ID: 4.117" |
| 22F | 075711-200 | 31589-AA050 | Transfer Case - selective | .078/2.0 | 87-98 | AR | 30T - ID: 4.117" |
| 22F | 075711-240 | 31589-AA060 | Transfer Case - selective | .095/2.4 | 87-98 | AR | 30T - ID: 4.117" |
| 22F | 075711-280 | 31589-AA070 | Transfer Case - selective | .110/2.8 | 87-98 | AR | 30T - ID: 4.117" |
| **PRESSURE PLATES** | | | | | | | |
| 23B | 075760-320 | NA | High - backing | .126/3.2 | 87-94 | AR | |
| 13B | 075760-340 | 31567-AA340 | High - backing | .134/3.4 | 87-94 | AR | |
| 13B | 075760-360 | 31567-AA190 | High - backing | .142/3.6 | 87-94 | AR | |
| 13B | 075760-380 | 31567-AA200 | High - backing | .150/3.8 | 87-94 | AR | |
| 13B | 075760-400 | 31567-AA210 | High - backing | .157/4.0 | 87-94 | AR | |
| 13B | 075760-420 | 31567-AA220 | High - backing | .165/4.2 | 87-94 | AR | |
| 13B | 075760-440 | 31567-AA230 | High - backing | .173/4.4 | 87-94 | AR | |
| 13B | 075760-460 | 31567-AA240 | High - backing | .181/4.6 | 87-94 | AR | |
| 13B | 075760-480 | 31567-AA250 | High - backing | .189/4.8 | 87-On | AR | |

# SUBARU
## R4AX-EL (4AT)
## 1987-98

| ILL | ALTO NO | REF NO | DESCRIPTION | SPEC | YEAR | QTY | NOTES |
|---|---|---|---|---|---|---|---|
| **PRESSURE PLATES** | | | | | | | ...Continued |
| 13B | 075760-500 | 31567-AA260 | High - backing | .197/5.0 | 87-On | AR | |
| 14B | TBA | 31567-AA350 | Reverse - backing | .189/4.8 | 87-On | AR | |
| 14B | TBA | 31567-AA360 | Reverse - backing | .197/5.0 | 87-On | AR | |
| 14B | TBA | 31567-AA370 | Reverse - backing | .205/5.2 | 87-On | AR | |
| 14B | TBA | 31567-AA380 | Reverse - backing | .213/5.4 | 87-On | AR | |
| 14B | TBA | 31567-AA390 | Reverse - backing | .220/5.6 | 87-On | AR | |
| **OEI™ Original Equipment Improvements** | | | | | | | |
| KT | 075758 | NA | DRUMSAVER™ Kit - Reverse clutch | | 87-91 | 1 | Reuse worn drum (34T) |
| KT | 075758A | NA | DRUMSAVER™ Kit - Reverse clutch | | 92-98 | 1 | Reuse worn drum (30T) |
| KT | 075985 | SK® RE4R01A | Shift Kit® - Reduces clutch / band failure | | 87-98 | 1 | |
| **HI-PERFORMANCE** | | | | | | | |
| KT | 075757HP | NA | DRUMSAVER™ - High Clutch | | 87-97 | 1 | |
| **BANDS** | | | | | | | |
| 15B | 075950 | 31630-AA050 | Brake | Tan | 87-98 | 1 | |
| **FILTERS** | | | | | | | |
| KT | FK075940 | NA | Filter Kit - 1/8" pickup | | 87-93 | 1 | |
| KT | FK075940A | NA | Filter Kit - 3/4" pickup | | 90-98 | 1 | |
| 16K | 075940 | 31728-AA000 | Filter - 1/8" pickup | | 87-93 | 1 | |
| 16K | 075940A | 31728-AA011 | Filter - 3/4" pickup | | 90-98 | 1 | |
| **METAL CLAD SEALS** | | | | | | | |
| 20H | 075400 | 8067-50030 | Torque Converter Housing | | 87-98 | 1 | |
| 21A | 075425 | 8067-30032 | Left Axle | 50mm | 87-98 | 1 | |
| 22A | 075426 | 8067-30031 | Right Axle | 50mm | 87-98 | 1 | |
| 24G | 042405 | 8067-35070 | Extension Housing | | 87-98 | 1 | |
| 25K | 075402 | 8067-52010 | Final Drive Pinion (front & rear) | | 87-98 | 2 | |
| N I | 075410 | 8067-16040 | Manual Lever | | 87-98 | 1 | |
| N I | 042410B | 8067-12030 | Speedometer shaft | 17.5mm | 87-98 | 1 | |
| **SEALING RINGS** | | | | | | | |
| KT | 075601 | NA | Sealing Ring Kit - 1M / 13T | | 87-98 | 1 | |
| 30J | 068100 | 31377-AA040 | Pump Stator to Reverse drum | | 87-98 | 2 | |
| 31J | 068101 | 31377-AA030 | Pump Stator to Direct drum | | 87-98 | 2 | |
| 32D | 075101A | 31377-AA122 | Forward & Overrun drum | | 87-98 | 4 | |
| 33H | 075104 | 31361-AA000 | Pump Drive Shaft | | 87-98 | 1 | |
| 34E | 075105 | 31377-AA020 | Reduction Gear Shaft | | 87-98 | 2 | |
| 35F | 075106 | 31377-AA010 | Transfer Clutch | | 87-98 | 2 | |
| 36J | 075103 | 31286-AA000 | Pump Slide | Metal | 87-98 | 1 | |
| **BUSHINGS** | | | | | | | |
| KT | 075625A | NA | Bushing Kit | | 87-98 | 1 | |

**NOTES**

# SUBARU
## 4 SPEED
## 1998-On

| ILL | DESCRIPTION | YEARS | FRICTION MODULE | STEEL MODULE | OVERHAUL KIT | BANNER KIT | MASTER KIT |
|---|---|---|---|---|---|---|---|
| **KITS** | | | | | | | |
| KT | Rebuilding Kit | 98-On | 135752 | 135753 | 135800 | 135901LS | 135901 |

| ILL | ALTO NO | REF NO | DESCRIPTION | SPEC | YEAR | QTY | NOTES |
|---|---|---|---|---|---|---|---|
| **FRICTION CLUTCHES** | | | | | | | |
| N I | 135700-180 | 31532-AA170 | Low | .071/1.8 | 98-On | 6 | Tan - 30T - OD: 5.425" - SM |
| N I | 135702-160 | 31532-AA150 | High | .063/1.6 | 98-On | 4 | Heg - 36T - OD: 5.435" - SB |
| N I | 135706-160 | 31532-AA180 | Reverse | .063/1.6 | 98-On | 2 | Tan - 30T - OD: 5.880" - PL |
| N I | 135708-160 | 31532-AA131 | 2-4 Brake | .063/1.6 | 98-On | 3 | Heg - 30T - OD: 6.562" - SB |
| N I | 075704-160 | 31662-AA110 | Low / Reverse | .063/1.6 | 98-On | 5-6 | Heg - 30T - OD: 5.800 - PL |
| N I | 075710-180 | NA | Transfer Case | .071/1.8 | 98-On | 6 | Tan - 24T - OD: 4.650 - SM |
| N I | 075720-180 | NA | Transfer Case | .071/1.8 | 98-On | 2 | Tan - 50T - OD: 4.650 - SM |
| **STEEL CLUTCHES** | | | | | | | |
| N I | 135701-140 | 31536-AA200 | Low | .055/1.4 | 98-On | 5-6 | 30T - ID: 4.841" |
| N I | 135703-200 | 31536-AA220 | High | .078/2.0 | 98-On | 4 | 8T - ID: 4.415" |
| N I | 135707-160 | 31536-AA190 | Reverse | .063/1.6 | 98-On | 2 | 32T - ID: 5.244" |
| N I | 135709-240 | 31536-AA142 | 2-4 Brake | .095/2.4 | 98-On | 2 | 23T - ID: 5.693" |
| N I | 075705-160 | 31666-AA070 | Low / Reverse | .063/1.6 | 98-On | 6 | 14T - ID: 5.086" |
| N I | 075711K160 | NA | Transfer Case | .063/1.6 | 98-On | 6 | 30T - ID: 4.117" |
| N I | 075711-200 | 31589-AA050 | Transfer Case | .078/2.0 | 98-On | AR | 30T - ID: 4.117" |
| N I | 075711-240 | 31589-AA060 | Transfer Case | .095/2.4 | 98-On | AR | 30T - ID: 4.117" |
| N I | 075711-280 | 31589-AA070 | Transfer Case | .110/2.8 | 98-On | AR | 30T - ID: 4.117" |
| **FILTERS** | | | | | | | |
| N I | 135940 | 31728-AA050 | Filter - internal | | 98-On | 1 | |
| N I | 135941 | 38325-KA000 | Filter - external (spin on) | | 98-On | 1 | |
| **METAL CLAD SEALS** | | | | | | | |
| N I | 075400 | 8067-50050 | Front Pump | 65mm | 98-On | 1 | |
| N I | 075410 | 8067-16060 | Manual Lever | 25mm | 98-On | 1 | |
| N I | 075402 | 8067-52020 | Oil Pump Retainer | 66mm | 98-On | 1 | |
| N I | 042405 | 8067-35210 | Extension Housing | 50mm | 98-On | 1 | |
| N I | 042410B | 8067-12090 | Speedo | 17.5mm | 98-On | 1 | |

# SUZUKI
## SR410, SR412
## WAGON R
## 1998-On

| ILL | DESCRIPTION | YEARS | FRICTION MODULE | STEEL MODULE | OVERHAUL KIT | BANNER KIT | MASTER KIT |
|---|---|---|---|---|---|---|---|
| **KITS** | | | | | | | |
| KT | Rebuilding Kit | 98-On | 175752 | 175753 | 175800 | 175901LS | 175901 |

| ILL | ALTO NO | REF NO | DESCRIPTION | SPEC | YEAR | QTY | NOTES |
|---|---|---|---|---|---|---|---|
| **FRICTION CLUTCHES** | | | | | | | |
| N I | 175700-166 | 26633-75FT0X | Forward (Front) | .065/1.66 | 98-On | 4 | Heg - 36T - OD: 5.16" - SM |
| N I | 175702A166 | 26746-75FT0X | 1-2 Brake | .065/1.66 | 98-On | 4 | Tan - 36T - OD: 5.610 - PLNI |
| N I | 175702-166 | 26823-75FT0X | Overdrive | .065/1.66 | 98-On | 1 | Tan - 36T - OD: 5.610 - SM |
| N I | 175700A166 | 26811-75FT0X | Reverse | .065/1.66 | 98-On | 4 | Tan - 36T - OD: 5.160 - PLNI |
| N I | 175708-166 | 26611-75FT0X | Rear | .065/1.66 | 98-On | 5 | Heg - 40T - OD: 3.770 - SM |
| **STEEL CLUTCHES** | | | | | | | |
| N I | 175701-180 | 26633-75FT0X | Forward (Front) | .070/1.8 | 98-On | 4 | 8T - ID: 4.640 |
| N I | 175703-180 | 26746-75FT0X | 1-2 Brake | .070/1.8 | 98-On | 4 | 18T - ID: 4.830 |
| N I | 175703A280 | 26823-75FT0X | Overdrive | .110/2.8 | 98-On | 1 | 18T - ID: 4.830 w/step |
| N I | 175703A320 | NL | Overdrive | .127/3.2 | 98-On | 1 | 18T - ID: 4.830 w/step |
| N I | 175707-125 | 26811-75FT0X | Reverse | .048/1.25 | 98-On | 3 | 19T - ID: 4.640 |
| N I | 175707-300 | NL | Reverse | .117/3.0 | 98-On | 2 | 19T - ID: 4.640 |
| N I | 175709-180 | NL | Rear | .070/1.8 | 98-On | 5 | 8T - ID: 3.330 |
| **FILTERS** | | | | | | | |
| N I | 175940 | NL | Filter | | 98-On | 1 | |
| N I | 175942 | 45611-02700 | Filter JF405E Hyundai | | 98-On | 1 | |

## NOTES

# TOYOTA

## TOYOTA - A40 SERIES
## MITSUBISHI - AW372 (R4AW2) / KM148 (V4AW2)
## 1972-On

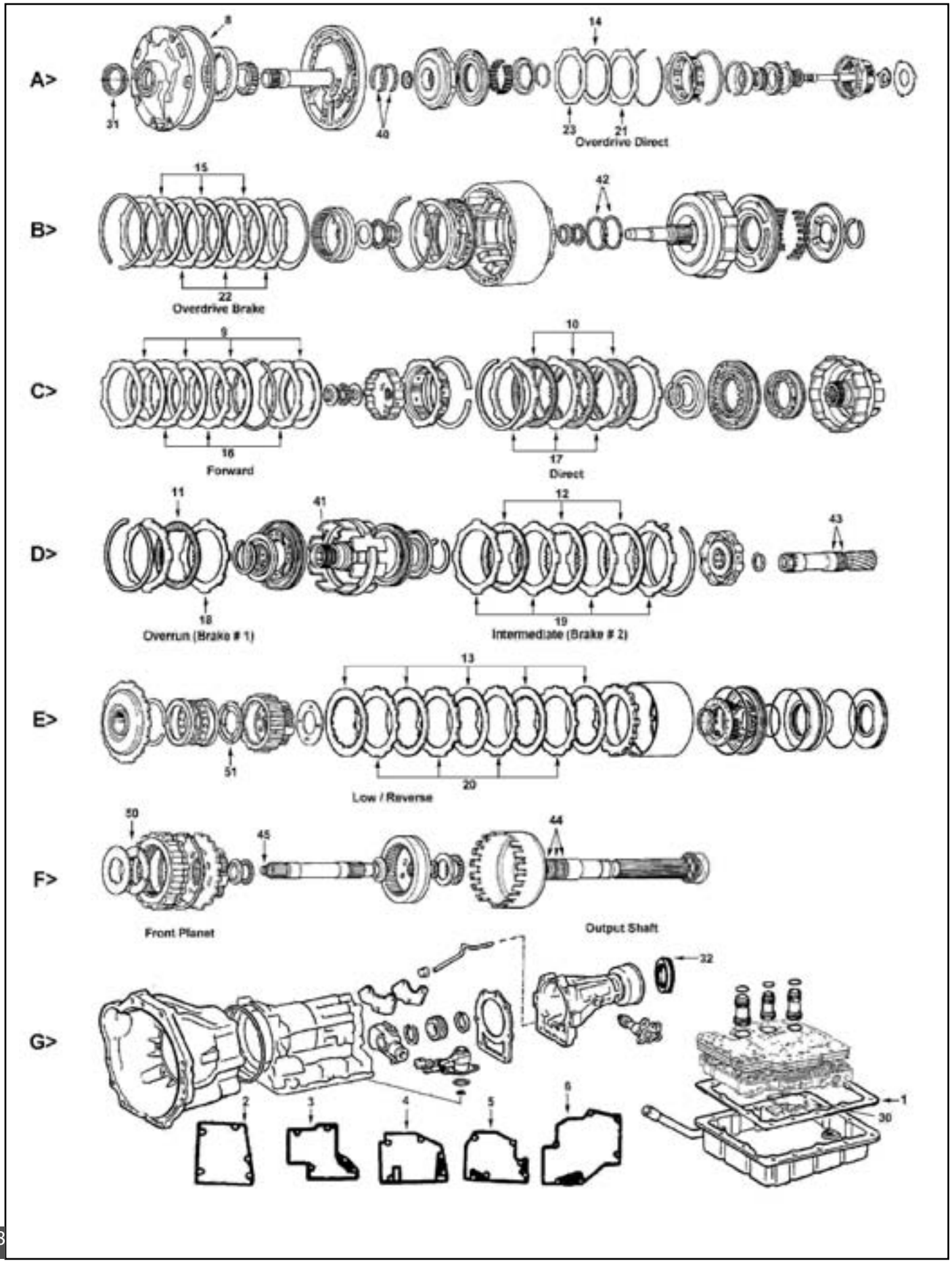

# TOYOTA

## TOYOTA - A40 SERIES
## MITSUBISHI - AW372 (R4AW2) / KM148 (V4AW2)
## 1972-On

| ILL | DESCRIPTION | YEARS | FRICTION MODULE | STEEL MODULE | OVERHAUL KIT | BANNER KIT | MASTER KIT |
|---|---|---|---|---|---|---|---|
| **KITS** | | | | | | | |
| KT | Rebuilding Kit - A40, 41, 43 (3 speed) | 72-93 | 044752 | 044753 | 044800 | 044901LS | 044901 |
| KT | Rebuilding Kit - A40D, A42D | 77-91 | 044752A | 044753A | 044802 | 044903LS | 044903 |
| KT | Rebuilding Kit - A43D, DE, DL | 79-83 | 044752C | 044753B | 044806 | 044909ALS | 044909A |
| KT | Rebuilding Kit - A43DE, DL | 84-On | 044752D | 044753B | 044806 | 044909BLS | 044909B |
| KT | Rebuilding Kit - A43D, DE, DL (combo) | 79-On | 044752B | 044753B | 044806 | 044909LS | 044909 |
| KT | Rebuilding Kit - A42DL, 44DL, 45DL | 84-On | 044752G | 044753G | 044806A | 044909CLS | 044909C |
| KT | Rebuilding Kit - A42DL, 44DL, 45DL, KM148 | 84-On | 044752H | 044753H | 044806A | 044909DLS | 044909D |
| KT | Rebuilding Kit - A46DE, DF | 90-On | 044752J | 044753J | 044806 | 044909ELS | 044909E |
| **HI-PERFORMANCE - RED EAGLE®** | | | | | | | |
| KT | Rebuilding Kit - A40, 41, 43 (3 speed) | 72-93 | 044752HP | 044753HP | 044800 | 044901HPLS | 044901HP |

| ILL | ALTO NO | REF NO | DESCRIPTION | SPEC | YEAR | QTY | NOTES |
|---|---|---|---|---|---|---|---|
| **MISCELLANEOUS GASKETS & KIT COMPONENTS** | | | | | | | |
| 1G | 044816 | 35168-22010 | Gasket, Oil Pan | Cork/Rub | 72-On | 1 | |
| 2G | 044004 | NA | Gasket, Filter - A40, A41, A43 | | 72-93 | 1 | |
| 3G | 044004A | 35339-30030 | Gasket, Filter - A40D, A42D | | 77-91 | 1 | |
| 4G | 044004B | 35339-30050 | Gasket, Filter - A43D | | 79-On | 1 | |
| 5G | 044004C | 35339-30060 | Gasket, Filter - All "DE" models | | 79-On | 1 | |
| 6G | 044004D | 35339-14010 | Gasket, Filter - All "DL, DF" & Mitsubishis | | 82-On | 1 | |
| 7G | 044005 | 35182-28010 | Gasket, Extension Housing | | 72-On | 1 | |
| 8A | 044050 | 35147-22010 | D Ring, Front Pump | | 72-79 | 1 | |
| 8A | 044050A | 90301-99010 | O Ring, Front Pump | | 80-On | 1 | |
| N I | 010116B | 90301-18018 | O Ring, Speedometer | | 72-On | 1 | |
| N I | 044054 | 90301-09173 | O Ring, Filler Tube & Detent cable | | 72-On | 2 | |
| N I | 044306C | 35496-22010 | Checkball, VB | | 72-On | 4-8 | |
| **FRICTION CLUTCHES** | | | | | | | |
| 9C | 044700 | Various | Forward | .091/2.3 | 72-On | 3-4 | Tan - 24T - OD: 5.000" - SM |
| 10C | 044700 | Various | Direct | .091/2.3 | 72-On | 3-4 | Tan - 24T - OD: 5.000" - SM |
| 11D | 044700 | Various | Overrun (Brake #1) Ctr Support - front | .091/2.3 | 72-On | 1-3 | Tan - 24T - OD: 5.000" - SM |
| 12D | 044700 | Various | Intermediate (Brake # 2) Ctr Support - rear | .091/2.3 | 72-On | 2-3 | Tan - 24T - OD: 5.000" - SM |
| 12D | 044710 | Various | Intermediate (Brake # 2) Ctr Support - rear | .078/2.0 | 85-On | 2-3 | Tan - 24T - OD: 5.000" - SM |
| 13E | 044702 | Various | Low / Reverse (Brake #3) | .091/2.3 | 72-On | 4-5 | Tan - 16T - OD: 5.000" - SM |
| 14A | 044700 | Various | Overdrive Direct | .091/2.3 | 72-On | 1 | Tan - 24T - OD: 5.000" - SM |
| 15B | 044700 | Various | Overdrive Brake | .091/2.3 | 72-On | 2-3 | Tan - 24T - OD: 5.000" - SM |
| 15B | 044704 | Various | Overdrive Brake | .091/2.3 | 79-81 | 3 | Tan - 44T - OD: 5.589" - SM |
| 15B | 065702 | Various | Overdrive Brake | .067/1.7 | 82-On | 3 | Heg - 33T - OD: 5.589" - SM |
| 15B | 044700W230 | Various | * Waved Friction - replaces 044700 | | 72-On | AR | Wave |
| 13E | 044702W230 | Various | * Waved Friction - replaces 044702 | | 72-On | AR | Wave |
| **HI-PERFORMANCE - RED EAGLE®** | | | | | | | |
| | 044740 | NA | All except Low / Reverse | .091/2.3 | 72-On | AR | Red - 24T - OD: 5.000" - SM |
| 13E | 044742 | NA | Low / Reverse | .091/2.3 | 72-On | 4-5 | Red - 16T - OD: 5.000" - SM |
| **HI-PERFORMANCE - UNIT PACKS (ONE Rebuild)** | | | | | | | |
| KT | 044740UP4 | NA | UNIT PACK - Various | .091/2.3 | 72-On | 1 | 4 RED EAGLE® Friction |
| KT | 044742UP5 | NA | UNIT PACK - Low / Reverse | .091/2.3 | 72-On | 1 | 5 RED EAGLE® Friction |
| **STEEL CLUTCHES** | | | | | | | |
| 16C | 044701 | 35634-22070 | Forward | .071/1.8 | 72-On | 3-4 | 8T - ID: 4.012" |
| 16C | 044711 | 35634-30070 | Forward | .078/2.0 | 80-On | 3-4 | 8T - ID: 4.012 |
| 16C | 044701-140 | 35634-30090 | Forward | .055/1.4 | 81-On | 1 | 8T - ID: 4.012" |
| 17C | 044701 | 35634-22070 | Direct | .071/1.8 | 72-On | 2-3 | 8T - ID: 4.012" |
| 17C | 044711 | 35634-30070 | Direct | .078/2.0 | 80-On | 2-3 | 8T - ID: 4.012 |
| 17C | 073701-230 | | Direct - Selective (some A43D) | .091/2.3 | 99-On | 5 | 8T - ID: 4.138" |
| 16C | 044701-051 | NA | Forward & Direct - selective | .020/.51 | 72-On | AR | 8T - ID: 4.012" |
| 16C | 044701-076 | NA | Forward & Direct - selective | .030/.76 | 72-On | AR | 8T - ID: 4.012" |
| 17C | 044701-230 | 35634-30120 | Forward & Direct - selective | .091/2.3 | 72-On | AR | 8T - ID: 4.012" |
| 18D | 044705 | 35634-22090 | Overrun (Brake # 1) Ctr Support - front | .071/1.8 | 72-On | 1-3 | 8T - ID: 4.012" |
| 18D | 044715 | 35648-30010 | Overrun (Brake # 1) Ctr Support - front | .078/2.0 | 72-On | 1-3 | 8T - ID: 4.012" |

# TOYOTA

## TOYOTA - A40 SERIES
## MITSUBISHI - AW372 (R4AW2) / KM148 (V4AW2)
## 1972-On

| ILL | ALTO NO | REF NO | DESCRIPTION | SPEC | YEAR | QTY | NOTES |
|---|---|---|---|---|---|---|---|
| **STEEL CLUTCHES** | | | | | | | ...Continued |
| 19D | 044705 | 35634-22090 | Intermediate (Brake #2) Ctr Support - rear | .071/1.8 | 72-On | 2-4 | 8T - ID: 4.012" |
| 19D | 044715 | 35648-30010 | Intermediate (Brake #2) Ctr Support - rear | .078/2.0 | 80-On | 1-3 | 8T - ID: 4.012" |
| 19D | 044725 | 35648-30020 | Intermediate (Brake #2) Ctr Support - rear | .091/2.3 | 80-On | 3 | 8T - ID: 4.012" |
| 19D | 044735 | 35648-22010 | Intermediate (Brake #2) Ctr Support - rear | .118/3.0 | 85-On | 2 | 8T - ID: 4.012" |
| 20E | 044703 | 35634-22080 | Low / Reverse (Brake #3) | .071/1.8 | 72-On | 4 | 15T - ID: 4.012" |
| 20E | 044713 | 35647-22010 | Low / Reverse (Brake #3) | .071/1.8 | 72-On | 4 | 15T - ID: 4.012" |
| 21A | 044701 | 35634-22070 | Overdrive Direct | .071/1.8 | 77-On | 1-2 | 8T - ID: 4.012" |
| 22B | 044705 | 35634-22090 | Overdrive Brake | .071/1.8 | 77-On | 2-3 | 8T - ID: 4.012" |
| 22B | 044707 | 35634-30080 | Overdrive Brake | .078/2.0 | 81-On | 2 | 7T - ID: 4.578" |
| 22B | 044717 | 35634-30010 | Overdrive Brake | .091/2.3 | 84-On | 1-3 | 7T - ID: 4.578" |
| 22B | 044707-400 | MD609200 | Overdrive Brake - Mitsubishi | .158/4.0 | 95-On | 3 | 7T - ID: 4.578" |
| **HI-PERFORMANCE - KOLENE®** | | | | | | | |
| 16C | 044701K180 | NA | Forward, Direct & OD Direct | .071/1.8 | 72-On | AR | 8T - ID: 4.012" |
| 20E | 044703K180 | NA | Low / Reverse | .071/1.8 | 72-On | AR | 15T - ID: 4.012" |
| 18D | 044705K180 | NA | Center Support - Front & Rear | .071/1.8 | 72-On | AR | 8T - ID: 4.012" |
| **HI-PERFORMANCE - UNIT PACKS (ONE Rebuild)** | | | | | | | |
| KT | 044701KUP4 | NA | UNIT PACK - Forward, Direct & OD Direct | .071/1.8 | 72-On | 1 | 4 KOLENE® Steel |
| KT | 044703KUP4 | NA | UNIT PACK - Low / Reverse | .071/1.8 | 72-On | 1 | 4 KOLENE® Steel |
| KT | 044705KUP4 | NA | UNIT PACK - Center Support - Front & Rear | .071/1.8 | 72-On | 1 | 4 KOLENE® Steel |
| **PRESSURE PLATES** | | | | | | | |
| 28A | 044767 | 34618-30010 | Overdrive Direct - cushion | .055/1.4 | 77-On | 1 | |
| **FILTERS** | | | | | | | |
| KT | FK044940 | NA | Filter Kit - A40, A41, A43 | | 72-93 | 1 | |
| KT | FK044942 | NA | Filter Kit - A40D | | 77-85 | 1 | |
| KT | FK044944 | NA | Filter Kit - A55 Tercel | | 80-97 | 1 | |
| KT | FK044946 | NA | Filter Kit - A42D, A43D, A44D | | 82-On | 1 | |
| KT | FK044948 | NA | Filter Kit - A42DL, A43DL, A44DL, A45D/DF | | 79-On | 1 | |
| KT | FK044952 | NA | Filter Kit - A43DE, A46DE | | 83-On | 1 | |
| 30G | 044940 | 35303-22020 | Filter - A40, A41, A43 | | 72-93 | 1 | |
| 30G | 044942 | 35303-30031 | Filter - A40D | | 77-85 | 1 | |
| 30G | 044944 | 35303-16030 | Filter - A55 4WD Tercel - deep | | 80-97 | 1 | |
| 30G | 044946 | 35303-30050 | Filter - A42D, A43D, A44D | | 82-On | 1 | MD609545 |
| 30G | 044948 | 35303-14010 | Filter - A42DL, A43DL, A44DL, A45D/DF | | 79-On | 1 | |
| 30G | 044952 | 35303-30060 | Filter - A43DE, A46DE | | 83-On | 1 | |
| **METAL CLAD SEALS** | | | | | | | |
| 31A | 044400 | 90311-38020 | Front Pump | | 72-On | 1 | |
| 32G | 044405 | 90303-38010 | Extension Housing (without felt) | 2.290 | 72-On | 1 | Toyota & Mazda 2wd |
| 32G | 044408A | 09625009 | Extension Housing - Isuzu | 1.944 | 81-85 | 1 | |
| 32G | 044408 | 94473633 | Extension Housing - Isuzu | 2.700 | 86-On | 1 | |
| 32G | 044407 | MD951482 | Extension Housing - AW372/ R4AW2 | 2.255 | 87-On | 1 | Mitsubishi 2wd |
| 32G | 044412 | 90310-40003 | Adapter Housing - A43DL / A46DF | 2.217 | 84-On | 1 | 4wd |
| 32G | 044413 | 29792-57B01 | Adapter Housing - GM / Suzuki (03-72L) | 1.978 | 96-On | 1 | |
| 32G | 044409 | MD609235 | Adapter Housing - KM148 / V4AW2 | 2.700 | 87-On | 1 | |
| N I | 044410 | 90311-11128 | Manual Lever | | 72-On | 1 | |
| N I | 044420 | 90310-09001 | Speedometer | | 72-On | 1 | |
| **SEALING RINGS** | | | | | | | |
| KT | 044600 | | Sealing Ring Kit - 3 speed - 17M | | 72-93 | 1 | |
| KT | 044601 | D457 | Sealing Ring Kit - 4 speed - 21M / 1T | | 77-On | 1 | |
| KT | 044601B | D456 | Sealing Ring Kit - 4 speed - 14M / 1T | | 81-On | 1 | |
| 40A | 044100 | 35617-22010 | Stator Support - 3 speed | | 72-81 | 2 | |
| 40A | 044101 | 35617-22020 | Stator Support - 4 speed | | 77-81 | 2 | |
| 40A | 044101A | 35617-16010 | Stator Support - All | | 82-On | 2 | |
| 41D | 044101 | 35617-22020 | Center Support - All | | 72-81 | 3 | |
| 41D | 044101A | 35617-16010 | Center Support - All | | 82-On | 3 | |
| 42B | 044101 | 35617-22020 | Overdrive Support - 4 speed | | 72-81 | 3 | |
| 42B | 044101A | 35617-16010 | Overdrive Support - 4 speed | | 82-On | 3 | |

# TOYOTA
## TOYOTA - A40 SERIES
## MITSUBISHI - AW372 (R4AW2) / KM148 (V4AW2)
## 1972-On

| ILL | ALTO NO | REF NO | DESCRIPTION | SPEC | YEAR | QTY | NOTES |
|---|---|---|---|---|---|---|---|
| **SEALING RINGS** | | | | | | | ...Continued |
| 43D | 044103 | 35749-22010 | Sun Gear - All except below | 1.500 | 72-On | 2 | |
| 43D | 044106 | 35749-30010 | Sun Gear - A43 series, A46DE, DL | 1.750 | 72-On | 2 | |
| 44F | 044104 | 35735-22010 | Output Shaft - All | | 72-On | 3 | |
| 45F | 044107 | 35748-30010 | Intermediate Shaft - 4 speed | Teflon | 77-On | 1 | |
| **BUSHINGS** | | | | | | | |
| KT | 044625 | NA | Bushing Kit - 3 speed | | 72-93 | 1 | |
| KT | 044625A | NA | Bushing Kit - 4 speed | | 77-On | 1 | |
| N I | 044200 | NA | Front Pump Body - All | | 77-On | 1 | |
| N I | 044201 | NA | Stator Shaft (Front & Rear) - Narrow | 21.5mm | 72-93 | 2 | |
| N I | 044202 | NA | Stator Shaft (Front) - wide | 21.5mm | 77-On | 1 | |
| N I | 044203 | NA | Case (Rear) | | 72-On | 1 | |
| N I | 044204 | NA | Center Support | | 72-On | 1 | |
| N I | 044205 | NA | Sun Gear (Front & Rear) | | 72-On | 2 | |
| N I | 044207 | NA | Extension Housing | | 72-On | 1 | |
| N I | 044207A | NA | Extension Housing - Mitsubishi | | 87-On | 1 | * Not in Kit |
| N I | 044209 | NA | Output Shaft | | 72-On | 1 | |
| N I | 044210 | NA | Overdrive Sun Gear - Front | | 77-On | 1 | |
| N I | 044211 | NA | Overdrive Sun Gear - Rear | | 77-On | 1 | |
| **WASHERS** | | | | | | | |
| KT | 044635 | NA | Kit, A40, A41, A43 | | 72-93 | 1 | |
| KT | 044635A | NA | Kit, A40D, A42D | | 77-91 | 1 | |
| KT | 044635B | NA | Kit, A43D, DE, DL, A46DE / DF | | 79-On | 1 | |
| KT | 044635C | NA | Kit, A42DL, A44DL, A45DL | | 84-On | 1 | |
| 50F | 044154 | 35738-22010 | Front Planet - A40, A40D | Plastic | 72-93 | 1 | |
| 50F | 044156 | 35738-30010 | Front Planet - A43 series, A46DE, DF | Plastic | 77-On | 1 | |
| 50F | 044158 | 35738-30030 | Front Planet - A42DL, A44DL, A45DL | Plastic | 77-On | 1 | |
| 51E | 044155 | 35739-22010 | Rear Planet - A40, A40D | Plastic | 72-93 | 1 | |
| 51E | 044157 | 35739-30010 | Rear Planet - A43 series, A46DE, DF | Plastic | 77-On | 1 | |
| 51E | 044159 | 35739-30020 | Rear Planet - A42DL, A44DL, A45DL | Plastic | 77-On | 1 | |

**NOTES**

# TOYOTA

## TOYOTA - A340E, H, F, 341E, 343E, 350E
## JEEP - AW4 / MITSUBISHI - R4AV3, V4AW3
## VOLVO - AW30-40, AW30-43, AW30-80 1985-On

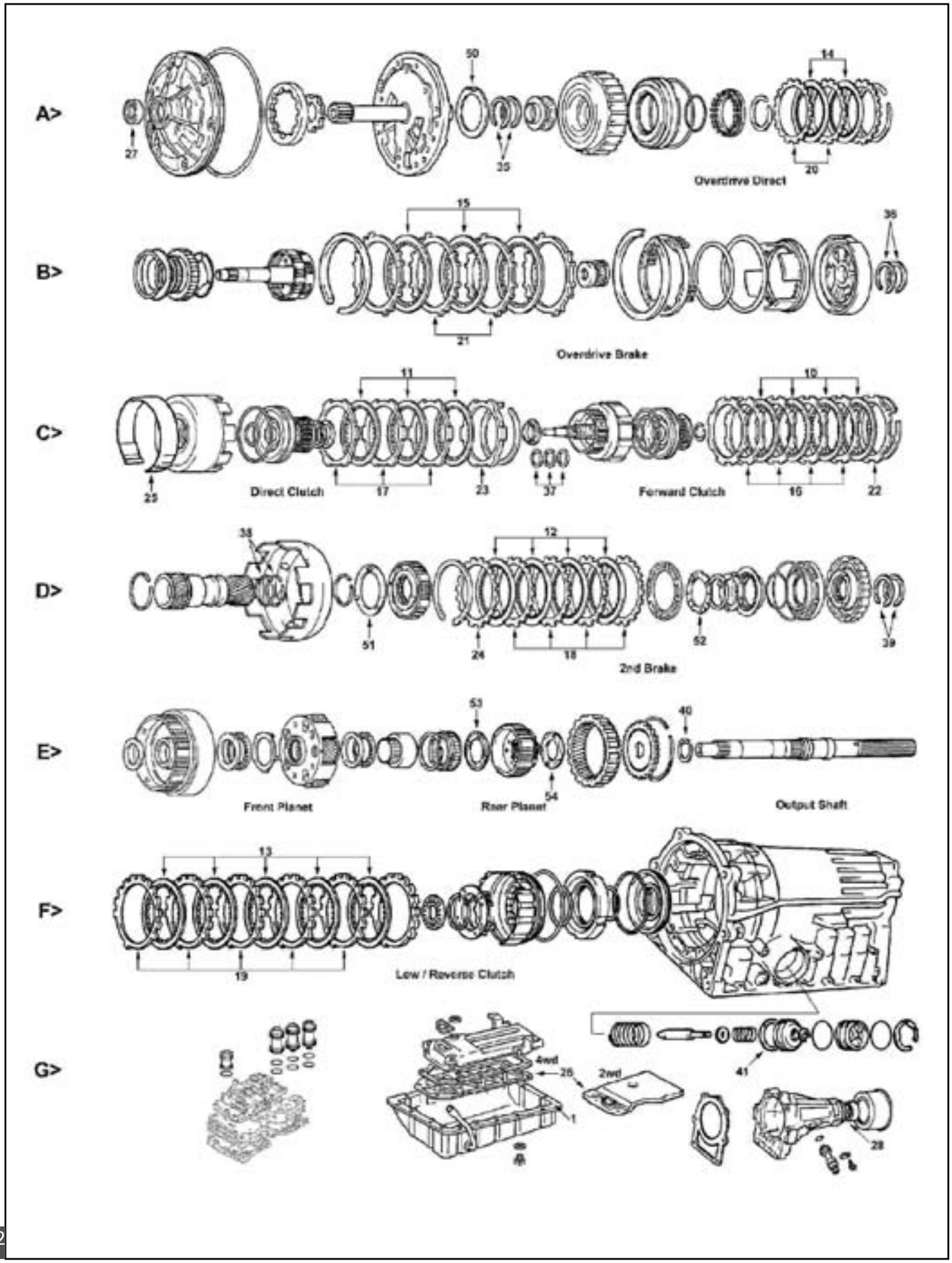

# TOYOTA

## TOYOTA - A340E, H, F, 341E, 343E, 350E
## JEEP - AW4 / MITSUBISHI - R4AV3, V4AW3
## VOLVO - AW30-40, AW30-43, AW30-80 1985-On

| ILL | DESCRIPTION | YEARS | FRICTION MODULE | STEEL MODULE | OVERHAUL KIT | BANNER KIT | MASTER KIT |
|---|---|---|---|---|---|---|---|
| **KITS** | | | | | | | |
| **TOYOTA CRESSIDA** | | | | | | | |
| KT | Rebuilding Kit | 85-92 | 073752A | 073753A | 073800 | 073901ALS | 073901A |
| **TOYOTA SUPRA** | | | | | | | |
| KT | Rebuilding Kit - Non Turbo | 86-97 | 073752A | 073753A | 073800 | 073901ALS | 073901A |
| KT | Rebuilding Kit - Non Turbo | 98 | 073752F | 073753D | 073804 | 073907ALS | TBA |
| KT | Rebuilding Kit - Turbo | 85-93 | 073752C | 073753H | 073800 | 073901LS | TBA |
| KT | Rebuilding Kit - Turbo | 94-98 | 073752F | 073753F | 073804 | 073907ALS | 073907A |
| KT | Rebuilding Kit - Non Turbo | 94-98 | 073752A | 073753J | 073804 | 073907LS | 073907B |
| **TOYOTA 4Runner & Pickup** | | | | | | | |
| KT | Rebuilding Kit - 2wd with 4 cyl. Engine | 85-95 | 073752A | 073753A | 073800 | 073901ALS | 073901A |
| KT | Rebuilding Kit - 2wd with 4 cyl. Engine | 94-00 | 073752L | 073753N | 073800E | 073907FLS | 073907F |
| KT | Rebuilding Kit - All 4wd | 90-91 | 073752A | 073753A | 073800 | 073901ALS | 073901A |
| KT | Rebuilding Kit - All 4wd | 92-95 | 073752A | 073753N | 073800 | 073901ALS | TBA |
| KT | Rebuilding Kit - 4wd with V6 Engine | 96-99 | 073752S | 073753S | 073800 | 073915ALS | 073915A |
| **TOYOTA LANDCRUISER** | | | | | | | |
| KT | Rebuilding Kit - A343 | 98-99 | 073752C | 073753L | 073800 | 073913LS | 073913 |
| **TOYOTA 4Runner & Pickup** | | | | | | | |
| KT | Rebuilding Kit - 4wd with V6 Engine | 00-01 | 073752M | 073753Q | 073806 | 073915LS | 073915 |
| **TOYOTA LANDCRUISER** | | | | | | | |
| KT | Rebuilding Kit - A343F | 8/99-On | 073752C | 073753P | 073800 | 073913LS | 073913A |
| KT | Rebuilding Kit - A343 | 00-On | 073752M | 073753Q | 073806 | 073915LS | 073915 |
| **TOYOTA PREVIA (with Supercharger)** | | | | | | | |
| KT | Rebuilding Kit - 2wd | 90-94 | 073752A | 073753D | 073804 | 073907LS | 073907 |
| **TOYOTA Previa (with Supercharger)** | | | | | | | |
| KT | Rebuilding Kit - 4wd | 90-94 | 073752C | 073753E | 073804 | 073907CLS | 073907C |
| KT | Rebuilding Kit - 2wd & 4wd | 95-96 | 073752A | 073753D | 073800D | 073907DLS | 073907D |
| **TOYOTA SEQUOIA** | | | | | | | |
| KT | Rebuilding Kit - | 00-On | 073752M | 073753Q | 073806 | 073915LS | 073915 |
| **TOYOTA T100** | | | | | | | |
| KT | Rebuilding Kit - 4 cylinder Engine | 93-97 | 073752L | 073753D | 073800 | TBA | TBA |
| KT | Rebuilding Kit - V6 | 93-94 | 073752A | 073753E | 073800 | 073901ALS | TBA |
| KT | Rebuilding Kit - V6 | 95-98 | 073752S | 073753S | 073800 | 073915ALS | 073915A |
| **TOYOTA TACOMA** | | | | | | | |
| KT | Rebuilding Kit - 4 cylinder Engine | 95-97 | 073752C | 073753K | 073804 | 073907CLS | 073909 |
| KT | Rebuilding Kit - 4 cylinder Engine | 98-On | 073752L | 073753N | 073800E | 073907FLS | 073907F |
| KT | Rebuilding Kit - 6 cylinder Engine | 95-On | 073752L | 073753L | 073804 | 073909ALS | 073909A |
| KT | Rebuilding Kit - V6 | 95-7/00 | 073752S | 073753S | 073800 | 073915ALS | 073915A |
| KT | Rebuilding Kit - V6 | 8/00-On | 073752M | 073753Q | 073806 | 073915LS | 073915 |
| **TOYOTA TUNDRA** | | | | | | | |
| KT | Rebuilding Kit | 99-On | 073752M | 073753Q | 073806 | 073915LS | 073915 |
| **LEXUS GS300** | | | | | | | |
| KT | Rebuilding Kit - A350E | 96-97 | 073752A | 073753D | 073804 | 073907LS | 073907 |
| **LEXUS LS400** | | | | | | | |
| KT | Rebuilding Kit - | 95-97 | 073752H | 073753H | 073804 | 073905LS | 073905 |
| **LEXUS LX450, LX470** | | | | | | | |
| KT | Rebuilding Kit - A343F | 96-98 | 073752C | 073753L | 073800 | 073913LS | 073913 |
| KT | Rebuilding Kit - A343F | 99-On | 073752M | 073753Q | 073806 | 073915LS | 073915 |
| **LEXUS SC300, SC400** | | | | | | | |
| KT | Rebuilding Kit - SC300 | 92-On | 073752A | 073753D | 073804 | 073907LS | 073907 |
| KT | Rebuilding Kit - SC400 | 91-97 | 073752F | 073753F | 073804 | 073907ALS | 073907A |
| **ISUZU TROOPER** | | | | | | | |
| KT | Rebuilding Kit | 88-91 | 073752A | 073753A | 073800 | 073901ALS | 073901A |

# TOYOTA

## TOYOTA - A340E, H, F, 341E, 343E, 350E
## JEEP - AW4 / MITSUBISHI - R4AV3, V4AW3
## VOLVO - AW30-40, AW30-43, AW30-80 1985-On

| ILL | DESCRIPTION | YEARS | FRICTION MODULE | STEEL MODULE | OVERHAUL KIT | BANNER KIT | MASTER KIT |
|---|---|---|---|---|---|---|---|
| **KITS** | | | | | | | ...Continued |
| **JEEP - ALL** | | | | | | | |
| KT | Rebuilding Kit | 87-01 | 073752C | 073753C | 073802 | 073901BLS | 073901B |
| **MITSUBISHI MONTERO / PAJERO** | | | | | | | |
| KT | Rebuilding Kit | 94-95 | 073752C | 073753E | 073800E | 073907ELS | 073907E |
| KT | Rebuilding Kit | 96-On | 073752L | 073753N | 073800E | 073907FLS | 073907F |
| **VOLVO 960** | | | | | | | |
| KT | Rebuilding Kit | 91-97 | 073752H | 073753M | 073804 | 073911LS | 073911 |
| **HI-PERFORMANCE - RED EAGLE®** | | | | | | | |
| KT | Rebuilding Kit | Var. | 073752HP | 073753 | 073800 | 073901HPLS | 073901HP |
| **COMBINATION KITS** | | | | | | | |
| | 073752 replaces 073752A & 073752C | | | | | | |
| | 073752F replaces 073752H | | | | | | |
| | 073753 replaces 073753A, 073753E, 073753L | | | | | | |

| ILL | ALTO NO | REF NO | DESCRIPTION | SPEC | YEAR | QTY | NOTES |
|---|---|---|---|---|---|---|---|
| **MISCELLANEOUS GASKETS & KIT COMPONENTS** | | | | | | | |
| 1G | 073816 | NA | Gasket, Oil Pan | Cork/Rub | 85-On | 1 | OE is RTV |
| **FRICTION CLUTCHES** | | | | | | | |
| 10C | 073700 | 35677-30090 | Forward - Cars except SC/LS400 & Turbo | .083/2.1 | 85-On | 4-5 | Heg - 40T - OD: 4.973" - SM |
| 10C | 073700A | 35677-26010 | Forward - Trucks with V6 & Turbo | .067/1.7 | 93-On | 3-5 | Heg - 40T - OD: 4.973" - SM |
| 10C | 073700-190 | 35677-50020 | Forward - Lexus SC/LS400 | .075/1.9 | 92-On | 6-7 | Tan - 40T - OD: 4.973" - SM |
| 10C | 073700-200 | 35677-30170 | Forward - Trucks with 4 cyl. | .078/2.0 | 93-On | 5 | Tan - 40T - OD: 4.973" - SM |
| 11C | 073702 | Various | Direct | .083/2.1 | 85-On | 3-4 | Heg - 40T - OD: 5.178" - SM |
| 11C | 073702B200 | 35667-34010 | Direct | .080/2.0 | 99-On | 3-4 | Heg - 40T - OD: 5.178" - SM |
| 12D | 073704 | 35667-60010 | 2nd Brake | .078/2.0 | 85-On | 4-5 | Heg - 32T - OD: 5.178" - SM |
| 13F | 073706 | 35677-30180 | Low / Reverse | .067/1.7 | 85-On | 5-7 | Heg - 32T - OD: 5.092" - SM |
| 14A | 073708 | 35633-30040 | Overdrive Direct | .083/2.1 | 85-On | 2 | Tan - 32T - OD: 4.973" - SM |
| 15B | 073710 | 34633-60010 | Overdrive Brake | .083/2.1 | 85-On | 3-5 | Tan - 24T - OD: 6.529" - SM |
| **HI-PERFORMANCE - RED EAGLE®** | | | | | | | |
| 10C | 073740 | NA | Forward - Cars except SC/LS400 & Turbo | .083/2.1 | 85-On | 4-5 | Red - 40T - OD: 4.973" - SM |
| 10C | 073740A | NA | Forward - Trucks with V6 & Turbo | .067/1.7 | 93-On | 3-5 | Red - 40T - OD: 4.973" - SM |
| 11C | 073742 | NA | Direct | .083/2.1 | 85-On | 3-4 | Red - 40T - OD: 5.178" - SM |
| 12D | 073744 | NA | 2nd Brake | .078/2.0 | 85-On | 4-5 | Red - 32T - OD: 5.178" - SM |
| 13F | 073746 | NA | Low / Reverse | .067/1.7 | 85-On | 5-7 | Red - 32T - OD: 5.092" - SM |
| 14A | 073748 | NA | Overdrive Direct | .083/2.1 | 85-On | 2 | Red - 32T - OD: 4.973" - SM |
| 15B | 073749 | NA | Overdrive Brake | .083/2.1 | 85-On | 3-5 | Red - 24T - OD: 6.529" - SM |
| **HI-PERFORMANCE - UNIT PACKS (ONE Rebuild)** | | | | | | | |
| KT | 073740UP5 | NA | UNIT PACK - Forward | .083/2.1 | 85-On | 1 | 5 RED EAGLE® Friction |
| KT | 073740AUP6 | NA | UNIT PACK - Forward | .067/1.7 | 93-On | 1 | 6 RED EAGLE® Friction |
| KT | 073742UP4 | NA | UNIT PACK - Direct | .083/2.1 | 85-On | 1 | 4 RED EAGLE® Friction |
| KT | 073744UP5 | NA | UNIT PACK - 2nd Brake | .078/2.0 | 85-On | 1 | 5 RED EAGLE® Friction |
| KT | 073746UP7 | NA | UNIT PACK - Low / Reverse | .067/1.7 | 85-On | 1 | 7 RED EAGLE® Friction |
| KT | 073748UP2 | NA | UNIT PACK - Overdrive Direct | .083/2.1 | 85-On | 1 | 2 RED EAGLE® Friction |
| KT | 073749UP5 | NA | UNIT PACK - Overdrive Brake | .083/2.1 | 85-On | 1 | 5 RED EAGLE® Friction |
| **STEEL CLUTCHES** | | | | | | | |
| 16C | 073701 | 35634-33060 | Forward - All | .078/2.0 | 85-91 | 4-5 | 8T - ID: 4.138" |
| 16C | 065701 | 35634-32010 | Forward - Truck with V6 & Turbo | .071/1.8 | 92-On | 6-7 | 8T - ID: 4.138" |
| 16C | 073701-230 | 35634-30110 | Forward - Cars & 4 cyl. Trucks | .091/2.3 | 92-On | 4-5 | 8T - ID: 4.138" |
| 17C | 073703 | 35647-30011 | Direct | .091/2.3 | 85-99 | 1/4 | 6T - ID: 4.152" |
| 17C | 073703A | 35634-30020 | Direct | .071/1.8 | 93-99 | 3-4 | 6T - ID: 4.152" |
| 17C | 073723 | 35647-14010 | Direct | .118/3.0 | 87-99 | 4 | 6T - ID: 4.152" |
| 17C | 142705-230 | 35647-22030 | Direct | .091/2.3 | 00-On | 4 | 24T - ID: 4.152" |
| 18D | 073705 | 35647-30030 | 2nd Brake | .071/1.8 | 85-On | 1 | 16T - ID: 4.152" |
| 18D | 073725 | 35647-30020 | 2nd Brake | .098/2.5 | 85-On | 4 | 16T - ID: 4.152" |
| 19F | 073707 | 35648-30031 | Low / Reverse | .071/1.8 | 85-On | 5-7 | 15T - ID: 4.319" |

# TOYOTA

## TOYOTA - A340E, H, F, 341E, 343E, 350E
## JEEP - AW4 / MITSUBISHI - R4AV3, V4AW3
## VOLVO - AW30-40, AW30-43, AW30-80 1985-On

| ILL | ALTO NO | REF NO | DESCRIPTION | SPEC | YEAR | QTY | NOTES |
|---|---|---|---|---|---|---|---|
| **STEEL CLUTCHES** | | | | | | | ...Continued |
| 20A | 073709 | 34616-30010 | Overdrive Direct | .078/2.0 | 85-On | 1-2 | 24T - ID: 4.127" |
| 20A | 073709A | 34615-33010 | Overdrive Direct | .118/3.0 | 85-On | AR | 24T - ID: 4.127" |
| 20A | 073709-250 | 34616-50010 | Overdrive Direct | .098/2.5 | 92-On | 1 | 24T - ID: 4.127" |
| 21B | 073711 | 34634-30020 | Overdrive Brake - small OD | .078/2.0 | 85-On | 3-4 | 6T - ID: 5.634" |
| 21B | 073721 | 34634-30050 | Overdrive Brake - large OD | .078/2.0 | 92-On | 3-4 | 6T - ID: 5.634" |
| **HI-PERFORMANCE - KOLENE®** | | | | | | | |
| 17C | 073703K | NA | Direct | .091/2.3 | 85-99 | 1/4 | |
| 17C | 073703AK | NA | Direct | .071/1.8 | 93-99 | 3-4 | |
| 17C | 073723K | NA | Direct | .118/3.0 | 87-99 | 4 | |
| 18D | 073705K | NA | 2nd Brake | .071/1.8 | 85-On | 1 | |
| 18D | 073725K | NA | 2nd Brake | .098/2.5 | 85-On | 4 | |
| **PRESSURE PLATES** | | | | | | | |
| 22C | 065760-260 | 35675-32030 | Forward Top - selective | .102/2.6 | 85-On | AR | |
| 22C | 065760-280 | 35675-17010 | Forward Top - selective | .110/2.8 | 85-On | AR | |
| 22C | 065760-300 | 35675-32010 | Forward Top - selective | .118/3.0 | 85-On | AR | |
| 22C | 065760-320 | 35635-50050 | Forward Top - selective | .125/3.2 | 85-On | AR | Marked "60" |
| 22C | 065760-337 | 35635-50040 | Forward Top - selective | .133/3.37 | 85-On | AR | Marked "45" |
| 22C | 065760-360 | 35635-50030 | Forward Top - selective | .141/3.6 | 85-On | AR | Marked "62" |
| 22C | TBA | 35635-50020 | Forward Top - selective | .150/3.8 | 85-On | AR | Marked "44" |
| 22C | TBA | 35635-50010 | Forward Top - selective | .157/4.0 | 85-On | AR | Marked "42" |
| 22C | TBA | 35635-30020 | Forward Top - selective | .165/4.2 | 85-On | AR | Marked "63" |
| 22C | TBA | 35635-30030 | Forward Top - selective | .173/4.4 | 85-On | AR | Marked "64" |
| 23C | 073723-400 | 35647-30040 | Direct Top - selective | .157/4.0 | 85-On | AR | 6T - ID: 4.152" |
| 24D | 073725-400 | 35647-30050 | 2nd Brake Top - selective | .157/4.0 | 85-On | AR | 16T - ID: 4.152" |
| **BANDS** | | | | | | | |
| 25C | 073950 | 35810-50020 | 2nd Coast Brake | Tan | 85-On | 1 | |
| **FILTERS** | | | | | | | |
| 26G | 073940 | 35330-30011 | Filter - 2wd except below | | 85-On | 1 | |
| 26G | 073944 | 35330-50010 | Filter - 2wd Lexus & Supra Turbo | | 85-On | 1 | |
| 26G | 073944A | 35330-30020 | Filter - 2wd GS300 (A350) | | 94-95 | 1 | |
| 26G | 073944B | 35330-30040 | Filter - GS300 (A350E) | | 96-On | 1 | |
| 26G | 073942 | 35330-35010 | Filter - 4wd (4" x 12") Rectangle | | 85-On | 1 | |
| 26G | 073942A | 83504032 | Filter - 4wd (5" x 10") Jeep | | 87-01 | 1 | |
| 26G | 073942B | 35330-22010 | Filter - 4wd (3/8" pickup tube) | | 95-On | 1 | |
| 26G | 073946 | 35330-35020 | Filter - 4wd (center pickup tube) | | 95-On | 1 | |
| 26G | 073948 | 35330-60020 | Filter - 4wd (3/4" pickup tube) | | 95-On | 1 | |
| **METAL CLAD SEALS** | | | | | | | |
| 27A | 073400 | 90311-38029 | Front Pump | | 85-On | 1 | |
| 28G | 073402 | 90311-40001 | Extension Housing - 2wd | 1.600 | 85-On | 1 | |
| 28G | 073403 | 90311-38043 | Extension Housing - 2wd | 1.500 | 86-87 | 1 | 83504048 (Jeep) |
| 28G | 073404 | 90311-42024 | Extension Housing - 2wd | 2.173 | 90-On | 1 | |
| 28G | 073405 | 90311-40007 | Adapter Housing - 4wd | 2.295 | 90-On | 1 | |
| 28G | 073406 | 90311-48016 | Adapter Housing - 4wd | 2.455 | 95-On | 1 | |
| 28G | 073407 | 83504055 | Adapter Housing - 4wd Jeep | 2.440 | 87-On | 1 | |
| N I | 044420 | 90310-09001 | Speedometer | | 85-On | 1 | |
| N I | 065410 | 90311-12002 | Manual Lever | | 85-On | 2-3 | |
| **SEALING RINGS** | | | | | | | |
| KT | 073600 | D465 | Sealing Ring Kit - 3M / 10T | | 85-On | 1 | |
| 35A | 073100 | 35617-30020 | Front Pump Stator | | 85-On | 2 | Teflon |
| 36B | 073100 | 35617-30020 | OD Support Stator | | 85-On | 2 | Teflon |
| 37C | 073101 | 35712-30020 | Input Shaft | | 85-On | 3 | Teflon |
| 38D | 044105 | 35749-30010 | Sun Gear | | 85-On | 2 | Metal |
| 39D | 073100 | 35617-30020 | Center Support | | 85-On | 2 | Teflon |
| 40E | 073103 | 35735-30020 | Output Shaft | | 85-On | 1 | Metal |
| 41G | 073102 | 35865-30010 | 2nd Coast Brake Servo | | 85-On | 1 | Teflon |

# TOYOTA

## TOYOTA - A340E, H, F, 341E, 343E, 350E
## JEEP - AW4 / MITSUBISHI - R4AV3, V4AW3
## VOLVO - AW30-40, AW30-43, AW30-80 1985-On

| ILL | ALTO NO | REF NO | DESCRIPTION | SPEC | YEAR | QTY | NOTES |
|---|---|---|---|---|---|---|---|
| **BUSHINGS** | | | | | | | |
| KT | 073625 | NA | Bushing Kit | | 85-On | 1 | |
| N I | 044200 | NA | Front Pump Body | | 85-On | 1 | |
| N I | 044205 | NA | Extension Housing - 35mm Yoke | | 85-On | 1 | |
| N I | 044205A | NA | Extension Housing - 40mm Yoke | | 85-On | 1 | |
| N I | 044205B | NA | Extension Housing - 44mm Yoke | | 85-On | 1 | |
| **WASHERS** | | | | | | | |
| KT | 073635 | NA | Washer Kit | | 85-On | 1 | |
| 50A | 073156 | 35616-30050 | Direct Drum - 1 tab | Nylon | 85-On | 1 | |
| 51D | 073153 | 35738-30040 | Intermediate Sprag - Front | Nylon | 85-On | 1 | |
| 52D | 073152 | 35729-30010 | Intermediate Sprag - Rear | Nylon | 85-On | 1 | |
| 53E | 073154 | 35739-30030 | Rear Planet - Front | Nylon | 85-On | 1 | |
| 54E | 073155 | 35737-30030 | Rear Planet - Rear | Nylon | 85-On | 1 | |
| 55C | 073151 | 35686-30010 | Input Drum | Nylon | 85-On | 1 | |

**NOTES**

A>

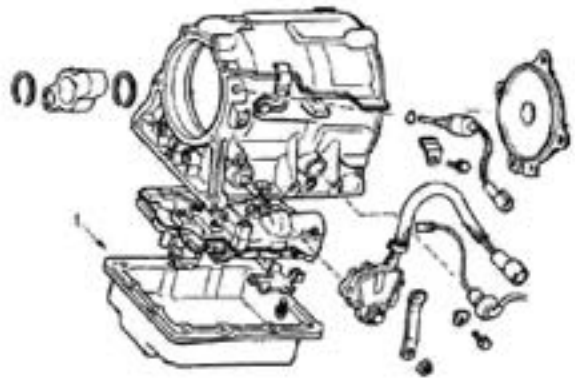


B>

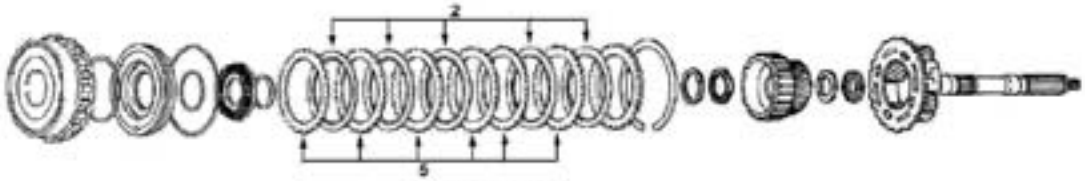


Direct Clutch (C3)

C>

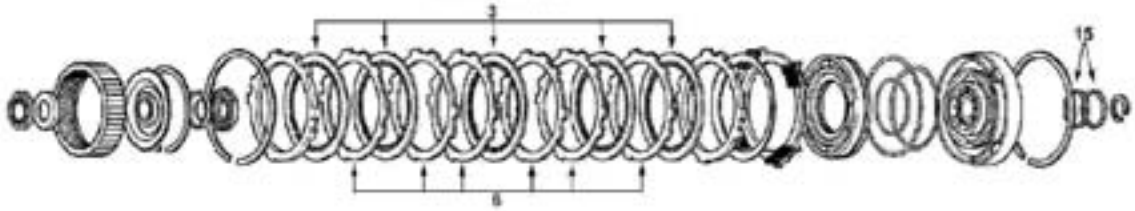


Low Speed Brake (B4)

D>

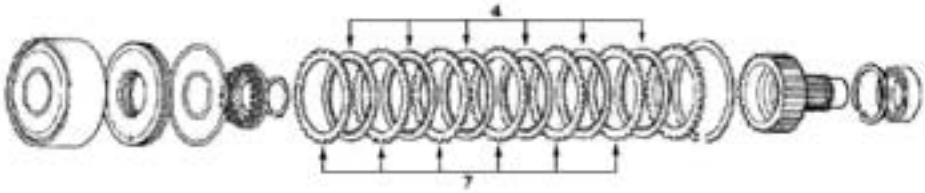


Front Drive Clutch (C4)

E>

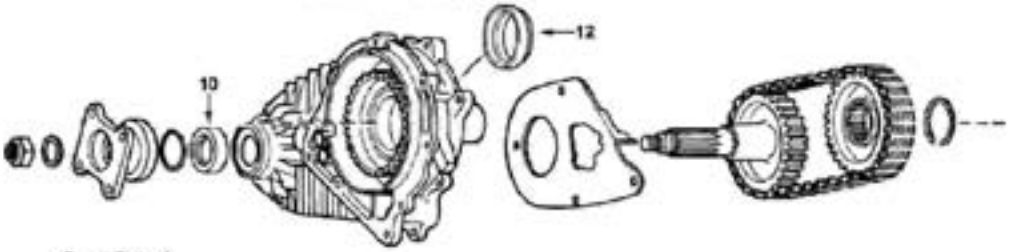


Front Output

F>

Rear Output

# TOYOTA

## TOYOTA A340 TRANSFER CASE 1988-95

| ILL | DESCRIPTION | YEARS | FRICTION MODULE | STEEL MODULE | OVERHAUL KIT | BANNER KIT | MASTER KIT |
|---|---|---|---|---|---|---|---|
| **KITS** | | | | | | | |
| KT | Rebuilding Kit | 88-95 | 073752B | 073753B | 073800T | 073903LS | 073903 |

| ILL | ALTO NO | REF NO | DESCRIPTION | SPEC | YEAR | QTY | NOTES |
|---|---|---|---|---|---|---|---|
| **MISCELLANEOUS GASKETS & KIT COMPONENTS** | | | | | | | |
| 1A | 073818 | NA | Gasket, Oil Pan | Cork/Rub | 85-95 | 1 | OE is RTV |
| **FRICTION CLUTCHES** | | | | | | | |
| 2B | 073712 | 34653-35020 | Direct (C3) Clutch | .067/1.7 | 88-95 | 6 | Heg - 44T - OD: 5.597" - SM |
| 3C | 073714 | 34683-35020 | Low Speed Brake (B4) Clutch | .067/1.7 | 88-95 | 7 | Tan - 53T - OD: 6.808" - SM |
| 4D | 073712 | 34653-35020 | Front Drive (C4) Clutch | .067/1.7 | 88-95 | 6 | Heg - 44T - OD: 5.597" - SM |
| **STEEL CLUTCHES** | | | | | | | |
| 5B | 073713 | 34656-35010 | Direct (C3) Clutch | .071/1.8 | 88-95 | 5 | 29T - ID: 4.580" |
| 5B | 073713-255 | 34656-35020 | Direct (C3) Clutch | .100/2.55 | 88-95 | 5 | 29T - ID: 4.580" |
| 6C | 073715 | 34686-35010 | Low Speed Brake (B4) Clutch | .071/1.8 | 88-95 | 4-6 | 8T - ID: 5.954" |
| 7D | 073713 | 34656-35010 | Front Drive (C4) Clutch | .071/1.8 | 88-95 | 6 | 29T - ID: 4.580" |
| **METAL CLAD SEALS** | | | | | | | |
| 10E | TBA | 90316-40001 | Front Output shaft | 2.295 | 88-95 | 1 | |
| 11F | TBA | 90316-40001 | Rear Output shaft | 2.295 | 88-95 | 1 | |
| 12E | TBA | 90310-58001 | Chain Case - Front | 75mm | 88-95 | 1 | |
| 12E | TBA | 90310-77001 | Chain Case - Front | 77mm | 88-95 | 1 | |
| 12E | TBA | 90310-58002 | Chain Case - Front (1 pc) | Combo | 88-95 | 1 | |
| 13F | TBA | 90310-58001 | Chain Case - Rear | 75mm | 88-95 | 1 | |
| 13F | TBA | 90310-77001 | Chain Case - Rear | 77mm | 88-95 | 1 | |
| 13F | TBA | 90310-58002 | Chain Case - Rear (1 pc) | Combo | 88-95 | 1 | |
| N I | 073405 | 90311-40007 | Adapter to Transfer Case | 2.295 | 88-95 | 1 | |
| N I | TBA | 90311-15008 | Case - Fork shaft side | | 88-95 | 2 | |
| N I | TBA | 90311-41006 | Case - Output side | | 88-95 | 1 | |
| **SEALING RINGS** | | | | | | | |
| N I | 044100 | 35617-22010 | Direct (C3) Drum | | 88-95 | 2 | |
| 15C | 044101 | 35617-22020 | Center Support | | 88-95 | 2 | |

**NOTES**

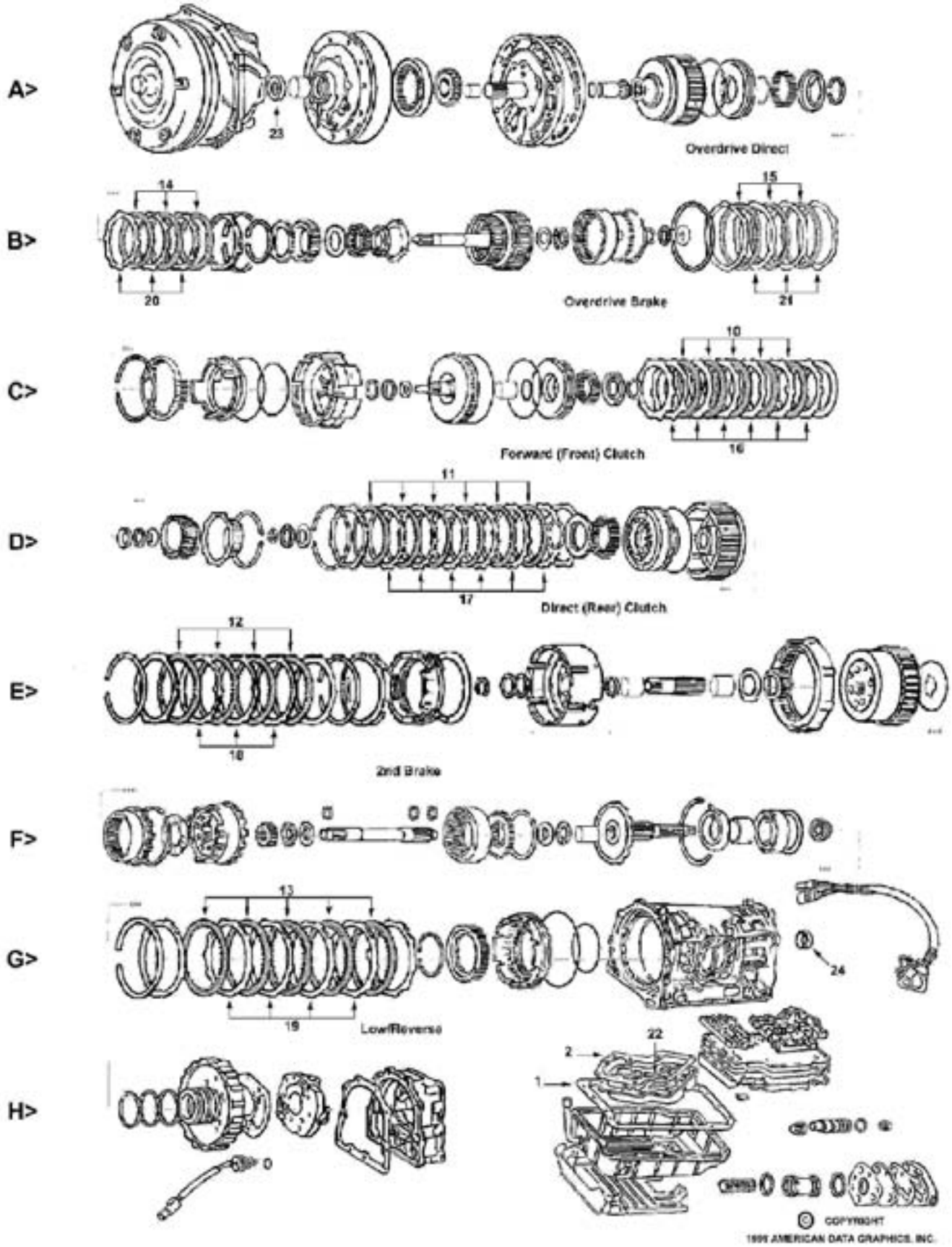
A>
23
Overdrive Direct
B>
14
15
20
Overdrive Brake
21
C>
10
16
Forward (Front) Clutch
D>
11
17
Direct (Rear) Clutch
E>
12
18
2nd Brake
F>
G>
13
24
19
Low/Reverse
H>
22
2
1
0
COPYRIGHT
1999 AMERICAN DATA GRAPHICS, INC.

# TOYOTA

## A440F 1985-92
## A442F 1993-95

| ILL | DESCRIPTION | YEARS | FRICTION MODULE | STEEL MODULE | OVERHAUL KIT | BANNER KIT | MASTER KIT |
|---|---|---|---|---|---|---|---|
| **KITS** | | | | | | | |
| KT | Rebuilding Kit - A440 | 85-89 | 083752 | 083753 | 083800 | 083901LS | 083901 |
| KT | Rebuilding Kit - A440 | 90-92 | 083752 | 083753A | 083800 | 083901LS | 083903 |
| KT | Rebuilding Kit - A442 | 93-95 | 083752A | 083753B | 083802 | 083905LS | 083905 |

| ILL | ALTO NO | REF NO | DESCRIPTION | SPEC | YEAR | QTY | NOTES |
|---|---|---|---|---|---|---|---|
| **MISCELLANEOUS GASKETS & KIT COMPONENTS** | | | | | | | |
| 1H | 083816 | 35168-36010 | Gasket, Oil Pan | Cork/Rub | 85-95 | 1 | |
| 2H | 083004 | 35339-60010 | Gasket, Filter | | 85-92 | 1 | |
| **FRICTION CLUTCHES** | | | | | | | |
| 10C | 083700 | 35633-60040 | Forward (Front) | .083/2.1 | 85-95 | 6-7 | Tan - 46T - OD: 4.987" - SM |
| 10C | 083700A210 | 35633-60040 | Forward (Front) | .083/2.1 | 85-95 | 6-7 | Heg - 46T - OD: 4.987" - SM |
| 10C | 083700-170 | 35677-40020 | Forward (Front) - Some overseas Type A60 (03-95) | .067/1.7 | 95 | 6-7 | Tan - 46T - OD: 4.987" - SM |
| 11D | 083700 | 35633-60040 | Direct (Rear) | .083/2.1 | 85-95 | 5 | Tan - 46T - OD: 4.987" - SM |
| 11D | 083700A210 | 35633-60040 | Direct (Rear) | .083/2.1 | 85-95 | 5 | Heg - 46T - OD: 4.987" - SM |
| 12E | 083702 | 35633-36060 | 2nd Brake (Intermediate) | .083/2.1 | 85-95 | 4-5 | Tan - 70T - OD: 6.887" - SM |
| 12E | 083702B210 | 35633-36060 | 2nd Brake (Intermediate) | .083/2.1 | 85-95 | 4-5 | Heg - 70T - OD: 6.887" - SM |
| 13G | 083704 | 35633-60030 | Low / Reverse | .067/1.7 | 85-95 | 6 | Tan - 70T - OD: 6.887" - SM |
| 13G | 083704A170 | 35633-60030 | Low / Reverse | .067/1.7 | 85-95 | 6 | Heg - 70T - OD: 6.887" - SM |
| 14B | 083700 | 35633-36040 | Overdrive Direct | .083/2.1 | 85-95 | 3 | Tan - 46T - OD: 4.987" - SM |
| 14B | 083700A210 | 35633-36040 | Overdrive Direct | .083/2.1 | 85-95 | 3 | Heg - 46T - OD: 4.987" - SM |
| 14B | 083710-210 | NA | Overdrive Direct - Some overseas (A442F) | .083/2.1 | 95 | 3 | Tan - 47T - OD: 4.987" - SM |
| 14B | 083710A210 | NA | Overdrive Direct - Some overseas (A442F) | .083/2.1 | 95 | 3 | Heg - 47T - OD: 4.987" - SM |
| 15B | 083702 | 35633-36060 | Overdrive Brake - A440F | .083/2.1 | 85-92 | 3 | Tan - 70T - OD: 6.887" - SM |
| 15B | 083702B210 | 35633-36060 | Overdrive Brake - A440F | .083/2.1 | 85-92 | 3 | Heg - 70T - OD: 6.887" - SM |
| 15B | 083702A | 35633-36050 | Overdrive Brake - A442F | .083/2.1 | 93-95 | 3 | Tan - 75T - OD: 7.237" - SM |
| 15B | 083712-210 | NA | Overdrive Brake - Some overseas (A442F) | .083/2.1 | 95 | 3 | Tan - 20T - OD: 7.229" - SM |
| 15B | 083712A210 | NA | Overdrive Brake - Some overseas (A442F) | .083/2.1 | 95 | 3 | Heg - 20T - OD: 7.229" - SM |
| **STEEL CLUTCHES** | | | | | | | |
| 16C | 083701 | 35634-36010 | Forward (Front) | .071/1.8 | 85-95 | 6 | 10T - ID: 3.997" |
| 16C | 083701-200 | 35634-36040 | Forward (Front) - selective | .078/2.0 | 85-95 | AR | 10T - ID: 3.997" |
| 16C | 083701-220 | 35634-36050 | Forward (Front) - selective | .087/2.2 | 85-95 | AR | 10T - ID: 3.997" |
| 16C | 083701-240 | 35634-36020 | Forward (Front) - selective | .095/2.4 | 85-95 | AR | 10T - ID: 3.997" |
| 17D | 083701 | 35634-36010 | Direct (Rear) | .071/1.8 | 85-95 | 6 | 10T - ID: 3.997" |
| 18E | 083703 | 35632-36010 | 2nd Brake (Intermediate) | .095/2.4 | 85-90 | 7 | 6T - ID: 5.995" |
| 18E | 083703-200 | 35632-60040 | 2nd Brake (Intermediate) | .078/2.0 | 91-95 | 4 | 6T - ID: 5.995" |
| 19G | 083705 | 35632-36020 | Low / Reverse - A440F | .071/1.8 | 85-92 | 6 | 16T - ID: 5.995" |
| 19G | 083705-240 | 35632-60030 | Low / Reverse - A442F | .095/2.4 | 93-95 | 6 | 16T - ID: 5.995" |
| 20B | 083701 | 35634-36010 | Overdrive Direct | .071/1.8 | 85-95 | 6 | 10T - ID: 3.997" |
| 20B | 083711-200 | NA | Overdrive Direct - Some overseas (A442F) | .078/2.0 | 95 | 3 | 20T - ID: 4.048" |
| 21B | 083703 | 35632-36010 | Overdrive Brake - A440F | .095/2.4 | 85-92 | 3 | 6T - ID: 5.995" |
| 21B | 083703-200 | 35632-60040 | Overdrive Brake - A442F | .078/2.0 | 93-95 | 3 | 6T - ID: 5.995" |
| 21B | 083713-400 | 35632-60020 | Overdrive Brake - A442F | .157/4.0 | 93-95 | 1 | 6T - ID: 5.995" |
| 21B | 083703A240 | NA | Overdrive Brake - Some overseas (A442F) | .095/2.4 | 95 | 3 | 6T - ID: 5.995" |
| **FILTERS** | | | | | | | |
| 22H | 083940 | 35303-60011 | Filter - A440F (Shallow) | .375" | 85-92 | 1 | |
| 22H | 083942 | 35303-60010 | Filter - A440F (Deep) | 2.0" | 85-92 | 1 | |
| 22H | 083944 | 35330-60010 | Filter - A442F | | 93-95 | 1 | |
| **METAL CLAD SEALS** | | | | | | | |
| 23A | 083400 | 90311-42010 | Front Pump | | 85-95 | 1 | |
| 23A | 042400 | NA | Front Pump (will work) | | 85-95 | 1 | |
| 24G | 083405 | 90311-48016 | Adapter Housing (4x4) | | 85-95 | 1 | |
| **SEALING RINGS** | | | | | | | |
| KT | 083600 | NA | Sealing Ring Kit - A440F | | 85-92 | 1 | |
| KT | 083601 | NA | Sealing Ring Kit - A442F | | 93-95 | 1 | |

## NOTES

# TOYOTA
## A650E
## 1998-On

| ILL | DESCRIPTION | YEARS | FRICTION MODULE | STEEL MODULE | OVERHAUL KIT | BANNER KIT | MASTER KIT |
|---|---|---|---|---|---|---|---|
| **KITS** | | | | | | | |
| KT | Rebuilding Kit | 98-On | 142752 | 142753 | 142800 | 142901LS | 142901 |

| ILL | ALTO NO | REF NO | DESCRIPTION | SPEC | YEAR | QTY | NOTES |
|---|---|---|---|---|---|---|---|
| **FRICTION CLUTCHES** | | | | | | | |
| N I | 073700-190 | 35677-30150 | Forward | .075/1.9 | 98-On | 5-6 | Tan - 40T - OD: 4.973" - SM |
| N I | 142704-170 | NA | Direct | .067/1.7 | 98-On | 5 | Heg - 40T - OD: 5.178" - SM |
| N I | 142702-170 | 35683-30010 | Low / Reverse | .067/1.7 | 98-On | 6 | Tan - 44T - OD: 5.420" - SM |
| N I | 142706-180 | NA | 3rd Brake | .071/1.8 | 98-On | 5 | Heg - 36T - OD: 5.940" - PL |
| N I | 142708-220 | NA | 2nd Brake | .087/2.2 | 98-On | 5 | Heg - 35T - OD: 5.575" - WF |
| N I | 073708 | 35633-30040 | Overdrive Direct | .083/2.1 | 98-On | 2 | Tan - 32T - OD: 4.970" - SM |
| N I | 073710 | 34633-60010 | Ovedrive Brake | .081/2.05 | 98-On | 4 | Tan - 24T - OD: 6.529" - SM |
| **STEEL CLUTCHES** | | | | | | | |
| N I | 065701 | 35634-32010 | Forward | .071/1.8 | 98-On | 5-6 | 8T - ID: 4.138" |
| N I | 065701-140 | 35634-33020 | Forward | .055/1.4 | 98-On | 1 | 8T - ID: 4.138" |
| N I | 073701-230 | 35634-30110 | Forward (SC400/430) | .091/2.3 | 98-On | 5 | 8T - ID: 4.135" |
| N I | 142705-180 | NA | Direct | .071/1.8 | 98-On | 5 | 24T - ID: 4.155" |
| N I | 142703-180 | 35693-30020 | Low / Reverse | .071/1.8 | 98-On | 5 | 18T - ID: 4.872" |
| N I | 142707-270 | NA | 3rd Brake | .106/2.7 | 98-On | 4 | 8T - ID: 5.175" |
| N I | 142707-200 | NA | 3rd Brake | .078/2.0 | 98-On | 1 | 8T - ID: 5.175" |
| N I | 142709-290 | NA | 2nd Brake | .114/2.9 | 98-On | 5 | 23T - ID: 4.861" |
| N I | 073709 | 34616-30010 | Overdrive Direct | .078/2.0 | 98-On | 2 | 24T - ID: 4.127" |
| N I | 073709-250 | 34616-50010 | Overdrive Direct | .098/2.5 | 98-On | 1 | 24T - ID: 4.127" |
| N I | 073721 | 34634-30050 | Overdrive Brake | .078/2.0 | 98-On | 3 | 6T - ID: 5.634" |
| **PRESSURE PLATES** | | | | | | | |
| N I | 065760-300 | 35635-50060 | Forward - selective "61" | .118/3.0 | 98-On | AR | |
| N I | 065760-320 | 35635-50050 | Forward - selective "60" | .126/3.2 | 98-On | AR | |
| N I | 065760-337 | 35635-50040 | Forward - selective "45" | .134/3.4 | 98-On | AR | |
| N I | TBA | 35635-50030 | Forward - selective "62" | .142/3.6 | 98-On | AR | |
| N I | TBA | 35635-50020 | Forward - selective "44" | .150/3.8 | 98-On | AR | |
| N I | TBA | 35635-50010 | Forward - selective "42" | .157/4.0 | 98-On | AR | |
| N I | TBA | 35635-30020 | Forward - selective "63" | .165/4.2 | 98-On | AR | |
| N I | TBA | 35635-30030 | Forward - selective "64" | .173/4.4 | 98-On | AR | |
| N I | TBA | 35675-22030 | Direct - selective | .130/3.3 | 98-On | AR | |
| N I | TBA | 35675-22040 | Direct - selective | .134/3.4 | 98-On | AR | |
| N I | TBA | 35675-22050 | Direct - selective | .138/3.5 | 98-On | AR | |
| N I | TBA | 35675-22060 | Direct - selective | .142/3.6 | 98-On | AR | |
| N I | TBA | 35675-22070 | Direct - selective | .146/3.7 | 98-On | AR | |
| N I | TBA | 35675-22080 | Direct - selective | .150/3.8 | 98-On | AR | |
| N I | TBA | 35675-22090 | Direct - selective | .154/3.9 | 98-On | AR | |
| N I | TBA | 35675-22100 | Direct - selective | .157/4.0 | 98-On | AR | |
| N I | TBA | 35675-30180 | Direct - selective | .161/4.1 | 98-On | AR | |
| N I | TBA | 35696-30010 | Low / Reverse - selective | .078/2.0 | 98-On | AR | |
| N I | TBA | 35696-30020 | Low / Reverse - selective | .087/2.2 | 98-On | AR | |
| N I | TBA | 35696-30030 | Low / Reverse - selective | .094/2.4 | 98-On | AR | |
| N I | TBA | 35696-30040 | Low / Reverse - selective | .102/2.6 | 98-On | AR | |
| N I | TBA | 35696-30050 | Low / Reverse - selective | .110/2.8 | 98-On | AR | |
| N I | TBA | 35696-30060 | Low / Reverse - selective | .118/3.0 | 98-On | AR | |
| N I | TBA | 35679-30010 | Low / Reverse - Top (Bevel) | .236/6.0 | 98-On | 1 | |
| N I | TBA | 35676-30180 | 2nd Brake - Top & Bottom selective | .142/3.6 | 98-On | AR | |
| N I | TBA | 35676-30190 | 2nd Brake - Top & Bottom selective | .145/3.7 | 98-On | AR | |
| N I | TBA | 35676-30200 | 2nd Brake - Top & Bottom selective | .150/3.8 | 98-On | AR | |
| N I | TBA | 35676-30210 | 2nd Brake - Top & Bottom selective | .154/3.9 | 98-On | AR | |
| N I | TBA | 35676-30220 | 2nd Brake - Top & Bottom selective | .157/4.0 | 98-On | AR | |
| N I | TBA | 35676-30230 | 2nd Brake - Top & Bottom selective | .161/4.1 | 98-On | AR | |
| N I | TBA | 35695-30010 | 3rd Brake - Bottom selective | .083/2.1 | 98-On | AR | |
| N I | TBA | 35695-30020 | 3rd Brake - Bottom selective | .090/2.3 | 98-On | AR | |

| ILL | ALTO NO | REF NO | DESCRIPTION | SPEC | YEAR | QTY | NOTES |
|---|---|---|---|---|---|---|---|
| **PRESSURE PLATES** | | | | | | | ...Continued |
| N I | TBA | 35695-30030 | 3rd Brake - Bottom selective | .098/2.5 | 98-On | AR | |
| N I | TBA | 35695-30040 | 3rd Brake - Bottom selective | .106/2.7 | 98-On | AR | |
| N I | 142709-290 | 35695-30050 | 3rd Brake - Bottom selective | .114/2.9 | 98-On | AR | |
| N I | TBA | 35695-30060 | 3rd Brake - Bottom selective | .122/3.1 | 98-On | AR | |
| **BANDS** | | | | | | | |
| N I | 073950 | 35810-14010 | 2nd Coast Brake | Tan | 98-On | 1 | |
| **FILTERS** | | | | | | | |
| N I | 142940A | 35330-30050 | Filter | | 98-00 | 1 | |
| N I | 142942 | 35330-30070 | Filter | | 01-On | 1 | |
| **METAL CLAD SEALS** | | | | | | | |
| N I | 073400 | 90311-38029 | Front Pump | | 98-On | 1 | |
| N I | 073404 | 90311-42024 | Extension Housing | 2.173 | 98-On | 1 | |
| N I | 065410 | 90311-12002 | Manual Lever | | 98-On | 2 | |
| **SEALING RINGS** | | | | | | | |
| KT | 142600 | NA | Sealing Ring Kit | | 98-On | 1 | |

## NOTES

# TOYOTA

## A750E, A750F
## 5 Speed RWD 2003-On

| ILL | DESCRIPTION | YEARS | FRICTION MODULE | STEEL MODULE | OVERHAUL KIT | BANNER KIT | MASTER KIT |
|---|---|---|---|---|---|---|---|
| **KITS** | | | | | | | |
| KT | Rebuilding Kit | 03-On | 173752 | 173753 | 173800 | 173901LS | 173901 |

| ILL | ALTO NO | REF NO | DESCRIPTION | SPEC | YEAR | QTY | NOTES |
|---|---|---|---|---|---|---|---|
| **FRICTION CLUTCHES** | | | | | | | |
| N I | 173700-150 | 35667-60020 | Direct | .059/1.5 | 03-On | 5 | Heg - 36T - SB |
| N I | 173702-150 | 35677-60010 | Rear | .059/1.5 | 03-On | 5 | Heg - 40T - SB |
| N I | 173704-190 | 35633-60070 | Forward | .074/1.9 | 03-On | 6 | Heg - 30T - OD: 4.700" - SB |
| N I | 173708-180 | 35681-60010 | #1 Brake | .070/1.8 | 03-On | 3 | Heg - 40T - SB |
| N I | 173710-150 | 35682-60010 | #2 Brake | .060/1.5 | 03-On | 3 | Heg - 40T - OD: 5.430" - SB |
| N I | 173706-185 | 35693-60010 | #3 Brake | .073/1.85 | 03-On | 4 | Heg - 40T |
| N I | 173712-150 | 35684-60010 | #4 Brake | .060/1.5 | 03-On | 8 | Tan - 48T - OD: 5.530" |
| **STEEL CLUTCHES** | | | | | | | |
| N I | 173701-180 | 35647-60010 | Direct & Rear | .071/1.8 | 03-On | 6-10 | 24T |
| N I | 173701-240 | 35648-60010 | Rear | .095/2.4 | 03-On | 4 | 24T |
| N I | 173705-180 | 35634-60020 | Forward | .071/1.8 | 03-On | 5 | 24T - ID: 4.160" |
| N I | 173709-240 | 35691-60010 | #1 Brake | .094/2.4 | 03-On | 3 | 13T - ID: 5.525" |
| N I | 173711-200 | 35692-60010 | #2 Brake | .079/2.0 | 03-On | 3 | 13T - ID: 4.530" |
| N I | 173707-200 | 35683-60010 | #3 Brake | .079/2.0 | 03-On | 4 | 16T |
| N I | 173713-180 | 35694-60010 | #4 Brake | .070/1.8 | 03-On | 7 | 16T - ID: 4.920" |

**NOTES**

A>

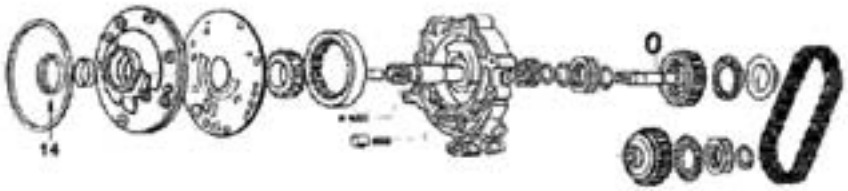


B>

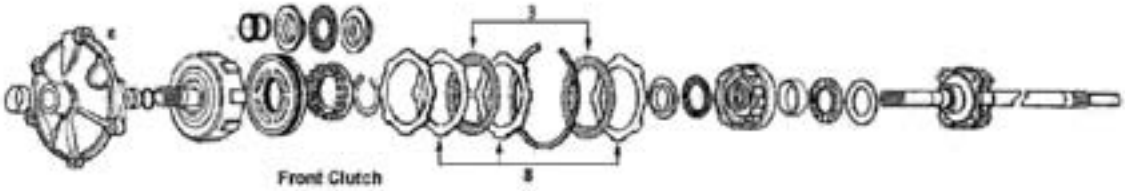


C>

D>

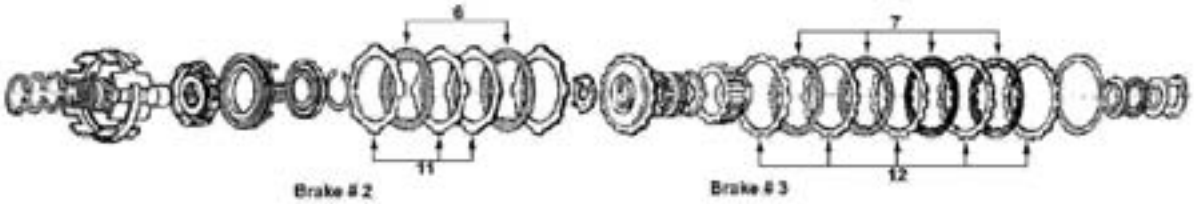


E>

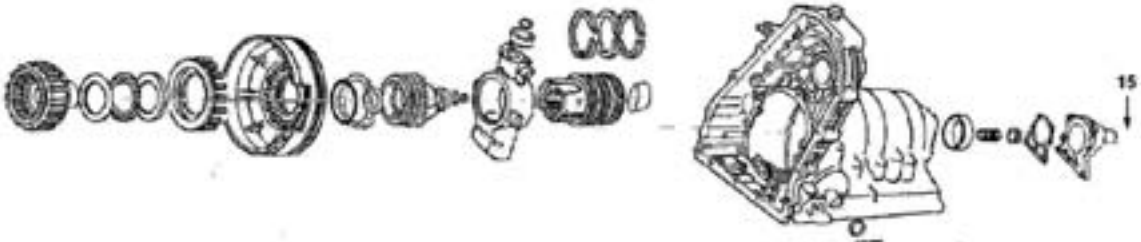


F>

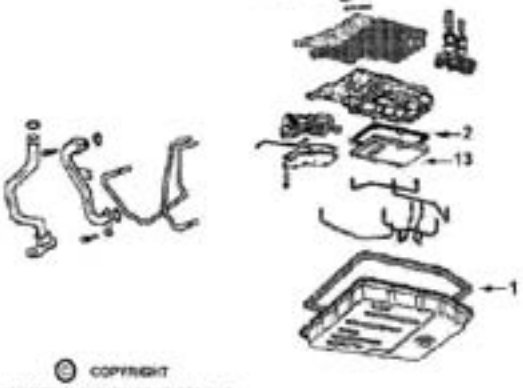


© COPYRIGHT
1990 AMERICAN DATA GRAPHICS, INC.

# TOYOTA
## A55, A55F
## 1979-87

| ILL | DESCRIPTION | YEARS | FRICTION MODULE | STEEL MODULE | OVERHAUL KIT | BANNER KIT | MASTER KIT |
|---|---|---|---|---|---|---|---|
| **KITS** | | | | | | | |
| KT | Rebuilding Kit - 2wd & 4wd | 79-87 | 044752E | 044753E | 044804 | 044905LS | 044905 |

| ILL | ALTO NO | REF NO | DESCRIPTION | SPEC | YEAR | QTY | NOTES |
|---|---|---|---|---|---|---|---|
| **MISCELLANEOUS GASKETS & KIT COMPONENTS** | | | | | | | |
| 1F | 044816A | 35168-16010 | Gasket, Oil Pan | Cork/Rub | 79-87 | 1 | |
| 2F | 044004E | 35339-16010 | Gasket, Filter | | 79-87 | 1 | |
| **FRICTION CLUTCHES** | | | | | | | |
| 3B | 044700 | Various | Front | .091/2.3 | 79-87 | 2-3 | Tan - 24T - OD: 5.000" - SM |
| 4C | 044700 | Various | Rear | .091/2.3 | 79-87 | 2 | Tan - 24T - OD: 5.000" - SM |
| 5C | 044700 | Various | Brake #1 | .091/2.3 | 79-87 | 1 | Tan - 24T - OD: 5.000" - SM |
| 6D | 044700 | Various | Brake #2 (Center Support front) | .091/2.3 | 79-87 | 2 | Tan - 24T - OD: 5.000" - SM |
| 7D | 044702 | Various | Brake #3 (Center Support rear) | .091/2.3 | 79-87 | 4 | Tan - 16T - OD: 5.000" - SM |
| 3B | 044700W230 | Various | * Waved Friction - replaces 044700 | | 79-87 | AR | Wave |
| 7D | 044702W230 | Various | * Waved Friction - replaces 044702 | | 79-87 | AR | Wave |
| **HI-PERFORMANCE - RED EAGLE®** | | | | | | | |
| AR | 044740 | NA | Front, Rear & Brake #2 | .091/2.3 | 79-87 | AR | Red - 24T - OD: 5.000" - SM |
| 7D | 044742 | NA | Brake #3 | .091/2.3 | 79-87 | AR | Red - 16T - OD: 5.000" - SM |
| **HI-PERFORMANCE - UNIT PACKS (ONE Rebuild)** | | | | | | | |
| KT | 044740UP4 | NA | UNIT PACK - Front, Rear or Brake #2 | .091/2.3 | 79-87 | 1 | 4 RED EAGLE® Friction |
| KT | 044742UP5 | NA | UNIT PACK - Brake #3 | .091/2.3 | 79-87 | 1 | 5 RED EAGLE® Friction |
| **STEEL CLUTCHES** | | | | | | | |
| 8B | 044701 | Various | Front | .071/1.8 | 79-87 | 3-4 | 8T - ID: 4.012" |
| 9C | 044701 | Various | Rear | .071/1.8 | 79-87 | 3 | 8T - ID: 4.012" |
| 10C | 044701 | Various | Brake #1 | .071/1.8 | 79-87 | 1 | 8T - ID: 4.012" |
| 11D | 044705 | Various | Brake #2 (Center Support front) | .071/1.8 | 79-87 | 4 | 8T - ID: 4.012" (Long Tooth) |
| 12D | 044703 | Various | Brake #3 (Center Support rear) | .071/1.8 | 79-87 | 5 | 15T - ID: 4.012" |
| **HI-PERFORMANCE - KOLENE®** | | | | | | | |
| AR | 044701K180 | NA | Front, Rear, & Brake #1 | .071/1.8 | 79-87 | AR | 8T - ID: 4.012" |
| 11D | 044705K180 | NA | Brake #2 (Center Support front) | .071/1.8 | 79-87 | 4 | 8T - ID: 4.012" (Long Tooth) |
| 12D | 044703K180 | NA | Brake #3 (Center Support rear) | .071/1.8 | 79-87 | 5 | 15T - ID: 4.012" |
| **HI-PERFORMANCE - UNIT PACKS (ONE Rebuild)** | | | | | | | |
| KT | 044701KUP4 | NA | UNIT PACK - Front, Rear or Brake #1 | .071/1.8 | 79-87 | 1 | 4 KOLENE® Steel |
| KT | 044705KUP4 | NA | UNIT PACK - Brake #2 | .071/1.8 | 79-87 | 1 | 4 KOLENE® Steel |
| KT | 044703KUP4 | NA | UNIT PACK - Brake #3 | .071/1.8 | 79-87 | 1 | 4 KOLENE® Steel |
| **FILTERS** | | | | | | | |
| KT | FK044938 | NA | Filter Kit - 2wd | | 79-87 | 1 | |
| KT | FK044938A | NA | Filter Kit - 4wd | | 82-87 | 1 | |
| 13F | 044938 | 35303-16010 | Filter - 2wd | | 79-87 | 1 | |
| 13F | 044938A | 35303-16030 | Filter - 4wd | | 82-87 | 1 | |
| **METAL CLAD SEALS** | | | | | | | |
| 14A | 044400 | 90311-38020 | Front Pump | | 79-87 | 1 | |
| 15E | TBA | 90311-32011 | Extension Housing - 4wd | | 82-87 | 1 | |
| N I | 044425 | 90311-32006 | Axle/Differential - Right & Left - 2wd | | 79-87 | 2 | |
| N I | 044402 | 90310-23001 | Governor Pressure Adapter | | 79-87 | 2 | |
| N I | 036403 | 90311-08004 | Throttle Valve | | 79-87 | 1 | |
| N I | 044420 | 90310-09001 | Speedometer | | 79-87 | 1 | |
| N I | TBA | 90311-10082 | Manual Lever | | 79-87 | 1 | |
| **SEALING RINGS** | | | | | | | |
| KT | 044601A | D442 | Sealing Ring Kit - 14M | | 79-87 | 1 | |

**NOTES**

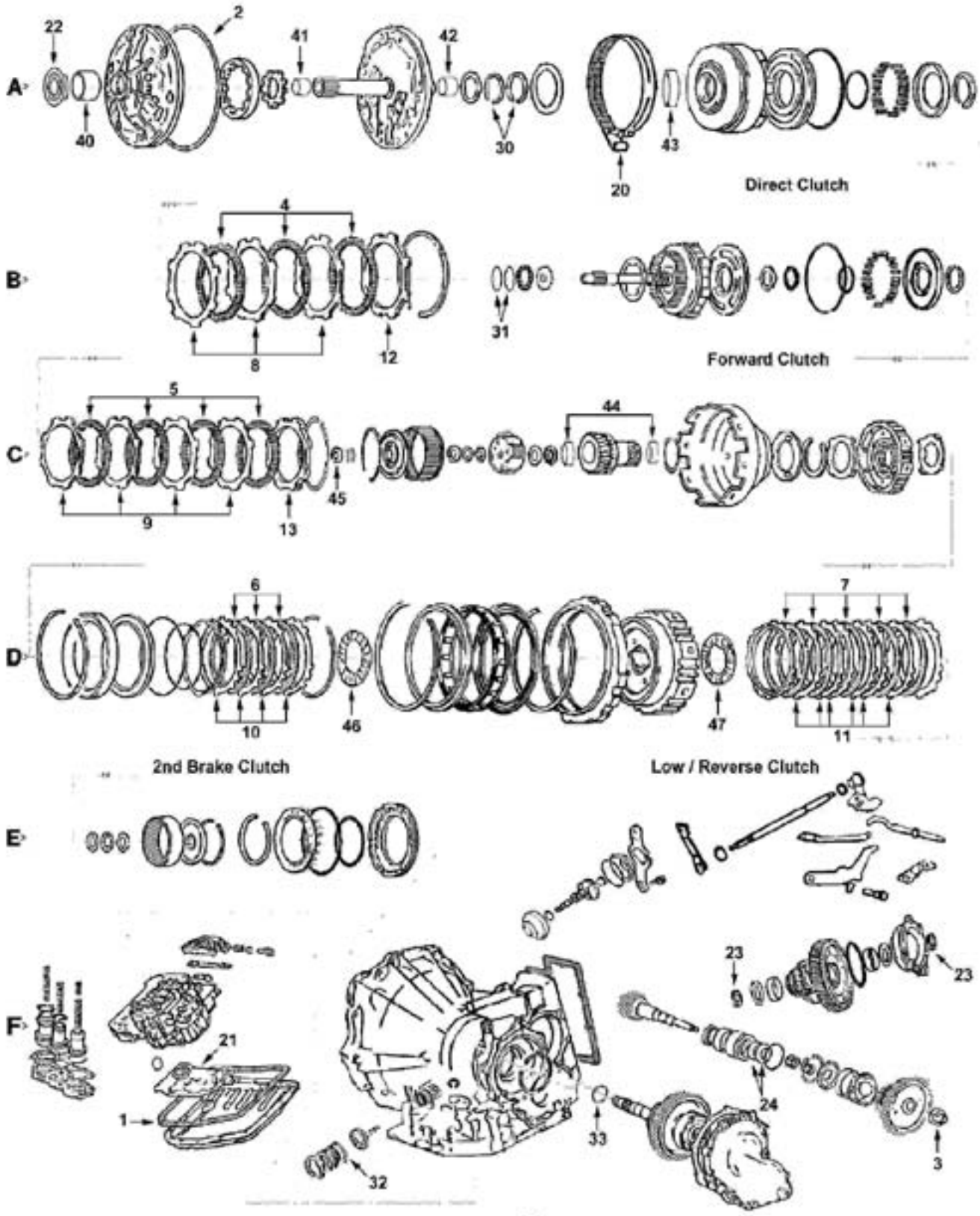


© COPYRIGHT
1999 AMERICAN DATA GRAPHICS, INC.

# TOYOTA

## TOYOTA - A130, 131, 132
## GM - MX1, MX17
## 1984-On

| ILL | DESCRIPTION | YEARS | FRICTION MODULE | STEEL MODULE | OVERHAUL KIT | BANNER KIT | MASTER KIT |
|---|---|---|---|---|---|---|---|
| **KITS** | | | | | | | |
| KT | Rebuilding Kit - A130, A131L, A132L | 84-94 | 065752B | 065753B | 065800 | 065905LS | 065905 |
| KT | Rebuilding Kit - A132L | 95-On | 065752N | 065753N | 065800 | 065905ALS | 065905A |
| KT | Rebuilding Kit - MX17(Sprint, Firefly, Metro) | 85-On | 065752D | 065753D | 065808 | 065909LS | 065909 |
| KT | Rebuilding Kit - MX1 (Nova, Prizm) | 85-94 | 065752B | 065753B | 065810 | 065911LS | 065911 |

| ILL | ALTO NO | REF NO | DESCRIPTION | SPEC | YEAR | QTY | NOTES |
|---|---|---|---|---|---|---|---|
| **MISCELLANEOUS GASKETS & KIT COMPONENTS** | | | | | | | |
| 1F | 065816 | 35168-32010 | Gasket, Oil Pan | Cork/Rub | 83-On | 1 | |
| 2A | 044050 | 90301-99024 | O Ring, Front Pump to case | | 83-On | 1 | |
| N I | 044054 | 90301-09173 | O Ring, Filler Tube & Detent Cable | | 83-On | 2 | |
| N I | 010116B | 96711-24018 | O Ring, Speedometer | | 83-On | 1 | |
| 3F | TBA | 90179-20004 | Nut, Pinion Shaft | | 83-On | 1 | |
| **FRICTION CLUTCHES** | | | | | | | |
| 4B | 065700 | Various | Direct | .067/1.7 | 83-86 | 3 | Heg - 40T - OD: 4.971" - SM |
| 4B | 065700PL | Various | Direct | .067/1.7 | 83-86 | 3 | Heg - 40T - OD: 4.971" - PL |
| 4B | 065710PL | Various | Direct | .075/1.95 | 87-On | 3-4 | Tan - 40T - OD: 4.971" - PL |
| 5C | 065700 | Various | Forward | .067/1.7 | 83-86 | 4 | Heg - 40T - OD: 4.971" - SM |
| 5C | 065700PL | Various | Forward | .067/1.7 | 83-86 | 4 | Heg - 40T - OD: 4.971" - PL |
| 5C | 065700W | NA | Forward - wave | .067/1.7 | 87-On | AR | Heg - 40T - OD: 4.971" - SM |
| 6D | 065702 | Various | 2nd Brake (Coast) | .067/1.7 | 83-86 | 3 | Heg - 33T - OD: 5.589" - SM |
| 6D | 065712 | Various | 2nd Brake (Coast) - some models | .075/1.95 | 87-On | 3 | Tan - 33T - OD: 5.589" - SM |
| 7D | 065702 | Various | Low / Reverse (Brake #3) - Except Celica | .067/1.7 | 83-On | 6 | Heg - 33T - OD: 5.589" - SM |
| 7D | 065722 | Various | Low / Reverse (Brake #3) - Celica only | .059/1.5 | 93-99 | 5 | Tan - 33T - OD: 5.589" - SM |
| **STEEL CLUTCHES** | | | | | | | |
| 8B | 065701 | Various | Direct | .071/1.8 | 84-On | 2-3 | 8T - ID: 4.138" |
| 9C | 065701 | Various | Forward | .071/1.8 | 84-On | 3 | 8T - ID: 4.138" |
| 10D | 065705 | Various | 2nd Brake (Coast) | .071/1.8 | 84-On | 3-4 | 12T - ID: 4.580" |
| 11D | 065703 | Various | Low / Reverse (Brake #3) | .071/1.8 | 84-On | 5-7 | 12T - ID: 4.580" |
| **PRESSURE PLATES** | | | | | | | |
| 12B | 065760-260 | NA | Direct, Top - selective | .102/2.6 | 84-On | AR | |
| 12B | 065760-300 | 35675-32010 | Direct, Top - selective | .118/3.0 | 84-On | AR | |
| 12B | 065760-320 | 35675-12010 | Direct, Top - selective | .125/3.2 | 84-On | AR | |
| 12B | 065760-337 | 35675-32020 | Direct, Top - selective | .133/3.37 | 84-On | AR | |
| 12B | TBA | 35675-32060 | Direct, Top - selective | .157/4.0 | 84-On | AR | |
| 13C | 065760-260 | NA | Forward, Top - selective | .102/2.6 | 84-On | AR | |
| 13C | 065760-280 | 35675-17010 | Forward, Top - selective | .110/2.8 | 84-On | AR | |
| 13C | 065760-300 | 35675-32010 | Forward, Top - selective | .118/3.0 | 84-On | AR | |
| 13C | 065760-320 | 35675-12010 | Forward, Top - selective | .125/3.2 | 84-On | AR | |
| 13C | 065760-337 | 35675-32020 | Forward, Top - selective | .133/3.37 | 84-On | AR | |
| 13C | 065760-360 | 35675-32060 | Forward, Top - selective | .157/4.0 | 84-On | AR | |
| **BANDS** | | | | | | | |
| 20A | 065950 | 35810-32020 | 2nd Coast Brake - except below | .983 | 84-On | 1 | |
| 20A | 065952 | 96054009 | 2nd Coast Brake - MX17 | 1.190 | 85-On | 1 | |
| **FILTERS** | | | | | | | |
| KT | FK065940 | NA | Filter Kit | | 84-On | 1 | |
| 21F | 065940 | 35330-20012 | Filter | | 84-On | 1 | |
| 21F | 065944 | 96053975 | Filter - MX17 | | 89-On | 1 | |
| **METAL CLAD SEALS** | | | | | | | |
| 22A | 044400 | 90311-38020 | Front Pump | | 84-On | 1 | |
| 23F | 065426 | 90311-34022 | Axle | 2.140 | 84-On | 2 | 1pc. 95-On (Conv. side) |
| 23F | 065428 | 90311-35010 | Axle - A130L only | 2.494 | 84-85 | 2 | Corolla Diesel |
| 23F | 065430 | 90311-34023 | Axle - case side | | 95-On | 1 | |
| 24F | 065427 | 90311-34003 | Pinion | | 84-On | 1 | |
| N I | 065410 | 90311-12002 | Manual Lever | | 84-On | 1 | |
| N I | 044420 | 90310-09001 | Speedometer | | 84-On | 1 | |

# TOYOTA

## TOYOTA - A130, 131, 132
## GM - MX1, MX17
## 1984-On

| ILL | ALTO NO | REF NO | DESCRIPTION | SPEC | YEAR | QTY | NOTES |
|---|---|---|---|---|---|---|---|
| **SEALING RINGS** | | | | | | | |
| KT | 065600 | D411 | Sealing Ring Kit - 2M / 7T | | 84-On | 1 | combo - all Toyota FWD |
| KT | 065601 | NA | Sealing Ring Kit - 6T | | 84-On | 1 | A130 series only |
| 30A | 065100 | 35617-22011 | Front Pump Stator - Direct drum | | 84-On | 2 | |
| 31B | 065101 | 35712-32010 | Input Shaft | | 84-On | 2 | |
| 32F | 065102 | 35865-32010 | 2nd Coast Servo piston | | 84-On | 1 | |
| 33F | 065103 | 35748-32010 | Intermediate Shaft | | 84-On | 1 | |
| **BUSHINGS** | | | | | | | |
| KT | 065625 | NA | Bushing Kit | | 84-On | 1 | |
| 40A | 044200 | NA | Front Pump Body | | 84-On | 1 | |
| 41A | 044202 | NA | Stator Shaft (Front) - wide | 21.5mm | 84-On | 1 | |
| 42A | 065201 | NA | Stator Shaft (Rear) | | 84-On | 1 | |
| 43A | 065202 | 35605-20010 | Direct Drum | | 84-On | 1 | |
| 44C | 065203 | NA | Sun Gear | | 84-On | 2 | |
| 45C | 065204 | NA | Input Hub | | 84-On | 1 | |
| **WASHERS** | | | | | | | |
| KT | 065635 | NA | Washer Kit | | 84-On | 1 | |
| 46D | 065151 | 35738-32010 | Rear Planet - Front | Nylon | 84-On | 1 | |
| 47D | 065152 | 35739-32011 | Rear Planet - Rear | Nylon | 84-On | 1 | |

**NOTES**

# TOYOTA
## A140, 141, 142
## 1983-On

A>

Direct Clutch

B>

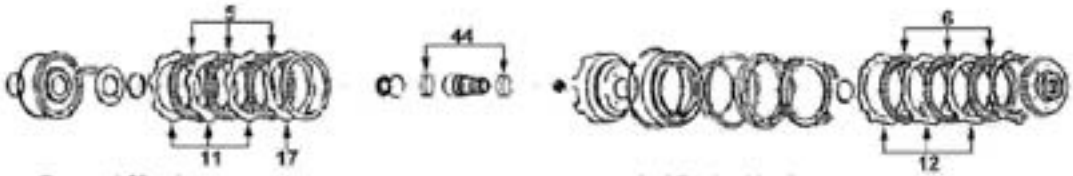


Forward Clutch

2nd Brake Clutch

C>

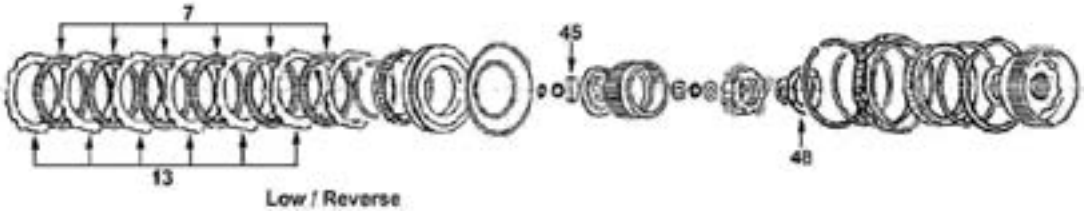


Low / Reverse

D>

Overdrive Brake

E>

Overdrive Direct

F>

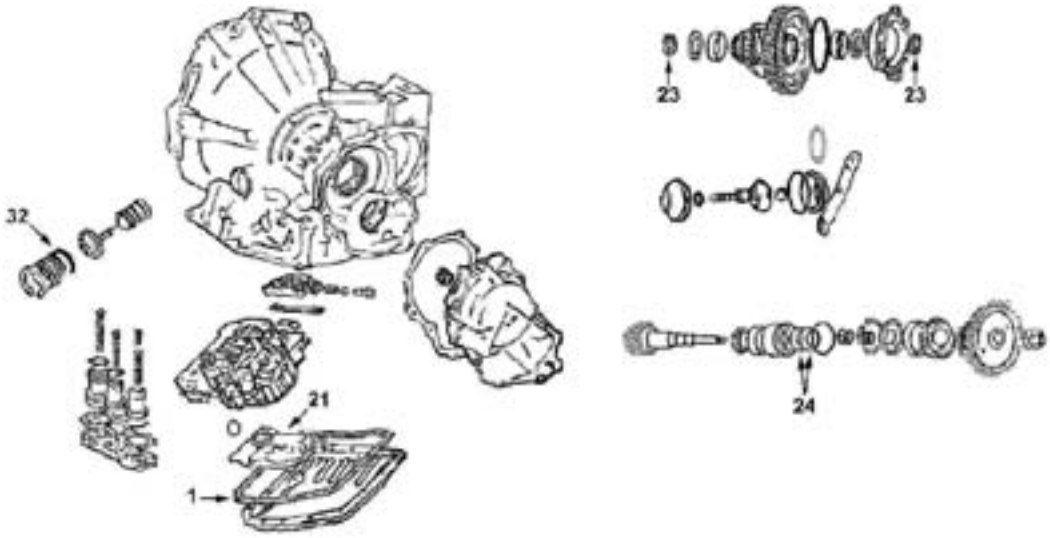

# TOYOTA
## A140, 141, 142
## 1983-On

| ILL | DESCRIPTION | YEARS | FRICTION MODULE | STEEL MODULE | OVERHAUL KIT | BANNER KIT | MASTER KIT |
|---|---|---|---|---|---|---|---|
| **KITS** | | | | | | | |
| KT | Rebuilding Kit - A140E/L, A141E, A142E/L | 83-86 | 065752 | 065753 | 065802 | 065901LS | 065901 |
| KT | Rebuilding Kit - A140E/L, A142E | 87-89 | 065752A | 065753A | 065802 | 065901ALS | 065901A |
| KT | Rebuilding Kit - A140E, A142E | 90-On | 065752K | 065753K | 065802 | 065901BLS | 065901B |

| ILL | ALTO NO | REF NO | DESCRIPTION | SPEC | YEAR | QTY | NOTES |
|---|---|---|---|---|---|---|---|
| **MISCELLANEOUS GASKETS & KIT COMPONENTS** | | | | | | | |
| 1F | 065816 | 35168-32010 | Gasket, Oil Pan | Cork/Rub | 83-On | 1 | |
| 2A | 044050 | 90301-99024 | O Ring, Front Pump to case | | 83-On | 1 | |
| N I | 044054 | 90301-09173 | O Ring, Filler Tube & Detent Cable | | 83-On | 2 | |
| N I | 010116B | 96711-24018 | O Ring, Speedometer | | 83-On | 1 | |
| 3F | TBA | 90179-20004 | Nut, Pinion Shaft | | 83-On | 1 | |
| **FRICTION CLUTCHES** | | | | | | | |
| 4A | 065700 | Various | Direct | .067/1.7 | 83-86 | 3 | Heg - 40T - OD: 4.971" - SM |
| 4A | 065700PL | Various | Direct | .067/1.7 | 83-86 | 3 | Heg - 40T - OD: 4.971" - PL |
| 4A | 065710PL | Various | Direct | .075/1.95 | 87-On | 3-4 | Tan - 40T - OD: 4.971" - PL |
| 5B | 065700 | Various | Forward | .067/1.7 | 83-86 | 4 | Heg - 40T - OD: 4.971" - SM |
| 5B | 065700PL | Various | Forward | .067/1.7 | 83-86 | 4 | Heg - 40T - OD: 4.971" - PL |
| 5B | 065700W | NA | Forward - wave | .067/1.7 | 87-On | AR | Heg - 40T - OD: 4.971" - SM |
| 6B | 065702 | Various | 2nd Brake (Coast) | .067/1.7 | 83-86 | 3 | Heg - 33T - OD: 5.589" - SM |
| 6B | 065712 | Various | 2nd Brake (Coast) - some models | .075/1.95 | 87-On | 3 | Tan - 33T - OD: 5.589" - SM |
| 7C | 065702 | Various | Low / Reverse (Brake #3) - Except Celica | .067/1.7 | 83-On | 6 | Heg - 33T - OD: 5.589" - SM |
| 7C | 065722 | Various | Low / Reverse (Brake #3) - Celica only | .059/1.5 | 93-99 | 5 | Tan - 33T - OD: 5.589" - SM |
| 8E | 065700 | Various | Overdrive Direct | .067/1.7 | 83-86 | 2 | Heg - 40T - OD: 4.971" - SM |
| 8E | 065710 | Various | Overdrive Direct | .075/1.95 | 87-On | 2 | Tan - 40T - OD: 4.971" - SM |
| 9D | 065702 | Various | Overdrive Brake | .067/1.7 | 83-86 | 3 | Heg - 33T - OD: 5.589" - SM |
| 9D | 065706 | Various | Overdrive Brake | .075/1.95 | 87-On | 3 | Tan - 24T - OD: 6.483" - PL |
| **STEEL CLUTCHES** | | | | | | | |
| 10A | 065701 | Various | Direct | .071/1.8 | 83-On | 3 | 8T - ID: 4.138" |
| 11B | 065701 | Various | Forward | .071/1.8 | 83-On | 4 | 8T - ID: 4.138" |
| 12B | 065705 | Various | 2nd Brake (Coast) | .071/1.8 | 83-On | 3-4 | 12T - ID: 4.580" |
| 13C | 065703 | Various | Low / Reverse (Brake #3) | .071/1.8 | 83-On | 5-8 | 12T - ID: 4.580" |
| 14E | 065701 | Various | Overdrive Direct | .071/1.8 | 83-86 | 2 | 8T - ID: 4.138" |
| 14E | 065709 | Various | Overdrive Direct | .071/1.8 | 87-On | 2-3 | 20T - ID: 4.128" |
| 15D | 065707 | Various | Overdrive Brake | .071/1.8 | 83-89 | 3-4 | 12T - ID: 5.636" |
| 15D | 065717 | Various | Overdrive Brake | .098/2.5 | 90-On | 2 | 12T - ID: 5.636" |
| **PRESSURE PLATES** | | | | | | | |
| 16A | 065760-260 | 35675-32030 | Direct, Top - selective | .102/2.6 | 83-On | AR | |
| 16A | 065760-300 | 35675-32010 | Direct, Top - selective | .118/3.0 | 83-On | AR | |
| 16A | 065760-320 | 35675-12010 | Direct, Top - selective | .125/3.2 | 83-On | AR | |
| 16A | 065760-337 | 35675-32020 | Direct, Top - selective | .133/3.37 | 83-On | AR | |
| 16A | TBA | 35675-32060 | Direct, Top - selective | .157/4.0 | 83-On | AR | |
| 17B | 065760-280 | 35675-17010 | Forward, Top - selective | .110/2.8 | 83-On | AR | |
| 17B | 065760-300 | 35675-32010 | Forward, Top - selective | .118/3.0 | 83-On | AR | |
| 17B | 065760-320 | 35675-12010 | Forward, Top - selective | .125/3.2 | 83-On | AR | |
| 17B | 065760-337 | 35675-32020 | Forward, Top - selective | .133/3.37 | 83-On | AR | |
| 17B | 065760-360 | 35635-50030 | Forward, Top - selective | .142/3.6 | 83-On | AR | |
| **BANDS** | | | | | | | |
| 20A | 065950 | 35810-32020 | 2nd Coast Brake | Tan | 83-On | 1 | |
| **FILTERS** | | | | | | | |
| KT | FK065940 | NA | Filter Kit | | 84-89 | 1 | |
| KT | FK065940A | NA | Filter Kit | | 90-On | 1 | |
| 21F | 065940 | 35330-20012 | Filter | | 84-89 | 1 | |
| 21F | 065940A | 35330-33022 | Filter | | 90-On | 1 | |
| **METAL CLAD SEALS** | | | | | | | |
| 22A | 044400 | 90311-38020 | Front Pump | | 83-On | 1 | |

# TOYOTA
## A140, 141, 142
## 1983-On

| ILL | ALTO NO | REF NO | DESCRIPTION | SPEC | YEAR | QTY | NOTES |
|---|---|---|---|---|---|---|---|
| **METAL CLAD SEALS** | | | | | | | ...Continued |
| 23F | 065428 | 90311-35019 | Axle - except MR2 | 2.494 | 83-On | 2 | |
| 23F | 065426 | 90311-34007 | Axle - MR2 only | | 1986 | 2 | |
| 24F | 065427 | NA | Pinion | | 83-On | 2 | |
| N I | 065410 | 90311-12002 | Manual Lever | | 83-On | 1 | |
| N I | 044420 | 90310-09001 | Speedometer | | 83-On | 1 | |
| **SEALING RINGS** | | | | | | | |
| KT | 065600 | D411 | Sealing Ring Kit - 2M / 7T (Combo) | | 83-On | 1 | All Toyota FWD exc. A540 |
| 30A | 065100 | 35617-22011 | Front Pump Stator - Direct drum | | 83-On | 2 | |
| 34E | 044101A | 35617-16010 | Overdrive Support | Metal | 83-On | 2 | |
| 31B | 065101 | 35712-32010 | Input Shaft | | 83-On | 2 | |
| 32F | 065102 | 35865-32010 | 2nd Coast Servo piston | | 83-On | 1 | |
| 33F | 065103 | 35748-32010 | Intermediate Shaft | | 83-On | 1 | |
| **BUSHINGS** | | | | | | | |
| KT | 065625 | NA | Bushing Kit | | 83-On | 1 | |
| 40A | 044200 | NA | Front Pump Body | | 83-On | 1 | |
| 41A | 044202 | NA | Stator Shaft (Front) - wide | 21.5mm | 83-On | 1 | |
| 42A | 065201 | NA | Stator Shaft (Rear) | | 83-On | 1 | |
| 43A | 065202 | 35605-20010 | Direct Drum | | 83-On | 1 | |
| 44B | 065203 | NA | Sun Gear | | 83-On | 2 | |
| 45C | 065204 | NA | Input Hub | | 83-On | 1 | |
| 46E | 065205 | NA | Overdrive Sun Gear - Front | | 83-On | 1 | |
| 47E | 065206 | NA | Overdrive Sun Gear - Rear | | 83-On | 1 | |
| **WASHERS** | | | | | | | |
| KT | 065635 | NA | Washer Kit | | 84-On | 1 | |
| 48C | 065151 | 35738-32010 | Rear Planet - Front | Nylon | 84-On | 1 | |
| 49D | 065152 | 35739-32011 | Rear Planet - Rear | Nylon | 84-On | 1 | |

**NOTES**

A>

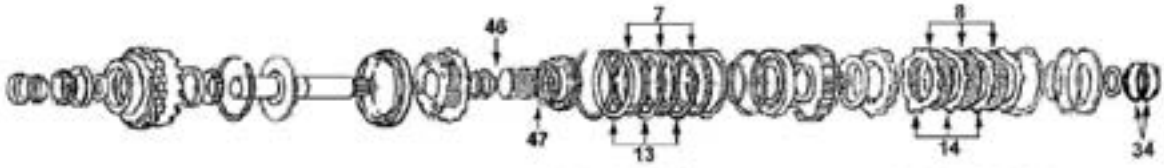


Underdrive Direct

Underdrive Brake

B>

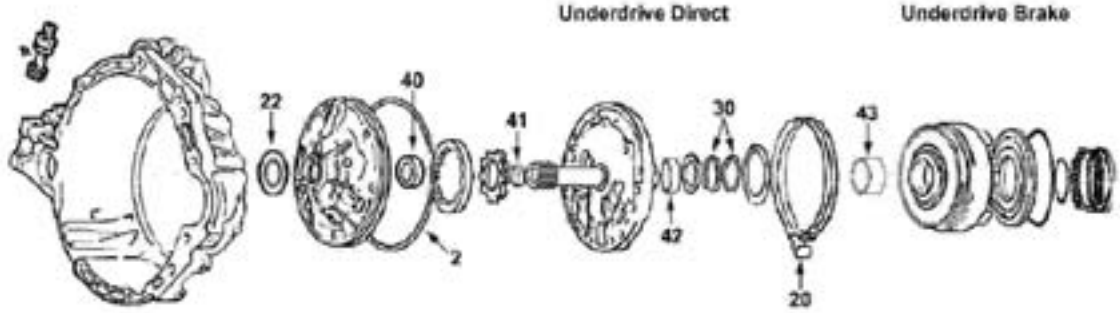


C>

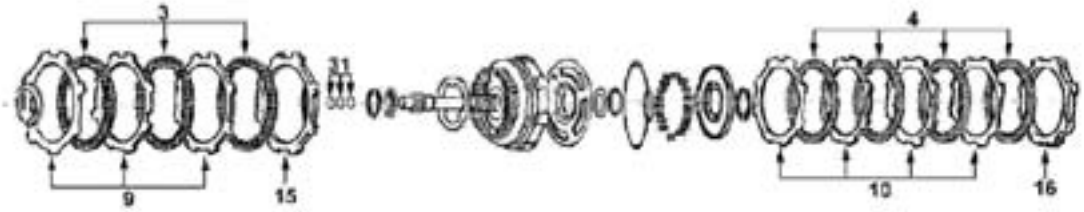


Direct Clutch

Forward Clutch

D>

2nd Brake Clutch

E>

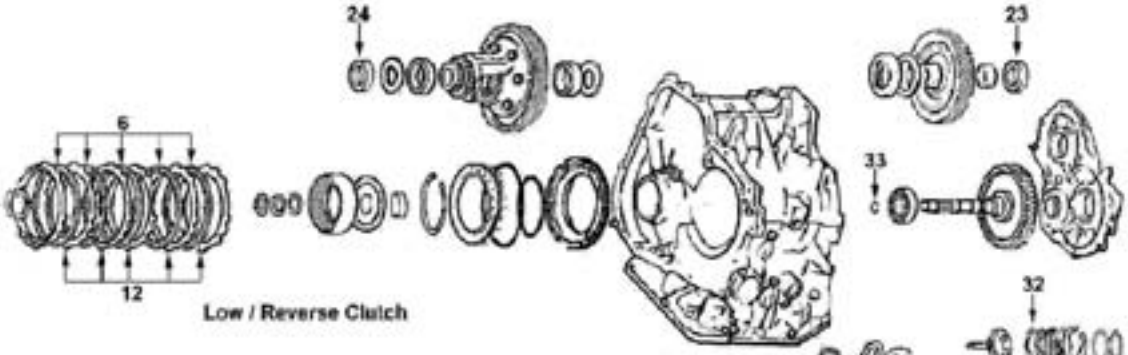


Low / Reverse Clutch

F>

# TOYOTA
## A240 SERIES
## 1984-On

| ILL | DESCRIPTION | YEARS | FRICTION MODULE | STEEL MODULE | OVERHAUL KIT | BANNER KIT | MASTER KIT |
|---|---|---|---|---|---|---|---|
| **KITS** | | | | | | | |
| **Celica** | | | | | | | |
| KT | Rebuilding Kit - A243L (1.6L engine) | 90-93 | 065752C | 065753C | 065804 | 065907LS | 065907 |
| KT | Rebuilding Kit - A241E (2.2L engine) | 90-93 | 065752H | 065753H | 065804 | 065907ALS | 065907A |
| KT | Rebuilding Kit - A246E | 94-97 | 065752J | 065753J | 065804A | 065907BLS | 065907B |
| **Corolla** | | | | | | | |
| KT | Rebuilding Kit - A240L | 84-88 | TBA | 065753C | 065804 | TBA | TBA |
| KT | Rebuilding Kit - A240L (2wd) | 88-92 | 065752C | 065753C | 065804 | 065907LS | 065907 |
| KT | Rebuilding Kit - A241H (AWD) | 88-92 | 065752C | 065753C | 065804* | 065907LS | 065907 |
| KT | Rebuilding Kit - A245E (1.8L engine) | 93-On | 065752J | 065753J | 065804A | 065907BLS | 065907B |
| KT | Rebuilding Kit - A245E | 96-On | 065752S | 065753J | 065804 | 065907ELS | 065907E |
| **MR2** | | | | | | | |
| KT | Rebuilding Kit - A240L | 87-89 | 065752H | 065753H | 065804 | 065907ALS | 065907A |
| KT | Rebuilding Kit - A241E | 90-93 | 065752L | 065753L | 065804 | 065907CLS | 065907C |
| KT | Rebuilding Kit - A241E | 94-95 | 065752T | 065753L | 065804 | 065907FLS | 065907F |
| **Paseo** | | | | | | | |
| KT | Rebuilding Kit - A244E | 92-On | 065752H | 065753H | 065804 | 065907ALS | 065907A |
| **Rav4** | | | | | | | |
| KT | Rebuilding Kit - A241E (2wd) | 96-97 | 065752V | 065753C | 065804 | 065907GLS | 065907G |
| KT | Rebuilding Kit - A247E (2wd) | 98-00 | 065752W | 065753J | 065804 | 065907HLS | 065907H |
| **Tercel** | | | | | | | |
| KT | Rebuilding Kit - A242L | 95-On | 065752M | 065753M | 065804 | 065907DLS | 065907D |
| | * Right Axle seal must be ordered separately for this application | | | | | | |

| ILL | ALTO NO | REF NO | DESCRIPTION | SPEC | YEAR | QTY | NOTES |
|---|---|---|---|---|---|---|---|
| **MISCELLANEOUS GASKETS & KIT COMPONENTS** | | | | | | | |
| 1F | 065816A | 35168-12020 | Gasket, Oil Pan - A240, 241, 242, 244 | Cork/Rub | 84-On | 1 | |
| 1F | 065816B | 35168-12030 | Gasket, Oil Pan - A245, 246, 247 | Cork/Rub | 93-On | 1 | |
| 2B | 044050 | 90301-99024 | O Ring, Front Pump to case | | 84-On | 1 | |
| N I | 044054 | 90301-09173 | O Ring, Filler Tube & Detent Cable | | 84-On | 2 | |
| N I | 010116B | 96711-24018 | O Ring, Speedometer | | 84-On | 1 | |
| N I | TBA | 90179-20004 | Nut, Pinion Shaft | | 84-On | 1 | |
| **FRICTION CLUTCHES** | | | | | | | |
| 3C | 065700 | Various | Direct - A240, 241, 242, 244 | .067/1.7 | 84-On | 2 | Heg - 40T - OD: 4.971" - SM |
| 3C | 065700PL | Various | Direct - A240, 241, 242, 244 | .067/1.7 | 84-On | 2 | Heg - 40T - OD: 4.971" - PL |
| 3C | 065710 | Various | Direct - A241, 245, 246, 247 | .075/1.95 | 93-On | 2-3 | Tan - 40T - OD: 4.971" - SM |
| 3C | 065710PL | Various | Direct - A240, 241, 243 | .075/1.95 | 86-95 | 3 | Tan - 40T - OD: 4.971" - PL |
| 4C | 065700 | Various | Forward - All | .067/1.7 | 84-On | 3-4 | Heg - 40T - OD: 4.971" - SM |
| 4C | 065700PL | Various | Forward - All | .067/1.7 | 84-On | 3-4 | Heg - 40T - OD: 4.971" - PL |
| 3C | 065700W | NA | Forward & Direct - wave | .067/1.7 | 84-On | opt. | Heg - 40T - OD: 4.971" - SM |
| 5D | 065702 | Various | 2nd Brake - Corolla & Celica | .067/1.7 | 84-On | 3 | Heg - 33T - OD: 5.589" - SM |
| 5D | 065712 | Various | 2nd Brake - all others | .075/1.95 | 86-On | 2-3 | Tan - 33T - OD: 5.589" - SM |
| 6E | 065702 | Various | Low / Reverse - narrow paper | .067/1.7 | 84-95 | 5-6 | Heg - 33T - OD: 5.589" - SM |
| 6E | 065702A | Various | Low / Reverse - wide paper | .067/1.7 | 93-On | 5-6 | Heg - 33T - OD: 5.589" - SM |
| 7A | 067702 | Various | Underdrive #1 (Direct) | .075/1.95 | 84-On | 3-4 | Tan - 34T - OD: 4.254" - SM |
| 8A | 067704 | Various | Underdrive #2 (Brake) - wide paper | .067/1.7 | 84-On | 3 | Tan - 26T - OD: 4.254" - SM |
| 8A | 067704A | Various | Underdrive #2 (Brake) - narrow paper | .067/1.7 | 93-On | 3 | Heg - 26T - OD: 4.254" - SM |
| N I | 067702 | Various | Differential (4wd - A241H) | .075/1.95 | 88-92 | 7 | Tan - 34T - OD: 4.254" - SM |
| **STEEL CLUTCHES** | | | | | | | |
| 9C | 065701 | Various | Direct | .071/1.8 | 84-On | 3 | 8T - ID: 4.138" |
| 10C | 065701 | Various | Forward | .071/1.8 | 84-On | 3-4 | 8T - ID: 4.138" |
| 11D | 065705 | Various | 2nd Brake | .071/1.8 | 84-On | 3-4 | 12T - ID:4.578" (short tooth) |
| 12E | 065703 | Various | Low / Reverse - A240, 241, 242, 244 | .071/1.8 | 84-On | 4-6 | 12T - ID:4.578" (long tooth) |
| 12E | 065703A | Various | Low / Reverse - A245, 246, 247 | .071/1.8 | 93-On | 6 | 12T - ID:4.923" (long tooth) |
| 13A | 067703 | Various | Underdrive #1 (Direct) | .071/1.8 | 84-On | 3-4 | 20T - ID: 3.568" |

| ILL | ALTO NO | REF NO | DESCRIPTION | SPEC | YEAR | QTY | NOTES |
|---|---|---|---|---|---|---|---|
| **STEEL CLUTCHES** | | | | | | | ...Continued |
| 14A | 067705 | Various | Underdrive #2 (Brake) | .071/1.8 | 84-On | 3 | 8T - ID: 3.155" |
| 14A | 067705A | Various | Underdrive #2 (Brake) | .071/1.8 | 93-On | 3 | 8T - ID: 3.429" |
| N I | 067703 | Various | Differential (4wd - A241H) | .071/1.8 | 88-92 | 8 | 20T - ID: 3.568" |
| **PRESSURE PLATES** | | | | | | | |
| 15C | 065760-260 | 35675-32030 | Direct, Top - selective | .102/2.6 | 84-On | AR | |
| 15C | 065760-300 | 35675-32010 | Direct, Top - selective | .118/3.0 | 84-On | AR | |
| 15C | 065760-320 | 35675-12010 | Direct, Top - selective | .125/3.2 | 84-On | AR | |
| 15C | 065760-337 | 35675-32020 | Direct, Top - selective | .133/3.37 | 84-On | AR | |
| 15C | TBA | 35675-32060 | Direct, Top - selective | .157/4.0 | 84-On | AR | |
| 16C | 065760-280 | 35675-17010 | Forward, Top - selective | .110/2.8 | 84-On | AR | |
| 16C | 065760-300 | 35675-32010 | Forward, Top - selective | .118/3.0 | 84-On | AR | |
| 16C | 065760-320 | 35675-12010 | Forward, Top - selective | .125/3.2 | 84-On | AR | |
| 16C | 065760-337 | 35675-32020 | Forward, Top - selective | .133/3.37 | 84-On | AR | |
| 16C | 065760-360 | 35635-50030 | Forward, Top - selective | .142/3.6 | 84-On | AR | |
| **BANDS** | | | | | | | |
| 20B | 065950 | 35810-32020 | 2nd Coast Brake | Tan | 84-On | 1 | |
| **FILTERS** | | | | | | | |
| KT | FK065942 | NA | Filter Kit - A240, 241, 242, 243, 244 | | 84-On | 1 | |
| KT | FK065942A | NA | Filter Kit - A245, 246, 247 | | 93-On | 1 | |
| 21F | 065942 | 35330-12020 | Filter - A240, 241, 242, 243, 244 | | 84-On | 1 | |
| 21F | 065942A | 35330-12030 | Filter - A245, 246, 247 | | 93-On | 1 | |
| **METAL CLAD SEALS** | | | | | | | |
| 22B | 044400 | 90311-38020 | Front Pump | | 84-On | 1 | |
| 23E | 065429 | 90311-34013 | Left Axle - A240, 242, 244, 245 | 2.494 | 84-On | 1 | Small ID |
| 23E | 065429A | 90311-35020 | Left Axle - A241E/H, 243, 246, 247 | 2.494 | 84-On | 1 | Large ID |
| 24E | 065426 | 90311-34012 | Right Axle - A240, 244, 245, 246 | 2.140 | 84-On | 1 | |
| 24E | 065428 | 90311-35019 | Right Axle - A241E, 243, 247 | 2.175 | 84-On | 1 | |
| 24E | 065430 | 90311-44004 | Right Axle - A241H (AWD) | 3.165 | 84-On | 1 | |
| N I | 065410 | 90311-12002 | Manual Lever | | 84-On | 1 | |
| N I | 044420 | 90310-09001 | Speedometer | | 84-On | 1 | |
| **SEALING RINGS** | | | | | | | |
| KT | 065600 | D411 | Sealing Ring Kit - 2M / 7T (Combo) | | 84-On | 1 | All Toyota FWD exc. A540 |
| 30B | 065100 | 35617-22011 | Front Pump Stator - Direct drum | | 84-On | 2 | |
| 34A | 044101A | 35617-16010 | Overdrive Support | Metal | 84-On | 2 | |
| 31C | 065101 | 35712-32010 | Input Shaft | | 84-On | 2 | |
| 32F | 065102 | 35865-32010 | 2nd Coast Servo piston | | 84-On | 1 | |
| 33E | 065103 | 35748-32010 | Intermediate Shaft | | 84-On | 1 | |
| **BUSHINGS** | | | | | | | |
| KT | 065625 | NA | Bushing Kit | | 84-On | 1 | |
| 40B | 044200 | NA | Front Pump Body | | 84-On | 1 | |
| 41B | 044202 | NA | Stator Shaft (Front) - wide | 21.5mm | 84-On | 1 | |
| 42B | 065201 | NA | Stator Shaft (Rear) | | 84-On | 1 | |
| 43B | 065202 | 35605-20010 | Direct Drum | | 84-On | 1 | |
| 44D | 065203 | NA | Sun Gear | | 84-On | 2 | |
| N I | 065204 | NA | Input Hub | | 84-On | 1 | |
| 46A | 065205 | NA | Overdrive Sun Gear - Front | | 84-On | 1 | |
| 47A | 065206 | NA | Overdrive Sun Gear - Rear | | 84-On | 1 | |
| **WASHERS** | | | | | | | |
| KT | 065635 | NA | Washer Kit | | 84-On | 1 | |
| 48D | 065151 | 35738-32010 | Rear Planet - Front | Nylon | 84-On | 1 | |
| 49D | 065152 | 35739-32011 | Rear Planet - Rear | Nylon | 84-On | 1 | |

**NOTES**

# TOYOTA
## A540E / H, A541E
## 1988-On

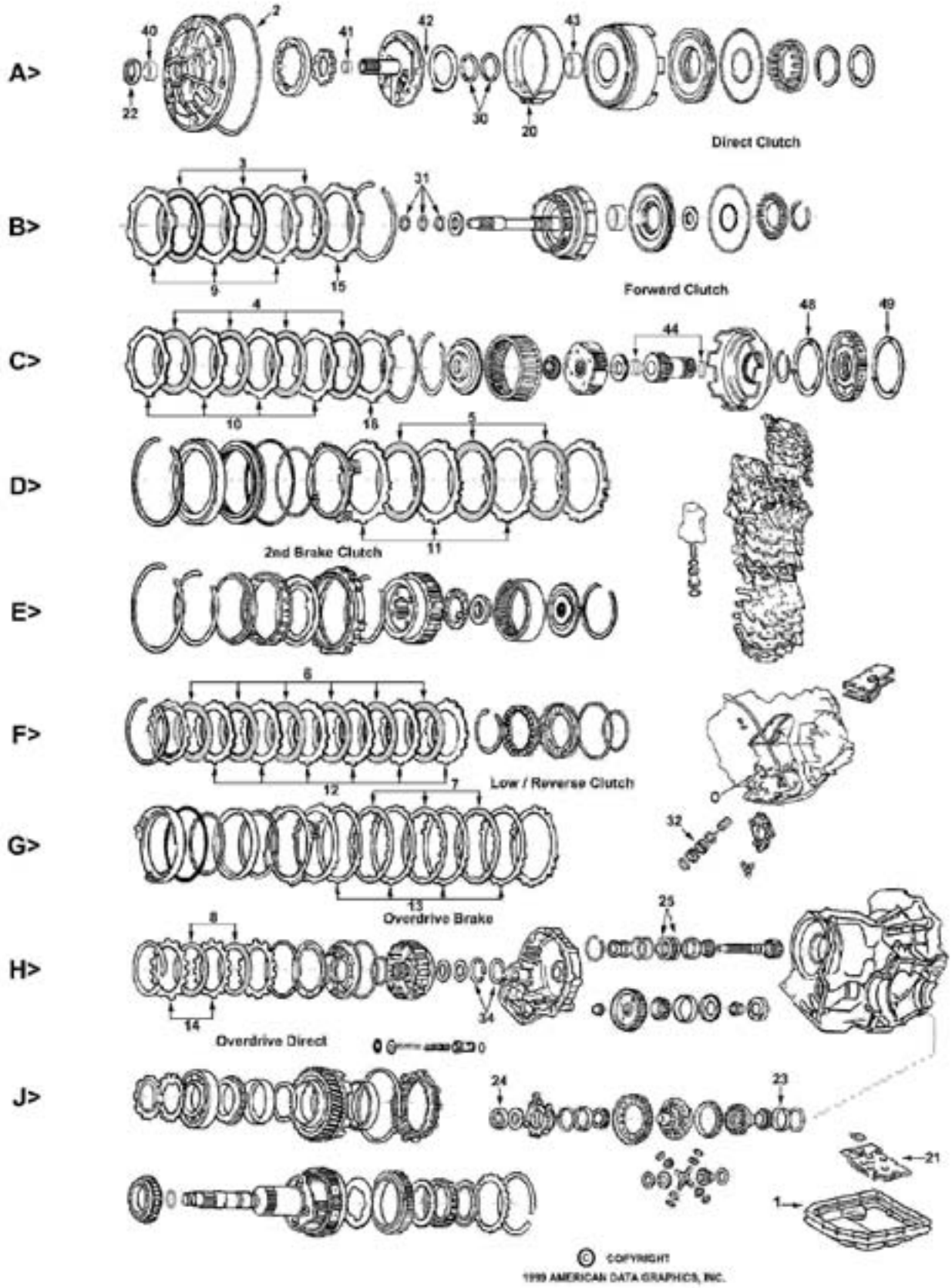

# TOYOTA
## A540E / H, A541E
## 1988-On

| ILL | DESCRIPTION | YEARS | FRICTION MODULE | STEEL MODULE | OVERHAUL KIT | BANNER KIT | MASTER KIT |
|---|---|---|---|---|---|---|---|
| **KITS** | | | | | | | |
| **Avalon** | | | | | | | |
| KT | Rebuilding Kit - A541E | 95-97 | 065752P | 065753P | 065806B | 065903DLS | 065903D |
| KT | Rebuilding Kit - A541E | 98-7/99 | 065752P | 065753R | 065806B | 065903DLS | 065903E |
| KT | Rebuilding Kit - A541E | 8/99-On | 065752R | 065753S | 065806B | 065903FLS | 065903F |
| **Camry** | | | | | | | |
| KT | Rebuilding Kit - A540E (V6) | 88-91 | 065752E | 065753E | 065806 | 065903LS | 065903 |
| KT | Rebuilding Kit - A540H (V6 with AWD) | 89-91 | 065752Q | 065753Q | 065806C | 065903CLS | 065903C |
| KT | Rebuilding Kit - A540E (V6) | 92-93 | 065752F | 065753F | 065806 | 065903ALS | 065903A |
| KT | Rebuilding Kit - A540E (V6) | 94-97 | 065752P | 065753P | 065806B | 065903DLS | 065903D |
| KT | Rebuilding Kit - A541E (V6) | 98-01 | 065752P | 065753R | 065806B | 065903DLS | 065903E |
| **Rav4** | | | | | | | |
| KT | Rebuilding Kit - A540H (AWD) | 96-00 | 065752Q | 065753Q | 065806C | 065903CLS | 065903C |
| **Sienna** | | | | | | | |
| KT | Rebuilding Kit - A540E | 98-00 | 065752G | 065753G | 065806A | 065903BLS | 065903B |
| KT | Rebuilding Kit - A541E | 01-On | 065752P | 065753R | 065806B | 065903DLS | 065903E |
| **Solara** | | | | | | | |
| KT | Rebuilding Kit - A541E | 99-01 | 065752P | 065753R | 065806B | 065903DLS | 065903E |
| **Lexus ES250** | | | | | | | |
| KT | Rebuilding Kit - A540E | 89-91 | 065752E | 065753E | 065806 | 065903LS | 065903 |
| **Lexus ES300** | | | | | | | |
| KT | Rebuilding Kit - A540E | 92-93 | 065752G | 065753G | 065806A | 065903BLS | 065903B |
| KT | Rebuilding Kit - A541E | 94-97 | 065752P | 065753P | 065806B | 065903DLS | 065903D |
| KT | Rebuilding Kit - A541E | 98-On | 065752P | 065753R | 065806B | 065903DLS | 065903E |

| ILL | ALTO NO | REF NO | DESCRIPTION | SPEC | YEAR | QTY | NOTES |
|---|---|---|---|---|---|---|---|
| **MISCELLANEOUS GASKETS & KIT COMPONENTS** | | | | | | | |
| 1F | 065818 | 35168-33020 | Gasket, Oil Pan | Cork/Rub | 88-On | 1 | |
| 1F | 065816D | 35168-33030 | Gasket, Oil Pan | Cork/Rub | 94-97 | 1 | |
| 2B | 065050 | 90301-99079 | O Ring, Front Pump to case | | 88-On | 1 | |
| N I | 044054 | 90301-09173 | O Ring, Filler Tube & Detent Cable | | 88-On | 2 | |
| N I | 010116B | 96711-24018 | O Ring, Speedometer | | 88-On | 1 | |
| N I | TBA | 90179-24006 | Nut, Pinion Shaft | | 88-On | 1 | |
| **FRICTION CLUTCHES** | | | | | | | |
| 3B | 065700 | Various | Direct - A540H | .067/1.7 | 89-00 | 3 | Heg - 40T - OD: 4.971" - SM |
| 3B | 065700PL | Various | Direct - A540H | .067/1.7 | 89-00 | 3 | Heg - 40T - OD: 4.971" - PL |
| 3B | 073704PL | Various | Direct - A540E (replaces 40T design) | .080/2.05 | 88-00 | 3 | Heg - 32T - OD: 5.171" - PL |
| 3B | 073702 | Various | Direct - A541E | .083/2.1 | 94-On | 3 | Heg - 40T - OD: 5.177" - SM |
| 3B | 073702A200 | 35633-41010 | Direct - A541E | .080/2.03 | 99-On | 3 | Heg - 40T - OD: 5.178" - SM |
| 4C | 065700 | Various | Forward - A540E/H | .067/1.7 | 88-00 | 4 | Heg - 40T - OD: 4.971" - SM |
| 4C | 065700PL | Various | Forward - A540E/H | .067/1.7 | 88-00 | 4 | Heg - 40T - OD: 4.971" - PL |
| 4C | 065700-150 | Various | Forward - A541E | .059/1.7 | 94-On | 5 | Heg - 40T - OD: 4.971" - SM |
| 5D | 065712 | Various | 2nd Brake - A540E (88-91), A541E (94-On) | .075/1.95 | 88-On | 3 | Tan - 33T - OD: 5.589" - PL |
| 5D | 065712SM | Various | 2nd Brake - A540E | .075/1.95 | 92-00 | 3 | Tan - 33T - OD: 5.589" - PL |
| 5D | 065712A | Various | 2nd Brake - A540H | .075/1.95 | 89-On | 3-4 | Tan - 36T - OD: 5.830" - PL |
| 6F | 065722 | Various | Low / Reverse - A540E, A540H | .059/1.5 | 88-00 | 6-7 | Tan - 33T - OD: 5.589" - SM |
| 6F | 065722A | Various | Low / Reverse - A541E | .059/1.5 | 94-On | 6 | Tan - 36T - OD: 5.830" - PL |
| 7G | 065706A | Various | Overdrive Brake - A540E (88-91), 540H | .081/2.05 | 88-00 | 3 | Tan - 24T - OD: 6.483" - PL |
| 7G | 065706SM205 | Various | Overdrive Brake - A540E | .081/2.05 | 92-00 | 3 | Tan - 24T - OD: 6.483" - SM |
| 7G | 065706 | Various | Overdrive Brake - A541E | .075/1.9 | 94-On | 3 | Tan - 24T - OD: 6.483" - PL |
| 8H | 065710 | Various | Overdrive Direct | .075/1.95 | 88-On | 2 | Tan - 40T - OD: 4.971" - SM |
| N I | 065718 | Various | Differential - A540H | .071/1.8 | 89-00 | 11 | Tan - 36T - OD: 4.508" - SM |
| **STEEL CLUTCHES** | | | | | | | |
| 9B | 065701 | Various | Direct - A540H | .071/1.8 | 89-On | 3 | 8T - ID: 4.138" |
| 9B | 073703 | Various | Direct - A540E | .091/2.3 | 88-On | 2 | 6T - ID: 4.152" |
| 9B | 073703A | Various | Direct - A540E | .071/1.8 | 88-On | 1 | 6T - ID: 4.152" |

# TOYOTA
## A540E / H, A541E
## 1988-On

| ILL | ALTO NO | REF NO | DESCRIPTION | SPEC | YEAR | QTY | NOTES |
|---|---|---|---|---|---|---|---|
| **STEEL CLUTCHES** | | | | | | | ...Continued |
| 9B | 073703A200 | Various | Direct - A541E | .078/2.0 | 94-On | 2-3 | 6T - ID: 4.152" |
| 9B | 073703A140 | Various | Direct - A541E | .055/1.4 | 94-On | 1 | 6T - ID: 4.152" |
| 10C | 065701 | Various | Forward - A540E (88-92), A540H (96-00) | .071/1.8 | 88-00 | 4 | 8T - ID: 4.138" |
| 10C | 065701-160 | Various | Forward - A540E | .063/1.6 | 92-00 | 4 | 8T - ID: 4.138" |
| 10C | 065701-140 | Various | Forward - A540E | .055/1.4 | 92-00 | 1 | 8T - ID: 4.138" |
| 10C | 073701 | Various | Forward - A541E | .078/2.0 | 94-On | 5 | 8T - ID: 4.138" |
| 11D | 065715 | Various | 2nd Brake - A540E | .071/1.8 | 88-00 | 3 | 12T - ID: 4.580"(Long tooth) |
| 11D | 065705 | Various | 2nd Brake - A540H | .071/1.8 | 89-00 | 3 | 12T - ID: 4.580"(Short tooth) |
| 11D | 065723 | Various | 2nd Brake - A541E | .071/1.8 | 94-On | 3 | 10T - ID: 4.864" |
| 12F | 065703 | Various | Low / Reverse - A540E, A540H | .071/1.8 | 88-00 | 6-7 | 12T - ID: 4.580" |
| 12F | 065713 | Various | Low / Reverse - A541E | .063/1.6 | 94-On | 6 | 10T - ID: 4.864" |
| 13G | 065717 | Various | Overdrive Brake | .098/2.5 | 88-On | 3-4 | 12T - ID: 5.636" |
| 14H | 065709 | Various | Overdrive Direct - A540E | .071/1.8 | 88 | 2 | 20T - ID: 4.128" |
| 14H | 073709A | Various | Overdrive Direct - A540E, A540H | .118/3.0 | 89-00 | 2 | 23T - ID: 4.128" |
| 14H | 073709-180 | Various | Overdrive Direct - A541E | .078/2.0 | 94-On | 1 | 24T - ID: 4.128" |
| N I | 065719 | Various | Differential - A540H | .063/1.6 | 89-00 | 11 | 30T - ID: 3.561" |
| **HI-PERFORMANCE - KOLENE®** | | | | | | | |
| 9B | 073703K | NA | Direct - A540E | .091/2.3 | 88-On | 2 | |
| 9B | 073703AK | NA | Direct - A540E | .071/1.8 | 88-On | 1 | |
| **PRESSURE PLATES** | | | | | | | |
| 15B | 065760-260 | 35675-32030 | Direct, Top - selective | .102/2.6 | 88-On | AR | |
| 15B | 065760-300 | 35675-32010 | Direct, Top - selective | .118/3.0 | 88-On | AR | |
| 15B | 065760-320 | 35675-12010 | Direct, Top - selective | .125/3.2 | 88-On | AR | |
| 15B | 065760-337 | 35675-32020 | Direct, Top - selective | .133/3.37 | 88-On | AR | |
| 15B | TBA | 35675-32060 | Direct, Top - selective | .157/4.0 | 88-On | AR | |
| 16C | 065760-280 | 35675-17010 | Forward, Top - selective | .110/2.8 | 88-On | AR | |
| 16C | 065760-300 | 35675-32010 | Forward, Top - selective | .118/3.0 | 88-On | AR | |
| 16C | 065760-320 | 35675-12010 | Forward, Top - selective | .125/3.2 | 88-On | AR | |
| 16C | 065760-337 | 35675-32020 | Forward, Top - selective | .133/3.37 | 88-On | AR | |
| 16C | 065760-360 | 35635-50030 | Forward, Top - selective | .142/3.6 | 88-On | AR | |
| **BANDS** | | | | | | | |
| 20A | 065951 | 35810-33010 | 2nd Coast Brake | Tan | 88-On | 1 | |
| **FILTERS** | | | | | | | |
| KT | FK065946 | NA | Filter Kit | | 88-On | 1 | |
| KT | FK065946A | NA | Filter Kit - V6 Avalon, Camry | | 94-On | 1 | |
| 21F | 065946 | 35330-33030 | Filter | | 88-On | 1 | |
| 21F | 065946A | 35330-30010 | Filter - V6 Avalon, Camry | | 94-On | 1 | |
| **METAL CLAD SEALS** | | | | | | | |
| 22A | 044400 | 90311-38020 | Front Pump | | 88-On | 1 | |
| 23J | 065424 | 90311-50011 | Left Axle - All | | 88-On | 1 | |
| 24J | 065423 | 90311-40010 | Right Axle - A540E, A541E | | 88-00 | 1 | |
| 24J | 065430 | 90311-44004 | Right Axle - A540H | | 89-00 | 1 | |
| 25H | 065431 | NA | Pinion | | 88-On | 2 | Retros for all |
| N I | 065410 | 90311-12002 | Manual Lever | | 88-On | 1 | |
| N I | 044420 | 90310-09001 | Speedometer | | 88-On | 1 | |
| **SEALING RINGS** | | | | | | | |
| KT | 065602 | D411C | Sealing Ring Kit, A540E/A540H - 2M / 7T | | 88-On | 1 | |
| KT | 065602A | NA | Sealing Ring Kit, A541E - 2M / 7T | | 94-On | 1 | |
| 30A | 065100 | 35617-22011 | Front Pump Stator - Direct drum | | 88-On | 2 | |
| 34H | 044101A | 35617-16010 | Overdrive Support | Metal | 88-On | 2 | |
| 31B | 065101 | 35712-32010 | Input Shaft | | 88-On | 2-3 | |
| 32G | 065104 | 35865-32020 | 2nd Coast Servo piston - A540E, A540H | 2.106 | 88-On | 1 | |
| 32G | 065105 | 35865-33010 | 2nd Coast Servo piston - A541E | | 94-On | 1 | |
| 33E | 065103 | 35748-32010 | Intermediate Shaft | | 88-On | 1 | |
| **BUSHINGS** | | | | | | | |
| KT | 065625A | NA | Bushing Kit | | 88-On | 1 | |

| ILL | ALTO NO | REF NO | DESCRIPTION | SPEC | YEAR | QTY | NOTES |
|---|---|---|---|---|---|---|---|
| **BUSHINGS** | | | | | | | ...Continued |
| 40A | 044200 | NA | Front Pump Body | | 88-On | 1 | |
| 41A | 044202 | NA | Stator Shaft (Front) - wide | 21.5mm | 88-On | 1 | |
| 42A | 065201A | NA | Stator Shaft (Rear) - bearing design | | 88-On | 1 | |
| 43A | 065212 | NA | Direct Drum | | 88-On | 1 | |
| 44C | 065213 | NA | Sun Gear | | 88-On | 2 | |
| N I | 065214 | NA | Input Hub | | 88-On | 1 | |
| N I | 065205 | NA | Overdrive Sun Gear - Front | | 88-On | 1 | |
| N I | 065206 | NA | Overdrive Sun Gear - Rear | | 88-On | 1 | |
| **WASHERS** | | | | | | | |
| KT | 065635A | NA | Washer Kit | | 84-On | 1 | |
| 48C | 065151 | 35738-32010 | Rear Planet - Front | Nylon | 84-On | 1 | |
| 49C | 065152 | 35739-32011 | Rear Planet - Rear | Nylon | 84-On | 1 | |

# TOYOTA
## U140E, U140F
## 1998-On

| ILL | DESCRIPTION | YEARS | FRICTION MODULE | STEEL MODULE | OVERHAUL KIT | BANNER KIT | MASTER KIT |
|---|---|---|---|---|---|---|---|
| **KITS** | | | | | | | |
| KT | Rebuilding Kit | 98-On | 136752 | 136753 | 136800 | 136901LS | 136901 |
| KT | Rebuilding Kit - without Molded Pistons | 98-On | 136752 | 136753 | 136800X | TBA | TBA |

| ILL | ALTO NO | REF NO | DESCRIPTION | SPEC | YEAR | QTY | NOTES |
|---|---|---|---|---|---|---|---|
| **MISCELLANEOUS GASKETS & KIT COMPONENTS** | | | | | | | |
| N I | 136816 | 35168-21010 | Gasket, Oil Pan | Cork/Rub | 98-On | 1 | |
| N I | 136050 | 90301-99099 | O Ring, Front Pump to case | | 98-On | 1 | |
| N I | 044054 | 90301-09173 | O Ring, Filler Tube & Detent Cable | | 98-On | 2 | |
| N I | 010116B | 96711-18018 | O Ring, Speedometer | | 98-On | 1 | |
| **FRICTION CLUTCHES** | | | | | | | |
| N I | 136700-180 | 35633-21010 | Forward | .071/1.8 | 98-On | 6 | Heg - 40T - OD: 5.387" - SM |
| N I | 136702-180 | 35667-21010 | Direct | .071/1.8 | 98-On | 4 | Heg - 40T - OD: 6.180" - PL |
| N I | 136704-180 | 35681-21010 | 2nd Brake | .071/1.8 | 98-On | 3-4 | Heg - 40T - OD: 6.700" - PL |
| N I | 136706-180 | 35682-21010 | 1st / Reverse | .071/1.8 | 98-On | 5.7 | Heg - 40T - OD: 6.400" - SB |
| N I | 136708-180 | 34261-21010 | Underdrive Brake (#1) | .071/1.8 | 98-On | 3-4 | Heg - 40T - OD: 4.918" - PL |
| N I | 136710-180 | 34262-21010 | Underdrive Brake (#2) | .071/1.8 | 98-On | 3-4 | Heg - 28T - OD: 4.635" - PL |
| **STEEL CLUTCHES** | | | | | | | |
| N I | 136701-180 | 35634-21010 | Forward | .071/1.8 | 98-On | 6 | 40T - ID: 4.500" |
| N I | 136703-300 | 35647-21010 | Direct | .118/3.0 | 98-On | 4 | 40T - ID: 5.540" |
| N I | 136705-200 | 35691-21010 | 2nd Brake | .078/2.0 | 98-On | 4 | 12T - ID: 5.640" |
| N I | 136707-180 | 35692-21010 | 1st / Reverse | .071/1.8 | 98-On | 7 | 12T - ID: 5.640" |
| N I | 136709-200 | 34263-21010 | Underdrive Brake (#1) | .078/2.0 | 98-On | 4 | 40T - ID: 3.904" |
| N I | 136711-180 | 34264-21010 | Underdrive Brake (#2) | .071/1.8 | 98-On | 4 | 11T - ID: 3.663" |
| **PRESSURE PLATES** | | | | | | | |
| N I | 136760-300 | 35635-21010 | Forward Top plate - selective | .118/3.0 | 98-On | AR | |
| N I | 136760-315 | 35635-21020 | Forward Top plate - selective | .124/3.15 | 98-On | AR | |
| N I | 136760-330 | 35635-21030 | Forward Top plate - selective | .129/3.3 | 98-On | AR | |
| N I | 136760-345 | 35635-21040 | Forward Top plate - selective | .135/3.45 | 98-On | AR | |
| N I | 136760-360 | 35635-21050 | Forward Top plate - selective | .141/3.6 | 98-On | AR | |
| N I | 136761-310 | 35675-21020 | Direct Top plate - selective | .122/3.1 | 98-On | AR | |
| N I | 136761-320 | 35675-21030 | Direct Top plate - selective | .125/3.2 | 98-On | AR | |
| N I | 136761-330 | 35675-21040 | Direct Top plate - selective | .129/3.3 | 98-On | AR | |
| N I | 136761-340 | 35675-21050 | Direct Top plate - selective | .133/3.4 | 98-On | AR | |
| N I | 136761-350 | 35675-21060 | Direct Top plate - selective | .137/3.5 | 98-On | AR | |
| N I | 136763-190 | 35678-21020 | Low / Reverse Top plate - selective | .074/1.9 | 98-On | AR | |
| N I | 136763-200 | 35678-21030 | Low / Reverse Top plate - selective | .078/2.0 | 98-On | AR | |
| N I | 136763-210 | 35678-21040 | Low / Reverse Top plate - selective | .082/2.1 | 98-On | AR | |
| N I | 136763-220 | 35678-21050 | Low / Reverse Top plate - selective | .086/2.2 | 98-On | AR | |
| N I | 136763-230 | 35678-21060 | Low / Reverse Top plate - selective | .090/2.3 | 98-On | AR | |
| N I | 136763-240 | 35678-21070 | Low / Reverse Top plate - selective | .094/2.4 | 98-On | AR | |
| N I | 136763-250 | 35678-21080 | Low / Reverse Top plate - selective | .098/2.5 | 98-On | AR | |
| N I | 136762-300 | 35676-21070 | 2nd Brake Top plate - selective | .118/3.0 | 98-On | AR | |
| N I | 136762-310 | 35676-21080 | 2nd Brake Top plate - selective | .122/3.1 | 98-On | AR | |
| N I | 136762-320 | 35676-21090 | 2nd Brake Top plate - selective | .125/3.2 | 98-On | AR | |
| N I | 136762-330 | 35676-21100 | 2nd Brake Top plate - selective | .129/3.3 | 98-On | AR | |
| N I | 136762-340 | 35676-21110 | 2nd Brake Top plate - selective | .133/3.4 | 98-On | AR | |
| N I | 136762-350 | 35676-21120 | 2nd Brake Top plate - selective | .137/3.5 | 98-On | AR | |
| N I | 136762-360 | 35676-21130 | 2nd Brake Top plate - selective | .141/3.6 | 98-On | AR | |
| N I | 136764-300 | 34265-21020 | Underdrive Brake (#1) - selective | .118/3.0 | 98-On | AR | |
| N I | 136764-320 | 34265-21030 | Underdrive Brake (#1) - selective | .125/3.2 | 98-On | AR | |
| N I | 136764-340 | 34265-21040 | Underdrive Brake (#1) - selective | .133/3.4 | 98-On | AR | |
| N I | 136765-300 | 34266-21010 | Underdrive Direct (#2) - selective | .118/3.0 | 98-On | AR | |
| N I | 136765-320 | 34266-21020 | Underdrive Direct (#2) - selective | .125/3.2 | 98-On | AR | |
| N I | 136765-340 | 34265-21030 | Underdrive Direct (#2) - selective | .133/3.4 | 98-On | AR | |
| **FILTERS** | | | | | | | |
| N I | 136940 | 35330-21020 | Filter - U140E (2wd) | | 98-On | 1 | |

| ILL | ALTO NO | REF NO | DESCRIPTION | SPEC | YEAR | QTY | NOTES |
|---|---|---|---|---|---|---|---|
| **FILTERS** | | | | | | | ...Continued |
| N I | 136942 | 35330-28010 | Filter - Rav4 (4wd) | | 98-On | 1 | |
| N I | 136944 | 35330-0W010 | Filter - RX300 (4wd) | | 00-On | 1 | |
| **METAL CLAD SEALS** | | | | | | | |
| N I | 044400A | 90301-38064 | Front Pump | | 98-On | 1 | |
| N I | 065410 | 90311-12002 | Manual Lever | | 98-On | 1 | |
| N I | 065423 | 90311-40010 | Axle - Converter Side (2wd) | | 98-On | 1 | |
| N I | 136405 | 90311-62004 | Axle - Converter Side (4wd) | | 98-On | 1 | |
| N I | 065424 | 90311-50011 | Axle - Case Side (All) | | 98-On | 1 | |
| N I | 136406 | 90311-58009 | Transfer Case - Left Output | | 98-On | 1 | |
| N I | 136407 | 90311-34021 | Transfer Case - Right Bearing Ret. - outer | | 98-On | 1 | |
| N I | 136408 | 90311-37001 | Transfer Case - Right Bearing Ret. - inner | | 98-On | 1 | |
| N I | 136409 | 90311-38062 | Transfer Case - Extension Housing | | 98-On | 1 | |
| **SEALING RINGS** | | | | | | | |
| KT | 136600 | NA | Sealing Ring Kit | | 98-On | 1 | |
| N I | 136100 | 35613-21010 | Front Pump Stator | | 98-On | 2 | |
| N I | 136101 | 35653-21010 | Rear Clutch Drum | | 98-On | 2 | |
| N I | 136102 | 34244-21010 | Underdrive Direct (#2) Clutch Drum | | 98-On | 2 | |

## NOTES

# TOYOTA
## U150
## 2002-On

| ILL | DESCRIPTION | YEARS | FRICTION MODULE | STEEL MODULE | OVERHAUL KIT | BANNER KIT | MASTER KIT |
|---|---|---|---|---|---|---|---|
| **KITS** | | | | | | | |
| KT | Rebuilding Kit | 02-On | 163752 | 163753 | 163800 | 163901LS | 163901 |
| KT | Rebuilding Kit - without Molded Pistons | 02-On | 163752 | 163753 | 136800X | TBA | TBA |

| ILL | ALTO NO | REF NO | DESCRIPTION | SPEC | YEAR | QTY | NOTES |
|---|---|---|---|---|---|---|---|
| **FRICTION CLUTCHES** | | | | | | | |
| N I | 136700A180 | 35633-33090 | Forward (#1 Clutch) | .071/1.8 | 02-On | 5 | Heg - 40T - OD: 5.387" - SB |
| N I | 136702-152 | 35667-33010 | Direct (#2 Clutch) | .060/1.52 | 02-On | 3 | Heg - 40T - OD: 6.180" - PL |
| N I | 136704-180 | 35681-33010 | Brake #1 | .071/1.8 | 02-On | 4 | Heg - 40T - OD: 6.700" - PL |
| N I | 136706-180 | 35682-28010 | Brake #2 | .071/1.8 | 02-On | 6 | Heg - 40T - OD: 6.400" - SB |
| N I | 136708-180 | 34261-28010 | Underdrive (#1) | .071/1.8 | 02-On | 4 | Heg - 40T - OD: 4.918" - PL |
| N I | 136710-180 | 34262-33010 | Underdrive (#2) | .071/1.8 | 02-On | 4 | Heg - 28T - OD: 4.635" - PL |
| N I | 163712-170 | 34627-33010 | Overdrive Direct | .067/1.7 | 02-On | 4 | Heg - 40T - OD: -SB |
| **STEEL CLUTCHES** | | | | | | | |
| N I | 136701-180 | 35634-28010 | Forward (#1 Clutch) | .071/1.8 | 02-On | 5 | 40T - ID: 4.500" |
| N I | 136703-180 | 35647-33030 | Direct (#2 Clutch) | .071/1.8 | 02-On | 2 | 40T - ID: 5.540" |
| N I | 136705-200 | 35691-28010 | Brake #1 | .078/2.0 | 02-On | 4 | 12T - ID: 5.640" |
| N I | 136707-180 | 35692-28010 | Brake #2 | .071/1.8 | 02-On | 6 | 12T - ID: 5.640" |
| N I | 136709-200 | 34263-28010 | Underdrive (#1) | .078/2.0 | 02-On | 4 | 40T - ID: 3.904" |
| N I | 136711-180 | 34264-28010 | Underdrive (#2) | .071/1.8 | 02-On | 4 | 11T - ID: 3.663" |
| N I | 163713-180 | 34616-33010 | Overdrive Direct | .071/1.8 | 02-On | 4 | 40T - ID: |
| **PRESSURE PLATES** | | | | | | | |
| N I | 136760-300 | 35635-21010 | Forward Top plate - selective | .118/3.0 | 02-On | AR | |
| N I | 136760-315 | 35635-21020 | Forward Top plate - selective | .124/3.15 | 02-On | AR | |
| N I | 136760-330 | 35635-21030 | Forward Top plate - selective | .129/3.3 | 02-On | AR | |
| N I | 136760-345 | 35635-21040 | Forward Top plate - selective | .135/3.45 | 02-On | AR | |
| N I | 136760-360 | 35635-21050 | Forward Top plate - selective | .141/3.6 | 02-On | AR | |
| N I | 136761-310 | 35675-21020 | Direct Top plate - selective | .122/3.1 | 02-On | AR | |
| N I | 136761-320 | 35675-21030 | Direct Top plate - selective | .125/3.2 | 02-On | AR | |
| N I | 136761-330 | 35675-21040 | Direct Top plate - selective | .129/3.3 | 02-On | AR | |
| N I | 136761-340 | 35675-21050 | Direct Top plate - selective | .133/3.4 | 02-On | AR | |
| N I | 136761-350 | 35675-21060 | Direct Top plate - selective | .137/3.5 | 02-On | AR | |
| N I | 136763-190 | 35678-21020 | Brake #1 - selective | .074/1.9 | 02-On | AR | |
| N I | 136763-200 | 35678-21030 | Brake #1 - selective | .078/2.0 | 02-On | AR | |
| N I | 136763-210 | 35678-21040 | Brake #1 - selective | .082/2.1 | 02-On | AR | |
| N I | 136763-220 | 35678-21050 | Brake #1 - selective | .086/2.2 | 02-On | AR | |
| N I | 136763-230 | 35678-21060 | Brake #1 - selective | .090/2.3 | 02-On | AR | |
| N I | 136763-240 | 35678-21070 | Brake #1 - selective | .094/2.4 | 02-On | AR | |
| N I | 136763-250 | 35678-21080 | Brake #1 - selective | .098/2.5 | 02-On | AR | |
| N I | 136762-300 | 35676-21070 | Brake #2 - selective | .118/3.0 | 02-On | AR | |
| N I | 136762-310 | 35676-21080 | Brake #2 - selective | .122/3.1 | 02-On | AR | |
| N I | 136762-320 | 35676-21090 | Brake #2 - selective | .125/3.2 | 02-On | AR | |
| N I | 136762-330 | 35676-21100 | Brake #2 - selective | .129/3.3 | 02-On | AR | |
| N I | 136762-340 | 35676-21110 | Brake #2 - selective | .133/3.4 | 02-On | AR | |
| N I | 136762-350 | 35676-21120 | Brake #2 - selective | .137/3.5 | 02-On | AR | |
| N I | 136762-360 | 35676-21130 | Brake #2 - selective | .141/3.6 | 02-On | AR | |
| N I | 136764-300 | 34265-21020 | Underdrive (#1) - selective | .118/3.0 | 02-On | AR | |
| N I | 136764-320 | 34265-21030 | Underdrive (#1) - selective | .125/3.2 | 02-On | AR | |
| N I | 136764-340 | 34265-21040 | Underdrive (#1) - selective | .133/3.4 | 02-On | AR | |
| N I | 136765-300 | 34266-21010 | Underdrive (#2) - selective | .118/3.0 | 02-On | AR | |
| N I | 136765-320 | 34266-21020 | Underdrive (#2) - selective | .125/3.2 | 02-On | AR | |
| N I | 136765-340 | 34265-21030 | Underdrive (#2) - selective | .133/3.4 | 02-On | AR | |

**NOTES**

# TOYOTA
## U240E, U241E
## 2000-On

| ILL | DESCRIPTION | YEARS | FRICTION MODULE | STEEL MODULE | OVERHAUL KIT | BANNER KIT | MASTER KIT |
|---|---|---|---|---|---|---|---|
| **KITS** | | | | | | | |
| KT | Rebuilding Kit | 00-On | 145752 | 145753 | 145800 | 145901LS | 145901 |
| KT | Rebuilding Kit - without Molded Pistons | 00-On | 145752 | 145753 | 136800X | TBA | TBA |

| ILL | ALTO NO | REF NO | DESCRIPTION | SPEC | YEAR | QTY | NOTES |
|---|---|---|---|---|---|---|---|
| **MISCELLANEOUS GASKETS & KIT COMPONENTS** | | | | | | | |
| 1G | 136816 | 35168-21010 | Gasket, Oil Pan | Cork/Rub | 00-On | 1 | |
| 2A | 136050 | 90301-99099 | O Ring, Front Pump to case | | 00-On | 1 | |
| N I | 044054 | 90301-09173 | O Ring, Filler Tube & Detent Cable | | 00-On | 2 | |
| N I | 010116B | 96711-18018 | O Ring, Speedometer | | 00-On | 1 | |
| **FRICTION CLUTCHES** | | | | | | | |
| 4A | 136700-180 | 35633-21010 | Forward | .071/1.8 | 00-On | 6 | Heg - 40T - OD: 5.387" - SM |
| 11B | 136702-180 | 35667-21010 | Direct | .071/1.8 | 00-On | 4 | Heg - 40T - OD: 6.180" - PL |
| 17C | 136704-180 | 35681-21010 | 2nd Brake | .071/1.8 | 00-On | 5-7 | Heg - 40T - OD: 6.700" - PL |
| 14C | 136706-180 | 35682-21010 | 1st / Reverse | .071/1.8 | 00-On | 3-4 | Heg - 40T - OD: 6.400" - SB |
| 20D | 145708-180 | 34261-32020 | Underdrive Brake (#1) | .071/1.8 | 00-On | 3-4 | Heg - 40T - OD: 4.487" - PL |
| 23E | 145710-180 | 34262-32020 | Underdrive Brake (#2) | .071/1.8 | 00-On | 3-4 | Heg - 28T - OD: 4.43" - PL |
| **STEEL CLUTCHES** | | | | | | | |
| 6A | 136701-180 | 35634-21010 | Forward | .071/1.8 | 00-On | 6 | 40T - ID: 4.500" |
| 12B | 136703-300 | 35647-21010 | Direct | .118/3.0 | 00-On | 4 | 40T - ID: 5.540" |
| 18C | 136705-200 | 35691-21010 | 2nd Brake | .078/2.0 | 00-On | 7 | 12T - ID: 5.640" |
| 15C | 136707-180 | 35692-21010 | 1st / Reverse | .071/1.8 | 00-On | 4 | 12T - ID: 5.640" |
| 21D | 145709-200 | 34263-32020 | Underdrive Brake (#1) | .078/2.0 | 00-On | 3 | 40T - ID: 3.550" |
| 24E | 145711-177 | 34264-32020 | Underdrive Brake (#2) | .071/1.8 | 00-On | 3 | 11T - ID: 3.510" |
| **PRESSURE PLATES** | | | | | | | |
| 3A | 136760-300 | 35635-21010 | Forward Top plate - selective | .118/3.0 | 00-On | AR | |
| 3A | 136760-315 | 35635-21020 | Forward Top plate - selective | .124/3.15 | 00-On | AR | |
| 3A | 136760-330 | 35635-21030 | Forward Top plate - selective | .129/3.3 | 00-On | AR | |
| 3A | 136760-345 | 35635-21040 | Forward Top plate - selective | .135/3.45 | 00-On | AR | |
| 3A | 136760-360 | 35635-21050 | Forward Top plate - selective | .141/3.6 | 00-On | AR | |
| 10B | 136761-310 | 35675-21020 | Direct Top plate - selective | .122/3.1 | 00-On | AR | |
| 10B | 136761-320 | 35675-21030 | Direct Top plate - selective | .125/3.2 | 00-On | AR | |
| 10B | 136761-330 | 35675-21040 | Direct Top plate - selective | .129/3.3 | 00-On | AR | |
| 10B | 136761-340 | 35675-21050 | Direct Top plate - selective | .133/3.4 | 00-On | AR | |
| 10B | 136761-350 | 35675-21060 | Direct Top plate - selective | .137/3.5 | 00-On | AR | |
| 16C | 136763-190 | 35678-21020 | Low / Reverse Top plate - selective | .074/1.9 | 00-On | AR | |
| 16C | 136763-200 | 35678-21030 | Low / Reverse Top plate - selective | .078/2.0 | 00-On | AR | |
| 16C | 136763-210 | 35678-21040 | Low / Reverse Top plate - selective | .082/2.1 | 00-On | AR | |
| 16C | 136763-220 | 35678-21050 | Low / Reverse Top plate - selective | .086/2.2 | 00-On | AR | |
| 16C | 136763-230 | 35678-21060 | Low / Reverse Top plate - selective | .090/2.3 | 00-On | AR | |
| 16C | 136763-240 | 35678-21070 | Low / Reverse Top plate - selective | .094/2.4 | 00-On | AR | |
| 16C | 136763-250 | 35678-21080 | Low / Reverse Top plate - selective | .098/2.5 | 00-On | AR | |
| 13C | 136762-300 | 35676-21070 | 2nd Brake Top plate - selective | .118/3.0 | 00-On | AR | |
| 13C | 136762-310 | 35676-21080 | 2nd Brake Top plate - selective | .122/3.1 | 00-On | AR | |
| 13C | 136762-320 | 35676-21090 | 2nd Brake Top plate - selective | .125/3.2 | 00-On | AR | |
| 13C | 136762-330 | 35676-21100 | 2nd Brake Top plate - selective | .129/3.3 | 00-On | AR | |
| 13C | 136762-340 | 35676-21110 | 2nd Brake Top plate - selective | .133/3.4 | 00-On | AR | |
| 13C | 136762-350 | 35676-21120 | 2nd Brake Top plate - selective | .137/3.5 | 00-On | AR | |
| 13C | 136762-360 | 35676-21130 | 2nd Brake Top plate - selective | .141/3.6 | 00-On | AR | |
| 19D | 136764-300 | 34265-32010 | Underdrive Brake (#1) - selective | .118/3.0 | 00-On | AR | |
| 19D | 136764-320 | 34265-32020 | Underdrive Brake (#1) - selective | .125/3.2 | 00-On | AR | |
| 19D | 136764-340 | 34265-32030 | Underdrive Brake (#1) - selective | .133/3.4 | 00-On | AR | |
| 22E | 136765-300 | 34266-32010 | Underdrive Direct (#2) - selective | .118/3.0 | 00-On | AR | |
| 22E | 136765-320 | 34266-32020 | Underdrive Direct (#2) - selective | .125/3.2 | 00-On | AR | |
| 22E | 136765-340 | 34265-32030 | Underdrive Direct (#2) - selective | .133/3.4 | 00-On | AR | |
| **FILTERS** | | | | | | | |
| 5G | 136942 | 35330-28010 | Filter | | 00-On | 1 | |

# TOYOTA
## U240E, U241E
## 2000-On

| ILL | ALTO NO | REF NO | DESCRIPTION | SPEC | YEAR | QTY | NOTES |
|---|---|---|---|---|---|---|---|
| **METAL CLAD SEALS** | | | | | | | |
| 7A | 044400A | 90301-38064 | Front Pump | | 00-On | 1 | |
| 8G | 065410 | 90311-12002 | Manual Lever | | 00-On | 1 | |
| N I | 065423 | 90311-40010 | Axle - Converter Side | | 00-On | 1 | |
| N I | 065424 | 90311-50011 | Axle - Case Side | | 00-On | 1 | |
| **SEALING RINGS** | | | | | | | |
| KT | 136600 | NA | Sealing Ring Kit | | 00-On | 1 | |
| 9A | 136100 | 35613-21010 | Front Pump Stator | | 00-On | 2 | |
| 25B | 136101 | 35653-21010 | Rear Clutch Drum | | 00-On | 2 | |
| N I | 136102 | 34244-21010 | Underdrive Direct (#2) Clutch Drum | | 00-On | 2 | |

**NOTES**

# TOYOTA
## U340E, U341E, U341F
## 2000-On

| ILL | DESCRIPTION | YEARS | FRICTION MODULE | STEEL MODULE | OVERHAUL KIT | BANNER KIT | MASTER KIT |
|---|---|---|---|---|---|---|---|
| **KITS** | | | | | | | |
| KT | Rebuilding Kit | 00-On | 144752 | 144753 | 144800 | 144901LS | 144901 |

| ILL | ALTO NO | REF NO | DESCRIPTION | SPEC | YEAR | QTY | NOTES |
|---|---|---|---|---|---|---|---|
| **MISCELLANEOUS GASKETS & KIT COMPONENTS** | | | | | | | |
| N I | 144816 | 35168-52020 | Gasket, Oil Pan | Cork/Rub | 00-On | 1 | |
| N I | 044054 | 90301-09173 | O Ring, Filler Tube & Detent Cable | | 00-On | 2 | |
| N I | 065058 | 96711-24018 | O Ring, Speedometer | | 00-On | 1 | |
| **FRICTION CLUTCHES** | | | | | | | |
| N I | 144700-180 | 35633-52020 | Forward | .071/1.8 | 00-On | 4 | Heg - 40T - OD: 5.100 - SB |
| N I | 144702-180 | 35667-52020 | Direct | .071/1.8 | 00-On | 3 | Heg - 40T - OD: 4.370 - SB |
| N I | 144704-180 | 35682-52020 | 2nd Brake | .071/1.8 | 00-On | 3-4 | Heg - 32T - OD: 6.325 - SB |
| N I | 144706-180 | 35683-52020 | Low / Reverse | .071/1.8 | 00-On | 4 | Heg - 43T - OD: 6.035 - SB |
| N I | 144708-185 | 35677-52020 | Coast | .073/1.85 | 00-On | 2-3 | Heg - 32T - OD: 4.590 - SB |
| N I | 144710-180 | 34633-52020 | 2nd Coast & Overdrive Brake | .071/1.8 | 00-On | 2 | Heg - 40T - OD: 6.325 - SB |
| **STEEL CLUTCHES** | | | | | | | |
| N I | 144701-188 | 35634-52020 | Forward | .074/1.88 | 00-On | 4 | 30T - ID: 4.270 |
| N I | 144703-300 | 35675-52040 | Direct | .118/3.0 | 00-On | 3 | 30T - ID: 3.400 |
| N I | 144705-200 | 35692-52020 | 2nd Brake - U341 | .078/2.0 | 00-On | 3 | 13T - ID: 5.650 |
| N I | 144705-300 | 35678-52020 | 2nd Brake - U340 | .118/3.0 | 00-On | 3 | 13T - ID: 5.650 |
| N I | 144707-177 | 35693-52040 | Low / Reverse | .070/1.77 | 00-On | 4 | 13T - ID: 5.400 |
| N I | 144709-178 | 35648-52020 | Coast | .070/1.77 | 00-On | 2-3 | 30T - ID: 3.870 |
| N I | 144711-300 | 34625-52060 | 2nd Coast & Overdrive Brake | .118/3.0 | 00-On | 2 | 15T - ID: 5.650 |
| **FILTERS** | | | | | | | |
| N I | 144940 | 35330-20020 | Filter | | 00-On | 1 | |
| **METAL CLAD SEALS** | | | | | | | |
| N I | 044400A | 90311-38064 | Front Pump - Brown | Vamac® | 00-On | 1 | |
| N I | 044400B | 90311-38077 | Front Pump - Black | Viton® | 00-On | 1 | |
| N I | 065430 | 90311-34023 | Axle - Converter Side | | 00-On | 1 | |
| N I | 065426 | 90311-34022 | Axle - Case Side | | 00-On | 1 | |
| N I | 065410 | 90311-12002 | Manual Lever | | 00-On | 1 | |
| **SEALING RINGS** | | | | | | | |
| KT | 144600 | NA | Sealing Ring Kit | | 00-On | 1 | |
| N I | 144100 | 35613-52010 | Front Pump Stator | | 00-On | 2 | |
| N I | 144101 | 35712-52020 | Input Shaft | | 00-On | 1 | |
| N I | 144102 | 35617-52020 | Intermediate Shaft | | 00-On | 3 | |

## NOTES

# VOLKSWAGEN
## AUDI 3 SPEED
## 010, 087, 089, 090
## 1975-93

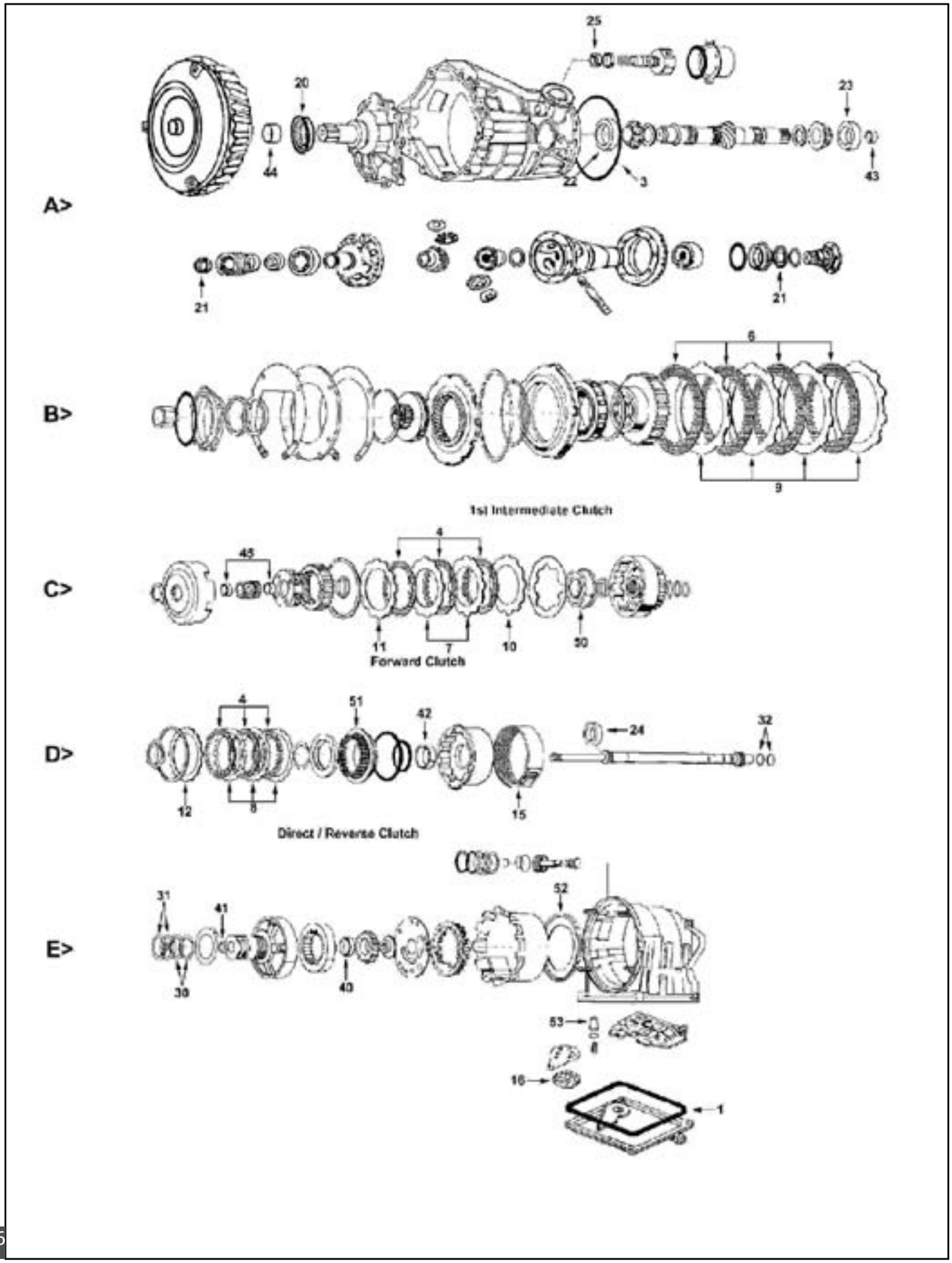

# VOLKSWAGEN
## AUDI 3 SPEED
## 010, 087, 089, 090
## 1975-93

| ILL | DESCRIPTION | YEARS | FRICTION MODULE | STEEL MODULE | OVERHAUL KIT | BANNER KIT | MASTER KIT |
|---|---|---|---|---|---|---|---|
| **KITS** | | | | | | | |
| **010** | | | | | | | |
| KT | Rebuilding Kit - without Final Drive | 75-93 | 046752 | 046753 | 046800 | 046901LS | 046901 |
| KT | Rebuilding Kit - with Final Drive | 75-93 | 046752 | 046753 | 046802 | 046901ALS | 046901A |
| **087** | | | | | | | |
| KT | Rebuilding Kit - without Final Drive | 84-91 | 046752A | 046753A | 046800 | 046903LS | 046903 |
| KT | Rebuilding Kit - with Final Drive | 84-91 | 046752C | 046753C | 046802A | 046907ALS | 046907A |
| **089** | | | | | | | |
| KT | Rebuilding Kit - without Final Drive | 75-91 | 046752A | 046753A | 046800 | 046903LS | 046903 |
| KT | Rebuilding Kit - with Final Drive | 75-91 | 046752A | 046752A | 046802A | 046903ALS | 046903A |
| **090** | | | | | | | |
| KT | Rebuilding Kit - with Final Drive | 78-91 | 046752B | 046753B | 046802A* | 046905ALS | 046905A |
| | * Must Add sub kit 046803V for coverage | | | | | | |

| ILL | ALTO NO | REF NO | DESCRIPTION | SPEC | YEAR | QTY | NOTES |
|---|---|---|---|---|---|---|---|
| **MISCELLANEOUS GASKETS & KIT COMPONENTS** | | | | | | | |
| 1E | 046816 | 010-321-371B | Gasket, Oil Pan - 010, 087, 089 | M.Rubber | 75-93 | 1 | |
| 1E | 046818 | 090-507-215 | Gasket, Oil Pan - 090 | M.Rubber | 78-91 | 1 | |
| 2E | 046004 | 010-325-443 | Gasket, Filter | | 75-93 | 1 | |
| N I | 010209B | 003-321-419 | Speedometer | | 75-93 | 1 | |
| 3A | 046050A | 010-409-549B | Lathe Cut, Final Drive to case | | 75-93 | 1 | Replaces O Ring |
| **FRICTION CLUTCHES** | | | | | | | |
| 4C | 046700 | 010-323-241C | Forward - All | .061/1.55 | 75-93 | 3-5 | Tan - 48T - OD: 4.756" - SM |
| 5D | 046702 | 010-323-141C | Direct/Reverse - 010, 089, 090 | .090/2.3 | 75-93 | 3-5 | Tan - 48T - OD: 4.756" - PL |
| 5D | 046706 | 087-323-141A | Direct/Reverse - 087 | .090/2.3 | 84-91 | 5 | Tan - 49T - OD: 5.000" - PL |
| 6B | 046704 | 010-323-231C | 1st Intermediate (Low / Reverse) | .061/1.55 | 75-93 | 3-5 | Tan - 30T - OD: 6.679" - SM |
| **STEEL CLUTCHES** | | | | | | | |
| 7C | 046701 | 010-323-139A | Forward - All | .079/2.0 | 75-93 | 2-4 | 17T - ID: 4.100" |
| 8D | 046701 | 010-323-139A | Direct/Reverse - 010, 089, 090 | .079/2.0 | 75-93 | 3-5 | 17T - ID: 4.100" |
| 8D | 046707 | 087-323-139 | Direct/Reverse - 087 | .079/2.0 | 84-91 | 5 | 53T - ID: 4.059" |
| 9B | 046703 | 010-323-227A | 1st Intermediate (Low / Reverse) | .079/2.0 | 75-93 | 3-5 | 8T - ID: 6.182" |
| **PRESSURE PLATES** | | | | | | | |
| 10C | TBA | 010-323-237A | Forward Bottom - except Diesel | | 75-93 | 1 | |
| 10C | TBA | 010-323-237B | Forward Bottom - Diesel | | 75-93 | 1 | |
| 11C | TBA | 010-323-153 | Forward Top - selective | 6.3 | 75-93 | AR | |
| 11C | TBA | 010-323-253B | Forward Top - selective | 6.8 | 75-93 | AR | |
| 11C | TBA | 010-323-253C | Forward Top - selective | 7.2 | 75-93 | AR | |
| 11C | TBA | 010-323-253D | Forward Top - selective | 7.6 | 75-93 | AR | |
| 11C | TBA | 010-323-253F | Forward Top - selective | 6.0 | 75-93 | AR | |
| 11C | TBA | 010-323-253G | Forward Top - selective | 2.3 | 75-93 | AR | |
| 11C | TBA | 010-323-253H | Forward Top - selective | 2.7 | 75-93 | AR | |
| 11C | TBA | 010-323-253J | Forward Top - selective | 3.1 | 75-93 | AR | |
| 11C | TBA | 010-323-253K | Forward Top - selective | 3.5 | 75-93 | AR | |
| 11C | TBA | 010-323-253L | Forward Top - selective | 3.9 | 75-93 | AR | |
| 12C | TBA | 010-323-153 | Direct Top - 010, 089, 090 | 6.3 | 75-93 | 1 | |
| 12C | TBA | 087-323-153 | Direct Top - 087 | | 84-91 | 1 | |
| **BANDS** | | | | | | | |
| 15D | 046950 | 010-323-461A | 2nd Gear Brake | Tan | 75-93 | 1 | |
| **FILTERS** | | | | | | | |
| 16E | 046940 | 010-325-421 | Filter - Rectangular | | 75-76 | 1 | |
| 16E | 046942 | 010-325-421A | Filter - Round with Off Center Hole | | 77-93 | 1 | |
| **METAL CLAD SEALS** | | | | | | | |
| 20A | 046400 | 010-409-568 | Front Pump - 010, 087, 089 | | 75-93 | 1 | |
| 20A | 034400 | 003-519-089D | Front Pump - 090 | | 78-91 | 1 | |
| 24D | 046403 | 087-323-559A | Turbine Shaft to Pump Shaft - All | | 75-93 | 1 | |

# VOLKSWAGEN
## AUDI 3 SPEED
## 010, 087, 089, 090
## 1975-93

| ILL | ALTO NO | REF NO | DESCRIPTION | SPEC | YEAR | QTY | NOTES |
|---|---|---|---|---|---|---|---|
| **METAL CLAD SEALS** | | | | | | | ...Continued |
| **010** | | | | | | | |
| 21A | 046425 | 010-409-255 | Axle - Left & Right | | 75-83 | 2 | |
| 21A | 046425A | 020-301-189M | Axle - Left & Right | | 84-93 | 2 | |
| 22A | 046401 | 010-409-085E | Final Drive Pinion - Front | | 75-93 | 1 | |
| 23A | 046402 | 010-409-529C | Final Drive Pinion - Rear | | 75-93 | 1 | |
| **087** | | | | | | | |
| 25A | 046405 | 087-409-133A | Governor | | 84-91 | 1 | |
| 21A | 046426 | 016-409-399B | Axle - Left & Right | 60mm | 84-91 | 2 | |
| 22A | 046406 | 087-409-085B | Final Drive Pinion - Front | | 84-91 | 2 | |
| 23A | 046407 | 087-409-529D | Final Drive Pinion - Rear | | 84-91 | 2 | |
| **089** | | | | | | | |
| 25A | 046405 | 087-409-133A | Governor | | 75-91 | 1 | |
| 21A | 046426 | 016-409-399B | Axle - Left & Right | 60mm | 75-91 | 2 | |
| 22A | 046408 | 089-409-085B | Final Drive Pinion - Front | | 75-91 | 1 | |
| 23A | 046409 | 089-409-529D | Final Drive Pinion - Rear | | 75-91 | 1 | |
| **090** | | | | | | | |
| 21A | 046426 | 016-409-399B | Axle - Left & Right | 60mm | 78-91 | 2 | |
| 22A | 046401 | 010-409-085E | Final Drive Pinion - Front | | 78-91 | 1 | |
| 23A | 046409 | 089-409-529D | Final Drive Pinion - Rear | | 78-91 | 2 | |
| **SEALING RINGS** | | | | | | | |
| KT | 046600 | G710 | Sealing Ring Kit - 6M | | 75-93 | 1 | |
| 30E | 034100 | 003-321-261 | Rear Pump Stator to Forward Drum | | 75-93 | 2 | |
| 31E | 046101 | 010-321-261 | Rear Pump Stator to Direct Drum | | 75-93 | 2 | |
| 32D | 046102 | 010-323-557A | Turbine Shaft | | 75-93 | 2 | |
| **BUSHINGS** | | | | | | | |
| KT | 046625 | NA | Bushing Kit | | 75-93 | 1 | |
| 40E | 109200A | 003-321-253 | Oil Pump Body | | 75-93 | 1 | |
| 41E | 109201 | 003-323-611 | Oil Pump Drive Gear | | 75-93 | 1 | |
| 42D | 046201 | 010-323-115 | Direct Drum | | 75-93 | 1 | |
| 43A | 046203 | 089-409-639A | Pinion Shaft - 010, 089 | | 75-93 | 1 | |
| 43A | 046203A | 087-409-639A | Pinion Shaft - 087 | | 84-91 | 1 | |
| 44A | 109201 | 003-323-611 | Torque Converter | | 75-93 | 1 | |
| 45C | 046202 | 010-323-017A | Sun Gear | | 75-93 | 2 | |
| **MOLDED PISTONS** | | | | | | | |
| 50C | 046315 | 010-323-217A | Forward Clutch Drum | | 75-93 | 1 | |
| 51D | 046317A | 010-323-121B | Direct / Reverse Drum | | 78-93 | 1 | |
| 52E | 046325 | 010-323-479A | 1st Intermediate Piston without Bleed valve | | 75-82 | 1 | |
| 52E | 046325A | 010-323-512A | 1st Intermediate Piston with Bleed valve | | 83-93 | 1 | |
| 53E | 046331 | 003-325-405C | Accumulator Piston | | 75-93 | 1 | |

**NOTES**

A>

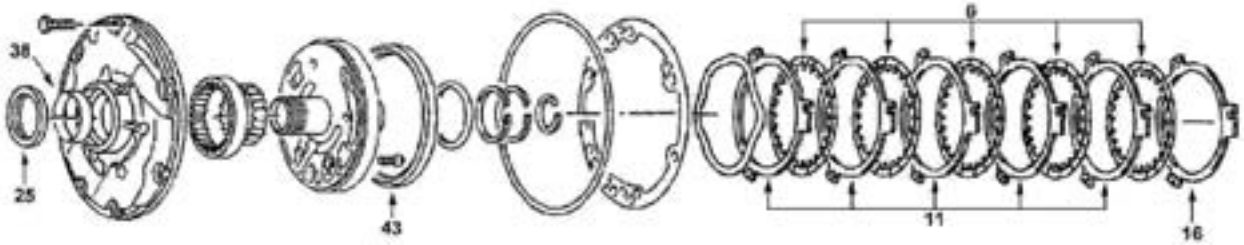


B2 (2-4 Clutch)

B>

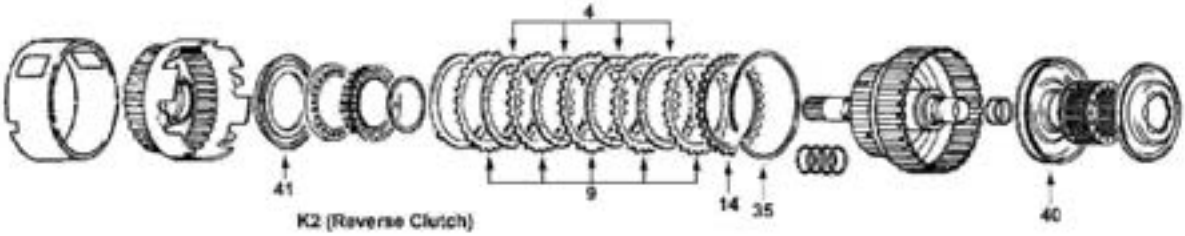


K2 (Reverse Clutch)

C>

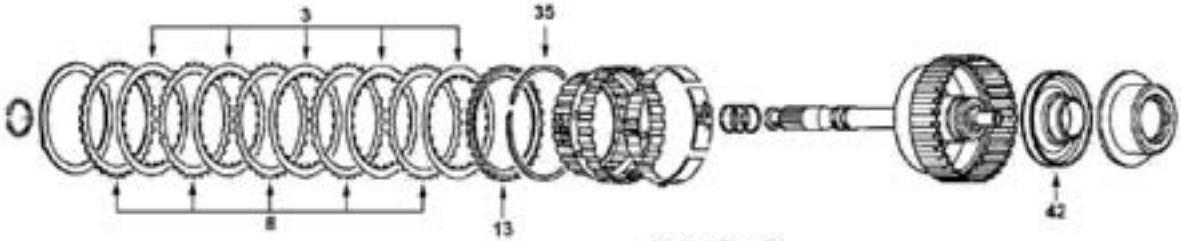


K1 (1-3 Clutch)

D>

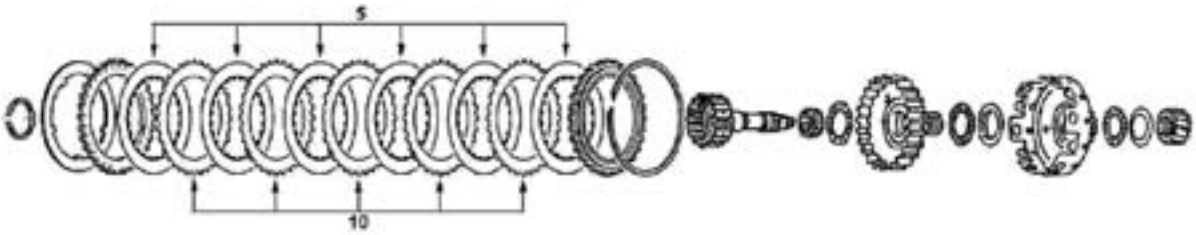


K3 (3-4 Clutch)

E>

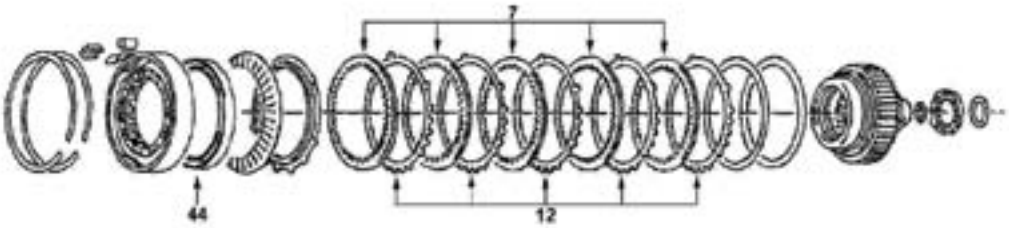


B1 (Low / Reverse Clutch)

# VOLKSWAGEN
## AUDI 4 SPEED
## 095, 096, 097, 098 (AG4)
## 01M, 01N, 01P 1989-On

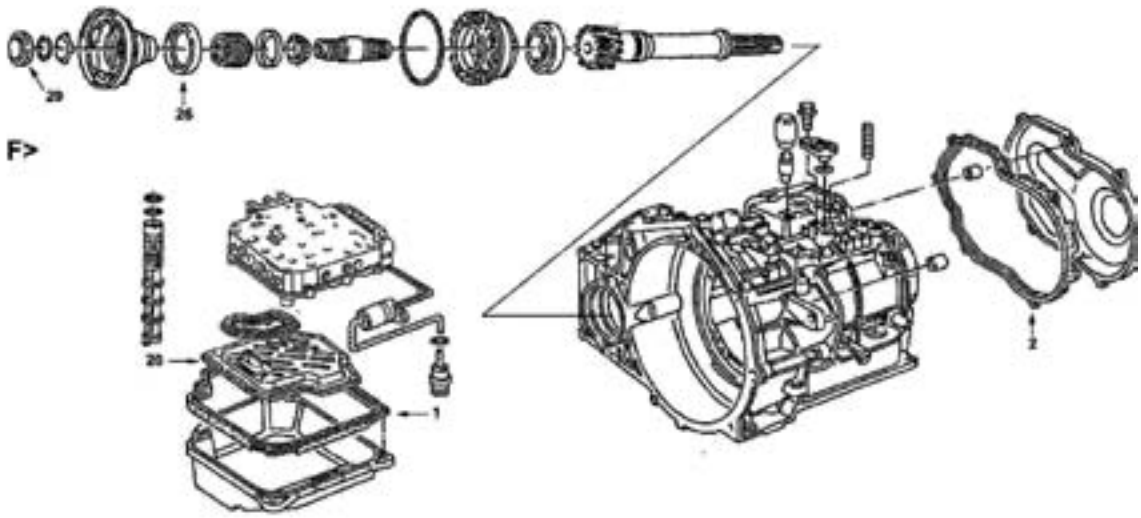


| ILL | DESCRIPTION | YEARS | FRICTION MODULE | STEEL MODULE | OVERHAUL KIT | BANNER KIT | MASTER KIT |
|---|---|---|---|---|---|---|---|
| **KITS** | | | | | | | |
| **095, 096** | | | | | | | |
| KT | Rebuilding Kit - with Molded Pistons | 89-95 | 109752 | 109753 | 109800 | 109901LS | 109901 |
| KT | Rebuilding Kit - without Molded Pistons | 89-95 | 109752 | 109753 | 109800A | 109901ALS | 109901A |
| **01M** | | | | | | | |
| KT | Rebuilding Kit - with Molded Pistons | 96-On | 109752D | 109753D | 109800B | 109901BLS | 109901B |
| KT | Rebuilding Kit - without Molded Pistons | 96-On | 109752D | 109753D | 109800A | 109901CLS | 109901C |
| **097** | | | | | | | |
| KT | Rebuilding Kit - with Molded Pistons | 89-95 | 109752 | 109753 | 109806 | 109907LS | 109907 |
| KT | Rebuilding Kit - without Molded Pistons | 89-95 | 109752 | 109753 | 109806A | 109907ALS | 109907A |
| **O1N** | | | | | | | |
| KT | Rebuilding Kit - with Molded Pistons | 96-On | 109752D | 109753D | 109806B | 109907BLS | 109907B |
| KT | Rebuilding Kit - without Molded Pistons | 96-On | 109752D | 109753D | 109806C | 109907CLS | 109907C |
| **098** | | | | | | | |
| KT | Rebuilding Kit - with Molded Pistons | 91-95 | 109752A | 109753A | 109802 | 109903LS | 109903 |
| KT | Rebuilding Kit - without Molded Pistons | 91-95 | 109752A | 109753A | 109802A | 109903ALS | 109903A |
| **01P** | | | | | | | |
| KT | Rebuilding Kit - with Molded Pistons | 96-On | 109752E | 109753E | 109802C | 109903BLS | 109903B |
| KT | Rebuilding Kit - without Molded Pistons | 96-On | 109752E | 109753E | 109802A | 109903CLS | 109903C |

| ILL | ALTO NO | REF NO | DESCRIPTION | SPEC | YEAR | QTY | NOTES |
|---|---|---|---|---|---|---|---|
| **MISCELLANEOUS GASKETS & KIT COMPONENTS** | | | | | | | |
| 1F | 109819 | 096-321-370 | Gasket, Oil Pan - 096, 01M | M.Rubber | 89-On | 1 | |
| 1F | 109819C | 097-321-371 | Gasket, Oil Pan - 097 | M.Rubber | 89-On | 1 | |
| 1F | 109819A | 01N-321-370 | Gasket, Oil Pan - 01N | M.Rubber | 89-On | 1 | |
| 1F | 109819B | 098-321-370 | Gasket, Oil Pan - 098, 01P | M.Rubber | 91-On | 1 | |
| 2F | 109821 | 096-321-488 | Gasket, Rear Cover - 096, 01M | M.Rubber | 89-On | 1 | |
| 2F | 109821B | 098-321-493 | Gasket, Rear Cover - 098 | M.Rubber | 89-94 | 1 | |
| 2F | 109821A | 01P-321-488 | Gasket, Rear Cover - 098, 01P | M.Rubber | 95-On | 1 | |
| **FRICTION CLUTCHES** | | | | | | | |
| 3C | 109700 | NA | K1 (Forward) | .063/1.6 | 89-On | 4-5 | Heg - 24T - OD: 4.800" - PL |
| 4B | 109700 | NA | K2 (Reverse) | .063/1.6 | 89-On | 4-5 | Heg - 24T - OD: 4.800" - PL |
| 5D | 109706 | NA | K3 (3 - 4 Clutch) | .063/1.6 | 89-95 | 4-6 | Heg - 22T - OD:3.771 - PLNI |
| 5D | 109716 | NA | K3 (3 - 4 Clutch) | .063/1.6 | 96-On | 3-4 | Heg - 22T - OD:4.057 - CPL |
| 6A | 109702 | 095-323-495 | B2 (Brake) - Front | .063/1.6 | 89-On | 3-4 | Tan - 32T - OD: 6.096" - PL |
| 7E | 109704 | 095-323-231A | B1 (Reverse Brake) - Rear | .063/1.6 | 89-95 | 4-6 | Heg - 50T - OD: 5.743" - SM |
| 7E | 109704A | 095-323-231C | B1 (Reverse Brake) - Rear | .063/1.6 | 96-On | 4-6 | Heg - 50T - OD: 5.743" - SB |

# VOLKSWAGEN
## AUDI 4 SPEED
## 095, 096, 097, 098 (AG4)
## 01M, 01N, 01P 1989-On

| ILL | ALTO NO | REF NO | DESCRIPTION | SPEC | YEAR | QTY | NOTES |
|---|---|---|---|---|---|---|---|
| **FRICTION CLUTCHES** | | | | | | | ...Continued |
| **HI-PERFORMANCE - RED EAGLE®** | | | | | | | |
| 5D | 109746-160 | NA | K3 (3 - 4 Clutch) | .063/1.6 | 89-95 | 4-6 | RED EAGLE® |
| 5D | 109746A160 | NA | K3 (3 - 4 Clutch) | .063/1.6 | 96-On | 3-4 | RED EAGLE® |
| **STEEL CLUTCHES** | | | | | | | |
| 8C | 109701 | NA | K1 (Forward) | .079/2.0 | 89-95 | 4-5 | 32T - ID: 4.095" |
| 8C | 109701-145 | NA | K1 (Forward) | .057/1.45 | 96-On | 4-5 | 32T - ID: 4.095" |
| 9B | 109701 | NA | K2 (Reverse) | .079/2.0 | 89-On | 5 | 32T - ID: 4.095" |
| 10D | 109707 | NA | K3 (3 - 4 Clutch) | .079/2.0 | 89-95 | 3-5 | 26T - ID: 2.835" |
| 10D | 109717-145 | NA | K3 (3 - 4 Clutch) | .057/1.45 | 96-On | 3-4 | 28T - ID: 2.835" |
| 10D | 109717-160 | NA | K3 (3 - 4 Clutch) - selective | .063/1.6 | 96-On | AR | 28T - ID: 2.835" |
| 10D | 109717 | NA | K3 (Overdrive - 3rd/4th shift) - AR4 only | .078/2.0 | 96-On | AR | 28T - ID: 2.835" |
| 11A | 109703 | 097-323-463 | B2 (Brake) - Front | .079/2.0 | 89-On | 5-7 | 3T - ID: 5.361" |
| 12E | 109705 | 095-323-227 | B1 (Reverse Brake) - Rear | .079/2.0 | 89-95 | 6 | 12T - ID: 5.078" |
| 12E | 109705-145 | 095-323-227A | B1 (Reverse Brake) - Rear | .057/1.45 | 96-On | 6 | 12T - ID: 5.078" |
| **HI-PERFORMANCE - KOLENE®** | | | | | | | |
| 8C | 109701K | NA | K1 (Forward) | .079/2.0 | 89-95 | 4-5 | 32T - ID: 4.095" |
| 8C | 109701K145 | NA | K1 (Forward) | .057/1.45 | 96-On | 4-5 | 32T - ID: 4.095" |
| 9B | 109701K | NA | K2 (Reverse) | .079/2.0 | 89-On | 5 | 32T - ID: 4.095" |
| 10D | 109717K145 | NA | K3 (3 - 4 Clutch) | .057/1.45 | 96-On | 3-4 | 28T - ID: 2.835" |
| **PRESSURE PLATES** | | | | | | | |
| 13C | 109760 | NA | K1 (Forward) - selective | .118/3.0 | 89-On | AR | |
| 13C | 109760A520 | NA | K1 (Forward) - selective | .205/5.2 | 89-On | AR | |
| 13C | 109760A640 | NA | K1 (Forward) - selective | .253/6.4 | 89-On | AR | |
| 14C | 109760 | NA | K2 (Reverse) - selective | .118/3.0 | 89-On | AR | |
| 14C | 109760A520 | NA | K2 (Reverse) - selective | .205/5.2 | 89-On | AR | |
| 16A | 109703-225 | 097-323-463A | B2 (Brake) - selective | .089/2.25 | 89-On | AR | |
| 16A | 109703-250 | 097-323-463B | B2 (Brake) - selective | .098/2.5 | 89-On | AR | |
| 16A | 109703-275 | 097-323-463G | B2 (Brake) - selective | .108/2.75 | 89-On | AR | |
| 16A | 109703-300 | 097-323-463C | B2 (Brake) - selective | .118/3.0 | 89-On | AR | |
| 16A | TBA | 097-323-463D | B2 (Brake) - selective | .128/3.25 | 89-On | AR | |
| 16A | TBA | 097-323-463E | B2 (Brake) - selective | .138/3.5 | 89-On | AR | |
| 16A | TBA | 097-323-463F | B2 (Brake) - selective | .148/3.75 | 89-On | AR | |
| **OEI™ Original Equipment Improvements** | | | | | | | |
| KT | 109757 | NA | POWERPACK™ - K-3 (3-4 Clutch) 01M, 01N | | 96-On | 1 | |
| KT | 109757A | NA | POWERPACK™ - K-3 (3-4 Clutch) 01P | | 96-On | 1 | |
| **FILTERS** | | | | | | | |
| 20F | 109940 | 095-325-429C | Filter - 096, 097, 098 | | 89-95 | 1 | |
| 20F | 109941 | 01M-325-429 | Filter - 01M, 01N, 01P | | 96-On | 1 | |
| **METAL CLAD SEALS** | | | | | | | |
| 25A | 109400 | 095-321-243A | Front Pump | | 89-On | 1 | |
| N I | 109410 | 095-321-182B | Manual Lever | | 89-On | 1 | |
| **096, 01M** | | | | | | | |
| 26F | 109425 | 020-301-189T | Axle - Left & Right | 2.575 | 89-On | 2 | |
| N I | 109402 | 095-323-862A | Pinion | 1.978 | 89-91 | 1 | |
| N I | 109402A | 096-323-862 | Pinion | 2.060 | 92-On | 1 | |
| N I | TBA | 020-409-289B | Left Axle cap | | 89-On | 1 | |
| **097, 01N** | | | | | | | |
| 26F | 109426 | 016-409-399B | Axle - Right (01N) | 2.000 | 89-On | 1 | |
| 26F | 109429 | 016-409-399A | Axle - Right (097) | | 89-95 | 1 | |
| 26F | 109425 | 020-301-189T | Axle - Left (01N ) | 2.575 | 89-On | 1 | |
| 26F | 109428 | 097-409-400D | Axle - Left (097 ) | | 89-95 | 1 | |
| N I | 109403 | 097-409-529A | Pinion | 3.630 | 89-On | 1 | |
| N I | 109417 | 097-321-491A | Pinion Cover | | 89-On | 1 | |
| N I | 109416 | 097-321-073A | Rear Cover | | 89-On | 2 | |
| N I | 109415 | 020-409-289B | Left Axle cap | | 89-On | 1 | |

# VOLKSWAGEN
## AUDI 4 SPEED
## 095, 096, 097, 098 (AG4)
## 01M, 01N, 01P 1989-On

| ILL | ALTO NO | REF NO | DESCRIPTION | SPEC | YEAR | QTY | NOTES |
|---|---|---|---|---|---|---|---|
| **METAL CLAD SEALS** | | | | | | | ...Continued |
| **098, 01P** | | | | | | | |
| 26F | 109426 | 016-409-399B | Axle - Right & Left | 2.000 | 91-On | 2 | |
| N I | 109404 | 098-323-862A | Pinion | 2.295 | 91-On | 1 | |
| N I | TBA | 002-517-289A | Left Axle Cap | | 91-On | 1 | |
| **SEALING RINGS** | | | | | | | |
| KT | 109600 | G708A | Sealing Ring Kit - 12M | | 89-On | 1 | |
| 30A | 109100 | 095-321-261A | Stator Support - Large | | 89-On | 2 | |
| 31A | 109101 | 095-321-262 | Stator Support - Small | | 89-On | 1 | |
| 32C | 109104 | 095-323-570A | Turbine Shaft | 21mm | 89-On | 3 | |
| 33C | 109103 | 095-323-560 | Input Shaft - Rear | 28mm | 89-94 | 1 | |
| 34B | 109102 | 095-323-557C | Input Shaft - Front | 30mm | 89-On | 3-5 | |
| **SNAP RINGS** | | | | | | | |
| 35BC | 109250-160 | NA | K1 & K2 Clutch drum - selective | .063/1.6 | 89-On | AR | |
| 35BC | 109250-180 | NA | K1 & K2 Clutch drum - selective | .071/1.8 | 89-On | AR | |
| 35BC | 109250-200 | NA | K1 & K2 Clutch drum - selective | .079/2.0 | 89-On | AR | |
| 35BC | 109250-220 | NA | K1 & K2 Clutch drum - selective | .087/2.2 | 89-On | AR | |
| **BUSHINGS** | | | | | | | |
| KT | 109625 | NA | Bushing Kit | | 89-On | 1 | |
| 38A | 109200 | NA | Front Pump Body | | 89-On | 1 | |
| **MOLDED PISTONS** | | | | | | | |
| KT | 109670 | NL | Kit - Molded Pistons (5) | | 89-95 | 1 | w/o shaft covers |
| KT | 109670A | NL | Kit - Molded Pistons (7) | | 96-On | 1 | w/o shaft covers |
| 40B | 109330 | 095-323-217B | K1 (Forward) | | 89-95 | 1 | |
| 40B | 109330A | 095-323-217G | K1 (Forward) | | 96-On | 1 | |
| N I | 109335 | 095-323-257 | K1 (Forward) spring retainer | | 96-On | 1 | |
| 41B | 109332 | 095-323-121E | K2 (Reverse) | | 89-On | 1 | |
| 42C | 109333 | 095-323-927A | K3 (3 - 4 Clutch) | | 89-95 | 1 | |
| 42C | 109333A | 095-323-927G | K3 (3 - 4 Clutch) | | 96-On | 1 | |
| N I | 109336 | 095-323-977C | K3 (3 - 4 Clutch) spring retainer | | 96-On | 1 | |
| 43A | 109331 | 095-321-531C | B2 (Brake) - Front | | 89-On | 1 | |
| 44E | 109334 | 095-323-479B | B1 (Reverse Brake) - Rear | | 89-On | 1 | |

# VOLKSWAGEN
## JATCO
## JF404E
## 2000-On

| ILL | DESCRIPTION | YEARS | FRICTION MODULE | STEEL MODULE | OVERHAUL KIT | BANNER KIT | MASTER KIT |
|---|---|---|---|---|---|---|---|
| **KITS** | | | | | | | |
| KT | Rebuilding Kit - Lupo, Polo, Seat, Arosa, Skoda, Fabia (All 1.0-1.5 Eng.) | 00-On | 158752 | 158753 | 158800 | 158901LS | 158901 |

| ILL | ALTO NO | REF NO | DESCRIPTION | SPEC | YEAR | QTY | NOTES |
|---|---|---|---|---|---|---|---|
| **FRICTION CLUTCHES** | | | | | | | |
| N I | 158700-160 | 001-398-205AK | 1st & 3rd Clutch - low | .063/1.6 | 00-On | 5 | Heg - 20T - OD: 3.949" - PLNI |
| N I | 158702-157 | 001-398-921K | 3rd & 4th Clutch - high | .062/1.8 | 00-On | 3 | Heg - 36T - OD: 4.71" - PLNI |
| N I | 158704-162 | 001-398-105K | Reverse | .064/1.62 | 00-On | 2 | Tan - 24T - OD: 4.965" - PLNI |
| N I | 158706-160 | 001-323-465 | Low / Reverse | .063/1.6 | 00-On | 5 | Tan - 30T - OD: 6.561" - PLNI |
| **STEEL CLUTCHES** | | | | | | | |
| N I | 158701-132 | 001-323-139E | 1st & 3rd Clutch - low | .052/1.32 | 00-On | 5 | 24T - ID: 3.186" |
| N I | 158703-200 | 001-323-944 | 3rd & 4th Clutch - high | .079/2.0 | 00-On | 5 | 24T - ID: 3.798" |
| N I | 158703-250 | NA | 3rd & 4th Clutch - high | .098/2.5 | 01-On | 3-4 | 24T - ID: 3.798" |
| N I | 158705-300 | 001-323-139 | Reverse | .118/3.0 | 00-On | 2 | 15T - ID: 4.454" |
| N I | 158707-132 | 001-323-463 | Low / Reverse | .052/1.32 | 00-On | 4 | 10T - ID: 5.467" |
| **PRESSURE PLATES** | | | | | | | |
| N I | 158760A400 | 001-323-139F | 1st & 3rd Clutch - low | .157/4.0 | 00-On | 1 | |
| N I | 158760A410 | 001-323-139P | 1st & 3rd Clutch - low | .161/4.1 | 00-On | 1 | |
| N I | 158760A420 | 001-323-139G | 1st & 3rd Clutch - low | .165/4.2 | 00-On | 1 | |
| N I | 158760A430 | 001-323-139R | 1st & 3rd Clutch - low | .169/4.3 | 00-On | 1 | |
| N I | 158760A440 | 001-323-139H | 1st & 3rd Clutch - low | .173/4.4 | 00-On | 1 | |
| N I | 158760A460 | 001-323-139J | 1st & 3rd Clutch - low | .183/4.65 | 00-On | 1 | |
| N I | 158760A470 | 001-323-139T | 1st & 3rd Clutch - low | .185/4.7 | 00-On | 1 | |
| N I | 158760A480 | 001-323-139K | 1st & 3rd Clutch - low | .189/4.8 | 00-On | 1 | |
| N I | 158760A490 | 001-323-139AA | 1st & 3rd Clutch - low | .193/4.9 | 00-On | 1 | |
| N I | 158760A500 | 001-323-139L | 1st & 3rd Clutch - low | .197/5.0 | 00-On | 1 | |
| N I | 158762A340 | 001-323-944B | 3rd & 4th Clutch - high | .133/3.4 | 00-On | 1 | |
| N I | 158762A380 | 001-323-944D | 3rd & 4th Clutch - high | .148/3.75 | 00-On | 1 | |
| N I | 158762A400 | 001-323-944E | 3rd & 4th Clutch - high | .157/4.0 | 00-On | 1 | |
| N I | 158762A420 | 001-323-944F | 3rd & 4th Clutch - high | .165/4.2 | 00-On | 1 | |
| N I | 158761A440 | 001-323-139C | Reverse | .170/4.3 | 00-On | 1 | |
| N I | 158761A460 | 001-323-139D | Reverse | .181/4.6 | 00-On | 1 | |
| N I | 158763A220 | 001-323-463A | Low / Reverse - apply | .086/2.2 | 00-On | 1 | |
| N I | 158763A240 | 001-323-463B | Low / Reverse - apply | .093/2.35 | 00-On | 1 | |
| N I | 158763A260 | 001-323-463C | Low / Reverse - apply | .102/2.6 | 00-On | 1 | |
| N I | 158763A280 | 001-323-463D | Low / Reverse - apply | .110/2.8 | 00-On | 1 | |
| N I | TBA | 001-323-297 | Low / Reverse | .170/4.3 | 00-On | 1 | |
| **BANDS** | | | | | | | |
| N I | 158950 | 001-323-461 | Brake | Tan | 00-On | 1 | |
| **FILTERS** | | | | | | | |
| N I | 158940 | 001-325-429 | Filter | | 00-On | 1 | |
| **METAL CLAD SEALS** | | | | | | | |
| N I | 068400 | 001-321-243 | Front Pump | 59mm | 00-On | 1 | |
| N I | 158425 | 001-409-399 | Axles | 62mm | 00-On | 2 | |
| N I | 075410 | 001-321-199 | Manual Lever | | 00-On | 1 | |

## NOTES

# VOLKSWAGEN

## VW JF506E, FORD 5F31J
## NISSAN RE5F01A
## 2001-On

| ILL | DESCRIPTION | YEARS | FRICTION MODULE | STEEL MODULE | OVERHAUL KIT | BANNER KIT | MASTER KIT |
|---|---|---|---|---|---|---|---|
| **KITS** | | | | | | | |
| KT | Rebuilding Kit | 01-On | 162752 | 162753 | 162800 | 162901LS | 162901 |

| ILL | ALTO NO | REF NO | DESCRIPTION | SPEC | YEAR | QTY | NOTES |
|---|---|---|---|---|---|---|---|
| **FRICTION CLUTCHES** | | | | | | | |
| N I | 162700-170 | FP01-19-580 | #1 Clutch - Direct | .068/1.73 | 01-On | 4 | Heg - 24T - OD: 4.026 - PL |
| N I | 105706-180 | FP01-19-590 | #2 Clutch - Low / Reverse Brake | .071/1.8 | 01-On | 7 | Heg - 32T - OD: 6.455" - PL |
| N I | 162704-170 | FP01-19-5J0 | #3 Clutch - Low | .068/1.73 | 01-On | 7 | Heg - 30T - OD: 5.426 - PL |
| N I | 162706-160 | FP01-19-3V0 | #4 Clutch - 2-4 Brake | .063/1.6 | 01-On | 3 | Heg - 32T - OD: 7.534 - SB |
| N I | 162708-152 | FP01-19-610 | #5 Clutch - Reverse | .060/1.52 | 01-On | 2 | Heg - 32T - OD: 6.141 - PL |
| N I | 105702B | FP01-19-620 | #6 Clutch - High | .063/1.6 | 01-On | 5 | Heg - 24T - OD: 4.416 - PL |
| **STEEL CLUTCHES** | | | | | | | |
| N I | 162701-200 | FP01-19-499 | #1 Clutch - Direct | .079/2.01 | 01-On | 4 | 24T - ID: 3.380 |
| N I | 162703-140 | FP01-19-609 | #2 Clutch - Low / Reverse Brake | .055/1.4 | 01-On | 6 | 10T - ID: 5.908 |
| N I | 162705-140 | FP01-19-561 | #3 Clutch - Low | .055/1.4 | 01-On | 6 | 32T - ID: 4.841 |
| N I | 162707-300 | FP01-19-3N4 | #4 Clutch - 2-4 Brake | .118/3.0 | 01-On | 2 | 7T - ID: 6.663 |
| N I | 162709-200 | FP01-19-571 | #5 Clutch - Reverse | .078/1.98 | 01-On | 2 | 36T - ID: 5.614 |
| N I | 162711-240 | FP01-19-6E1 | #6 Clutch - High | .095/2.4 | 01-On | 4 | 18T - ID: 3.596 |
| N I | 162711-160 | FP01-19-6E2 | #6 Clutch - High | .063/1.6 | 01-On | 1 | 18T - ID: 3.596 |
| **PRESSURE PLATES** | | | | | | | |
| N I | 162764-360 | NA | Reverse | .141/3.6 | 01-On | AR | |
| N I | 162764-380 | NA | Reverse | .150/3.8 | 01-On | AR | |
| N I | 162764-400 | A15-37-RP0-27 | Reverse | .157/4.0 | 01-On | AR | |
| N I | 162764-420 | NA | Reverse | .165/4.2 | 01-On | AR | |
| **SPRINGS - WAVE, BELLEVILLE, FINGER** | | | | | | | |
| N I | 162768X | NA | Low - wave spring | | 01-On | AR | |
| **FILTERS** | | | | | | | |
| N I | 162940 | 31728-PW001 | Filter | | 98-On | 1 | |

**NOTES**

A>

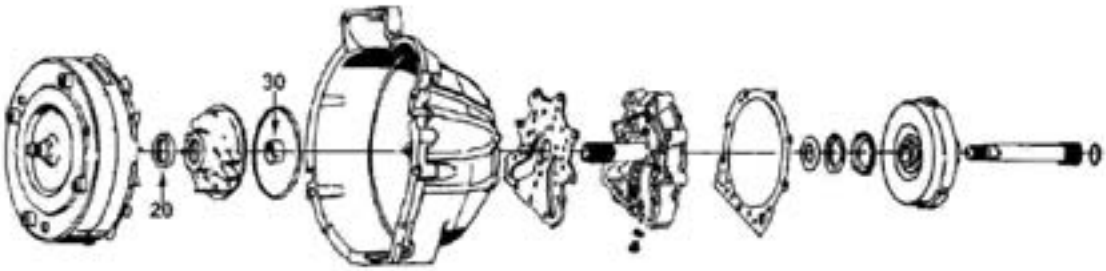


B>

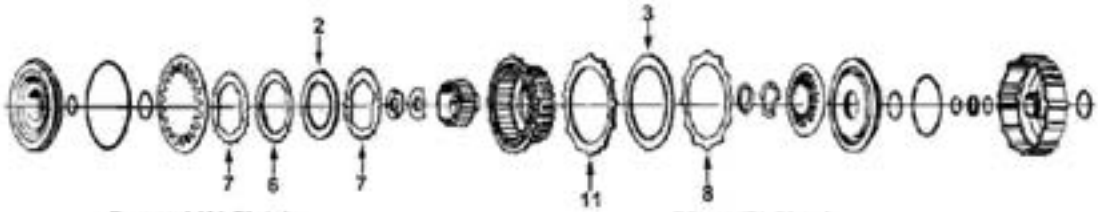


Forward (A) Clutch

Direct (B) Clutch

C>

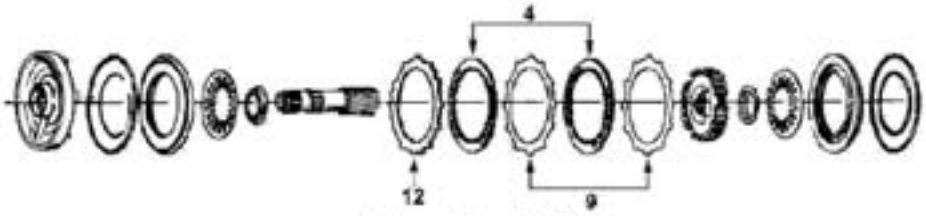


Intermediate (C) Clutch

D>

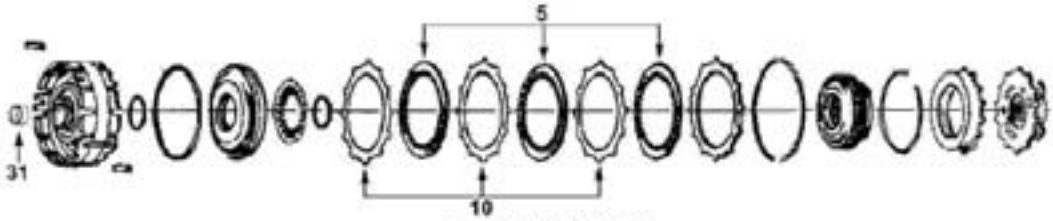


2nd Brake (D) Clutch

E>

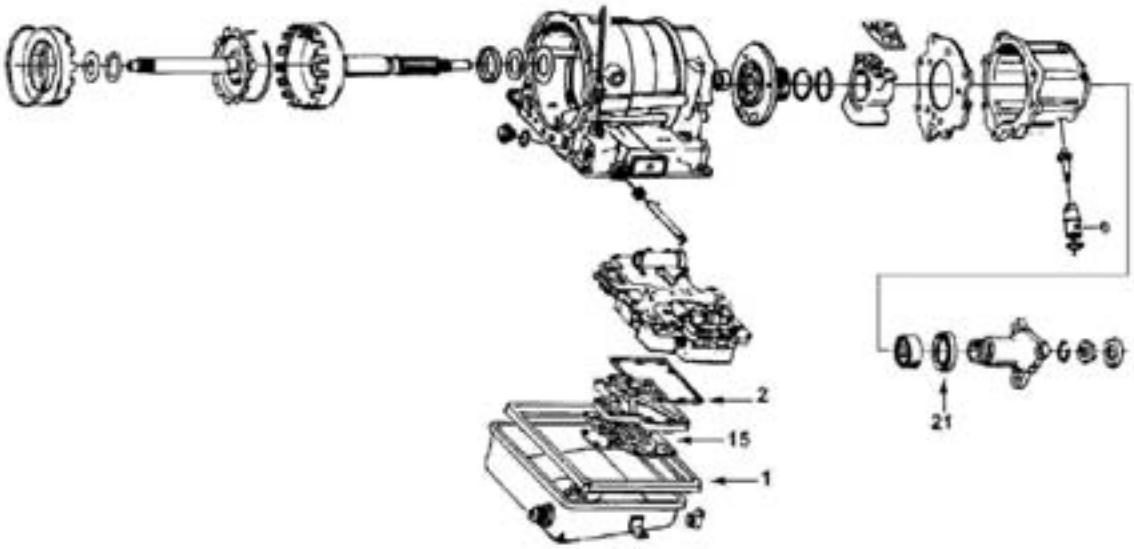

# Z F
## ZF3HP22
## RWD
## 1976-84

| ILL | DESCRIPTION | YEARS | FRICTION MODULE | STEEL MODULE | OVERHAUL KIT | BANNER KIT | MASTER KIT |
|---|---|---|---|---|---|---|---|
| **KITS** | | | | | | | |
| KT | Rebuilding Kit | 76-84 | 053752A | 053753A | 053800 | 053901LS | 053901 |

| ILL | ALTO NO | REF NO | DESCRIPTION | SPEC | YEAR | QTY | NOTES |
|---|---|---|---|---|---|---|---|
| **MISCELLANEOUS GASKETS & KIT COMPONENTS** | | | | | | | |
| 1E | 053816 | 24111-205-903 | Gasket, Oil Pan | M.Rubber | 76-84 | 1 | |
| 2E | 053004 | 24341-205-974 | Gasket, Filter | | 76-84 | 1 | |
| **FRICTION CLUTCHES** | | | | | | | |
| 2B | 053700 | 1058-270-020 | Forward (A) Clutch | .061/1.55 | 76-84 | 4-5 | Heg - 34T - OD: 3.931" - SM |
| 2B | 053700K | NA | Forward (A) Clutch - POWERPACK™ Comp. | .061/1.55 | 76-84 | AR | KEVLAR® |
| 3B | 053702 | 1043-202-041 | Direct (B) Clutch | .059/1.5 | 76-84 | 4 | Tan - 24T - OD: 5.629" - PL |
| 4C | 053702A155 | NA | Direct (B) Clutch | .061/1.55 | 76-84 | 4 | Heg - 24T - OD: 5.629" - PL |
| 4C | 053702 | 1043-202-041 | Intermediate (C) Clutch | .059/1.5 | 76-84 | 4 | Tan - 24T - OD: 5.629" - PL |
| /4C | 053702A155 | NA | Intermediate (C) Cltuch | .061/1.55 | 76-84 | 4 | Heg - 24T - OD: 5.629" - PL |
| 5D | 053704 | 1056-210-053 | Reverse (D) Clutch | .061/1.55 | 76-84 | 4-5 | Heg - 48T - OD: 5.629" - PL |
| **STEEL CLUTCHES** | | | | | | | |
| 6B | 053701 | 1043-302-046 | Forward (A) Clutch | .071/1.8 | 76-84 | 5-6 | 24T - ID: 3.000" |
| 6B | 053701-120 | 1043-302-123 | Forward (A) Clutch - selective | .047/1.5 | 76-84 | AR | 24T - ID: 3.000" |
| 6B | 053701-210 | 1043-302-127 | Forward (A) Clutch - selective | .083/2.1 | 76-84 | AR | 24T - ID: 3.000" |
| 6B | 053711 | NA | Forward (A) Clutch - POWERPACK™ Comp. | .060/1.5 | 76-84 | AR | 24T - ID: 3.000" |
| 7B | 053721 | 1043-302-001 | Forward (A) Clutch - wave | .040/1.0 | 76-84 | 2 | 24T - ID: 3.000" |
| 8B | 053703 | 0301-302-037 | Direct (B) Clutch | .071/1.8 | 76-84 | 4 | 12T - ID: 4.690" |
| 9C | 053703 | 0301-302-037 | Intermediate (C) Clutch | .071/1.8 | 76-84 | 3-4 | 12T - ID: 4.690" |
| 10D | 053703 | 0301-302-037 | Reverse (D) Clutch | .071/1.8 | 76-84 | 3-4 | 12T - ID: 4.690" |
| **SELECTIVES FOR B, C, and D clutches** | | | | | | | |
| AR | 053703-120 | 0301-317-013 | B, C, and D Clutch - selective | .047/1.2 | 76-84 | AR | 12T - ID: 4.690" |
| AR | 053703W120 | 1043-302-036 | B, C, and D Clutch - selective (wave) | .047/1.2 | 76-84 | AR | 12T - ID: 4.690" |
| AR | 053703-150 | 1043-302-020 | B, C, and D Clutch - selective | .060/1.5 | 76-84 | AR | 12T - ID: 4.690" |
| AR | 053703-210 | 1043-302-021 | B, C, and D Clutch - selective | .082/2.1 | 76-84 | AR | 12T - ID: 4.690" |
| **PRESSURE PLATES** | | | | | | | |
| 11B | 053703-400 | 24231-217-334 | B Clutch - backing | .158/4.0 | 76-84 | AR | |
| 11B | TBA | 0301-302-004 | B Clutch - backing | .178/4.5 | 76-84 | AR | |
| 12C | 053703-400 | 24231-217-334 | C Clutch - backing | .158/4.0 | 76-84 | AR | |
| 12C | TBA | 0301-302-004 | C Clutch - backing | .178/4.5 | 76-84 | AR | |
| **OEI™ Original Equipment Improvements** | | | | | | | |
| KT | 053755 | NA | POWERPACK™ - Forward (A) Clutch | | 76-84 | 1 | Increase Torque Capacity |
| **FILTERS** | | | | | | | |
| KT | FK053940 | NA | Filter Kit | | 76-84 | 1 | |
| 15E | 053940 | 24341-209-791 | Filter | | 76-84 | 1 | |
| **METAL CLAD SEALS** | | | | | | | |
| 20A | 053400 | 0750-111-254 | Front Pump | | 76-84 | 1 | |
| 21A | 053405 | 0750-111-204 | Extension Housing | | 76-84 | 1 | |
| N I | 053410 | 0750-110-062 | Manual Lever | | 76-84 | 1 | |
| **SEALING RINGS** | | | | | | | |
| KT | 053600 | G715A | Sealing Ring Kit - 3M | | 76-84 | 1 | |
| **BUSHINGS** | | | | | | | |
| 30A | 053200 | NA | Front Pump Body | | 76-84 | 1 | |
| 31D | 053205 | NA | Center Support | | 76-84 | 1 | |

**NOTES**

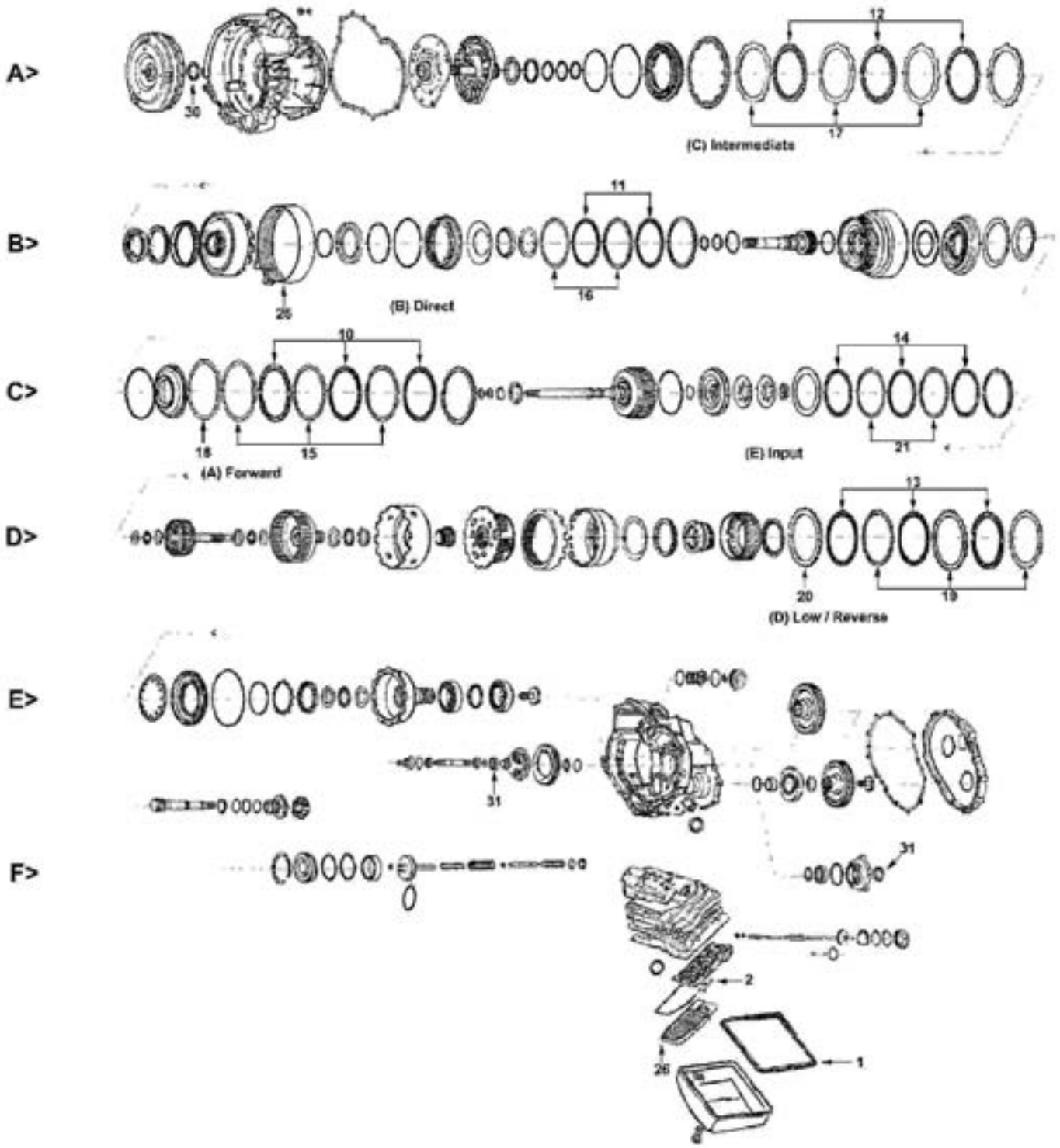
A>
12
30
17
(C) Intermediate
B>
11
26
16
(B) Direct
C>
10
14
18
15
21
(A) Forward
(E) Input
D>
13
20
19
(D) Low / Reverse
E>
31
F>
31
2
26
1

# Z F
## ZF4HP14
## FWD
## 1986-94

| ILL | DESCRIPTION | YEARS | FRICTION MODULE | STEEL MODULE | OVERHAUL KIT | BANNER KIT | MASTER KIT |
|---|---|---|---|---|---|---|---|
| **KITS** | | | | | | | |
| KT | Rebuilding Kit | 86-94 | 103752 | 103753 | 103800 | 103901LS | 103901 |
| KT | Rebuilding Kit - OE Gasket & Seal Kit | 86-94 | 103752 | 103753 | 103800-OE | 103901LS-OE | 103901-OE |

| ILL | ALTO NO | REF NO | DESCRIPTION | SPEC | YEAR | QTY | NOTES |
|---|---|---|---|---|---|---|---|
| **MISCELLANEOUS GASKETS & KIT COMPONENTS** | | | | | | | |
| 1F | 103816 | 1036-301-182 | Gasket, Oil Pan | Fiber | 86-94 | 1 | |
| 2F | 103004 | 1036-326-117 | Gasket, Filter | | 86-94 | 1 | |
| **FRICTION CLUTCHES** | | | | | | | |
| 10C | 103702-155 | 1036-202-018 | A Pack (Forward) | .061/1.55 | 86-94 | 3-5 | Heg - 30T - OD: 5.309" - SM |
| 11B | 103702-195 | 1036-202-028 | B Pack (Direct) | .077/1.95 | 86-94 | 3 | Heg - 30T - OD: 5.309" - SM |
| 12A | 103702-155 | 1036-202-018 | C Pack (Intermediate) | .061/1.55 | 86-94 | 2-3 | Heg - 30T - OD: 5.309" - SM |
| 13D | 103702-155 | 1036-217-005 | D Pack (Low/Reverse) | .061/1.55 | 86-94 | 4-5 | Heg - 30T - OD: 5.309" - SM |
| 14C | 103700 | 1036-230-034 | E Pack (Input) | .061/1.55 | 86-94 | 4-5 | Heg - 36T - OD: 3.853" - SM |
| **STEEL CLUTCHES** | | | | | | | |
| 15C | 103703 | 1036-302-015 | A Pack (Forward) | .071/1.8 | 86-94 | 3-5 | 24T - ID: 4.730" |
| 18D | 103703W100 | 1036-302-041 | A Pack (Forward) - wave | .040/1.0 | 86-94 | 1 | 24T - ID: 4.730" |
| 16B | 103703 | 1036-302-015 | B Pack (Direct) | .071/1.8 | 86-94 | 3 | 24T - ID: 4.730" |
| 17A | 103703 | 1036-302-015 | C Pack (Intermediate) | .071/1.8 | 86-94 | 1-3 | 24T - ID: 4.730" |
| 19D | 103705 | 1036-317-006 | D Pack (Low/Reverse) | .047/1.2 | 86-94 | 5 | 24T - ID: 4.730" |
| 20D | 103705W100 | 1036-302-058 | D Pack (Low/Reverse) - wave | .040/1.0 | 86-94 | AR | 24T - ID: 4.730" |
| 20D | TBA | 1036-302-059 | D Pack (Low/Reverse) - wave | .051/1.3 | 86-94 | AR | 24T - ID: 4.730" |
| 21C | 103701 | 1036-330-036 | E Pack (Input) | .071/1.8 | 86-94 | 4-5 | 30T - ID: 2.996" |
| **BANDS** | | | | | | | |
| 25B | 103950 | 0501-208-833 | Brake | Tan | 86-94 | 1 | |
| **FILTERS** | | | | | | | |
| KT | FK103940 | NA | Filter Kit | | 86-94 | 1 | |
| 26F | 103940 | 1036-226-013 | Filter | | 86-94 | 1 | |
| **METAL CLAD SEALS** | | | | | | | |
| 30A | 053400 | 0750-111-254 | Front Pump | 52mm | 86-94 | 1 | |
| 31F | 053425 | 0750-111-221 | Axle | 58mm | 86-94 | 2 | |
| N I | 053410A | 0634-300-040 | Manual Lever | 22mm | 86-94 | 1 | |
| **SEALING RINGS** | | | | | | | |
| KT | 103600 | 4HP14MPSR | Sealing Ring Kit | | 86-94 | 1 | |

**NOTES**

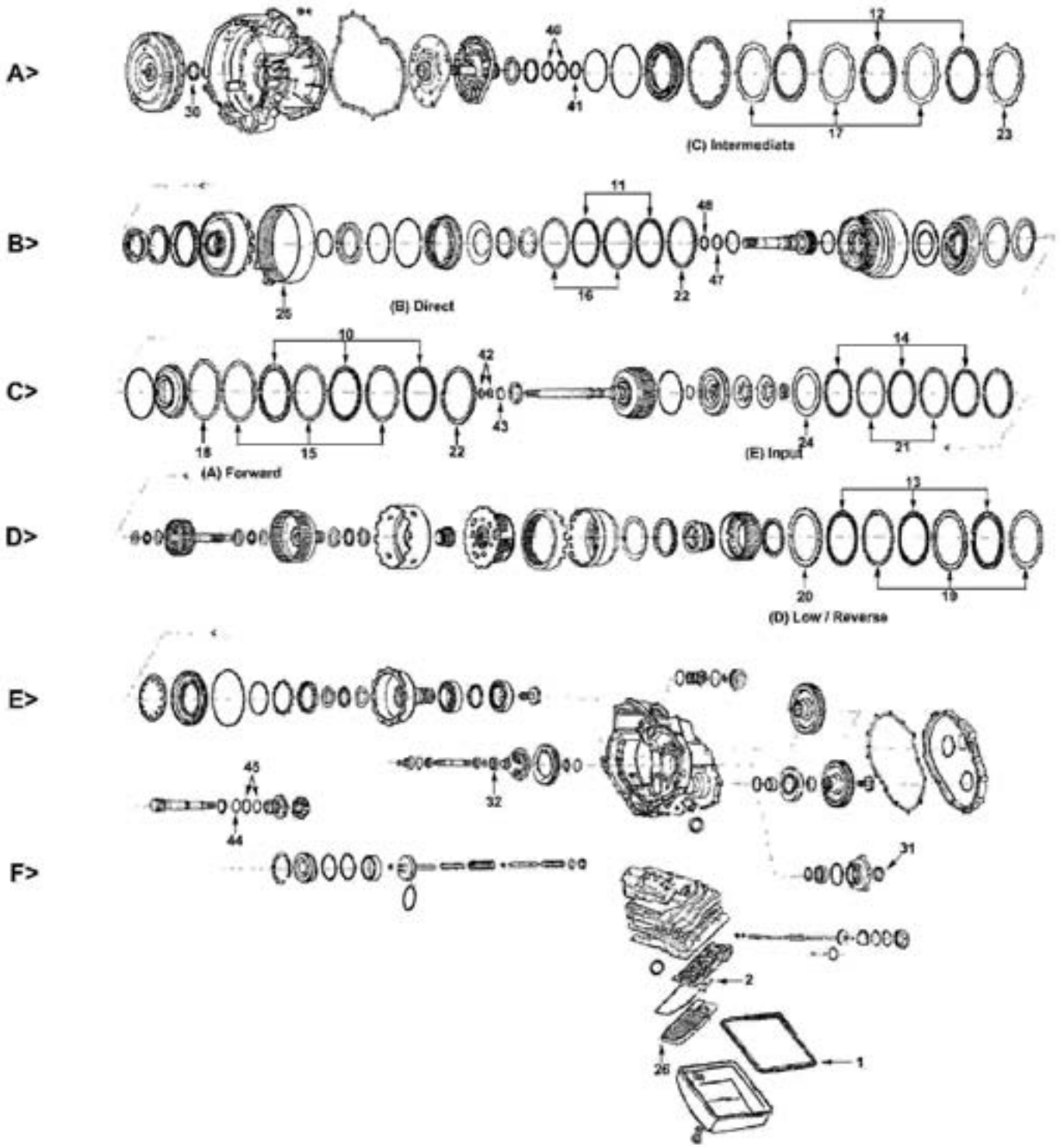
A>
B>
C>
D>
E>
F>
(C) Intermediate
(B) Direct
(A) Forward
(E) Input
(D) Low / Reverse

# Z F

## ZF4HP18Q (Transverse) 1986-98
## ZF4HP18FL, FLA, FLA (Inline) 1988-98

| ILL | DESCRIPTION | YEARS | FRICTION MODULE | STEEL MODULE | OVERHAUL KIT | BANNER KIT | MASTER KIT |
|---|---|---|---|---|---|---|---|
| **KITS** | | | | | | | |
| **ZF4HP18FL** | | | | | | | |
| KT | Rebuilding Kit - Chrysler / Dodge | 88-92 | 104752 | 104753 | 104800 | 104901LS | 104901 |
| KT | Rebuilding Kit - Chrys / Dodge OE Gsk & Seal Kit | 88-92 | 104752 | 104753 | 104800-OE | 104901LS-OE | 104901-OE |
| **ZF4HP18FLA, FLE** | | | | | | | |
| KT | Rebuilding Kit - FLE (Audi 2wd) | 90-98 | 104752B | 104753B | 104806 | 104907LS | 104907 |
| KT | Rebuilding Kit - FLA (Audi 4wd) | 90-98 | 104752B | 104753B | 104806A | 104907ALS | 104907A |
| **ZF4HP18Q** | | | | | | | |
| KT | Rebuilding Kit - Saab 9000, 9000S | 86-98 | 104752 | 104753 | 104802 | 104903LS | 104903 |
| KT | Rebuilding Kit - Saab 9000,9000S OE Gsk & Seal Kit | 86-98 | 104752 | 104753 | 104802-OE | 104903LS-OE | 104903-OE |
| KT | Rebuilding Kit - Alfa 164, Lancia, Citroen | 90-98 | 104752C | 104753 | 104802 | 104903ALS | 104903A |

| ILL | ALTO NO | REF NO | DESCRIPTION | SPEC | YEAR | QTY | NOTES |
|---|---|---|---|---|---|---|---|
| **MISCELLANEOUS GASKETS & KIT COMPONENTS** | | | | | | | |
| 1F | 104816 | 1050-301-036 | Gasket, Oil Pan | M.Rubber | 86-98 | 1 | |
| 2F | 103004 | 1036-326-117 | Gasket, Filter - 4HP18FL, 4HP18Q | | 86-98 | 1 | |
| **FRICTION CLUTCHES** | | | | | | | |
| 10C | 104702-160 | 1050-202-002 | A Pack (Forward) | .063/1.6 | 86-98 | 4-5 | Heg - 30T - OD: 5.778" - PL |
| 11B | 104702-180 | 1056-210-031 | B Pack (Direct) - Alfa Romeo | .071/1.8 | 90-98 | 3 | Heg - 30T - OD: 5.778" - PL |
| 11B | 104702-200 | 1056-272-024 | B Pack (Direct) - All others | .079/2.0 | 86-98 | 3-4 | Heg - 30T - OD: 5.778" - PL |
| 12A | 104702-180 | 1056-210-031 | C Pack (Intermediate / Overrun) - Q | .071/1.8 | 86-98 | 3 | Heg - 30T - OD: 5.778" - PL |
| 12A | 053704 | 1056-210-053 | C Pack (Intermediate / Overrun) - FLE, FLA | .063/1.6 | 90-98 | 3-4 | Heg - 48T - OD: 5.625" - PL |
| 13D | 104702-160 | 1050-217-002 | D Pack (Low/Reverse) | .063/1.6 | 86-98 | 6 | Heg - 30T - OD: 5.778" - PL |
| 14C | 104700 | 1050-230-033 | E Pack (Input) | .063/1.6 | 86-98 | 4-5 | Heg - 36T - OD: 4.250" - PL |
| **STEEL CLUTCHES** | | | | | | | |
| 15C | 104703 | 1050-302-011 | A Pack (Forward) | .071/1.8 | 86-98 | 4-5 | 24T - ID: 5.204" |
| 18C | 104703W100 | 1050-302-012 | A Pack (Forward) - wave | .040/1.0 | 86-98 | 1 | 24T - ID: 5.204" |
| 16B | 104703 | 1050-302-011 | B Pack (Direct) | .071/1.8 | 86-98 | 3 | 24T - ID: 5.204" |
| 17A | 053703 | 0302-302-037 | C Pack (Intermediate / Overrun) | .071/1.8 | 86-98 | 3-4 | 12T - ID: 4.690" |
| 19D | 104703 | 1050-302-011 | D Pack (Low/Reverse) | .071/1.8 | 86-98 | 6 | 24T - ID: 5.204" |
| 21D | 104701 | 1050-330-017 | E Pack (Input) | .071/1.8 | 86-98 | 4-5 | 30T - ID: 3.079" |
| **PRESSURE PLATES** | | | | | | | |
| 22C | TBA | 1050-302-013 | A, B, D Packs - Bottom | .177/4.5 | 86-98 | 1 | |
| 23A | 053703-300 | 1043-302-092 | C Pack - Top | .118/3.0 | 86-98 | 1 | |
| 24C | 104701-350 | 1056-330-002 | E Pack (Input) - Bottom | .138/3.5 | 86-98 | 1 | |
| **BANDS** | | | | | | | |
| 25B | 104950 | 0501-208-881 | Brake - 4HP18FL & 4HP18Q | Tan | 86-98 | 1 | without V6 engine |
| 25B | 104952 | 0501-208-747 | Brake - 4HP18Q with 3.0L V6 engine | Tan | 86-98 | 1 | |
| 25B | 104954 | 0501-210-101 | Brake - 4HP18FLA & 4HP18FLE | Tan | 86-98 | 1 | |
| **FILTERS** | | | | | | | |
| 26F | 103940 | 1036-226-013 | Filter - 4HP18FL (Chrysler) | | 88-92 | 1 | |
| 26F | 104940 | 0501-311-497 | Filter - 4HP18Q (Cannister Type) | | 86-98 | 1 | |
| 26F | 104946 | 0501-004-608 | Filter - 4HP18FLA, 4HP18FLE (internal) | | 86-98 | 1 | |
| **METAL CLAD SEALS** | | | | | | | |
| 30A | 104400 | 0734-310-316 | Front Pump | 58mm | 86-98 | 1 | |
| N I | 053410 | 0634-300-040 | Manual Lever | 22mm | 86-98 | 1 | |
| **4HP18FL - Chrysler** | | | | | | | |
| 31F | 104425 | 0750-111-195 | Axle - Left | 62mm | 88-92 | 1 | 83505053 |
| 32E | 104426 | 0750-111-126 | Axle - Right | 55mm | 88-92 | 1 | 89835053 |
| N I | 104401 | 83505052 | Pinion - Left | 62mm | 88-92 | 1 | |
| N I | 104402 | 0750-111-193 | Pinion - Right | 42mm | 88-92 | 1 | 89835052 |
| **4HP18Q** | | | | | | | |
| 31A | 104427 | 0750-111-292 | Axle, Case Side - Saab | 47mm | 86-98 | 1 | |
| 31A | 104427A | 0750-111-219 | Axle, Case Side - Fiat / Lancia / Alfa | 63mm | 90-98 | 1 | |
| 31A | 104427B | 0750-111-221 | Axle, Case Side - Citroen / Peugeot | 58mm | 90-98 | 1 | |

| ILL | ALTO NO | REF NO | DESCRIPTION | SPEC | YEAR | QTY | NOTES |
|---|---|---|---|---|---|---|---|
| **METAL CLAD SEALS** | | | | | | | ...Continued |
| **4HP18Q** | | | | | | | |
| 32A | 104428 | 0750-111-189 | Axle, Converter Side - Saab | 55mm | 86-98 | 1 | |
| 32A | 104428A | 0750-111-220 | Axle, Converter Side - Fiat / Lancia / Alfa | 50mm | 90-98 | 1 | Flanged |
| 32A | 104428B | 0750-111-190 | Axle, Converter Side - Citroen / Peugeot | 50mm | 90-98 | 1 | |
| **4HP18FLA, FLE** | | | | | | | |
| 31A | 104429 | 0750-111-262 | Axle, Left | 75mm | 90-98 | 1 | |
| 32A | 104425 | 0750-111-195 | Axle, Right | 62mm | 90-98 | 1 | |
| N I | 104426 | 0750-111-126 | Pinion - outer | 55mm | 90-98 | 1 | |
| N I | 104402 | 0750-111-193 | Pinion - inner | 42mm | 90-98 | 1 | |
| N I | 104403 | 0750-111-279 | Rear Output shaft | 70mm | 90-98 | 1 | |
| N I | 104404 | 0750-111-280 | Rear Output shaft | 68mm | 90-98 | 1 | |
| **SEALING RINGS** | | | | | | | |
| KT | 104600 | 4HP18MPSR | Sealing Ring Kit - 4HP18FL, 4HP18Q | | 86-98 | 1 | |
| KT | 104600A | 4HP18MPSRA | Sealing Ring Kit - 4HP18FLA, FLE | | 90-98 | 1 | |
| 40A | 104100 | 0750-113-015 | Front Pump Stator | 53.9 x 58. | 86-98 | 2 | |
| 41A | 103101 | 0750-113-029 | Front Pump Stator | 48.3 x 52. | 86-98 | 1 | |
| 42C | 104101 | 0501-309-030 | Input Shaft | | 86-98 | 2 | |
| 43C | 104102 | 0750-113-038 | Input Shaft | 23.8 x 26. | 86-98 | 1 | |
| 44E | 104103 | 0750-113-025 | Governor - outer | 52 x 56 | 86-98 | 1 | |
| 45E | 103102 | 0501-306-310 | Governor - inner | | 86-98 | 2 | |
| 46B | 104104 | 0750-113-013 | Turbine Shaft, outer | 28.7 x 31 | 86-98 | 1 | |
| 47B | 104105 | 0750-113-014 | Turbine Shaft, inner - 4HP18FL, 4HP18Q | 29.5 x 32 | 86-98 | 1 | |
| 47B | 104106 | 0750-113-037 | Turbine Shaft, inner - 4HP18FLA, FLE | 29.5 x 31 | 90-98 | 1 | |
| **BUSHINGS** | | | | | | | |
| KT | 104625A | NA | Bushing Kit - 4HP18Q Saab 9000 | | 86-98 | 1 | |
| N I | 104200 | NA | Front Pump Body - Chrys | 29.5 x 31 | 88-92 | 1 | |

## NOTES

# Z F
## ZF4HP20
## 1998-On

| ILL | DESCRIPTION | YEARS | FRICTION MODULE | STEEL MODULE | OVERHAUL KIT | BANNER KIT | MASTER KIT |
|---|---|---|---|---|---|---|---|
| **KITS** | | | | | | | |
| KT | Rebuilding Kit - with molded pistons | 98-On | 154752 | 154753 | 154800 | 154901LS | 154901 |
| KT | Rebuilding Kit - without molded pistons | 98-On | 154752 | 154753 | 154800X | 154901XLS | 154901X |

| ILL | ALTO NO | REF NO | DESCRIPTION | SPEC | YEAR | QTY | NOTES |
|---|---|---|---|---|---|---|---|
| **MISCELLANEOUS GASKETS & KIT COMPONENTS** | | | | | | | |
| N I | 154816 | 1019-303-008 | Gasket, Side Cover | M.Rubber | 98-On | 1 | |
| **FRICTION CLUTCHES** | | | | | | | |
| N I | 132702 | 1058-270-003 | E Clutch (Input - Top) | .062/1.6 | 98-On | 4-5 | Heg - 30T - OD: 7.025" - PL |
| N I | 132702 | 1058-270-003 | B Clutch (Input - Bottom) | .062/1.6 | 98-On | 2-3 | Heg - 30T - OD: 7.025" - PL |
| N I | 139704-155 | 1019-273-019 | D Clutch (Brake - Top) | .060/1.55 | 98-On | 4 | Heg - 40T - OD: 6.635" - PL |
| N I | 154702-220 | 1019-231-002 | C Clutch (Brake - Bottom) | .087/2.2 | 98-On | 1-2 | Heg - 24T - OD: 8.426" - PL |
| N I | 139704-155 | 1019-273-019 | F Clutch | .060/1.55 | 98-On | 3 | Heg - 40T - OD: 6.635" - PL |
| **STEEL CLUTCHES** | | | | | | | |
| N I | 132703-210 | 1019-370-049 | E Clutch (Input - Top) | .083/2.1 | 98-On | 4-5 | 30T - ID: 6.100" |
| N I | 132703-240 | 1019-370-050 | B Clutch (Input - Bottom) | .095/2.4 | 98-On | 2-3 | 30T - ID: 6.100" |
| N I | 139705-180 | 1019-273-023 | D Clutch (Brake - Top) | .071/1.8 | 98-On | 4 | 24T - ID: 5.741" |
| N I | 154703A178 | 1019-331-030 | C Clutch (Brake - Bottom) - Merc. & Fiat | .071/1.8 | 98-On | 1 | 24T - ID: 5.200" |
| N I | 154703-360 | 1019-331-037 | C Clutch (Brake - Bottom) some units | .142/3.6 | 98-On | 1 | Internal Teeth (30T) |
| N I | 154701-270 | 1019-377-028 | F Clutch | .106/2.7 | 98-On | 3 | 17T - ID: 5.745" |
| **PRESSURE PLATES** | | | | | | | |
| N I | TBA | 1058-370-049 | E Clutch (Input - Top) - Top | .154/3.9 | 98-On | AR | |
| N I | TBA | 1019-370-055 | E Clutch (Input - Top) - Top | .173/4.4 | 98-On | AR | |
| N I | TBA | 1019-370-057 | E Clutch (Input - Top) - Top | .189/4.8 | 98-On | AR | |
| N I | TBA | 1019-370-048 | B Clutch (Input - Bottom) - Top | .071/1.8 | 98-On | AR | |
| N I | 132703-210 | 1019-370-049 | B Clutch (Input - Bottom) - Top | .083/2.1 | 98-On | AR | |
| N I | TBA | 1019-370-051 | B Clutch (Input - Bottom) - Top | .106/2.7 | 98-On | AR | |
| N I | TBA | 1058-370-050 | B Clutch (Input - Bottom) - Top | .118/3.0 | 98-On | AR | |
| N I | 139705-210 | 1019-373-024 | D Clutch (Brake - Top) - Top | .083/2.1 | 98-On | AR | |
| N I | 139705-240 | 1019-373-025 | D Clutch (Brake - Top) - Top | .095/2.4 | 98-On | AR | |
| N I | 154703A300 | 1019-331-031 | C Clutch (Brake - Bottom) - Top | .118/3.0 | 98-On | 1 | |
| N I | 154701-180 | 1019-377-024 | F Clutch - Top | .071/1.8 | 98-On | AR | |
| N I | 154701-300 | 1019-377-029 | F Clutch - Top | .118/3.0 | 98-On | AR | |
| N I | 154701-330 | 1019-377-030 | F Clutch - Top | .130/3.3 | 98-On | AR | |
| N I | 154701-360 | 1019-377-031 | F Clutch - Top | .142/3.6 | 98-On | AR | |
| **FILTERS** | | | | | | | |
| N I | 154940 | 1019-222-018 | Filter - Renault, Peugeot, Citroen | | 98-On | 1 | |
| N I | 154942 | 1019-222-019 | Filter - Mercedes, Fiat | | 98-On | 1 | |
| **METAL CLAD SEALS** | | | | | | | |
| N I | 104400 | 0734-310-316 | Front Pump | 58mm | 98-On | 1 | |
| N I | 154425 | 0734-319-538 | Axle, Front - All except Mercedes | 58mm | 98-On | 1 | |
| N I | 154426 | 0734-319-556 | Axle, Front - Mercedes | 58mm | 98-On | 1 | |
| N I | 154427 | 0734-319-537 | Axle, Rear - All except Mercedes | 64mm | 98-On | 1 | |
| N I | 154428 | 0734-319-520 | Axle, Rear - Mercedes | 62mm | 98-On | 1 | |
| **MOLDED PISTONS** | | | | | | | |
| N I | 154330 | 0501-314-761 | D Clutch (Brake - Top) | | 98-On | 1 | |
| N I | 154331 | 0501-316-134 | C Clutch (Brake - Bottom) | | 98-On | 1 | |

**NOTES**

A>

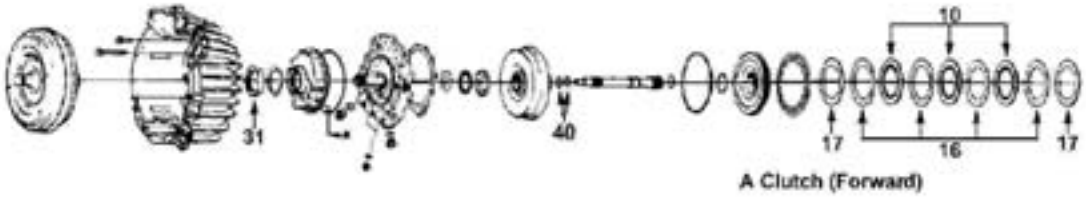


A Clutch (Forward)

B>

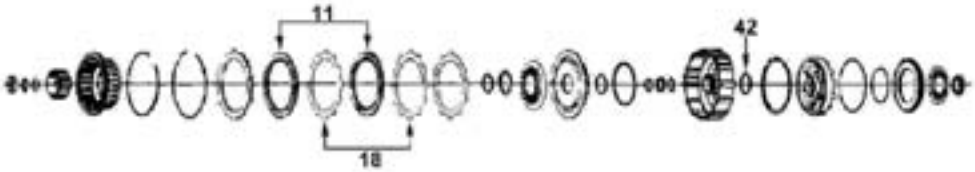


B Clutch (Direct)

C>

C Clutch (Intermediate)

C' Clutch (Intermediate)

D>

E>

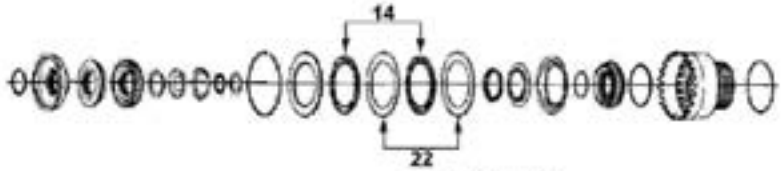


E Pack (Input)

F>

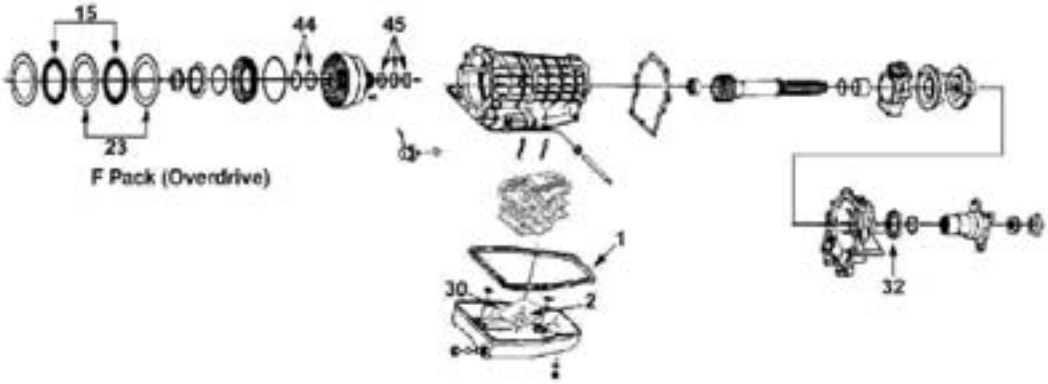


F Pack (Overdrive)

# Z F
## ZF4HP22
## ZF4HP24, ZF4HP24A
## 1983-99

| ILL | DESCRIPTION | YEARS | FRICTION MODULE | STEEL MODULE | OVERHAUL KIT | BANNER KIT | MASTER KIT |
|---|---|---|---|---|---|---|---|
| **KITS** | | | | | | | |
| KT | Rebuilding Kit - ZF4HP22 | 83-99 | 053752B | 053753B | 053802 | 053903LS | 053903 |
| KT | Rebuilding Kit - ZF4HP24 | 87-99 | 053752C | 053753C | 053802 | 053903ALS | 053903A |
| KT | Rebuilding Kit - ZF4HP24A with Transfer Case | 89-99 | 053752D | 053753D | 053804 | 053905LS | 053905 |
| KT | Rebuilding Kit - ZF4HP24A without Transfer Case | 89-99 | 053752E | 053753E | 053804 | 053905ALS | 053905A |

| ILL | ALTO NO | REF NO | DESCRIPTION | SPEC | YEAR | QTY | NOTES |
|---|---|---|---|---|---|---|---|
| **MISCELLANEOUS GASKETS & KIT COMPONENTS** | | | | | | | |
| 1F | 053816A | 0750-112-033 | Gasket, Oil Pan | M.Rubber | 83-99 | 1 | |
| 2F | TBA | 0734-313-110 | O Ring, Filter | | 83-99 | 1 | |
| N I | 053315 | 0736-101-105 | Bolt, F Clutch drum to case | M6 x 15 | 83-99 | 10 | |
| **FRICTION CLUTCHES** | | | | | | | |
| 10A | 053700 | 1043-202-183 | A Clutch - ZF4HP22 | .061/1.55 | 83-99 | 4-5 | Heg - 34T - OD: 3.931" - SM |
| 10A | 053706SM | 1043-202-189 | A Clutch - ZF4HP24 | .061/1.55 | 87-99 | 4-5 | Heg - 40T - OD: 5.042" - SM |
| 10A | 053700K | NA | A Clutch - POWERPACK™ Comp. | .061/1.55 | 83-99 | AR | ZF4HP22 - KEVLAR® |
| 11B | 053702 | 1043-202-041 | B Clutch | .059/1.5 | 83-99 | 4-5 | Tan - 24T - OD: 5.629" - PL |
| 11B | 053702A155 | NA | B Clutch | .061/1.55 | 83-99 | 4-5 | Heg - 24T - OD: 5.629" - PL |
| 12C | 053702 | 1043-202-041 | C Clutch (Center Support Front) - ZF4HP22 | .059/1.5 | 83-99 | 2 | Tan - 24T - OD: 5.629" - PL |
| 12C | 053702A155 | NA | C Clutch (Center Support Front) - ZF4HP22 | .061/1.55 | 83-99 | 2 | Heg - 24T - OD: 5.629" - PL |
| 12C | 053704 | 1043-217-009 | C Clutch (Center Support Front) - ZF4HP24 | .062/1.55 | 87-99 | 5 | Heg - 48T - OD: 5.629" - PL |
| 13C | 053704 | 1043-217-009 | D Clutch (Center Support Rear) - ZF4HP22 | .062/1.55 | 83-99 | 4-5 | Heg - 48T - OD: 5.629" - PL |
| 13C | 053714 | 1043-217-015 | D Clutch (Center Support Rear) - ZF4HP24 | .062/1.55 | 87-99 | 4-5 | Heg - 58T - OD: 5.629" - PL |
| 14E | 053706 | 1043-230-009 | E Clutch | .062/1.55 | 83-99 | 4 | Heg - 40T - OD: 5.042" - PL |
| 15F | 053706 | 1043-230-009 | F Clutch | .062/1.55 | 83-99 | 4 | Heg - 40T - OD: 5.042" - PL |
| 15F | 053706-225 | NA | F Clutch - POWERPACK™ Component | .088/2.25 | 83-99 | AR | Use only w/ 053705 Steel-Heg |
| N I | 053716 | NA | Transfer Case (AUDI) | .062/1.55 | 89-94 | 6 | Heg - 18T - OD: 4.680" - PL |
| **STEEL CLUTCHES** | | | | | | | |
| 16A | 053701 | 1043-302-046 | A Clutch - ZF4HP22 | .071/1.8 | 83-99 | 5-6 | 24T - ID: 3.000" |
| 16A | 053701-120 | 1043-302-123 | A Clutch - ZF4HP22 selective | .047/1.2 | 83-99 | AR | 24T - ID: 3.000" |
| 16A | 053711 | NA | A Clutch - ZF4HP22 POWERPACK™ Comp | .060/1.5 | 83-99 | AR | 24T - ID: 3.000" |
| 16A | 053707 | 1043-330-022 | A Clutch - ZF4HP24 | .083/2.1 | 87-99 | 4-6 | 24T - ID: 4.213" |
| 17A | 053721 | 1043-302-001 | A Clutch - ZF4HP22 wave | .040/1.0 | 83-99 | 2 | 24T - ID: 3.000" |
| 17A | 053707W140 | 1043-330-140 | A Clutch - ZF4HP24 wave | .055/1.4 | 87-99 | 2 | 24T - ID: 4.213" |
| 18B | 053703 | 0301-302-037 | B Clutch - 4HP22H (Ford, Volvo, Peugeot) | .071/1.8 | 83-99 | 3-4 | 12T - ID: 4.690" |
| 18B | 053703-210 | 1043-302-021 | B Clutch - 4HP22E,H (BMW, Rover, Jaguar) | .082/2.1 | 83-99 | 4 | 12T - ID: 4.690" |
| 18B | 053703-120 | 0301-317-013 | B Clutch - 4HP22 selective | .047/1.2 | 83-99 | AR | 12T - ID: 4.690" |
| 18B | 053703W120 | 1043-302-036 | B Clutch - 4HP22 selective wave | .047/1.2 | 83-99 | AR | 12T - ID: 4.690" |
| 18B | 053703-400 | 24231-217-334 | B Clutch - 4HP22 selective | .158/4.0 | 83-99 | AR | 12T - ID: 4.690" |
| 18B | 053703-210 | 1043-302-021 | B Clutch - 4HP24 | .082/2.1 | 87-99 | 4-5 | 12T - ID: 4.690" |
| 19C | 053703 | 0301-302-037 | C Clutch - 4HP22 | .071/1.8 | 83-99 | 2 | 12T - ID: 4.690" |
| 19C | 053703-120 | 0301-317-013 | C Clutch - 4HP22 selective | .047/1.2 | 83-99 | AR | 12T - ID: 4.690" |
| 19C | 053703W120 | 1043-302-036 | C Clutch - 4HP22 selective wave | .047/1.2 | 83-99 | AR | 12T - ID: 4.690" |
| 19C | 053703-400 | 24231-217-334 | C Clutch - 4HP22 selective | .158/4.0 | 83-99 | AR | 12T - ID: 4.690" |
| 19C | 053703-210 | 1043-302-021 | C Clutch - 4HP24 | .082/2.1 | 87-99 | 1 | 12T - ID: 4.690" |
| 19C | 053703 | 0301-302-037 | C Clutch - 4HP24 | .071/1.8 | 87-99 | 1 | 12T - ID: 4.690" |
| 20C | 053703 | 0301-302-037 | D Clutch - 4HP22 | .071/1.8 | 83-99 | 3-4 | 12T - ID: 4.690" |
| 21C | 053703-120 | 0301-317-013 | D Clutch - 4HP22 selective | .047/1.2 | 83-99 | AR | 12T - ID: 4.690" |
| 21C | 053703W120 | 1043-302-036 | D Clutch - 4HP22 selective wave | .047/1.2 | 83-99 | AR | 12T - ID: 4.690" |
| 21C | 053703-150 | 1043-302-020 | D Clutch - 4HP22 selective | .060/1.5 | 83-99 | AR | 12T - ID: 4.690" |
| 21C | 053703-400 | 24231-217-334 | D Clutch - 4HP22 selective | .158/4.0 | 83-99 | AR | 12T - ID: 4.690" |
| 20C | 053713 | 1043-317-040 | D Clutch - 4HP24 | .047/1.2 | 87-99 | 5-6 | 12T - ID: 4.810" |
| 21C | 053713-150 | 1043-317-061 | D Clutch - 4HP24 selective | .060/1.5 | 87-99 | AR | 12T - ID: 4.810" |
| 21C | 053713-180 | 1043-317-062 | D Clutch - 4HP24 selective | .071/1.8 | 87-99 | AR | 12T - ID: 4.810" |
| 21C | 053713-210 | 1043-317-063 | D Clutch - 4HP24 selective | .082/2.1 | 87-99 | AR | 12T - ID: 4.810" |
| 22E | 053705 | 1043-330-021 | E Clutch | .059/1.5 | 83-99 | 4 | 24T - ID: 4.213" |
| 23F | 053707 | 1043-330-022 | F Clutch | .082/2.1 | 83-99 | 4 | 24T - ID: 4.213" |
| N I | 053717 | NA | Transfer Case (AUDI) | .082/2.1 | 89-94 | 6 | 12T - ID: 2.444" |

| ILL | ALTO NO | REF NO | DESCRIPTION | SPEC | YEAR | QTY | NOTES |
|---|---|---|---|---|---|---|---|
| **STEEL CLUTCHES** | | | | | | | ...Continued |
| N I | 053765J | NA | Transfer Case (AUDI) - holes in teeth | .082/2.1 | 89-94 | 1 | Bottom plate |
| **OEI™ Original Equipment Improvements** | | | | | | | |
| KT | 053755 | NA | POWERPACK™ - "A" Clutch | | 83-99 | 1 | ZF4HP22 only |
| KT | 053758 | NA | DRUMSAVER™ - "E" Clutch | | 83-99 | 1 | |
| **FILTERS** | | | | | | | |
| 30F | 053942 | 1043-226-034 | Filter - without Tube | | 83-99 | 1 | |
| 30F | 053944 | 1043-226-036 | Filter - with 1" Tube | | 85-99 | 1 | |
| 30F | 053945 | 1043-226-037 | Filter - Range Rover | | 88-99 | 1 | |
| 30F | 053946 | 1043-228-041 | Filter - Porsche | | 93-99 | 1 | |
| 30F | 053947 | 1043-226-035 | Filter - Audi 4wd (Quattro) | | 93-99 | 1 | |
| **METAL CLAD SEALS** | | | | | | | |
| 31A | 053400 | 0750-111-254 | Front Pump | | 83-99 | 1 | |
| N I | 053410 | 0750-110-062 | Manual Lever | | 83-99 | 1 | |
| 32F | 053405 | 0750-111-204 | Extension Housing except Below | 58mm | 83-99 | 1 | |
| 32F | 053406 | 0501-308-540 | Extension Housing - Ford | 69mm | 84-86 | 1 | |
| 32F | 053407 | 0750-111-117 | Extension Housing - Range Rover | 61.9mm | 88-99 | 1 | |
| 32F | 053408 | 0750-111-308 | Extension Housing - Land Rover | 70mm | 88-99 | 1 | |
| **SEALING RINGS** | | | | | | | |
| KT | 053601 | G715 | Sealing Ring Kit - 11M | | 83-99 | 1 | |
| 40A | 053102 | 0750-113-019 | Input Shaft | 25mm | 83-99 | 2 | |
| 41D | 053103 | 0750-113-021 | Sun Gear | 35mm | 83-99 | 2 | |
| 42B | 053104 | 0750-113-003 | Direct Drum | 43mm | 83-99 | 1 | |
| 43D | 053105 | 0750-513-272 | Rear Planet | | 83-99 | 1 | |
| 44F | 053106 | 0750-113-026 | E Clutch drum to F Clutch drum | 52mm | 83-99 | 2 | |
| 45F | 053051 | 0501-306-311 | Governor (F Drum) | Viton® | 83-99 | 1-3 | |
| 45F | 053101A | 0750-113-005 | Governor (F Drum) | Metal | 83-99 | 1-3 | |

## NOTES

# Z F
## ZF5HP18
## A5S 360
## 1991-On

| ILL | DESCRIPTION | YEARS | FRICTION MODULE | STEEL MODULE | OVERHAUL KIT | BANNER KIT | MASTER KIT |
|---|---|---|---|---|---|---|---|
| **KITS** | | | | | | | |
| KT | Rebuilding Kit - with Molded Pistons | 91-On | 104752A | 104753A | 104804 | 104905LS | 104905 |
| KT | Rebuilding Kit - without Molded Pistons | 91-On | 104752A | 104753A | 104804A | 104905XLS | 104905X |

| ILL | ALTO NO | REF NO | DESCRIPTION | SPEC | YEAR | QTY | NOTES |
|---|---|---|---|---|---|---|---|
| **MISCELLANEOUS GASKETS & KIT COMPONENTS** | | | | | | | |
| N I | 104818 | 1056-301-010 | Gasket, Oil Pan | M.Rubber | 91-On | 1 | |
| **FRICTION CLUTCHES** | | | | | | | |
| N I | 104702-160 | 1050-202-002 | A Clutch (Forward) | .063/1.6 | 91-On | 4-5 | Heg - 30T - OD: 5.778" - PL |
| N I | 104702-200 | 1056-272-024 | B Clutch (Direct) | .079/2.0 | 91-On | 2-3 | Heg - 30T - OD: 5.778" - PL |
| N I | 053704 | 1056-210-053 | C Clutch (Intermediate / Overrun) | .063/1.6 | 91-On | 3-4 | Heg - 48T - OD: 5.625" - PL |
| N I | 104702-160 | 1050-217-002 | D Clutch (Front) | .063/1.6 | 91-On | 4-6 | Heg - 30T - OD: 5.778" - PL |
| N I | 103702-155 | 1056-277-036 | D Clutch (Rear) | .061/1.55 | 91-On | 3-4 | Heg - 30T - OD: 5.778" - PL |
| N I | 104700 | 1050-230-033 | E Clutch (Input) | .063/1.6 | 91-On | 4-5 | Heg - 36T - OD: 4.250" - PL |
| N I | 103702-155 | 1056-277-036 | F Clutch (5th) | .061/1.55 | 91-On | 4-5 | Heg - 30T - OD: 5.778" - PL |
| **STEEL CLUTCHES** | | | | | | | |
| N I | 104703 | 1050-302-011 | A Clutch (Forward) | .071/1.8 | 91-On | 4-5 | 24T - ID: 5.204" |
| N I | 104703W100 | 1056-370-009 | A Clutch (Forward) - wave | .040/1.0 | 91-On | 1 | 24T - ID: 5.204" |
| N I | 104703 | 1050-302-011 | B Clutch (Direct) | .071/1.8 | 91-On | 2-3 | 24T - ID: 5.204" |
| N I | 053703-210 | 1043-302-021 | C Clutch (Intermediate / Overrun) | .082/2.1 | 91-On | 2-4 | 12T - ID: 4.690" |
| N I | 053703-300 | 1043-202-092 | C Clutch (Intermediate / Overrun) | .118/3.0 | 91-On | 1 | 12T - ID: 4.690" |
| N I | 053703W120 | 1043-302-036 | C Clutch (Intermediate / Overrun) - wave | .047/1.2 | 91-On | 1 | 12T - ID: 4.690" |
| N I | 104703 | 1050-302-011 | D Clutch (Front) | .071/1.8 | 91-On | 5-6 | 24T - ID: 5.204" |
| N I | 103703 | 1056-277-036 | D Clutch (Rear) | .071/1.8 | 91-On | 3-4 | 24T - ID: 4.730" |
| N I | 104701 | 1050-330-017 | E Clutch (Input) | .071/1.8 | 91-On | 4-5 | 30T - ID: 3.079" |
| N I | 103703-300 | 1056-377-045 | F Clutch (5th) | .118/3.0 | 91-On | 5-6 | 24T - ID: 4.730" |
| **PRESSURE PLATES** | | | | | | | |
| N I | TBA | 1050-302-013 | A Clutch - Top | .178/4.5 | 91-On | 1 | |
| N I | TBA | 1050-302-013 | B Clutch - Top | .178/4.5 | 91-On | 1 | |
| N I | TBA | 0301-302-004 | C Clutch - Top | .178/4.5 | 91-On | 1 | |
| N I | TBA | 1050-302-013 | D Clutch (Front) - Top | .178/4.5 | 91-On | 1 | |
| N I | TBA | 1056-377-046 | D Clutch (Rear) - Top | | 91-On | 1 | |
| N I | 104701-350 | 1056-330-002 | E Clutch - Top | .138/3.5 | 91-On | 1 | |
| **BANDS** | | | | | | | |
| N I | 104951 | 0501-208-847 | Brake | Tan | 91-On | 1 | |
| **FILTERS** | | | | | | | |
| N I | 104944 | 0501-005-185 | Filter | | 91-On | 1 | |
| **METAL CLAD SEALS** | | | | | | | |
| N I | 053400 | 0750-111-254 | Front Pump | | 91-On | 1 | |
| N I | 104405 | 0750-111-253 | Extension Housing | | 91-On | 1 | |
| N I | 053410 | 0634-300-040 | Manual Lever | 22mm | 91-On | 1 | |
| **SEALING RINGS** | | | | | | | |
| KT | 104601 | 5HP18MPSR | Sealing Ring Kit | | 91-On | 1 | |

**NOTES**

# Z F

## ZF5HP19 (BMW) 1997-On
## ZF5HP19FL, FLA (AUDI 01V) 1995-On
## ZF5HP19HL (Porsche) 1998-On

| ILL | DESCRIPTION | YEARS | FRICTION MODULE | STEEL MODULE | OVERHAUL KIT | BANNER KIT | MASTER KIT |
|---|---|---|---|---|---|---|---|
| **KITS** | | | | | | | |
| KT | Rebuilding Kit-Front Wheel Drive 5HP19FL | 95-On | 139752 | 139753 | 139800 | 139901ALS | 139901A |
| KT | Rebuilding Kit-Rear Wheel Drive (2WD) 5HP19 | 95-On | 139752 | 139753A | 139800 | 139901ALS | 139901B |
| KT | Rebuilding Kit-All Wheel Drive (4WD) 5HP19FLA | 95-On | 139752A | 139753B | 139800 | 139901CLS | 139901C |
| KT | Overhaul Kit - without Molded Pistons | 95-On | | | 139800X | | |

| ILL | ALTO NO | REF NO | DESCRIPTION | SPEC | YEAR | QTY | NOTES |
|---|---|---|---|---|---|---|---|
| **MISCELLANEOUS GASKETS & KIT COMPONENTS** | | | | | | | |
| N I | 139816 | 1056-303-031 | Gasket, Oil Pan | | 95-On | 1 | |
| **FRICTION CLUTCHES** | | | | | | | |
| N I | 104702-160 | 1050-217-002 | A Clutch | .063/1.6 | 95-On | 4-5 | Heg - 30T - OD: 5.778" - PL |
| N I | 139702-200 | 1060-272-003 | B Clutch | .079/2.0 | 95-On | 2 | Tan - 30T - OD: 6.097" - PL |
| N I | 139704-155 | 1019-273-019 | C Clutch | .061/1.55 | 95-On | 4-5 | Heg - 40T - OD: 6.635" - PL |
| N I | 104702-160 | 1050-217-002 | D Clutch (Center Support - Front) | .063/1.6 | 95-On | 5-6 | Heg - 30T - OD: 5.778" - PL |
| N I | 103702-155 | 1056-277-036 | G Clutch (Center Support - Rear) | .061/1.55 | 95-On | 3-5 | Heg - 30T - OD: 5.778" - PL |
| N I | 104700 | 1050-230-033 | E Clutch | .063/1.6 | 95-On | 4-5 | Heg - 36T - OD: 4.250" - PL |
| N I | 103702-155 | 1056-277-036 | F Clutch | .061/1.55 | 95-On | 4-5 | Heg - 30T - OD: 5.778" - PL |
| **STEEL CLUTCHES** | | | | | | | |
| N I | 104703 | 1050-302-011 | A Clutch (thin) | .071/1.8 | 95-On | 4-5 | 24T - ID: 5.204" |
| N I | 104703W100 | 1056-370-009 | A Clutch - wave | .040/1.0 | 95-On | 1 | 24T - ID: 5.204" |
| N I | 139703-180 | 1060-372-002 | B Clutch (thick) | .071/1.8 | 95-On | 2 | 24T - ID: 5.204" |
| N I | 139705-180 | 1019-373-023 | C Clutch | .071/1.8 | 95-On | 4-5 | 24T - ID: 5.740" |
| N I | 139705-210 | NA | C Clutch - selective | .082/2.1 | 95-On | AR | 24T - ID: 5.740" |
| N I | 139705-240 | NA | C Clutch - selective | .094/2.4 | 95-On | AR | 24T - ID: 5.740" |
| N I | 139705-300 | NA | C Clutch - selective | .118/3.0 | 95-On | AR | 24T - ID: 5.740" |
| **PRESSURE PLATES** | | | | | | | |
| N I | 139705-330 | NA | C Clutch - Top | .130/3.3 | 95-On | AR | |
| **STEEL CLUTCHES** | | | | | | | |
| N I | 104703 | 1050-302-011 | D Clutch (Center Support - Front) | .071/1.8 | 95-On | 5-6 | 24T - ID: 5.204" |
| N I | 103703 | 1056-277-036 | G Clutch (Center Support - Rear) | .071/1.8 | 95-On | 3-4 | 24T - ID: 4.730" |
| N I | 104701 | 1050-330-017 | E Clutch | .071/1.8 | 95-On | 4-5 | 30T - ID: 3.079" |
| N I | 103703-300 | 1056-377-045 | F Clutch (5th) | .118/3.0 | 95-On | 5-6 | 24T - ID: 4.730" |
| **PRESSURE PLATES** | | | | | | | |
| N I | TBA | 1050-302-013 | A Clutch - Top | .178/4.5 | 95-On | 1 | |
| N I | TBA | 1060-372-003 | B Clutch - Top | | 95-On | 1 | |
| N I | 139705-390 | 1019-373-029 | C Clutch - Top | .153/3.9 | 95-On | AR | |
| N I | TBA | 1050-302-013 | D Clutch (Center Support - Front) - Top | .178/4.5 | 95-On | 1 | |
| N I | TBA | 1056-377-046 | G Clutch (Center Support - Rear) - Top | | 95-On | 1 | |
| N I | TBA | 1056-371-043 | E Clutch - Top | | 95-On | 1 | |
| **FILTERS** | | | | | | | |
| N I | 139940 | 0501-210-781 | Filter - ZF5HP19HL (Porsche) | | 98-On | 1 | |
| N I | 139942 | 0501-209-251 | Filter - ZF5HP19FL, FLA | | 95-On | 1 | |
| **METAL CLAD SEALS** | | | | | | | |
| N I | 139400 | 0734-310-316 | Front Pump | 58mm | 95-On | 1 | |
| N I | 139410 | 0734-319-524 | Manual Lever | | 95-On | 1 | |
| N I | TBA | 0734-319-419 | Left Axle - ZF5HP19FL, FLA | 80mm | 95-On | 1 | |
| N I | TBA | 0750-111-369 | Left Axle - ZF5HP19HL | 55mm | 98-On | 1 | |
| N I | TBA | 0734-310-342 | Right Axle - ZF5HP19FL, FLA | 90mm | 95-On | 1 | |
| N I | TBA | 0734-319-419 | Right Axle - ZF5HP19HL | 80mm | 98-On | 1 | |
| **SEALING RINGS** | | | | | | | |
| N I | 139600 | NA | Sealing Ring Kit | | 95-On | 1 | |

**NOTES**

# Z F

## ZF5HP24 (BMW / JAGUAR) 1995-On
## ZF5HP24A (AUDI V8 - O1L) 1997-On

| ILL | DESCRIPTION | YEARS | FRICTION MODULE | STEEL MODULE | OVERHAUL KIT | BANNER KIT | MASTER KIT |
|---|---|---|---|---|---|---|---|
| **KITS** | | | | | | | |
| KT | Rebuilding Kit - with Molded Pistons | 95-On | 132752 | 132753 | 132800 | 132901LS | 132901 |
| KT | Rebuilding Kit - without Molded Pistons | 95-On | 132752 | 132753 | 132800X | TBA | TBA |

| ILL | ALTO NO | REF NO | DESCRIPTION | SPEC | YEAR | QTY | NOTES |
|---|---|---|---|---|---|---|---|
| **MISCELLANEOUS GASKETS & KIT COMPONENTS** | | | | | | | |
| N I | 132816 | 0501-314-899 | Gasket, Oil Pan - BMW/Jaguar | | 95-On | 1 | 24111-142-676 |
| N I | 132818 | 1058-303-015 | Gasket, Oil Pan - Audi | | 97-On | 1 | |
| N I | 053315 | 0736-101-105 | Bolt, Front Pump Stator to Body | | 95-On | 5 | |
| **FRICTION CLUTCHES** | | | | | | | |
| N I | 053706 | 1058-270-020 | A Clutch | .061/1.55 | 95-On | 6 | Heg - 40T - OD: 5.042" - PL |
| N I | 132702 | 1058-270-029 | B Clutch | .061/1.55 | 95-On | 6 | Heg - 30T - OD: 7.025" - PL |
| N I | 053706 | 1058-270-020 | C Clutch | .061/1.55 | 95-On | 4 | Heg - 40T - OD: 5.042" - PL |
| N I | 132702 | 1058-270-029 | D Clutch | .061/1.55 | 95-On | 6 | Heg - 30T - OD: 7.025" - PL |
| N I | 132702 | 1058-270-029 | E Clutch | .061/1.55 | 95-On | 5 | Heg - 30T - OD: 7.025" - PL |
| N I | 113700A | 1055-270-072 | F Clutch | .061/1.55 | 95-On | 6 | Heg - 30T - OD: 5.627" - SB |
| **STEEL CLUTCHES** | | | | | | | |
| N I | 132701 | 1058-370-066 | A Clutch | .082/2.1 | 95-On | 6 | 24T - ID: 4.212" |
| N I | 132703 | 1058-370-073 | B Clutch | .118/3.0 | 95-On | 6 | 30T - ID: 6.100" |
| N I | 132701 | 1058-370-066 | C Clutch | .082/2.1 | 95-On | 4 | 24T - ID: 4.212" |
| N I | 132703 | 1058-370-073 | D Clutch | .118/3.0 | 95-On | 4 | 30T - ID: 6.100" |
| N I | 132703 | 1058-370-073 | E Clutch | .118/3.0 | 95-On | 5 | 30T - ID: 6.100" |
| N I | 132703-210 | 1058-370-070 | B, D, E Clutch - selective | .082/2.1 | 95-On | AR | 30T - ID: 6.100" |
| N I | 132703-240 | 1058-370-071 | B, D, E Clutch - selective | .094/2.4 | 95-On | AR | 30T - ID: 6.100" |
| N I | 113701-180 | 1055-374-030 | F Clutch | .071/1.8 | 95-On | 6 | 24T - ID: 4.685" |
| **PRESSURE PLATES** | | | | | | | |
| N I | TBA | 1058-370-057 | A Clutch - Top | | 95-On | 1 | |
| N I | TBA | 1058-370-076 | B Clutch - Top | .154/3.9 | 95-On | 1 | |
| N I | TBA | 1058-370-067 | C Clutch - Top | | 95-On | 1 | |
| N I | TBA | 1058-370-076 | D Clutch - Top | .154/3.9 | 95-On | 1 | |
| N I | TBA | 1058-370-076 | E Clutch - Top | .154/3.9 | 95-On | 1 | |
| N I | TBA | 1055-376-054 | F Clutch - Top | | 95-On | 1 | |
| **FILTERS** | | | | | | | |
| N I | 132940 | 0501-004-925 | Filter - BMW/Jaguar | | 95-On | 1 | 24341-422-673 |
| N I | 132940A | 0501-005-998 | Filter - Mercedes | | 97-On | 1 | |
| **METAL CLAD SEALS** | | | | | | | |
| N I | 053400 | 0750-111-254 | Front Pump | | 95-On | 1 | |
| N I | 053410 | 0750-110-062 | Manual Lever | 18mm | 95-On | 1 | |
| N I | 113405 | 0750-111-243 | Extension Housing | 73mm | 95-On | 1 | 24131-422-667 |
| N I | 132425 | 0734-319-419 | Left Axle - Audi | 80mm | 97-On | 1 | |
| N I | 132426 | 0734-310-342 | Right Axle - Audi | 90mm | 97-On | 1 | |
| N I | 132427 | 0734-319-509 | Rear Axle output | 52mm | 97-On | 1 | |
| N I | 132401 | 0734-319-547 | Transfer Case | 67mm | 97-On | 1 | |
| **SEALING RINGS** | | | | | | | |
| KT | 132600 | NA | Sealing Ring Kit | | 95-On | 1 | |
| **MOLDED PISTONS** | | | | | | | |
| N I | 132330 | 0501-208-317 | F Clutch Drum | | 95-On | 1 | |

**NOTES**

# Z F
## ZF5HP30
## A5S 560
## 1993-On

| ILL | DESCRIPTION | YEARS | FRICTION MODULE | STEEL MODULE | OVERHAUL KIT | BANNER KIT | MASTER KIT |
|---|---|---|---|---|---|---|---|
| **KITS** | | | | | | | |
| KT | Rebuilding Kit - with molded Pistons | 93-On | 113752 | 113753 | 113800 | 113901LS | 113901 |
| KT | Rebuilding Kit - without molded Pistons | 93-On | 113752 | 113753 | 113800A | 113901BLS | 113901B |

| ILL | ALTO NO | REF NO | DESCRIPTION | SPEC | YEAR | QTY | NOTES |
|---|---|---|---|---|---|---|---|
| **MISCELLANEOUS GASKETS & KIT COMPONENTS** | | | | | | | |
| N I | 113816 | 0750-112-155 | Gasket, Oil Pan | M.Rubber | 93-On | 1 | |
| N I | 053315 | 0736-401-054 | Bolt, F Clutch drum to case | M8 x 15 | 93-On | 12 | |
| **FRICTION CLUTCHES** | | | | | | | |
| N I | 113700 | 1055-270-030 | A Clutch (Forward) | .062/1.6 | 93-On | 5 | Heg - 30T - OD: 5.627" - PL |
| N I | 113702 | 1055-271-025 | B Clutch (Direct) | .062/1.6 | 93-On | 5-6 | Heg - 30T - OD: 8.007" - PL |
| N I | 113702 | 1055-271-025 | C Clutch (Intermediate) | .062/1.6 | 93-On | 3 | Heg - 30T - OD: 8.007" - PL |
| N I | 113702 | 1055-271-025 | D Clutch (Center Support Front) | .062/1.6 | 93-On | 5 | Heg - 30T - OD: 8.007" - PL |
| N I | 113700 | 1055-270-030 | E Clutch (Center Support Rear) | .062/1.6 | 93-On | 5-6 | Heg - 30T - OD: 5.627" - PL |
| N I | 113700 | 1055-270-030 | F Clutch (Overdrive) | .062/1.6 | 93-On | 6 | Heg - 30T - OD: 5.627" - PL |
| N I | 113714 | NA | Torque Converter | .118/3.0 | 93-On | AR | Red - 24T - OD: 9.354" |
| **STEEL CLUTCHES** | | | | | | | |
| N I | 113701-300 | 1055-370-089 | A Clutch (Forward) | .118/3.0 | 93-On | 5 | 24T - ID: 4.690" |
| N I | 113701W080 | 1055-376-052 | A Clutch (Forward) - wave | .032/.8 | 93-On | 1 | |
| N I | 113703 | 1055-371-003 | B Clutch (Direct) | .118/3.0 | 93-On | 6-7 | 32T - ID: 7.170" |
| N I | 113703 | 1055-371-003 | C Clutch (Intermediate) | .118/3.0 | 93-On | 3 | 32T - ID: 7.170" |
| N I | 113703 | 1055-371-003 | D Clutch (Center Support Front) | .118/3.0 | 93-On | 5-6 | 32T - ID: 7.170" |
| N I | 113701-180 | 1055-374-024 | E Clutch (Center Support Rear) | .071/1.8 | 93-On | 5 | 24T - ID: 4.690" |
| N I | 113701W080 | 1055-376-052 | E Clutch (Center Support Rear) - wave | .032/.8 | 93-On | 1 | |
| N I | 113701-180 | 1055-374-024 | F Clutch (Overdrive) | .071/1.8 | 93-On | 6 | 24T - ID: 4.690" |
| N I | 113701W080 | 1055-376-052 | F Clutch (Overdrive) - wave | .032/.8 | 93-On | 1 | |
| **PRESSURE PLATES** | | | | | | | |
| N I | TBA | 1055-370-090 | A Clutch - Top | | 93-On | 1 | |
| N I | TBA | 1055-370-047 | C Clutch - Top | | 93-On | 1 | |
| N I | 113701-300 | 1055-370-089 | E Clutch (Center Support Rear) | .118/3.0 | 93-On | 1 | |
| N I | TBA | 1055-376-052 | F Clutch - Top | | 93-On | 1 | |
| **FILTERS** | | | | | | | |
| N I | 113940 | 0501-005-184 | Filter | | 93-On | 1 | 24341-422-229 |
| **METAL CLAD SEALS** | | | | | | | |
| N I | 053400 | 0750-111-254 | Front Pump | 58mm | 93-On | 1 | 24311-422-671 |
| N I | 113405 | 0750-111-243 | Extension Housing | 73mm | 93-On | 1 | 24311-422-667 |
| N I | 053410 | 0750-110-062 | Manual Lever | 18mm | 93-On | 1 | 24521-207-430 |
| **SEALING RINGS** | | | | | | | |
| KT | 113600 | NA | Sealing Ring Kit | | 93-On | 1 | |
| **MOLDED PISTONS** | | | | | | | |
| N I | 113330 | 0750-132-086 | E Clutch (Center Support Rear) | | 93-On | 1 | |
| N I | 113331 | 0750-132-072 | F Clutch (Overdrive) | | 93-On | 1 | |

**NOTES**

# Z F
## ECOMAT 4HP500, 5HP500
## 4HP590. 5HP590
## 4HP600, 5HP600, 6HP600

| ILL | DESCRIPTION | YEARS | FRICTION MODULE | STEEL MODULE | OVERHAUL KIT | BANNER KIT | MASTER KIT |
|---|---|---|---|---|---|---|---|
| **KITS** | | | | | | | |
| KT | Rebuilding Kit | 90-On | 121752 | 121753 | 121800 | 121901LS | 121901 |
| | Also available: Torque Converter Kit, Cover Plate Kit & Sealing Ring Kit - Inquire for Details | | | | Main Body Kit | | |
| KT | Rebuilding Kit - 6HP600 only | 90-On | 121752A | 121753A | TBA | TBA | TBA |

| ILL | ALTO NO | REF NO | DESCRIPTION | SPEC | YEAR | QTY | NOTES |
|---|---|---|---|---|---|---|---|
| **MISCELLANEOUS GASKETS & KIT COMPONENTS** | | | | | | | |
| N I | 121816 | 4139-301-579 | Gasket, Oil Pan | Fiber | 90-On | 1 | |
| **FRICTION CLUTCHES** | | | | | | | |
| N I | 121700 | 4139-270-025 | A Clutch - external Teeth | .118/3.0 | 90-On | 6-8 | Heg - 10T - ID: 4.967 - PLNI |
| N I | 121702 | 4139-233-177 | B Clutch (Except 6HP600) | .115/2.9 | 90-On | 4-5 | Heg - 42T - OD: 10.100 - PLNI |
| N I | 121702-315 | NA | B Clutch (6HP600) | .124/3.15 | 90-On | 4-5 | Heg - 42T - OD: 10.100 - PLNI |
| N I | 121702 | 4139-233-177 | C Clutch (Except 6HP600) | .115/2.9 | 90-On | 4 | Heg - 42T - OD: 10.100 - PLNI |
| N I | 121702-315 | NA | C Clutch (6HP600) | .124/3.15 | 90-On | 4 | Heg - 42T - OD: 10.100 - PLNI |
| N I | 121704 | 4139-233-178 | D Clutch | .118/3.0 | 90-On | 3-4 | Heg - 46T - OD: 10.932 - PLNI |
| N I | 121704 | 4139-233-178 | E Clutch | .118/3.0 | 90-On | 6-7 | Heg - 46T - OD: 10.932 - PLNI |
| N I | 121704 | 4139-233-178 | F Clutch | .118/3.0 | 90-On | 6-8 | Heg - 46T - OD: 10.932 - PLNI |
| N I | 121708-300 | NA | G Clutch (6HP600) | .118/3.0 | 90-On | 9 | Heg - 48T - OD: 10.93 - PL |
| N I | 121706 | 4166-238-037 | Torque Converter (Except 6HP600) | .118/3.0 | 90-On | 2 | Heg - 18T - OD: 12.930 - PL |
| N I | 121706A320 | NA | Torque Converter (6HP600) | .124/3.15 | 90-On | 2 | Heg - 36T - OD: 15.398 - PL |
| **STEEL CLUTCHES** | | | | | | | |
| N I | 121701 | 4139-333-036 | A Clutch - internal Teeth | .079/2.0 | 90-On | 6-8 | 32T - OD: 6.417 |
| N I | 121701-250 | 4139-333-765 | A Clutch - internal Teeth (selective) | .098/2.5 | 90-On | AR | 32T - ID: 6.417 |
| N I | 121703 | 4139-333-172 | B Clutch | .079/2.0 | 90-On | 4 | 34T - ID: 8.708 |
| N I | 121703-250 | 4139-333-759 | B Clutch - selective | .098/2.5 | 90-On | AR | 34T - ID: 8.708 |
| N I | 121703 | 4139-333-172 | C Clutch | .079/2.0 | 90-On | 3 | 34T - ID: 8.708 |
| N I | 121703-250 | 4139-333-759 | C Clutch - selective | .098/2.5 | 90-On | AR | 34T - ID: 8.708 |
| N I | 121705 | 4139-333-015 | D Clutch | .079/2.0 | 90-On | 4 | 24T - ID: 9.304 |
| N I | 121705-250 | 4139-333-745 | D Clutch - selective | .098/2.5 | 90-On | AR | 24T - ID: 9.304 |
| N I | 121705-300 | 4139-333-263 | D Clutch - selective | .118/3.0 | 90-On | AR | 24T - ID: 9.304 |
| N I | 121705 | 4139-333-015 | E Clutch | .079/2.0 | 90-On | 6 | 24T - ID: 9.304 |
| N I | 121705-250 | 4139-333-745 | E Clutch - selective | .098/2.5 | 90-On | AR | 24T - ID: 9.304 |
| N I | TBA | 4139-333-766 | E Clutch - selective | .118/3.0 | 90-On | AR | 24T - ID: 9.304 |
| N I | 121705 | 4139-333-015 | F Clutch | .079/2.0 | 90-On | 4 | 24T - ID: 9.304 |
| N I | 121705-250 | 4139-333-745 | F Clutch - selective | .098/2.5 | 90-On | AR | 24T - ID: 9.304 |
| N I | TBA | S | F Clutch - selective | .118/3.0 | 90-On | AR | 24T - ID: 9.304 |
| N I | 121709-200 | NA | G Clutch (6HP600) | .079/2.0 | 90-On | 9 | 24T - ID: 9.767 |
| N I | 121709-250 | NA | G Clutch - selective (6HP600) | .098/2.5 | 90-On | AR | 24T - ID: 9.767 |
| N I | 121707 | 4139-334-004 | Torque Converter (Except 6HP600) | .079/2.0 | 90-On | AR | 12T - ID: 11.887 |
| N I | 121707-300 | NA | Torque Converter (Except 6HP600) | .118/3.0 | 90-On | AR | 12T - ID: 11.887 |
| N I | 121707-350 | 4139-334-006 | Torque Converter (Except 6HP600) | .138/3.5 | 90-On | AR | 12T - ID: 11.887 |
| N I | 121707A250 | NA | Torque Converter (6HP600) | .098/2.5 | 90-On | 2 | 36T - ID: 14.313 |
| N I | 121707A300 | NA | Torque Converter (6HP600) | .118/3.0 | 90-On | 1 | 36T - ID: 14.313 |
| **PRESSURE PLATES** | | | | | | | |
| N I | 121701-300 | 4139-333-694 | A Clutch - Bottom | .118/3.0 | 90-On | 1 | |
| N I | 121703-300 | 4139-333-373 | B Clutch - Bottom | .118/3.0 | 90-On | 1 | |
| N I | TBA | 4139-333-437 | C Clutch - Bottom | | 90-On | 1 | |
| N I | 121705-300 | 4139-333-263 | D Clutch - Bottom | .118/3.0 | 90-On | 1 | |
| N I | TBA | 4139-333-766 | E Clutch - Bottom | .118/3.0 | 90-On | 1 | |
| N I | TBA | 4139-373-029 | F Clutch - Bottom | | 90-On | 1 | |
| N I | 121763 | 4139-333-480 | F Clutch - Top | .079/2.0 | 90-On | 1 | 24T - ID: 9.304 |
| **FILTERS** | | | | | | | |
| N I | 121940 | 0750-131-003 | Filter | | 90-On | 1 | |
| **METAL CLAD SEALS** | | | | | | | |
| N I | 121400 | 0750-111-044 | Front Pump | 150mm | 90-On | 1 | |
| N I | 121405 | 0750-111-018 | Extension Housing (without PTO) | 125mm | 90-On | 1 | |

| ILL | ALTO NO | REF NO | DESCRIPTION | SPEC | YEAR | QTY | NOTES |
|---|---|---|---|---|---|---|---|
| **METAL CLAD SEALS** | | | | | | | ...Continued |
| N I | 121420 | 0734-310-353 | Speedometer | 15mm | 90-On | 1 | |
| N I | 121420 | 0734-310-353 | Speedometer | 15mm | 90-On | 1 | |

## NOTES

# GENERAL MOTORS
## SATURN CVT
## VT20E, VT25E
## 2002-On

| ILL | DESCRIPTION | YEARS | FRICTION MODULE | OVERHAUL KIT | BANNER KIT | MASTER KIT |
|---|---|---|---|---|---|---|
| **KITS** | | | | | | |
| KT | Rebuilding Kit | 02-On | 167750 FR & ST | 167800 | NA | 167901 |

| ILL | ALTO NO | REF NO | DESCRIPTION | SPEC | YEAR | QTY | NOTES |
|---|---|---|---|---|---|---|---|
| **FRICTION CLUTCHES** | | | | | | | |
| | | | (All Clutches are 1 Sided Friction) | | | | |
| N I | 167700-150 | 24214072 | Reverse - Internal Spline | .059/1.5 | 02-On | 3 | Heg - 36T - OD: 6.140" |
| N I | 167701-150 | 24214073 | Reverse - Externall Spline | .059/1.5 | 02-On | 3 | Heg - 32T - ID: 5.055" |
| N I | 167702-150 | 24214069 | Input - Internal Spline | .059/1.5 | 02-On | 3 | Heg - 36T - OD: 6.142" |
| N I | 167703-150 | 24214070 | Input - Externall Spline | .059/1.5 | 02-On | 3 | Heg - 36T - ID: 5.055" |
| **PRESSURE PLATES** | | | | | | | |
| N I | TBA | NA | Reverse | | 02-On | AR | 15T |
| N I | TBA | NA | Input | | 02-On | AR | 18T |

# FORD
## CTX1, CTX2 (CVT)
## 1990-On

| ILL | DESCRIPTION | FRICTION MODULE | STEEL MODULE | OVERHAUL KIT | BANNER KIT | MASTER KIT |
|---|---|---|---|---|---|---|
| **KITS** | | | | | | |
| KT | Overhaul Kit | NA | NA | 082800 | NA | NA |

| ILL | ALTO NO | REF NO | DESCRIPTION | SPEC | YEAR | QTY | NOTES |
|---|---|---|---|---|---|---|---|
| **FRICTION CLUTCHES** | | | | | | | |
| NI | 082700 | NA | Clutch | .098/2.5 | 90-On | 6 | Tan - 24T - OD: 6.605"-PLI |
| NI | 082700SM | NA | Clutch | .098/2.5 | 90-On | 6 | Tan - 24T - OD: 6.605"-SM |
| **STEEL CLUTCHES** | | | | | | | |
| NI | 082701 | NA | Clutch | .098/2.5 | 90-On | 6 | 8T - ID: 4.923" |

# HONDA
## CVT
## 1996-On

| ILL | DESCRIPTION | YEARS | FRICTION MODULE | STEEL MODULE | OVERHAUL KIT | BANNER KIT | MASTER KIT |
|---|---|---|---|---|---|---|---|
| **KITS** | | | | | | | |
| KT | Rebuilding Kit - M4VA | 96-00 | 118752 | 118753 | 118800 | 118901LS | 118901 |
| KT | Rebuilding Kit - MLYA | 01-02 | 118752A | 118753A | 118802 | 118901ALS | 118901A |
| KT | Rebuilding Kit - SZCA | 03-On | 118752 | 118753 | TBA | TBA | TBA |

| ILL | ALTO NO | REF NO | DESCRIPTION | SPEC | YEAR | QTY | NOTES |
|---|---|---|---|---|---|---|---|
| **MISCELLANEOUS GASKETS & KIT COMPONENTS** | | | | | | | |
| N I | 118816 | 21814-P4V-000 | Gasket, Oil Pan | Cork/Rub | 96-On | 1 | |
| N I | TBA | 21813-P4V-000 | Gasket, Side | | 96-On | 1 | |
| N I | TBA | 21812-P4V-000 | Gasket, Case | | 96-On | 1 | |
| **FRICTION CLUTCHES** | | | | | | | |
| N I | 058710G | Various | Forward | .075/1.9 | 96-On | 2 | Heg - 38T - OD: 4.325" - PL |
| N I | 058720G | Various | Low | .075/1.9 | 96-On | 4 | Heg - 41T - OD: 4.558" - PL |
| N I | 118704 | NA | Reverse Brale | .078/2.0 | 96-On | 2 | Heg - 24T - OD: 5.709" - PL |
| **HI-PERFORMANCE - RED EAGLE®** | | | | | | | |
| N I | 058740-190 | NA | Forward | .075/1.9 | 96-On | 2 | RED EAGLE® |
| **STEEL CLUTCHES** | | | | | | | |
| N I | 058711 | Various | Forward | .078/2.0 | 96-On | 2 | 8T - ID: 3.230" |
| N I | 058723-230 | Various | Low | .091/2.3 | 96-On | 5 | 24T - ID: 3.440" |
| N I | 118705 | NA | Reverse Brake | .076/1.9 | 96-On | 2 | 12T - ID: 5.173" |

# HONDA
## CVT
## 1996-On

| ILL | ALTO NO | REF NO | DESCRIPTION | SPEC | YEAR | QTY | NOTES |
|---|---|---|---|---|---|---|---|
| **STEEL CLUTCHES** | | | | | | | **...Continued** |
| N I | 118705-134 | NA | Reverse Brake | .053/1.34 | 01-On | 2 | 12T - ID: 5.173" |
| **HI-PERFORMANCE - KOLENE®** | | | | | | | |
| N I | 058711K200 | NA | Forward | .078/2.0 | 96-On | 2 | 8T - ID: 3.230" |
| **FILTERS** | | | | | | | |
| N I | 118940 | 25420-P4V-000 | Filter | | 96-99 | 1 | |
| N I | 118942 | 25420-PET-003 | Filter | | 00-On | 1 | |
| **METAL CLAD SEALS** | | | | | | | |
| N I | 118400 | 91207-P4V-000 | Flywheel Housing | 35mm | 96-On | 1 | |
| N I | TBA | 91205-PL3-A01 | Left Axle | 56mm | 96-On | 1 | |
| N I | 058402D | 91206-689-005 | Right Axle | 76mm | 96-On | 1 | |

# NISSAN
## NISSAN RE0F09A
## JATCO CVT
## 2003-On

| ILL | DESCRIPTION | YEARS | FRICTION MODULE | STEEL MODULE | OVERHAUL KIT | BANNER KIT | MASTER KIT |
|---|---|---|---|---|---|---|---|
| **KITS** | | | | | | | |
| KT | Rebuilding Kit | 03-On | 181752 | 181753 | 181800 | 181901LS | 181901 |

| ILL | ALTO NO | REF NO | DESCRIPTION | YEAR | QTY |
|---|---|---|---|---|---|
| **FRICTION CLUTCHES** | | | | | |
| N I | 181700 | 31532-1XD00 | Forward | 03-On | 4 |
| N I | 181702 | 31536-1XE00 | Reverse | 03-On | 4 |
| **STEEL CLUTCHES** | | | | | |
| N I | 181701 | 31532-1XD02 | Forward | 03-On | 4 |
| N I | 181703 | 31666-1XD00 | Reverse | 03-On | 4 |

# SUBARU
## CVT "REX"
## 1989-On

| ILL | DESCRIPTION | YEARS | FRICTION MODULE | STEEL MODULE | OVERHAUL KIT | BANNER KIT | MASTER KIT |
|---|---|---|---|---|---|---|---|
| **KITS** | | | | | | | |
| KT | Rebuilding Kit | 89-On | 176752 | 176753 | 176800 | 176901LS | 176901 |

| ILL | ALTO NO | REF NO | DESCRIPTION | SPEC | YEAR | QTY | NOTES |
|---|---|---|---|---|---|---|---|
| **FRICTION CLUTCHES** | | | | | | | |
| N I | 176700-160 | NA | #1 Reverse Brake | .063/1.6 | 89-On | 2 | Heg - 44T - OD: 5.672" |
| N I | 176702-180 | NA | #2 Start (Drive) | 071/1.8 | 89-On | 2 | Heg - 30T - OD: 5.138" |
| **STEEL CLUTCHES** | | | | | | | |
| N I | 176701-200 | NA | #1 Reverse Brake | .078/2.0 | 89-On | 2 | 15T - ID: 4.604" |
| N I | 176703-200 | NA | #2 Start (Drive) | .079/2.0 | 89-On | 1 | 36T - ID: 4.350" |
| N I | 176703A415 | NA | #2 Start (Drive) | .070/1.64 | 89-On | 1 | 36T - ID: 4.350" |

# VOLKSWAGEN
## AUDI
## CVT
## 2001-On

| ILL | DESCRIPTION | YEARS | FRICTION MODULE | STEEL MODULE | OVERHAUL KIT | BANNER KIT | MASTER KIT |
|---|---|---|---|---|---|---|---|
| **KITS** | | | | | | | |
| KT | Rebuilding Kit | 01-On | 151752 | 151753 | 151800 | 151901LS | 151901 |

| ILL | ALTO NO | REF NO | DESCRIPTION | SPEC | YEAR | QTY | NOTES |
|---|---|---|---|---|---|---|---|
| **FRICTION CLUTCHES** | | | | | | | |
| N I | 151700-270 | NA | Forward (Lock) - external teeth | .107/1.7 | 01-On | 6 | Heg - 30T - ID: 4.326" - SM |
| N I | 151702-270 | NA | Low / Reverse Brake - internal teeth | .107/1.7 | 01-On | 6 | Heg - 40T - OD: 7.160" - SM |
| **STEEL CLUTCHES** | | | | | | | |
| N I | 151701-195 | NA | Forward (Lock) - internal teeth | .076/1.95 | 01-On | 4 | 26T - ID: 5.434" |
| N I | 151701-225 | NA | Forward (Lock) - internal teeth | .089/2.25 | 01-On | 1 | 26T - ID: 5.434" |
| N I | 151701-250 | NA | Forward (Lock) - internal teeth | .098/2.5 | 01-On | 2 | 26T - ID: 5.434" |
| N I | 151703-195 | NA | Low / Reverse Brake - internal teeth | .076/1.95 | 01-On | 3 | 3T - ID: 6.398" |
| N I | 151703-225 | NA | Low / Reverse Brake - internal teeth | .089/2.25 | 01-On | 1 | 3T - ID: 6.398" |
| N I | 151703-250 | NA | Low / Reverse Brake - internal teeth | .098/2.5 | 01-On | 3 | 3T - ID: 6.398" |
| **METAL CLAD SEALS** | | | | | | | |
| N I | 151400 | NA | Front Pump | 30mm | 01-On | 1 | |
| N I | 151401 | 01J-331-201 | Pinion Shaft | 94mm | 01-On | 1 | |
| N I | 151425 | 018-409-399B | Axle (Final Drive) | 60mm | 01-On | 1 | |
| N I | 151402 | 016-311-1136B | Front Cover (Input) | 40mm | 01-On | 1 | |
| N I | 109410 | 095-321-182B | Manual Lever | | 01-On | 1 | |
| **MOLDED PISTONS** | | | | | | | |
| N I | 151330 | 01J-323-121 | Reverse Brake | | 01-On | 1 | |
| N I | 151331 | 01J-331-201 | Pulley Shaft Rear | | 01-On | 1 | |
| N I | 151332 | 01J-331-191A | Pulley Shaft Front | | 01-On | 1 | |

# Z F
## MINI CVT
## 2003-On

| ILL | DESCRIPTION | YEARS | FRICTION MODULE | STEEL MODULE | OVERHAUL KIT | BANNER KIT | MASTER KIT |
|---|---|---|---|---|---|---|---|
| **KITS** | | | | | | | |
| KT | Rebuilding Kit | 03-On | 184752 | 184753 | 184800 | 184901LS | 184901 |

| ILL | ALTO NO | REF NO | DESCRIPTION | SPEC | YEAR | QTY | NOTES |
|---|---|---|---|---|---|---|---|
| **FRICTION CLUTCHES** | | | | | | | |
| N I | 139702-150 | NA | Reverse | .059/1.5 | 03-On | 3 | 30T - OD: 6.97" |
| N I | 113700A | NA | Input | .062/1.57 | 03-On | 3 | Heg - 30T - OD: 5.627" - SB |
| **STEEL CLUTCHES** | | | | | | | |
| N I | 139703-180 | NA | Reverse | .071/1.8 | 03-On | 3 | 24T - ID: 5.200" |
| N I | 113701-180 | NA | Input | .071/1.8 | 03-On | 3 | 24T - ID: 4.690" |

# TRANSFER CASE CLUTCHES

## GM 4L30E

| ALTO NO | REF NO | DESCRIPTION | SPEC | OD/ID | MATL | SPLINE |
|---|---|---|---|---|---|---|
| 138730 | NA | FR 4 X 4 1 Side Friction Internal Spline | .065/1.65 | OD: 5.590" | TAN PLNI | 19T |
| 138731 | NA | FR 4 X 4 1 Side Friction External Spline | .065/1.65 | ID: 4.727" | TAN PLNI | 31T |

## GM 4L60, 4L60E, 4L80E, TH700-R4

| ALTO NO | REF NO | DESCRIPTION | SPEC | OD/ID | MATL | SPLINE |
|---|---|---|---|---|---|---|
| 126700 | 12547607 | FR NEW VENTURE GEAR 136, 236 | .086/2.18 | OD: 6.080" | HEG SM | 54T |
| 126701 | 12547608 | ST NEW VENTURE GEAR 136, 236 | .067/1.7 | ID: 5.023" | | 12T |
| 171700-170 | 88935701 | FR NEW VENTURE GEAR 125C, 225C<br>1 Side Friction Internal Spline | .067/1.7 | | HEG | 50T |
| 171701-170 | 88935700 | FR NEW VENTURE GEAR 125C. 225C<br>1 Side Friction External Spline | .067/1.7 | | HEG | 16T |

## ALLISON WORLD MD300 TRANSFER CASE

| ALTO NO | REF NO | DESCRIPTION | SPEC | OD/ID | MATL | SPLINE |
|---|---|---|---|---|---|---|
| 148710-400 | 23048735 | FR WORLD MD300 C-6 95+ | .157/4.0 | OD: 8.589" | HEG PLI | 34T |
| 148711-250 | 29506073 | ST WORLD MD300 C-6 95+ | .098/2.5 | ID: 7.090" | | 40T |
| 055702A246 | 23041097 | FR WORLD MD300 C-7 95+ | .097/2.46 | OD: 8.15" | HEG | 60T |
| 148709-220 | 29502156 | ST WORLD MD300 C-7 95+ | .086/2.2 | ID: 6.580" | | 67T |

## FORD AOD, AOD-E, 4R70W, 5R55N, 5R55W

| ALTO NO | REF NO | DESCRIPTION | SPEC | OD/ID | MATL | SPLINE |
|---|---|---|---|---|---|---|
| 138730 | NA | FR BW4405 1 Side Friction Internal Spline | .065/1.65 | OD: 5.590" | TAN PLNI | 19T |
| 138730-195 | XL2Z-7C108AA PAK | FR BW4406 1 Side Friction Internal Spline | .077/1.98 | OD: 5.590" | TAN PLNI | 19T |
| 138731 | NA | FR BW4405 1 Side Friction External Spline | .065/1.65 | ID: 4.727" | TAN PLNI | 31T |
| 138731-195 | XL2Z-7C108AA PAK | FR BW4406 1 Side Friction External Spline | .077/1.98 | ID: 4.727" | TAN PLNI | 31T |

## AW50-40/42LE TRANSFER CASE

| ALTO NO | REF NO | DESCRIPTION | SPEC | OD/ID | MATL | SPLINE |
|---|---|---|---|---|---|---|
| 110710-150 | NA | FR AW50-40/42LE 89+ | .059 | OD: 5.870" | HEG PL | 61T |
| 110711-150 | NA | ST AW50-40/42LE 89+ | .059 | ID: 5.220" | | 66T |

## NISSAN RE4R01A TRANSFER CASE

| ALTO NO | REF NO | DESCRIPTION | SPEC | OD/ID | MATL | SPLINE |
|---|---|---|---|---|---|---|
| 075712 | 31532-0W410 | FR RE4R01A 97+ | .078/2.0 | OD: 6.338" | HEG WF | 40T |
| 075715K | 31536-0W410 | ST RE4R01A 97+ | .078/2.0 | ID: 4.633" | Kolene® | 32T |

## SUBARU M41, M41A (GUNMA) TRANSFER CASE

| ALTO NO | REF NO | DESCRIPTION | SPEC | OD/ID | MATL | SPLINE |
|---|---|---|---|---|---|---|
| 042706 | 35188-AA-041<br>55188-AA-040<br>35188-AA-000 | FR SUBARU M41, M41A 83-94 | .115/2.9 | OD: 3.702" | TAN SM | 33T |
| 042707 | 31589-AA-000<br>44646-7000 | ST SUBARU M41, M41A 83-94 | .071/1.8 | ID: 2.837" | | 48T |

# TRANSFER CASE CLUTCHES

## SUBARU 4 SPEED TRANSFER CASE

| ALTO NO | REF NO | DESCRIPTION | SPEC | OD/ID | MATL | SPLINE |
|---|---|---|---|---|---|---|
| 075710 | 31588-AA-020 | FR SUBARU 4 SPEED 98+ | .078/2.0 | OD: 4.646" | TAN PL | 24T |
| 075720-180 | 31588-AA070 | FR SUBARU 4 SPEED 98+ | .071/1.8 | OD: 4.646" | TAN SM | 50T |
| 075711K160 | 31589-AA040<br>31589-AA041 | ST SUBARU 4 SPEED KOLENE 98+ | .063/1.6 | ID: 4.117 | Kolene® | 30T |
| 075711-200 | 31589AA-050 | ST SUBARU 4 SPEED 98+ selective | .078/2.0 | ID: 4.117" | | 30T |
| 075711-240 | 31587AA-060 | ST SUBARU 4 SPEED 98+ selective | .095/2.4 | ID: 4.117" | | 30T |
| 075711-280 | 31589AA-070 | ST SUBARU 4 SPEED 98+ selective | .110/2.8 | ID: 4.117" | | 30T |

## SUBARU R4AX-EL TRANSFER CASE

| ALTO NO | REF NO | DESCRIPTION | SPEC | OD/ID | MATL | SPLINE |
|---|---|---|---|---|---|---|
| 075710 | 31588-AA-020 | FR SUBARU R4AX-EL 87-93<br>(Loyale) | .078/2.0 | OD: 4.646" | TAN PL | 24T |
| 075710-180 | 31588-AA-060 | FR SUBARU R4AX-EL 91-98<br>(Impressa/Legacy/SVX) | .071/1.8 | OD: 4.646" | TAN SM | 24T |
| 075720-180 | 31588-AA070 | FR SUBARU R4AX-EL | .071/1.8 | OD: 4.646" | TAN SM | 50T |
| 075711 | 31589-AA-030 | ST SUBARU R4AX-EL TC 87-93<br>(Loyale) | .071/1.8 | ID: 4.117" | | 30T |
| 075711-160 | 31589-AA-040<br>31589-AA-041 | ST SUBARU R4AX-EL TC 90-94<br>(Impressa/Legacy/SVX) | .063/1.6 | ID: 4.117" | | 30T |
| 075711K200 | NA | ST SUBARU R4AX-EL KOLENE 87-98 | .078/2.0 | ID: 4.117" | Kolene® | 30T |
| 075711-200 | 31589AA-050 | ST SUBARU R4AX-EL 87-98 selective | .078/2.0 | ID: 4.117" | | 30T |
| 075711-240 | 31587AA-060 | ST SUBARU R4AX-EL 87-98 selective | .095/2.4 | ID: 4.117" | | 30T |
| 075711-280 | 31589AA-070 | ST SUBARU R4AX-EL 87-98 selective | .110/2.8 | ID: 4.117" | | 30T |

## TOYOTA A340 TRANSFER CASE

| ALTO NO | REF NO | DESCRIPTION | SPEC | OD/ID | MATL | SPLINE |
|---|---|---|---|---|---|---|
| 073712 | 34653-35020<br>34653-35010 | FR TOY A340 DIRECT (C3) 88-95 | .067/1.7 | OD: 5.597" | HEG SM | 44T |
| 073714 | 35683-35020<br>34683-35010 | FR TOY A340 LOW SPEED BRAKE (B4) 88-95 | .067/1.7 | OD: 6.808" | TAN SM | 53T |
| 073712 | 34653-35020<br>34653-35010 | FR TOY A340 FRONT DRIVE (C4) 88-95 | .067/1.7 | OD: 5.597" | HEG SM | 44T |
| 073713 | 34656-35010 | ST TOY A340 DIRECT (C3) 88-95 | .071/1.8 | ID: 4.580" | | 29T |
| 073713-255 | 34656-35020 | ST TOY A340 DIRECT (C3) selective 88-95 | .100/2.55 | ID: 4.580" | | 29T |
| 073715 | 34686-35010 | ST TOY A340 LOW SPEED BRAKE (B4) 88-95 | .071/1.8 | ID: 5.954" | | 8T |
| 073713 | 34656-35010 | ST TOY A340 FRONT DRIVE (C4) 88-95 | .071/1.8 | ID: 4.580" | | 29T |

## ZF5HP24 TRANSFER CASE

| ALTO NO | REF NO | DESCRIPTION | SPEC | OD/ID | MATL | SPLINE |
|---|---|---|---|---|---|---|
| 053716 | NA | FR ZF4HP24A AUDI 89-94 | .062/1.55 | OD: 4.680" | HEG PL | 18T |
| 053717 | NA | ST ZF4HP24A AUDI 89-94 | .082/2.1 | ID: 2.444" | | 12T |
| 053765J | NA | ST ZF4HP24A AUDI BOTTOM PLATE 89-94<br>(holes in teeth) | .082/2.1 | ID: 2.444" | | 12T |

# BTR 85/91/95LE
## BTR 74/93/97LE
## 1990-On

| ILL | DESCRIPTION | YEARS | YEAR | FRICTION MODULE | STEEL MODULE | OVERHAUL KIT | BANNER KIT | MASTER KIT |
|---|---|---|---|---|---|---|---|---|
| **KITS** | | | | | | | | |
| KT | Rebuilding Kit | 90-On | 90-On | 079752 | 079753 | 079800 | 079901LS | 079901 |

| ILL | ALTO NO | REF NO | DESCRIPTION | SPEC | YEAR | QTY | NOTES |
|---|---|---|---|---|---|---|---|
| **GASKETS** | | | | | | | |
| NI | 079816 | NA | Gasket, Oil Pan | Cork/Rub | 90-On | 1 | Tan - 46T - OD: 4.978"-PLNI |
| **FRICTION CLUTCHES** | | | | | | | |
| NI | 079700A200 | 0585-666013 | C1 Clutch - except below | .079/2.0 | 90-On | 5 | Heg - 46T - OD: 4.978"-C2PL |
| NI | 079700 | 0585-666013 | C1 Clutch - except below | .079/2.0 | 90-On | 5 | Tan - 46T - OD: 4.978"-C2PL |
| NI | 079704A200 | 0585-666007 | C1 Clutch - 74LE & Australia Falcon | .079/2.0 | 90-On | 5 | Heg - 46T - OD: 4.978"-PLI |
| NI | 079704 | 0585-666007 | C1 Clutch - 74LE & Australia Falcon | .079/2.0 | 90-On | 5 | Tan - 46T - OD: 4.978"-PLI |
| NI | 079704A200 | 0585-666007 | C2 Clutch | .079/2.0 | 90-On | 5 | Heg - 46T - OD: 4.978"-PLI |
| NI | 079704 | 0585-666007 | C2 Clutch | .079/2.0 | 90-On | 5 | Tan - 46T - OD: 4.978"-PLI |
| NI | 079704A200 | 0585-666007 | C3 Clutch | .079/2.0 | 90-On | 3-4 | Heg - 46T - OD: 4.978"-PLI |
| NI | 079704 | 0585-666007 | C3 Clutch | .079/2.0 | 90-On | 3-4 | Tan - 46T - OD: 4.978"-PLI |
| NI | 079702A200 | 0585-666010 | C4 Clutch | .079/2.0 | 90-On | 3 | Heg - 41T - OD: 4.601" C2PL |
| NI | 079702 | 0585-666010 | C4 Clutch | .079/2.0 | 90-On | 3 | Tan - 41T - OD: 4.601" C2PL |
| **STEEL CLUTCHES** | | | | | | | |
| NI | 079701-225 | 0585-166008 | C1 Clutch | .089/2.2 | 90-On | 2 | 52T - ID: 4.015" |
| NI | 079701-250 | NA | C1 Clutch | .098/2.5 | 90-On | 2 | 52T - ID: 4.015" |
| NI | 079701-200 | 0585-166007 | C1 Clutch - selective | .079/2.0 | 90-On | AR | 52T - ID: 4.015" |
| NI | 079701-225 | 0585-166008 | C2 Clutch | .089/2.2 | 90-On | 2 | 52T - ID: 4.015" |
| NI | 079701-200 | 0585-166007 | C2 Clutch | .079/2.0 | 90-On | 2 | 52T - ID: 4.015" |
| NI | 079701-180 | NA | C2 Clutch - Selective | .098/2.5 | 90-On | AR | 52T - ID: 4.015" |
| NI | 079701-225 | 0585-166008 | C3 Clutch | .089/2.2 | 90-On | 2 | 52T - ID: 4.015" |
| NI | 079701-200 | 0585-166007 | C3 Clutch - selective | .079/2.0 | 90-On | AR | 52T - ID: 4.015" |
| NI | 079703-140 | 0585-166035 | C4 Clutch | .055/1.4 | 90-On | 1 | 56T - ID: 3.580" |
| NI | 079703-180 | 0585-166036 | C4 Clutch | .071/1.8 | 90-On | 1 | 56T - ID: 3.580" |
| NI | 079703-220 | 0585-166037 | C4 Clutch | .087/2.2 | 90-On | 1 | 56T - ID: 3.580" |
| NI | 079703-170 | 0585-166030 | C4 Clutch- selective | .067/1.7 | 90-On | 1 | 56T - ID: 3.580" |
| **FILTERS** | | | | | | | |
| NI | 079940 | TGM-10011 | Filter | .067/1.7 | 90-On | 1 | |
| **BANDS** | | | | | | | |
| NI | 079950 | EAB-7D034A | Band | | 90-On | 1 | |

# API, II, IIIE
## European Models

| ILL | DESCRIPTION |
|---|---|
| **KITS** | |
| KT | Rebuilding Kit - *NOT AVAILABLE* |

| ILL | ALTO NO | REF NO | DESCRIPTION | SPEC | YEAR | QTY | NOTES |
|---|---|---|---|---|---|---|---|
| **FRICTION CLUTCHES** | | | | | | | |
| NI | 079710B | NA | OE Style - all models | .102/2.6 | ALL | AR | Blk - 24T - OD: 4.306"-PL |
| NI | 079710R | NA | Aftermarket Style - all models | .102/2.6 | ALL | AR | Red - 24T - OD: 4.306"-PL |
| NI | 079722 | NA | Forward - IIIE only | .102/2.6 | ALL | AR | Tan - 18T - OD: 4.306"-PL |

# ASIAN "MINI" CARS
## 1988-On

| ILL | DESCRIPTION |
|---|---|
| **KITS** | |
| KT | Rebu |

| ILL | ALTO NO | REF NO | DESCRIPTION | SPEC | YEAR | QTY | NOTES |
|---|---|---|---|---|---|---|---|
| **FRICTION CLUTCHES** | | | | | | | |
| NI | 079712 | NA | Forward | .065/1.7 | 88-On | AR | Tan- 36T - OD: 4.026"-PL |
| NI | 079712A | NA | Forward - 2nd Design | .060/1.65 | 88-On | AR | Heg- 36T - OD: 4.026"-PL |
| NI | 079714 | NA | Direct | .063/1.6 | 88-On | AR | Tan - 18T - OD: 4.026"-PL |
| NI | 079716 | NA | Low / Reverse | .063/1.6 | 88-On | AR | Tan - 46T - OD: 4.538"-PL |
| **STEEL CLUTCHES** | | | | | | | |
| NI | 079713 | NA | Forward & Direct | .048/1.2 | 88-On | AR | 16T - ID: 3.375" |
| NI | 079717 | NA | Low / Reverse | .048/1.2 | 88-On | AR | 15T - ID: 3.854" |

# ASIAN "MINI" CARS
## 1985-On

| ILL | DESCRIPTION |
|---|---|
| **KITS** | |
| KT | Rebu |

| ILL | ALTO NO | REF NO | DESCRIPTION | SPEC | YEAR | QTY | NOTES |
|---|---|---|---|---|---|---|---|
| **FRICTION CLUTCHES** | | | | | | | |
| NI | 079724 | NA | Forward & Direct | .067/1.7 | 85-On | AR | Tan - 41T - OD: 4.214"-PL |
| NI | 079724 | NA | Low / Reverse | .067/1.7 | 85-On | AR | Tan - 44T - OD: 4.689"-PL |
| **STEEL CLUTCHES** | | | | | | | |
| NI | 079725 | NA | Forward & Direct | .071/1.8 | 85-On | AR | 8T - ID: 3.497" |
| NI | 079727 | NA | Low / Reverse | .071/1.8 | 85-On | AR | 16T - ID: 3.821" |

# DAIHATSU MINI

| ILL | DESCRIPTION | FRICTION MODULE | STEEL MODULE | OVERHAUL KIT | BANNER KIT | MASTER KIT |
|---|---|---|---|---|---|---|
| **KITS** | | | | | | |
| KT | Rebuilding Kit | 127752 | 127753 | 127800 | 127901LS | 127901 |

| ILL | ALTO NO | REF NO | DESCRIPTION | SPEC | QTY | NOTES |
|---|---|---|---|---|---|---|
| **GASKETS** | | | | | | |
| NI | 127815 | NA | Gasket, Oil Pan | Fiber | 1 | |
| **FRICTION CLUTCHES** | | | | | | |
| NI | 127700 | NA | Input Clutch - 1st design | .063/1.6 | AR | Tan - 8T - OD: 3.230"-PLNI |
| NI | 127700A | NA | Input Clutch - 2nd design | .063/1.6 | AR | Grn - 30T - OD: 3.269-PLNI |
| NI | 127702 | NA | Forward | .079/2.0 | AR | Tan - 10T - OD: 4.491"-PLNI |
| NI | 127704 | NA | Center Support - external spline | .071/1.8 | AR | Tan - 20T - ID: 3.736"-PLNI |
| NI | 127704A155 | NA | Center Support - late external spline | .061/1.55 | AR | Heg - 35T -ID: 3.779"-PLNI |
| NI | 127706 | NA | Low / Reverse | .079/2.0 | AR | Tan - 21T - OD: 5.041"-PLNI |
| **STEEL CLUTCHES** | | | | | | |
| NI | 127701 | NA | Input Clutch - 1st design | .055/1.4 | AR | 20T - ID: 2.520" |
| NI | 127701A | NA | Input Clutch - 2nd design | .055/1.4 | AR | 20T - ID: 2.560" |
| NI | 127703 | NA | Forward | .079/2.0 | AR | 8T - ID: 3.750" |
| NI | 127705 | NA | Center Support - internal spline | .079/2.0 | AR | 20T - OD: 4.450" |
| NI | 127707 | NA | Low / Reverse | .079/2.0 | AR | 12T - ID: 4.414" |

# LENCO RACING

| ILL | DESCRIPTION |
|---|---|
| **KITS** | |
| KT | Rebuilding Kit - *NOT AVAILABLE* |

| ILL | ALTO NO | REF NO | DESCRIPTION | SPEC | YEAR | QTY | NOTES |
|---|---|---|---|---|---|---|---|
| **FRICTION CLUTCHES** | | | | | | | |
| NI | 011740 | NA | Friction - 51 tooth design | .098/2.5 | ALL | AR | RED EAGLE |
| NI | 011740K | NA | Friction - 51 tooth design | .098/2.5 | ALL | OPT | KEVLAR |
| NI | 023744 | NA | Friction - 45 tooth design | .063/1.6 | ALL | AR | RED EAGLE |
| NI | 023744UP10 | NA | Friction - 45 tooth design (10/Pack) | .063/1.6 | ALL | AR | RED EAGLE |
| NI | 023744K | NA | Friction - 45 tooth design | .063/1.6 | ALL | OPT | KEVLAR |
| NI | 028742 | NA | Friction - 62 tooth design | .063/1.6 | ALL | AR | Red - 62T - OD: 6.700" - SM |
| NI | 028742A155 | NA | Friction - 62 tooth design | .063/1.6 | ALL | AR | Red - 62T - OD: 6.700" - PL |
| NI | 028742K | NA | Friction - 62 tooth design | .063/1.6 | ALL | OPT | KEVLAR |
| **STEEL CLUTCHES** | | | | | | | |
| NI | 021701 | NA | Steel - use with 011740 | .065/1.65 | ALL | AR | 8T - ID: 4.070" |
| NI | 021701-183 | NA | Steel - use with 011740 | .072/1.83 | ALL | AR | 8T - ID: 4.070" |
| NI | 023745 | NA | Steel - use with 023744 | .065/1.65 | ALL | AR | 56T - ID: 3.900" |
| NI | 028743 | NA | Steel - use with 028742 | .056/1.42 | ALL | AR | 68T - ID: 5.340" |

# VOITH

| ILL | ALTO NO | REF NO | DESCRIPTION | SPEC | QTY | NOTES |
|---|---|---|---|---|---|---|
| **FRICTION CLUTCHES** | | | | | | |
| N I | 125706 | 58.4150.12 | Input | .126/3.2 | 4 | Heg - 50T - OD: 10.15" - PLNI |
| N I | 125706 | 58.4150.12 | Lock-Up | .126/3.2 | 4 | Heg - 50T - OD: 10.15" - PLNI |
| N I | 125704 | 58.2460.13 | Pump Brake | .118/3.0 | 2 | Tan - 50T - OD: 10.15" - PLNI |
| N I | 125708 | 5.7147.16 | Reverse | .136/3.5 | 6 | Heg - 63T - OD: 12.50" - CGSM |
| N I | 125714 | 58.2250.12 | Torque Converter | | 3 | |
| N I | 125714 | 58.2250.13 | Torque Converter | | 3 | |
| **STEEL CLUTCHES** | | | | | | |
| N I | 125707 | 50.7920.10 | Input | .079/2.0 | 1 | 12T - ID: 8.173" |
| N I | 125707-350 | 52.6306.10 | Input | .138/3.5 | 3 | 12T - ID: 8.173" |
| N I | 125705 | 50.7715.20 | Input - backing | .118/3.0 | 2 | 12T - ID: 8.173" |
| N I | 125707 | 50.7920.10 | Lock-up | .079/2.0 | 1 | 12T - ID: 8.173" |
| N I | 125707-350 | 52.6306.10 | Lock-up | .138/3.5 | 3 | 12T - ID: 8.173" |
| N I | 125707-350 | 52.6306.10 | Pump Brake | .138/3.5 | 2 | 12T - ID: 8.173" |
| N I | 125705A300 | 52.6303.10 | Pump Brake | .138/3.0 | 1 | 12T - ID: 8.173" (2 Short Teeth) |
| N I | TBA | 54.8208.10 | Pump Brake - backing | .277/7.0 | 1 | 12T |
| N I | 125709 | 54.9141.10 | Reverse | .098/2.5 | 7-8 | 12T - ID: 10.41" |
| N I | 125715 | 50.9743.13 | Torque Converter | .098/2.5 | 4 | |

# DIFFERENTIAL CLUTCHES

## FORD ANTIQUE REAR DIFFERENTIAL

| ALTO NO | REF NO | DESCRIPTION | SPEC | OD/ID | MATL | SPLINE |
|---|---|---|---|---|---|---|
| 049720A235 | B9AZ-4945A | FR FORD DIFFERENTIAL HEG 1959+ | .093/2.36 | OD: 5.250" | HEGHD WF | 45T |
| 399705-130 | NA | ST FORD DIFFERENTIAL 1959+<br>EXTERNAL TAB | .051/1.3 | ID: 3.895" | | 5 TAB |

## FORD REAR DIFFERENTIAL

| ALTO NO | REF NO | DESCRIPTION | SPEC | OD/ID | MATL | SPLINE |
|---|---|---|---|---|---|---|
| 023716A160 | C80Z-4945B | FR FORD DIFF 8.8" RG HEG 68+ | .063/1.6 | OD: 4.887" | HEG WF | 46T |
| 023718A200 | C80Z-4A325B | FR FORD DIFF 8.8" RG HEG 68+<br>1 SIDE FRICTION EXTERNAL TABS | .082/2.08 | ID: 3.955" | HEG PLI | 4 TAB |
| 023717 | C80Z-4947A | ST FORD DIFF 8.8" RG 68+ | .050/1.27 | ID: 3.955" | | 4 TAB |
| 399700 | E4DZ-4947A-F | FR FORD DIFF 7.5" RG HEG 79+ | .094/2.39 | ID: 2.080" | HEG SM | 2 TAB |
| 399701 | E4DZ-4947A-S | ST FORD DIFF 7.5" RG 79+<br>INTERNAL SPLNE | .065/1.65" | OD: 3.000" | | 23T |
| 399702 | F3AZ-4947A-F | FR FORD DIFF 8.8" RG HEG 92-98<br>Longer Tab | .098/2.49 | ID: 2.080" | HEG SM | 2 TAB |
| 399702A | NA | FR FORD DIFF 8.8" RG HEG 99+<br>Shorter Tab | .098/2.49 | ID: 2.080" | HEG SM | 2 TAB |
| 399703 | F3AZ-4947A-S | ST FORD DIFF 8.8" RG 92+<br>INTERNAL SPLINE | .079/2.01 | OD: 3.363" | | 23T |

## HONDA/ACURA NSX (MR9A) DIFFERENTIAL

| ALTO NO | REF NO | DESCRIPTION | SPEC | OD/ID | MATL | SPLINE |
|---|---|---|---|---|---|---|
| 078718 | 41252-PR8-000 | FR ACURA NSX 4SP 91+ | .067/1.7 | OD: 3.933 | HEG PL | 17T |
| 078719 | 41252-PR8-000 | ST ACURA NSX 4SP 91+ | .100/2.55 | ID: 2.825" | | 26T |

## TOYOTA A240 4X4 (ALLTRAC) DIFFERENTIAL

| ALTO NO | REF NO | DESCRIPTION | SPEC | OD/ID | MATL | SPLINE |
|---|---|---|---|---|---|---|
| 067702 | 34201-20030-PK | FR TOYOTA A241H 4WD 88-92 | .075/1.95 | OD: 4.254" | TAN SM | 34T |
| 067703 | 34201-20030-PK | ST TOYOTA A24AH 4WD 88-92 | .071/1.8 | ID: 3.568" | | 20T |

## TOYOTA A540H DIFFERENTIAL

| ALTO NO | REF NO | DESCRIPTION | SPEC | OD/ID | MATL | SPLINE |
|---|---|---|---|---|---|---|
| 065718 | 41475-32010 | FR TOYOTA A540H 89-00 | .071/1.8 | OD: 4.508" | TAN SM | 36T |
| 065719 | 41474-32011 | ST TOYOTA A540H 89-00 | .063/1.6 | ID: 3.561" | | 30T |

### Brass Compression Fittings

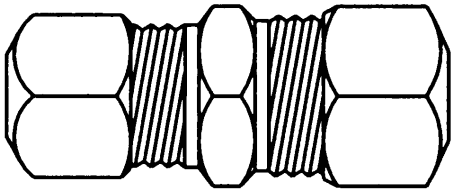

| ALTO# | Size |
|---|---|
| **057107** | 5/16” to 5/16” |
| **099053DE** | 5/16” to 3/8” |

### Cooler Line Retainer Clip

| ALTO# | Transmission |
|---|---|
| **M001001** | 4L60E, 4L80E |

## CASE PLUGS

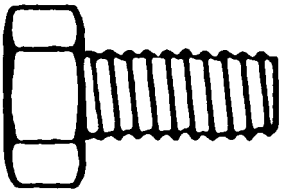

| ALTO# | Material | Size |
|---|---|---|
| **057248S** | Steel | 1/16" |
| **057249S** | Steel | 1/8" |
| **057249** | Brass | 1/8" |

## MISC.

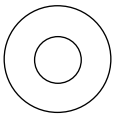

| ALTO# | Description |
|---|---|
| **077006** | 4L80E Chrysler Front Pump Bolt Washer Brass |

## BOLTS

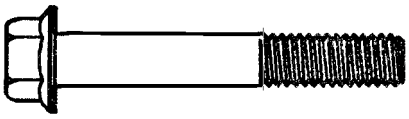

| ALTO# | Description |
|---|---|
| **031315** | 4L80E |

## BOLTS

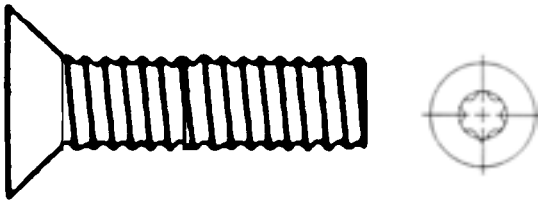

| ALTO# | Description | Dimensions |
|---|---|---|
| **053315** | ZF4HP22 “F” Drum to Case | M6 x 15 |

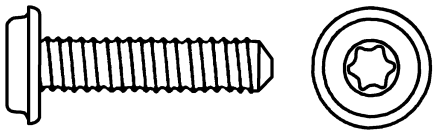

| ALTO# | Description |
|---|---|
| **057315-057315UP8** | 4L60E Bell Housing to Case Torx Plus®, 1999-On |

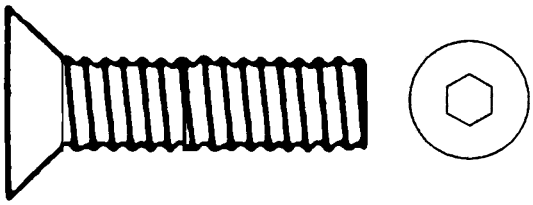

| ALTO# | Description | Dimensions |
|---|---|---|
| **059315** | KM175, 177, F4A21 23 Overdrive (F) Drum to Case | M8 x 20 |

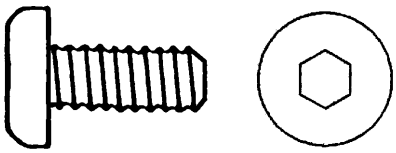

| ALTO# | Description | Dimensions |
|---|---|---|
| **068315** | RL4F02A Pump Stator & Bearing Retainer | M8 x 21 |

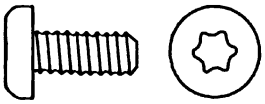

| ALTO# | Description | Dimensions |
|---|---|---|
| **077315** | A604 Low/Reverse Retainer | M5 x 11 |

## Lubegard® Automatic Transmission Fluid Protectant

- ▶ Reduces heat (9 out of 10 transmissions fail due to heat)
- ▶ Eliminates Clutch Chatters and Converter shudders.
- ▶ Softens harsh shifts with no loss of lock–up time.
- ▶ Eliminates objectionable noises during shifts
- ▶ Optimizes overall transmission performance
- ▶ Inhibits oxidation and overheating
- ▶ Eliminates hung–up governors.
- ▶ Prevents clutch chatter
- ▶ Increases fluid life
- ▶ Keeps the valves free

**BLACK ONLY**:

- ▶ Eliminates need for multiple OEM fluids such as Honda, Mopar +3(7176) & +4(9602), Hyundai, Toyota, Mitsubishi, Sterling, Saturn, Nissan etc.

| ALTO# | Lubegard®# | Unit Size | Remarks |
|---|---|---|---|
| **099351** | 60902 | 10 oz. | Red Bottle |
| **099352** | 61910 | 10 oz. | Black Bottle |

## Lubegard® Bio/Tech Engine Oil Protectant

| ALTO# | Lubegard®# | Unit Size | Remarks |
|---|---|---|---|
| **099350** | 30901 | 15 oz. | 12/Case |

## Lubegard® Valve and Assembly Lubricant

- ▶ Designed as a lubricant for the assembly of transmissions, engines, gear boxes, pumps or any other general automotive use
- ▶ LXE's natural polarity will strongly attach to metal surfaces providing superior lubrication of valves and governors, keeping them free during assembly
- ▶ Excellent penetrant and protects agains rust

| ALTO# | Lubegard®# | Unit Size | Remarks |
|---|---|---|---|
| **099356** | 61016 | 16 oz. | 6/Case |

## Dr. Tranny™ Assemblee Lube

- ▶ Excellant penetrant and protects against rust
- ▶ Same formulation as Lubegard Valve and Assembly, but in a easy to use aerosol can.

| ALTO# | Lubegard®# | Unit Size | Remarks |
|---|---|---|---|
| **099362** | 19310 | 13 oz. | 12/Case |

**with LXE!**

## Dr. Tranny™ Kooler Kleen

- ▶ Transmission cooler line flush to prevent contamination of new or rebuild unit.
- ▶ 3-in-1 Product: Transmission cooler line flush/cleaner; Cleaner for wiring harnesses; Dielectric protectant.

| ALTO# | Lubegard®# | Unit Size | Remarks |
|---|---|---|---|
| **099360** | 19001 | 15 oz. | 12/Case |

## Lubegard® Lube N' Loosen

- ▶ Frees sticky mechanisms, stops squeeks, loosens difficult rusted bolts.
- ▶ Excellant penetrant and protects against rust.

| ALTO# | Lubegard®# | Unit Size | Remarks |
|---|---|---|---|
| **099359** | 61444 | 4 oz. | 24/Case |

## Dr. Tranny™ Assemblee Goo

- ▶ Provides superior "Tackiness" required during assembly process
- ▶ Stays stable up to 130 F
- ▶ Dissolves and solubilizes in ATF
- ▶ Dyed green to prevent misdiagnosing leaks

| ALTO# | Lubegard®# | Unit Size | Remarks |
|---|---|---|---|
| **099361** | 19250 | 16 oz. | 12/Case |

## Other Lubegard® Products…

| ALTO# | Lubegard®# | Unit Size | Remarks |
|---|---|---|---|
| **099353** | 30903 | 8 oz. | Gear Fluid Supp. |
| **099358** | 12901 | 8 oz | 2 cycle oil |
| **099358A** | 12932 | 32 oz. | 2 cycle oil |
| **099363** | 19610 | 2 oz. | Instant Shudder fixx |
| **099365** | 30990 | 15 oz. | Free-Eze® |

# ALTO PRODUCTS CORP.

Alto Products, an ISO Manufacturer, is the oldest and largest independently owned manufacturer of clutches and brakes in the USA. For 50 years, Alto has supplied over half a billion clutches, brakes and gears specializing in On and Off-Highway applications for the agricultural and construction industries. Our TICUSA brand gears, shafts and synchronizer assemblies have become the world standard. Our capabilities include in-house tooling for more than 1,000 heavy-duty parts. Our experienced research and development team can help you engineer your next heavy-duty application.

**Alto Way • Atmore • AL • 36504 • USA • 251.368.7777 • Fax: 251.368.7774 • altoUSA.com**

# What's New in Our 2005 Catalog?

## General Motors...

| SERIES | DESCRIPTION | YEARS | PAGE |
|---|---|---|---|
| 156000 | 4L40E, 5L40E | '99-On | 49 |
| 167000 | Saturn Vue CVT | '02-On | 372 |
| 182000 | Saturn Ion 4 SP AF23-5, JATCO AW235 | '03-On | 95 |
| 171000 | NVG 125C, 225C Transfer Case | '02-On | 77 |

## Ford...

| SERIES | DESCRIPTION | YEARS | PAGE |
|---|---|---|---|
| 166000 | Ford 5R110W | '03-On | 123 |

## Aisin Warner/Borg Warner...

| SERIES | DESCRIPTION | YEARS | PAGE |
|---|---|---|---|
| 159000 | Volvo AW55/50SN | '99-On | 194 |
| 168000 | Aisin A581 Freightliner | '01-On | 197 |

## Honda...

| SERIES | DESCRIPTION | YEARS | PAGE |
|---|---|---|---|
| 161000 | Acura 5 SP RSX, MRMA | '02-On | 219 |
| 164000 | Honda CR-2 MRVA, MCVA | '02-On | 215 |
| 169000 | Honda Accord BCLA | '03-On | 215 |
| 172000 | Acura MDX MDKA | '03-On | 217 |
| 177000 | Honda Acura TSX | '04-On | 220 |

## Mitsubishi...

| SERIES | DESCRIPTION | YEARS | PAGE |
|---|---|---|---|
| 165000 | Hyundai F5AH1 | '01-On | 261 |

## Nissan...

| SERIES | DESCRIPTION | YEARS | PG/SECTION |
|---|---|---|---|
| 174000 | Nissan RE5R05A G35 | '02-On | 273 |
| 181000 | Jatco, Nissan RE0F09A CVT | '03-On | 373 |
| 162000 | 5F31J RE5F01A 4SP FWD | '01-On | 354 |

## Renault...

| SERIES | DESCRIPTION | YEARS | PG/SECTION |
|---|---|---|---|
| 155000 | AL4-DPO | '97-On | 298 |

## Subaru...

| SERIES | DESCRIPTION | YEARS | PG/SECTION |
|---|---|---|---|
| 176000 | Subaru CVT REX | '89-On | 373 |

## Suzuki...

| SERIES | DESCRIPTION | YEARS | PG/SECTION |
|---|---|---|---|
| 175000 | Suzuki Wagon R SR410, SR412 | '98-On | 307 |

## Toyota...

| SERIES | DESCRIPTION | YEARS | PG/SECTION |
|---|---|---|---|
| 163000 | Toyota U150 LEXUS | '02-On | 342 |
| 173000 | Toyota A750E, A750F, A750G | '03-On | 324 |

## Volkswagen...

| SERIES | DESCRIPTION | YEARS | PG/SECTION |
|---|---|---|---|
| 162000 | JF506E AG-5 | '01-On | 354 |
| 151000 | VW/Audi CVT | '01-On | 374 |



**Coming Soon...**
ZF6HP26, ZF CVT, VW Touareg, European "Mini" (Italy)