2001-03 AUTOMATIC TRANSMISSIONS

Servicing - Eurovan

APPLICATION

TRANSAXLE APPLICATION

Application	Transaxle Model
Eurovan	01P

IDENTIFICATION

OIL PAN GASKET

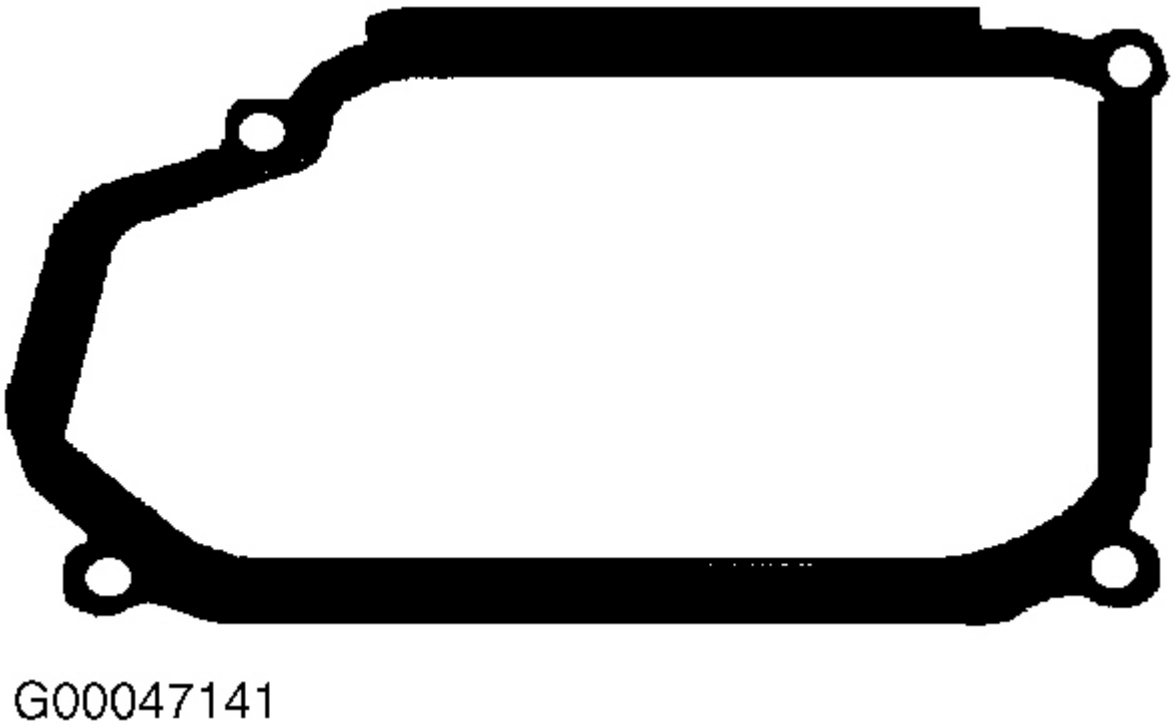

Fig. 1: Identifying Oil Pan Gasket (01P)
Courtesy of VOLKSWAGEN UNITED STATES, INC.

LUBRICATION

SERVICE INTERVALS

Transaxle

Check fluid level at 20,000 mile intervals. Fluid is filled for life except on transaxle with code EQJ. No changing is required. On transaxles with code EQJ, replace fluid every 40,000 miles.

Final Drive

Check fluid level at 40,000 mile intervals. Fluid is filled for life. No changing is required.

 © 2004 Mitchell Repair Information Company, LLC.

CHECKING FLUID LEVELS

NOTE: VW ATF (G 052 162 A2) is Light Yellow in color.

Transaxle

NOTE: In the following procedures, letters and numbers in parenthesis are shown in illustrations.

1. **NOTE: When ATF level is checked, the seal on the level plug must always be replaced. VAG Scan Tool (1551) and Diagnosis Cable (1551/1) are required to check ATF fluid level. Scan tool is used to measure ATF temperature. Follow aftermarket scan tool manufacturer instructions (if applicable) to check AFT temperature.**

   Prior to checking ATF level, ensure all fuses are okay. Battery voltage must be at least 11.5 volts. Ground connections on engine, transaxle and body must be okay. All electrical components must be switched off. Transaxle ATF temperature must not be above about 86°F (30°C). Vehicle must be on level surface and selector lever must be in "P" position.
2. Connect VAG 1924 ATF filling system to vehicle. Remove noise insulation tray. Connect vehicle diagnostic, testing and information system VAS 5051. Select "08 - read measured value blocks" on the touch screen. Select display group 005 via "Measured value block" and "Change display group number". The first display zone shows the ATF temperature. The ATF temperature must not be more than about 86°F (30°C) at the start of test.
3. **NOTE: The following detailed test procedures are described for VAG Scan Tool (1551).**

   Connect VAG Scan Tool (1551) and enter address word "02 Transmission electronics" and advance until "Select function XX" is indicated on display. Measure ATF temperature in measured value block.
4. Press keys 0 and 8. (The function "Read measured value block" is selected with 08). Confirm entry with key Q. Press keys 0 0 5. (005 selects the "Display group number 005"). Confirm entry with key Q. The first display zone shows the ATF temperature. The ATF temperature must not be more than about 86°F (30°C) at the start of test. Start engine. Raise and support vehicle. Place drip tray under the transaxle. Bring ATF to test temperature of 95-113°F (35-45°C). Remove ATF level plug (A) from the oil pan. See **Fig. 2** .
5. The ATF present in the overflow pipe (2) will run out. If ATF drips out of hole, ATF does not need to be topped off. Install NEW seal (1) to level plug and tighten to 11 ft. lbs. (15 N.m). ATF check is completed. Ensure sealing plug (3) and cap (4) remain closed. See **Fig. 3** . If only the ATF present in the overflow pipe runs out of hole, top off ATF.
6. To top off ATF, pry off plug securing cap (arrow) with a screwdriver. See **Fig. 4** . The securing cap locking device will be destroyed when doing this, so always replace securing cap. Pull plug out of filler pipe. On some transaxles, a cap with a spring retainer is installed. This cap can be used again.
7. **NOTE: An insufficient amount of ATF, as well as filling ATF to excess, affects**

 © 2004 Mitchell Repair Information Company, LLC.

the function of the transaxle.

Fill transaxle with ATF using VAG 1924 ATF filling system until ATF runs out of level hole. See **Fig. 5** . Install NEW seal (1) to level plug and tighten to 11 ft. lbs. (15 N.m). See **Fig. 3** . Install sealing plug (3) on filler pipe until the spring retainer lock locates, or install plug on filler pipe and secure with a NEW cap. See **Fig. 3** and **Fig. 4** . Lock cap in place. The cap secures the sealing plug.

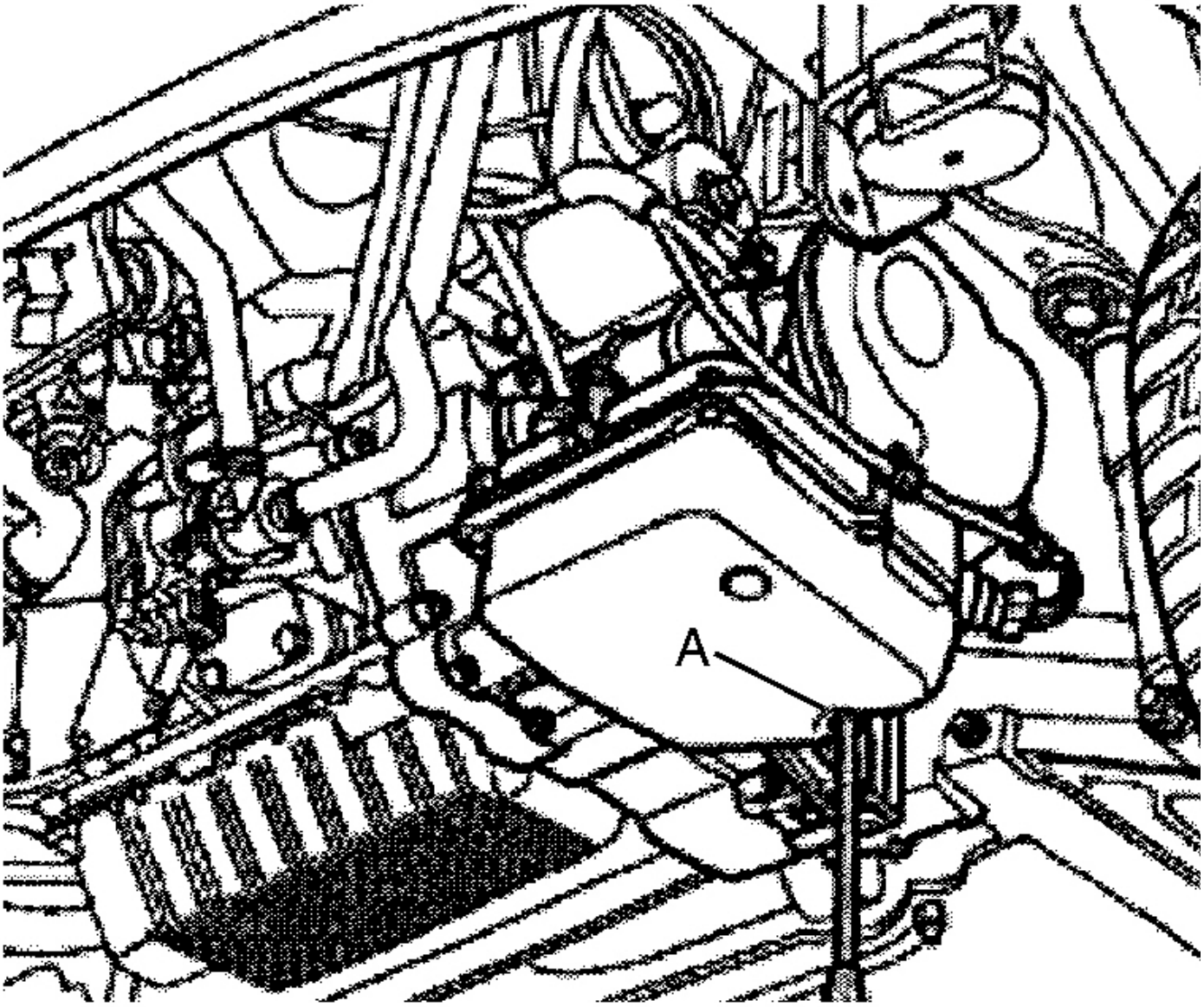

G00204354

Fig. 2: Removing ATF Level Plug From Oil Pan
Courtesy of VOLKSWAGEN UNITED STATES, INC.

 © 2004 Mitchell Repair Information Company, LLC.

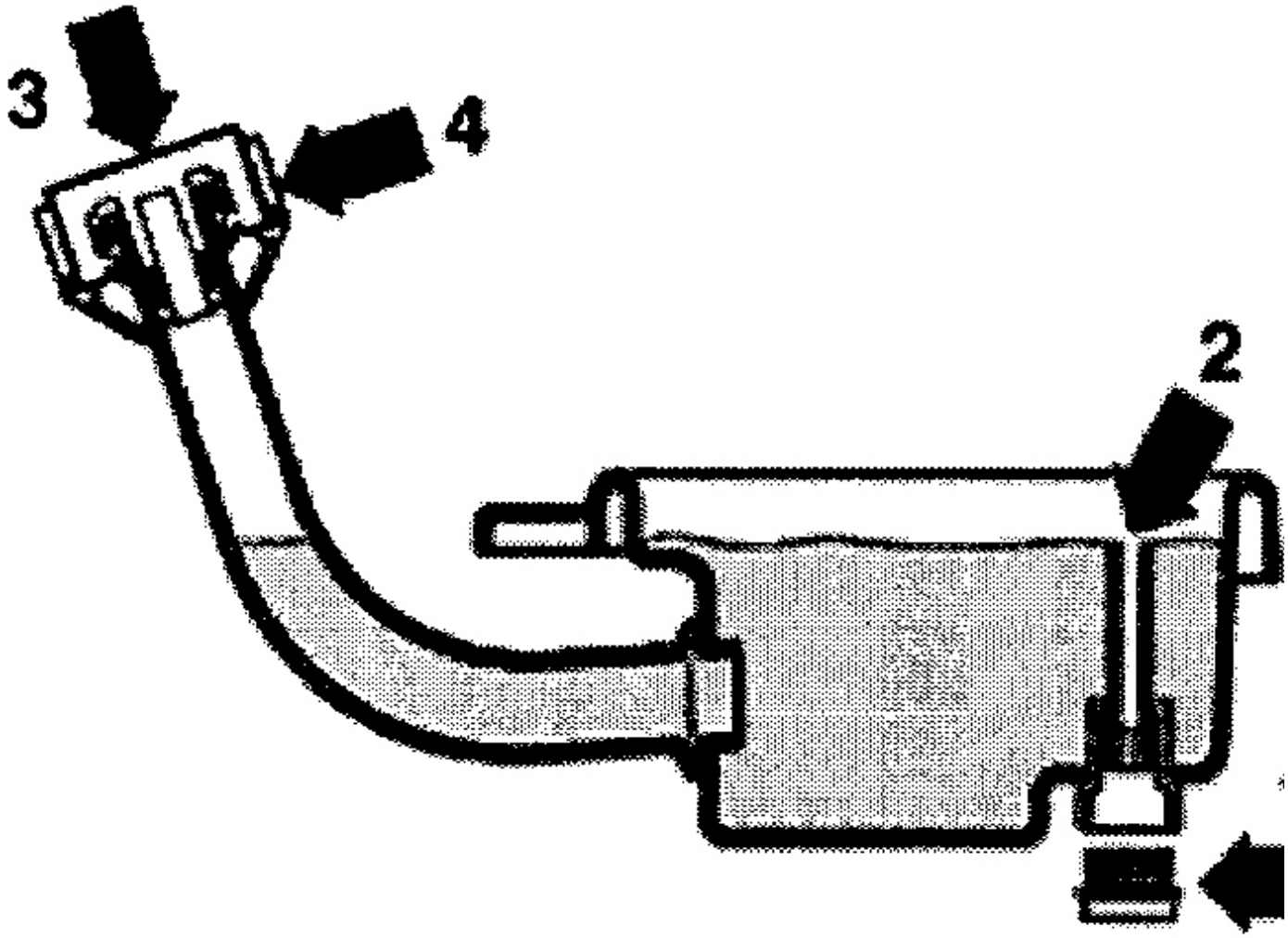

Fig. 3: Locating Plug Seal, Overfill Pipe, Sealing Plug & Cap
Courtesy of VOLKSWAGEN UNITED STATES, INC.

 © 2004 Mitchell Repair Information Company, LLC.

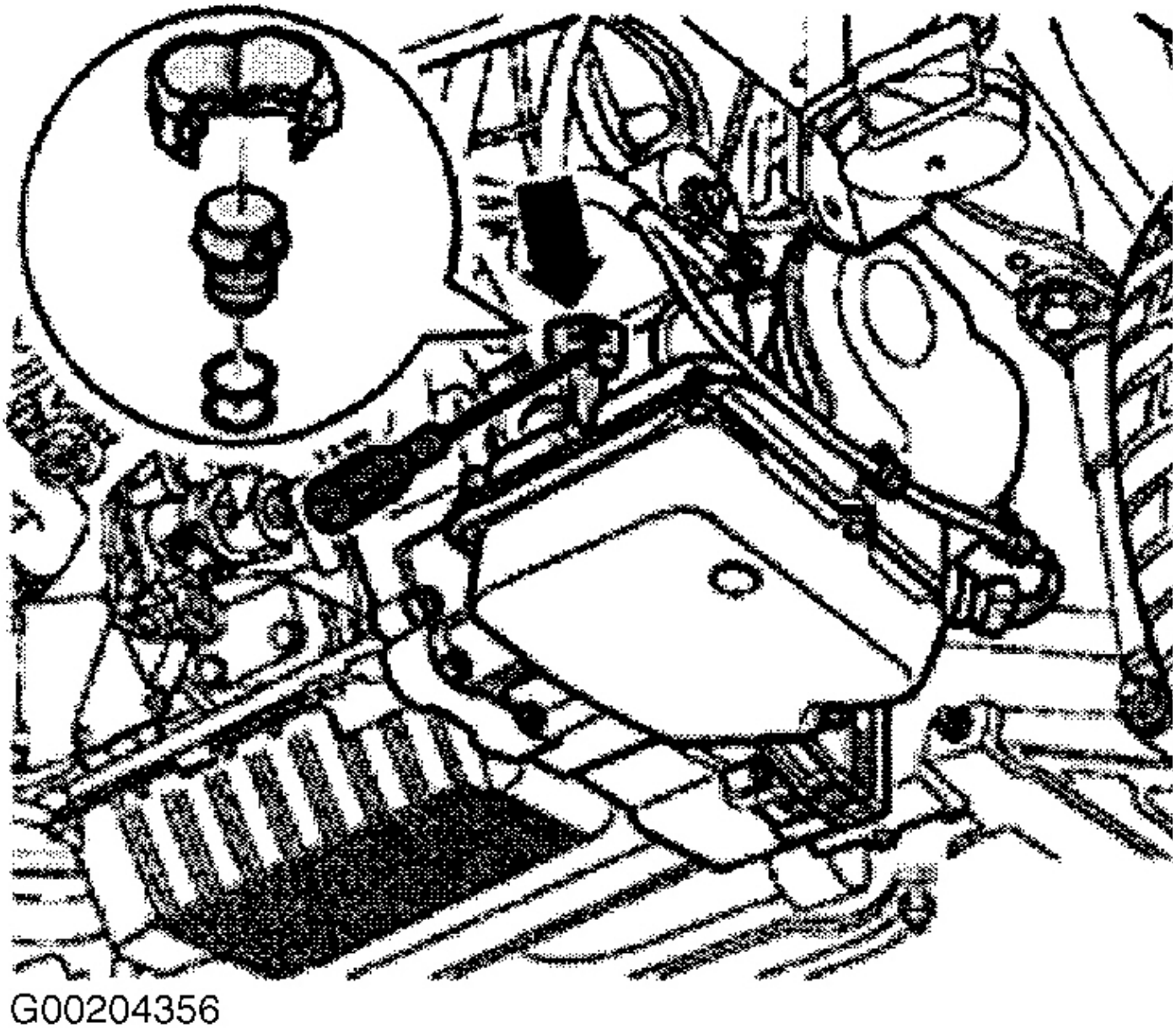

Fig. 4: Prying Off Plug Securing Cap
Courtesy of VOLKSWAGEN UNITED STATES, INC.

 © 2004 Mitchell Repair Information Company, LLC.

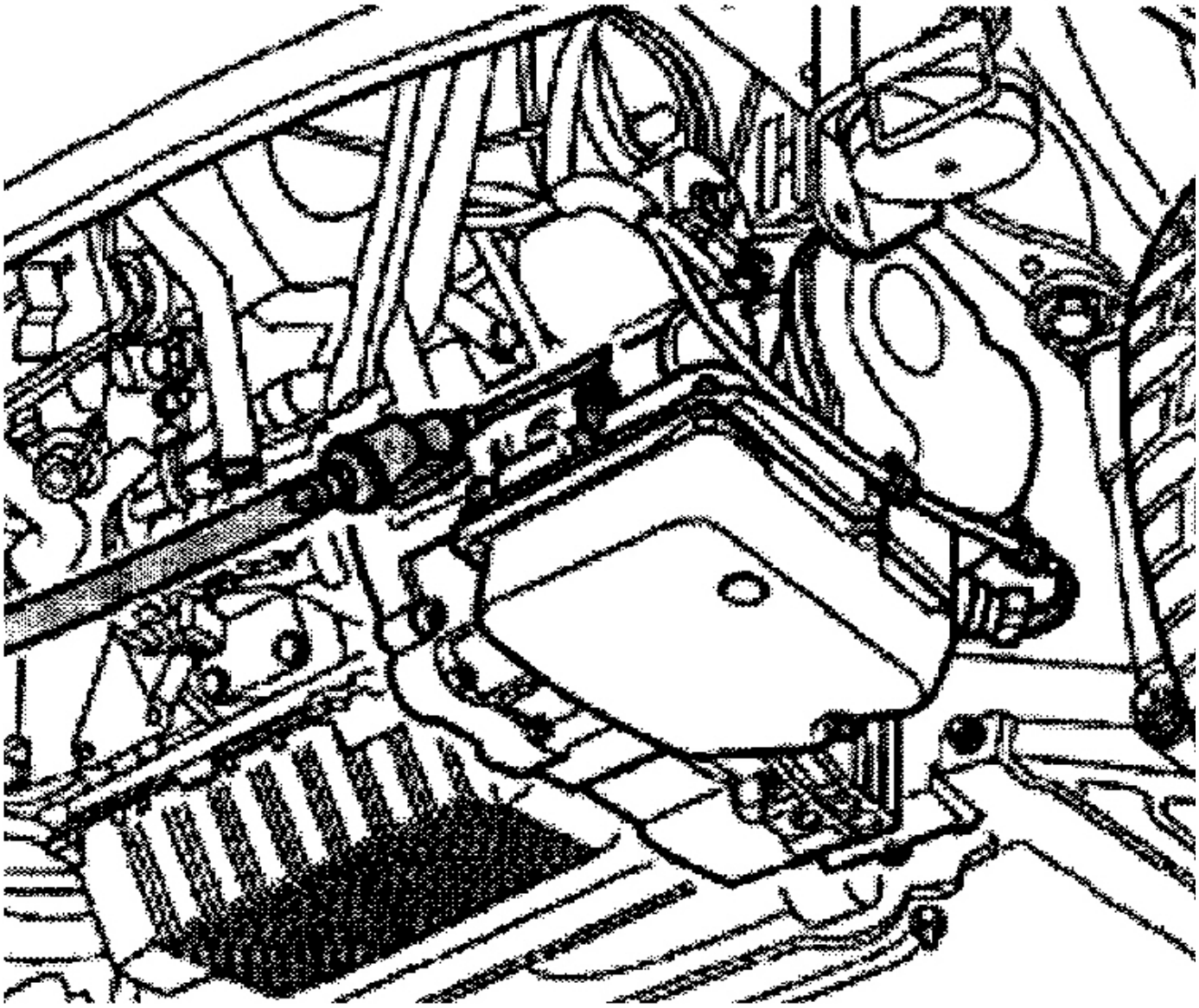

Fig. 5: Filling Transaxle Using VAG 1924 ATF Filling System
Courtesy of VOLKSWAGEN UNITED STATES, INC.

Final Drive

Raise and support vehicle. Remove filler plug on side of final drive. See **Fig. 6** . Gear oil level should be at lower edge of hole. If fluid is required, add G 50, SAE 75W-90 synthetic gear oil (G 052 145 S2). Install filler plug and tighten to 15 ft. lbs. (20 N.m).

 © 2004 Mitchell Repair Information Company, LLC.

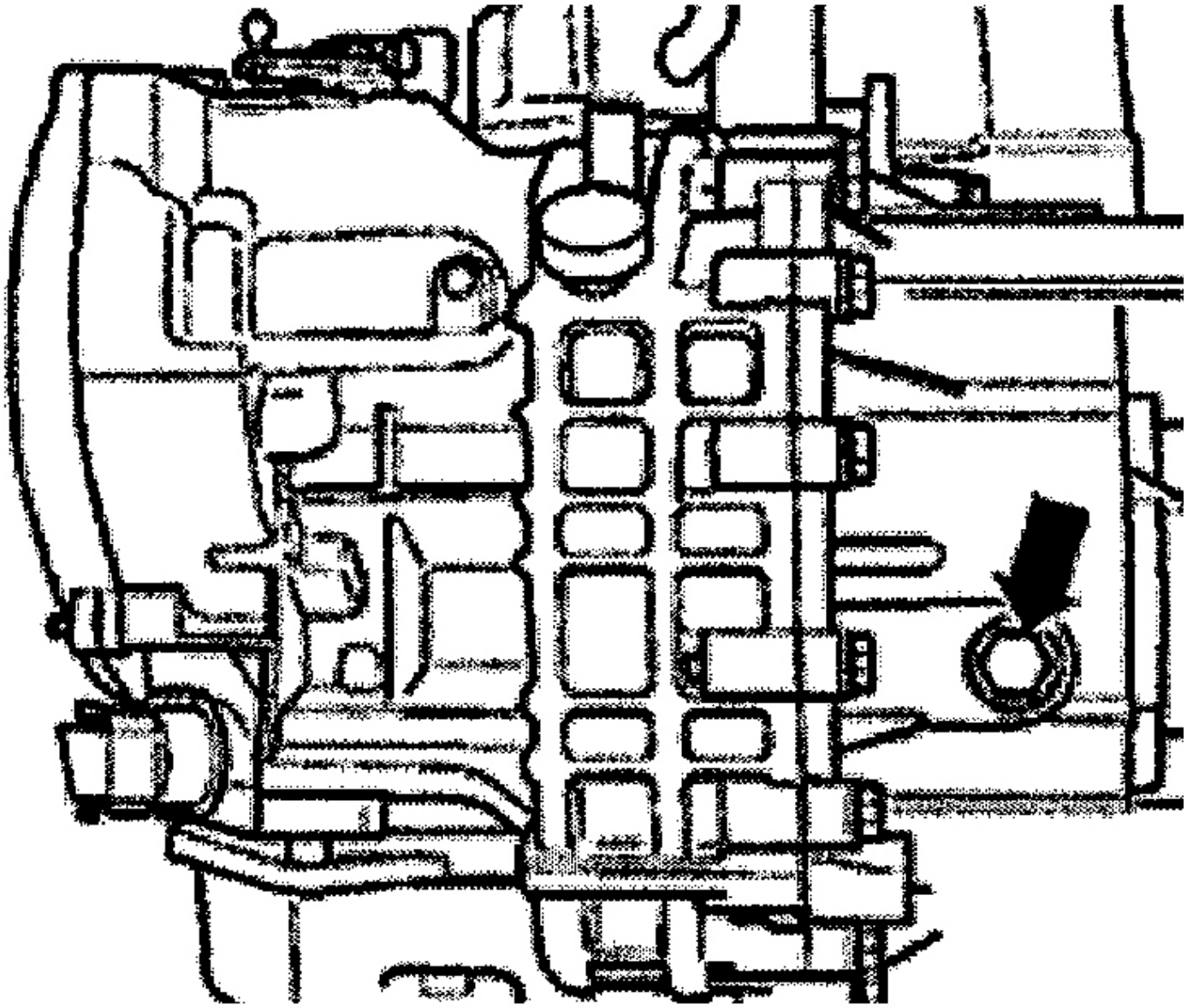

G00204358

Fig. 6: Checking Final Drive Fluid Level
Courtesy of VOLKSWAGEN UNITED STATES, INC.

RECOMMENDED FLUIDS

RECOMMENDED FLUIDS

Application	Fluid Type
Transaxle	VW ATF (G 052 162 A2)
Final Drive	(1) G 50, SAE 75W-90 (G 052 145 S2)
(1) Synthetic oil.	

FLUID CAPACITIES

TRANSAXLE FLUID CAPACITY

Application	Refill - Qts. (L)	Dry-Fill - Qts. (L)

 © 2004 Mitchell Repair Information Company, LLC.

01P	3.2 (3.0)	5.6 (5.3)

FINAL DRIVE FLUID CAPACITY

Application	Qts. (L)
01P	.8 (.75)

DRAINING & REFILLING

1. To replace ATF, raise and support vehicle. Place drip tray under the transaxle. Remove ATF level plug from the oil pan. See **Fig. 2** . Remove overflow pipe through the level hole. Drain ATF. Install overflow pipe. Screw level plug in hand-tight.
2. Fill with appropriate amount of ATF through filler pipe using VAG 1924 ATF filling system. See **FLUID CAPACITIES** . See **Fig. 5** . Start engine and shift transaxle through all the selector lever positions with the vehicle stationary. Check and top off ATF level. See **CHECKING FLUID LEVELS** . Tighten ATF level plug to 11 ft. lbs. (15 N.m).

ON-VEHICLE REPAIRS

NOTE: Various components may be serviced without transaxle removal. For servicing of these components, see appropriate component under ADJUSTMENTS and/or REMOVAL & INSTALLATION .

ADJUSTMENTS

SELECTOR LEVER CABLE

Checking & Adjusting

NOTE: In the following procedures, numbers in parenthesis are shown in illustrations.

1. Remove selector lever cable locking washer (6) from lever/selector shaft. See **Fig. 7** . Take selector lever cable off lever. Move selector lever from "P" to "1" position. Selector lever mechanism and selector lever cable must move freely. If necessary, replace selector lever cable or service selector lever mechanism. Always replace selector lever cable locking washer on transaxle support bracket after disassembling.
2. To adjust cable, place selector lever in "P" position. Loosen adjustment bolt (2) on selector lever in selector lever housing. See **Fig. 8** . Place selector shaft lever in "P" position on transaxle. Locking lever must engage in park lock wheel, with both front wheels locked. Tighten adjustment bolt on selector lever in selector lever housing to 15 ft. lbs. (20 N.m).

 © 2004 Mitchell Repair Information Company, LLC.

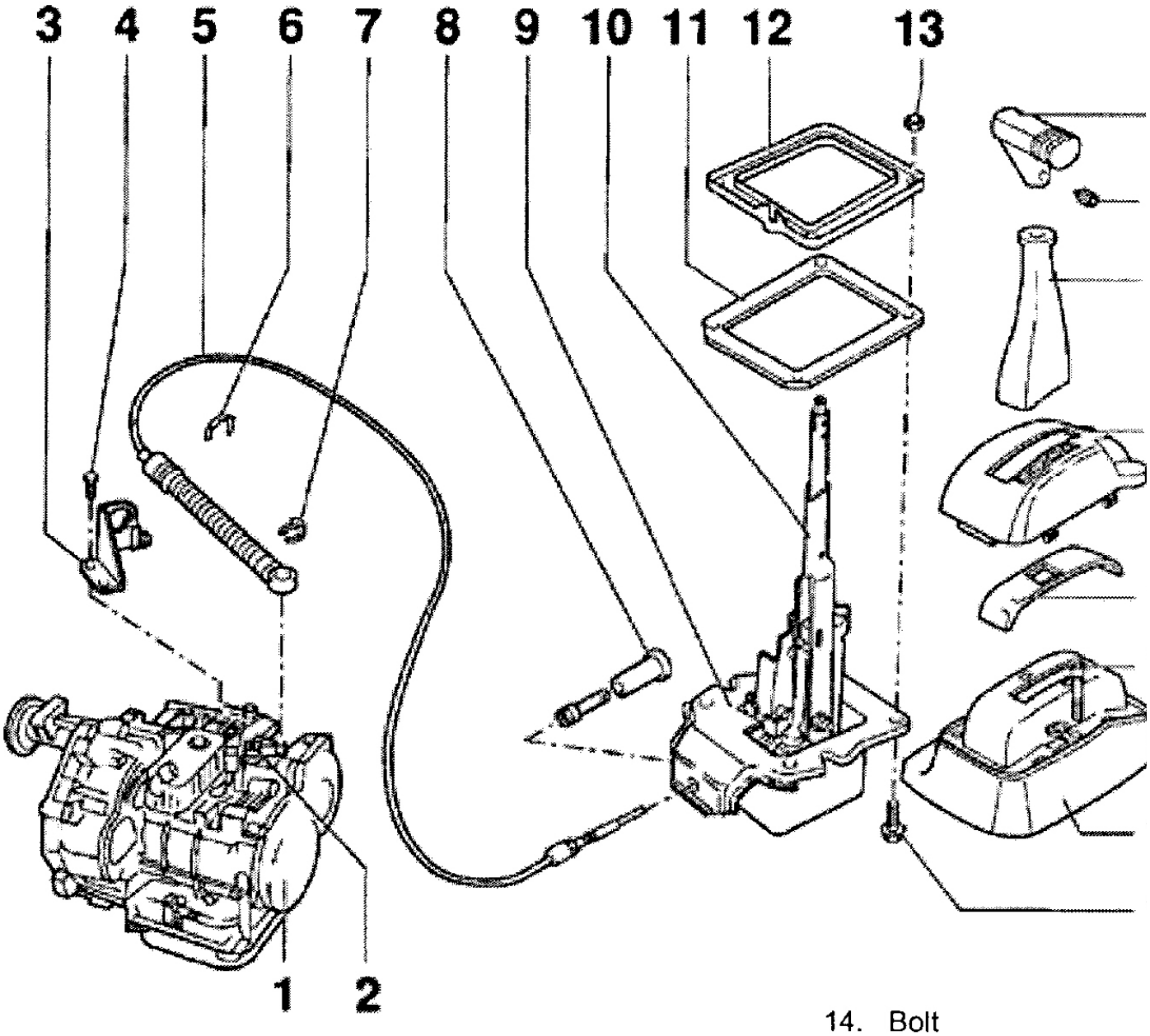

1. Transaxle
2. Lever
3. Support Bracket
4. Bolt
5. Selector Lever Cable With Guide Tube
6. Locking Washer
7. Locking Washer
8. Protective Sleeve
9. Selector Lever Housing
10. Selector Lever
11. Gasket
12. Frame
13. Nut
14. Bolt
15. Console
16. Bolt
17. Cover Strip
18. Cover
19. Selector Lever Trim
20. Selector Lever Hanc
21. Set Screw

G00204359

Fig. 7: Exploded View Of Selector Mechanism Components
Courtesy of VOLKSWAGEN UNITED STATES, INC.

 © 2004 Mitchell Repair Information Company, LLC.

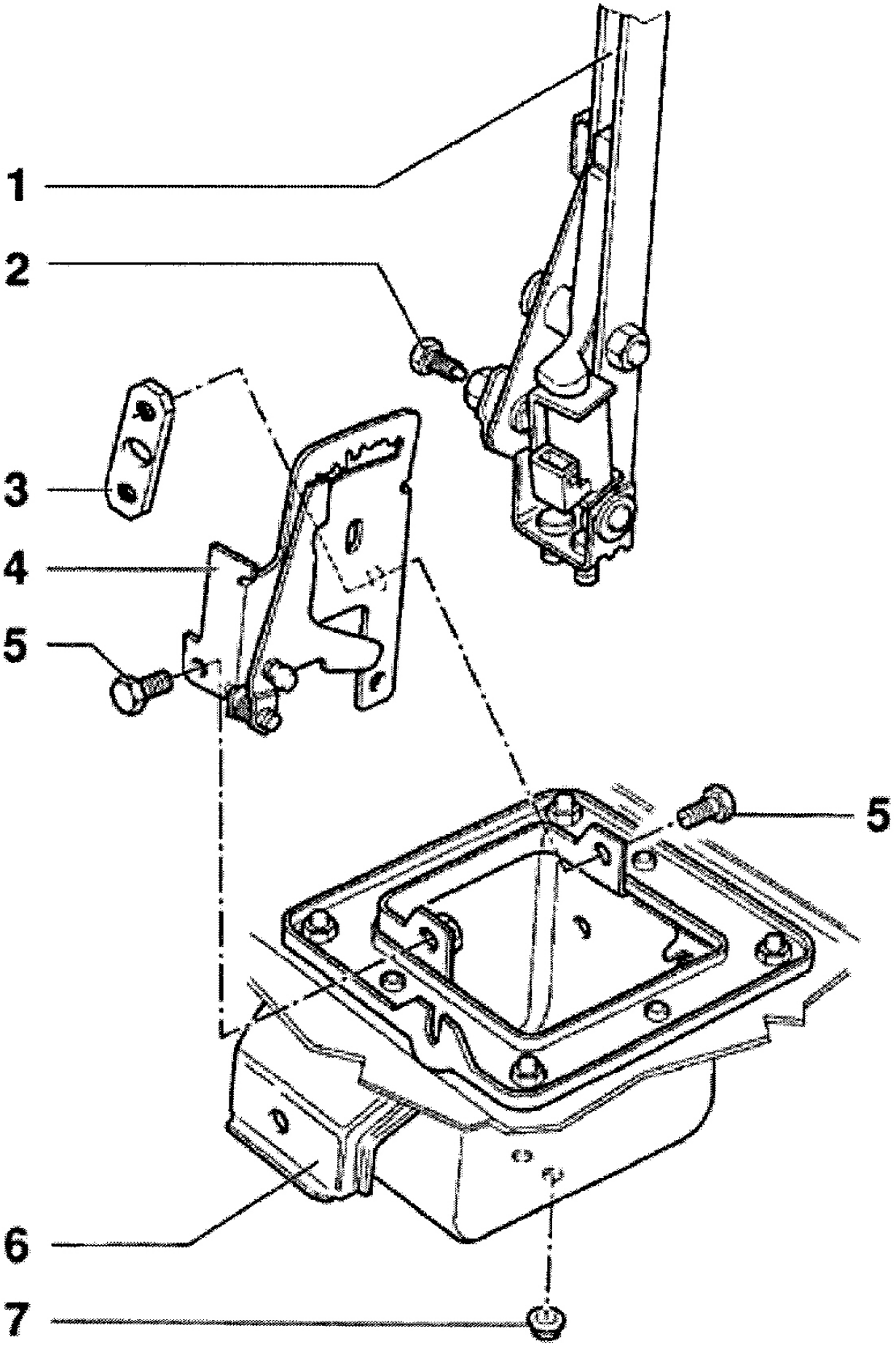

 © 2004 Mitchell Repair Information Company, LLC.

Fig. 8: Exploded View Of Selector Lever Components
Courtesy of VOLKSWAGEN UNITED STATES, INC.

LOCKING CABLE

NOTE: In the following procedure, numbers in parenthesis are shown in illustration.

NOTE: Locking cable must only be adjusted in its installation position. See Fig. 10 .

Shift selector lever into "P" position and turn ignition key to end (ignition off) position. Loosen locking cable nuts (1) and (2) at frame. See **Fig. 9** . Push locking lever (arrow) until it touches selector lever. Secure locking cable in this position on frame. After adjustment, ensure ignition key operates properly.

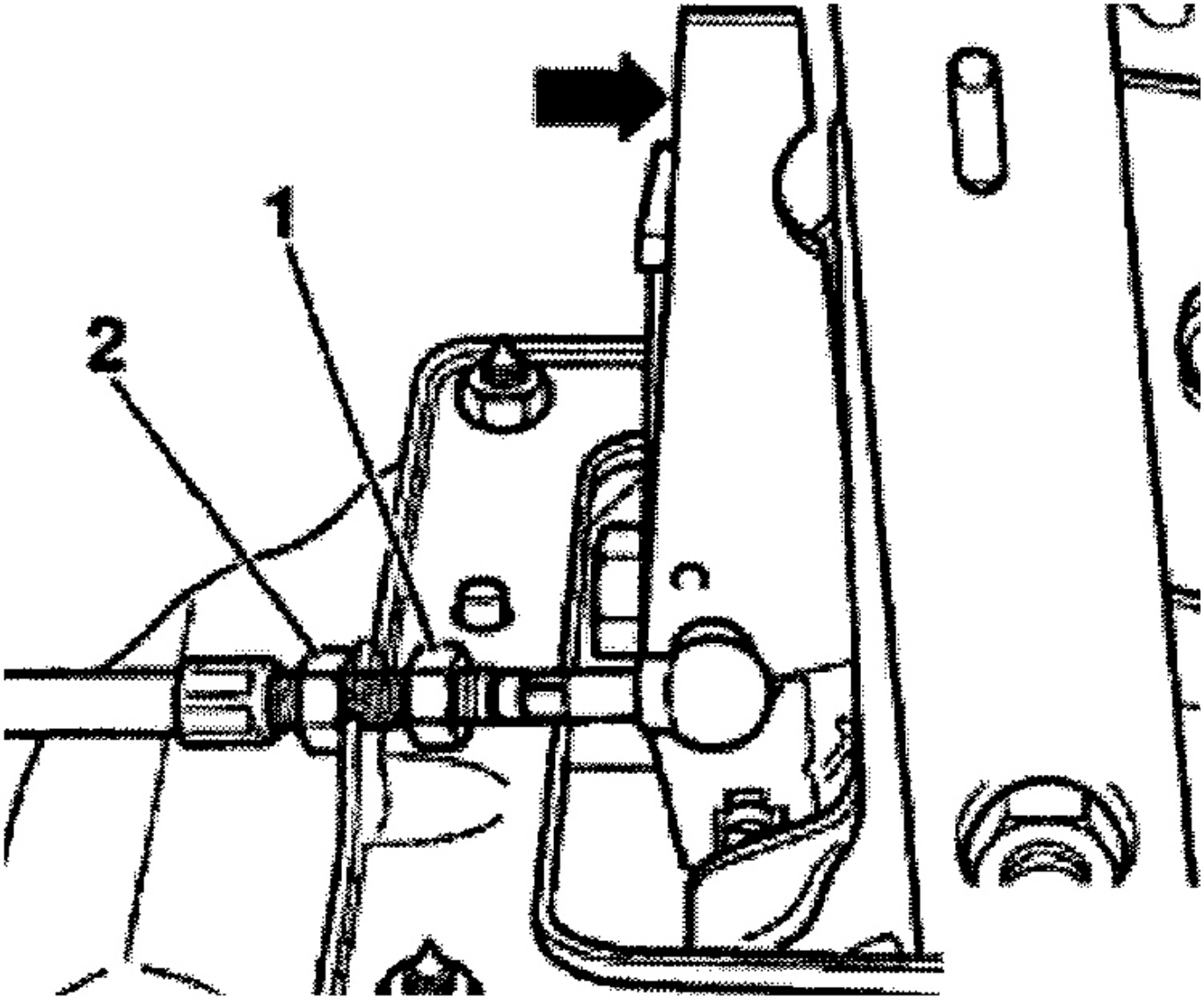

Fig. 9: Adjusting Locking Cable
Courtesy of VOLKSWAGEN UNITED STATES, INC.

REMOVAL & INSTALLATION

 © 2004 Mitchell Repair Information Company, LLC.

LOCKING CABLE

Removal & Installation

NOTE: In the following procedures, numbers in parenthesis are shown in illustration.

1. **NOTE: When battery is disconnected, vehicle computer and memory systems may lose memory data. Driveability problems may exist until computer systems have completed a relearn cycle.**

   CAUTION: Radio/cassette or radio/CD player is equipped with an anti-theft protection circuit. Whenever battery is disconnected, radio will go into anti-theft mode. When battery is reconnected, radio will display CODE, and will be inoperative until proper code number is entered. Obtain security code before disconnecting battery.

   Place selector lever in "P" position. Obtain radio security code (if equipped). Disconnect negative battery cable. Remove selector lever handle, trim, cover, cover strips and selector lever console. See **Fig. 7** .
2. Remove locking cable from frame and take off from locking lever ball head. Remove ignition switch trim. Press locking cable clip (4) out of ignition switch support and remove locking cable (2) from ball head. See **Fig. 10** . Remove footwell vent console. Take out locking cable.
3. To install, reverse removal procedure. Ensure proper routing of locking cable when installing. Adjust locking cable after installation. See **LOCKING CABLE** under ADJUSTMENTS.

 © 2004 Mitchell Repair Information Company, LLC.

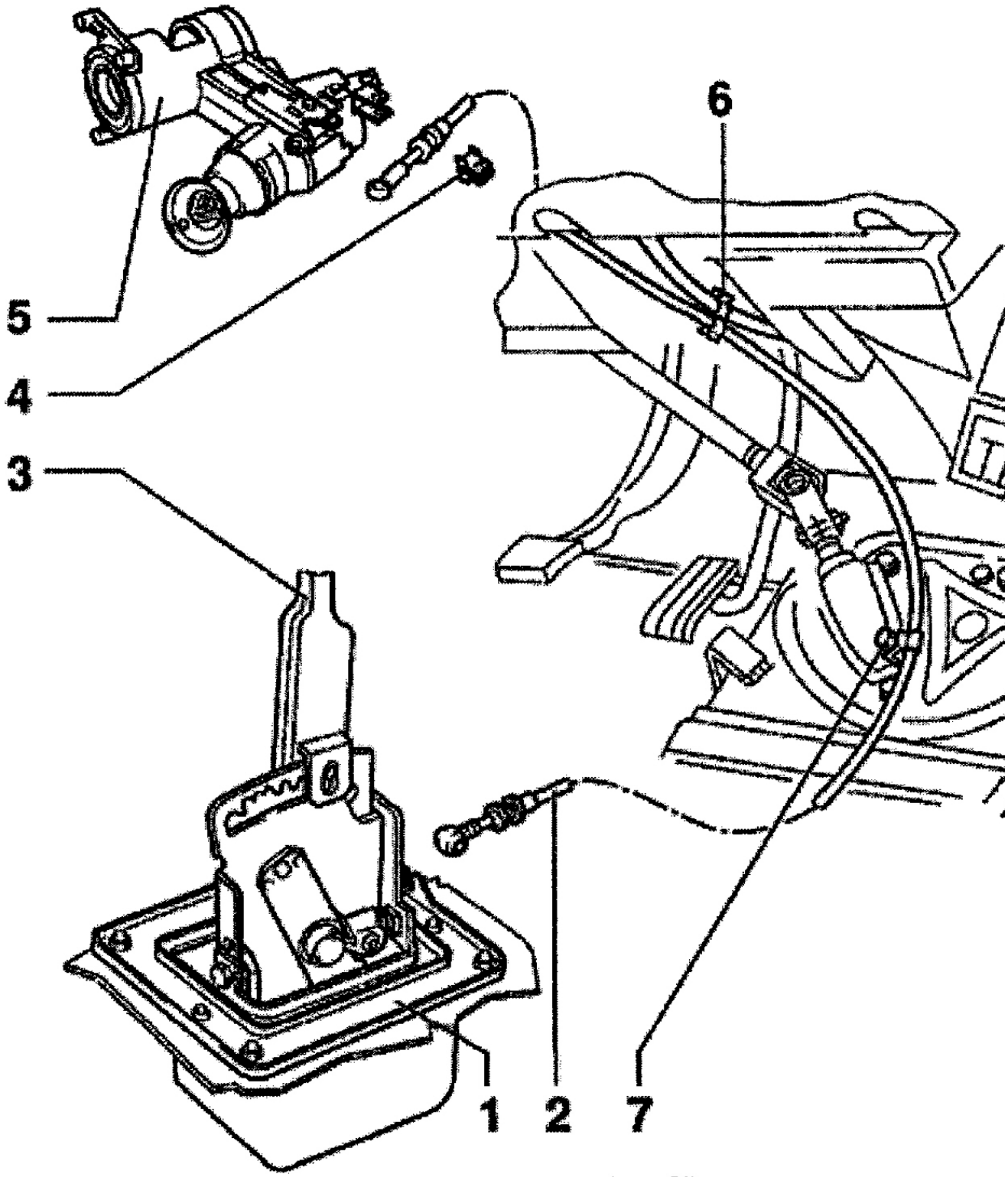

1. Frame
2. Locking Cable
3. Selector Lever
4. Clip
5. Ignition Switch
6. Mount
7. Mount

G00204362

Fig. 10: Removing Locking Cable
Courtesy of VOLKSWAGEN UNITED STATES, INC.

 © 2004 Mitchell Repair Information Company, LLC.

VALVE BODY ASSEMBLY

Removal & Installation

NOTE: In the following procedures, numbers in parenthesis are shown in illustrations.

NOTE: Code letters are stamped on a metal tab located on valve body for component identification. Metal tab must remain on the valve body. See Fig. 17 .

1. **WARNING: Do not run engine or tow vehicle with oil pan removed or when there is no ATF in transaxle.**

   Place container under the transaxle. Remove level plug (1). Remove plug seal from plug. Remove overflow pipe (2) and allow ATF to drain. See **Fig. 18** . Screw overflow pipe in onto stop.
2. Remove oil pan bolts, oil pan, gasket and AFT screen. To remove conductor strip, place Pry Bar (3373) onto stop under the solenoid valve plug. Pull plug off with pry bar in direction of arrow. Remove bolt (1). See **Fig. 11** .
3. **NOTE: When removing the valve body, the manual selector valve (1) remains in valve body. See Fig. 12 . Do not interchange manual selector valves of valve bodies.**

   Remove valve body bolts and valve body. Shift selector lever/shaft into "1" position. Pull manual selector valve out until it is just possible to unhook the operating rod (2). See **Fig. 12** . Secure manual selector valve so that it cannot fall out.
4. **NOTE: Always replace steel spring and bolt for manual selector valve.**

   Remove steel spring (arrow) and lever from selector shaft in transaxle. See **Fig. 13** . For better clarification, selector shaft is shown in illustration removed from transaxle.
5. Install steel spring and bolt to selector shaft. Do not tighten bolt at this time. Note installation direction of sealing plug. Pull sealing plug out of housing before removing and installing free wheel, otherwise the sealing plug and the "O" ring will be damaged. Moisten 2 new "O" rings with ATF and install to sealing plug. Insert sealing plug in hole in transaxle housing (arrow). See **Fig. 14** .
6. Secure operating rod onto manual selector valve by shifting selector lever/shaft into "1" position. Turn manual selector valve so that shoulder faces operating rod. Guide operating rod with manual selector valve into valve body. Tighten steel spring and bolt to the selector shaft.
7. To adjust operating rod for manual selector valve, move selector shaft to "P" position. Push operating rod (2) with manual selector valve (1) into valve body onto stop (direction of arrow) and tighten bolt (3) to 35 INCH lbs. (4 N.m). See **Fig. 15** . Ensure selector valve is resting against the stop. Counter-hold when tightening bolt. Always replace bolt and manual selector valve retaining clip.
8. Install valve body and bolts. Tighten bolts to 44 INCH lbs. (5 N.m). When installing conductor strip, route conductor strip as shown. See **Fig. 16** . Ensure conductor strip is not kinked or twisted. Before installing the ATF screen, insert seal in valve body. Firmly press ATF screen onto valve body. Install oil pan, gasket and bolts. Tighten bolts to 106 INCH lbs. (12 N.m).

 © 2004 Mitchell Repair Information Company, LLC.

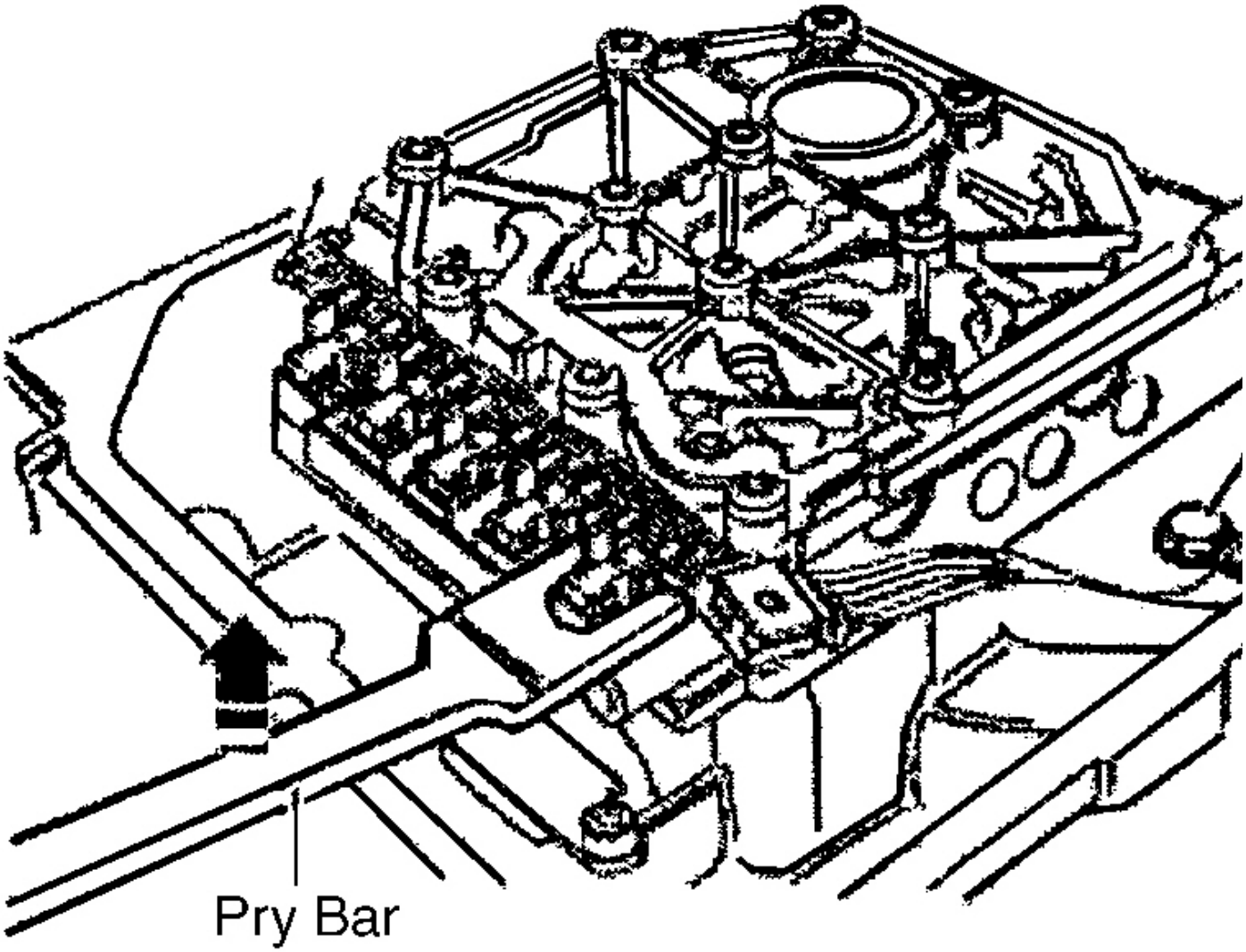

Fig. 11: Prying Up On Conductor Strip
Courtesy of VOLKSWAGEN UNITED STATES, INC.

 © 2004 Mitchell Repair Information Company, LLC.

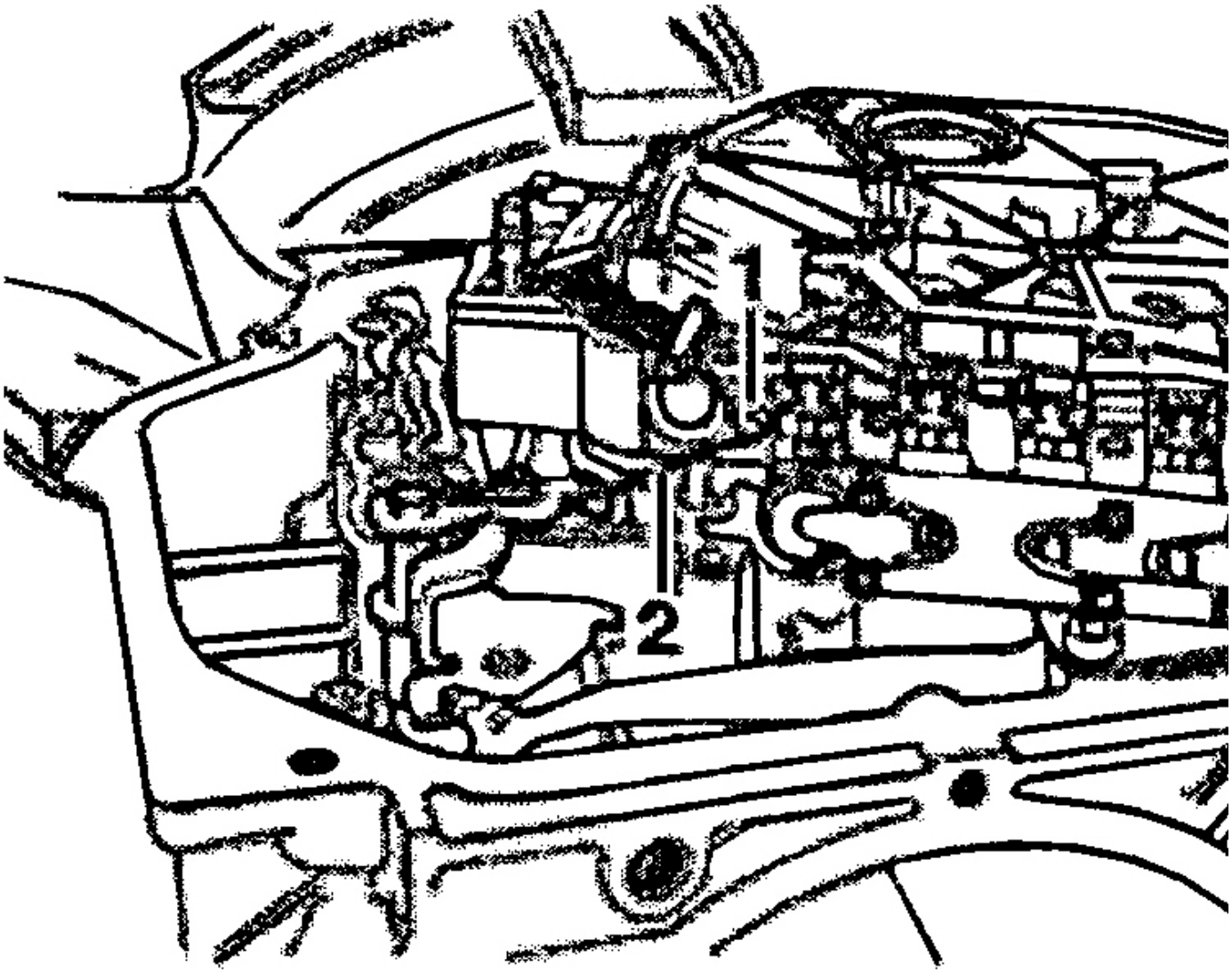

G00204364

Fig. 12: Removing Valve Body & Unhooking Operating Rod
Courtesy of VOLKSWAGEN UNITED STATES, INC.

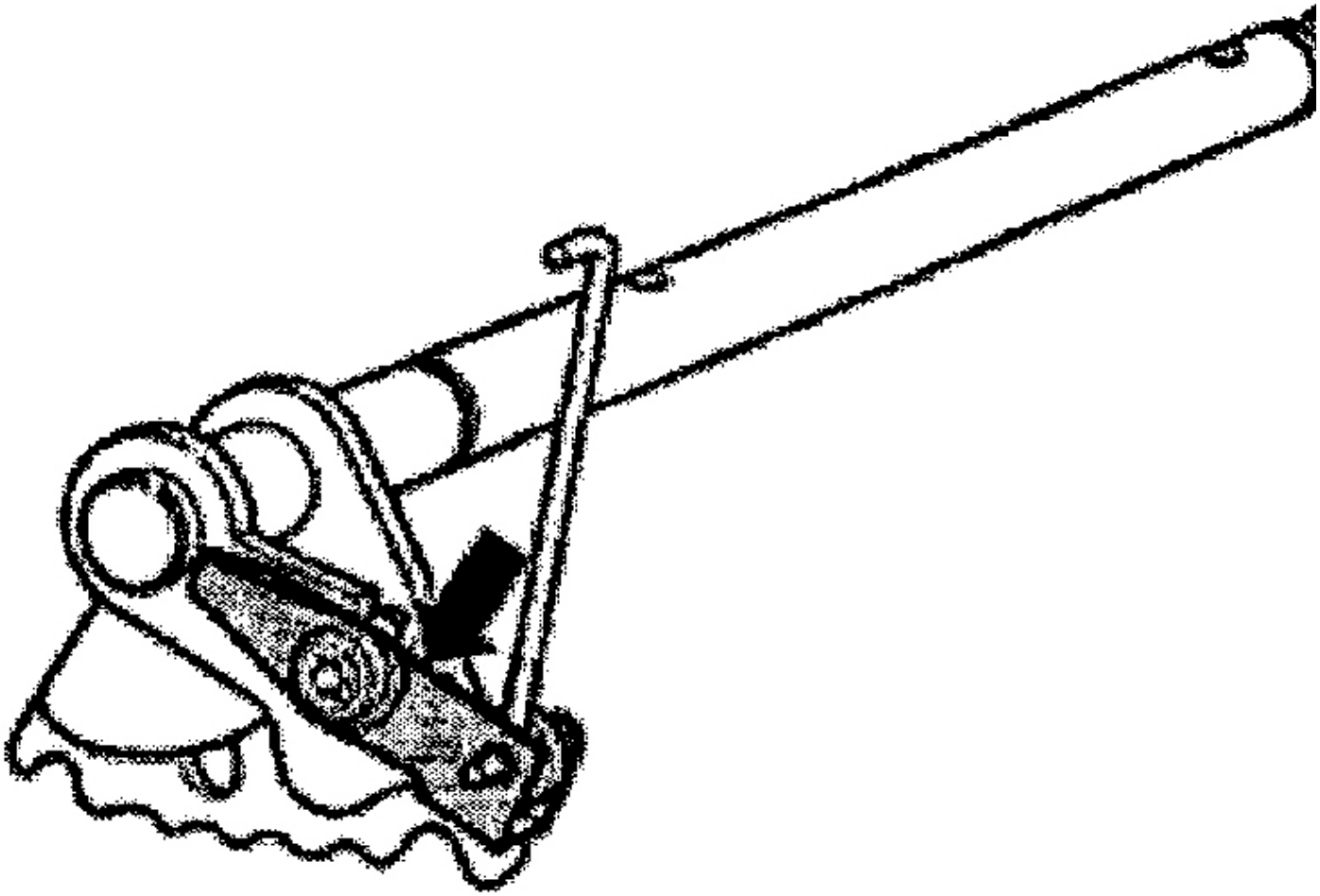

G00204365

Fig. 13: Locating Steel Spring On Selector Shaft
Courtesy of VOLKSWAGEN UNITED STATES, INC.

 © 2004 Mitchell Repair Information Company, LLC.

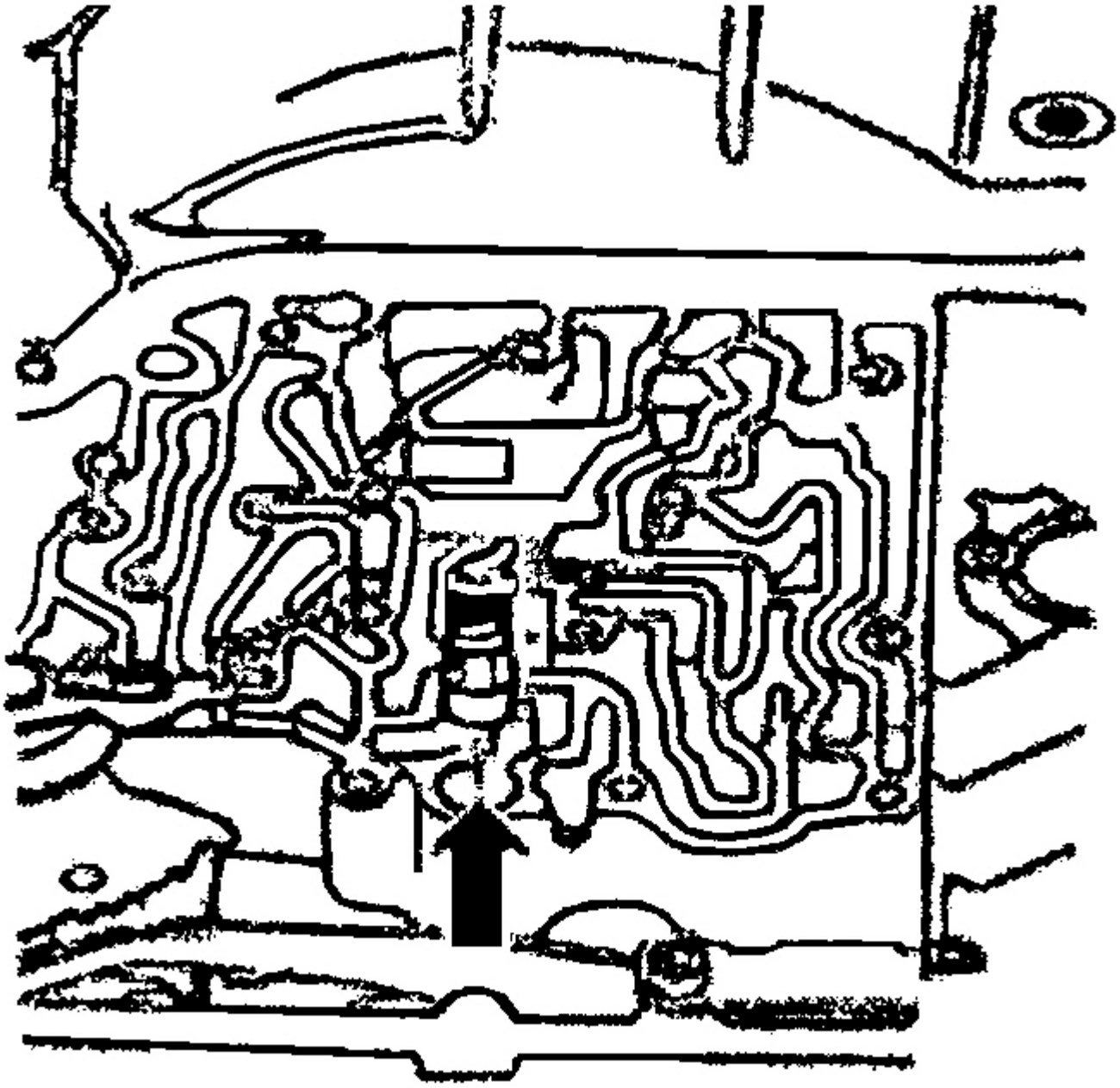

Fig. 14: Inserting Sealing Plug
Courtesy of VOLKSWAGEN UNITED STATES, INC.

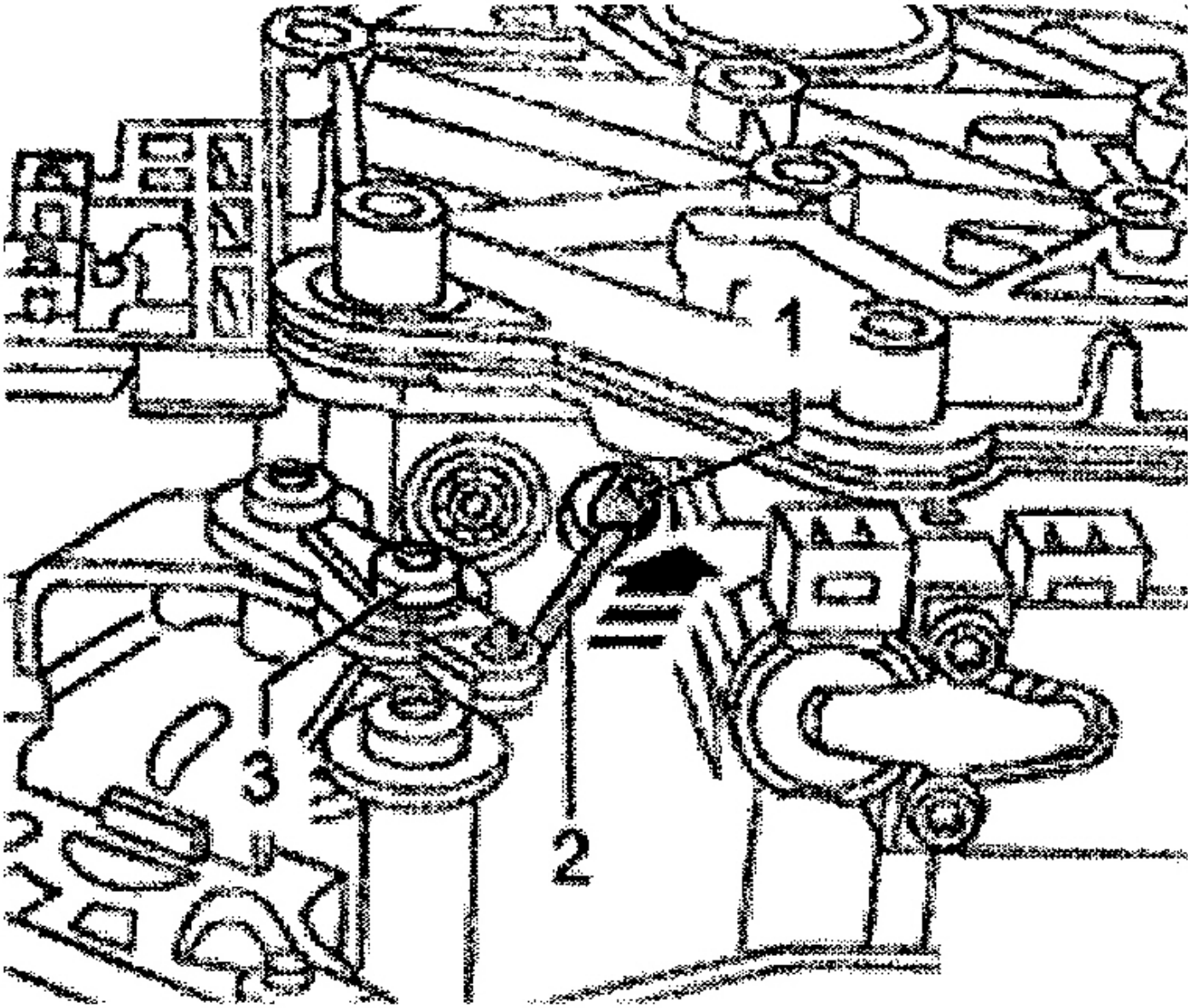

G00204367

Fig. 15: Adjusting Operating Rod For Manual Selector Valve
Courtesy of VOLKSWAGEN UNITED STATES, INC.

 © 2004 Mitchell Repair Information Company, LLC.

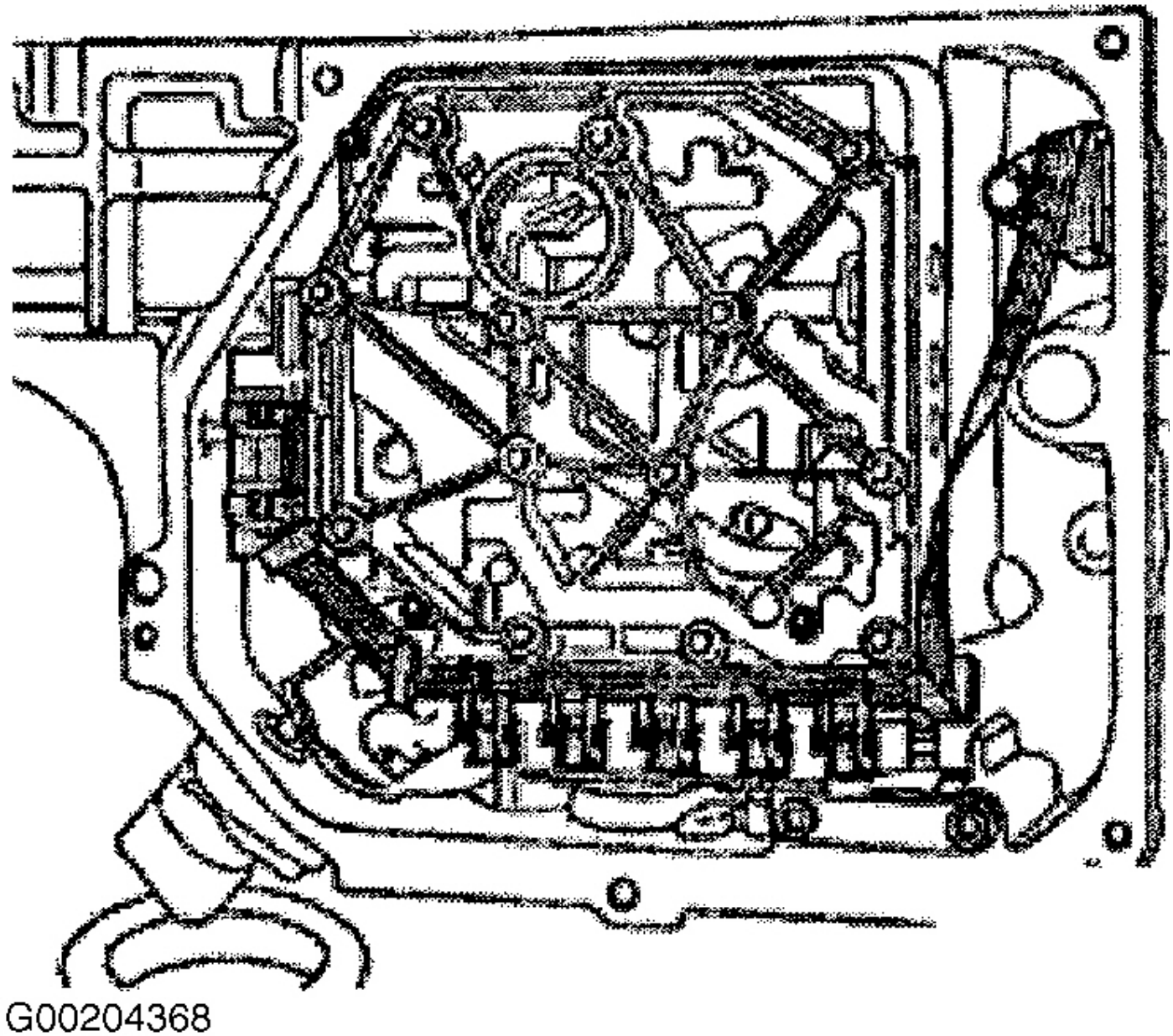

Fig. 16: Installing Conductor Strip
Courtesy of VOLKSWAGEN UNITED STATES, INC.

 © 2004 Mitchell Repair Information Company, LLC.

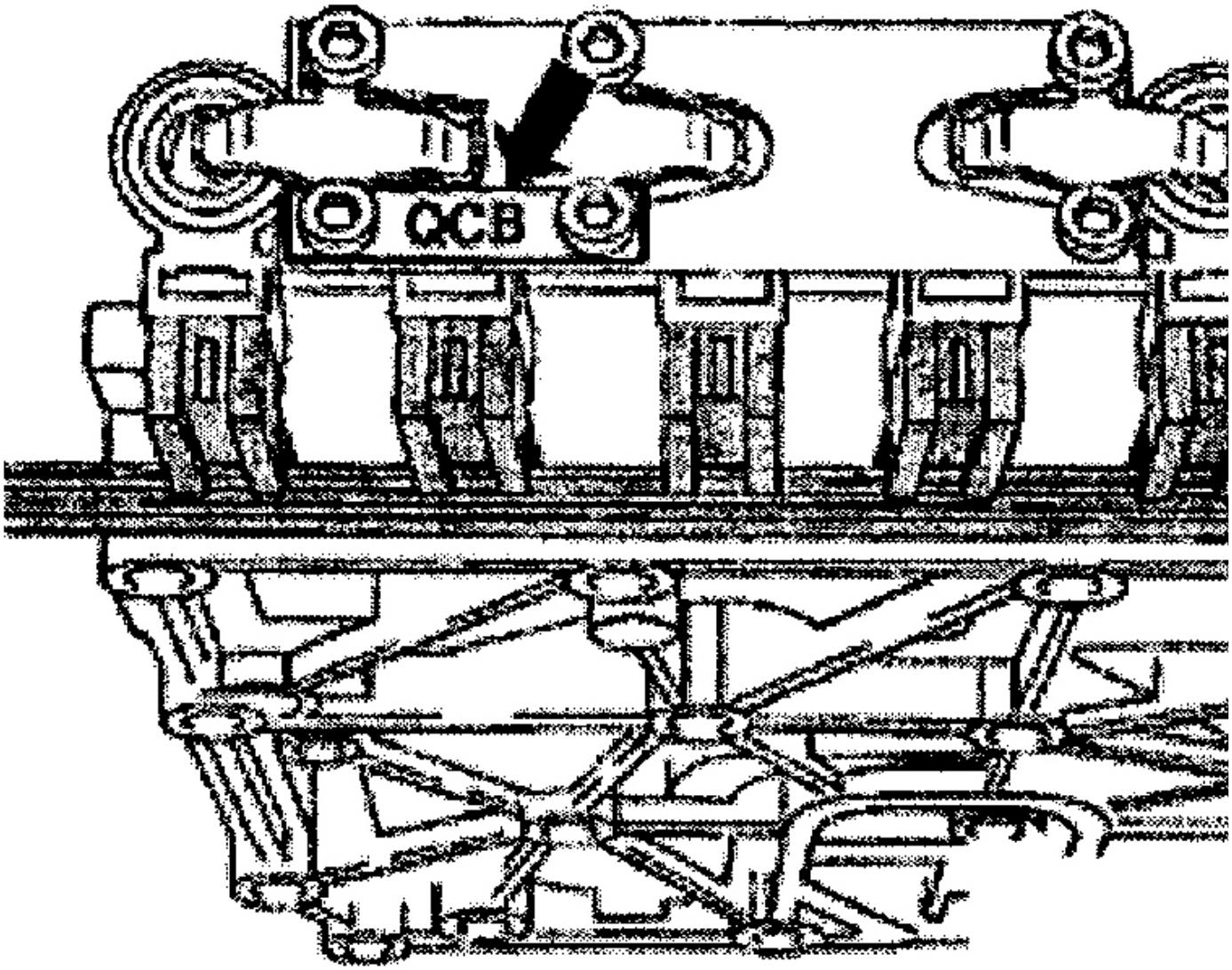

G00204369

Fig. 17: Locating Valve Body Identification Tab
Courtesy of VOLKSWAGEN UNITED STATES, INC.

 © 2004 Mitchell Repair Information Company, LLC.

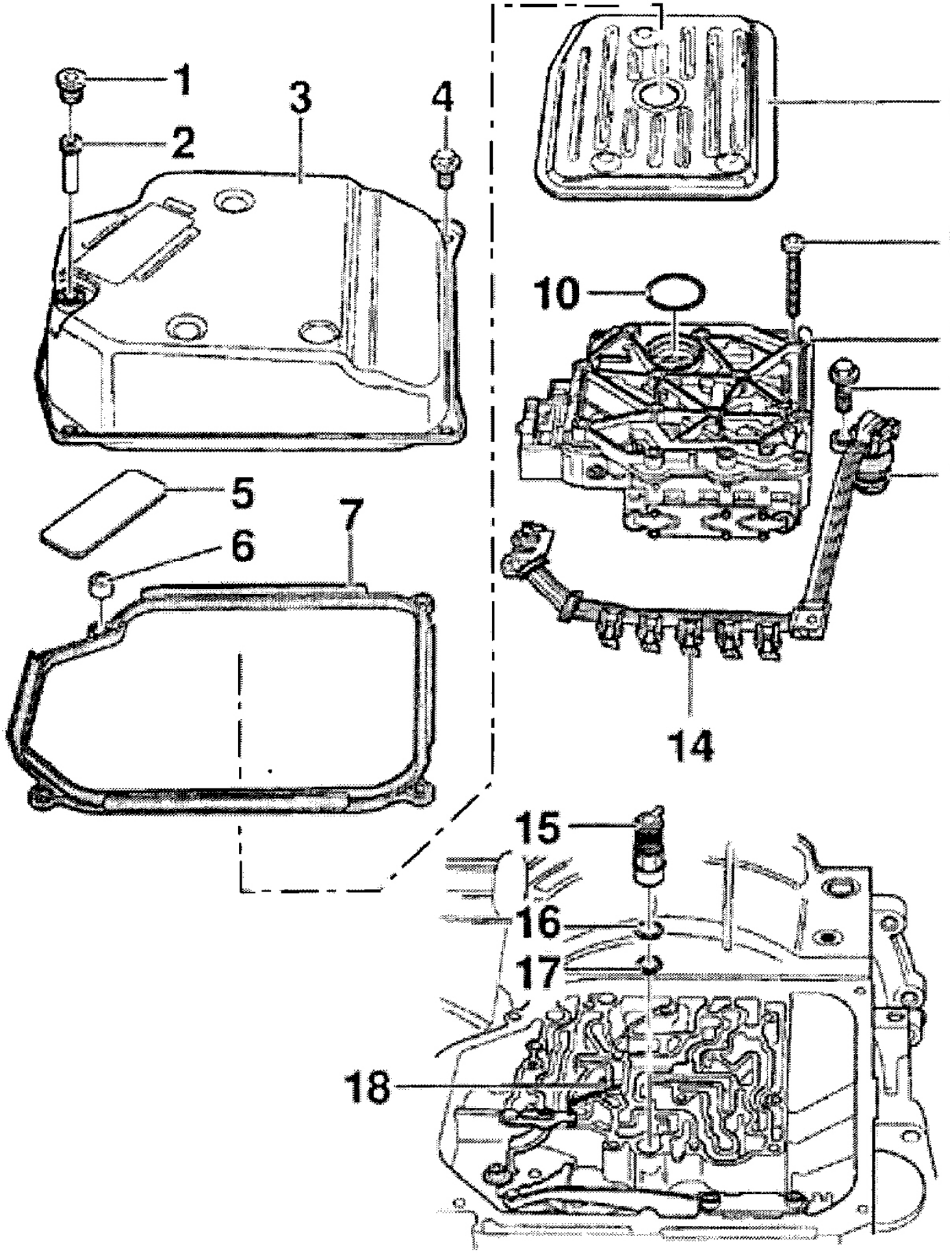
1
2
3
4
5
6
7
10
14
15
16
17
18

Fig. 18: Exploded View Of Valve Body Components
Courtesy of VOLKSWAGEN UNITED STATES, INC.

TORQUE SPECIFICATIONS

TORQUE SPECIFICATIONS

Application	Ft. Lbs. (N.m)
Final Drive Filler Plug	15 (20)
Selector Lever Cable Adjustment Bolt	15 (20)
	INCH Lbs. (N.m)
ATF Level Plug	133 (15)
Oil Pan Bolt	106 (12)
Valve Body Bolt	44 (5)

 © 2004 Mitchell Repair Information Company, LLC.