Volkswagen Technical Site - http://volkswagen.msk.ru

KostRepair

1986 Volkswagen Jetta GLI , In-Line4

1986 AUTOMATIC TRANSMISSIONS

Type 010 3-Speed Diagnosis & Overhaul

APPLICATION

TRANSAXLE APPLICATION

Application	Transaxle Model
Cabriolet	Type 010
Golf	Type 010
Jetta	Type 010
Scirocco	Type 010

IDENTIFICATION

Transaxle type number is cast into top of transaxle case over transaxle portion. Code letters and date of manufacture are stamped into machined flat on bellhousing rim. Valve body identification tag is secured with valve body mounting screws. Torque converter code letter is stamped on side of attaching lug.

TYPE 010 COMPONENT IDENTIFICATION

Component	Identification Code
Transaxle Type	010
Transaxle Model	TJ Or TNA
Valve Body	FG
Torque Converter	K

DESCRIPTION

Transaxle assembly consists of 2 main units: Automatic transaxle and final drive assembly. The transaxle housing contains 2 planetary gear sets, 2 multiple-disc clutches, 1 brake band and servo, 1 multiple-disc brake, a one-way clutch and a hydraulic control system. The final drive housing contains torque converter, governor for transaxle, three-gear type ring and pinion assembly and differential unit.

CAUTION: Never tow a vehicle with this automatic transaxle with the front wheels on the ground. Bearings can be damaged by lack of lubrication. If vehicle must be towed, place selector in "N" and lift front wheels. Do not tow vehicle backwards.

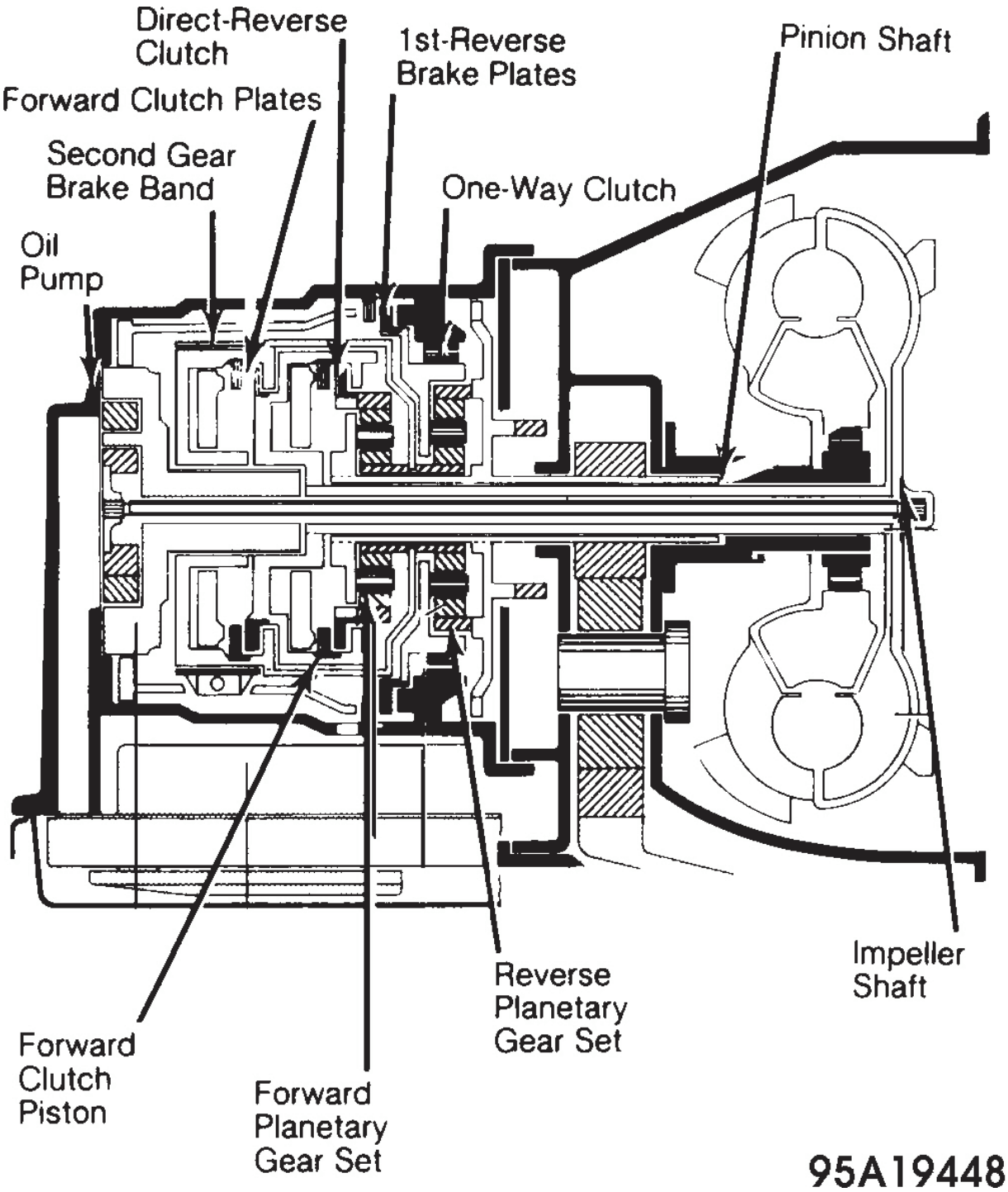

Fig. 1: Cross-Sectional View Of Volkswagen Type 010 Automatic Transaxle Assembly

LUBRICATION & ADJUSTMENTS

NOTE: **See appropriate SERVICING article.**

ON-VEHICLE REPAIRS

DRIVE AXLE SHAFTS

NOTE: **See appropriate AXLE SHAFTS article in DRIVELINE/AXLES.**

TROUBLE SHOOTING

NOTE: **The trouble shooting diagnosis steps are arranged in the order of probability.**

NO MOVEMENT

In Any Gear

Low ATF fluid level. Manual lever cable disconnected from manual valve. Drive plate broken or not bolted to torque converter. Main pressure valve sticking. Oil pump or pump drive faulty/no pressure. Broken gear or shaft, possibly in final drive.

In Forward Gears

Forward clutch internal damage (worn plates, broken diagram spring, seals leaking, etc.).

In 1st Gear In "D" Or "2"

1st gear one-way clutch not holding. Forward clutch internal damage.

In 1st Gear in "1"

1st-reverse brake plates worn or burnt.

In 2nd Gear

2nd gear brake band out of adjustment or burnt, or servo defective.

In 3rd Gear

Direct-reverse clutch internal damage (worn and/or burnt plates, seals leaking, etc.).

In Reverse

1st-reverse brake plates worn or burnt. Direct-reverse clutch internal damage. Forward clutch seized in applied position.

IRREGULAR MOVEMENT

In All Forward Gears

Check for low ATF fluid level and/or oil pump pickup strainer partially clogged.

NO UPSHIFT

Into 2nd Gear

Governor drive defective. Governor dirty or improperly assembled during repair. Accumulator cover plate loose. Valve body assembly dirty. 1st/2nd gear shift valve sticking.

Into 3rd Gear

Governor dirty. Valve body assembly dirty. 2nd/3rd gear shift valve sticking. Sealing balls missing from transfer plate.

NO DOWNSHIFT

Into 2nd &/Or 1st Gear

Governor or valve body dirty. Check 1st/2nd and/or 2nd/3rd gear shift valves for sticking in valve body.

DELAYED ENGAGEMENT ON UPSHIFTS

1-2 Upshift

Low fluid level. Dirty valve body assembly. 2nd gear brake band worn, burnt or out of adjustment. 2nd gear servo defective, possible wrong piston.

2-3 Upshift

Low fluid level. Dirty valve body. 2nd gear brake band worn, burnt or out of adjustment. 2nd gear servo defective. Direct-reverse clutch plates worn or burnt. Wrong direct-reverse clutch installed.

SHIFT SPEEDS ABOVE OR BELOW NORMAL

Governor or valve body assembly dirty, damaged or improperly installed. Paper gasket for transaxle or intermediate plate damaged.

INCORRECT OPERATING PRESSURES

Check for defective oil pump, leakage in housing, oil leaks at oil seals and sealing surfaces. Check control valves for sticking.

CLUTCH & BAND APPLICATIONS

CLUTCH & BRAKE BAND APPLICATION CHART (ELEMENTS IN USE)

Lever Position	Forward Clutch	Direct Reverse Clutch	First-Reverse Brake	Second Gear Band	One Way Clutch
Drive					
First	×				Holding
Second	×			×	Overrun
Third	×	×			Overrun
2-Intermed					
First Gear	×				Holding
Second Gear	×			×	Overrun
1-Low	×		×		
Reverse		×	×		
Neutral/Park-All clutches, brake & bands released &/or ineffective.					

Fig. 2: Clutch & Brake Band Application Chart (Elements In Use)

PERFORMANCE TESTS

ROAD TEST

1. Before road testing, ensure that fluid level is correct and in good condition. Check control linkage adjustments and correct as necessary. During test, transaxle should upshift and downshift at correct speeds. See **SHIFT SPEED SPECIFICATIONS** table.
2. All shifts may vary somewhat due to production tolerances or tire size. Quality of shifts is most important factor. All shifts should be smooth, responsive, and with no slippage or engine speed runaway.
3. Slippage or engine runaway in any gear usually indicates clutch, band, or brake problems. Slipping unit in particular gear can be identified by noting transaxle operation in other selector positions and comparing which internal units are applied. See **Fig. 2**.
4. This process of elimination can be used to detect any unit which slips and to confirm proper operation of good units. Actual cause of malfunction usually cannot be easily decided.
5. Practically any condition can be caused by leaking hydraulic circuits or sticking valves.

Therefore, unless definite problem exists, do not disassemble transaxle until hydraulic pressure test has been made.

NOTE: **If shift points are incorrect or transaxle does not kick down, check accelerator cable adjustments.**

SHIFT SPEEDS SPECIFICATIONS

Application	Full Throttle (MPH)	Kickdown (MPH)
I.D. Code "TJ"		
1-2 Upshift	23-37	44-47
2-3 Upshift	54-68	76-77
3-2 Downshift	38-53	71-73
2-1 Downshift	16-20	34-36
I.D. Codes "TNA"		
1-2 Upshift	21-33	40-43
2-3 Upshift	50-62	69-71
3-2 Downshift	36-49	66-67
2-1 Downshift	15-18	31-33

HYDRAULIC PRESSURE TEST

1. Connect 0-150 psi (0-10 kg/cm ^{2}) pressure gauge to main pressure test point on case (adjacent to servo cover). See **Fig. 3**. With transaxle, at normal operating temperature, place selector lever in "D".
2. Operate vehicle above 31 MPH, release throttle and read pressure on gauge, at engine idle. Ensure idle speed is correct. Pressure reading may be incorrect if idle speed is below specification.
3. With transaxle in "D", operate at full throttle (with vehicle speed above 25 MPH). Note pressure. With vehicle at rest, place selector lever in "R" position. Note reading on pressure gauge with engine idling.
4. If pressures do not meet specifications in **MAIN PRESSURE SPECIFICATIONS** table. If pressures obtained do not match those shown in table, see **INCORRECT OPERATING PRESSURES** under TROUBLE SHOOTING. Remove pressure gauge and install pressure plug.

MAIN PRESSURE SPECIFICATIONS

Application	psi (kg/cm ^{2})
"D" @ Idle (1)	41-42 (2.9-3.0)
"D" @ Full Throttle (2)	83-84 (5.85-5.95)
"R" @ Idle (1)	131-145 (9.1-10.0)

(1) Test should be performed on a dynamometer whenever possible. Perform idle test with vehicle stationary.

(2) Full throttle test up to 31 MPH.

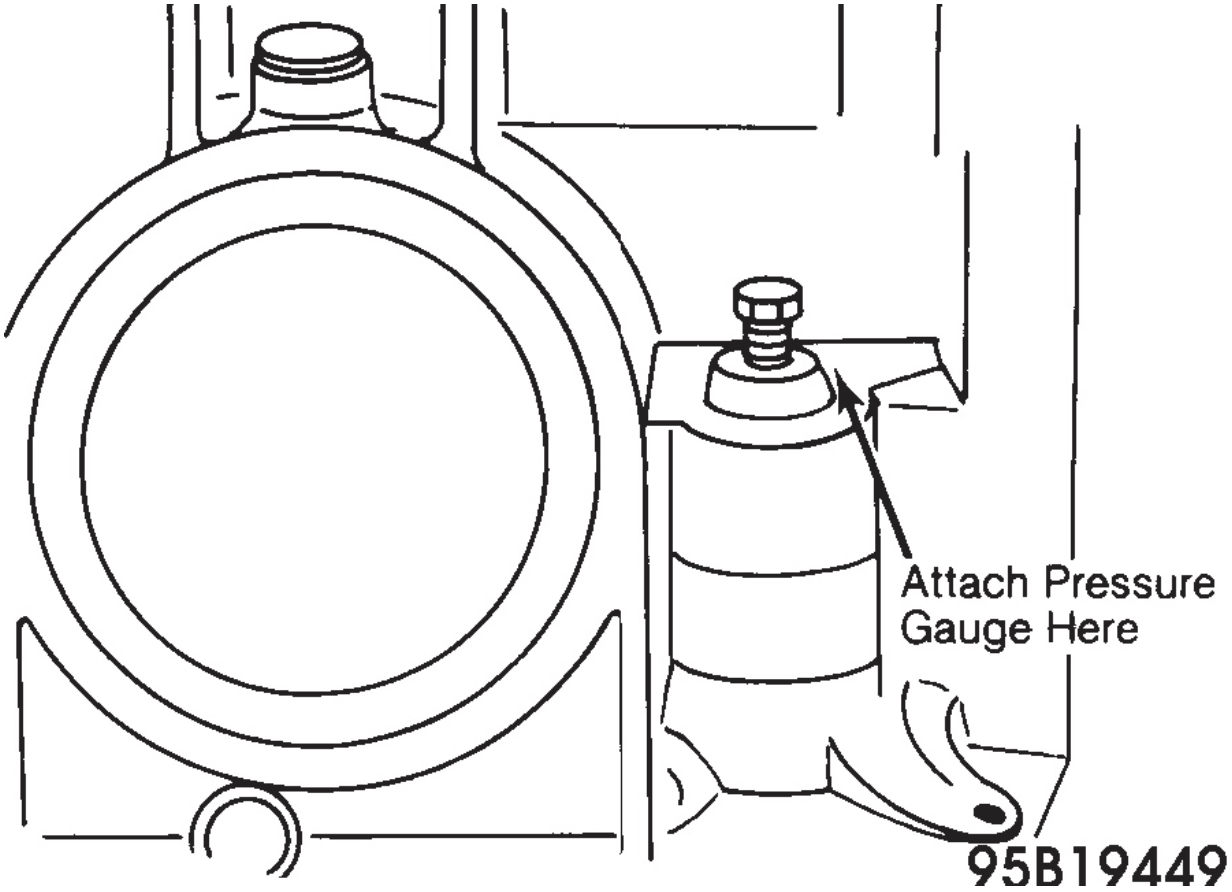

Fig. 3: Pressure Test Port Location

STALL SPEED TEST

Testing Precautions

Check stall speed only if vehicle shows poor performance or acceleration (despite a properly tuned engine). When making test, do not hold throttle open any longer than the time it takes to read tachometer or torque convertor will overheat. Maximum stall speed test time is 20 seconds. If test must be repeated, wait at least 20 seconds.

If engine speed exceeds limits shown, release accelerator immediately as clutch or band slippage is indicated. See **STALL SPEED SPECIFICATIONS** table.

Testing Procedure

1. With engine at normal operating temperature, connect a tachometer to engine. Start engine and set parking and service brakes. Place selector lever in "D". Depress accelerator briefly to full throttle and note maximum RPM obtained. Repeat test with selector lever in "1" position. Engine speed should be within limits shown in table.
2. Depress accelerator briefly to full throttle and note maximum RPM obtained. Repeat test with selector lever in "1" position. Engine speed should be within limits shown in **STALL SPEED SPECIFICATIONS** table.

NOTE: Normal stall speed will drop about 125 RPM per 3200 feet, altitude (4000 feet with E-Mode). Also, stall speed will drop slightly at high ambient temperature.

STALL SPEED SPECIFICATIONS

Application	Stall RPM
Transaxle Code Letters	
TJ (1)	2200-2500
TNA	2320-2570
(1) Torque converter code letter "K".	

STALL SPEED TEST RESULTS

1. If stall speed is too, high in "D", but OK in "l", one-way clutch is defective. If stall speed is too high in both ranges, forward clutch is faulty.
2. If stall speed is about 200 RPM below normal, check engine operation (ignition timing, fuel injection, compression). If stall speed is about 400 RPM too low, stator one-way clutch in torque converter is probably defective and converter should be replaced.

REMOVAL & INSTALLATION

TRANSAXLE ASSEMBLY

NOTE: See appropriate REMOVAL & INSTALLATION article.

TRANSAXLE INTERNAL LINKAGE (PARKING LOCK, KICKDOWN & MANUAL VALVE LINKAGE)

Removal & Disassembly

1. Remove oil pan and valve assembly from transaxle. Note linkage component locations, for reassembly reference.
2. Remove "E" clip from parking lock operating lever pin. Detach parking lock pawl spring from under pawl. Detach "E" clip from operating rod guide pin. Pull operating rod assembly out of parking lever and detach from manual washer, from kickdown operating lever shaft. Remove valve operating lever.
3. Slide parking lever off pin. From inside transaxle case, detach small kickdown lever nut, with washer, from kickdown operating lever shaft. Remove kickdown valve operating lever.
4. Detach large manual lever retainer nut, with flat and lock washers, from cable lever. Slide manual lever off of cable lever. If necessary, pull cable lever from transaxle case. Detach shaft and operating levers as needed. Discard "O" rings. See **Fig. 4**.

Inspection

1. Check parking lever roller and roller spring for excessive wear, damage and ease of movement. Inspect parking lock pawl, kickdown lever detent notches and manual lever detent notches for excessive wear or damaged.
2. Check pin for parking lock pawl for location in case and straightness. If any linkage components are excessively worn or damaged, replace components as an assembly.

Reassembly & Installation

1. To complete installation, reverse removal procedures. To prevent ATF leaks when installing pin for parking lock pawl, ensure end of pin is flush with transaxle case edge.
2. Install spring under parking lock pawl so that it will retract the pawl from engagement with

notches in the periphery of the annular gear flange. Check the operation of the parking lock mechanism before installing valve body.

3. If cable lever was removed, install new "O" rings, lubricate with ATF and slide into transaxle case. When installing operating lever for kickdown valve, ensure angled end of lever points toward center of transaxle.

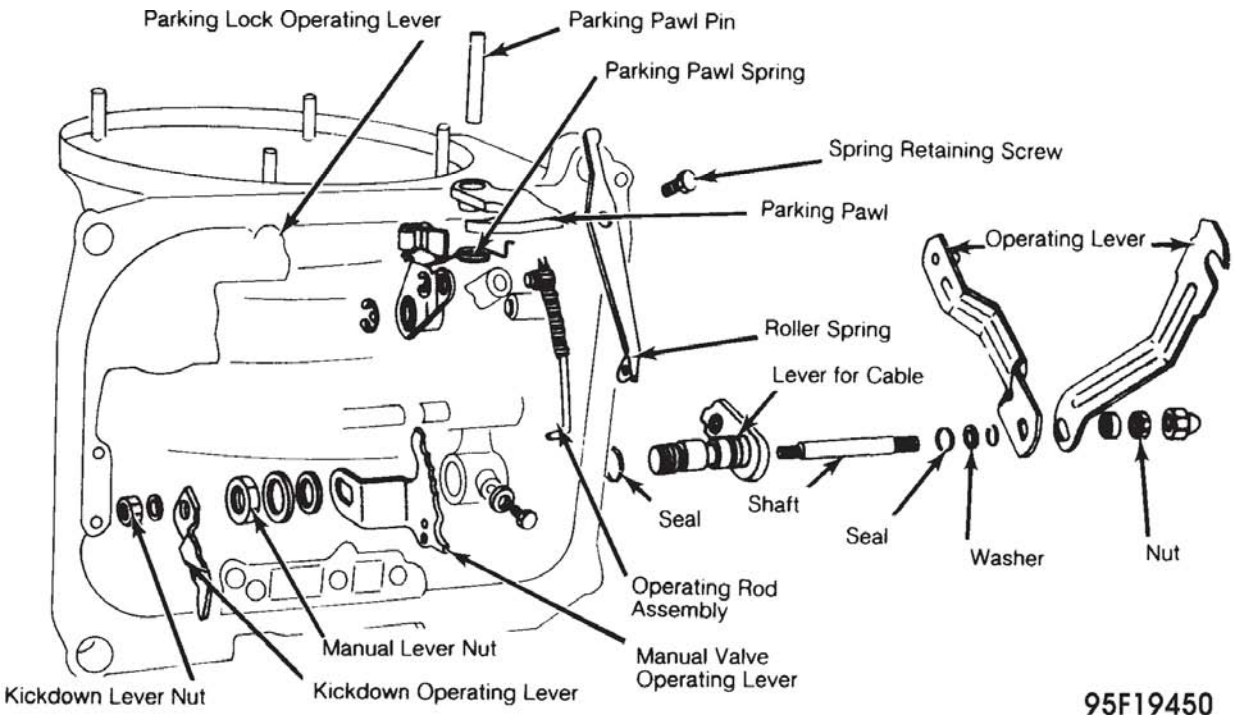

Fig. 4: Bottom View Of Transaxle Case Showing Parking Lock, Kickdown & Manual Valve Linkage

VALVE BODY ASSEMBLY

Removal

1. Raise and support vehicle. Drain ATF. Detach oil pan mounting screws, remove oil pan and discard gasket. Detach mounting screws holding pump pick-up's ATF strainer to valve body assembly, then remove strainer.
2. Detach 10 (of 11) mounting bolts holding valve body assembly. Keep 1 bolt (near accumulator piston spring) installed so valve body does not fall.
3. While supporting valve body, remove remaining bolt. Remove valve body assembly. On transaxles through model No. 20 040, remove pump-to-valve body ATF strainer and discard. Do not replace this strainer.
4. If accumulator piston and spring require inspection, remove 3 galvanized screws from accumulator cover plate. Remove cover plate, spring and piston.
5. If necessary, use circlip expanding pliers inserted into spring recess of piston to withdraw piston from transaxle case. Inspect accumulator piston and note if sealing ring is separate or permanent type.

NOTE: On accumulator piston with separate sealing ring, install ring with lip toward pressure side of piston. Both separate and bonded sealing ring pistons are interchangeable.

Installation

1. If accumulator piston was removed, lubricate sealing ring with ATF and install piston, spring and cover. Tighten mounting screws. If new valve body is being installed, ensure correct code letter of old valve body matches new valve body.
2.

   NOTE: The code letter is the only reliable indication that the valve body is suitable for the vehicle.

   Position new valve body assembly on transaxle with manual valve and kickdown valve correctly engaged with their operating levers. Attach valve body assembly to transaxle case with 1 mounting bolt (near accumulator).
3. Install remaining bolts. Working in a diagonal pattern, gradually tighten all mounting bolts. Install ATF strainer and tighten mounting bolts.
4.

   CAUTION: Do not use sealer on oil pan gasket. Any surplus may find its way into the ATF and cause control valve(s) to stick. Never tighten oil pan mounting bolts to more than 15 ft. lbs. (20 N.m) in an attempt to cure a leaking gasket. Overtightening will deform the pan and make it impossible to obtain a good seal. Always install a new gasket to correct leaks.

   Install ATF oil pan (with new gasket) and tighten mounting bolts gradually, in a diagonal pattern. Refill transaxle with new ATF, warm engine to operating temperature and recheck ATF level.

GOVERNOR

NOTE: Governor is located beneath a round, pressed steel cover, on top of final drive housing, just right of transaxle case. The cover is held in place with a spring wire clip. Governor may be removed with transaxle in vehicle.

Removal

1. Thoroughly clean governor housing and governor cover so that dirt cannot accidentally enter transaxle as cover is removed. Pry off spring wire clip that holds governor to transaxle housing.
2. Remove cover and discard gasket. Withdraw governor by pulling with a twisting motion to allow drive gear to disengage from helical gear on transaxle's annulus gear flange.
3. Inspect thrust plate and drive end of governor shaft for wear and/or scoring. Replace worn or damaged parts.

Installation

Ensure governor assembly installed is correct replacement part. Governor flange should be marked with an "A" on all gasoline engined vehicles. To install governor assembly, reverse removal procedure. Turn governor, as it is installed, to engage drive gear.

TRANSAXLE HOUSING STUDS

Removal & Installation

If a transaxle housing stud is broken or has damaged threads, replace stud with one of the same type. Transaxle-to-final drive unit mounting studs (900 029 01) should project out of case no more than 1.732" (44 mm).

When replacing transaxle mounting stud (Short Stud 014 517 01 and Long Stud 014 692 01), ensure stud projects the proper amount. Short stud should project .551" (14 mm) and long stud should project 1.339" (34 mm) from case.

TORQUE CONVERTER

NOTE: The torque convertor only requires removal when seal or bushing replacement is needed or to clean unit when transaxle failure has contaminated the ATF.

CAUTION: Do not rock or tilt convertor during removal or installation. Damage to seal, stator one-way clutch or other components in convertor hub can occur.

Removal

Remove transaxle assembly. Remove wire or securing bar that was installed across mouth of bellhousing during transaxle removal. Hold torque convertor with both hands while pulling it (with twisting motion) oft its support tube on final drive housing.

Cleaning & Inspection

1. Torque converter is sealed unit and cannot be disassembled for service. Replace the unit if leaky or noisy, loose welds are evident or if stall speed test shows unit to be faulty.
2. When charred material from a burned clutch disc or other pollutants have entered the ATF, residual pollutants must be removed from torque convertor. Attach a piece of plastic hose (with 5/16" I.D.) to a plastic squeeze bottle.
3. Ensure both hose connection and cap are an airtight fit on bottle. If necessary, cut free end of hose at an angle to allow it to lay nearly flat against lowest part of convertor interior.
4. Lay convertor on work surface with one side elevated (low side toward hose and bottle). Place bottle lower than convertor. Squeeze bottle and insert hose in convertor. Release bottle and, as soon as AT begins to flow, loosen cap to allow air to escape. Siphon out remaining ATF.
5. If torque convertor requires replacement, inspect convertor for identification code mark (stamped on boss on outside diameter of unit). Ensure the same code is stamped on replacement unit. See **TORQUE CONVERTOR CODE LETTER APPLICATION** table.

NOTE: A leaking oil seal is often caused by a worn bushing in convertor hub. Check bushing for excessive wear or out-of-round whenever seal is replaced.

TORQUE CONVERTER CODE LETTER APPLICATION

Application	Code Letter
1.8L Engine (Gas)	K

Oil Seal Replacement

1. Check converter hub seal seat for scoring, pitting or excessive wear. If seal seat on hub is

rough, worn or damaged, replace converter. Do not attempt to smooth seal contact area of convertor with emery cloth.

2.

NOTE: Ensure oil seal seat edge is chamfered. If not, round front edge with emery cloth to prevent seal damage during converter installation.

Remove any sharp edges and burrs with fine emery cloth. Do not damage surface where oil seal makes contact. If removal is necessary, note installed position. Pry off oil seal and discard. Clean seal seat.

3. Dip new oil seal in clean ATF and drive into position using Oil Seal Installer (US4450). Do not allow gas or solvent to contact silicone-type seal or seal must be replaced.

NOTE: Torque convertor replacement bushings are manufactured to size and require no reaming or honing.

Bushing Replacement

1. Cheek bushing I.D. for excessive wear and out-of-round using inside micrometer. Bushing wear limit is 1.348" (34.25 mm). Maximum allowable out-of-round is .001" (,03 mm).
2. To replace bushing, assemble Bushing Puller (VW201 or US691) and Adapter (US4452). Withdraw bushing from converter hub. See **Fig. 5**. Press new bushing into place using Bushing Drivers (VW412, VW420 and VW474) and Support (VW401).

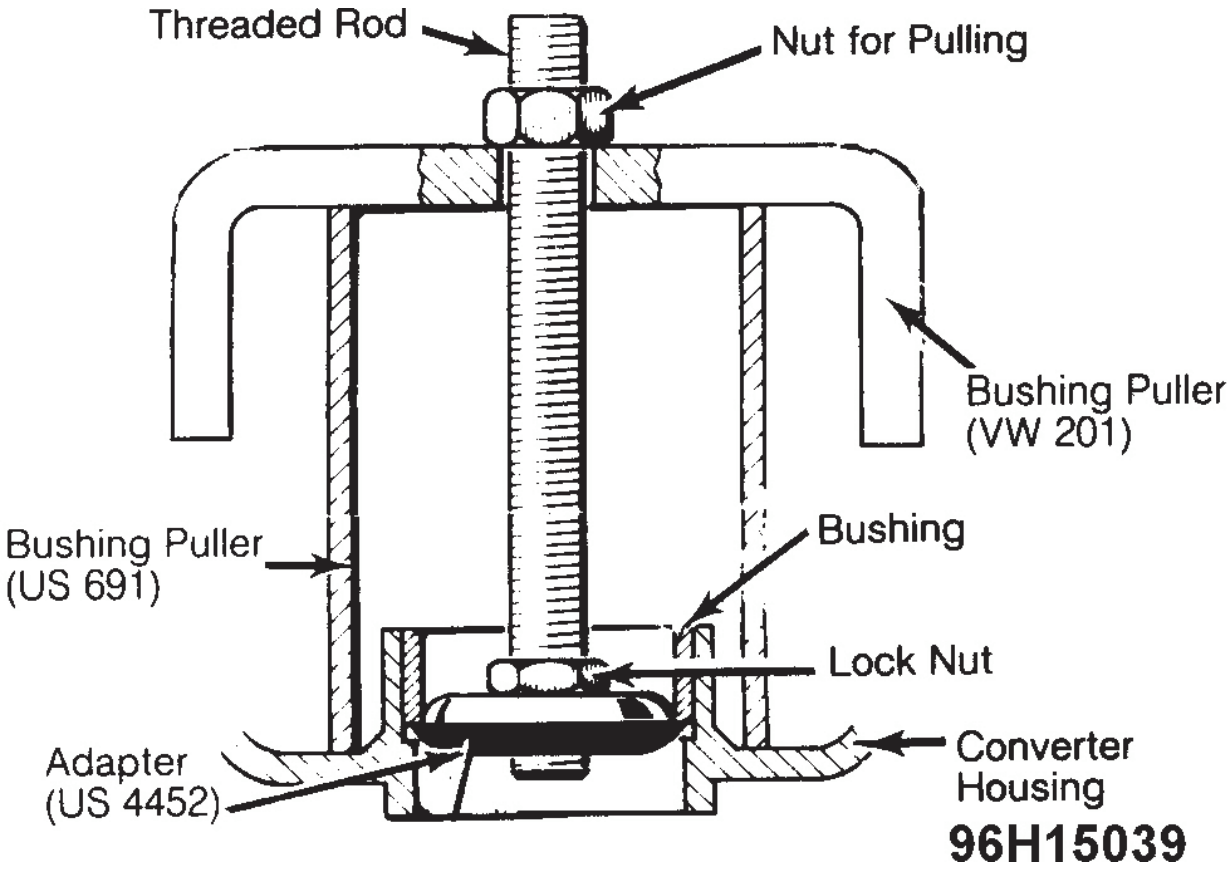

Fig. 5: Removing Torque Converter Bushing
Courtesy of VOLKSWAGEN UNITED STATES, INC.

Installation

1. Install torque converter in reverse of removal procedure. Ensure pump shaft is completely seated in pump (inside transaxle) by checking splined ends for proper length.
2. Correct pump shaft length is 13.94" (354 mm), measured from tip-to-tip. Install converter by turning slowly clockwise and counterclockwise so turbine and pump shaft splines will engage. See **Fig. 6**.

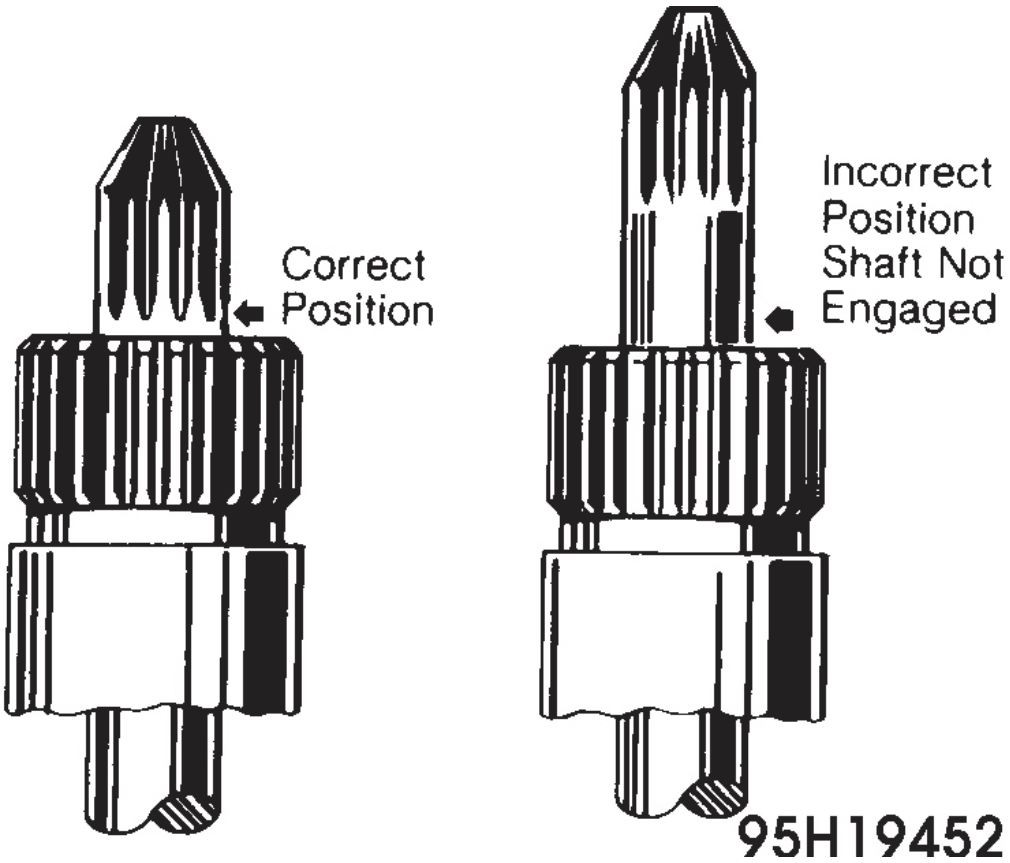

Fig. 6: Installing Pump Shaft

TRANSAXLE DISASSEMBLY

NOTE: Final drive disassembly and reassembly procedures are covered at end of article.

TRANSAXLE ASSEMBLY

Disassembly

1. With final drive housing/transaxle assembly removed from vehicle, clean outside case thoroughly and disassemble in a clean area. When cleaning and wiping parts, use nylon cloth or paper towels. Common shop rags will leave lint that can interfere with transaxle operation. Mount assembly on repair fixture (VW851 and VW309). Drain ATF from transaxle.

CAUTION: When removing/installing torque converter, do not rock or tilt converter. This could damage the converter oil seal, stator one-way clutch or other components in torque converter hub.

2. Withdraw torque converter from final drive housing using a twisting motion. Set converter aside and cover hub opening. Remove governor cover and gasket. Pull governor from final

drive housing. Use a clockwise twisting motion to disengage governor drive gear from gear on transaxle annulus gear.

3. Turn transaxle/final drive assembly so gear oil cannot leak. Remove nuts from 1 3/4" (44 mm) transaxle-to-final drive studs. Separate transaxle from final drive. Drain gear oil from final drive if unit is to be repaired.
4. Withdraw 13.937" (354 mm) long pump shaft and 10.44" (265.1 mm), long turbine shaft from transaxle (check turbine shaft rings for wear and proper seating).

NOTE: Once transaxle and final drive assemblies are separated, keep out dirt by covering open end of transaxle when final drive is being worked on or both ends of final drive as transaxle is being repaired.

5. Detach screws retaining separation plate in transaxle case. Remove plate and discard gasket. With- draw annulus gear assembly (governor drive gear/Reverse planetary ring gear) from case. See **Fig. 7**.
6. Withdraw needle bearing and thrust washer from top of reverse (front) planetary gear set (some models may have thrust washer in place of needle bearing).
7. Using screwdriver, pry out large circlip retaining one-way clutch assembly in case. Fabricate 2 hooks from 3/16" welding rod. Using hooks, lift one-way clutch, internally and externally splined 1st/Reverse gear brake discs (3 fiber and 3 steel) and the reverse planetary gear set from case. See **Fig. 8**.
8. Remove thrust washer(s). Withdraw apply shell (with internally splined washer), forward (rear) planetary gear set (with sun gear), needle bearing (some models may have thrust washer in place of needle bearing) and forward clutch as an assembly.

NOTE: When removing forward clutch assembly, ensure 2 thrust washers and thrust bearing which oil pump rides against are not lost or damaged.

9. Remove forward clutch-to-Direct/Reverse clutch thrust washer and radial-roller thrust bearing (some models may have thrust washer in place of bearing). Push 2nd gear brake band servo piston assembly down into transaxle case. Remove retaining circlip. Withdraw servo assembly (cover, piston and spring) from case.
10. If servo assembly sticks, tap cover with rubber mallet until piston pops out under spring pressure. On opposite side of case, loosen lock nut for 2nd gear brake band adjusting screw. Detach screw (with lock nut) and withdraw push rod. Remove Direct/Reverse clutch from case. From inside case, withdraw 2nd gear brake band. Remove 5 bolts from 1st/reverse gear brake spring plate.
11. Withdraw plate and springs. Pull 1st/ Reverse apply shell, brake piston and AT oil pump assembly from case. Position transaxle case on bench with oil pan facing upward. Remove pan mount bolts. Withdraw pan and gasket. Remove oil strainer screws from valve body.

NOTE: An inspection of any foreign matter in the oil pan can indicate the type of problems to look for while disassembling transaxle.

12. Remove 11 hex-head mount bolts from valve body. Lift valve body from case. Use care not to lose manual valve. Withdraw accumulator spring and piston from case. If necessary for parts replacement, disassemble parking lock, kickdown and manual valve linkage. See **Fig. 4**.

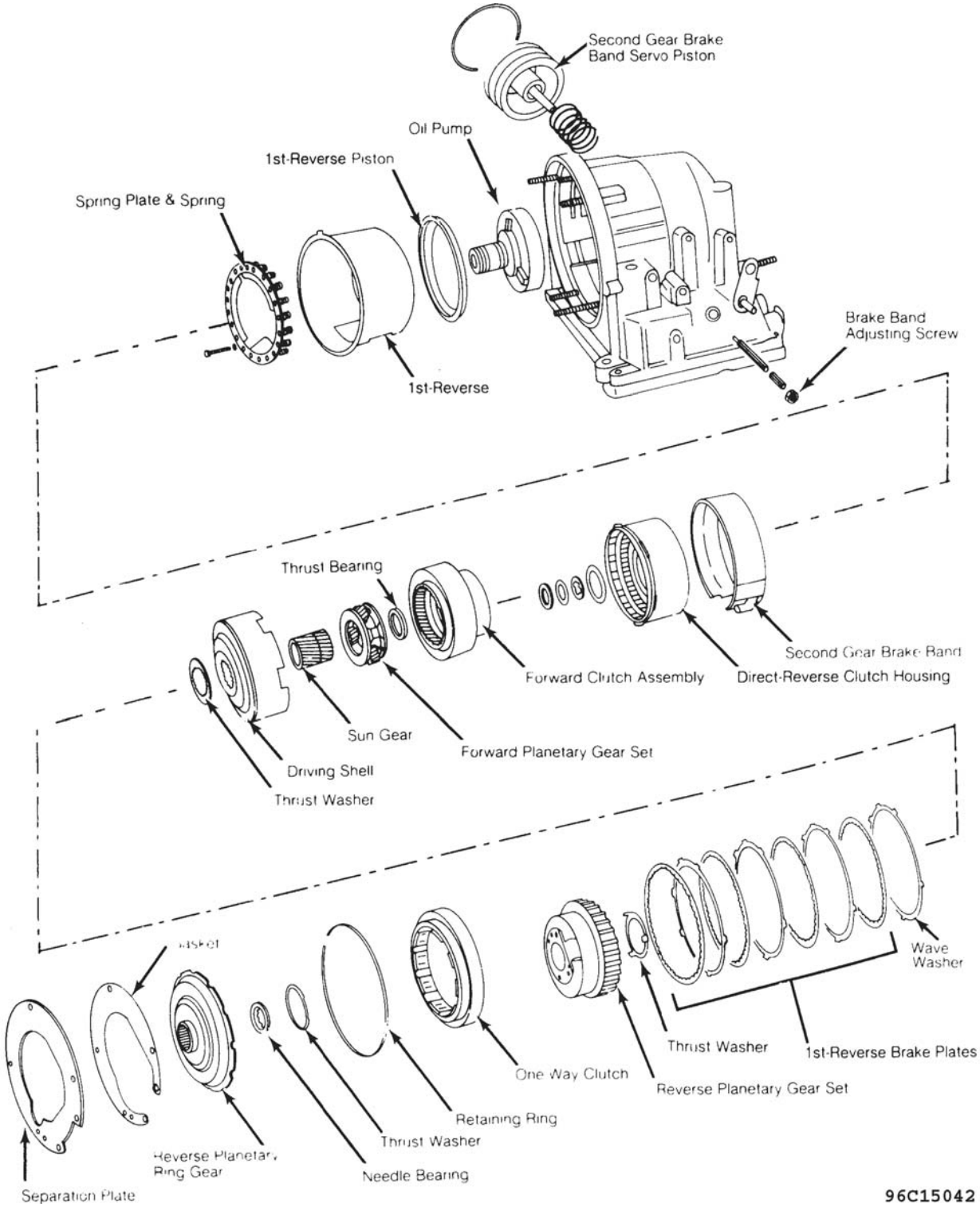

Fig. 7: Exploded View Of Automatic Transaxle Assembly

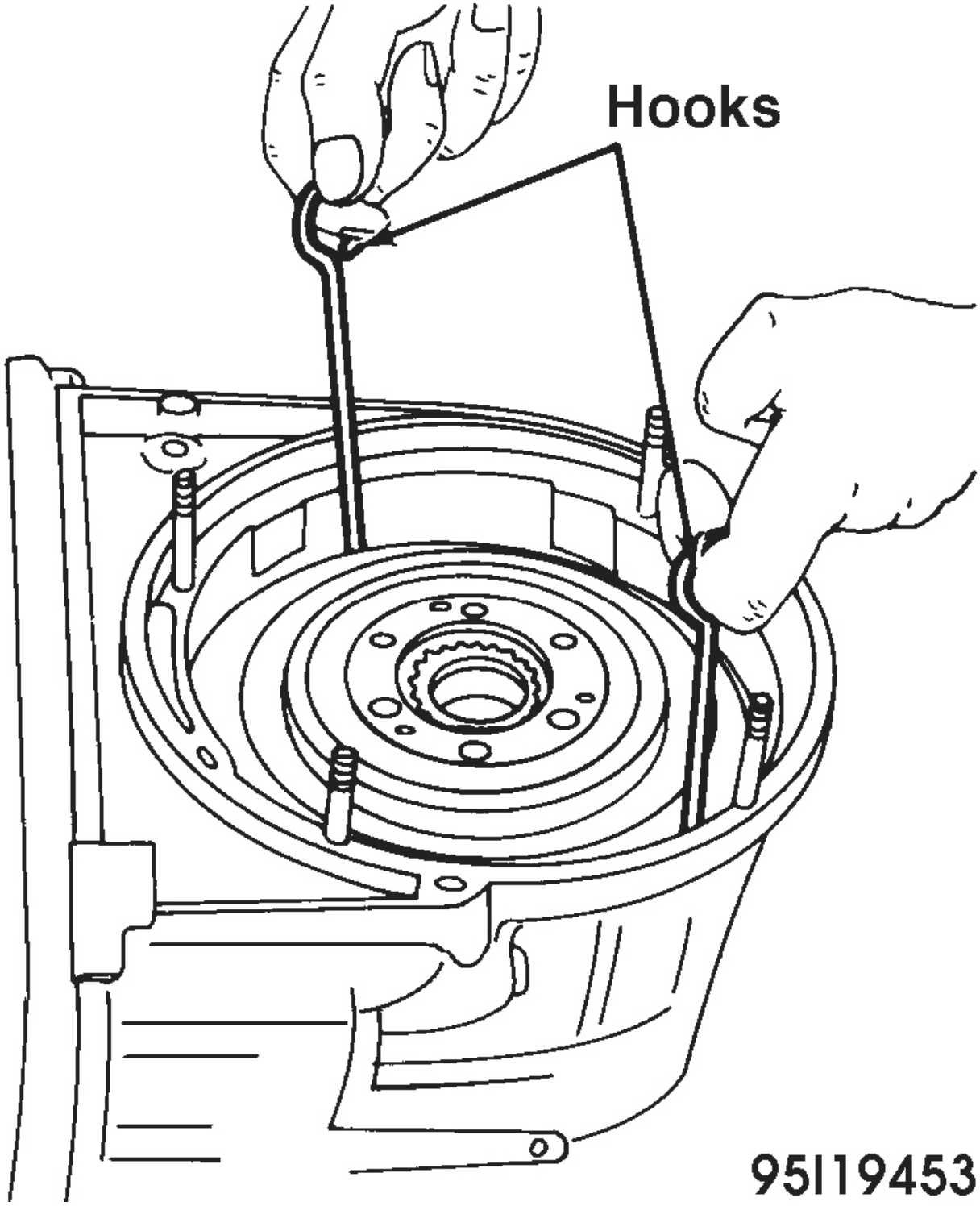

Fig. 8: Removing One-Way Clutch From Case

COMPONENT DISASSEMBLY & REASSEMBLY

OIL PUMP ASSEMBLY

CAUTION: There are 2 ATF pumps available, one with a thrust washer and one with a radial-roller thrust bearing. The pump installed determines the type of forward clutch drum and turbine shaft used.

Disassembly

1. To remove metal sealing rings, first unhooking small ring ends with needle nose pliers. Carefully remove rings from front of pump housing. Unhook large ring ends and remove rings from housing.
2. Remove thrust washer or radial-roller thrust bearing from front of pump-housing. Hold cover plate tight against housing (plate is under spring tension). Remove cover plate mounting screws (4 mm) and cover plate.
3. Remove the 7/16" (11 mm) check ball and spring. Withdraw pump drive plate. Mark pump gears for reassembly reference and remove gears. See **Fig. 9**.

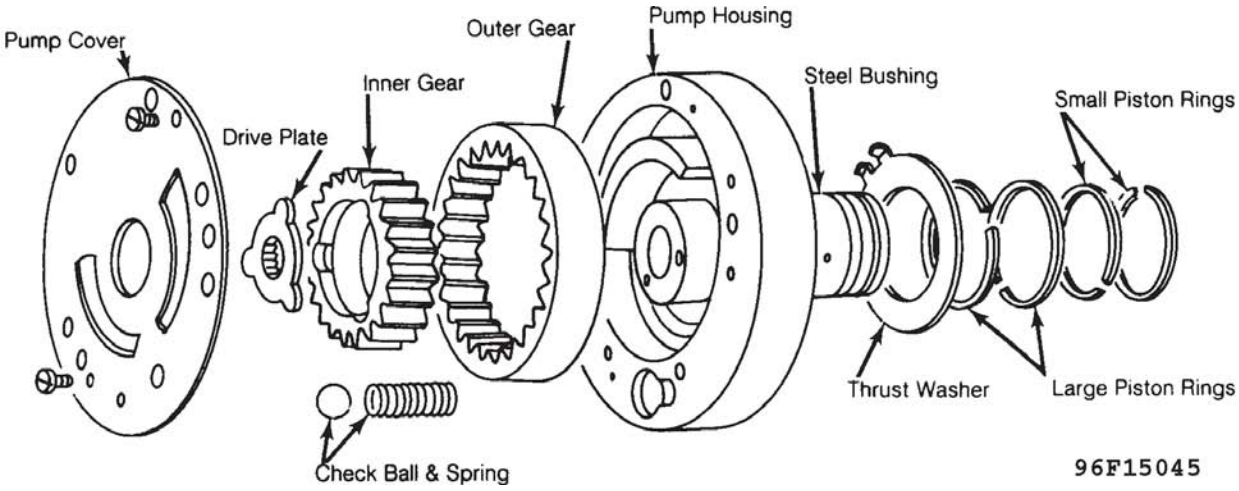

Fig. 9: Exploded View Of Oil Pump Assembly

Cleaning & Inspection

Wash all parts in solvent and clean oil passages with compressed air. Inspect all parts for wear, scoring, chipped teeth or other damage. Replace parts as necessary.

NOTE: **If either pump gear, pump housing or cover is damaged, entire oil pump assembly must be replaced. Drive plate, piston rings and thrust washer (thrust bearing and washers) may be replaced individually as needed.**

Reassembly

1. Coat pump gears with transaxle fluid. Install gears into pump housing, aligning marks made at disassembly. Position drive plate on top of inner gear. Ensure extended hub of drive plate is inserted into shaft opening of housing. Set check ball, with spring, in housing.
2. Place cover plate over rear of assembly. Compress spring and check ball, taking care not to displace them. Install and tighten cover-to-housing screws. Install thrust washer so that claws on washer face away from piston ring grooves and are engaged on lug on pump housing. See **Fig. 9**.
3. Install large and small sealing rings with ends locked together. To check for proper oil pump operation, insert pump shaft into oil pump and rotate gears. Pump assembly must rotate freely with no sticking or binding.

CAUTION: **If pump's internal parts are jammed or binding, owing to incorrect assembly or installation, severe damage can result when engine is started.**

VALVE BODY ASSEMBLY

Disassembly Precautions

1. Valve body disassembly is necessary only for cleaning. Disassemble valve body if ATF is very dirty or contaminated by large solid particles. Otherwise, immerse complete valve body assembly in cleaning fluid and blow dry with compressed air. Do not hold air jet so close that it moves the valves violently or spring damage can occur.
2. Valve body components, especially the springs, are very similar in appearance. If removed, ensure all components are separated and marked for identification, for reassembly reference.
3. When disassembling later model transaxle, check previously listed bolts and nuts for a spring washer. If equipped, reinstall bolts and nuts with new spring washers.

Disassembly

1. Remove oil pan. Remove valve body assembly from transaxle. Remove oil strainer.
2. Note position of galvanized accumulator piston cover. Remove 3 galvanized screws. Remove transfer plate-to-main valve body mounting screws. Always replace identification tag when servicing valve body.
3. Inspect valve body for proper identification. Lift off transfer and separator plates from main body, as an assembly. Ensure only identical components are used for replacement.
4. Note locations and sizes, and remove ball valves and springs from main valve body. See **Fig. 10**. In valve body "FG", there are five 6-mm ball valves and one 3 mm ball valve.

NOTE: Do not alter settings of adjusting screws or interchange location of ball valves. Adjustments may only be set on a test stand.

5. Remove large cover plate. Withdraw 1st-2nd governor plug, limiting and pressure valves; springs, adjusting screws and screw sleeves. Do not turn adjusting screws, they are factory set and can only be reset on test stand.
6. Remove remaining cover plates one at time and withdraw all valves, plugs, springs, spring seats and adjusting screws (with sleeves). Tag all components, or arrange in relationship to valve body, to ensure correct reassembly.

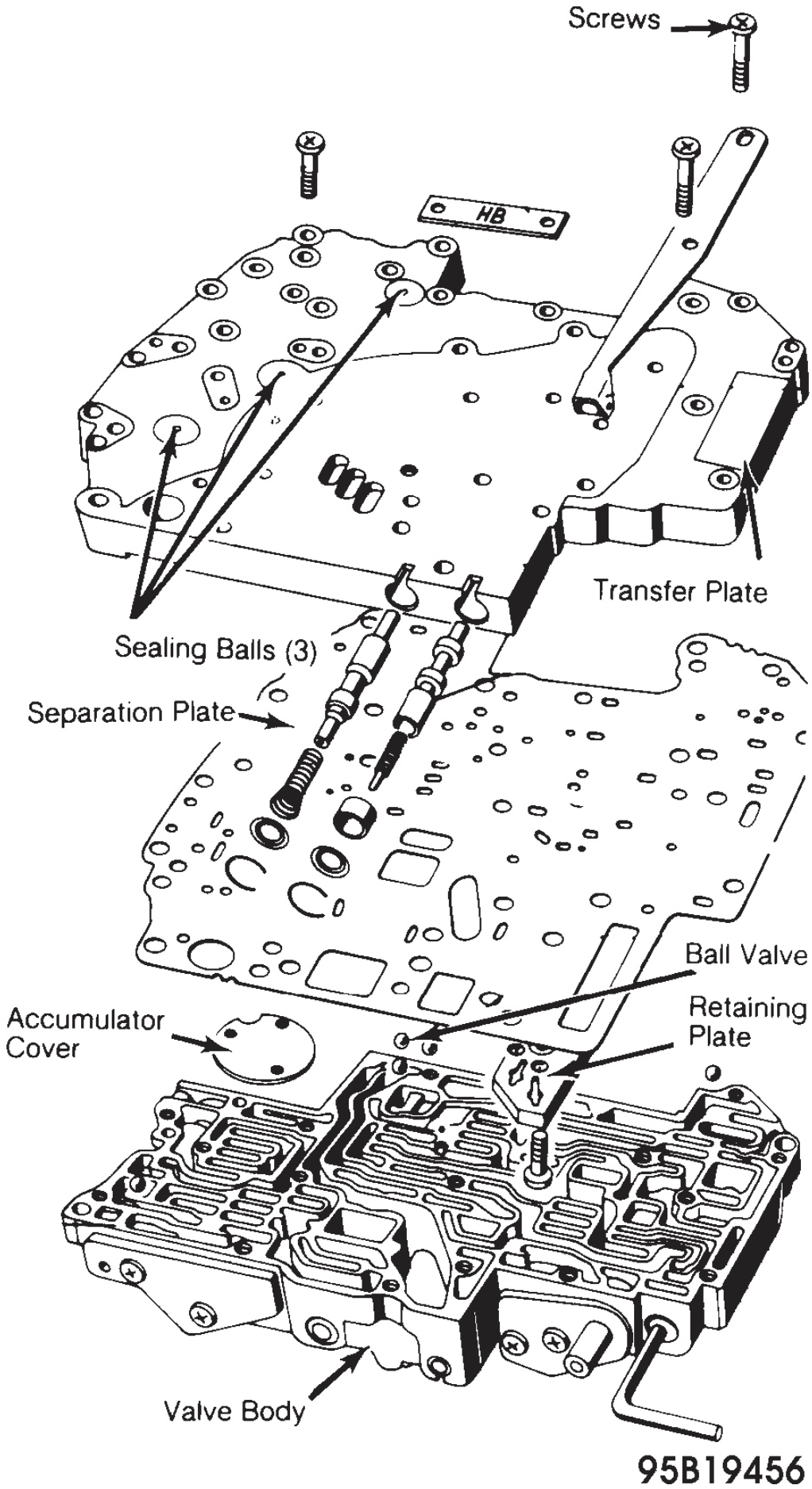

Fig. 10: Exploded View Of Transfer Plate & Valve Body Assembly

Cleaning & Inspection

1. Disassemble valve body. If necessary, use: brass rod to press out sticking or tight valves. Wash all parts in solvent and air dry only. Check all parts for burrs and scores.
2. Replace assembly if excessive wear, rust, or damage is found. When valves are clean and lubricated with fluid, they should fall, of their own weight, into respective bores. If not, inspect valves and body for valve or bore damage. Used valves must be returned to their original locations.

CAUTION: If springs are not kept separate and marked, for identification, each spring must be measured with a micrometer (prior to reassembly) in order to find its correct position.

3. Check all springs for damage and collapsed coils. Take care not to disturb settings of adjusting screws pressures affected by these screws can only be measured and adjusted accurately on a test stand.
4. If transaxle was disassembled due to failure to shift into 3rd gear, trouble may be caused by a missing sealing ball in transfer plate. If any ball is missing, use following procedure to install replacement balls.
5. To install new searing ball, stick .118" (3 mm) diameter ball to end of 8 mm punch with small amount of grease. Drive ball flush into hole of transfer plate. See **Fig. 11**.

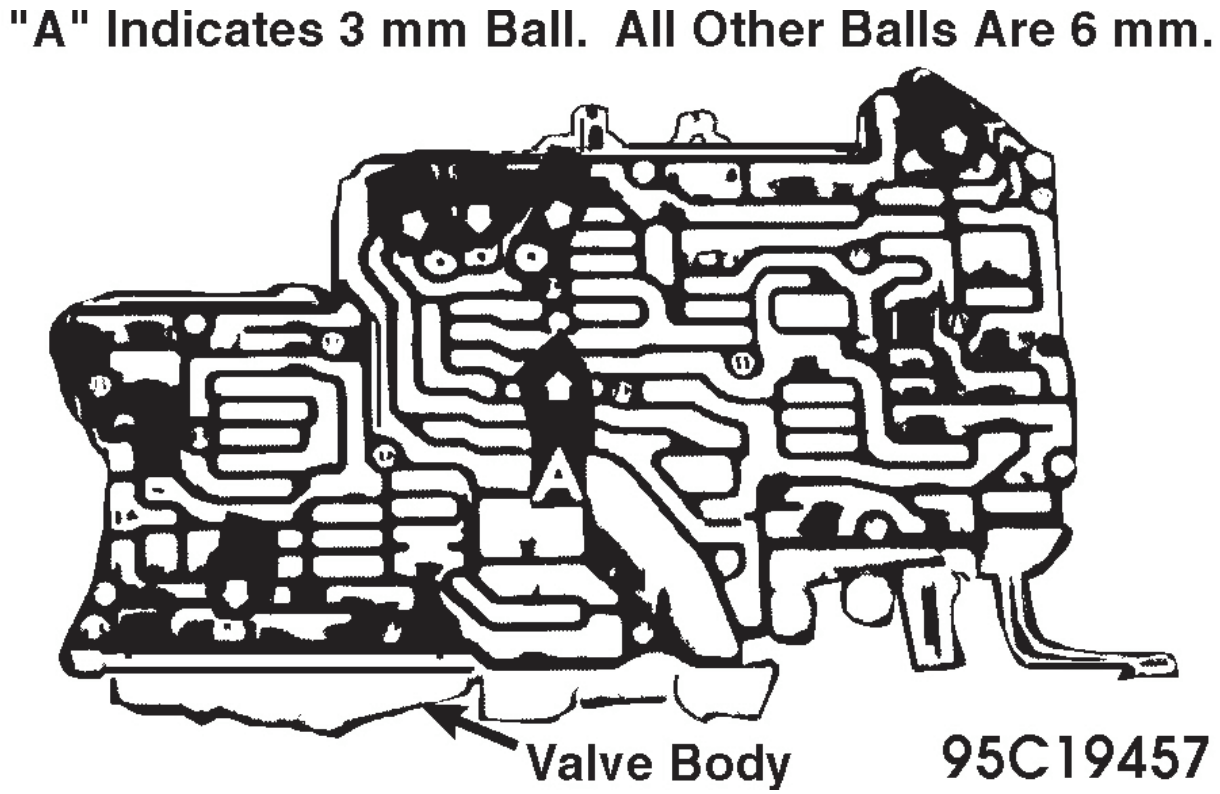

Fig. 11: View Of Valve Body Showing Location Of Transfer Plate Sealing Balls

Reassembly

1. Lubricate all parts with ATF. Install valve components into proper valve body bores in reverse order of removal. If used valves are installed, ensure valves are returned to their original locations. Ensure all valves slide freely in bores.
2.

CAUTION: Do not overtighten cover plate mounting or valve body may distort and cause to stick.

Ensure check balls are installed in correct bores. Install transfer plate-to-main body screws and tighten from center outward. Install valve body onto transaxle case with manual valve and kickdown valve engaged in their operating levers. Tighten valve body mounting bolts to 35 INCH lbs. (4 N.m), in diagonal pattern.

3. Install new oil strainer assembly. Install oil pan, with new gasket, and tighten mount bolts no more than 14 ft. lbs. (19 N.m). Install final drive housing if removed. Refill transaxle with ATF, install transaxle assembly and road test vehicle for proper operation.

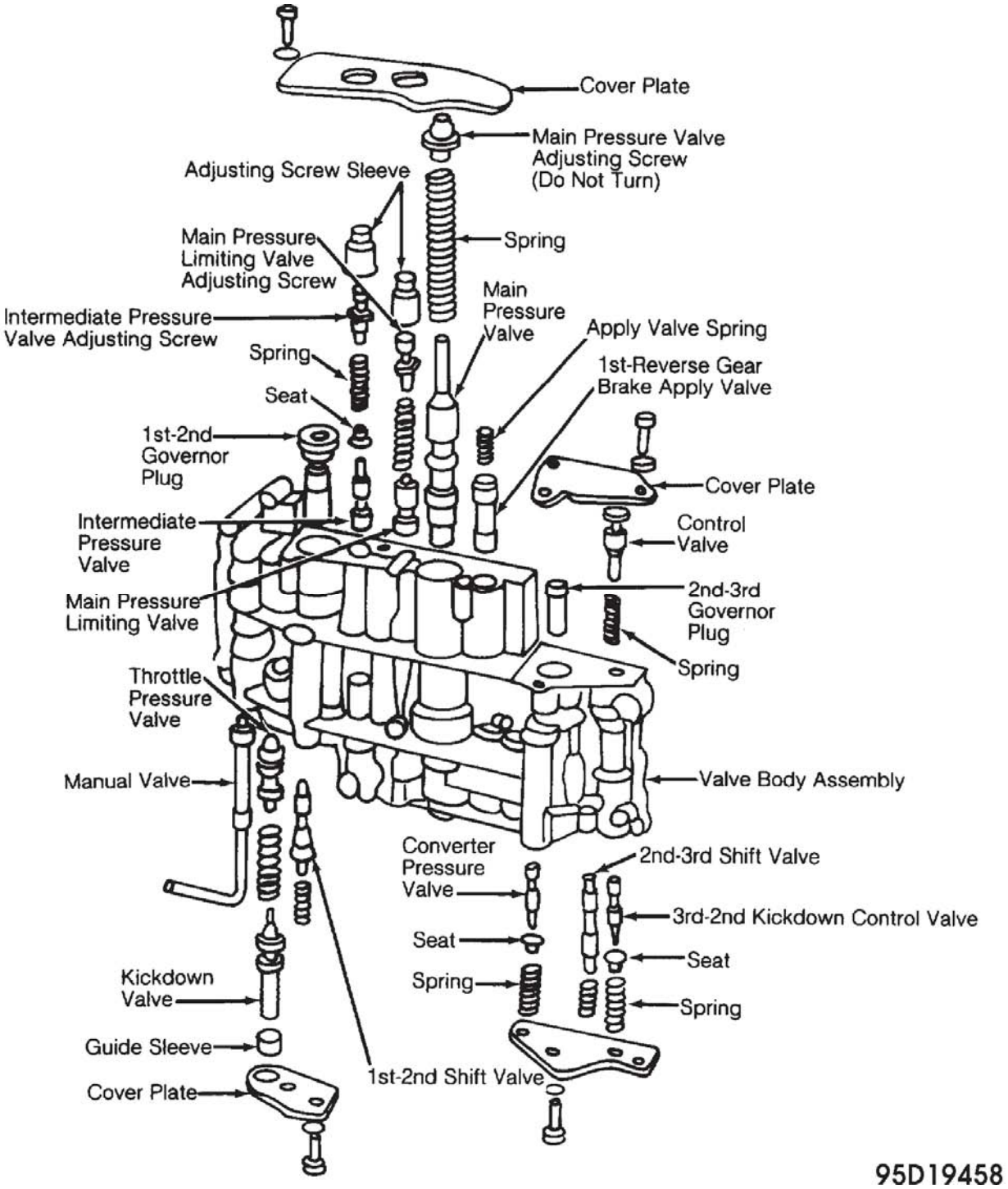

Fig. 12: Exploded View Of Main Valve Body

Valve Spring	Free Length In. (mm)	Inner Diameter In. (mm) [1]	Number Of Coils	Wire Thickness In. (mm)
Throttle Pressure Limiting Valve	1.49 (37.9)	.303 (7.70)	14.5	.043 (1.10)
Main Pressure Valve	2.72 (69.2)	.469 (11.90)	16.5	.055 (1.40)
Main Pressure Limiting Valve	1.08 (27.5)	.299 (7.60)	12.5	.047 (1.20)
Throttle Pressure Valve	1.73 (44.0)	.305 (7.75)	16.5	.043 (1.10)
1st-2nd Shift Valve	1.13 (28.8)	.319 (8.10)	8.5	.035 (0.90)
Converter Pressure Valve	0.87 (22.2)	.303 (7.70)	8.5	.049 (1.30)
3rd-2nd Control Valve	1.28 (32.4)	.303 (7.70)	12.5	.039 (1.00)
2nd-3rd Shift Valve	0.69 (17.4)	.274 (6.95)	8.5	.031 (0.80)
3rd-2nd Kickdown Valve	1.12 (28.4)	.319 (8.10)	11.5	.035 (0.90)
Forward Clutch				
Apply Valve	0.68 (17.2)	.137 (3.50)	15.5	.019 (0.50)
Release Valve	.578 (14.70)	.232 (5.90)	6.5	.015 (0.40)
1st/Reverse Gear Brake				
Apply Valve	1.429 (36.30)	.354 (9.00)	10.5	.025 (0.63)

[1] – Inner coil diameter tolerance is ±.012" (.30 mm).

G00159572

Fig. 13: Valve Body "FG" Spring Identification Chart (Transaxle Model TJ & TNA)

GOVERNOR ASSEMBLY

Governor unit is not serviceable. Replace as a complete unit. Governor may be cleaned and checked for wear at balance weight pivots. Governor units for gasoline engined vehicles are marked with the code letter "A" on the face of the balance plate. See **Fig. 14**.

Inspection

Wash governor components in solvent and blow dry with compressed air. Inspect governor shaft for wear and thrust plate for scoring. Replace components as necessary.

Reassembly

To install, reverse disassembly procedure. Lubricate all parts with ATF during assembly. Ensure thrust plate is centered in housing to contact cover.

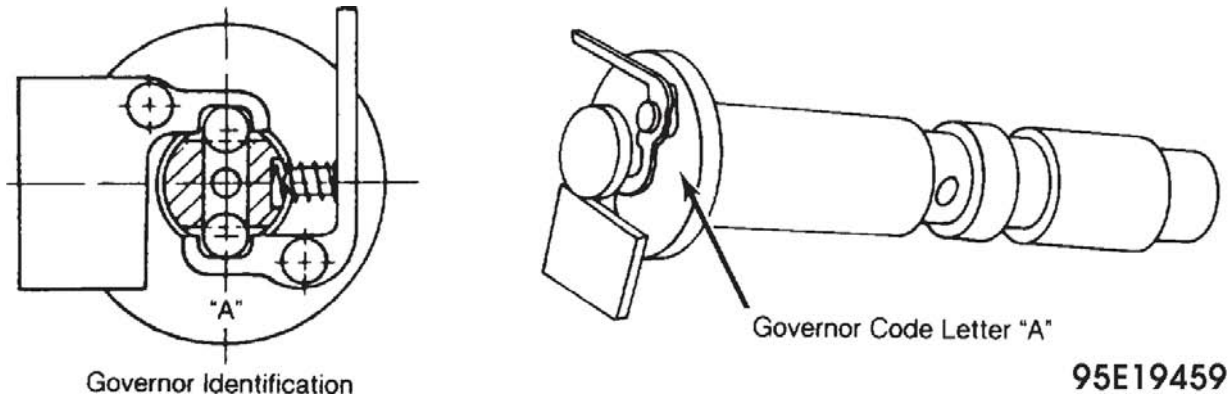

Fig. 14: Exploded View Of Governor Assembly

2ND GEAR BRAKE BAND SERVO PISTON ASSEMBLY

NOTE: The 2nd gear brake band servo piston can be removed from vehicle with transaxle installed.

Disassembly

1. Apply inward pressure to servo piston using lever (VW281 a). Remove retaining circlip. Using a rubber mallet, tap piston cover until spring forces piston and cover out of case. Pull servo piston assembly out of cover.
2. Remove and discard "O" ring seals from outside diameter of cover. Remove retaining clip and separate piston pin, accumulator spring, spring seat, and adjusting shim(s) from servo piston. Withdraw and discard 2 lip seals from servo piston. See **Fig. 15**.

Inspection

Clean all parts and check for wear, scoring or other damage. Standard piston outside diameter is 3.228" (82 mm). If piston is worn or damaged, replace piston, pin, spring retainer, accumulator spring and shim(s) as an assembly only.

NOTE: Piston assemblies supplied as replacement parts are already assembled and adjusted.

Reassembly

1. Apply ATF to spring retainer, accumulator spring and shim(s). Position spring retainer, accumulator spring and shim(s) on piston pin. Install assembly into servo piston and retain with "E" clip on pin.
2. Install new lip seals on piston as follows: Smaller (upper) seal is installed on piston with lip facing upward (into servo cover). Larger seal is installed on piston with lip pointed downward (out of servo cover). See **Fig. 16**.
3. Lubricate piston and cover assembly thoroughly with ATF. Install piston into cover using a twisting motion. Ensure piston seals are not damaged or forced out of position. Install new "O" rings on outer diameter of servo cover.
4. When inserting piston assembly and cover into case, guide piston rod into engagement with 2nd gear brake band. Using suitable lever (VW281 a), press cover and piston assembly into transaxle case against spring pressure until circlip can be installed. Ensure circlip is completely seated in groove of case.

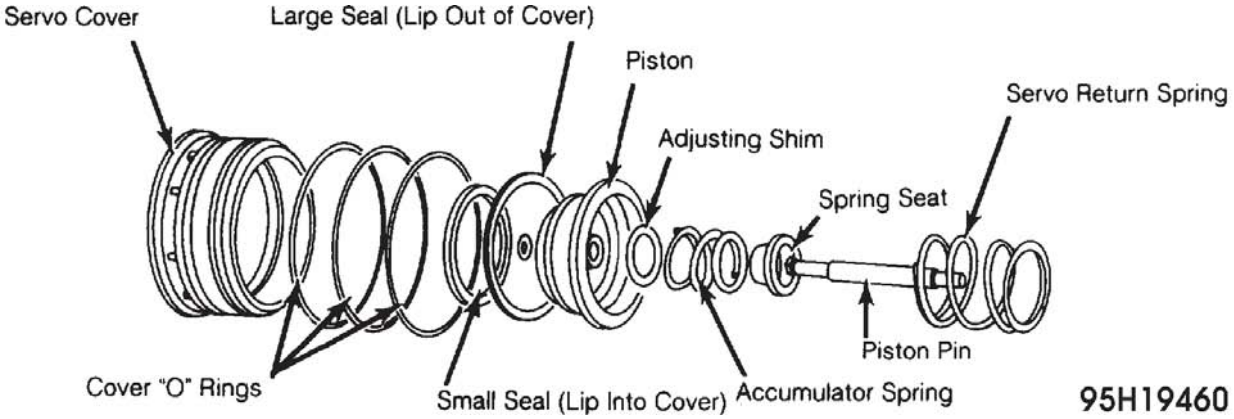

Fig. 15: Exploded View Of 2nd Gear Brake Band Servo Piston Assembly

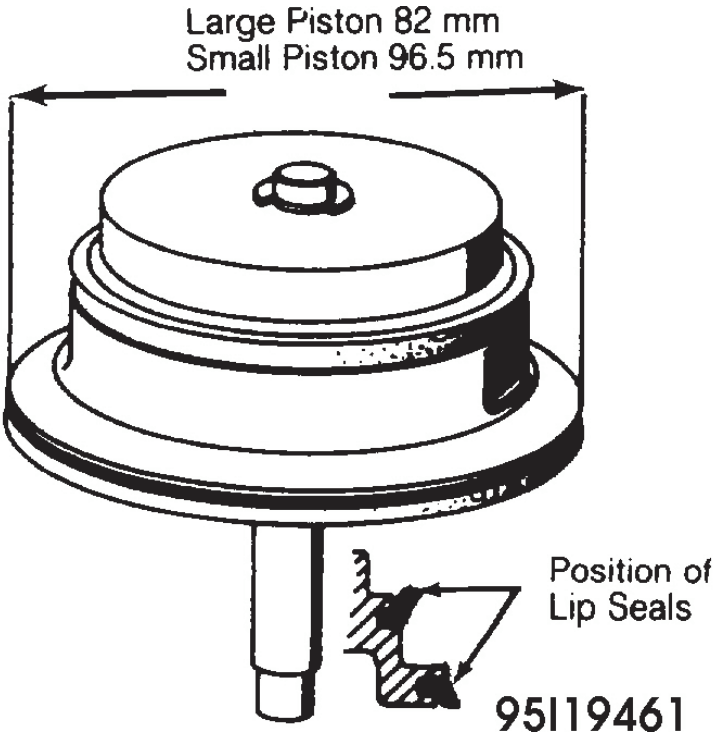

Fig. 16: Installing Servo Piston Seals

DIRECT-REVERSE CLUTCH ASSEMBLY

Disassembly

1. Place direct/reverse clutch assembly on clean, flat surface. Using large screwdriver, pry out large outer circlip. Remove pressure plate, internally splined fiber plates and externally splined steel plates.
2. Using hydraulic press with adapters (VW411 and VW460/3) and support plate (VW401), press clutch pack into drum enough to remove small circlip that retains spring retainer plate.
3. Release press and remove spring retainer plate. With a twisting motion, remove clutch piston with springs and spring plate. Remove seals from clutch piston and drum. See **Fig. 17**.
4. Check drum bushing for excessive wear or damage and replace if necessary. Place clutch drum in press. Using bushing extractor/installer (VW408a), support plates (VW402 and VW401) and receiver tool (US1099), drive bushing out of clutch drum.

NOTE: When installing new fiber clutch plates, ensure surface pattern of plates is identical to those removed.

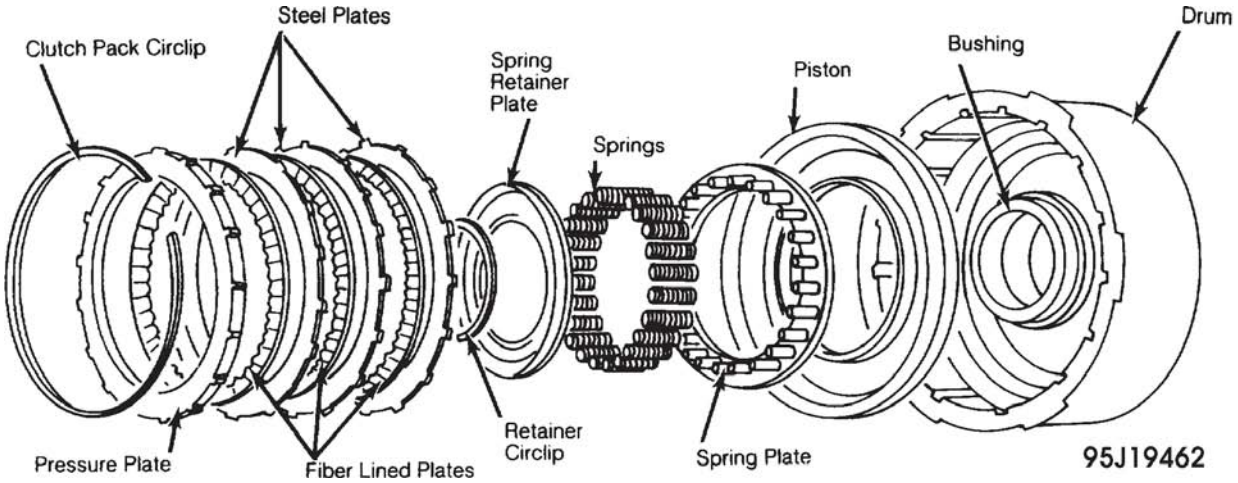

Fig. 17: Exploded View Of Direct-Reverse Clutch Assembly

Inspection

1. Clean all parts in solvent and dry with compressed air. Check for wear or damage on friction surfaces of piston and drum. Check for wear or damage of grooves that externally splined plates ride in.

NOTE: The Direct/Reverse piston seals are vulcanized to the piston. Replace entire piston if there is leakage past seals or if seals are obviously worn or damaged.

2. Replace piston and/or drum as necessary. Ensure drum has proper inside dimension of 1.063" (27 mm) from circlip groove to piston contact surface of drum.
3. Inspect steel plates for wear and burn marks. Replace if excessively warn or blued from overheating. Check fiber lined plates for wear, cracking or chipping. Replace any damaged plates.
4. Inspect check ball in clutch drum for freedom of operation, and proper sealing. Ensure clutch drum drilled passage for ball valve is clear. Check piston return springs for distortion or collapsed coils. Replace any damaged parts.

NOTE: When installing new fiber clutch plates, ensure surface pattern of plates is identical to those removed. DO NOT install plates with a different pattern of markings.

Reassembly

1. If drum bushing is removed, install new bushing, using hydraulic press with bushing driver (VW433), bushing extractor/installer and support plates. Install clutch drum hub bushing flush with hub surface.
2. Using old bushing, press new bushing into hub until it is .067" (1.70 mm) below hub lip. Remove old bushing from hub bore with pliers. Install new seals on clutch drum and piston, with seal lips facing downward into drum.
3. Completely lubricate piston assembly with ATF. Insert a 1.5-2.0" (38-51 mm) wide, thin (but flexible) plastic sheet around inside diameter of drum to protect piston seals during installation. Install piston assembly into drum with a twisting motion. Remove plastic sheet.
4. Position spring plate on top of piston and springs on spring plate. Place retainer on top of springs. Compress drum assembly in press and install small circlip. Lubricate all clutch plates with ATF. Soak new plates in ATF for 15 minutes prior to installation.

5. Install 1 steel plate (external splines), then 1 lined plate (internal splines) into drum. Continue alternating steel and lined plates until all clutch plates are installed. Install pressure plate and clutch pack retaining circlip.
6. Using a feeler gauge, measure clearance between clutch pack retaining circlip and pressure plate. The clearance should be within .081-.098" (2.05-2.50 mm). See **Fig. 18**.
7. If clearance is incorrect, remove clutch pack circlip. Replace it with circlip of correct thickness to bring clearance within specifications. Recheck clearance after installing replacement circlip.

NOTE: Circlips are available in thicknesses of 1.50 mm, 1.70 mm, 2.00 mm, 2.30 mm and 2.50 mm.

8. To check operation of assembled direct-reverse clutch, lubricate sealing rings with ATF and temporarily install ATF pump in direct-reverse clutch assembly.
9. Blow compressed air into oil port and check that clutch piston audibly compresses clutch plates. When air pressure is released, ensure clutch plates release and piston returns to original position.

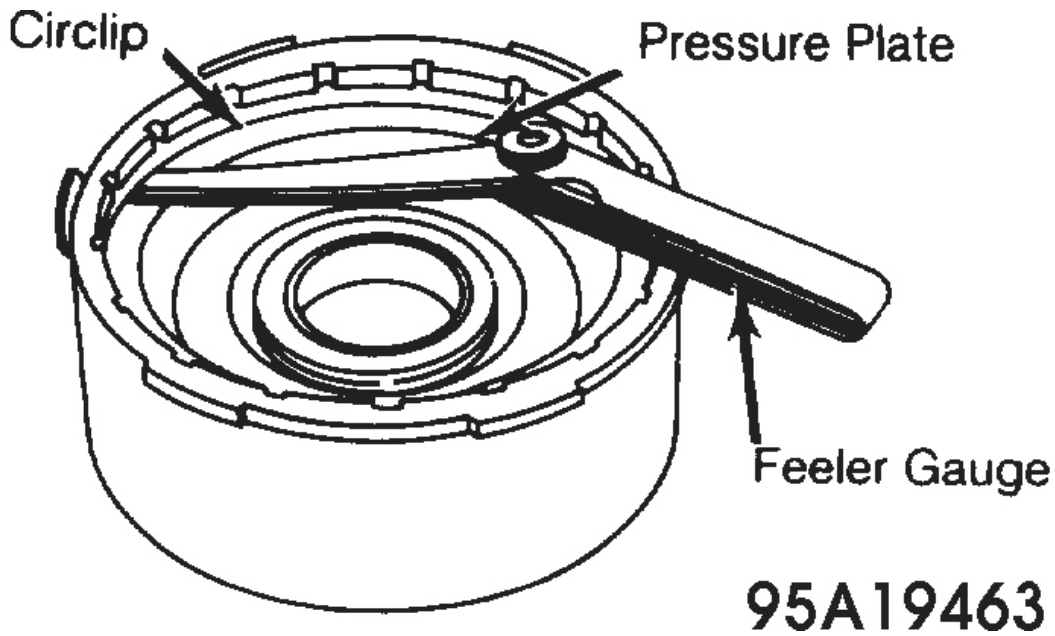

Fig. 18: Measuring Direct-Reverse Clutch Clearance

FORWARD CLUTCH ASSEMBLY

Disassembly

1. Using a screwdriver, pry out waved clutch plate circlip from clutch drum. Remove pressure plate, 2 fiber clutch plates and 3 steel clutch plates, forward planetary ring gear and thrust plate.

CAUTION: The clutch piston sealing rings, are vulcanized onto the piston. Do not damage sealing rings during removal. If seal lips are obviously worn or damaged or leakage past the rings is found, replace the entire piston as an assembly.

2. Remove flat circlip, diaphragm spring and clutch piston. See **Fig. 19**. Remove spring washer and spring. Use press to compress spring plate and remove small circlip.

3. Slowly release pressure on spring plate. Remove plate. Remove spring retaining ring, spring assembly and spring support ring. Remove clutch piston from clutch drum by pulling with a twisting motion or expelling with compressed air.

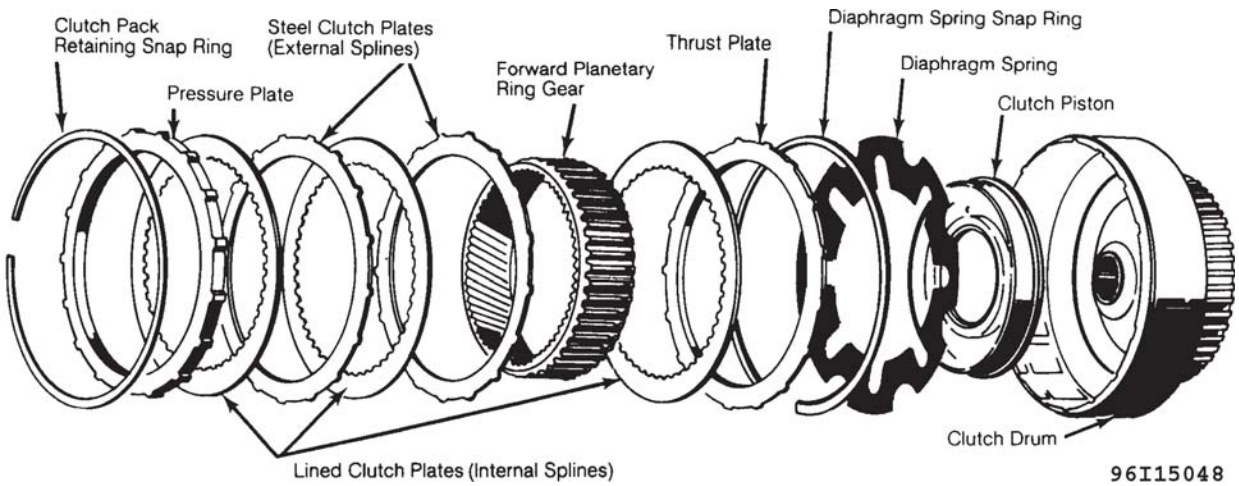

Fig. 19: Exploded View Of Forward Clutch Assembly
Courtesy of VOLKSWAGEN UNITED STATES, INC.

Inspection

1. Clean all parts in solvent and dry with compressed air. Check for wear or damage on friction surfaces of piston and drum. Check for wear or damage of grooves that externally splined plates ride in. Replace piston and/or drum as necessary.
2. Ensure drum has proper inside dimension of 1.031" (26.20 mm) from circlip groove to piston contact surface of drum. Inspect for proper ball valve movement by shaking clutch drum. Rattle of ball valve should be heard. If not, clean drilling. Replace faulty drum as needed, ball valve is not replaceable separately.
3. Inspect steel plates for wear and burn marks. Replace if excessively worn or blued from overheating. Check fiber lined plates for wear, cracking or chipping. Replace any damaged plates.
4. Check planetary ring gear inner and outer splines for wear, scoring or other damage. Replace as needed. Check diaphragm spring for settling by placing in drum. Spring should reach at least to lower edge of circlip groove. Replace faulty spring, as necessary.

CAUTION: Clutch drum with drillings must not be use in transaxle with ATF pump that has radial-roller thrust bearing. Clutch drum without drillings must not be used i transaxle with (early) ATF pump that has only thrust washer.

Reassembly

1. Coat clutch piston and sealing rings with ATF. Install piston assembly into drum using twisting motion. Position diaphragm spring in drum with convex side towards bottom of drum. Install a flat 2.03 mm retaining Circlip (010 323 157).
2. Compress spring plate and install small circlip. Install spring and spring washer. Ensure that spring and washer are installed with convex side down (into drum).
3. Lubricate components with ATF. Install thrust plate and one fiber-lined plate in clutch drum. If one side of thrust plate is chamfered, install chamfered side toward diaphragm spring.
4. Install planetary ring (annulus) gear. Engage short splines (beneath retaining ridge) into inner splines of fiber-lined plate. After soaking in ATF, install remaining clutch plates, starting with

one steel plate and alternating fiber-lined and steel plates until all clutch plates are installed. Install pressure plate and Circlip (010 323 159B).

5. Position dial indicator on assembly with indicator pointer resting on pressure plate. Zero indicator. Pull up on planetary ring gear and note reading on dial. End play of assembly should be .020-.035" (.50-.90 mm). See **Fig. 20**.
6. If end play is incorrect, replace pressure plate with selective circlip of required thickness to bring play to proper specifications.
7. Pressure plates are available in thicknesses of 2.36" (6.0 mm) to .299"(7.60 mm) in increments of .016" (.40 mm).
8. Assemble direct/reverse clutch with thrust washers and forward clutch onto oil pump. Blow compressed air into oil port and check that clutch piston audibly compresses clutch plates. When air pressure is released, ensure clutch plates release and piston returns to original position.

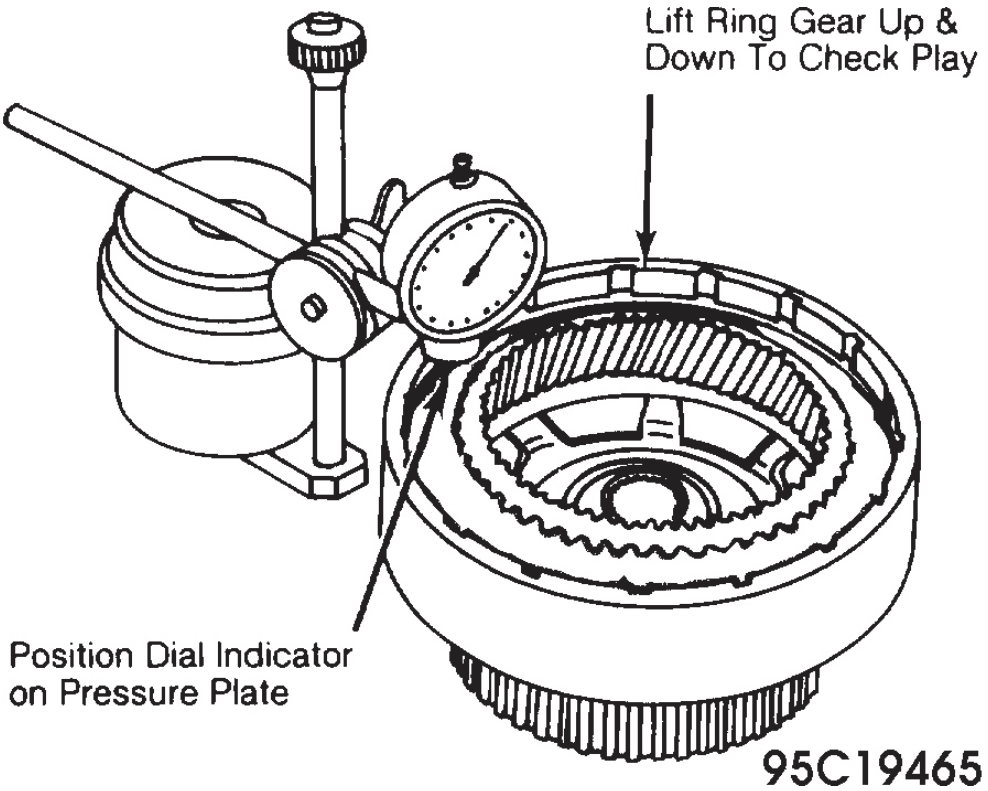

Fig. 20: Measuring Forward Clutch End Play

1ST GEAR ONE-WAY CLUTCH

Disassembly

1. Remove large circlip that retains one-way clutch in transaxle case. Pull one-way clutch assembly from case. Remove rollers and springs. On steel cage, detach upper and lower circlips. Using plastic hammer, drive cage from outer race (from flat side of outer race toward angled side). See **Fig. 21**.
2. On plastic cage type, push roller cage out of outer race (from angled side of outer race toward flat side). On all models, inspect all parts for wear, scoring or other damage and replace as needed.

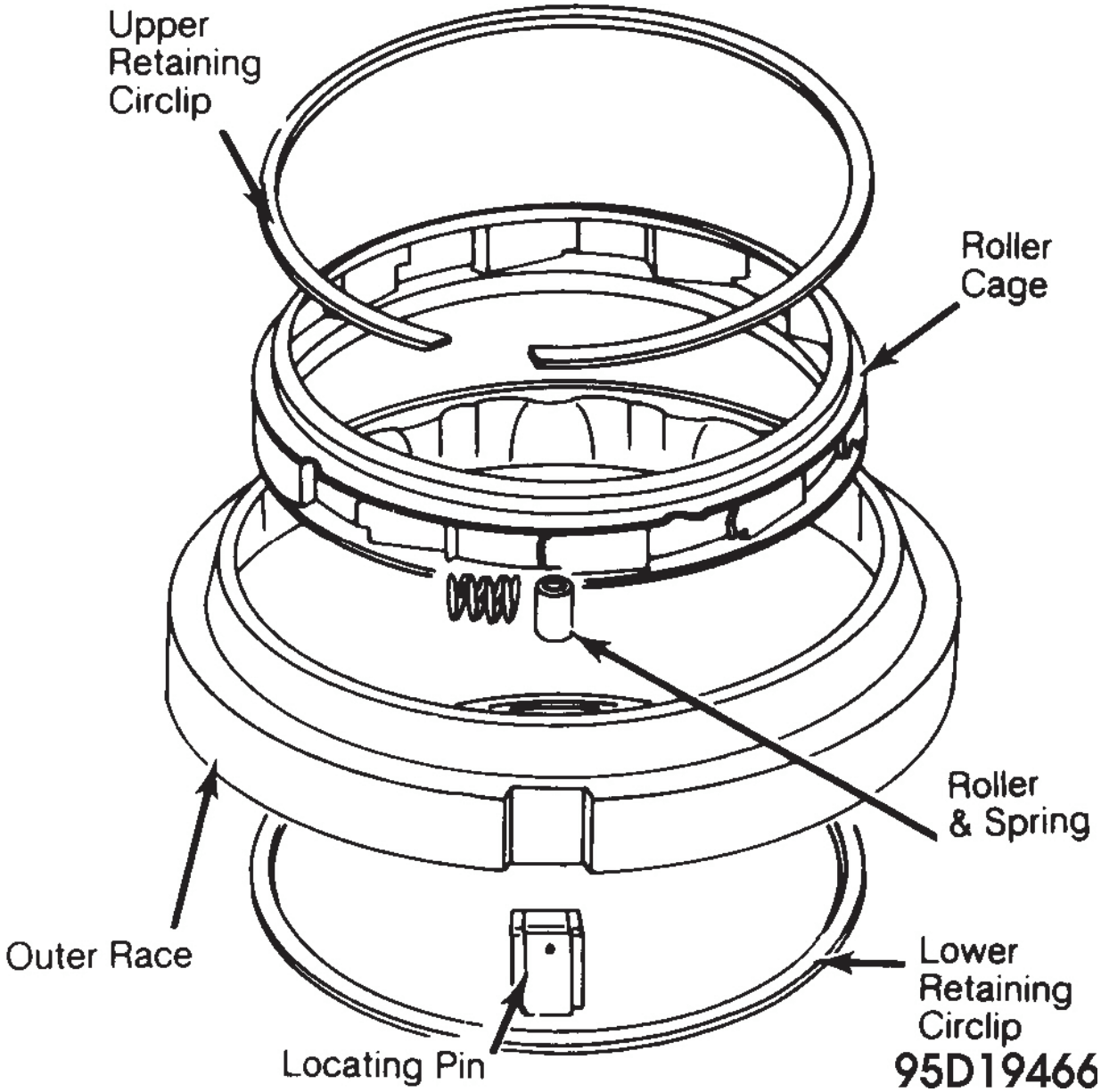

Fig. 21: Exploded View Of One-Way Clutch
Courtesy of VOLKSWAGEN UNITED STATES, INC.

Reassembly

1. On steel roller and spring cage type, install lower circlip in groove of outer race. If necessary, heat outer race to 300-390 deg. F (150-200 deg. C) and set roller cage on ice. Place roller cage into outer race with 2 pair of pliers. See **Fig. 22**.
2. Rotate roller cage slightly, immediately after installing, to locate it properly against outer race.
3. Install upper circlip. Install rollers ad springs into cage. Ensure that guide lug on springs (if equipped) is pointed toward roller. See **Fig. 23**.
4. On plastic roller and spring cage type, assemble 10 segments of plastic cage to form ring. Install all springs and rollers. Ensure each spring guide tab (lug) faces toward its roller.
5. Insert roller cage from flat side of outer race (small ledge toward tapered side and large ledge toward flat side). See **Fig. 24**. With outer race/roller cage assembled and laying on flat side, turn cage clockwise to secure. If assembled correctly clutch will not turn counterclockwise.

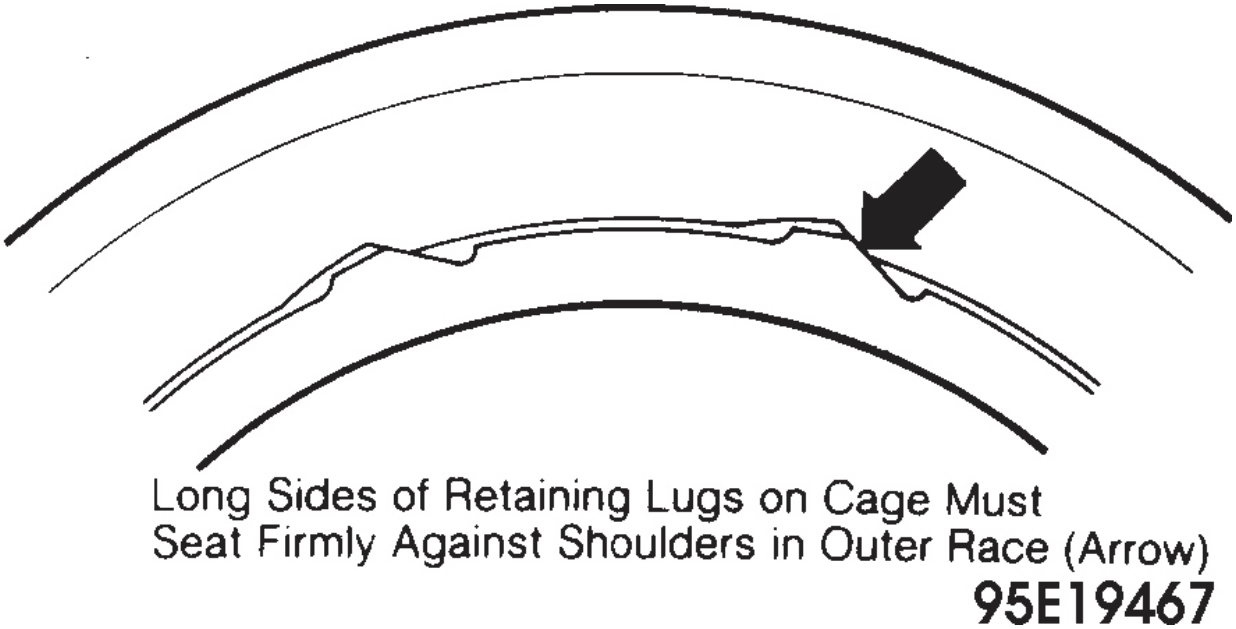

Fig. 22: Steel Roller Cage Installation In 1st Gear One-Way Clutch Outer Race
Courtesy of VOLKSWAGEN UNITED STATES, INC.

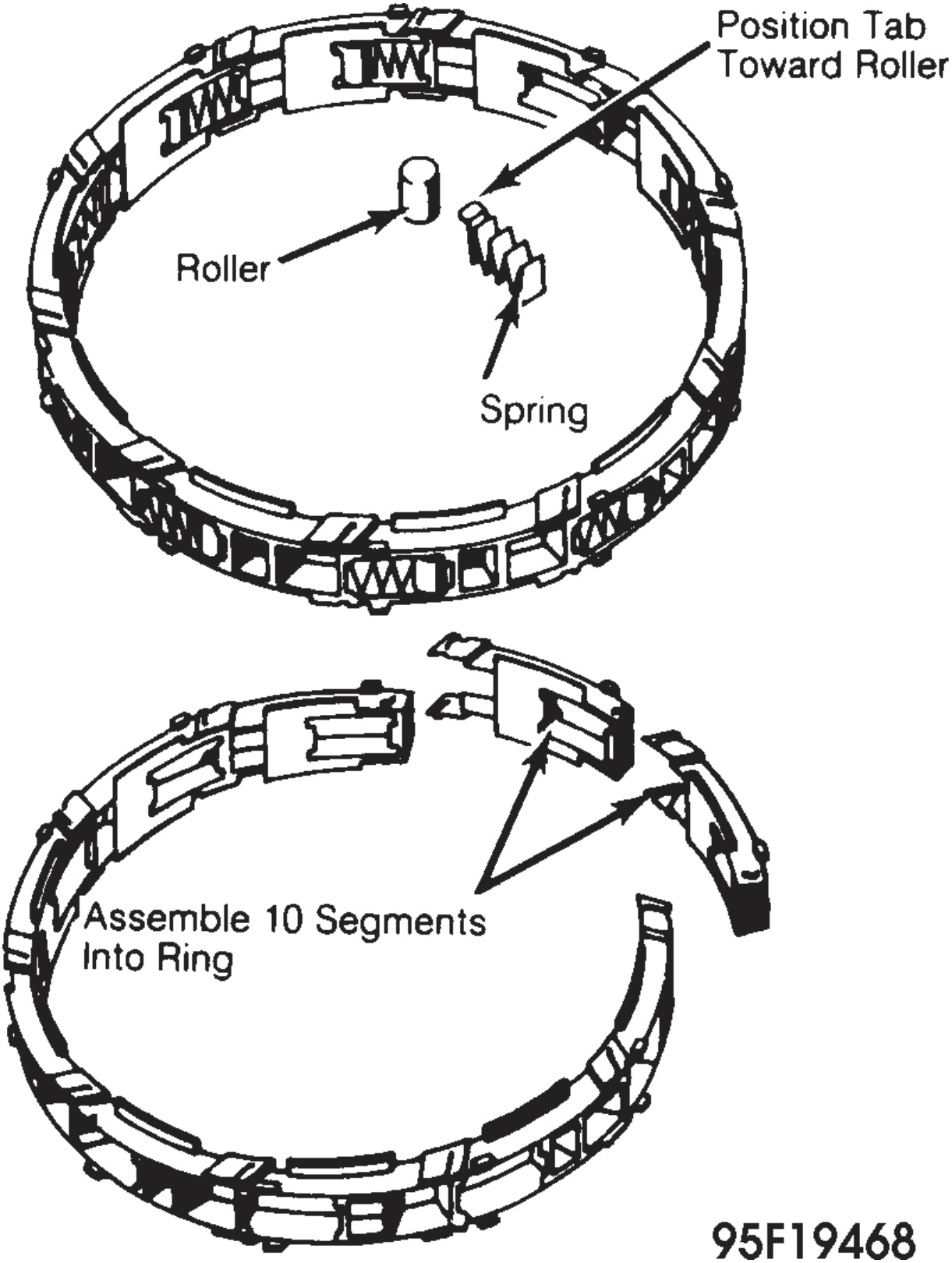

Fig. 23: Installing Roller & Spring In One-Way Clutch

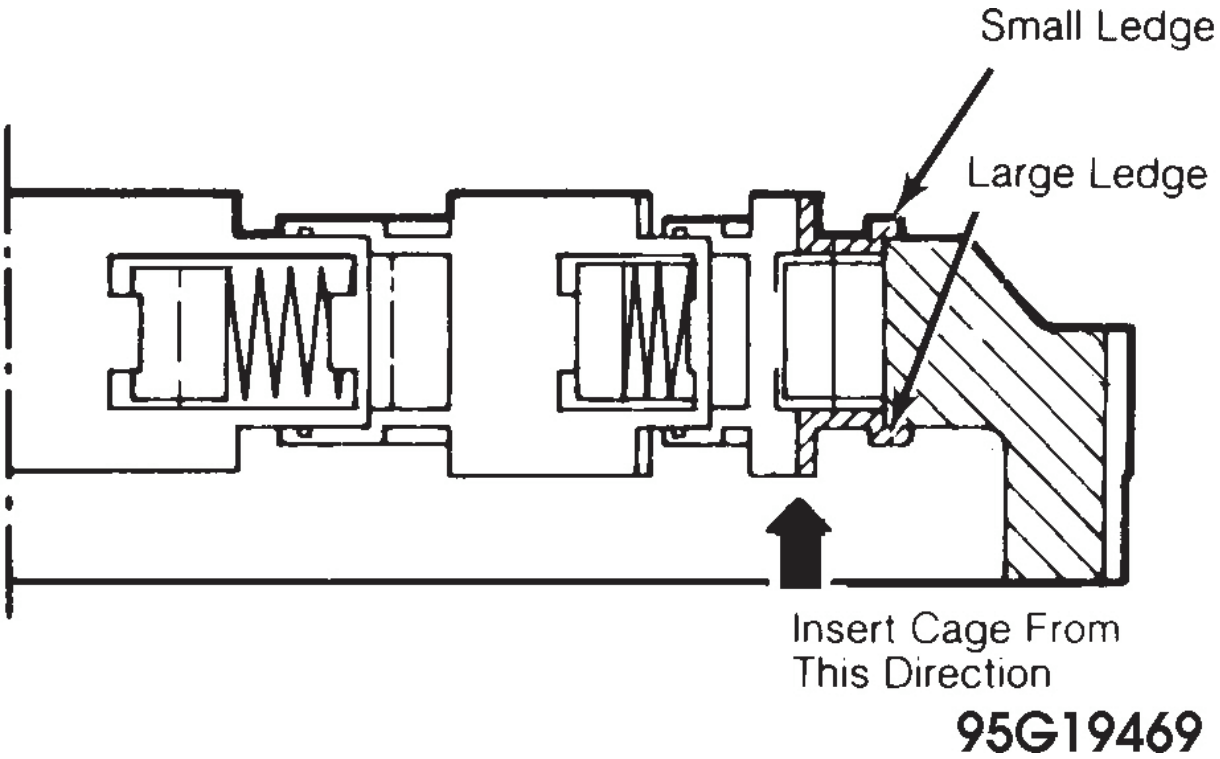

Fig. 24: Installing One-Way Clutch Into Outer Race

ANNULUS GEAR (2-PART) GOVERNOR DRIVE GEAR-PLANETARY RING GEAR

Disassembly & Reassembly

Annulus gear engages planet gears of reverse planetary gearset. Two-part gear should be disassembled only if necessary to replace one of the components. To disassemble, detach circlip, and remove governor drive gear/hub from flanged annulus gear. Inspect for damage or excessive wear and replace components as necessary. If new circlip is needed, replace with Circlip (090 323 369).

TRANSAXLE REASSEMBLY

TRANSAXLE COMPONENT INITIAL ASSEMBLY

Reassembly

1. Coat 1st/reverse brake piston with ATF and install on oil pump housing. Insert brake piston/oil pump assembly into transaxle case. Ensure brake piston ball valve lines up with drilling in transaxle housing and anti-rotation lug for thrust washer of oil pump is facing toward top of case.
2. Before installing 1st/reverse gear driving shell, measure overall length to ensure proper component is installed. Shell length is 3.957" (100.50 mm). Install apply shell into case so that tab of shell engages upper groove in transaxle case. See **Fig. 25**.

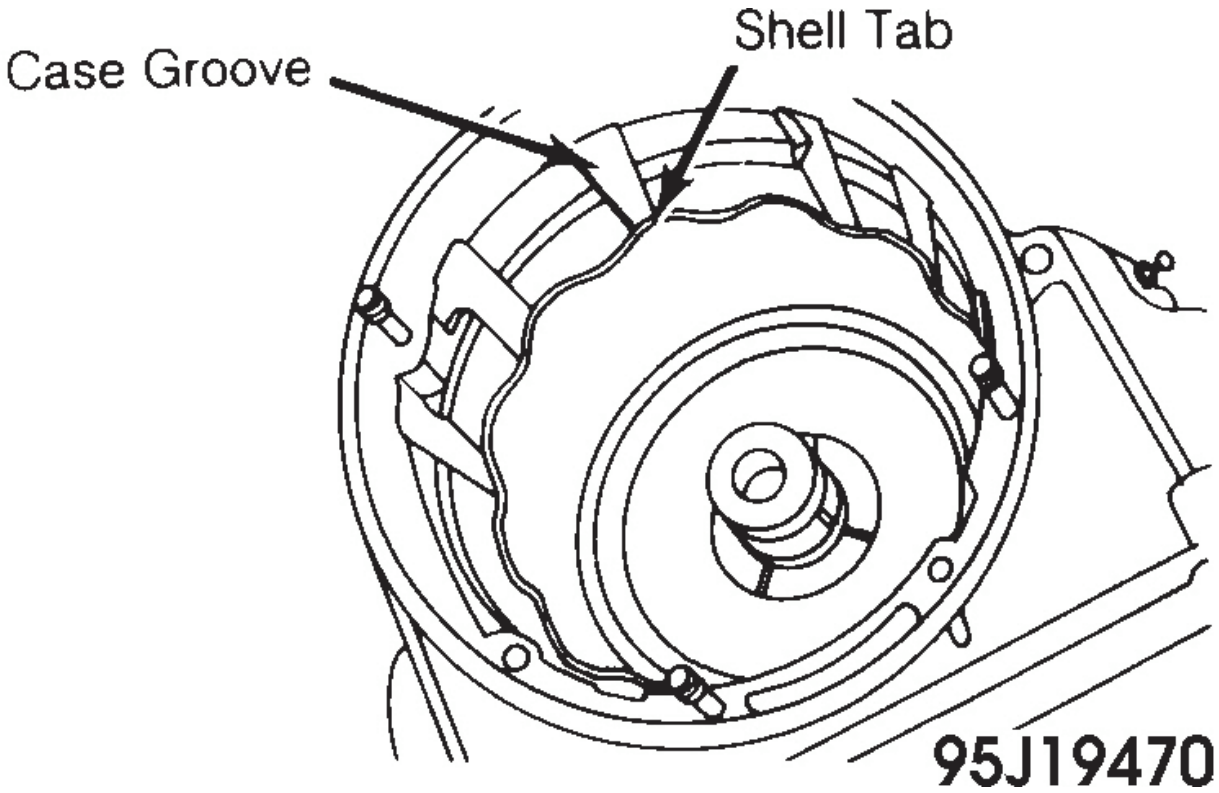

Fig. 25: Installing 1st/Reverse Gear Driving Shell

3. Position 1st/reverse brake piston return springs on spring plate. Ensure springs have a wire thickness of .039" (1 mm). If necessary, use petroleum jelly to adhere springs to plate. Insert assembly into case with springs downward and bolt holes in spring plate matching those in ATF pump.
4. Install plate mount bolts and gradually tighten, in a diagonal pattern, to 61 INCH lbs. (7 N.m). After installation, insert pump driveshaft into oil pump. Turn assembly by hand to ensure parts are not jammed and there is no binding.
5. Position 2nd gear band in transaxle case. With new "O" rings installed on servo piston cover and coated with ATF, install 2nd gear servo piston in case. Ensure piston pin engages band end inside case. Using lever (VW281a), push cover/piston assembly against spring pressure. Install circlip.
6. Turn transaxle case horizontal (servo piston cover pointed down). On opposite side of case, install band adjusting screw push rod. Be sure rod engages band end inside case. Install adjusting screw just enough to hold band in place.
7. Coat forward clutch-to-direct/reverse clutch thrust washers with petroleum jelly and position on rear end of forward clutch. Install forward clutch into direct/reverse clutch. Make sure that splines on forward clutch drum fully engage splines on direct/reverse clutch lined plates.
8. With transaxle case opening angled downward, install assembled clutch units in case and over neck of oil pump. Use care not to damage pump seal rings. Ensure inner thrust washer, thrust bearing and outer thrust washer are between oil pump piston end and forward clutch.
9. Rotate transaxle case so opening faces upward. Install forward planetary-to-forward clutch thrust bearing into forward clutch. Install forward planetary gear set into ring gear in forward clutch.
10. Install sun gear (short end first) into gear set. Install driving shell and thrust washer over sun gear. Position thrust washer on underside of reverse planetary gear set. Install gear set into case and onto sun gear.
11. Install 1st/reverse brake wave washer in case. Check for, proper identification, mark of "B1" on 1st gear inner splined plates. Install 4 fiber lined and 4 steel plates in case alternately,

starting with steel plate. If any new fiber plates are used, soak plates in transaxle fluid for 15 minutes prior to installation.

12.

NOTE: With one-way clutch installed, it should not be possible to rotate reverse planetary gear set counterclockwise.

Install 1st gear one-way clutch assembly into transaxle case. Using special tool (VW458), push clutch downward while rotating reverse planetary gear set clockwise to fully engage parts. With all parts engaged, install one-way clutch-to-case retaining circlip. See **Fig. 26**

CAUTION: With correctly installed components, circlip groove should uncovered. Do not force in circlip on an incorrectly assembled transaxle.

13. Position needle bearing and thrust washer on rear side of governor drive gear/ring gear assembly. Install unit into transaxle case fully engaging reverse planetary gear set. Install separation plate gasket, with plate, over case studs. Install and tighten plate mount screws. Check transaxle end play (whether or not new parts were installed).

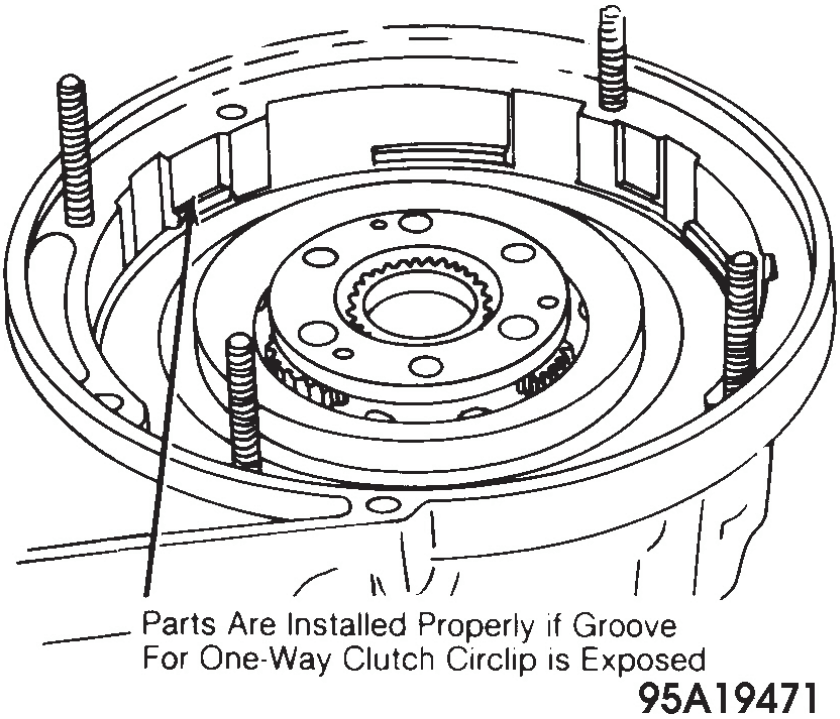

Fig. 26: Installing 1st Gear One-Way Clutch Circlip

NOTE: When adjusting brake band, transaxle must be horizontal in order to keep band from slipping or jamming. If band slips, transaxle must be partially disassembled to correct problem.

14. Adjust 2nd gear brake band as follows: Tighten band adjusting screw to 7 ft. lbs. (10 N.m). Loosen and retighten adjusting screw to 4 ft. lbs. (5 N.m). From this position, back off screw, exactly 2 1/2 turns and tighten lock nut to 14 ft. lbs. (19 N.m).
15. If case linkage was disassembled, reinstall in case using **Fig. 4** as an assembly guide. Install new seal on accumulator piston (lip pointing toward case). Install piston and spring into case.
16. Install valve body assembly, making sure manual valve engages manual lever and kickdown valve engages kickdown lever. Install valve body-to-case bolts and tighten from center

outward. Install oil pan with new gasket.

FINAL DRIVE

DISASSEMBLY

1. Place final drive assembly in holding fixture. Remove oil pan and gasket. Rotate differential assembly in case until differential pinion gear opening appears. Use 2 screwdrivers to remove 2 clips retaining axle drive flanges in differential. See **Fig. 27**.

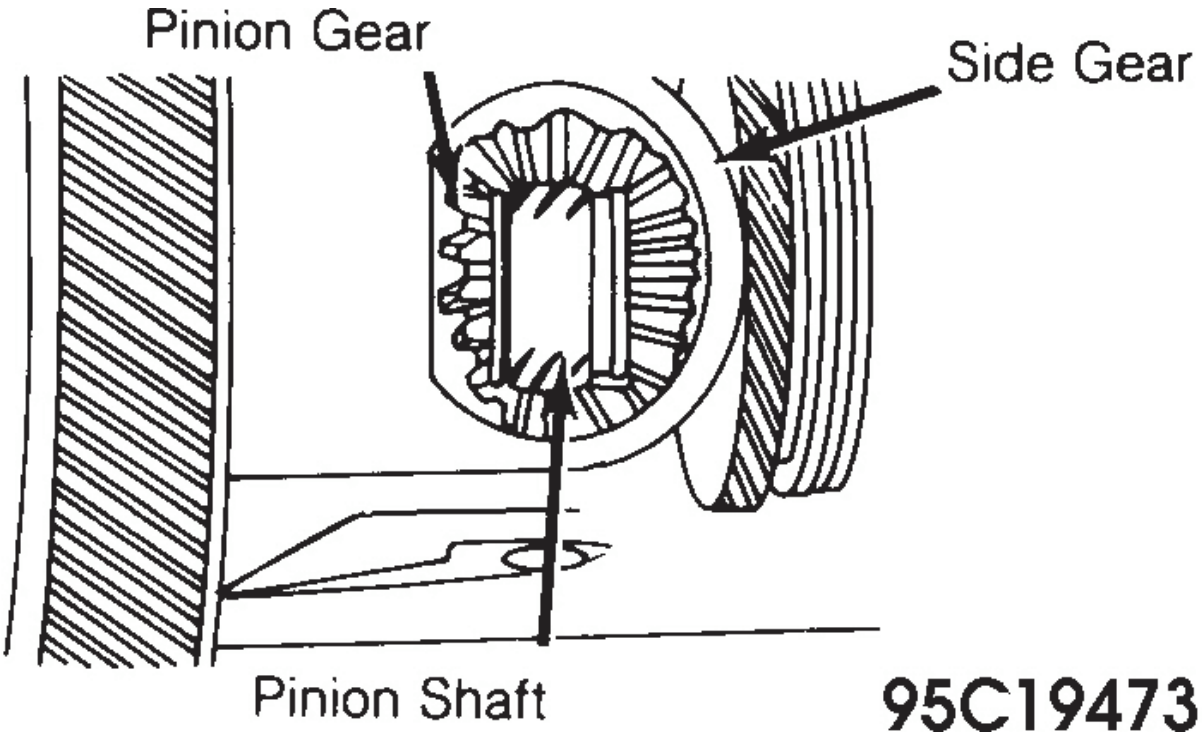

Fig. 27: Location Of Drive Flange Retaining Clips

2. Pull axle drive flanges out of final drive housing together with side gear shafts. Turn drive flanges slightly during removal to prevent side gear thrust washers from catching in circlip grooves of side gear shafts.
3. Remove retaining bolt and withdraw speedometer driven gear assembly straight out of case. If bearings are to be mused, scribe a match mark on differential side bearing adjusting ring and case for reassembly reference.
4. Remove lock clip from adjusting ring. Using spanner wrench (VW 182), screw ring out of case. See **Fig. 28**. On opposite side of case, remove nuts and withdraw the other differential side bearing retainer (cover). Grasp differential and ring gear assembly and remove from final drive case. See **Fig. 29**.

NOTE: After index marking case and adjusting ring, screw ring out of case with spanner wrench.

5. Inside converter housing area of final drive case, mark relationship of intermediate gear shaft and case with scribe. Remove lock clip from intermediate gear shaft. Using special tool, screw shaft out of case. See **Fig. 30**.
6. From inside case, remove intermediate gear, bearings and thrust washer. See **Fig. 31**. Remove bolts retaining one-way clutch support to converter housing area of case. Withdraw support and drive pinion shaft assembly from case.

7. To disassemble differential assembly, remove 2 differential pinion shaft retaining snap rings. Remove drive shaft from case with drift. Move differential pinion gears around to case openings. Remove pinion gears arid thrust washers. Remove differential side gears and thrust washers.
8. Remove ring gear-to-differential case mount bolts. Using hydraulic press, adapters (VW411 and VW295a) with support plates (VW401 and VW402), separate ring gear from case. If required, withdraw differential side bearings and speedometer drive gear from case with press and adapter (US1078).
9. Withdraw bearing races from adjusting ring and side cover. If replacement of pinion bearings or pinion shaft is required, proceed as follows. Place pinion assembly in press. With press plates positioned under bearings, drive bearings from pinion shaft.
10. Place stator support in press. Drive out pinion bearing race along with preload shim and pinion oil seal. Using hammer and drifts drive remaining pinion bearing race out of final drive case. Inspect ATF drillings in one-way clutch/stator support assembly.
11. Check ball valve in support for proper action by installing a piece of tight fitting hose into ball valve hole. Apply suction. Ball valve must seal to prevent ATF from draining out of torque convertor when engine is not running. If bail does not seal, replace one-way clutch support.

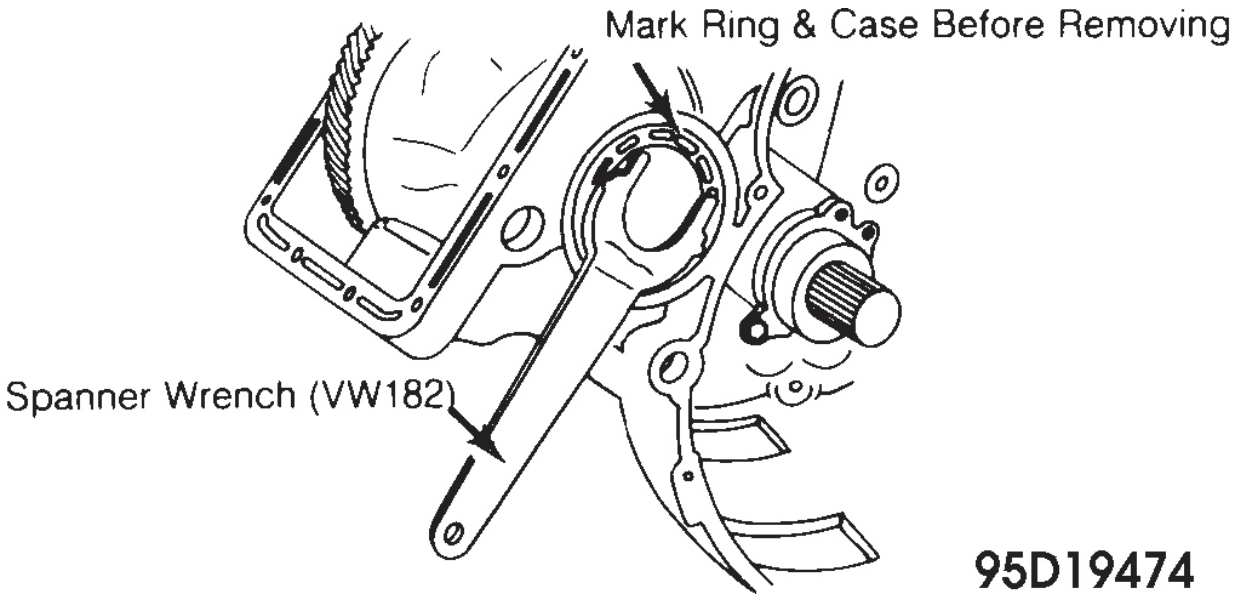

Fig. 28: Removing Differential Side Bearing Adjusting Ring

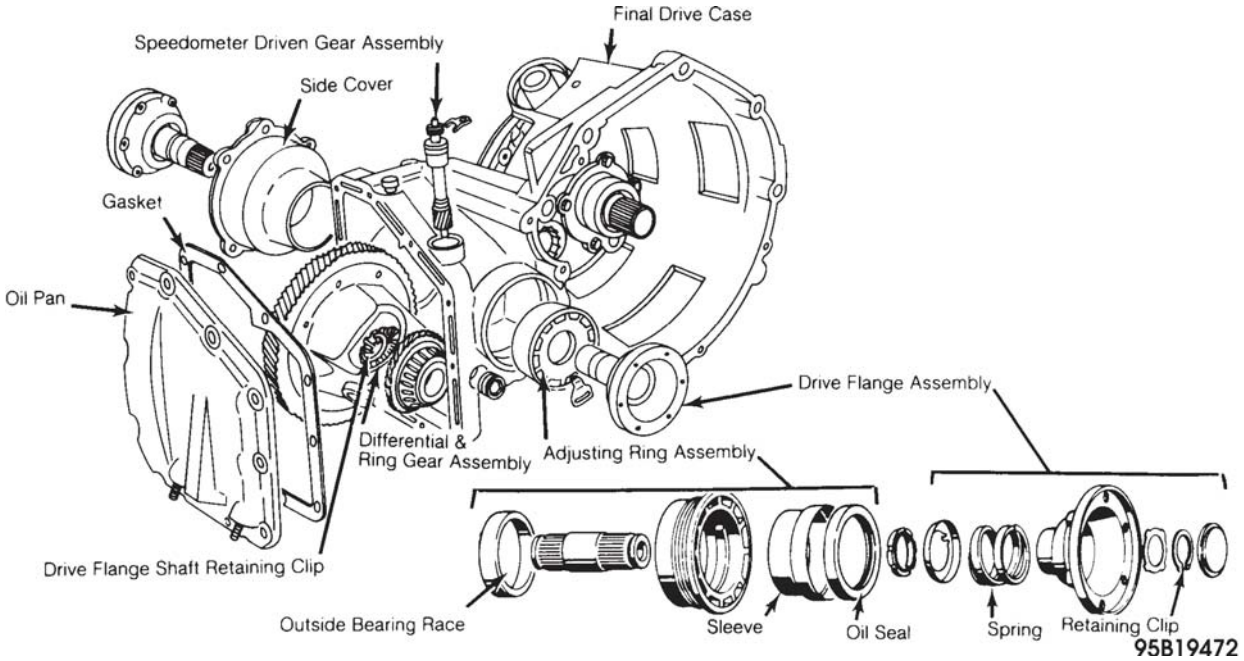

Fig. 29: Exploded View Of Differential & Related Parts In Final Drive Case

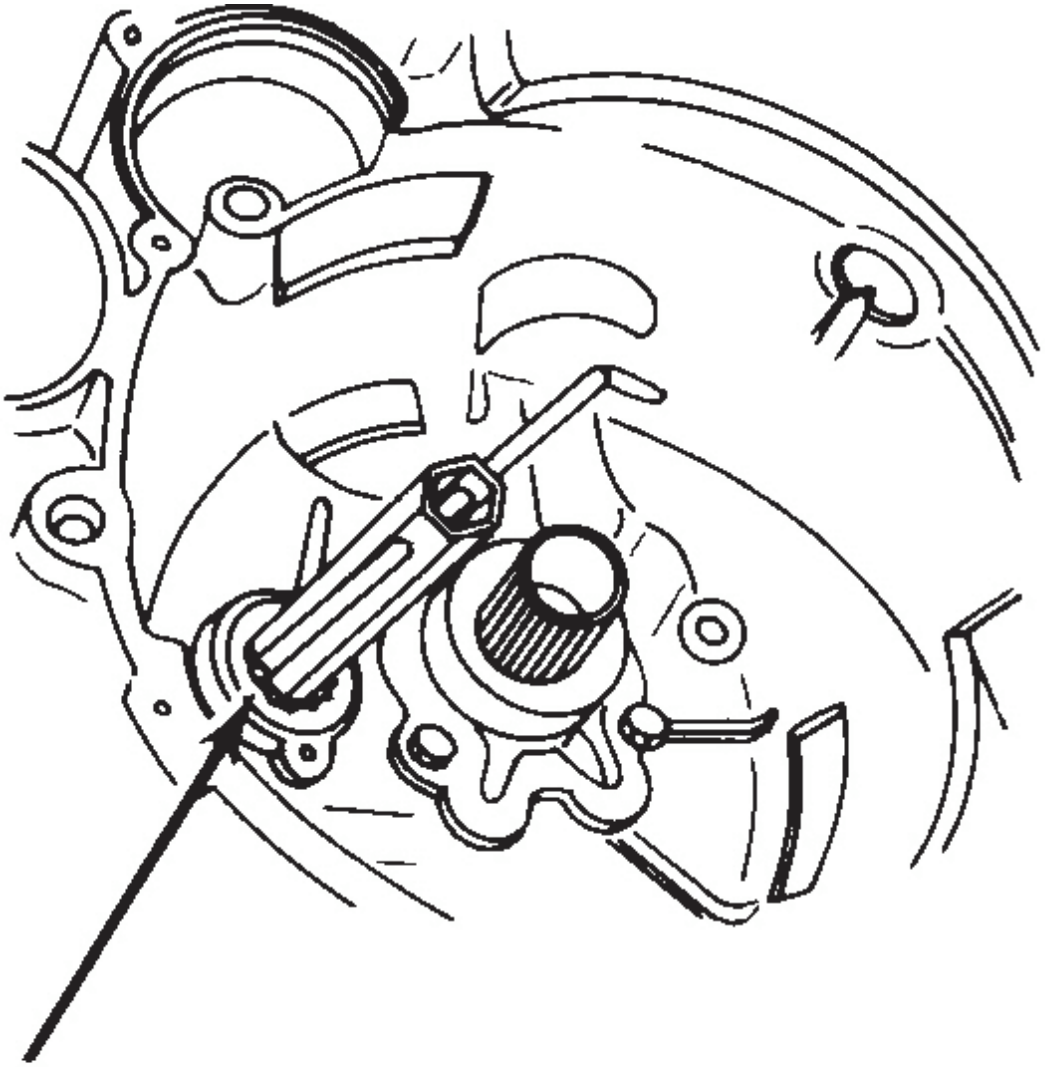

Mark Shaft & Case Before Removing Shaft

95E19475

Fig. 30: Removing Intermediate Gear Shaft

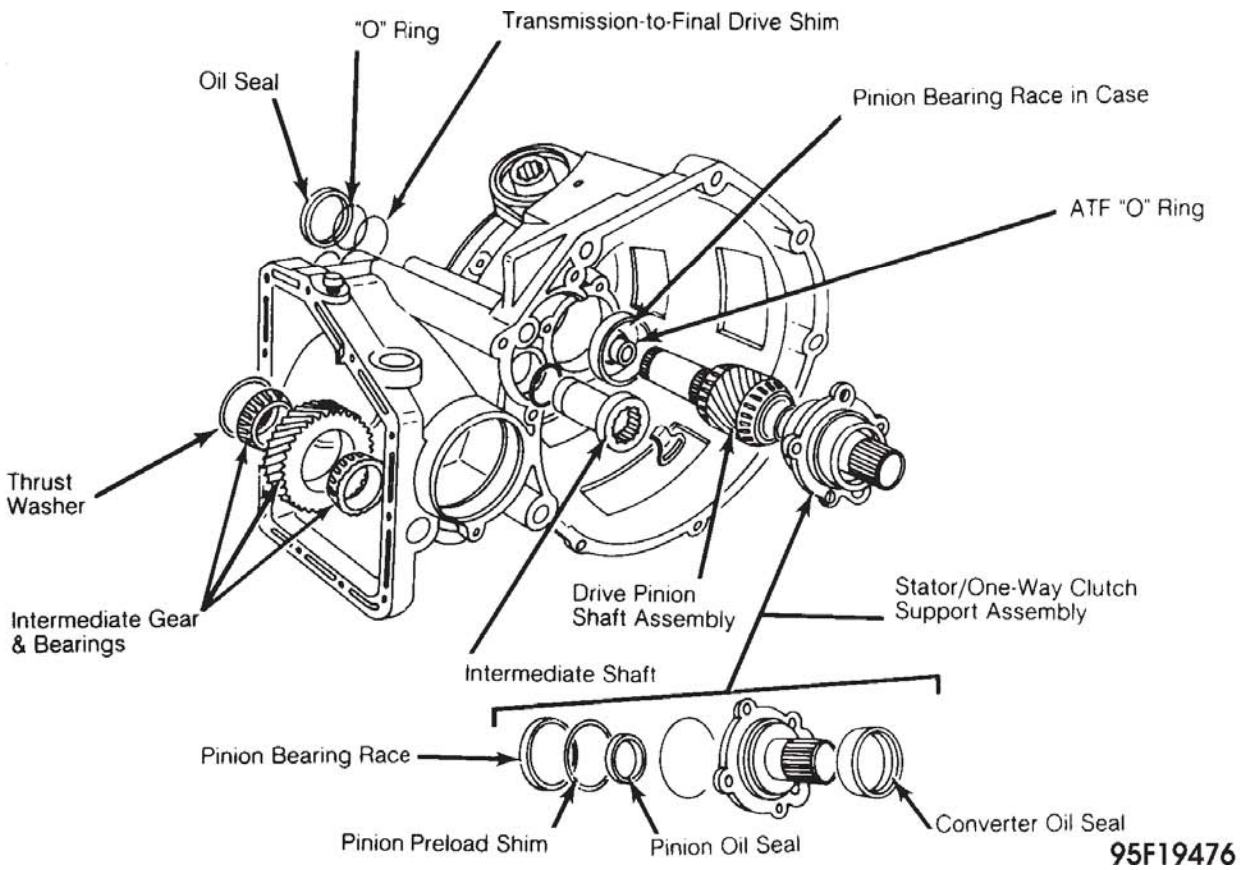

Fig. 31: Exploded View Of Intermediate Gear & Pinion Gear Assemblies In Final Drive Case

NOTE: **If pinion bearing outer races are being removed, ensure races are kept with their original bearings.**

REASSEMBLY & ADJUSTMENTS

Pinion Reassembly & Preload Adjustment

1. If pinion gear and/or pinion bearings were replaced, lubricate bearings with gear oil. If preload check must be done, do not lubricate bearings until after check has been completed.
2. Press bearings onto pinion shaft. Using drift, install pinion bearing race into final drive housing. Temporarily install remaining pinion bearing race (without adjusting shim) into stator support.

NOTE: **When measuring end play of pinion shaft, do not lubricate bearings or turn drive pinion. If pinion is lubricated, turned when seating against outer race or when installing in final drive housing, measurement will be inaccurate.**

3. Install pinion assembly into final drive case, tightening stator support bolts securely. See **Fig. 31**. With transaxle attaching face of final drive housing facing upward, position dial indicator on housing with button of indicator contacting pinion shaft.
4. Zero indicator. Move pinion shaft up and down (without turning) noting maximum end play reading on dial indicator. See **Fig. 32**. To determine proper pinion preload shim usage (to be, installed under bearing race in stator support), add .008" (.20 mm) to end play reading.

5. Preload shim thickness should be equal to this amount. Pinion preload shims are available in thicknesses, of .039" (1.00 mm) to .087" (2.20 mm) in increments of .002" (.05 mm). If exact size shim is not available, use shim size closest to ideal thickness.

NOTE: When installing used shim, measure shim in several places to ensure thickness accuracy. Do not use burred or damaged shims.

6. Remove pinion assembly from final drive case. Press bearing race out of stator support. Install pinion oil seal into support. Install preload shim determined in steps 2 and 3. Position bearing race in support and press into place.
7. Install converter oil seal on front side of support. Install sealing "O" ring on rear side. Install new transaxle fluid passage "O" rings in final drive case, at stator support attaching face. Thoroughly coat pinion bearings with gear oil.
8. Position pinion assembly in final drive case. Install stator support and tighten mount bolts. Install torque gauge (VW24Q) and rapidly turn 15-20 times to settle bearings. See **Fig. 33**. Turn shaft with torque gauge and record turning torque reading for future reference.

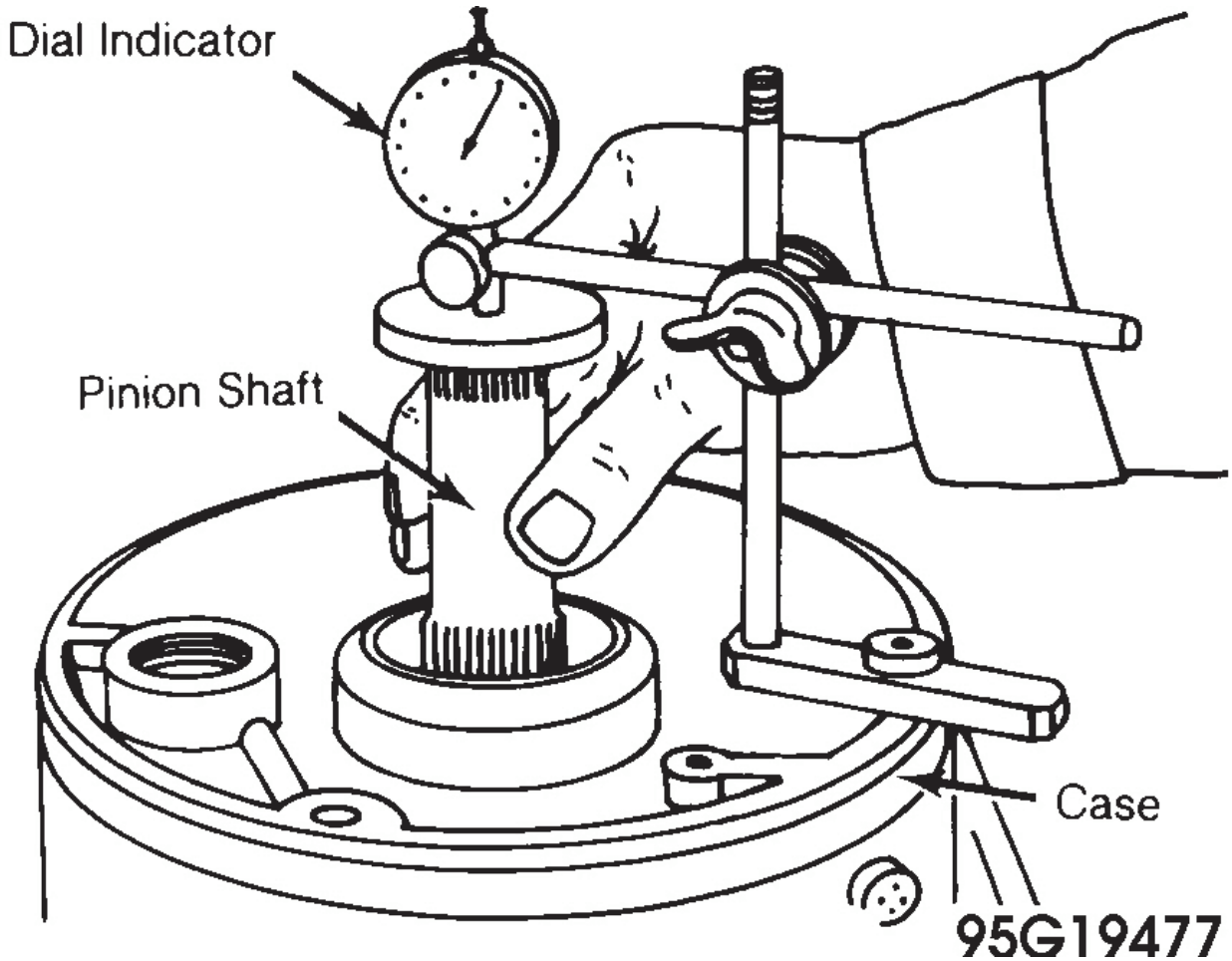

Fig. 32: Using Dial Indicator To Determine Pinion Preload Shim Thickness

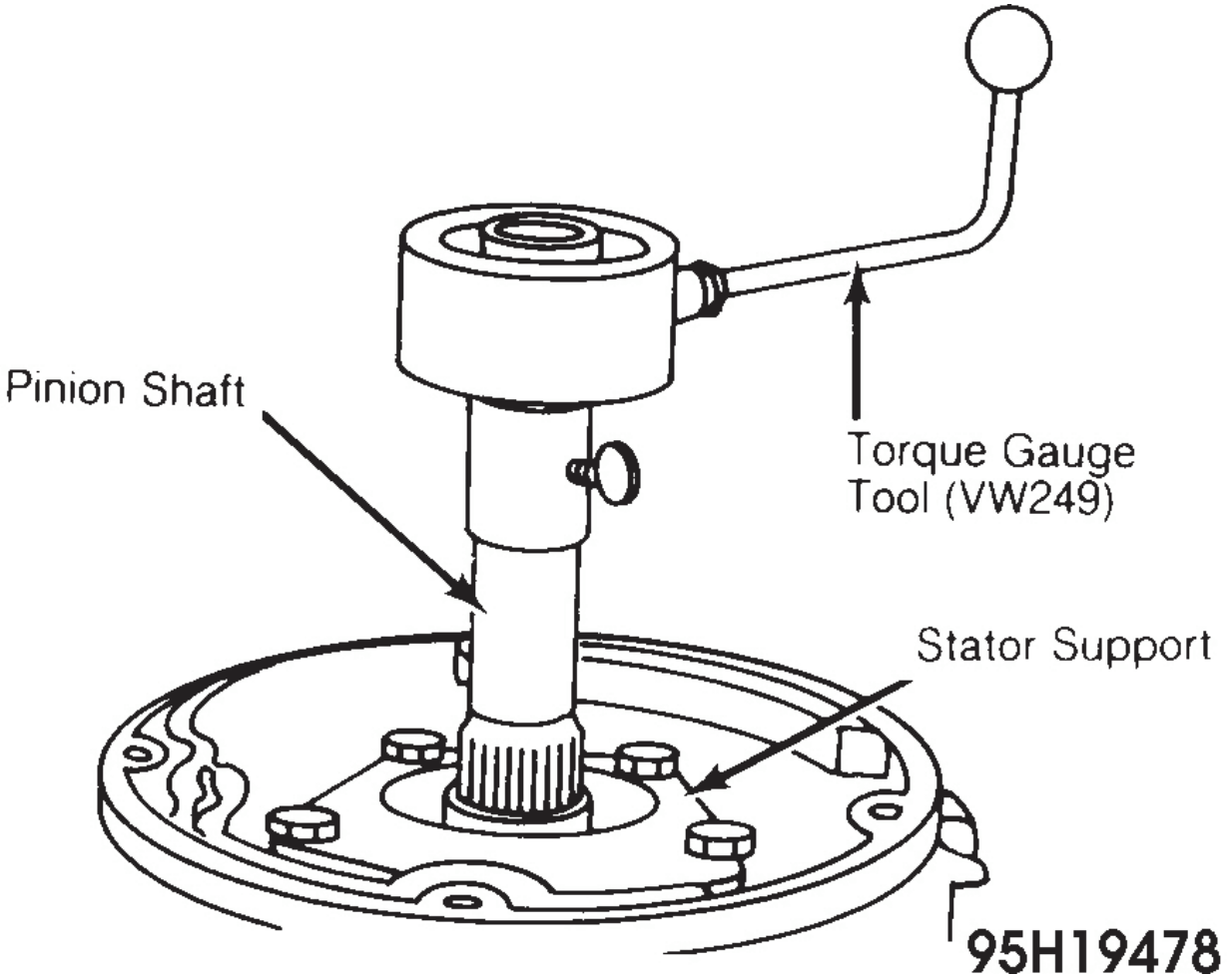

Fig. 33: Checking Pinion Shaft Turning Torque

Intermediate Gear Reassembly & Preload Adjustment

NOTE: Torque reading is basis for intermediate shaft and differential assembly preload adjustments. Reading must be noted before any further assembly steps are taken.

1. If intermediate gear and bearings were replaced, coat bearings, with gear oil and install new "O" rings. Install bearings in intermediate gear. Position gear assembly into final drive case. Insert intermediate shaft and tighten shaft slightly. Attach torque gauge to pinion shaft. Rotate shaft and note preload reading on gauge. See **Fig. 33**.
2. While continuing to rotate pinion shaft, turn intermediate shaft left or right until preload reading on gauge is about 13 INCH lbs. (1.4 N.m) higher than reading obtained in step 6 of PINION REASSEMBLY & PRELOAD ADJUSTMENT. With proper preload obtained, install and tighten shaft lock plate bolt.

Pinion Shaft Turning Torque

1. Lubricate differential side gears and thrust washers with gear oil and position in differential case. Coat differential pinion gears and thrust washers with lubricant. Place gears and washers onto side gears through opening in differential case. Rotate gears into alignment with differential pinion shaft bores in case.
2.

NOTE: Pinion gears must be exactly opposite one another in order to

install pinion shaft.

Install differential pinion shaft into differential case and through pinion gears. See **Fig. 34**. Install pinion shaft retaining clips. If removed, press differential side bearings and speedometer drive gear onto differential case.

3. If ring gear is being replaced, install guide pins into differential case bolt hole. Heat ring gear in hot oil to about 212 deg. F (100 deg. C). Using pins to guide ring gear into place, install gear on case. Install and tighten mount bolts.
4. If differential case, pinion gears, side gears, thrust washers or axle drive flange shafts are replaced, drive flange shaft retaining rings must be selected. Two sizes of retaining rings are available. To determine which rings to use, go to next step. If parts listed are being reused, go to step 6.
5. To select drive flange shaft retaining rings, install each flange shaft into differential case and bottom against differential pinion shaft. While holding side gear against differential case, attempt to install the thicker of the 2 available circlips. If ring jams at sides and cannot be installed, thinner retaining ring must be used when drive flanges are installed.
6.

NOTE: If differential must be adjusted, ensure old oil seals are removed. Do not install new oil seals until turning torque reading is recorded.

Install side bearing races and new oil seals in adjusting ring and side cover (if removed). Install new sealing "O" rings on ring and cover. Thoroughly coat ring gear and side bearings with final drive lubricant.

7. Position differential assembly in final drive case and engage with intermediate gear. Install side cover to engage with side bearing, then install and tighten cover retaining nuts. Screw side bearing adjusting ring into case and over side bearing so differential is firmly supported.
8. With torque gauge attached to pinion shaft, rotate shaft and note torque reading. While continuing to rotate pinion shaft rapidly, gradually rotate side bearing adjuster left or right until preload reading is about 6 INCH lbs. (.7 N.m) greater than last reading obtained in **INTERMEDIATE GEAR REASSEMBLY & PRELOAD ADJUSTMENT**.
9. With proper preload obtained, install and tighten adjusting ring lock. If disassembled, install drive flanges onto flange shafts. Secure with spring rings and lock clips. Install end caps into flange shafts. Install shafts into final drive case, securing with retaining clips selected in step 5. Install oil pan with new gasket and fill final drive with proper amount of gear oil.

NOTE: Final drive oil capacity is .5 qts. (.75L) of SAE 90W hypoid gear oil.

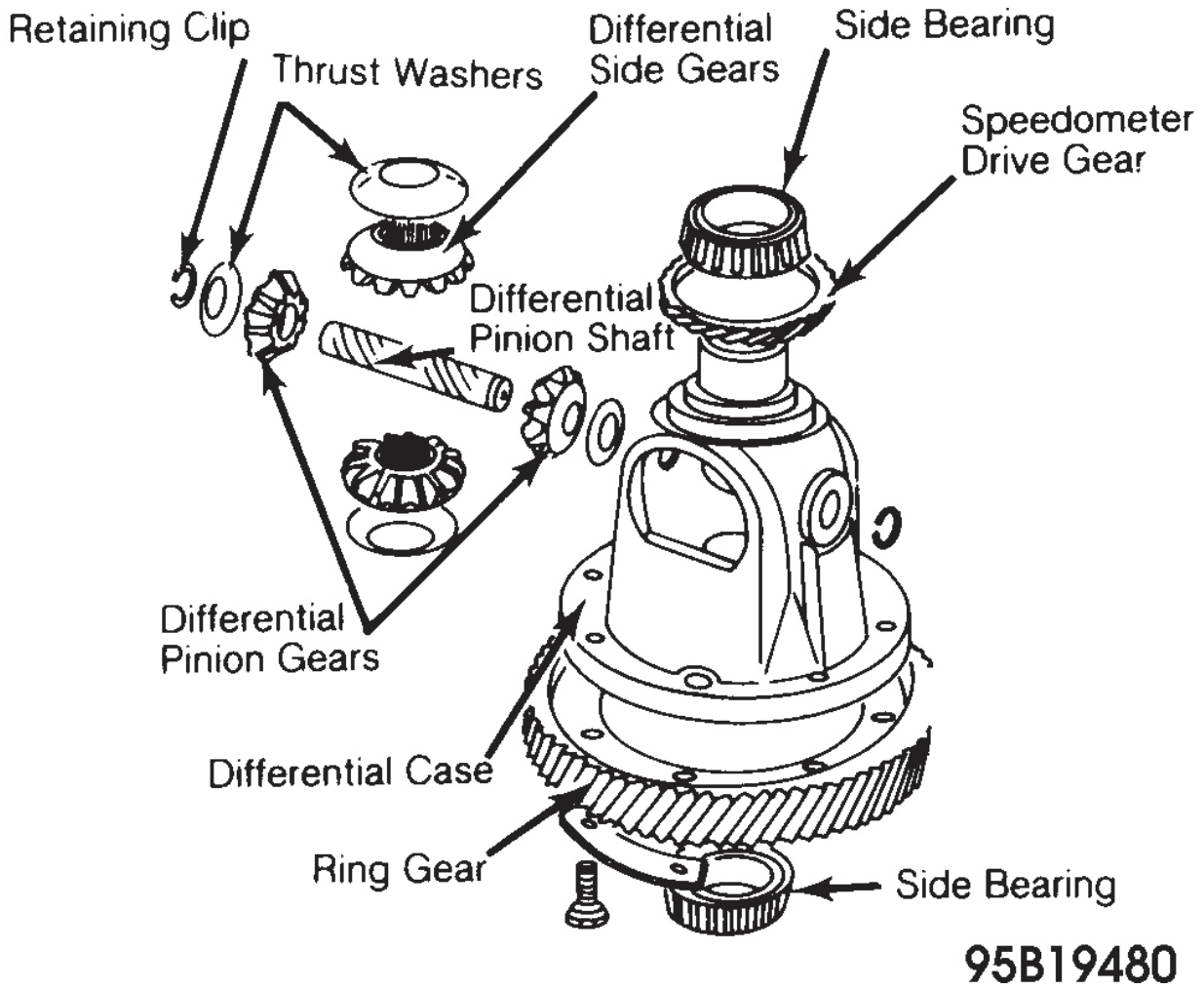

Fig. 34: Exploded View Of Differential & Ring Gear Assembly

FINAL ASSEMBLY OF TRANSAXLE

1. Measure play between final drive and transaxle. Place a straightedge on transaxle attaching face of final drive housing. Using a depth gauge, measure distance from top surface of straightedge to surface of pinion bearing inner race. See **Fig. 35**. This is measurement "A".
2. Measure distance from top surface of straightedge to face of final drive housing. This is measurement "B". Subtract "B" from "A" to obtain "C". Record for future reference.
3. Place a new gasket on transaxle separation plate. Position straightedge on transaxle case and measure distance from top surface of straightedge to gasket surface. This is measurement "D".
4. Measure distance from top surface of straightedge down to inner shoulder of governor drive gear. This is measurement "E". Subtract "E" from "D" to obtain "F" and record.
5. Subtract "F" from "C". This amount is end play (without shims) between final drive and transaxle. Refer to **END PLAY SHIM SELECTION** table to determine shim pack thickness required. Shims are available in thicknesses of .016" (.40 mm) and .047" (1.20 mm). Combine shims as required to obtain correct total thickness.
6. Install selected shim(s) into final drive case, on top of pinion bearing inner race. Next, install sealing "O" ring and final drive-to-transaxle oil seal into pinion cavity of final drive housing. Install impeller shaft and pump shaft fully into transaxle.
7. Position new "O" ring seal on final drive case. Mate final drive and transaxle cases. Install final drive-to-transaxle case nuts and tighten. Place new "O" ring seals on governor, governor cover and speedometer driven gear assembly.
8. Install components in transaxle case. Install torque converter on stator support to complete

assembly. Install transaxle assembly into vehicle, fill with ATF and road test for proper operation.

NOTE: When filling dry transaxle with ATF, capacity is 6.4 qts. (6.1L). Refill capacity of transaxle is 3.2 qts. (3.01L). Use only DEXRON or DEXRON II type transaxle fluid.

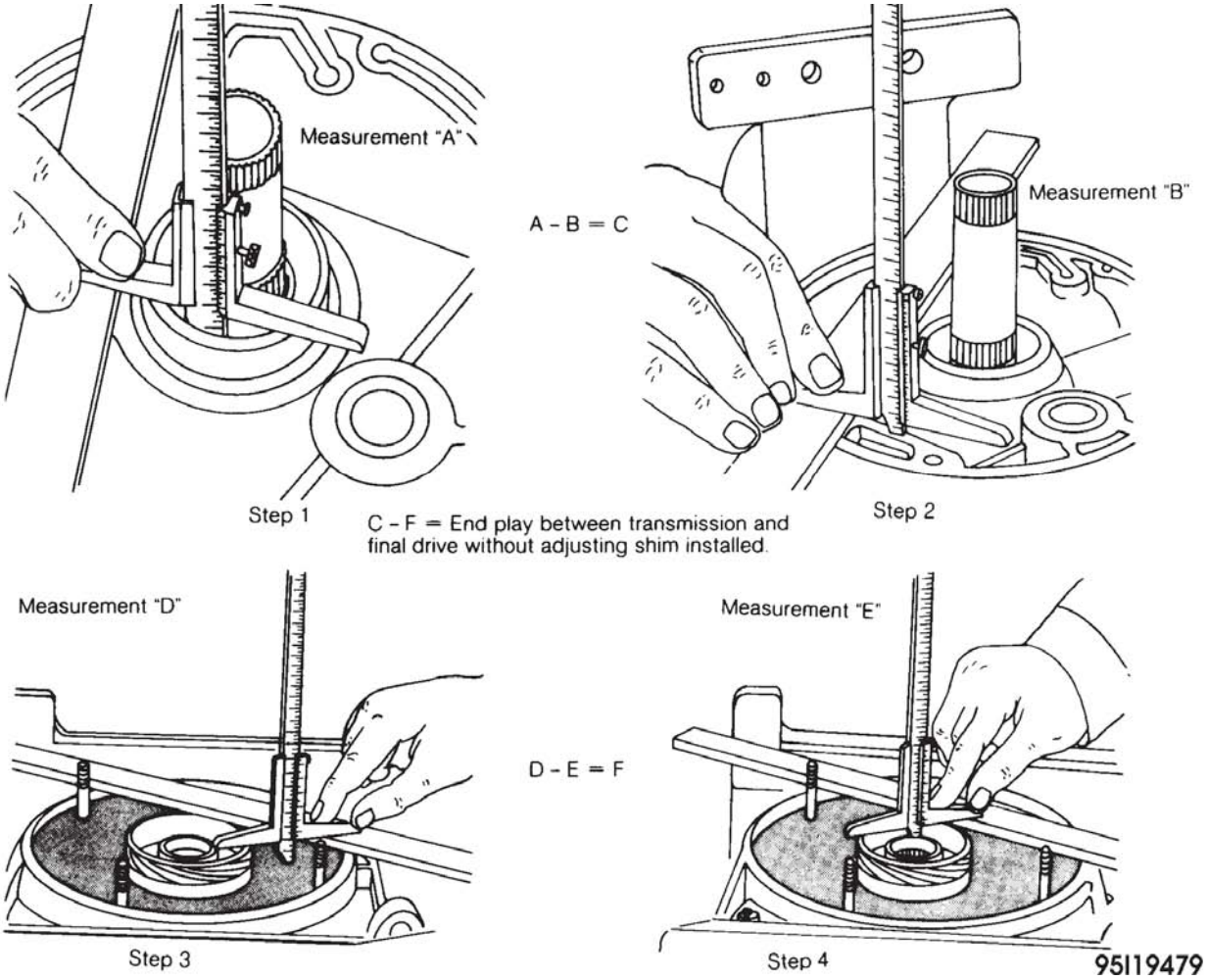

Fig. 35: Measuring Transaxle-To-Final Drive End Play

END PLAY SHIM SELECTION

End Play In. (mm)	Correct Shim In. (mm)
.009-.032 (.23-.84)	None
.033-.049 (.85-1.24)	.016 (.4)
.050-.065 (1.25-1.64)	.032 (.8)
.066-.080 (1.65-2.04)	.048 (1.2)
.081-.096 (2.05-2.44)	.064 (1.6)
.097-.112 (2.45-2.84)	.080 (2.0)
.113-.128 (2.85-3.24)	.096 (2.4)
.129-.143 (3.25-3.64)	.112 (2.8)
.144-.153 (3.65-3.88)	.128 (3.2)

TORQUE SPECIFICATIONS

TORQUE SPECIFICATIONS

Application	Ft. Lbs.
Drive Shaft	
CV Joint-To-Drive Flange	33 (45)
Final Drive	
Housing Cover-To-Housing Mount Bolt	22 (30)
Intermediate Gear Shaft Lock Plate-To-Housing	11 (15)
One-Way Clutch Support Mount Bolt	18 (25)
Ring Gear Mount Bolt	51 (70)
Side Bearing Cover Mount Nut	22 (31)
Transaxle	
Converter Cover Plate-To-Bell Housing	11 (15)
Converter-To-Drive Plate	22 (31)
Constant Velocity Joint-To-Drive Flange	32 (45)
Kickdown Valve-To-Shaft Nut	11 (15)
Manual Valve-To-Shaft Nut	14 (20)
Operating Lever-To-Shaft (For Kickdown Valve)	11 (15)
Operating Lever-To-Shaft (New Type)	14 (20)
Pan-To-Transaxle Case	14 (20)
Protection Plate-To-Transaxle Mounting Bolt (8 mm)	14 (20)
Protection Plate-To-Transaxle Mounting Bolt (10 mm)	18 (25)
Selector Segment Spring-To-Transaxle Case	14 (20)
Starter-To-Bell Housing	22 (31)
Transaxle Case-To-Final Drive Housing	22 (31)
Transaxle-To-Engine Mount Bolt	40 (56)
2nd Gear Brake Band Adjusting Screw Lock Nut	14 (20)
	INCH lbs. (N.m)
Final Drive Housing (Differential)	
Adjusting Ring Lock Plate-To-Housing	89 (10)
Transaxle	
Accumulator Cover-To-Case	27 (3)
ATF Pump-To-Case	62 (7)
Main Pressure Tap Plug	89 (10)
Operating Lever Shaft Lock Bolt	35 (4)
Separating Plate-To-Transaxle Case	62 (7)
Strainer-To-Valve Body	27 (3)
Valve Body-To-Case	35 (4)
Valve Body-To-Separator & Transfer Plates	35 (4)

TRANSAXLE APPLICATION

Application	Transaxle Model
Cabriolet	Type 010
Golf	Type 010
Jetta	Type 010
Scirocco	Type 010

TYPE 010 COMPONENT IDENTIFICATION

Component	Identification Code
Transaxle Type	010
Transaxle Model	TJ Or TNA
Valve Body	FG
Torque Converter	K

SHIFT SPEEDS SPECIFICATIONS

Application	Full Throttle (MPH)	Kickdown (MPH)
I.D. Code "TJ"		
1-2 Upshift	23-37	44-47
2-3 Upshift	54-68	76-77
3-2 Downshift	38-53	71-73
2-1 Downshift	16-20	34-36
I.D. Codes "TNA"		
1-2 Upshift	21-33	40-43
2-3 Upshift	50-62	69-71
3-2 Downshift	36-49	66-67
2-1 Downshift	15-18	31-33

MAIN PRESSURE SPECIFICATIONS

Application	psi (kg/cm ^{2})
"D" @ Idle (1)	41-42 (2.9-3.0)
"D" @ Full Throttle (2)	83-84 (5.85-5.95)
"R" @ Idle (1)	131-145 (9.1-10.0)

(1) Test should be performed on a dynamometer whenever possible. Perform idle test with vehicle stationary.

(2) Full throttle test up to 31 MPH.

STALL SPEED SPECIFICATIONS

Application	Stall RPM
Transaxle Code Letters	
TJ (1)	2200-2500
TNA	2320-2570

(1) Torque converter code letter "K".

TORQUE CONVERTER CODE LETTER APPLICATION

Application	Code Letter
1.8L Engine (Gas)	K

END PLAY SHIM SELECTION

End Play In. (mm)	Correct Shim In. (mm)
.009-.032 (.23-.84)	None
.033-.049 (.85-1.24)	.016 (.4)

.050-.065 (1.25-1.64)	.032 (.8)
.066-.080 (1.65-2.04)	.048 (1.2)
.081-.096 (2.05-2.44)	.064 (1.6)
.097-.112 (2.45-2.84)	.080 (2.0)
.113-.128 (2.85-3.24)	.096 (2.4)
.129-.143 (3.25-3.64)	.112 (2.8)
.144-.153 (3.65-3.88)	.128 (3.2)

TORQUE SPECIFICATIONS

Application	**Ft. Lbs.**
Drive Shaft	
CV Joint-To-Drive Flange	33 (45)
Final Drive	
Housing Cover-To-Housing Mount Bolt	22 (30)
Intermediate Gear Shaft Lock Plate-To-Housing	11 (15)
One-Way Clutch Support Mount Bolt	18 (25)
Ring Gear Mount Bolt	51 (70)
Side Bearing Cover Mount Nut	22 (31)
Transaxle	
Converter Cover Plate-To-Bell Housing	11 (15)
Converter-To-Drive Plate	22 (31)
Constant Velocity Joint-To-Drive Flange	32 (45)
Kickdown Valve-To-Shaft Nut	11 (15)
Manual Valve-To-Shaft Nut	14 (20)
Operating Lever-To-Shaft (For Kickdown Valve)	11 (15)
Operating Lever-To-Shaft (New Type)	14 (20)
Pan-To-Transaxle Case	14 (20)
Protection Plate-To-Transaxle Mounting Bolt (8 mm)	14 (20)
Protection Plate-To-Transaxle Mounting Bolt (10 mm)	18 (25)
Selector Segment Spring-To-Transaxle Case	14 (20)
Starter-To-Bell Housing	22 (31)
Transaxle Case-To-Final Drive Housing	22 (31)
Transaxle-To-Engine Mount Bolt	40 (56)
2nd Gear Brake Band Adjusting Screw Lock Nut	14 (20)
	INCH lbs. (N.m)
Final Drive Housing (Differential)	
Adjusting Ring Lock Plate-To-Housing	89 (10)
Transaxle	
Accumulator Cover-To-Case	27 (3)
ATF Pump-To-Case	62 (7)
Main Pressure Tap Plug	89 (10)
Operating Lever Shaft Lock Bolt	35 (4)
Separating Plate-To-Transaxle Case	62 (7)
Strainer-To-Valve Body	27 (3)
Valve Body-To-Case	35 (4)

Valve Body-To-Separator & Transfer Plates	35 (4)