# Automatic Transaxle (F4A51)

**GENERAL**

**AUTOMATIC TRANSAXLE SYSTEM**
AUTOMATIC TRANSAXLE

**AUTOMATIC TRANSAXLE CONTROL SYSTEM**
SOLENOID VALVE
VFS(VARIABLE FORCE SOLENOID) VALVE
INPUT SPEED SENSOR
OUTPUT SPEED SENSOR
TRANSAXLE OIL TEMPERATURE SENSOR
TRANSAXLE RANGE (TR) SWITCH
SHIFT LEVER

# GENERAL

## SPECIFICATION E63CDC3E

| Item | | F4A51 |
|---|---|---|
| Torque converter type | | 3-element, 1-stage, 2-phase type |
| Transaxle type | | 4-speed forward, 1-speed reverse |
| Engine displacement | | 2.7L GSL |
| Gear ratio | 1st | 2.842 |
| | 2nd | 1.529 |
| | 3rd | 1.000 |
| | 4th | 0.712 |
| | Reverse | 2.480 |
| Final gear ratio | | 3.770 |
| Shift pattern | Variable | |
| Shift range | 4range ( P-R-N-D) + Sports mode | |
| Shift range valve | PWM ; 5EA(Duty control) , VFS | |
| Stall speed | 2100~2900rpm | |
| Planetary gear | 2EA(Output planetary/Overdrive planetary) | |
| Clutch | 3EA | |
| Brake | 2EA | |
| OWC | 1EA | |

### TIGHTENING TORQUE

| ITEM | Nm | kgf·m | lb-ft |
|---|---|---|---|
| Control cable nut | 8 ~ 12 | 0.8 ~ 1.2 | 5.8 ~ 8.6 |
| Input shaft speed sensor | 10 ~ 12 | 1.0 ~1.2 | 7 ~ 8 |
| Output shaft speed sensor | 10 ~ 12 | 1.0 ~1.2 | 7 ~ 8 |
| Manual control lever | 18 ~ 25 | 1.8 ~ 2.5 | 13 ~ 18 |
| Transaxle range switch | 10 ~ 12 | 1.0 ~1.2 | 7 ~ 8 |
| Valve body cover | 10 ~ 12 | 1.0 ~1.2 | 7 ~ 8 |
| Valve body mounting bolt | 10 ~ 12 | 1.0 ~1.2 | 7 ~ 8 |
| Oil temperature sensor | 10 ~ 12 | 1.0 ~1.2 | 7 ~ 8 |
| Oil filler plug | 29 ~ 34 | 2.9 ~ 3.4 | 21.4 ~ 25.1 |
| Oil drain plug | 40 ~ 50 | 4.0 ~ 5.0 | 29 ~ 36 |
| Solenoid valve support | 5 ~ 7 | 0.5 ~ 0.7 | 4 ~ 5 |
| Pressure check plug | 8 ~ 10 | 0.8 ~ 1.0 | 6 ~ 7 |
| Transaxle mounting sub bracket nut | 60 ~ 80 | 6.0 ~ 8.0 | 43 ~ 58 |
| Transaxle mounting bracket bolts | 40 ~ 55 | 4.0 ~ 5.5 | 29 ~ 40 |
| Transaxle mounting insulator bolt | 90 ~ 110 | 9.0 ~ 11 | 65 ~ 80 |
| Transaxle and engine mounting bolt | 65 ~ 85 | 6.5 ~ 8.5 | 47 ~ 61.5 |
| Drive plate bolt | 46 ~ 53 | 4.6 ~ 5.3 | 33.3 ~ 38.3 |

## LUBRICANT E896282A

| Item | Specified lubricant | Quantity |
|---|---|---|
| Transmission oil | Diamond ATF SP-III | 7.8ℓ (8.2 Us qt, 6.9Imp.qt) |

### SEALANT

| Item | Specified Sealant |
|---|---|
| Rear cover<br>Torque converter housing<br>Valve body cover | Three Bond - TB 1281B or LOCTITE - FMD - 546 |
| Transmission case side cover | Three Bond - TB 1389 or LOCTITE - 518 |
| Side cover | Three Bond - TB 1389 or LOCTITE - 518/587 |

## SPECIAL TOOLS EACCB44F

| TOOL (Number and name) | Illustration | Use |
|---|---|---|
| 09200 - 38001<br>Engine support fixture | 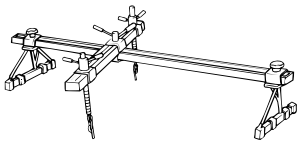 <br>D0038001 | Removal and installation of transaxle. |

### REFERENCE SERVICE TOOLS

| Tool (Number and Name) | Remark |
|---|---|
| TRK00A<br>Wiring Repair Kit | For more information of the wiring repair kit, please refer to BE group - "REFERENCE SERVICE TOOLS" |

# AUTOMATIC TRANSAXLE SYSTEM

## DESCRIPTION EE89AD48

The automatic transmission is a combination of 3-element 2-phase 1-stage torque converter and double shaft electrocally-controlled unit which provides 4 speeds forward and 1 reverse. To improve the efficiency of power transmission, the line pressure control was changed applying " Variable Force Solenoid (VFS) valve" on this model. However, adopting VFS on this model, the line pressure is variably changed according to TPS and the vehicle speed, this will enable more improved efficiency of power transmission and fuel consumption.

### CHARACTERISTICS

Some of the characteristics include:

- ▶ Different power transfer
- ▶ Different component layout
- ▶ New shift logic(HIVEC) to improve shift feeling
- ▶ Position of Valve Body
- ▶ Variable shift pattern
- ▶ Communication protocol and method
- ▶ Step gate type shift lever.

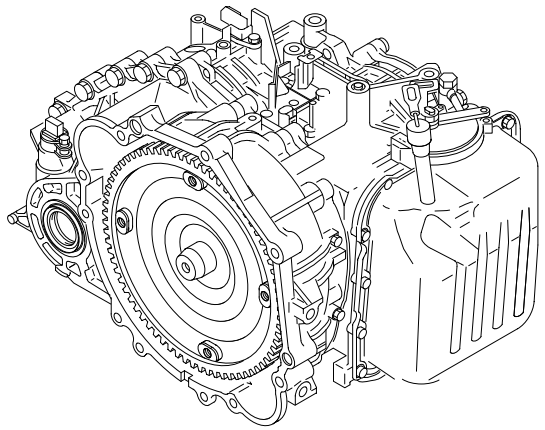

EKRF071A

| Item | Details |
|---|---|
| Weight Reduction | 1. Aluminum oil pump<br>- 2.3kg Approx<br><br>2. Pressed parts<br>- Retainer and hub of brakes and clutches<br>- Carrier of planetary gear set |
| Better shift quality | 1. Independent control of clutches and brakes enabled better control of hydraulic pressure and skiped shifts (4 to 2, 3 to 1)<br>2. During N to D or N to R shift, feedback control adopted.<br>3. When starting from Creep condition, reduction of shock.(Creep condition is controlled with 1st gear)<br>4. Solenoid valve frequency is increased for more accurate control. 35Hz to 61.3Hz except DCCSV that is 35Hz and VFS that is 600Hz.<br>5. HIVEC adoption for better shift feeling.<br>6. Variable shift pattern. |
| Increase in Power train efficiency | 1. Fully Variable Line Pressure<br>2. VFS(Variable Force Solenoid) |
| Dynamic drive by sports mode | - Manual shifting possible<br>- Step gate type shift lever<br> 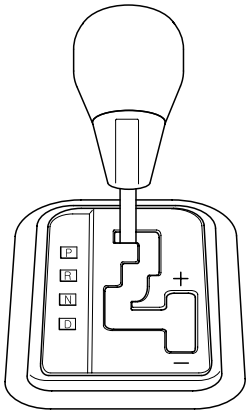 <br><br>EKRF072A |

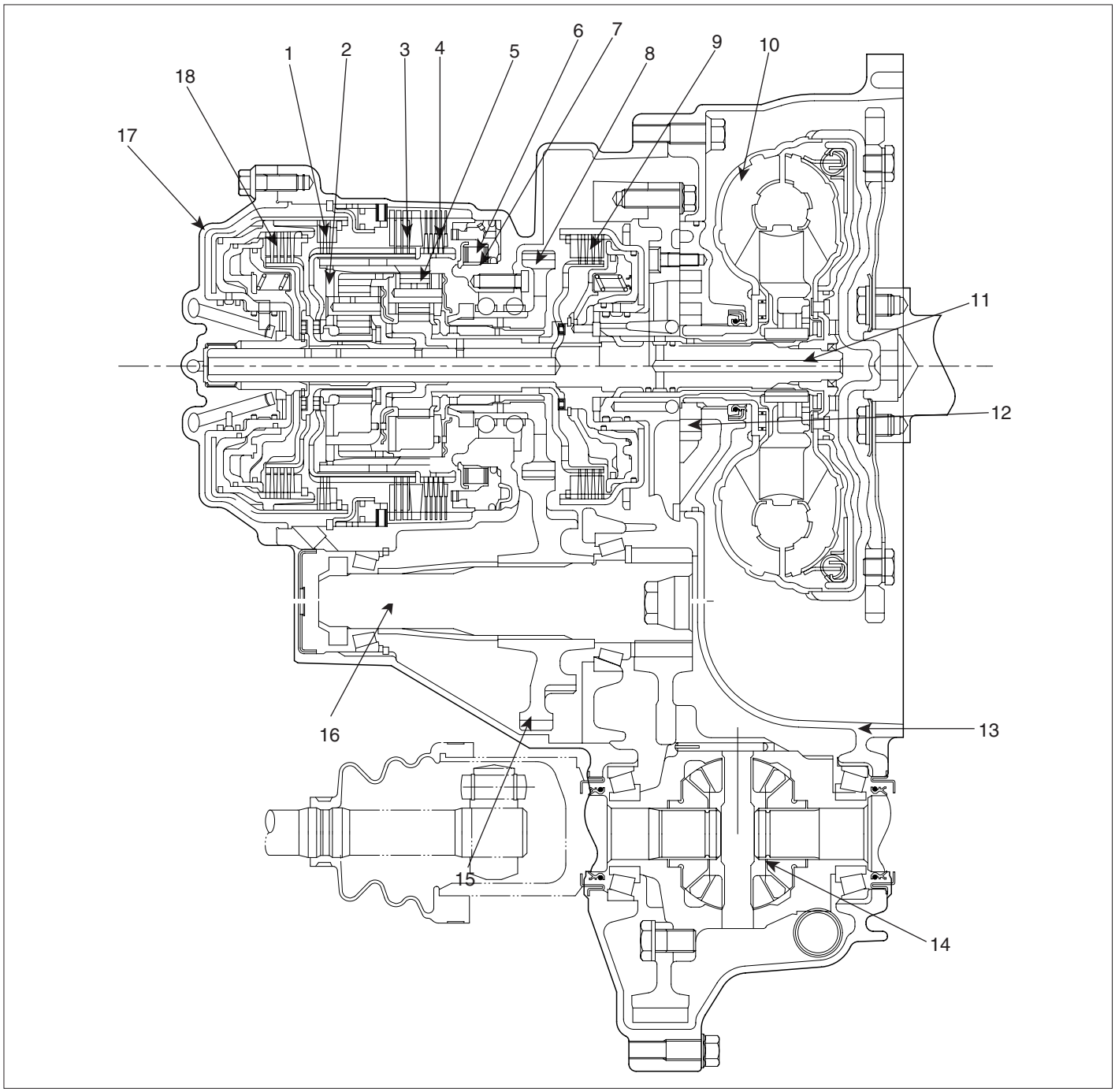


1. Reverse clutch
2. Overdrive planetary gear set
3. Second brake
4. Low-reverse brake
5. Output plantary gear set
6. Oneway clutch
7. Oneway clutch inner race
8. Transfer drive gear
9. Underdrive clutch
10. Torque converter
11. Input shaft
12. Oil pump
13. Converter housing
14. Differential
15. Transfer driven gear
16. Output shaft
17. Rear cover
18. Overdrive clutch

EKRF001A

## MECHANICAL SYSTEM

### OPERATION COMPONENTS AND FUNCTION

| Operating Element | Symbol | Function |
|---|---|---|
| Under drive clutch | UD | Connect input shaft and under drive sun gear |
| Reverse clutch | REV | Connect input shaft and reverse sun gear |
| Overdrive clutch | OD | Connect input shaft and over drive carrier |
| Low & Reverse brake | LR | Hold LR annulus gear and OD carrier |
| Second brake | 2ND | Hold reverse sun gear |
| One way clutch | OWC | Restrict the rotating direction of low & reverse annulus gear |

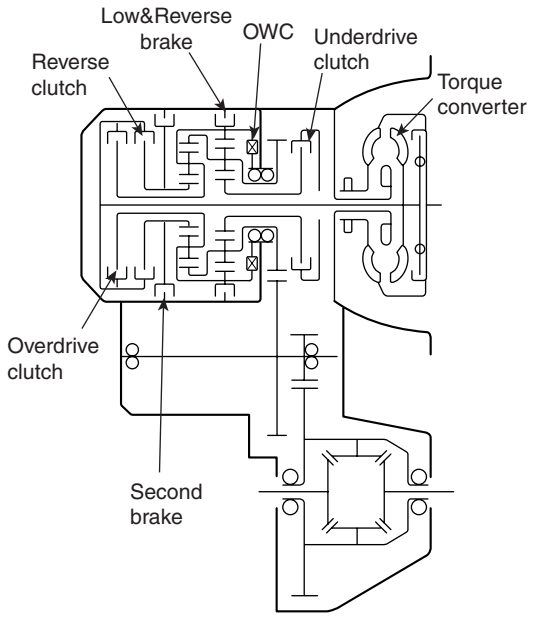


EKRF002A

### OPERATING ELEMENTS

| | UD/C | OD/C | REV/C | 2ND/B | LR/B | OWC |
|---|---|---|---|---|---|---|
| P | | | | | ● | |
| R | | | ● | | ● | |
| N | | | | | ● | |
| D1 | ● | | | | ● | ○ |
| D2 | ● | | | ● | | |
| D3 | ● | ● | | | | |
| D4 | | ● | | ● | | |

1) ○ : OWC is operated when shifts from 1st gear to 2nd gear.
2) L & R brake is released in 1st gear when the vehicle speed is more than 5KPH approximately.

### TORQUE CONVERTER AND SHAFT

The torque converter consists of an impeller(pump), turbine and stator assembly in a single unit. The pump is connected to the engine crankshaft and turns as the engine turns. This drawing force is transmitted to the turbine through the oil which is recycled by the stator.
The transmission has two parallel shafts ; the input shaft and the output shaft. Both shafts are in line with the engine crankshaft. The input shaft includes the overdrive clutch, reverse clutch, underdrive clutch, one way clutch, 2ND brake, low & reverse brake, overdrive planetary carrier, output planetary carrier and transfer drive gear. The output shaft includes the transfer driven gear.

### CLUTCHES

The gear changing mechanism utilizes three multi-disc clutches. The retainers of these clutches are fabricated from high-precision sheet metal for lightness and ease of production. Also, more responsive gearshifts at high engine speeds are achieved by a pressure-balanced piston mechanism that cancels out centrifugal hydraulic pressure. This mechanism replaces the conventional ball check valve.

### UNDERDRIVE CLUTCH

The underdrive clutch operates in 1st, 2nd, and 3rd gears and transmits driving force from the input shaft to the underdrive sun gear(A).
The components comprising the under clutch are as illustrated below.
Hydraulic pressure acts in the piston pressure chamber(B) (between the piston(c) and retainer) and thus pushes the piston(C). In turn, the piston depresses the clutch discs and thereby transmits driving force from the retainer(D) to the hub(E) side.

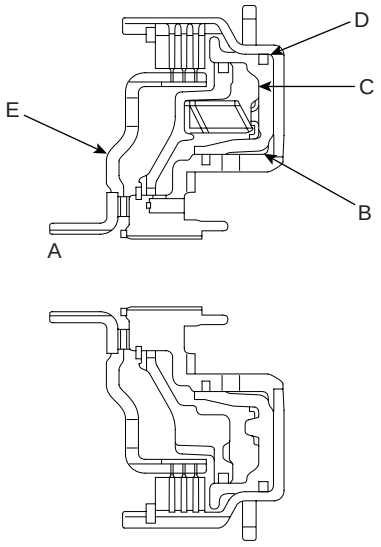


EKRF002B

At high speed, fluid remaining in the piston pressure chamber is subjected to centrifugal force and attempts to push the piston.
However, fluid in the balance fluid chamber(A) (the space between the piston and return spring retainer(B)) is also subjected to centrifugal force.
Thus, the hydraulic pressure on one side of the piston cancels out the hydraulic pressure on the other side, and the piston does not move.

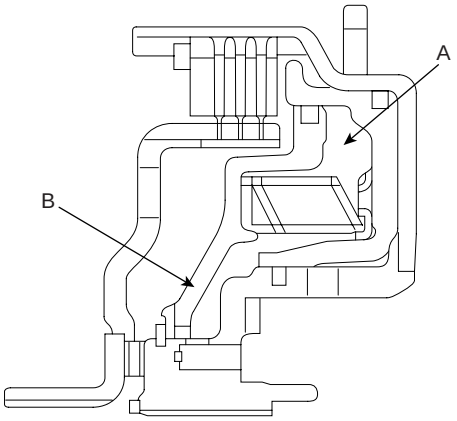


EKRF002C

### REVERSE CLUTCH AND OVERDRIVE CLUTCH

The reverse clutch(C) operates when the reverse gear is selected and transmits driving force from the input shaft to the reverse sun gear.
The overdrive clutch(D) operates in 3rd and 4th gears and transmits driving force from the input shaft to the overdrive planetary carrier and low-reverse annulus gear.

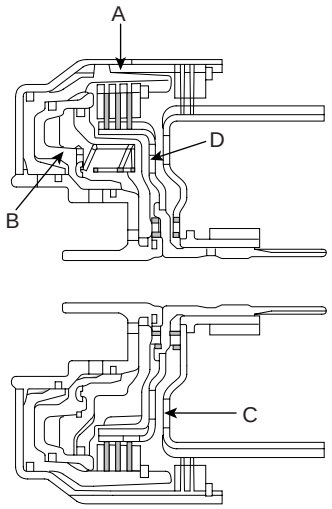


EKRF002D

### BRAKES

The gear changing mechanism utilizes two multi-disc brakes.

### LOW & REVERSE BRAKE AND SECOND BRAKE

The low & reverse brake(A) operates in 1st and reverse gears, when the vehicle is parked, and during manual operation. It locks the low & reverse annulus gear and overdrive planetary carrier to the case.
The second(C) brake(B) operates in 2nd and 4th gears and locks the reverse sun gear(D) to the case.
The components comprising the low & reverse brake and second brake are as illustrated below.
As shown, the discs and plates of the two brakes are arranged on either side of the rear cushion plate(E), which is itself secured to the case(F) by a snap ring.

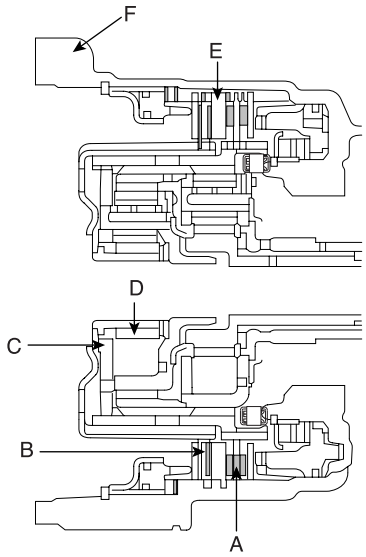


EKRF002E

### OWC

To improve the shift feeling from 1st to 2nd gear, OWC was adopted on the low & reverse brake annulus gear. Instead of hydraulic fixing by Low & reverse brake at the 1st gear, this mechanical fixing device was used. This structure is not a new concept, because this OWC already has been installed on the previous models.

### ACCUMULATORS

| Number | Function Name | Color |
|---|---|---|
| 1 | Low & Reverse Brake | None |
| 2 | Underdrive Clutch | Yellow |
| 3 | Second Brake | Blue |
| 4 | Overdrive Clutch | None |

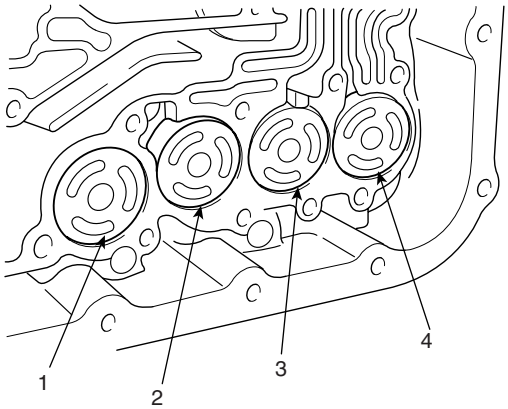


EKRF002F

### OBJECTIVE

* Energy (hydraulic pressure) storage
* Impact and pulsation damping when solenoid valves operating
* Operation as spring element
* Smooth shifting by preventing sudden operation of clutches and brakes

### TRANSFER DRIVE GEAR

With the transfer drive gear, increased tooth height and a higher contact ratio have reduced gear noise.
Also, the bearing that supports the drive gear is a preloaded type that eliminates rattle, and the rigidity of the gear mounting has been increased by bolting the bearing directly onto the case.

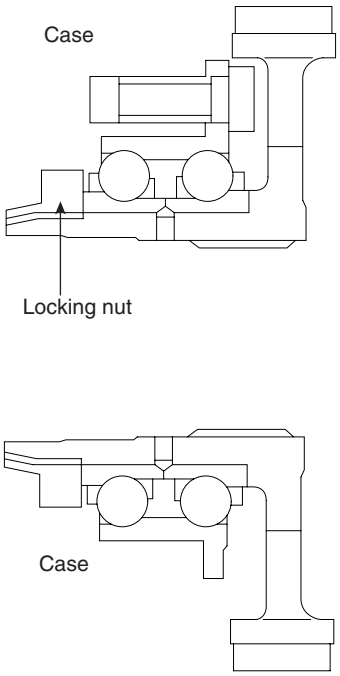


EKRF002G

### OUTPUT SHAFT/TRANSFER DRIVEN GEAR

As shown in the illustration below, the transfer driven gear is press-fitted onto the output shaft, and the output shaft is secured by a locking nut and supported by bearings.
The locking nut has a left-handed thread, and a hexagonal hole in the other end of the shaft enables the shaft to be held in position for locking nut removal.

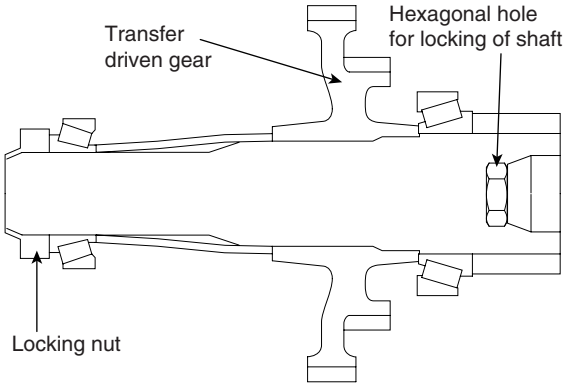


EKRF002H

### MANUAL CONTROL SYSTEM

### MANUAL CONTROL LEVER

The manual control lever is fitted to the top of the valve body and is linked to the parking roller rod and manual control valve pin.
A detent mechanism is provided to improve the gear shift feeling during manual selection.

### PARKING MECHANISM

When the manual control lever is moved to the parking position, the parking roller rod moves along the parking roller support and pushes up the parking sprag.
As a result, the parking sprag meshes with the transfer driven gear (parking gear), thereby locking the output shaft. To minimize the operating force required, a roller is fitted to the end of the rod.

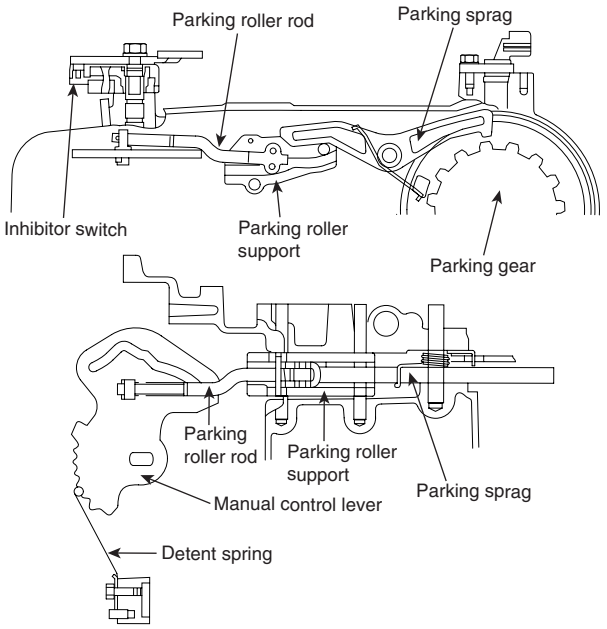


EKRF002I

## POWER TRAIN E5E54FA9

### P POSITION

Hydraulic pressure is applied to the LR brake and the RED brake, so power is not transmitted from the input shaft to the UD clutch or OD clutch, and the output shaft is locked by the park brake pawl interlocking the park gear.

### N POSITION

Hydraulic pressure is applied to the LR brake(A) and the RED brake, so power is not transmitted from the input shaft to the UD clutch or OD clutch.

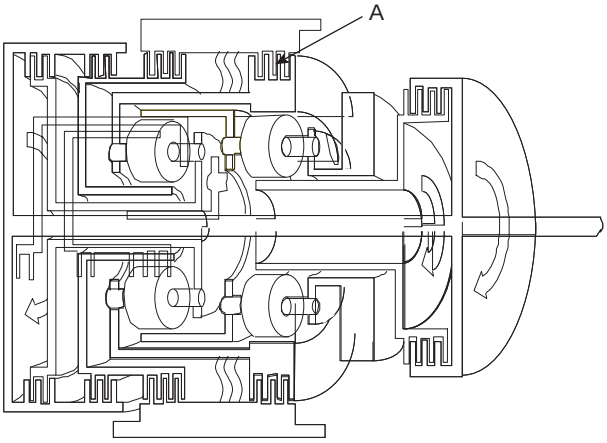


EKRF003A

### 1ST GEAR POWER FLOW

Hydraulic pressure is applied to the UD clutch(B) the LR brake(A) and the one way clutch(OWC), then the UD clutch transmits driving force from the input shaft to the UD sun gear, and the LR brake locks the LR annulus gear to the case.The UD sun gear of the planetary gear drives the output pinion gear, and the LR brake locks the annulus gear, and the output pinion drives the output carriers, and the output carrier drives the transfer drive gear, and the transfer drive gear drives the transfer driven gear of the output shaft, and power is transmitted to the differential gear through the differential drive gear.

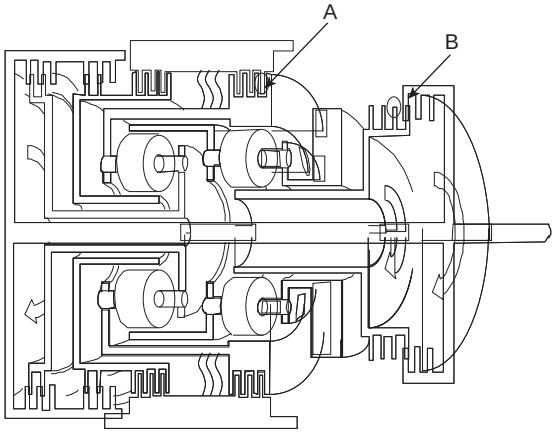


EKRF003B

### 2ND GEAR POWER FLOW

Hydraulic pressure is applied to the UD clutch(A) the 2nd brake(B) and the one way clutch(OWC), then the UD clutch transmits driving force from the input shaft to the UD sun gear, and the 2nd brake locks the reverse sun gear to the case.The UD sun gear of the planetary gear drives the output pinion gear and the LR annulus gear, and the LR annulus gear drives the OD planetary carriers, and OD planetary carriers drives OD pinion gear, and the OD pinion gear drives the output carriers, and the output carrier drives the transfer drive gear, and the transfer drive gear drives the transfer driven gear of the output shaft, and power is transmitted to the differential gear through the differential drive gear.

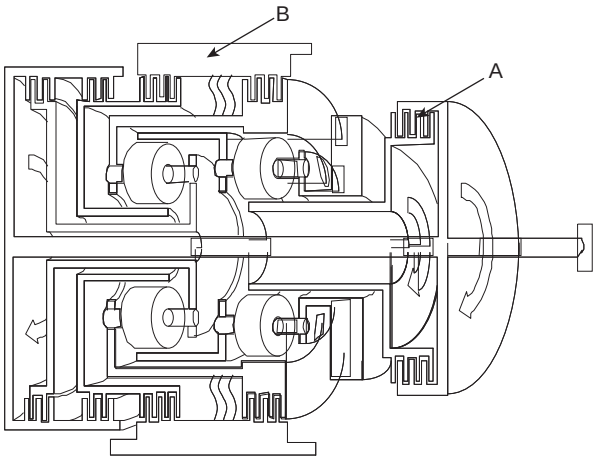


EKRF003C

### 3RD GEAR POWER FLOW

Hydraulic pressure is applied to the UD clutch(A) and the OD clutch(B), then the UD clutch transmits driving force from the input shaft to the UD sun gear, and the OD clutch transmits driving force from the input shaft to the overdrive planetary carrier and low & reverse annulus gear.The UD sun gear of the planetary gear drives the output pinion gear and the LR annulus gear, and the LR annulus gear drives the OD pinion gear through the OD planetary carrier, and the OD pinion gear drives the reverse sun gear and the output carrier.The OD clutch drives the OD carrier, and the OD carrier drives the OD pinion gear, and the OD pinion gear drives the reverse sun gear and the output carrier, and the output carrier drives the transfer drive gear, and the transfer drive gear drives the transfer driven gear of the output shaft, and power is transmitted to the differential gear through the differential drive gear.

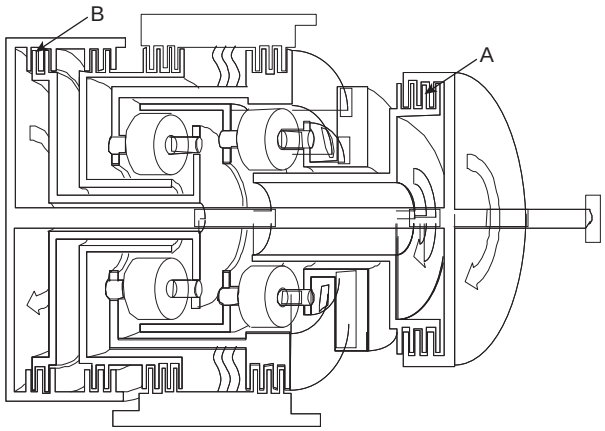


EKRF003D

### 4TH GEAR POWER FLOW

Hydraulic pressure is applied to the OD clutch(A) and the 2nd brake(B), then the OD clutch transmits driving force from the input shaft to the OD planetary carrier and LR annulus gear, and the 2nd brake locks the reverse sun gear to the case.The OD clutch drives the OD carrier, and the OD carrier drives the OD pinion gear and the LR annulus gear, and the OD pinion gear drives the output carrier, and the output carrier drives the transfer drive gear, and the transfer drive gear drives the transfer driven gear of the output shaft, and power is transmitted to the differential gear through the differential drive gear.

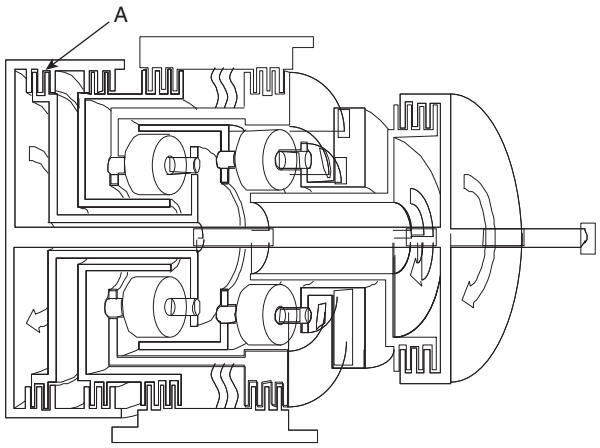


EKRF003E

### REVERSE GEAR POWER FLOW

Hydraulic pressure is applied to the reverse clutch(A) and the LR brake(B), then the reverse clutch transmits driving force from the input shaft to the reverse sun gear, and the LR brake locks the LR annulus gear and OD planetary carrier to the case.The reverse clutch drives the reverse sun gear, and the reverse sun gear drives the output carrier through the OD pinion gear, and the output carrier drives the transfer drive gear, and the transfer drive gear drives the transfer driven gear of the output shaft, and power is transmitted to the differential gear through the differential drive gear.

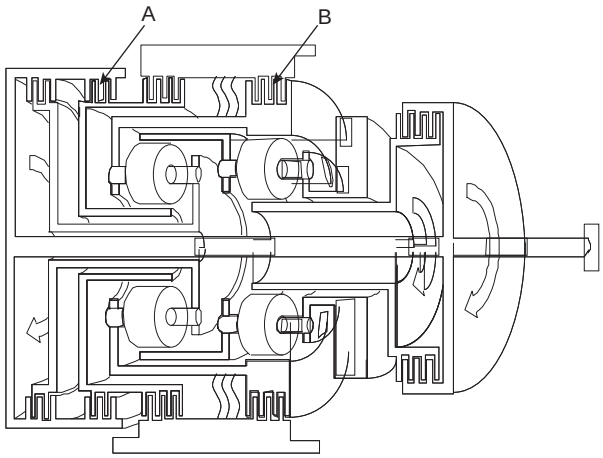


EKRF003F

## HYDRAULIC CONTROL SYSTEM E4DCC033

### DESCRIPTION

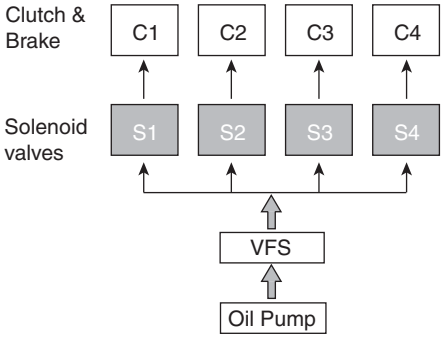


Each clutch and brake have a Solenoid valve for independent control of hydraulic pressure

EKRF003G

- Better and smoother shift quality.
- In order to prevent ATF leakage from the valve body or each elements, the exhaust ports have been grouped into only one with an addition of a check ball.
- If a failure occurs in its electric control, the switch valve and fail safe valve is able to move to enable 3rd speed drive or reverse.
- The hydraulic system consists of oil pump, regulator valve, solenoid valves, pressure control valve and valve body.
- In order to control the optimal line pressure and inprove the efficiency of power transmission according to maximize the efficiency of the oil pump, VFS(Variable Force Solenoid) valve has been added in the valve body hydralic circuit.

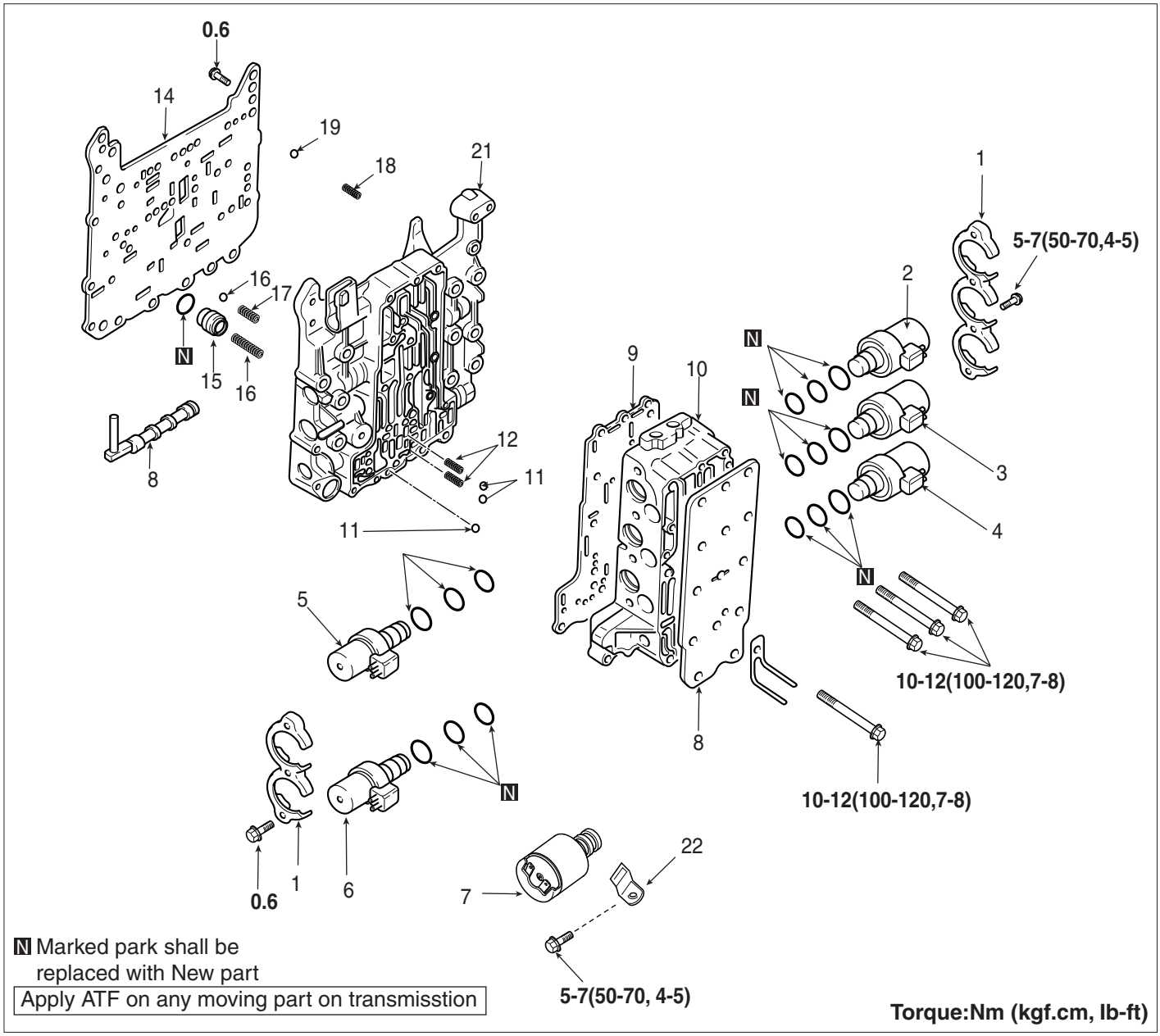


Disassembly steps
1. Solenoid valve support
2. UD clutch solenoid valve
3. 2nd brake solenoid valve
4. Damper clutch control solenoid\oid valve
5. OD clutch solenoid valve
6. Low and reverse brake solenoid valve
7. VFS solenoid valve
8. Manual valve
9. Cover
10. Plate
11. Outside valve body assembly
12. Steel ball (Orifice check ball)
13. Spring
14. Plate
15. Damping valve
16. Damping valve spring
17. Steel ball (line relief)
18. Spring
19. Steel ball (Orifice check ball)
20. Spring
21. Inside valve body assembly
22. VFS plate

EKRF003H

## VFS (VARIABLE FORCE SOLENOID)

### VRS Function

The spool rod in VFS is not duty cycled like one of PWM, it minutely vibrates at the range between the control port and exhaust port to control the hydraulic pressure. That is, it uses the equilibrium effect between the spring force and the magnetic force, the spring force is mechanical characteristics decided at the stage of design and the magnetic force is controlled by TCM. This electrical magnetic force is proportional to the current. So TCM will control the current.

In case of VFS valve, the electrical ‘ time constant’ is considered to decide the frequency for the current not to be fluctuated even though turns on or off the input signal. The electrical ‘ time constant’ is much more fast than one of mechanical so the frequency of VFS is extremely higher than the conventional PWM type.

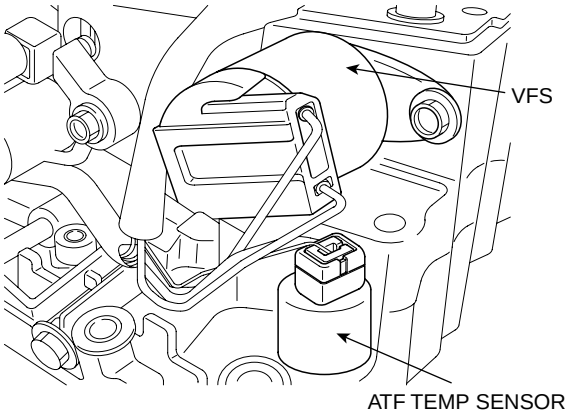


EKRF081A

Characteristics of Bosch VFS:
Supply pressure : 700～1600kPa
Control pressure: typically 600～0 kPa
Current range: typically 0～1,000 mA
Dither frequency: Up to 600 Hz
Dimension: 32 mm protrusion reach 42 mm

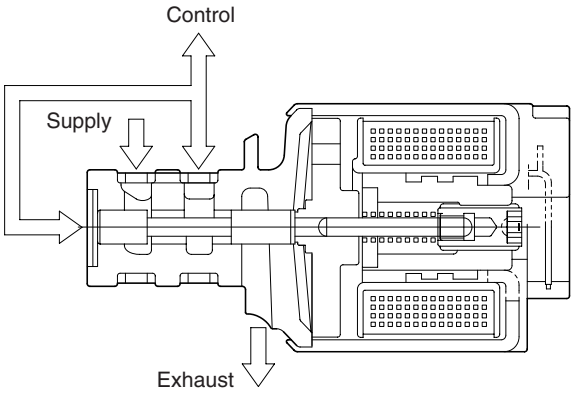


EKRF082A

The reducing pressure will be supplied to the ‘ Supply’ port of the VFS valve on the above illustration to control the line pressure.

## REDUCING PRESSURE

### FUNCTION

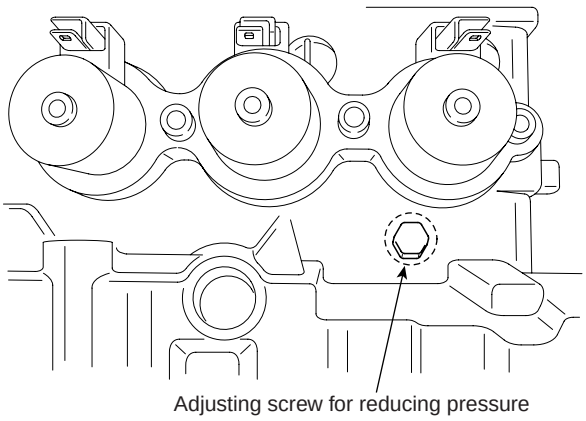


EKRF083A

As same as one of Alpha or Beta automatic transaxle system, this reducing valve length can be adjusted by rotating the screw on the picture. As you rotate the screw toward clockwise by 90˚ , the reducing pressure will increase about 1.0bar. However, the reducing pressure is used just as a ‘ supply pressure’ for the solenoid valves (except Low & Reverse, Reduction and Damper Clutch control solen), so this may not be handled to rotate in the field service shop. VFS is operated based on the ‘ supply pressure’ and it outputs the ‘ control pressure’ to control the regulator valve indirectly. While developing the VFS system, the line pressure was used as a ‘ supply pressure’ for VFS and other solenoid valves but it has been changed into additional ‘ reducing pressure’ because the line pressure is variably changed by VFS so the control pressure becomes unstable and some hydraulic pressure oscillation occurred. That is why the reducing pressure has been added in the hydraulic circuit of VFS system for both 4th and 5th speed A/T.

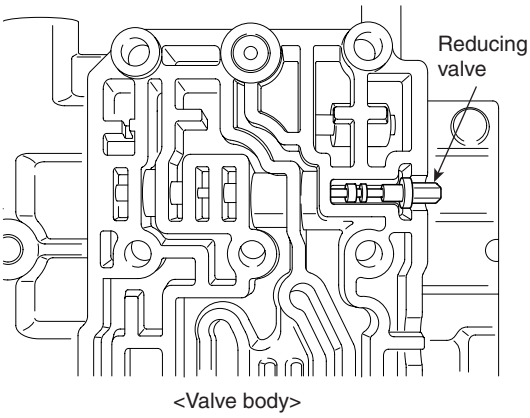


EKRF084A

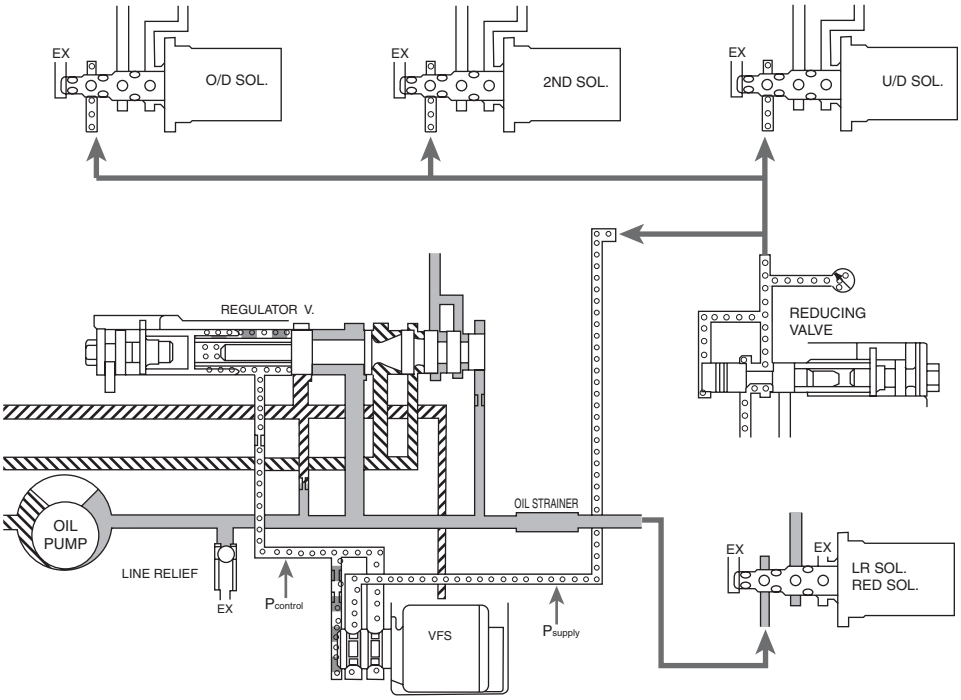


EKRF085A

The reducing pressure is about 6.5bar and this value does not be changed regardless of the driving or engine load condition. Be sure that the conventional line pressure is used for the ‘ supply pressure’ of Low & Reverse, Reduction solenoid because the variable line pressure is not available at reverse range.

**HYDRULIC PRESSURE TABLE**

Under the constant current amount of VFS (200mA), the line pressure will become as below table. Be sure that the following data can be achieved by specific special facility or device to check the performance of A/T assembly (not on the vehicle), however we can refer the maximum pressure value according to each element.

| Solenoid valve Duty(%) | | | | | Measured Element | Pressure kPa(Psi) |
|---|---|---|---|---|---|---|
| LR | 2ND | UD | OD | RED* | | |
| 0 | 100 | 0 | 100 | 0 | LR | 1030±20(149±3) |
| 60 | ↑ | ↑ | ↑ | ↑ | | 520±40(75±6) |
| 75 | ↑ | ↑ | ↑ | ↑ | | 230±40(33±6) |
| 100 | ↑ | ↑ | ↑ | ↑ | | 0 |
| 100 | 0 | 0 | 100 | 0 | 2ND | 1030±20(149±3) |
| ↑ | 60 | ↑ | ↑ | ↑ | | 550±40(80±6) |
| ↑ | 75 | ↑ | ↑ | ↑ | | 220±40(32±6) |
| ↑ | 100 | ↑ | ↑ | ↑ | | 0 |
| 100 | 100 | 0 | 0 | 0 | OD | 1030±20(149±3) |
| ↑ | ↑ | ↑ | 60 | ↑ | | 520±40(75±6) |
| ↑ | ↑ | ↑ | 75 | ↑ | | 210±40(30±6) |
| ↑ | ↑ | ↑ | 100 | ↑ | | 0 |
| 100 | 100 | 0 | 0 | 0 | UD | 1030±20(149±3) |
| ↑ | ↑ | 60 | ↑ | ↑ | | 470±40(68±6) |
| ↑ | ↑ | 75 | ↑ | ↑ | | 170±40(25±6) |
| ↑ | ↑ | 100 | ↑ | ↑ | | 0 |
| 100 | 0 | 100 | 0 | 100 | DIR* | 0 |
| 75 | ↑ | ↑ | ↑ | ↑ | | 270±40(39±6) |
| 60 | ↑ | ↑ | ↑ | ↑ | | 540±40(78±6) |
| 0 | ↑ | ↑ | ↑ | ↑ | | 1030±20(149±3) |

Measuring condition:
1. PG-A (Input speed): 2,500rpm
2. Manual valve position: D
3. DCC Solenoid duty: 0%

## N-P

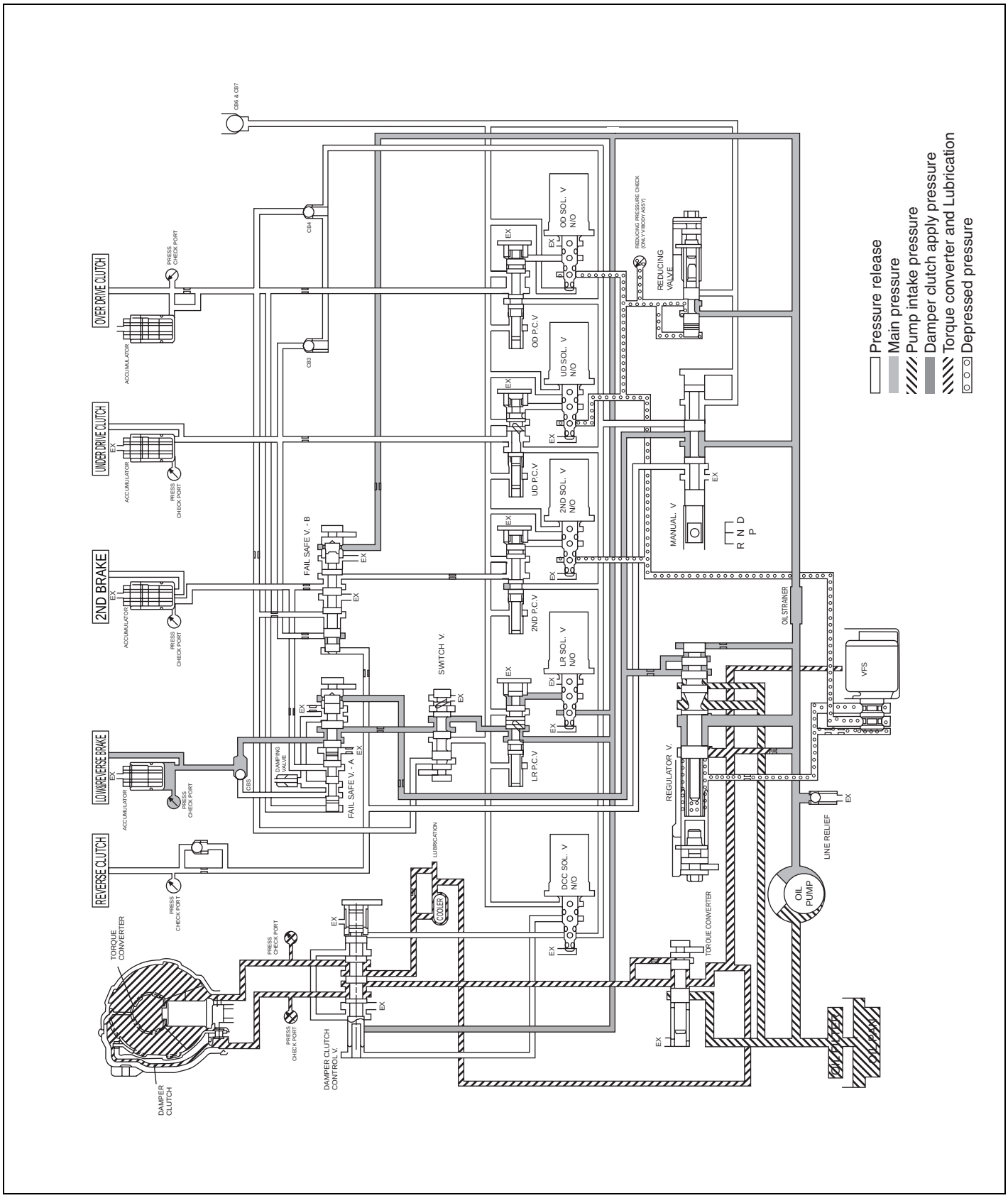
OVER DRIVE CLUTCH
UNDER DRIVE CLUTCH
2ND BRAKE
LOW/REVERSE BRAKE
REVERSE CLUTCH
ACCUMULATOR
PRESS CHECK PORT
TORQUE CONVERTER
DAMPER CLUTCH
DAMPER CLUTCH CONTROL V.
FAIL SAFE V. - A
FAIL SAFE V. - B
DAMPING VALVE
SWITCH V.
LUBRICATION
COOLER
OD P.C.V
UD P.C.V
2ND P.C.V
LR P.C.V
OD SOL. V N/O
UD SOL. V N/O
2ND SOL. V N/O
LR SOL. V N/O
DCC SOL. V N/O
REDUCING VALVE
MANUAL V
R N D P
OIL STRAINER
VFS
REGULATOR V.
LINE RELIEF
OIL PUMP
TORQUE CONVERTER
EX
Pressure release
Main pressure
Pump intake pressure
Damper clutch apply pressure
Torque converter and Lubrication
Depressed pressure

EKRF017H

## D 1ST GEAR

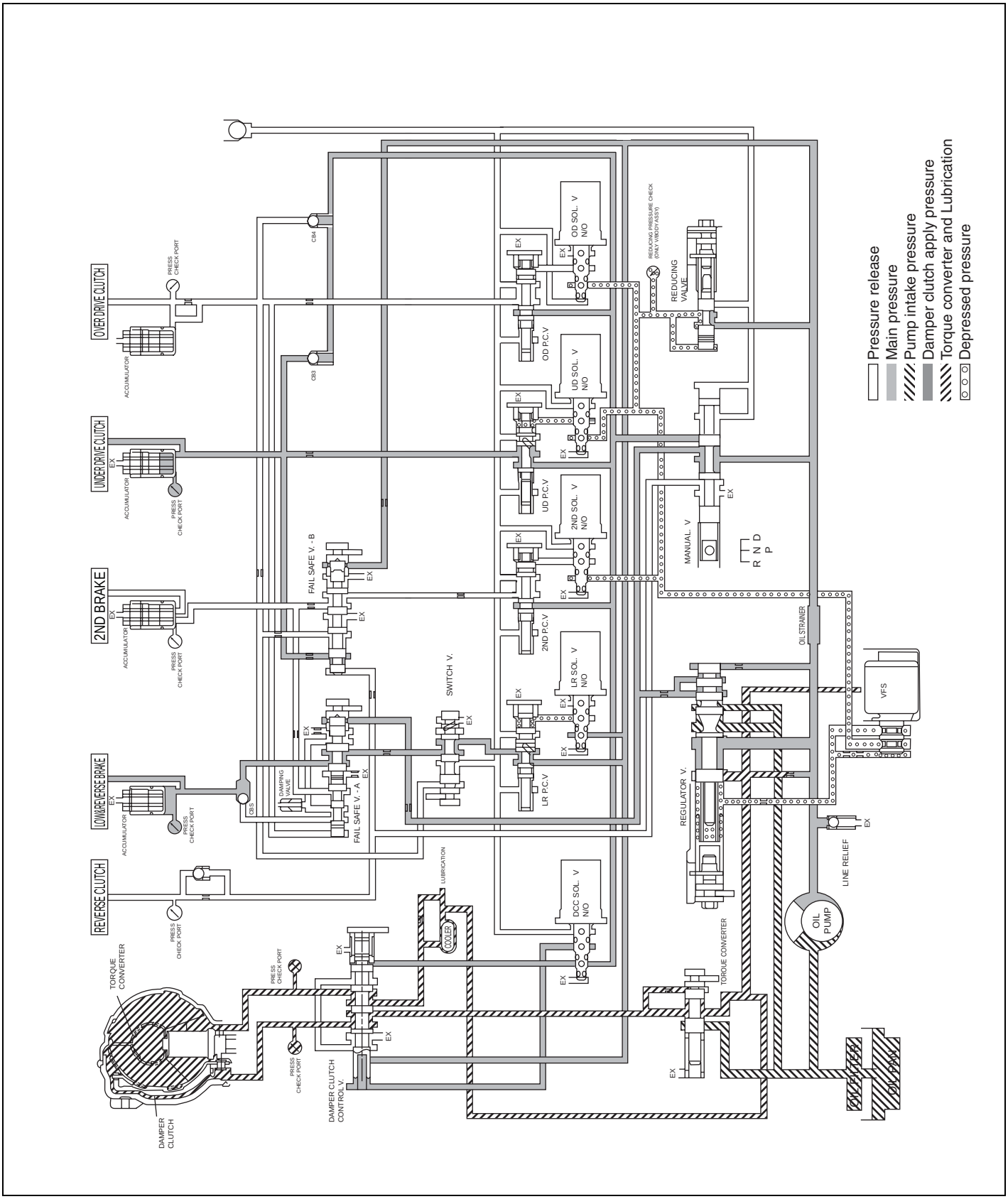


EKRF017I

## D 2ND GEAR

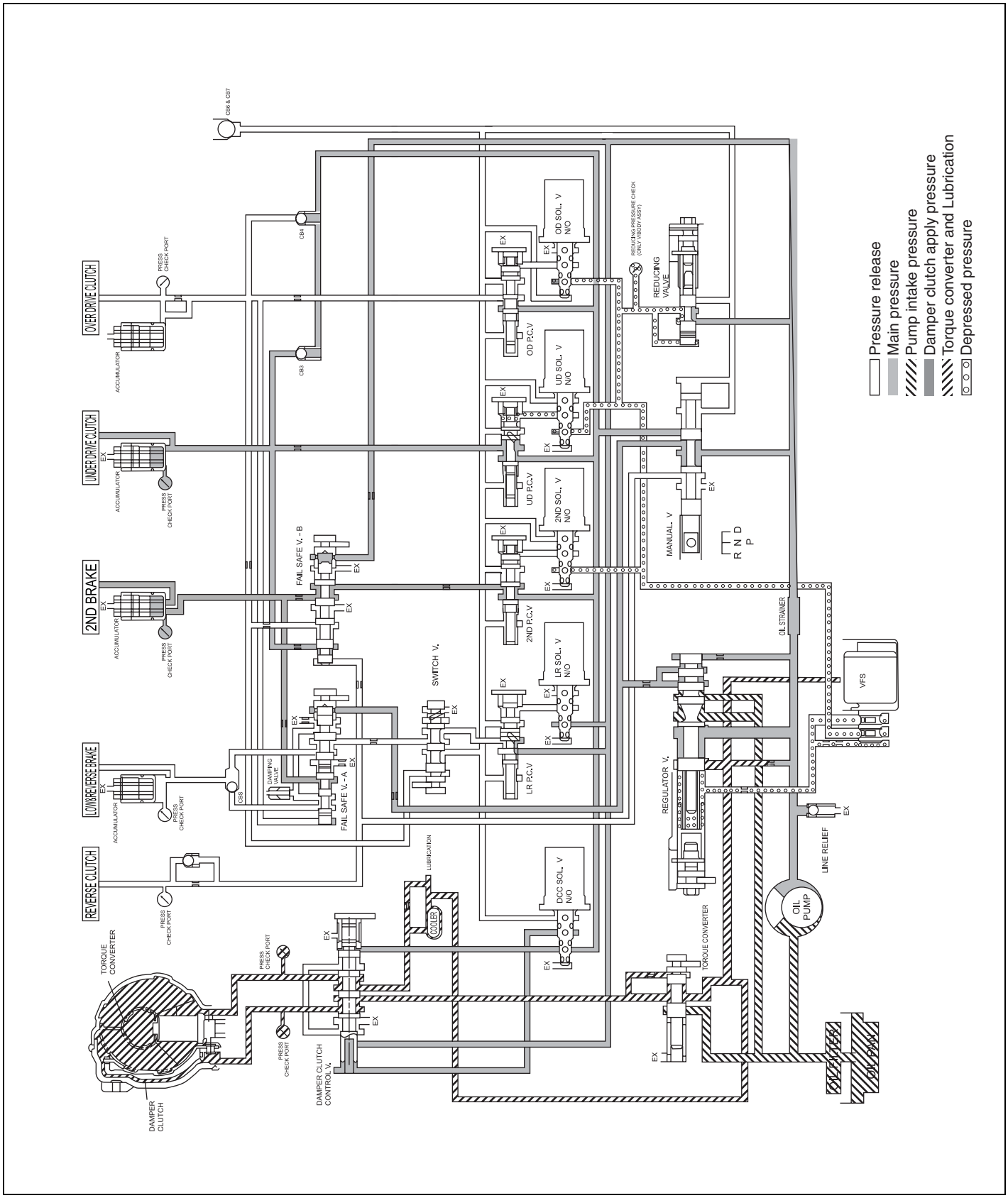


EKRF017J

## D 3RD GEAR

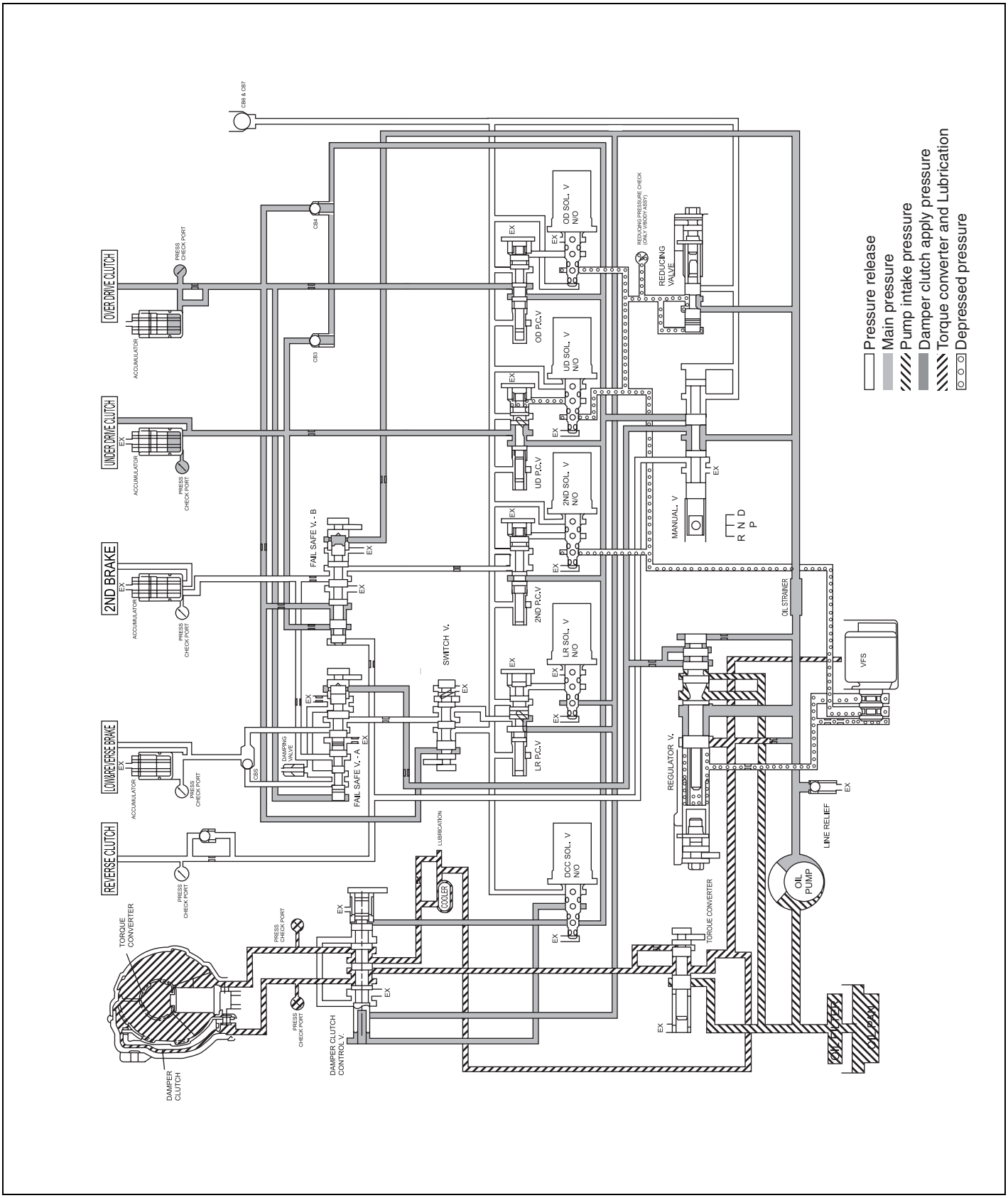


EKRF017K

## D 4TH GEAR

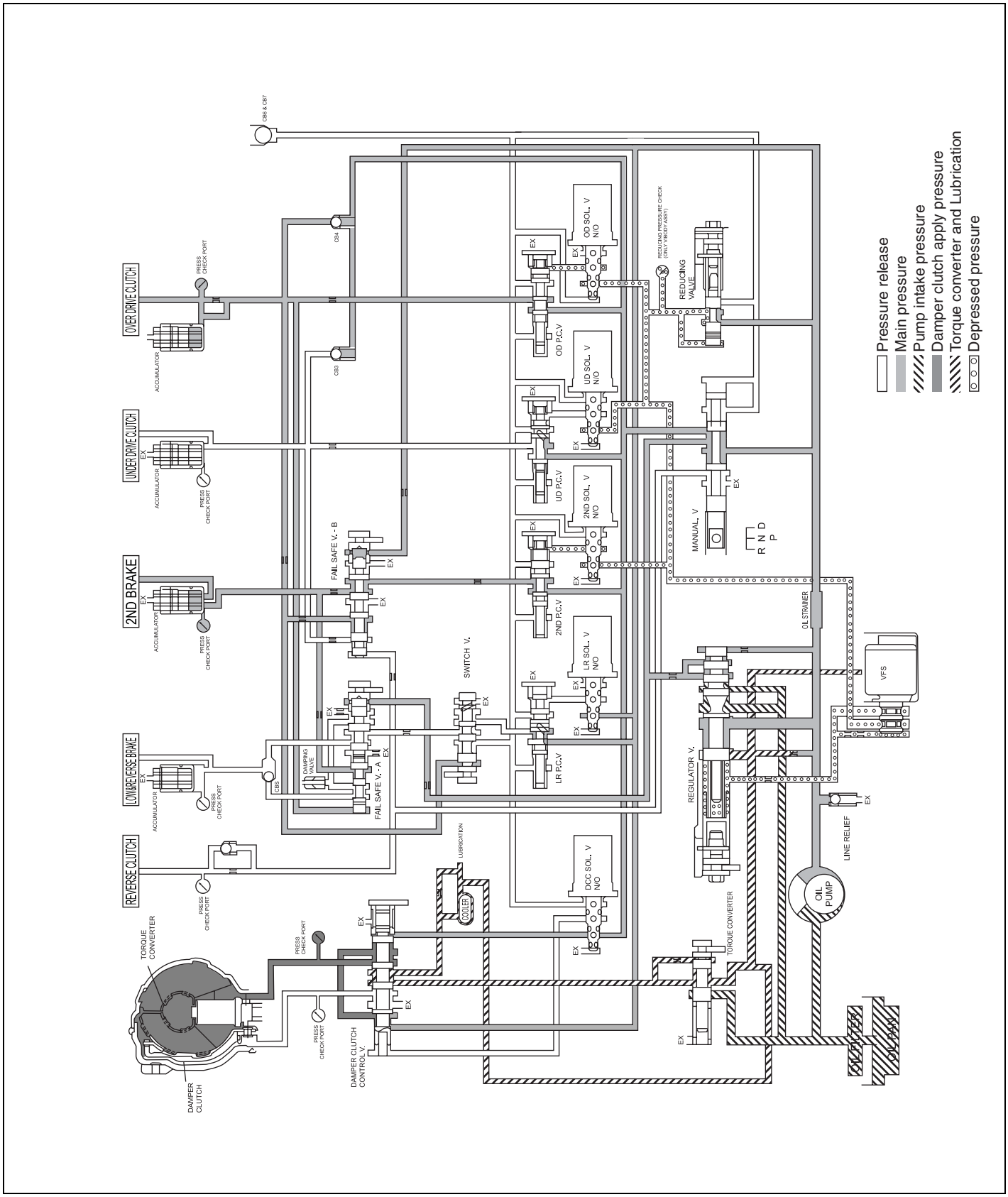


EKRF017L

## REVERSE

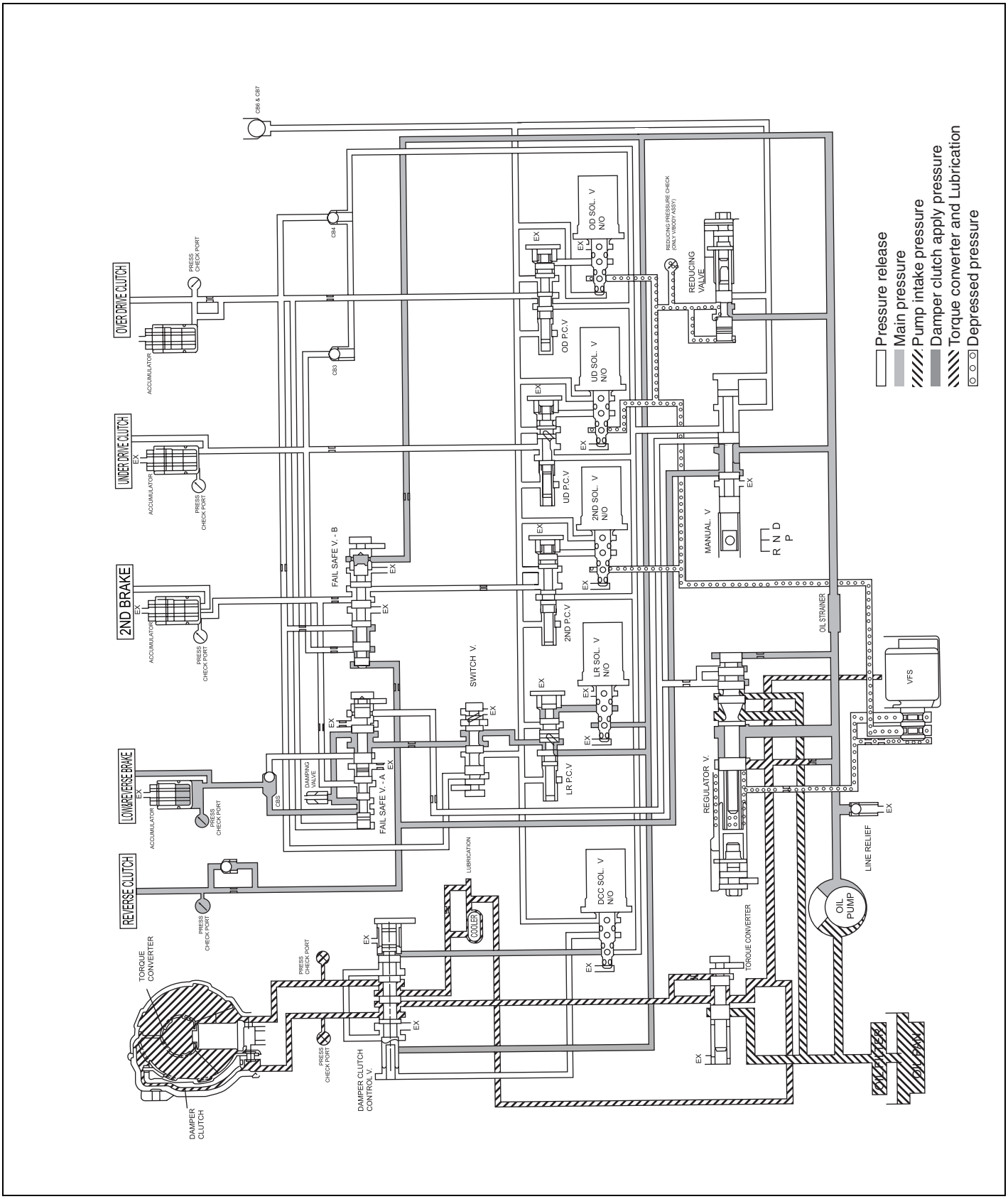


EKRF017M

## ELECTRONIC CONTROL SYSTEM E1D6CFCD

### DESCRIPTION

The electronic control system used in the new generation auto transaxle is far superior to the previous systems. This system is able to adopt a variable shift pattern for smooth and problem free shifting.

A solenoid valve is applied to each of the clutches and brakes and is independently controlled. Feedback control and correction control is performed in all gears as well as utilization of mutual control system to increase shift feeling. The torque converter damper clutch uses a partial lock up and full lock-up system. An additional control method called the HIVEC system (neural network) is adopted to increase shift feeling.

### BLOCK DIAGRAM (CAN)

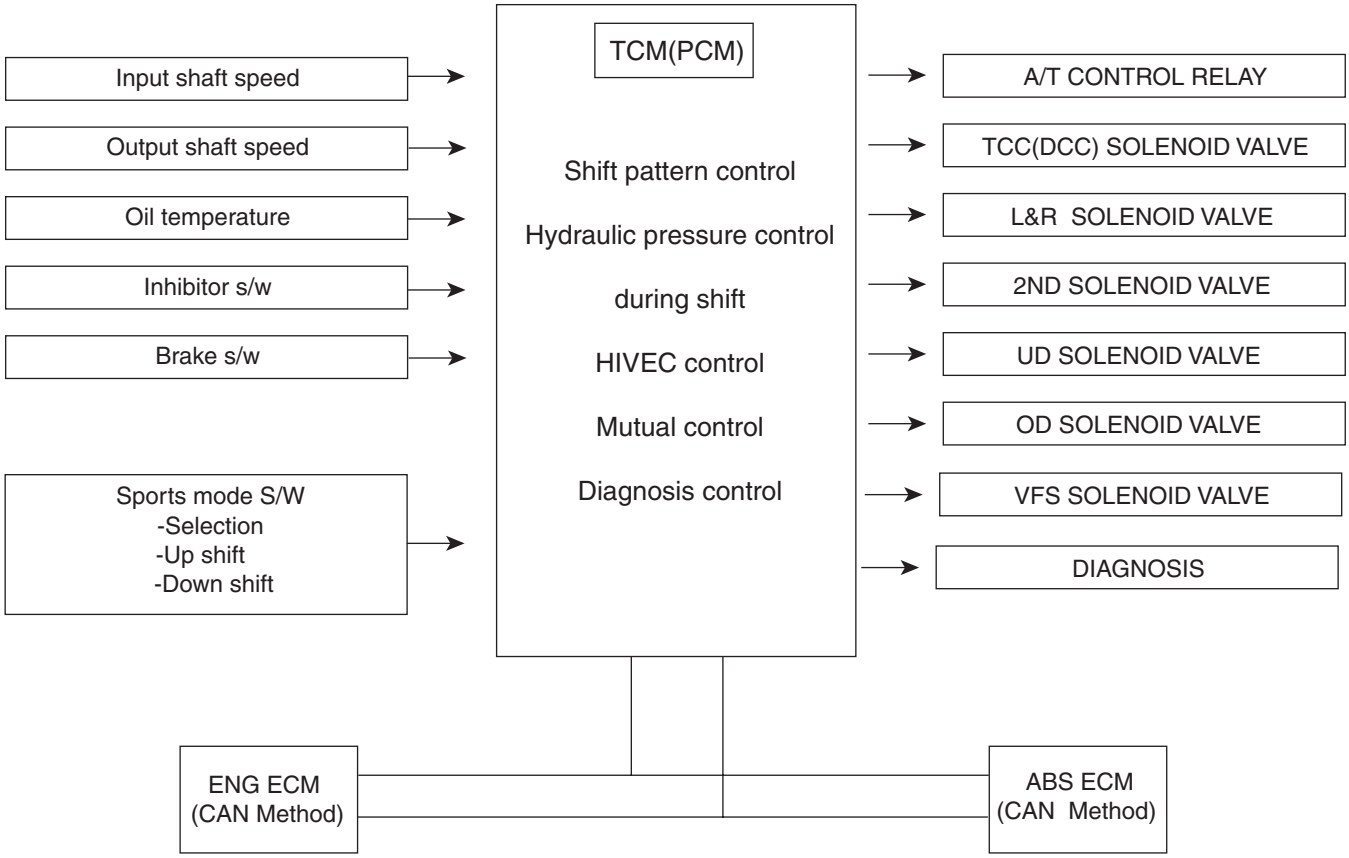


EKRF004G

**ELECTRIC CONTROL LOCATION**

The TCM(PCM) is located on the intake manifold in the engine room.

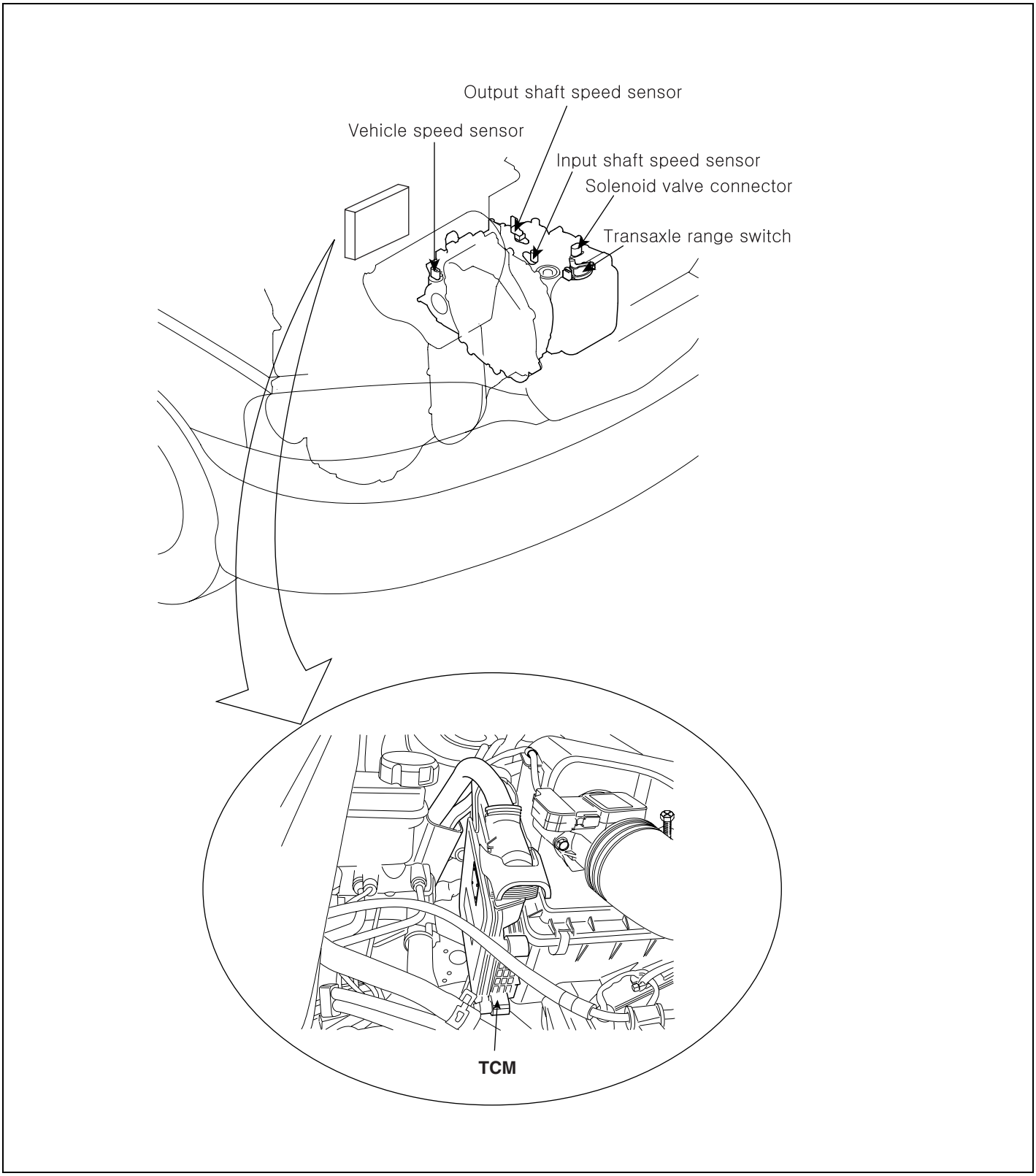


EKRF087A

## OPERATING COMPONENTS AND FUNCTIONS

| Sensor | Function |
|---|---|
| Input shaft speed sensor | Detect turbine speed at UD retainer |
| Output shaft speed sensor | Detect T/F drive gear speed at T/F driven gear (4A/T) |
| Crank angle sensor | Detect engine speed |
| TPS(Gasoline) | Throttle opening ratio by potentiometer |
| Air conditioner switch | A/C load by thermister |
| Inhibitor switch | Select lever position by contact switch |
| Brake switch | Brake pedal position |
| Vehicle speed sensor | Detect vehicle speed by speedometer driven gear |
| Sport mode switch | Sport mode On/Off signal |
| Sport mode up-shift switch | Sport mode up-shift signal |
| Sport mode downshift switch | Sport mode downshift signal |
| Request of torque reduction | Send the request of torque reduction to ECM |
| ABS-ECM, Engine ECM | In case of CAN communication |

## SPORTS MODE

### SPORTS MODE SWITCH

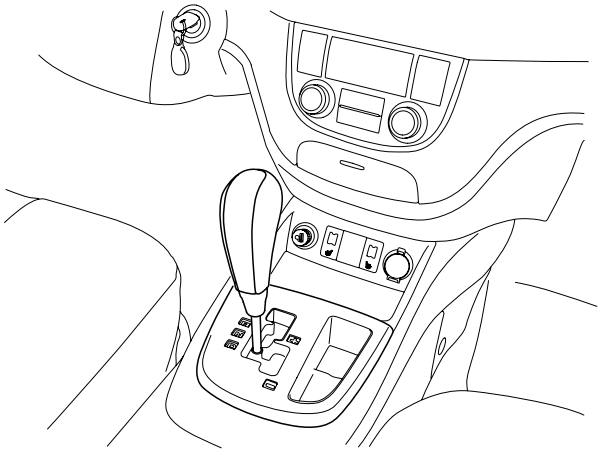

SCMAT6509L

Sports mode allows the manual up-shift and downshift with the accelerator pedal is depressed. The prompt response and shift would be obtained due to the continuous shifting without cutting of driving power. The shifting time is also decreased about 0.1sec during up-shift, 0.2sec during downshift. As the selector lever is pushed upward or downward one time, the gear is up shifted or downshifted by one gear.

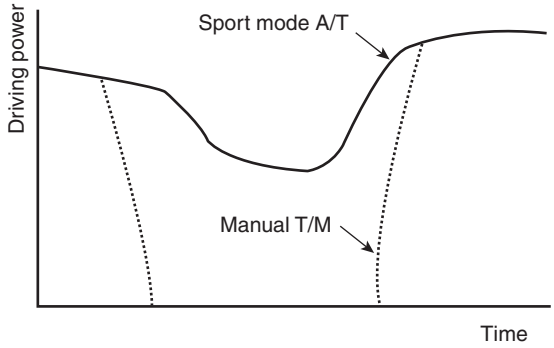


EKRF005C

**SIGNALS OF SPORTS MODE SWITCH**

| Items | Mode S/W | UP S/W | DOWN S/W |
|---|---|---|---|
| D range selection | OFF | OFF | OFF |
| Sports mode selection | ON | OFF | OFF |
| Sports mode up-shift selection | ON | ON | OFF |
| Sports mode downshift selection | ON | OFF | ON |

**CONTROLLER AREA NETWORK (CAN)**

Previously, for different computers in the vehicle to share the same information, each signal required a different pin and wiring. However, with the introduction of a CAN system, only two lines are required to achieve the same function. The information is in digital format. This method does not use an integrated ECM.

Frequency: 500Kbit/sec

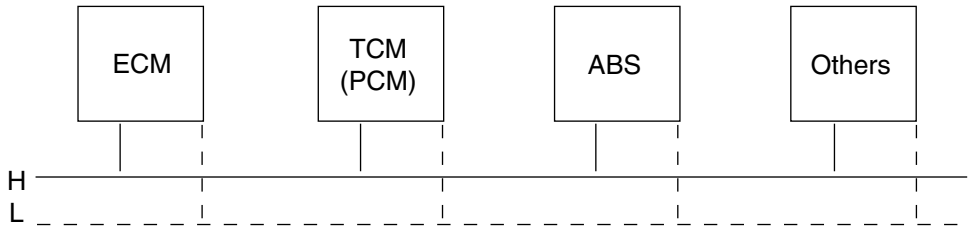


EKRF005D

**Input signals to TCM(PCM) through ' CAN communication'**

- Engine rpm, TPS signal
- A/CON signal, Engine coolant temperature
- Quantity of intake airflow, Vehicle speed
- Shift holding signal (FTCS ON)

**Output signals from TCM(PCM) through ' CAN communication'**
- Request signal for torque reduction
- ATF temperature, TCM(PCM) type, TCM(PCM) error or not
- Damper clutch ON, OFF / Gear position

## TCM PIN DESCRIPITION

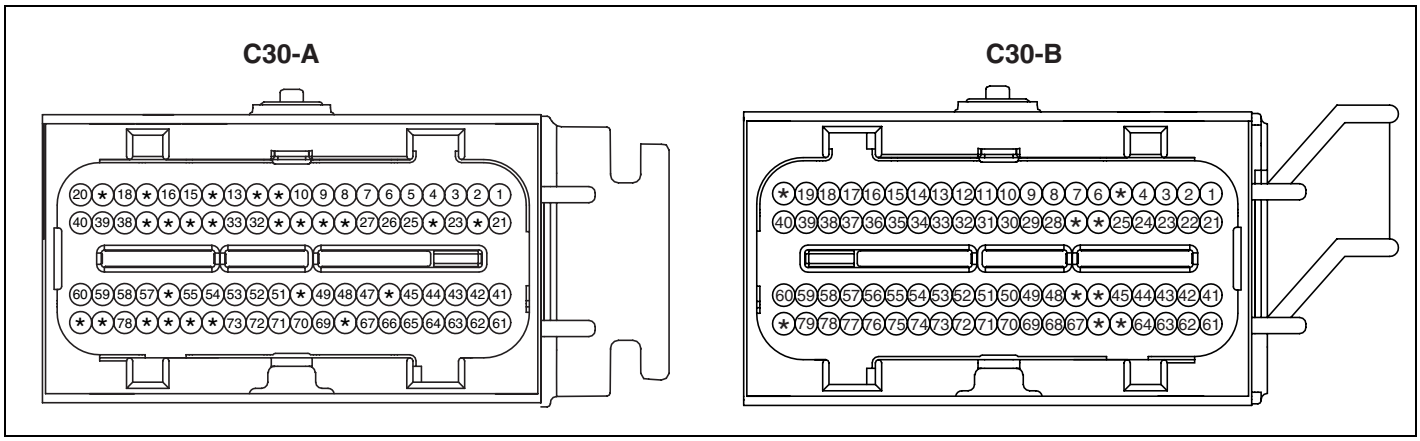


SCMAT6501L

| PIN No. | Check item | Condition | Input/Output value | | Measurement Value | Remarks |
|---|---|---|---|---|---|---|
| | | | Type | Level | | |
| A01 | 2nd CAN_HI | - | - | - | - | - |
| A02 | 2nd CAN_LO | - | - | - | - | - |
| A03 | P Range Selection | P Position<br>Otherwise | DC Voltage | V_BAT<br>Max. 1.0V | 12.9V<br>0V | |
| A04 | R Range Selection | R Position<br>Otherwise | DC Voltage | V_BAT<br>Max. 1.0V | 12.3V<br>0V | |
| A05 | N Range Selection | N Position<br>Otherwise | DC Voltage | V_BAT<br>Max. 1.0V | 13.2V<br>0V | |
| A06 | D Range Selection | D Position<br>Otherwise | DC Voltage | V_BAT<br>Max. 1.0V | 13.2V<br>0V | |
| A07 | Select Position | - | DC Voltage | V_BAT<br>Max. 1.0V | 13.2V<br>0V | |
| A08 | Up Position | - | DC Voltage | V_BAT<br>Max. 1.0V | 13.2V<br>0V | |
| A09 | Down Position | - | DC Voltage | V_BAT<br>Max. 1.0V | 13.2V<br>0V | |
| A12 | N.A | - | - | - | - | |
| A14 | N.A | - | - | - | - | |
| A19 | N.A | - | - | - | - | |
| A20 | A/T Control Relay | Relay On<br>Relay Off | DC Voltage | V_BAT<br>Max. 1.0V<br>Vpeak : Max. 70V<br>Resistance : 680Ω | 13.8V<br>0V<br>-0.7V<br>Resistance : 680Ω | |
| | | W/H Open | | DTC Spec : P0890 | DTC : P0890 | |
| A27 | Diagnosis "K" | Communicated with GST | Pulse | At transmitting<br>HI : V_BAT* 80%↑<br>LO : V_BAT * 20%↓<br>AT receiving<br>HI : V_BAT* 70%↑<br>LO : V_BAT*30%↓ | 11.3V<br>0.14/ 0.32V | V_BAT : 13.2V |

| PIN No. | Check item | Condition | Input/Output value | | Measurement Value | Remarks |
|---|---|---|---|---|---|---|
| | | | Type | Level | | |
| A31 | N.A | - | - | - | - | |
| A32 | A/C Pressure Analog | - | - | - | - | - |
| A34 | N.A | - | - | - | - | |
| A36 | N.A | - | - | - | - | |
| A37 | N.A | - | - | - | - | |
| A41 | CAN_HI | Recessive<br>Dominant | Pulse | 2.0 ~ 3.0 V<br>2.75 ~ 4.5 V | 3.85V<br>2.5V | |
| A42 | CAN_LO | Recessive<br>Dominant | Pulse | 2.0 ~ 3.0 V<br>0.5 ~ 2.25 V | 2.55V<br>1.34V | |
| A60 | A/T PWR Source | IG Off<br>IG On<br><br>IG. Key On<br>IG. Key Off<br>Idle<br>Key Off from Idle<br><br>Fuse 1/2/3 Removal Condition | DC Voltage | Max. 0.5 V<br>V_BAT<br><br>MAX. +/- 75V (ECU GND)<br>MAX. +/- 75V (ECU GND)<br>MAX. +/- 75V (ECU GND)<br>MAX. +/- 75V (ECU GND)<br><br>MAX. +/- 75V (ECU GND) | 0V<br>11.9V<br><br>+30V / -10V<br>or less<br>↑ | |
| | | W/H Open | | DTC Spec : P0888 | DTC : P0888 | |
| A73 | Shift Position Signal(To Cluster) | Running<br><br>1 gear<br>2 gear<br>3 gear<br>4 gear<br>5 gear | Pulse<br><br>Duty<br>↑<br>↑<br>↑<br>↑ | HI : V_BAT<br>LO : Max. 1.0V<br>Freq.: 50±2Hz (Reference)<br>12.5±2%<br>27.5±2%<br>42.5±2%<br>57.5±2%<br>72.5±2% | N.A | Sports mode |
| B03 | UD Solenoid | Shifting | Pulse | HI : V_BAT<br>LO : Max. 1.0V<br>Vpeak : Max. 70V | 14.4V<br>0.35V<br>56.3V | |
| | | W/H Open | | DTC Spec : P0755 | DTC : P0755 | |
| B05 | N.A | - | - | - | - | |
| B06 | Oil temperature sensor_ATM | Idle | Analog | 0.5V ~ 4.5V | 4.4V<br>3.1V | 16Hz |
| B09 | Output speed sensor | 30kph | Pulse | HI : Min. 4.0V<br>LO : Max. 1.0V | 5.08V<br>0.34V | |
| | | W/H Open | | DTC Spec : P0722 | DTC : P0722 | |
| B10 | Input speed sensor | Idle | Pulse | HI : Min. 4.0V<br>LO : Max. 1.0V | 5.06V<br>0.35V | 630Hz |
| | | W/H Open | | DTC Spec : P0717 | DTC : P0717 | |
| B20 | N.A | - | - | - | - | |

| PIN No. | Check item | Condition | Input/Output value | | Measurement Value | Remarks |
|---|---|---|---|---|---|---|
| | | | Type | Level | | |
| B22 | LR Solenoid | Shifting | Pulse | HI : V_BAT<br>LO : Max. 1.0V<br>Vpeak : Max. 70V | 13.9V<br>0.38V<br>56.1V | |
| | | W/H Open | | DTC Spec : P0750 | DTC : P0750 | |
| B26 | N.A | - | - | - | - | |
| B27 | N.A | - | - | - | - | |
| B33 | GND_Sensor | Idle | DC Voltage | Max. 50 mV | 13mV | WTS & OTS_ATM |
| | | W/H Open | | DTC Spec : P0118/ 1115 | DTC : P0118/ P1115 | |
| B42 | OD Solenoid | Shifting | Pulse | HI : V_BAT<br>LO : Max. 1.0V<br>Vpeak : Max. 70V | 15.4V<br>0.45V<br>56.3V | |
| | | W/H Open | | DTC Spec : P0765 | DTC : P0765 | |
| B43 | DCC solenoid | Lock_Up on | Pulse | HI : V_BAT<br>LO : Max. 1.0V<br>Vpeak : Max. 70V | 15.4V<br>0.45V<br>56.3V | |
| | | W/H Open | | DTC Spec : P0743 | DTC : P0743 | |
| B44 | RED Solenoid | Shifting | Pulse | HI : V_BAT<br>LO : Max. 1.0V<br>Vpeak : Max. 70V | 15.4V<br>0.45V<br>56.3V | |
| | | W/H Open | | DTC Spec : P0770 | DTC : P0770 | |
| B45 | 2ND Solenoid | Shifting | Pulse | HI : V_BAT<br>LO : Max. 1.0V<br>Vpeak : Max. 70V | 15.4V<br>0.45V<br>56.3V | |
| | | W/H Open | | DTC Spec : P0760 | DTC : P0760 | |
| B46 | N.A | - | - | - | - | |
| B47 | N.A | - | - | - | - | |
| B59 | Variable Solenoid (-) | Idle | Pulse | HI : V_BAT<br>LO : Max. 1.0V<br>Vpeak : Max. 70V | 1.8/1.2V - N range<br>0.03V(DC) - D range | 600Hz |
| | | W/H Open | | DTC Spec : P0748 | DTC : P0748 | |
| B65 | N.A | - | - | - | - | |
| B66 | N.A | - | - | - | - | |
| B75 | Variable Solenoid (+) | Idle | Pulse | HI : V_BAT<br>LO : Max. 1.0V<br>Vpeak : Max. 70V | 13.1V<br>-0.07V | |
| | | W/H Open | | DTC Spec : P0748 | DTC : P0748 | |
| B80 | N.A | - | - | - | - | |

## SERVICE ADJUSTMENT PROCEDURE E32348DF

### AUTOMATIC TRANSAXLE FLUID

#### INSPECTION

1. Drive the vehicle until the fluid reaches normal operating temperature [70~80°C].
2. Place the vehicle on a level surface.
3. Move the selector lever through all gear positions. This will fill the torque converter and the hudraulic system with fluid and move the selector lever to the "N" (Neutral) or "P"(Park) position.
4. Before removing the oil level gauge, wipe all contaminants from around the oil level gauge. Then take out the oil level gauge and check the condition of the fluid.

   ***NOTE***

   *If the fluid smells as if it is burning, it means that the fluid has been contaminated by fine particles from the bushes and friction materials, a transaxle overhaul may be necessary.*

5. Check that the fluid level is at the HOT mark on the oil level gauge. If the fluid level is low, add automatic transaxle fluid until the level reaches the "HOT" mark.

| |
|---|
| Auto transaxle fluid:<br>DIAMOND ATF SP-III, SK ATF SP-III<br>Quantity : 7.8ℓ (8.2 US qt, 6.9 Imp.qt) |

***NOTE***

*Low fluid level can cause a variety of a abnormal conditions because it allows the pump to take in air along with fluid. Air trapped in the hydraulic system forms bubbles, which are compressable. Therefore, pressures will be erratic, causing delayed shifting ,slipping clutches and brakes, etc. Improper filling can also raise fluid level too high. When the transaxle has too much fluid, gears churn up foam and acuise the same conditions which occur with low fluid level, resulting in accelerated deterioration of automatic transaxle fluid. In either case, air bubbles can cause overheating, and fluid oxidation, which can interfere with normal valve, clutch, and brake operation. Foaming can also result in fluid escaping from the transaxle vent where it may be mistaken for a leak.*

6. Insert the oil level gauge(A) securely.

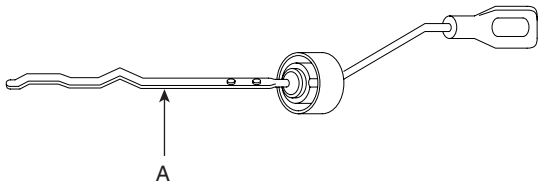


EKRF008A

***NOTE***

*When new, automatic transmission fluid should be red. The red dye is added so the assembly plant can identify it as transmission fluid and distinguish it from engine oil or antifreeze. The red dye, which is not an indicator of fluid quality, is not permanent. As the vehicle is driven the transmission fluid will begin to look darker. The color may eventually appear light brown.*

#### REPLACEMENT

If you have a fluid changer, use this changer to replace the fluid. If you do not, replace it using the following procedure.

1. Disconnect the hose which connects the transmission and the oil cooler which is within the radiator only in 2.4L engine(3.3L-the oil cooler is separated).
2. Start the engine and let the fluid drain out.

| |
|---|
| Running conditions : "N" range with engine idling. |

***CAUTION***

***The engine should be stopped within one minute after it is started. If the fluid has all drained out before then, the engine should be stopped at that point.***

3. Romove the drain plug(A) from the bottom of the transmission case to drain the fluid.

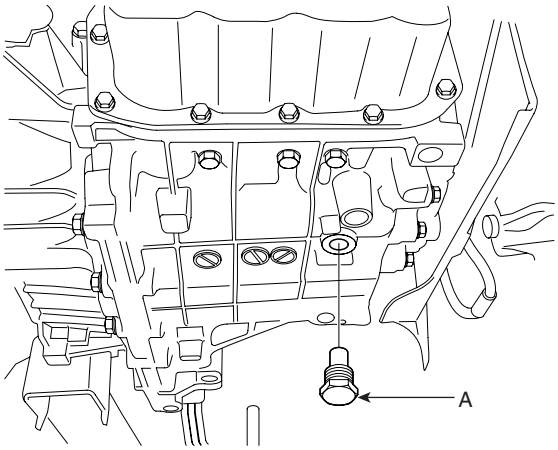


EKRF073A

4. Install the drain plug via the gasket, and tighten it to the specified torque.

| |
|---|
| TORQUE : 40~50Nm (4.0~5.0 kgf.m, 29~36 lb-ft) |

5. Pour the new fluid in through the oil filler tube.

***CAUTION***

***Stop pouring if the full volume of fluid cannot be poured in.***

6. Repeat the procedure in step (2).

***NOTE***

*Check the old fluid for contamination. If it has been contaminated, repeat the steps (5) and (6).*

7. Pour the new fluid in through the oil filler tube.

8. Reconnect the hose which was disconnected in step (1) above and firmly replace the oil level gauge.(In case of this "replace", this means after wiping off any dirt around the oil level gauge, insert it into the filler tube.)

9. Start the engine and run it at idle for 1~2 minutes.

10. Move the select lever through all positions, and then move it to the "N" position.

11. Drive the vehicle until the fluid temperature rises to the normal temperature (70~80°C), and then check the fluid level again. The fluid level must be at the HOT mark.

12. Firmly insert the oil level gauge(A) into the oil filler tube.

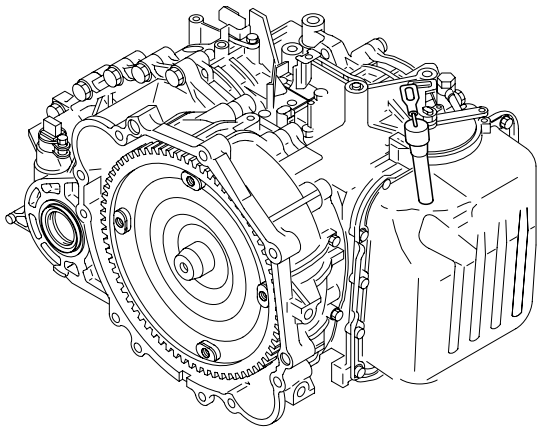

EKRF008B

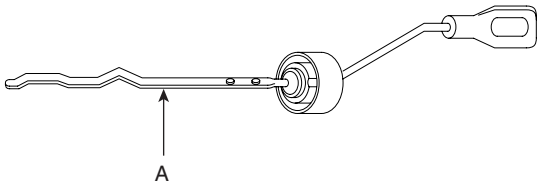


EKRF008A

## TROUBLESHOOTING EE0B83F5

### DIAGNOSIS FLOW

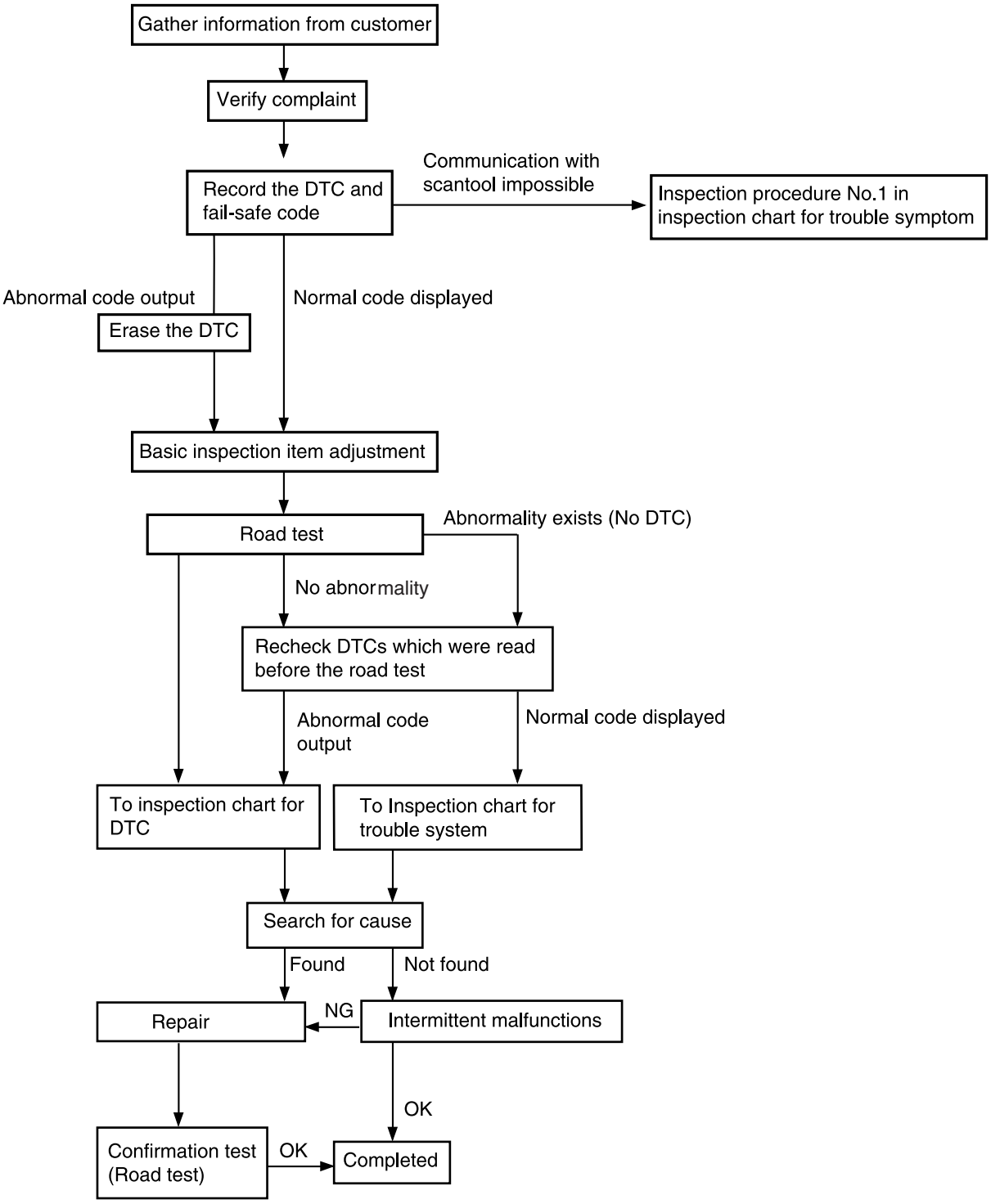


EKRF007A

## INSPECTION CHART FOR TROUBLE SYMPTOMS

| Trouble symptom | | Probable cause |
|---|---|---|
| **Communication with HI-SCAN is not possible**<br>If communication with the HI-SCAN is not possible, the cause is probably a defective diagnosis line or the TCM(PCM) is not functioning. | | - Malfunction diagnosis line<br>- Malfunction of connector<br>- Malfunction of the TCM(PCM) |
| **Driving impossible** | **Starting impossible**<br>Starting is not possible when the selector lever is in P or N range. In such cases, the cause is probably a defective engine system, torque converter or oil pump. | - Malfunction of the engine system<br>- Malfunction of the torque converter<br>- Malfunction of the oil pump |
| | **Does not move forward**<br>If the vehicle does not move forward when the selector lever is shifted from N to D, 3, 2 or L range while the engine is idling, the cause is probably abnormal line pressure or a malfunction of the underdrive clutch or valve body. | - Abnormal line pressure<br>- Malfunction of the underdrive solenoid valve<br>- Malfunction of the underdrive clutch<br>- Malfunction of the valve body |
| | **Does not reverse**<br>If the vehicle does not reverse when the selector lever is shifted from N to R range while the engine is idling, the cause is probably abnormal pressure in the reverse clutch or low and reverse brake or a malfunction of the reverse clutch, low and reverse brake or valve body. | - Abnormal reverse clutch pressure<br>- Abnormal low and reverse brake pressure<br>- Malfunction of the low and reverse brake solenoid valve<br>- Malfunction of the reverse clutch<br>- Malfunction of the low and reverse brake<br>- Malfunction of the valve body |
| | **Does not move (forward or reverse)**<br>If the vehicle does not move forward or reverse when the selector lever is shifted to any position while the engine is idling, the cause is probably abnormal line pressure or a malfunction of the power train, oil pump or valve body. | - Abnormal line pressure<br>- Malfunction of power train<br>- Malfunction of the oil pump<br>- Malfunction of the valve body |
| **Malfunction when starting** | **Engine stalling when shifting**<br>If the engine stalls when the selector lever is shifted from N to D or R range while the engine is idling, the cause is probably a malfunction of the engine system, damper clutch solenoid valve, valve body or torque converter (damper clutch malfunction). | - Malfunction of the engine system<br>- Malfunction of the damper clutch control solenoid valve<br>- Malfunction of the valve body<br>- Malfunction of the torque converter (Malfunction of the damper clutch) |
| | **Shocks when changing from N to D and large time lag**<br>If abnormal shocks or a time lag of 2 seconds or more occur when the selector lever is shifted from N to D range while the engine is idling, the cause is probably abnormal underdrive clutch pressure or a malfunction of the underdrive clutch, valve body or idle position switch. | - Abnormal underdrive clutch pressure<br>- Abnormal low and reverse brake pressure<br>- Malfunction of the underdrive solenoid valve<br>- Malfunction of the valve body<br>- Malfunction of the idle position switch |

| Trouble symptom | | Probable cause |
|---|---|---|
| **Malfunction when starting** | **Shocks when changing from N to R and large time lag**<br>If abnormal shocks or a time lag of 2 seconds or more occur when the selector lever is shifted from N to R range while the engine is idling, the cause is probably abnormal reverse clutch pressure or low and reverse brake pressure, or a malfunction of the reverse clutch, low and reverse brake, valve body or idle position switch. | - Abnormal reverse clutch pressure<br>- Abnormal low and reverse brake pressure<br>- Malfunction of the low and reverse solenoid valve<br>- Malfunction of the reverse clutch<br>- Malfunction of the low and reverse brake<br>- Malfunction of the valve body<br>- Malfunction of the idle position switch |
| | **Shocks when changing from N to D, N to R and large time lag**<br>If abnormal shocks or a time lag of 2 seconds or more occur when the selector lever is shifted from N to D range and from N to R range while the engine is idling, the cause is probably abnormal line pressure or a malfunction of the oil pump or valve body. | - Abnormal line pressure<br>- Malfunction of the oil pump<br>- Malfunction of the valve body |
| **Malfunction when shifting** | **Shocks and running up**<br>If shocks occur when driving due to up shifting or down shifting and the transmission speed becomes higher than the engine speed, the cause is probably abnormal line pressure or a malfunction of a solenoid valve, oil pump, valve body or of a brake or clutch. | - Abnormal line pressure<br>- Malfunction of each solenoid valve<br>- Malfunction of the oil pump<br>- Malfunction of the valve body<br>- Malfunction of each brake or each clutch |
| **Displaced shifting points** | **All points**<br>If all shift points are displaced while driving, the cause is probably a malfunction of the output shaft speed sensor, TPS or of a solenoid valve. | - Malfunction of the output shaft speed sensor<br>- Malfunction of the throttle position sensor<br>- Malfunction of each solenoid valve<br>- Abnormal line pressure<br>- Malfunction of the valve body<br>- Malfunction of the TCM(PCM) |
| | **Some points**<br>If some of the shift points are displaced while driving, the cause is probably a malfunction of the valve body, or it is related to control and is not an abnormality. | - Malfunction of the valve body |
| **Does not shift** | **No diagnosis codes**<br>If shifting does not occur while driving and no diagnosis codes are output, the cause is probably a malfunction of the transaxle range switch, or TCM(PCM) | - Malfunction of the transaxle range<br>- Malfunction of the TCM(PCM) |
| **Malfunction while driving** | **Poor acceleration**<br>If acceleration is poor even if down shifting occurs while driving, the cause is probably a malfunction of the engine system or of a brake or clutch. | - Malfunction of the engine system<br>- Malfunction of the brake or clutch |

| Trouble symptom | | Probable cause |
|---|---|---|
| **Malfunction while driving** | **Vibration**<br>If vibration occurs when driving at constant speed or when accelerating and deceleration in top range, the cause is probably abnormal damper clutch pressure or a malfunction of the engine system, damper clutch control solenoid valve, torque converter or valve body. | - Abnormal damper clutch pressure<br>- Malfunction of the engine system<br>- Malfunction of the damper clutch control solenoid valve<br>- Malfunction of the torque converter<br>- Malfunction of the valve body |
| **Transaxle range switch system**<br>The cause is probably a malfunction of the inhibitor switch circuit, ignition switch circuit or a defective TCM(PCM). | | - Malfunction of the transaxle range switch<br>- Malfunction of the ignition switch<br>- Malfunction of connector<br>- Malfunction of the TCM(PCM) |
| **Idle position switch system**<br>The cause is probably a defective idle position switch circuit, or a defective TCM(PCM). | | - Malfunction of the triple pressure switch<br>- Malfunction of connector<br>- Malfunction of the TCM(PCM) |
| **Triple pressure switch system**<br>The cause is probably a defective dual pressure switch circuit or a defective TCM(PCM). | | - Malfunction of the triple pressure switch<br>- Malfunction of connector<br>- Malfunction of A/C system<br>- Malfunction of the TCM(PCM) |
| **Vehicle speed sensor system**<br>The cause is probably a defective vehicle speed sensor circuit or a defective TCM(PCM). | | - Malfunction of the vehicle speed sensor<br>- Malfunction of connector<br>- Malfunction of the TCM(PCM) |

**DTC TROUBLESHOOTING INDEX**

| No. | Code | Item | MIL | Remark |
|---|---|---|---|---|
| 1 | P0707 | TRANSAXLE RANGE SWITCH CIRCUIT LOW INPUT | ON | AT-48 |
| 2 | P0708 | TRANSAXLE RANGE SWITCH CIRCUIT HIGH INPUT | ON | AT-55 |
| 3 | P0711 | TRANSAXLE FLUID TEMPERATURE SENSOR RATIONALITY | ON | AT-58 |
| 4 | P0712 | TRANSAXLE FLUID TEMPERATURE SENSOR CIRCUIT LOW INPUT | ON | AT-64 |
| 5 | P0713 | TRANSAXLE FLUID TEMPERATURE SENSOR CIRCUIT HIGH INPUT | ON | AT-66 |
| 6 | P0717 | A/T INPUT SPEED SENSOR CIRCUIT - OPEN or SHORT(GND) | ON | AT-69 |
| 7 | P0722 | AT OUTPUT SPEED SENSOR CIRCUIT - OPEN or SHORT(GND) | ON | AT-76 |
| 8 | P0731 | GEAR 1 INCORRECT RATIO | ON | AT-83 |
| 9 | P0732 | GEAR 2 INCORRECT RATIO | ON | AT-89 |
| 10 | P0733 | GEAR 3 INCORRECT RATIO | ON | AT-94 |
| 11 | P0734 | GEAR 4 INCORRECT RATIO | ON | AT-99 |
| 12 | P0741 | TORQUE CONVERTER CLUTCH STUCK OFF | ON | AT-103 |
| 13 | P0742 | TORQUE CONVERTER CLUTCH STUCK ON | ON | AT-106 |
| 14 | P0743 | TORQUE CONVERTER CLUTCH CONTROL SOLENOID VALVE - OPEN or SHORT(GND) | ON | AT-109 |
| 15 | P0748 | VFS SOLENOID | OFF | AT-117 |
| 16 | P0750 | LOW and REVERSE SOLENOID VALVE CIRCUIT - OPEN or SHORT(GND) | ON | AT-124 |
| 17 | P0755 | UNDER DRIVE SOLENOID VALVE CIRCUIT - OPEN or SHORT(GND) | ON | AT-131 |
| 18 | P0760 | SECOND SOLENOID VALVE CIRCUIT - OPEN or SHORT(GND) | ON | AT-138 |
| 19 | P0765 | OVERDRIVE SOLENOID VALVE CIRCUIT - OPEN or SHORT(GND) | ON | AT-145 |
| 20 | P0885 | A/T CONTROL RELAY - OPEN or SHORT(GND) | ON | AT-152 |
| 21 | P0890 | TCM power Relay sense circuit low | ON | AT-157 |
| 22 | P0891 | TCM power Relay sense circuit High | ON | AT-158 |

**FAILSAFE**

Activation and deactivation of error failsafe is coordinated Error failsafe Management.
Once Error failsafe is activated, it will be kept until ignition key OFF.
In every new TCM start, TCM start with No Error failsafe and No Error present.

0. Mechanical Limp Home Mode
   - Switch off A/T relay

1. Electrical Limp Home Mode
   - Keep 2nd / 3rd gear

2. Prohibit Intelligent Shift
   - Fuzzy SAT(Siements Adaptive Transmission) shift pattern (Medium Driver, Sporty Driver) will not be used

3. Prohibit Adaptive Control
   - No learning is done

6. Prohibit Torque Reduction Request
   - No torque reduction is sent to ECU

7. Prohibit Lockup Control
   - Stay in non-lockup control state

8. Substitute Input Value Oil Temperature
   - Set oil temperature(tf) to 80° C (192°F)

9. Substitute Value Speed Ratio
   - Set speed ratio to 0.7

10. Substitute CAN Input Value
    - Set engine torque to 42%
    - Set throttle position to 50%
    - Set accelerator pedal signal to 50%
    - Set engine speed (Ne) to 3000 rpm
    - Set vehicle speed to 0 km/h
    - Set status of air condition relay to OFF

11. Prohibit VFS control
    - Stop the Line Pressure Control till IG Off

**FAILSAFE ACCORDING TO THE DTC**

***NOTE***

- *Refer the detail description in the previous page for the indicated number on the ‘ Failsafe’ column.*

| Items | Type of error | Failsafe | OBD-II relevant DTC | DTC |
|---|---|---|---|---|
| Oil temperature sensor | Short to ground | 2, 3, 7, 8, 11 | P0712 | P0712 |
| | Open or short to B+ | | P0713 | P0713 |
| | Stuck signal | | P0711 | P0711 |
| | Sensor fail | | P0711 | P0711 |
| PG-A | Short to ground | 1,11 | P0717 | P0717 |
| | Open or short to B+ | | | |
| PG-B | Short to ground | | P0722 | P0722 |
| | Open or short to B+ | | | |
| | Sensor fail | | P0721 | P0721 |
| Brake switch | Open | 2 | – | P0713 |
| | Short to B+ | | | |
| LR Solenoid valve | Short to B+ | 0,11 | P0750 | P0750 |
| | Open or short to ground | | | |
| 2nd Solenoid valve | Short to B+ | | P0760 | P0760 |
| | Open or short to ground | | | |
| UD Solenoid valve | Short to B+ | | P0755 | P0755 |
| | Open or short to ground | | | |
| OD Solenoid valve | Short to B+ | | P0765 | P0765 |
| | Open or short to ground | | | |
| | Open or short to B+ | | P0765 | P0765 |
| DCC Solenoid valve | Short to B+ | | P0743 | P0743 |
| | Open or short to ground | | | |
| 1st speed asynchronous | Synchronous error | 0,11 | P0731 | P0731 |
| 2nd speed asynchronous | Synchronous error | | P0732 | P0732 |
| 3rd speed asynchronous | Synchronous error | | P0733 | P0733 |
| 4th speed asynchronous | Synchronous error | | P0734 | P0734 |
| Reverse speed asynchronous | Synchronous error | | – | – |
| CAN | No ID from ECM | 2,3,6,7,9,10,11 | – | P1604 |
| | CAN BUS off | | – | P1603 |
| Damper clutch | Abnormal system | 7 | P0741 | P0741 |
| A/T relay | Short to ground or open | 0,11 | P0885 | P0885 |

| Items | Type of error | Failsafe | OBD-II relevant DTC | DTC |
|---|---|---|---|---|
| Inhibitor switch | Short to ground or open | – | P0707 | P0707 |
| | Short to B+ or short between switches | | P0708 | P0708 |
| VFS | Short to B+ | 11 | – | P0748 |
| | Short to ground | 0,11 | | |
| | Open | 11 | | |
| CKP sensor | Sensor error | Ne=3,000rpm 7,9 | – | – |
| TPS sensor | Sensor error | TPS=50% | – | – |

**SERVICE DATA LIST(WITH SCAN TOOL)**

| No. | ITEM NAME | UNIT | DATA | Data Description | Failure |
|---|---|---|---|---|---|
| 1 | ENGINE RPM | rpm | 700 rpm | Current Engine rpm | 0 rpm |
| 2 | VEHICLE SPEED | km/h | 0km/h | Current Vehicle speed | 0km/h |
| 3 | THROTTLE P.SENSOR | % | 12.5% | Current TPS open angle | 0% |
| 4 | INPUT SPEED(PG-A) | rpm | 700 rpm | Input speed rpm. Always output rpm when turning start ON | 0 rpm |
| 5 | OUTPUT SPEED(PG-B) | rpm | 0 rpm | Output speed rpm. Always output rpm when driving | 0 rpm |
| 6 | DCC(TCC) SOLENOID DUTY | % | 0% | Control 0% → 100% when operating Damper Clutch | |
| 7 | DAMPER CLUTCH SLIP | rpm | 260 rpm | Current Damper clutch slip ratio | 0 rpm |
| 8 | LR SOLENOID DUTY | % | 100% | Control 100% → 0% when operating brake | 0% |
| 9 | UD SOLENOID DUTY | % | 100% | Control 100% → 0% when operating clutch | 0% |
| 10 | 2ND SOLENOID DUTY | % | 100% | Control 100% → 0% when operating clutch | 0% |
| 11 | OD SOLENOID DUTY | % | 100% | Control 100% → 0% when operating clutch | 0% |
| 12 | VFS SOLENOID DUTY | % | 0~400% | – | |
| 13 | OIL TEMPERATURE | °C | 40°C | Current Oil temperature | 80°C |
| 14 | SHIFT POSITION | N,P,REV/1st G/…/5th G | D | Current shift position | P, N |
| 15 | SELECT LEVEL | P,N/R/D/SPORTS | D | Current shift lever position | P, N |
| 16 | A/CON SWITCH | OFF/ON/-/NOT SUPP | OFF | - | |
| 17 | IDLE STATUS | OFF/ON/-/NOT SUPP | ON | When idling, ON | |
| 18 | BRAKE SWITCH | OFF/ON/-/NOT SUPP | ON | When braking, ON | |
| 19 | AUTO CRUISE SWITCH | OFF/ON/-/NOT SUPP | | | |
| 20 | AUTO CRUISE RELEASE | – | – | | |

| No. | ITEM NAME | UNIT | DATA | Data Description | Failure |
|---|---|---|---|---|---|
| 21 | SPORT MODE SELECT SW | OFF/ON/-/NOT SUPP | ON | When selecting sport mode, ON | |
| 22 | SPORT MODE UP SW | OFF/ON/-/NOT SUPP | ON | When Selecting Sport mode up, ON | |
| 23 | SPORT MODE DOWN SW | OFF/ON/-/NOT SUPP | ON | When selecting sport mode down, ON | |
| 24 | A/T CONTROL RELAY VOLT | V | 12.9V | | 0V |
| 25 | ENGINE TORQUE | % | 20% | | |
| 26 | HIVEC MODE | A/B/C/D/E/F/G/H/I/J/K | F | A/B/C/D is control mode, F is release mode | F |

**HIVEC -SAT(SIEMENS ADAPTIVE TRANSMISSION CONTROL) MODE (SHIFT PATTEN)**

| Shift patten | Description(Help) | SCAN DISPLAY |
|---|---|---|
| ECONOMY | Economy Driver shift patten for flat road | A |
| MEDIUM | Shift patten for medium road | B |
| SPORTS | Shift patten for sport road | C |
| LOAD 1 | Shift patten for low land, slow grade and slope | D |
| LOAD 2 | Shift patten for low land, steep grade and slope | E |
| LOAD 3 | Shift patten for downhill road | F |
| LOAD 1 HI ALT | Shift patten for high land, steep grade and slope | G |
| LOAD 2 HI ALT | Shift patten for low land, steep grade and slope | H |
| HI TEMP | Shift patten for high temperture ATF | I |
| WARM UP | Shift patten for exhaust gas decrease | J |
| HOLD | Shift patten for when hold, switch on | K |

**ACTUATOR INSPECTION**

| NO | ITEM NAME | Actuator Driving | Condition |
|---|---|---|---|
| 1 | LR SOLENOID(SCSV A) | Solenoid valve driver for 5sec. | 1. IG Key ON<br>2. Inhibitor SW normal<br>3. P range<br>4. Vehicle speed 0km/h<br>5. Engine stop<br>6. No failure<br>7. TPS < 1V |
| 2 | UD SOLENOID(SCSV B) | | |
| 3 | 2ND SOLENOID(SCSV C) | | |
| 4 | OD SOLENOID(SCSV D) | | |
| 5 | TORQUE CONVERTER SOLENOID VALVE | | |
| 6 | A/T CONTROL RELAY | OFF for 3 sec. | - |
| 7 | INTELLIGENT SHIFT PROHIBIT | Prohibit until IG off | - |
| 8 | CLEAR LEARNING VALUE | - | - |

**ROAD TEST**

| No. | Condition | Operation | Judgment value | Check item |
|---|---|---|---|---|
| 1 | Ignition switch : OFF | Ignition switch<br>(1) ON | Battery voltage (mV) | Control relay |
| 2 | • Ignition switch : ON<br>• Engine : Stopped<br>• Selector lever position : P | Selector lever position<br>(1) P, (2) R, (3) N, (4) D | (1) P, (2) R, (3) N, (4) D | Transaxle range switch |
| | | Accelerator pedal<br>(1) Released<br>(2) Half depressed<br>(3) Depressed | (1) 400~1,000 mV<br>(2)Gradually rises from (1)<br>(3) 4,500~5,000 mV | Throttle position sensor |
| | | Brake pedal<br>(1) Depressed<br>(2) Released | (1) ON<br>(2) OFF | Brake switch |
| 3 | • Ignition switch : ST<br>• Engine : Stopped | Starting test with lever P or N range | Starting should be possible | Starting possible or impossible |
| 4 | Warming up | Drive for 15 minutes or more so that the automatic fluid temperature becomes 70~90°C | Gradually rises to 70~90°C | Oil temperature sensor |
| 5 | • Engine : Idling<br>• Selector lever position : N | A/C switch<br>(1) ON<br>(2) OFF | (1) ON<br>(2) OFF | Triple pressure switch |
| | | Accelerator pedal<br>(1) Released<br>(2) Half depressed | (1) ON<br>(2) OFF | Idle position switch |
| | | | (1) 600~900 rpm<br>(2) Gradually rises from (1) | |
| | | | (1) Data changes | Communication with engine-ECU |
| | | Selector lever position<br>(1) N→D<br>(2) N→R | Should be no abnormal shifting shocks<br>Time lag should be within 2 seconds | Malfunction when starting |

| No. | Condition | Operation | Judgment value | Check item |
|---|---|---|---|---|
| 6 | Selector lever position : N (Carry out on a flat and straight road) | Selector lever position and vehicle speed<br>1. Idling in 1st gear (Vehicle stopped)<br>2. Driving at constant speed of 20 km/h in 1st gear<br>3. Driving at constant speed of 30 km/h in 2nd gear<br>4. Driving at 50 km/h in 3rd gear with accelerator fully closed<br>5. Driving at constant speed of 50 km/h in 4th gear | (2) 1st, (4) 3rd, (3) 2nd, (5) 4th | Shift condition |
| | | | (2) 0%, (4) 100%, (3) 100%, (5) 100% | Low and reverse solenoid valve |
| | | | (2) 0%, (4) 0%, (3) 0% | Underdrive solenoid valve |
| | | | (1) 100%, (2) 0%, (3) 100% | Second solenoid valve |
| | | | (2) 100%, (3) 100%, (4) 0% | Overdrive solenoid valve |
| | | | (1) 0km/h<br>(4) 50km/h | Vehicle speed sensor |
| | | | (4) 1,800 ~ 2,100rpm | Input shaft speed sensor |
| | | | (4) 1,800 ~ 2,100rpm | Output shaft speed sensor |
| 7 | Selector lever position : D (Carry out on a flat and straight road) | • Accelerate to 4th gear at a throttle position sensor output of 1.5V (accelerator opening angle of 30 %).<br>• Gently decelerate to a standstill.<br>• Accelerate to 4th gear at a throttle position sensor output of 2.5 V (accelerator opening angle of 50%).<br>• While driving at 60 km/h in 4th gear, shift down to 3rd gear.<br>• While driving at 40 km/h in 3rd gear, shift down to 2nd gear.<br>• While driving at 20 km/h in 2nd gear, shift down to 1st gear. | For (1), (2) and (3), the reading should be the same as the specified output shaft torque, and no abnormal shocks should occur.<br>For (4), (5) and (6), downshifting should occur immediately after the shifting operation is made. | Malfunction when shifting |
| | | | | Displaced shift points |
| | | | | Does not shift |
| | | | | Does not shift from 1 to 2 or 2 to 1 |
| | | | | Does not shift from 2 to 3 or 3 to 2 |
| | | | | Does not shift from 3 to 4 or 4 to 3 |
| 8 | Selector lever position : N (Carry out on a flat and straight road) | Move selector lever to R range drive at constant speed of 10km/h | The ratio between input and output shaft speed sensor data should be the same as the gear ratio when reversing. | Does not shift |

## TORQUE CONVERTER STALL TEST

This test measures the maximum engine speed when the selector lever is in the D or R position. The torque converter stalls to test the operation of the torque converter, starter motor, one-way clutch operation, the holding performance of the clutches, and brakes in the transaxle.

***CAUTION***

***Do not let anybody stand in front of or behind the vehicle while this test is being carried out***

1. Check the automatic transmission fluid level and temperature, and the engine coolant temperature.
   - Fluid level : At the HOT mark on the oil level gauge
   - Fluid temperature : 80~100°C (176~212°F)
   - Engine coolant temperature : 80~100°C(176~212°F)
2. Prevent all the wheels from moving during the test.
3. Pull the parking brake lever up, with the brake pedal fully depressed.
4. Start the engine.
5. Move the selector lever to the "D" position, fully depress the accelerator pedal and take a reading of the maximum engine speed at this time.

| |
|---|
| Stall speed : 2,100~2,900rpm |

***CAUTION***

- ***The throttle should not be left fully open for any more than five seconds.***
- ***If carrying out the stall test two or more times, move the selector lever to the "N" position and run the engine at 1,000 r/min to let the automatic transaxle fluid cool down before carrying out subsequent tests.***

6. Move the selector lever to the "R" position and carry out the same test again.

## TORQUE CONVERTER STALL TEST CONCLUSION

1. Stall speed is too high in both "D" and "R" ranges
   - Low line pressure
   - Low & reverse brake(B) slippage
2. Stall speed is to high in "D" range only
   - Underdrive clutch(C) slippage
3. Stall speed is too high in "R" range only
   - Reverse clutch(A) slippage
4. Stall speed too low in both "D" and "R" ranges
   - Malfunction of torque converter(D)
   - Insufficient engine output

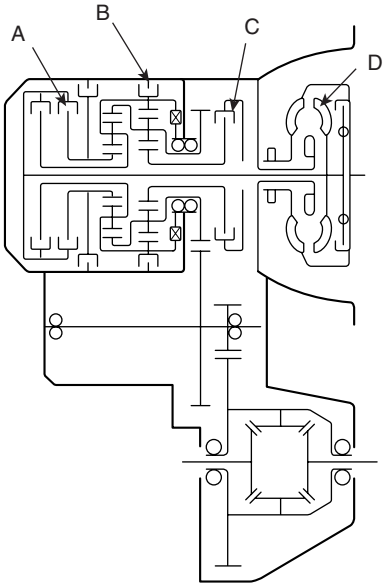


EKRF007F

## HYDRAULIC PRESSURE TEST

1. Warm up the engine until the automatic transaxle fluid temperature is 80-100°C.
2. Lift up the vehicle so that the wheels are free to turn.
3. Connect the special tool (oil pressure gauge) to each pressure discharge port.
4. Measure the hydraulic pressure at each port under the conditions given in the standard hydraulic pressure table, and check that the measured values are within the standard value ranges.
5. If a value is outside the standard range, correct the problem while referring to the hydraulic pressure test diagnosis table.

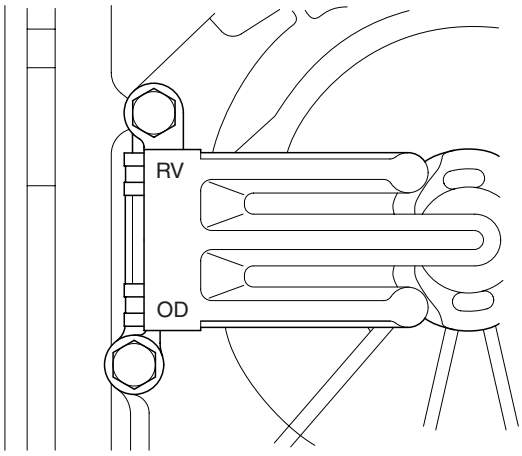


EKRF007I

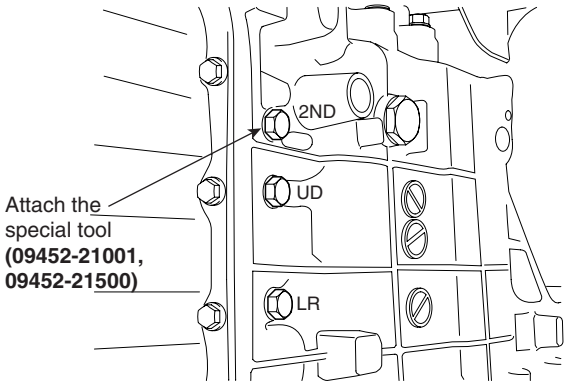


EKRF007G

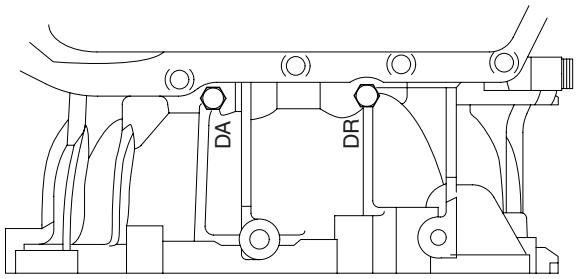


EKRF007H

**STANDARD HYDRAULIC PRESSURE TEST**

| Measurement condition | | | Standard hydraulic pressure kPa (psi) | | | | | | |
|---|---|---|---|---|---|---|---|---|---|
| Se-lector lever posi-tion | Shift position | Engine speed (rpm) | Under drive clutch pressure | Reverse clutch pressure | Overdrive clutch pressure | Low & reverse brake pressure | Second brake pressure | Damper clutch Apply pressure (DA) | Damper clutch Release pressure (DR) |
| P | - | 2,500 | - | - | - | 260-340 (38-50) | - | - | - |
| R | Reverse | 2,500 | - | 1,270-1,770 (185-256) | - | 1,270-1,770 (185-256) | - | - | - |
| N | - | 2,500 | - | - | - | 260-340 (38-50) | - | - | - |
| D | 1st gear | 2,500 | 430-510 (62-74) | - | - | 1,010-1,050 (146-152) | - | - | - |
| | 2nd gear | 2,500 | 430-510 (62-74) | - | - | - | 430-510 (62-74) | - | - |
| | 3rd gear | 2,500 | 430-510 (62-74) | - | 430-510 (62-74) | - | - | More than 730 (100) | 0-10 (0-1) |
| | 4th gear | 2,500 | - | - | 430-510 (62-74) | - | 780-880 (110-130) | More than 730 (100) | 0-10 (0-1) |

※ The values are subject to change according to vehicle model or condition

※ Depress the acceleration pedal "GENTLY" under no load when measuring the hydraulic pressure.

# DTC P0707 TRANSAXLE RANGE SWITCH - LOW INPUT

## COMPONENT LOCATION E9A1E3F5

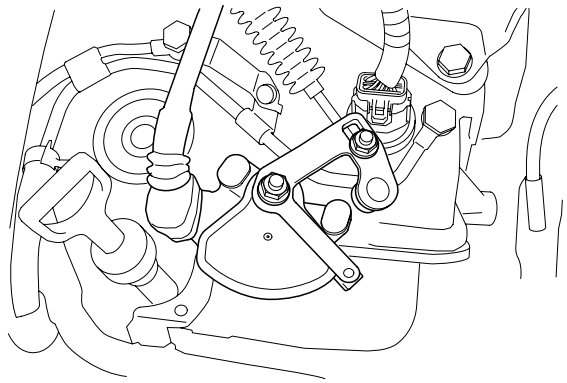

EKKE108A

## GENERAL DESCRIPTION E2CDEB72

The Transaxle Range Switch sends the shift lever position information to the TCM(PCM) using a 12V (battery voltage) signal. When the shift lever is in the D (Drive) position the output signal of Transaxle Range Switch is 12V and in all other positions the voltage is 0V. The TCM(PCM) judges the shift lever position by reading all signals, for the Transaxle Range Switch, simultaneously.

## DTC DESCRIPTION EA59FEC0

The TCM(PCM) sets this code when the Transaxle Range Switch has no output signal for more than 30 seconds.

## DTC DETECTING CONDITION EEDFCC13

| Item | Detecting Condition | Possible cause |
|---|---|---|
| **DTC Strategy** | • Check for no signal | • Open or short in circuit<br>• Faulty Shift cable adjustment<br>• Faulty Inhibitor switch and Manual control lever position adjustment<br>• Faulty TRANSAXLE RANGE SWITCH<br>• Faulty TCM(PCM) |
| **Enable Conditions** | • Engine state = "RUN"<br>• 11V ≤ Battery Voltage ≤ 16V<br>• TPS ≥ 3% | |
| **Threshold value** | • No signal detected | |
| **Diagnostic Time** | • More than 30seconds | |
| **Fail Safe** | • Recognition as previous signal.<br>- When P-D or R-D or D-R SHIFT is detected, it is regarded as N-D or N-R though "N" signal is not detected<br>- When sports mode S/W is ON without P,R,N, D-RANGE signals, it is regarded sports mode. (DTC is not set) | |

## SIGNAL WAVEFORM EC2E1E1D

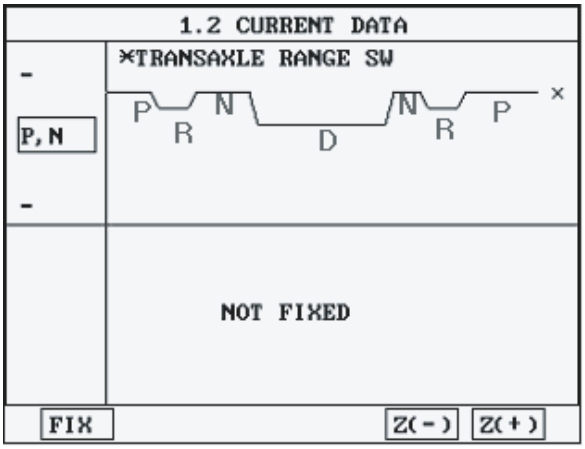


EKBF100A

## MONITOR SCANTOOL DATA E10EDAD4

1. Connect scantool to data link connector(DLC).
2. Ignition "ON" & Engine "OFF".
3. Monitor the "TRANSAXLE RANGE SWITCH" parameter on the scantool.
4. Shift selector lever from "P" range to "D" range.

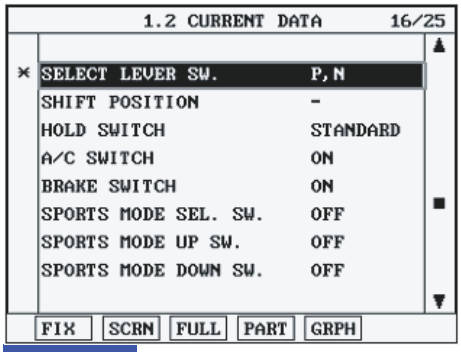


FIG.1)

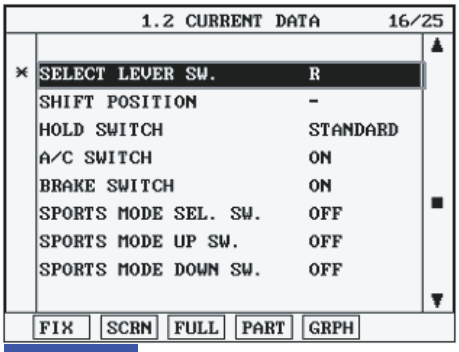


FIG.2)

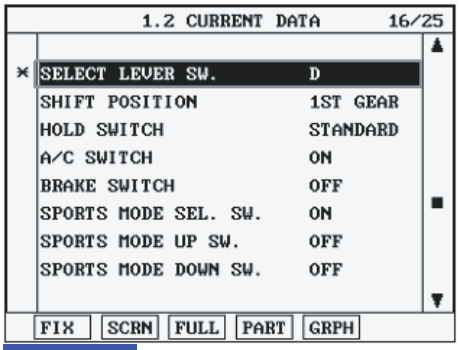


FIG.3)

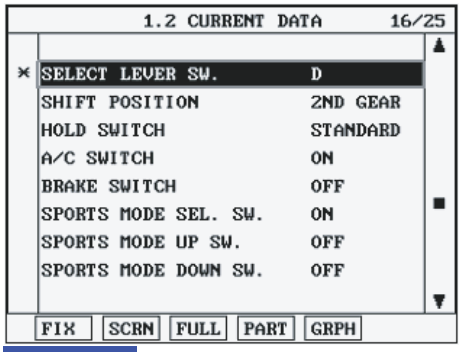


FIG.4)

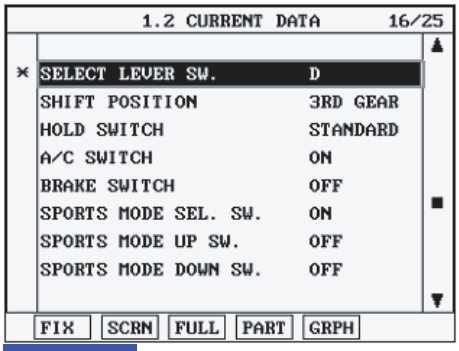


FIG.5)

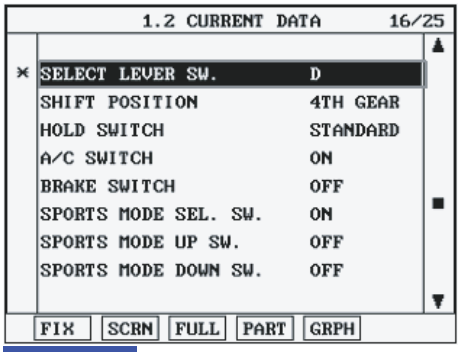


FIG.6)

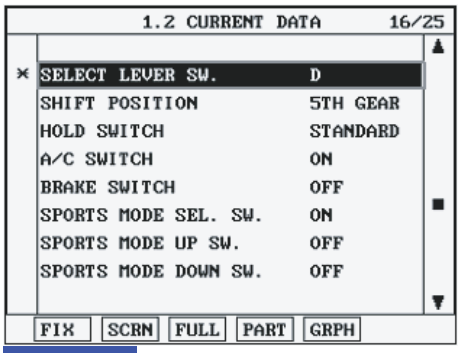


FIG.7)

FIG. 1) "P,N" Range
FIG. 2) "R" Range
FIG. 3) "D" Range 1st gear
FIG. 4) "D" Range 2nd gear
FIG. 5) "D" Range 3re gear
FIG. 6) "D" Range 4th gear
FIG. 7) "D" Range 5th gear

LLLG100A

5. Does "TRANSAXLE RANGE SWITCH" follow the reference data?

**YES**

▶ Fault is intermittent caused by poor contact in the sensor's and/or TCM(PCM)'s connector or was repaired and TCM(PCM) memory was not cleared. Thoroughly check connectors for looseness, poor connection, bending, corrosion, contamination, deterioration or damage. Repair or replace as necessary and go to "Verification of Vehicle Repair" procedure.

**NO**

▶ Go to "Terminal & connector inspection" procedure.

※ Most of fault that happen about inhibitor switch, result from faulty shift cable adjustment or incorrect location of manual control lever and inhibitor switch. So, when DTC which related Inhibitor switch or engine start defectiveness at "P" range happen, After check the shift cable adjustment or location of manual control lever and inhibitor switch, repair or replace as necessary.

## TERMINAL & CONNECTOR INSPECTION EC9C5732

1. Many malfunctions in the electrical system are caused by poor harness and terminals. Faults can also be caused by interference from other electrical systems, and mechanical or chemical damage.

2. Thoroughly check connectors for looseness, poor connection, bending, corrosion, contamination, deterioration, or damage.

3. Has a problem been found?

**YES**

▶ Repair as necessary and go to "Verification of vehicle repair" procedure.

**NO**

▶ Go to "Power circuit inspection" procedure.

## POWER SUPPLY CIRCUIT INSPECTION EE59EA80

1. CHECK POWER TO RANGE SWITCH

   1) Disconnect "TRANSAXLE RANGE SWITCH" connector.

   2) Ignition "ON" & Engine "OFF".

   3) Measure voltage between terminal "8" of the sensor harness connector and chassis ground.

| |
|---|
| Specification : approx. B+ |

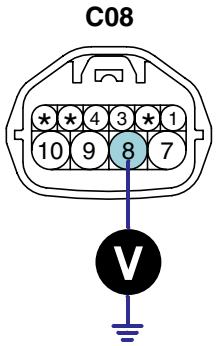


1. D Range
3. P Range
4. N Range
7. R Range
**8. Power supply IG1**
9. Starting circuit
10. Starting circuit

SCMAT6701L

4) Is voltage within specifications?

**YES**

▶ Go to "Signal circuit inspection" procedure.

**NO**

▶ Check that Fuse 10A is installed or not blown.
▶ Check for open in harness. Repair as necessary and go to "Verification of vehicle repair" procedure.

## SIGNAL CIRCUIT INSPECTION E2609BDA

1. Ignition "OFF".
2. Disconnect "TRANSAXLE RANGE SWITCH" and "TCM(PCM)" connector.
3. Measure resistance between each terminal of the sensor harness connector and TCM(PCM) harness connector as below.

Specification :

| Pin No of "TRANSAXLE RANGE SWITCH" | C08 No.1 | C08 No.3 | C08 No.4 | C08 No.7 |
|---|---|---|---|---|
| Pin No of "PCM" harness | C30-A No.6 | C30-A No.3 | C30-A No.5 | C30-A No.4 |
| Specification | 0Ω | 0Ω | 0Ω | 0Ω |

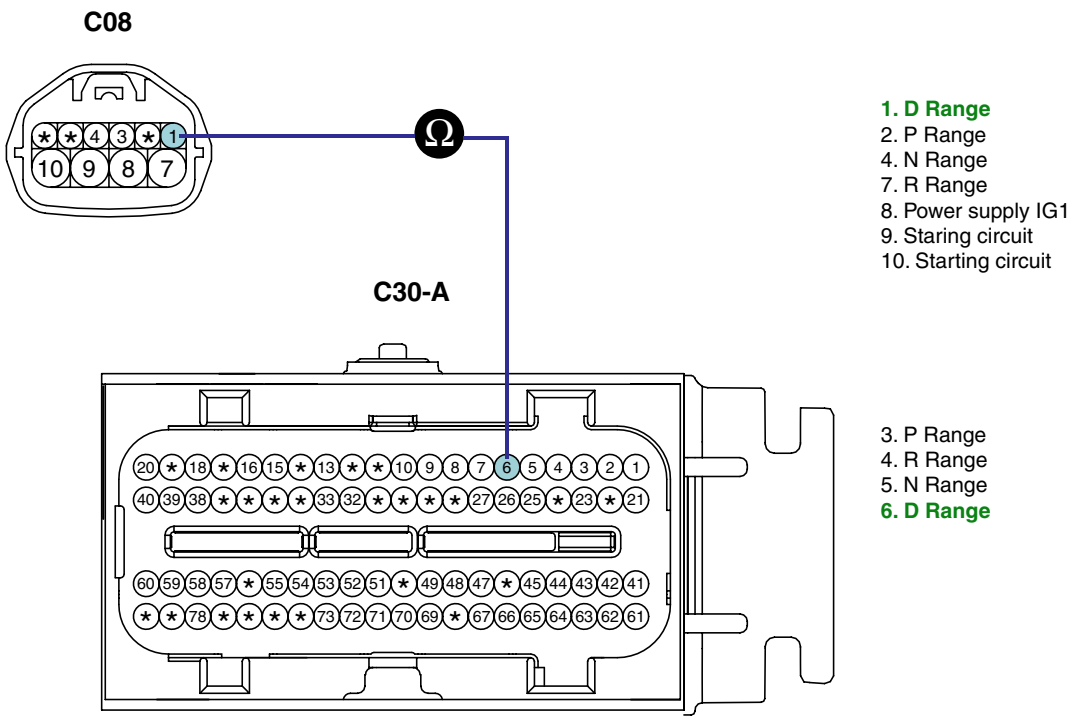


SCMAT6702L

4. Is resistance within specifications?

**YES**

▶ Go to "Component inspection" procedure.

**NO**

▶ Check for Open in harness. Repair as necessary and Go to "Verification of Vehicle Repair" procedure.

## COMPONENT INSPECTION EFFA7D74

1. Ignition "OFF".
2. Remove "TRANSAXLE RANGE SWITCH".
3. Measure the resistance between each terminal of the sensor.

| |
|---|
| Specification : Approx. 0 Ω |

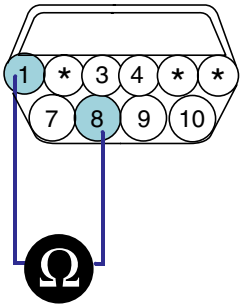


**C08**
Component side

**1. D Range**
3. P Range
4. N Range
7. R Range
**8. Power supply IG1**
9. Starting circuit
10. Starting circuit

| Range \ Terminal | P | R | N | D | 3 | 2 | L |
|---|---|---|---|---|---|---|---|
| 1 | | | | ● | | | |
| 2 | | | | | | ● | |
| 3 | ● | | | | | | |
| 4 | | | ● | | | | |
| 5 | | | | | ● | | |
| 6 | | | | | | | ● |
| 7 | | ● | | | | | |
| 8 | ● | ● | ● | ● | ● | ● | ● |
| 9 | ● | | ● | | | | |
| 10 | ● | | ● | | | | |

[ RANGE SWITCH continuity check table (Case of SPORTS MODE vehicle has no 3,2,L range) ]

SCMAT6703L

4. Is resistance within specifications?

**YES**

▶ Substitute with a known-good PCM/TCM and check for proper operation. If the problem is corrected, replace PCM/TCM as necessary and then go to "Verification of Vehicle Repair" procedure.

**NO**

▶ Replace "TRANSAXLE RANGE SWITCH" as necessary and Go to "Verification of Vehicle Repair" procedure.

## VERIFICATION OF VEHICLE REPAIR EB7F7EB6

After a repair, it is essential to verify that the fault has been corrected.

1. Connect scantool and select "Diagnostic Trouble Codes(DTCs)" mode.
2. Using a scantool, Clear DTC.
3. Operate the vehicle within DTC Enable conditions in General information.
4. Are any DTCs present?

**YES**

▶ Go to the applicable troubleshooting procedure.

**NO**

▶ System performing to specification at this time.

# DTC P0708 TRANSAXLE RANGE SWITCH - HIGH INPUT

## COMPONENT LOCATION E8ECC177

Refer to DTC P0707.

## GENERAL DESCRIPTION E7E46C8A

Refer to DTC P0707.

## DTC DESCRIPTION ED5D0931

The TCM sets this code when the Transaxle Range Switch outputs multiple signals for more than 30 seconds.

## DTC DETECTING CONDITION EEFC7EC9

| Item | Detecting Condition | Possible cause |
|---|---|---|
| **DTC Strategy** | • Check for multiful signals | • Open or short in TRANSAXLE RANGE SWITCH<br>• Faulty Shift cable adjustment<br>• Faulty Inhibitor switch and Manual control lever position adjustment<br>• Faulty TRANSAXLE RANGE SWITCH<br>• Faulty PCM |
| **Enable Conditions** | • Engine state = "RUN"<br>• 11V ≤ Battery Voltage ≤ 16V<br>• TPS ≥ 3% | |
| **Threshold value** | • Multiple signal | |
| **Diagnostic Time** | • More than 30sec | |
| **Fail Safe** | • Recognition as previous signal<br>- When signal is input "D" and "N" at the same time, TCM regards it as "N" RANGE<br>- After PCM/TCM Reset, If the if the PCM/TCM detects multiple signal or no signal, then it holds the 3rd gear position | |

## SIGNAL WAVEFORM E9A9AA09

Refer to DTC P0707.

## MONITOR SCANTOOL DATA ECBB7BFE

Refer to DTC P0707.

## TERMINAL & CONNECTOR INSPECTION EA22C7FA

Refer to DTC P0707.

## POWER SUPPLY CIRCUIT INSPECTION EEAF065B

1. Disconnect "TRANSAXLE RANGE SWITCH" connector.
2. Ignition "ON" & Engine "OFF".
3. Measure voltage between each terminal of the sensor harness connector and chassis ground.

Specification :

| TERMINAL(C08) | No.1 | No.3 | No.4 | No.7 | No.8 | No.9 | No.10 |
|---|---|---|---|---|---|---|---|
| SPECIFICATION | 0V | 0V | 0V | 0V | 0V | 0V | 0V |

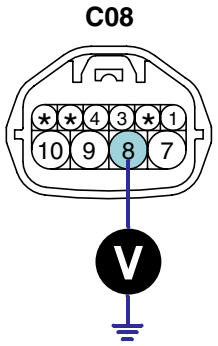


1. D Range
3. P Range
4. N Range
7. R Range
**8. Power supply IG1**
9. Starting circuit
10. Starting circuit

SCMAT6701L

4. Is voltage within specifications?

**YES**

▶ Go to "Signal circuit inspection" procedure.

**NO**

▶ Check for Short in harness. Repair as necessary and Go to "Verification of Vehicle Repair" procedure.

## SIGNAL CIRCUIT INSPECTION EBF2BDAA

1. Ignition "OFF".
2. Disconnect "TRANSAXLE RANGE SWITCH" and "TCM(PCM)" connector.
3. Measure resistance between each terminals of the sensor harness to check for Short.

| Specification : Infinite |
|---|

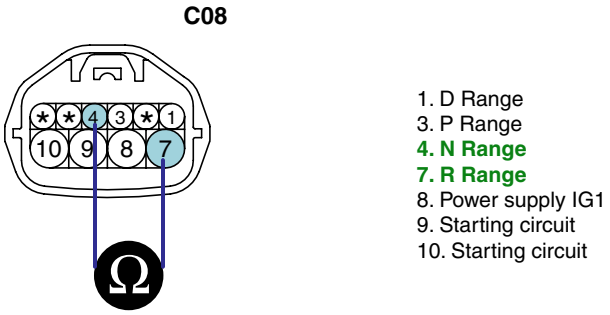


SCMAT6704L

4. Is resistance within specifications?

**YES**

▶ Go to "Component inspection" procedure.

**NO**

▶ Check for Short in harness. Repair as necessary and Go to "Verification of Vehicle Repair" procedure.

## COMPONENT INSPECTION EBE9E25B

Refer to DTC P0707.

## VERIFICATION OF VEHICLE REPAIR E9F40C05

Refer to DTC P0707.

# DTC P0711 TRANSAXLE FLUID TEMPERATURE SENSOR RATIONALITY

## COMPONENT LOCATION EFB9EACF

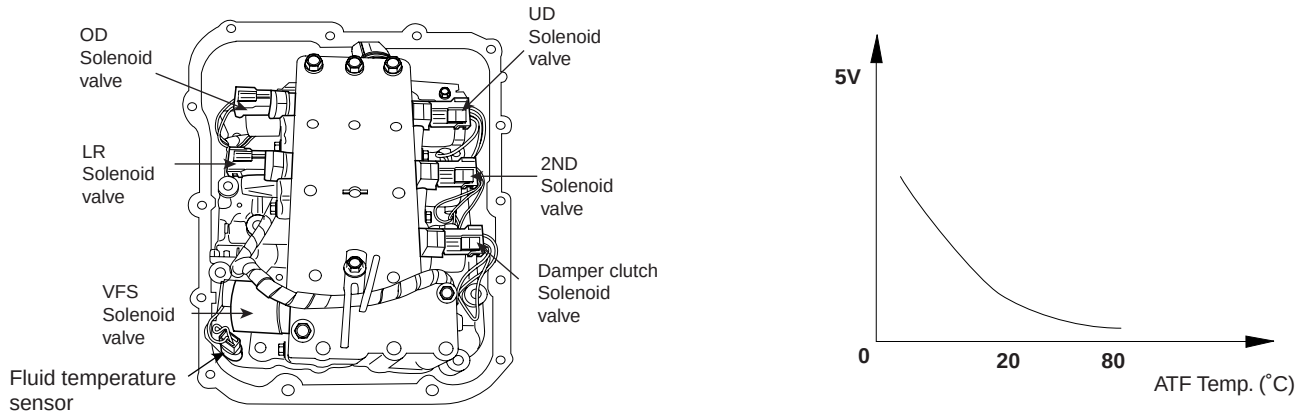


EKRF404A

## GENERAL DESCRIPTION EC83584F

The automatic TRANSAXLE fluid(ATF) temperature sensor is installed in the Valve Body. This sensor uses a thermistor whose resistance changes according to the temperature changes. The TCM supplies a 5V reference voltage to the sensor, and the output voltage of the sensor changes when the ATF temperature varies. The automatic TRANSAXLE fluid(ATF) temperature provides very important data for the TCM's control of the Torque Converter Clutch, and is also used for many other purposes.

## DTC DESCRIPTION E8DBFA31

This DTC code is set when the ATF temperature output voltage is lower than a value generated by thermistor resistance, in a normal operating range, for approximately 1 second or longer. The TCM regards the ATF temperature as fixed at a value of 80°C(176°F).

## DTC DETECTING CONDITION E8626E39

| Item | Detecting Condition | Possible cause |
|---|---|---|
| **DTC Strategy** | • Check rationality | • Sensor signal circuit is short to ground<br>• Faulty sensor<br>• Faulty PCM |
| **Enable Conditions 1)** | • Intake air temperature ≥ -25°C(-13°F)<br>• Engine state = RUN<br>• No error with relations other sensors<br>• Engine be cooled sufficiently | |
| **Enable Conditions 2)** | • Engine state = RUN<br>• Average start up temperature of TM stuck diagnostic ≤ 55°C(131°F) | |
| **Threshold Value 1)** | • ATF Temp - Coolant Temp ≥ 20°C(68°F) | |
| **Threshold Value 2)** | • ATF Temp - TM start up Temp ≤ 0.5°C(32.9°F) | |
| **Diagnostic Time 1)** | • more than 1 second | |
| **Diagnostic Time 2)** | • more than 900 seconds | |
| **Fail Safe** | • Learning control and Intelligent shift are inhibited<br>• Fluid temperature is regarded as 80°C(176°F) | |

## SPECIFICATION EDE1646A

| TEMP.[°C(°F)] | Resistance(kΩ ) | TEMP.[°C(°F)] | Resistance(kΩ ) |
|---|---|---|---|
| -40(-40°F) | 139.5 | 80(176°F) | 1.08 |
| -20(-4°F) | 47.7 | 100(212°F) | 0.63 |
| 0(32°F) | 18.6 | 120(248°F) | 0.38 |
| 20(68°F) | 8.1 | 140(284°F) | 0.25 |
| 40(104°F) | 3.8 | 160(320°F) | 0.16 |
| 60(140°F) | 1.98 | | |

## MONITOR SCANTOOL DATA EB5C6397

1. Connect scantool to data link connector(DLC).
2. Engine "ON".
3. Monitor the "TRANSAXLE FLUID TEMPERATURE SENSOR" parameter on the scan tool.

Specification : Increasing Gradually

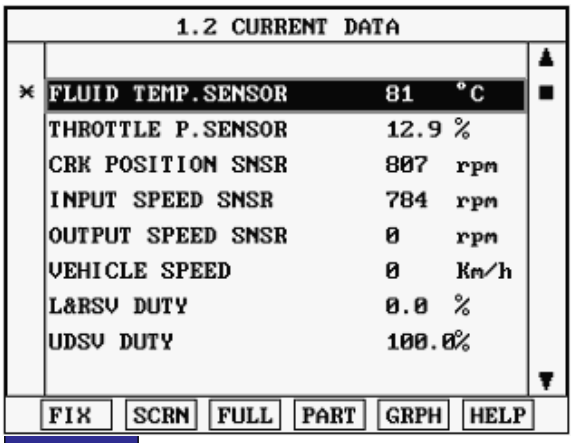


FIG.1)

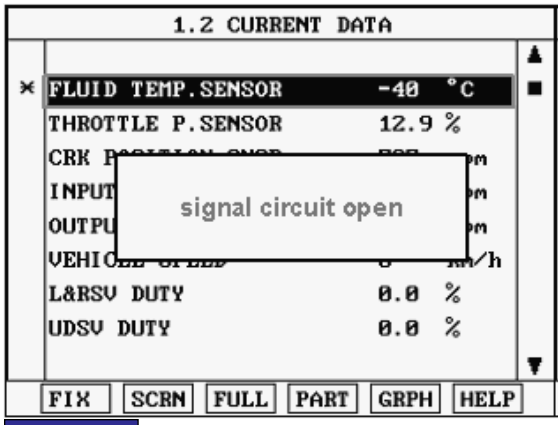


FIG.2)

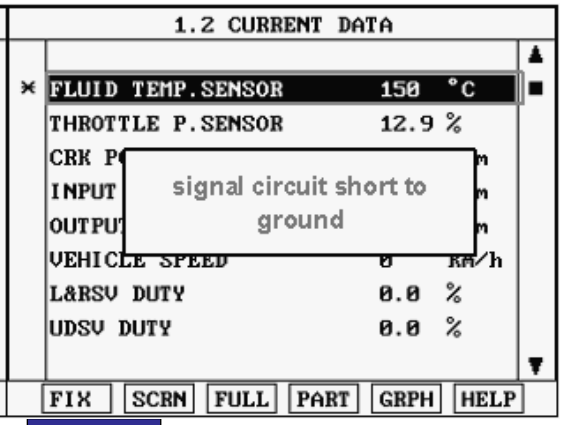


FIG.3)

FIG.1) Normal
FIG.2) Signal harness Open
FIG.3) Signal harness Short

SCMAT6706L

4. Does "TRANSAXLE FLUID TEMPERATURE SENSOR " follow the reference data?

**YES**

▶ Fault is intermittent caused by poor contact in the sensor's and/or TCM(PCM)'s connector or was repaired and TCM(PCM) memory was not cleared. Thoroughly check connectors for looseness, poor connection, bending, corrosion, contamination, deterioration or damage. Repair or replace as necessary and go to "Verification of Vehicle Repair" procedure.

**NO**

▶ Go to "Terminal & connector inspection" procedure.

## TERMINAL & CONNECTOR INSPECTION E9C55AF4

1. Many malfunctions in the electrical system are caused by poor harness and terminals. Faults can also be caused by interference from other electrical systems, and mechanical or chemical damage.

2. Thoroughly check connectors for looseness, poor connection, bending, corrosion, contamination, deterioration, or damage.

3. Has a problem been found?

**YES**

▶ Repair as necessary and go to "Verification of vehicle Repair" procedure.

**NO**

▶ Go to "Component inspection" procedure.

## COMPONENT INSPECTION E1BE9EA6

1. CHECK "TRANSAXLE FLUID TEMPERATURE SENSOR"

   1) Ignition "OFF".

   2) Disconnect the "TRANSAXLE FLUID TEMPERATURE SENSOR" connector.

   3) Measure the resistance between terminals "1" and "2" of the "TRANSAXLE FLUID TEMPERATURE SENSOR".

Specification : Refer to "Reference data"

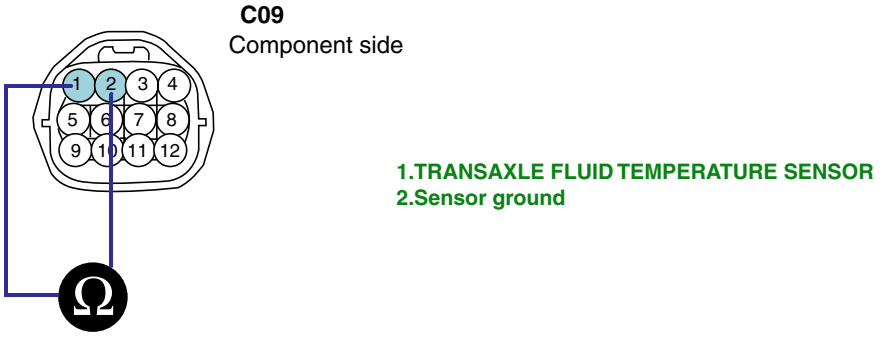


SCMAT6707L

**[REFERENCE DATA]**

| TEMP.[°C(°F)] | Resistance(kΩ ) | TEMP.[°C(°F)] | Resistance(kΩ ) |
|---|---|---|---|
| -40(-40°F) | 139.5 | 80(176°F) | 1.08 |
| -20(-4°F) | 47.7 | 100(212°F) | 0.63 |
| 0(32°F) | 18.6 | 120(248°F) | 0.38 |
| 20(68°F) | 8.1 | 140(284°F) | 0.25 |
| 40(104°F) | 3.8 | 160(320°F) | 0.16 |
| 60(140°F) | 1.98 | | |

4) Is resistance within specifications?

**YES**

▶ Go to "CHECK PCM/TCM " as below.

**NO**

▶ Replace "TRANSAXLE FLUID TEMPERATURE SENSOR" as necessary and Go to "Verification of Vehicle Repair" procedure.

2. CHECK TCM

1) Ignition "ON" & Engine "OFF".

2) Connect "TRANSAXLE FLUID TEMPERATURE SENSOR" connector.

3) Install scan tool and select a SIMU-SCAN.

4) Simulate voltage (0→5V) to "TRANSAXLE FLUID TEMPERATURE SENSOR" signal circuit.

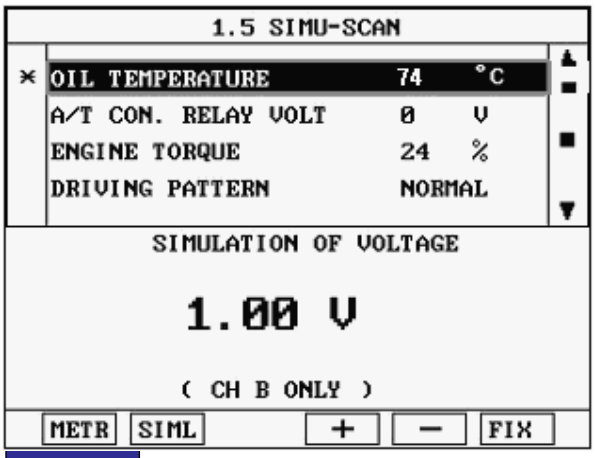


FIG.1)

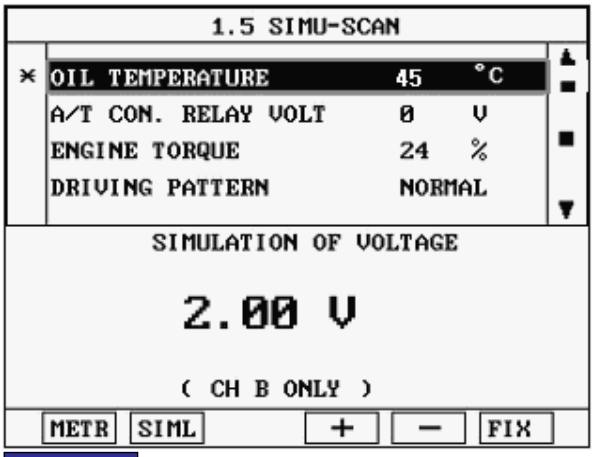


FIG.2)

FIG.1) INPUT 1.00V → 74˚C
FIG.2) INPUT 2.00V → 45˚C

※The values are subject to change according to vehicle model or conditions.

SCMAT6708L

5) Is FLUID TEMP. SENSOR signal value changed according to simulation voltage?

**YES**

▶ Thoroughly check connectors for looseness, poor connection, bending, corrosion, contamination, deterioration, or damage. Repair or replace as necessary and then go to "Verification of Vehicle Repair" procedure.

**NO**

▶ Substitute with a known-good PCM/TCM and check for proper operation. If the problem is corrected, replace PCM/TCM as necessary and then go to "Verification of Vehicle Repair" procedure.

## VERIFICATION OF VEHICLE REPAIR EDCB245C

After a repair, it is essential to verify that the fault has been corrected.

1. Connect scantool and select "Diagnostic Trouble Codes(DTCs)" mode.
2. Using a scantool, Clear DTC.
3. Operate the vehicle within DTC Enable conditions in General information.
4. Are any DTCs present?

**YES**

▶ Go to the applicable troubleshooting procedure.

**NO**

▶ System performing to specification at this time.

# DTC P0712 FLUID(OIL) TEMPERATURE SENSOR CIRCUIT - LOW

## COMPONENT LOCATION EABFE2F5

Refer to DTC P0711.

## GENERAL DESCRIPTION E280CF0F

Refer to DTC P0711.

## DTC DESCRIPTION E940D9AD

Refer to DTC P0711.

## DTC DETECTING CONDITION E912F15B

| Item | Detecting Condition | Possible cause |
|---|---|---|
| **DTC Strategy** | • Check for Voltage range | • Sensor signal circuit is short to ground<br>• Faulty sensor<br>• Faulty PCM |
| **Enable Conditions** | • Engine state = RUN | |
| **Threshold Value** | • voltage < 0.07V | |
| **Diagnostic Time** | • more than 1sec | |
| **Fail Safe** | • Learning control and Intelligent shift are inhibited<br>• Fluid temperature is regarded as 80°C(176°F) | |

## SPECIFICATION EADC79F4

Refer to DTC P0711.

## MONITOR SCANTOOL DATA E659A0E5

Refer to DTC P0711.

## TERMINAL & CONNECTOR INSPECTION EEEAC089

Refer to DTC P0711.

## SIGNAL CIRCUIT INSPECTION E4E1C15E

1. Ignition "ON" & Engine "OFF".
2. Disconnect the "TRANSAXLE FLUID TEMPERATURE SENSOR" connector.
3. Measure the voltage between terminal "1" of the "TRANSAXLE FLUID TEMPERATURE SENSOR" harness connector and chassis ground.

| |
|---|
| Specification : Approx. 5 V |

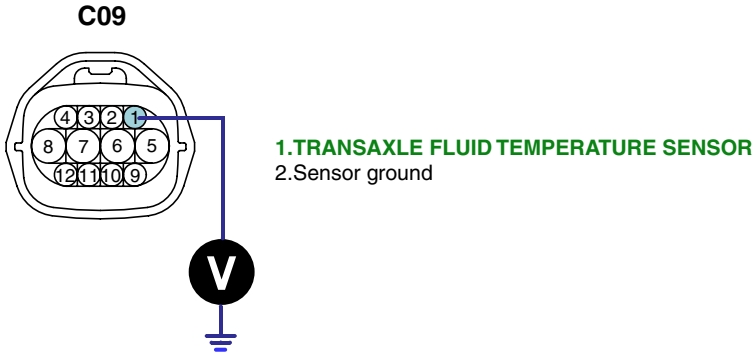


SCMAT6710L

4. Is voltage within specifications?

**YES**

▶ Go to "Component Inspection" procedure.

**NO**

▶ Check for short to ground in harness. Repair as necessary and Go to "Verification of Vehicle Repair" procedure.

## COMPONENT INSPECTION EE688D63

Refer to DTC P0711.

## VERIFICATION OF VEHICLE REPAIR EEECDE81

Refer to DTC P0711.

# DTC P0713 FLUID(OIL) TEMPERATURE SENSOR CIRCUIT - HIGH

## COMPONENT LOCATION E112171F

Refer to DTC P0711.

## GENERAL DESCRIPTION E4C2B6D1

Refer to DTC P0711.

## DTC DESCRIPTION EB21AF10

This DTC code is set when the ATF temperature output voltage is higher than a value generated by thermistor resistance, in a normal operating range, for an extended period of time . The TCM regards the ATF temperature as fixed at a value of 80 °C(176°F).

## DTC DETECTING CONDITION ED640D86

| Item | Detecting Condition | Possible cause |
|---|---|---|
| **DTC Strategy** | • Check for Voltage range | • Sensor signal circuit is short to ground<br>• Faulty sensor<br>• Faulty PCM |
| **Enable Conditions** | • Intake air temperature ≥ -23.5°C(-10.3°F)<br>• Engine state = RUN | |
| **Threshold Value** | • Voltage ≥4.9V | |
| **Diagnostic Time** | • more than 1sec | |
| **Fail Safe** | • Learning control and Intelligent shift are inhibited<br>• Fluid temperature is regarded as 80°C(176°F) | |

## SPECIFICATION EB5D8F22

Refer to DTC P0711.

## MONITOR SCANTOOL DATA EA9AC2B4

Refer to DTC P0711.

## TERMINAL & CONNECTOR INSPECTION EF3D1B31

Refer to DTC P0711.

## SIGNAL CIRCUIT INSPECTION EBD69471

1. Ignition "ON" & Engine "OFF".
2. Disconnect the "TRANSAXLE FLUID TEMPERATURE SENSOR" connector.
3. Measure the voltage between terminal "1" of the "TRANSAXLE FLUID TEMPERATURE SENSOR" harness connector and chassis ground.

| |
|---|
| Specification : Approx. 5 V |

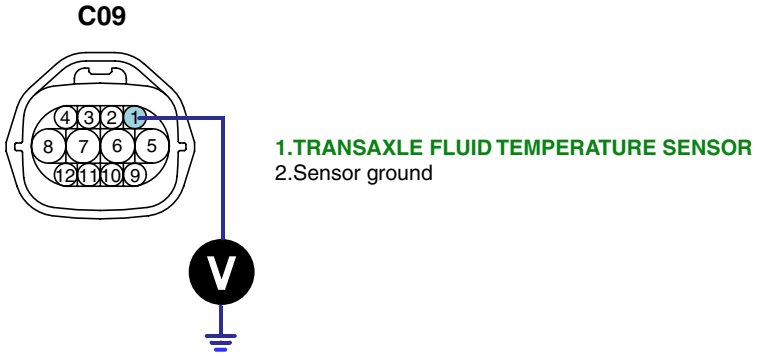


SCMAT6710L

4. Is voltage within specifications ?

**YES**

▶ Go to "Ground circuit inspection" procedure.

**NO**

▶ Check for short to ground in harness. Repair as necessary and Go to "Verification of Vehicle Repair" procedure .

## GROUND CIRCUIT INSPECTION E2DB489D

1. Ignition "ON" & Engine "OFF".
2. Disconnect the "TRANSAXLE FLUID TEMPERATURE SENSOR" connector.
3. Measure the resistance between terminal "2" of the "TRANSAXLE FLUID TEMPERATURE SENSOR" harness connector and chassis ground.

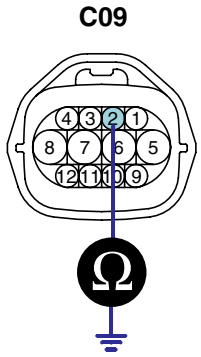


1.TRANSAXLE FLUID TEMPERATURE SENSOR
**2.Sensor ground**

SCMAT6711L

4. Is resistance within specifications?

**YES**

▶ Go to "Component inspection" procedure.

**NO**

▶ Check for open in harness. Repair as necessary and Go to "Verification of Vehicle Repair" procedure .

## COMPONENT INSPECTION EAD3DADE

Refer to DTC P0711.

## VERIFICATION OF VEHICLE REPAIR E0650E06

Refer to DTC P0711.

# DTC P0717 INPUT SPEED SENSOR CIRCUIT - NO SIGNAL

## COMPONENT LOCATION E797E84F

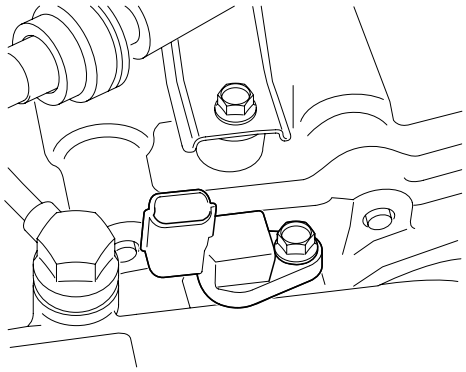

BKQE004A

## GENERAL DESCRIPTION E76AE310

The input(turbine) speed sensor outputs pulse-signals according to the revolutions of the input shaft of the transmission. The TCM determines the input shaft speed by counting the frequency of the pulses. This value is mainly used to control the optimum fluid pressure during shifting.

## DTC DESCRIPTION EA26773D

The TCM sets this code if an output pulse-signal is not detected, from the input speed sensor, when the vehicle is running faster than 30 km/h. The Fail-Safe function will be set by the TCM if this code is detected.

## DTC DETECTING CONDITION E1DD9E22

| Item | Detecting Condition | Possible cause |
|---|---|---|
| **DTC Strategy** | • Speed rationality check | • Signal circuit is open or short.<br>• Sensor power circuit is open<br>• Sensor ground circuit is open<br>• Faulty INPUT SPEED SENSOR<br>• Faulty PCM/TCM |
| **Enable Conditions** | • Vehicle speed is over 19 Mile/h(30 Km/h) and Ne≥ 1000rpm in D,3,2,L(A/T range switch) and SP(SPORTS MODE)<br>• 11V ≤ Battery Voltage ≤ 16V<br>• TM oil temperature ≥ -23°C(-9.4°F) | |
| **Threshold value** | • No signal | |
| **Diagnostic Time** | • More than 1sec | |
| **Fail Safe** | • Locked into 3rd or 2nd gear<br>• Manual shifting is possible(2 nd → 3 rd, 3 rd → 2 nd) | |

## SPECIFICATION E6CCF378

Input shaft & Output shaft speed sensor
- Type : Hall sensor
- Current consumption : 22mA(MAX)
- Sensor body and sensor connector have been unified as one.

## SIGNAL WAVEFORM E56F58CC

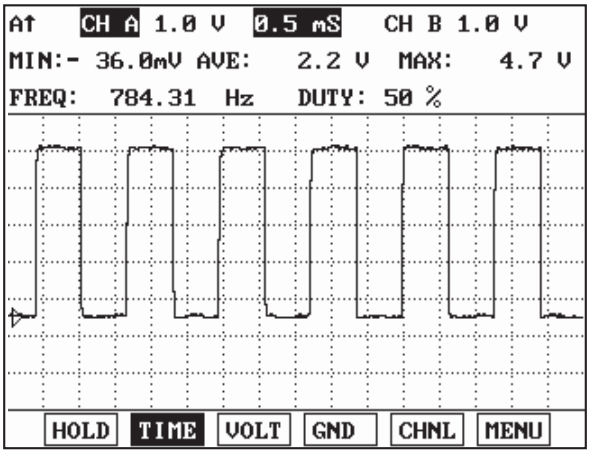


EKBF105A

## MONITOR SCANTOOL DATA E6AA00CD

1. Connect scan tool to data link connector(DLC).
2. Engine "ON".
3. Monitor the "INPUT SPEED SENSOR" parameter on the scantool.
4. Driving at speed of over 19 Mile/h(30 Km/h).

| Specification : Increasing Gradually |
|---|

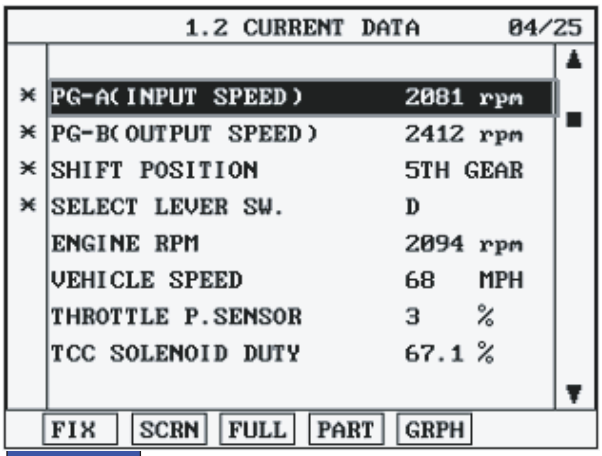


FIG.1)

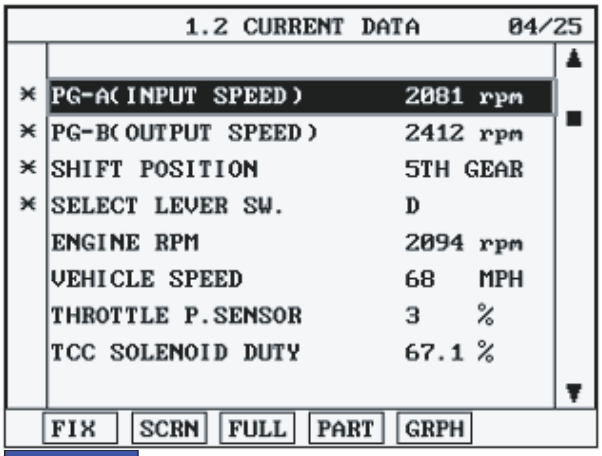


FIG.2)

FIG.1) Idling
FIG.2) Accelerating

SCMAT6712L

5. Does "Input speed sensor" follow the reference data?

**YES**

▶ Fault is intermittent caused by poor contact in the sensor's and/or TCM(PCM)'s connector or was repaired and TCM(PCM) memory was not cleared. Thoroughly check connectors for looseness, poor connection, bending, corrosion, contamination, deterioration or damage. Repair or replace as necessary and go to "Verification of Vehicle Repair" procedure.

**NO**

▶ Go to "Terminal & connector inspection" procedure.

## TERMINAL & CONNECTOR INSPECTION EA95DEFD

1. Many malfunctions in the electrical system may be caused from poor harness and terminals. These faults can be caused by interference from other electrical systems and mechanical or chemical damage.
2. Thoroughly check connectors for looseness, poor connection, bending, corrosion, contamination, deterioration, or damage.
3. Has a problem been found?

**YES**

▶ Repair as necessary and go to "Verification of vehicle repair" procedure.

**NO**

▶ Go to "Signal circuit inspection" procedure.

## SIGNAL CIRCUIT INSPECTION E803DB9A

1. Ignition "ON" & Engine "OFF".
2. Disconnect the "INPUT SPEED SENSOR" connector.
3. Measure voltage between terminal "2" of the INPUT SPEED SENSOR harness connector and chassis ground.

| |
|---|
| Specification : approx. 5V |

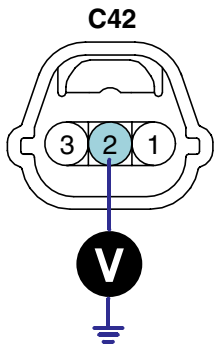


1. Sensor ground
2. **Input speed sensor**
3. Power supply IG1

SCMAT6713L

4. Is voltage within specification?

**YES**

▶ Go to "Power circuit Inspection" procedure.

**NO**

▶ Check for open or short in harness. Repair as necessary and Go to "Verification of Vehicle Repair" procedure.
▶ If signal circuit in harness is OK, Go to "Check PCM/TCM" of the "Component Inspection" procedure.

## POWER SUPPLY CIRCUIT INSPECTION EAE9B04E

1. Ignition "ON" & Engine "OFF".
2. Disconnect the "INPUT SPEED SENSOR" connector.
3. Measure voltage between terminal "3" of the INPUT SPEED SENSOR harness connector and chassis ground.

| Specification : approx. B+ |
|---|

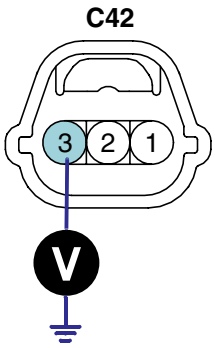


1. Sensor ground
2. Input speed sensor
3. **Power supply IG1**

SCMAT6714L

4. Is voltage within specification?

**YES**

▶ Go to "Ground circuit inspection" procedure.

**NO**

▶ Check for open in harness. Repair as necessary and Go to "Verification of Vehicle Repair" procedure.

## GROUND CIRCUIT INSPECTION E3AABC89

1. Ignition "ON" & Engine "OFF".
2. Disconnect the "INPUT SPEED SENSOR" connector.
3. Measure resistance between terminal "1" of the INPUT SPEED SENSOR harness connector and chassis ground.

| Specification : approx. 0 Ω |
|---|

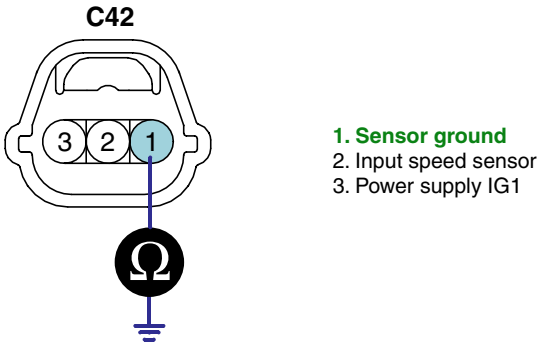


SCMAT6715L

4. Is resistance within specification ?

**YES**

▶ Go to "Component Inspection" procedure.

**NO**

▶ Check for open in harness. Repair as necessary and Go to "Verification of Vehicle Repair" procedure.
▶ If ground circuit in harness is OK, Go to "Check PCM/TCM" of the "Component Inspection" procedure.

## COMPONENT INSPECTION EB3A35B0

1. Check "INPUT SPEED SENSOR"
   1) Ignition "OFF".
   2) Disconnect the "INPUT SPEED SENSOR" connector.
   3) Measure resistance between terminal "1","2" and "2","3" and "1","3" of the "INPUT SPEED SENSOR" connector.

| Specification : Refer to "Reference data" |
|---|

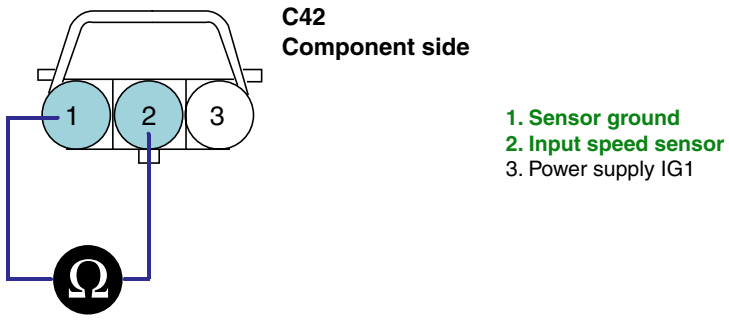


SCMAT6716L

4) Is resistance within specifications?

**[REFERENCE DATA]**

| Data | Reference Data | |
|---|---|---|
| Current | 22 mA | |
| Air Gap | Input sensor | 1.3 mm |
| | Output sensor | 0.85 mm |
| Resistance | Input sensor | Above 4 MΩ |
| | Output sensor | Above 4 MΩ |
| Voltage | High | 4.8 ~ 5.2V |
| | Low | Below 0.8V |

**YES**

▶ Go to "CHECK PCM" as below.

**NO**

▶ Replace "INPUT SPEED SENSOR" as necessary and Go to "Verification of Vehicle Repair" procedure.

2. CHECK PCM/TCM

1) Ignition "ON" & Engine "OFF".

2) Connect "INPUT SPEED SENSOR" connector.

3) Install scantool and select a SIMU-SCAN.

4) Simulate frequency to INPUT SPEED SENSOR signal circuit.

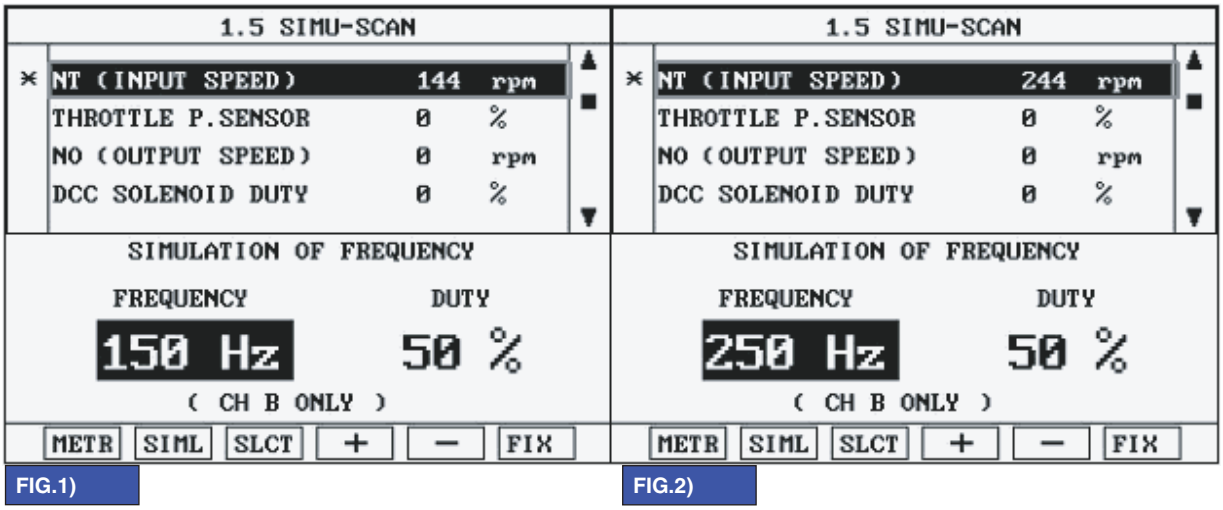


FIG.1) FIG.2)

FIG.1) INPUT 150Hz → 144rpm
FIG.2) INPUT 250Hz → 244 rpm

※The values are subject to change according to vehicle model or conditions

SCMAT6717L

5) Is "INPUT SPEED SENSOR" signal value changed according to simulation frequency?

**YES**

▶ Thoroughly check connectors for looseness, poor connection, bending, corrosion, contamination, deterioration, or damage. Repair or replace as necessary and then go to "Verification of Vehicle Repair" procedure.

**NO**

▶ Substitute with a known-good PCM/TCM and check for proper operation. If the problem is corrected, replace PCM/TCM as necessary and then go to "Verification of Vehicle Repair" procedure.

## VERIFICATION OF VEHICLE REPAIR EF6AF9F6

After a repair, it is essential to verify that the fault has been corrected.

1. Connect scan tool and select "Diagnostic Trouble Codes(DTCs)" mode.
2. Using a scan tool, Clear DTC.
3. Operate the vehicle within DTC Enable conditions in General information.
4. Is resistance within specification ?

**YES**

▶ Go to the applicable troubleshooting procedure.

**NO**

▶ System performing to specification at this time.

# DTC P0722 OUTPUT SPEED SENSOR CIRCUIT - NO SIGNAL

## COMPONENT LOCATION E262AC7C

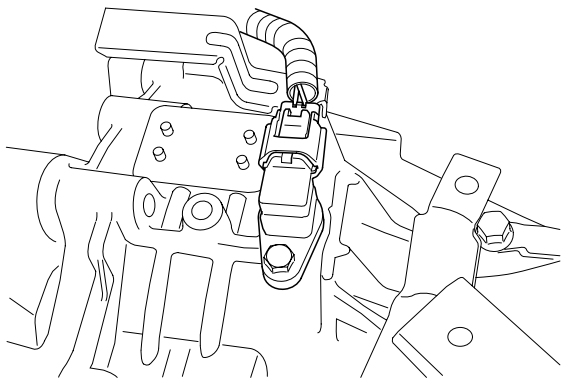

BKQE005A

## GENERAL DESCRIPTION E8B3A5DF

The Output Speed Sensor outputs pulse-signals according to the revolutions of the output shaft of the transmission. The Output Speed Sensor is installed in front of the Transfer Drive Gear to determine the Transfer Drive Gear rpms by counting the frequency of the pulses. This value, together with the throttle position data, is mainly used to decide the optimum gear position.

## DTC DESCRIPTION EADEF85D

The TCM sets this code if the calculated value of the pulse-signal is noticeably different from the value calculated, using the Vehicle Speed Sensor output, when the vehicle is running faster than 30 km/h. The TCM will initiate the fail safe function if this code is detected.

## DTC DETECTING CONDITION E8B5DC1C

| Item | Detecting Condition | Possible cause |
|---|---|---|
| **DTC Strategy** | • Speed rationality check | • Signal circuit is open or short<br>• Sensor power circuit is open<br>• Sensor ground circuit is open<br>• Faulty OUTPUT SPEED SENSOR<br>• Faulty PCM |
| **Enable Conditions** | • Vehicle speed is over 19 Mile/h(30 Km/h) and Ne≥1000rpm in D,3,2,L(A/T range switch) and SP(SPORTS MODE)<br>• 11V ≤ Battery Voltage ≤ 16V<br>• TM oil temperature ≥ -23°C(-9.4°F) | |
| **Threshold value** | • Vehicle speed calculated from output speed ≤ 10%(the vehicle speed from vehicle speed sensor) | |
| **Diagnostic Time** | • More than 1sec | |
| **Fail Safe** | • Locked into 3rd or 2nd gear.<br>• Apply an electric current to solenoid valve<br>• Manual shifting is possible(2 nd → 3 rd, 3 rd → 2 nd) | |

## SPECIFICATION E5381A0E

Input shaft & Output shaft speed sensor
- Type : Hall sensor
- Current consumption : 22mA(MAX)
- Sensor body and sensor connector have been unified as one.

## SIGNAL WAVEFORM EB18EDEE

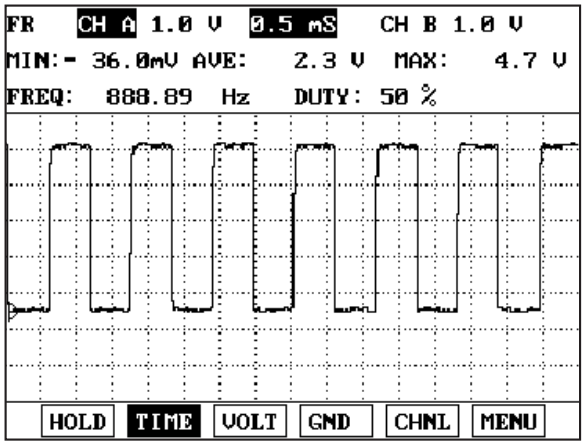


LLLG106B

## MONITOR SCANTOOL DATA E4C2F196

1. Connect scantool to data link connector(DLC).
2. Engine "ON".
3. Monitor the "OUTPUT SPEED SENSOR" parameter on the scantool.
4. Driving at speed of over 19 Mile/h(30 Km/h).

| Specification : Increasing Gradually |
|---|

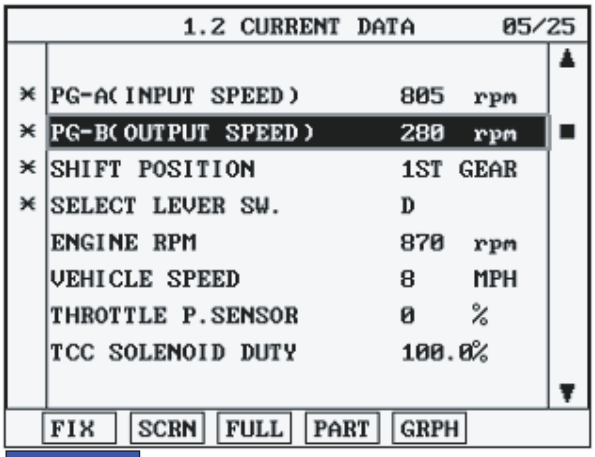


FIG.1)

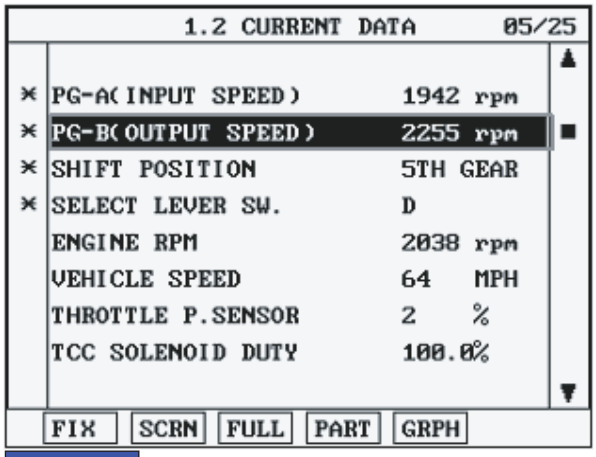


FIG.2)

FIG.1) Low-speed
FIG.2) High-speed

SCMAT6720L

5. Does "Output speed sensor" follow the reference data?

**YES**

▶ Fault is intermittent caused by poor contact in the sensor's and/or TCM(PCM)'s connector or was repaired and TCM(PCM) memory was not cleared. Thoroughly check connectors for looseness, poor connection, bending, corrosion, contamination, deterioration or damage. Repair or replace as necessary and go to "Verification of Vehicle Repair" procedure.

**NO**

▶ Go to "Terminal & connector inspection" procedure.

## TERMINAL & CONNECTOR INSPECTION E1DDBA29

1. Many malfunctions in the electrical system may be caused from poor harness and terminals. These faults can be caused by interference from other electrical systems and mechanical or chemical damage.
2. Thoroughly check connectors for looseness, poor connection, bending, corrosion, contamination, deterioration, or damage.
3. Has a problem been found?

**YES**

▶ Repair as necessary and go to "Verification of vehicle Repair" procedure.

**NO**

▶ Go to "Signal circuit inspection" procedure.

## SIGNAL CIRCUIT INSPECTION E3695DC8

1. Ignition "ON" & Engine "OFF".
2. Disconnect the "OUTPUT SPEED SENSOR" connector.
3. Measure voltage between terminal "2" of the OUTPUT SPEED SENSOR harness connector and chassis ground.

| |
|---|
| Specification : approx. 5V |

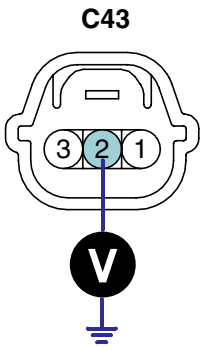


1. Sensor ground
2. **Output speed sensor**
3. Power supply IG1

SCMAT6721L

4. Is voltage within specification?

**YES**

▶ Go to "Power circuit Inspection" procedure.

**NO**

▶ Check for open or short in harness. Repair as necessary and Go to "Verification of Vehicle Repair" procedure.
▶ If signal circuit in harness is OK, Go to "Check PCM/TCM" of the "Component Inspection" procedure.

## POWER SUPPLY CIRCUIT INSPECTION EFBB0B79

1. Ignition "ON" & Engine "OFF".

2. Disconnect the "OUTPUT SPEED SENSOR" connector.

3. Measure voltage between terminal "3" of the "OUTPUT SPEED SENSOR" harness connector and chassis ground.

| Specification : approx. B+ |
|---|

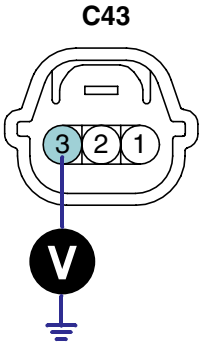


1. Sensor ground
2. Output speed sensor
3. **Power supply IG1**

SCMAT6722L

4. Is voltage within specification?

**YES**

▶ Go to "Ground circuit inspection" procedure.

**NO**

▶ Check for open in harness. Repair as necessary and Go to "Verification of Vehicle Repair" procedure.

## GROUND CIRCUIT INSPECTION E05BDEBB

1. Ignition "ON" & Engine "OFF".
2. Disconnect the "OUTPUT SPEED SENSOR" connector.
3. Measure resistance between terminal "1" of the OUTPUT SPEED SENSOR harness connector and chassis ground.

| |
|---|
| Specification : Approx. 0Ω |

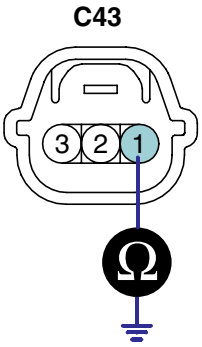


1. Sensor ground
2. Output speed sensor
3. Power supply IG1

SCMAT6723L

4. Is resistance within specifications?

**YES**

▶ Go to "Component Inspection" procedure.

**NO**

▶ Check for open in harness. Repair as necessary and Go to "Verification of Vehicle Repair" procedure.
▶ If ground circuit is OK, Go to "Check PCM/TCM" of the "Component Inspection" procedure.

## COMPONENT INSPECTION EB96B3E7

1. Check "OUTPUT SPEED SENSOR"

   1) Ignition "OFF".

   2) Disconnect the "OUTPUT SPEED SENSOR" connector.

   3) Measure resistance between terminal "1","2" and "2","3" and "1","3" of the "OUTPUT SPEED SENSOR" connector.

| Specification : Refer to "Reference data" |
|---|

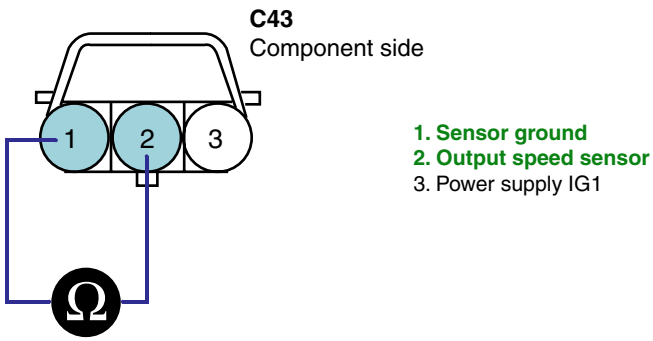


SCMAT6724L

   4) Is resistance within specifications?

**[REFERENCE DATA]**

| Data | Reference Data | |
|---|---|---|
| Current | 22 mA | |
| Air Gap | Input sensor | 1.3 mm |
| | Output sensor | 0.85 mm |
| Resistance | Input sensor | Above 4 MΩ |
| | Output sensor | Above 4 MΩ |
| Voltage | High | 4.8 ~ 5.2V |
| | Low | Below 0.8V |

**YES**

▶ Go to "CHECK PCM/TCM " as below.

**NO**

▶ Replace "OUTPUT SPEED SENSOR" as necessary and Go to "Verification of Vehicle Repair" procedure.

2. CHECK PCM/TCM

1) Ignition "ON" & Engine "OFF".

2) Connect "OUTPUT SPEED SENSOR" connector.

3) Install scantool and select a SIMU-SCAN.

4) Simulate frequency to OUTPUT SPEED SENSOR signal circuit.

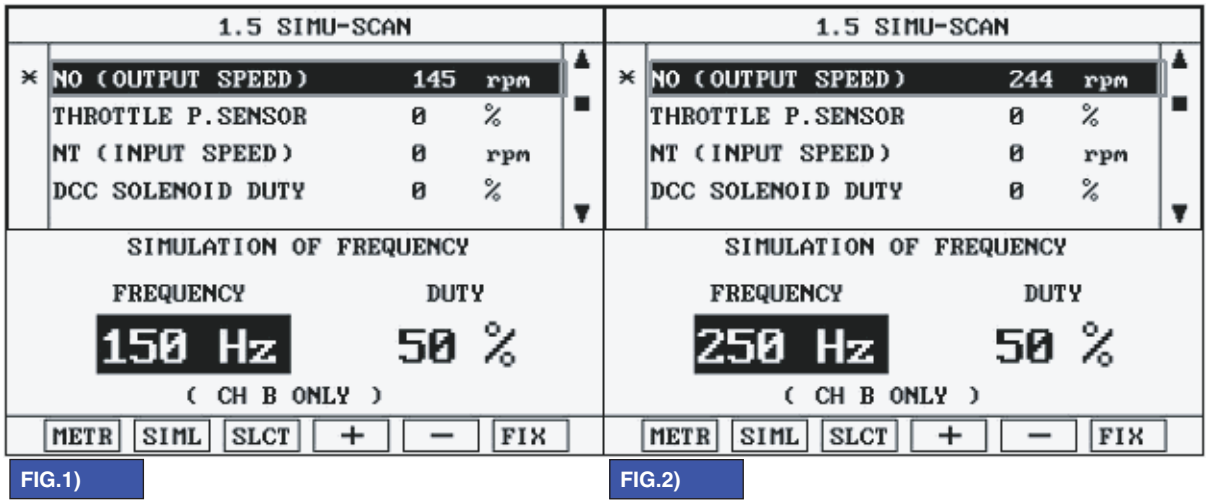


FIG.1) OUTPUT 150Hz → 145rpm
FIG.2) OUTPUT 250Hz → 244rpm

SCMAT6725L

5) Is "OUTPUT SPEED SENSOR" signal value changed according to simulation frequency?

**YES**

▶ Thoroughly check connectors for looseness, poor connection, bending, corrosion, contamination, deterioration, or damage. Repair or replace as necessary and then go to "Verification of Vehicle Repair" procedure.

**NO**

▶ Substitute with a known-good PCM/TCM and check for proper operation. If the problem is corrected, replace PCM/TCM as necessary and then go to "Verification of Vehicle Repair" procedure.

## VERIFICATION OF VEHICLE REPAIR E1DFB50D

Refer to DTC P0707.

# DTC P0731 GEAR 1 INCORRECT RATIO

## COMPONENT LOCATION EABBAF1A

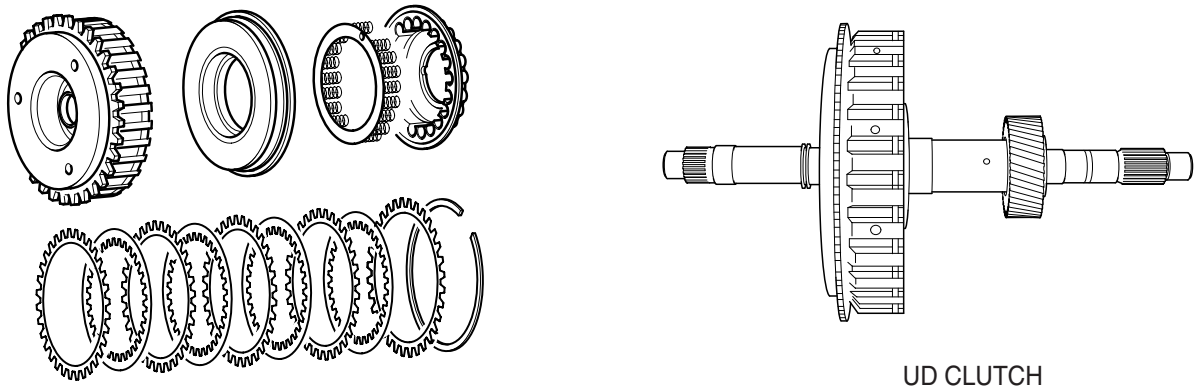


BKQE006A

## GENERAL DESCRIPTION E5E949DC

The value of the input shaft speed should be equal to the value of the output shaft speed, when multiplied by the 1st gear ratio, while the transaxle is engaged in the 1st gear. For example, if the output speed is 1000 rpm and the 1st gear ratio is 2.842, then the input speed is 2,842 rpm.

## DTC DESCRIPTION E8EE1872

This code is set if the value of input shaft speed is not equal to the value of the output shaft, when multiplied by the 1st gear ratio, while the transaxle is engaged in 1st gear. This malfunction is mainly caused by mechanical troubles such as control valve sticking or solenoid valve malfunctioning rather than an electrical issue.

## DTC DETECTING CONDITION E1BA8AD7

| Item | Detecting Condition | Possible cause |
|---|---|---|
| **DTC Strategy** | • 1st gear incorrect ratio | • Faulty Input speed sensor<br>• Faulty output speed sensor<br>• Faulty UD clutch or LR brake or Oneway clutch |
| **Enable Conditions** | • Engine speed > 450rpm<br>• Output speed > 350rpm<br>• Shift stage 1st. gear<br>• Input speed > 0rpm<br>• A/T oil temp sensor voltage < 4.5V<br>• Voltage of Battery > 10V<br>• TRANSAXLE RANGE SWITCH is normal and after 2sec is passed from IG ON | |
| **Threshold value** | • \| Input speed/1st gear ratio - output speed \| ≥ 200rpm | |
| **Diagnostic Time** | • More than 1sec | |
| **Fail Safe** | • Locked into 3rd gear.<br>(If diagnosis code P0731 is output four times, the transaxle is locked into 3rd gear) | |

## SIGNAL WAVEFORM EDFCA11D

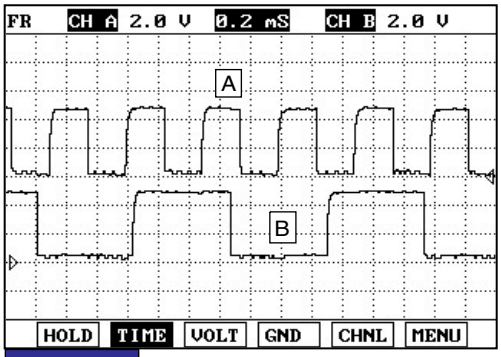


FIG.1)

A : INPUT SPEED SENSOR
B : OUTPUT SPEED SENSOR

ELQE031A

## MONITOR SCANTOOL DATA E24B9E96

1. Connect scantool to data link connector(DLC).
2. Engine "ON".
3. Monitor the "ENGINE SPEED, INPUT SPEED SENSOR, OUTPUT SPEED SENSOR, GEAR POSITION" parameter on the scantool.
4. Perform the "STALL TEST" with gear position "1"

Specification : 2000~2700 engine rpm

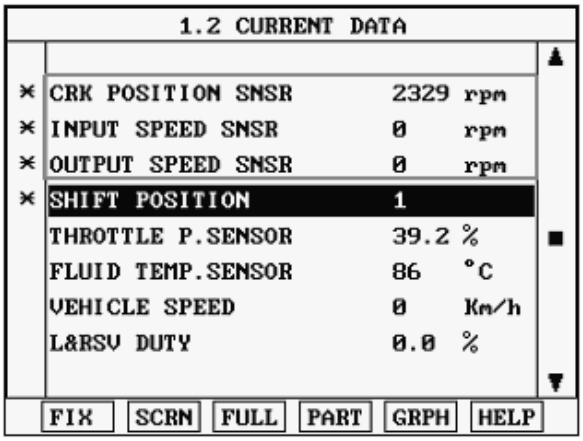


ELQE032A

**OPERATING ELEMENT OF EACH SHIFTING RANGE**

| | UD/C | OD/C | REV/C | 2ND/B | LR/B | OWC |
|---|---|---|---|---|---|---|
| P | | | | | ● | |
| R | | | ● | | ● | |
| N | | | | | ● | |
| D1 | ● | | | | ● | ○ |
| D2 | ● | | | ● | | |
| D3 | ● | ● | | | | |
| D4 | | ● | | ● | | |

※ Low & Reverse Brake is released when the vehicle speed is over 7Km/h(5 MPH).

**Stall test procedure in D1 and reason**

Procedure

1. Warm up the engine
2. After positioning the select lever in "D" , depress the foot brake pedal fully. After that, depress the accelerator pedal to the maximum

   * The slippage of 1st gear operating parts can be detected by stall test in D

Reason for stall test

1. If there is no mechanical defaults in A/T, all slippage occurs in the torque converter.
2. Therefore, engine revolution is output, but input and output speed revolution must be "zero" due to wheel's lock.
3. If 1st gear operating part has faults, input speed revolution will be out of specification.
4. If output speed revolution is output. It means that the foot brake force is not applied fully. Remeasuring is required.

5. Is "STALL TEST " within specification?

**YES**

▶ Go to "Signal Circuit Inspection" procedure.

**NO**

▶ Go to "Component inspection" procedure.

***CAUTION***

● ***Do not let anybody stand in front of or behind the vehicle while this test is being carried out.***
● ***Check the A/T fluid level and temperature and the engine coolant temperature.***
- ***Fluid level : At the hot mark on the oil level gauge.***
- ***Fluid temperature : 176 °F~ 212 °F (80~100 °C).***
- ***Engine coolant temperature : 176 °F~ 212 °F (80~100 °C).***

● ***Chock both rear wheels(left and right).***
● ***Pull the parking brake lever on with the brake pedal fully depressed.***
● ***The throttle should not be left fully open for more than eight seconds.***
● ***If carrying out the stall test two or more times, move the select lever to the "N" position and run the engine at 1,000 rpm to let the A/T fluid cool down before carrying out subsequent tests.***

## SIGNAL CIRCUIT INSPECTION EB710A73

1. Connect Scantool.
2. Engine "ON".
3. Monitor the "INPUT & OUTPUT SPEED SENSOR" parameter on the scantool.
4. Accelerate the Engine speed until about 2000 rpm in the 1st gear.

Specification : INPUT SPEED - (OUTPUT SPEED × GEAR RATIO) ≤ 200 RPM

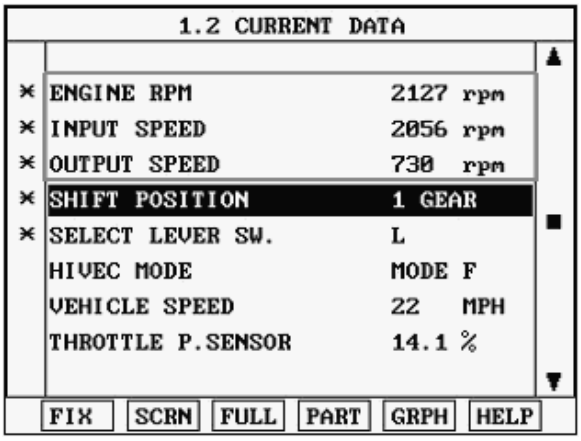


ELQE033A

5. Are "INPUT & OUTPUT SPEED SENSOR" within specifications?

**YES**

▶ Go to "Component Inspection" procedure.

**NO**

▶ Check for electrical noise of circuit in INPUT & OUTPUT SPEED SENSOR or replace INPUT & OUTPUT SPEED SENSOR. Repair as necessary and go to "Verification of Vehicle Repair" procedure.

## COMPONENT INSPECTION EE456CB2

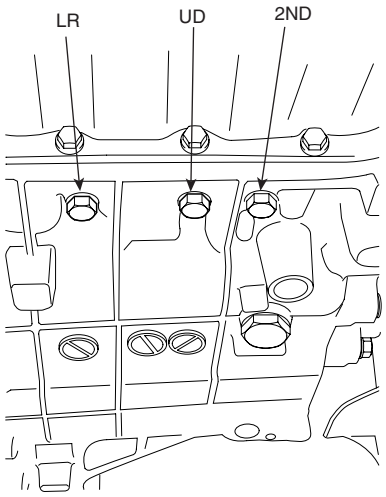


EKBF107D

1. Connect oil pressure gauge to "UD" and "L/R" port.
2. Engine "ON".
3. Drive the car with gear position 1 in "SPORTS MODE".
4. Compare it with reference data as below.

Specification : shown below

| Measurement condition | | | Standard hydraulic pressure kPa (psi) | | | | | | |
|---|---|---|---|---|---|---|---|---|---|
| Selector lever position | Shift position | Engine speed (rpm) | Under drive clutch pressure | Reverse clutch pressure | Over-drive clutch pressure | Low & reverse brake pressure | Second brake pressure | Damper clutch Apply pressure (DA) | Damper clutch Release pressure (DR) |
| P | - | 2,500 | - | - | - | 260-340 (38-50) | - | - | - |
| R | Reverse | 2,500 | - | 1,270-1,770 (185-256) | - | 1,270-1,770 (185-256) | - | - | - |
| N | - | 2,500 | - | - | - | 260-340 (38-50) | - | - | - |
| D | 1st gear | 2,500 | 430-510 (62-74) | - | - | 1,010-1,050 (146-152) | - | - | - |
| | 2nd gear | 2,500 | 430-510 (62-74) | - | - | - | 430-510 (62-74) | - | - |
| | 3rd gear | 2,500 | 430-510 (62-74) | - | 430-510 (62-74) | - | - | More than 730 (100) | 0-10 (0-1) |
| | 4th gear | 2,500 | - | - | 430-510 (62-74) | - | 780-880 (110-130) | More than 730 (100) | 0-10 (0-1) |

※ The values are subject to change according to vehicle model or condition

5. Is oil pressure value within specification?

**YES**

▶ Repair AUTO TRANSAXLE(Clutch or Brake) as necessary and Go to "Verification of Vehicle Repair" procedure.

**NO**

▶ Replace AUTO TRANSAXLE (BODY CONTROL VALVE faulty) as necessary and go to "Verification of Vehicle Repair " procedure.

## VERIFICATION OF VEHICLE REPAIR EDA4F3A2

After a repair, it is essential to verify that the fault has been corrected.

1. Connect scan tool and select "Diagnostic Trouble Codes(DTCs)" mode.
2. Using a scantool, Clear DTC.
3. Operate the vehicle within DTC Enable conditions in general information.
4. Are any DTCs present ?

**YES**

▶ Go to the applicable troubleshooting procedure.

**NO**

▶ System performing to specification at this time.

# DTC P0732 GEAR 2 INCORRECT RATIO

## COMPONENT LOCATION EE695120

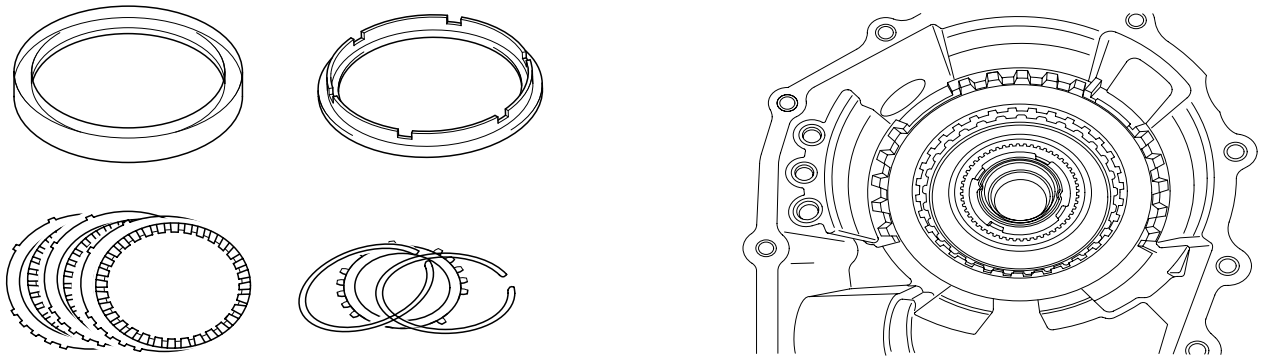


BKQE007A

## GENERAL DESCRIPTION E93FBD85

The value of the input shaft speed should be equal to the value of the output shaft speed, when multiplied by the 2nd gear ratio, while the transaxle is engaged in the 2nd gear. For example, if the output speed is 1000 rpm and the 2nd gear ratio is 1.529, then the input speed is 1,529 rpm.

## DTC DESCRIPTION EE795493

This code is set if the value of input shaft speed is not equal to the value of the output shaft, when multiplied by the 2nd gear ratio, while the transaxle is engaged in 2nd gear. This malfunction is mainly caused by mechanical troubles such as control valve sticking or solenoid valve malfunctioning rather than an electrical issue.

## DTC DETECTING CONDITION EBEC8FAD

| Item | Detecting Condition | Possible cause |
|---|---|---|
| **DTC Strategy** | • 2nd gear incorrect ratio | • Faulty Input speed sensor<br>• Faulty output speed sensor<br>• Faulty UD clutch or 2nd brake |
| **Enable Conditions** | • Engine speed > 450rpm<br>• Output speed > 350rpm<br>• Shift stage 2nd. gear<br>• Input speed > 0rpm<br>• A/T oil temp sensor voltage < 4.5V<br>• Voltage of Battery > 10V<br>• TRANSAXLE RANGE SWITCH is normal | |
| **Threshold value** | • \| Input speed/2nd gear ratio - output speed \| ≥ 200rpm | |
| **Diagnostic Time** | • More than 1sec | |
| **Fail Safe** | • Locked into 3 rd gear.<br>(If diagnosis code P0732 is output four times, the transaxle is locked into 3rd gear) | |

## SIGNAL WAVEFORM EABEDEE1

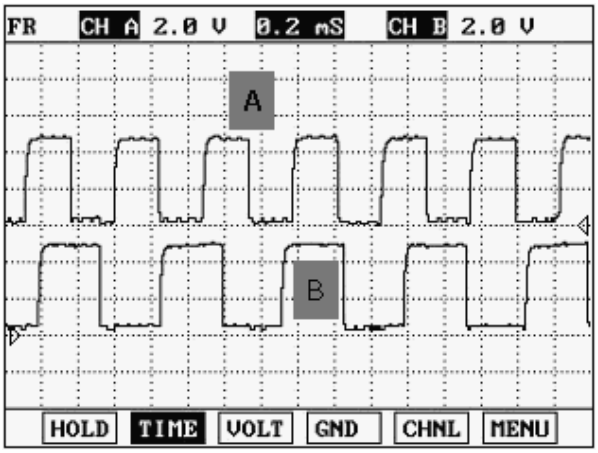


LKLG107A

## MONITOR SCANTOOL DATA E2E040A6

1. Connect scantool to data link connector(DLC).
2. Engine "ON".
3. Monitor the "ENGINE SPEED, INPUT SPEED SENSOR, OUTPUT SPEED SENSOR, GEAR POSITION" parameter on the scantool.
4. Perform the "STALL TEST" with gear position "2".

| |
|---|
| Specification : 2000~2700 engine rpm |

※ This test is possible only for "HOLD S/W" or "SPORTS MODE" applied vehicles.

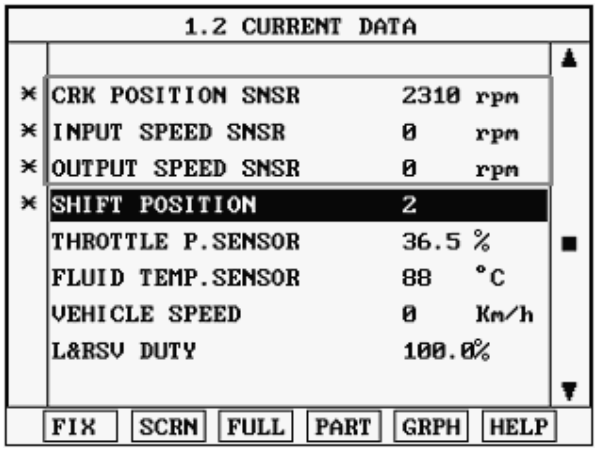


ELQE034A

**OPERATING ELEMENT OF EACH SHIFTING RANGE**

| | UD/C | OD/C | REV/C | 2ND/B | LR/B | OWC |
|---|---|---|---|---|---|---|
| P | | | | | ● | |
| R | | | ● | | ● | |
| N | | | | | ● | |
| D1 | ● | | | | ● | ○ |
| D2 | ● | | | ● | | |
| D3 | ● | ● | | | | |
| D4 | | ● | | ● | | |

※ Low & Reverse Brake is released when the vehicle speed is over 7Km/h(5 MPH).

**Stall test procedure in D2 and reason**

Procedure

1. Warm up the engine
2. After positioning the select lever in "D" , depress the foot brake pedal fully after that, depress the accelerator pedal to the maximum

   * The slippage of 1st gear operating parts can be detected by stall test in D2.

Reason for stall test

1. If there are mechanical defaults in A/T, all slippage occurs in the torque converter.
2. Therefore, engine revolution is output, but input and output speed revolution must be "zero" due to wheel's lock.
3. If 2nd brake system(2nd gear operating part) has faults, input speed revolution will be out of specification.
4. If wheel spin occurs, the applied brake force is not adequate. Retry using more brake force.

5. Is "STALL TEST " within specification?

**YES**

▶ Go to "Signal Circuit Inspection" procedure.

**NO**

▶ Go to "Component Inspection" procedure.

***CAUTION***

● ***Do not let anybody stand in front of or behind the vehicle while this test is being carried out.***
● ***Check the A/T fluid level and temperature and the engine coolant temperature.***
- ***Fluid level : At the hot mark on the oil level gauge.***
- ***Fluid temperature : 80~100 °C (176 °F~ 212 °F).***
- ***Engine coolant temperature : 80~100 °C (176 °F~ 212 °F).***

● ***Chock both rear wheels(left and right).***
● ***Pull the parking brake lever on with the brake pedal fully depressed.***
● ***The throttle should not be left fully open for more than eight seconds.***
● ***If carrying out the stall test two or more times, move the select lever to the "N" position and run the engine at 1,000 rpm to let the A/T fluid cool down before carrying out subsequent tests.***

## SIGNAL CIRCUIT INSPECTION E442E1EC

1. Connect Scantool.
2. Engine "ON".
3. Monitor the "INPUT & OUTPUT SPEED SENSOR" parameter on the scantool.
4. Accelerate the Engine speed until about 2000 rpm in the 2nd gear.

Specification : INPUT SPEED - (OUTPUT SPEED × GEAR RATIO) ≤ 200 RPM

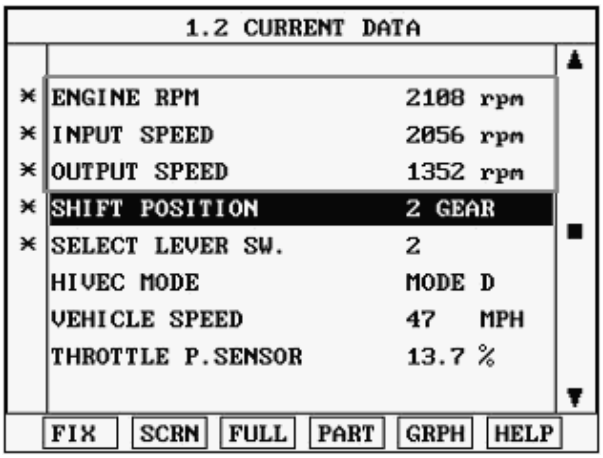


ELQE035A

5. Are "INPUT & OUTPUT SPEED SENSOR" within specifications?

**YES**

▶ Go to "Component Inspection" procedure.

**NO**

▶ Check for electrical noise of circuit in INPUT & OUTPUT SPEED SENSOR or replace INPUT & OUTPUT SPEED SENSOR. Repair as necessary and go to "Verification of Vehicle Repair" procedure.

## COMPONENT INSPECTION E64FC4DF

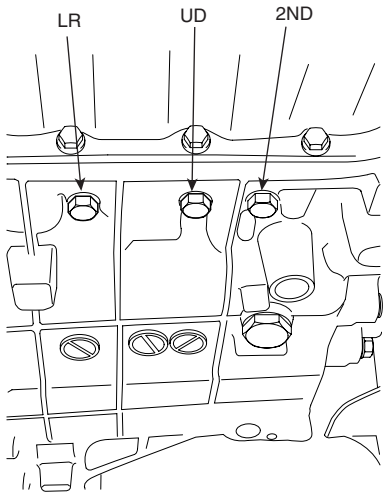


EKBF107D

1. Connect Oil pressure gauge to "UD" and "2ND" port.
2. Engine "ON".
3. Drive the car with gear position 2 in "SPORTS MODE".
4. Compare it with reference data as below.

| |
|---|
| Specification : Refer to DTC P0731. |

5. Is oil pressure value within specification?

**YES**

▶ Repair AUTO TRANSAXLE(Clutch or Brake) as necessary and go to "Verification of Vehicle Repair" procedure.

**NO**

▶ Replace AUTO TRANSAXLE (BODY CONTROL VALVE faulty) as necessary and go to "Verification of Vehicle Repair " procedure.

## VERIFICATION OF VEHICLE REPAIR EEF09061

Refer to DTC P0731.

# DTC P0733 GEAR 3 INCORRECT RATIO

## COMPONENT LOCATION EF3CAD3C

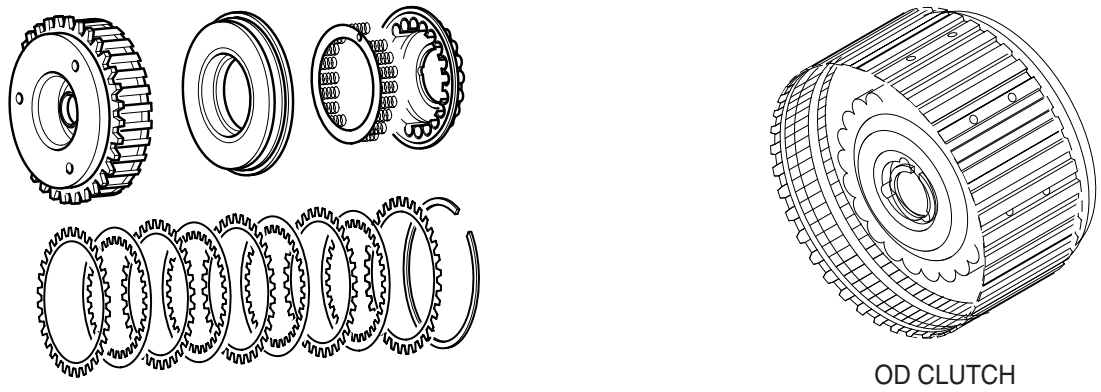


BKQE008A

## GENERAL DESCRIPTION E2653AF7

The value of the input shaft speed should be equal to the value of the output shaft speed, when multiplied by the 3rd gear ratio, while the transaxle is engaged in the 3rd gear. For example, if the output speed is 1,000 rpm and the 3rd gear ratio is 1.000, then the input speed is 1,000 rpm.

## DTC DESCRIPTION EC52C1ED

This code is set if the value of input shaft speed is not equal to the value of the output shaft, when multiplied by the 3rd gear ratio, while the transaxle is engaged in 3rd gear. This malfunction is mainly caused by mechanical troubles such as control valve sticking or solenoid valve malfunctioning rather than an electrical issue.

## DTC DETECTING CONDITION E49BBC9E

| Item | Detecting Condition | Possible cause |
|---|---|---|
| **DTC Strategy** | • 3rd gear incorrect ratio | • Faulty Input speed sensor<br>• Faulty output speed sensor<br>• Faulty UD clutch or OD clutch |
| **Enable Conditions** | • Engine speed > 450rpm<br>• Output speed > 900rpm<br>• Shift stage 3rd. gear<br>• Input speed > 0rpm<br>• A/T oil temp sensor voltage < 4.5V<br>• Voltage of Battery > 10V<br>• TRANSAXLE RANGE SWITCH is normal and after 2sec is passed from IG ON | |
| **Threshold value** | • \| Input speed/3rd gear ratio - output speed \| ≥ 200rpm | |
| **Diagnostic Time** | • More than 1sec | |
| **Fail Safe** | • Locked into 3rd gear.<br>(If diagnosis code P0733 is output four times, the transaxle is locked into 3rd gear) | |

## SIGNAL WAVEFORM E7BB8AC0

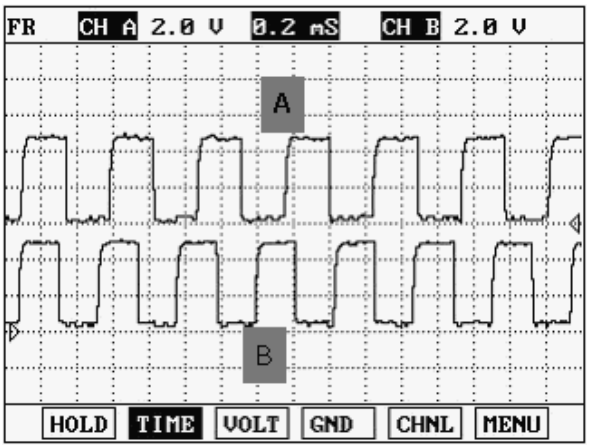


LKLG107B

## MONITOR SCANTOOL DATA EC3727C9

1. Connect scantool to data link connector(DLC).
2. Engine "ON".
3. Monitor the "ENGINE SPEED, INPUT SPEED SENSOR, OUTPUT SPEED SENSOR, GEAR POSITION" parameter on the scantool.
4. Disconnect the solenoid valve connector and perform the "STALL TEST".

| |
|---|
| Specification : 2000~2700 engine rpm |

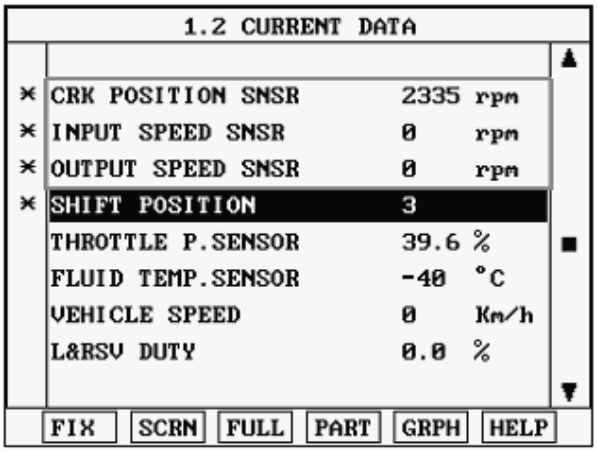


ELQE036A

**OPERATING ELEMENT OF EACH SHIFTING RANGE**

| | UD/C | OD/C | REV/C | 2ND/B | LR/B | OWC |
|---|---|---|---|---|---|---|
| P | | | | | ● | |
| R | | | ● | | ● | |
| N | | | | | ● | |
| D1 | ● | | | | ● | ○ |
| D2 | ● | | | ● | | |
| D3 | ● | ● | | | | |
| D4 | | ● | | ● | | |

※ Low & Reverse Brake is released when the vehicle speed is over 7Km/h(5 MPH).

**Stall test procedure in D3 and reason**

Procedure

1. Warm up the engine
2. Set 3rd gear hold by disconnecting the solenoid valve connector. Fully depress the brake pedal, then place the transaxle gear lever into "D" range. Press and hold the accelerator pedal to the floor for no more than eight seconds while observing the engine, input speed,
   and output speed RPM values.

   * The slippage of 3rd gear operating parts can be detected by stall test in D3

Reason for stall test

1. If there is no mechanical defaults in A/T, all slippage occurs in torque converter.
2. Therefore, engine revolution is output, but input and output speed revolution must be "zero" due to wheel's lock.
3. If OD clutch system(3rd gear operating part) has faults, input speed revolution will be out of specification.
4. If output speed revolution is output. It means that the foot brake force is not applied fully. Retesting using greater braking force is required.

5. Is "STALL TEST " within specification?

**YES**

▶ Go to "Signal Circuit Inspection" procedure.

**NO**

▶ Go to "Component Inspection" procedure.

***CAUTION***

● ***Do not let anybody stand in front of or behind the vehicle while this test is being carried out.***
● ***Check the A/T fluid level and temperature and the engine coolant temperature.***
- ***Fluid level : At the hot mark on the oil level gauge.***
- ***Fluid temperature : 80~100 °C (176 °F~ 212 °F).***
- ***Engine coolant temperature : 80~100 °C (176 °F~ 212 °F).***

● ***Chock both rear wheels(left and right).***
● ***Pull the parking brake lever on with the brake pedal fully depressed.***
● ***The throttle should not be left fully open for more than eight seconds.***
● ***If carrying out the stall test two or more times, move the select lever to the "N" position and run the engine at 1,000 rpm to let the A/T fluid cool down before carrying out subsequent tests.***

## SIGNAL CIRCUIT INSPECTION ED81421B

1. Connect Scantool.
2. Engine "ON".
3. Monitor the "INPUT & OUTPUT SPEED SENSOR" parameter on the scantool.
4. Accelerate the Engine speed until about 2000 rpm in the 3rd gear.

Specification : INPUT SPEED - (OUTPUT SPEED × GEAR RATIO) ≤ 200 RPM

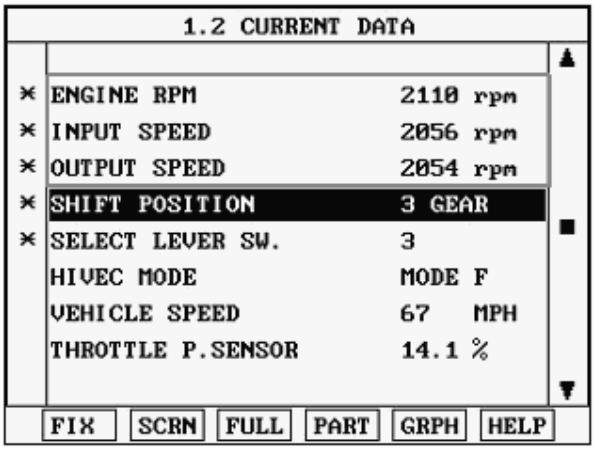


ELQE037A

5. Are "INPUT & OUTPUT SPEED SENSOR" within specifications?

**YES**

▶ Go to "Component Inspection" procedure.

**NO**

▶ Check for electrical noise of circuit in INPUT & OUTPUT SPEED SENSOR or replace INPUT & OUTPUT SPEED SENSOR. Repair as necessary and go to "Verification of Vehicle Repair" procedure.

## COMPONENT INSPECTION EFAA83C0

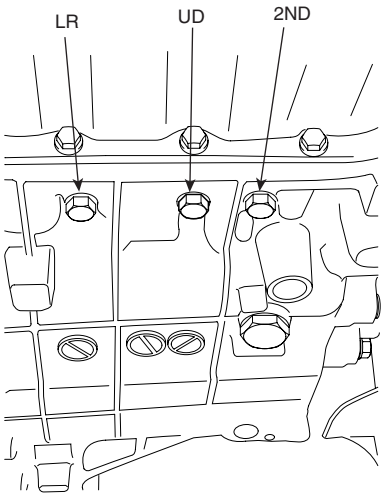


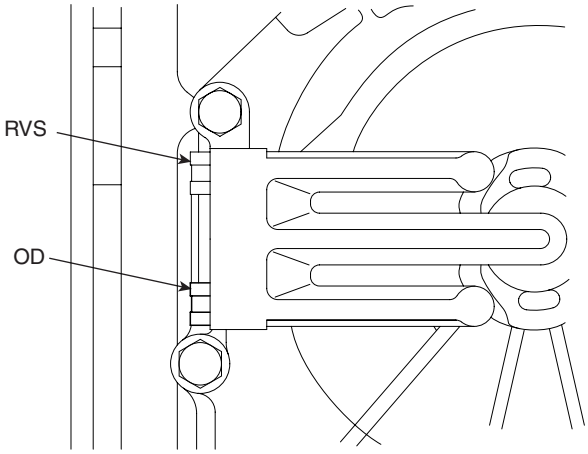


EKBF109D

1. Connect Oil pressure gauge to "UD" and "OD" port.
2. Engine "ON".
3. Drive a car with gear position 3 in fail mode.
4. Compare it with reference data as below.

| |
|---|
| Specification : Refer to DTC P0731. |

5. Is oil pressure value within specification?

**YES**

▶ Repair AUTO TRANSAXLE(Clutch or Brake) as necessary and go to "Verification of Vehicle Repair" procedure.

**NO**

▶ Replace AUTO TRANSAXLE (BODY CONTROL VALVE faulty) as necessary and go to "Verification of Vehicle Repair " procedure.

## VERIFICATION OF VEHICLE REPAIR E7BDCB35

Refer to DTC P0731.

# DTC P0734 GEAR 4 INCORRECT RATIO

## COMPONENT LOCATION E4C25870

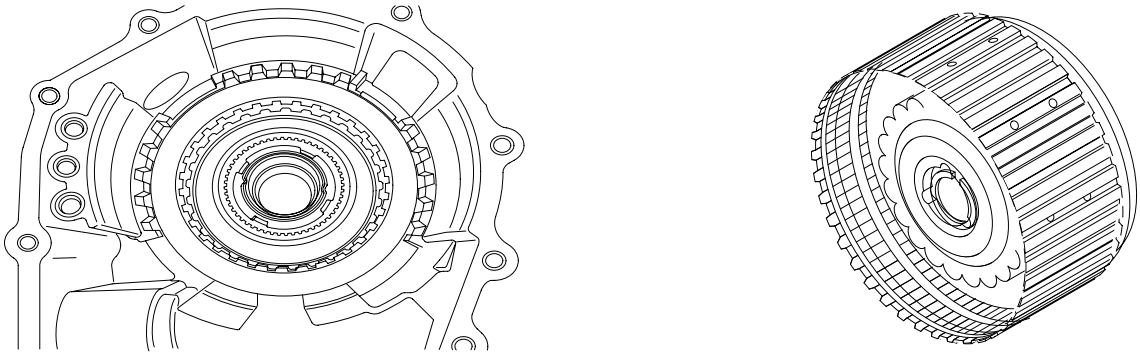


BKQE010A

## GENERAL DESCRIPTION E64BBE3B

The value of the input shaft speed should be equal to the value of the output shaft speed, when multiplied by the 4th gear ratio, while the transaxle is engaged in the 4th gear. For example, if the output speed is 1,000 rpm and the 4th gear ratio is 0.712, then the input speed is 0,712 rpm.

## DTC DESCRIPTION EC34EBAD

This code is set if the value of input shaft speed is not equal to the value of the output shaft, when multiplied by the 4th gear ratio, while the transaxle is engaged in 4th gear. This malfunction is mainly caused by mechanical troubles such as control valve sticking or solenoid valve malfunctioning rather than an electrical issue.

## DTC DETECTING CONDITION E4B3180C

| Item | Detecting Condition | Possible cause |
|---|---|---|
| **DTC Strategy** | • 4th gear incorrect ratio | • Faulty Input speed sensor<br>• Faulty output speed sensor<br>• Faulty UD clutch or 2nd brake |
| **Enable Conditions** | • Engine speed > 450rpm<br>• Output speed > 900rpm<br>• Shift stage 4th. gear<br>• Input speed > 0rpm<br>• A/T oil temp sensor voltage < 4.5V<br>• Voltage of Battery > 10V<br>• TRANSAXLE RANGE SWITCH is normal and above 2sec is passed from IG ON | |
| **Threshold value** | • \| Input speed/4th gear ratio - output speed \| ≥ 200rpm | |
| **Diagnostic Time** | • More than 1sec | |
| **Fail Safe** | • Locked into 3rd gear.<br>(If diagnosis code P0734 is output four times, the transaxle is locked into 3rd gear) | |

## SIGNAL WAVEFORM EC9BDEAE

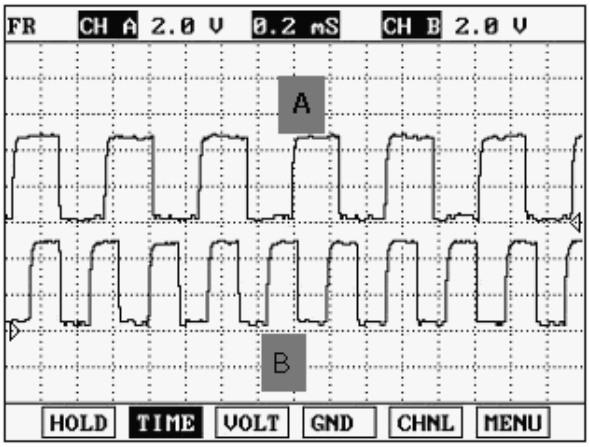


LKLG107C

## MONITOR SCANTOOL DATA EC8F0610

※ It is difficult to "STALL TEST" in 4th gear, therefore Go to "Signal Circuit Inspection" procedure.

### OPERATING ELEMENT OF EACH SHIFTING RANGE

| | UD/C | OD/C | REV/C | 2ND/B | LR/B | OWC |
|---|---|---|---|---|---|---|
| P | | | | | ● | |
| R | | | ● | | ● | |
| N | | | | | ● | |
| D1 | ● | | | | ● | ○ |
| D2 | ● | | | ● | | |
| D3 | ● | ● | | | | |
| D4 | | ● | | ● | | |

※ Low & Reverse Brake is released when the vehicle speed is over 7Km/h(5 MPH).

## SIGNAL CIRCUIT INSPECTION E99C24DA

1. Connect Scantool.
2. Engine "ON".
3. Monitor the "INPUT & OUTPUT SPEED SENSOR" parameter on the scantool.
4. Accelerate the Engine speed until about 2000 rpm in the 4th gear.

Specification : INPUT SPEED - (OUTPUT SPEED × GEAR RATIO) ≤ 200 RPM

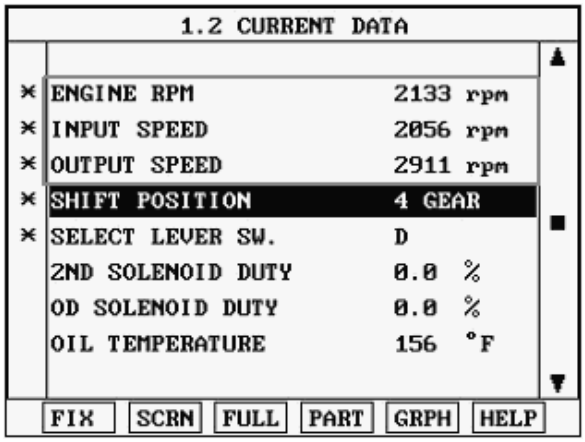


ELQE038A

5. Are "INPUT & OUTPUT SPEED SENSOR" within specifications?

**YES**

▶ Go to "Component Inspection" procedure.

**NO**

▶ Check for electrical noise of circuit in INPUT & OUTPUT SPEED SENSOR or replace INPUT & OUTPUT SPEED SENSOR. Repair as necessary and go to "Verification of Vehicle Repair" procedure.

## COMPONENT INSPECTION EFE04A6C

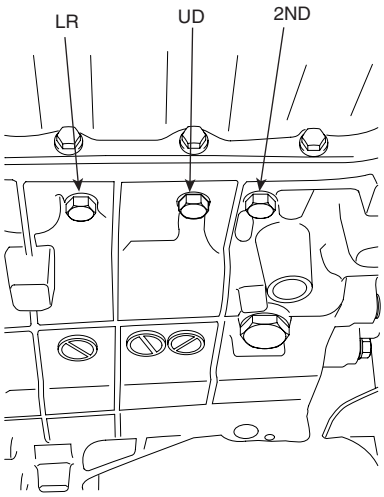


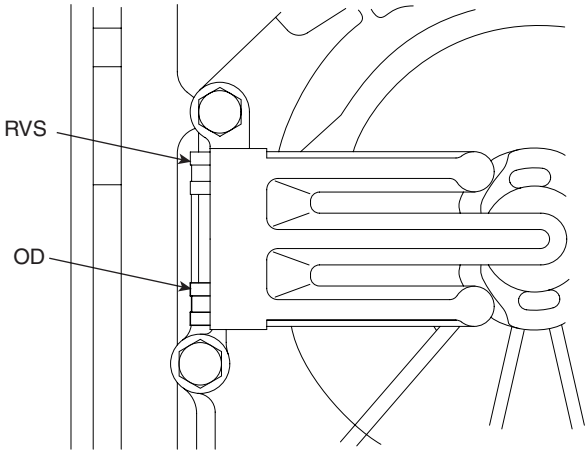


EKBF109D

1. Connect Oil pressure gauge to "OD" and "2nd" port.
2. Engine "ON".
3. Drive the car with gear position "4".
4. Compare it with reference data as below.

| |
|---|
| Specification : Refer to DTC P0731. |

5. Is oil pressure value within specification?

**YES**

▶ Repair AUTO TRANSAXLE(Clutch or Brake) as necessary and go to "Verification of Vehicle Repair" procedure.

**NO**

▶ Replace AUTO TRANSAXLE (BODY CONTROL VALVE faulty) as necessary and go to "Verification of Vehicle Repair " procedure.

## VERIFICATION OF VEHICLE REPAIR EC1BC0DB

Refer to DTC P0731.

# DTC P0741 TORQUE CONVERTER CLUTCH CIRCUIT - STUCK OFF

## GENERAL DESCRIPTION ECAA9FDC

The PCM/TCM controls the locking and unlocking of the Torque Converter Clutch ( or Damper Clutch ), to the input shaft of the transmission, by appling hydraulic pressure. The main purpose of T/C clutch control is to save fuel by decreasing the hydraulic load inside the T/C. The PCM/TCM outputs duty pulses to control the Damper Clutch Control Solenoid Valve( DCCSV ) and hydraulic pressure is applied to the DC according to the DCC duty ratio value. When the duty ratio is high, high pressure is applied and the Damper Clutch is locked. The normal operating range of the Damper Clutch Control duty ratio value is from 30%(unlocked) to 85%(locked).

## DTC DESCRIPTION ED347B7C

The PCM/TCM increases the duty ratio to engage the Damper Clutch by monitoring slip rpms (difference vlaue beteween engine speed and turbine speed ). To decrease the slip of the Damper Clutch, the PCM/TCM increases the duty ratio by appling more hyraulic pressure. When slip rpm does not drop under some value with 100% duty ratio, the PCM/TCM determines that the Torque Converter Clutch is stuck OFF and sets this code.

## DTC DETECTING CONDITION E3022CAC

| Item | Detecting Condition | Possible cause |
|---|---|---|
| **DTC Strategy** | • Stuck "OFF" | ※ TORQUE CONVERTER(DAMPER) CLUTCH : TCC<br>• Faulty TCC or oil pressure system<br>• Faulty TCC solenoid valve<br>• Faulty body control valve<br>• Faulty PCM/TCM |
| **Enable Conditions** | • Always | |
| **Threshold value** | • TCC duty > 0% or TCC abnormal slip counter ≥ 4 | |
| **Diagnostic Time** | • 1 second | |
| **Fail Safe** | • Damper clutch abnormal system<br>(If diagnosis code P0741 is output four times, TORQUE CONVERTER(DAMPER) CLUTCH is not controlled by PCM/TCM) | |

## MONITOR SCANTOOL DATA E2404E0E

1. Connect scantool to data link connector(DLC).
2. Engine "ON".
3. Select "D RANGE" and drive vehicle.
4. Monitor the "TORQUE CONVERTER(DAMPER) CLUTCH" parameter on the scantool.

Specification : TCC SLIP < 160RPM(In condition that TCC SOL. DUTY > 40% )

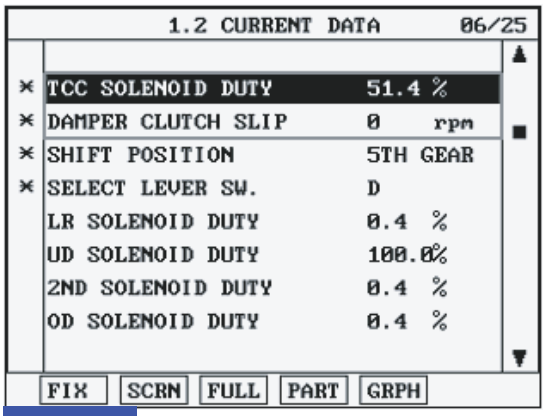

FIG.1)

FIG.1) : Normal status

LLLG112A

5. Are "TCC SOLENOID DUTY and TCC SLIP" within specifications?

**YES**

▶ Fault is intermittent caused by poor contact in the sensor's and/or TCM(PCM)'s connector or was repaired and TCM(PCM) memory was not cleared. Thoroughly check connectors for looseness, poor connection, bending, corrosion, contamination, deterioration or damage. Repair or replace as necessary and go to "Verification of vehicle repair" procedure.

**NO**

▶ Go to "Component inspection" procedure.

## COMPONENT INSPECTION E2BA45DD

1. CHECK TORQUE CONVERTER CLUTCH SOLENOID VALVE

   1) Connect scantool to data link connector(DLC).

   2) Ignition "ON" & Engine "OFF".

   3) Select A/T Solenoid valve Actuator test and Operate Actuator test.

   4) Can you hear operating sound for using TCC SOLENOID VALVE Actuator Testing Function?

   **YES**

   ▶ Go to "CHECK OIL PRESSURE" as below.

   **NO**

   ▶ Replace "TCC SOLENOID VALVE" as necessary and Go to "Verification of Vehicle Repair" procedure.

2. CHECK OIL PRESSURE

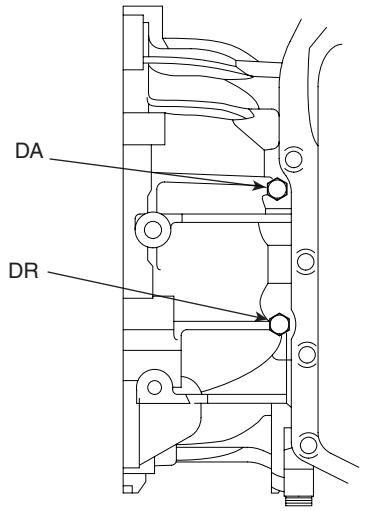


KKCF212B

1) Connect oil pressure gauge to "DA" ports.

2) Engine "ON".

3) After connecting Scantool and monitor the "TCC SOLENIOD VALVE DUTY" parameter on the scantool data list.

4) Operate vehicle with 3rd or 4th gear and operate the "TCC SOLENIOD VALVE DUTY" more than 85%.

5) Is oil pressure value within specification?

**YES**

▶ Repair TORQUE CONVERTER CLUTCH(REPLACE Torque Converter ) as necessary and Go to "Verification of Vehicle Repair " procedure.

**NO**

▶ Replace A/T assembly (possible to BODY CONTROL VALVE faulty) as necessary and Go to "Verification of Vehicle Repair " procedure.

## VERIFICATION OF VEHICLE REPAIR E1A6C21F

After a repair, it is essential to verify that the fault has been corrected.

1. Connect scantool and select "Diagnostic Trouble Codes(DTCs)" mode.
2. Using a scantool, Clear DTC.
3. Operate the vehicle within DTC Enable conditions in General information.
4. Are any DTCs present ?

**YES**

▶ Go to the applicable troubleshooting procedure.

**NO**

▶ System performing to specification at this time.

# DTC P0742 TORQUE CONVERTER CLUTCH CIRCUIT - STUCK ON

## GENERAL DESCRIPTION E14AFC7F

Refer to DTC P0741.

## DTC DESCRIPTION EEB0CCA2

The TCM increases the duty ratio to engage the Damper Clutch by monitoring the slip rpms (difference value between engine speed and turbine speed ). If a very small amount of slip rpm is maintained though the TCM applies 0% duty ratio value, then the TCM determines that the Torque Converter Clutch is stuck ON and sets this code.

## DTC DETECTING CONDITION EDF0F9BC

| Item | Detecting Condition | Possible cause |
|---|---|---|
| **DTC Strategy** | • Stuck "ON" | ※ TORQUE CONVERTER(DAMPER) CLUTCH : TCC<br>• Faulty TCC or oil pressure system<br>• Faulty TCC solenoid valve<br>• Faulty body control valve<br>• Faulty TCM(PCM) |
| **Enable Conditions** | • Throttle position > 20%<br>• Output speed > 500 rpm<br>• Manifold air pressure > 60 kPa<br>• A/T range switch D,SP<br>• TCC stuck on delay timer > 5 secs | |
| **Threshold value** | • \| Engine rpm - Input speed sensor rpm \| ≤ 20 rpm | |
| **Diagnostic Time** | • More than 1sec | |
| **Fail Safe** | • Damper clutch abnormal system<br>(If diagnosis code P0741 is output four times, TORQUE CONVERTER(DAMPER) CLUTCH is not controlled by PCM/TCM) | |

## MONITOR SCANTOOL DATA EDFE4CBB

1. Connect scantool to data link connector(DLC).
2. Engine "ON".
3. Select "D RANGE" and drive vehicle.
4. Monitor the "TORQUE CONVERTER(DAMPER) CLUTCH" parameter on the scantool.

Specification : TCC SLIP > 5RPM

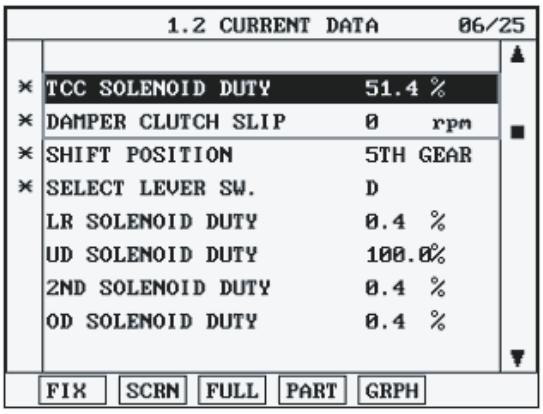


SCMAT6726L

5. Is TCC SLIP" within specifications?

**YES**

▶ Fault is intermittent caused by poor contact in the sensor's and/or TCM(PCM)'s connector or was repaired and TCM(PCM) memory was not cleared. Thoroughly check connectors for looseness, poor connection, bending, corrosion, contamination, deterioration or damage. Repair or replace as necessary and go to "Verification of vehicle repair" procedure.

**NO**

▶ Go to "Component inspection" procedure.

## COMPONENT INSPECTION E791E44B

1. CHECK TORQUE CONVERTER CLUTCH SOLENOID VALVE

   1) Connect scantool to data link connector(DLC).

   2) Ignition "ON" & Engine "OFF".

   3) Select A/T solenoid valve actuator test and operate actuator test.

   4) Can you hear operating sound for using TCC SOLENOID VALVE actuator testing function?

   **YES**

   ▶ Go to "CHECK OIL PRESSURE" as below.

   **NO**

   ▶ Repair or replace as necessary and then go to "Verification of vehicle repair" procedure.

2. CHECK OIL PRESSURE

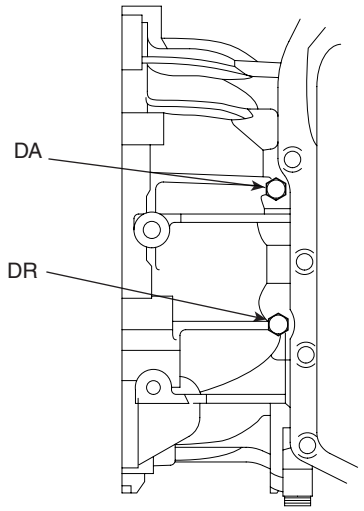


KKCF212B

1) Connect oil pressure gauge to "DR" ports.

2) Ignition "ON" & Engine "OFF".

3) After connecting scantool and monitor the "TCC SOLENIOD VALVE DUTY" parameter on the scantool data list.

4) Select 1st gear and accelerate Engine speed to 2500 rpm.

5) Measure oil pressure.

6) Is oil pressure value within specification?

| |
|---|
| Specification : approx. 598.2034KPa(6.1kg/cm²) |

**YES**

▶ Repair TORQUE CONVERTER CLUTCH(REPLACE Torque Converter ) as necessary and go to "Verification of vehicle repair" procedure.

**NO**

▶ Replace A/T assembly (possible to BODY CONTROL VALVE faulty) as necessary and Go to "Verification of vehicle Repair" procedure.

## VERIFICATION OF VEHICLE REPAIR E4AD7DD3

Refer to DTC P0741.

# DTC P0743 TORQUE CONVERTER CLUTCH CIRCUIT - ELECTRICAL

## COMPONENT LOCATION EA07A4D4

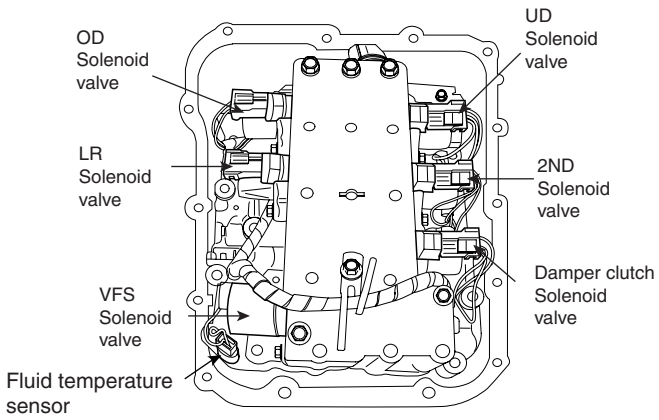


EKRF410A

## GENERAL DESCRIPTION E406CFBC

The PCM/TCM controls the locking and unlocking of the Torque Converter Clutch (or Damper Clutch), to the input shaft of the transmission, by appling hydraulic pressure. The main purpose of T/C clutch control is to save fuel by decreasing the hydraulic load inside the T/C. The PCM/TCM outputs duty pulses to control the Damper Clutch Control Solenoid Valve(DCCSV) and hydraulic pressure is applied to the DC according to the DCC duty ratio value. When the duty ratio is high, high pressure is applied and the Damper Clutch is locked. The normal operating range of the Damper Clutch Control duty ratio value is from 30%(unlocked) to 85%(locked).

## DTC DESCRIPTION E172CCCE

The PCM/TCM checks the Damper Clutch Control Signal by monitoring the feedback signal from the solenoid valve drive circuit. If an unexpected signal is monitored (for example, high voltage is detected when low voltage is expected, or low voltage is detected when high voltage is expected) the PCM/TCM judges that DCCSV circuit is malfunctioning and sets this code.

## DTC DETECTING CONDITION EFAE4AC1

| Item | Detecting Condition | Possible cause |
|---|---|---|
| **DTC Strategy** | • Check voltage range | ※ TORQUE CONVERTER(DAMPER) CLUTCH : TCC<br>• Open or short in circuit<br>• Faulty TCC SOLENOID VALVE<br>• Faulty PCM/TCM |
| **Enable Conditions** | • 16V > Voltage Battery > 11V<br>• In gear state(no gear shifting) 500msec is passed from turn on the relay<br>• A/T Relay = ON<br>• Engine state = RUN | |
| **Threshold value** | • Feedback voltage from DCC control solenoid > vb-2V and DCC control duty is 100% | |
| **Diagnostic Time** | • More than 2 seconds | |
| **Fail Safe** | • Locked in 3rd gear.(Control relay off) | |

## SPECIFICATION E7EDFA7E

Solenoid Valve for Pressure Control

- Sensor type : Normal open 3-way
- Operating temperature : -22~266°F(-30°C~130°C)
- Frequency :
  - LR, 2ND, UD, OD, RED : 61.27Hz (at the ATF temp. -20°C above)
  - DCC : 30.64Hz
    ※ KM series : 35Hz

- Internal resistance :
  - 2.7~3.4Ω (68°F or 20°C)

- Surge voltage : 56 V

## SIGNAL WAVEFORM E224E54A

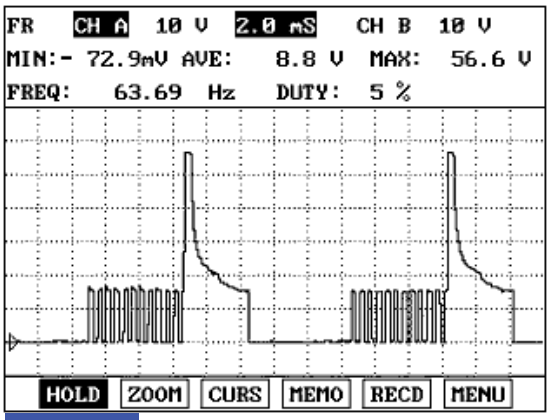


FIG.1)

FIG.1) : Operating of "DCCSV"

EKBF115A

## MONITOR SCANTOOL DATA EDBDCD5A

1. Connect scantool to data link connector(DLC)
2. Engine "ON".
3. Monitor the "TCC SOL. VALVE" parameter on the scantool
4. Select "D RANGE" and Operate "TCC SOLENOID DUTY" more than 40%.

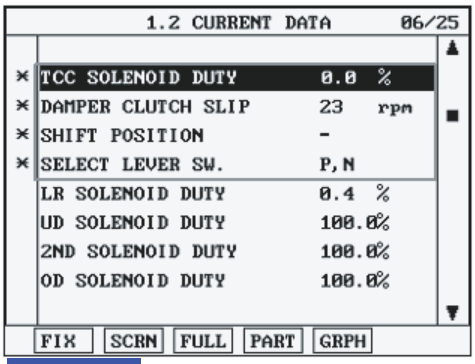


FIG.1)

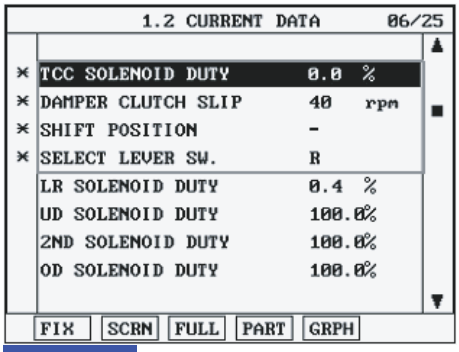


FIG.2)

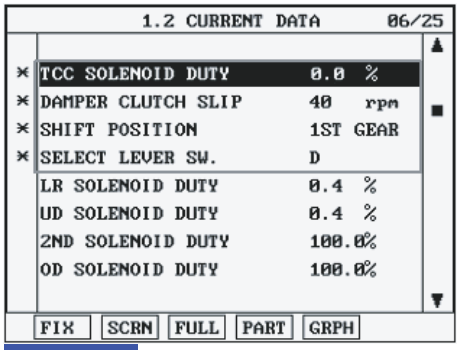


FIG.3)

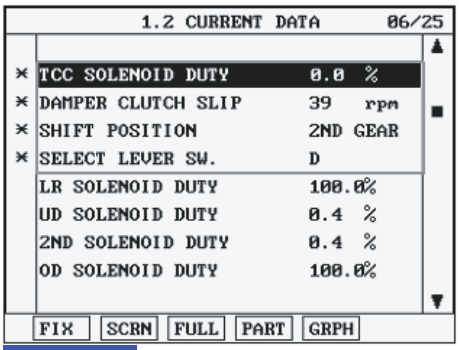


FIG.4)

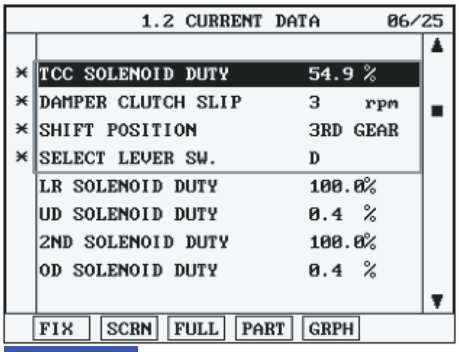


FIG.5)

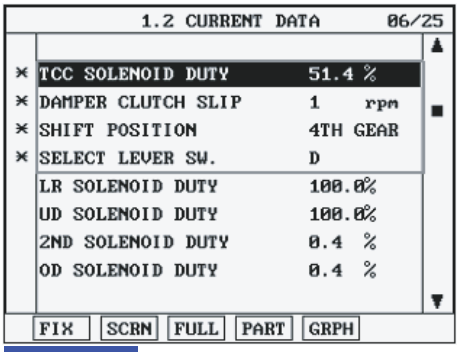


FIG.6)

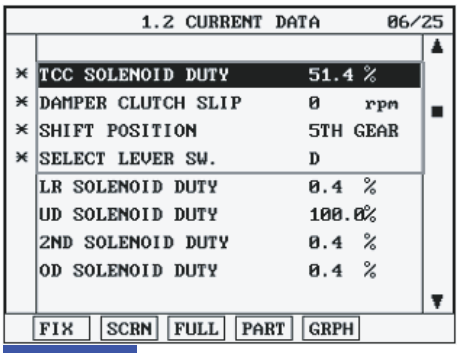


FIG.7)

FIG. 1) P,N
FIG. 2) "R"
FIG. 3) "D 1st" gear
FIG. 4) "2nd" gear
FIG. 5) "3rd" gear
FIG. 6) "4th" gear
FIG. 7) "5th" gear

LLLG114A

5. Does "TCC SOLENOID DUTY " follow the reference data?

**YES**

▶ Fault is intermittent caused by poor contact in the sensor's and/or TCM(PCM)'s connector or was repaired and TCM(PCM) memory was not cleared. Thoroughly check connectors for looseness, poor connection, bending, corrosion, contamination, deterioration or damage. Repair or replace as necessary and go to "Verification of vehicle repair" procedure.

**NO**

▶ Go to "Terminal & connector inspection " procedure.

## TERMINAL & CONNECTOR INSPECTION E40ECA9A

1. Many malfunctions in the electrical system are caused by poor harness and terminals. Faults can also be caused by interference from other electrical systems, and mechanical or chemical damage.
2. Thoroughly check connectors for looseness, poor connection, bending, corrosion, contamination, deterioration, or damage.
3. Has a problem been found?

**YES**

▶ Repair as necessary and then go to "Verification of vehicle repair" procedure.

**NO**

▶ Go to "Power supply circuit inspection" procedure.

## POWER SUPPLY CIRCUIT INSPECTION EFEDF07D

1. Disconnect "A/T SOLENOID VALVE" connector.
2. Measure voltage between terminal "5" of the sensor harness connector and chassis ground.
3. Turn ignition switch OFF → ON

| |
|---|
| Specification: 12V is measured only for approx. 0.5sec |

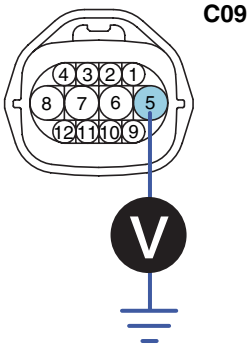


3. UD solenoid valve
4. 2ND solenoid valve
5. **A/T battery**
6. A/T battery
7. VF solenoid valve(+)
8. VF solenoid valve(-)
9. DCC solenoid valve
10. RED solenoid valve
11. LR solenoid valve
12. OD solenoid valve

SCMAT6730L

4. Is voltage within specifications?

**YES**

▶ Go to "Signal circuit inspection" procedure.

**NO**

▶ Check that A/T-20A fuse in engine room junction is installed or not blown.
▶ Check for open in harness. Repair as necessary and go to "Verification of vehicle repair" procedure.

## SIGNAL CIRCUIT INSPECTION EAA2FDEB

1. Check signal circuit open inspection.

   1) Ignition "OFF".

   2) Disconnect "A/T SOLENOID VALVE" connector and "PCM/TCM" connector.

   3) Measure resistance between terminal "9" of the ATM SOLENOID VALVE harness connector and terminal "43" of the TCM harness connector.

| |
|---|
| Specification: approx. 0 Ω |

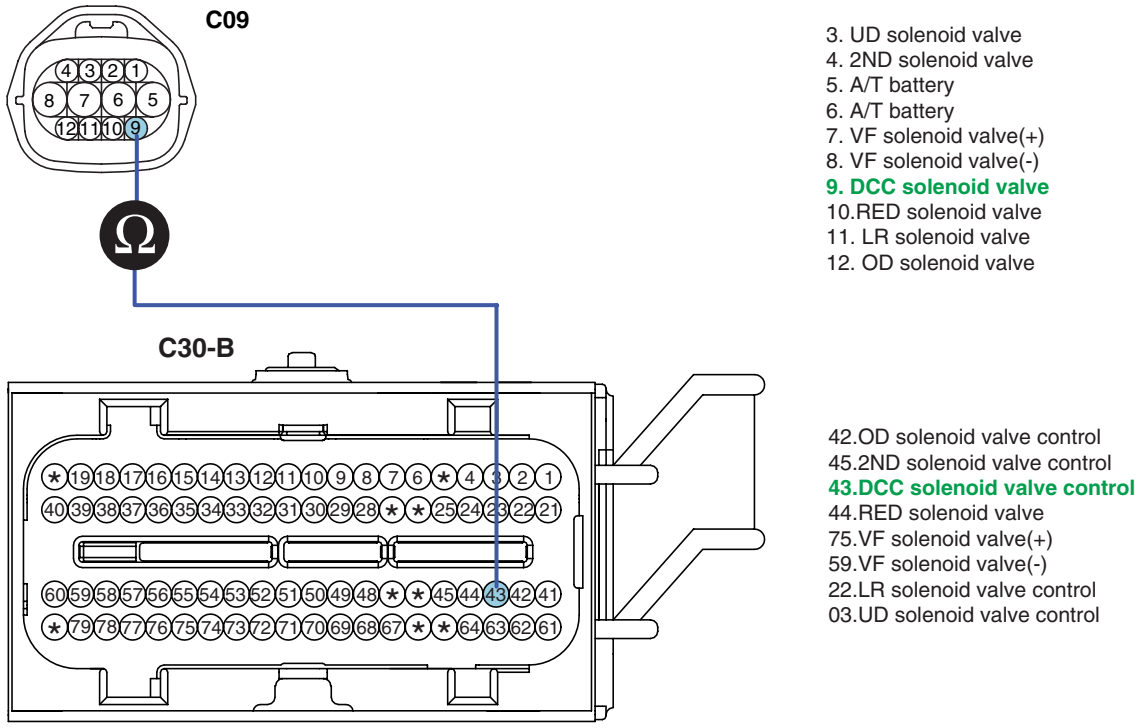


SCMAT6731L

4) Is resistance within specifications?

**YES**

▶ Go to "Check signal circuit short inspection" procedure.

**NO**

▶ Check for open in harness. Repair as necessary and go to "Verification of vehicle repair" procedure.

2. Check signal circuit short inspection

1) Ignition "OFF".

2) Disconnect "A/T SOLENOID VALVE" connector and "PCM/TCM" connector.

3) Measure resistance between terminal "9" of the ATM SOLENOID VALVE harness and chassis ground.

| Specification: Infinite |
|---|

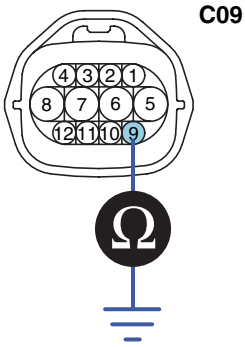


3. UD solenoid valve
4. 2ND solenoid valve
5. A/T battery
6. A/T battery
7. VF solenoid valve(+)
8. VF solenoid valve(-)
9. **DCC solenoid valve**
10. RED solenoid valve
11. LR solenoid valve
12. OD solenoid valve

SCMAT6732L

4) Is resistance within specifications?

**YES**

▶ Go to "Component inspection" procedure.

**NO**

▶ Check for short to ground in harness. Repair as necessary and go to "Verification of vehicle repair" procedure.

## COMPONENT INSPECTION EAAC290B

1. CHECK SOLENOID VALVE

   1) Ignition "OFF".

   2) Disconnect "A/T SOLENOID VALVE" connector.

   3) Measure resistance between terminal "5" and terminal "9" of the ATM SOLENOID VALVE harness connector.

Specification: Approximately 2.7~3.4 Ω [20°C(68°F)]

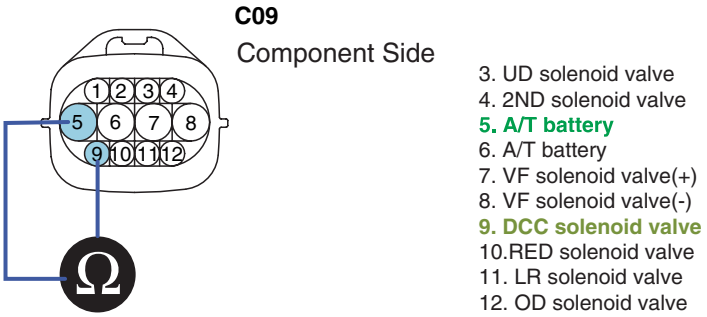


SCMAT6733L

   4) Is resistance within specification?

   **YES**

   ▶ Go to "CHECK PCM/TCM" as below.

   **NO**

   ▶ Replace TCC SOLENOID VALVE as necessary and go to "Verification of vehicle repair" procedure.

2. CHECK PCM/TCM

   1) Connect scantool to data link connector(DLC).

   2) Ignition "ON" & Engine "OFF".

   3) Select A/T solenoid valve actuator test and operate actuator test.

   4) Can you hear operating sound for TCC SOLENOID VALVE actuator testing function?

   **YES**

   ▶ Go to "Verification of vehicle repair" procedure.

   **NO**

   ▶ Replace PCM/TCM as necessary and go to "Verification of vehicle repair" procedure.

**ACTUATOR TEST CONDITION**

1. IG SWITCH ON
2. TRANSAXLE RANGE SWITCH is normal
3. P RANGE
4. Vehicle Speed 0mph(0km/h)
5. Throttle position sensor < 1V
6. IDLE SWITCH ON
7. ENGINE RPM 0

## VERIFICATION OF VEHICLE REPAIR EB78553C

After a repair, it is essential to verify that the fault has been corrected.

1. Connect scantool and select "Diagnostic Trouble Codes(DTCs)" mode.
2. Using a scantool, Clear DTC.
3. Operate the vehicle within DTC Enable conditions in General information.
4. Are any DTCs present?

**YES**

▶ Go to the applicable troubleshooting procedure.

**NO**

▶ System performing to specification at this time.

# DTC P0748 PRESSURE CONTROL SOLENOID VALVE A - ELECTRICAL

## COMPONENT LOCATION EC6BF3EE

Refer to DTC P0743.

## GENERAL DESCRIPTION E363780E

Variable Faced Solenoid (Linear Solenoid) : With the duty control which uses higher frequency(600Hz), instead of the existing PWM type which adapts low frequency(60Hz) to control, spool valve can be controlled precisely.
In PWM control, the amount of oil flow is determined by the duration of "ON"signal among continuously repeated ON/OFF signals.
In VFS, the amount is decided by how widely spool valve open the passage of going through.

## DTC DESCRIPTION EE1EC5BB

The TCM checks the VFS Control Signal by monitoring the feedback signal from the solenoid valve drive circuit. If an unexpected signal is monitored (for example, high voltage is detected when low voltage is expected, or low voltage is detected when high voltage is expected), the TCM judges that the Low and Reverse control solenoid circuit is malfunctioning and sets this code.

## DTC DETECTING CONDITION E12CA0CF

| Item | Detecting Condition | Possible cause |
|---|---|---|
| **DTC Strategy** | • Check voltage range | • Open or short in circuit<br>• Faulty VFS SOLENOID VALVE<br>• Faulty PCM/TCM |
| **Enable Conditions** | • 16V > Voltage Battery > 11V<br>• In gear state(no gear shifting) 500msec is passed from turn on the relay<br>• A/T Relay = ON<br>• Engine state = RUN | |
| **Threshold value** | • Out of available voltage range | |
| **Diagnostic Time** | • More than 2 seconds | |
| **Fail Safe** | • Locked in 3rd gear (Control relay off) | |

## SPECIFICATION EDB255C8

Solenoid Valve for Pressure Control
- Sensor type : Normal open 3-way
- Operating temperature : -22~266°F(-30°C～130°C)
- Frequency :
  - LR, 2ND, UD, OD, RED : 61.27Hz (at the ATF temp. -20°C above)
  - DCC : 30.64Hz
  - VFS : 600 ± 20Hz
    ※ KM series : 35Hz

- Internal resistance :
  - 2.7~3.4Ω (68°F or 20°C) - LR, 2ND, UD, OD, RED, DCC
  - 4.35±0.35Ω (68°F or 20°C) - VFS

- Surge voltage : 56 V(except VFS)

## SIGNAL WAVEFORM EB6E4BE0

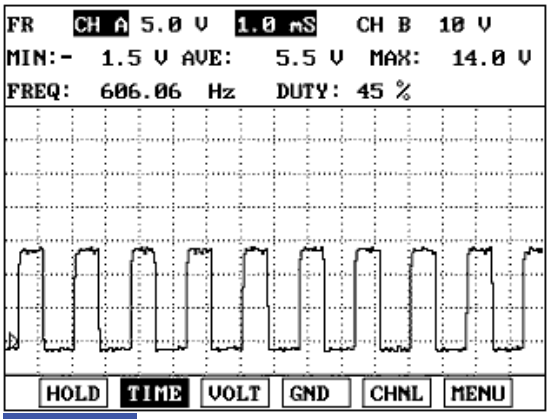


FIG.1)

FIG.1) : Wave form of "VFS"

EKBF116A

## MONITOR SCANTOOL DATA E08C07BE

1. Connect scantool to data link connector(DLC).
2. Engine "ON".
3. Monitor the "PRESS CONTROL SOL. VALVE" parameter on the scantool.
4. Shift gear at each position.

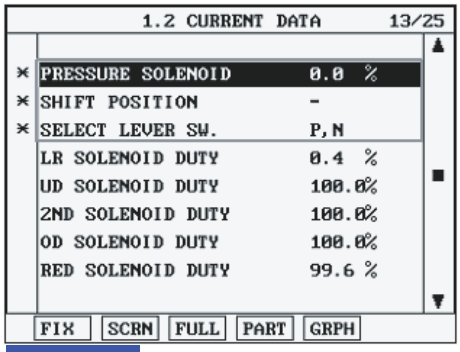


FIG.1)

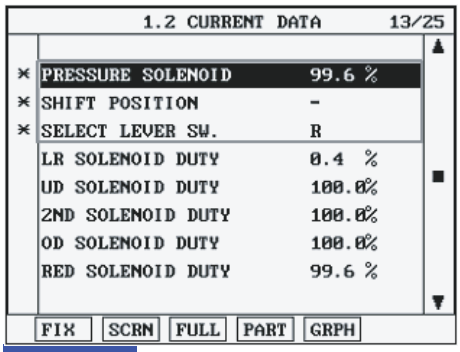


FIG.2)

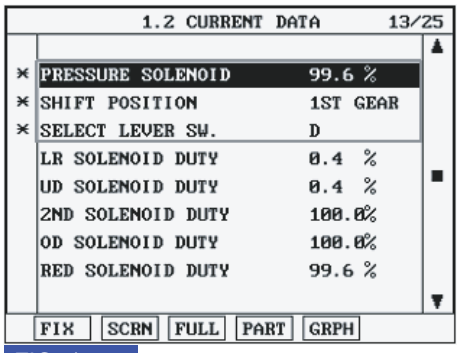


FIG.3)

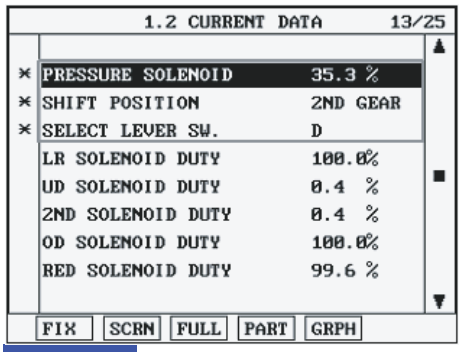


FIG.4)

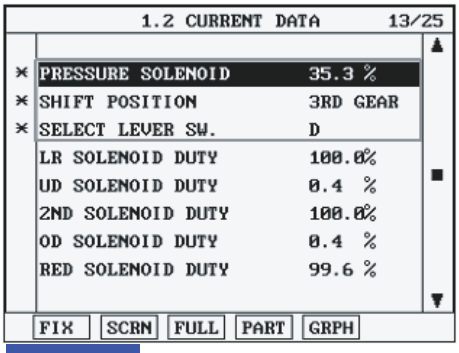


FIG.5)

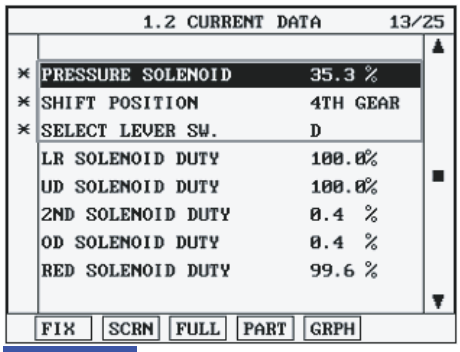


FIG.6)

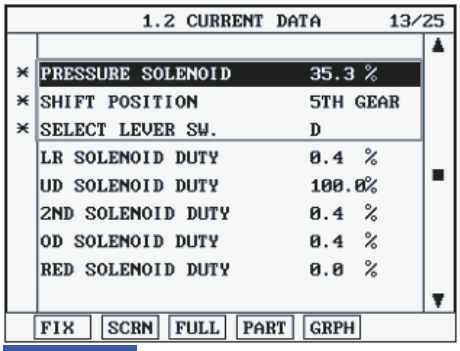


FIG.7)

FIG. 1) P,N
FIG. 2) "R"
FIG. 3) "D 1st" gear
FIG. 4) "2nd" gear
FIG. 5) "3rd" gear
FIG. 6) "4th" gear
FIG. 7) "5th" gear

SCMAT6736L

5. Does "PRESS CONTROL SOL DUTY " follow the reference data?

**YES**

▶ Fault is intermittent caused by poor contact in the sensor's and/or TCM(PCM)'s connector or was repaired and TCM(PCM) memory was not cleared. Thoroughly check connectors for looseness, poor connection, bending, corrosion, contamination, deterioration or damage. Repair or replace as necessary and go to "Verification of vehicle repair" procedure.

**NO**

▶ Go to "Terminal & connector inspection" procedure.

## TERMINAL & CONNECTOR INSPECTION E9A1C782

Refer to DTC P0743.

## POWER SUPPLY CIRCUIT INSPECTION EE693FC6

1. Disconnect "A/T SOLENOID VALVE" connector.
2. Measure voltage between terminal "7" of the sensor harness connector and chassis ground.
3. Measure voltage of VFS solenoid valve.

| Specification: | Approx.12V |
|---|---|

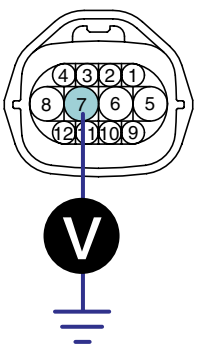


3. UD solenoid valve
4. 2ND solenoid valve
5. A/T battery
6. A/T battery
7. A/T battery
8. VF solenoid valve
9. DCC solenoid valve
11. LR solenoid valve
12. OD solenoid valve

SCMAT6737L

4. Is voltage within specifications?

**YES**

▶ Go to "Signal circuit inspection" procedure.

**NO**

▶ Check that A/T-20A fuse in engine room junction is installed or not blown.
▶ Check for open in harness. Repair as necessary and go to "Verification of vehicle repair" procedure.

## SIGNAL CIRCUIT INSPECTION E6B9E4FC

1. Check signal circuit open inspection.

   1) Ignition "OFF".

   2) Disconnect "A/T SOLENOID VALVE" connector and "PCM/TCM" connector.

   3) Measure resistance between terminal "7" of the ATM SOLENOID VALVE harness connector and terminal "75" of the PCM/TCM harness connector.

Specification: approx. 0 Ω

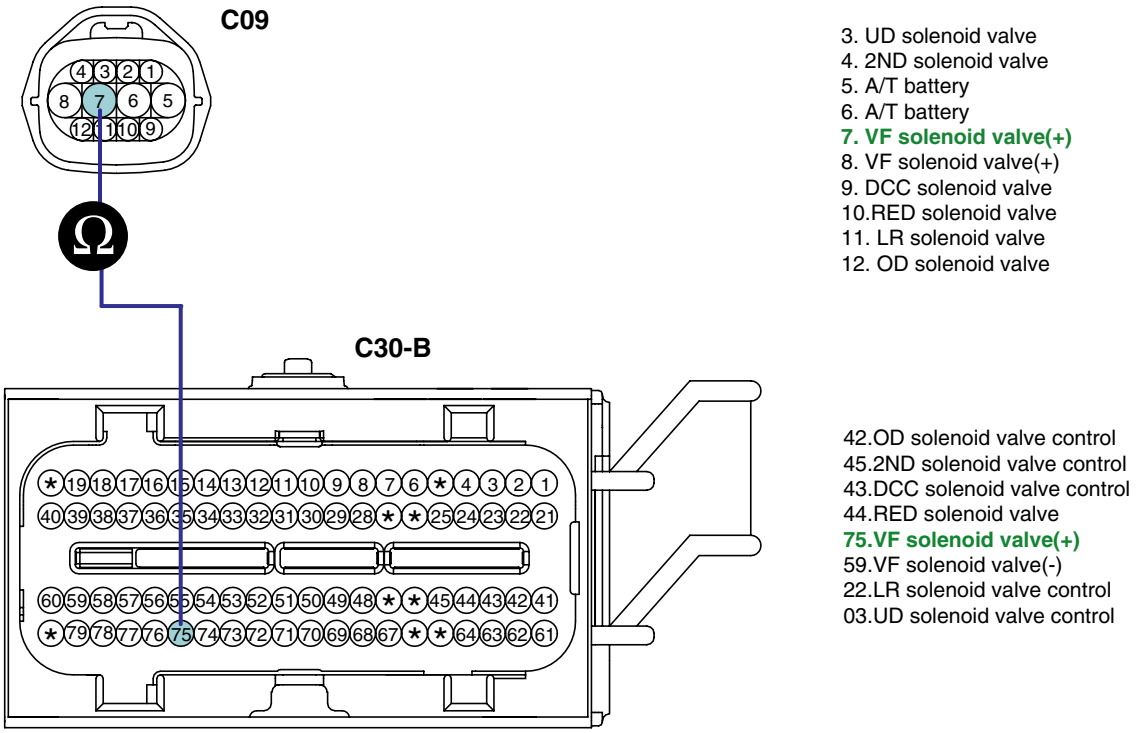


SCMAT6738L

   4) Is resistance within specifications?

   **YES**

   ▶ Go to "Check signal circuit short inspection" procedure.

   **NO**

   ▶ Check for open in harness. Repair as necessary and go to "Verification of vehicle repair" procedure.

2. Check signal circuit short inspection

   1) Ignition "OFF".

   2) Disconnect "A/T SOLENOID VALVE" connector and "PCM/TCM" connector

   3) Measure resistance between terminal "7" of the ATM SOLENOID VALVE harness and chassis ground.

Specification: Infinite

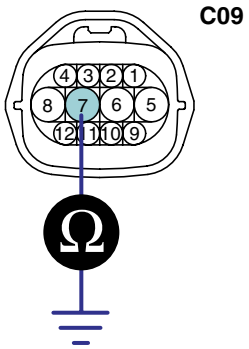


3. UD solenoid valve
4. 2ND solenoid valve
5. A/T battery
6. A/T battery
**7. VF solenoid valve(-)**
8. VF solenoid valve(+)
9. DCC solenoid valve
10.RED solenoid valve
11. LR solenoid valve
12. OD solenoid valve

SCMAT6739L

4) Is resistance within specifications?

**YES**

▶ Go to "Component inspection" procedure.

**NO**

▶ Check for short to ground in harness. Repair as necessary and go to "Verification of vehicle repair" procedure.

## COMPONENT INSPECTION E836FB63

1. CHECK SOLENOID VALVE

1) Ignition "OFF".

2) Disconnect "A/T SOLENOID VALVE" connector.

3) Measure resistance between terminal "7" and terminal "8" of the ATM SOLENOID VALVE harness connector.

| |
|---|
| Specification: Approximately 4.35±0.35Ω [20°C(68°F)] |

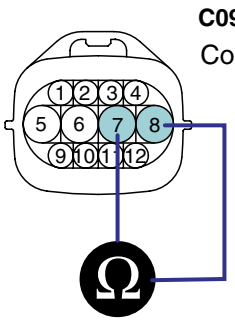


3. UD solenoid valve
4. 2ND solenoid valve
5. A/T battery
6. A/T battery
**7. VF solenoid valve(+)**
**8. VF solenoid valve(-)**
9. DCC solenoid valve
10.RED solenoid valve
11. LR solenoid valve
12. OD solenoid valve

SCMAT6740L

4) Is resistance within specification?

**YES**

▶ Go to "CHECK PCM/TCM" as below.

**NO**

▶ Replace "PRESS CONTROL SOL VALVE(VFS)" as necessary and go to "Verification of vehicle repair" procedure.

2. CHECK PCM/TCM

1) Connect scantool to data link connector(DLC).

2) Ignition "ON" & Engine "OFF".

3) Select A/T Solenoid valve Actuator test and Operate Actuator test.

4) Can you hear operating sound for "PRESS CONTROL SOL VALVE(VFS)" Actuator testing function?

**YES**

▶ Go to "Verification of vehicle repair" procedure.

**NO**

▶ Replace PCM/TCM as necessary and go to "Verification of vehicle repair" procedure.

**ACTUATOR TEST CONDITION**

1. IG SWITCH ON
2. TRANSAXLE RANGE SWITCH is normal
3. P RANGE
4. Vehicle Speed 0mph(0km/h)
5. Throttle position sensor < 1V
6. IDLE SWITCH ON
7. ENGINE RPM 0

## VERIFICATION OF VEHICLE REPAIR E0EAF7CB

Refer to DTC P0743.

# DTC P0750 SHIFT CONTROL SOLENOID VALVE A CIRCUIT MALFUNCTION

## COMPONENT LOCATION EB49F3FD

Refer to DTC P0743.

## GENERAL DESCRIPTION EEC6AFAA

The Automatic transmission changes the gear position of the transmission by utilizing a combination of clutches and brakes, which are controlled by solenoid valves. This automatic transmission consists of a: LR (Low and Reverse Brake), 2ND (2nd Brake), UD (Under Drive Clutch), OD (Over Drive Clutch), REV (Reverse Clutch), and RED (Reduction Brake, only for 5 speed transmissions). The LR Brake is engaged in the 1st gear and reverse gear positions.

## DTC DESCRIPTION ECD36756

The TCM checks the Low and Reverse Control Signal by monitoring the feedback signal from the solenoid valve drive circuit. If an unexpected signal is monitored (for example, high voltage is detected when low voltage is expected, or low voltage is detected when high voltage is expected), the TCM judges that the Low and Reverse control solenoid circuit is malfunctioning and sets this code.

## DTC DETECTING CONDITION E94E629F

| Item | Detecting Condition | Possible cause |
|---|---|---|
| **DTC Strategy** | • Check voltage range | • Open or short in circuit<br>• Faulty LR SOLENOID VALVE<br>• Faulty PCM/TCM |
| **Enable Conditions** | • 16V > Voltage Battery > 11V<br>• In gear state(no gear shifting) 500msec is passed from turn on the relay<br>• A/T Relay = ON<br>• Engine state = RUN | |
| **Threshold value** | • Out of available voltage range | |
| **Diagnostic Time** | • More than 2 seconds | |
| **Fail Safe** | • Locked in 3rd gear.(Control relay off) | |

## SPECIFICATION E3EBEAB1

Refer to DTC P0743.

## SIGNAL WAVEFORM E2DCC546

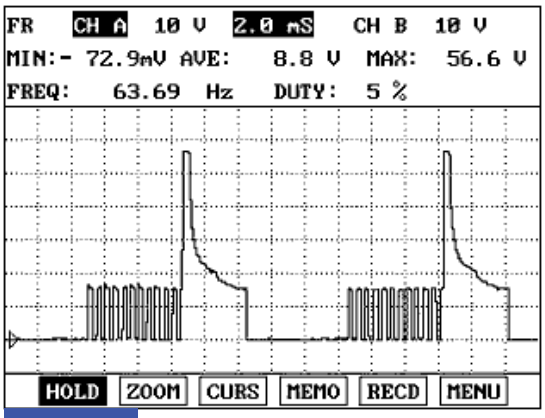

FIG.1)

FIG.1) : "2nd" gear → "1st" gear

EKBF117A

## MONITOR SCANTOOL DATA E220AD8E

1. Connect scantool to data link connector(DLC).
2. Engine "ON".
3. Monitor the "LR SOL. VALVE" parameter on the scantool.
4. Shift gear at each position.

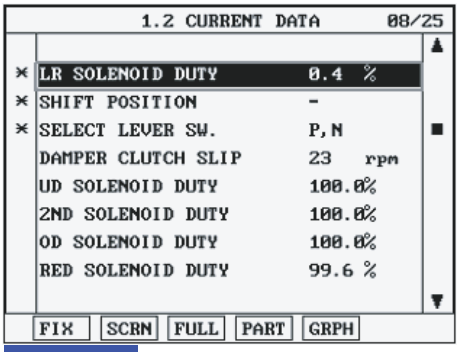


FIG.1)

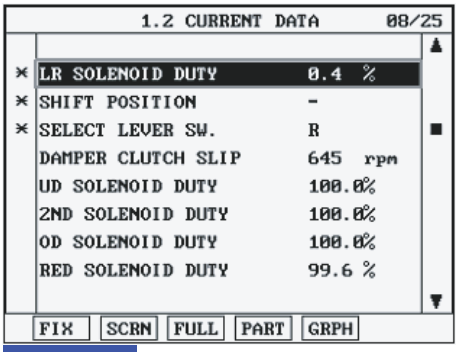


FIG.2)

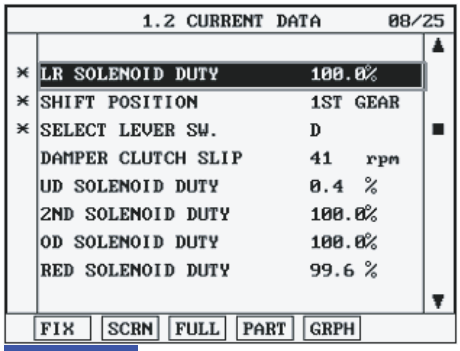


FIG.3)

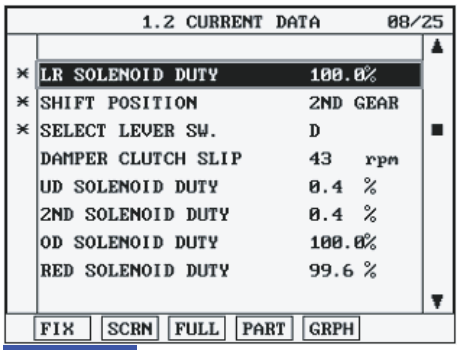


FIG.4)

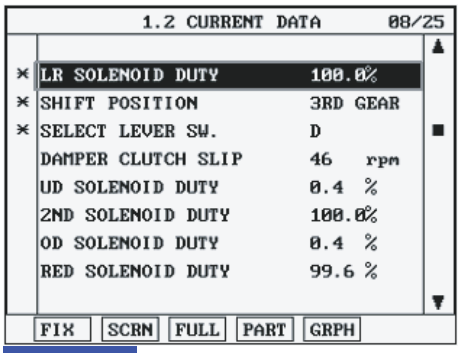


FIG.5)

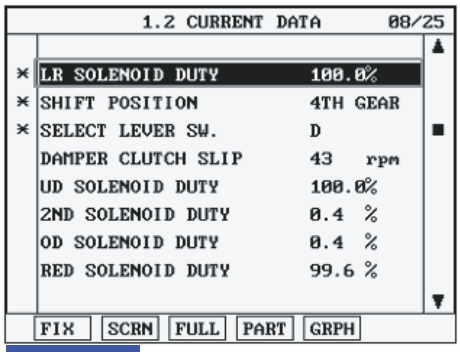


FIG.6)

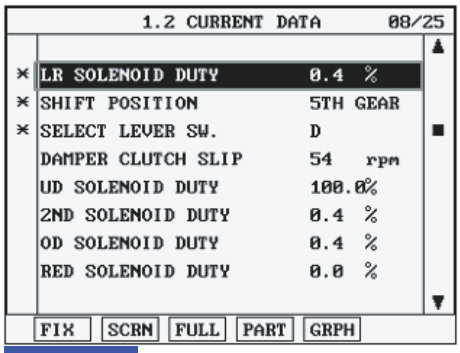


FIG.7)

FIG. 1) P,N
FIG. 2) "R"
FIG. 3) "D 1st" gear
FIG. 4) "2nd" gear
FIG. 5) "3rd" gear
FIG. 6) "4th" gear
FIG. 7) "5th" gear

SCMAT6741L

5. Does "LR SOLENOID DUTY " follow the reference data?

**YES**

▶ Fault is intermittent caused by poor contact in the sensor's and/or TCM(PCM)'s connector or was repaired and TCM(PCM) memory was not cleared. Thoroughly check connectors for looseness, poor connection, bending, corrosion, contamination, deterioration or damage. Repair or replace as necessary and go to "Verification of vehicle repair" procedure.

**NO**

▶ Go to "Terminal & connector inspection " procedure.

## TERMINAL & CONNECTOR INSPECTION ECA3B290

Refer to DTC P0743.

## POWER SUPPLY CIRCUIT INSPECTION EAC8F5C7

Refer to DTC P0743.

## SIGNAL CIRCUIT INSPECTION E63BEBD5

1. Check signal circuit open inspection

   1) Ignition "OFF".

   2) Disconnect "A/T SOLENOID VALVE" connector and "PCM/TCM" connector.

   3) Measure resistance between terminal "11" of the ATM SOLENOID VALVE harness connector and terminal "22" of the PCM/TCM harness connector.

| |
|---|
| Specification: approx. 0 Ω |

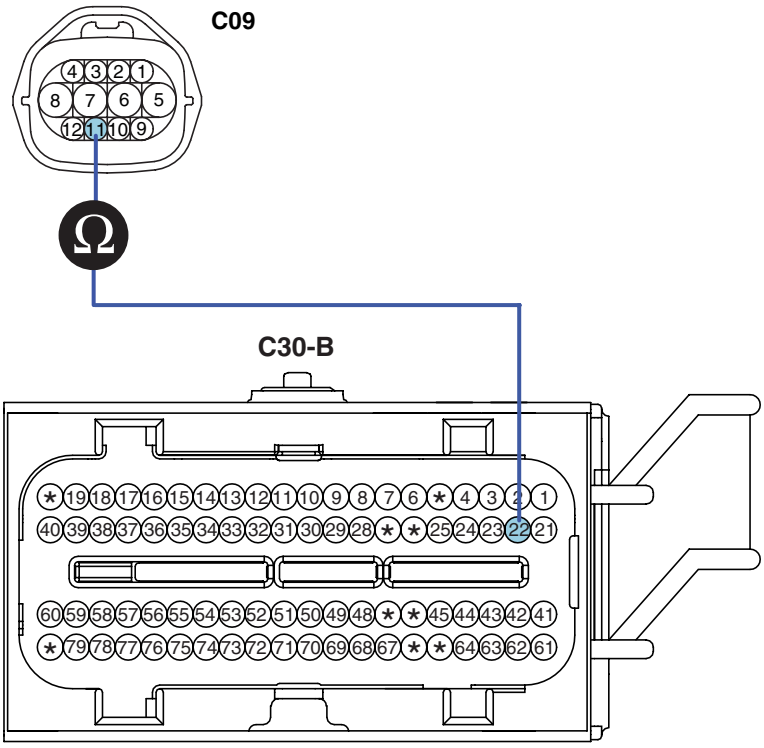


3. UD solenoid valve
4. 2ND solenoid valve
5. A/T battery
6. A/T battery
7. VF solenoid valve(+)
8. VF solenoid valve(-)
9. DCC solenoid valve
10.RED solenoid valve
**11. LR solenoid valve**
12. OD solenoid valve

42.OD solenoid valve control
45.2ND solenoid valve control
43.DCC solenoid valve control
44.RED solenoid valve
75.VF solenoid valve(+)
59.VF solenoid valve(-)
**22.LR solenoid valve control**
03.UD solenoid valve control

SCMAT6742L

4) Is resistance within specifications?

**YES**

▶ Go to "Check signal circuit short inspection" procedure.

**NO**

▶ Check for open in harness. Repair as necessary and go to "Verification of vehicle repair" procedure.

2. Check signal circuit short inspection

1) Ignition "OFF".

2) Disconnect "A/T SOLENOID VALVE" connector and "PCM/TCM" connector.

3) Measure resistance between terminal "11" of the ATM SOLENOID VALVE harness and chassis ground.

Specification: Infinite

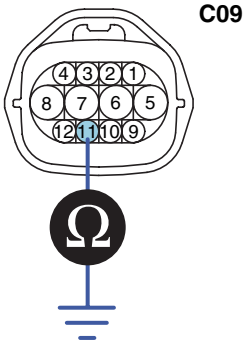


3. UD solenoid valve
4. 2ND solenoid valve
5. A/T battery
6. A/T battery
7. VF solenoid valve(+)
8. VF solenoid valve(-)
9. DCC solenoid valve
10.RED solenoid valve
**11. LR solenoid valve**
12. OD solenoid valve

SCMAT6743L

4) Is resistance within specifications?

**YES**

▶ Go to "Component inspection" procedure.

**NO**

▶ Check for short to ground in harness. Repair as necessary and go to "Verification of vehicle repair" procedure.

## COMPONENT INSPECTION E6D76BCE

1. CHECK SOLENOID VALVE

1) Ignition "OFF".

2) Disconnect "A/T SOLENOID VALVE" connector.

3) Measure resistance between terminal "5" and terminal "11" of the ATM SOLENOID VALVE harness connector.

Specification: Approximately 2.7~3.4 Ω [20°C(68°F)]

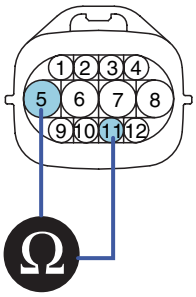


**C09**
Component Side

3. UD solenoid valve
4. 2ND solenoid valve
**5. A/T battery**
6. A/T battery
7. VF solenoid valve(+)
8. VF solenoid valve(-)
9. DCC solenoid valve
10.RED solenoid valve
**11. LR solenoid valve**
12. OD solenoid valve

SCMAT6744L

4) Is resistance within specification?

**YES**

▶ Go to "CHECK PCM/TCM" as below.

**NO**

▶ Replace LR SOLENOID VALVE as necessary and go to "Verification of vehicle repair" procedure.

2. CHECK PCM/TCM

1) Connect scantool to data link connector(DLC).

2) Ignition "ON" & Engine "OFF".

3) Select A/T solenoid valve actuator test and operate actuator test.

4) Can you hear operating sound for LR SOLENOID VALVE actuator testing function?

**YES**

▶ Go to "Verification of vehicle repair" procedure.

**NO**

▶ Replace PCM/TCM as necessary and go to "Verification of vehicle repair" procedure.

**ACTUATOR TEST CONDITION**

1. IG SWITCH ON
2. TRANSAXLE RANGE SWITCH is normal
3. P RANGE
4. Vehicle Speed 0mph(0km/h)
5. Throttle position sensor < 1V
6. IDLE SWITCH ON
7. ENGINE RPM 0

## VERIFICATION OF VEHICLE REPAIR EB0D2E1E

Refer to DTC P0743.

# DTC P0755 SHIFT CONTROL SOLENOID VALVE B CIRCUIT MALFUNCTION

## COMPONENT LOCATION E89B6127

Refer to DTC P0743.

## GENERAL DESCRIPTION EC5FC358

The Automatic transmission changes the gear position of the transmission by utilizing a combination of clutches and brakes, which are controlled by solenoid valves. This automatic transmission consists of a: LR (Low and Reverse Brake), 2ND (2nd Brake), UD (Under Drive Clutch), OD (Over Drive Clutch), REV (Reverse Clutch), and RED (Reduction Brake, only for 5 speed transmissions).
The UD Clutch is engaged in the 1st gear, 2nd gear and 3rd gear positions.

## DTC DESCRIPTION EEB2AA3F

The TCM checks the Under Drive Clutch Control Signal by monitoring the feedback signal from the solenoid valve drive circuit. If an unexpected signal is monitored (for example, high voltage is detected when low voltage is expected, or low voltage is detected when high voltage is expected), the TCM judges that Under Drive control solenoid circuit is malfunctioning and sets this code.

## DTC DETECTING CONDITION EFEA610C

| Item | Detecting Condition | Possible cause |
|---|---|---|
| **DTC Strategy** | • Check voltage range | • Open or short in circuit<br>• Faulty UD SOLENOID VALVE<br>• Faulty PCM/TCM |
| **Enable Conditions** | • 16V > Voltage Battery > 11V<br>• In gear state(no gear shifting) 500msec is passed from turn on the relay<br>• A/T Relay = ON<br>• Engine state = RUN | |
| **Threshold value** | • Out of available voltage range | |
| **Diagnostic Time** | • More than 2 seconds | |
| **Fail Safe** | • Locked in 3rd gear.(Control relay off) | |

## SPECIFICATION E690711E

Refer to DTC P0743.

## SIGNAL WAVEFORM E0532F7D

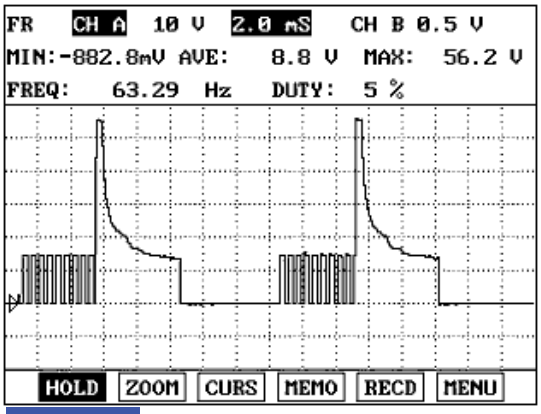


FIG.1)

FIG.1) : "N" → "D"

EKBF118A

## MONITOR SCANTOOL DATA E74D5AEA

1. Connect scantool to data link connector(DLC).
2. Engine "ON".
3. Monitor the "UD SOL. VALVE" parameter on the scantool.
4. Shift gear at each position.

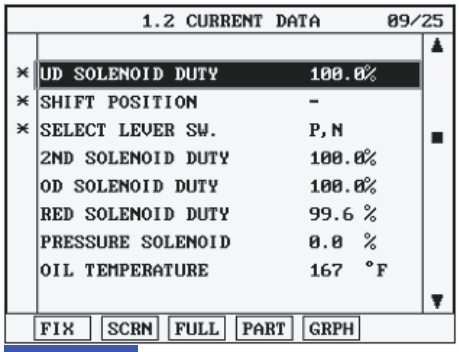


FIG.1)

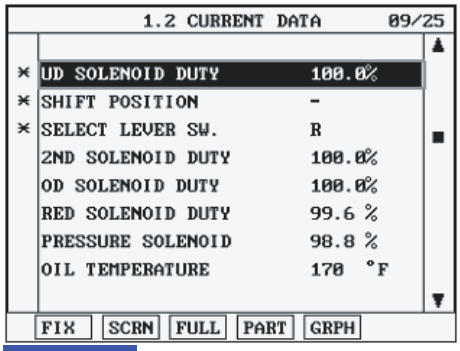


FIG.2)

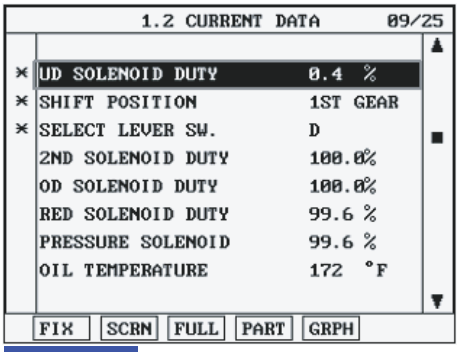


FIG.3)

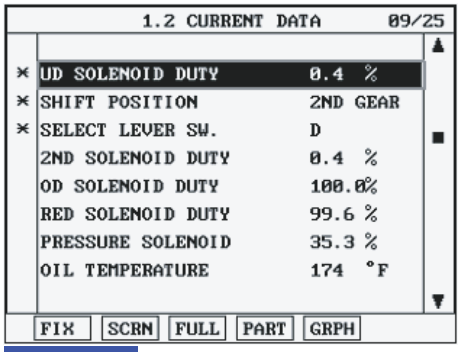


FIG.4)

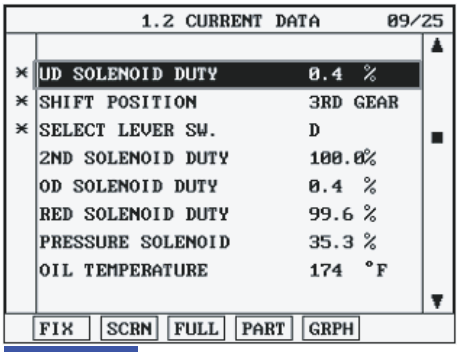


FIG.5)

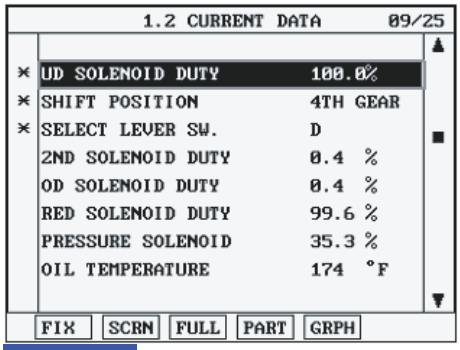


FIG.6)

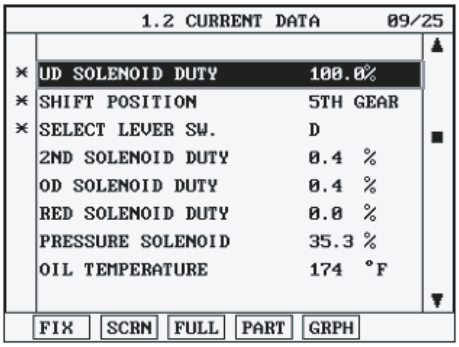


FIG.7)

FIG. 1) P,N
FIG. 2) "R"
FIG. 3) "D 1st" gear
FIG. 4) "2nd" gear
FIG. 5) "3rd" gear
FIG. 6) "4th" gear
FIG. 7) "5th" gear

SCMAT6745L

5. Does "UD SOLENOID DUTY " follow the reference data?

**YES**

▶ Fault is intermittent caused by poor contact in the sensor's and/or TCM(PCM)'s connector or was repaired and TCM(PCM) memory was not cleared. Thoroughly check connectors for looseness, poor connection, bending, corrosion, contamination, deterioration or damage. Repair or replace as necessary and go to "Verification of vehicle repair" procedure.

**NO**

▶ Go to "Terminal & connector inspection" procedure.

## TERMINAL & CONNECTOR INSPECTION E4BDD1F6

Refer to DTC P0743.

## POWER SUPPLY CIRCUIT INSPECTION E736436B

1. Disconnect "A/T SOLENOID VALVE" connector.
2. Measure voltage between terminal "6" of the sensor harness connector and chassis ground.
3. Turn ignition switch OFF → ON.

| Specification: 12V is measured only for approx. 0.5sec |
|---|

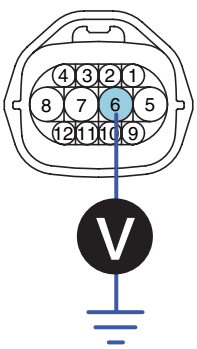


3. UD solenoid valve
4. 2ND solenoid valve
5. A/T battery
6. A/T battery
7. VF solenoid valve(+)
8. VF solenoid valve(-)
9. DCC solenoid valve
10.RED solenoid valve
11. LR solenoid valve
12. OD solenoid valve

SCMAT6746L

4. Is voltage within specifications?

**YES**

▶ Go to "Signal circuit inspection" procedure.

**NO**

▶ Check that A/T-20A fuse in engine room junction is installed or not blown.
▶ Check for open in harness. Repair as necessary and go to "Verification of vehicle repair" procedure.

## SIGNAL CIRCUIT INSPECTION E5D6EC84

1. Check signal circuit open inspection

   1) Ignition "OFF".

   2) Disconnect "A/T SOLENOID VALVE" connector and "PCM/TCM" connector.

   3) Measure resistance between terminal "3" of the ATM SOLENOID VALVE harness connector and terminal "3" of the PCM/TCM harness connector.

Specification: approx. 0 Ω

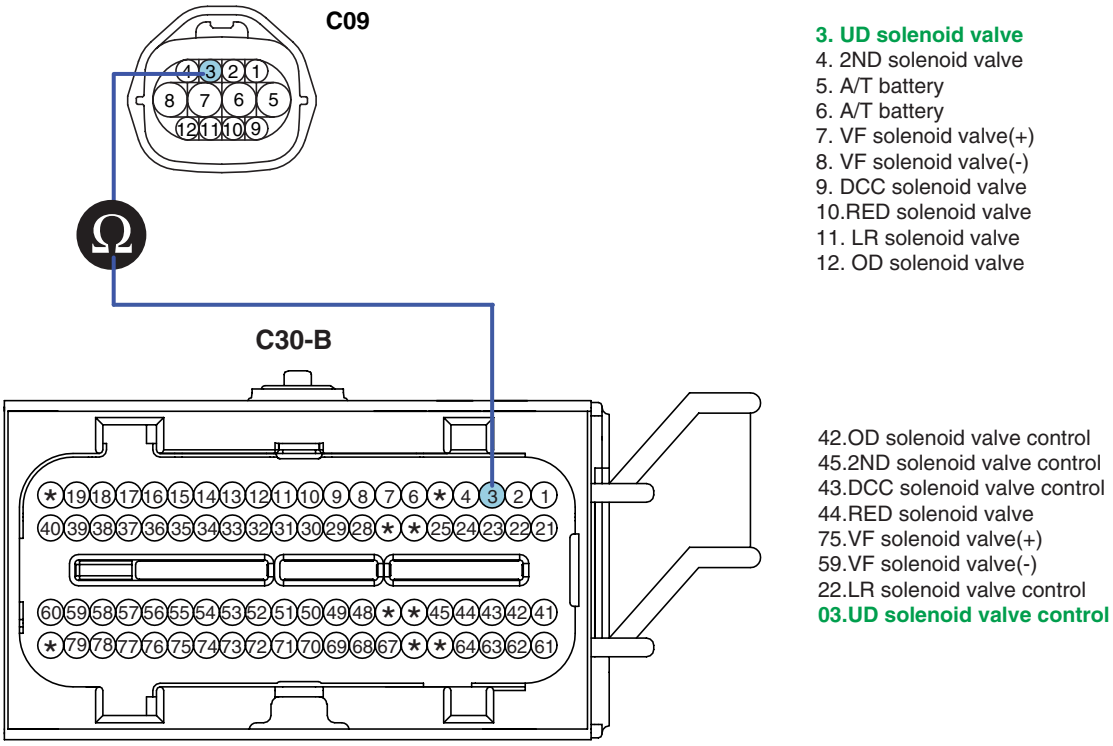


SCMAT6747L

   4) Is resistance within specifications?

**YES**

▶ Go to "Check signal circuit short inspection" procedure.

**NO**

▶ Check for open in harness. Repair as necessary and go to "Verification of vehicle repair" procedure.

2. Check signal circuit short inspection

   1) Ignition "OFF".

   2) Disconnect "A/T SOLENOID VALVE" connector and "PCM/TCM" connector.

   3) Measure resistance between terminal "3" of the ATM SOLENOID VALVE harness and chassis ground.

Specification: Infinite

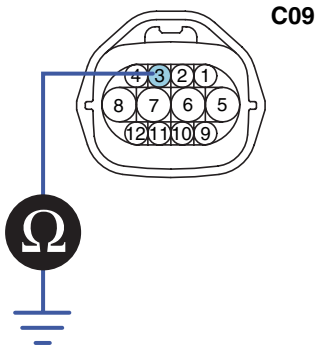


**3. UD solenoid valve**
4. 2ND solenoid valve
5. A/T battery
6. A/T battery
7. VF solenoid valve(+)
8. VF solenoid valve(-)
9. DCC solenoid valve
10.RED solenoid valve
11. LR solenoid valve
12. OD solenoid valve

SCMAT6748L

4) Is resistance within specifications?

**YES**

▶ Go to "Component inspection" procedure.

**NO**

▶ Check for short to ground in harness. Repair as necessary and go to "Verification of vehicle repair" procedure.

## COMPONENT INSPECTION EB8A623F

1. CHECK SOLENOID VALVE

1) Ignition "OFF".

2) Disconnect "A/T SOLENOID VALVE" connector.

3) Measure resistance between terminal "3" and terminal "6" of the ATM SOLENOID VALVE harness connector.

Specification: Approximately 2.7~3.4 Ω [20°C(68°F)]

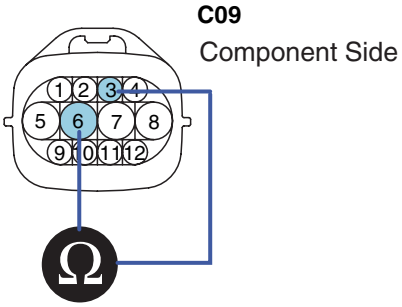


**3. UD solenoid valve**
4. 2ND solenoid valve
5. A/T battery
**6. A/T battery**
7. VF solenoid valve(+)
8. VF solenoid valve(-)
9. DCC solenoid valve
10.RED solenoid valve
11. LR solenoid valve
12. OD solenoid valve

SCMAT6749L

4) Is resistance within specification?

**YES**

▶ Go to "CHECK PCM/TCM" as below.

**NO**

▶ Replace UD SOLENOID VALVE as necessary and go to "Verification of vehicle repair" procedure.

2. CHECK PCM/TCM

1) Connect scantool to data link connector(DLC).

2) Ignition "ON" & Engine "OFF".

3) Select ATM solenoid valve actuator test and operate actuator test.

4) Can you hear operating sound for UD SOLENOID VALVE actuator testing function?

**YES**

▶ Go to "Verification of vehicle repair" procedure.

**NO**

▶ Replace PCM/TCM as necessary and go to "Verification of vehicle repair" procedure.

**ACTUATOR TEST CONDITION**

1. IG SWITCH ON
2. TRANSAXLE RANGE SWITCH is normal
3. P RANGE
4. Vehicle Speed 0mph(0km/h)
5. Throttle position sensor < 1V
6. IDLE SWITCH ON
7. ENGINE RPM 0

## VERIFICATION OF VEHICLE REPAIR ECF2D3A5

Refer to DTC P0743.

# DTC P0760 SHIFT CONTROL SOLENOID VALVE C CIRCUIT MALFUNCTION

## COMPONENT LOCATION E1994EC6

Refer to DTC P0743.

## GENERAL DESCRIPTION EE1A17C7

The Automatic transmission changes the gear position of the transmission by utilizing a combination of clutches and brakes, which are controlled by solenoid valves. This automatic transmission consists of a: LR (Low and Reverse Brake), 2ND (2nd Brake), UD (Under Drive Clutch), OD (Over Drive Clutch), REV (Reverse Clutch), and RED (Reduction Brake, only for 5 speed transmissions).
The 2ND Brake is engaged in the 2nd gear and 4th gear positions.

## DTC DESCRIPTION E2AC72C5

The TCM checks the Under Drive Clutch Control Signal by monitoring the feedback signal from the solenoid valve drive circuit. If an unexpected signal is monitored, (For example, high voltage is detected when low voltage is expected or low voltage is detected when high voltage is expected) the TCM judges that 2nd Brake drive control solenoid circuit is malfunctioning and sets this code.

## DTC DETECTING CONDITION EE1D0BD8

| Item | Detecting Condition | Possible cause |
|---|---|---|
| **DTC Strategy** | • Check voltage range | • Open or short in circuit<br>• Faulty 2ND SOLENOID VALVE<br>• Faulty PCM/TCM |
| **Enable Conditions** | • 16V > Voltage Battery > 11V<br>• In gear state(no gear shifting) 500msec is passed from turn on the relay<br>• A/T Relay = ON<br>• Engine state = RUN | |
| **Threshold value** | • Out of available voltage range | |
| **Diagnostic Time** | • More than 2 seconds | |
| **Fail Safe** | • Locked in 3rd gear.(Control relay off) | |

## SPECIFICATION E84E22AA

Refer to DTC P0743.

## SIGNAL WAVEFORM EF2EFDF9

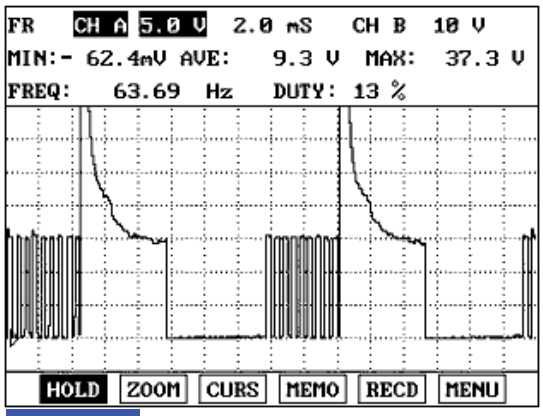


FIG.1)

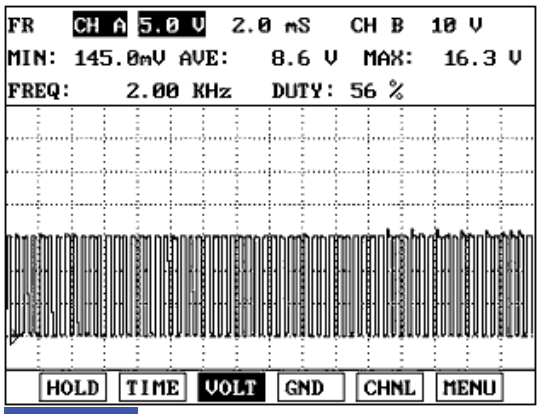


FIG.2)

FIG. 1) "2ND" gear → "1st" gear
FIG. 2) "P & N" Range

EKBF119A

## MONITOR SCANTOOL DATA EF772FBB

1. Connect scantool to data link connector(DLC).
2. Engine "ON".
3. Monitor the "2nd SOL. VALVE" parameter on the scantool.
4. Shift gear at each position.

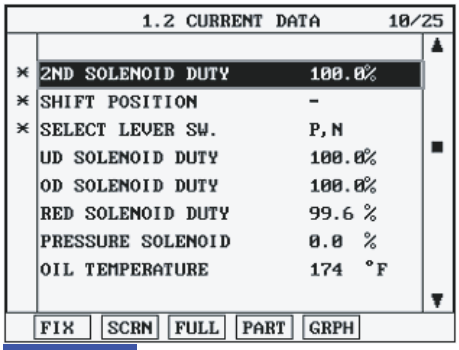


FIG.1)

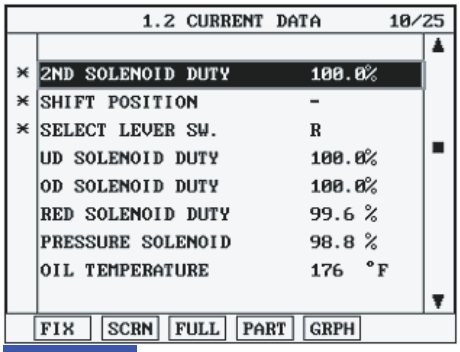


FIG.2)

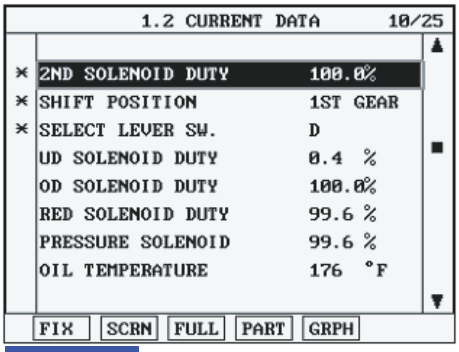


FIG.3)

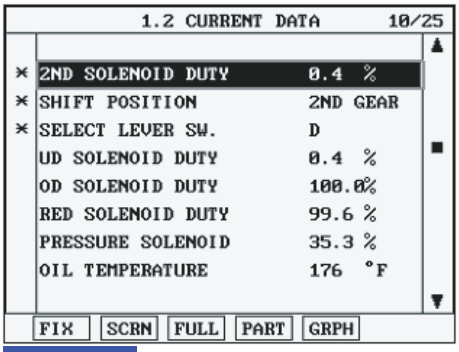


FIG.4)

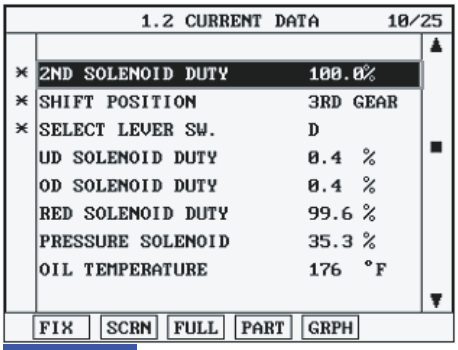


FIG.5)

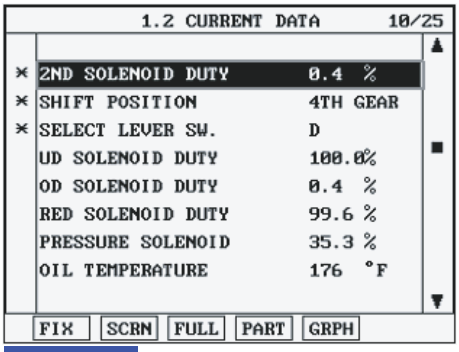


FIG.6)

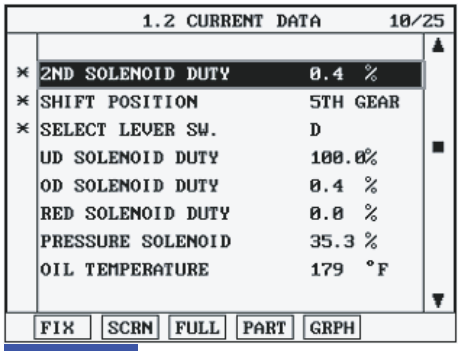


FIG.7)

FIG. 1) P,N
FIG. 2) "R"
FIG. 3) "D 1st" gear
FIG. 4) "2nd" gear
FIG. 5) "3rd" gear
FIG. 6) "4th" gear
FIG. 7) "5th" gear

SCMAT6750L

5. Does "2nd SOLENOID DUTY " follow the reference data?

**YES**

▶ Fault is intermittent caused by poor contact in the sensor's and/or TCM(PCM)'s connector or was repaired and TCM(PCM) memory was not cleared. Thoroughly check connectors for looseness, poor connection, bending, corrosion, contamination, deterioration or damage. Repair or replace as necessary and go to "Verification of vehicle repair" procedure.

**NO**

▶ Go to "Terminal & connector inspection " procedure.

## TERMINAL & CONNECTOR INSPECTION ED8CD3AF

Refer to DTC P0743.

## POWER SUPPLY CIRCUIT INSPECTION EDF39BB7

1. Disconnect "A/T SOLENOID VALVE" connector.
2. Measure voltage between terminal "6" of the sensor harness connector and chassis ground.
3. Turn ignition switch OFF → ON.

| Specification: 12V is measured only for approx. 0.5sec |
|---|

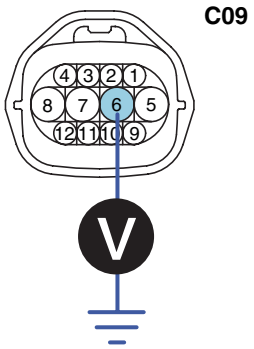


3. UD solenoid valve
4. 2ND solenoid valve
5. A/T battery
6. **A/T battery**
7. VF solenoid valve(+)
8. VF solenoid valve(-)
9. DCC solenoid valve
10. RED solenoid valve
11. LR solenoid valve
12. OD solenoid valve

SCMAT6746L

4. Is voltage within specifications?

**YES**

▶ Go to "Signal circuit inspection" procedure.

**NO**

▶ Check that A/T-20A fuse in engine room junction is installed or not blown.
▶ Check for open in harness. Repair as necessary and go to "Verification of vehicle repair" procedure.

## SIGNAL CIRCUIT INSPECTION EBE86DF0

1. Check signal circuit open inspection

   1) Ignition "OFF".

   2) Disconnect "A/T SOLENOID VALVE" connector and "PCM" connector.

   3) Measure resistance between terminal "4" of the ATM SOLENOID VALVE harness connector and terminal "45" of the PCM/TCM harness connector.

Specification: approx. 0 Ω

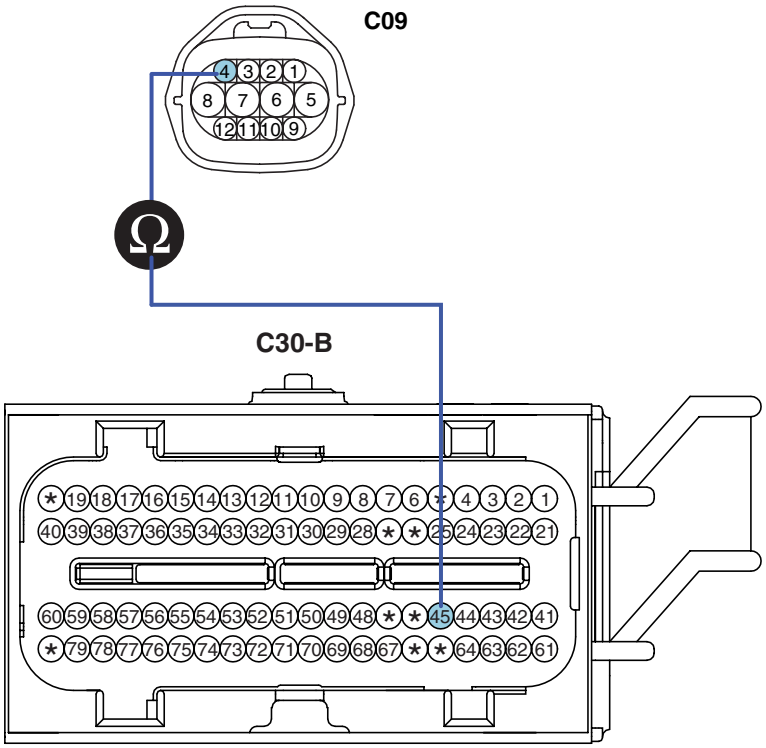


3. UD solenoid valve
**4. 2ND solenoid valve**
5. A/T battery
6. A/T battery
7. VF solenoid valve(+)
8. VF solenoid valve(-)
9. DCC solenoid valve
10.RED solenoid valve
11. LR solenoid valve
12. OD solenoid valve

42.OD solenoid valve control
**45.2ND solenoid valve control**
43.DCC solenoid valve control
44.RED solenoid valve
75.VF solenoid valve(+)
59.VF solenoid valve(-)
22.LR solenoid valve control
03.UD solenoid valve control

SCMAT6751L

   4) Is resistance within specifications?

   **YES**

   ▶ Go to "Check signal circuit short inspection" procedure.

   **NO**

   ▶ Check for open in harness. Repair as necessary and go to "Verification of vehicle repair" procedure.

2. Check signal circuit short inspection

   1) Ignition "OFF".

   2) Disconnect "A/T SOLENOID VALVE" connector and "PCM/TCM" connector.

   3) Measure resistance between terminal "4" of the ATM SOLENOID VALVE harness and chassis ground.

Specification: Infinite

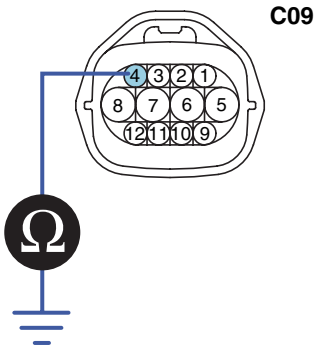


3. UD solenoid valve
**4. 2ND solenoid valve**
5. A/T battery
6. A/T battery
7. VF solenoid valve(+)
8. VF solenoid valve(-)
9. DCC solenoid valve
10.RED solenoid valve
11. LR solenoid valve
12. OD solenoid valve

SCMAT6752L

4) Is resistance within specifications?

**YES**

▶ Go to "Component inspection" procedure.

**NO**

▶ Check for short to ground in harness. Repair as necessary and go to "Verification of vehicle repair" procedure.

## COMPONENT INSPECTION E4CEF6BC

1. CHECK SOLENOID VALVE

1) Ignition "OFF".

2) Disconnect "A/T SOLENOID VALVE" connector.

3) Measure resistance between terminal "4" and terminal "6" of the ATM SOLENOID VALVE harness connector.

| |
|---|
| Specification: Approximately 2.7~3.4 Ω [20°C(68°F)] |

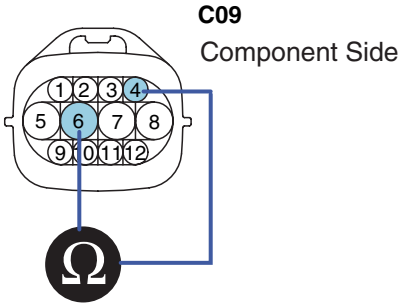


3. UD solenoid valve
**4. 2ND solenoid valve**
5. A/T battery
**6. A/T battery**
7. VF solenoid valve(+)
8. VF solenoid valve(-)
9. DCC solenoid valve
10.RED solenoid valve
11. LR solenoid valve
12. OD solenoid valve

SCMAT6753L

4) Is resistance within specification?

**YES**

▶ Go to "CHECK PCM/TCM" as below.

**NO**

▶ Replace 2nd SOLENOID VALVE as necessary and go to "Verification of vehicle repair" procedure.

2. CHECK PCM/TCM

1) Connect scantool to data link connector(DLC).

2) Ignition "ON" & Engine "OFF".

3) Select A/T solenoid valve actuator test and operate actuator test.

4) Can you hear operating sound for 2nd SOLENOID VALVE actuator testing function?

**YES**

▶ Go to "Verification of vehicle repair" procedure.

**NO**

▶ Replace PCM/TCM as necessary and go to "Verification of vehicle repair" procedure.

**ACTUATOR TEST CONDITION**

1. IG SWITCH ON
2. TRANSAXLE RANGE SWITCH is normal
3. P RANGE
4. Vehicle Speed 0mph(0km/h)
5. Throttle position sensor < 1V
6. IDLE SWITCH ON
7. ENGINE RPM 0

## VERIFICATION OF VEHICLE REPAIR E281AE36

Refer to DTC P0743.

# DTC P0765 SHIFT CONTROL SOLENOID VALVE D CIRCUIT MALFUNCTION

## COMPONENT LOCATION EED27453

Refer to DTC P0743.

## GENERAL DESCRIPTION E331DF52

The Automatic transmission changes the gear position of the transmission by utilizing a combination of clutches and brakes, which are controlled by solenoid valves. This automatic transmission consists of a: LR (Low and Reverse Brake), 2ND (2nd Brake), UD (Under Drive Clutch), OD (Over Drive Clutch), REV (Reverse Clutch), and RED (Reduction Brake, only for 5 speed transmissions).
The OD Clutch is engaged in the 3rd gear and 4th gear positions.

## DTC DESCRIPTION EC62EBFF

The TCM checks the Under Drive Clutch Control Signal by monitoring the feedback signal from the solenoid valve drive circuit. If an unexpected signal is monitored (for example, high voltage is detected when low voltage is expected or low voltage is detected when high voltage is expected), the TCM judges that the OVER DRIVE CLUTCH drive control solenoid circuit is malfunctioning and sets this code.

## DTC DETECTING CONDITION EAECAFE2

| Item | Detecting Condition | Possible cause |
|---|---|---|
| **DTC Strategy** | • Check voltage range | • Open or short in circuit<br>• Faulty OD SOLENOID VALVE<br>• Faulty PCM/TCM |
| **Enable Conditions** | • 16V > Voltage Battery > 11V<br>• In gear state(no gear shifting) 500msec is passed from turn on the relay<br>• A/T Relay = ON<br>• Engine state = RUN | |
| **Threshold value** | • Out of available voltage range | |
| **Diagnostic Time** | • More than 2 seconds | |
| **Fail Safe** | • Locked in 3rd gear.(Control relay off) | |

## SPECIFICATION E765188E

Refer to DTC P0743.

## SIGNAL WAVEFORM E50A1C64

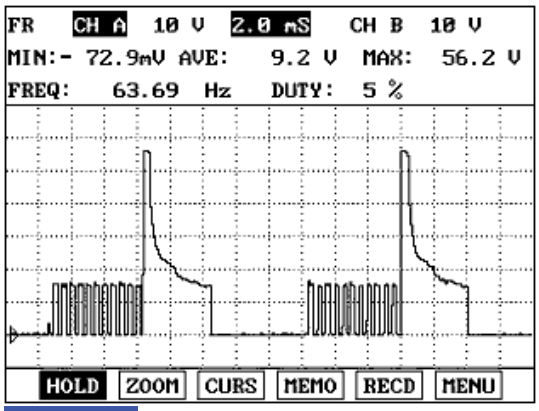


FIG.1)

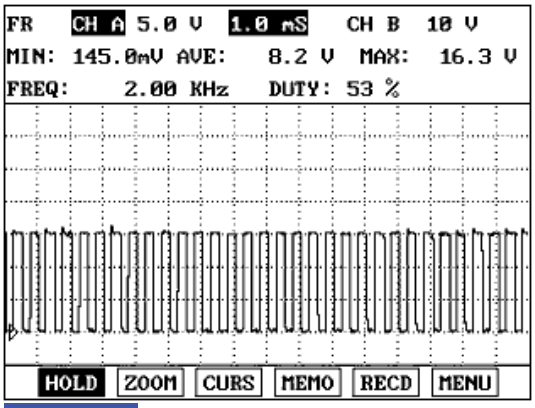


FIG.2)

FIG. 1) "3rd" gear → "2nd" gear
FIG. 2) "P & N" Range

EKBF120A

## MONITOR SCANTOOL DATA E41DE2CD

1. Connect scantool to data link connector(DLC).
2. Engine "ON".
3. Monitor the "OD SOL. VALVE" parameter on the scantool.
4. Shift gear at each position.

Specification: 2nd gear → 0.0%, 3nd gear → 100%

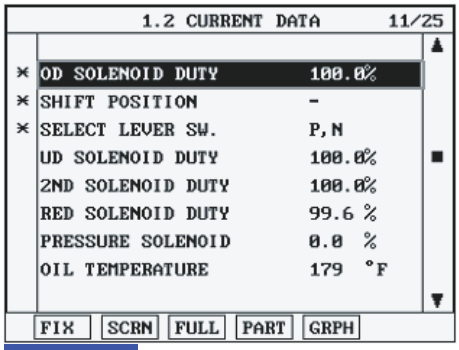


FIG.1)

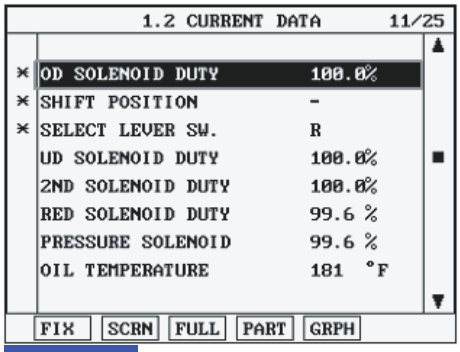


FIG.2)

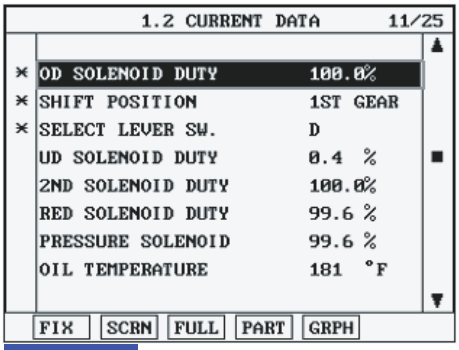


FIG.3)

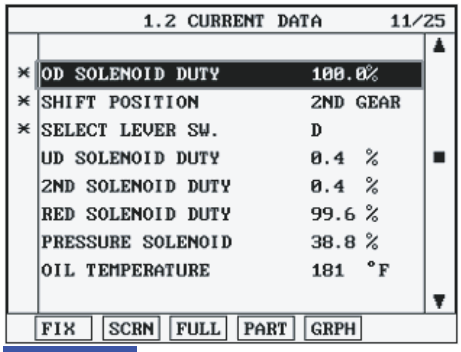


FIG.4)

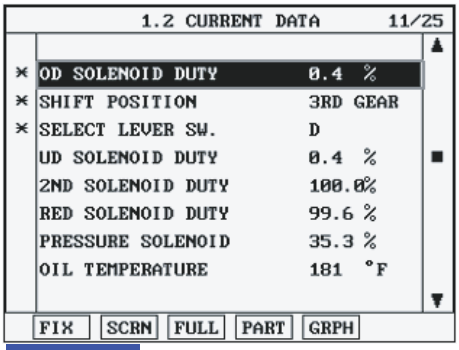


FIG.5)

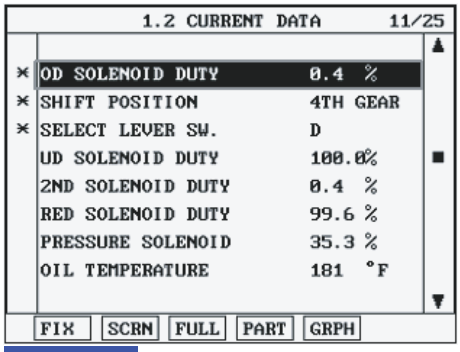


FIG.6)

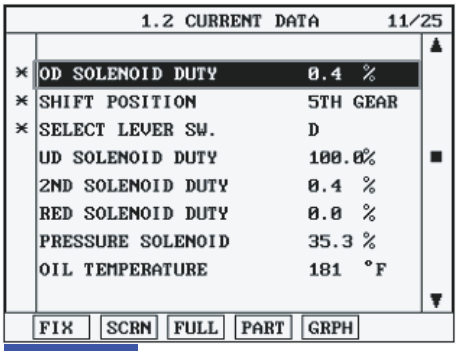


FIG.7)

FIG. 1) P,N
FIG. 2) "R"
FIG. 3) "D 1st" gear
FIG. 4) "2nd" gear
FIG. 5) "3rd" gear
FIG. 6) "4th" gear
FIG. 7) "5th" gear

SCMAT6755L

5. Does "OD SOLENOID DUTY " follow the reference data?

**YES**

▶ Fault is intermittent caused by poor contact in the sensor's and/or TCM(PCM)'s connector or was repaired and TCM(PCM) memory was not cleared. Thoroughly check connectors for looseness, poor connection, bending, corrosion, contamination, deterioration or damage. Repair or replace as necessary and go to "Verification of vehicle repair" procedure.

**NO**

▶ Go to "Terminal & connector inspection " procedure.

## TERMINAL & CONNECTOR INSPECTION EE0FBE41

Refer to DTC P0743.

## POWER SUPPLY CIRCUIT INSPECTION E4ECB63A

1. Disconnect "A/T SOLENOID VALVE" connector.
2. Measure voltage between terminal "6" of the sensor harness connector and chassis ground.
3. Turn ignition switch OFF → ON.

| |
|---|
| Specification: 12V is measured only for approx. 0.5sec |

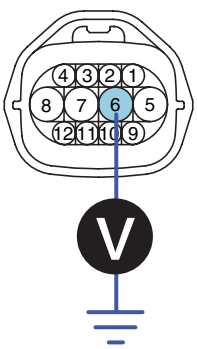


3. UD solenoid valve
4. 2ND solenoid valve
5. A/T battery
6. A/T battery
7. VF solenoid valve(+)
8. VF solenoid valve(-)
9. DCC solenoid valve
10.RED solenoid valve
11. LR solenoid valve
12. OD solenoid valve

SCMAT6746L

4. Is voltage within specifications?

**YES**

▶ Go to "Signal circuit inspection" procedure.

**NO**

▶ Check that A/T-20A fuse in engine room junction is installed or not blown.
▶ Check for open in harness. Repair as necessary and go to "Verification of vehicle repair" procedure.

## SIGNAL CIRCUIT INSPECTION ED6CEE06

1. Check signal circuit open inspection

   1) Ignition "OFF".

   2) Disconnect "A/T SOLENOID VALVE" connector and "PCM/TCM" connector.

   3) Measure resistance between terminal "12" of the ATM SOLENOID VALVE harness connector and terminal "42" of the PCM/TCM harness connector.

Specification: approx. 0 Ω

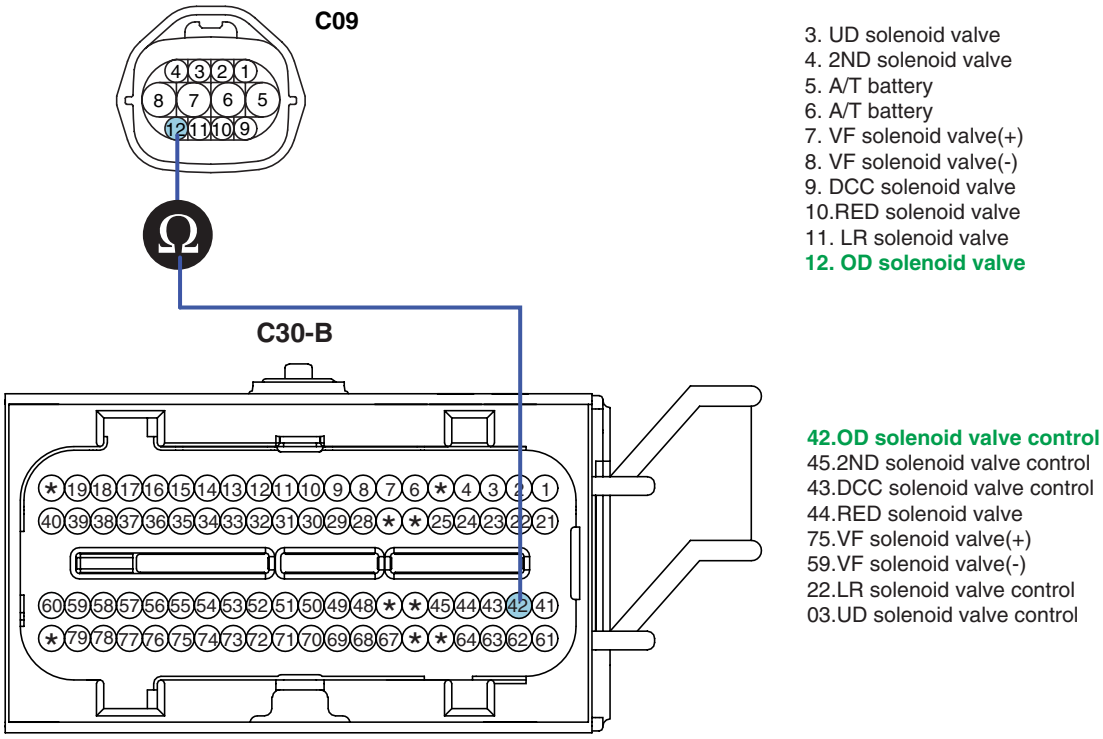


SCMAT6756L

   4) Is resistance within specifications?

   **YES**

   ▶ Go to "Check signal circuit short inspection" procedure.

   **NO**

   ▶ Check for open in harness. Repair as necessary and go to "Verification of vehicle repair" procedure.

2. Check signal circuit short inspection

   1) Ignition "OFF".

   2) Disconnect "A/T SOLENOID VALVE" connector and "PCM/TCM" connector.

   3) Measure resistance between terminal "12" of the ATM SOLENOID VALVE harness and chassis ground.

Specification: Infinite

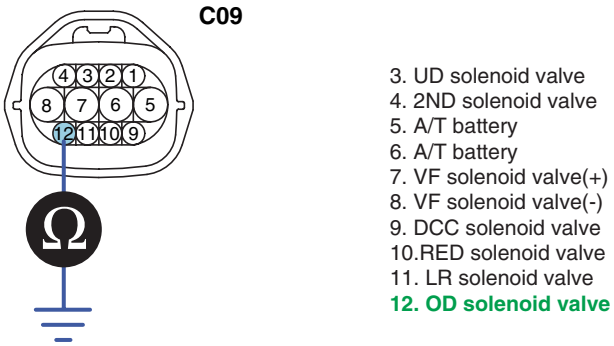


SCMAT6757L

4) Is resistance within specifications?

**YES**

▶ Go to "Component inspection" procedure.

**NO**

▶ Check for short to ground in harness. Repair as necessary and go to "Verification of vehicle repair" procedure.

## COMPONENT INSPECTION E39F8164

1. CHECK SOLENOID VALVE

1) Ignition "OFF".

2) Disconnect "A/T SOLENOID VALVE" connector.

3) Measure resistance between terminal "6" and terminal "12" of the ATM SOLENOID VALVE harness connector.

Specification: Approximately 2.7~3.4 Ω [20°C(68°F)]

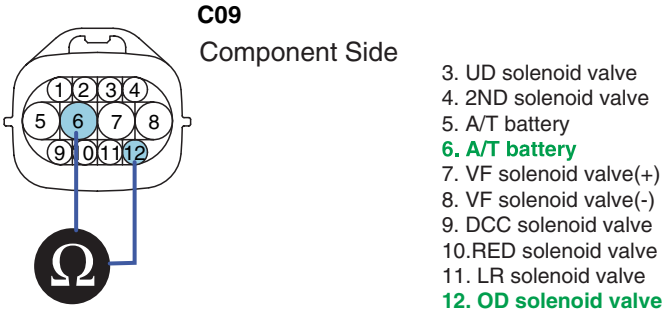


SCMAT6758L

4) Is resistance within specification?

**YES**

▶ Go to "CHECK PCM/TCM" as below.

**NO**

▶ Replace OD SOLENOID VALVE as necessary and go to "Verification of vehicle repair" procedure.

2. CHECK PCM/TCM

1) Connect scantool to data link connector(DLC).

2) Ignition "ON" & Engine "OFF".

3) Select A/T solenoid valve actuator test and operate actuator test.

4) Can you hear operating sound for OD SOLENOID VALVE actuator testing function?

**YES**

▶ Go to "Verification of vehicle repair" procedure.

**NO**

▶ Replace PCM/TCM and go to "Verification of vehicle repair" procedure.

**ACTUATOR TEST CONDITION**

1. IG SWITCH ON
2. TRANSAXLE RANGE SWITCH is normal
3. P RANGE
4. Vehicle Speed 0mph(0km/h)
5. Throttle position sensor < 1V
6. IDLE SWITCH ON
7. ENGINE RPM 0

## VERIFICATION OF VEHICLE REPAIR E4B7ED91

Refer to DTC P0743.

# DTC P0885 A/T RELAY CIRCUIT MALFUNCTION

## COMPONENT LOCATION ECA1B33F

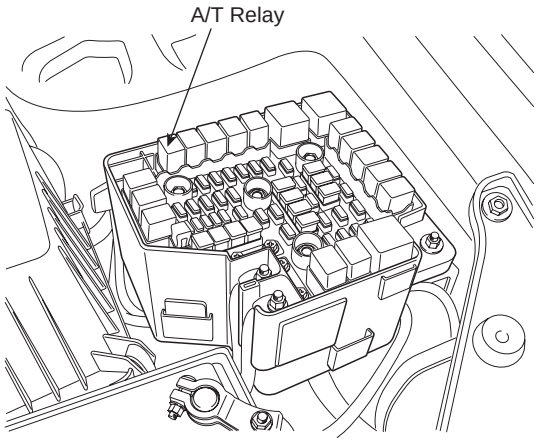


SCMAT6759L

## GENERAL DESCRIPTION E834BA5A

The HIVEC Automatic Transmission supplies the power to the solenoid valves by way of a control relay. When the TCM sets the relay to ON, the relay operates and the battery power is supplied to all the solenoid valves. When the TCM sets the relay to OFF, all solenoid valve power is shut off and the transmission is held in the 3rd gear position. (Fail Safe Mode ).

## DTC DESCRIPTION EF467A4B

The TCM checks the A/T control relay signal by monitoring the control signal. If, after the ignition key is turned on, an unexpected voltage value, which is quite a bit lower than battery voltage is detected, the TCM sets this code.

## DTC DETECTING CONDITION ED9294F2

| Item | Detecting Condition | Possible cause |
|---|---|---|
| **DTC Strategy** | • Check voltage range | • Open or short in circuit<br>• Faulty A/T control relay<br>• Faulty PCM/TCM |
| **Enable Conditions** | • 16V > Voltage Battery > 11V<br>• Time after TCM turns on > 0.5sec | |
| **Threshold value** | • 16V > Voltage Battery > 11V | |
| **Diagnostic Time** | • more than 1 second | |
| **Fail Safe** | • Locked in 3rd gear.(control relay off) | |

## MONITOR SCANTOOL DATA EA054F02

1. Connect scantool to data link connector(DLC).
2. Ignition "ON" & Engine "OFF".
3. Monitor the "A/T CON. RELAY VOLT" parameter on the scantool.

Specification : Approx. B+

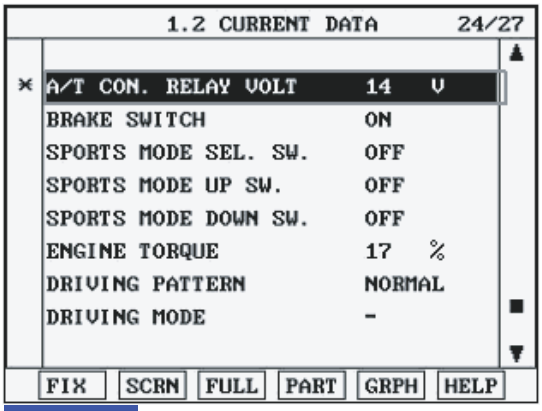


FIG.1)

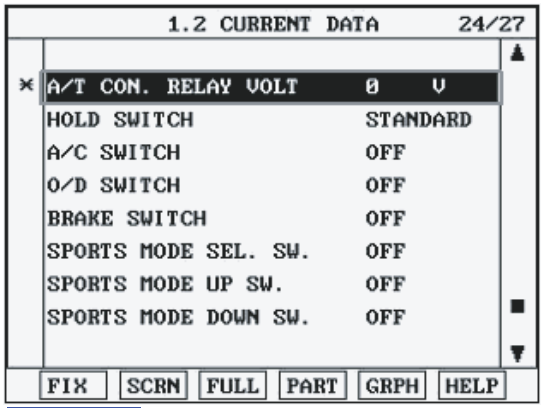


FIG.2)

FIG. 1) Normal status for "A/T RELAY"
FIG. 2) Open status for "A/T RELAY"

LLLG121A

4. Is A/T RELAY VOLT within specifications?

**YES**

▶ Fault is intermittent caused by poor contact in the sensor's and/or TCM(PCM)'s connector or was repaired and TCM(PCM) memory was not cleared. Thoroughly check connectors for looseness, poor connection, bending, corrosion, contamination, deterioration or damage. Repair or replace as necessary and go to "Verification of Vehicle Repair" procedure.

**NO**

▶ Go to "Terminal & Connector Inspection" procedure.

## TERMINAL & CONNECTOR INSPECTION E35CA1F8

1. Many malfunctions in the electrical system are caused by poor harness and terminals. Faults can also be caused by interference from other electrical systems, and mechanical or chemical damage.

2. Thoroughly check connectors for looseness, poor connection, bending, corrosion, contamination, deterioration, or damage.

3. Has a problem been found?

**YES**

▶ Repair as necessary and then go to "Verification of Vehicle Repair" procedure.

**NO**

▶ Go to "Power circuit inspection" procedure.

## POWER SUPPLY CIRCUIT INSPECTION ECAC216B

1. Ignition "ON" & Engine "OFF".

2. Disconnect the "A/T CONTROL RELAY" connector.

3. Measure the voltage between terminal "1" of the "A/T CONTROL RELAY" harness(JC101) connector and chassis ground.

Specification : Approx. B+

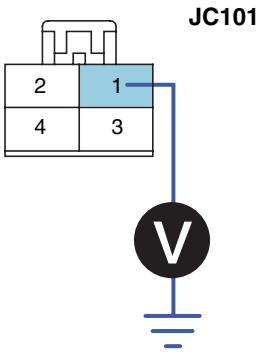


1.Battery
2.Ground
3.Battery Voltage
(Supplying Power to solenoid valve)
4.A/T control relay

LLLG121B

4. Is voltage within specifications?

**YES**

▶ Go to "Signal circuit inspection" procedure.

**NO**

▶ Check that A/T-20A Fuse in engine room junction is installed or not blown.
▶ Check for Open in harness. Repair as necessary and Go to "Verification of Vehicle Repair" procedure.

## SIGNAL CIRCUIT INSPECTION ED1FB39A

1. CHECK A/T control relay harness

   1) Ignition "OFF".

   2) Disconnect the "A/T CONTROL RELAY" connector.

   3) Measure the voltage between terminal "4" of the "A/T CONTROL RELAY" harness connector and chassis ground.

   4) Engine OFF → ON.

Specification: 12V is measured only for approx. 0.5sec

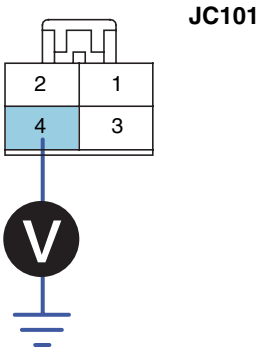


1.Battery
2.Ground
3.Battery Voltage
(Supplying Power to solenoid valve)
4.A/T control relay

LLLG121C

5) Is voltage within specifications?

**YES**

▶ Go to "Check Supplying Power to solenoid valve" procedure.

**NO**

▶ Check for open in harness. Repair as necessary and Go to "Verification of Vehicle Repair" procedure.
▶ If signal circuit is OK, Substitute with a known-good PCM/TCM and check for proper operation. If the problem is corrected, replace PCM/TCM and then go to "Verification of Vehicle Repair" procedure.

2. CHECK Supplying Power to solenoid valve harness

1) Ignition "OFF".

2) Disconnect the "A/T CONTROL RELAY" and PCM/TCM connector.

3) Measure the resistance between terminal "3" of the "A/T CONTROL RELAY" harness connector and terminal "60" of the PCM/TCM harness connector.

| |
|---|
| Specification : Approx. 0 Ω |

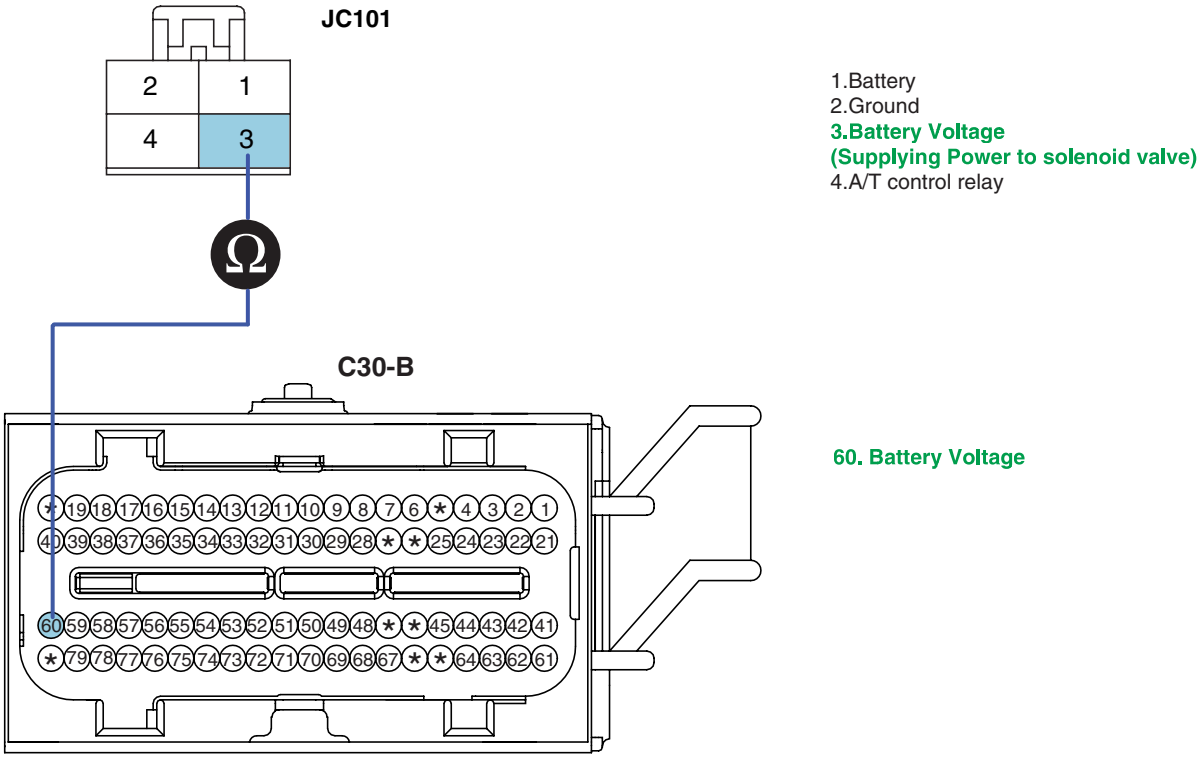


SCMAT6760L

4) Is resistance within specifications?

**YES**

▶ Go to "Ground circuit inspection" procedure.

**NO**

▶ Check that A/T-15A Fuse in engine room junction is installed or not blown.
▶ Check for open in harness. Repair as necessary and Go to "Verification of Vehicle Repair" procedure.

## GROUND CIRCUIT INSPECTION E49F4B4D

1. Ignition "OFF".
2. Connect the "A/T CONTROL RELAY" connector.
3. Measure the resistance between terminal "2" of the "A/T CONTROL RELAY" harness connector and chassis ground.

| Specification : Approx. 0 Ω |
|---|

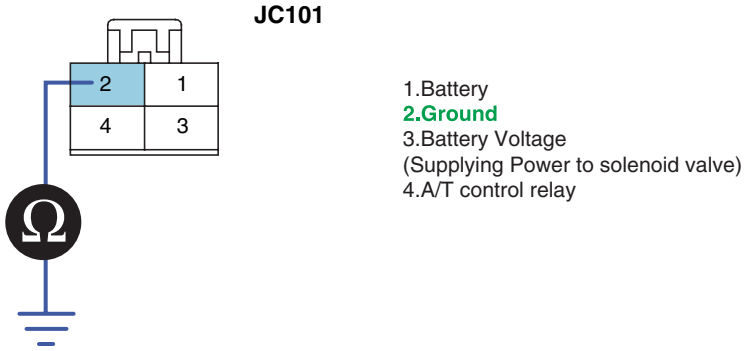


LLLG121E

4. Is resistance within specifications?

**YES**

▶ Thoroughly check connectors for looseness, poor connection, bending, corrosion, contamination, deterioration, or damage. Repair or replace as necessary and then go to "Verification of Vehicle Repair" procedure.

**NO**

▶ Replace FRONT AREA MODULE and then go to "Verification of Vehicle Repair" procedure.

## VERIFICATION OF VEHICLE REPAIR E048B9EA

After a repair, it is essential to verify that the fault has been corrected.

1. Connect scantool and select "Diagnostic Trouble Codes(DTCs)" mode.
2. Using a scantool, Clear DTC.
3. Operate the vehicle within DTC Enable conditions in General information.
4. Are any DTCs present ?

**YES**

▶ Go to the applicable troubleshooting procedure.

**NO**

▶ System performing to specification at this time.

# DTC P0890 AT RELAY - LOW CIRCUIT

## COMPONENT LOCATION E2C4DADB

Refer to DTC P0885.

## GENERAL DESCRIPTION EF65CE2B

Refer to DTC P0885.

## DTC DESCRIPTION EBCD7EE4

Refer to DTC P0885.

## DTC DETECTING CONDITION E55DA70D

| Item | Detecting Condition | Possible cause |
|---|---|---|
| **DTC Strategy** | • Check voltage range | • Open or short in circuit<br>• Faulty A/T control relay<br>• Faulty PCM/TCM |
| **Enable Conditions** | • 16V > Voltage Battery > 11V<br>• Time after TCM turns on > 0.5sec | |
| **Threshold value** | • Feedback Voltage ≤ 0.5V | |
| **Diagnostic Time** | • more than 1 second | |
| **Fail Safe** | • Locked in 3rd gear.(control relay off) | |

## MONITOR SCANTOOL DATA E6A54CCB

Refer to DTC P0885.

## TERMINAL & CONNECTOR INSPECTION E264C8FD

Refer to DTC P0885.

## POWER SUPPLY CIRCUIT INSPECTION E951BEC5

Refer to DTC P0885.

## SIGNAL CIRCUIT INSPECTION E8967CCC

Refer to DTC P0885.

## GROUND CIRCUIT INSPECTION E5ACD2E7

Refer to DTC P0885.

## VERIFICATION OF VEHICLE REPAIR E8C0A417

Refer to DTC P0885.

# DTC P0891 AT RELAY - OPEN CIRCUIT

## COMPONENT LOCATION EE31B58B

Refer to DTC P0885.

## GENERAL DESCRIPTION EEEDFCCA

Refer to DTC P0885.

## DTC DESCRIPTION E9741811

Refer to DTC P0885.

## DTC DETECTING CONDITION E6AAEAD4

| Item | Detecting Condition | Possible cause |
|---|---|---|
| **DTC Strategy** | • Check voltage range | • Open or short in circuit<br>• Faulty A/T control relay<br>• Faulty PCM/TCM |
| **Enable Conditions** | • 16V > Voltage Battery > 11V<br>• Time after TCM turns on > 0.5sec | |
| **Threshold value** | • Feedback Voltage ≥ 20V | |
| **Diagnostic Time** | • more than 1 second | |
| **Fail Safe** | • Locked in 3rd gear.(control relay off) | |

## MONITOR SCANTOOL DATA EB96F3E1

Refer to DTC P0885.

## TERMINAL & CONNECTOR INSPECTION E56804FB

Refer to DTC P0885.

## POWER SUPPLY CIRCUIT INSPECTION E6F6ADE0

Refer to DTC P0885.

## SIGNAL CIRCUIT INSPECTION EAE638C0

Refer to DTC P0885.

## GROUND CIRCUIT INSPECTION E087FAFA

Refer to DTC P0885.

## VERIFICATION OF VEHICLE REPAIR E14B1FDF

Refer to DTC P0885.

# AUTOMATIC TRANSAXLE

## COMPONENTS (1) E605139C

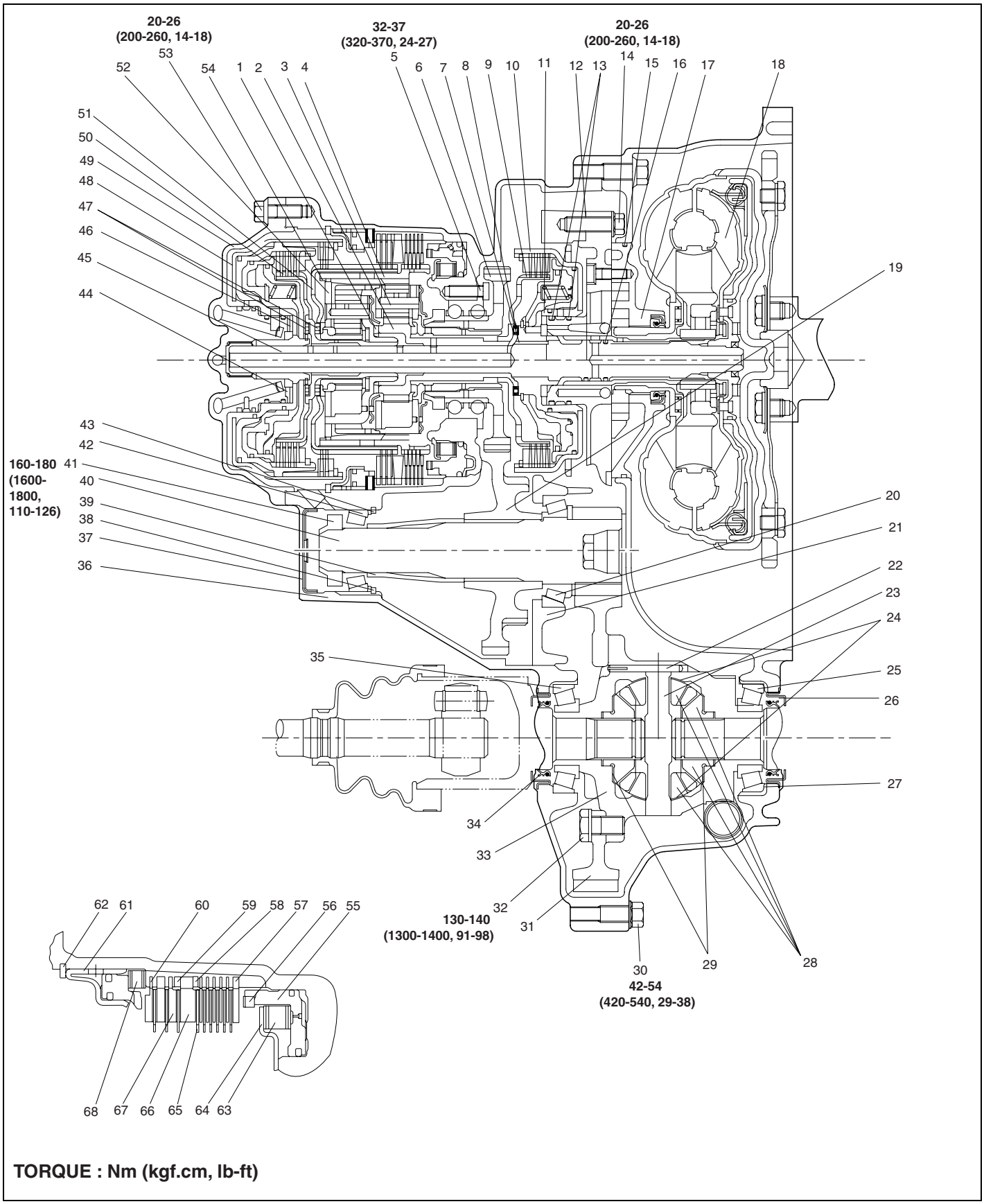


EKRF012A

1. Thrust bearing
2. Underdrive sun gear
3. Output carrier
4. Low and reverse annulus gear
5. Bolt
6. Transfer drive gear
7. Snap ring
8. Thrust bearing
9. Underdrive clutch hub
10 . Underdrive clutch
11. Thrust washer
12. Oil pump gasket
13. Seal ring
14. Flange bolt
15. O-ring
16. Seal ring
17. Oil pump
18. Torque converter
19. Transfer driven gear
20. Taper roller bearing
21. Bearing retainer
22. Lock pin
23. Pinion shaft
24. Washer
25. Taper roller bearing
26. Oil seal
27. Differential spacer
28. Differential gear
29. Differential spacer set
30. Flange bolt
31. Differential drive gear
32. Fly wheel bolt
33. Differential case
34. Oil seal
35. Transmission case
36. One-way Clutch Inner Race
37. Sealing cap
38. Output spacer set
39. Collar
40. Output shaft
41. Locking pin
42. Roller bearing
43. Snap ring
44. Thrust race
45. Input shaft
46. Thrust bearing
47. Thrust bearing
48. Return & O/D clutch
49. Rear cover
50. O/D clutch hub
51. Return sun gear
52. Output carrier
53. Flange bolt
54. Snap ring
55. Low and reverse brake piston
56. Wave spring
57. Brake pressure plate
58. Snap ring
59. Snap ring set
60. Brake pressure plate
61. 2nd brake retainer
62. Snap ring
63. 2nd brake return spring
64. Brake disc
65. Brake reaction plate
66. Brake plate
67. Brake spring retainer
68. Low and reverse return spring

EKRF012B

## COMPONENTS (2)

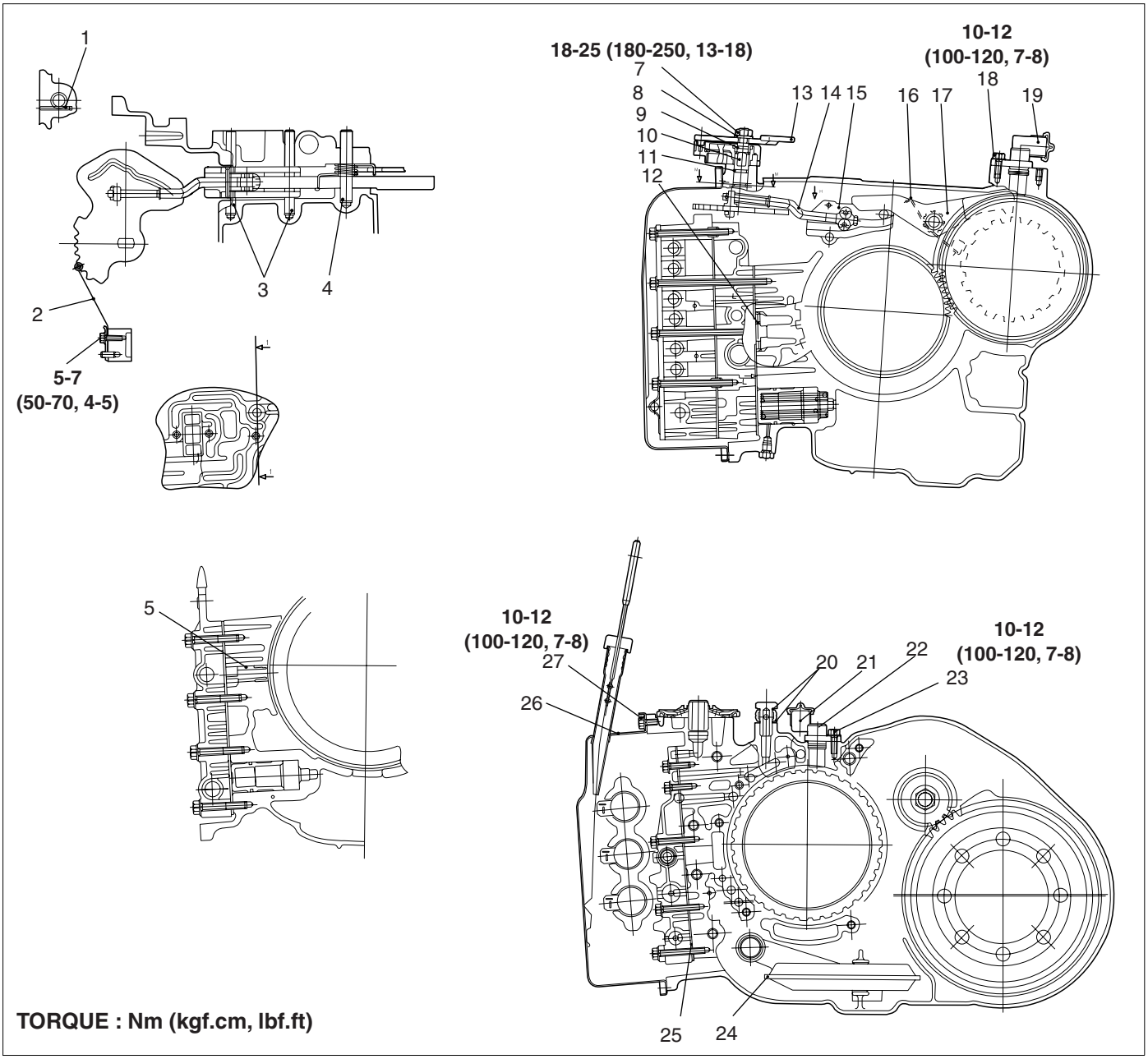


1. Roller
2. Detent spring
3. Parking roller shaft
4. Parking spring shaft
5. Oil seal
6. 2nd brake retainer
7. Flange nut
8. Spring washer
9. Oil ring
10. Manual control shaft
11. Oil ring
12. Oil strainer
13. Manual control lever
14. Parking roller rod
15. Parking roller shaft
16. Parking sprag
17. Parking sprag shaft
18. Flange bolt
19. Output speed sensor
20. Eye bolt
21. Gasket
22. Input speed sensor
23. Flange bolt
24. Oil filter
25. Valve body gasket
26. Valve body
27. Flange bolt

EKRF012C

**COMPONENTS (3)**

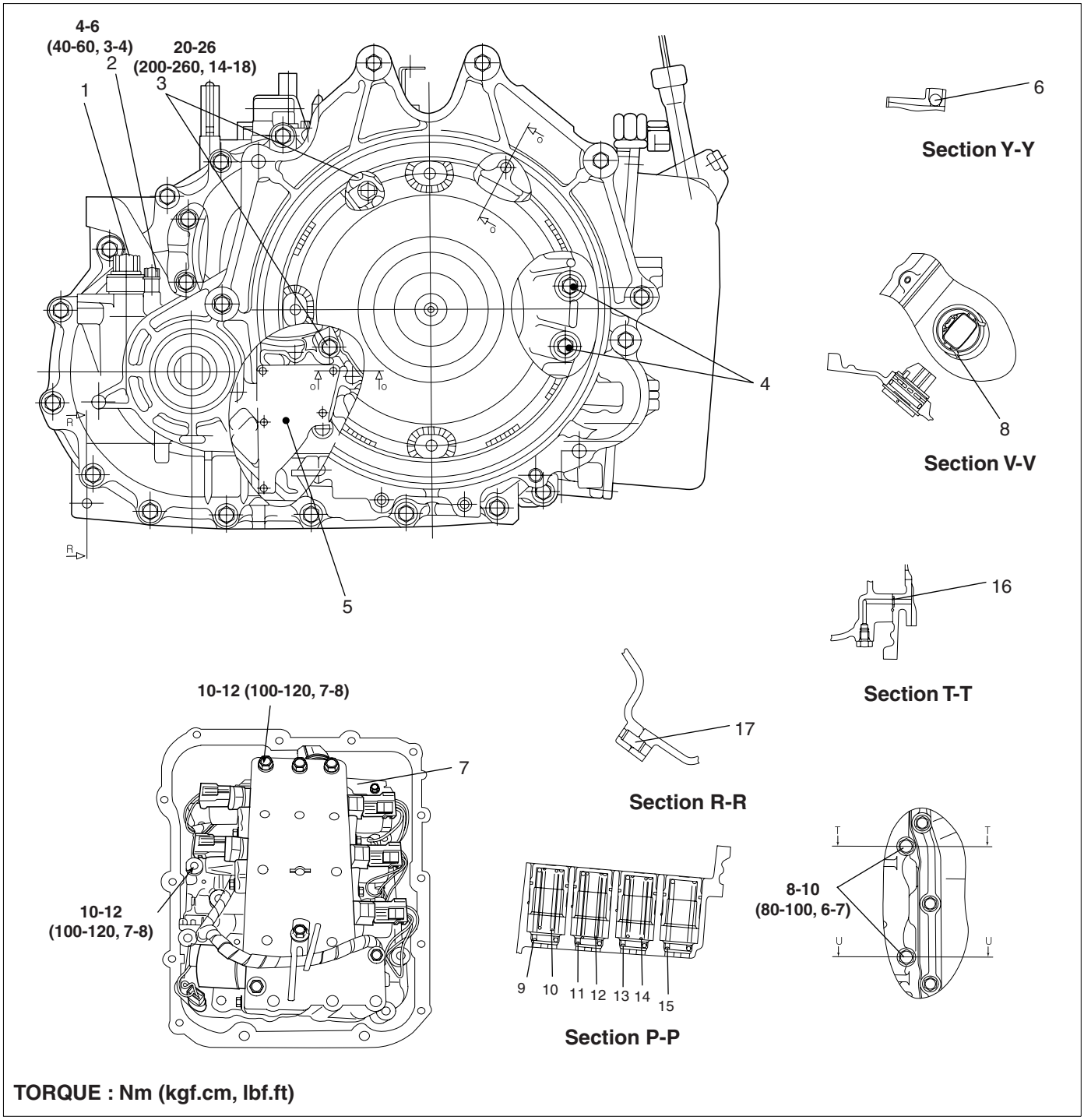


**TORQUE : Nm (kgf.cm, lbf.ft)**

1. Vehicle speed sensor
2. Washer
3. Seal bolt
4. Flange bolt
5. Oil guide
6. Steel ball
7. Harness
8. Snap ring
9. Coil spring
10. Coil spring
11. Coil spring
12. Coil spring
13. Coil spring
14. Coil spring
15. Coil spring
16. O-ring
17. Dowel pin

EKRF091A

**COMPONENTS (4)**

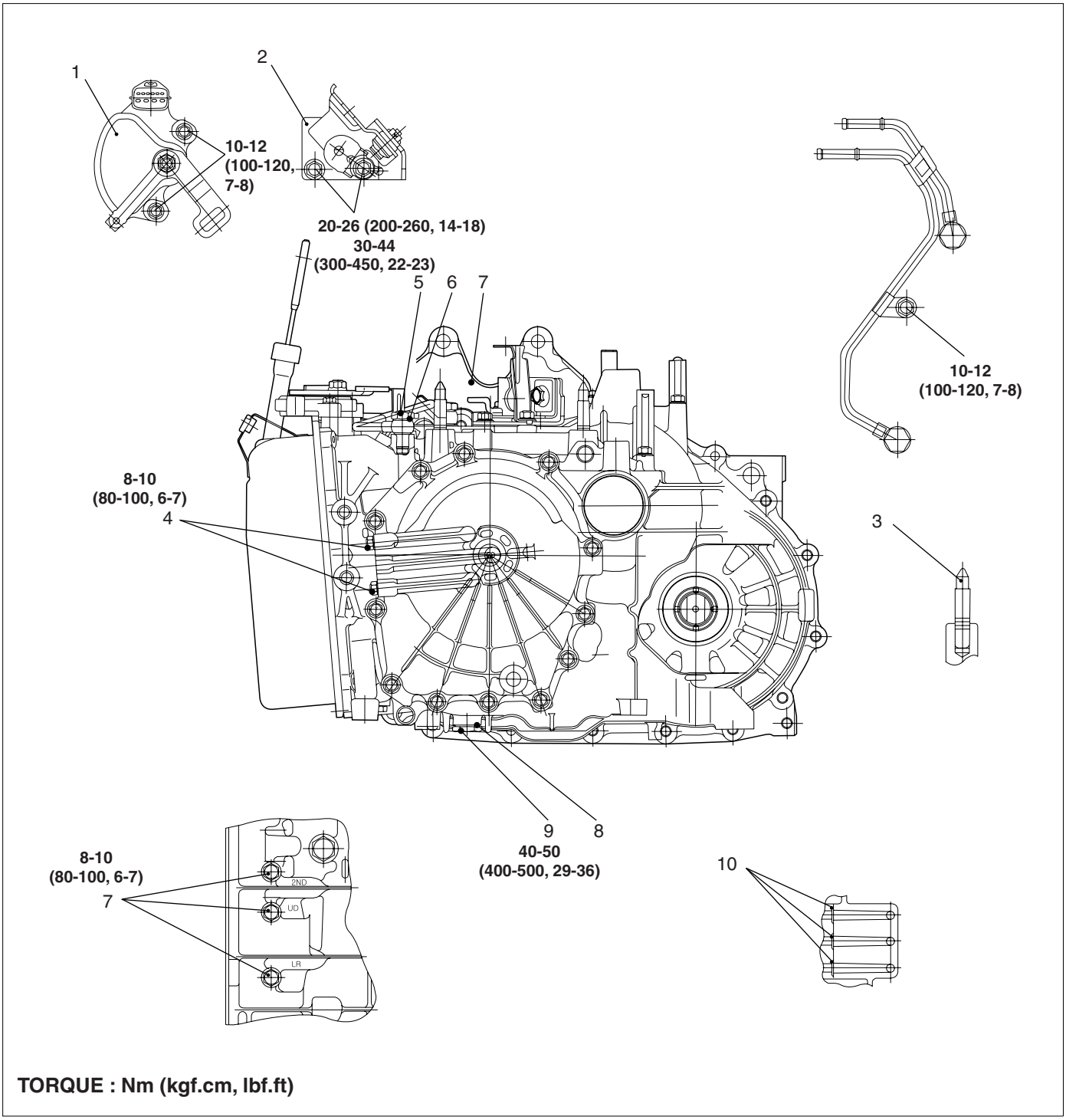


1. Inhibitor switch
2. Control cable bracket
3. Stud
4. Pressure check plug
5. Eye bolt
6. Gasket
7. Converter housing
8. Gasket
9. Magnet plug
10. Accumulator piston

EKRF012D

## REMOVAL E69F6B73

***CAUTION***

- ***Use a cover not to damage the vehicle surface.***
- ***Disconnect connectors carefully not to be damaged.***

***NOTE***

- *Mark wires or hoses for identification.*

1. Remove the inter cooler and the engine cover. (see EM group)
2. Remove the battery (A).

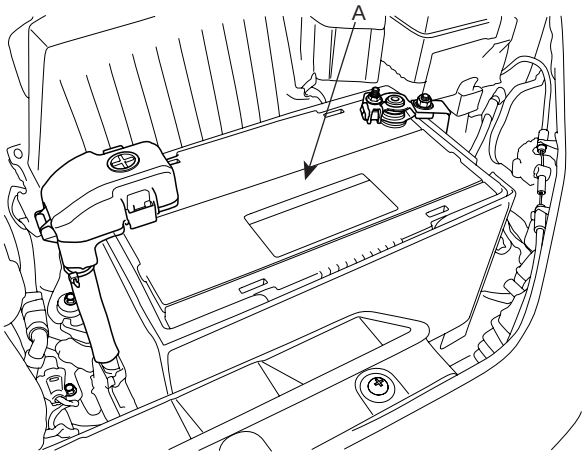


SCMAT6001D

3. Disconnect the AFS connector (A).

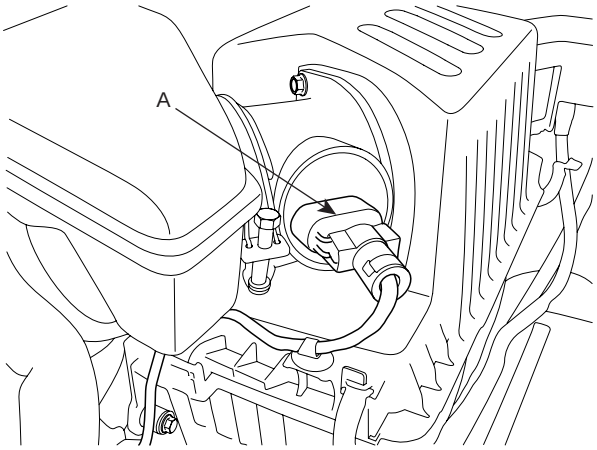


SCMAT6002D

4. Lossen the clamp bolt (A) and disconnect the air cleaner hose (B).

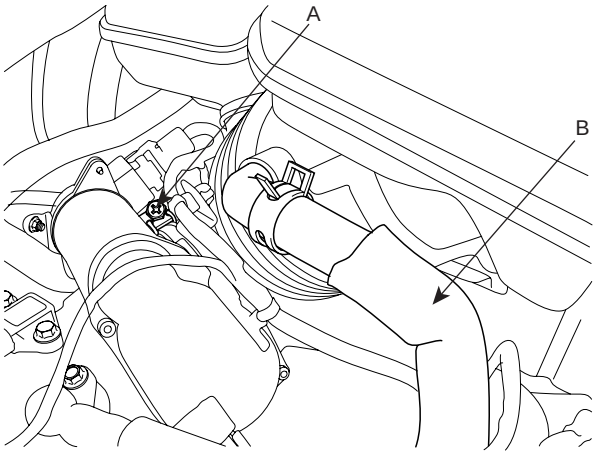


SCMAT6003D

5. Remove the air cleaner upper cover (B) by removing the clips (A).

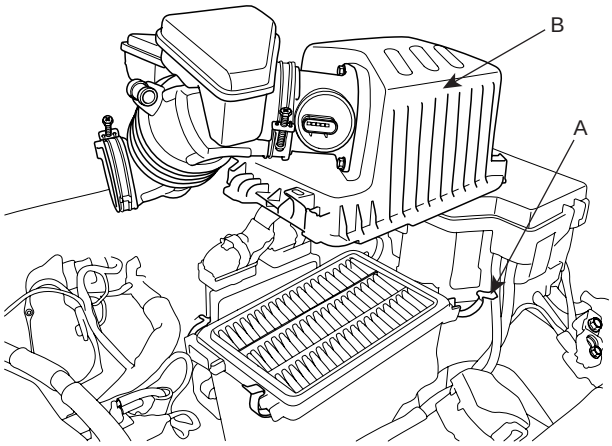


SCMAT6004D

6. Remove the air cleaner lower part (A) by removing the two mounting bolts.

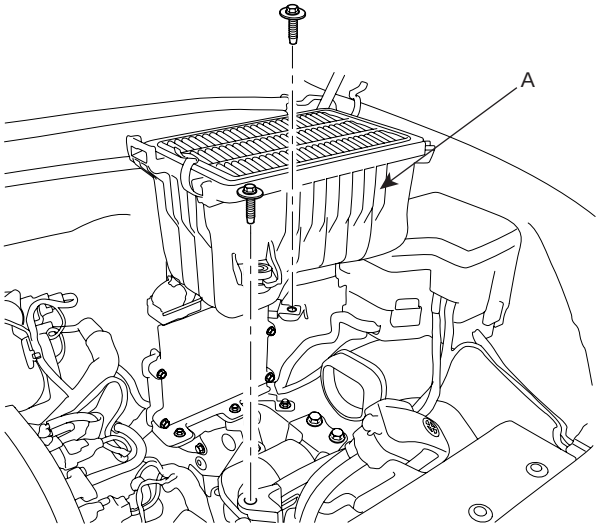


SCMAT6005D

7. Remove the battery tray (B) by removing the four mounting bolts (A).

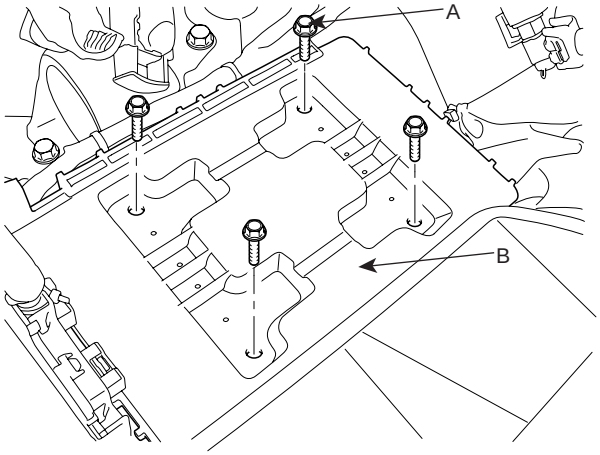


SCMAT6006D

8. Disconnect the transaxle wire harness connectors.

1) Remove the inhibiter switch connector (A).

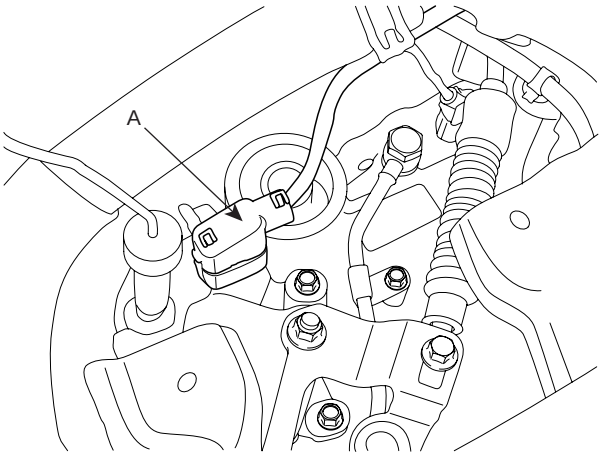


SCMAT6007D

2) Remove the solenoid valve connector (A).

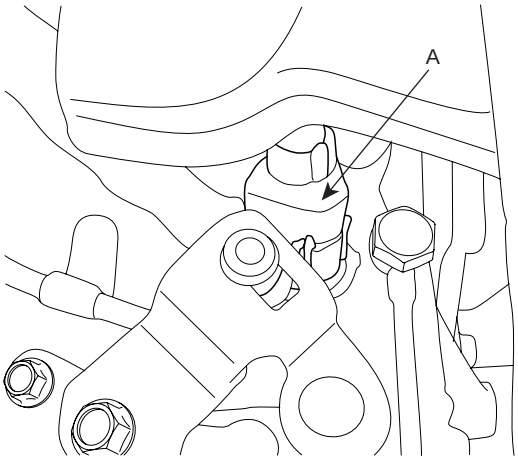


SCMAT6008D

3) Remove the input speed sensor connector (A).

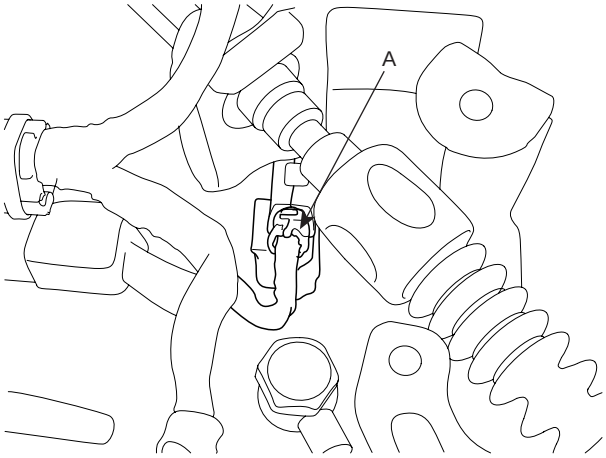


SCMAT6009D

4) Remove the output speed sensor connector (A).

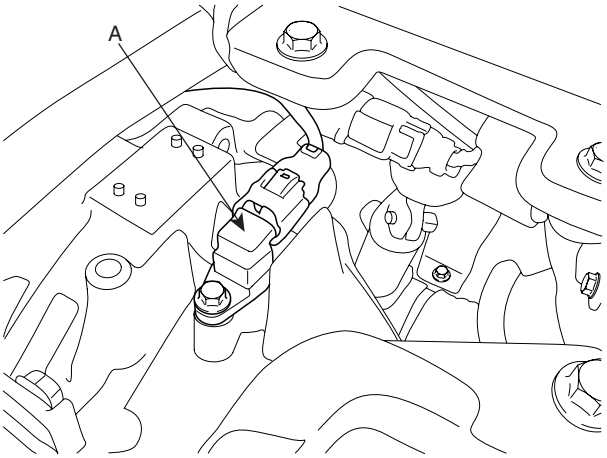


SCMAT6502L

5) Remove the vehicle speed sensor connector (A).

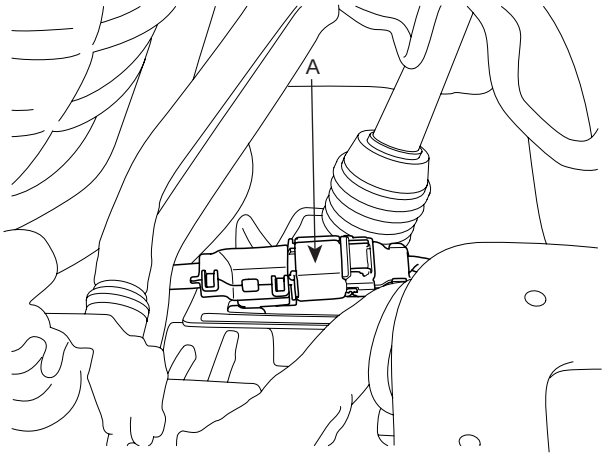


SCMAT6011D

9. Remove the control cable assembly(C) by removing the nut (A) and clip (B).

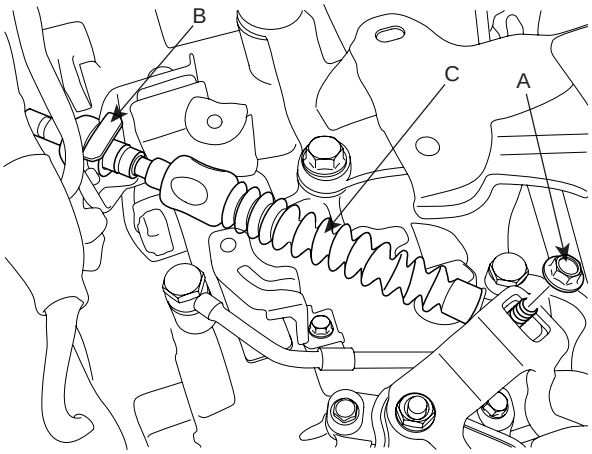


SCMAT6012D

10. Disconnect the transaxle oil cooler hoses (B) from the tubes by loosening the clamps (A).

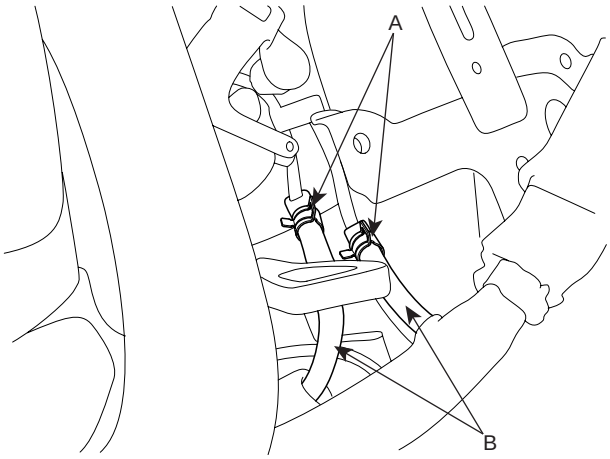


SCMAT6013D

11. Remove the transaxle mounting bolts (A).

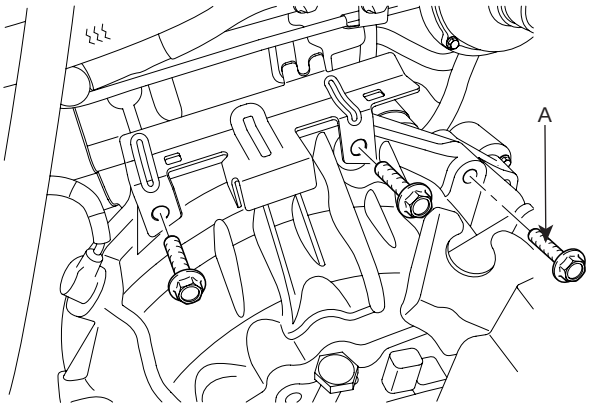


AKKF002O

12. Remove the starter motor by disconnecting the connector. (see EE group)

13. Using the SST(09200-38001), hold the engine and transaxle assembly safely.

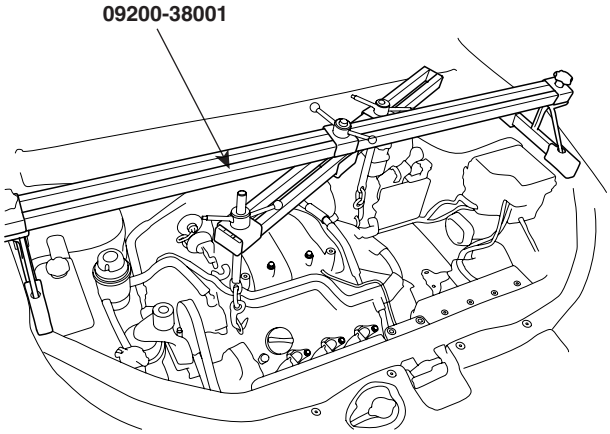


SCMAT6503L

14. Remove the transaxle insulator mounting bolts (A).

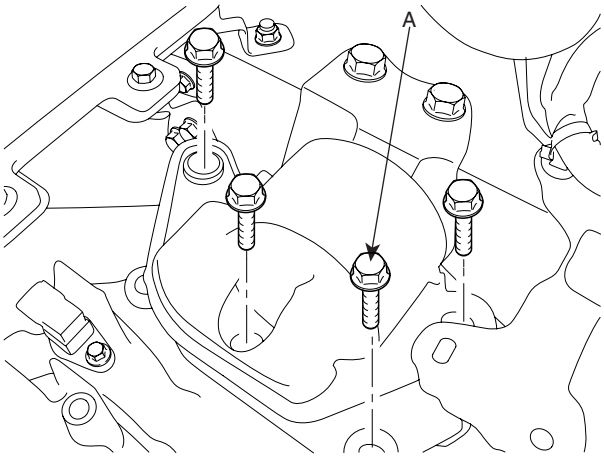


SCMAT6504L

15. Remove the front wheels. (see SS group)

16. Lift up the vehicle.

17. Remove the power steering column joint bolt and the EPS connector. (see ST group)

18. Remove the under cover (A).

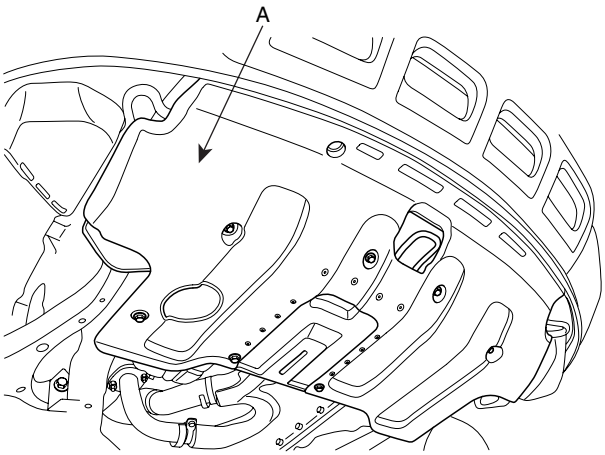


SCMAT6505L

19. Drain the transaxle fluid.

20. Drain power steering fluid through the return tube(A). (see ST group)

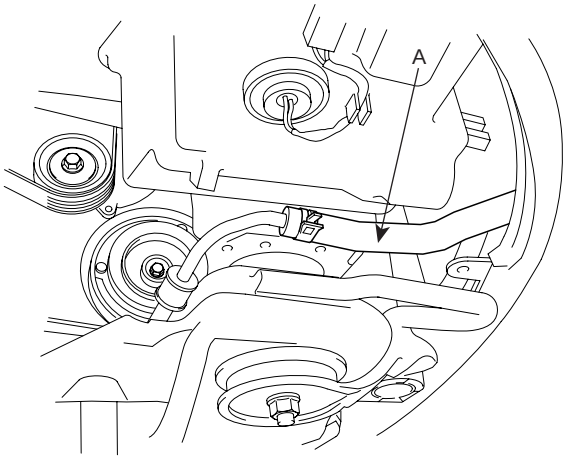


SCMAT6010L

21. Disconnect the power steering pressure tube (A) from the power steering oil pump.

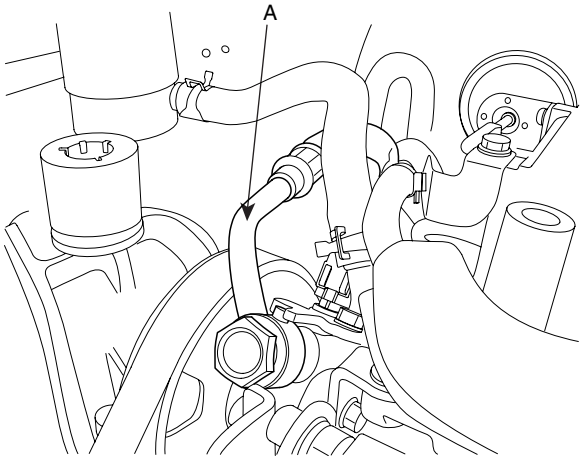


SCMAT6506L

22. Disconnect the lower arm, the tie rod end ball joint, the stabilizer bar link from the front knuckle. (see SS group)

23. Remove the roll stopper mounting bolts.

24. Remove the mounting bolts from the sub frame by supporting the sub frame with a jack. (see SS group)

25. Remove drive shaft from transaxle. (see DS group).

26. Install a jack for supporting the transaxle assembly.

27. In case of 4WD, remove the transfer case assembly. (see MT group's 'Transfer case')

28. Remove the drive plate bolts (A) and the transaxle lower mounting bolts (B-4EA).

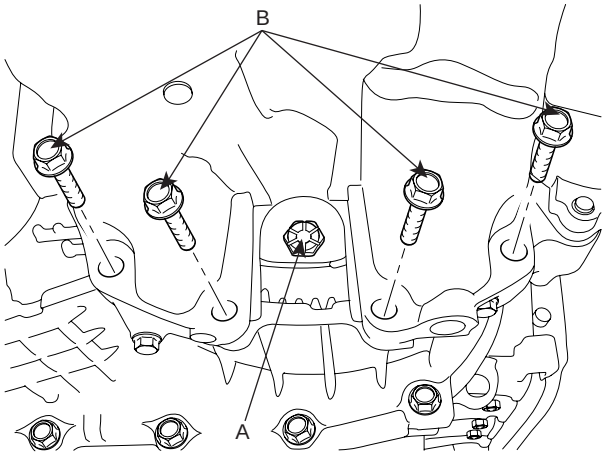


SCMAT6019D

29. Lifting the vehicle up and lowering the jack slowly, remove the transaxle assembly.

## INSTALLATION EE2647DD

Installation is in the reverse order of removal.
Perform the following :

- Adjust the shift cable.
- Refill the transaxle with fluid.
- Refill the radiator with engine coolant.
- Bleed air from the cooling system with the heater valve open.
- Clean the battery posts and cable terminals with sandpaper, assemble them, and apply grease to prevent corrosion.

1. Lowering the vehicle or lifting up a jack, install the transaxle assembly.

2. Tighten the transaxle lower mounting bolts (B-4EA).

TORQUE:
65~85 Nm(6.5~8.5 kgf.m, 47.0~61.5 lb-ft)

3. Install the drive plate bolts (A) by turning the timing gear.

TORQUE:
46~53 Nm(4.6~5.3 kgf.m, 33.3~38.3 lb-ft)

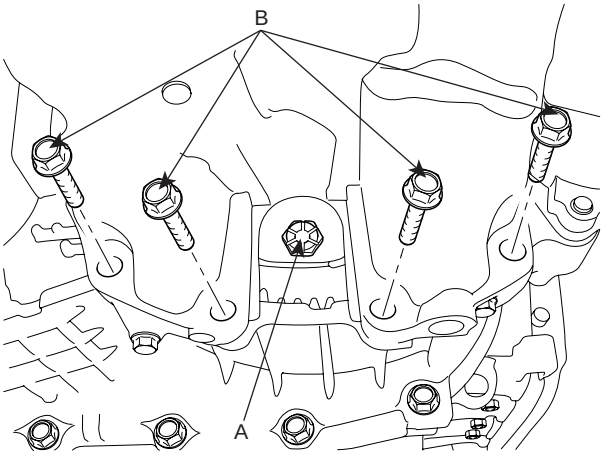


SCMAT6019D

4. In case of 4WD, install the transfer case assembly. (see MT group's 'Transfer case')

5. After removing a jack, insert the drive shafts. (see DS group)

6. Install the sub frame. (see SS group).

7. Tighten the roll stopper mounting bolts.

TORQUE:
90~110 Nm(9~11 kgf.m, 65.1~79.5 lb-ft)

8. Connect the lower arm, the tie rod end ball joint, the stabilizer bar link to the front knuckle. (see SS group)

9. Install the under cover (A).

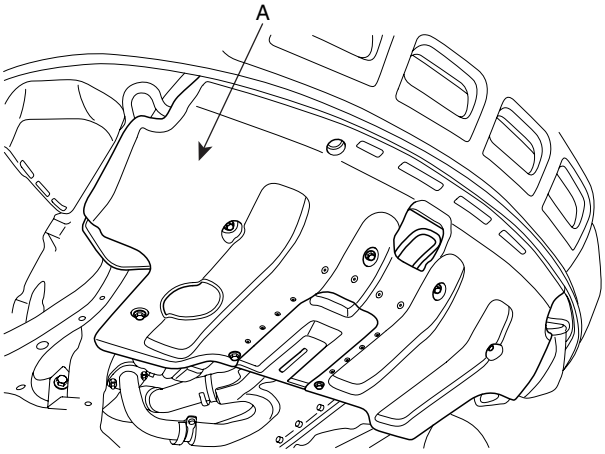


SCMAT6505L

10. Install the steering column joint bolt and the EPS connector. (see ST group)

11. Connect the return tube(A) with a clamp. (see ST group)

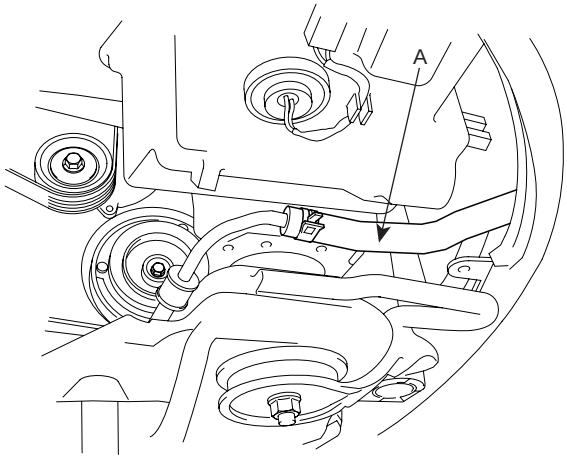


SCMAT6010L

12. Install the front wheels and tires.

13. Tighten the transaxle insulator mounting bolt (A).

TORQUE:
90~110 Nm(9~11 kgf.m, 65.1~79.5 lb-ft)

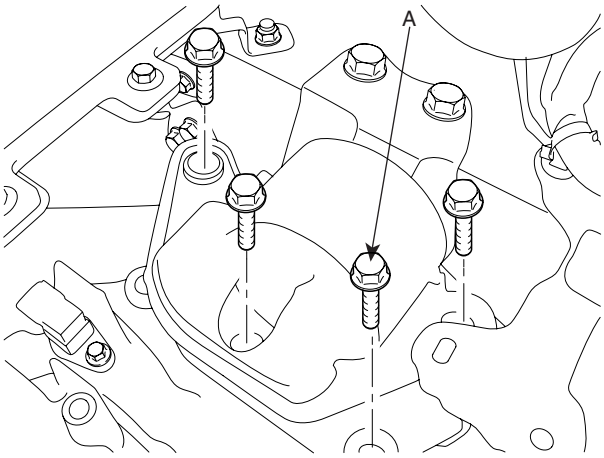


SCMAT6504L

14. Tighten the transaxle mounting bolts (A).

TORQUE:
65~85 Nm(6.5~8.5 kgf.m, 47.0~61.5 lb-ft)

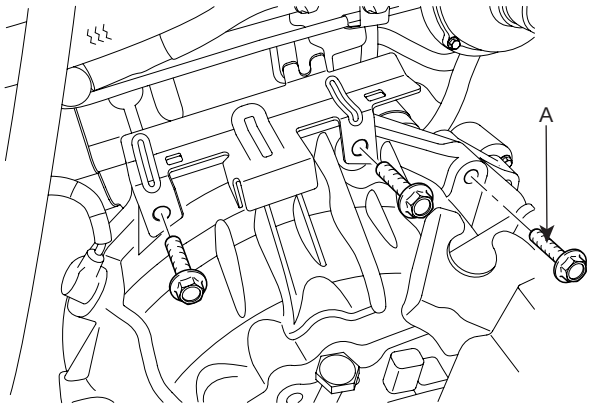


AKKF002O

15. Remove the SST (09200-38001) holding the engine and transaxle assembly.

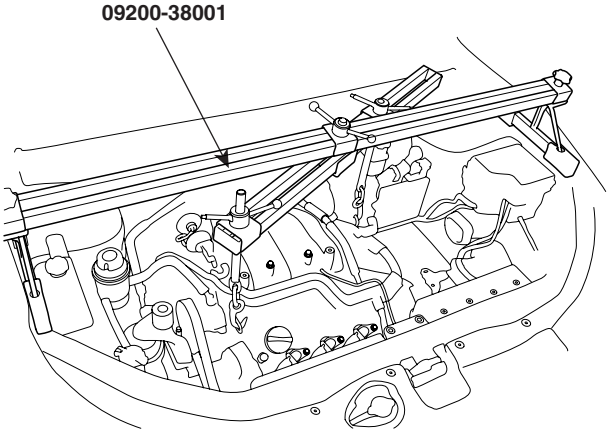


SCMAT6503L

16. Install the starter motor. (see EE group).

TORQUE:
65~85 Nm(6.5~8.5 kgf.m, 47.0~61.5 lb-ft)

17. Connect the power steering pressure tube (A) to the power steering oil pump.

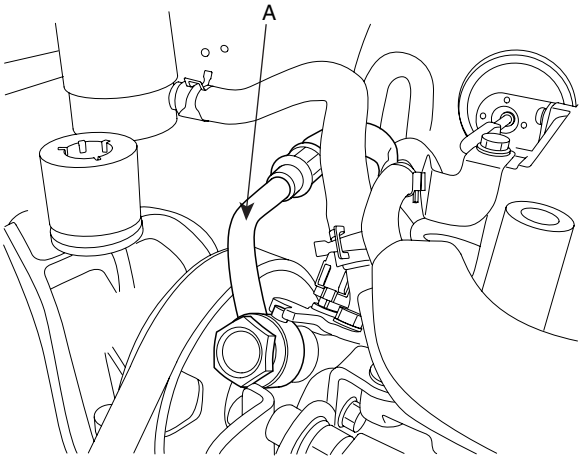


SCMAT6506L

18. Connect the transaxle oil cooler hoses (A) to the tubes by fastening the clamps (B).

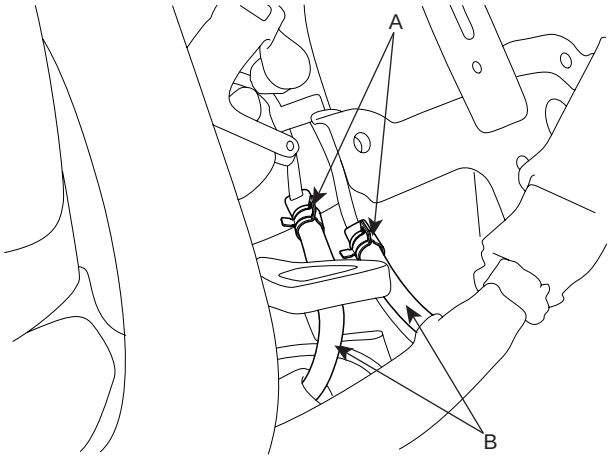


SCMAT6013D

19. Install the control cable assembly(C) by tightening the nut (A) and clip (B).

TORQUE:
8~12 Nm(0.8~1.2 kgf.m, 5.8~8.6 lb-ft)

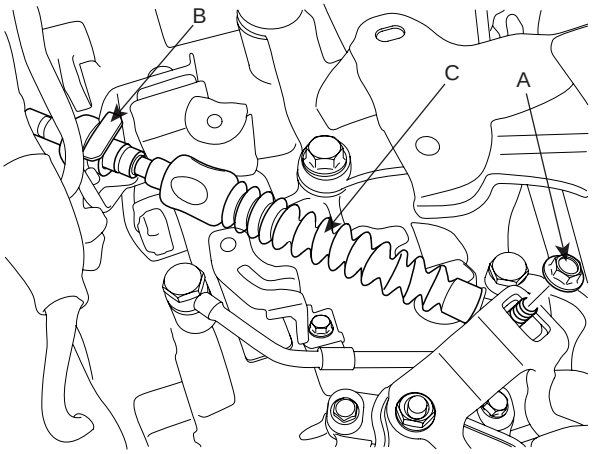


SCMAT6012D

20. Connect the transaxle wire harness connectors.

1) Install the inhibiter switch connector (A).

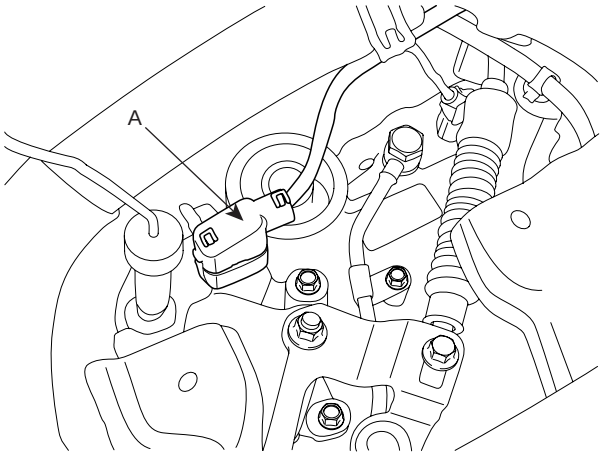


SCMAT6007D

2) Install the solenoid valve connector (A).

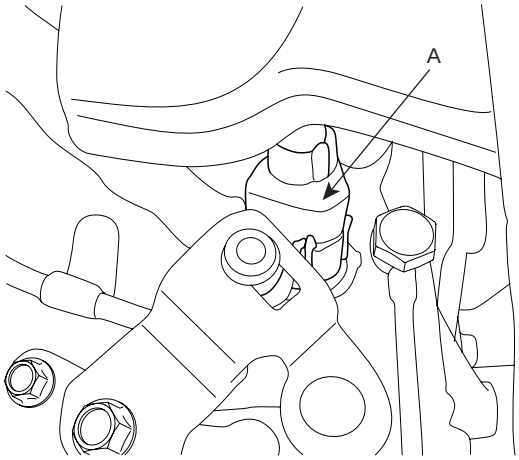


SCMAT6008D

3) Install the input speed sensor connector (A).

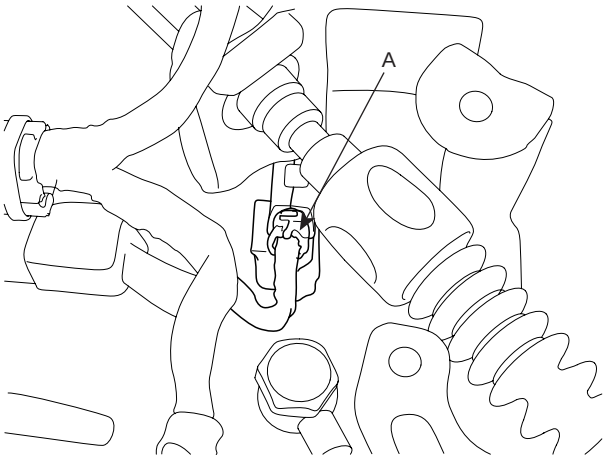


SCMAT6009D

4) Install the output speed sensor connector (A).

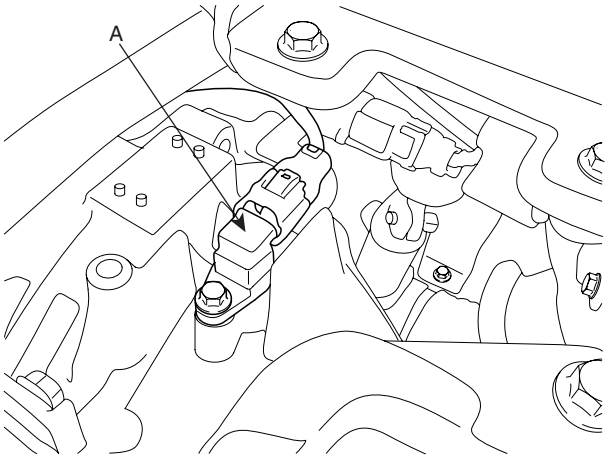


SCMAT6502L

5) Install the vehicle speed sensor connector (A).

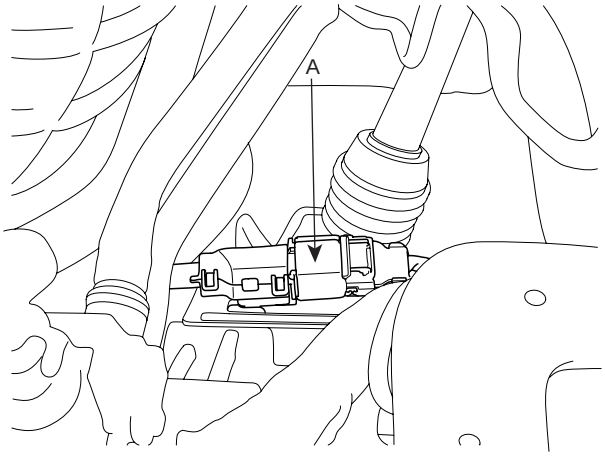


SCMAT6011D

21. Install the battery tray (B) by tightening the four mounting bolts (A).

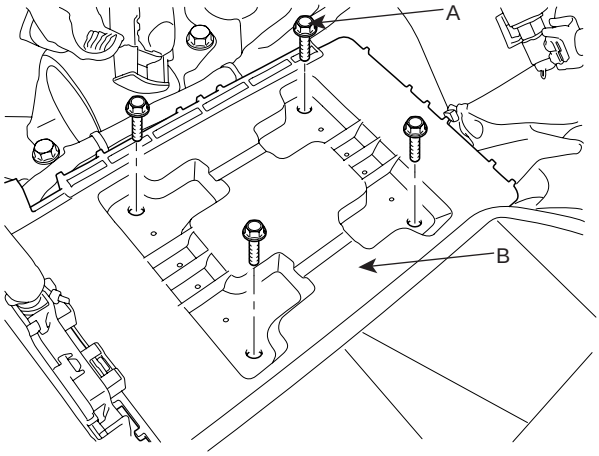


SCMAT6006D

22. Install the air cleaner lower part (A) by installing the two mounting bolts.

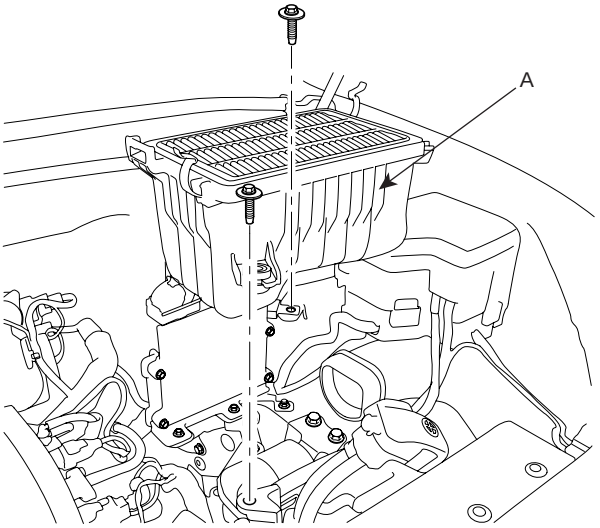


SCMAT6005D

23. Install the air cleaner upper cover (B) by installing the clips (A).

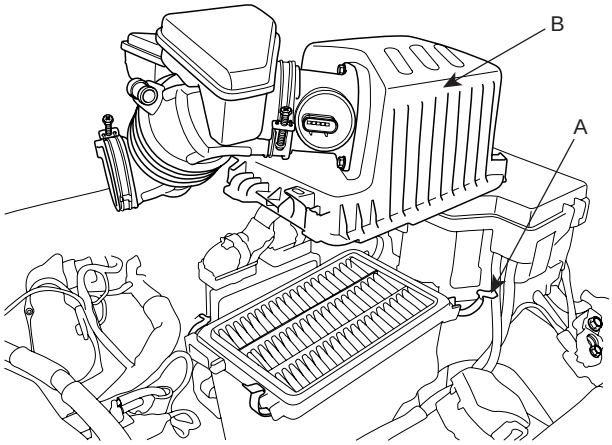


SCMAT6004D

24. Connect the air cleaner hose (B) and tighten the clamp bolt (A).

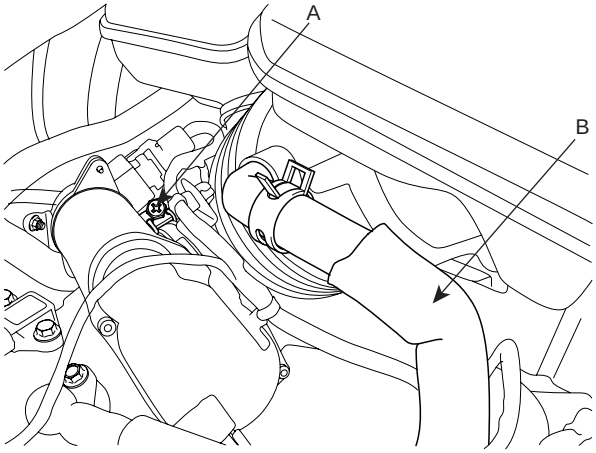


SCMAT6003D

25. Connect the AFS connector (A).

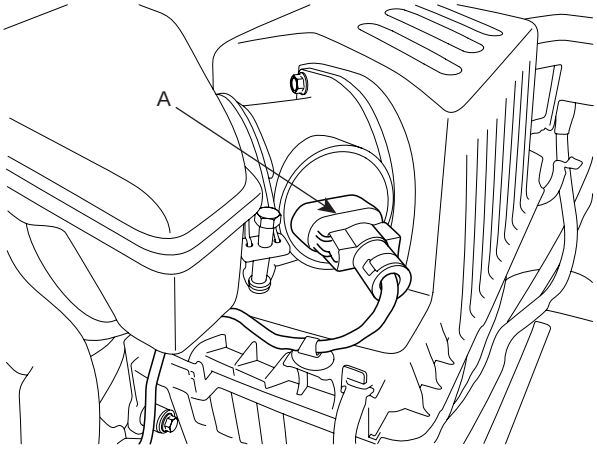


SCMAT6002D

26. Install the battery (A).

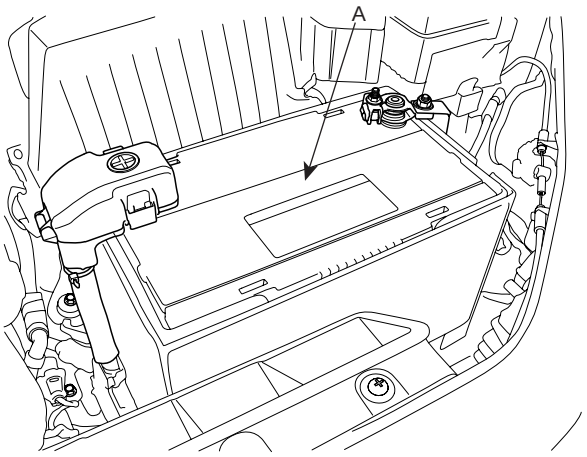


SCMAT6001D

27. Refill the transaxle fluid. (see 'Service adjustment procedure')

28. Refill the power steering fluid. (see 'ST' group)

***CAUTION***

***After installing the inter cooler assembly, bleed the air in the system.***

29. Install the engine cover and the inter cooler assembly. (see 'EM' group)

***NOTE***

*When replacing the automatic transaxle, reset the automatic transaxle's values by using the High- Scan Pro.*

a. Connect the Hi-Scan Pro connector to the data link connector under the crash pad and power cable to the cigar jack under the center facia.
b. Turn the ignition switch on and power on the Hi-Scan Pro.
c. Select the vehicle's name.
d. Select 'AUTOMATIC TRANSAXLE'.

```
    1. HYUNDAI VEHICLE DIAGNOSIS ▼
MODEL  : SANTAFE(CM)06-
SYSTEM : AUTOMATIC TRANSAXLE
         GASOLINE
  01. DIAGNOSTIC TROUBLE CODES
  02. CURRENT DATA
  03. FLIGHT RECORD
  04. ACTUATION TEST
  05. SIMU-SCAN
  06. FREEZE FRAME DATA
  07. RESETTING AUTO T/A VALUES
  08. IDENTIFICATION CHECK
```

SCMAT6511L

e. Select 'RESETTING AUTO T/A VALUES' and perform the procedure.

```
1.7. RESETTING AUTO T/A VALUES

THIS FUNCTION IS FOR RESETTING
THE ADAPTIVE VALUES FROM THE
USED AUTO T/A WHEN REPLACING IT.

IF YOU ARE READY,
          PRESS [ENTER] KEY!
```

SCMAT6512L

f. Perform the procedure by pressing F1 (REST).

```
1.7. RESETTING AUTO T/A VALUES

RESETTING AUTO T/A VALUES
CONDITION | IG KEY ON
          | TRANSAXLE RANGE : P
          | VEHICLE SPEED : 0
          | ENGINE OFF

PRESS [REST], IF YOU ARE READY !

REST
```

SCMAT6513L

# AUTOMATIC TRANSAXLE CONTROL SYSTEM

## SOLENOID VALVE

### DESCRIPTION ECF5C218

#### ACTUATORS

**Solenoid Valve for Pressure Control**

- Sensor type: Normal open 3-way
- Operating temperature : -30°C～130°C(-22°F~266°F)
- Frequency:
LR, 2ND, UD, OD: 61.27Hz (at the ATF temp. above -20°C(-4°F))
DCC: 30.64Hz
- Internal resistance:
3.0 ± 0.5 Ω (LR, 2ND, UD, OD, TCC)
4.35 ± 0.5 Ω (VFS)
- Surge voltage: 56 V (Except VFS)

**(LR, 2ND, UD, OD, DCC)**

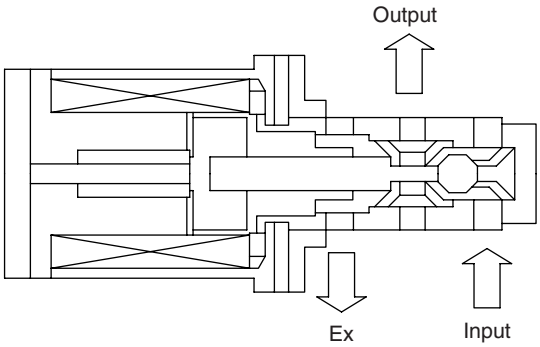


EKRF018J

**LOCATION**

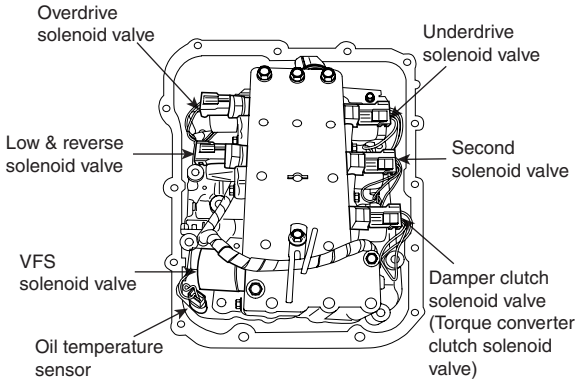


EKRF018K

**SOLENOID VALVES SCHEDULE**

| Position | Solenoid valves | | | | |
|---|---|---|---|---|---|
| Operation | LR | 2ND | UD | OD | * DCC |
| 1st gear | OFF | ON | OFF | ON | OFF |
| 2nd gear | ON | OFF | OFF | ON | OFF |
| 3rd gear | ON | ON | OFF | OFF | ON |
| 4th gear | ON | OFF | ON | OFF | ON |
| Reverse | OFF | ON | ON | ON | OFF |
| N, P (STD. mode) | OFF | ON | ON | ON | OFF |
| N, P (Hold mode) | ON | OFF | ON | ON | OFF |

*: Reference value.
(DCC solenoid valve will be ON when the operating condition is satisfied)

## INSPECTION E7AEA75F

1. If the value is out of specification according to the chart below, remove the valve body cover.

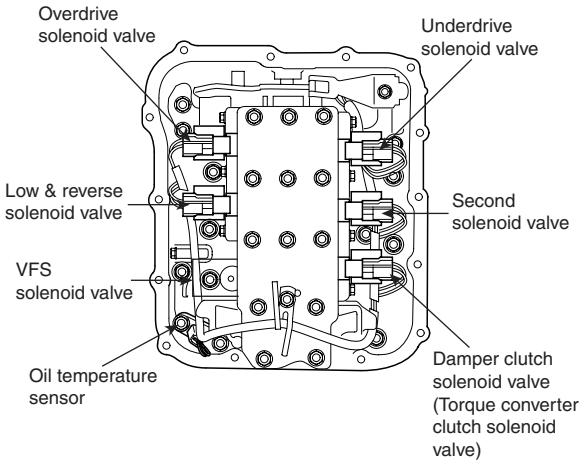


EKRF011A

2. Measure the resistance again after disconnecting solenoid valve connector.

| |
|---|
| Specification (20°C):<br>2.5 ~ 3.5 Ω (LR, 2ND, UD, OD, TCC) |

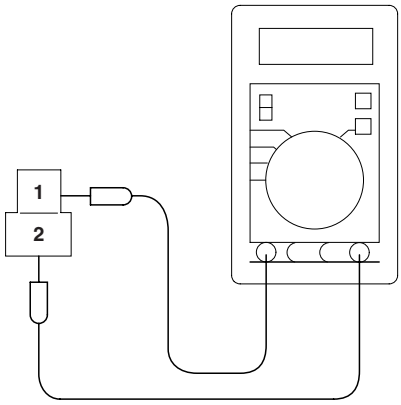


EKRF011B

3. If the value is out of specification replace the solenoid valve.

| Pin No. | Name | Resistance |
|---|---|---|
| 6 & 9 | DCC (TCC) | 2.5~3.5Ω (20°C) |
| 6 & 11 | LR | |
| 4 & 5 | 2ND | |
| 3 & 5 | UD | |
| 5 & 12 | OD | |

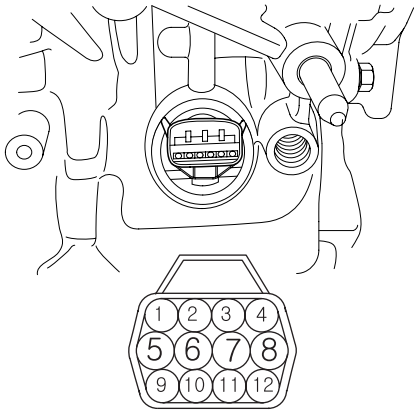


EKRF011C

# VFS(VARIABLE FORCE SOLENOID) VALVE

## DESCRIPTION E95DAC46

### ACTUATORS

### Solenoid Valve for Pressure Control

- Sensor type: Normal open 3-way
- Operating temperature : -30°C～130°C(-22°F~266°F)
- Frequency:
LR, 2ND, UD, OD: 61.27Hz (at the ATF temp. above -20°C(-4°F))
DCC: 30.64Hz
- Internal resistance:
3.0 ± 0.5 Ω (LR, 2ND, UD, OD, TCC)
4.35 ± 0.5 Ω (VFS)
- Surge voltage: 56 V (Except VFS)

### (VFS)

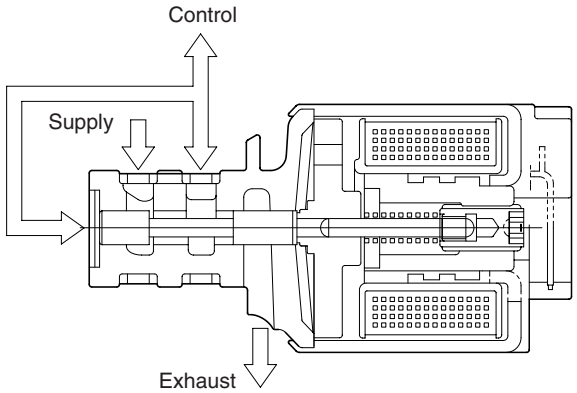


EKRF082A

### LOCATION

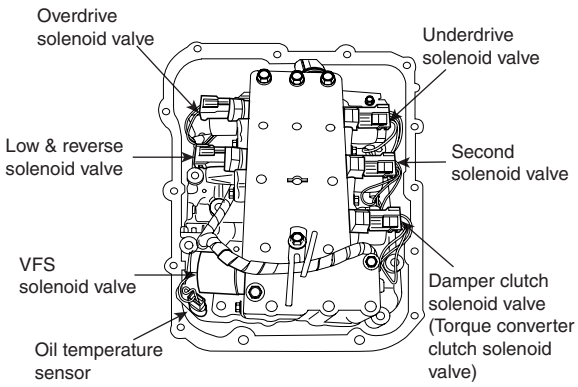


EKRF018K

**VFS CONTROL PRESSURE**

| Input Current(mA) | Control Pressure (No line pressure) | | | |
|---|---|---|---|---|
| | Increasing Current | | | Decreasing Current |
| | MAX. (Kgf/㎠) [ Kpa ] | MIN. (Kgf/㎠) [ Kpa ] | △ (Kgf/㎠) [ Kpa ] | MIN. (Kgf/㎠) [ Kpa ] |
| 100 | 6.52 [ 639 ] | 5.87 [ 575 ] | [ 64 ] | |
| 200 | 6.23 [ 611 ] | 5.70 [ 559 ] | [ 52 ] | 5.43 [ 532 ] |
| 300 | 5.76 [ 564 ] | 5.24 [ 514 ] | [ 50 ] | 4.49 [ 484 ] |
| 400 | 5.08 [ 498 ] | 4.59 [ 450 ] | [ 48 ] | 4.30 [ 421 ] |
| 500 | 4.24 [ 416 ] | 3.78 [ 370 ] | [ 46 ] | 3.52 [ 345 ] |
| 700 | 2.29 [ 224 ] | 1.82 [ 178 ] | [ 46 ] | 1.51 [ 148 ] |
| 800 | 1.41 [ 138 ] | 0.09 [ 88 ] | [ 50 ] | 0.58 [ 57 ] |
| 900 | 0.65 [ 64 ] | 0.14 [ 14 ] | [ 50 ] | 0 [ 0 ] |
| 1,000 | 0.24 [ 24 ] | 0 [ 0 ] | [ 24 ] | |
| 1,100 | 0.24 [ 24 ] | 0 [ 0 ] | [ 24 ] | |

*Test condition:
Ps : Supply Pressure (Ps = 7.1 ± 0.3 KGf/㎠)
Pc : Control Pressure
Pex : Exhaust Pressure (Atmosphere pressure)
ATF : DIAMOND ATF SP-Ⅲ
ATF temperature : 30 ± 3°C (86°F)
- Coil resistance : 4.35 ± 35Ω
- Dither Frequency : 600 ± 20Hz
In case of VFS solenoid valve, the relation between Duty and oil pressure can't be expressed.

## INSPECTION E976C1C7

1. If the value is out of specification according to the chart below, remove the valve body cover.

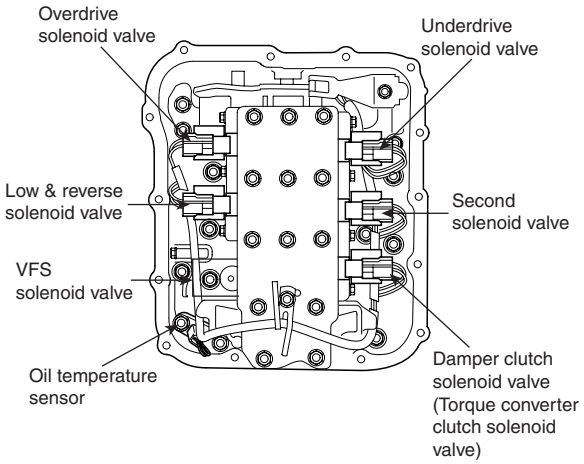


EKRF011A

2. Measure the resistance again after disconnecting solenoid valve connector.

| Pin No. | Name | Resistance |
|---|---|---|
| 7 & 8 | VFS | 4.3~4.4Ω (20°C) |

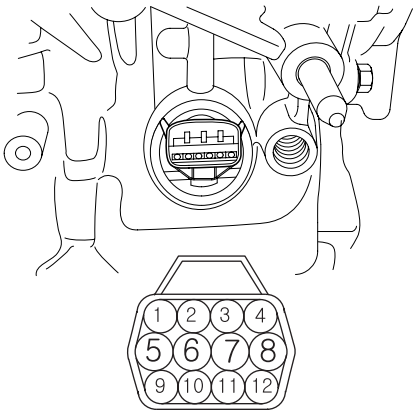


EKRF011C

Specification (20°C):
4.3 ~ 4.4Ω (VFS)

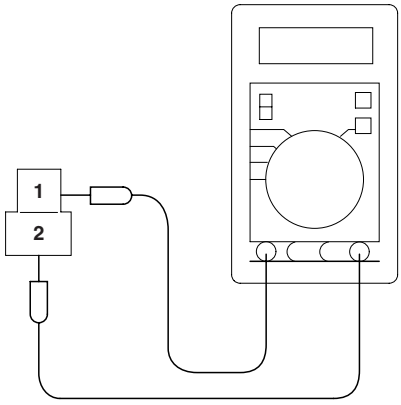


EKRF011B

3. If the value is out of specification replace the solenoid valve.

# INPUT SPEED SENSOR

- Type: Hall sensor
- Current consumption: 22mA (MAX.)
- Sensor body and sensor connector have been unified as one.

## DESCRIPTION E4C6DCFB

### INPUT SHAFT SPEED SENSOR

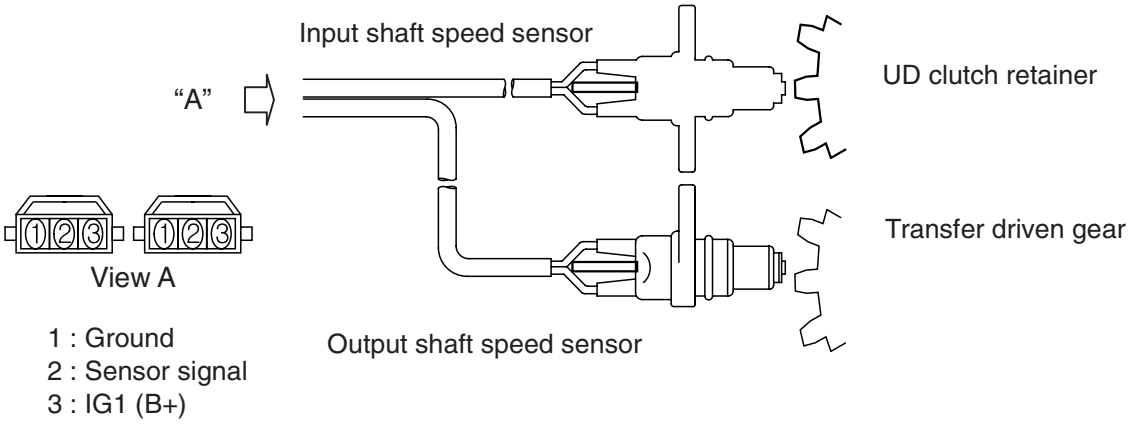


EKRF018A

### HALL TYPE SENSOR: SPECIFICATION

| | | |
|---|---|---|
| Air gap (mm) | Input shaft speed sensor | 1.3 |
| Coil Resistance | Input shaft speed sensor | over 1MΩ |
| Peak-Peak Voltage | High | 4.8~5.2V |
| | Low | 0.8V |

### WAVE FORM WITH HIGH-SCAN

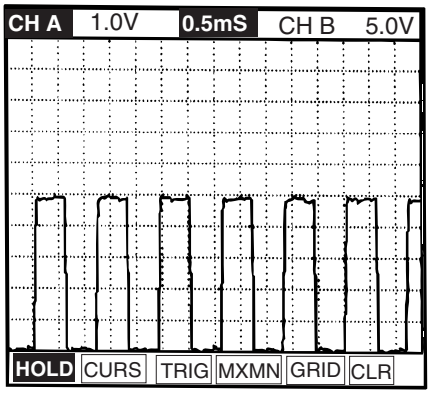


EKRF018B

**HALL TYPE SENSOR: STRUCTURE & INTERFACE**

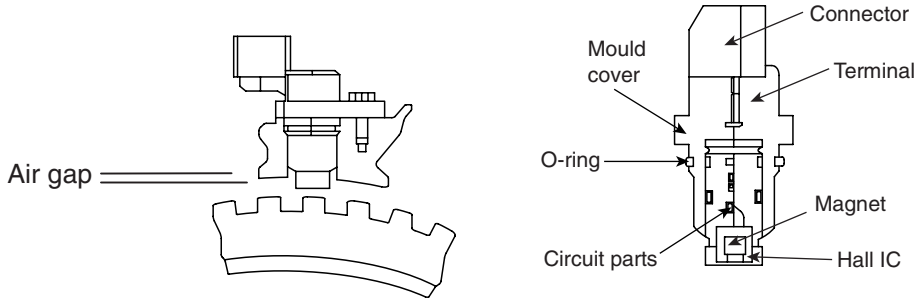


EKRF018E

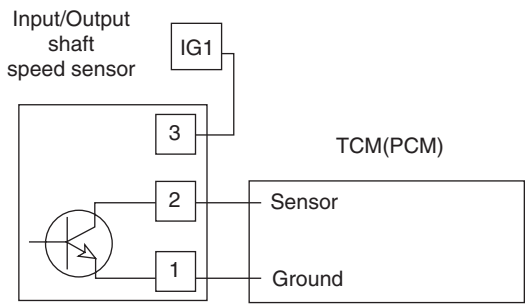


EKRF018C

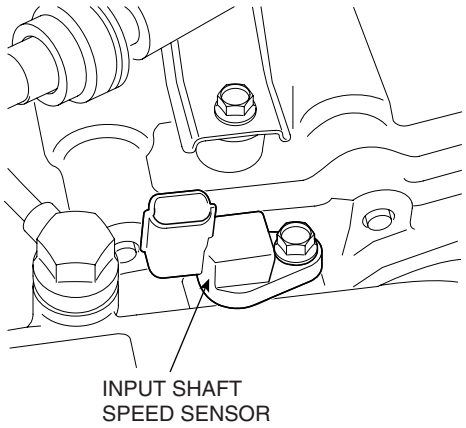


EKRF018D

## REPLACEMENT E437642C

1. Remove the battery and air cleaner (see "Transaxle range switch replacement").
2. Remove the transaxle range switch connector.
3. Remove the control cable to transaxle range switch mounting nut.
4. Remove the input shaft speed sensor(A).
   1) Disconnect the input shaft speed sensor connector.
   2) Remove the bolt(B).

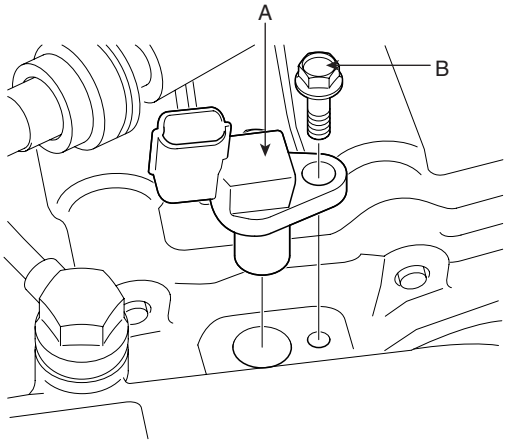


EKRF009F

   3) Inspect the input shaft speed sensor bore.
5. Apply a light coat of automatic transaxle fluid to the O-ring seal before installation.
6. Install the input shaft speed sensor.
7. Install the control cable mounting bracket.
8. Connect the input shaft speed sensor connector.
9. Install the holder of the control cable.
10. Adjust the control cable to transaxle range switch and tighten the transaxle manual lever to the control cable mounting nut. (see "Automatic transaxle shift control installation")
11. Installation is the reverse of removal.

# OUTPUT SPEED SENSOR

- Type: Hall sensor
- Current consumption: 22mA (MAX.)
- Sensor body and sensor connector have been unified as one.

## DESCRIPTION E5FABE4A

### OUTPUT SHAFT SPEED SENSOR

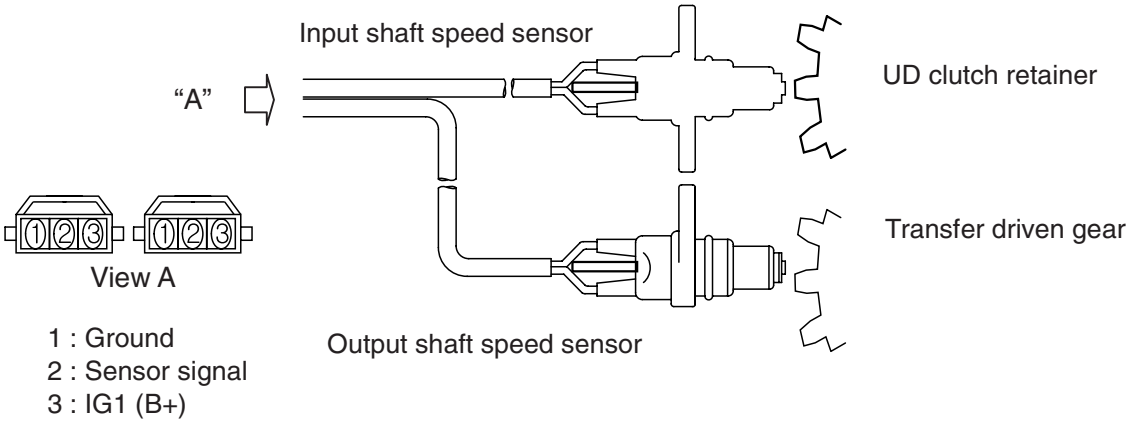


EKRF018A

### HALL TYPE SENSOR: SPECIFICATION

| | | |
|---|---|---|
| Air gap (mm) | Output shaft speed sensor | 0.85 |
| Coil Resistance | Output shaft speed sensor | over 1MΩ |
| Peak-Peak Voltage | High | 4.8~5.2V |
| | Low | 0.8V |

### WAVE FORM WITH HIGH-SCAN

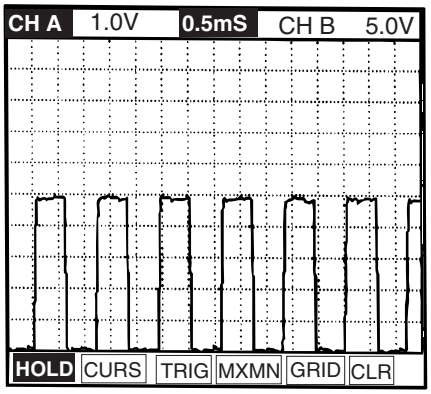


EKRF018B

### HALL TYPE SENSOR: STRUCTURE & INTERFACE

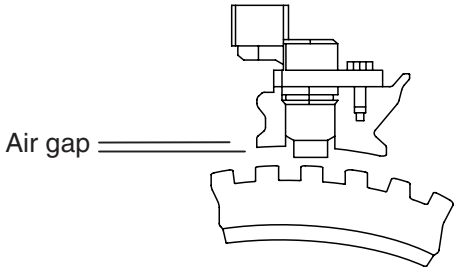


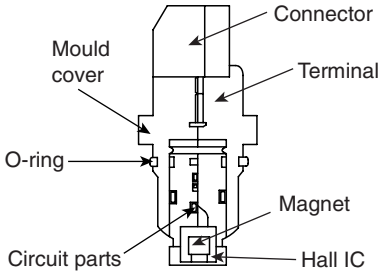


EKRF018E

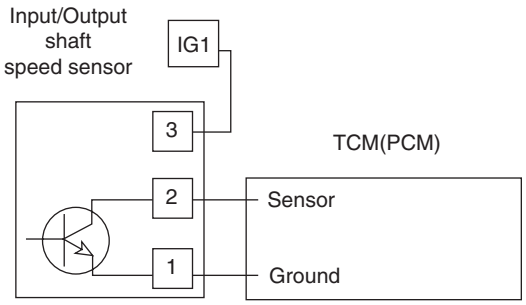


EKRF018C

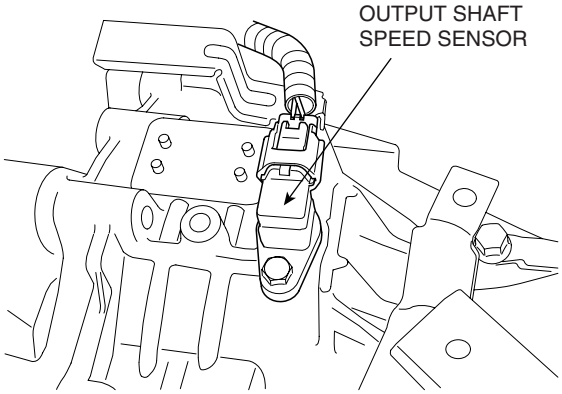


EKRF018F

## REPLACEMENT E20A06B9

1. Remove the battery and air cleaner. (see "Transaxle range switch replacement")
2. Remove the output shaft speed sensor(A).

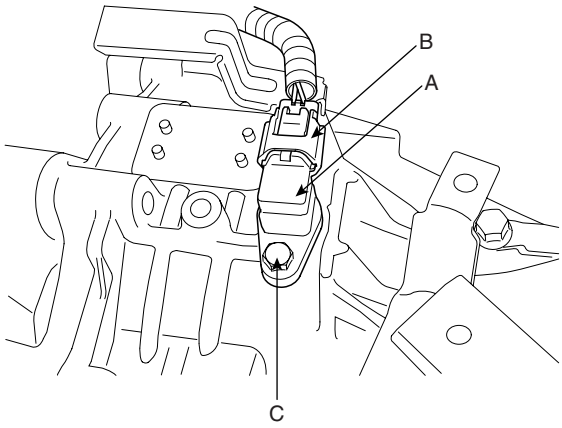


EKRF010A

   1) Disconnect the output shaft speed sensor connector(B).
   2) Remove the bolt(C).
   3) Inspect the output shaft speed sensor bore.
3. Apply a light coat of automatic transaxle fluid to the O-ring seal before installation.
4. Installation is the reverse of removal.

# TRANSAXLE OIL TEMPERATURE SENSOR

## DESCRIPTION E122ACC8

### OIL TEMPERATURE SENSOR

The oil temperature sensor is of the thermistor type, and senses the automatic transaxle fluid temperature. Using the signal from this sensor, TCM(PCM) controls the shift pattern optimally during shift. In order to operate the damper clutch, this signal is also referred.
- Range of temperature : -40°C～145°C
- Type: Separated type (High / Low temperature)
- Standard value of internal resistance

| Temp.[°C(°F)] | Resistance(kΩ ) | Temp.[°C(°F)] | Resistance(kΩ ) |
|---|---|---|---|
| -40(-40) | 139.5 | 80(176) | 1.08 |
| -20(-4) | 47.7 | 100(212) | 0.63 |
| 0(32) | 18.6 | 120(248) | 0.38 |
| 20(68) | 8.1 | 140(284) | 0.25 |
| 40(104) | 3.8 | 160(320) | 0.16 |
| 60(140) | 1.98 | | |

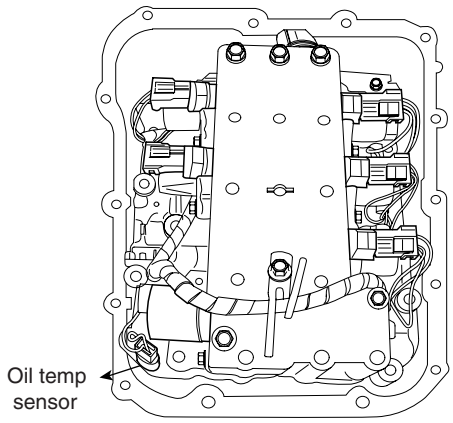


EKRF018G

## REPLACEMENT EEC35FED

1. Remove the automatic transaxle assembly.
2. Remove the valve body cover(refer to the overhaul manual).
3. Disconnect the oil temperature sensor connector.
4. Remove the oil temperature sensor(B), loosening the mounting bolt(A).

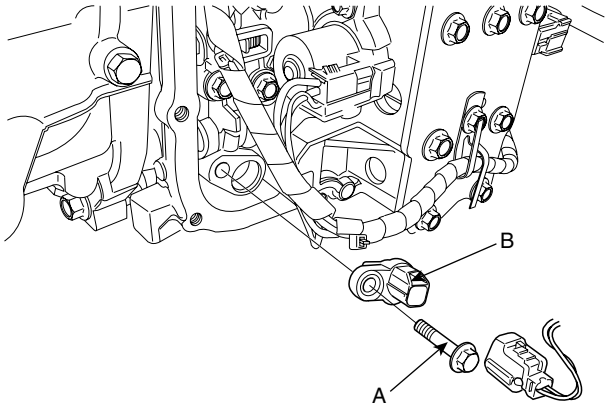


EKRF009C

5. Replace the sensor with the new one and reassemble the rest of the parts.

## INSPECTION EFB6BAFB

1. Remove the oil temperature sensor(A).

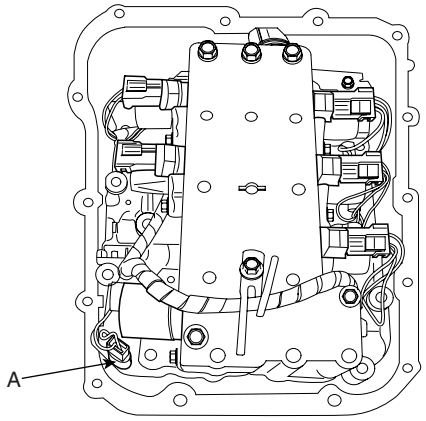


EKRF009D

2. Measure the resistance between the terminal 1 and 2 of the sensor connector.

| Temp.[°C(°F)] | Resistance(KΩ ) |
|---|---|
| 0(32)<br>100(212) | 18.6<br>0.63 |

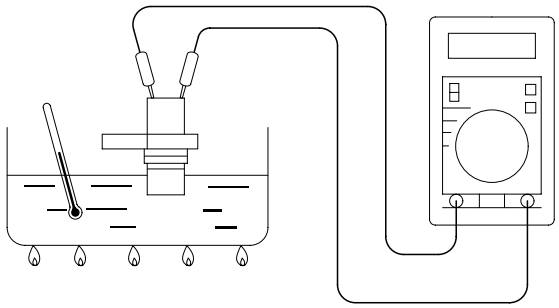

EKRF009E

3. If the value is out of the specfication, replace the oil temperature sensor.

# TRANSAXLE RANGE (TR) SWITCH

## DESCRIPTION E88015D4

### INHIBITOR SWITCH

- Type: Rotary contact type
- Range of temperature : -40°C～145°C(-40°F~293°F)

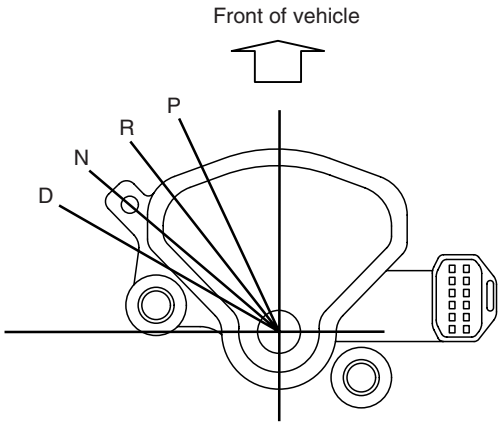


EKRF018H

### INHIBITOR SWITCH - CONTINUITY CHECK(SPORTS MODE)

| Range | Terminal Number | | | | | | | | | |
|---|---|---|---|---|---|---|---|---|---|---|
| | 1 | 2 | 3 | 4 | 5 | 6 | 7 | 8 | 9 | 10 |
| P | | | ○ | — | — | — | — | ○ | ○ | ○ |
| R | | | | | | | ○ | ○ | | |
| N | | | | ○ | — | — | — | ○ | ○ | ○ |
| D | ○ | — | — | — | — | — | — | ○ | | |

EKRF018I

## REPLACEMENT EE7E45CD

1. Pull up the parking brake.
2. Position the shift lever in 'N' range.
3. Remove the air cleaner assembly.
4. Remove the battery.
5. Remove the battery tray.
6. Remove the inhibiter switch connector.
7. Remove the shift cable mounting nut(A).

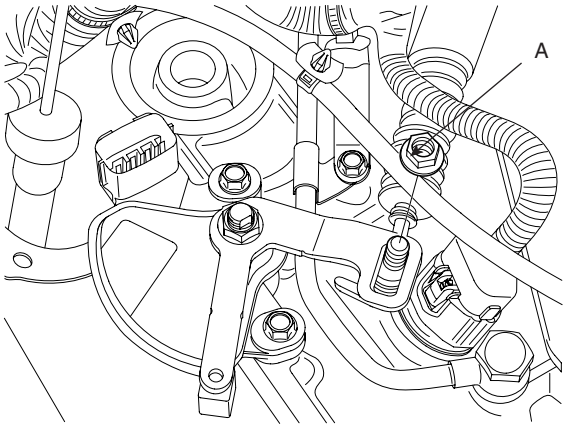


EKRF008E

8. Remove the inhibiter switch loosening the mounting bolts.
9. Refering to 'INSPECTION', check for continuity. If there is an error, replace the inhibiter switch.

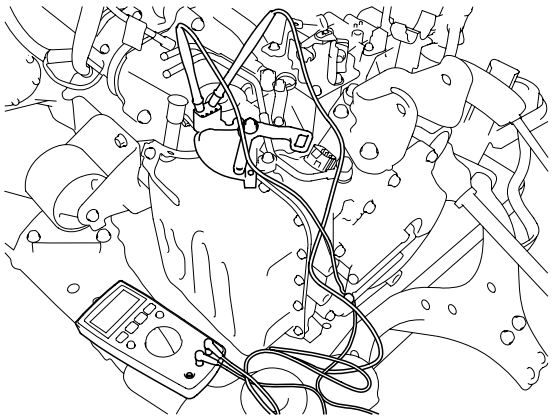

EKRF008F

10. After tightening the shift cable mounting nut, connect the inhibiter switch.
11. Install the battery, battery tray and the air cleaner assembly.

## INSPECTION E5BFD847

1. Check for the starter motor when the ignition switch is at 'START' position and the shift lever at 'P' or 'N' range.
2. Check for the rear lamp when the ignition switch if it does not work properly.
3. Check for the inhibiter switch if it does not work properly.
4. If the inhibiter switch is not fixed in a proper position, reassemble it in the right position.
5. Re-check 1 and 2 procedures.
6. Using a scan tool, confirm the DTCs.
7. Disconnect the battery (-) terminal and the inhibiter switch.
8. Check for continuity between terminals at the switch connector.

| Range | Terminal Number | | | | | | | | | |
|---|---|---|---|---|---|---|---|---|---|---|
| | 1 | 2 | 3 | 4 | 5 | 6 | 7 | 8 | 9 | 10 |
| P | | | ○ | — | — | — | — | ○ | ○ | ○ |
| R | | | | | | | ○ | ○ | | |
| N | | | | ○ | — | — | — | ○ | ○ | ○ |
| D | ○ | — | — | — | — | — | — | ○ | | |

EKRF008G

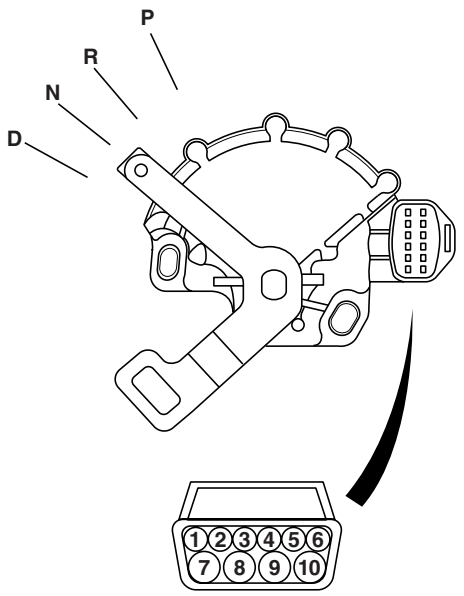


EKRF008H

9. If there is not continuity between the terminals in the table above for each switch position, replace the inhibiter switch.

## ADJUSTMENT EB9F50D8

1. Set the select lever to the "N" position.
2. Loosen the control cable to manual control lever coupling nut to free the cable and lever.
3. Set the manual control lever to the neutral position.

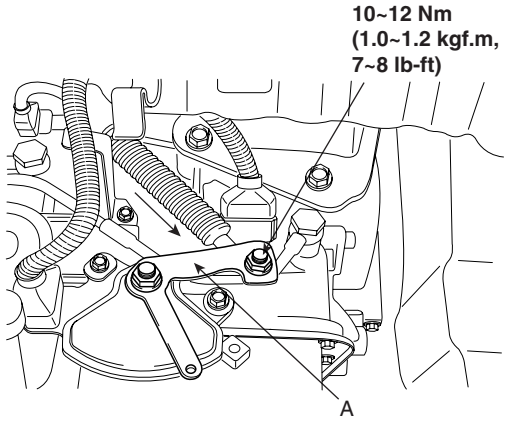


EKRF009A

4. Loosen the transaxle range switch body mounting bolts and then turn the transaxle range switch body so the hole in the end of the manual control lever and the hole (cross section A-A in the figure) in the flange of the transaxle range switch body flange are aligned.

5. Tighten the transaxle range switch body mounting bolts to the specified torque. Make sure at this time that the position of the switch body did not move.

| |
|---|
| TORQUE : 10～12Nm (1.0~1.2kgf.m, 7~8lb-ft) |

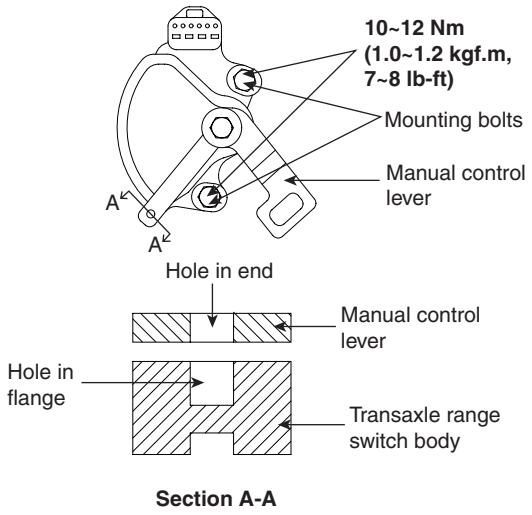


EKRF009B

6. Gently pull the transmission control cable in the direction of the arrow, and then tighten the adjusting nut.

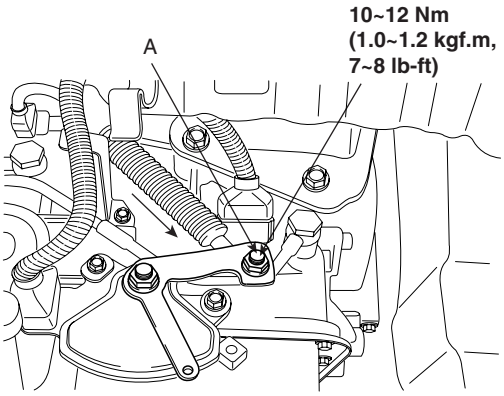


EKRF090A

7. Check that the select lever is in the "N" position.

# SHIFT LEVER

## COMPONENTS (1) EA3EE691

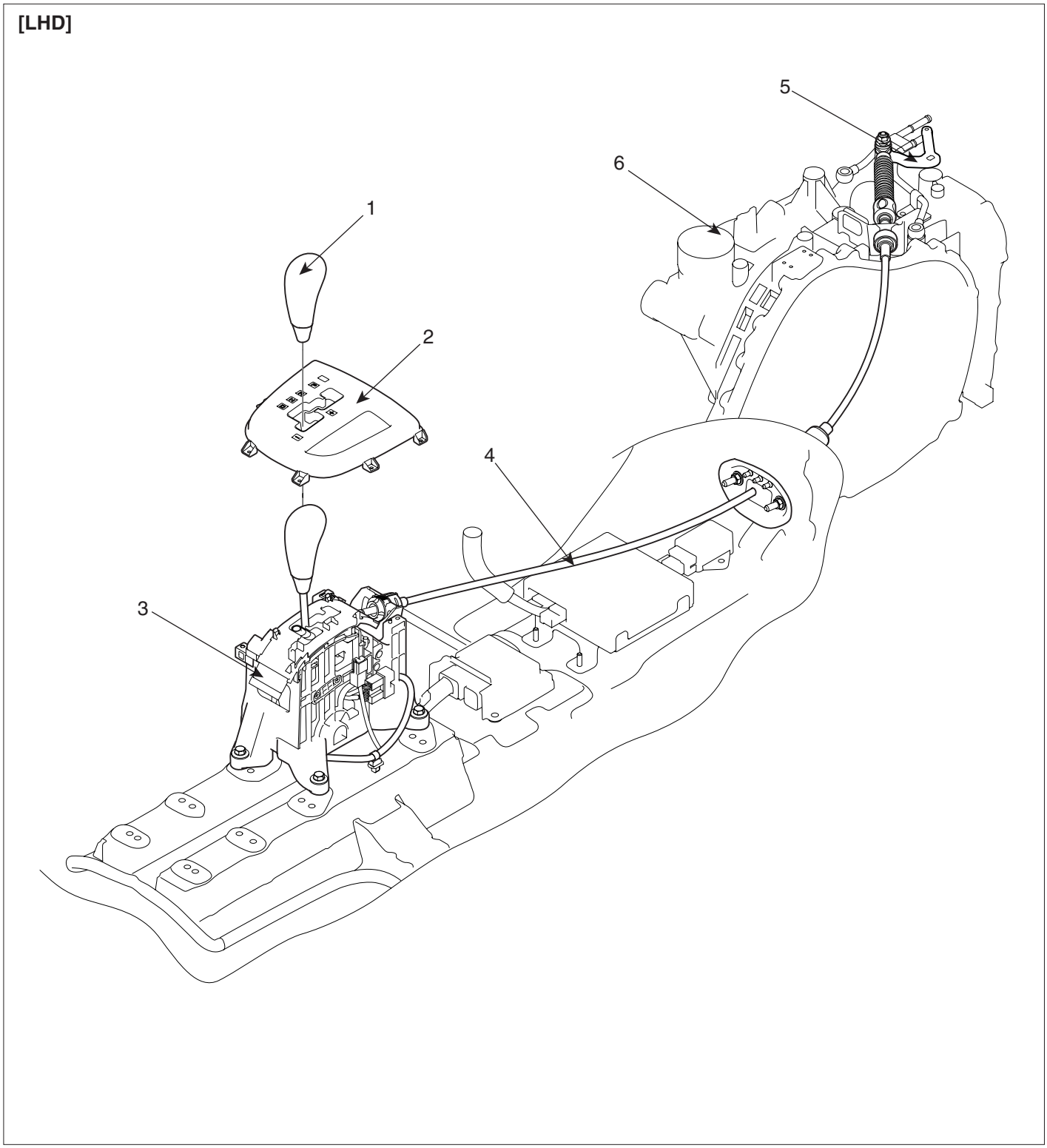


1. Shift lever knob
2. Indicator assembly
3. Shift lever assembly
4. Control cable assembly
5. Shift lever assembly (AT side)
6. Automatic transaxle assembly

SCMAT6507L

**[RHD]**

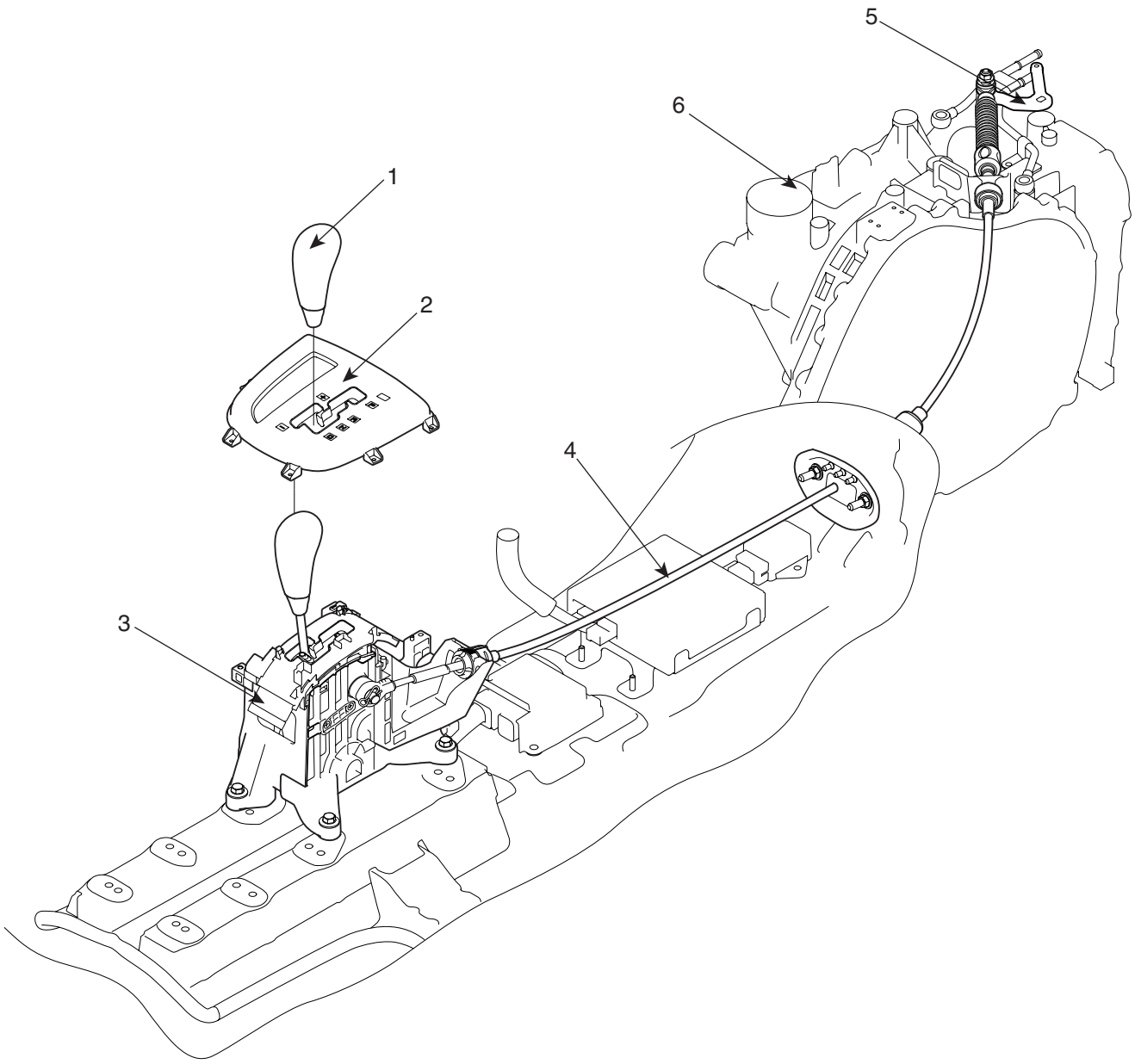


1. Shift lever knob
2. Indicator assembly
3. Shift lever assembly
4. Control cable assembly
5. Shift lever assembly (AT side)
6. Automatic transaxle assembly

SCMAT6507R

**COMPONENTS (2)**

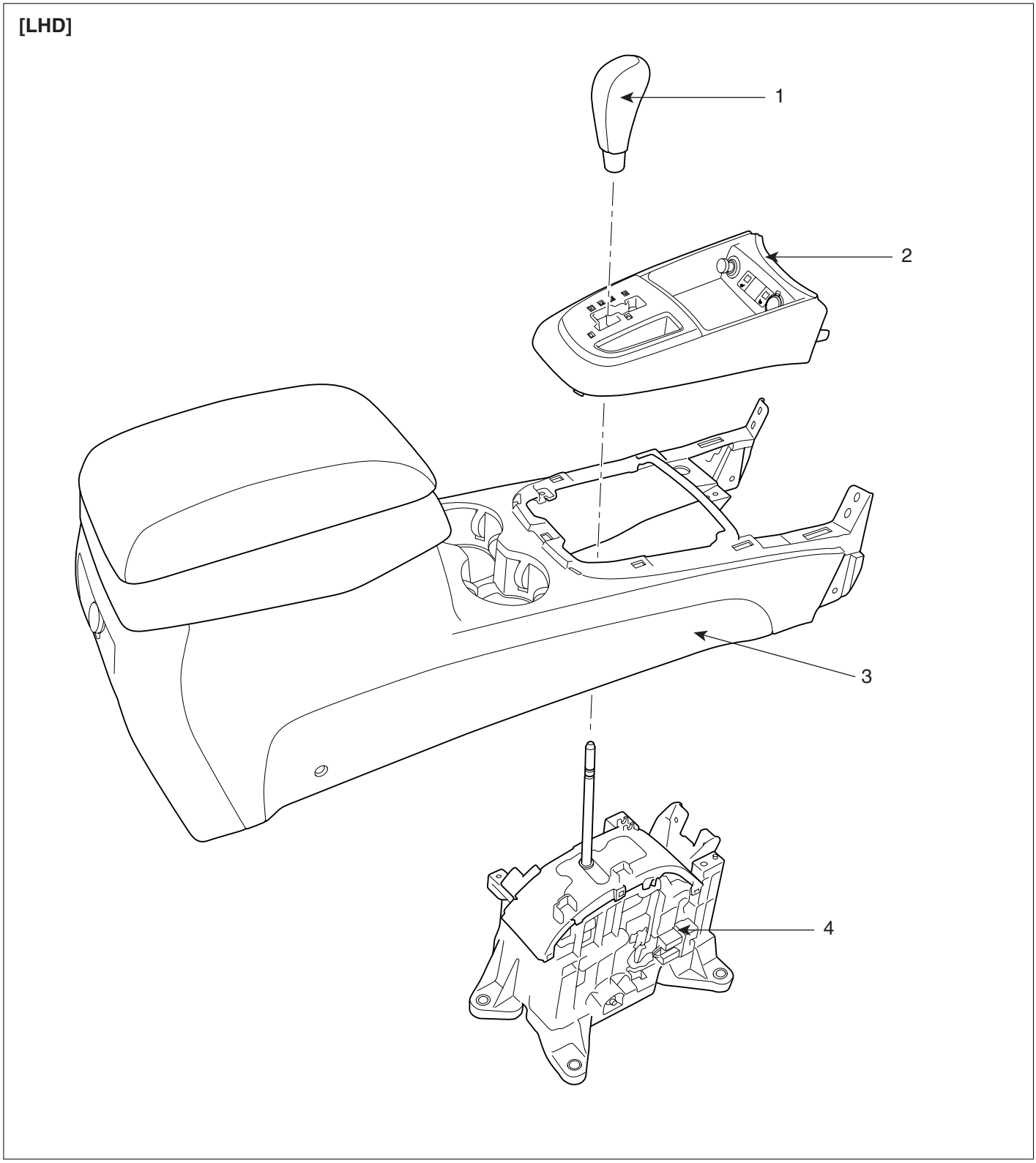


1. Shift lever knob
2. Center console cover
3. Center console
4. Shift lever

SCMAT6508L

[RHD]

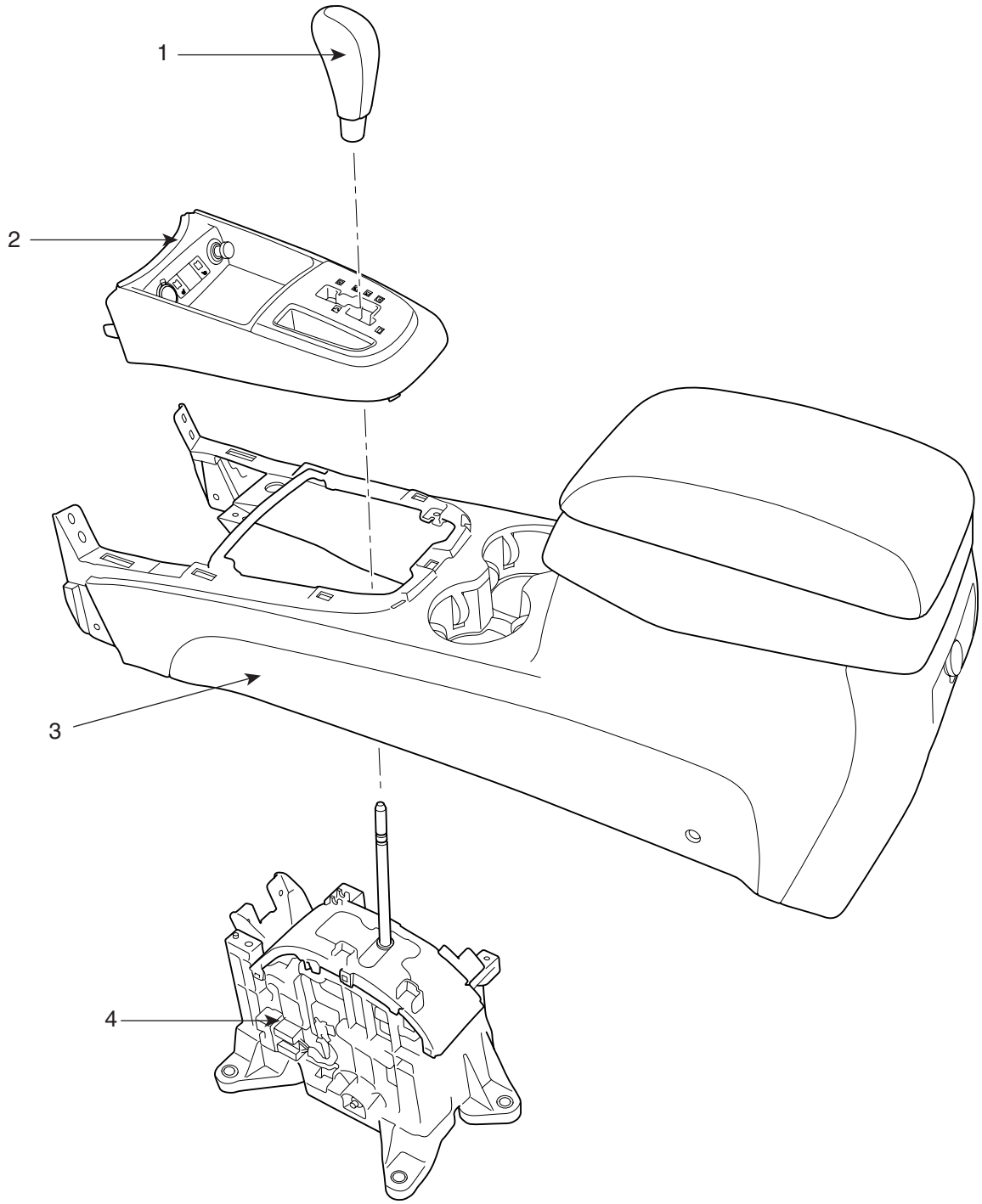


1. Shift lever knob
2. Center console cover
3. Center console
4. Shift lever

SCMAT6508R

## REMOVAL EFBDD5ED

1. Remove the shift lever knob(A).

**[LHD]**

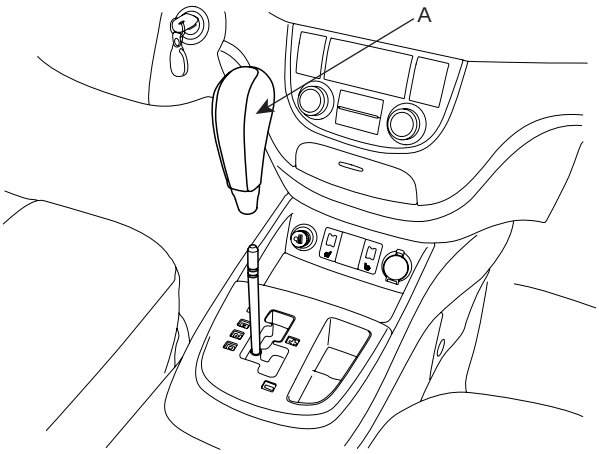


SCMAT6022D

**[RHD]**

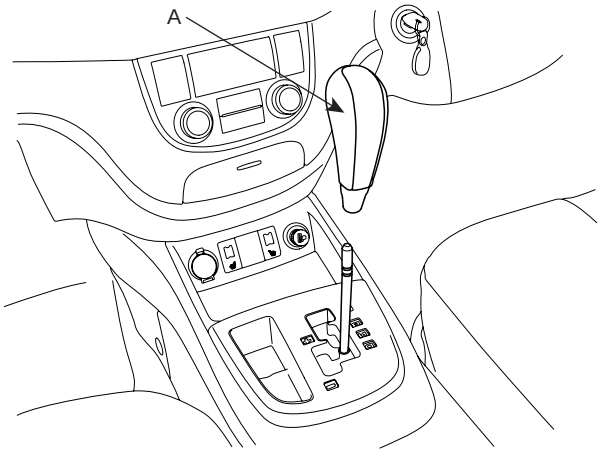


SCMAT6022R

2. Remove the center console cover (A).

**[LHD]**

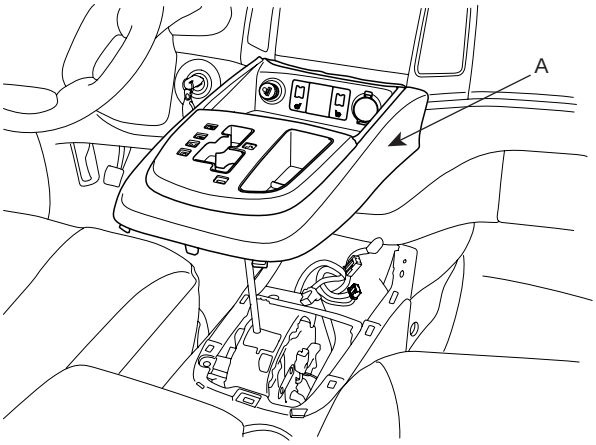


SCMAT6023D

**[RHD]**

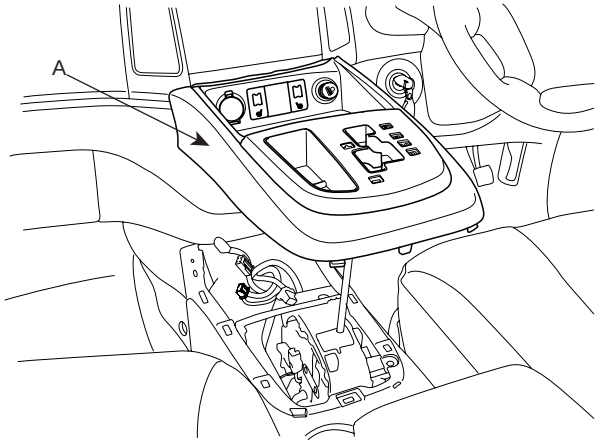


SCMAT6023R

3. Remove the center console cover by removing the two screws (A) and the four bolts (B). (See BD group)

**[LHD]**

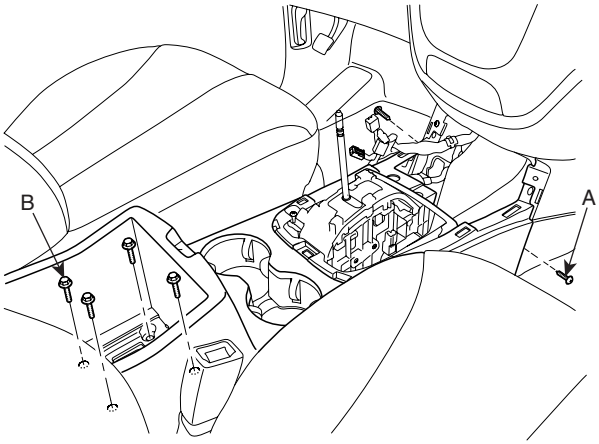


SCMAT6024D

**[RHD]**

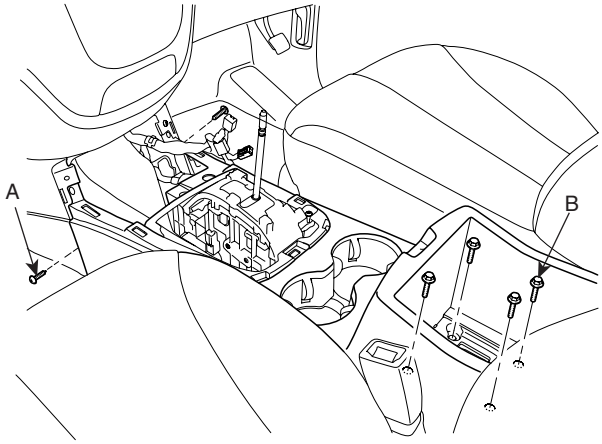


SCMAT6024R

4. Disconnect the interlock switch connector (A).

**[LHD]**

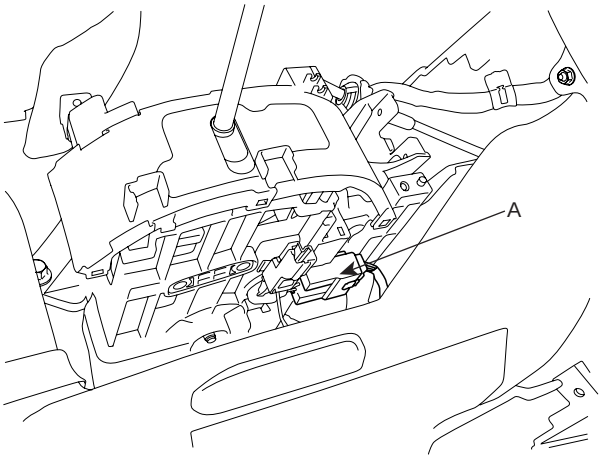


SCMAT6025D

**[RHD]**

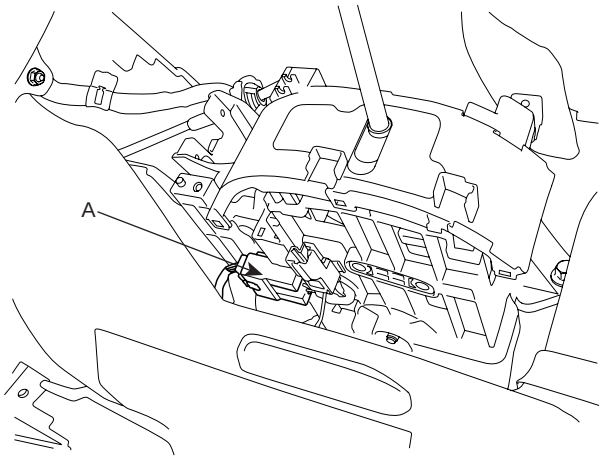


SCMAT6025R

5. Remove the control cable assembly by removing the snap pin (A) and the clip (B).

**[LHD]**

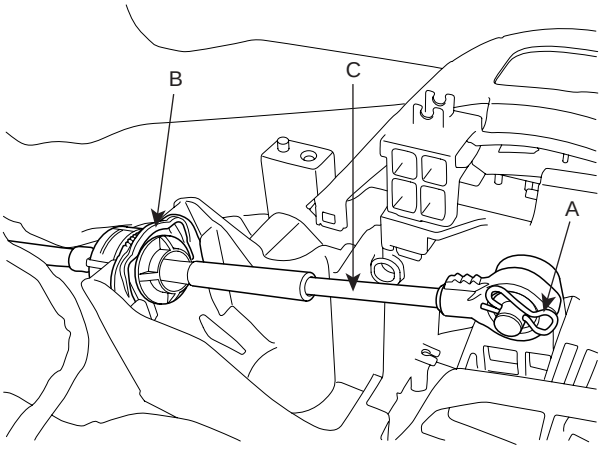


SCMAT6026D

**[RHD]**

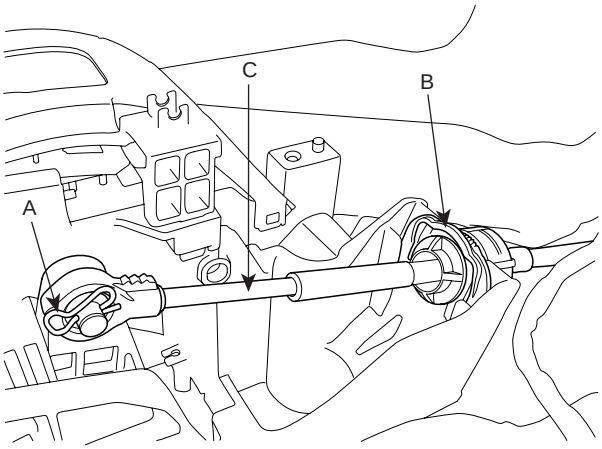


SCMAT6026R

6. Remove the shift lever bolts (A-4ea).

**[LHD]**

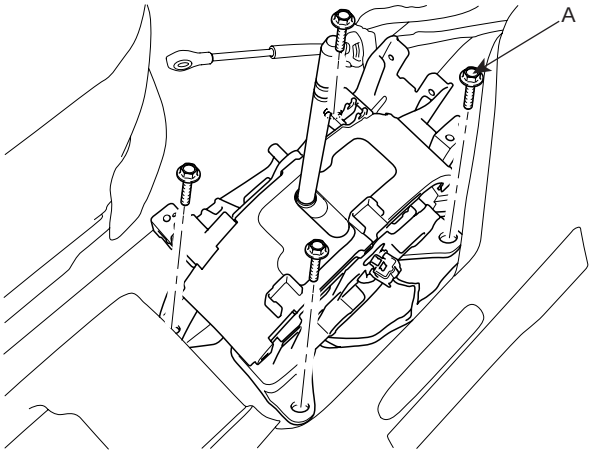


SCMAT6027D

**[RHD]**

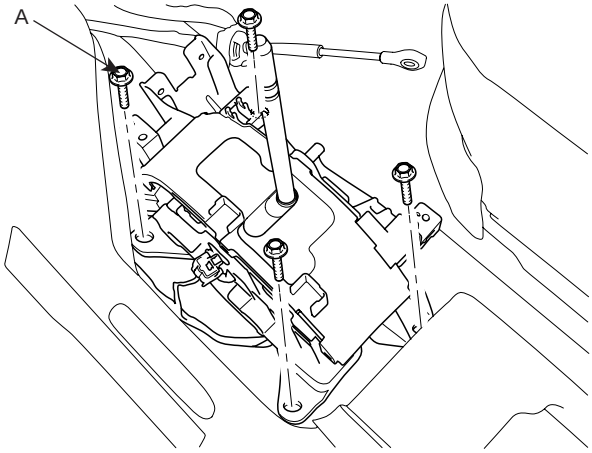


SCMAT6027R

7. Remove the shift lever assembly.

## INSPECTION E20B75D9

1. Adjusting method for T/M control cable

   1) Set room side lever and T/M side lever to "N" position.

   2) Connect room side lever and shift cable.

   3) Connect T/M side lever to cable in a following orders.
      a. Push cable lightly to "F" direction shown to eliminate FREE PLAY of cable.
      b. Tighten adjusting nut(C).

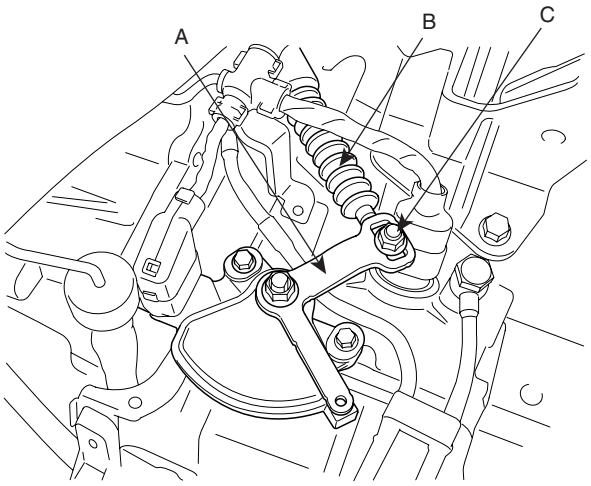


LKLG002B

   4) After adjusting according to (2)-(4). Check to be sure that this part operates surely at each range of T/M side corresponding to each position of room lever.

## INSTALLATION EC05C9CB

1. Installation is the reverse of removal.