Spider - Gtv

VOLUME I

REPAIR INSTRUCTIONS

TECHNICAL DATA 00

ENGINE 1747 1970 T.SPARK 16V 10

ENGINE 2959 V6 10

CLUTCH 18

GEARBOX 21

FRONT AXLE 27

BRAKES 33

STEERING 41

SUSPENSION AND WHEELS 44

VARIANTS FOR Gtv 1996 TB

VARIANTS FOR Gtv 3596 24V

VARIANTS FOR

Alfa Romeo

PA497200000006

9-1996

cardiagn.com

Spider - Gtv

REPAIR INSTRUCTIONS

UPDATE
PA497200000012
(60468359)

Alfa Romeo

(PAGE NOT TO BE INSERTED IN THE VOLUME)

cardiagn.com

Spider - Gtv

REPAIR INSTRUCTIONS

UPDATE
PA497200000011
(60468345)

Alfa Romeo

(PAGE NOT TO BE INSERTED IN THE VOLUME)

cardiagn.com

Spider - Gtv

REPAIR INSTRUCTIONS

UPDATE
PA497200000010
(60468285)

Alfa Romeo

(PAGE NOT TO BE INSERTED IN THE VOLUME)

cardiagn.com

INSTRUCTIONS FOR INSERTING THE TECHNICAL DOCUMENTATION IN THE FOLDER

Spider
Gtv

REPAIR INSTRUCTIONS

For placing the documentation concerning update PA497200000012 in Volumes "Spider - Gtv - Repair Instructions ", you are recommended to follow the instructions given in the UPDATE CARD (yellow) concerning each volume.
The illustration below schematically shows the composition of the volume.

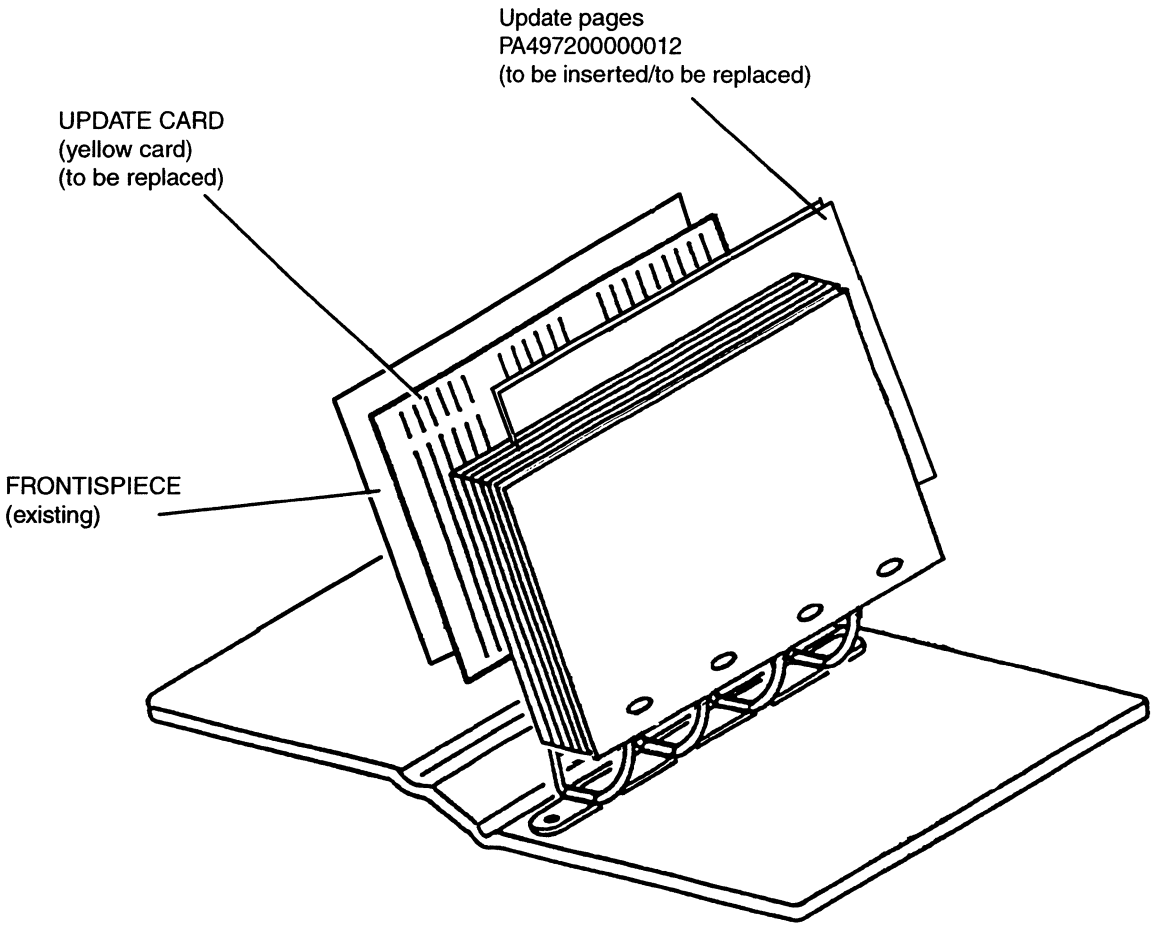

cardiagn.com

INSTRUCTIONS FOR INSERTING THE TECHNICAL DOCUMENTATION IN THE FOLDER

Spider
Gtv

REPAIR INSTRUCTIONS

For placing the documentation concerning update PA497200000011 in Volumes "Spider - Gtv - Repair Instructions ", you are recommended to follow the instructions given in the UPDATE CARD (yellow) concerning each volume.
The illustration below schematically shows the composition of the volume.

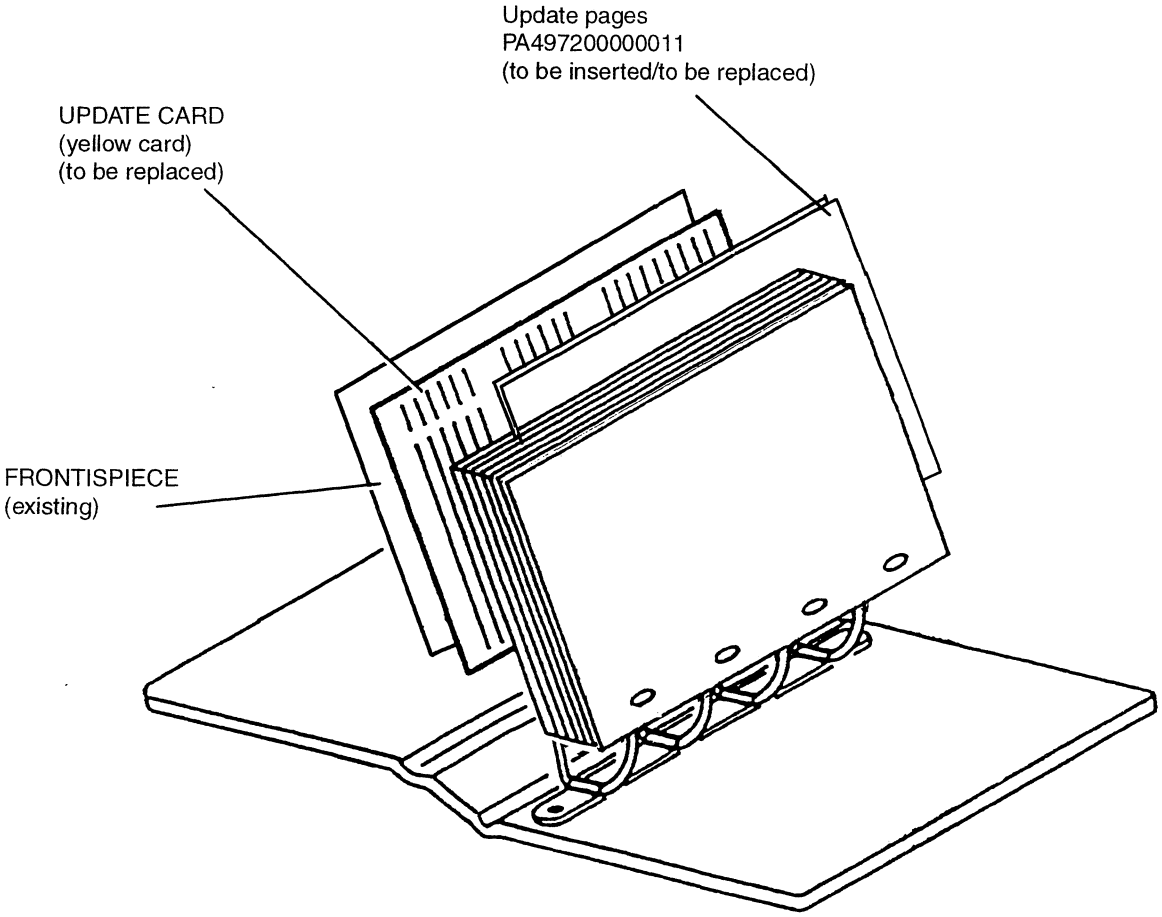

cardiagn.com

INSTRUCTIONS FOR INSERTING THE TECHNICAL DOCUMENTATION IN THE FOLDER

Spider
Gtv

REPAIR INSTRUCTIONS

For placing the documentation concerning update PA497200000010 in Volumes "Spider - Gtv - Repair Instructions ", you are recommended to follow the instructions given in the UPDATE CARD (yellow) concerning each volume.
The illustration below schematically shows the composition of the volume.

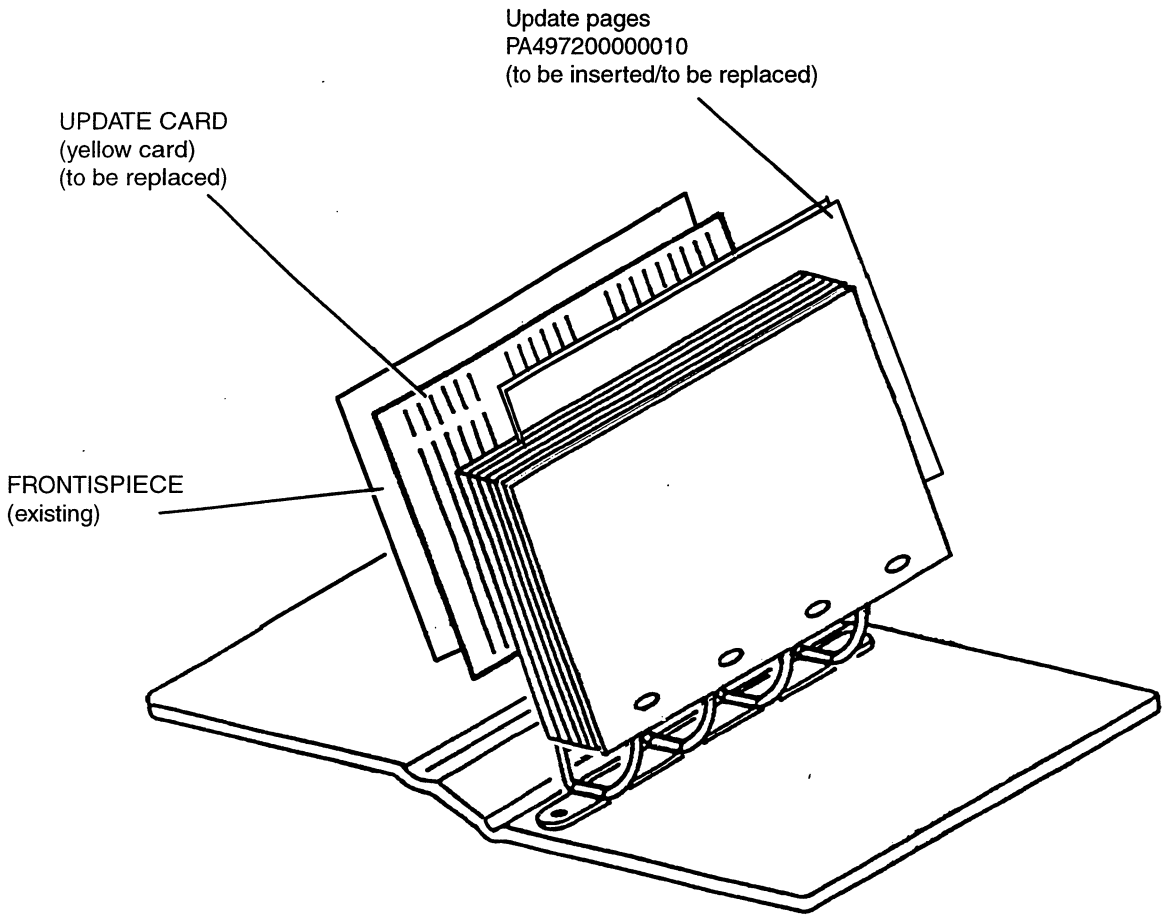

cardiagn.com

INSTRUCTIONS FOR INSERTING THE TECHNICAL DOCUMENTATION IN THE FOLDER

Spider
Gtv

REPAIR INSTRUCTIONS

For placing the documentation concerning update PA497200000009 in Volumes "Spider - Gtv - Repair Instructions ", you are recommended to follow the instructions given in the UPDATE CARD (yellow) concerning each volume.
The illustration below schematically shows the composition of the volume.

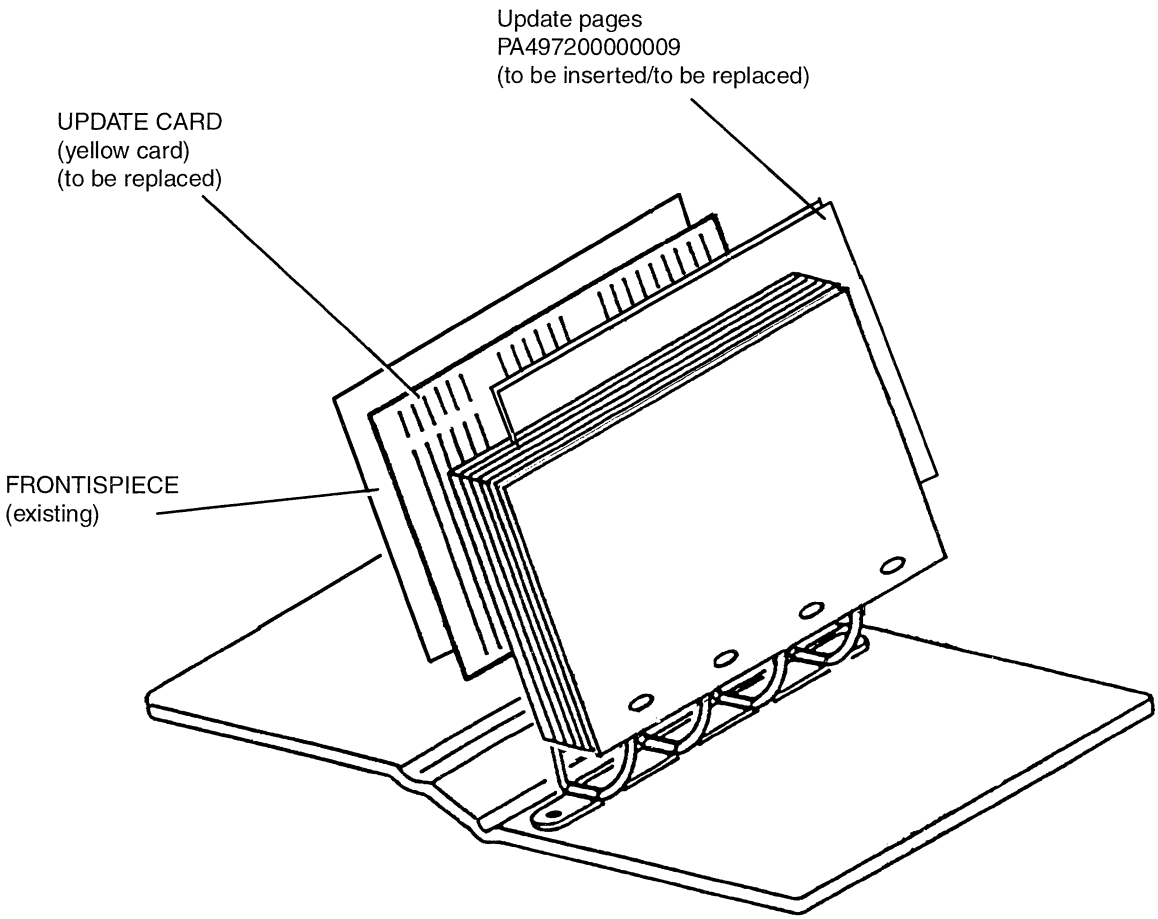

cardiagn.com

UPDATE CARD

Spider - Gtv

VOLUME I
REPAIR
INSTRUCTIONS

UPDATE CARD				
UPDATE (DATE)	MODEL	SECTION	PAGE	
			SUBST.	ADDED
8 (3/1998)	Spider-Gtv	-	Frontespice	
9 (9/1998)	Spider-Gtv	00	Index	
8 (3/1998)	Spider-Gtv	00	1	
9 (3/1998)	Spider-Gtv	00	2 to 4	
10 (11/1999)	Spider-Gtv	00	5 to 6	
9 (3/1998)	Spider-Gtv	00	7	
8 (3/1998)	Spider-Gtv	00		7/1 to 7/6
8 (3/1998)	Spider-Gtv	00	8	
9 (9/1998)	Spider-Gtv	00	13	
6 (9/1996)	Spider-Gtv	00	19	
8 (3/1998)	Spider-Gtv	00	20	
9 (9/1998)	Spider-Gtv	00	21 to 26	
6 (9/1996)	Spider-Gtv	00	27	
8 (3/1998)	Spider-Gtv	00	28	
9 (9/1998)	Spider-Gtv	00	29 to 30	
6 (9/1996)	Spider-Gtv	00	32	
3 (3/1995)	Spider-Gtv	00	33 to 34	
6 (9/1996)	Spider-Gtv	00	35	
8 (3/1998)	Spider-Gtv	00	36 to 37	
9 (9/1998)	Spider-Gtv	00	39 to 40	
6 (9/1996)	Spider-Gtv	00	43 to 45	
9 (9/1998)	Spider-Gtv	00		46/1 to 46/2
7 (4/1997)	Spider-Gtv	00	49	
9 (9/1998)	Spider-Gtv	00	51	
6 (9/1996)	Spider-Gtv	00	55	
9 (9/1998)	Spider-Gtv	10 T.S.	Index I-II	
6 (9/1996)	Spider-Gtv	10 T.S.		8/1 to 8/2
6 (9/1996)	Spider-Gtv	10 T.S.	16 to 18	
3 (3/1995)	Spider-Gtv	10 T.S.		18/1
6 (9/1996)	Spider-Gtv	10 T.S.	22	
6 (9/1996)	Spider-Gtv	10 T.S.		24/1 to 24/6
6 (9/1996)	Spider-Gtv	10 T.S.	31	
6 (9/1996)	Spider-Gtv	10 T.S.		36/1 to 36/2
3 (3/1995)	Spider-Gtv	10 T.S.		38/1 to 38/2
3 (3/1995)	Spider-Gtv	10 T.S.	44	
6 (9/1996)	Spider-Gtv	10 T.S.	45 to 46	
9 (9/1998)	Spider-Gtv	10 T.S.	49 to 60	
9 (9/1998)	Spider-Gtv	10 T.S.		61 to 104
3 (3/1995)	Spider-Gtv	10 V6	Index I	
3 (3/1995)	Spider-Gtv	10 V6	17	
9 (9/1998)	Spider-Gtv	10 V6		18/1 to 18/2
3 (3/1995)	Spider-Gtv	10 V6	26	
3 (3/1995)	Spider-Gtv	10 V6		26/1 to 26/4
3 (3/1995)	Spider-Gtv	10 V6		39/ to 39/2
6 (9/1996)	Spider-Gtv	21	4	
6 (9/1996)	Spider-Gtv	21	10	
11 (7/2000)	Spider-Gtv	33	Index	
7 (4/1997)	Spider-Gtv	33	1	
7 (4/1997)	Spider-Gtv	33	3 to 4	

UPDATE CARD				
UPDATE (DATE)	MODEL	SECTION	PAGE	
			SUBST.	ADDED
7 (4/1997)	Spider-Gtv	33		4/1 to 4/2
10 (11/1999)	Spider-Gtv	33	4/3 to 4/4	
7 (4/1997)	Spider-Gtv	33		4/5 to 4/6
7 (4/1997)	Spider-Gtv	33	5	
11 (7/2000)	Spider-Gtv	33		8/1 a 8/4
6 (9/1996)	Spider-Gtv	33	9	
9 (9/1998)	Spider-Gtv	41	Index	
7 (4/1997)	Spider-Gtv	41	2	
9 (9/1998)	Spider-Gtv	41	3 to 4	
9 (9/1998)	Spider-Gtv	41		4/1 to 4/2
9 (9/1998)	Spider-Gtv	41	5	
6 (9/1996)	Spider-Gtv	41	7	
9 (9/1998)	Spider-Gtv	41	11	
11 (7/2000)	Spider-Gtv	44	Index	
6 (9/1996)	Spider-Gtv	44	5	
3 (3/1995)	Spider-Gtv	44	8	
6 (9/1996)	Spider-Gtv	44	9	
3 (3/1995)	Spider-Gtv	44	11 to 12	
3 (3/1995)	Spider-Gtv	44		12/1 to 12/3
11 (7/2000)	Spider-Gtv	44	18	
11 (7/2000)	Spider-Gtv	44		18/1 to 18/6
11 (7/2000)	Spider-Gtv	44	19	
9 (9/1998)	Spider-Gtv	44	20 to 23	
3 (3/1995)	Gtv V6TB		Index	
9 (9/1998)	Gtv V6TB	00	1 to 5	
1 (3/1994)	Gtv V6TB	00		6
9 (9/1998)	Gtv V6TB	00	7	
1 (3/1994)	Gtv V6TB	00		8 to 11
3 (3/1995)	Gtv V6TB	00	12	
3 (3/1995)	Gtv V6TB	00		12/1 to 12/2
8 (3/1998)	Gtv V6TB	00	13	
1 (3/1994)	Gtv V6TB	00		14
9 (9/1998)	Gtv V6TB	00	15	
3 (3/1995)	Gtv V6TB	00		15/1
1 (3/1994)	Gtv V6TB	00		16
3 (3/1995)	Gtv V6TB	00	17 to 19	
3 (3/1995)	Gtv V6TB	00		19/1 to 19/2
1 (3/1994)	Gtv V6TB	00		20
3 (3/1995)	Gtv V6TB	00	21	
9 (9/1998)	Gtv V6TB	00		21/1 to 21/2
3 (3/1995)	Gtv V6TB	00		22 to 31
3 (3/1995)	Gtv V6TB	10	1 to 2	
3 (3/1995)	Gtv V6TB	10		3 to 60
3 (3/1995)	Gtv V6TB	21		1 to 7
9 (9/1998)	Gtv V6TB	44	1 to 4	
9 (9/1998)	Gtv 3.024V		Index I-II	
9 (9/1998)	Gtv 3.024V	00	1 to 7	
6 (9/1996)	Gtv 3.024V	00		8 to 12

(continued)

cardiagn.com

UPDATE CARD

Spider - Gtv

VOLUME I

REPAIR INSTRUCTIONS

UPDATE CARD				
UPDATE (DATE)	MODEL	SECTION	PAGE	
			SUBST.	ADDED
9 (9/1998)	Gtv 3.024V	00	13 to 16	
6 (9/1996)	Gtv 3.024V	00		17 to 18
9 (9/1998)	Gtv 3.024V	00	19 to 20	
6 (9/1996)	Gtv 3.024V	00		21
9 (9/1998)	Gtv 3.024V	00	22	
6 (9/1996)	Gtv 3.024V	00		23
9 (9/1998)	Gtv 3.024V	00	24	
9 (9/1998)	Gtv 3.024V	00		24/1 to 24/2
6 (9/1996)	Gtv 3.024V	00		25 to 42
9 (9/1998)	Gtv 3.024V	00		43 to 53
6 (9/1996)	Gtv 3.024V	10		1 to 28
9 (9/1998)	Gtv 3.024V	10	29	
6 (9/1996)	Gtv 3.024V	10		30
9 (9/1998)	Gtv 3.024V	10	31 to 32	
6 (9/1996)	Gtv 3.024V	10		33 to 38
9 (9/1998)	Gtv 3.024V	10	39 to 41	
9 (9/1998)	Gtv 3.024V	10		41/1 to 41/2
6 (9/1996)	Gtv 3.024V	10		42 to 58
9 (9/1998)	Gtv 3.024V	10	59	
6 (9/1996)	Gtv 3.024V	10		60 to 71
9 (9/1998)	Gtv 3.024V	10		72 to 143

UPDATE CARD				
UPDATE (DATE)	MODEL	SECTION	PAGE	
			SUBST.	ADDED
6 (9/1996)	Gtv 3.024V	18		1 to 4
6 (9/1996)	Gtv 3.024V	21		1 to 11
9 (9/1998)	Gtv 3.024V	21		12 to 32
6 (9/1996)	Gtv 3.024V	33		1 to 4
9 (9/1998)	Gtv 3.024V	41	Index	
6 (9/1996)	Gtv 3.024V	41		1 to 4
9 (9/1998)	Gtv 3.024V	44		0/1 to 0/2
9 (9/1998)	Gtv 3.024V	44	1 to 4	
9 (9/1998)	Spider V6TB		Index	
9 (9/1998)	Spider V6TB	00	1 to 4	
9 (9/1998)	Spider V6TB	00		5 to 7
11 (7/2000)	Spider Gtv T.Spark (Euro 3)	00 00		Index 1 to 2
11 (7/2000)	Spider Gtv 3.024V (Euro 3)	00 00		Index 1 to 3
12 (11/2000)		**10**		**Index** **1 to 14**

cardiagn.com

UPDATE CARD

Spider - Gtv

VOLUME I

REPAIR INSTRUCTIONS

UPDATE CARD				
UPDATE (DATE)	MODEL	SECTION	PAGE	
			SUBST.	ADDED
8 (3/1998)	Spider-Gtv	-	Frontespice	
9 (9/1998)	Spider-Gtv	00	Index	
8 (3/1998)	Spider-Gtv	00	1	
9 (3/1998)	Spider-Gtv	00	2 to 4	
10 (11/1999)	Spider-Gtv	00	5 to 6	
9 (3/1998)	Spider-Gtv	00	7	
8 (3/1998)	Spider-Gtv	00		7/1 to 7/6
8 (3/1998)	Spider-Gtv	00	8	
9 (9/1998)	Spider-Gtv	00	13	
6 (9/1996)	Spider-Gtv	00	19	
8 (3/1998)	Spider-Gtv	00	20	
9 (9/1998)	Spider-Gtv	00	21 to 26	
6 (9/1996)	Spider-Gtv	00	27	
8 (3/1998)	Spider-Gtv	00	28	
9 (9/1998)	Spider-Gtv	00	29 to 30	
6 (9/1996)	Spider-Gtv	00	32	
3 (3/1995)	Spider-Gtv	00	33 to 34	
6 (9/1996)	Spider-Gtv	00	35	
8 (3/1998)	Spider-Gtv	00	36 to 37	
9 (9/1998)	Spider-Gtv	00	39 to 40	
6 (9/1996)	Spider-Gtv	00	43 to 45	
9 (9/1998)	Spider-Gtv	00		46/1 to 46/2
7 (4/1997)	Spider-Gtv	00	49	
9 (9/1998)	Spider-Gtv	00	51	
6 (9/1996)	Spider-Gtv	00	55	
9 (9/1998)	Spider-Gtv	10 T.S.	Index I-II	
6 (9/1996)	Spider-Gtv	10 T.S.		8/1 to 8/2
6 (9/1996)	Spider-Gtv	10 T.S.	16 to 18	
3 (3/1995)	Spider-Gtv	10 T.S.		18/1
6 (9/1996)	Spider-Gtv	10 T.S.	22	
6 (9/1996)	Spider-Gtv	10 T.S.		24/1 to 24/6
6 (9/1996)	Spider-Gtv	10 T.S.	31	
6 (9/1996)	Spider-Gtv	10 T.S.		36/1 to 36/2
3 (3/1995)	Spider-Gtv	10 T.S.		38/1 to 38/2
3 (3/1995)	Spider-Gtv	10 T.S.	44	
6 (9/1996)	Spider-Gtv	10 T.S.	45 to 46	
9 (9/1998)	Spider-Gtv	10 T.S.	49 to 60	
9 (9/1998)	Spider-Gtv	10 T.S.		61 to 104
3 (3/1995)	Spider-Gtv	10 V6	Index I	
3 (3/1995)	Spider-Gtv	10 V6	17	
9 (9/1998)	Spider-Gtv	10 V6		18/1 to 18/2
3 (3/1995)	Spider-Gtv	10 V6	26	
3 (3/1995)	Spider-Gtv	10 V6		26/1 to 26/4
3 (3/1995)	Spider-Gtv	10 V6		39/ to 39/2
6 (9/1996)	Spider-Gtv	21	4	
6 (9/1996)	Spider-Gtv	21	10	
11 (7/2000)	**Spider-Gtv**	**33**	**Index**	
7 (4/1997)	Spider-Gtv	33	1	
7 (4/1997)	Spider-Gtv	33	3 to 4	

UPDATE CARD				
UPDATE (DATE)	MODEL	SECTION	PAGE	
			SUBST.	ADDED
7 (4/1997)	Spider-Gtv	33		4/1 to 4/2
10 (11/1999)	Spider-Gtv	33	4/3 to 4/4	
7 (4/1997)	Spider-Gtv	33		4/5 to 4/6
7 (4/1997)	Spider-Gtv	33	5	
11 (7/2000)	**Spider-Gtv**	**33**		**8/1 a 8/4**
6 (9/1996)	Spider-Gtv	33	9	
9 (9/1998)	Spider-Gtv	41	Index	
7 (4/1997)	Spider-Gtv	41	2	
9 (9/1998)	Spider-Gtv	41	3 to 4	
9 (9/1998)	Spider-Gtv	41		4/1 to 4/2
9 (9/1998)	Spider-Gtv	41	5	
6 (9/1996)	Spider-Gtv	41	7	
9 (9/1998)	Spider-Gtv	41	11	
11 (7/2000)	**Spider-Gtv**	**44**	**Index**	
6 (9/1996)	Spider-Gtv	44	5	
3 (3/1995)	Spider-Gtv	44	8	
6 (9/1996)	Spider-Gtv	44	9	
3 (3/1995)	Spider-Gtv	44	11 to 12	
3 (3/1995)	Spider-Gtv	44		12/1 to 12/3
11 (7/2000)	**Spider-Gtv**	**44**	**18**	
11 (7/2000)	**Spider-Gtv**	**44**		**18/1 to 18/6**
11 (7/2000)	**Spider-Gtv**	**44**	**19**	
9 (9/1998)	Spider-Gtv	44	20 to 23	
3 (3/1995)	Gtv V6TB		Index	
9 (9/1998)	Gtv V6TB	00	1 to 5	
1 (3/1994)	Gtv V6TB	00		6
9 (9/1998)	Gtv V6TB	00	7	
1 (3/1994)	Gtv V6TB	00		8 to 11
3 (3/1995)	Gtv V6TB	00	12	
3 (3/1995)	Gtv V6TB	00		12/1 to 12/2
8 (3/1998)	Gtv V6TB	00	13	
1 (3/1994)	Gtv V6TB	00		14
9 (9/1998)	Gtv V6TB	00	15	
3 (3/1995)	Gtv V6TB	00		15/1
1 (3/1994)	Gtv V6TB	00		16
3 (3/1995)	Gtv V6TB	00	17 to 19	
3 (3/1995)	Gtv V6TB	00		19/1 to 19/2
1 (3/1994)	Gtv V6TB	00		20
3 (3/1995)	Gtv V6TB	00	21	
9 (9/1998)	Gtv V6TB	00		21/1 to 21/2
3 (3/1995)	Gtv V6TB	00		22 to 31
3 (3/1995)	Gtv V6TB	10	1 to 2	
3 (3/1995)	Gtv V6TB	10		3 to 60
3 (3/1995)	Gtv V6TB	21		1 to 7
9 (9/1998)	Gtv V6TB	44	1 to 4	
9 (9/1998)	Gtv 3.024V		Index I-II	
9 (9/1998)	Gtv 3.024V	00	1 to 7	
6 (9/1996)	Gtv 3.024V	00		8 to 12

(continued)

cardiagn.com

UPDATE CARD

Spider - Gtv

VOLUME I

REPAIR INSTRUCTIONS

UPDATE CARD				
UPDATE (DATE)	MODEL	SECTION	PAGE	
			SUBST.	ADDED
9 (9/1998)	Gtv 3.024V	00	13 to 16	
6 (9/1996)	Gtv 3.024V	00		17 to 18
9 (9/1998)	Gtv 3.024V	00	19 to 20	
6 (9/1996)	Gtv 3.024V	00		21
9 (9/1998)	Gtv 3.024V	00	22	
6 (9/1996)	Gtv 3.024V	00		23
9 (9/1998)	Gtv 3.024V	00	24	
9 (9/1998)	Gtv 3.024V	00		24/1 to 24/2
6 (9/1996)	Gtv 3.024V	00		25 to 42
9 (9/1998)	Gtv 3.024V	00		43 to 53
6 (9/1996)	Gtv 3.024V	10		1 to 28
9 (9/1998)	Gtv 3.024V	10	29	
6 (9/1996)	Gtv 3.024V	10		30
9 (9/1998)	Gtv 3.024V	10	31 to 32	
6 (9/1996)	Gtv 3.024V	10		33 to 38
9 (9/1998)	Gtv 3.024V	10	39 to 41	
9 (9/1998)	Gtv 3.024V	10		41/1 to 41/2
6 (9/1996)	Gtv 3.024V	10		42 to 58
9 (9/1998)	Gtv 3.024V	10	59	
6 (9/1996)	Gtv 3.024V	10		60 to 71
9 (9/1998)	Gtv 3.024V	10		72 to 143

UPDATE CARD				
UPDATE (DATE)	MODEL	SECTION	PAGE	
			SUBST.	ADDED
6 (9/1996)	Gtv 3.024V	18		1 to 4
6 (9/1996)	Gtv 3.024V	21		1 to 11
9 (9/1998)	Gtv 3.024V	21		12 to 32
6 (9/1996)	Gtv 3.024V	33		1 to 4
9 (9/1998)	Gtv 3.024V	41	Index	
6 (9/1996)	Gtv 3.024V	41		1 to 4
9 (9/1998)	Gtv 3.024V	44		0/1 to 0/2
9 (9/1998)	Gtv 3.024V	44	1 to 4	
9 (9/1998)	Spider V6TB		Index	
9 (9/1998)	Spider V6TB	00	1 to 4	
9 (9/1998)	Spider V6TB	00		5 to 7
11 (7/2000)	**Spider Gtv T.Spark (Euro 3)**	**00 00**		**Index 1 to 2**
11 (7/2000)	**Spider Gtv 3.024V (Euro 3)**	**00 00**		**Index 1 to 3**

cardiagn.com

UPDATE CARD

Spider - Gtv

VOLUME I

REPAIR INSTRUCTIONS

UPDATE CARD				
UPDATE (DATE)	MODEL	SECTION	PAGE	
			SUBST.	ADDED
8 (3/1998)	Spider-Gtv	-	Frontespice	
9 (9/1998)	Spider-Gtv	00	Index	
8 (3/1998)	Spider-Gtv	00	1	
9 (3/1998)	Spider-Gtv	00	2 to 4	
10 (11/1999)	**Spider-Gtv**	**00**	**5 to 6**	
9 (3/1998)	Spider-Gtv	00	7	
8 (3/1998)	Spider-Gtv	00		7/1 to 7/6
8 (3/1998)	Spider-Gtv	00	8	
9 (9/1998)	Spider-Gtv	00	13	
6 (9/1996)	Spider-Gtv	00	19	
8 (3/1998)	Spider-Gtv	00	20	
9 (9/1998)	Spider-Gtv	00	21 to 26	
6 (9/1996)	Spider-Gtv	00	27	
8 (3/1998)	Spider-Gtv	00	28	
9 (9/1998)	Spider-Gtv	00	29 to 30	
6 (9/1996)	Spider-Gtv	00	32	
3 (3/1995)	Spider-Gtv	00	33 to 34	
6 (9/1996)	Spider-Gtv	00	35	
8 (3/1998)	Spider-Gtv	00	36 to 37	
9 (9/1998)	Spider-Gtv	00	39 to 40	
6 (9/1996)	Spider-Gtv	00	43 to 45	
9 (9/1998)	Spider-Gtv	00		46/1 to 46/2
7 (4/1997)	Spider-Gtv	00	49	
9 (9/1998)	Spider-Gtv	00	51	
6 (9/1996)	Spider-Gtv	00	55	
9 (9/1998)	Spider-Gtv	10 T.S.	Index I-II	
6 (9/1996)	Spider-Gtv	10 T.S.		8/1 to 8/2
6 (9/1996)	Spider-Gtv	10 T.S.	16 to 18	
3 (3/1995)	Spider-Gtv	10 T.S.		18/1
6 (9/1996)	Spider-Gtv	10 T.S.	22	
6 (9/1996)	Spider-Gtv	10 T.S.		24/1 to 24/6
6 (9/1996)	Spider-Gtv	10 T.S.	31	
6 (9/1996)	Spider-Gtv	10 T.S.		36/1 to 36/2
3 (3/1995)	Spider-Gtv	10 T.S.		38/1 to 38/2
3 (3/1995)	Spider-Gtv	10 T.S.	44	
6 (9/1996)	Spider-Gtv	10 T.S.	45 to 46	
9 (9/1998)	Spider-Gtv	10 T.S.	49 to 60	
9 (9/1998)	Spider-Gtv	10 T.S.		61 to 104
3 (3/1995)	Spider-Gtv	10 V6	Index I	
3 (3/1995)	Spider-Gtv	10 V6	17	
9 (9/1998)	Spider-Gtv	10 V6		18/1 to 18/2
3 (3/1995)	Spider-Gtv	10 V6	26	
3 (3/1995)	Spider-Gtv	10 V6		26/1 to 26/4
3 (3/1995)	Spider-Gtv	10 V6		39/ to 39/2
6 (9/1996)	Spider-Gtv	21	4	
6 (9/1996)	Spider-Gtv	21	10	
7 (4/1997)	Spider-Gtv	33	Index	
7 (4/1997)	Spider-Gtv	33	1	
7 (4/1997)	Spider-Gtv	33	3 to 4	

UPDATE CARD				
UPDATE (DATE)	MODEL	SECTION	PAGE	
			SUBST.	ADDED
7 (4/1997)	Spider-Gtv	33		4/1 to 4/2
10 (11/1999)	**Spider-Gtv**	**33**	**4/3 to 4/4**	
7 (4/1997)	Spider-Gtv	33		4/5 to 4/6
7 (4/1997)	Spider-Gtv	33	5	
6 (9/1996)	Spider-Gtv	33	9	
9 (9/1998)	Spider-Gtv	41	Index	
7 (4/1997)	Spider-Gtv	41	2	
9 (9/1998)	Spider-Gtv	41	3 to 4	
9 (9/1998)	Spider-Gtv	41		4/1 to 4/2
9 (9/1998)	Spider-Gtv	41	5	
6 (9/1996)	Spider-Gtv	41	7	
9 (9/1998)	Spider-Gtv	41	11	
6 (9/1996)	Spider-Gtv	44	5	
3 (3/1995)	Spider-Gtv	44	8	
6 (9/1996)	Spider-Gtv	44	9	
3 (3/1995)	Spider-Gtv	44	11 to 12	
3 (3/1995)	Spider-Gtv	44		12/1 to 12/3
3 (3/1995)	Spider-Gtv	44	18	
9 (9/1998)	Spider-Gtv	44	20 to 23	
3 (3/1995)	Gtv V6TB		Index	
9 (9/1998)	Gtv V6TB	00	1 to 5	
1 (3/1994)	Gtv V6TB	00		6
9 (9/1998)	Gtv V6TB	00	7	
1 (3/1994)	Gtv V6TB	00		8 to 11
3 (3/1995)	Gtv V6TB	00	12	
3 (3/1995)	Gtv V6TB	00		12/1 to 12/2
8 (3/1998)	Gtv V6TB	00	13	
1 (3/1994)	Gtv V6TB	00		14
9 (9/1998)	Gtv V6TB	00	15	
3 (3/1995)	Gtv V6TB	00		15/1
1 (3/1994)	Gtv V6TB	00		16
3 (3/1995)	Gtv V6TB	00	17 to 19	
3 (3/1995)	Gtv V6TB	00		19/1 to 19/2
1 (3/1994)	Gtv V6TB	00		20
3 (3/1995)	Gtv V6TB	00	21	
9 (9/1998)	Gtv V6TB	00		21/1 to 21/2
3 (3/1995)	Gtv V6TB	00		22 to 31
3 (3/1995)	Gtv V6TB	10	1 to 2	
3 (3/1995)	Gtv V6TB	10		3 to 60
3 (3/1995)	Gtv V6TB	21		1 to 7
9 (9/1998)	Gtv V6TB	44	1 to 4	
9 (9/1998)	Gtv 3.024V		Index I-II	
9 (9/1998)	Gtv 3.024V	00	1 to 7	
6 (9/1996)	Gtv 3.024V	00		8 to 12
9 (9/1998)	Gtv 3.024V	00	13 to 16	
6 (9/1996)	Gtv 3.024V	00		17 to 18
9 (9/1998)	Gtv 3.024V	00	19 to 20	
6 (9/1996)	Gtv 3.024V	00		21

(continued)

cardiagn.com

UPDATE CARD

Spider - Gtv

VOLUME I

REPAIR INSTRUCTIONS

UPDATE CARD				
UPDATE (DATE)	MODEL	SECTION	PAGE	
			SUBST.	ADDED
9 (9/1998)	Gtv 3.024V	00	22	
6 (9/1996)	Gtv 3.024V	00		23
9 (9/1998)	Gtv 3.024V	00	24	
9 (9/1998)	Gtv 3.024V	00		24/1 to 24/2
6 (9/1996)	Gtv 3.024V	00		25 to 42
9 (9/1998)	Gtv 3.024V	00		43 to 53
6 (9/1996)	Gtv 3.024V	10		1 to 28
9 (9/1998)	Gtv 3.024V	10	29	
6 (9/1996)	Gtv 3.024V	10		30
9 (9/1998)	Gtv 3.024V	10	31 to 32	
6 (9/1996)	Gtv 3.024V	10		33 to 38
9 (9/1998)	Gtv 3.024V	10	39 to 41	
9 (9/1998)	Gtv 3.024V	10		41/1 to 41/2
6 (9/1996)	Gtv 3.024V	10		42 to 58
9 (9/1998)	Gtv 3.024V	10	59	
6 (9/1996)	Gtv 3.024V	10		60 to 71
9 (9/1998)	Gtv 3.024V	10		72 to 143
6 (9/1996)	Gtv 3.024V	18		1 to 4
6 (9/1996)	Gtv 3.024V	21		1 to 11
9 (9/1998)	Gtv 3.024V	21		12 to 32
6 (9/1996)	Gtv 3.024V	33		1 to 4
9 (9/1998)	Gtv 3.024V	41	Index	
6 (9/1996)	Gtv 3.024V	41		1 to 4
9 (9/1998)	Gtv 3.024V	44		0/1 to 0/2
9 (9/1998)	Gtv 3.024V	44	1 to 4	
9 (9/1998)	Spider V6TB		Index	
9 (9/1998)	Spider V6TB	00	1 to 4	
9 (9/1998)	Spider V6TB	00		5 to 7

UPDATE CARD				
UPDATE (DATE)	MODEL	SECTION	PAGE	
			SUBST.	ADDED

cardiagn.com

UPDATE CARD

Spider - Gtv

VOLUME I

REPAIR INSTRUCTIONS

UPDATE CARD				
UPDATE (DATE)	MODEL	SECTION	PAGE	
			SUBST.	ADDED
8 (3/1998)	Spider-Gtv	-	Frontespice	
9 (9/1998)	Spider-Gtv	00	Index	
8 (3/1998)	Spider-Gtv	00	1	
9 (3/1998)	Spider-Gtv	00	2 to 7	
8 (3/1998)	Spider-Gtv	00		7/1 to 7/6
8 (3/1998)	Spider-Gtv	00	8	
9 (9/1998)	Spider-Gtv	00	13	
6 (9/1996)	Spider-Gtv	00	19	
8 (3/1998)	Spider-Gtv	00	20	
9 (9/1998)	Spider-Gtv	00	21 to 26	
6 (9/1996)	Spider-Gtv	00	27	
8 (3/1998)	Spider-Gtv	00	28	
9 (9/1998)	Spider-Gtv	00	29 to 30	
6 (9/1996)	Spider-Gtv	00	32	
3 (3/1995)	Spider-Gtv	00	33 to 34	
6 (9/1996)	Spider-Gtv	00	35	
8 (3/1998)	Spider-Gtv	00	36 to 37	
9 (9/1998)	Spider-Gtv	00	39 to 40	
6 (9/1996)	Spider-Gtv	00	43 to 45	
9 (9/1998)	Spider-Gtv	00		46/1 to 46/2
7 (4/1997)	Spider-Gtv	00	49	
9 (9/1998)	Spider-Gtv	00	51	
6 (9/1996)	Spider-Gtv	00	55	
9 (9/1998)	Spider-Gtv	10 T.S.	Index I-II	
6 (9/1996)	Spider-Gtv	10 T.S.		8/1 to 8/2
6 (9/1996)	Spider-Gtv	10 T.S.	16 to 18	
3 (3/1995)	Spider-Gtv	10 T.S.		18/1
6 (9/1996)	Spider-Gtv	10 T.S.	22	
6 (9/1996)	Spider-Gtv	10 T.S.		24/1 to 24/6
6 (9/1996)	Spider-Gtv	10 T.S.	31	
6 (9/1996)	Spider-Gtv	10 T.S.		36/1 to 36/2
3 (3/1995)	Spider-Gtv	10 T.S.		38/1 to 38/2
3 (3/1995)	Spider-Gtv	10 T.S.	44	
6 (9/1996)	Spider-Gtv	10 T.S.	45 to 46	
9 (9/1998)	Spider-Gtv	10 T.S.	49 to 60	
9 (9/1998)	Spider-Gtv	10 T.S.		61 to 104
3 (3/1995)	Spider-Gtv	10 V6	Index I	
3 (3/1995)	Spider-Gtv	10 V6	17	
9 (9/1998)	Spider-Gtv	10 V6		18/1 to 18/2
3 (3/1995)	Spider-Gtv	10 V6	26	
3 (3/1995)	Spider-Gtv	10 V6		26/1 to 26/4
3 (3/1995)	Spider-Gtv	10 V6		39/ to 39/2
6 (9/1996)	Spider-Gtv	21	4	
6 (9/1996)	Spider-Gtv	21	10	
7 (4/1997)	Spider-Gtv	33	Index	
7 (4/1997)	Spider-Gtv	33	1	
7 (4/1997)	Spider-Gtv	33	3 to 4	
7 (4/1997)	Spider-Gtv	33		4/1 to 4/6
7 (4/1997)	Spider-Gtv	33	5	

UPDATE CARD				
UPDATE (DATE)	MODEL	SECTION	PAGE	
			SUBST.	ADDED
6 (9/1996)	Spider-Gtv	33	9	
9 (9/1998)	Spider-Gtv	41	Index	
7 (4/1997)	Spider-Gtv	41	2	
9 (9/1998)	Spider-Gtv	41	3 to 4	
9 (9/1998)	Spider-Gtv	41		4/1 to 4/2
9 (9/1998)	Spider-Gtv	41	5	
6 (9/1996)	Spider-Gtv	41	7	
9 (9/1998)	Spider-Gtv	41	11	
6 (9/1996)	Spider-Gtv	44	5	
3 (3/1995)	Spider-Gtv	44	8	
6 (9/1996)	Spider-Gtv	44	9	
3 (3/1995)	Spider-Gtv	44	11 to 12	
3 (3/1995)	Spider-Gtv	44		12/1 to 12/3
3 (3/1995)	Spider-Gtv	44	18	
9 (9/1998)	Spider-Gtv	44	20 to 23	
3 (3/1995)	Gtv V6TB		Index	
9 (9/1998)	Gtv V6TB	00	1 to 5	
1 (3/1994)	Gtv V6TB	00		6
9 (9/1998)	Gtv V6TB	00	7	
1 (3/1994)	Gtv V6TB	00		8 to 11
3 (3/1995)	Gtv V6TB	00	12	
3 (3/1995)	Gtv V6TB	00		12/1 to 12/2
8 (3/1998)	Gtv V6TB	00	13	
1 (3/1994)	Gtv V6TB	00		14
9 (9/1998)	Gtv V6TB	00	15	
3 (3/1995)	Gtv V6TB	00		15/1
1 (3/1994)	Gtv V6TB	00		16
3 (3/1995)	Gtv V6TB	00	17 to 19	
3 (3/1995)	Gtv V6TB	00		19/1 to 19/2
1 (3/1994)	Gtv V6TB	00		20
3 (3/1995)	Gtv V6TB	00	21	
9 (9/1998)	Gtv V6TB	00		21/1 to 21/2
3 (3/1995)	Gtv V6TB	00		22 to 31
3 (3/1995)	Gtv V6TB	10	1 to 2	
3 (3/1995)	Gtv V6TB	10		3 to 60
3 (3/1995)	Gtv V6TB	21		1 to 7
9 (9/1998)	Gtv V6TB	44	1 to 4	
9 (9/1998)	Gtv 3.024V		Index I-II	
9 (9/1998)	Gtv 3.024V	00	1 to 7	
6 (9/1996)	Gtv 3.024V	00		8 to 12
9 (9/1998)	Gtv 3.024V	00	13 to 16	
6 (9/1996)	Gtv 3.024V	00		17 to 18
9 (9/1998)	Gtv 3.024V	00	19 to 20	
6 (9/1996)	Gtv 3.024V	00		21
9 (9/1998)	Gtv 3.024V	00	22	
6 (9/1996)	Gtv 3.024V	00		23
9 (9/1998)	Gtv 3.024V	00	24	
9 (9/1998)	Gtv 3.024V	00		24/1 to 24/2

(continued)

cardiagn.com

UPDATE CARD

Spider - Gtv

VOLUME I

REPAIR INSTRUCTIONS

UPDATE CARD				
UPDATE (DATE)	MODEL	SECTION	PAGE	
			SUBST.	ADDED
6 (9/1996)	Gtv 3.024V	00		25 to 42
9 (9/1998)	Gtv 3.024V	00		43 to 53
6 (9/1996)	Gtv 3.024V	10		1 to 28
9 (9/1998)	Gtv 3.024V	10	29	
6 (9/1996)	Gtv 3.024V	10		30
9 (9/1998)	Gtv 3.024V	10	31 to 32	
6 (9/1996)	Gtv 3.024V	10		33 to 38
9 (9/1998)	Gtv 3.024V	10	39 to 41	
9 (9/1998)	Gtv 3.024V	10		41/1 to 41/2
6 (9/1996)	Gtv 3.024V	10		42 to 58
9 (9/1998)	Gtv 3.024V	10	59	
6 (9/1996)	Gtv 3.024V	10		60 to 71
9 (9/1998)	Gtv 3.024V	10		72 to 143
6 (9/1996)	Gtv 3.024V	18		1 to 4
6 (9/1996)	Gtv 3.024V	21		1 to 11
9 (9/1998)	Gtv 3.024V	21		12 to 32
6 (9/1996)	Gtv 3.024V	33		1 to 4
9 (9/1998)	Gtv 3.024V	41	Index	
6 (9/1996)	Gtv 3.024V	41		1 to 4
9 (9/1998)	Gtv 3.024V	44		0/1 to 0/2
9 (9/1998)	Gtv 3.024V	44	1 to 4	
9 (9/1998)	Spider V6TB		Index	
9 (9/1998)	Spider V6TB	00	1 to 4	
9 (9/1998)	Spider V6TB	00		5 to 7

UPDATE CARD				
UPDATE (DATE)	MODEL	SECTION	PAGE	
			SUBST.	ADDED

cardiagn.com

INSTRUCTIONS FOR INSERTING THE TECHNICAL DOCUMENTATION IN THE FOLDER

Spider
Gtv

REPAIR INSTRUCTIONS

For placing the documentation concerning update PA497200000008 in Volumes "Spider - Gtv - Repair Instructions ", you are recommended to follow the instructions given in the UPDATE CARD (yellow) concerning each volume.
The illustration below schematically shows the composition of the volume.

VOLUME I

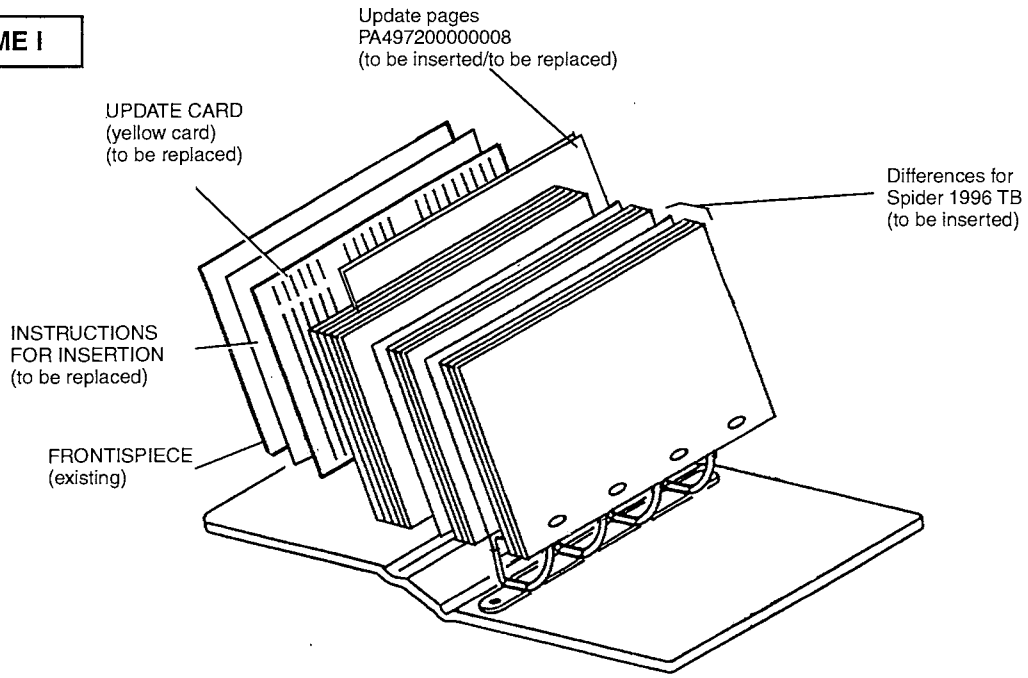

VOLUME II

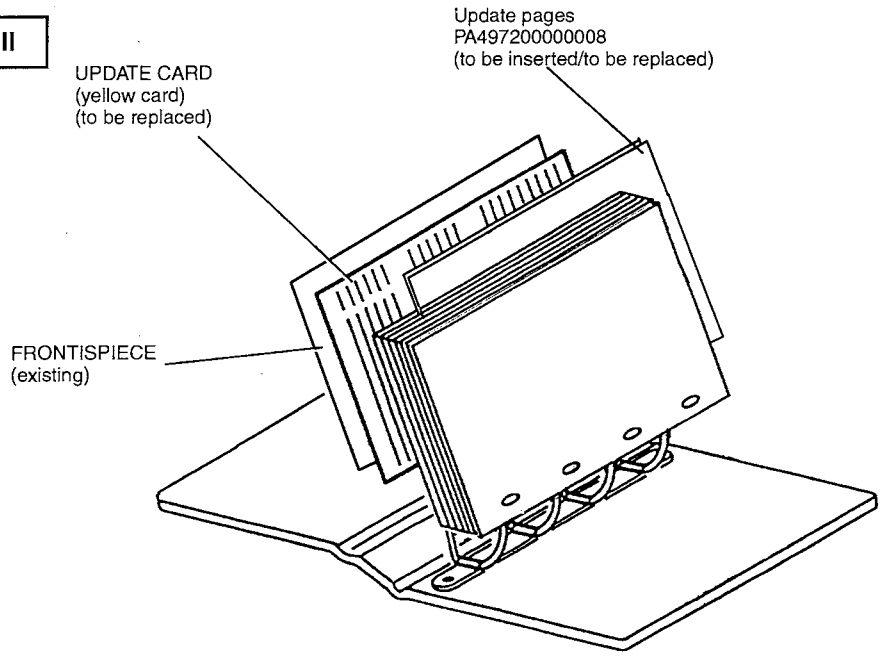

cardiagn.com

VOLUME III

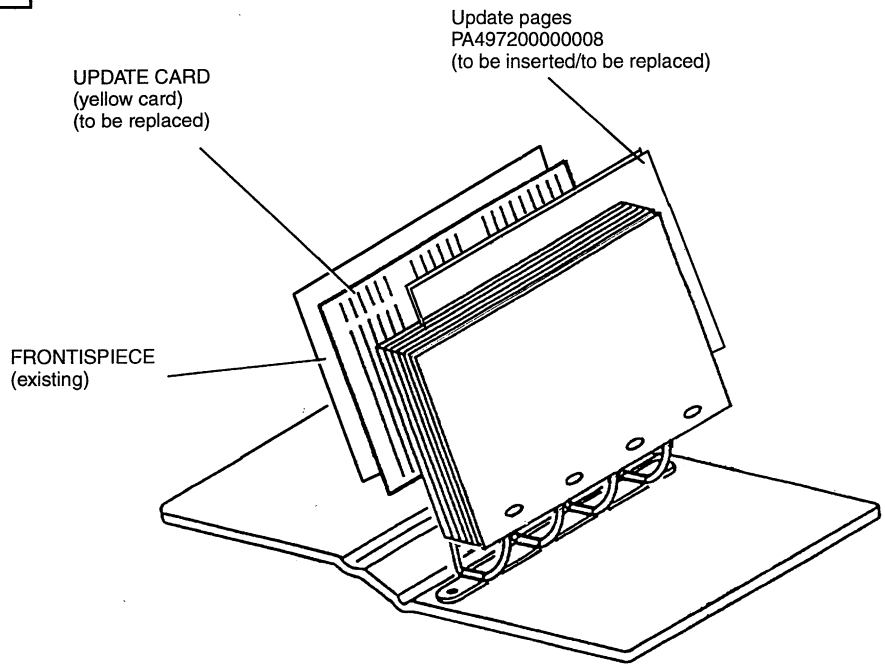

VOLUME III
SECTION II

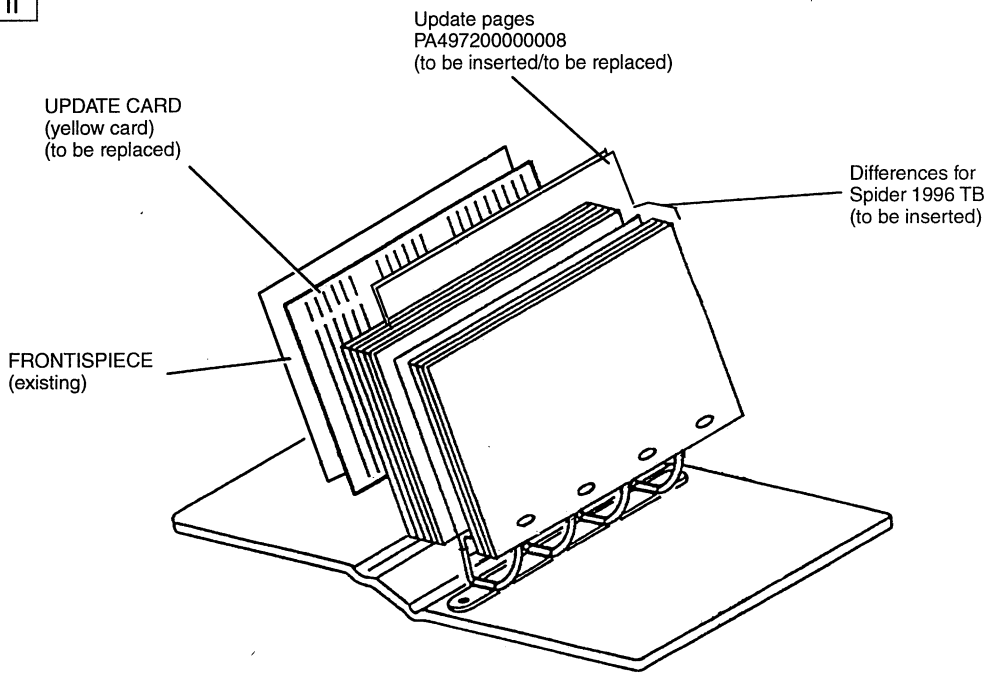

cardiagn.com

UPDATE CARD

Spider - Gtv

VOLUME I
REPAIR
INSTRUCTIONS

UPDATE CARD				
UPDATE (DATE)	MODEL	SECTION	PAGE	
			SUBST.	ADDED
8 (3/1998)	Spider-Gtv	-	Frontespice	
8 (3/1998)	Spider-Gtv	00	Index	
8 (3/1998)	Spider-Gtv	00	1	
8 (3/1998)	Spider-Gtv	00	3 to 4	
8 (3/1998)	Spider-Gtv	00	6	
8 (3/1998)	Spider-Gtv	00		7/1 to 7/6
8 (3/1998)	Spider-Gtv	00	8	
6 (9/1996)	Spider-Gtv	00	19	
8 (3/1998)	Spider-Gtv	00	20	
7 (4/1997)	Spider-Gtv	00	24	
6 (9/1996)	Spider-Gtv	00	26 to 27	
8 (3/1998)	Spider-Gtv	00	28 to 30	
6 (9/1996)	Spider-Gtv	00	32	
3 (3/1995)	Spider-Gtv	00	33 to 34	
6 (9/1996)	Spider-Gtv	00	35	
8 (3/1998)	Spider-Gtv	00	36 to 37	
8 (3/1998)	Spider-Gtv	00	39	
3 (3/1995)	Spider-Gtv	00	40	
6 (9/1996)	Spider-Gtv	00	43 to 45	
7 (4/1997)	Spider-Gtv	00	49	
6 (9/1996)	Spider-Gtv	00	55	
8 (3/1998)	Spider-Gtv	10 T.S.	Index I	
8 (3/1998)	Spider-Gtv	10 T.S.		Index II
6 (9/1996)	Spider-Gtv	10 T.S.		8/1 to 8/2
6 (9/1996)	Spider-Gtv	10 T.S.	16 to 18	
3 (3/1995)	Spider-Gtv	10 T.S.		18/1
6 (9/1996)	Spider-Gtv	10 T.S.	22	
6 (9/1996)	Spider-Gtv	10 T.S.		24/1 to 24/6
6 (9/1996)	Spider-Gtv	10 T.S.	31	
6 (9/1996)	Spider-Gtv	10 T.S.		36/1 to 36/2
3 (3/1995)	Spider-Gtv	10 T.S.		38/1 to 38/2
3 (3/1995)	Spider-Gtv	10 T.S.	44	
6 (9/1996)	Spider-Gtv	10 T.S.	45 to 46	
8 (3/1998)	Spider-Gtv	10 T.S.		49 to 60
3 (3/1995)	Spider-Gtv	10 V6	Index I	
3 (3/1995)	Spider-Gtv	10 V6	17	
3 (3/1995)	Spider-Gtv	10 V6	26	
3 (3/1995)	Spider-Gtv	10 V6		26/1 to 26/4
3 (3/1995)	Spider-Gtv	10 V6		39/ to 39/2
6 (9/1996)	Spider-Gtv	21	4	
6 (9/1996)	Spider-Gtv	21	10	
7 (4/1997)	Spider-Gtv	33	Index	
7 (4/1997)	Spider-Gtv	33	1	
7 (4/1997)	Spider-Gtv	33	3 to 4	
7 (4/1997)	Spider-Gtv	33		4/1 to 4/6
7 (4/1997)	Spider-Gtv	33	5	
6 (9/1996)	Spider-Gtv	33	9	
6 (9/1996)	Spider-Gtv	21	10	
7 (4/1997)	Spider-Gtv	41	2	

UPDATE CARD				
UPDATE (DATE)	MODEL	SECTION	PAGE	
			SUBST.	ADDED
6 (9/1996)	Spider-Gtv	41	7	
6 (9/1996)	Spider-Gtv	44	5	
3 (3/1995)	Spider-Gtv	44	8	
6 (9/1996)	Spider-Gtv	44	9	
3 (3/1995)	Spider-Gtv	44	11 to 12	
3 (3/1995)	Spider-Gtv	44		12/1 to 12/3
3 (3/1995)	Spider-Gtv	44	18	
6 (9/1996)	Spider-Gtv	44	20	
7 (4/1997)	Spider-Gtv	44	21	
6 (9/1996)	Spider-Gtv	44	22	
7 (4/1997)	Spider-Gtv	44	23	
3 (3/1995)	Gtv V6TB		Index	
3 (3/1995)	Gtv V6TB	00	1	
1 (3/1994)	Gtv V6TB	00		2 to 3
6 (9/1996)	Gtv V6TB	00	4	
3 (3/1995)	Gtv V6TB	00	5	
1 (3/1994)	Gtv V6TB	00		6
8 (3/1998)	Gtv V6TB	00	7	
1 (3/1994)	Gtv V6TB	00		8 to 11
3 (3/1995)	Gtv V6TB	00	12	
3 (3/1995)	Gtv V6TB	00		12/1 to 12/2
8 (3/1998)	Gtv V6TB	00	13	
1 (3/1994)	Gtv V6TB	00		14
7 (4/1997)	Gtv V6TB	00	15	
3 (3/1995)	Gtv V6TB	00		15/1
1 (3/1994)	Gtv V6TB	00		16
3 (3/1995)	Gtv V6TB	00	17 to 19	
3 (3/1995)	Gtv V6TB	00		19/1 to 19/2
1 (3/1994)	Gtv V6TB	00		20
3 (3/1995)	Gtv V6TB	00	21	
3 (3/1995)	Gtv V6TB	00		22 to 31
3 (3/1995)	Gtv V6TB	10	1 to 2	
3 (3/1995)	Gtv V6TB	10		3 to 60
3 (3/1995)	Gtv V6TB	21		1 to 7
3 (3/1995)	Gtv V6TB	44	1	
7 (4/1997)	Gtv V6TB	44	2	
3 (3/1995)	Gtv V6TB	44	3 to 4	
6 (9/1996)	Gtv 3.0V6			Index
6 (9/1996)	Gtv 3.0V6	00		1 to 14
7 (4/1997)	Gtv 3.0V6	00	15 to 16	
6 (9/1996)	Gtv 3.0V6	00		17 to 42
6 (9/1996)	Gtv 3.0V6	10		1 to 71
6 (9/1996)	Gtv 3.0V6	18		1 to 4
6 (9/1996)	Gtv 3.0V6	21		1 to 11
6 (9/1996)	Gtv 3.0V6	33		1 to 4
6 (9/1996)	Gtv 3.0V6	41		1 to 4
6 (9/1996)	Gtv 3.0V6	44		1 to 4

cardiagn.com

UPDATE CARD

Spider Gtv

VOLUME I

REPAIR INSTRUCTIONS

UPDATE CARD				
UPDATE (DATE)	MODEL	SECTION	PAGE	
			SUBST.	ADDED
1 (12/1994)	Spider-Gtv	-	Frontespice	
1 (12/1994)	Gtv V6 TB	-		Index
1 (12/1994)	Gtv V6 TB	00		1 to 21
1 (12/1994)	Gtv V6 TB	10		1
1 (12/1994)	Gtv V6 TB	10		2
1 (12/1994)	Gtv V6 TB	44		1 to 4

cardiagn.com

Spider Gtv

VOLUME I

REPAIR INSTRUCTIONS

UPDATE CARD

UPDATE CARD				
UPDATE (DATE)	MODEL	SECTION	PAGE	
			SUBST.	ADDED
1 (12/1994)	Spider-Gtv	-	Frontespice	
3 (3/1995)	Spider-Gtv	00	8	
3 (3/1995)	Spider-Gtv	00	24	
3 (3/1995)	Spider-Gtv	00	33 to 34	
3 (3/1995)	Spider-Gtv	00	39 to 40	
3 (3/1995)	Spider-Gtv	00	43 to 44	
3 (3/1995)	Spider-Gtv	10 T.S.	Index	
3 (3/1995)	Spider-Gtv	10 T.S.		18/1
3 (3/1995)	Spider-Gtv	10 T.S.		38/1 to 38/2
3 (3/1995)	Spider-Gtv	10 T.S.	44	
3 (3/1995)	Spider-Gtv	10 V6	Index	
3 (3/1995)	Spider-Gtv	10 V6	17	
3 (3/1995)	Spider-Gtv	10 V6	26	
3 (3/1995)	Spider-Gtv	10 V6		26/1 to 26/4
3 (3/1995)	Spider-Gtv	10 V6		39/1 to 39/2
3 (3/1995)	Spider-Gtv	33	5	
3 (3/1995)	Spider-Gtv	44	8	
3 (3/1995)	Spider-Gtv	44	11 to 12	
3 (3/1995)	Spider-Gtv	44		12/1 to 12/3
3 (3/1995)	Spider-Gtv	44	18	
3 (3/1995)	Spider-Gtv	44	20 to 23	
3 (3/1995)	Gtv V6TB		Index	
3 (3/1995)	Gtv V6TB	00	1	
1 (3/1994)	Gtv V6TB	00		2 to 4
3 (3/1995)	Gtv V6TB	00	5	
1 (3/1994)	Gtv V6TB	00		6 to 11
3 (3/1995)	Gtv V6TB	00	12	
3 (3/1995)	Gtv V6TB	00		12/1 to 12/2
1 (3/1994)	Gtv V6TB	00		13 to 14
3 (3/1995)	Gtv V6TB	00	15	
3 (3/1995)	Gtv V6TB	00		15/1
1 (3/1994)	Gtv V6TB	00		16
3 (3/1995)	Gtv V6TB	00	17 to 19	
3 (3/1995)	Gtv V6TB	00		19/1 to 19/2
1 (3/1994)	Gtv V6TB	00		20
3 (3/1995)	Gtv V6TB	00	21	
3 (3/1995)	Gtv V6TB	00		22 to 31
3 (3/1995)	Gtv V6TB	10	1 to 2	
3 (3/1995)	Gtv V6TB	10		3 to 60
3 (3/1995)	Gtv V6TB	21		1 to 7
3 (3/1995)	Gtv V6TB	44	1 to 4	

cardiagn.com

UPDATE CARD

Spider - Gtv

VOLUME I
REPAIR
INSTRUCTIONS

UPDATE CARD				
UPDATE (DATE)	MODEL	SECTION	PAGE	
			SUBST.	ADDED
6 (9/1996)	Spider-Gtv	-	Frontespice	
6 (9/1996)	Spider-Gtv	00	4	
6 (9/1996)	Spider-Gtv	00	8	
6 (9/1996)	Spider-Gtv	00	19	
6 (9/1996)	Spider-Gtv	00	24	
6 (9/1996)	Spider-Gtv	00	26 to 27	
6 (9/1996)	Spider-Gtv	00	32	
3 (3/1995)	Spider-Gtv	00	33 to 34	
6 (9/1996)	Spider-Gtv	00	35	
6 (9/1996)	Spider-Gtv	00	39	
3 (3/1995)	Spider-Gtv	00	40	
6 (9/1996)	Spider-Gtv	00	43 to 45	
6 (9/1996)	Spider-Gtv	00	55	
6 (9/1996)	Spider-Gtv	10 T.S.		
6 (9/1996)	Spider-Gtv	10 T.S.		8/1 to 8/2
6 (9/1996)	Spider-Gtv	10 T.S.	16 to 18	
3 (3/1995)	Spider-Gtv	10 T.S.		18/1
6 (9/1996)	Spider-Gtv	10 T.S.	22	
6 (9/1996)	Spider-Gtv	10 T.S.		24/1 to 24/6
6 (9/1996)	Spider-Gtv	10 T.S.	31	
6 (9/1996)	Spider-Gtv	10 T.S.		36/1 to 36/2
3 (3/1995)	Spider-Gtv	10 T.S.		38/1 to 38/2
3 (3/1995)	Spider-Gtv	10 T.S.	44	
6 (9/1996)	Spider-Gtv	10 T.S.	45 to 46	
3 (3/1995)	Spider-Gtv	10 V6		
3 (3/1995)	Spider-Gtv	10 V6	17	
3 (3/1995)	Spider-Gtv	10 V6	26	
3 (3/1995)	Spider-Gtv	10 V6		26/1 to 26/4
3 (3/1995)	Spider-Gtv	10 V6		39/ to 39/2
6 (9/1996)	Spider-Gtv	21	4	
6 (9/1996)	Spider-Gtv	21	10	
6 (9/1996)	Spider-Gtv	33		
6 (9/1996)	Spider-Gtv	33		4/1 to 4/2
6 (9/1996)	Spider-Gtv	33	5	
6 (9/1996)	Spider-Gtv	33	9	
6 (9/1996)	Spider-Gtv	21	10	
6 (9/1996)	Spider-Gtv	41	7	
6 (9/1996)	Spider-Gtv	44	5	
3 (3/1995)	Spider-Gtv	44	8	
6 (9/1996)	Spider-Gtv	44	9	
3 (3/1995)	Spider-Gtv	44	11 to 12	
3 (3/1995)	Spider-Gtv	44		12/1 to 12/3
3 (3/1995)	Spider-Gtv	44	18	
6 (9/1996)	Spider-Gtv	44	20 to 23	
3 (3/1995)	Gtv V6TB			
3 (3/1995)	Gtv V6TB	00	1	
1 (3/1994)	Gtv V6TB	00		2 to 3
6 (9/1996)	Gtv V6TB	00	4	

UPDATE CARD				
UPDATE (DATE)	MODEL	SECTION	PAGE	
			SUBST.	ADDED
3 (3/1995)	Gtv V6TB	00	5	
1 (3/1994)	Gtv V6TB	00		6 to 11
3 (3/1995)	Gtv V6TB	00	12	
3 (3/1995)	Gtv V6TB	00		12/1 to 12/2
1 (3/1994)	Gtv V6TB	00		13 to 14
6 (9/1996)	Gtv V6TB	00	15	
3 (3/1995)	Gtv V6TB	00		15/1
1 (3/1994)	Gtv V6TB	00		16
3 (3/1995)	Gtv V6TB	00	17 to 19	
3 (3/1995)	Gtv V6TB	00		19/1 to 19/2
1 (3/1994)	Gtv V6TB	00		20
3 (3/1995)	Gtv V6TB	00	21	
3 (3/1995)	Gtv V6TB	00		22 to 31
3 (3/1995)	Gtv V6TB	10	1 to 2	
3 (3/1995)	Gtv V6TB	10		3 to 60
3 (3/1995)	Gtv V6TB	21		1 to 7
3 (3/1995)	Gtv V6TB	44	1 to 4	
6 (9/1996)	Gtv 3.0V6			
6 (9/1996)	Gtv 3.0V6	00		1 to 42
6 (9/1996)	Gtv 3.0V6	10		1 to 71
6 (9/1996)	Gtv 3.0V6	18		1 to 4
6 (9/1996)	Gtv 3.0V6	21		1 to 11
6 (9/1996)	Gtv 3.0V6	33		1 to 4
6 (9/1996)	Gtv 3.0V6	41		1 to 4
6 (9/1996)	Gtv 3.0V6	44		1 to 4

cardiagn.com

UPDATE CARD

Spider - Gtv

VOLUME I

REPAIR INSTRUCTIONS

UPDATE CARD				
UPDATE (DATE)	MODEL	SECTION	PAGE	
			SUBST.	ADDED
6 (9/1996)	Spider-Gtv	-	Frontespice	
7 (4/1997)	Spider-Gtv	00	1	
6 (9/1996)	Spider-Gtv	00	4	
6 (9/1996)	Spider-Gtv	00	8	
6 (9/1996)	Spider-Gtv	00	19	
7 (4/1997)	Spider-Gtv	00	24	
6 (9/1996)	Spider-Gtv	00	26 to 27	
6 (9/1996)	Spider-Gtv	00	32	
3 (3/1995)	Spider-Gtv	00	33 to 34	
6 (9/1996)	Spider-Gtv	00	35	
6 (9/1996)	Spider-Gtv	00	39	
3 (3/1995)	Spider-Gtv	00	40	
6 (9/1996)	Spider-Gtv	00	43 to 45	
7 (4/1997)	Spider-Gtv	00	49	
6 (9/1996)	Spider-Gtv	00	55	
6 (9/1996)	Spider-Gtv	10 T.S.	Index	
6 (9/1996)	Spider-Gtv	10 T.S.		8/1 to 8/2
6 (9/1996)	Spider-Gtv	10 T.S.	16 to 18	
3 (3/1995)	Spider-Gtv	10 T.S.		18/1
6 (9/1996)	Spider-Gtv	10 T.S.	22	
6 (9/1996)	Spider-Gtv	10 T.S.		24/1 to 24/6
6 (9/1996)	Spider-Gtv	10 T.S.	31	
6 (9/1996)	Spider-Gtv	10 T.S.		36/1 to 36/2
3 (3/1995)	Spider-Gtv	10 T.S.		38/1 to 38/2
3 (3/1995)	Spider-Gtv	10 T.S.	44	
6 (9/1996)	Spider-Gtv	10 T.S.	45 to 46	
3 (3/1995)	Spider-Gtv	10 V6	Index	
3 (3/1995)	Spider-Gtv	10 V6	17	
3 (3/1995)	Spider-Gtv	10 V6	26	
3 (3/1995)	Spider-Gtv	10 V6		26/1 to 26/4
3 (3/1995)	Spider-Gtv	10 V6		39/ to 39/2
6 (9/1996)	Spider-Gtv	21	4	
6 (9/1996)	Spider-Gtv	21	10	
7 (4/1997)	Spider-Gtv	33	Index	
7 (4/1997)	Spider-Gtv	33	1	
7 (4/1997)	Spider-Gtv	33	3 to 4	
7 (4/1997)	Spider-Gtv	33		4/1 to 4/6
7 (4/1997)	Spider-Gtv	33	5	
6 (9/1996)	Spider-Gtv	33	9	
6 (9/1996)	Spider-Gtv	21	10	
7 (4/1997)	Spider-Gtv	41	2	
6 (9/1996)	Spider-Gtv	41	7	
6 (9/1996)	Spider-Gtv	44	5	
3 (3/1995)	Spider-Gtv	44	8	
6 (9/1996)	Spider-Gtv	44	9	
3 (3/1995)	Spider-Gtv	44	11 to 12	
3 (3/1995)	Spider-Gtv	44		12/1 to 12/3
3 (3/1995)	Spider-Gtv	44	18	
6 (9/1996)	Spider-Gtv	44	20	

UPDATE CARD				
UPDATE (DATE)	MODEL	SECTION	PAGE	
			SUBST.	ADDED
7 (4/1997)	Spider-Gtv	44	21	
6 (9/1996)	Spider-Gtv	44	22	
7 (4/1997)	Spider-Gtv	44	23	
3 (3/1995)	Gtv V6TB		Index	
3 (3/1995)	Gtv V6TB	00	1	
1 (3/1994)	Gtv V6TB	00		2 to 3
6 (9/1996)	Gtv V6TB	00	4	
3 (3/1995)	Gtv V6TB	00	5	
1 (3/1994)	Gtv V6TB	00		6 to 11
3 (3/1995)	Gtv V6TB	00	12	
3 (3/1995)	Gtv V6TB	00		12/1 to 12/2
1 (3/1994)	Gtv V6TB	00		13 to 14
7 (4/1997)	Gtv V6TB	00	15	
3 (3/1995)	Gtv V6TB	00		15/1
1 (3/1994)	Gtv V6TB	00		16
3 (3/1995)	Gtv V6TB	00	17 to 19	
3 (3/1995)	Gtv V6TB	00		19/1 to 19/2
1 (3/1994)	Gtv V6TB	00		20
3 (3/1995)	Gtv V6TB	00	21	
3 (3/1995)	Gtv V6TB	00		22 to 31
3 (3/1995)	Gtv V6TB	10	1 to 2	
3 (3/1995)	Gtv V6TB	10		3 to 60
3 (3/1995)	Gtv V6TB	21		1 to 7
3 (3/1995)	Gtv V6TB	44	1	
7 (4/1997)	Gtv V6TB	44	2	
3 (3/1995)	Gtv V6TB	44	3 to 4	
6 (9/1996)	Gtv 3.0V6			Index
6 (9/1996)	Gtv 3.0V6	00		1 to 14
7 (4/1997)	Gtv 3.0V6	00	15 to 16	
6 (9/1996)	Gtv 3.0V6	00		17 to 42
6 (9/1996)	Gtv 3.0V6	10		1 to 71
6 (9/1996)	Gtv 3.0V6	18		1 to 4
6 (9/1996)	Gtv 3.0V6	21		1 to 11
6 (9/1996)	Gtv 3.0V6	33		1 to 4
6 (9/1996)	Gtv 3.0V6	41		1 to 4
6 (9/1996)	Gtv 3.0V6	44		1 to 4

cardiagn.com

UPDATE CARD

Spider Gtv

RIGHT-HAND DRIVE VERSION

REPAIR INSTRUCTIONS

UPDATE CARD				
UPDATE (DATE)	MODEL	SECTION	PAGE	
			SUBST.	ADDED
1 (4/1997)	Spider-Gtv R.H. DRIVE	55	2 to 3	
1 (4/1997)	Spider-Gtv R.H. DRIVE	55-8	1 to 4	
1 (4/1997)	Spider-Gtv R.H. DRIVE	55-8		5 to 7
1 (4/1997)	Spider-Gtv R.H. DRIVE	55-14	1 to 2	
1 (4/1997)	Spider-Gtv R.H. DRIVE	55-14		2/1 to 2/2
1 (4/1997)	Spider-Gtv R.H. DRIVE	55-14	4	
1 (4/1997)	Spider-Gtv R.H. DRIVE	55-14		5
1 (4/1997)	Spider-Gtv R.H. DRIVE	55-19	1 to 4	
1 (4/1997)	Spider-Gtv R.H. DRIVE	55-19		5 to 7
1 (4/1997)	Spider-Gtv R.H. DRIVE	55-20	1 to 4	
1 (4/1997)	Spider-Gtv R.H. DRIVE	55-20		5 to 7
1 (4/1997)	Spider-Gtv R.H. DRIVE	55-A1	2 to 4	
1 (4/1997)	Spider-Gtv R.H. DRIVE	55-A3	3 to 25	
1 (4/1997)	Spider-Gtv R.H. DRIVE	55-A3		26 to 44

cardiagn.com

UPDATE CARD

Spider Gtv

RIGHT-HAND DRIVE VERSION

REPAIR INSTRUCTIONS

UPDATE CARD				
UPDATE (DATE)	MODEL	SECTION	PAGE	
			SUBST.	ADDED
2 (10/1997)	Spider-Gtv R.H. DRIVE	00	1	
2 (10/1997)	Spider-Gtv R.H. DRIVE	00	3 to 4	
1 (4/1997)	Spider-Gtv R.H. DRIVE	55	2 to 3	
2 (10/1997)	Spider-Gtv R.H. DRIVE	55	Index	
2 (10/1997)	Spider-Gtv R.H. DRIVE	55-2	2 to 3	
2 (10/1997)	Spider-Gtv R.H. DRIVE	55-3		1 to 5
1 (4/1997)	Spider-Gtv R.H. DRIVE	55-8	1 to 4	
1 (4/1997)	Spider-Gtv R.H. DRIVE	55-8		5 to 7
1 (4/1997)	Spider-Gtv R.H. DRIVE	55-14	1 to 2	
1 (4/1997)	Spider-Gtv R.H. DRIVE	55-14		2/1 to 2/2
1 (4/1997)	Spider-Gtv R.H. DRIVE	55-14	4	
1 (4/1997)	Spider-Gtv R.H. DRIVE	55-14		5
1 (4/1997)	Spider-Gtv R.H. DRIVE	55-19	1 to 4	
1 (4/1997)	Spider-Gtv R.H. DRIVE	55-19		5 to 7
1 (4/1997)	Spider-Gtv R.H. DRIVE	55-20	1 to 4	
1 (4/1997)	Spider-Gtv R.H. DRIVE	55-20		5 to 7
2 (10/1997)	Spider-Gtv R.H. DRIVE	55-26		1 to 6
1 (4/1997)	Spider-Gtv R.H. DRIVE	55-A1	2 to 4	
1 (4/1997)	Spider-Gtv R.H. DRIVE	55-A3	3 to 14	
2 (10/1997)	Spider-Gtv R.H. DRIVE	55-A3	15	
1 (10/1997)	Spider-Gtv R.H. DRIVE	55-A3	16 to 20	
2 (10/1997)	Spider-Gtv R.H. DRIVE	55-A3	21	
1 (10/1997)	Spider-Gtv R.H. DRIVE	55-A3	22 to 25	
1 (10/1997)	Spider-Gtv R.H. DRIVE	55-A3		26 to 36
2 (10/1997)	Spider-Gtv R.H. DRIVE	55-A3	37	
1 (10/1997)	Spider-Gtv R.H. DRIVE	55-A3		38
2 (10/1997)	Spider-Gtv R.H. DRIVE	55-A3	39 to 44	
2 (10/1997)	Spider-Gtv R.H. DRIVE	55-A3		45

cardiagn.com

INTRODUCTION

The "Spider-Gtv - Repair Instructions" Manual is composed of three volumes as follows:

Volume I - Technical Data;
- Engines;
- Mechanical Groups.

Volume II - Heating-Ventilation;
- Bodywork.

Volume III - Electric system;
- Electrical system diagnosis.

For overhauling engines and mechanical groups refere to the following manuals:

– PA493600000000 REPAIR INSTRUCTIONS - ENGINE OVERHAUL.

– PA494200000000 REPAIR INSTRUCTIONS - OVERHAULING MECHANICAL GROUPS.

In order to facilitate consultation, the structure of the manual mirrors the functional groups already defined for the "Repair Flat-rate Manual" in use by Alfa Romeo Authorized Service Network.

The characteristic data and the tables for vehicles identification are contained in the "Technical Data" at the beginning of Volume I.

The "Model identification" tables should be consulted before carrying out repair work in order to identify the model of the vehicle, the engine size and the groups which form the vehicle.

How to use this manual

The aim of this manual is to supply the Alfa Romeo Service Personnel with a tool enabling them to rapidly identify faults and to render the corrective interventions precise and efficient.

The manual shows the procedures relative to the removal and refitting and dismontling operations and the checks relative to the various groups forming the vehicle.

The procedures are illustrated in detail as are the procedures for using the tools. An appropriate symbology and explanatory texts next to the fundamental technical drawings make a complete and rapid consultation of the manual possible.

The procedures illustrate complete component disassembly procedures and should only be carried out in their entirety when absolutely unavoidable. The procedures for "assembly" and "refitting" are normally obtained by reversing the procedure followed for disassembly or removal in reverse and only the reassembly procedures which are significantly different are illustrated.

For information relative to the electrical systems onboard the vehicle refer to section 55 "ELECTRIC SYSTEM" and to the successive 55 "ELECTRIC SYSTEM DIAGNOSIS" which gives the wiring diagrams and the description of each function, the connector tables, the location of the components, the tables for fault diagnosis and the technical data for checking the components.

All the information contained in this manual is updaded at the time of publication.

Alfa Romeo reserves the right to make any modifications to its products that it deems necessary without warning. However the technical information and updates to this manual will be supplied as soon as possible.

cardiagn.com

Symbology

A specific symbology has been used in this manual to permit a rapid identification of the main technical information supplied.

The list of symbols is given below.

- removal/disassembly
- refitting/re-assembly
- tighten to the torque
- caulk nut
- adjustment/regulation
- visual check
- lubricate
- weight difference
- angular value
- pressure
- temperature
- brake system air purge
- surfaces to be treated
- interference
- play
- intake
- exhaust
- Lubricate only with engine oil
- left-hand thread
- torque for tightening in oil
- engine r.p.m.
- ovalization
- taper
- eccentricity
- flatness
- diameter
- linear dimension
- parallelism
- service with grease
- heating temperature
- seal
- service with engine oil
- grease
- CAUTION!
- WARNING!

cardiagn.com

Warnings for the operator

All the operations must be carried out with the greatest care to prevent damage occurring to the vehicle or persons.

- The use of Alfa Romeo specific tools are indicated for some procedures. These tools must be used to ensure safety and to avoid damaging parts involved in the procedure.
- To free parts which are solidly stuck together, tap with an aluminium or lead mallet if the parts are of metal. Use a wooden or resin mallet for light alloy parts.
- When dismantling ensure parts are marked correctly if required.
- When refitting lubricate the parts, if necessary, to prevent seizing and binding during the initial period of operation.
- Using adhesive paper or clean rags cover those parts of the engine which, following disassembly, present openings which may allow dust or foreign material to enter.
- When refitting, the tightening torques and adjustment data must be respected.
- When substituting the main component(s) the seal rings, oil seals, flexible washers, safety plates, self-locking nuts and all worn parts must also be replaced.
- Avoid marking the internal coverings in the passenger compartment.

Substitution of groups or disconnected parts must be carried out using original spare parts only. Only in this way can the suitability and perfect operation of each organ be guaranteed.

- The words **CAUTION** and **WARNING** accompany those procedures where particular care should be taken to prevent damage occurring to people or vehicle parts.

CAUTION:
used when insufficient care could cause damage to people

WARNING:
used when insufficient care could cause damage to the vehicle or its component parts.

- The safety regulations applied to workshops should be respected. Where necessary the manual also lists the specific precautions to be taken to prevent dangerous situations from arising.

When using chemical products follow the safety indications given on the safety cards which the supplier is obliged to deliver to the user (in Italy in compliance with D.M. n.46/1992).

NOTE:
It is possible that for certain subjects were not completed in time for printing.
However these subjects are given and highlighted in the indices of the single groups.
It is the duty of the Technical Services to supply documentation regarding these subjects as soon as possible through updates or "Technical Bulletins".

cardiagn.com

INDEX

VEHICLE

- Model identification 1
- Identification plate location 1
- Identification data plate 2
- Bodywork paint identification plate 2
- Dimensions (Spider versions) 2
- Dimensions (GTV versions) 3
- Weights and loads 3
- Wheels and tyres 4
- Fluids and lubricates 5
- Indicative capacities 6
- Vehicle jacking points 7
- Vehicle towing points 7

1747 T. SPARK 16V ENGINE

- Technical features 7/1

1970 T. SPARK 16V ENGINE

- Technical features 8

2959 V6 ENGINE

- Technical features 14

ENGINE SUPPLY - COOLING

- Fuel feed 20
- Air feed 20
- Sensors 20
- Cooling system 21

MECHANICAL GROUPS

- Clutch 22
- Gearbox 22
- Brakes 23
- Front suspensions 24
- Rear suspensions 24
- Wheel trim and characteristic angles 24
- Steering 24

ELECTRICAL SYSTEM

- Ignition 25
- Starting 25
- Recharging 25

HEATING-VENTILATION

- Minimum pressure switch calibration 26
- Three-level (Trinary) pressure switch calibration 26
- Four-level pressure switch calibration 26
- Expansion valve 26
- Compressor (1970 cc) 27
- Compressor (2959 cc) 27

TIGHTENING TORQUES 28

SPECIFIC TOOLS 36

MAINTENANCE

- Maintenance operations 45
- 1970 cc engine maintenance 47
- 2959 cc engine maintenance 53
- Mechanical assembly maintenance 63

FOR INFORMATION ON 1747 T. SPARK 16V ENGINES NOT INCLUDED HERE, REFER TO 1970 T. SPARK 16V ENGINES

cardiagn.com

MODEL IDENTIFICATION

Brand name	Spider 1.8 T. Spark	Spider 2.0 T. Spark	GTV 1.8 T. Spark	GTV 2.0 T. Spark	Spider 3.0 V6
Version	Spider	Spider	Coupé	Coupé	Spider
Version (on identification plate)	916S3	916S2	916C3	916C2	916S1
Chassis (in engine compartment, on upper right-hand shock absorber bracket)	-	-	-	-	-
Progressive chassis number	6000001	6000001	6000001	6000001	6000001
Engine (code)	AR 32201	AR 16201 AR 32301	AR 32201	AR 16201 AR 32301	AR 16101
Engine symbol	1747 T. SPARK 16V	1970 T. SPARK 16V	1747 T. SPARK 16V	1970 T. SPARK 16V	2959 V6
Gearbox (code)	C.510.5.21.17	C.510.5.21.17	C.510.5.21.17	C.510.5.21.17	C.503.5.29.22 C.530.5.XX.YY▲

▲: For MY98 versions

IDENTIFICATION PLATE LOCATION

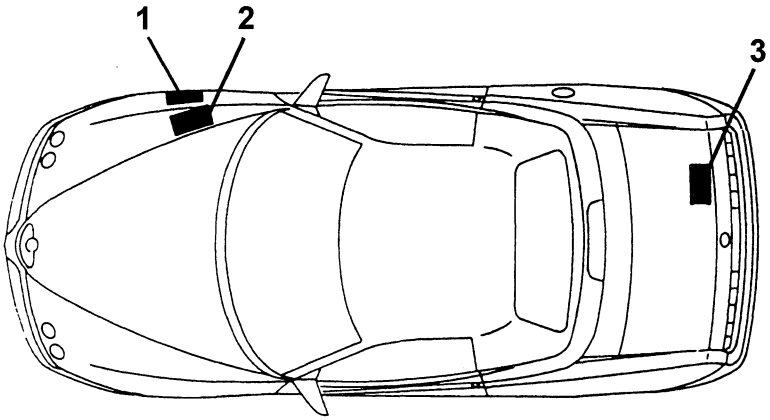

T. Spark 16V engines

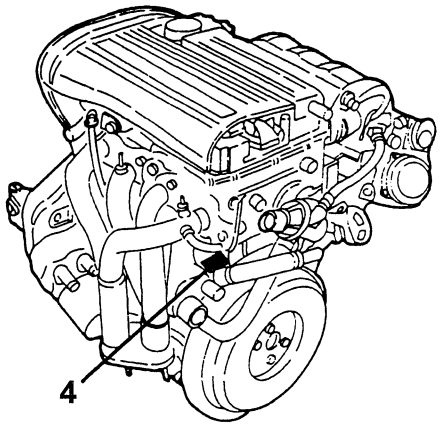

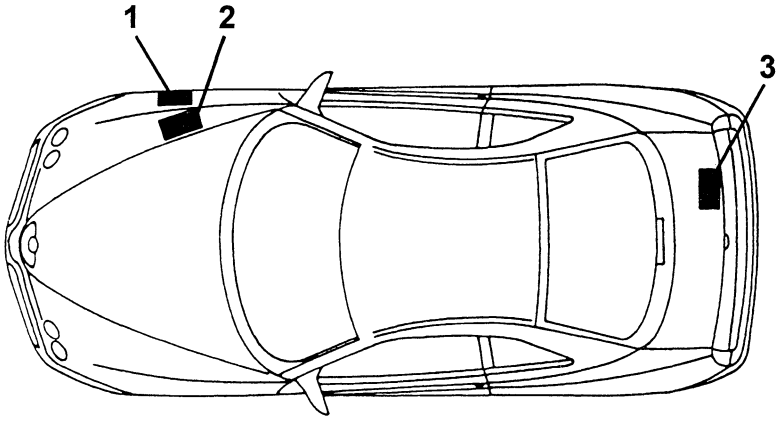

3.0 V6 12V engine

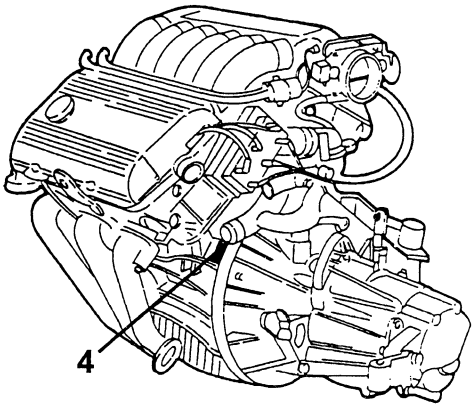

1. Identification data plate
2. Chassis marking
3. Paintwork identification plate
4. Engine marking

cardiagn.com

IDENTIFICATION DATA PLATE

The plate is applied in the engine compartment on the upper left-hand shock absorber bracket. It contains the following data:

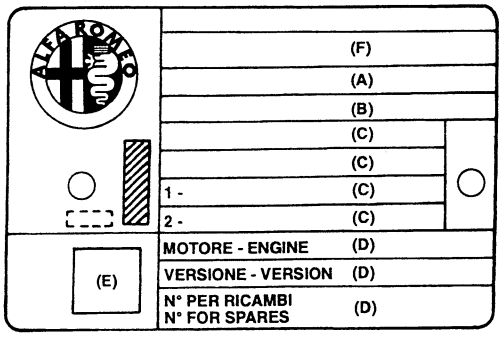

A. National homologation
B. Chassis number punch mark
C. Maximum authorised weights prescribed by national laws, where relevant
D. Version identification (e.g. 916S2) Version identification
E. Smokiness
F. Manufacturer's name punch mark

PAINTWORK IDENTIFICATION PLATE

This plate is applied on the inside of the boot and contains the following data:

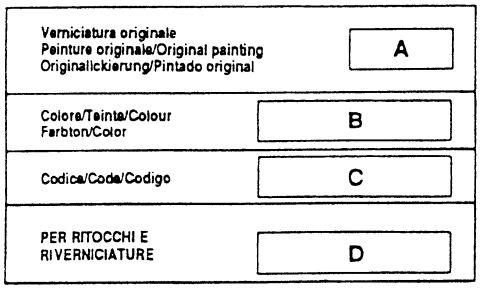

A. Paint manufacturer
B. Colour name
C. Colour code
D. Touch-up and re-spray code

DIMENSIONS
Spider versions

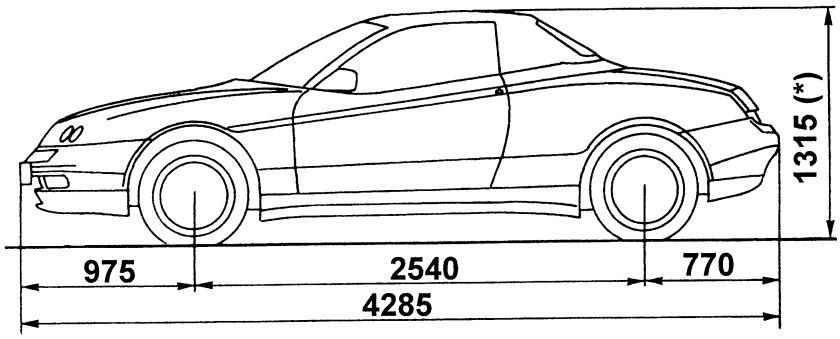

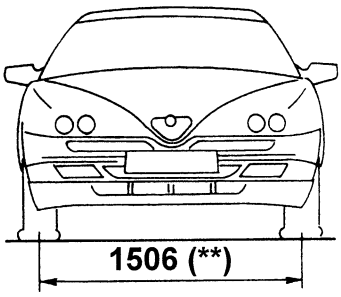

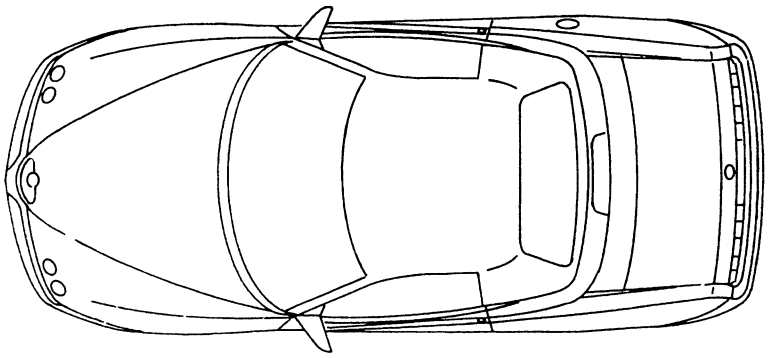

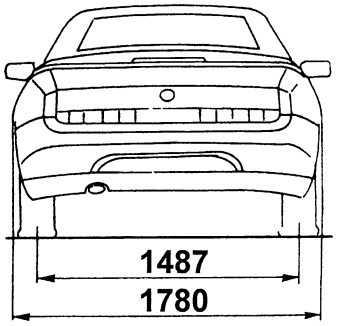

(*): Unladen vehicle (**): With alloy rims

cardiagn.com

DIMENSIONS
Gtv versions

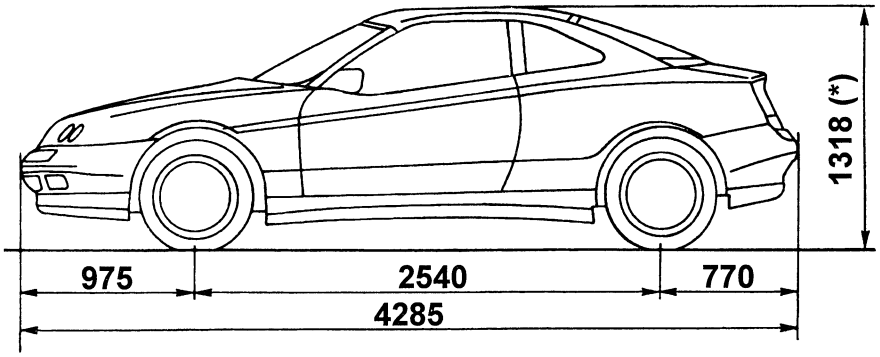

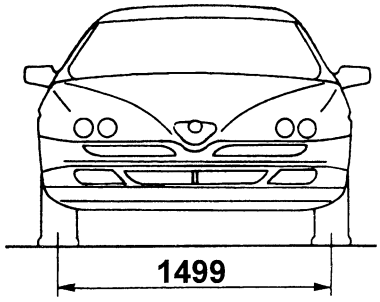

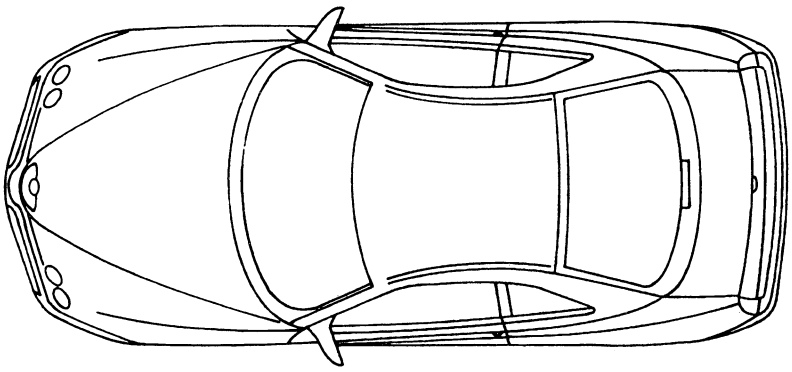

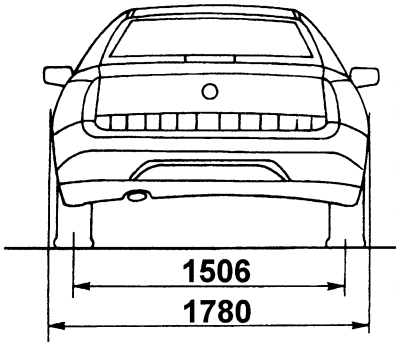

(*): Unladen vehicle

WEIGHTS AND LOADS

Unit: kg

Features \ Versions		916S3	916S2	916C3	916C2	916S1
Kerb weight (without driver)		1350	1370	1350	1370	1420
Maximum admitted load		1610	1630	1760	1780	1680
Load		260	260	410	410	260
Maximum weight allowed on each axle	front	974	974	974	974	1000
	rear	800	800	870	870	800
Towable weight	trailer with brakes	1000	1000	1000	1000	1000
	trailer without brakes	500	500	500	500	500
Maximum load on tow hitch		50	50	50	50	50

cardiagn.com

WHEELS AND TYRES

VEHICLE	RIM - TYRE DIMENSIONS	PRESSURE (bar)	
		FRONT	REAR
916S3	Not available at time of going to press		
916S2	6J x 15" (steel) - 195/60 ZR15"	2.3	2.1
	6.5J x 16" (alloy) - 205/50 ZR16"	2.7	2.5
916C3	Not available at time of going to press		
916C2	6J x 15" (steel) - 195/60 ZR15"	2.3	2.1
	6.5J x 16" (alloy) - 205/50 ZR16"	2.7	2.5
916S1	6.5J x 16" (alloy) - 205/50 ZR16"	2.7	2.5
ALL	SPACE SAVER SPARE WHEEL 4J x 15" (steel) - T125/80 R15 96M	4.2	

Snow chain tyres: snow chains can only be used with 195/55 ZR15" tyres (6J x 15" rims only) or 205/45 ZR16" tyres (with 6.5J x 16" rims).

IMPORTANT: Increase pressure by 0.3 bar in the event of constant driving at top speed.

WHEELS AND TYRES ('98 models)

VEHICLE		RIM - TYRE DIMENSIONS	PRESSURE (bar)	
			FRONT	REAR
916S3 - 916S2		6J x 15" (steel) - 195/60 R15 88W	2.3	2.1
		6.5J x 16" (alloy) - 205/50 R16 87Y	2.7	2.5
916C3	standard	6J x 15" (steel) - 195/60 R15 88W	2.3	2.1
	optional	6.5J x 16" (alloy) - 205/50 R16 87Y	2.7	2.5
		7.5J x 17" (alloy) - 225/45 ZR17 91Y		
916C2	standard	6J x 15" (steel) - 195/60 R15 88W	2.3	2.1
		6.5 x 16" (alloy) - 205/50 R16 87Y	2.7	2.5
	optional	7.5J x 17" (alloy) - 225/45 ZR17 91Y		
916S1		6.5J x 16" (alloy) - 205/50 ZR16"	2.7	2.5
ALL		SPACE SAVER SPARE WHEEL 4J x 15" - T125/80 R15 96M	4.2	

IMPORTANT: Increase pressure by 0.3 bar in the event of constant driving at top speed.

IMPORTANT: Snow chains cannot be fitted on 225/45 ZR17 91Y tyres.

cardiagn.com

FLUIDS AND LUBRICANTS

Type	Assembl ref.	Application		Classification	Name
OIL	10 - Engine	Engine (filling)		API SJ CCMCG5 ACEA A3-96 SAE 10W/40	SELENIA 20 K (*)
	21 - Gearbox	Gearbox-differential (filling)		API GL-5	TUTELA ZC 75 SYNTH
	50 - Add. units	Compressor (filling)	4 cyl.	-	NIPPONDENSO ND-9
			6 cyl.	-	SANDEN SP 10 "PAG"
FLUID	10 - Engine	Cooling circuit (filling)		-	ALFA ROMEO CLIMAFLUID SUPER PERMANENT -40°C
	18 - Clutch	Hydraulic brake-clutch circuit (filling)		DOT 4 SAE J 1703 F	ALFA ROMEO BRAKE FLUID SUPER DOT 4
	33 - Brakes				
	41 - Steering	Power steering (filling)		G.M. DEXRON II	TUTELA GI/A
	50 - Additional units	Climate control system (filling)		-	RIVOIRA: SUVA R134a HOECHST - TAZZETTI: FRIGEN R134a ICI - TAZZETTI: KLEA R134a
GREASE	18 - Clutch	Clutch thrust bearing and lever		-	TUTELA MR3
		Clutch cylinder strut			
	21 - Gearbox	Gear engage rod and ball lever bushings		-	TUTELA ZETA 2 ISECO MOLYKOTE LONGTERM N. 2
	27 - Front axle	Drive shaft CV joints		-	OPTIMOL PU 035 BERUTOX GKN HTB
	33 - Brakes	Pedal board joints and bushing		-	TUTELA ZETA 2
		ABS inductive sensor seats			

(*): For sportier use, we recommend **SELENIA Racing 10W/60** fully synthetic engine oil.

cardiagn.com

FLUIDS AND LUBRICANTS (Continued)

Type	Assembl ref.	Application	Classification	Name
GREASE	41 - Steering	Roller bushing seat on steering column	-	SPCA SPAGRAPH ISECO ERGON RUBBER GREASE REINACH SFERUL B2 AR
	44 - Suspensions and wheels	Wishbone brackets	-	GREASE MOLYKOTE 7544 PG54 TUTELA MR3
		Side steering linkage	-	MOLYGUARD SYL 113

INDICATIVE CAPACITIES

Capacit \ Version		916S3	916S2	916C3	916C2	916S1
Fuel tan		70 litres				
Fuel reserve		~ 9 litres				
Engine oil	Total capacity: sump + filter + pipes	5.0 litres				6.8 litres
	Sump + filter (for regular replacement)	4.4 litres				6.0 litres
Gearbox-differential oil		2 litres				
Power steering system oil		1.3 kg				
Brake and clutch circuit oil		0.4 kg				
Engine coolant		8.4 litres				11.7 litres
Climate control compressor oil		290 ± 30 cm^3 (1)				240 ± 15 cm^3
Climate control system fluid		0.650 kg + 0.05 kg (2)/[0.550 kg + 0.05 kg (2)] (3)				

(1): For component replacement:
- the compressor is provided with 160 ± 20 cm^3 of oil
- the drier filter is provided with 130 ± 10 cm^3 of oil.

(2): Additional amount to be computed considering the fluid which remains the recharge device lines.

(3): From June '99

cardiagn.com

JACKING POINTS

With arm hoist or shop jack.

- Position the arms or the jack in the areas shown.

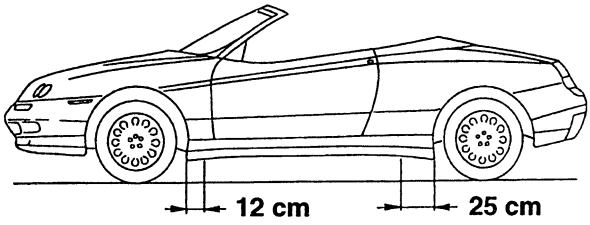

IMPORTANT:
Be very careful when positioning the arms or the jack in the front jacking points to avoid squeezing the brake and fuel lines.

TOWING POINTS

The vehicle is equipped with two threaded attachments - one at the front and the other at the back - where to screw the tow hitch which is provided in the tool bag (in the boot).

Attain scrupulously to the laws regulating towing.

IMPORTANT:
Before towing the vehicle, turn the key to MAR and back to STOP without removing it to prevent the steering wheel from locking.

Consider that while towing, the brake booster system is not running. Consequently, more effort on the brake pedal will be required.

Furthermore, when the engine is not running, the power steering system is neither working. Consequently, more effort on the steering wheel is required.

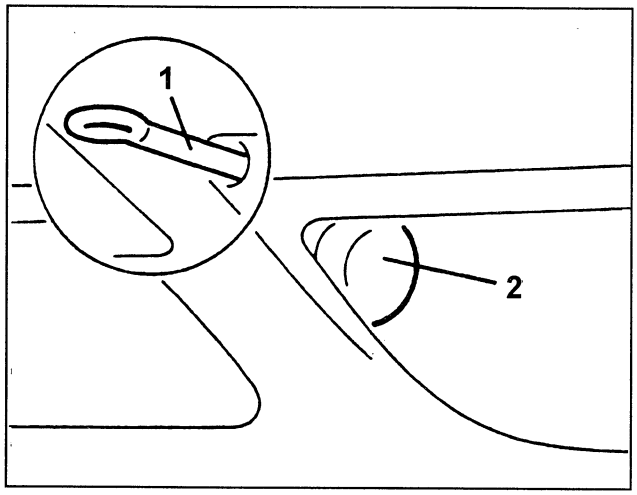

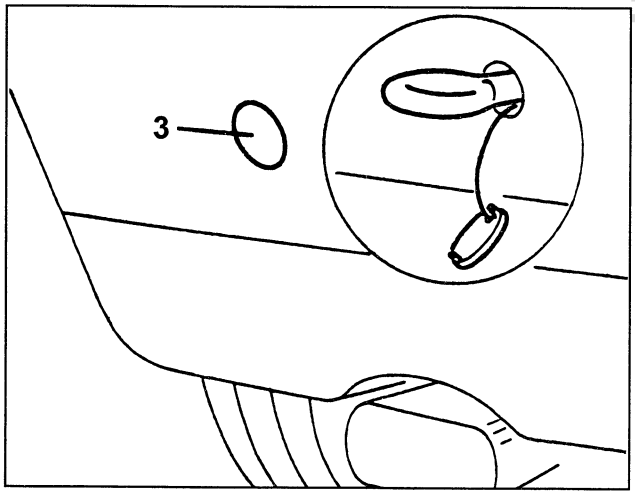

1. Front tow hitch
2. Front bumper slot
3. Rear bumper cover

cardiagn.com

ENGINE TECHNICAL FEATURES

CHARACTERISTIC DATA

Engine		AR 32201
Cycle		Otto, four stroke
Injection / Ignition		Multi-Point Motronic M 1.5.5
Firing order		1 - 3 - 4 - 2
Capacity	cm^3	1747
Number of cylinders		4 in line
Bore	mm	82
Stroke	mm	82.7
Maximum power	CV CEE (kW CEE) rpm	144 (106) 6500
Maximum torque	kgm CEE (Nm CEE) rpm	17.2 (169) 3500
Compression ratio		10.3 : 1
Engine oil pressure - Idling ratio - at 4000 rpm	bar	 ≥ 1.5 ≥ 4.5
Idling ratio	rpm	850 ± 30

COMPLETE CRANKCASE

Crankcase

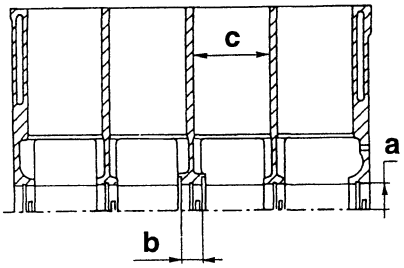

Unit: mm

Main journal diameter "a"		56.705 ÷ 56.718
Central main journal shoulder length "b"		21.720 ÷ 21.800
Cylinder diameter "c"	Class A	82.000 ÷ 82.010
	Class B	82.010 ÷ 82.020
	Class C	82.020 ÷ 82.030
	Oversized by 0.1	

Oil pump

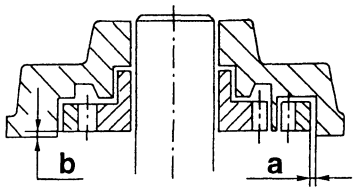

Pump casing - driven gear play "a"		0.080 ÷ 0.186 mm
Pump cover surface - upper gear side play "b"		0.025 ÷ 0.070 mm
Engine oil pressure limiting valve spring	Check load	6.4 ÷ 7.2 kg
	Spring length	36 mm

cardiagn.com

Crankshaft

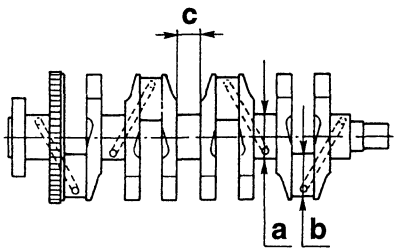

Unit: mm

Crank pin diameter "a"	Class A - Red	52.994 ÷ 53.000
	Class B - Blue	52.988 ÷ 52.994
	Class C - Yellow	52.982 ÷ 52.988
	Undersizing 0.127	
Connecting rod pin diameter "b"	Class A - Red	50.799 ÷ 50.805
	Class B - Blue	50.793 ÷ 50.799
	Class C - Yellow	50.787 ÷ 50.793
	Undersizing 0.127	
Central crank pin diameter "c"		26.575 ÷ 26.625
		Oversizing 0.254
Maximum taper of crank pin and connecting rod pins		0.0045
Maximum taper error between crank and connecting rod pins		0.03

Main half bearings

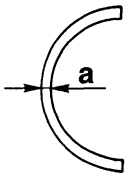

Unit: mm

Side main half bearing thickness "a"	Class A - Red	1.831 ÷ 1.837
	Class B - Blue	1.836 ÷ 1.844
	Class C - Yellow	1.843 ÷ 1.849
	Undersizing 0.127	
Centre main half bearing thickness "a"	Class A - Red	1.826 ÷ 1.832
	Class B - Blue	1.831 ÷ 1.839
	Class C - Yellow	1.838 ÷ 1.844
	Undersizing 0.127	
Clearance between pins pins and main half bearings	Lateral	0.019 ÷ 0.062
	Central	0.029 ÷ 0.072

Thrust half rings

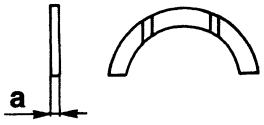

Unit: mm

Thrust half ring thickness "a"	2.342 ÷ 2.358
	Oversizing 0.127
Crankshaft axial clearance	0.059 ÷ 0.221

cardiagn.com

Engine flywheel

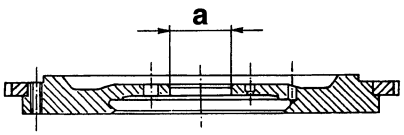

Centre bush I.D. (bore) "a"	47.010 ÷ 47.035 mm
Crown wheel heating temperature for assembly on engine flywheel	80° ÷ 100°C

CONNECTING ROD-PISTON ASSEMBLY

Piston

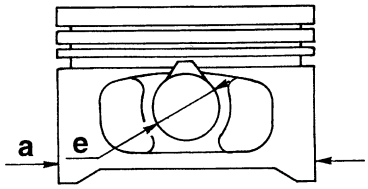

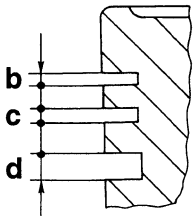

Unit: mm

Piston diameter "a" (1)	Class A - Blue	81.952 ÷ 81.962
	Class B - Pink	81.960 ÷ 81.970
	Class C - Green	81.968 ÷ 81.978
	Oversizing 0.1	
First seal ring seat height "b"		1.520 ÷ 1.540
Secong seal ring seat height "c"		1.510 ÷ 1.530
Oil scraper ring seat height "d"		3.010 ÷ 3.030
Pison pin holes diameter in pistons "e"		20.002 ÷ 20.007
Clearance between cylinders and pistons		0.038 ÷ 0.062
Weight difference between pistons		± 5 g

(1) To be obtained perpendicularly at the piston pin hole, at a distance of 12.5 mm from the skirt lower edge.

Connecting rods

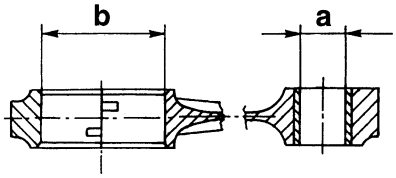

Unit: mm

Diameter of bushing hole on connecting rod small end "a"	20.006 ÷ 20.012
Connecting rod head I.D. "b"	53.897 ÷ 53.909
Weight difference between connecting rods	≤ 5 g
Clearance between piston pins and connecting rod small end bushings	0.006 ÷ 0.016
Connecting rod small end axial clearance	0.25 ÷ 0.6

cardiagn.com

Connecting rod half bearings

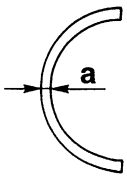

Unit: mm

Connecting rod half-bearings thickness "a"	Class A - Red	1.527 ÷ 1.531
	Class B - Blue	1.531 ÷ 1.535
	Class C - Yellow	1.535 ÷ 1.539
	Undersizing 0.127	
Clearance between connecting rod pinsand half-bearings	Class A - Red	0.026 ÷ 0.056
	Class B - Blue	
	Class C - Yellow	

Seal rings

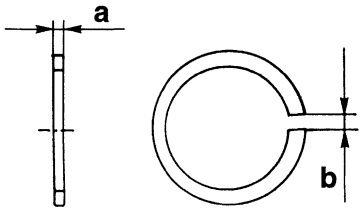

Unit: mm

Ring thickness "a"	First ring	1.470 ÷ 1.490
		Oversizing 0.1
	Second ring	1.475 ÷ 1.490
		Oversizing 0.1
	Oil scraper ring	2.975 ÷ 2.990
		Oversizing 0.1
Ring clearance "b" (1)	First ring	0.25 ÷ 0.50
	Second ring	0.30 ÷ 0.50
	Oil scraper ring	0.25 ÷ 0.50
Axial clearance between seal rings and their seats	First ring	0.030 ÷ 0.070
	Second ring	0.020 ÷ 0.055
	Oil scraper ring	0.020 ÷ 0.055

(1) To find in the control ring nut or in the cylinder.

Piston pins

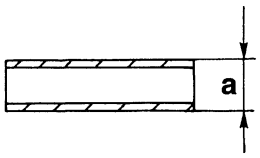

Unit: mm

Piston pin O.D. "a"	19.996 ÷ 20.000
Clearance between piston pins and their seats on the pistons	0.002 ÷ 0.011

CYLINDER HEAD

Head

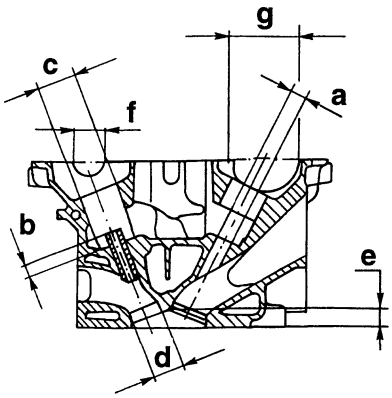

Unit: mm

Valve guide seat diameter "a"		12.950 ÷ 12.977
Valve guide protrusion "b"		11.25 ÷ 11.75
Valve tappet seat diameter "c"		33.000 ÷ 33.025
Valve seat diameter "d"	Intake	35.019 ÷ 35.044
	Exhaust	29.021 ÷ 29.042
Combustion chamber minimum depth "e"		13 ± 0.2
Maximum flatness error on head bottom face		0.1
Timing shafts support diameter "f"		26.045 ÷ 26.070
Phase variator support diameter "g"		55.990 ÷ 56.015

cardiagn.com

Valve guides

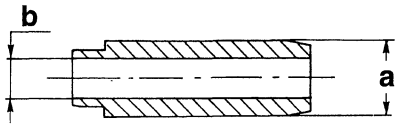

Unit: mm

Valve guide O.D. "a"	13.010 ÷ 13.030
	Oversizing 0.20
Valve guide I.D. (bore) "b"	7.022 ÷ 7.040
Interference between valve guides and their seats	0.033 ÷ 0.080

Valve seats

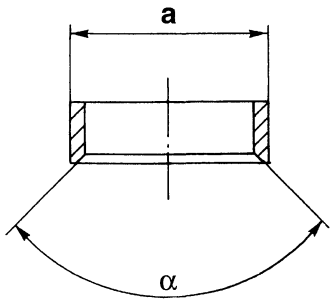

Unit: mm

Valve seat O.D. "a"	Intake	35.135 ÷ 35.150
	Exhaust	29.142 ÷ 29.157
Taper of band in contact with valve "α"		90° ± 10'
Interference between valve seats and the housings	Intake	0.091 ÷ 0.131
	Exhaust	0.100 ÷ 0.136
Cylinder head heating temperature to assemble valve seats		80 °C

Valves

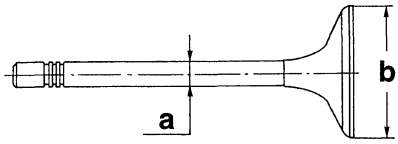

Unit: mm

Valve stem diameter "a"	Intake	6.975 ÷ 6.990
	Discharge	6.960 ÷ 6.975
Valve head diameter "b"	Intake	33.4 ÷ 33.7
	Discharge	27.9 ÷ 28.2
Radial clearance between valve stems and valve guides	Intake	0.032 ÷ 0.065
	Exhaust	0.047 ÷ 0.080

Valve springs

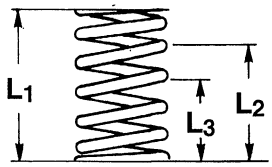

	External spring	Internal spring
Free length "L1"	46 mm	39 mm
Closed valve length "L2"	34 mm	29.5 mm
Load corresponding to "L2"	271 ÷ 294 N (27.6 ÷ 30 kg)	96 ÷ 106 N (9.8 ÷ 10.8 kg)
Open valve length "L3"	24.5 mm	20 mm
Load corresponding to "L3"	485 ÷ 524 N (49.4 ÷ 53.4 kg)	201 ÷ 221 N (20.5 ÷ 22.5 kg)

Hydraulic tappets

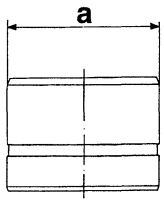

Unit: mm

Hydraulic tappet O.D. "a"	32.959 ÷ 32.975
Radial clearance between hydraulic tappets and their seats	0.025 ÷ 0.066

cardiagn.com

Timing shafts

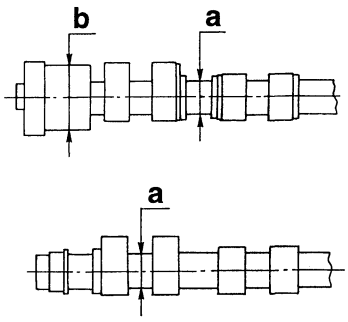

Unit: mm

Diameter of t iming shaft pin "a"		26.000 ÷ 26.015
Diameter of phase variator pin "b"		49.985 ÷ 50.000
Cam nominal lift	Intake	9.50
	Exhaust	9.50
Clearance between timing shaft pins and relevant seats		0.03 ÷ 0.07
Timing shaft axial clearance		0.10 ÷ 0.23

Phase variator half-bearings

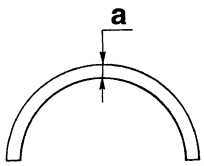

Unit: mm

Thickness of phase variator "a" half-bearings	2.992 ÷ 2.998
Clearance between phase variator and bearings	0.034 ÷ 0.086

TIMING ACTUAL DIAGRAM ANGLE (Obtained with control clearance 0.45 mm)

Intake	Opening (before T.D.C.)	"a"	-3° 22° (*)
	Closing (after B.D.C.)	"b"	51° 26° (*)
	Intake angle value	"c"	228°
Exhaust	Opening (before B.D.C.)	"d"	47°
	Closing (after T.D.C.)	"e"	4°
	Exhaust angle value	"f"	231°

(*): Value obtained with phase variator on.

cardiagn.com

ENGINE TECHNICAL DATA

TECHNICAL DATA

Engine		AR 16201		AR 32301
Cycle		Eight		
Fuel supply / Ignition		Multi-Point Motronic M 2.10.3	Multi-Point Motronic M 2.10.4	Multi-Point Motronic M 1.5.5
Order of ignition		1 - 3 - 4 - 2		
Engine size	cm^3	1970		
Number of cylinders		4 in line		
Bore	mm	83		
Stroke	mm	91		
Maximum power	CV CEE (kW CEE) rpm	150 (110) 6200		155 (114) 6400
Maximum torque	kgm CEE (Nm CEE) rpm	19 (186) 4000		19.1 (187) 3500
Compression ratio		10 : 1		
Engine oil pressure - Idling - At 4000 rpm	bar	≥ 1.5 ≥ 4.5		≥ 1.5 ≥ 4.5
Idling	rpm	800 ± 50	840 ± 50	850 ± 30

COMPLETE CRANK CASE

Crankcase

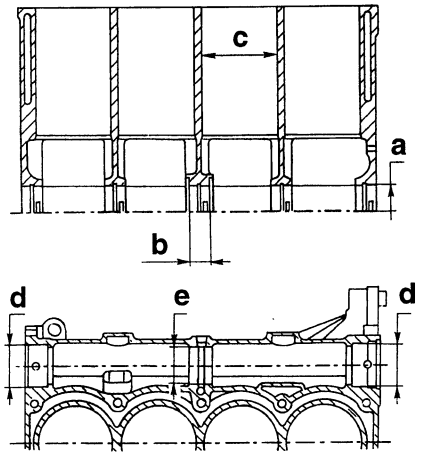

Unit: mm

Main bearing diameter "a"		56.705 ÷ 56.718
Central main bearing shoulder length "b"		21.720 ÷ 21.800
Cylinder diameter "c"	Class A - Blue	83.000 ÷ 83.010
	Class B - Pink	83.010 ÷ 83.020
	Class C - Green	83.020 ÷ 83.030
	Oversizing 0.1	
Counter rotation shaft support siameters	Front and rear "d"	46.975 ÷ 47.000
	Central "e"	39.979 ÷ 40.009

Oil pump

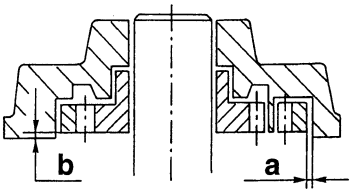

Clearance between pump casing housing and driven gear "a"		0.080 ÷ 0.186 mm
Clearance between pump cover contact surface and upper side of gear "b"		0.025 ÷ 0.070 mm
Engine oil pressure limiting valve spring	Control load	6.4 ÷ 7.2 kg
	Spring length	36 mm

cardiagn.com

Crankshaft

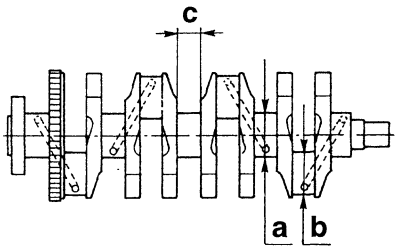

Unit: mm

Diameter of main bearing journals "a"	Class A - Red	52.994 ÷ 53.000
	Class B - Blue	52.988 ÷ 52.994
	Class C - Yellow	52.982 ÷ 52.988
	Undersize 0.127	
Diameter of connecting rod pins "b"	Class A - Red	50.799 ÷ 50.805
	Class B - Blue	50.793 ÷ 50.799
	Class C - Yellow	50.787 ÷ 50.793
	Undersize 0.127	
Length of centre bearing journal "c"		26.575 ÷ 26.625
Maximum taper of main and connecting rod journals		0.0045
Maximum error of concentricity between main journals and connecting rod journals		0.003

Main half bearings

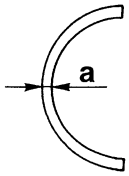

Unit: mm

Thickness of main half bearings "a"	Class A - Red	1.836 ÷ 1.840
	Class B - Blue	1.839 ÷ 1.843
	Class C - Yellow	1.842 ÷ 1.846
	Undersize 0.127	
Operating clearance between main journals and half bearings		0.025 ÷ 0.052

Counter-rotating shafts

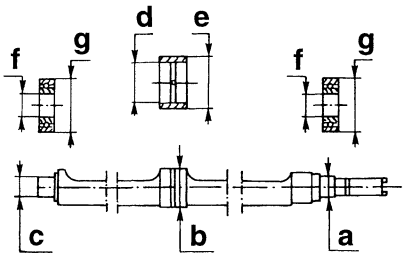

Unit: mm

Diameter of counter-rotating shaft pins	Front "a"	19.980 ÷ 19.993
	Centre "b"	36.945 ÷ 36.960
	Rear "c"	19.990 ÷ 20.010
Diameter of centre bushes	Inside "d"	37.020 ÷ 37.040
	Outside "e"	40.065 ÷ 40.090
Diameter of ball bearings	Inside "f"	19.990 ÷ 20.000
	Outside "g"	46.989 ÷ 47.000
Interference between centre bushes and their seats on crankcase		0.056 ÷ 0.111
Radial clearance between bushes and centre journals		0.060 ÷ 0.095
Clearance / Interference between ball bearings and their seats on crankcase		+0.011 ÷ -0.025
Clearance / Interference between ball bearings and counter-rotating shaft pins	Front	+0.020 ÷ -0.003
	Rear	+ 0.010 ÷ -0.020

cardiagn.com

Half thrust rings

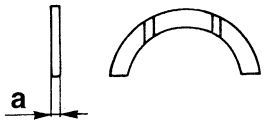

Unit: mm

Thickness of half thrust rings "a"	2.342 ÷ 2.358
	Oversize 0.127
Crankshaft end float	0.059 ÷ 0.221

Engine flywheel

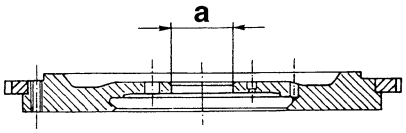

Inside diameter of centre bush (bore) "a"	47.010 ÷ 47.035 mm
Heating temperature of ring gear for assembly on flywheel	80° ÷ 100°C

CONNECTING ROD - PISTON ASSEMBLY

Piston

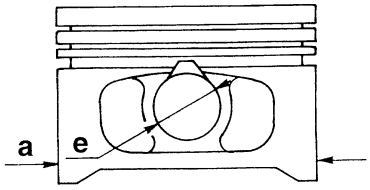

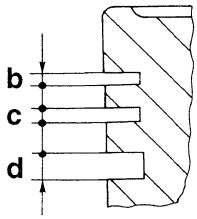

Unit: mm

Diameter of pistons "a" (1)	Class A - Blue	82.952 ÷ 82.962
	Class B - Pink	82.959 ÷ 82.971
	Class C - Green	82.968 ÷ 82.978
Height of first seal ring seats "b"		1.220 ÷ 1.240
Height of second seal ring seats "c"		1.510 ÷ 1.530
Height of oil scraper ring seats "d"		3.010 ÷ 3.030
Diameter of gudgeon pin holes in pistons "e"		20.002 ÷ 20.007
Clearance between cylinders and pistons		0.038 ÷ 0,062
Difference in weight between pistons		± 5 g

(1) To be measured perpendicular to the gudgeon pin hole at a distance of 12.5 mm from lower edge of skirt.

Connecting rods

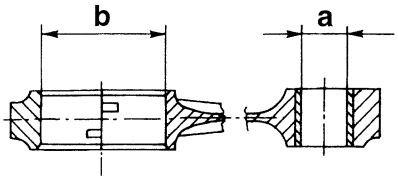

Unit: mm

Diameter of small end bushing bore "a"	20.006 ÷ 20.012
Inside diameter of rod big ends "b"	53.897 ÷ 53.909
Difference in weight between rods	≤ 5 g
Clearance between small end bushings and pins	0.006 ÷ 0.016
Small end end float	0.25 ÷ 0.6

cardiagn.com

Connecting rod half bearings

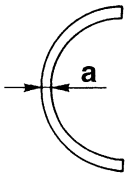

Unit: mm

Thickness of connecting rod half bearings "a"	Class A - Red	1.527 ÷ 1.531
	Class B - Blue	1.530 ÷ 1.534
	Class C - Yellow	1.533 ÷ 1.537
	Undersize 0.127	
Operating clearance connecting rod pins and their half bearings	Class A - Red	0.03 ÷ 0.056
	Class B - Blue	
	Class C - Yellow	

Seal rings

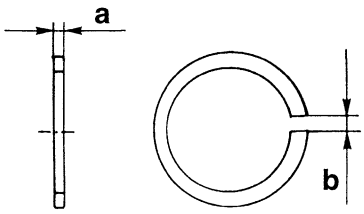

Unit: mm

Thickness of rings "a"	First ring	1.170 ÷ 1.190
		Oversize 0.1
	Second ring	1.475 ÷ 1.490
		Oversize 0.1
	Oil scraper ring	2.975 ÷ 2.990
		Oversize 0.1
Ring gap "b" (1)	First ring	0.25 ÷ 0.50
	Second ring	0.30 ÷ 0.50
	Oil scraper ring	0.25 ÷ 0.45
Axial play between seal rings and seats	First ring	0.030 ÷ 0.070
	Second ring	0.020 ÷ 0.055
	Oil scraper ring	0.020 ÷ 0.055

(1) To be measured in the checking ring nut or in the cylinder

Gudgeon pins

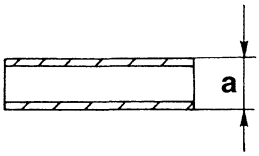

Unit: mm

Outside diameter of gudgeon pins "a"	19.996 ÷ 20.000
Clearance between gudgeon pins and their seats on pistons	0.002 ÷ 0.011

CYLINDER HEAD

Head

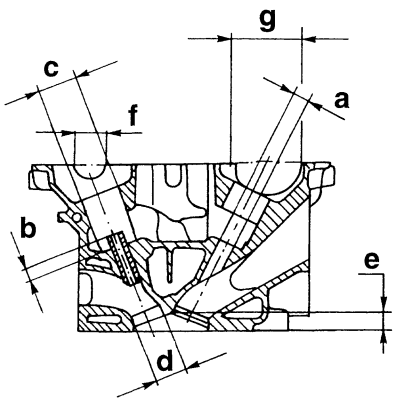

Unit: mm

Diameter of sedi valve guide seats "a"		12.950 ÷ 12.977
Valve guide protrusion "b"		11.25 ÷ 11.75
Diameter of valve cup seats "c"		33.000 ÷ 33.025
Diameter of valve seat housing "d"	Intake	34.989 ÷ 35.014
	Exhaust	28.991 ÷ 29.012
Minimum depth of combustion chamber "e"		13 ± 0.2
Maximum error of flatness of head lower surface		0.1
Diameter of camshaft supports "f"		26.045 ÷ 26.070
Diameter of timing variator support "g"		55.990 ÷ 56.015

cardiagn.com

Valve guides

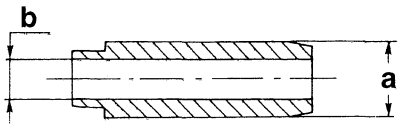

Unit: mm

Outside diameter of valve guides "a"	13.010 ÷ 13.030
	Oversize 0.20
Inside diameter of valve guides (bore) "b"	7.022 ÷ 7.040
Interference between valve guides and their seats	0.033 ÷ 0.080

Valve seats

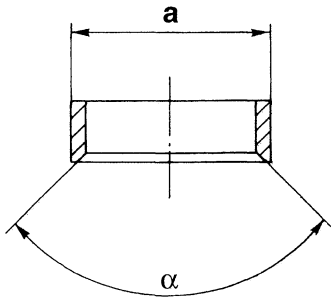

Unit: mm

Outside diameter of valve seats "a"	Intake	35.135 ÷ 35.150
	Exhaust	29.142 ÷ 29.157
Valve contact area taper "α"		90° ± 10'
Interference between valve seats and their housings	Intake	0.121 ÷ 0.146
	Exhaust	0.130 ÷ 0.166
Cylinder head heating temperature for fitting valve seats		80 °C

Valves

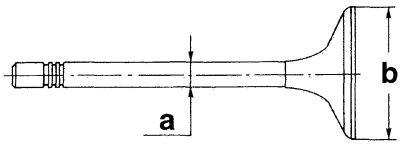

Unit: mm

Diameter of valve stems "a"	Intake	6.975 ÷ 6.990
	Exhaust	6.960 ÷ 6.975
Diameter of valve mushrooms "b"	Intake	33.4 ÷ 33.7
	Exhaust	27.9 ÷ 28.2
Radial clearance between valve stem and guide	Intake	0.032 ÷ 0.065
	Exhaust	0.047 ÷ 0.080

Valve springs

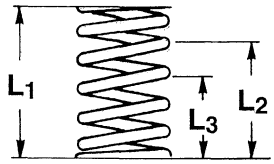

	Outer spring	Inner spring
Free length "L_1"	46 mm	39 mm
Length with valves closed "L_2"	34 mm	29.5 mm
Corresponding load at "L_2"	271 ÷ 294 N (27.6 ÷ 30 kg)	96 ÷ 106 N (9.8 ÷ 10.8 kg)
Length with valves open "L_3"	24,5 mm	20 mm
Corresponding load at "L_3"	485 ÷ 524 N (49.4 ÷ 53.4 kg)	201 ÷ 221 N (20.5 ÷ 22.5 kg)

Hydraulic tappets

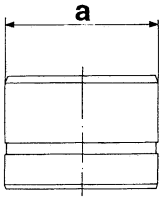

Unit: mm

Outside diameter of hydraulic tappets "a"	32.959 ÷ 32.975
Radial clearance between hydraulic tappets and their seats	0.025 ÷ 0.066

cardiagn.com

Camshafts

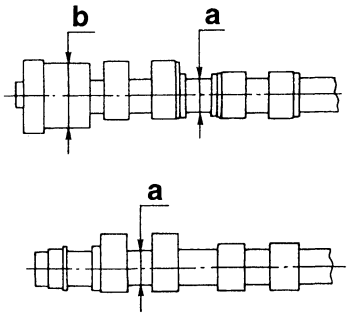

Unit: mm

Camshaft journal diameter "a"		26.000 ÷ 26.015
Phase variator pin diameter "b"		49.985 ÷ 50.000
Nominal cam height	Intake	9.50
	Exhaust	9.50
Camshaft journal and seat play		0.03 ÷ 0.07
Camshaft axial play		0.10 ÷ 0.23

Phase variator half-bearings

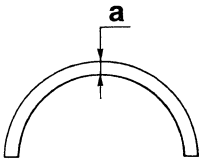

Unit: mm

Phase variator half-bearing thickness "a"	2.992 ÷ 2.998
Phase variator and respective bearing play	0.034 ÷ 0.086

ACTUAL TIMING ANGLE VALUE DIAGRAM

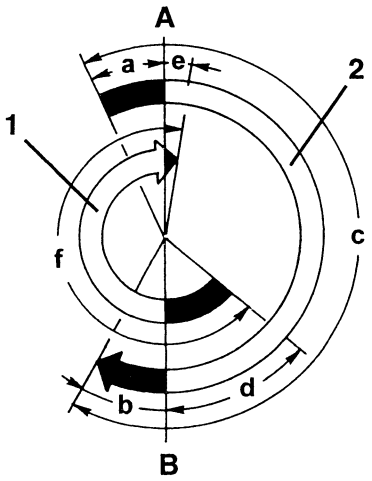

(1) Exhaust (2) Intake
(A) TDC (B) BDC

			AR 16201 engines	AR 32301 engines
Intake	Opens (before TDC)	"a"	0° 25° (*)	3° 22° (*)
	Closes (after BDC)	"b"	55° 30° (*)	51° 26° (*)
	Intake angle value	"c"	235°	228°
Exhaust	Opens (before BDC)	"d"	50°	47°
	Closes (after TDC)	"e"	8°	4°
	Exhaust angle value	"f"	238°	231°

cardiagn.com

ENGINE TECHNICAL FEATURES

CHARACTERISTIC DATA

Engine		AR 16101
Cycle		Otto, four stroke
Injection / Ignition		Multi - Point Motronic M 3.7.1
Firing order		1 - 4 - 2 - 5 - 3 - 6
Capacity	cm^3	2959
Number of cylinders		6 at V 60°
Bore	mm	93
Stroke	mm	72.6
Maximum power	CV CEE (kW CEE) rpm	192 (141) 5600
Maximum torque	kgm CEE (Nm CEE) rpm	26.6 (260) 4400
Compression ratio		10 : 1
Engine oil pressure - Idling ratio - at 4000 rpm	bar	1 4.5
Idling ratio	rpm	720 ± 50

COMPLETE CRANKCASE

Crankcase

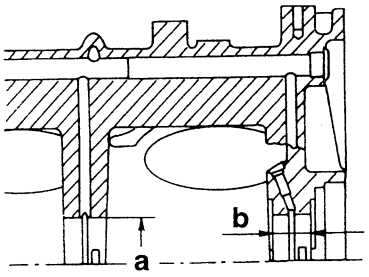

Unit: mm

Main journal diameter "a"	Class A - Red	63.657 ÷ 63.663
	Class B - Blue	63.663 ÷ 63.669
	Class C - Green	63.669 ÷ 63.675
Central main journal shoulder length "b"		26.450 ÷ 26.500

Crankshaft

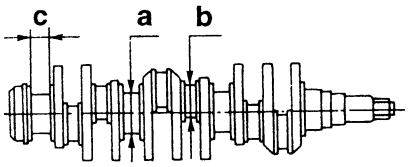

Unit: mm

Main journal diameter "a"	Class A - Red	59.973 ÷ 59.979
	Class B - Blue	59.967 ÷ 59.973
	Class C - Green	59.961 ÷ 59.967
Connecting rod journal diameter "b"	Class A - Red	51.990 ÷ 52.000
	Class B - Blue	51.980 ÷ 51.990
Rear main journal length "c"		31.300 ÷ 31.335
Maximum main journal and connecting rod journal ovality		0.004
Maximum main journal and connecting rod journal taper ratio		0.010
Maximum parallel error between main journals and connecting rod journals		0.015
Main journal maximum eccentricity		0.040

cardiagn.com

Main half bearings

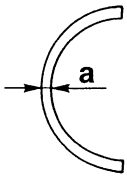

Unit: mm

Thickness of main half bearings "a"	Class A - Red	1.833 ÷ 1.839
	Class B - Blue	1.839 ÷ 1.845
	Class C - Green	1.845 ÷ 1.851
Operating clearance between main journals and half bearings		0.000 ÷ 0.024

Half thrust rings

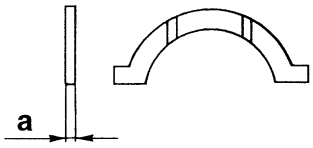

Unit: mm

Thickness of half thrust rings "a"	2.310 ÷ 2.360
Crankshaft end float	0.080 ÷ 0.265

Engine flywheel

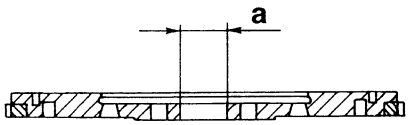

Unit: mm

Inside diameter of centre bushing (bore) "a"	35.000 ÷ 35.025
Heating temperature of ring gear for fitting on flywheel	120° ÷ 140 °C

Cylinder liners

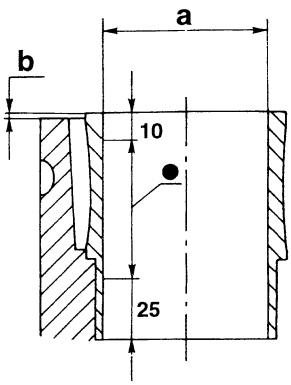

(●) Area for dimensional inspection

Unit: mm

Diameter of cylinder liners "a"	Class A - Blue	92.985 ÷ 92.994
	Class B - Pink	92.995 ÷ 93.004
	Class C - Green	93.005 ÷ 93.014
Protrusion of cylinder liners from crankcase "b"		0.01 ÷ 0.06
Cylinder liner limit of ovalization / taper		0.01

Oil pump

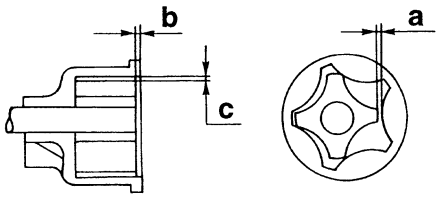

Unit: mm

Clearance between driven gear and inner gear "a"	0.040 ÷ 0.290
End float between pump casing rest surface and upper side of gears "b"	0.025 ÷ 0.075
Clearance between pump casing and driven gear "c"	0.170 ÷ 0.275

cardiagn.com

CONNECTING ROD - PISTON ASSEMBLY

Piston

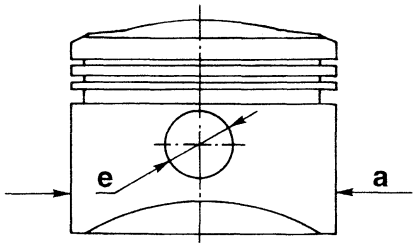

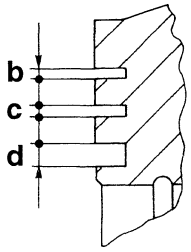

Unit: mm

Diameter of pistons "a" (1)	Class A - Blue	92.925 ÷ 92.935
	Class B - Pink	92.935 ÷ 92.945
	Class C - Green	92.945 ÷ 92.955
Height of seats of first seal ring "b"		1.525 ÷ 1.545
Height of seats of second seal ring "c"		1.525 ÷ 1.545
Height of seats of oil scraper ring "d"		3.515 ÷ 3.535
Diameter of gudgeon pin holes in pistons "e"	Class A - Black	22.003 ÷ 22.006
	Class B - White	22.006 ÷ 22.009
Clearance between liners and pistons		0.050 ÷ 0.069
Difference in weight between pistons		≤ 4 g

(1) To be measured perpendicularly to the gudgeon pin hole at a distance of 14 mm from lower edge of skirt.

Seal rings

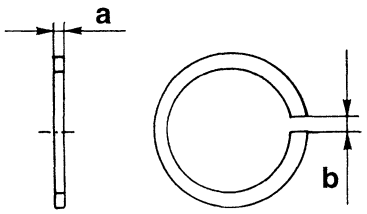

Unit: mm

Thickness of rings "a"	First ring	1.475 ÷ 1.490
	Second ring	1.475 ÷ 1.490
	Oil scraper ring	3.475 ÷ 3.490
Ring gap "b" (1)	First ring	0.40 ÷ 0.65
	Second ring	0.40 ÷ 0.65
	Oil scraper ring	0.30 ÷ 0.60
Axial play between rings and their seats	First ring	0.035 ÷ 0.070
	Second ring	0.035 ÷ 0.070
	Oil scraper ring	0.025 ÷ 0.060

(1) To be measured in the ckeck ring nut or in the cylinder liner

Gudgeon pins

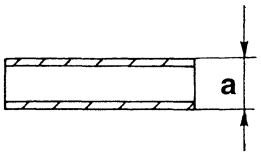

Unit: mm

Outside diameter of gudgeon pins "a"	Class A - Black	21.994 ÷ 21.997
	Class B - White	21.997 ÷ 22.000
Clearance between pins and their housings on pistons		0.006 ÷ 0.012

Connecting rods

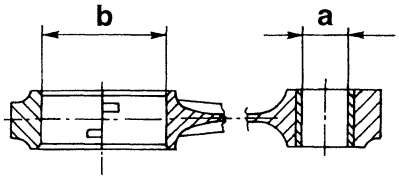

Unit: mm

Diameter of connecting rod bush hole "a"		22.004 ÷ 22.014
Inside diameter of big ends "b"		55.511 ÷ 55.524
Difference in weight between connecting rods		± 4 g
Big end end float		0.2 ÷ 0.3
Clearance between gudgeon pins and small end bushes	Class A - Black	0.007 ÷ 0.020
	Class B - White	0.004 ÷ 0.017

cardiagn.com

Connecting rod half bearings

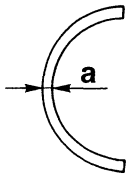

Unit: mm

Thickness of connecting rod half bearings "a"	Class A - Red	1.737 ÷ 1.745
	Class B - Blue	1.741 ÷ 1.749
Operating clearance between rod pins and their half bearings	Class A - Red	0.021 ÷ 0.060
	Class B - Blue	0.023 ÷ 0.062

CYLINDER HEADS

Heads

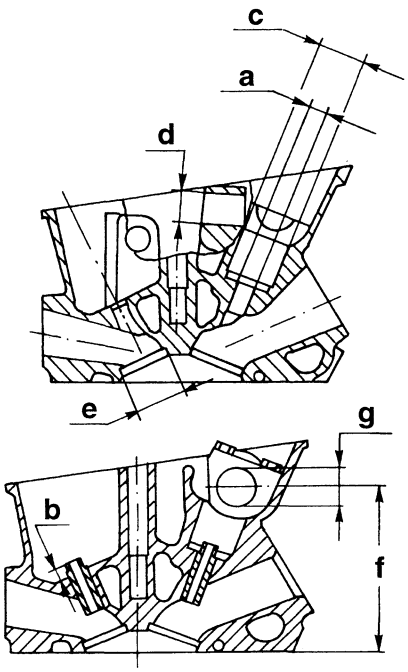

Unit: mm

Diameter of valve guide seats "a"		13.990 ÷ 14.018
Valve guide protrusion "b"		9.7 ÷ 10.1
Diameter of valve cup seats	Intake "c"	35.000 ÷ 35.025
	Exhaust "d"	24.000 ÷ 24.021
Diameter of valve seat housings "e"	Intake	45.000 ÷ 45.025
	Exhaust	39.000 ÷ 39.025
Minimum permissible height of heads after refacing "f"		124.85 ÷ 125.15
Maximum error of flatness of head lower surface		0.05
Diameter of camshaft supports "g"		27.000 ÷ 27.033
Length of camshaft support		26.851 ÷ 26.940
Diameter of camshaft pulley hub bush		32.000 ÷ 32.025
Diameter of oil pump drive shaft hub bush (1)		19.000 ÷ 19.021
Diameter of oil pump driving gear bush (1)		19.000 ÷ 19.021

(1) Specific for right-hand cylinder head

Valve guides

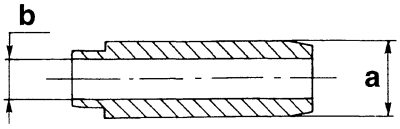

Unit: mm

Outside diameter of valve guides "a"	14.048 ÷ 14.059 14.062 ÷ 14.073 (1)
Inside diameter of valve guides (bore) "b"	9.000 ÷ 9.015
Interference between valve guides and their seats	0.030 ÷ 0.069

(1) For Spares only

Valve cups

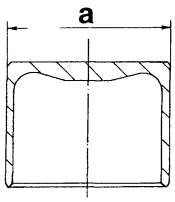

Unit: mm

Diameter of valve cups "a"	Intake	34.973 ÷ 34.989
	Exhaust	23.971 ÷ 23.989
Radial clearance between valve cups and seats	Intake	0.011 ÷ 0.052
	Exhaust	0.011 ÷ 0.050

cardiagn.com

Valve seats

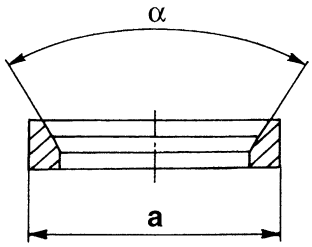

Unit: mm

Outside diameter of valve seats "a"	Intake	45.065 ÷ 45.100 45.365 ÷ 45.400 (1)
	Exhaust	39.095 ÷ 39.111 39.395 ÷ 39.411 (1)
Valve seat taper "α"		90° ± 20'
Interference between valve seats and their seats	Intake	0.040 ÷ 0.100
	Exhaust	0.070 ÷ 0.111
Heating temperature of cylinder heads for fitting valve seats		100 °C

(1) For Spares only

Valves

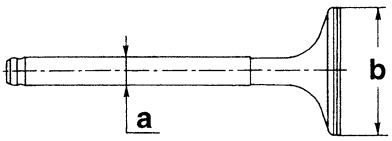

Unit: mm

Diameter of valve stems "a"	Intake	8.925 ÷ 8.960
	Exhaust	8.972 ÷ 8.987
Diameter of valve mushrooms "b"	Intake	43.82 ÷ 43.92
	Exhaust	38.52 ÷ 38.68
Radial clearance between valve stems and valve guides	Intake	0.040 ÷ 0.090
	Exhaust	0.013 ÷ 0.043

Valve springs

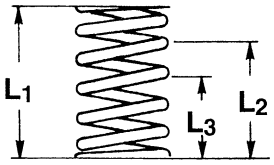

	Inner spring	Outer spring
Free length "L_1"	44.6 mm	44.1 mm
Length with valves closed "L_2"	32.5 mm	30.5 mm
Corresponding load at "L_2"	243 ÷ 252 N (24.8 ÷ 25.7 kg)	126 ÷ 130 N (12.8 ÷ 13.3 kg)
Length with valves open "L_3"	23.5 mm	21.5 mm
Corresponding load at "L_3"	470 ÷ 488 N (47.9 ÷ 49.7 kg)	222 ÷ 231 N (22.7 ÷ 23.5 kg)

Camshafts

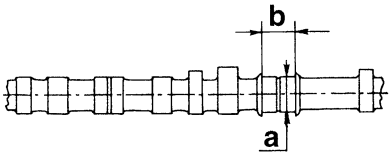

Unit: mm

Diameter of camshaft journals "a"		26.949 ÷ 26.970
Maximum eccentricity between journals		0.03
Width of camshaft shoulders "b"		27.000 ÷ 27.052
Nominal cam lift	Intake	10.4
	Exhaust	9
Clearance between camshaft journals and their seats		0.030 ÷ 0.084
Camshaft end float		0.060 ÷ 0.201

cardiagn.com

Equalisers

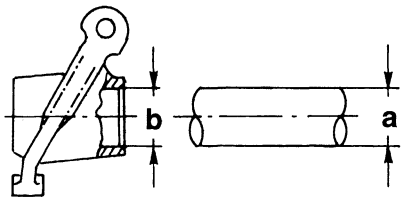

Unit: mm

Equaliser shaft diameter "a"	15.988 ÷ 16.000
Equaliser I.D. "b"	16.010 ÷ 16.028
Radial clearance between equalisers and their shafts	0.010 ÷ 0.040

Valve clearance

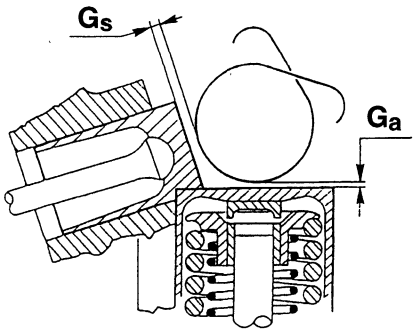

Unit: mm

Valve clearance (with engine cold)	Intake "G_a"	0.475 ÷ 0.500
	Exhaust "G_s"	0.225 ÷ 0.250

TIMING ACTUAL DIAGRAM ANGLE

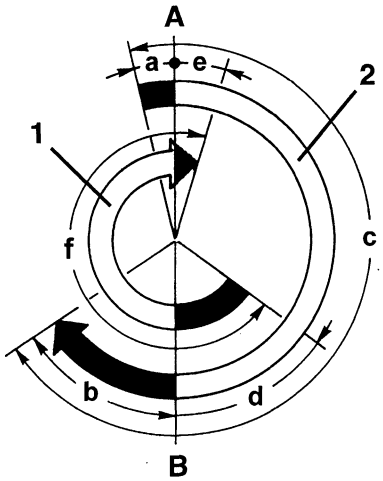

Intake	Opening (before T.D.C.)	"a"	13°
	Closing (after B.D.C.)	"b"	56°
	Intake angle value	"c"	249°
Exhaust	Opening (before B.D.C.)	"d"	53°
	Closing (after T.D.C.)	"e"	16°
	Exhaust angle value	"f"	249°

(1) Exhaust (2) Intake
(A) T.D.C. (B) B.D.C.

cardiagn.com

FUEL SUPPLY

FUEL

Unleaded petrol	R.O.N. minimum = 95

FUEL TANK

Full capacity	70 litres
Reserve	~ 9 litres

FUEL SUPPLY PRESSURE CONTROL

	T. SPARK 16V	2959 V6
Fuel pressure when idling	2.8 ÷ 3.2 bar (*)	3 bar
Maximum pressure control	~ 4 bar (*)	~ 4 bar

(*) For engines AR32201 and AR32301: 3.5 ± 0.2 bar.

AIR SUPPLY

FLOW TEST

	2959 V6
Air leak with accelerator throttle in closed position (Solex flow meter)	300 ± 10 Scale N

EXHAUST EMISSION CONTROL

CO at exhaust	≤ 2.2 g x km
HC + NOx at exhaust	0.5 g x km

SENSORS

REV AND PHASE SENSOR AIR GAP

0.5 ÷ 1.5 mm

PHASE SENSOR AIR GAP 2959 V6

0.1 ÷ 1.5 mm

cardiagn.com

COOLING SYSTEM

THERMOSTAT

	T. SPARK 16V	2959 V6
Opening start temperature	83° ± 2°C	87° ± 2°C

COOLING FAN THERMAL CONTACT (with M2.10.3 injection-ignition system)

Fan on/off temperature		
1st speed	On (contacts closed)	92 ± 2°C
	Off (contacts open)	87 ± 2°C
2nd speed	On (contacts closed)	97 ± 2°C
	Off (contacts open)	92 ± 2°C

COOLANT MAXIMUM TEMPERATURE SENSOR

	T. SPARK 16V	2959 V6
Contacts close temperature	122 ± 2°C (*)	115 ± 3°C
Contacts open temperature	112 ± 3°C (*)	≥ 102°C

(*): Data not available at time of going to press for M1.5.5 ignition-ignition system versions.

cardiagn.com

CLUTCH

		T. SPARK 16V	2959 V6
Clutch plate thickness	New	7.1 ÷ 7.7 mm	7.1 ÷ 7.7 mm
	Wear limit	6.3 mm	6.3 mm
Clutch plate diameter		228.5 mm	235 mm

GEARBOX

RATIOS (specific for 1747 T. SPARK 16V engines)

Axle ratio	Gear engaged	Gear ratio	Total ratio
15/56 1 : 3.733	1st 2nd 3rd 4th 5th Reverse	1 : 3.909 1 : 2.238 1 : 1.520 1 : 1.156 1 : 0.946 1 : 3.909	1 : 14.592 1 : 8.354 1 : 5.674 1 : 4.315 1 : 3.531 1 : 14.592

RATIOS (specific for 1970 T. SPARK 16V engines)

Axle ratio	Gear engaged	Gear ratio	Total ratio
16/57 1 : 3.562	1st 2nd 3rd 4th 5th Reverse	1 : 3.545 1 : 2.238 1 : 1.520 1 : 1.156 1 : 0.946 1 : 3.909	1 : 12.627 1 : 7.972 1 : 5.414 1 : 4.118 1 : 3.370 1 : 13.924

RATIOS (specific for 2959 V6 engines)

	Axle ratio	Gear engaged	Gear ratio	Total ratio
C.503.5.29.22 gearbox	18/56 1 : 3.111	1st 2nd 3rd 4th 5th Reverse	1 : 3.500 1 : 2.176 1 : 1.524 1 : 1.156 1 : 0.917 1 : 3.545	1 : 10.888 1 : 6.769 1 : 4.741 1 : 3.596 1 : 2.853 1 : 11.028
C.530.XX.YY gearbox	18/56 1 : 3.111	1st 2nd 3rd 4th 5th Reverse	1 : 3.500 1 : 2.235 1 : 1.524 1 : 1.156 1 : 0.914 1 : 3.545	1 : 10.888 1 : 6.953 1 : 4.741 1 : 3.596 1 : 2.843 1 : 11.028

cardiagn.com

DIFFERENTIAL

Bearing pre-load (not loaded) = 0.12 mm

NOTE: Calibrate bearing pre-load with spare rings from 1.70 mm to 2.60 mm thick in 0.05 mm steps.

	T. SPARK 16V	2959 V6
Planet-satellite play	≤ 0.10 mm	0.07 ÷ 0.20 mm

BRAKES

BRAKE DISCS

		FRONT		REAR
VEHICLE VERSION		**916 S2 - 916 S3**	**916 C2 - 916C3 916 S1**	**916 S2 - 916 S3 - 916 C2 916 C3 - 916 S1**
Diameter	(mm)	257	284	240
Use thickness limit	(mm)	18.2	20.2	9.2
Min. thickness after grinding	(mm)	19.2	21.9	10.1
Nominal thickness	(mm)	20.2	22.1	11

BRAKE PUMP

Type	ISOVAC
Diameter	15/16" (23.8 mm)
Stroke	9/16" (14 + 14 mm)

BRAKE BOOSTER

Type	ISOVAC
Working cylinder diameter	7" + 8" (17.8 + 20.3 cm)

FRONT BRAKE CALLIPERS

VEHICLE VERSION	**916 S2 - 916 S3**	**916 C2 - 916 C3 - 916 S1**
Type	ALTECNA	LUCAS
Piston diameter	54 mm	54 mm
Brake pad area	35.8 cm^2	50 cm^2
Pad nominal thickness	17 ± 0.3 mm	18.3 ± 0.2 mm

REAR BRAKE CALLIPERS

Type	LUCAS
Piston diameter	34 mm
Brake pad area	21 cm^2
Pad nominal thickness	14 ÷ 14.4 mm

BRAKE SHOES

	FRONT	REAR
Friction seal use limit thickness	1.5 mm (signalled by brake pad wear sensor)	1.5 mm

INDUCTIVE SENSOR - ABS PHONIC WHEEL GAP

Front wheels	0.3 ÷ 1.05 mm
Rear wheels	0.37 ÷ 0.9 mm

cardiagn.com

FRONT SUSPENSIONS

HELICOID SPRINGS

Engine	T. SPARK 16V	2959 V6
Wire diameter	12.9 mm	12.9 mm
Free length	439 mm	442 mm

SHOCK ABSORBERS

Rod diameter	22 mm
Stroke	158 mm

STABILISER BAR

Bar diameter	20 mm

REAR SUSPENSIONS

HELICOID SPRINGS

	916 S2 - 916 S3 - 916 S1	916 C2 - 916 C3
Wire diameter	13.9 mm	13.9 mm
Free length	231 mm	227 mm

SHOCK ABSORBERS

Rod diameter	39 mm
Stroke	94 mm

STABILISER BAR

Bar diameter	18 mm

WHEEL TRIM AND CHARACTERISTIC ANGLES (unladen and filled)

Versions / Features	To '97 versions			'98 versions		
	916 S1	916 S2	916 C2	916 S1	916 S2 916 S3	916 C2 916 C3
Front trim (B - A) (mm)	-36 ± 5	-33 ± 5	-32 ± 5	-46 ± 5	-42 ± 5	-43 ± 5
Rear trim (C - D) (mm)	-74 ± 5	-74 ± 5	-77 ± 5	-72 ± 3	-74 ± 5	-77 ± 3
Front wheel toe-in (D_2 - D_1) (mm)	-1.5 ± 0.5	-1.5 ± 0.5	-1.5 ± 0.5	-2 ± 1	-2 ± 0.5	-2 ± 1
Rear wheel toe-in (D_2 - D_1) (mm)	+2.5 - 0.5	+2.5 - 0.5	+2.5 - 0.5	+3 ± 1	+3 ± 0.5	+3 ± 1
Front wheel camber "α"	-0°39' ± 20'	-0°39' ± 20'	-0°39' ± 20'	-0°56' ± 20'	-0°30' ± 20'	-0°30' ± 20'
Caster "β"	3°8' ± 30'	3°9' ± 30'	3°12' ± 30'	2°45' ± 30'	2°55' ± 30'	2°59' ± 30'
Rear wheel camber "γ"	-1°10' ± 20'	-1°5' ± 20'	-1°8' ± 20'	-0°52' ± 20'	-0°59' ± 20'	-1°14' ± 20'

STEERING

Steering circle	10.8 m
Steering wheel turns (lock to lock)	2.23

cardiagn.com

IGNITION

IGNITION COILS

	T. SPARK 16V	2959 V6
Primary coil resistance	0.3 Ω ± 12%	0.5 Ω
Secondary coil resistance	7 kΩ ± 12%	13.3 kΩ

SPARK PLUGS

	T. SPARK 16V	2959 V6
Type	NGK PFR6B + NGK PMR7A (*) [NGK BKR6EKPA + NGK PMR7A]	LODGE 25 HL

(*): Two spark plugs (one for type) are fitting on each cylinder.
[ ]: Alternative.

STARTING SYSTEM

STARTER MOTOR

			T. SPARK 16V	2959 V6
Nominal voltage		(V)	12	12
Nominal power		(kW)	1.4	1.4
Loaded test	Voltage	(V)	Not available at time of going to press	9
	Intake	(A)		≤ 350
	Rpm			≥ 1500
	Torque	(Nm)		8.5
Unloaded test	Voltage	(V)		-
	Intake	(A)		-
	Rpm			-
Short circuit test	Voltage	(V)		4
	Intake	(A)		≤ 750
	Torque	(Nm)		≥ 15

RECHARGING

BATTERY

Nominal voltage	12V
Capacity (20 hours)	70 A/h
Current intensity (-18°C)	400 A

ALTERNATOR

	T. SPARK 16V	2959 V6
Nominal voltage	14V	14V
Nominal current	100A	90A
Constant maximum speed	18000 rpm	Not available at time of going to press
Inducer coil resistance (measured between rings at 20°C)	2.6 ± 5% Ω	

cardiagn.com

MINIMUM PRESSURE SWITCH CALIBRATION

Contact open pressure	1.8 ± 0.07 bar
Contact close pressure	3 ÷ 3.5 bar

THREE-LEVEL (TRINARY) PRESSURE SWITCH CALIBRATION

1st level	contact open	2.45 ± 0.25 bar
	contact closed	2.85 ± 0.50 bar
2nd level	contact open	15.2 ± 0.98 bar
	contact closed	11.28 ± 1.99 bar
3rd level	contact open	25 ÷ 30 bar
	contact closed	17 ÷ 26 bar

FOUR-LEVEL PRESSURE SWITCH CALIBRATION

1ST level	contact open	2.45 ± 0.35 bar
	contact closed	max 3.5 bar
2nd level	contact open	15 ± 1 bar
	contact closed	11 ± 2 bar
3rd level	contact open	20 ± 1.2 bar
	contact closed	16 ± 2.2 bar
4th level	contact open	28 ± 2 bar
	contact closed	22 ± 4 bar

EXPANSION VALVE

Calibrated hole diameter	
Brown mesh	1.55 mm
White mesh	1.8 mm

cardiagn.com

COMPRESSOR 1970 T. SPARK 16V

Make	NIPPONDENSO
Type	TV 14 SC
Number of blades	2
Length of blade	72.5 mm
Depth of blade	38.5 mm
Displacement	127 cm^3/rev
Weight	4.05 kg
Quantity of oil (type ND9)	160 ± 20 cm^3
Electromagnetic joint working voltage	12 V
Minimum current absobed by electromagnetic joint	2.2 A
Power absorbed by electromagnetic joint	min. 40 W

COMPRESSOR 2959 V6

Make		SANDEN
Type		SD7 V16
Cylinder diameter		29.3 mm
Stroke	min.	2.2 mm
	max.	34.2 mm
Theoretical capacity	min.	10.4 cm^3/rev
	max.	161.3 cm^3/rev
Number of cylinders		7
Rotation		clockwise
Max. steady running		6000 rpm
Quantity of oil ("PAG" SP10 or equivalent)		240 ± 15 cm^3
Electromagnetic joint working voltage		12 V
Minimum engagement voltage of electromagnetic joint		7.5 V
Power absorbed by electromagnetic joint		48 W

cardiagn.com

Group 00 - Engine Maintenance 1970 T. SPARK 16V

Part		Nm	kgm
Oil sump drain plug		17 ÷ 21	1.7 ÷ 2.1
Auxiliary organs drive belt pulley securing screws		24 ÷ 29	2.4 ÷ 3.0
Timing pulley exhaust side securing screws		100 ÷ 124	10.2 ÷ 12.6
Timing belt tensioner nut		21 ÷ 26	2.1 ÷ 2.6
Spark plugs	Central large	25 ÷ 35	2.5 ÷ 3.6
	Side small	10 ÷ 12	1.0 ÷ 1.2

Group 00 - Engine Maintenance 2959 V6

Part	Nm	kgm
Oil sump drain plug	64 ÷ 79	6.5 ÷ 8.0
Cylinder head cover securing screws	10 ÷ 13	1.1 ÷ 1.3
Timing pulley to support hubs securing screws	13 ÷ 16	1.3 ÷ 1.6
Timing pulley support hub nuts	97 ÷ 117	10 ÷ 12
Timing shaft cap nuts (in oil)	16 ÷ 18	1.6 ÷ 1.8
Exhaust side valve clearance adjustment screw lock nuts	15 ÷ 18	1.5 ÷ 1.8
Water pump pulley securing screws	4 ÷ 5	0.4 ÷ 0.5
Timing belt tensioner nuts	19 ÷ 23	1.9 ÷ 2.3
Spark plugs (in oil)	25 ÷ 34	2.5 ÷ 3.5

Group 00 - Mechanical Groups Maintenance

Part	Nm	kgm
Bleed screws on brake calipers	4 ÷ 6	0.4 ÷ 0.6
Gearbox oil filler plug (1970 c.c)	30 ÷ 48	3.1 ÷ 4.9
Gearbox oil drain plug (1970 c.c)	30 ÷ 48	3.1 ÷ 4.9
Gearbox and differential oil drain plug (2959 c.c)	19 ÷ 30	1.9 ÷ 3.1

Group 10 - Engines T. SPARK 16V

Part	Nm	kgm
Main journals securing screws (in oil)	96 ÷ 119	9.8 ÷ 12.1
Engine flywheel securing screws	121 ÷ 149	12.3 ÷ 15.2
Connecting rod cap securing screws (in oil)	25 + 60°	2.5 + 60°
Auxiliary units drive belt pulley securing screws	24 ÷ 29	2.4 ÷ 3.0
Timing belt control pulley securing screws (left hand)	340 ÷ 378	34.7 ÷ 38.5
Water pump securing screws	17 ÷ 21	1.7 ÷ 2.1
Engine oil minimum pressure sensor	25 ÷ 31	2.5 ÷ 3.2

(CONTINUED)

cardiagn.com

(CONTINUED)

Part		Nm	kgm
Counter-rotating shaft cover fastening screws (1970 cc only)		6 ÷ 7	0.6 ÷ 0.7
Oil sump fastening screw	M6	7 ÷ 9	0.7 ÷ 0.9
	M8	21 ÷ 26	2.1 ÷ 2.7
Oil sump drain cap		17 ÷ 21	1.7 ÷ 2.1
Oil pump fastening screws		6 ÷ 8	0.6 ÷ 0.8
EGR valve fastening screws		17 ÷ 21	1.7 ÷ 2.1
Intake manifold - cylinder head fastening nuts		17 ÷ 21	1.7 ÷ 2.1
Timing pulley fastening screw, exhaust side		100 ÷ 124	10.2 ÷ 12.6
Timing belt take-up fastening nut		21 ÷ 26	2.1 ÷ 2.6
Exhaust manifold - cylinder head fastening nuts		17 ÷ 21	1.7 ÷ 2.1
Thermostat cup - cylinder head fastening screws		17 ÷ 21	1.7 ÷ 2.1
Camshaft bearing fastening screws (in oil)		13 ÷ 16	1.3 ÷ 1.6
Spark plugs	Central large	25 ÷ 35	2.5 ÷ 3.6
	Side small	10 ÷ 12	1.0 ÷ 1.2
Engine coolant temperature gauge sensor and maximum temperature warning light contact		25 ÷ 31	2.5 ÷ 3.2
Engine coolant temperature sensor (NTC)		12 ÷ 15	1.2 ÷ 1.5
Knock sensor fastening screw		19.5 ÷ 20.5	2.0 ÷ 2.1
Cylinder head torque			
Fasten all screws at:	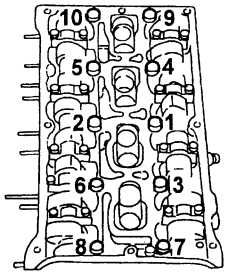	20	2.0
Pre-torque screws at:		40	4.1
Turn all screws at a angle of:		90° + 90° + 90°	

Assembly 10 - 2959 V6 engine

Part	Nm	kgm
Ignition coil fastening screws	6 ÷ 10	0.7 ÷ 1.1
Ignition coil bracket fastening nuts	14 ÷ 17	1.4 ÷ 1.7
Thermostat assembly fastening screws	32 ÷ 39	3.3 ÷ 4.1
Automatic timing belt take-up fastening nuts	19 ÷ 23	1.9 ÷ 2.3
Timing pulley - hub fastening screws	13 ÷ 16	1.3 ÷ 1.6
Timing pulley bracket hub fastening nut	97 ÷ 117	10 ÷ 12
Cylinder head cover fastening screws	10 ÷ 13	1.1 ÷ 1.3
Coolant pump cover fastening screws	6 ÷ 10	0.7 ÷ 1.1
Oil sump fastening screws	9 ÷ 11	0.9 ÷ 1.1
Connecting rod cap fastening screws (in oil)	53 ÷ 59	5.4 ÷ 6.0
Coolant pump pulley fastening screws	4 ÷ 5	0.4 ÷ 0.5
Coolant pump fastening screws	8 ÷ 9	0.8 ÷ 0.9

(CONTINUED)

cardiagn.com

(CONTINUED)

Part	Nm	kgm
Crankshaft front pulley fastening nut (in oil)	235	24
Engine front cover fastening screws	8 ÷ 9	0.8 ÷ 0.9
Flywheel fastening screws (in oil)	138 ÷ 144	14.1 ÷ 14.7
Main bearing fastening nuts (in oil)	84 ÷ 93	8.6 ÷ 9.5
Rear main bearing fastening nuts	25 + 79°	2.5 + 79°
Oil pump return pulley fastening nut	18 ÷ 22	1.8 ÷ 2.3
Camshaft bearing fastening nuts (in oil)	16 ÷ 18	1.6 ÷ 1.8
Tappet clearance adjustment screw lock nuts, exhaust side	15 ÷ 18	1.5 ÷ 1.8
Engine oil minimum pressure warning light sensor	20 ÷ 25	2.1 ÷ 2.6
Starter motor fastening screws	38 ÷ 45	3.9 ÷ 4.6
Oil sump drain cap	64 ÷ 79	6.5 ÷ 8.0
Spark plugs (in oil)	25 ÷ 34	2.5 ÷ 3.5
Filter fuel outlet fitting	21 ÷ 26	2.1 ÷ 2.7
Filter fuel inlet fitting	30 ÷ 37	3.1 ÷ 3.8
Throttle potentiometer fastening screws	1.7 ÷ 1.9	0.17 ÷ 0.19
Lambda sensor	50 ÷ 60	5.1 ÷ 6.1
Thermostat assembly cover fastening screws	14 ÷ 17	1.4 ÷ 1.7
Engine coolant temperature gauge sensor and maximum temperature warning light contact	20 ÷ 25	2.1 ÷ 2.6
Engine coolant temperature sensor (NTC)	12 ÷ 15	1.2 ÷ 1.5
Cylinder head torque		
Fasten all screws at:	25	2.5
Turn all screws at a angle of:	230° ± 2°	

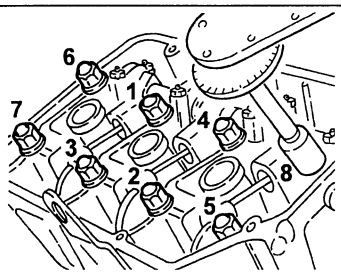

Assembly 18 - Clutch

Part	Nm	kgm
Thrust plate-flywheel fastening screws	20 ÷ 25	2.1 ÷ 2.6
Gearbox bell clutch cylinder bracket fastening screws (2959 cc)	12 ÷ 15	1.2 ÷ 1.5
Gearbox bell clutch cylinder fastening screws	13 ÷ 16	1.3 ÷ 1.6
Clutch pump - pedal board fastening nuts	13 ÷ 21	1.3 ÷ 2.1
Clutch circuit pipe fitting on pump	17 ÷ 19	1.7 ÷ 1.9
Clutch circuit pipe fitting on control cylinder	17 ÷ 19	1.7 ÷ 1.9
Thrust bearing sleeve fastening screws	7 ÷ 9	0.7 ÷ 0.9

cardiagn.com

Group 21 - Gearbox - Differential 1970 T. SPARK 16V

Part	Nm	Kgm
Screws and nuts fastening gearbox to engine	75 ÷ 92	7.6 ÷ 9.4
Screw fastening engine front mount to body	75 ÷ 92	7.6 ÷ 9.4
Screws fastening gearbox lower cover	42 ÷ 51	4.3 ÷ 5.3
Screws fastening gearbox to engine front mount	42 ÷ 51	4.3 ÷ 5.3
Screw fastening reversing shaft	29 ÷ 36	2.9 ÷ 3.6
Locknut for transmission and secondary shaft for fastening 5th gear	100 ÷ 124	10 ÷ 13
Screw fastening gearshift control forks	15 ÷ 19	1.6 ÷ 1.9
Screw fastening lever on gearshift control shaft	20 ÷ 25	2.0 ÷ 2.5
Screw fastening support for reversing gear control lever	9 ÷ 11	0.9 ÷ 1.1
Screw fastening gearshift control shaft bush	9 ÷ 11	0.9 ÷ 1.1
Screw fastening differential crown wheel	75 ÷ 92	7.6 ÷ 9.4
Screw fastening flange retaining differential carrier to gearbox	21 ÷ 26	2.2 ÷ 2.7
Screw fastening speedometer support	8 ÷ 13	0.8 ÷ 1.3
Magnetic threaded taper cap for draining gearbox oil	30 ÷ 48	3.1 ÷ 4.9
Taper threaded cap for filling gearbox oil	30 ÷ 48	3.1 ÷ 4.9
Screw fastening RH differential shaft support	7 ÷ 11	0.7 ÷ 1.1
Threaded taper plug for 1st and 2nd gearshift rod housing on gearbox	13 ÷ 21	1.3 ÷ 2.1
Front fastening screws for gearshift controls support	16 ÷ 25	1.6 ÷ 2.5
Screw fastening differential side joint to flange	40 ÷ 52	4.1 ÷ 5.3
Reversing light switch screw	20 ÷ 32	2.0 ÷ 3.2
Screw fastening starter motor to gearbox	20 ÷ 25	2.0 ÷ 2.5
Screw fastening earth braid to gearbox	10 ÷ 13	1.0 ÷ 1.3
Screws fastening engine rear mount to body	75 ÷ 92	7.6 ÷ 9.4
Screws fastening engine rear mount to crossmember	32 ÷ 40	3.3 ÷ 4.1
Screws fastening gearshift lever support to body	10 ÷ 16	1.0 ÷ 1.6
Nut for pin fastening intermediate gear	10 ÷ 16	1.0 ÷ 1.6
Nut fastening engagement tie-rod to intermediate lever	10 ÷ 16	1.0 ÷ 1.6
Nut for fastening selection gear on gearbox	10 ÷ 16	1.0 ÷ 1.6

Group 21 - Gearbox - Differential 2959 V6

Part	Nm	kgm
Screws fastening engine rear mount to gearbox	102 ÷ 126	10.4 ÷ 12.8
Screw fastening engine rear mount to body	75 ÷ 92	7.6 ÷ 9.3
Screw fastening gearbox rear support to body	75 ÷ 92	7.6 ÷ 9.3
Nuts fastening gear rear support to gearbox	47 ÷ 57	4.8 ÷ 5.8
Screw fastening gearshift control cable reaction bracket on gearbox	13 ÷ 16	1.3 ÷ 1.6
Screws fastening gearshift control cable lower cover	13 ÷ 16	1.3 ÷ 1.6

(CONTINUED)

cardiagn.com

(CONTINUED)

Part	Nm	kgm
Nut for fastening gear selection cable to gearshift rod	13 ÷ 16	1.3 ÷ 1.6
Screws fastening lower cover to gearbox	24 ÷ 31	2.4 ÷ 3.1
Threaded taper cap for draining gearbox oil	19 ÷ 30	1.9 ÷ 3.1
Threaded cap for draining differential oil	19 ÷ 30	1.9 ÷ 3.1
Screw fastening differential cover to gearbox	24 ÷ 31	2.4 ÷ 3.2
Screw retaining gearshift control rod spring	19 ÷ 30	1.9 ÷ 3.1
Ringnut locking transmission shaft gears	143 ÷ 185	14.6 ÷ 18.9
Ringnut locking secondary shaft gears	143 ÷ 185	14.6 ÷ 18.9
Screw fastening main rear bearing retainer plate	24 ÷ 31	2.5 ÷ 3.2
Screw fastening secondary rear bearing retainer plate	24 ÷ 31	2.5 ÷ 3.2
Self-locking screw fastening 1st & second gear fork	24 ÷ 31	2.5 ÷ 3.2
Self-locking screw fastening 3rd and 4th gear nib	24 ÷ 31	2.5 ÷ 3.2
Self-locking screw fastening 3rd and 4th gear fork	24 ÷ 31	2.5 ÷ 3.2
Self-locking screw fastening 5th gear and reverse gear nib	24 ÷ 31	2.5 ÷ 3.2
Screw fastening reversing lever complete	24 ÷ 31	2.5 ÷ 3.2
Self-locking screw fastening 5th gear fork	24 ÷ 31	2.5 ÷ 3.2
Screw fastening gearbox control shaft bush on box	7 ÷ 9	0.7 ÷ 0.9
Self-locking nut fastening gearshift control lever on inner shaft	24 ÷ 31	2.5 ÷ 3.2
Screw fastening gearshift control lever on outer shaft	24 ÷ 31	2.5 ÷ 3.2
Screw fastening mileage recorder support	8 ÷ 12	0.8 ÷ 1.2
Self-locking screw for fastening crown wheel	81 ÷ 90	8.3 ÷ 9.2

Group 27 - Axle shafts

Part	Nm	kgm
Screws fastening differential side axle shaft joint to flange	40 ÷ 52	4.1 ÷ 5.3
Screws fastening intermediate axle shaft flange	8 ÷ 10	0.8 ÷ 1.0
Nut fastening axle shafts to wheel hub (*)	67 ÷ 74 + 62° ± 2°	6.8 ÷ 7.5 + 62° ± 2°

(*) See GROUP 44 - Suspensions and Wheels

Group 33 - Brakes

Part		Nm	kgm
Stiff brake pipe unions on brake pump		13 ÷ 15	1.3 ÷ 1.5
Stiff brake pipe unions on A.B.S. hydraulic unit		13 ÷ 15	1.3 ÷ 1.5
Nut fastening brake pedal		27 ÷ 34	2.8 ÷ 3.5
Nuts fastening servobrake to pedal unit		10 ÷ 16	1 ÷ 1.6
Screws fastening front brake calipers (*)	M10 x 1.25	53 ÷ 59	5.4 ÷ 6.0
	M12 x 1.25	98 ÷ 108	10 ÷ 11

(*): Change the screws each time they are tightened

(CONTINUED)

cardiagn.com

(CONTINUED)

Part			Nm	kgm
Screws fastening rear brake caliper support plates			42 ÷ 51	4.3 ÷ 5.2
Screws fastening front brake calipers (*)	Car version	916 S2	31 ÷ 38	3.2 ÷ 3.9
		916 C2 - 916 S1	22 ÷ 32	2.2 ÷ 3.3
Screws fastening rear brake calipers (*)			31 ÷ 38	3.2 ÷ 3.9
Screws with centering pins for brake disks			5 ÷ 13	0.5 ÷ 1.3
Unions between brake system stiff pipes and hoses			13 ÷ 15	1.3 ÷ 1.5
Hose unions to brake calipers			13 ÷ 15	1.3 ÷ 1.5
Bleed screw on brake calipers			4 ÷ 6	0.4 ÷ 0.6
Screws fastening handbrake lever to support			18 ÷ 29	1.8 ÷ 3.0
Screws fastening braking load proportioning valve to bracket			7 ÷ 8	0.7 ÷ 0.8
Stiff brake pipe unions on braking load proportioning valve			13 ÷ 15	1.3 ÷ 1.5
Screw for braking load proportioning valve adjustment bracket			15 ÷ 19	1.5 ÷ 1.9

(*) Change the brake caliper fastening screws each time they are tightened

Group 41 - Steering system

Part		Nm	kgm
Nut fastening steering wheel to steering column		25 ÷ 31	2.5 ÷ 3.2
Screws fastening power steering box to crossmember		43 ÷ 47	4.4 ÷ 4.8
Nuts fastening steering column support to body		20 ÷ 25	2.0 ÷ 2.5
Screw fastening lower steering column to power steering box pinion		20 ÷ 24	2.0 ÷ 2.4
Nut fastening lower steering column to power steering box pinion		15 ÷ 19	1.5 ÷ 1.9
Union fastening power steering box oil inlet pipe		38 ÷ 42	3.9 ÷ 4.3
Union fastening power steering box oil outlet pipe		29 ÷ 32	2.9 ÷ 3.2
Nut fastening steering tierod ball pin to wheel upright		29 ÷ 36	3 ÷ 3.7
Nuts fastening side steering tierods		10 ÷ 15	1.0 ÷ 1.5
Oil delivery pipe on power steering pump	1970 c.c.	48 ÷ 53	4.9 ÷ 5.4
	2959 c.c.	46 ÷ 50	4.7 ÷ 5.1
Lower nut locking adjustable steering column		14 ÷ 17	1.4 ÷ 1.7
Upper nut locking adjustable steering column		10 ÷ 13	1.0 ÷ 1.3
Nut fastening lower steering strut		18 ÷ 30	1.8 ÷ 3.1

Group 44 - Front suspension

Part		Nm	kgm
Bolts fastening shock absorber to wheel upright	1970 c.c.	66 ÷ 74	6.7 ÷ 7.5
	2959 c.c.	95 ÷ 105	9.7 ÷ 10.7
Centre nut retaining helical spring to shock absorber		95 ÷ 105	9.7 ÷ 10.7
Screws fastening shock absorber to body		25 ÷ 32	2.5 ÷ 3.3

(CONTINUED)

cardiagn.com

(CONTINUED)

Part	Nm	kgm
Nut fastening track rod to wheel upright	29 ÷ 37	3.0 ÷ 3.8
Bolt fastening wishbone to wheel upright	67 ÷ 74	6.8 ÷ 7.5
Nut fastening connecting rod to stabilizer bar	43 ÷ 53	4.4 ÷ 5.4
Nut fastening stabilizer bar connecting rod to wishbone	26 ÷ 33	2.7 ÷ 3.3
Screws fastening U-bolts coupling wishbone to crossmember	59 ÷ 72	6.0 ÷ 7.3
Front screws fastening crossmember to body	92 ÷ 113	9.4 ÷ 11.5
Screws fastening reinforcement struts to the body	60 ÷ 73	6.1 ÷ 7.5
Screws fastening upper crossmember connections	92 ÷ 113	9.4 ÷ 11.5
Screws fastening steering box to crossmember	43 ÷ 47	4.4 ÷ 4.8
Nuts fastening stabilizer bar U-bolts to crossmember	29 ÷ 35	3.0 ÷ 3.6
Nut fastening axle shaft to wheel hub (*)	67 ÷ 74 + 62° ± 2°	6.8 ÷ 7.5 + 62° ± 2°

(*) See GROUP 44 - Suspension and wheels

Group 44 - Rear suspension

Part	Nm	kgm
Screws fastening rear suspension frame	79 ÷ 98	8.0 ÷ 10.0
Screw fastening upper shock absorber	59 ÷ 72	6.0 ÷ 7.3
Screw fastening lower shock absorber	79 ÷ 98	8.0 ÷ 10.0
Screw fastening spring holder arm to frame	88 ÷ 98	9.0 ÷ 10.0
Screw fastening shock absorber arm to frame	88 ÷ 98	9.0 ÷ 10.0
Screw fastening spring holder arm to upright	185 ÷ 205	19.0 ÷ 21.0
Screw fastening shock absorber arm to upright	185 ÷ 205	19.0 ÷ 21.0
Nut fastening rear hub	266 ÷ 294	27.0 ÷ 30.0
Adjustment tie-rod nuts	59 ÷ 73	6.0 ÷ 7.4
Screws fastening adjustment arm	47 ÷ 51	4.0 ÷ 5.0
Screws fastening stabilizer bar support	15 ÷ 21	1.5 ÷ 2.1
Screws fastening stabilizer bar	23 ÷ 28	2.4 ÷ 2.9

Group 44 - Wheels

Part	Nm	kgm
Screws fastening wheels (with rims in sheet metal)	83 ÷ 103	8.5 ÷ 10.5
Screws fastening wheels (with rims in alloy)	83 ÷ 103	8.5 ÷ 10.5

Group 50 - Climate control unit

Part	Nm	kgm
Union fastening evaporator/drier filter pipe on evaporator	40 ÷ 44	4.1 ÷ 4.5
Union fastening evaporator/drier filter pipe on drier filter	40 ÷ 44	4.1 ÷ 4.5

(CONTINUED)

cardiagn.com

(CONTINUED)

Part	Nm	kgm
Coupling securing dehydrator/compressor filter pipe on dehydrator filter	40 ÷ 44	4.1 ÷ 4.5
Screws securing inlet and outlet pipes flange on compressor	22 ÷ 24	2.2 ÷ 2.4
End nut securing compressor/condenser pipe on compressor mounting flange	21 ÷ 26	2.2 ÷ 2.7
Coupling securing compressor/condenser pipe on condenser	40 ÷ 44	4.1 ÷ 4.5
Coupling securing condenser/evaporator pipe on condenser	17 ÷ 19	1.7 ÷ 1.9
Coupling securing condenser/evaporator pipe on evaporator	17 ÷ 19	1.7 ÷ 1.9
Intermediate coupling pipe where expansion valve is installed	17 ÷ 19	1.7 ÷ 1.9
Trinary pressure switch mounting	7.5 ÷ 8.5	0.8 ÷ 0.9
Minimum pressure switch mounting	7.5 ÷ 8.5	0.8 ÷ 0.9

Group 55 - Electrical system

Part		Nm	kgm
Spark plugs (1970 c.c)	Central large	25 ÷ 35	2.6 ÷ 3.6
	Side small	10 ÷ 12	1 ÷ 1.2
Spark plugs (2959 c.c)		27 ÷ 34	2.8 ÷ 3.5

Group 70 - Body

Part	Nm	kgm
Front bonnet securing nuts	14 ÷ 16	1.4 ÷ 1.6
Screws securing door hinges to body	29 ÷ 36	3.0 ÷ 3.7
Screws securing pretensioner to seat	34 ÷ 42	3.5 ÷ 4.3
Front seat belt lower mounting screws	34 ÷ 42	3.5 ÷ 4.3
Front seat belt reel securing screws	34 ÷ 42	3.5 ÷ 4.3
Screws of device to adjust front seat belts in height (Gtv)	17 ÷ 21	1.7 ÷ 2.1
Rear seat belt transmission mounting screws (Gtv)	34 ÷ 42	3.5 ÷ 4.3
Rear seat belt reel securing screws (Gtv)	34 ÷ 42	3.5 ÷ 4.3
Rear seat belt whip securing screws (Gtv)	34 ÷ 42	3.5 ÷ 4.3
Damping earth brackets securing screws (Spider)	20 ÷ 25	2.0 ÷ 2.6
Damping earth securing screws (Spider)	25 ÷ 37	2.6 ÷ 3.8
Damping earth anchorage screws (Spider)	35 ÷ 50	3.6 ÷ 5.1

cardiagn.com

General

The special equipment has an important role in the car maintenance, since it is essential to ensure accurate, reliable and quick servicing.
It is important to note that the times for the various operations have been calculated assumung the use of this equipment.
This handbook lists and illustrates the specific equipment prepared especially for the Manufacturer to be used when overhauling, servicing or repairing the car.

The tool code has a new number with 10 digits and an old code of 1 letter and 5:
Example: 1.820.011.000
(A.2.0192)
Newly made tools have only the new number.
The servicing network can supply special tools or fixtures that conform to the procedures already used by the Alfa Romeo Dealers.
A list of the special tools used is given below.

Group 00 - Engine Servicing 1970 T. SPARK 16V

1.825.013.000 (C.6.0183)	Tool to check T.D.C.
1.825.041.000	Templates for timing shaft phasing

Group 00 - Engine Servicing 2959 V6

1.820.150.000 (R.9.0001)	Container for valve clearance caps adgustment
1.820.232.000	Extractor to remove timing shaft pulleys
1.822.016.000 (A.5.0220)	Wrench to adjust exhaust side tappets
1.822.146.000	Support for pulley wrenches
1.822.151.000	Wrench for timing pulley
1.824.018.000 (C.2.0131)	Tool to check belt tensions
1.824.034.000	Dial gauge for checking valve caps
1.825.013.000 (C.6.0183)	Tool to check T.D.C.
1.825.018.000 (C.6.0197)	Curved thickness gauge to check valve clearances

Group 10 - Engine Overhaul T. SPARK 16V

1.820.011.000 (A.2.0192)	Valves support fixture
1.820.012.000 (A.2.0195)	Stand for cylinder head support fixture
1.820.049.000 (A.2.0359)	Nut for valve support fixture
1.820.145.000 (R.4.0178)	Engine support brackets to be assembled on the overhaul stand
1.820.258.000	Cylinder head support stand
1.820.267.000	Spacer for valve removal/refitting

(CONTINUED)

cardiagn.com

(CONTINUED)

1.820.277.000	Graduated disk to close angle torques
1.820.286.000	Counter rotating shaft pulley anti-torque
1.820.618.000	Adapter for crankshaft rotation
1.820.619.000	Disk to centre crankshaft rear oil seal
1.820.624.000	Flywheel stop (for use at the bench)
1.820.626.000	Striker weight coupling
1.821.058.000 (A.3.0324)	Lever for valve removal/refitting
1.821.124.000 (A.3.0522)	Support for valve removal/refitting
1.821.176.000 (A.3.0641)	Valve guide extractor
1.821.205.000	Cage for valve removal/refittng
1.821.206.000	Valve guide oil seal inserter
1.821.208.000	Valve guide oil seal extractor
1.821.228.000	Inserter for timing shaft oil seal exhaust side
1.821.247.000	Inserter for crankshaft front oil seal and counter rotation shaft oil seals
1.821.252.000	Inserter for timing shaft oil seal intake side
1.821.254.000	Valve guide inserter
1.822.146.000	Support for pulley wrenches
1.822.147.000	Phase variator wrench
1.822.149.000	Timing belt tensioning wrench
1.822.154.000	Counter rotation shaft bvelt tensioning wrench
1.822.155.000	Wrench for timing pulley intake side
1.822.156.000	Wrench for timing pulley exhaust side
1.825.013.000 (C.6.0183)	Tool to check T.D.C.
1.825.041.000	Templates for timing shaft phasing
1.840.206.000	Striker weight

cardiagn.com

Group 10 - Engine Overhaul 2959 V6

1.820.011.000 (A.2.0192)	Valve support fixture
1.820.012.000 (A.2.0195)	Cylinder head support fixture stand
1.820.049.000 (A.2.0359)	Nut for valve support fixture

(CONTINUED)

(CONTINUED)

1.820.050.000 (A.2.0360)	Cylinder head supporting fork
1.820.115.000 (A.4.0195)	Reamer for pulley/oil pump control shaft bushings
1.820.145.000 (R.4.0178)	Engine support brackets for assembly on overhaul stand
1.820.228.000	Flywheel stop
1.820.232.000	Timing shaft pulley extractor
1.820.277.000	Graduated disk to close angle torques
1.820.279.000	Liner stop
1.820.618.000	Adapter for crankshaft rotation
1.821.002.000 (A.3.0113)	Rubber seal inserter on rear main bearing cap
1.821.005.000 (A.3.0134)	Valve guide extractor
1.821.006.001 (A.3.0139/0001)	Lever to remove rear main bearing cap
1.821.006.002 (A.3.0139/0002)	Fork to remove rear main bearing cap
1.821.010.000 (A.3.0178)	Inserter for crankshaft rear oil seal
1.821.016.000 (A.3.0244)	Valve guide oil seal inserter
1.821.018.000 (A.3.0247)	Valve guide oil seal extractor
1.821.058.000 (A.3.0324)	Lever to remove/refit valves
1.821.122.000 (A.3.0520)	Cage for valve removal/refitting
1.821.124.000 (A.3.0522)	Support for valve removal/refitting
1.821.125.000 (A.3.0524)	Crankshaft front oil seal inserter
1.821.126.000 (A.3.0525)	Timing shaft front oil seal inserter
1.821.127.000 (A.3.0526)	Intake valve guide inserter
1.821.128.000 (A.3.0527)	Exhaust valve guide inserter
1.821.129.000 (A.3.0528)	Extracter/inserter for pulley/oil pump control shaft bushings and timing shaft front bushing
1.822.016.000 (A.5.0220)	Wrench to adjust tappets exhaust side
1.822.146.000	Support for pulley wrenches and wrench for oil pump control pulley
1.822.151.000	Wrench for timing pulleys
1.824.034.000	Dial to check valve caps

(CONTINUED)

cardiagn.com

(CONTINUED)

1.825.003.000	Cylinder liner projection check tool
1.825.013.000	TDC check tool
1.825.018.000	Tappet clearance curved thickness gauge

Assembly 10 - T. SPARK 16V engine removal/refitting

1.820.225.000	Engine assembly removal/refitting stand
1.820.277.000	Angle torque dial
1.820.286.000	Counter-rotating shaft pulley torque contrast
1.820.617.000	Crankshaft pulley torque contrast (for post-change engines)
1.820.619.000	Crankshaft rear oil seal centring disc
1.820.623.000	Engine assembly removal/refitting stand
1,820.630.000	Flywheel retainer (for post-change engines)
1.821.175.000	Engine damper silent-block connecting rod extractor/taker-in
1.821.228.000	Camshaft oil seal taker-in, exhaust side
1.821.247.000	Front crankshaft oil seal and counter-rotating shaft oil seal taker-in
1.821.251.000	Counter-rotating shaft oil seal taker-in
1.821.252.000	Camshaft oil seal taker-in, intake side
1.822.144.000	Six-groove wrench for oil sump removal/refitting
1.822.145.000	Six-groove wrench for oil sump removal/refitting
1.822.146.000	Pulley wrench bracket
1.822.155.000	Timing pulley wrench, intake side
1.822.156.000	Timing pulley wrench, exhaust side

Assembly 10 - T. SPARK 16V engine feed

1.806.365.000	Examiner and diagnostic socket interface
1.820.079.000	Gap gauge
1.821.167.000	Tool for loosening/torquing fuel pump screw nut and fuel level gauge
1.822.146.000	Pulley wrench bracket
1.822.156.000	Timing pulley wrench, exhaust side
1.822.161.000	Tachometer sensor removal wrench
1.860.955.000	Pressure gauge
1.860.955.001	Fuel pressure check fitting kit
1.860.955.003	Fuel pressure check fitting kit
1.870.684.000	Fuel system pressure drain quick coupling fitting

Assembly 10 - 2959 V6 engine removal/refitting

1.820.225.000	Engine assembly removal/refitting stand
1.820.228.000	Flywheel retainer
1.820.234.000	Engine assembly removal/refitting bracket

(CONTINUED)

cardiagn.com

(CONTINUED)

1.820.277.000	Angle torque dial
1.820.279.000	Cylinder liner retainer
1.821.006.001	Rear main bearing extraction lever
1.821.006.002	Rear main bearing extractor
1.821.150.000	Crankshaft oil seal taker-in
1.822.135.000	Tool for removing the fuel pump assembly fastening screw nut from tank
1.822.146.000	Pulley wrench bracket
1.822.151.000	Timing pulley wrench
1.825.013.000	TDC check tool
1.822.159.000	Tool for removing the fuel level gauge fastening screw nut from tank

Assembly 10 - 2959 V6 engine feed

1.820.079.000	Gap gauge
1.824.011.000	Flow test pad

Assembly 18 - Clutch

1.820.126.000	Clutch plate centring tool
1.820.228.000	Flywheel retainer

Assembly 21 - T. SPARK 16V engine gearbox-differential

1.820.017.000	Half rings for: - extracting primary shaft 4th speed driven gear - primary shaft disassembly
1.820.019.000	Plate for extracting secondary shaft 2nd and 3rd speed driven gears
1.820.022.000	Half plates for introducing primary shaft bearing internal race
1.820.024.000	Half ring support plate for extracting secondary shaft 1st speed driven gear
1.820.085.000	Differential bearing thickness gauge
1.820.146.000	Rotating stand gearbox support plate
1.820.208.000	Gearbox removal/refitting bracket
1.820.226.000	Engine mount
1.820.229.000	Differential flange extraction flange
1.820.239.000	Engine gearbox bracket
1.820.581.000	Engine crossmember
1.820.623.001	Gearbox removal/refitting bracket
1.821.003.000	Differential bracket bearing external race extraction ram
1.821.028.000	Differential bracket bearing external race taker-in
1.821.034.000	Differential bearing extractor
1.821.047.000	1st-3rd-5th speed control rod safety pawl taker-in
1.821.049.000	Primary shaft rear bearing taker-in half plate
1.821.050.000	4th speed driven gear taker-in
1.821.062.000	Differential bearing taker-in
1.821.092.000	1st speed driven gear taker-in

(CONTINUED)

cardiagn.com

(CONTINUED)

1.821.117.000	Puller tool for disassembling secondary shaft and transmission shaft front bearing inner race
1.821.161.000	Mallet per removing differential flange
1.821.170.000	Installing tool differential carrier oil seal gearbox side
1.821.171.000	Grip for installing tools
1.821.225.000	Installing tool for differential carrier oil seal engine side
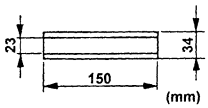	Installing tool for : transmission shaft front bearing inner race
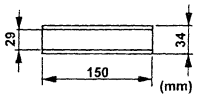	Installing tool for: transmission and secondary shaft rear bearing
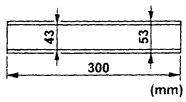	Installing tool for: synchronizer hub and secondary shaft 2nd and 3rd speed gears

Group 21 - Gearbox - Differential 2959 V6

1.820.018.000	Half rings for: - removing transmission shaft rear bearing - removing transmission shaft 4th speed driving gear
1.820.023.000	Half plate for: removing secondary shaft front bearing
1.820.024.000	Half rings support plate (to be used with 1.820.018.000)
1.820.043.000	Half rings for: - removing secondary shaft 4th speed driven gear - removing secondary shaft rear bearing
1.820.046.000	Half rings for: - removing secondary shaft 2nd and 3rd speed driven gears - removing secondary shaft 2nd speed synchronizer - removing secondary shaft 1st speed driven gear hub-sliding sleeve
1.820.047.001	Half ring support plate (to be used with 1.820.043.000)
1.820.047.003	Half ring support plate (to be used with 1.820.046.000)
1.820.085.000	Tool for measuring thickness of differential carrier bearing adjustment ring
1.820.125.000	Spindle for checking differential backlash
1.820.146.000	Gearbox support plate on revolving stand
1.820.208.000	Support for removal/refitting gearbox (to be used with 1.820.230.000)
1.820.226.000	Engine support (to be used with 1.820.239.000 and 1.820.581.000)
1.820.229.000	Flange (to be used with 1.821.161.000)
1.820.230.000	Brackets for removal/refitting gearbox (to be used with 1.820.208.000)

(CONTINUE

cardiagn.com

(CONTINUED)

1.820.239.000	Supports for engine gearbox (to be used with 1.820.581.000 and 1.820.226.000)
1.820.581.000	Horizontal engine support crossmember (to be used with 1.820.239.000 and 1.820.226.000)
1.821.034.000	Puller tool for differential bearings
1.821.047.000	Installing tool for 1st
1.821.049.000	Half plate for removing/installing front and rear transmission shaft bearings
1.821.092.000	Installing tool for: - transmission shaft front and rear bearings - secondary shaft rear bearing - secondary shaft 4th speed driven gear
1.821.161.000	Mallet per removing differential flange (to be used with 1.820.229.000)
1.821.169.000	Puller tool for track rod pin
1.821.170.000	Keying tool for installing differential cover oil seals (to be used with 1.821.171.000)
1.821.171.000	Grip (to be used with 1.821.170.000)
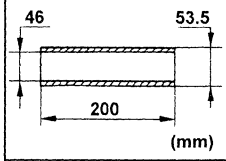	Installing tool for: - secondary shaft front bearing - secondary shaft 1st and 2nd speed engagement hub-sliding sleeve - - secondary shaft 3rd speed driven gear
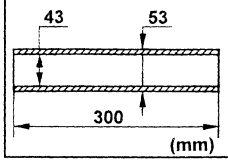	Installing tool for differential bearings

Group 27 - Axle shafts

1.820.082.000	Pincer for installing joint protection boot fastening clamps
1.820.084.000	Pincer for installing joint protection boot fastening clamps
1.821.161.000	Mallet
1.821.165.000	Puller tool for C.V. joint

Group 33 - Brakes

1.820.248.000	Tool for adjusting position of front brake caliper piston
1.822.108.000	Tool for moving back rear brake caliper piston

Group 41 - Steering system

1.821.105.000	Puller tool for removing steering wheel from steering column
1.821.169.000	Puller tool for track rod pin

cardiagn.com

Group 44 - Front suspension

1.820.047.002	Plate for removing inner bearing race from wheel hub
1.820.089.000	Tool for compressing front suspension spring
1.820.223.000	Half rings for removing inner bearing race from wheel hub
1.820.238.000	Plate for compressing front suspension spring
1.820.608.000	Blocks for compressing front suspension spring
1.820.622.000	Tool for front hub nut angle tightening
1.821.037.000	Tool for removing inner bearing race from wheel hub (2959 c.c.)
1.821.045.000	Tool for removing bearing outer race on wheel upright (1970 c.c.)
1.821.051.000	Tool for: - removing wheel hub from upright - removing bearing inner race from wheel hub
1.821.099.000	Tool for removing bearing outer race on wheel upright (2959 c.c.)
1.821.149.000	Support for removing bearing outer race from wheel upright (1970 c.c.)
1.821.169.000 (A.3.0633)	Tool for disconnecting track rod ball joint from wheel upright
1.821.209.000	Tool for: - installing bearing in wheel upright - installing hub in wheel upright
1.821.217.000	Tool for front wheel upright bearing (2959 c.c.)
1.821.220.000	Support for removing bearing outer race from wheel upright (2959 c.c.)
1.822.117.000	Wrench for slackening and tightening front shock absorber fastening nut
1.860.978.000	Tool for removing suspension crossmember

Group 44 - Rear suspension

1.820.625.000	Tool for removal/refitting rear suspension frame

Group 50 - Climate control unit

1.822.111.000	Socket wrench for Freon pipe fittings
1.822.112.000	Claw box wrench for Freon pipe fittings
1.822.113.000	Square wrench for Freon pipe fittings
1.822.115.000	Pin wrench for Freon pipe fittings
1.822.132.000	Ratchet wrench for removal/refitting outside air/recirculation port control motor
1.822.136.000	Set of inserts for removal/refitting outside air/recirculation port control motor
1.826.004.000	Emptying and recharging station for R134a

cardiagn.com

Group 70 - Body

1.820.628.000	Telescopic prep pre-loading tool
1.822.132.000	Ratchet wrench for removal/refitting sun roof electric motor
1.822.136.000	Set of inserts for removal/refitting sun roof electric motor
1.823.009.000	Blade for cutting glass sealant
1.823.010.000	Blade for cutting glass sealant
1.823.014.000	Knife for removing plastic parts
1.823.015.000	Knife for removing plastic buttons
1.823.019.000	Blade for cutting glass sealant
1.823.025.000	Inserts for removing plastic buttons
1.823.029.000	Blade for cutting glass sealant

cardiagn.com

MAINTENANCE OPERATIONS

The maintenance operations comprise checking and restoring the efficiency of certain parts of the vehicle on which wear and phase displacement are foreseeable after normal use.
The following table gives the list of maintenance operations to be carried out at the specified mileage intervals.

WARNINGS:
Precautions to be taken before maintenance operations. The engine compartment contains many moving parts, high temperature components and high voltage cables that can be dangerous.
Carefully follow the precautions given below:
- Turn the engine off and allow it to cool down.
Do not smoke or use naked flames. The presence of fuel can cause a fire hazard.
- Always work with a fire extinguisher handy.

Operations to have done at the mileage shown		km x 1.000									
		20	40	60	80	100	120	140	160	180	200
Change engine oil and filter (at all events once a years) and checking lubrication circuit for leaks		●	●	●	●	●	●	●	●	●	●
Checking valves clearance (except engines with hydraulic tappets)			●		●		●		●		●
Changing timing belts							●				
Checking conditions of trapezoidal belts			●		●		●		●		●
Checking conditions of Poly V belts					●				●		
Changing air cleaner cartridge			●		●		●		●		●
Changing fuel filter cartridge					●				●		
Checking operation of exhaust gas oxygen sensor (lambda probe)					●				●		
Changing spark plugs	1970 T. SPARK 16V					●					●
	2959 V6		●		●		●		●		●
Changing anti-freeze mixture					●				●		
Checking level of gearbox and differential oil					●				●		
Checking conditions of protective bellows for axle shafts, power steering and steering knuckle caps			●		●		●		●		●
Checking brake and fuel system piping for leaks			●		●		●		●		●
Checking handbrake travel			●		●		●		●		●
Checking power steering (if fitted) oil level			●		●		●		●		●

cardiagn.com

WARNINGS

To keep the car in good operating conditions, the following recommendations should be adhered to carefully:

Every 500 kms (or when refuelling) check:
- the engine oil level;
- the level of the fluid in the coolant circuit;
- the level of the brake/clutch fluid;
- the level of the fluid in the windscreen wiper/washer system.

Engine oil and filter

To be changed at the specified intervals.
At all events, they must be changed once a year.

Air cleaner

If the car is habitually used on dusty roads, the air cleaner should be changed more often than specified.

Brake pads

Wear of the front brake pads is indicated by the turning on of a warning light on the instrument cluster.
When changing the front pads, also check the rear ones.
However, depending on the use of the car, the rear pads might not need to be changed immediately, in which case, you are recommended to check them at a later stage.

Brake and clutch fluid

The brake fluid is hygroscopic, i.e. it absorbs moisture.
To avoid faulty braking, change the brake fluid every two years, regardless of the mileage driven.

Battery

During hot weather, check the electrolyte level frequently.

Dust and/or pollen filter (if fitted)

Once a year, preferably at the beginning of summer, check the conditions of the dust and/or pollen filter.
If the car is mostly used for town/motorway driving or on dusty roads, it is wise to check more often than indicated.
Failure to change the filter can considerably reduce the performance of the air conditioner system.

Anti-freeze

It is advisable to top up with Alfa Romeo Climafluid Super Permanent -40°C to conserve the protective properties of the mixture.

Notes

Under special driving conditions (e.g. on roads sprinkled with antifreeze salt and/or corrosive substances, rough road surfaces, etc.) often check the boots of the axle shafts and steering box, and clean and lubricate joints, hinges, door catches, bonnet catch, etc.)
When forced to use fuel, lubricants and/or fluids in general with characteristics other than those specified by the manufacturer (in emergencies), replace the fluids and corresponding filters at the earliest opportunity.

cardiagn.com

'98 MODELS

Operations to be performed at the indicated km	Km x 1.000								
	20	40	60	80	100	120	140	160	180
Check tyre conditions and wear	●	●	●	●	●	●	●	●	●
Check front disc brake pad wear warning light operation	●	●	●	●	●	●	●	●	●
Check rear disc brake pad wear		●		●		●		●	
Check intactness of drive shaft bellows, power steering, joint caps and tightness of fuel and brake lines	●	●	●	●	●	●	●	●	●
Inspect conditions of: external bodywork and underbody protection (exhaust - fuel feed - brakes); rubber parts (boots - sleeves - bushings - etc.)	●	●	●	●	●	●	●	●	●
Inspect conditions of accessory drive Poly-V belt		●							●
Check handbrake lever travel		●		●		●		●	
Check exhaust emissions		●		●		●		●	
Check evaporation system operation				●				●	
Replace air cleaner cartridge		●		●		●		●	
Check fluids and top up if required (brakes, hydraulic clutch, power steering, windscreen washer, battery, engine coolant, etc.)	●	●	●	●	●	●	●	●	●
Replace timing belt and accessory drive Poly-V belt						●			
Replace counter-rotating shaft drive belt (2.0 T. SPARK version only)						●			
Replace spark plugs (3.0 V6 version only)		●		●		●		●	
Replace spark plugs (1.8 - 2.0 T. SPARK versions only)					●				
Check engine control system operation (via diagnostic socket)		●		●		●		●	
Check gearbox and differential oil level				●				●	
Change engine oil and filter (*)	●	●	●	●	●	●	●	●	●
Change brake fluid (or every 24 months)			●			●			●
Check dust/pollen filter	●	●	●	●	●	●	●	●	●
Spider only Interventions on hood: - check open/close operation, inspect seals, check tightness of windows to hood seal and adjust if required (or every 18 months)	●	●	●	●	●	●	●	●	●
Spider only - version with automatic hood: check oil pump level and top-up if required (or every 12 months)	●	●	●	●	●	●	●	●	●

(*): Or every 18 months for lower mileage.

cardiagn.com

IMPORTANT:
Perfect operation and long working life of a car is strictly related to its good use and, above all, to the care with which regular service is performed. Considering product evolution, new service schedules have been adopted. The scheduled service coupons are planned at 20,000 km. It is, however, important to note that the car requires ordinary precautions, such as systematic fluid checks and topping up, tyre pressure checks, etc. In any case, remember that the correct car maintenance is certainly the best way to ensure performance, safety, environmental friendliness and low running costs in time.

Additional operations
The following precautions are required in addition to the operations shown in the Service Schedule to ensure good operation of the car:
Every 1000 km or before long trips, check and top up if required:
- engine oil
- engine coolant
- brake/clutch fluid
- power steering fluid
- battery electrolyte
- tyre pressure
- windscreen washer fluid.

Engine oil
If the car is mainly used in one of the following especially demanding conditions:
- towing trailers
- dusty roads
- short, repeated trips (less than 7-8 km) with temperature below zero degrees centigrade
- engine frequently idling or long distances at slow speed (or after a long storage period)

we recommend changing the engine oil more frequently than shown in the Service Schedule.

Air cleaner
Replace the air cleaner more frequently than prescribed if the car is mainly used on dusty roads.

Brake pads
The brake pads are subject to different use and wear, according to conditions of use and to driving style. Have the pad thickness checked at an Alfa Romeo Dealership as soon as the front brake pad warning light comes on. As the car is equipped with front brake pad wear sensors only, check the rear pads when the front pads are replaced. According to the car use, the rear brake pads may not need to be replaced immediately. We recommend in this case to check them later.

Brake/clutch fluid
Brake fluid is hygroscopic, i.e. it absorbs moisture. To prevent faulty braking, change the brake fluid every two years, regardless of the mileage (see the Service Schedule).

Battery
Check the battery charge status, preferably at the beginning of winter, to prevent the electrolyte from freezing. Perform this check more frequently if the car is mainly used for short trips or if permanent intake devices also running when the key is removed are fitted, especially those fitted after market.

Climate control system
To keep the system in perfect shape, simply turn it on every fortnight - also in winter - and run the compressor for a few minutes. Furthermore, we recommend having the system checked before the summer, when the system will be used.

Dust/pollen filter (cars with climate control only)
Have the filter checked once a year, preferably at the beginning of summer, by an Alfa Romeo Dealership. If the car is frequently used in dusty or very polluted environments, we recommend you have the filtering element checked more frequently than shown in the Service Schedule. The filter should be replaced in particular if decreased air intake into the passenger compartment is noticed.

Anti-freeze
We recommend topping up with Climafluid Super Permanent -40°C Alfa Romeo to preserve the protective features of the mixture.

Rubber hoses
The rubber hoses in the brake, power steering, fuel feed lines, etc. should be carefully checked at the frequency shown in the Service Schedule.

Wheels
Periodically and before long trips, check the pressure of each tyre, including the spare. Check pressure on cold tyres.
Periodically check that the depth of the tread complies with the minimum legal prescriptions. Periodically check that the tyres are not cut, swollen or present irregular wear. If this is so, go to an Alfa Romeo Dealership.
If a tyre is punctured, stop immediately and replace it to prevent damage to the tyre, the rim, the suspension and the steering.
The factory fitted wheels (rims and tyres) are suited to the features of the car and ensure maximum safety and comfort in all normal conditions of use. Before replacing the rims or tyre fitted on the car, check the allowed type table. However, attain to the rim-tyre coupling of the original fitting. Always fit new tyres. Avoid tyres from unknown sources.

cardiagn.com

MAINTENANCE FOR 1970 c.c. ENGINE

CHANGING THE ENGINE OIL AND FILTER

WARNING:
Engine oil is harmful to the skin: minimise contact of the oil with the skin; if this does occur wash with soap and water.

1. With the engine warm, remove the filler cap.
2. Withdraw the dipstick.

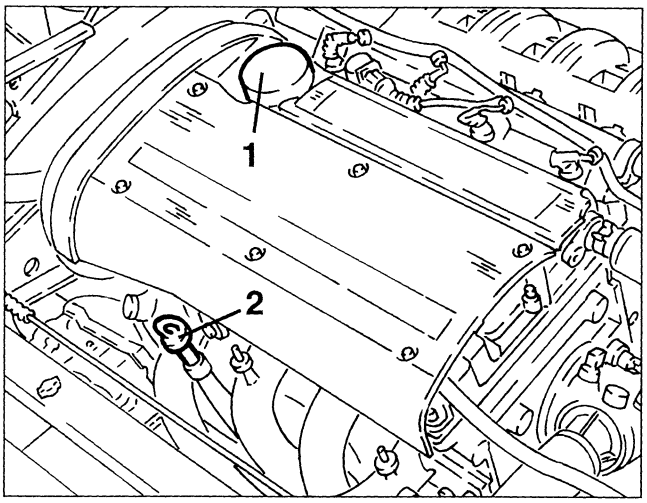

- Raise the car.
1. Remove the drain plug and drain off all the oil into a suitable recipient.

WARNING:
Be very careful when removing the drain plug; the oil might be very hot.

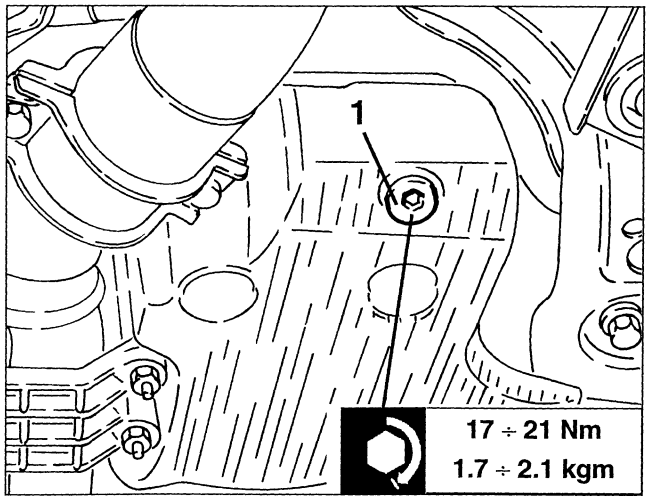

WARNING:
Never discard the oil in the environment as indiscriminate dumping causes pollution.

1. Working from underneath the car with the appropriate wrench, release the oil filter and remove it.

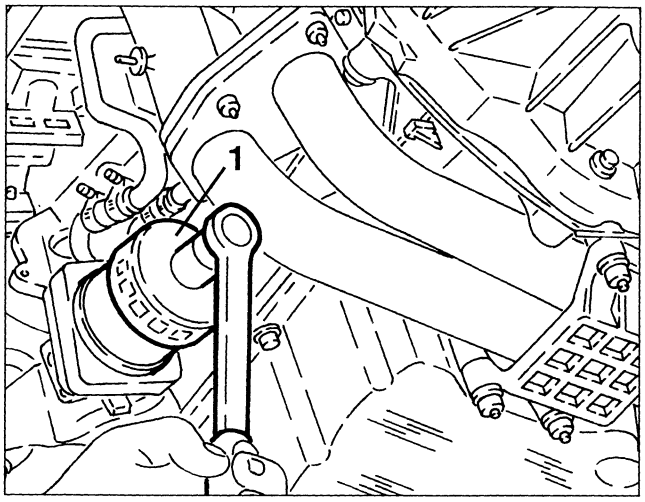

- Clean the drain plug and tighten it with the seal to the specified torque.
- Moisten the seal of the new filter and screw it on tightening fully by hand.
- Lower the car.
- Replenish the engine with oil of the type and in the quantity specified.
- Check that the oil level is correct with the dipstick.

WARNING:
The oil level should be checked with the car on level ground.
The oil level above the MAX mark car cause the oil to evaporate and loss o pressure.

- Refit the filler cap, run the engine for appr. 2 minute at idle speed, turn off the engine and wait for a fe minutes.
- Check the oil level and make sure there are no leak

WARNING:
When refilling with oil, great care shou be taken to prevent engine oil drippi into the alternator ventilation holes, this could seriously damage the alterr tor and may cause fire.

cardiagn.com

CHANGING THE TIMING GEAR BELT

- Set the car on a lift.
- Disconnect the battery (-) terminal.
- Remove the right front wheel and mud flap.

1. Working as illustrated on the guide pulley, slacken the tension of the auxiliary components control belt and remove it.
2. Slacken the four fastening screws and remove the auxiliary components control belt.

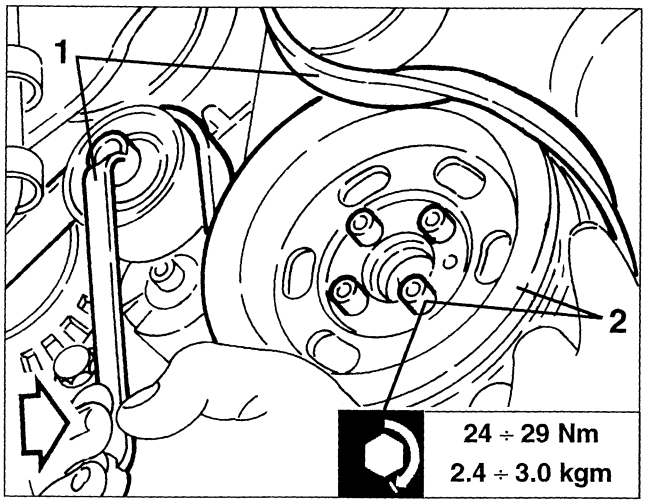

1. Slacken the fastening screw and remove the auxiliary components control belt guide pulley.
2. Slacken the fastening screw and remove the auxiliary components belt tensioner.
3. Slacken the fastening screws and remove the timing belts and counter-rotating shafts lower guard.

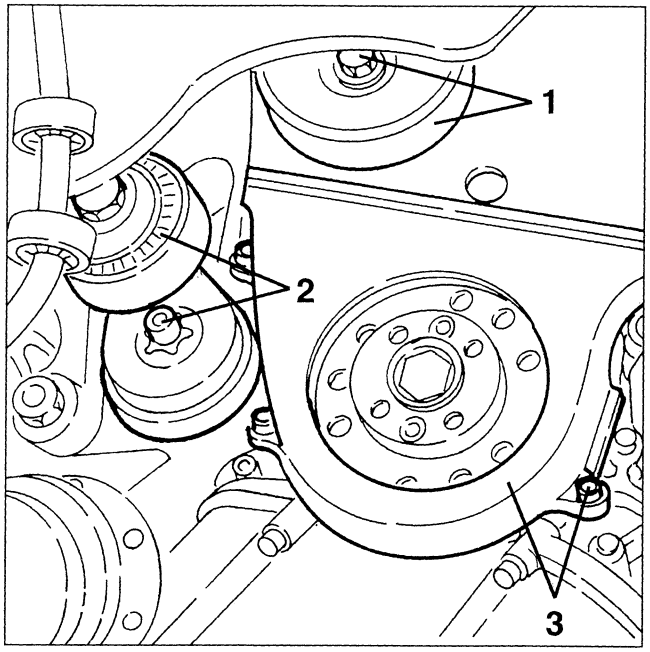

- Slacken the lower screws of the timing belts and counter- rotating shafts upper guard.

1. Lower the car, slackening the remaining fastening screws and remove the upper guard.

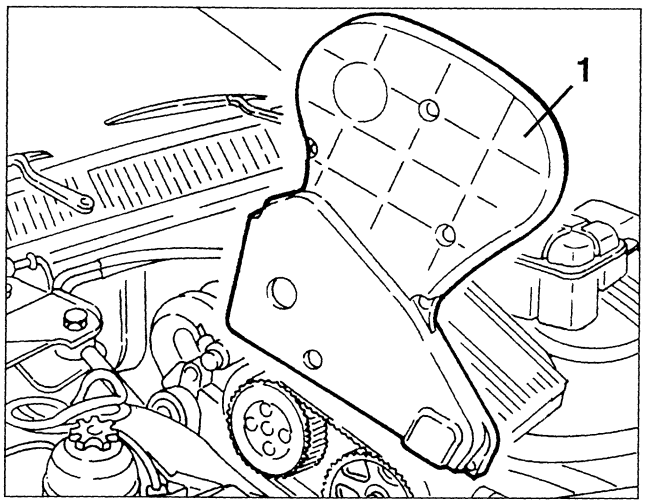

1. Slacken the tension of the counter-rotating shafts belt loosening the nut fastening the corresponding belt tensioner, then remove the belt.

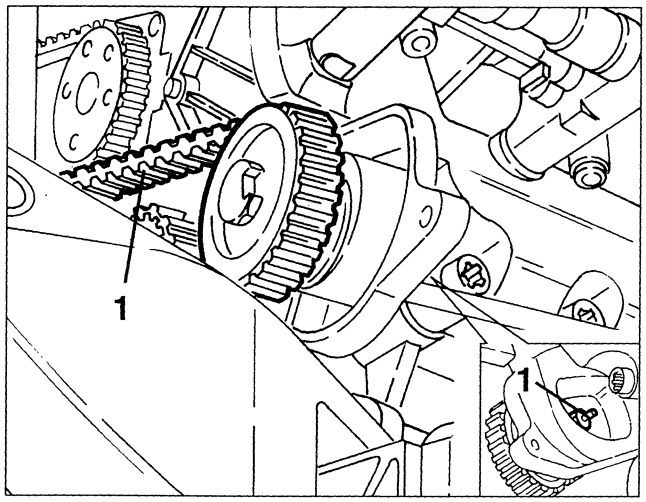

1. Slacken the two fastening screws and remove the counter- rotating shafts driving pulley.

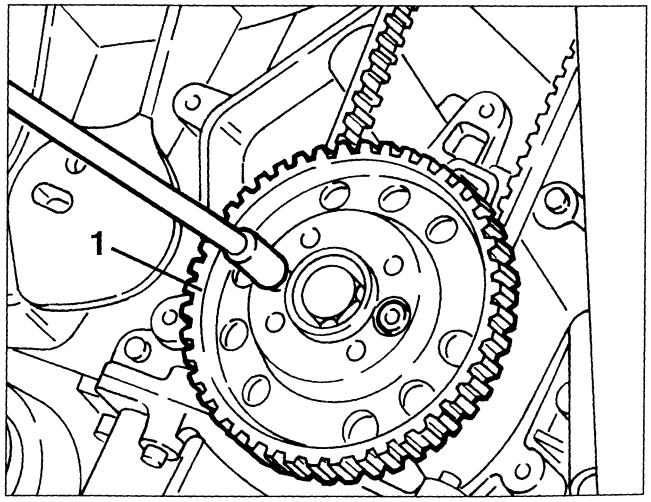

cardiagn.com

1. Slacken the fastening screws and remove the cover of the ignition coils.
2. Disconnect the electrical connections from the ignition coils.

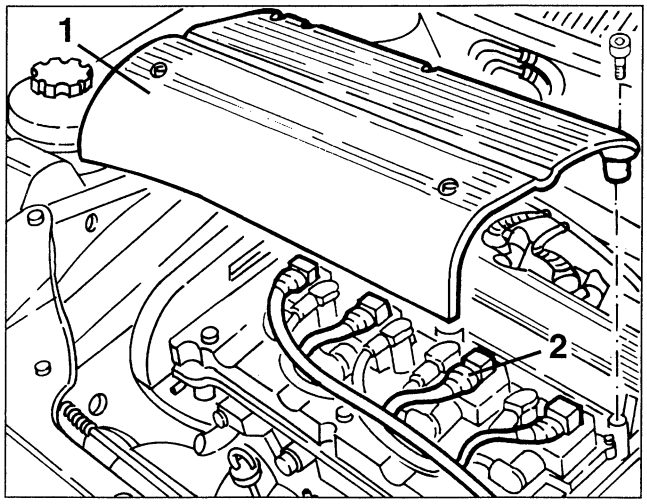

1. Slacken the fastening screws and remove the ignition coils.
2. Slacken the fastening screws and remove the ignition coils support bracket.

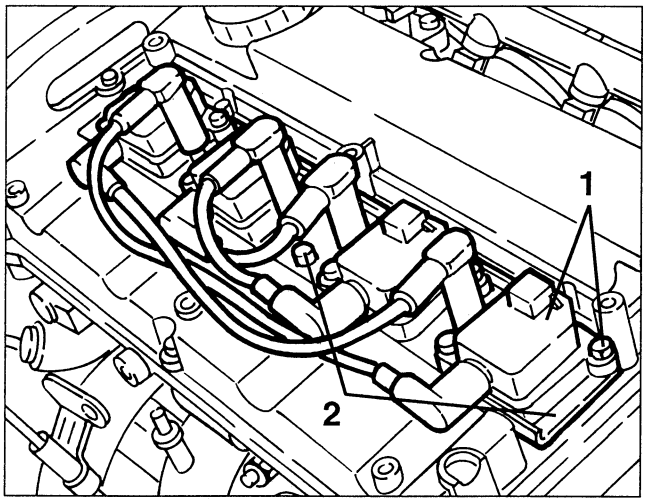

1. Slacken the fastening screws and remove the cylinder head cover complete with seal.

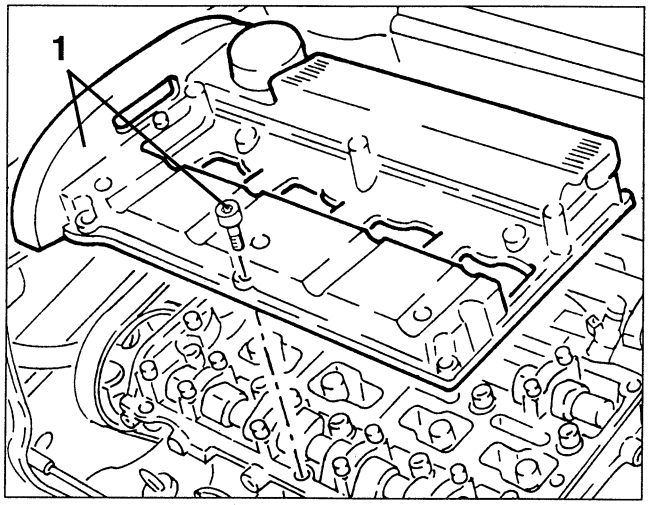

- Install tool no. 1.825.013.000 (C.6.0183) fitted with dial gauge in the seat of the first cylinder spark plug.
- Turn the crankshaft in its direction of rotation, until the piston of the 1st cylinder reaches the T.D.C. in the bursting stroke.
1. Working on the timing belt tensioner slacken the tension of the belt, then remove it.

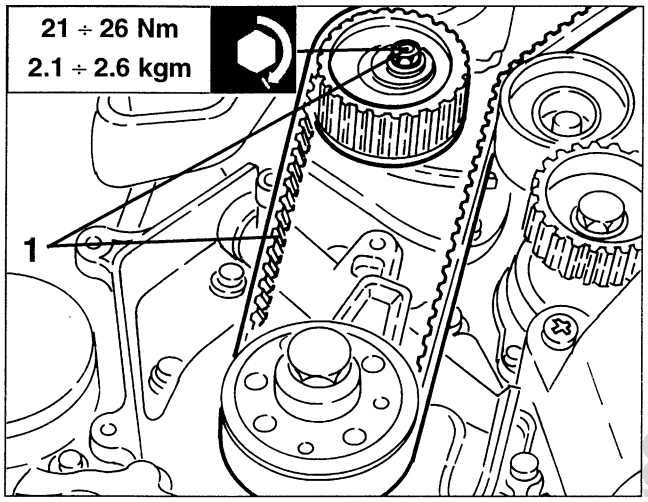

1. Remove the camshaft caps illustrated and in their place install templates no. 1.825.041.000 tightening the fastening screws to a maximum torque of 10 Nm (1 kgm) and ensuring correct coupling with the cams.
2. Slacken the four screws fastening the camshaft pulley on the intake side.
3. Slacken the screw fastening the timing pulley on the exhaust side with tools no. 1.822.146.000 and no. 1.822.156.000.

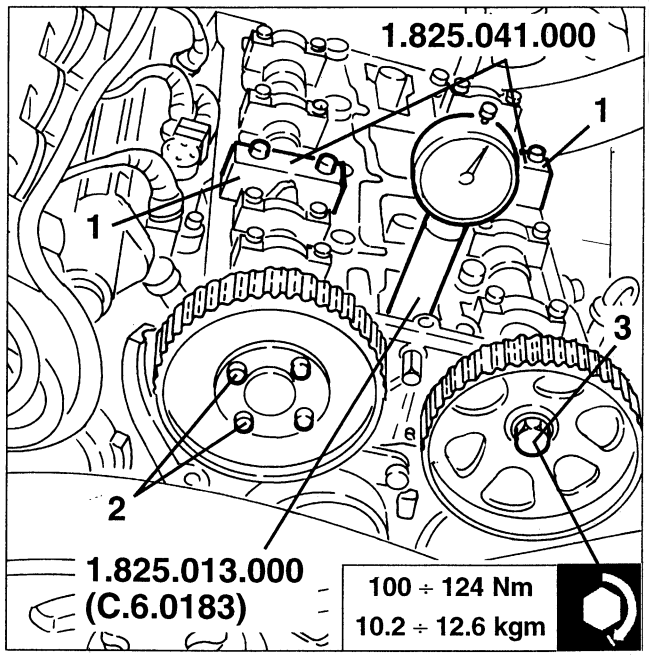

- Install a new timing belt proceeding as described in GROUP 10 - ENGINE OVERHAULING paragraph "Assembly of timing belt and checking timing".

cardiagn.com

- Install the counter-rotating shafts control belt proceeding as described in GROUP 10 - ENGINE OVERHAULING paragraph "Assembly of counter-rotating shafts control belt and timing".
- Complete re-assembly reversing the sequence followed for removal.

AUXILIARY COMPONENT BELT

The auxiliary components of the engine are driven by a single Poly V belt.
This belt is tensioned by an automatic tensioner: therefore checking the tension is unnecessary.

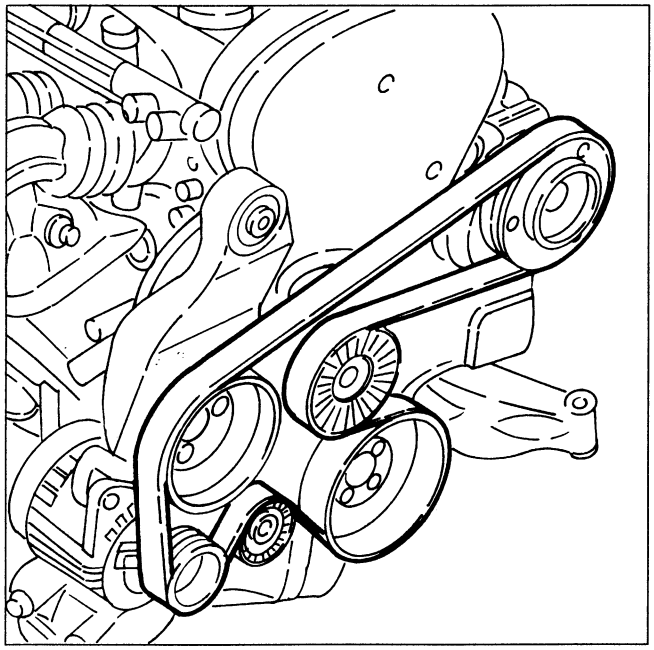

Replacement

- Set the car on a lift.
- Remove the right front wheel and mud flap.

- Check visually that the belt is intact and that it is free of:
• cuts
• cracks
• material surface wear (smooth and shiny)
• dry or stiff parts (lack of adherence).

In the event of one of the above defects, change the belt.

WARNING:
The contact of the belt with oil or solvents can damage the elasticity of the actual belt rubber and reduce its adherence.

1. Proceeding as illustrated on the guide pulley, slacken the tension of the auxiliary components drive belt and remove it.

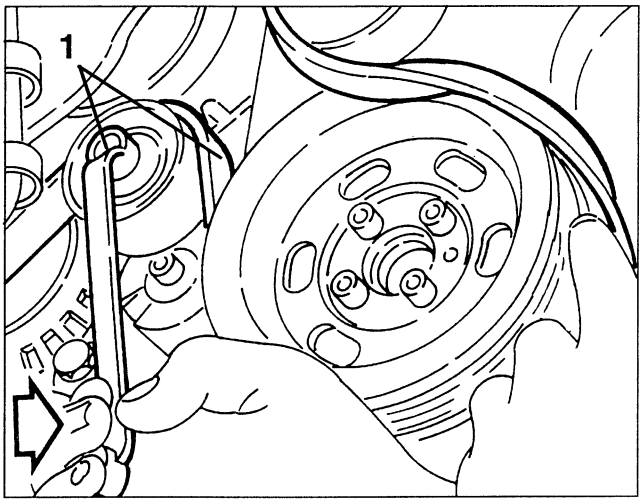

- Install a new belt reversing the sequence followed for removal.

CHANGING THE AIR CLEANER CARTRIDGE

WARNING:
Any filter cleaning operation might damage it, thereby adversely affecting the correct operation of the engine.

- Disconnect the battery (-) terminal.
1. Slacken the fastening clamp and disconnect the corrugated sleeve from the air cleaner cover, then move it to one side.
2. Disconnect the electrical connection from the airflow meter.

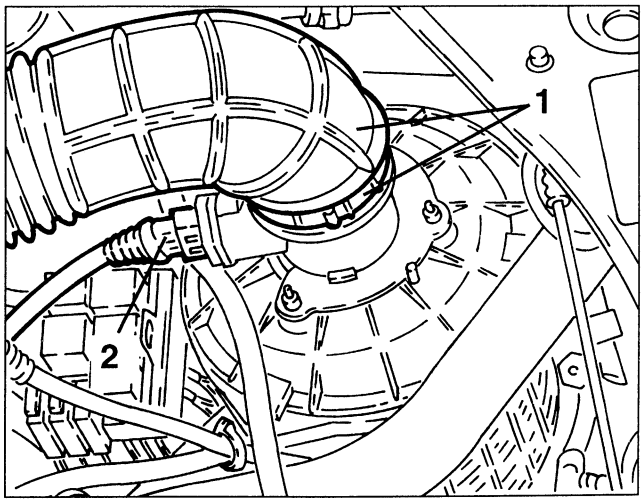

cardiagn.com

1. Loosen the fastening screws and remove the air cleaner cover and flow meter.
2. Remove the filtering element.

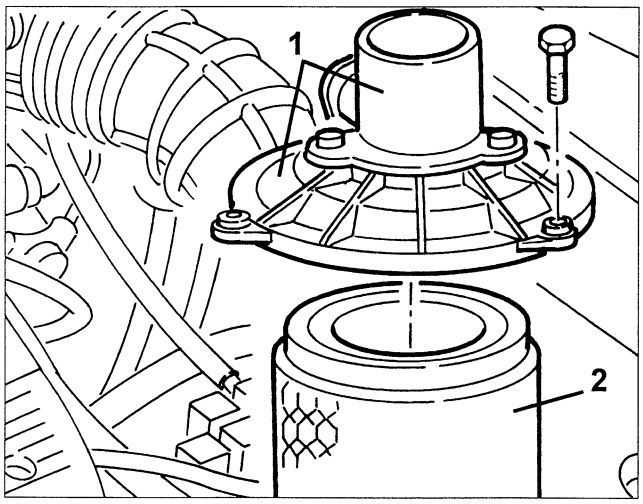

FUEL FILTER REPLACEMENT

NOTE: In '98 models with M1.5.5 injection, the fuel filter is built into the fuel pump and cannot be replaced.

- Position the vehicle on a shop jack and lift it.
1. Disconnect the fuel inlet pipe fitting from the filter.
2. Disconnect the fuel outlet pipe fitting from the filter.
3. Loosen the fastening clip and remove the fuel filter.

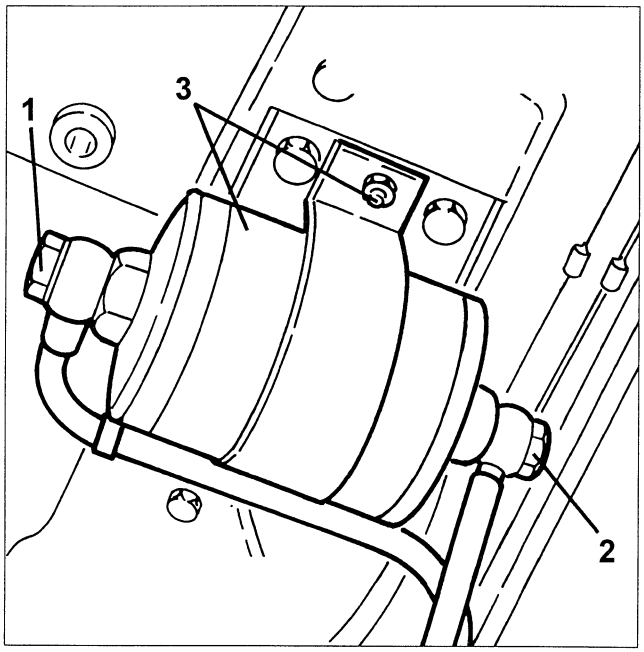

- Refit the new filter by reversing the removal sequence. Attain to the following precautions:
• replaces the copper fitting washers;
• refit the filter so that the arrow printed on it is directed according to fuel flow.

SPARK PLUG CHECK AND REPLACEMENT

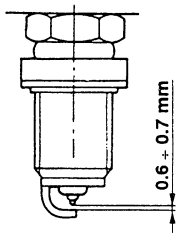

The standard fitted spark plugs are of the surface discharge type with one tip and one central electrode. In order for this type of spark plug to work correctly, a certain electrode gap is required.
The spark plugs are positioned asymmetrically in the firing chamber. Their size is different, as shown in the following diagram.

LARGE CENTRAL SPARK PLUGS - M14

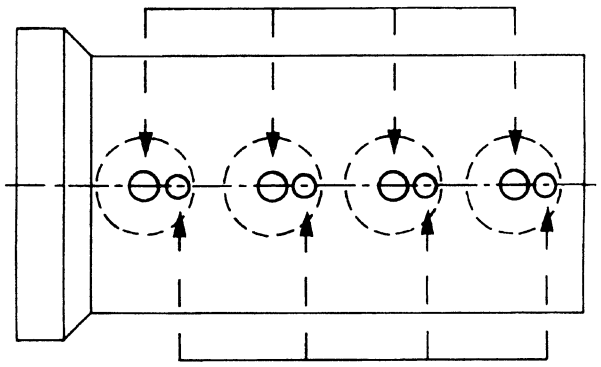

SMALL SIDE SPARK PLUGS - M10

NOTE: See specific paragraph for the type of spark plugs to be used.

- When the engine is cold, remove the spark plugs. Before removing, blow air in the respective seats to remove impurities and dirt.
- Check cleanness and intactness of the ceramic insulation. If required, replace the spark plugs.

IMPORTANT:
The use of spark plugs with different features or dimensions with respect to prescriptions can cause severe damage to the engine and effect the level of harmful emission in exhaust.

IMPORTANT:
A dirty or burned spark plug is often the symptom of a faulty engine feed system.
For example:
• Traces of carbon: incorrect mixture, air cleaner very dirty.
• Oil stains: oil infiltration through the piston gas rings.
• Ash: presence of aluminium material especially in the oil.

cardiagn.com

- **Fuse electrodes: overheating due to unsuitable fuel, faulty tappets.**
- **High electrode wear: harmful additives in the fuel or oil, knock, overheating.**
- **Etc.**

- When refitting, lubricate the threading with engine oil and torque the spark plugs as follows:

Central spark plugs (large)	25 ÷ 35 Nm 2.5 ÷ 3.6 kgm
Side spark plugs (small)	10 ÷ 12 Nm 1 ÷ 1.2 kgm

ENGINE COOLANT LEVEL CHECK AND REPLACEMENT

Check

- Visually check whether the coolant level in the expansion reservoir is included between the MIN and MAX marks.

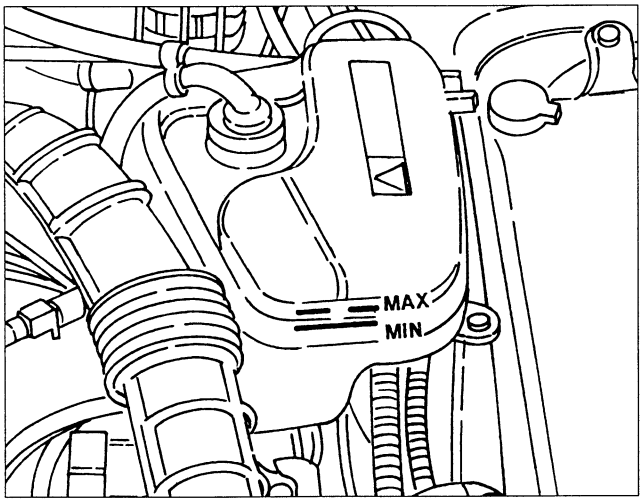

Replacement

- Position the vehicle on a shop jack.
- Loosen and remove the expansion reservoir cap.

IMPORTANT:
Never remove the expansion reservoir cap when the engine is hot!

- Lift the vehicle.
1. Drain the coolant by disconnecting the radiator outlet sleeve. Collect the coolant in a suitable container.

IMPORTANT:
The anti-freeze mixture used for engine cooling is a hazard for paintwork: avoid all contacts with painted parts.

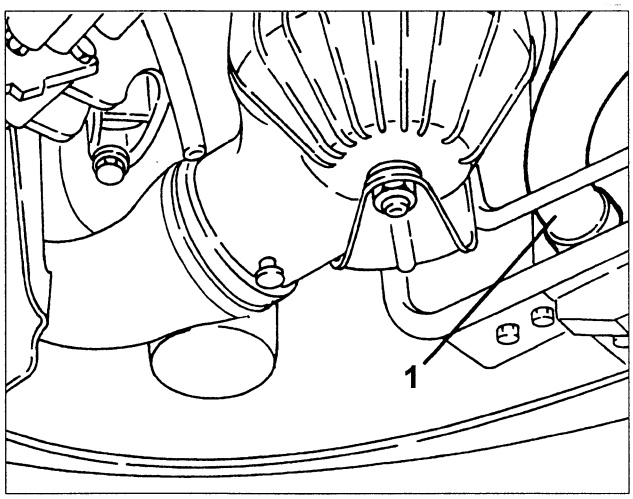

- Reconnect the radiator sleeve and all the disconnected pipes. Check clip torque.
- Refill with fluid of the prescribed and amount to reach the MAX mark on the expansion reservoir.
- Start the engine at take it to running temperature so to open the thermostat and bleed the residual air from the circuit.
- When the engine is cold, top-up to the MAX mark on the expansion reservoir.
- Close the expansion reservoir pressurised cap.

IMPORTANT:
Do not mix anti-freeze fluids of different type and make!
Do not use anti-rust additives: they may not be compatible with the anti-freeze used!

cardiagn.com

MAINTENANCE FOR 2929 c.c. ENGINE

CHANGING THE ENGINE OIL AND FILTER

WARNING:
Engine oil is harmful to the skin: minimise contact of the oil with the skin; if this does occur, wash with soap and water.

1. With the engine warm, remove the filler cap.
2. Withdraw the dipstick.

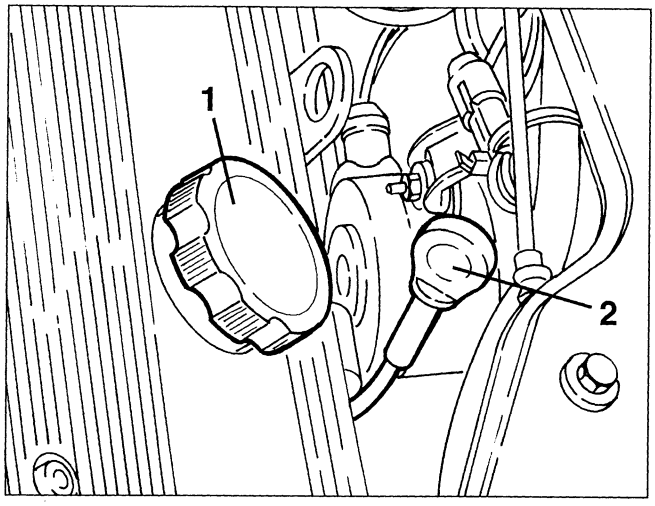

- Raise the car.
1. Remove the drain plug and drain off all the oil into a suitable recipient.

WARNING:
Be very careful when removing the drain plug; the oil might be very hot.

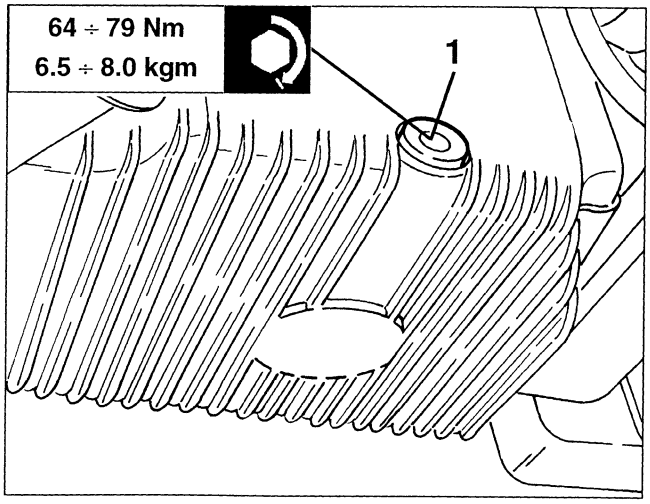

WARNING:
Never discard the oil in the environment, as indiscriminate dumping causes pollution.

1. Working from underneath the car with the appropriate wrench, release the oil filter and remove it.

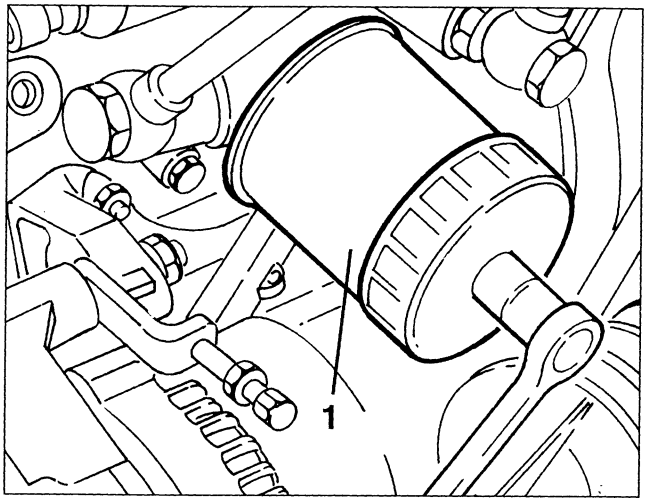

- Clean the drain plug and tighten it with the seal to the specified torque.
- Moisten the seal of the new filter with oil and screw it on tightening fully by hand.
- Lower the car.
- Replenish the engine with oil of the type and in the quantity specified.
- Check that the oil level is correct with the dipstick.

WARNING:
The oil level should be checked with the car on level ground.
The oil level above the MAX mark can cause the oil to evaporate and loss of pressure.

- Refit the filler cap, run the engine for appr. 2 minutes at idle speed, turn off the engine and wait for a few minutes.
- Check the oil level and make sure there are no leaks

WARNING:
When topping up the oil take care not to accidentally drip engine oil into the alternator ventilation slits which could cause serious damage and the hazard of fire.

cardiagn.com

CHECKING AND ADJUSTING THE VALVE CLEARANCE

- Remove the intake box (see specific paragraph).
1. Slacken the four fastening screws and remove the left- hand cylinder head.

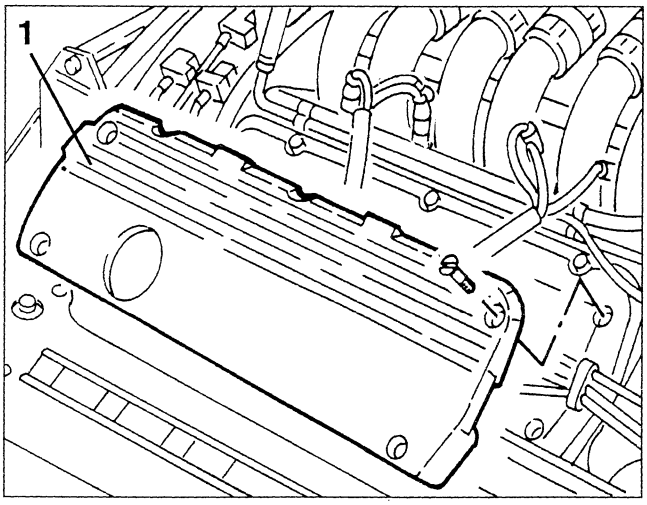

1. Disconnect the high voltage cables from the spark plugs.

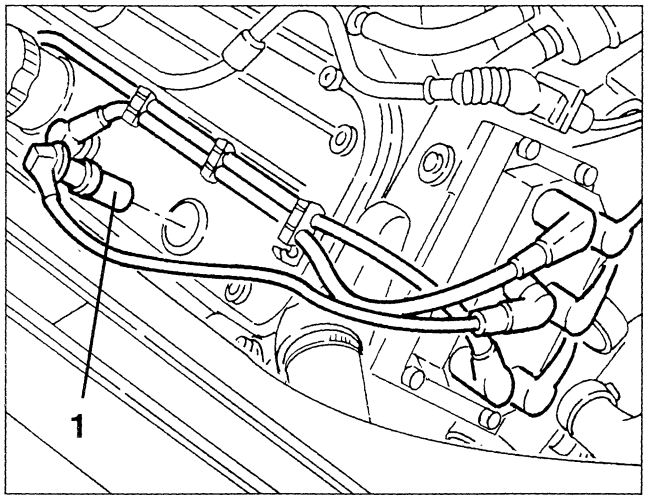

1. Disconnect the connections of the timing sensor (1a) knock sensor (1b) and rpm and timing sensor (1c), then move the wiring to one side.

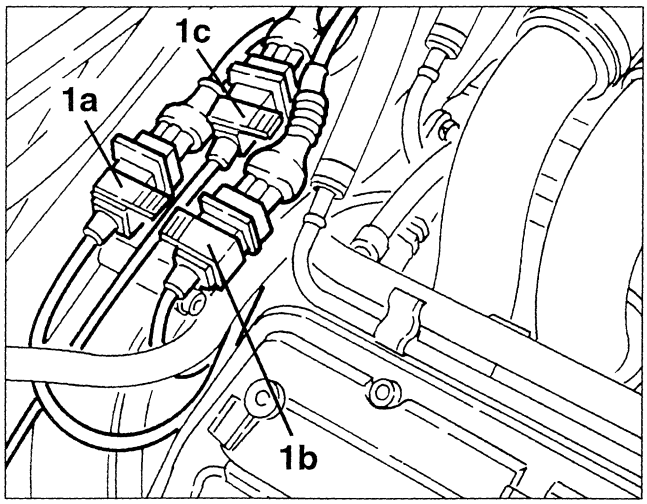

1. Slacken the fastening screws and remove the timing belt cover.

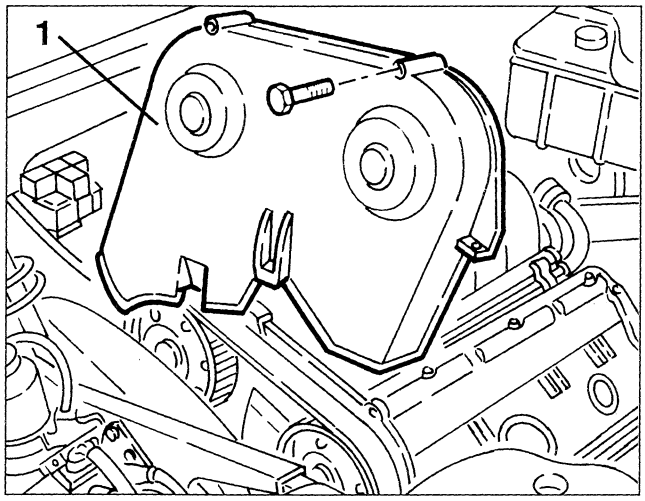

1. Slacken the fastening screws and remove the intake manifolds.

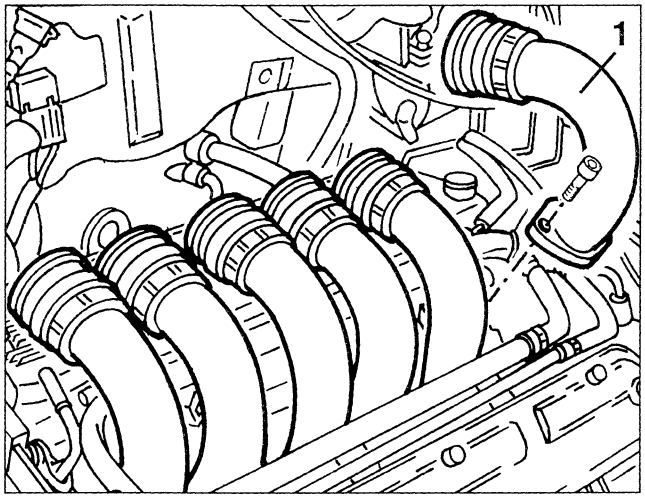

1. Slacken the fastening screws and remove the timing gear covers from the cylinder heads.

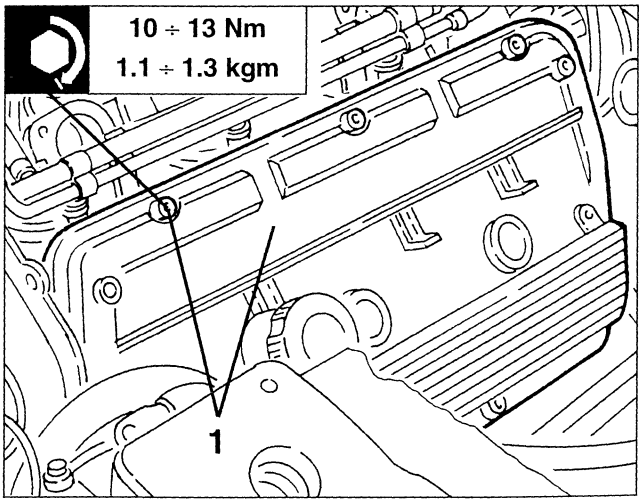

- Withdraw the oil from the wells and put it in the sump.

cardiagn.com

1. With the engine cold, check that the clearance between the lowered radius of the cams and the crown of the cups is within the specified limits.

Valve clearance on intake side "Ga"	0.475 ÷ 0.500 mm
Valve clearance on exhaust side "Gs"	0.225 ÷ 0.250 mm

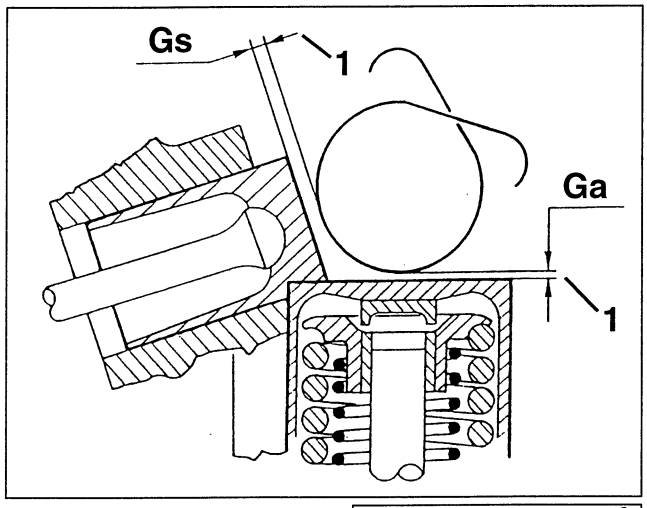

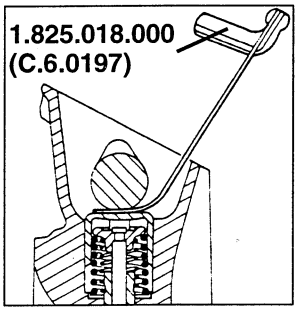

NOTE: To measure the intake valve clearance use thickness gauge no. 1.825.018.000 (C.6.0197).

- If the valve clearance is not within the specified limits, adjust as described below.

Intake valve clearance adjustment

1. Turn the crankshaft until the notches etched on the camshafts coincides with those on the corresponding caps.

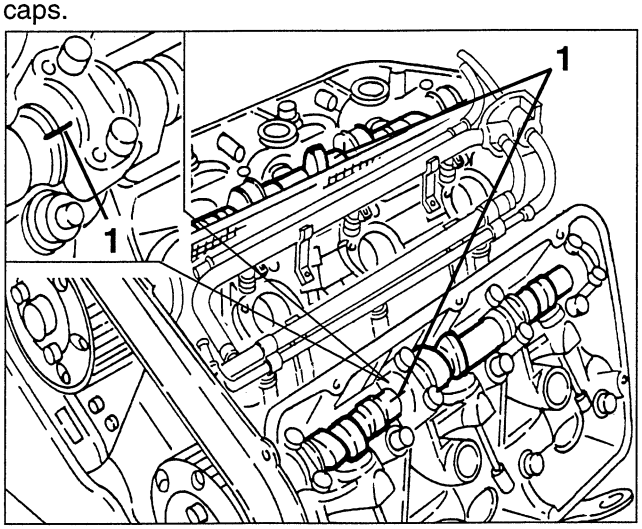

- Remove the right front wheel and mud flap.
- Slacken the fastening screws and remove the timing belt tensioner guard.

1. Check the alignment of the notch on the phonic wheel with the reference pin on the front crankcase cover.

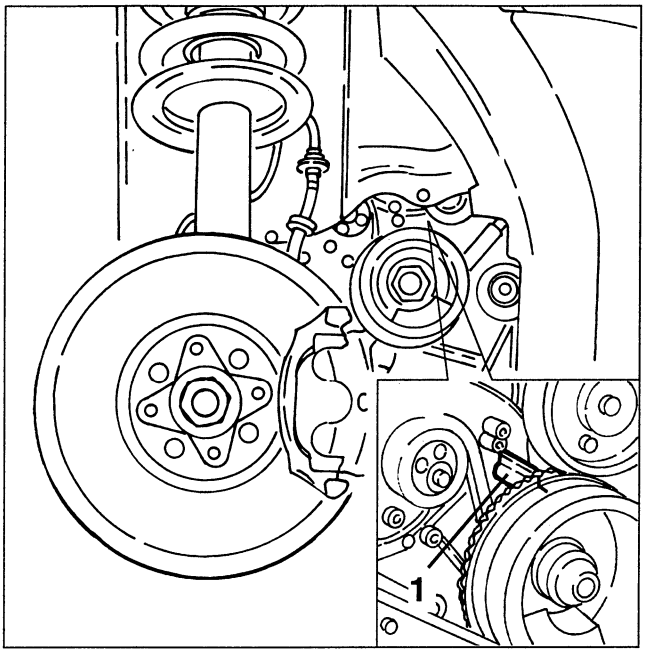

1. Slacken the screws fastening the pulley to the support hub.
2. Levering with tool no. 1.822.151.000 complete with tool no. 1.822.146.000, release and remove the hub fastening nut.

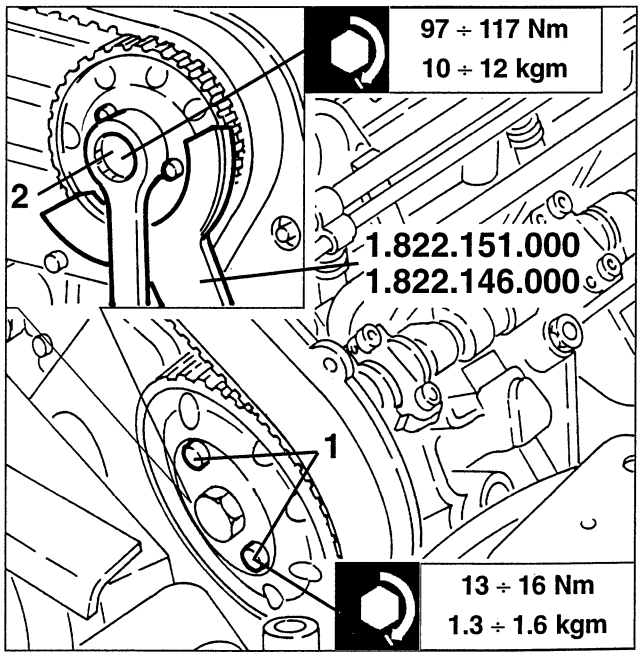

- Slacken and remove the screws fastening the timing pulley to the hub slackened previously.

cardiagn.com

1. Install tool no. 1.820.232.000 on the timing pulley screwing the three screws to the support hub.
2. Tighten the nut of tool no. 1.820.232.000 and locking the pulley with tools no. 1.822.151.000 and no. 1.822.146.000, move the pulley and hub forwards until they are released from the camshaft.

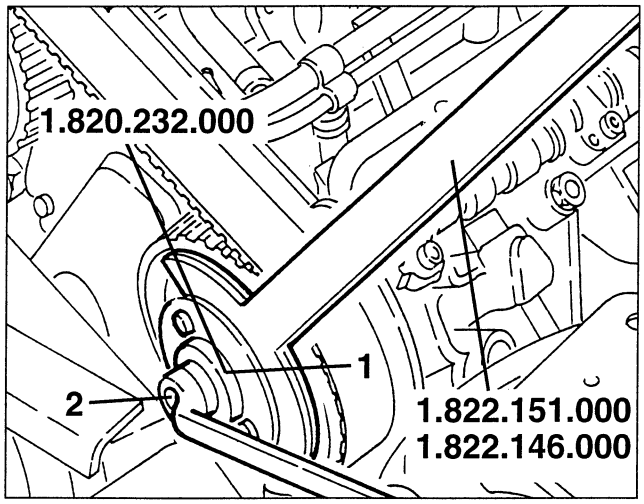

- Slacken the fastening nuts and remove the camshaft caps.
1. Remove the camshaft raising it from the rear.
2. Remove a cup and the corresponding valve clearance adjustment cap.

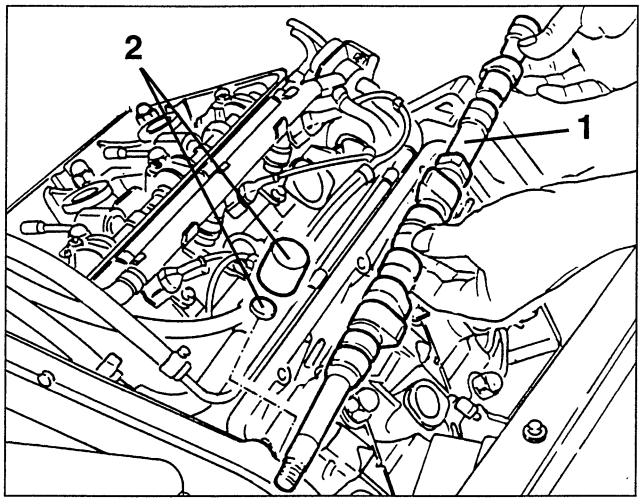

1. Measure the thickness of the caps with the specific dial gauge no. 1.824.034.000 then, according to the difference with respect to the values measured previously, choose from set no. 1.820.150.000 (R.9.0001) the suitable ones to restore the correct clearance of each valve.

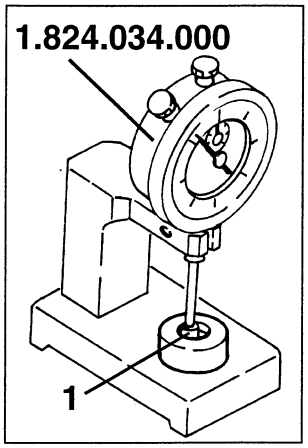

- Fit the new cap and the valve cup after lubricating with engine oil.
- Proceed in the same way for the remaining pairs of cups and caps.
1. Remove the centre part of tool no 1.820.232.000.
2. Assemble the camshaft checking through the hole of the tool that the key is positioned correctly.
- Push the timing gear driving pulley into the initial assembly position, then remove tool no. 1.820.232.000.
3. Tighten to the specified torque the three pulley fastening screws and the hub fastening screw levering with tools no. 1.822.151.000 and no. 1.822.146.000.
4. Fit the camshaft caps and tighten the fastening nuts to the specified torque.

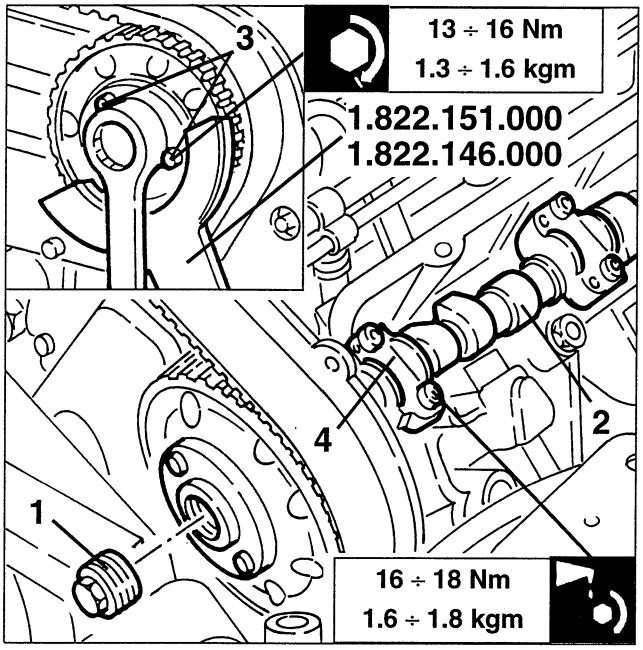

Adjusting exhaust valve clearance

1. Using tool no. 1.822.016.000 (A.5.0220) slacken the locknut of the adjustment screw working on the intermediate lever of the tool.
2. Still using the same tool, act on the adjustment screw until the specified valve clearance is obtained.
- Tighten the locknut and check the valve clearance again.

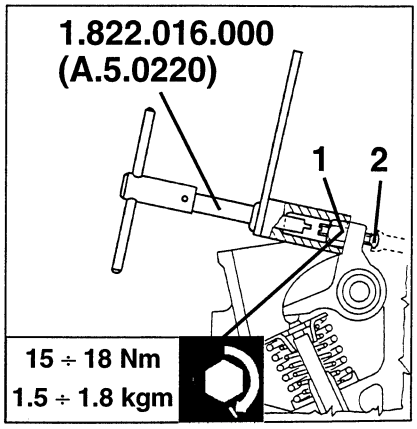

cardiagn.com

- Before refitting, position the camshafts correctly as follows:
1. Install tool no. 1.825.013.000 (C.6.0183), fitted with dial gauge, in the seat of the 1st cylinder park plug.
- Turn the crankshaft until the piston of the 1st cylinder is at the T.D.C. in the bursting stroke.
2. Check the alignment of the notches on the camshafts with those on the corresponding caps.

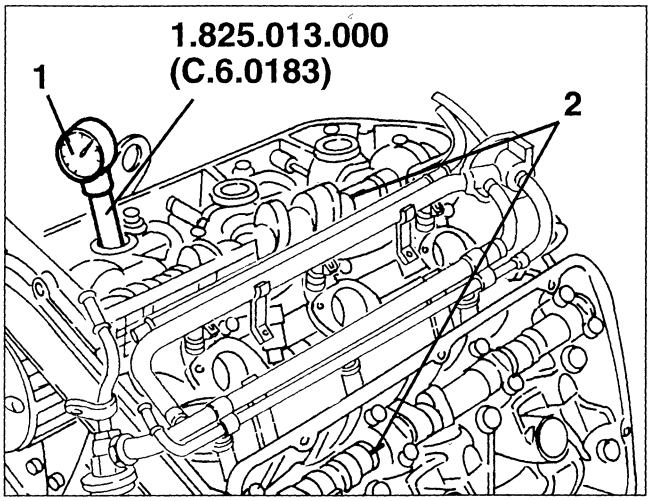

1. Check the alignment of the notch on the phonic wheel with the reference pin on the front crankcase cover.

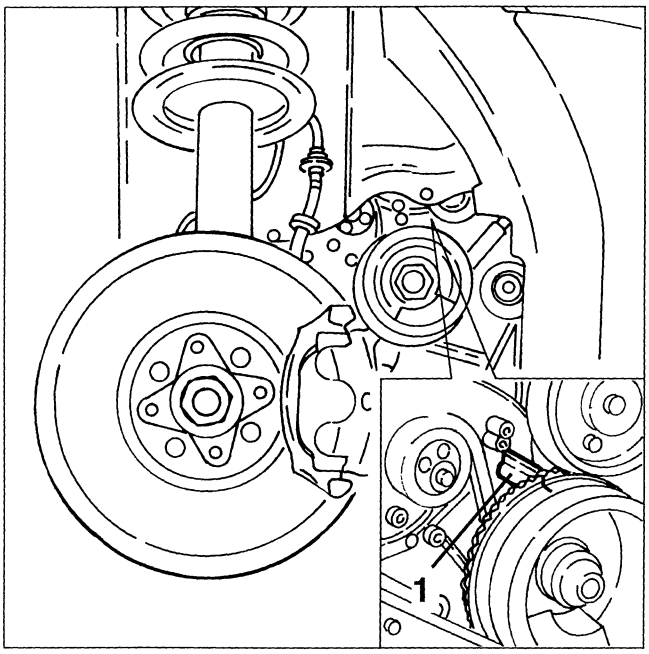

- Complete re-assembly reversing the sequence followed for removal.

CHANGING THE TIMING BELT

- Proceed as described in "CHECKING AND ADJUSTING VALVE CLEARANCES" up to removal of the timing gear covers from the cylinder heads.
- Remove the right front wheel and mud flap.
- Raise the car, slacken the fastening screws and remove the timing belt tensioner guard.
- Remove the conditioner compressor drive belt and the alternator-water pump drive belt (see specific paragraphs).
1. Slacken the fastening screws and remove the water pump pulley.
2. Slacken the two screws and remove the timing belt lower cover.
3. Slacken the fastening screws, then remove the rpm and timing sensor complete with support.

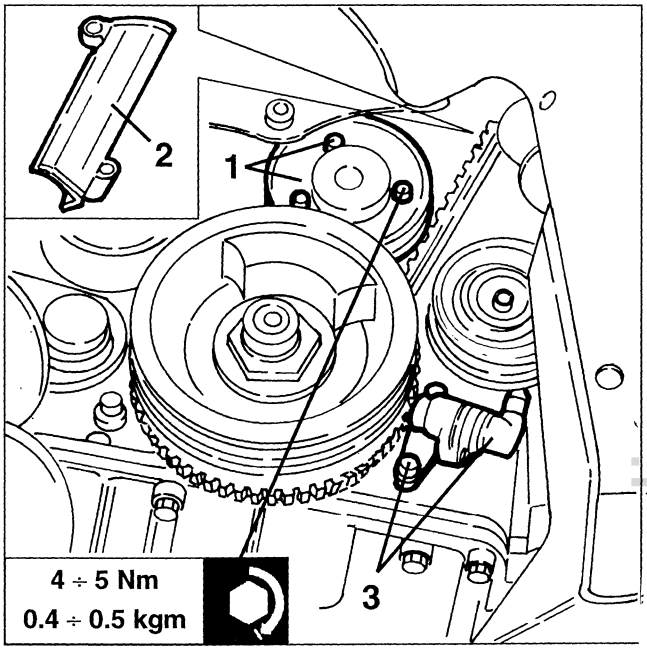

1. Lower the car and turn the crankshaft until the notches on the camshafts coincide with those on the corresponding caps.

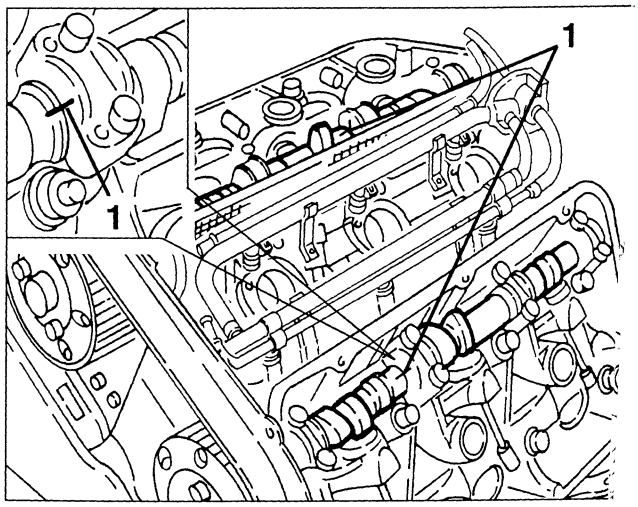

cardiagn.com

1. Raise the car and check the alignment of the notch on the phonic wheel with the reference pin on the front crankcase cover.

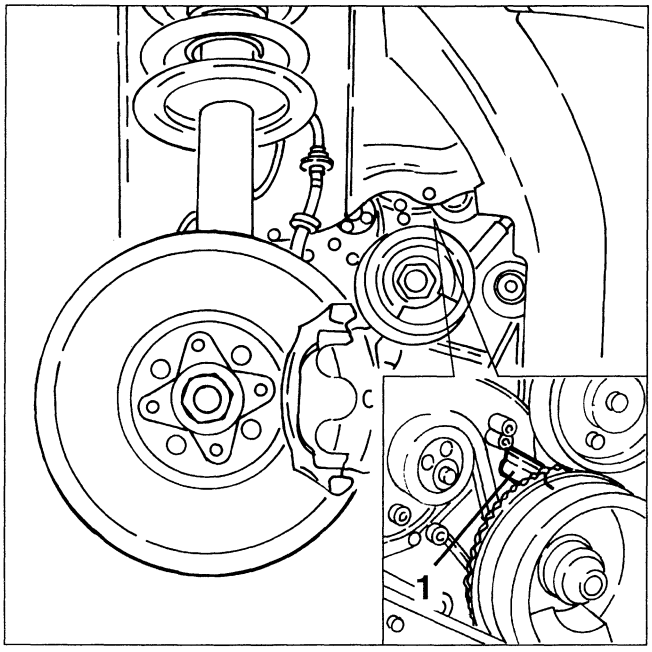

1. Slacken the two nuts fastening the timing belt tensioner, then position the latter in the slack belt position: stud "a" as illustrated, then tighten the two belt tensioner fastening nuts locking them lightly.

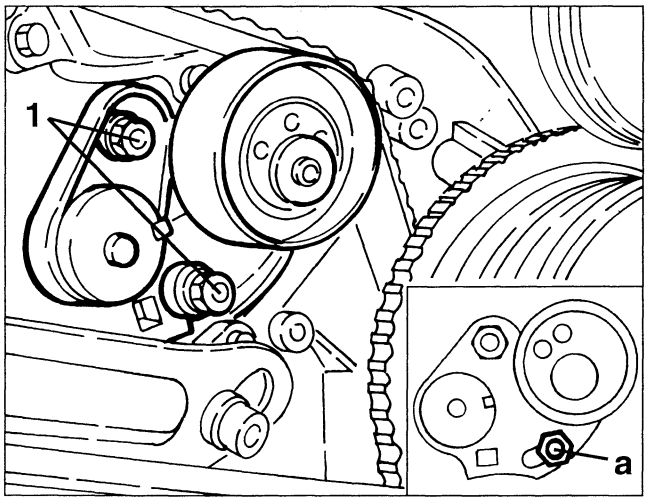

- Lower the car, then remove the timing belt from the pulleys.
- Raise the car and remove the timing belt.
- Install a new belt on the pulleys starting from the driving pulley and continue counter-clockwise.
1. Slacken the two belt tensioner fastening nuts.
2. Insert the 10 mm square of tensioning lever "b" (3/8" ratchet) in the hole of the belt tensioner, then turn it counter-clockwise so that the pointer moves 2 ÷ 3 mm with respect to the notch "d", then turn clockwise until they coincide; tighten the two belt tensioner fastening nuts without locking them.
- Turn the crankshaft twice in its normal direction of rotation until the piston of the 1st cylinder reaches the T.D.C. in the bursting stroke, checking that the timing references coincide.
- Check that the pointer "c" coincides with notch "d" and tighten the two belt tensioner fastening nuts to the specified torque.
- Remove the tensioning lever "b" from the belt tensioner.

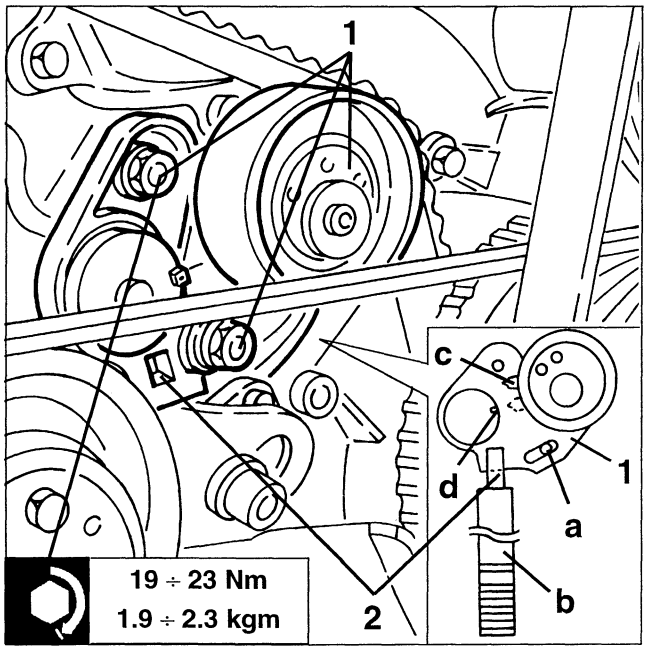

AUXILIARY COMPONENT BELTS

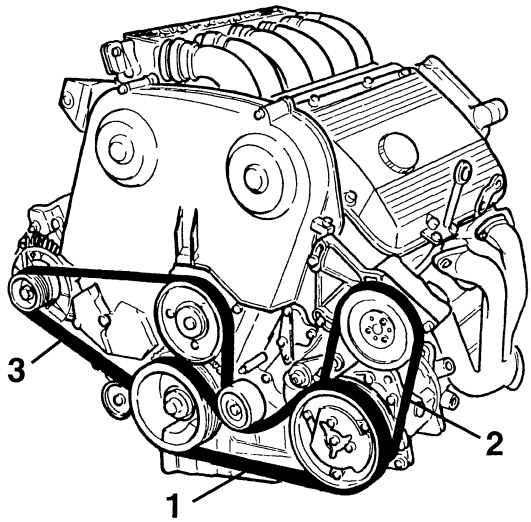

1. Conditioner compressor driving belt
2. Power steering pump driving belt
3. Alternator water pump driving belt

cardiagn.com

When ckecking the belt tension, also check that the actual belt is intact and for:
- cuts
- cracks
- material surface wear (smooth and shiny)
- dried or stiff parts (lack of adherence)

If one of the above defects is found, change the belt.

WARNING:
The contact of the belts with oil or solvents can damage the elasticity of the actual belt rubber and reduce its adherence.

Conditioner compressor drive belt

Checking and tensioning

- Set the car on a lift and raise it.
1. Proceeding as illustrated, measure the tension of the belt using tool no. 1.824.018.000 (C.2.0131).

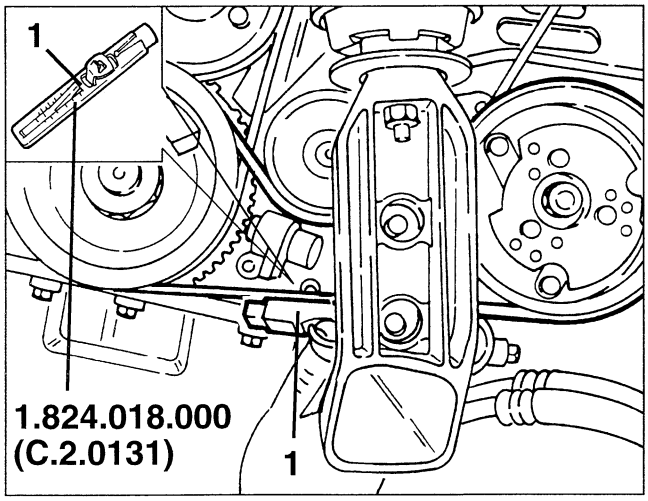

- Check that the values measured using the special tool are within the specified limits.

Tensioning of conditioner compressor Poly-V drive belt	
At assembly	630 ÷ 800 N
Retensioning	360 ÷ 520 N

NOTE: The belt should be tensioned after a brief running-in period, as follows:
- bring the engine to normal operating temperature;
- turn off the engine and wait for it to cool down;
- retension the belt to the specified value.

- If the belt tensioning values are incorrect, proceed as follows:
1. Slacken the two screws fastening the belt tensioner guide.
2. Slacken the locknut, then turn the micrometric tensioner screw until the specified belt tension is obtained.
- Tighten the micrometric tensioner locknut and the two screws fastening the belt tensioner.

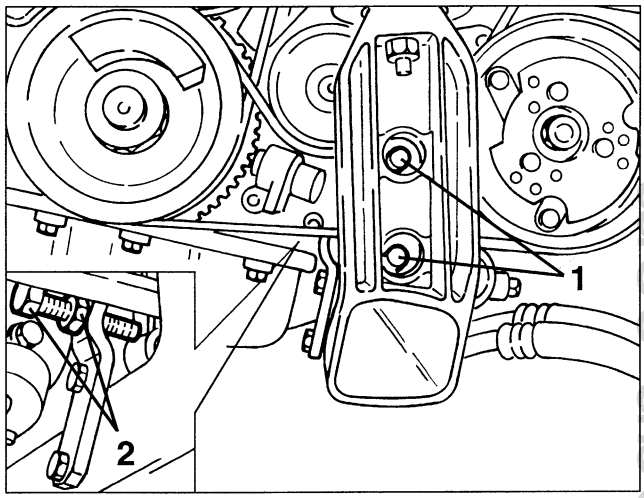

- To replace the conditioner compressor drive belt, adapt the above-mentioned procedure appropriately.

Power steering drive belt

Checking and tensioning

- Set the car on a lift and raise it.
1. Proceeding as illustrated, measure the tension of the belt using tool no. 1.824.018.000 (C.2.0131).

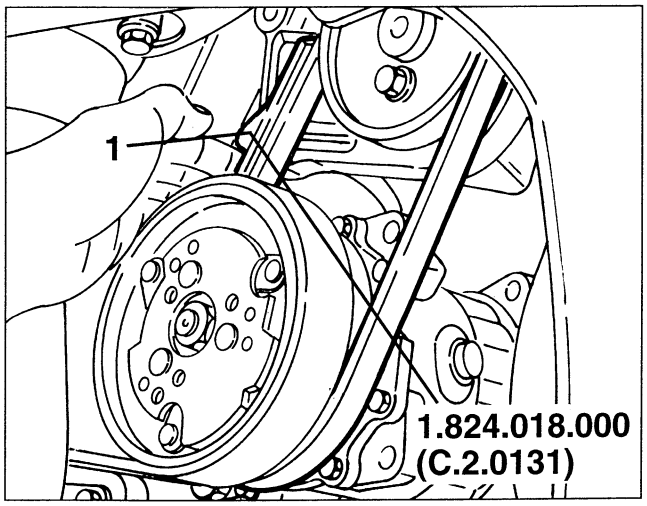

cardiagn.com

- Check that the values measured using the special tool are within the specified limits.

Tensioning of power steering pump Poly-V drive belt	
At assembly	420 ÷ 550 N
Retensioning	240 ÷ 360 N

NOTE: The belt may be retensioned after a brief running-in period, as follows:
- bring the engine to normal operating temperature;
- turn off the engine and wait for it to cool down;
- retension the belt to the specified value.

- If the belt tensioning values are incorrect, proceed as follows:
1. Working from the engine compartment, slacken the three screws fastening the power steering pump support bracket.
2. Slacken the locknut, then turn the micrometric tensioner screw until the specified belt tension is obtained.
- Tighten the micrometric belt tensioner locknut and the three screws fastening the power steering pump support bracket.

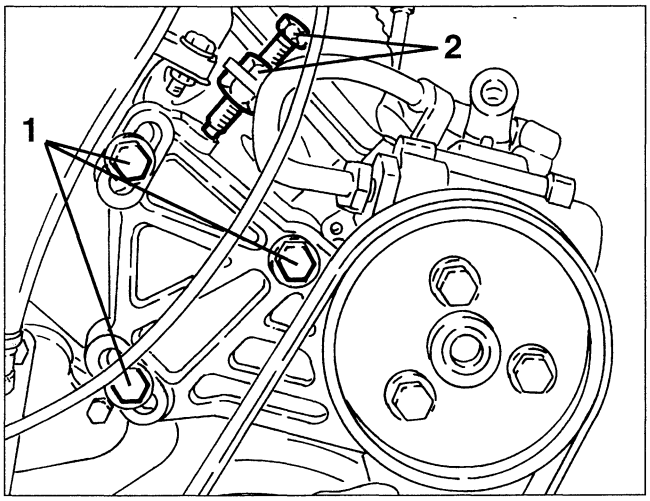

- To change the power steering pump drive belt, adapt the above-mentioned procedure appropriately.

Alternator - water pump drive belt

Checking and tensioning

- Set the car on a lift and raise it.
1. Proceeding as illustrated, measure the tension of the belt using tool no. 1.824.018.000 (C.2.0131).

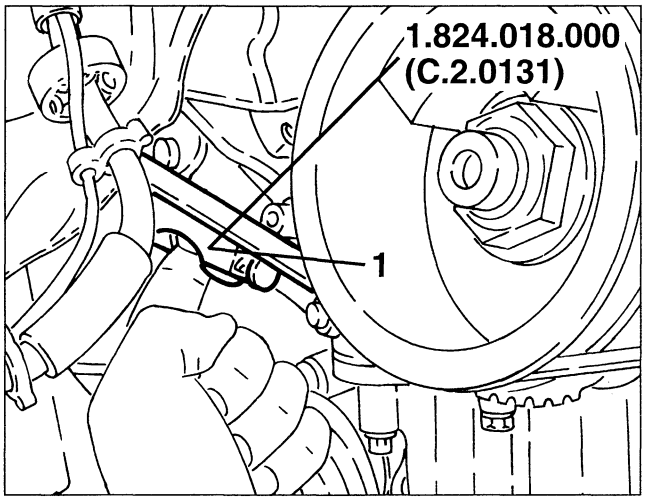

- Check that the values measured using the special tool are within the specified limits.

Tensioning of alternator - water pump Poly-V drive belt	
At assembly	520 ÷ 670 N
Retensioning	300 ÷ 450 N

NOTE: The belt may be retensioned after a brief running-in period, as follows:
- bring the engine to normal operating temperature;
- turn off the engine and wait for it to cool down;
- retension the belt to the specified value.

- If the belt tensioning values are incorrect, proceed as follows:
1. Slacken the two bolts fastening the alternator to the support brackets.
2. Slacken the locknut, then turn the micrometric tensioner screw until the specified belt tension is obtained.
- Tighten the micrometric belt tensioner locknut and the two bolts fastening the alternator.

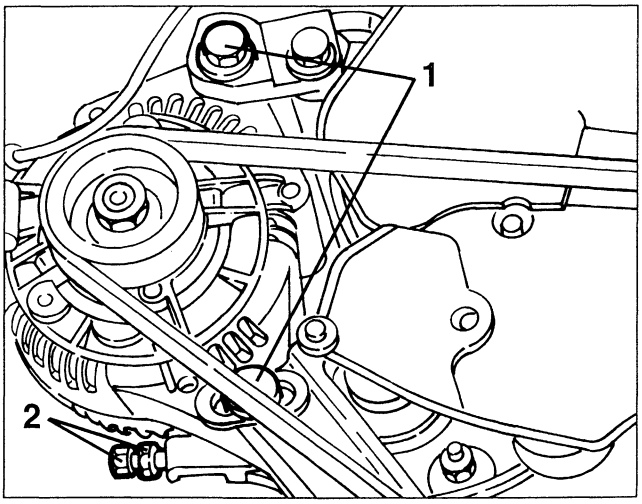

- To change the alternator - water pump drive belt, adapt the above-mentioned procedure appropriately.

cardiagn.com

CHANGING THE AIR CLEANER CARTRIDGE

WARNING:
Any filter cleaning operation might damage it, thereby adversely affecting the correct operation of the engine.

- Disconnect the battery (-) terminal.
1. Slacken the fastening clamp and disconnect the corrugated sleeve from the air cleaner cover, then move it to one side.
2. Disconnect the electrical connection from the air-flow meter.

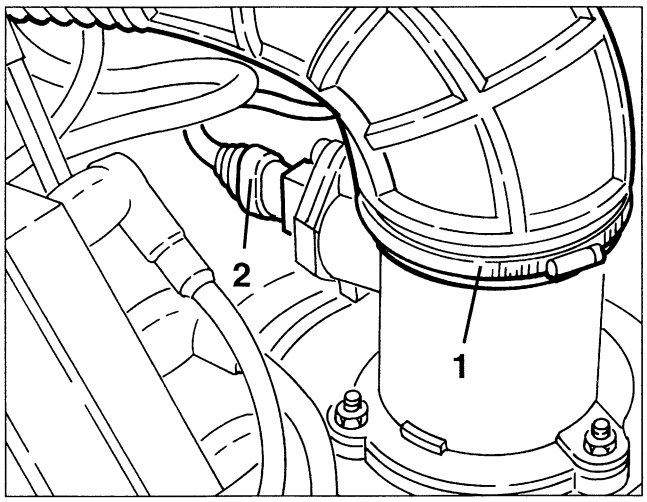

1. Slacken the fastening clamps and remove the air cleaner cover complete with air-flow meter.
2. Remove the filtering element.

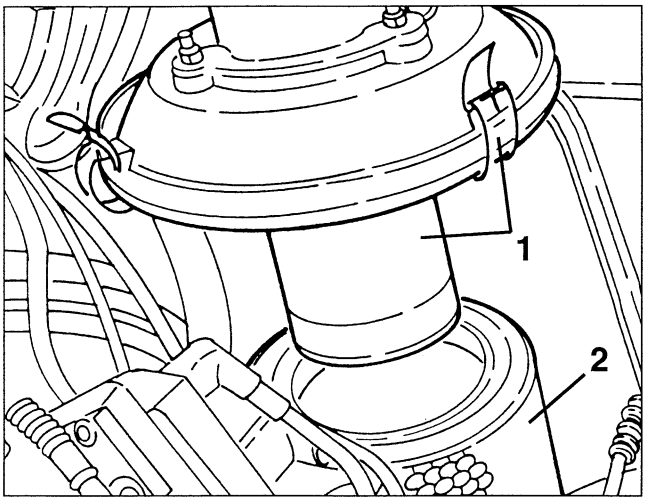

CHANGING THE FUEL FILTER

- Set the car on a lift and raise it.
1. Disconnect the fuel inlet hose connection from the filter.
2. Disconnect the fuel outlet hose connection from the filter.
3. Slacken the fastening clamp and remove the fuel filter.

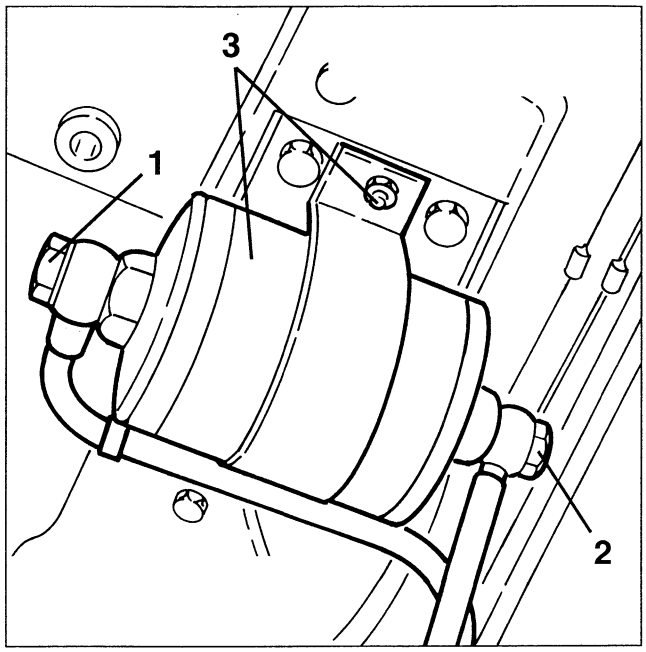

- Install the new filter reversing the sequence followed for removal and taking care to:
• change the copper gaskets of the connections;
• assemble the filter with the arrow stamped on it pointing in the direction of the flow of fuel.

CHECKING AND CHANGING SPARK PLUGS

The standard spark plugs are of the surface discharge type with one point and a centre electrode.
In order to operate correctly, the gap between the peripheral points and the centre electrode must be correct.

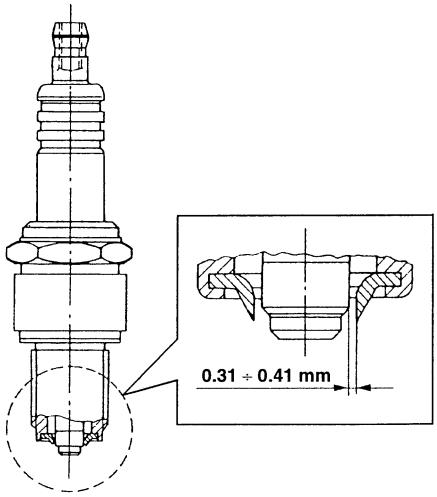

Spark plugs	LODGE 25 HL

cardiagn.com

- With the engine cold, remove the spark plugs, firstly blowing inside the spark plug openings to remove any impurities and traces of dirt.
- Check the spark plugs for dirt and the ceramic insulation for breaks. In this case replace the spark plugs.

WARNING:
The use of spark plugs with different characteristics or sizes than those specified can cause serious damage to the engine and change the level of harmful emission at the exhaust.

WARNING:
A dirty or worn out spark plug is often the sign of a failure in the engine supply system.
For example:
- **Traces of carbon dust: incorrect mixture, air cleaner very dirty.**
- **Spots of oil: oil leaking from the piston rings.**
- **Formation of ash: presence of aluminium materials, contained in the oil.**
- **Burnt electrodes: overheating due to unsuitable fuel, defects in the valves.**
- **High electrode wear: harmful additives in the fuel or in the oil, pinging in the cylinder head.**
- **Etc.**

- When installing, lubricate the thread with engine oil and tighten the spark plugs to the following torque:

25 ÷ 34 Nm 2.5 ÷ 3.5 kgm

CHECKING THE LEVEL AND CHANGING THE ENGINE COOLANT FLUID

Checking

- With the engine cold, check that the level in the coolant in the header tank is between the MIN and MAX marks.

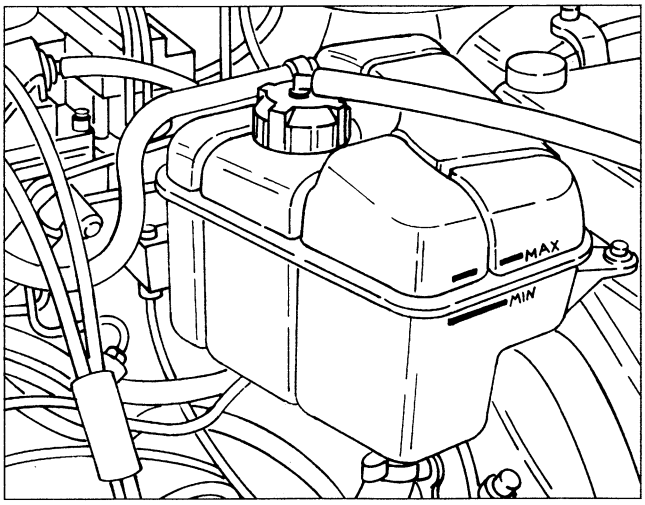

Draining and replenishing

- Set the car on a lift.
- Slacken and remove the header tank plug.

WARNING:
Absolutely never remove the header tank plug when the engine is hot!

1. Raise the car, slacken the radiator outlet hose and drain the coolant into a suitable recipient.

WARNING:
The anti-freeze mixture used as coolant can harm the paintwork: therefore avoid any contact with painted components.

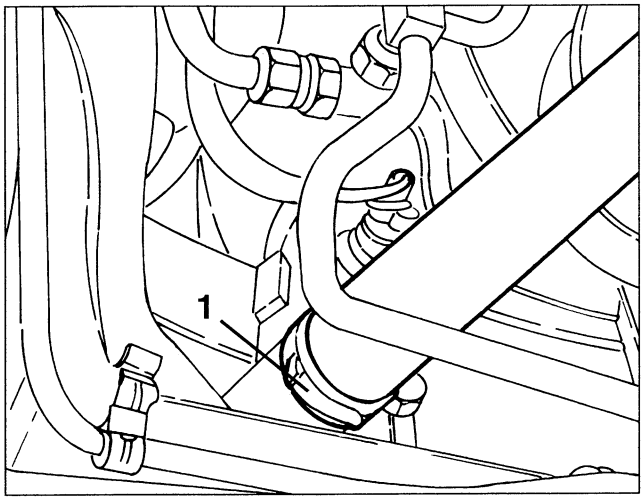

- Reconnect the sleeve to the radiator and any disconnected pipes, checking that all the clamps are firmly tightened.
- Fill the header tank to the MAX mark with fluid of the specified type and quantity.
- Start the engine and bring it to normal operating temperature so that the thermostat opens to release the amount of residual air in the circuit.
- With the engine cold, top up to the MAX mark on the header tank.
- Retighten the pressurised cap on the header tank.

WARNING:
It is unwise to mix anti-freeze fluids of different types or brands!
Never use antirust additives: they might not be compatible with the anti-freeze in use!

cardiagn.com

MAINTENANCE OF MECHANICAL UNITS

CHANGING THE BRAKE - CLUTCH FLUID

- Set the car on a lift.
1. Connect a hose to the clutch control cylinder relief screw, slacken the screw, and pumping on the pedal, drain the fluid into a suitable recipient.

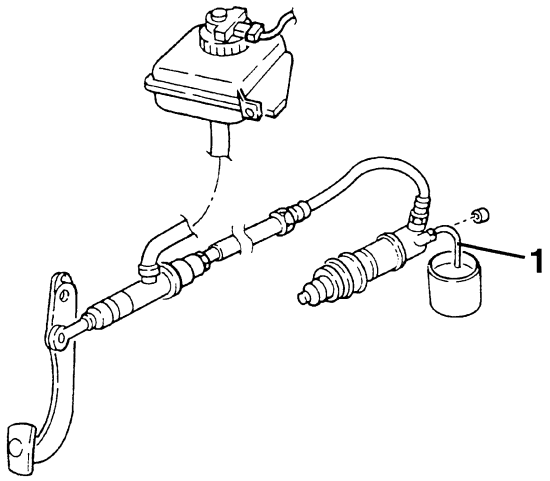

- Raise the car and, if necessary, remove the wheels.
1. Connect a hose to the relief screws on the brake calipers.
2. Slacken the relief screws and, pumping on the pedal, drain the fluid into a suitable recipient.

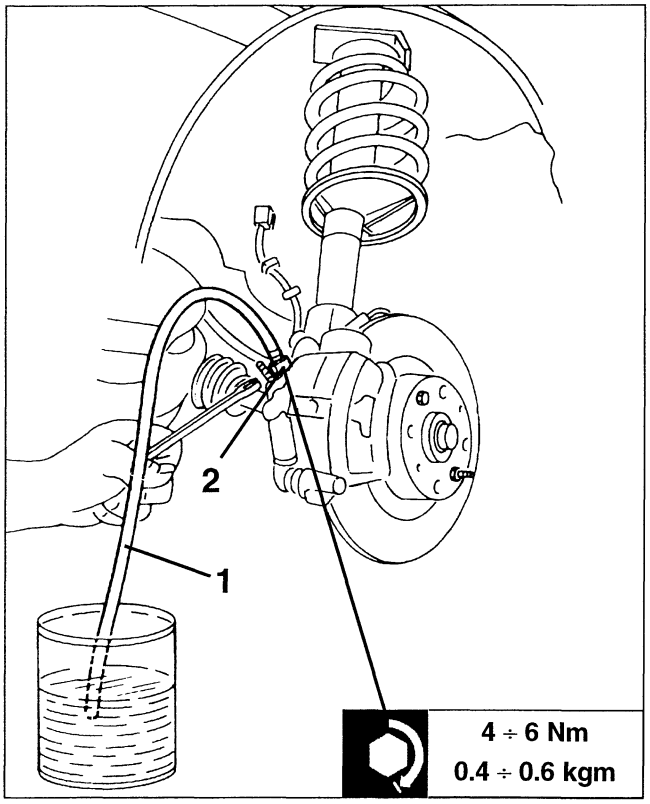

- Refill the brake - clutch system with the specified fluid.
- Bleed the clutch hydraulic system keeping the hose connected to the relief screw on the cylinder and the opposite end dipped in a recipient containing the same fluid as the circuit.
- Loosen the relief screw and at the same time press the clutch pedal letting it return slowly: repeat this operation until all the air trapped in the circuit has been eliminated.
- With the pedal fully depressed, tighten the relief screw and remove the hose.

When relieving the air from the circuit always keep the level of the fluid in the reservoir above the "MIN" mark.
Do not re-use the hydraulic fluid drained during the air relieving procedure. Brake/clutch fluid can harm the paintwork.

- Relieve the air from the braking system as described in GROUP 33 - Brakes.
- Top up the level of the fluid in the reservoir and refit the cap.
- Check that the clutch disengages and the gears engage correctly and that the braking system is in efficient conditions.

CHECKING THE LEVEL AND CHANGING GEARBOX/DIFERENTIAL OIL Specific for 1970 c.c.

Checking the oil level

- Set the car on a lift.
1. Disconnect and unscrew the reversing light switch and check that the level of the oil reaches the lower edge of the filler hole.
2. If necessary, remove the filler cap and top up.
- Refit the filler cap and the switch.
- Reconnect the electrical connection.

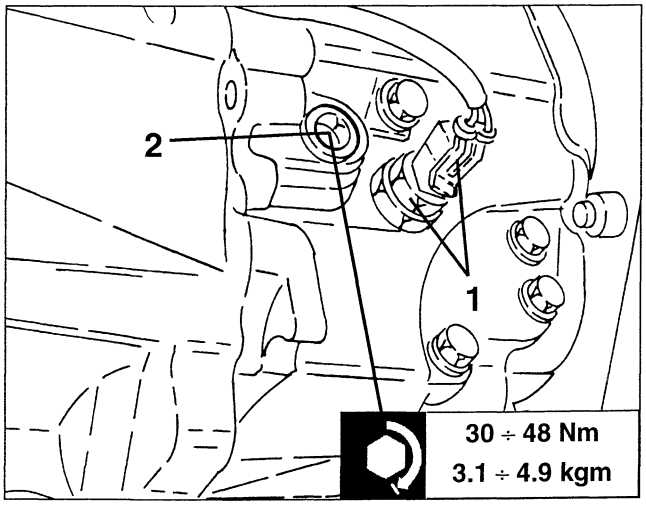

cardiagn.com

Changing the oil

- Set the car on a lift.
1. Remove the filler cap (1a), the reversing light switch (1b) and the drain cap (1c).

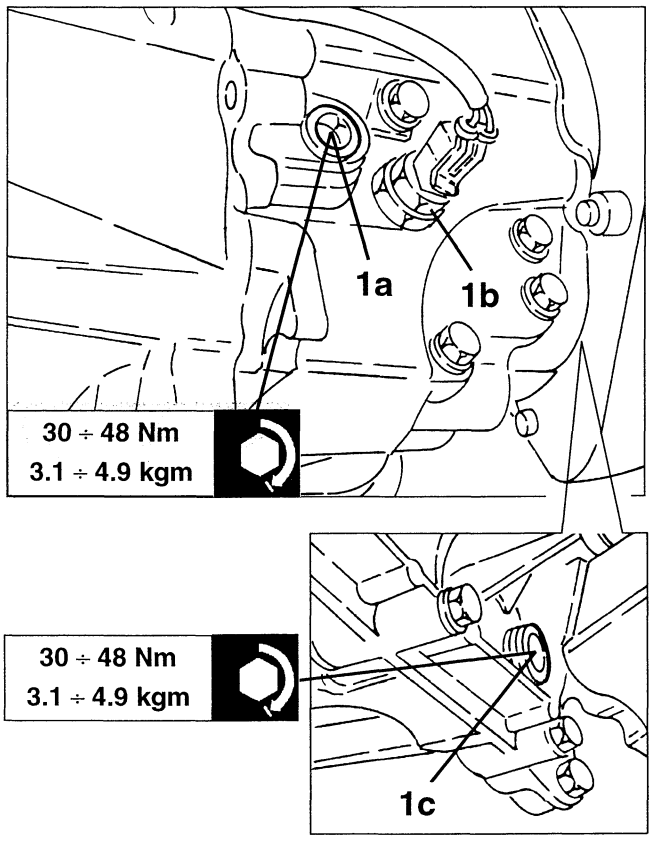

- Allow the oil to drain off completely.
- Clean the drain cap and screw it back on.
- Fill with oil of the specified type and quantity, through the filler hole.
- When the correct level has been reached (see previous paragraph) screw the filler cap and reversing light switch back on and reconnect the electrical connection.

Specific for 2959 c.c.

Checking the oil level

1. With the engine cold remove the gearbox/differential oil dipstick. Clean the dipstick with a lintfree cloth and insert it completely in its housing.
- Remove the dipstick again and check that the oil level coincides with the reference on the dipstick.
- If necessary fill with oil of the specified type to the correct level.
- Insert the dipstick completely in its housing.

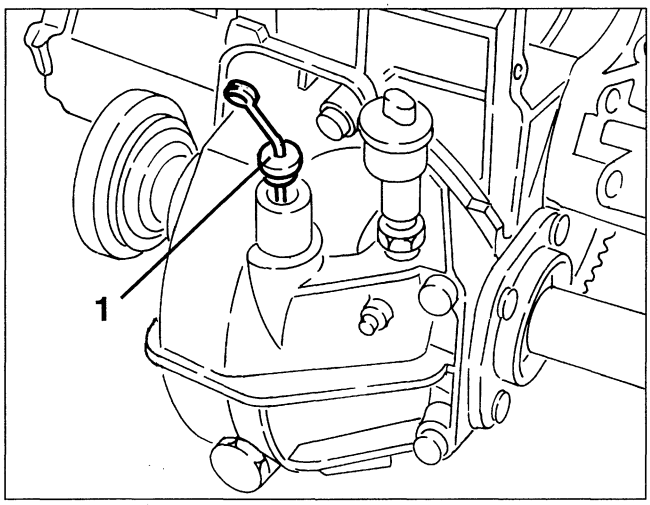

Changing the oil

- Set the car on a lift.
1. Remove the oil dipstick.
2. Raise the car and slacken the differential drain cap.
3. Remove the gearbox drain cap and allow the oil to drain off completely.
- Clean the caps and refit them.
- Fill with oil of the type and quantity specified, through the dipstick hole.
- Check that the correct level has been reached (see previous paragraph) and refit the dipstick.

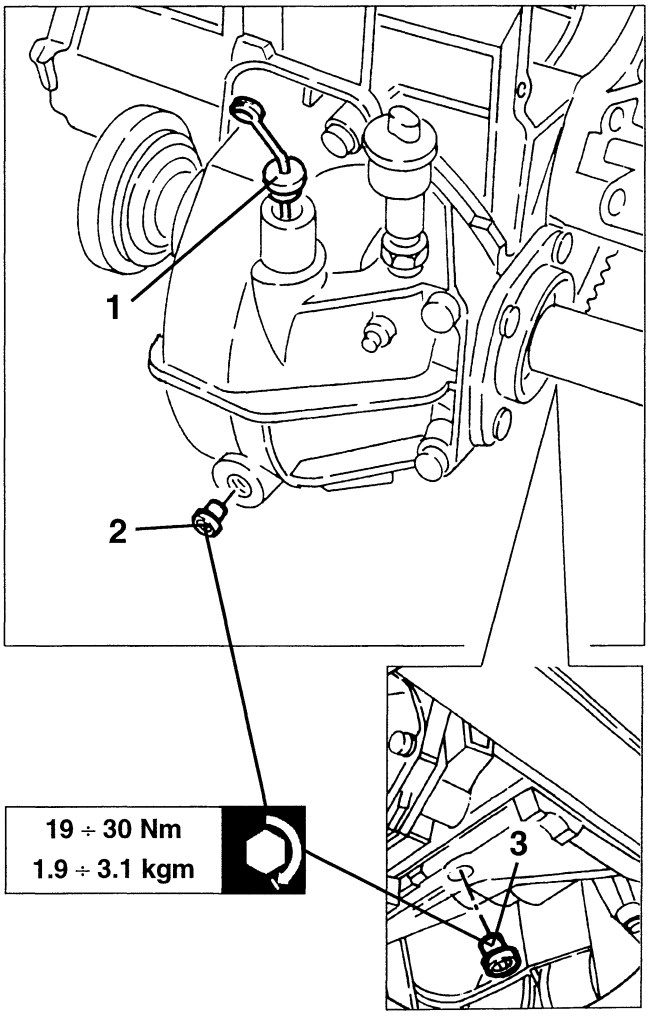

cardiagn.com

CHECKING THE HANDBRAKE STROKE

1. Move the control lever to the third - fourth click on the toothed sector, with the lever in this position check that the wheels are locked.
2. If not, tighten the adjustment screw until the wheels are locked.

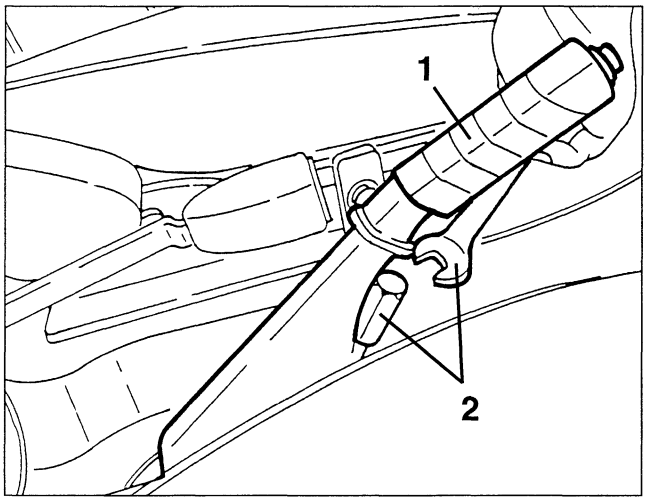

- Exerting a force of appr. 30 kg on the control lever check that there are 3 clicks on the toothed sector.
- Check the wheels are free when the lever is in the rest position.

CHECKING THE POWER STEERING OIL LEVEL

- With the engine stationary, clean the power steering tank cover and the areas surrounding it.
1. Disconnect the breather pipe from the cover on the tank.
2. Remove the cover checking that the level reaches the upper notch on the dipstick.

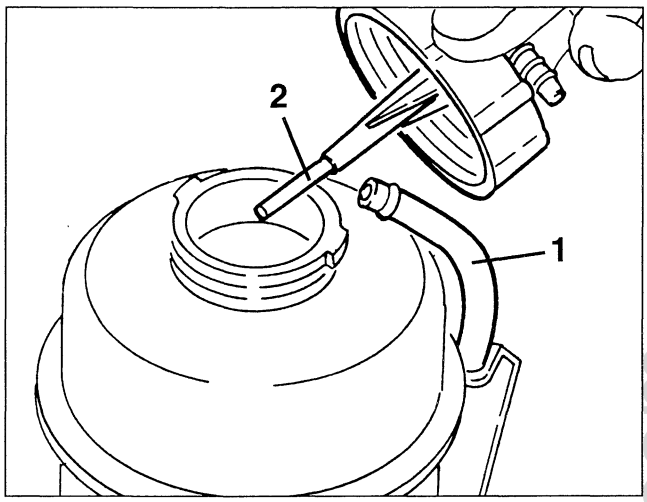

- If necessary top up with the specified oil proceeding as follows:
• Start the engine and wait for the level of the oil in the tank to stabilize.
• With the engine running, turn the steering wheel completely to the right and left a few times.
• Top up to the "MAX" level then refit the cover and insert the breather pipe.

cardiagn.com

INDEX

1970 T. SPARK 16V ENGINE

REMOVAL/REFITTING
- Description 1
- Removal 1
- Refitting 8
- Guard under engine 8/1
- Wheelhouse guards 8/1

OPERATIONS IN VEHICLE
- Cylinder head 9
- Oil sump 13
- Crankshaft front oil seal replacement 14
- Counter-rotating shaft oil seal replacement 17
- Camshaft oil seal replacement 17
- Engine damper connecting rod anchoring bracket rubber bushing replacement 18
- Crankcase rear cover replacement (with built-in oil seal) 18/1

M 2.10.3 INJECTION-IGNITION
- General description 19

M 2.10.4 INJECTION-IGNITION
- General description 24/1

FUEL SUPPLY
- System description 25
- Fuel pipe fittings (John Guest) 26
- Fuel pipe fittings (Huron) ..... (□)
- Fuel tank ..... (*)
- Fuel gauge ..... (*)
- Fuel pump ..... (*)
- Fuel filter ..... (□)
- Fuel distribution manifold 26
- Injectors 27
- Fuel pressure regulator 28
- Fuel pressure and circuit tightness check 28
- Fuel vapour recovery system description 29
- Fuel vapour separator 30
- Fuel vapour canister 30
- Fuel vapour solenoid valve 30

AIR SUPPLY SYSTEM
- Air feed and oil vapour recovery system 31
- Air cleaner cartridge replacement 32
- Throttle casing 32
- Air flow meter 33
- Intake air temperature sensor (NTC) 34
- Throttle potentiometer 34
- Intake manifold 35
- Constant idling actuator 36
- Air intake resonators 36/1

EXHAUST GAS RECIRCULATION
- Description 37
- EGR valve 38
- EGR modulating solenoid valve 38

EXHAUST SYSTEM
- Description 38/1
- Catalytic converter ..... (□)
- Lambda sensor 38/2
- Exhaust emission control 38/2

ELECTRICAL COMPONENTS
- Phase sensor 39
- Rpm and phase sensor 41
- Engine coolant temperature sensor (NTC) 42
- Knock sensor 43
- Phase variator electromagnet 43
- Inertia switch 44
- Tachometer sensor 44

ENGINE COOLING SYSTEM
- Engine cooling system 45
- Coolant pump 46

(*): See 2959 V6 for Spider models and 1996 TB for GTV models

(□): See 1996 TB

cardiagn.com

INDEX

1747 T. SPARK 16V 1970 T. SPARK 16V **ENGINES**

'98 MODELS

REMOVAL/REFITTING
- Description 49
- Removal 49
- Refitting 57
- Guard under engine ..... (O)
- Wheelhouse guards ..... (O)

OPERATIONS IN VEHICLE
- Cylinder head 58
- Oil sump ..... (O)
- Crankshaft front oil seal replacement ..... (O)
- Counter-rotating shaft oil seal replacement ..... (O)
- Camshaft oil seal replacement ..... (O)
- Engine damper connecting rod anchoring bracket rubber bushing replacement ..... (O)
- Crankcase rear cover replacement (with built-in oil seal) ..... (O)

M1.5.5 INJECTION-IGNITION
- General description 66

FUEL SUPPLY
- System description 75
- Fuel pipe fittings (John Guest) ..... (O)
- Fuel pipe fittings (Huron) ..... (□)
- Fuel tank 76
- Fuel pump and gauge 78
- Injectors 79
- Fuel distribution manifold 80
- Fuel circuit pressure check 81
- Fuel vapour recovery system description 82
- Fuel vapour separator 83
- Fuel vapour canister 83
- Fuel vapour solenoid valve 83

AIR SUPPLY SYSTEM
- Air feed and oil vapour recovery system 84
- Air cleaner cartridge replacement ..... (O)
- Throttle casing 85
- Idling actuator and throttle position sensor (MDS) 87
- Air flow meter with built-in temperature sensor 87
- Modular intake manifold 89
- Modular intake manifold solenoid valve 93
- Air intake resonators ..... (O)

EXHAUST SYSTEM
- Description ..... (O)
- Catalytic converter ..... (□)
- Lambda sensor 95
- Exhaust emission control ..... (O)

ELECTRICAL COMPONENTS
- Phase sensor 97
- Rpm and phase sensor 100
- Engine coolant temperature sensor 101
- Knock sensor 102
- Phase variator electromagnet ..... (O)
- Inertia switch ..... (O)
- Tachometer sensor ..... (O)

ENGINE COOLING SYSTEM
- Engine cooling system 103
- Coolant pump ..... (O)

(O): See 1970 T. SPARK 16V

(□): See 1996 TB

cardiagn.com

DESCRIPTION

The information and illustrations given below enable the rapid removal of the power unit from its housing and its subsequent refitting.

Dis-assembly of the single components on the bench is described in the volume "ENGINE OVERHAULING".
The following procedure may be used only in part according to requirements.
For further information and details, refer to the chapters concerning the components or specific groups.

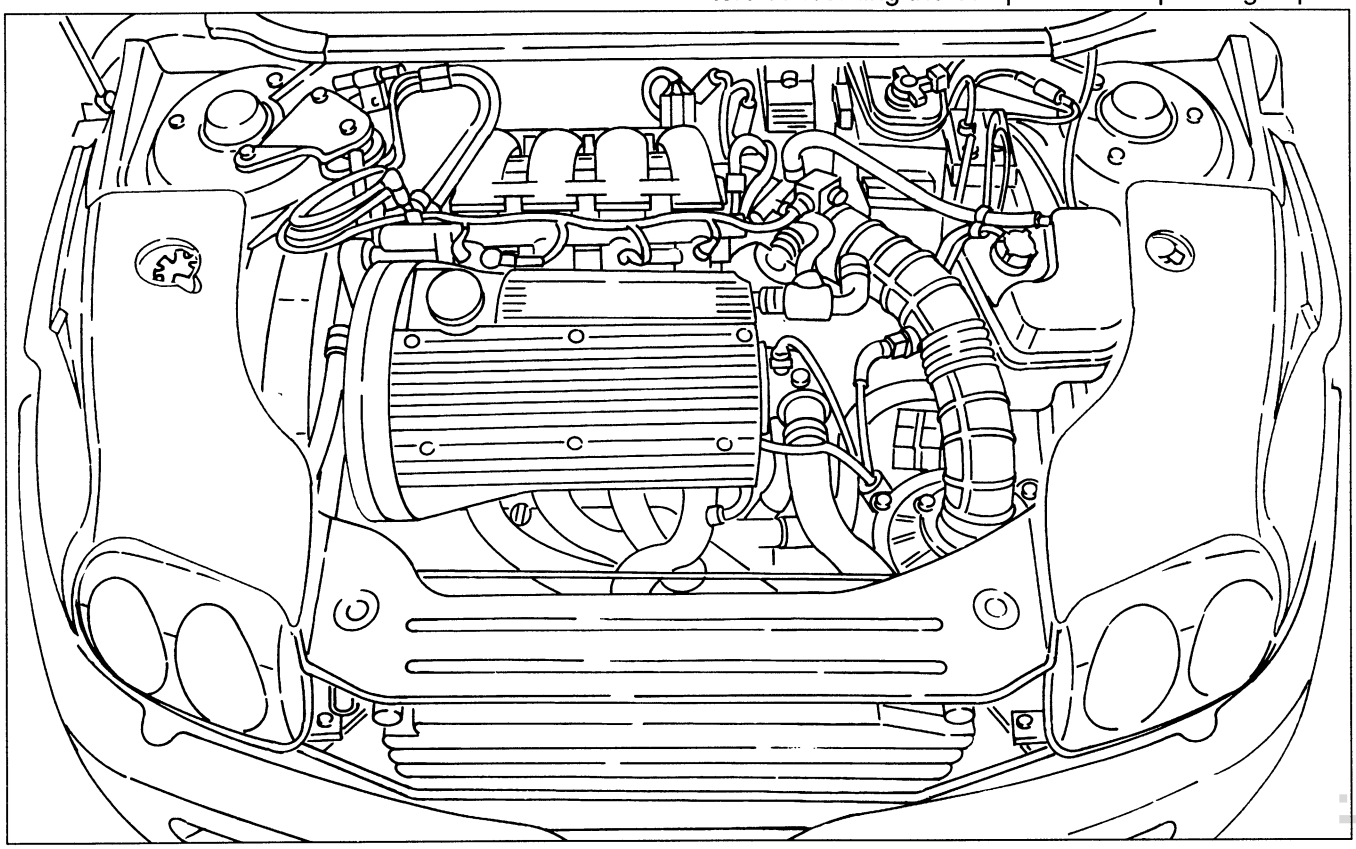

REMOVAL

- Set the car on a two-column lift.
- Disconnect the battery (-) terminal.
- Remove the front wheels and mud flaps.

1. Raise the car and drain the coolant fluid disconnecting the radiator outlet sleeve.
2. Slacken the clamp fastening the air intake sleeve to the air cleaner box.

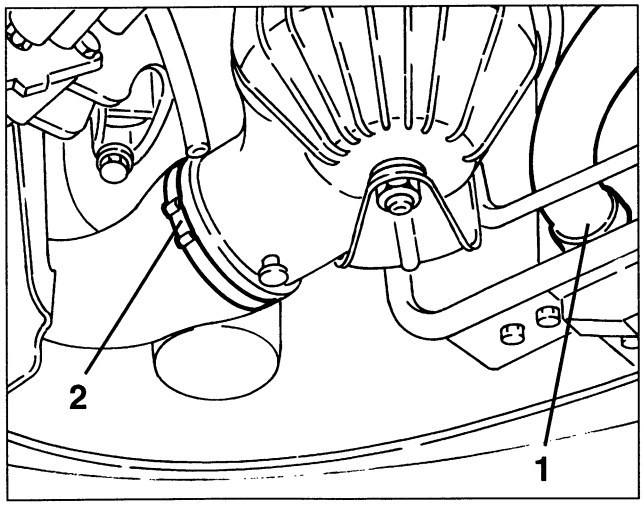

1. Lower the car and disconnect the electrical connection from the intaken air temperature sensor.
2. Disconnect the electrical connection from the air-flow meter.
3. Disconnect the electrical connection from the constant idle speed actuator.
4. Disconnect the oil vapour recirculation pipe from the corrugated sleeve.

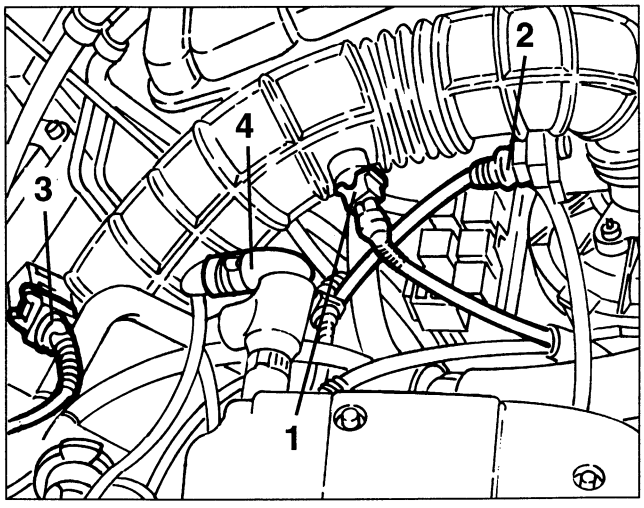

cardiagn.com

1. Slacken the clamp, back off the fastening screws and remove the air cleaner cover complete with air-flow meter and corrugated sleeve.
2. Remove the filtering element.

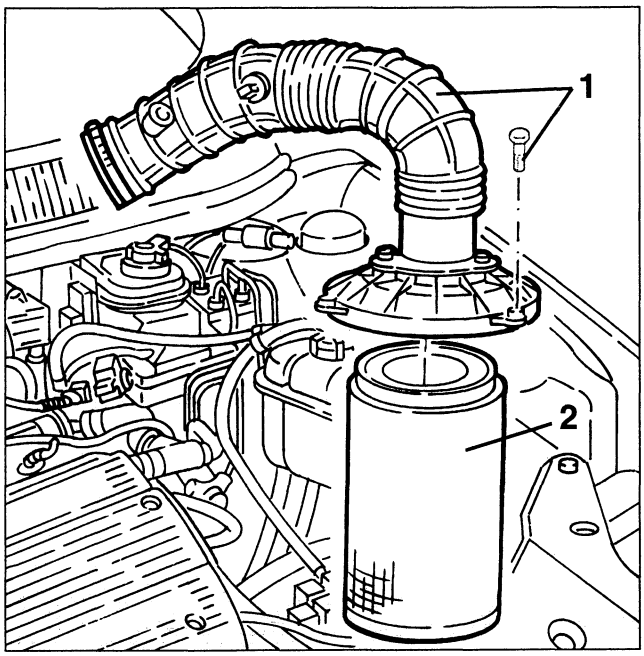

1. Slacken the fastening clamp and remove the air cleaner box.
2. Slacken the screws fastening the air cleaner support bracket, then remove it.

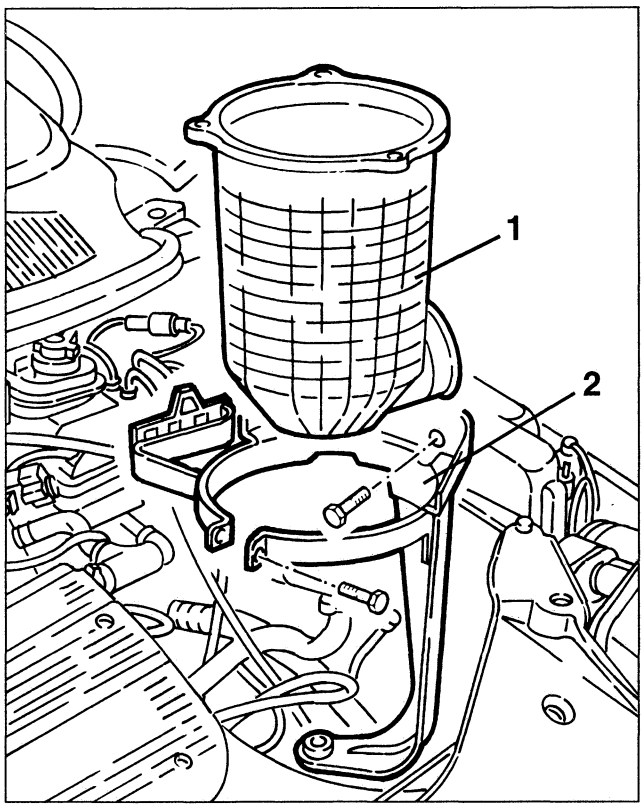

1. Disconnect the electrical connection from the coolant temperature sensor (NTC).

2. Disconnect the electrical connection from the coolant temperature gauge transmitter and max. temperature warning light contact, then move aside the wiring.

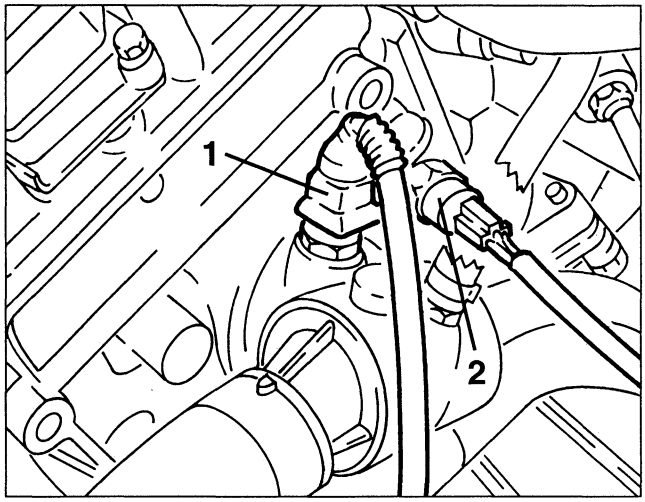

1. Disconnect the electrical connection from the speedometer sensor.
2. Disconnect the electrical connection from the reversing gear sensor.

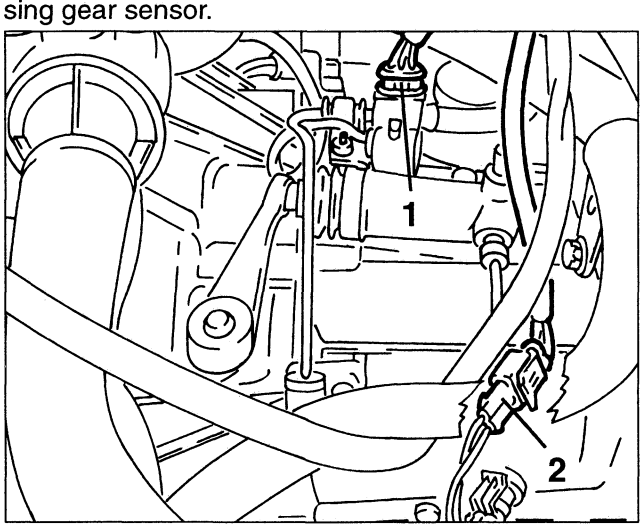

1. Slacken the fastening screws and remove the ignition coils cover.

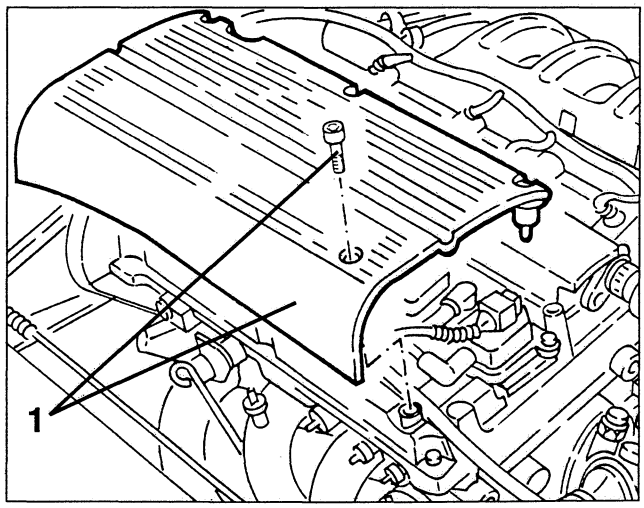

cardiagn.com

1. Disconnect the electrical connections from the ignition coils and move the wiring to one side.

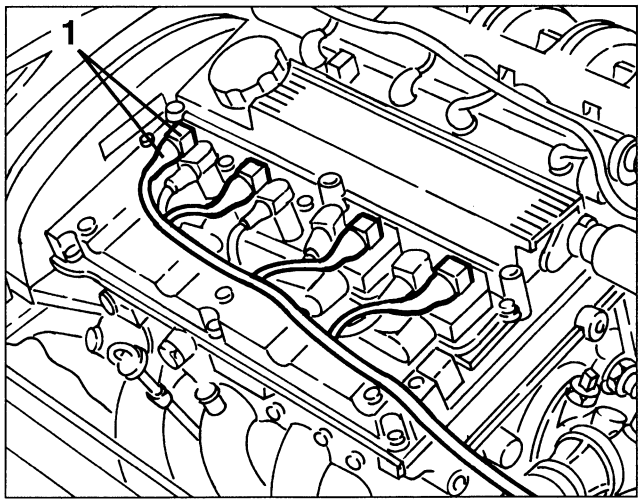

1. From the thermostatic cup disconnect the coolant delivery sleeve to the radiator.
2. From the coolant return manifold to the pump disconnect the return sleeve from the radiator and the system supply pipe leading from the header tank.
3. Disconnect the two coolant delivery and return pipes to the heater from the climate control system.

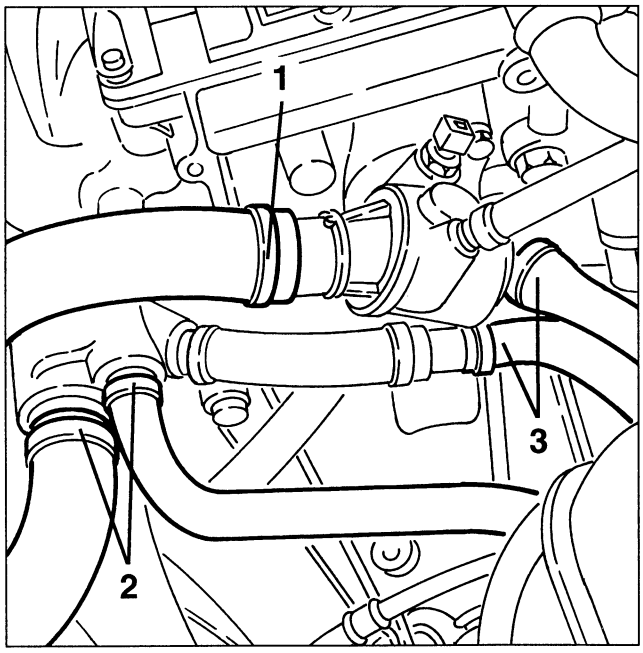

1. Disconnect the two coolant inlet and outlet pipes from the throttle body.
2. Disconnect the accelerator cable from the throttle body.
- Disconnect the servobrake vacuum takeoff pipe.
3. Disconnect the electrical connection from the throttle potentiometer.
4. Disconnect the electrical connection from the E.G.R. modulation solenoid valve.

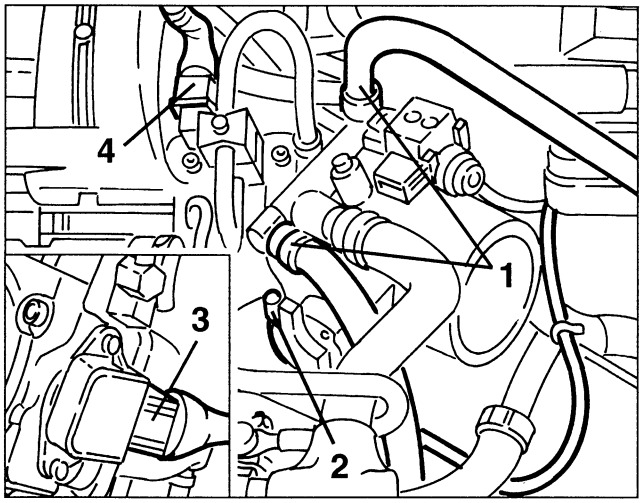

1. Disconnect the earth cable from the cylinder head.
2. Disconnect the electrical connections from the injectors.
3. Disconnect the electrical connection from the timing variator and move the wiring to one side.

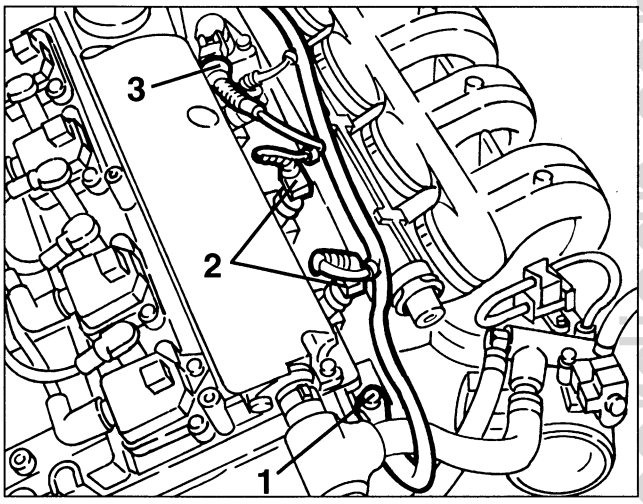

1. Disconnect the rpm and timing sensor connection.
2. Disconnect the timing sensor connection.
3. Disconnect the pinging sensor connection.
4. Disconnect the stay rod from the support on the engine.
5. Disconnect the fuel inlet and outlet pipes from the distributor manifold.

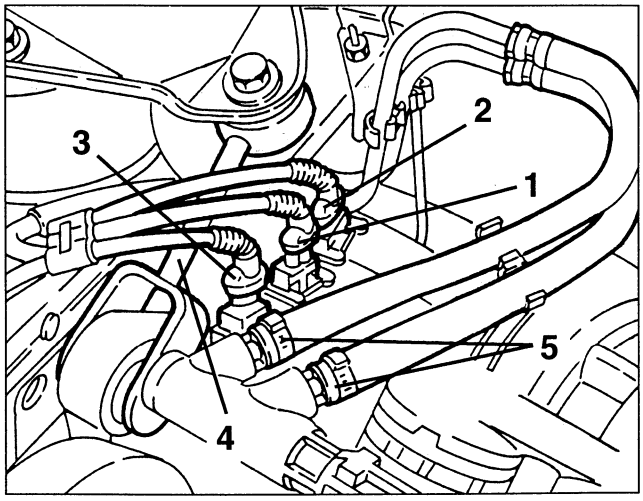

cardiagn.com

1. Open the control box and disconnect the electrical connection of the starter motor.
2. Disconnect the electrical connections of the lambda sensor.
3. Disconnect the electrical connection of the minimum engine oil pressure warning light sensor.

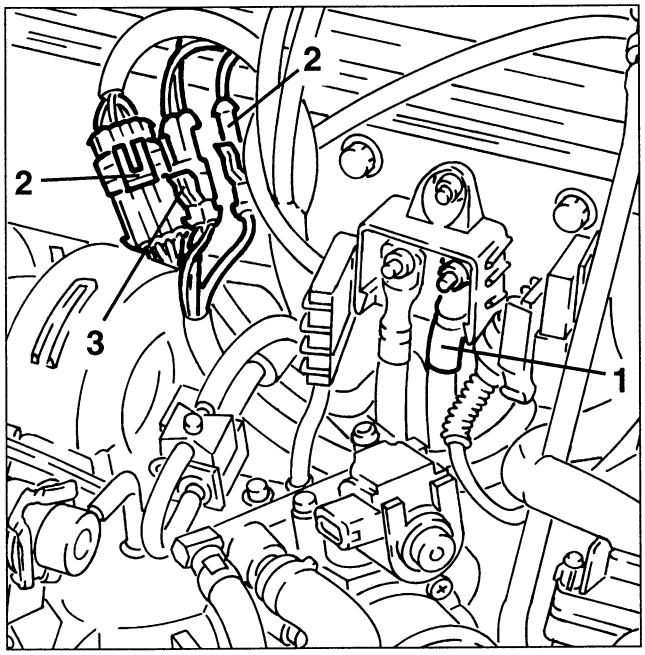

1. From the intake box disconnect the fuel vapour recirculation pipe.
- Empty the power steering tank using a suitable syringe.
2. Disconnect the oil inlet and delivery pipes from the power steering pump.

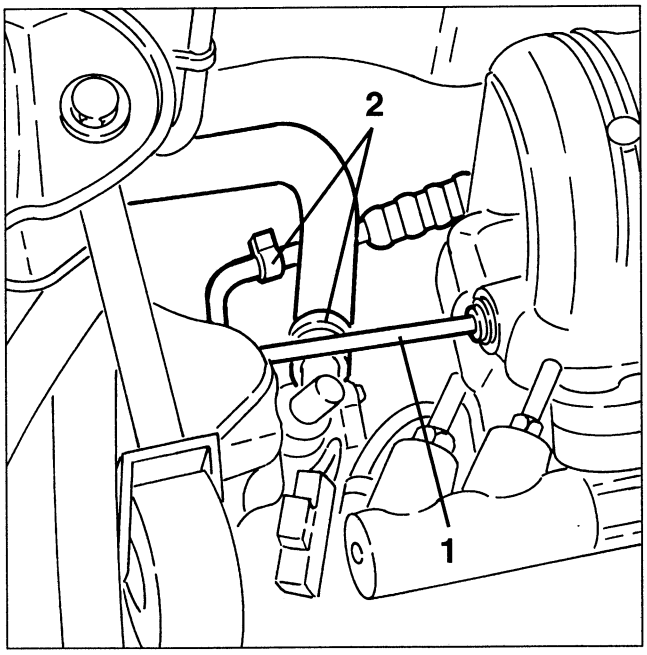

1. Slacken the two screws and the nut, then move the clutch control cylinder to one side disconnecting the associated piping.

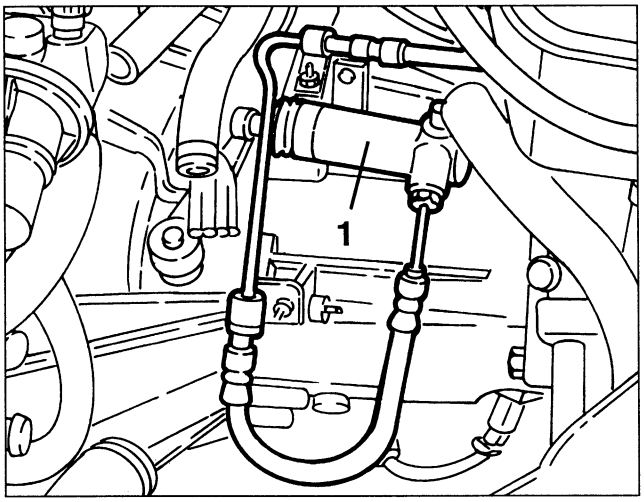

1. Disconnect the intermediate electrical connection of the air conditioner compressor.
2. Slacken the two upper screws fastening the conditioner compressor.

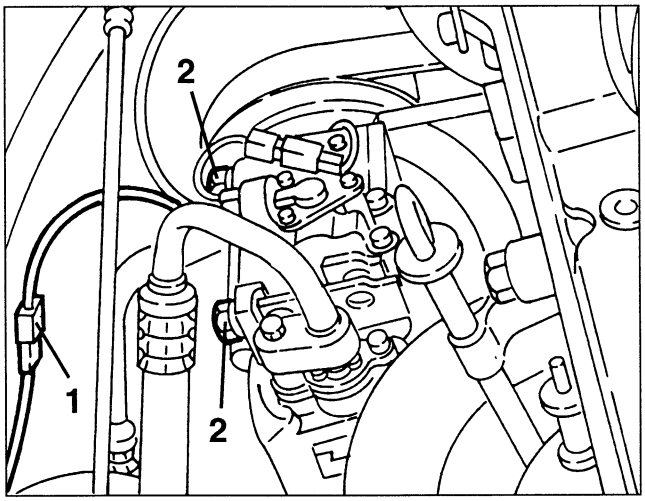

- Slacken the fastening screws and remove the upper radiator crossmember.
1. Disconnect the electrical connections from the cooling fan.

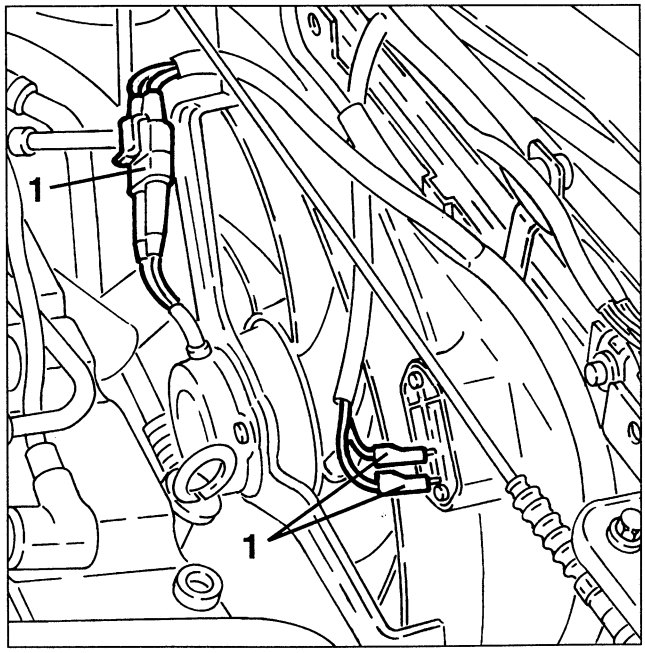

cardiagn.com

1. Slacken the fastening screws and remove the cooling fan.

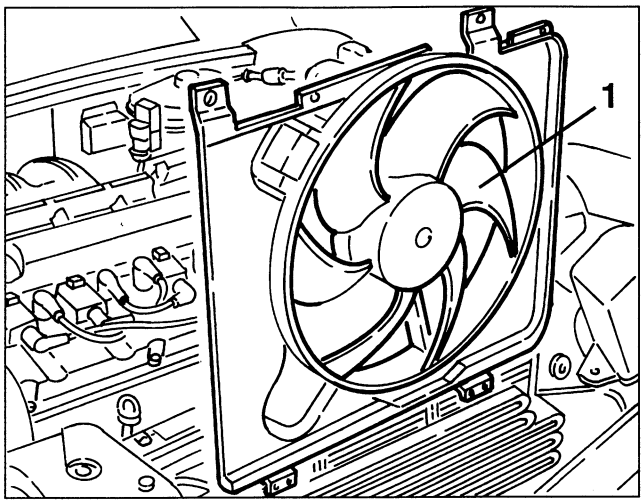

1. Raise the car and working as illustrated on the guide pulley, slacken the tension of the auxiliary components drive belt and remove it.

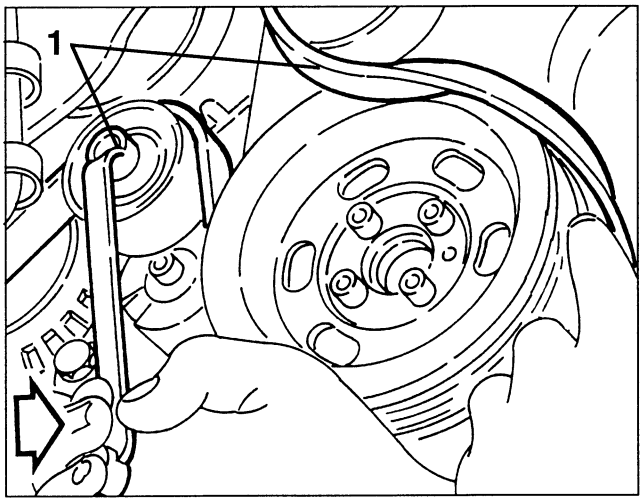

1. Slacken the two lower screws fastening the conditioner compressor, then, without disconnecting the piping, fasten it to one side so that it does not hinder the following operations.

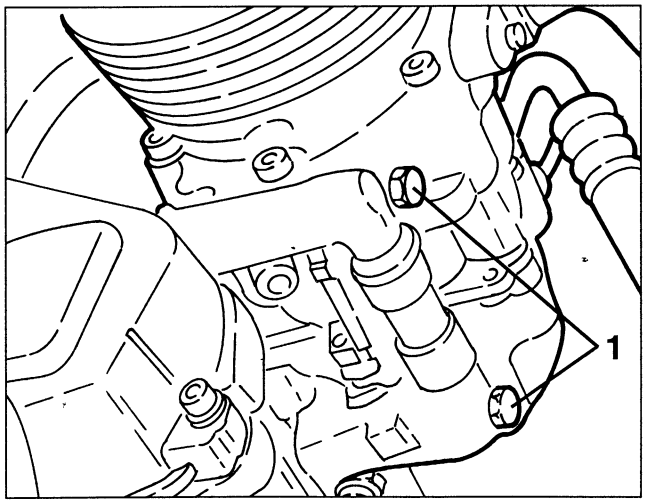

1. Disconnect the earth braid from the gearbox.
2. Slacken the fastening bolts and disconnect the axle shafts.

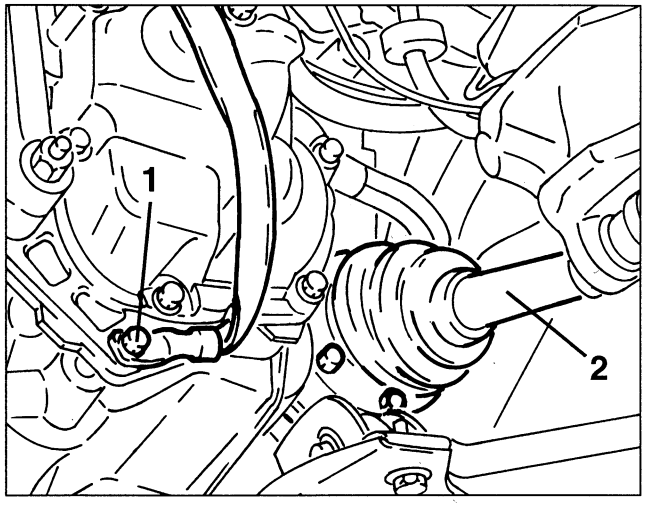

1. Slacken the fastening nuts and disconnect the gearshift control rods.

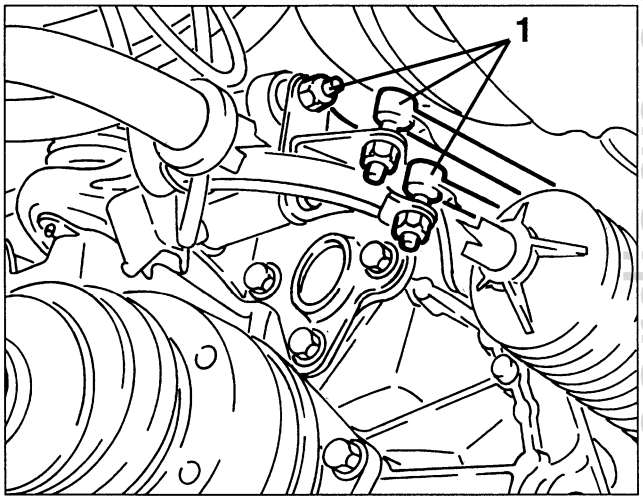

1. Remove the reinforcement brackets.
2. Remove the front section of the exhaust pipe complete with lambda probe after slacken the associated clamps.

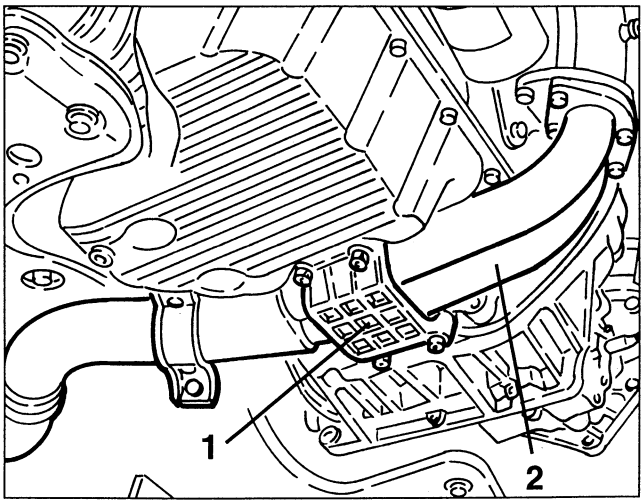

cardiagn.com

1. Slacken the fastening screws and remove the lower radiator crossmember after freeing the pipes from the fastening clamps on the crossmember itself.
2. Slacken the fastening clamps and remove the air intake elbow.

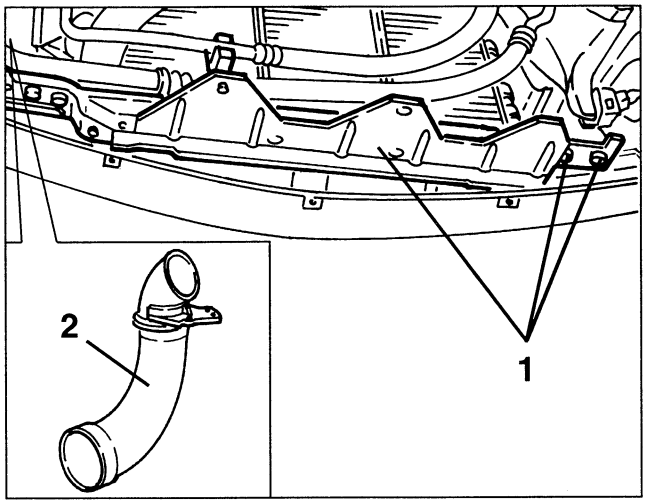

1. Position a hydraulic jack complete with tool no. 1.820.225.000 and no. 1.820.623.000.

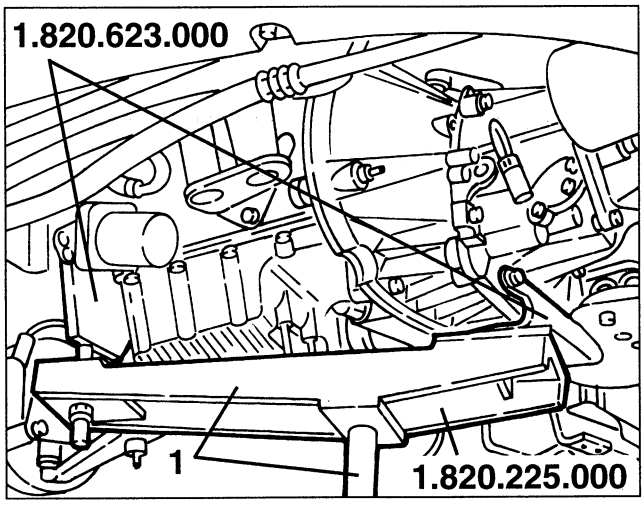

1. Slacken the fastening screws and remove the rear power unit support.

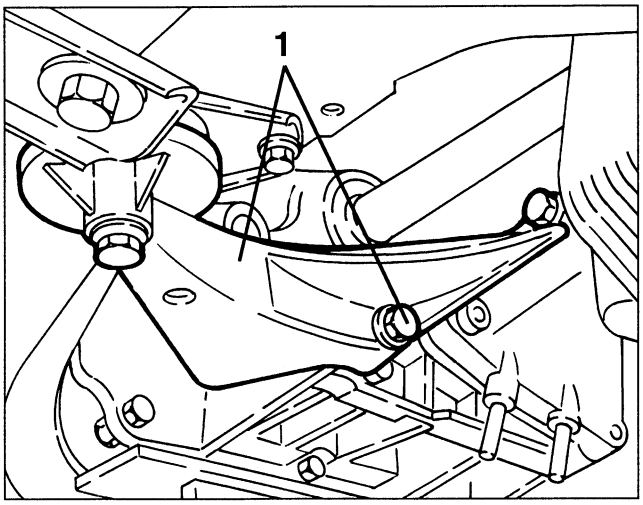

1. Slacken the screws fastening the power unit supports to the body on the gearbox side and camshaft side.
2. Slightly lower the power unit, then slacken the fastening screws and remove the gearbox side support.
3. Lower the hydraulic jack and remove the power unit from the engine compartment.

WARNING:
The hydraulic jack must have a capacity of at least 1000 kg.

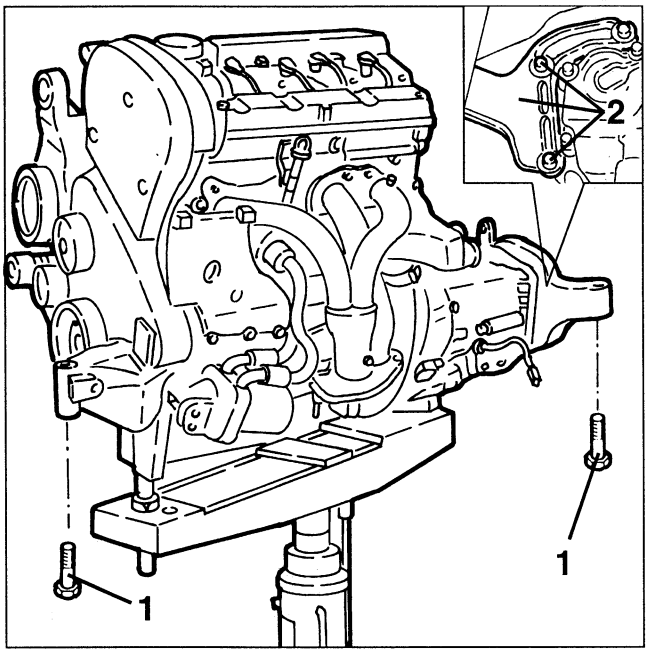

- Support the power unit with a hydraulic hoist as well as with the hydraulic jack used for removal.

WARNING:
For moving the power unit, use a hydraulic hoist after freeing it from the hydraulic jack.

- Release the power unit from the support tools, then set it on a special work bench.
1. Slacken the starter motor fastening screws.

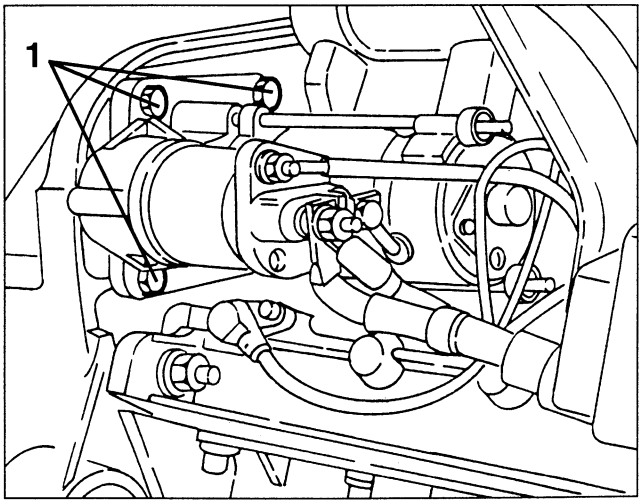

cardiagn.com

1. Slacken the fastening screws and nuts and remove the gearbox and differential unit.
2. Remove the heat exchanger coolant return and delivery pipes.

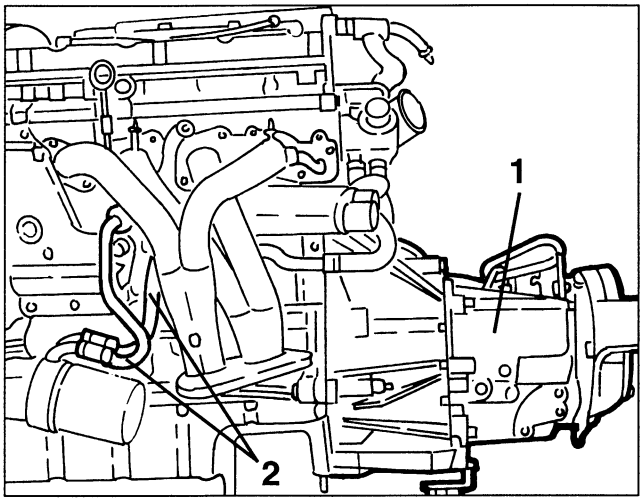

1. Slacken the three fastening screws and remove the intermediate shaft.
2. Remove the dust guard ring.
3. Retrieve the lower flywheel cover.

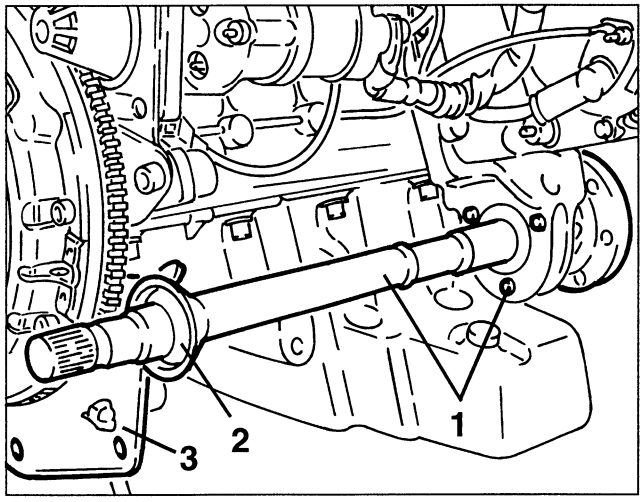

- Release the starter motor from the electric cables, then remove it.
1. Slacken the fastening screws and remove the pressure plate and clutch plate.

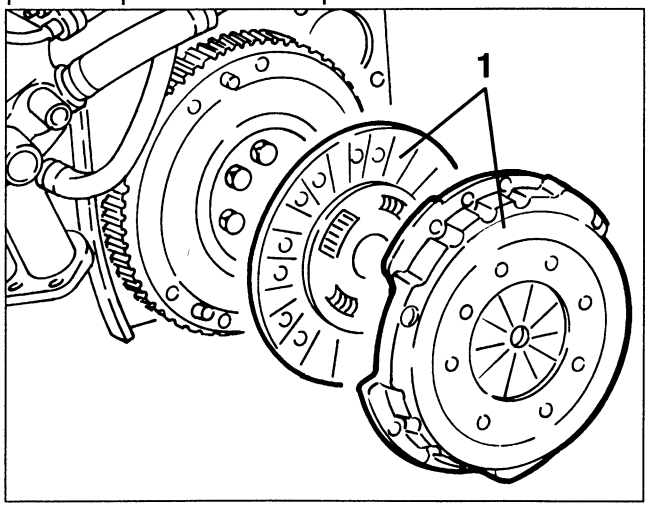

1. Slacken the screw fastening the belt tensioner to loosen the tension on the auxiliary components drive belt, then prise and remove the belt.
2. Back off the fastening screw completely and remove the belt tensioner.

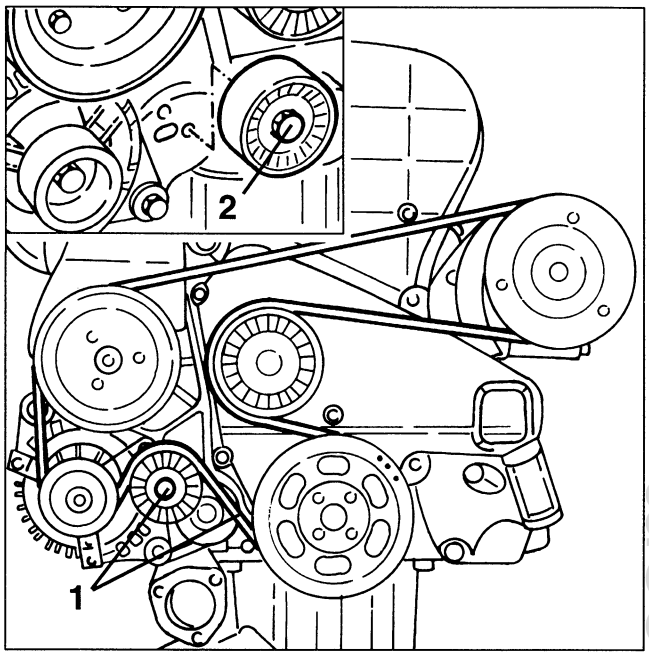

1. Slacken the two fastening bolts and remove the alternator.
2. Slacken the fastening screw and remove the auxiliary components drive belt guide pulley.

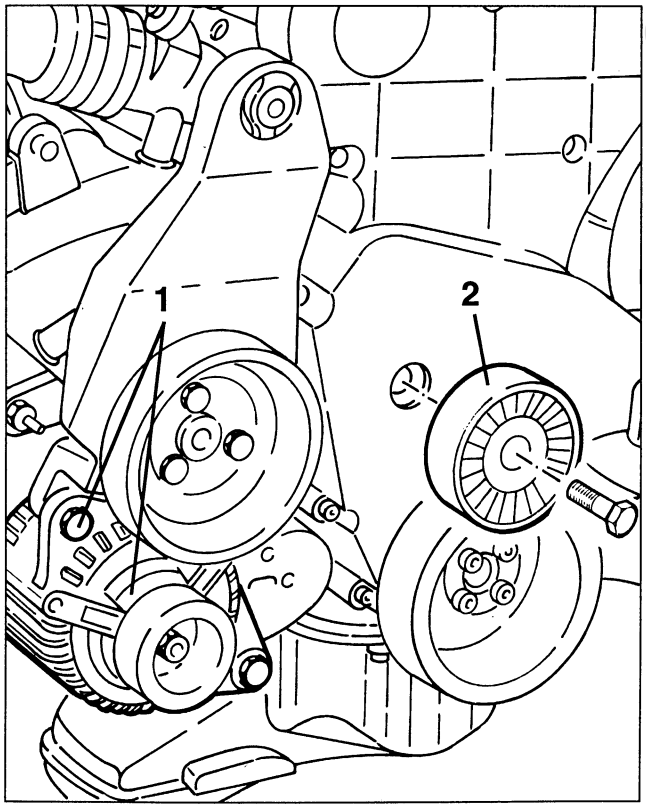

cardiagn.com

1. Using a 3/8" Allen wrench as counter-torque, slacken the three fastening screws and remove the power steering pump pulley.
2. Slacken the three fastening screws and remove the power steering pump.

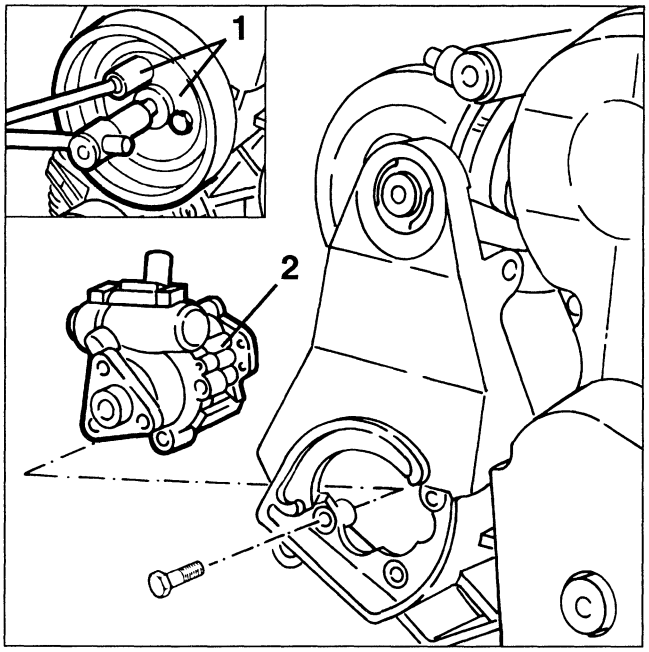

1. Slacken the fastening screws and remove the power steering pump support and alternator complete of air intake box.

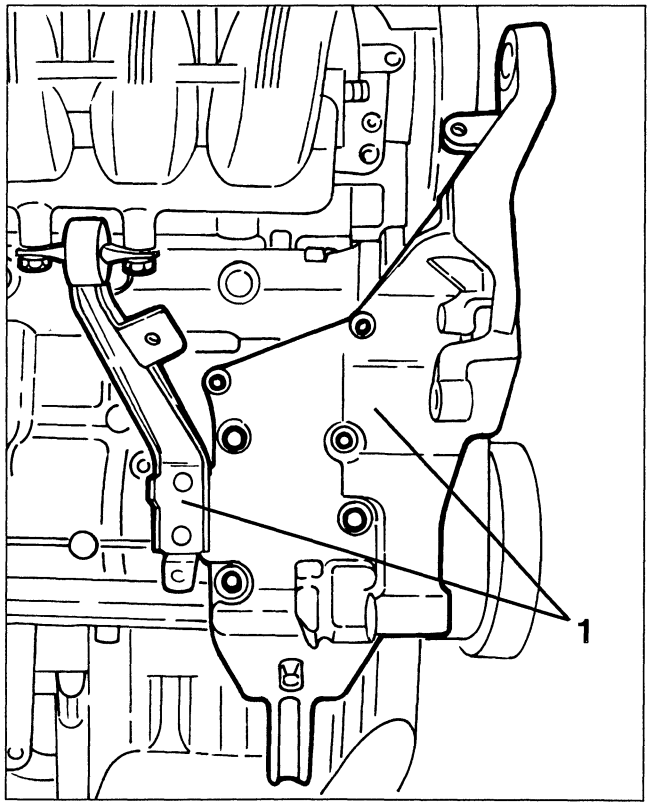

1. Slacken the fastening screws and remove the pinging sensor from the crankcase.
2. Slacken and remove the minimum oil pressure sensor from the crankcase.

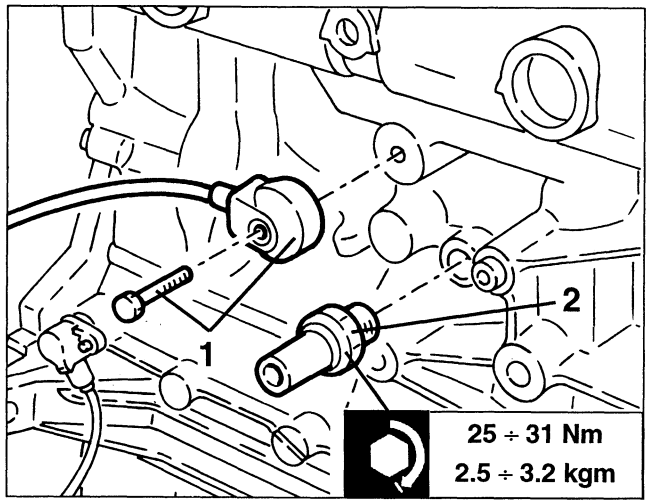

1. Slacken the four fastening screws and remove the conditioner compressor.
2. Slacken the five fastening screws and remove the conditioner compressor support.

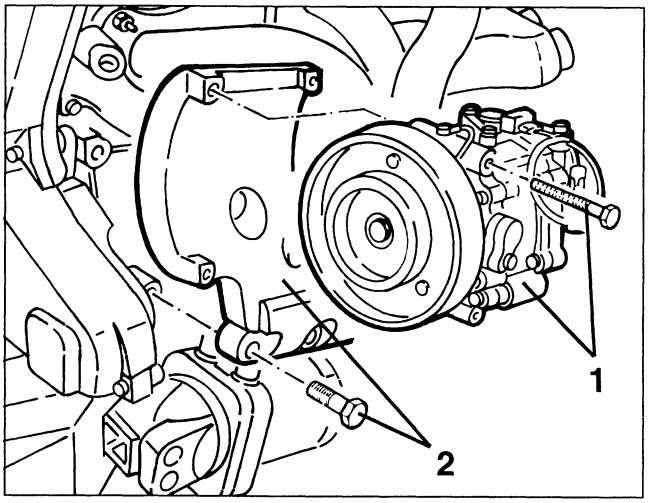

REFITTING

Reverse the sequence followed for removing operations adhering to the following instructions:
- Prepare the engine compartment to receive the power unit assembly, positioning all the electrical cables, pipes, etc. so that they do not interfere with assembly operations.

WARNING:
Make sure that the support points of the power unit have been fastened correctly.

- Upon completion of assembly operations, check that the belts are tensioned correctly, refill the various systems as specified (see GROUP 00).
- Carry out all the necessary checks and adjustments (see GROUP 00).

cardiagn.com

GUARD UNDER ENGINE

REMOVING/REFITTING

- Set the car on a lift and raise it.
1. Remove the plastic buttons, slacken the fastening screws and remove the guard under the engine.

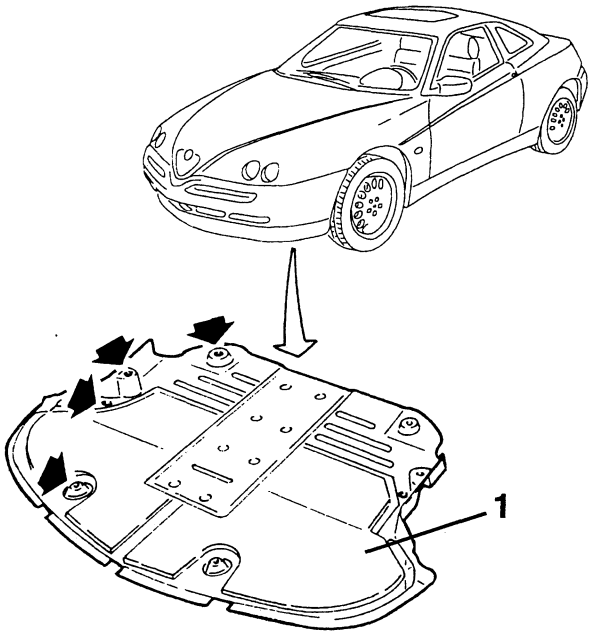

WHEELHOUSE GUARDS

REMOVING/REFITTING

- Set the car on a lift and raise it.
- Turn the left wheel just enough to gain access to the left guard.
1. Slacken the fastenings and remove the left wheelhouse guard.
- Carry out the same procedure for removing/refitting the right guard.

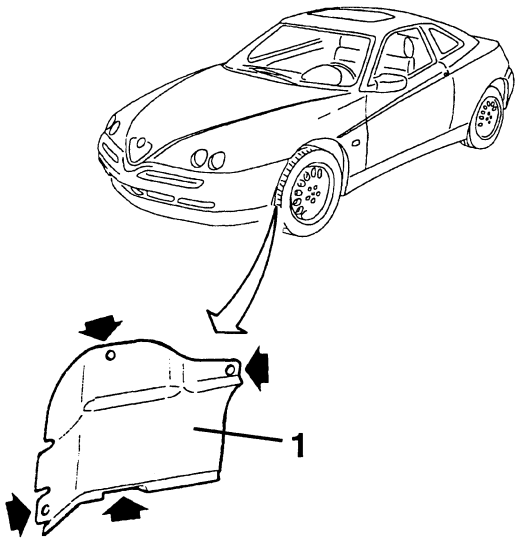

cardiagn.com

WHITE

cardiagn.com

CYLINDER HEAD

REMOVAL/REFITTING

- Proceed as described in the first steps of the procedure described in the paragraph "Engine - Removal/Refitting" up to removal of the air cleaner box.

1. Slacken the fastening screws and remove the ignition coils cover.

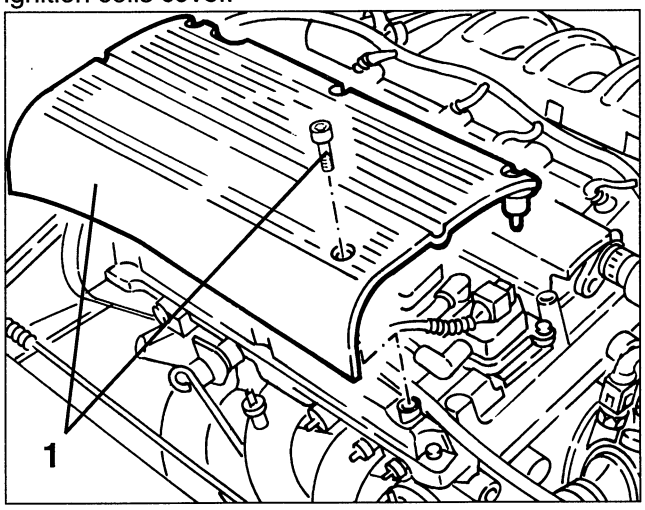

1. Disconnect the electrical connections from the ignition coils.
2. Disconnect the electrical connection from the coolant temperature sensor.
3. Disconnect the electrical connection from the engine coolant temperature gauge transmitter and maximum temperature warning light contact.

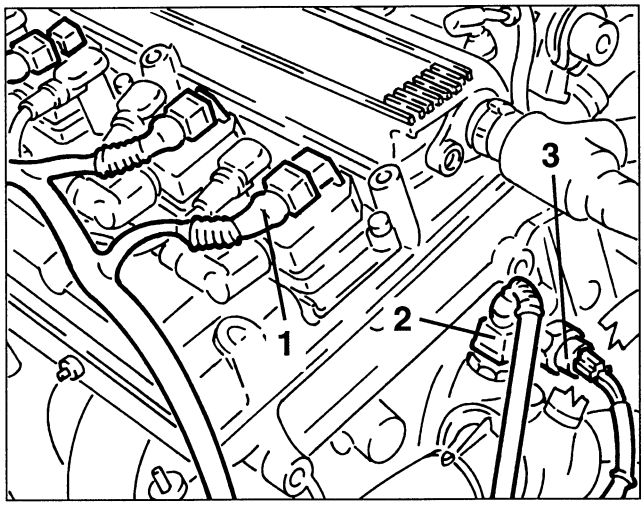

1. Disconnect the coolant delivery sleeve to the radiator from the thermostatic cup.
2. From the coolant return duct to the pump, disconnect the return sleeve from the radiator and the delivery pipe leading from the header tank.
3. Disconnect the two climate control heater coolant return and delivery pipes.
4. From the thermostatic cup disconnect the coolant delivery pipe to the heat exchanger for the engine lubrication circuit.

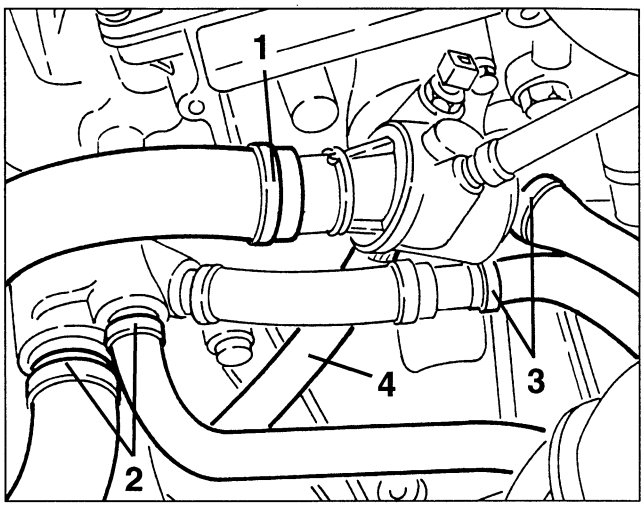

1. Disconnect the earth cable from the cylinder head.
2. Disconnect the electrical connections from the injectors.
3. Disconnect the electrical connection from the timing variator and move the associated wiring to one side.

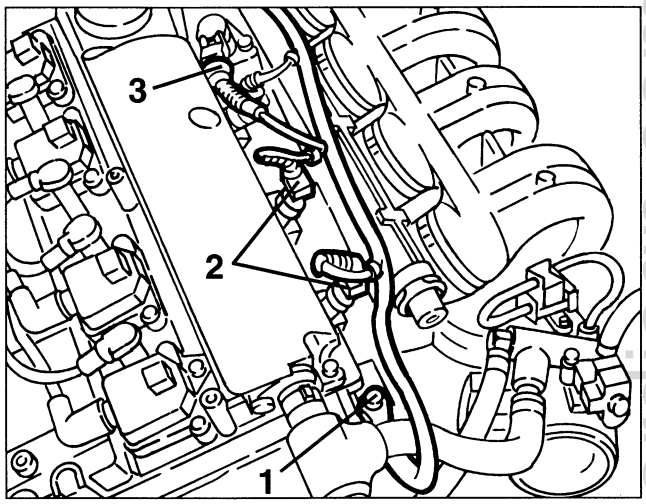

1. Disconnect the connection from the rpm and timing sensor.
2. Disconnect the connection from the timing sensor.
3. Disconnect the connection from the pinging sensor.
4. Remove the engine stay rod.
5. Disconnect the fuel inlet and outlet pipes from the distributor manifold.
6. Disconnect the fuel vapour recirculation pipe.

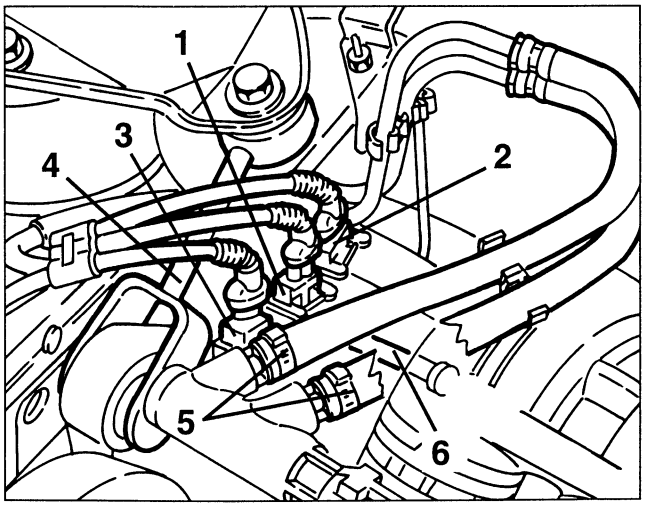

cardiagn.com

1. Disconnect the intermediate electrical connection from the air conditioning system compressor.
2. Slacken the engine oil dipstick fastening screw.

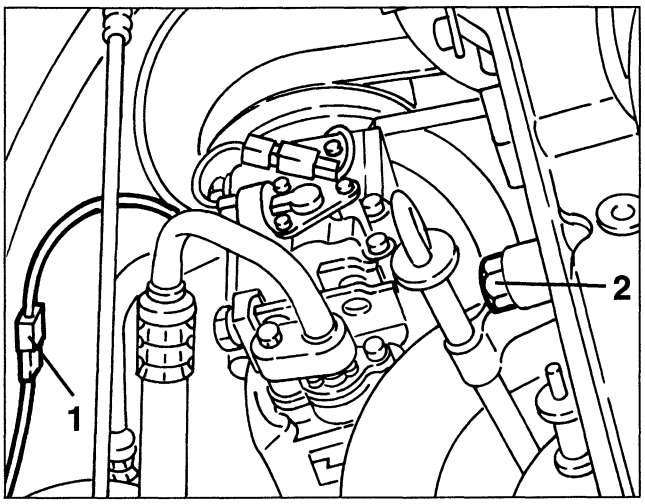

1. Raise the car and slacken the bolts fastening the front section of the exhaust pipe to the manifolds.
2. Slacken the screws fastening the exhaust manifold support bracket to the crankcase.

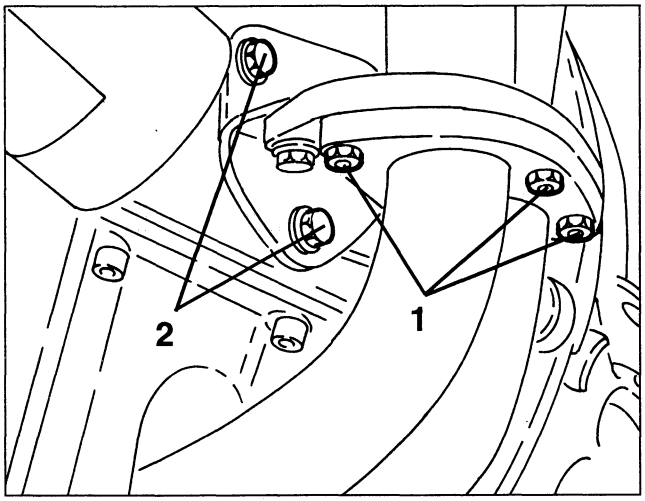

1. Slacken the two screws fastening the coolant delivery pipe to the heat exchanger.
2. Disconnect the coolant outlet pipe from the heat exchanger.

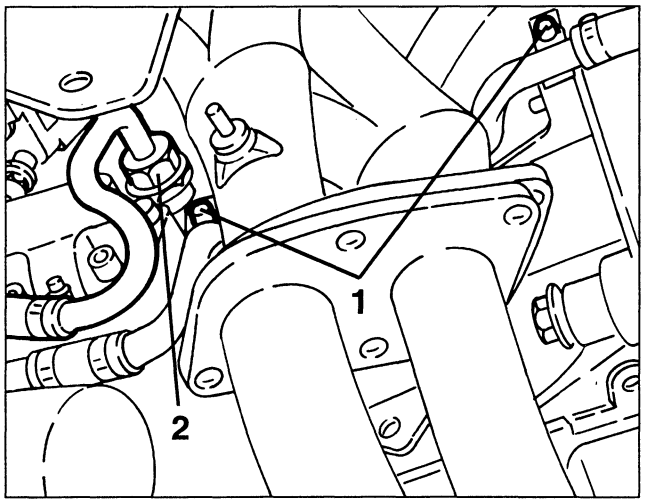

1. Working as illustrated on the guide pulley, loosen the tension of the auxiliary components drive belt and prise it off.
2. Slacken the four fastening screws and remove the auxiliary components drive pulley.

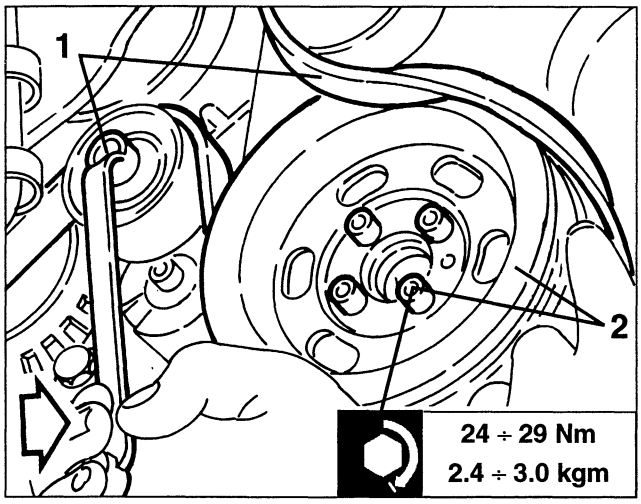

1. Slacken the fastening screw and remove the auxiliary components drive belt guide pulley.

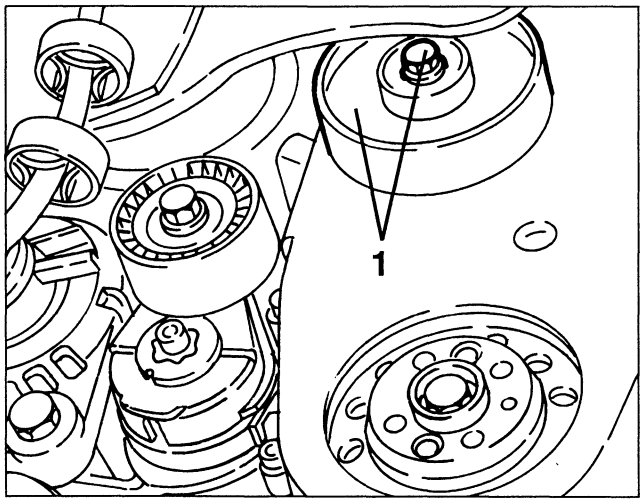

1. Slacken the fastening screws and remove the lower cover of the timing belts and counter-rotating shafts.
NOTE: To gain access to the rear screw, turn the belt tensioner as illustrated.

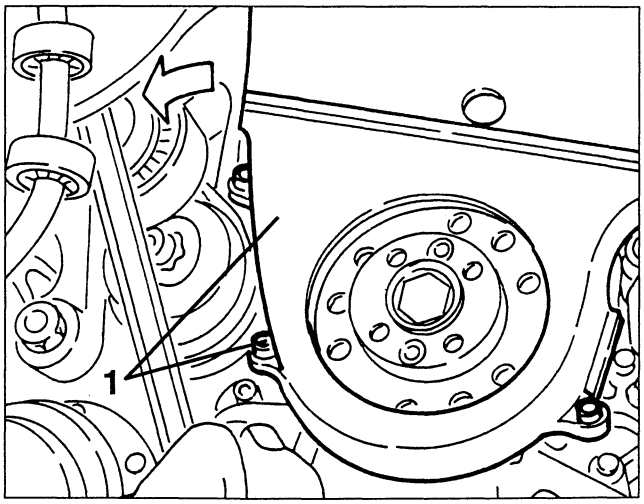

cardiagn.com

- Slacken the lower screws of the upper cover for the timing gear and counter-rotating shafts drive belts.
1. Lower the car, slacken the remaining fastening screws and remove the upper cover.

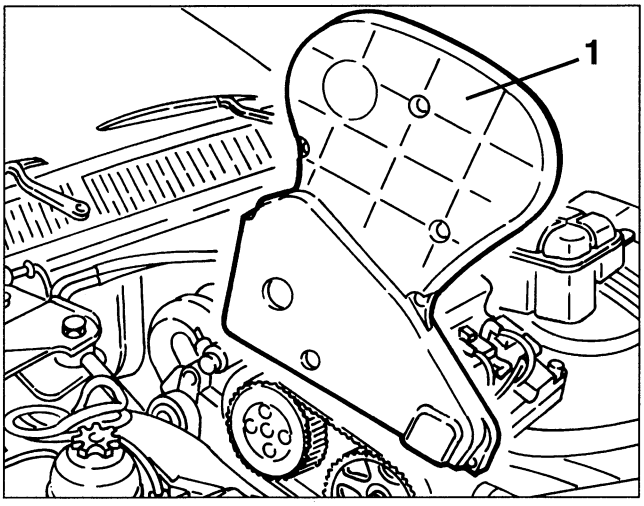

1. Working on the timing gear belt tensioner, loosen the tension of the belt, then prise it off the camshaft driving pulleys.

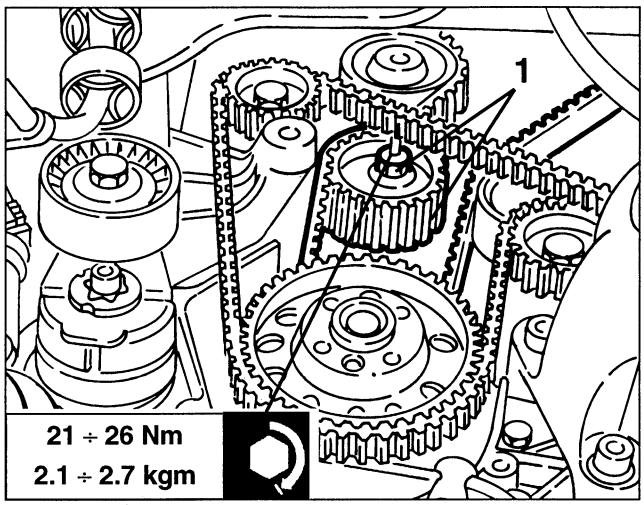

1. Slacken the fastening screws and remove the two timing gear belt side covers.

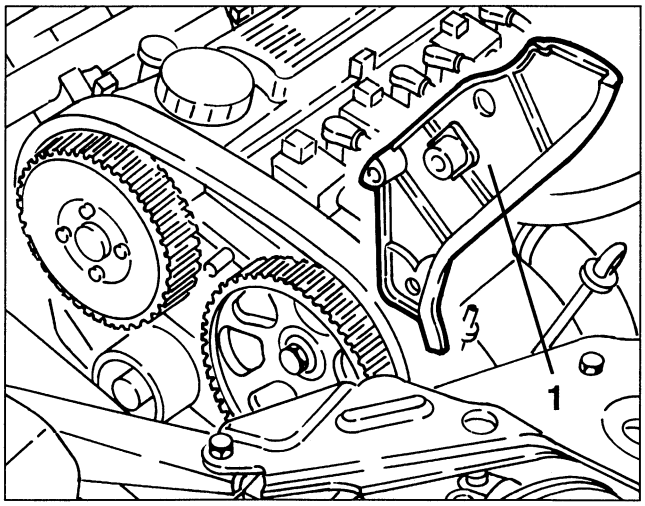

- Remove the bracket connecting the cylinder head to the engine stay rod support.
1. Raise the car and slacken the two screws fastening the support to the intake box.

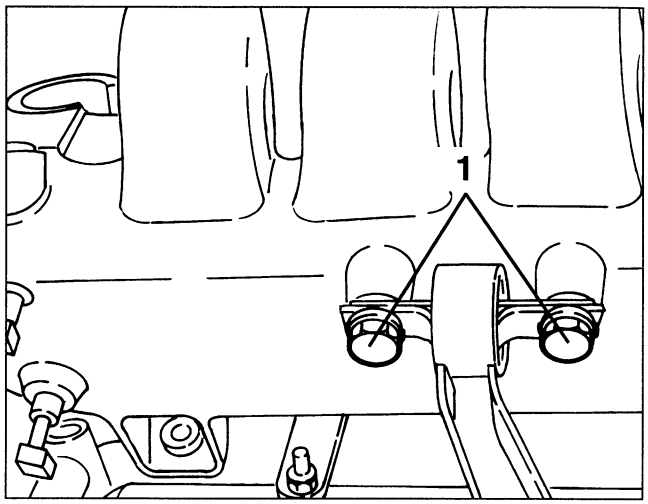

- Disconnect the vacuum takeoff pipe from the servo-brake.
1. Disconnect the accelerator cable from the throttle body.

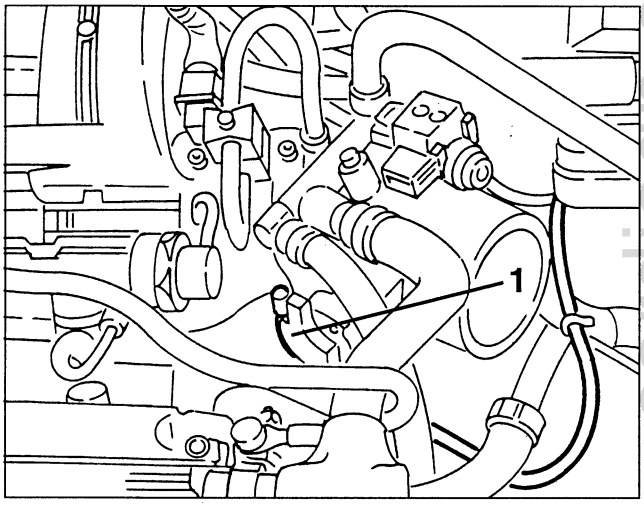

1. Slacken the fastening screws and remove the ignition coils.
2. Slacken the fastening screws and remove the ignition coils support bracket.

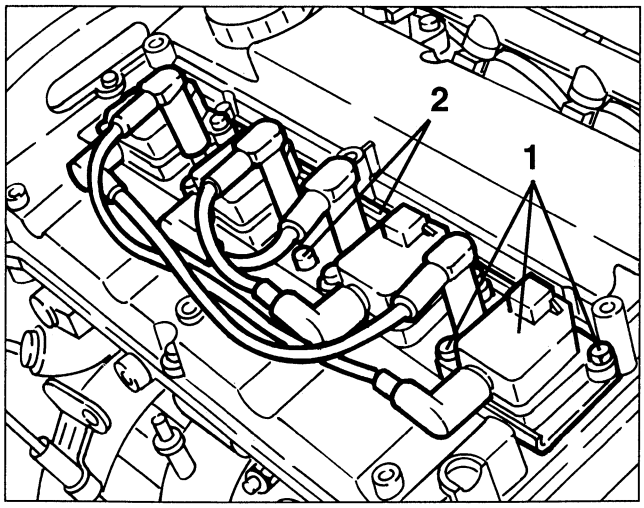

cardiagn.com

- Disconnect the oil vapour recovery pipe from the cylinder head.
1. Slacken the fastening screws and remove the cylinder head cover complete with gasket.

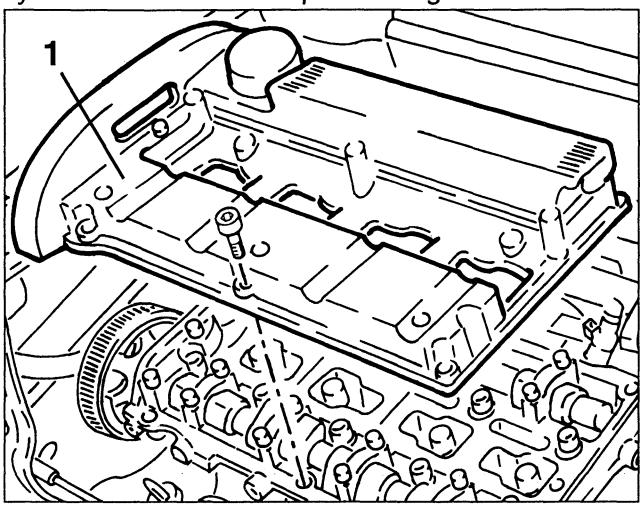

1. Slacken the cylinder head fastening screws and remove it.
2. Remove the gasket.

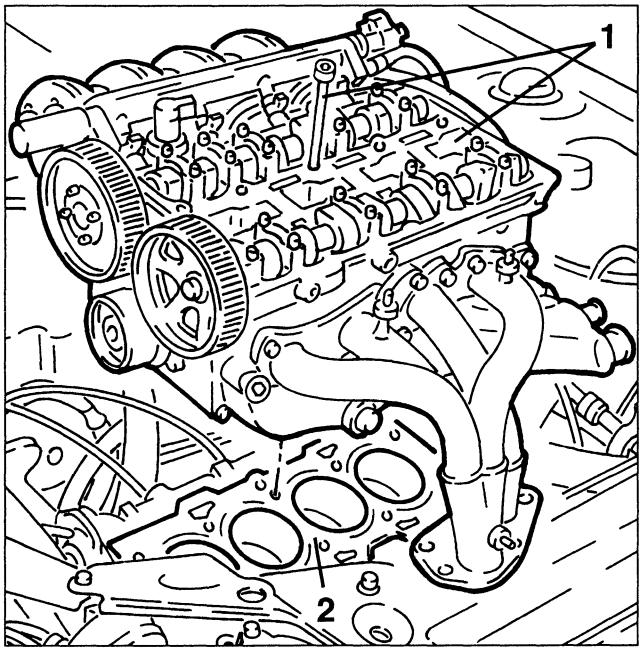

- Strip down the cylinder head and overhaul as described in the volume "Overhauling - Engines".

Re-assemble the cylinder head reversing the sequence described for removal and following the instructions given below.
- Turn the crankshaft to move the pistons of the 1st and 4th cylinder to the T.D.C.
- Position a new gasket on the cylinder head.
NOTE: The cylinder head gasket is in aramidic fibre and cylinder head retightening is unnecessary throughout the life of the engine.

WARNING: Before assembly, accurately clean the cylinder head and crankcase surfaces.

- Assemble the complete cylinder head on the crankcase.
- Tighten the cylinder head fastening screws as described below and bearing in mind that, for each step, the tightening sequence is the one illustrated.

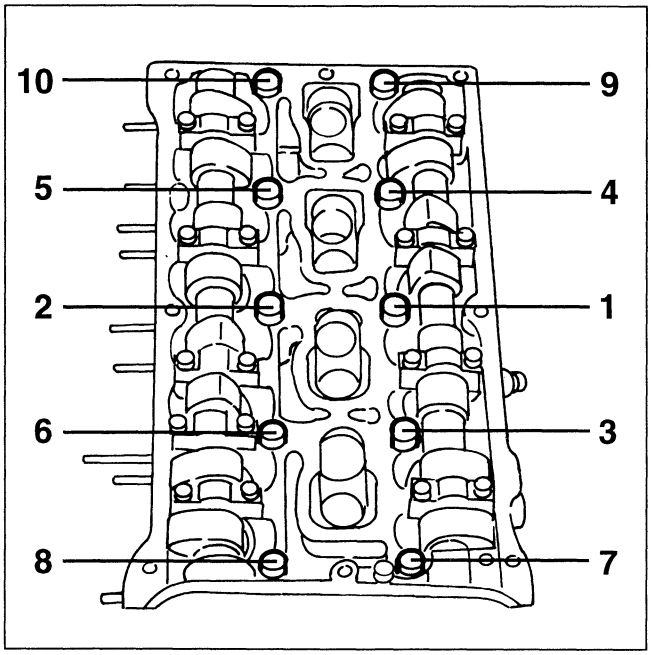

Tightening procedure	
Set in all the screws to a torque of:	20 Nm (2.0 kg)
Tighten the screws to the preliminary torque of:	40 Nm (4.1 kg)
Turn all the screws with an angle of:	90° + 90° + 90°

- For angle tightening use graduated disk no. 1.820.277.000 as illustrated.

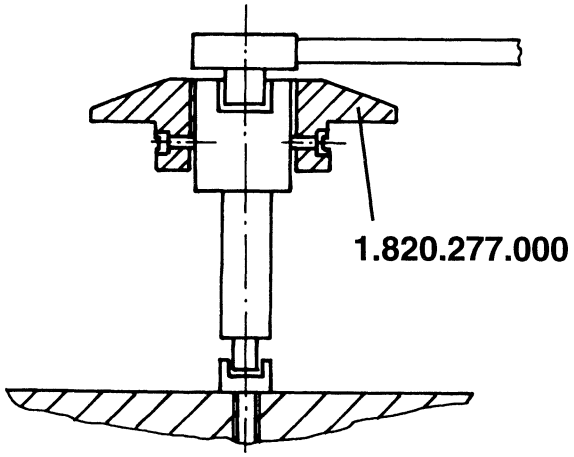

For re-assembly of the timing gear drive belt and timing and for assembly of the auxiliary components drive belt see GROUP 00.

cardiagn.com

OIL SUMP

REMOVAL/REFITTING

- Set the car on a lift.
- Drain the engine oil (see GROUP 00).
- Remove the right front wheel and mud flap.

1. Raise the car and working as illustrated on the belt tensioner, loosen the tension of the auxiliary components drive belt prise it off.
2. Slacken the four fastening screws and remove the auxiliary components drive pulley.

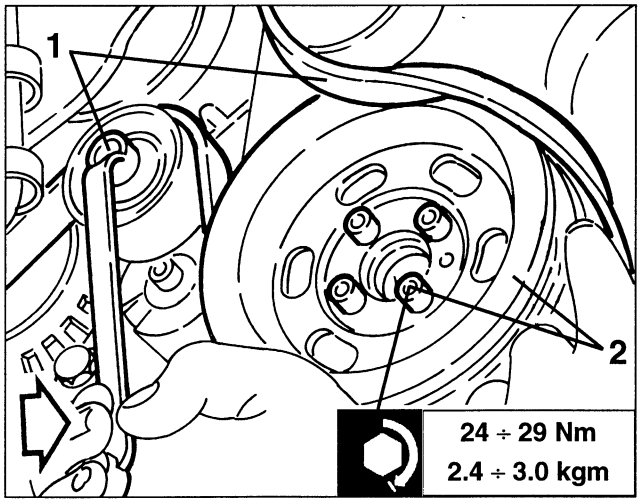

1. Slacken the fastening screw and remove the auxiliary components drive belt guide pulley.
2. Slacken the fastening screws and remove the lower cover of the timing gear and counter-rotating shaft belts.

NOTE: To gain access to the rear screw, turn the belt tensioner as illustrated.

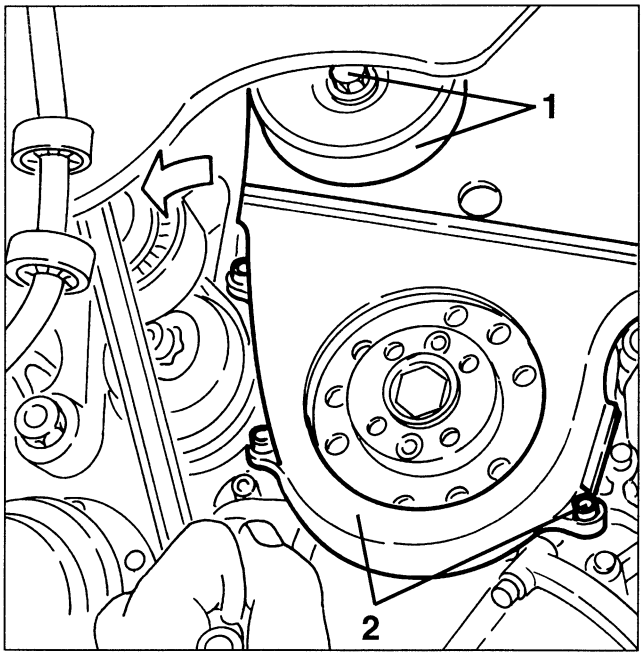

- Slacken the lower screws of the upper cover of the timing gear and counter-rotating shaft belts.

1. Lower the car, slacken the remaining fastening screws and remove the upper cover.

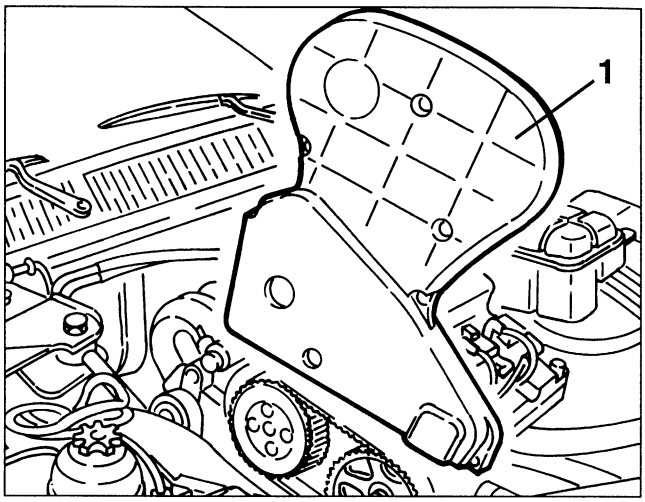

- Remove the front section of the exhaust pipe.
- Position a hydraulic jack under the gearbox.

1. Slacken the fastening screws and remove the power unit rear support.
2. Slacken the screws fastening the gearbox to the oil sump.

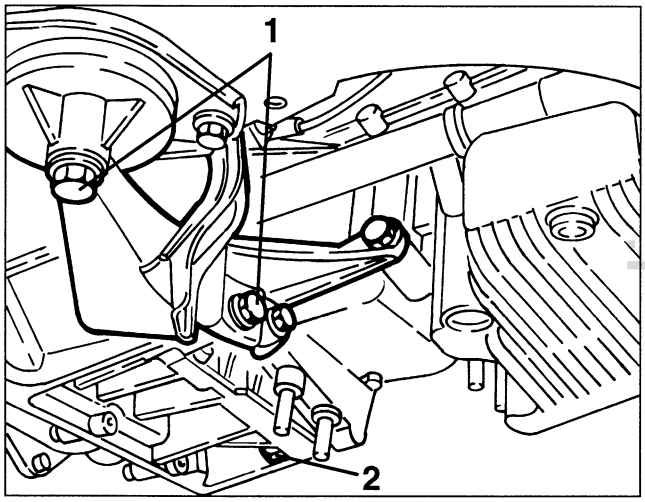

1. Slacken the oil sump fastening screws using tool no. 1.822.144.000 and no. 1.822.145.000 for those to which access is not possible.

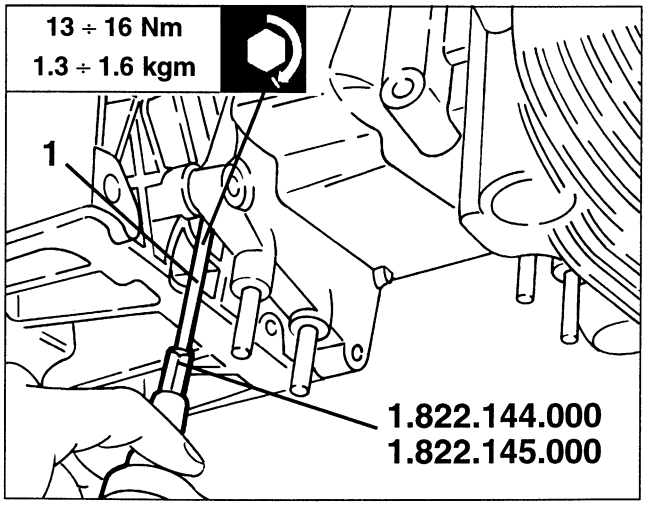

cardiagn.com

1. Lower the hydraulic jack as required and remove the oil sump.

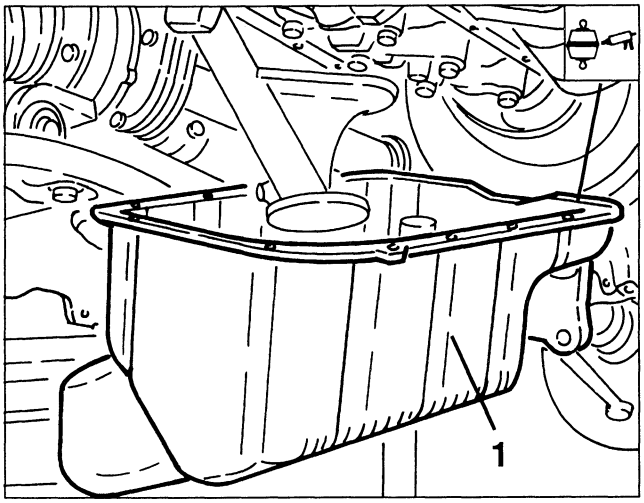

NOTE: if difficulty is encountered in removing the oil sump, slacken the fastening screws (1) of the suction device.

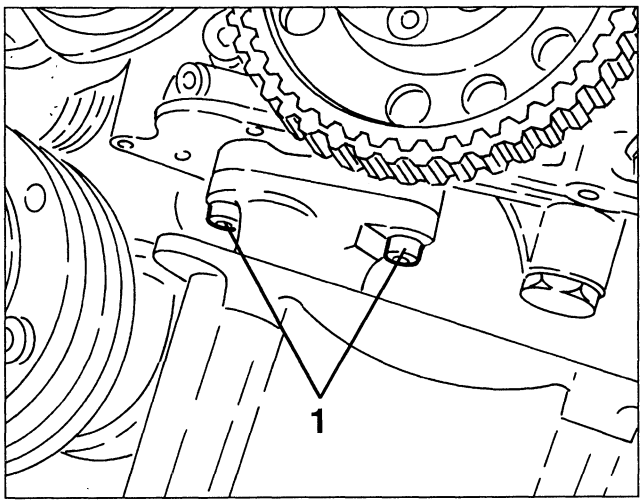

1. Slacken the fastening screws and remove the suction device.
- Remove the seal.

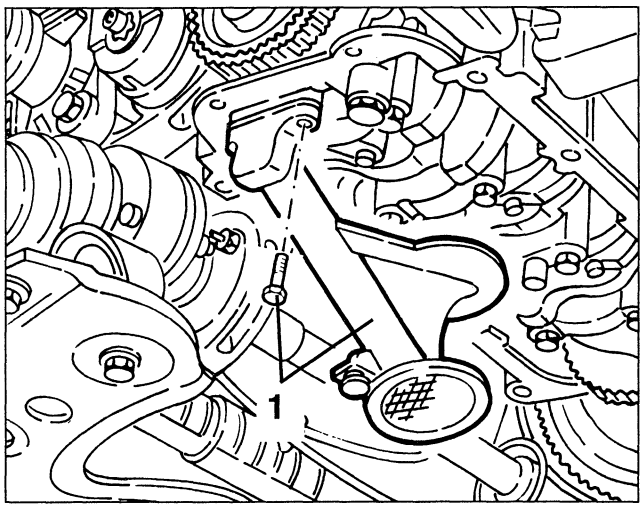

CHANGING THE CRANKSHAFT FRONT OIL SEAL

- Set the car on a lift.
- Disconnect the battery (-) terminal.
- Remove the right front wheel and mud flap.

1. Raise the car and working as illustrated on the belt tensioner, loosen the tension of the auxiliary components drive belt prise it off.
2. Slacken the four fastening screws and remove the auxiliary components drive pulley.

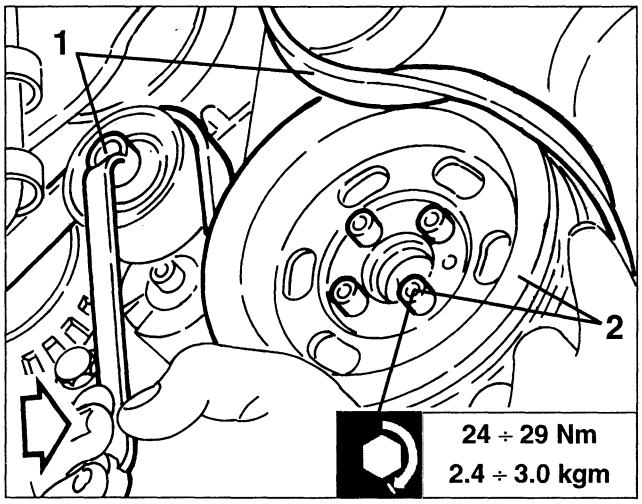

1. Slacken the fastening screw and remove the belt tensioner.
2. Slacken the fastening screw and remove the auxiliary components drive belt guide pulley.
3. Slacken the fastening screws and remove the lower cover of the timing gear and counter-rotating shaft drive belts.

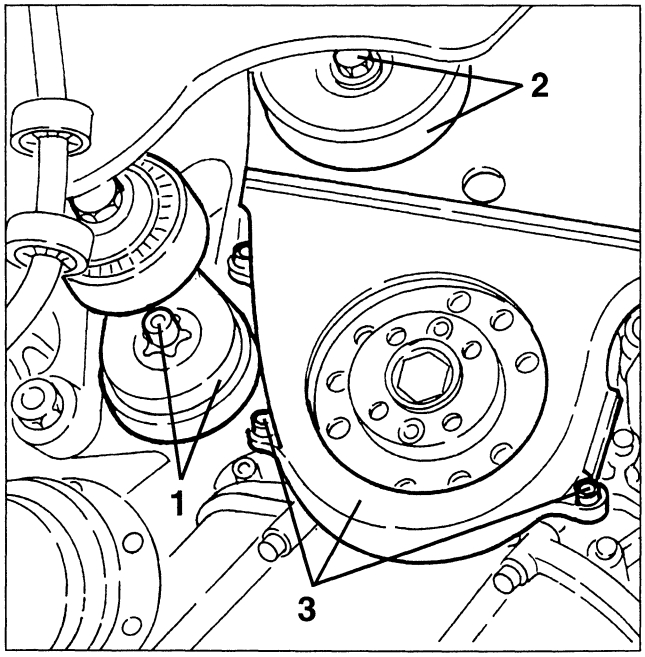

- Slacken the lower screws of the upper cover of the timing gear and counter-rotating shaft drive belts.

cardiagn.com

1. Lower the car, slacken the fastening screws and remove the upper cover.

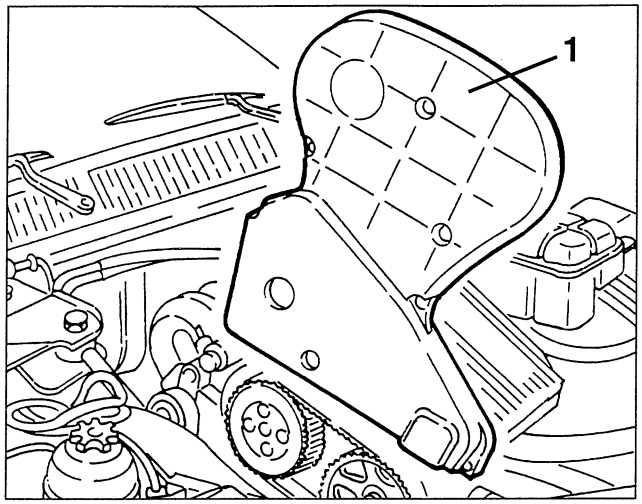

1. Disconnect and remove the oil vapour recovery pipes.

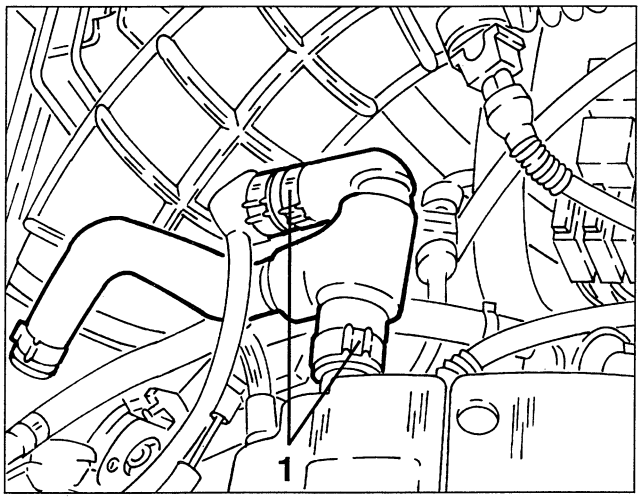

1. Slacken the fastening screws and remove the ignition coils cover.
2. Disconnect the electrical connections from the ignition coils.

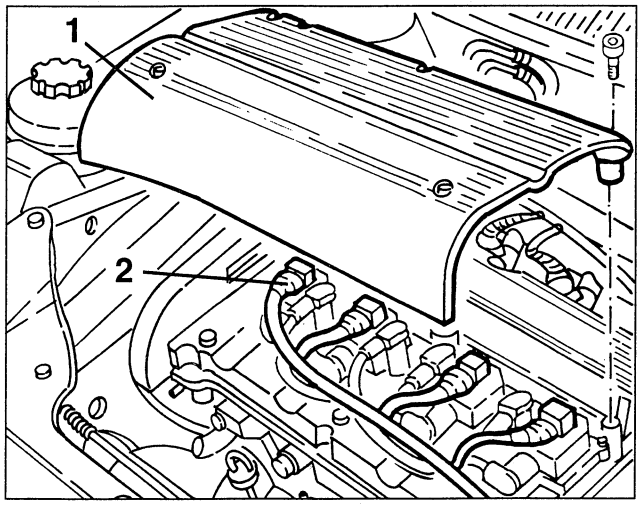

1. Slacken the fastening screws and remove the ignition coils.
2. Slacken the fastening screws and remove the ignition coils support bracket.

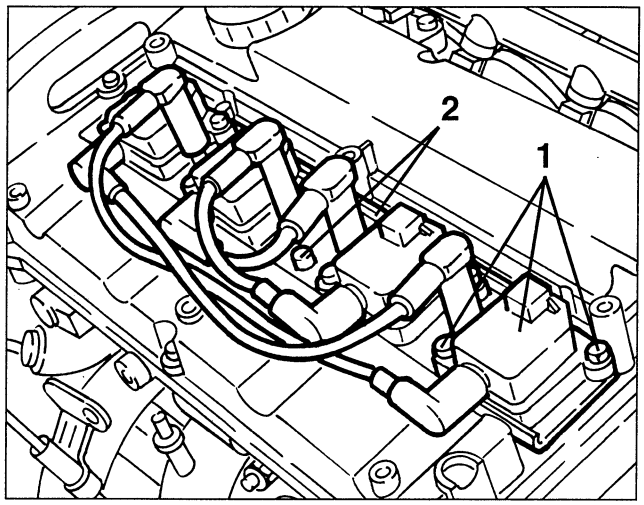

1. Slacken the fastening screws and remove the cylinder head cover complete with gasket.

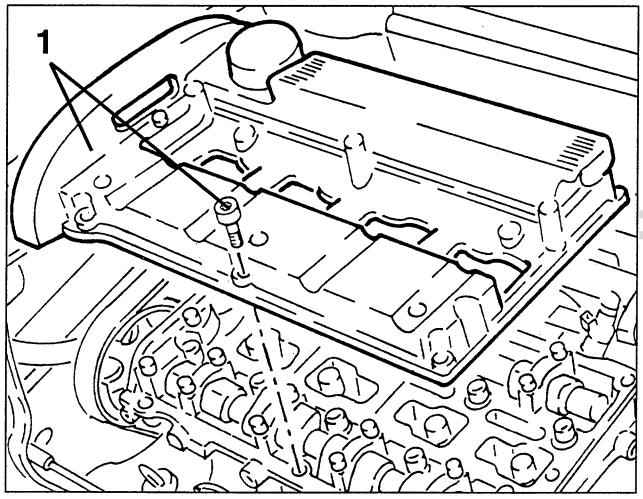

1. Loosen the tension of the counter-rotating shaft belt slackening the fastening nut of the corresponding belt tensioner, then prise and remove the belt.

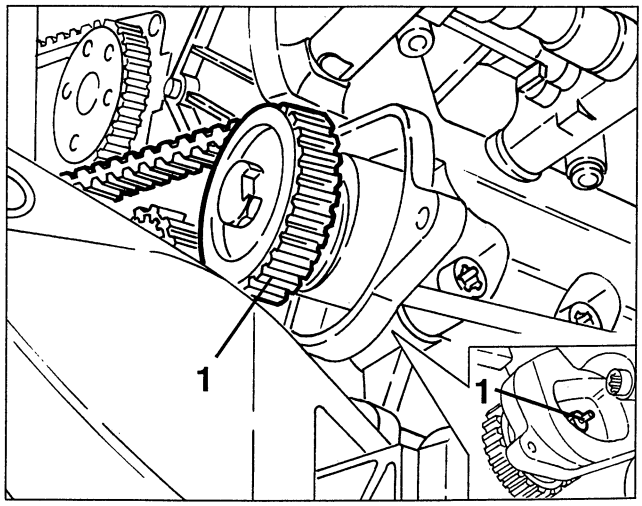

cardiagn.com

1. Slacken the two fastening screws and remove the counter-rotating shaft belt driving pulley.

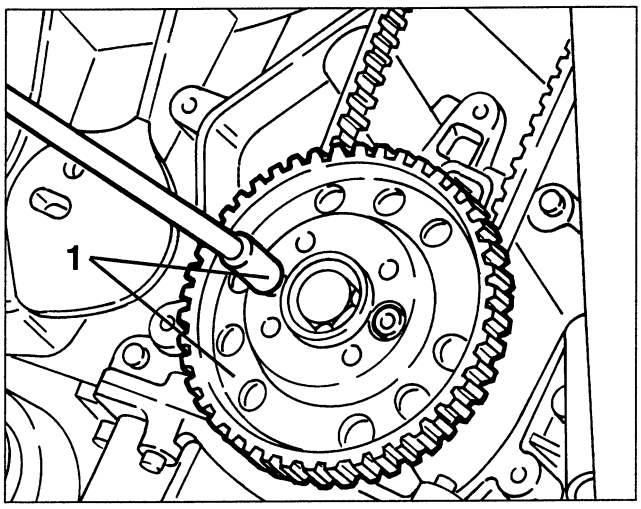

1. Working on the timing gear belt tensioner, loosen the tension of the belt, then prise it off.

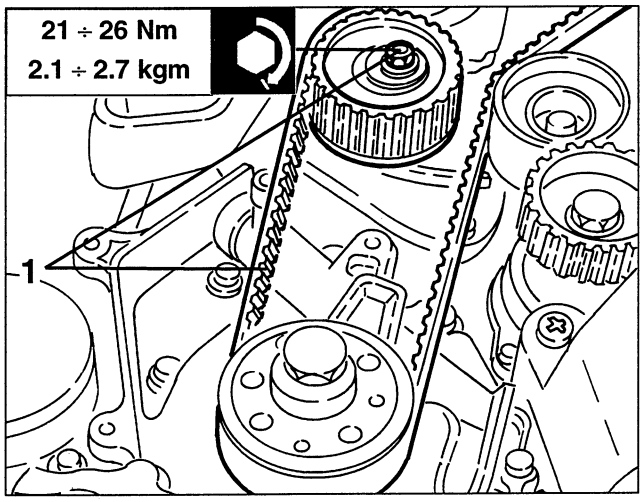

Solution for engines before change

1. Using tool no. 1.820.617.000 as counter torque, slacken the screw (lefthand) fastening the timing gear belt drive pulley, then remove the pulley.

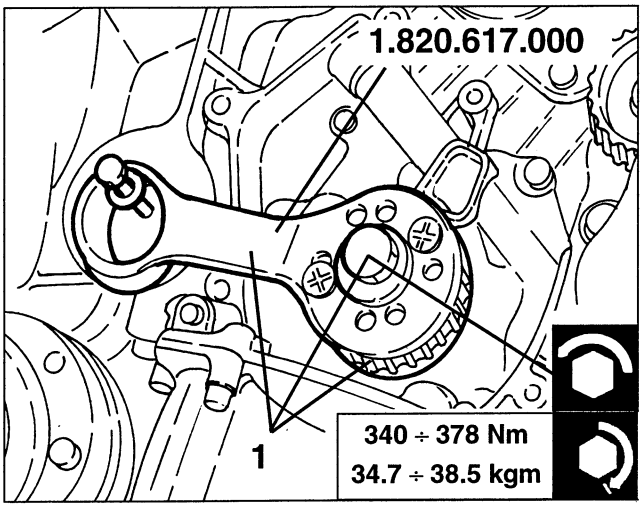

Solution for engines after change

- Slacken and remove the flywheel cover.
1. Install the flywheel stopper tool no. 1.820.630.000 as illustrated.

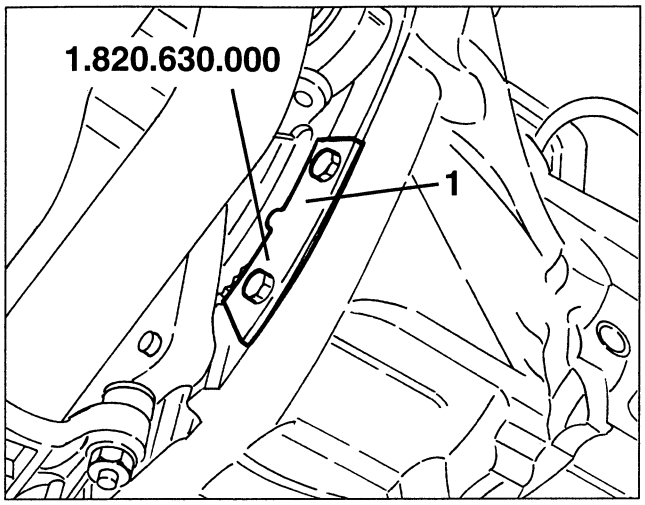

1. Slacken the screw (lefthand) fastening the timing gear belt drive pulley, then remove the pulley.

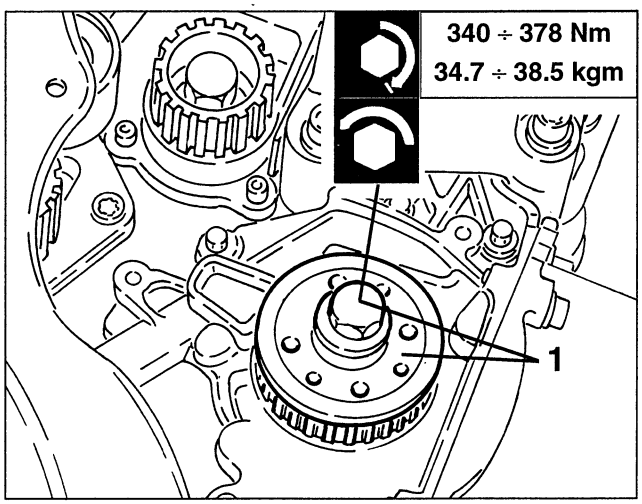

1. Remove the oil seal and install a new one using tool no. 1.821.247.000.

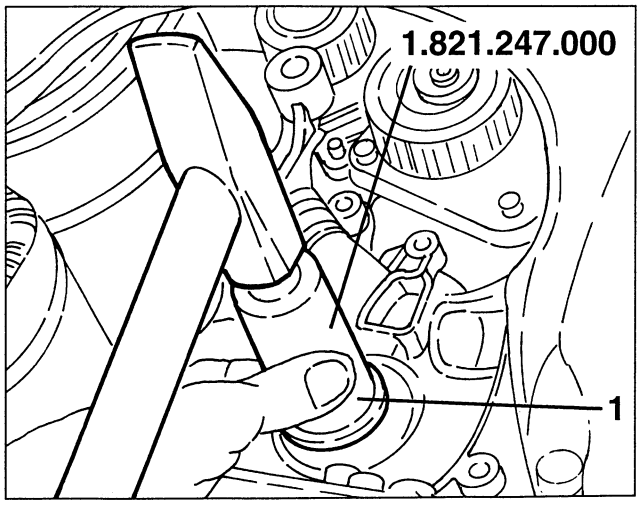

cardiagn.com

- Re-assemble reversing the sequence followed for removal.
Refer to GROUP 00 for re-assembly of the timing gear belts, counter-rotating shaft belts and their timing and for assembly of the auxiliary components drive belt.

CHANGING THE COUNTER-ROTATING SHAFT SEALS

- Proceed as described in the procedure for "Changing the crankshaft front oil seal" up to removal of the upper cover for the timing gear and counter-rotating shaft belts.

1. Loosen the tension of the counter-rotating shaft belt slackening the nut fastening the corresponding belt tensioner, then prise and remove the belt.

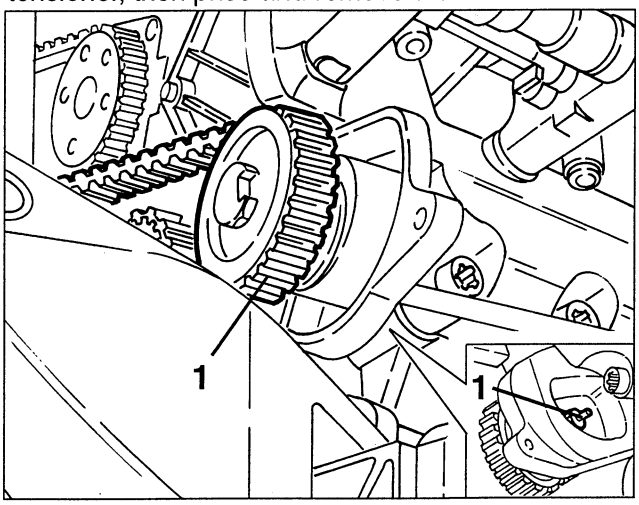

1. Using tool no. 1.820.286.000 slacken the screw fastening the counter-rotating shaft pulley and remove it.

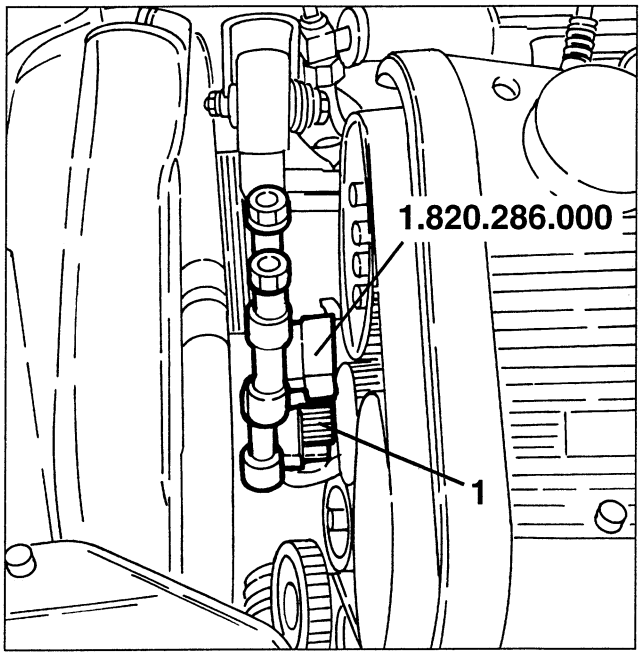

1. Remove the oil seal and install a new one using tool no. 1.821.251.000.

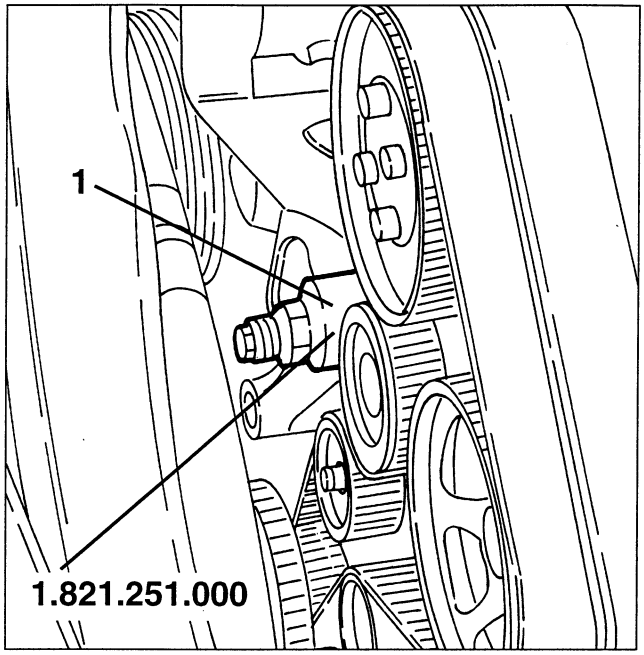

- Carry out re-assembly reversing the sequence described for removal referring to GROUP 00 for assembly of the counter- rotating shaft belt and for assembly of the auxiliary components drive belt.

CHANGING THE CAMSHAFT OIL SEALS

- Proceed as described n the procedure "Changing the crankshaft front oil seal" up to removing the timing gear drive belt.

1. Using tool no. 1.822.146.000 complete with tool no. 1.822.156.000 slacken the screw fastening the camshaft pulley on the exhaust side and remove it.
2. Slacken the four screws and remove the camshaft drive pulley on the intake side.

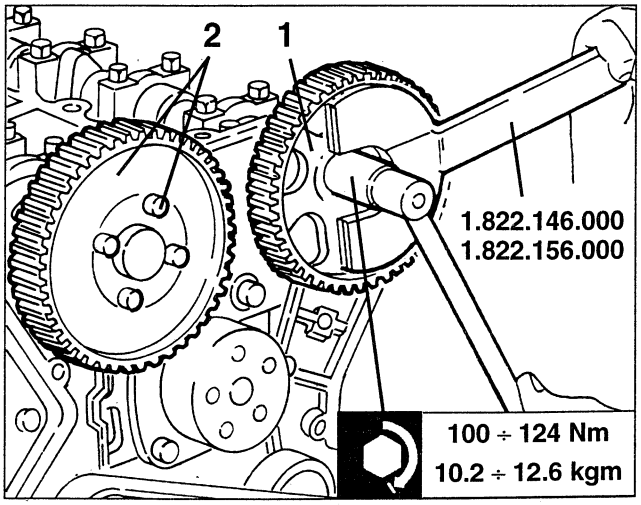

cardiagn.com

- Remove the camshaft oil seals.
1. Install a new camshaft front oil seal on the exhaust side using tool no. 1.821.228.000.
2. Install a new camshaft front oil seal on the intake side using tool no. 1.821.252.000.

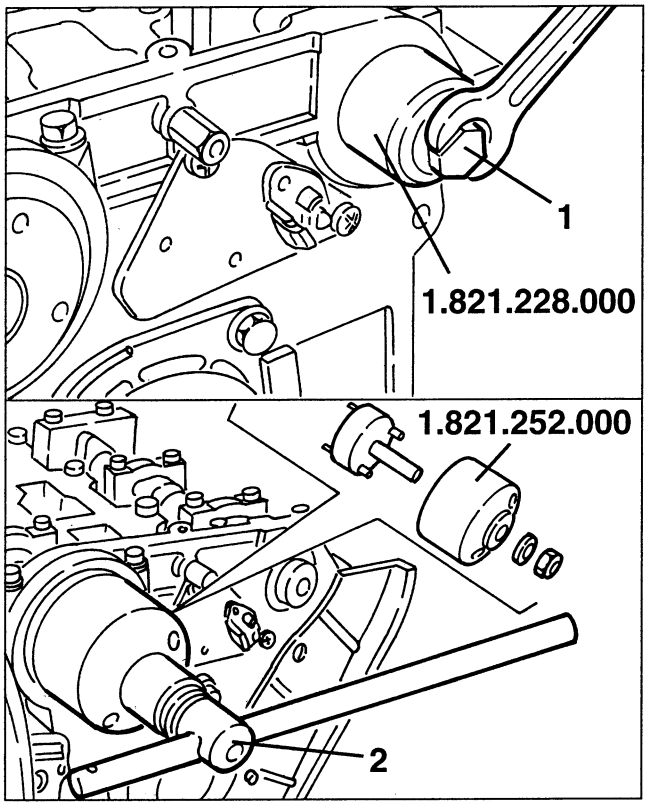

- Carry out re-assembly reversing the sequence described for removal
Refer to GROUP 00 for assembly of the timing gear and counter- rotating shaft belts and for assembly of the auxiliary components drive belt.

CHANGING THE FLEXIBLE BUSHING OF THE ENGINE STAY ROD ANCHOR BRACKET

1. Slacken the fastening screws and remove the engine stay rod.
2. Move to one side the support with the electrical connections.
- Move to one side the electrical wirings lateral protection.

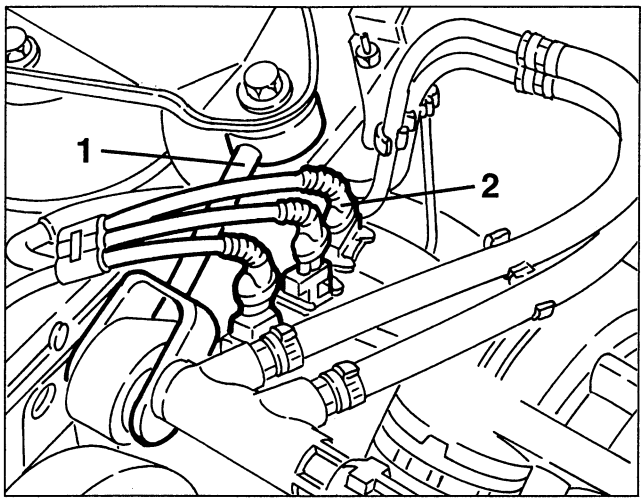

1. Using tool no. 1.821.175.000 (A.3.0640) as illustrated remove the flexible bushing from the engine stay rod anchor bracket.
2. Refit a new flexible bushing still using tool no. 1.821.175.000 (A.3.0640) as illustrated.
- Complete re-assembly reversing the sequence followed for removal.

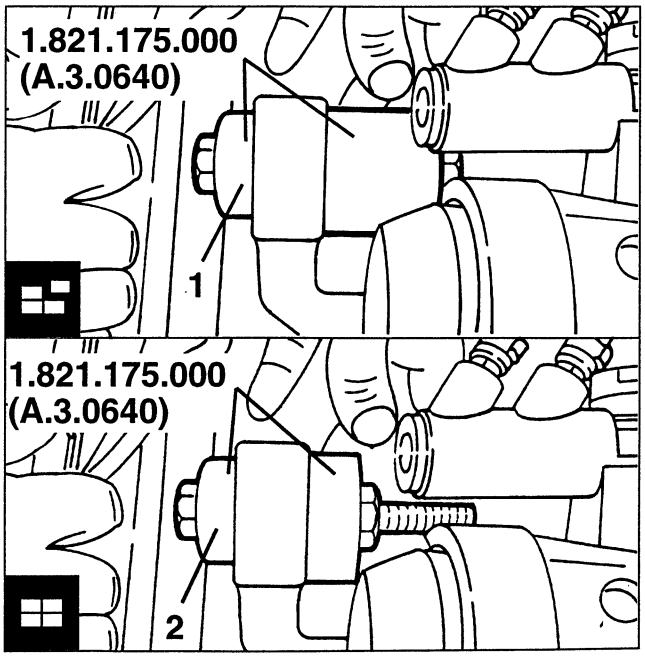

cardiagn.com

CHANGING THE REAR CRANKCASE COVER (with oil seal)

- Remove the gearbox (see specific paragraph).
- Remove the clutch (see specific paragraph).

1. Fit flywheel stopper tool no. 1.820.624.000.
2. Slacken the fastening screws and remove the flywheel.

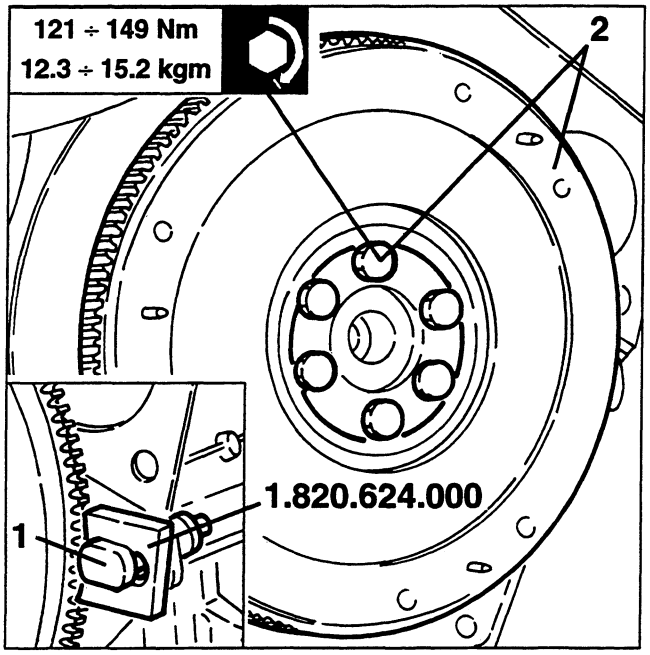

1. Slacken the screws fastening the oil sump to the crankcase, then remove the rear crankcase cover with integrated oil seal ring.

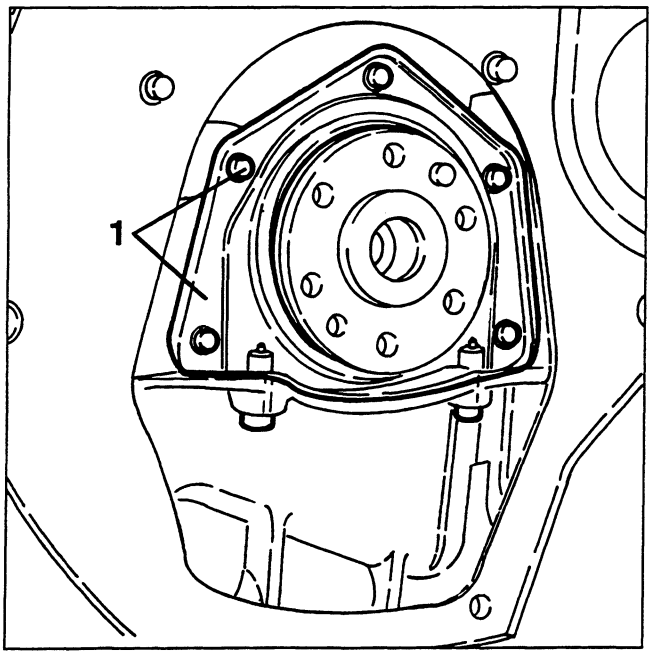

- Refit the rear cover proceeding as follows:
- Fit tool no. 1.820.619.000 on the oil seal of the rear crankcase cover.
- Assemble the tool - rear cover assembly and tighten the screws fastening the crankcase and the oil sump.
- Remove the centering tool no. 1.820.619.000.

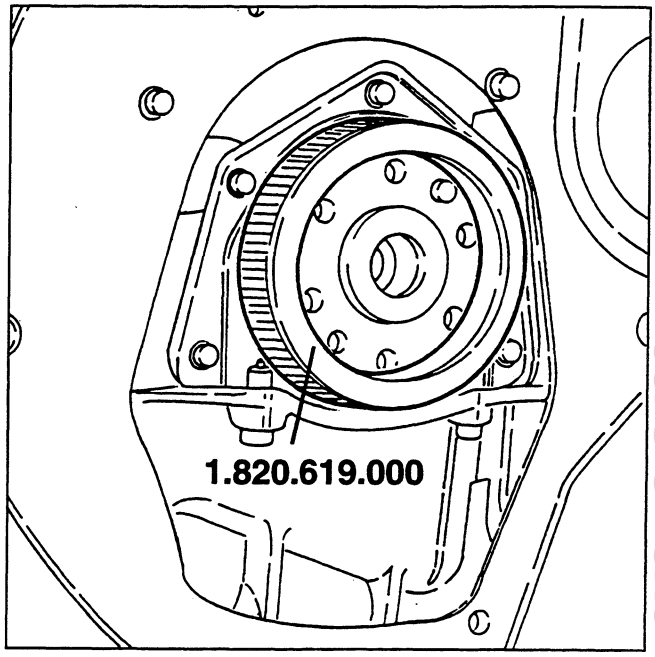

cardiagn.com

GENERAL DESCRIPTION

An electronic control system supervises and regulates all the parameters of the engine, optimising performance and consumption levels through response in real time to the different operating conditions: this sophisticated latest generation system consists of a single control unit which controls both ignition (static with lost spark) and injection (timed).
This is the M 2.10.3 version of the proven and reliable BOSCH MOTRONIC system.
Compared with the previous versions this new M 2.10.3 system adopts a control unit - with 55 pins - with advanced design and production technology, it also possesses many possibilities for inserting auxiliary functions.
As a result of the use of new sensors and revision of the control programmes, the system makes it possible to achieve considerable improvements in terms of consumption and emission levels and vehicle handling.
Another feature of this system is self-adaptation, i.e. the capability to recognise the changes that take place in the engine and to compensate them, according to functions which mainly correct:
- the mixture titration
- the caburetion parameters according to the command of the evaporative solenoid valve
- an adaptive programme for idle speed control.

FUNCTIONS OF THE SYSTEM

Sequential and timed injection (S.E.F.I.)

With this control unit, fuel injection is sequential and timed for each cylinder: the injection instant (delivery of fuel into the intake manifolds by the opening of the injectors) is not simultaneous for all the cylinders, but takes place for each cylinder in correspondence with the optimal point of injection, calculated by the control unit according to special maps depending on the load, speed and temperature of the engine.
NOTE: the instant considered in the design of the maps is that of the start of injection (the cylinder is in the exhaust stroke - intake valve still closed).

Static ignition

An electronic ignition system has been adopted with "static distribution" (with semi-conductors, without distributor). This solution makes it possible to eliminate rotary components; in addition, it does not produce external sparks thus reducing the risk of interferences; lastly it reduces the number of high voltage cables and connectors; as the power modules for controlling the primary windings of the coil are inside the control unit.
Static ignition takes place through four coils, according to the so-called "lost spark" logic: this solution exploits the different pressures and environments existing contemporaneously in a pair of cylinders: when one of the cylinders approaches the bursting stroke, with a mixture of air and fuel, the corresponding cylinder is at the end of the exhaust stroke in the presence of exhaust gas.
In a 4-cylinder in line engine, the paired cylinders are 1/4 and 2/3.
The solution adopted for this engine (T.SPARK - 16 valves) has required the adoption of a larger "central" spark plug and a smaller "side" spark plug. Each of the four coils supplies the small spark plug of the cylinder below and simultaneously the large one of the paired cylinder.
NOTE: This way it is impossible to invert the spark plug cables during servicing operations.

Metering the air flow rate

The air flow meter adopted is of a more modern design known as the "hot film" type.
Outside, the air-flow meter looks like a part of duct between the intake manifold and the air cleaner. Inside the air-flow meter there is an electronic circuit and a plate that is crossed by the air which passes into the duct. The film plate is kept at a constant temperature (appr. 120°C over the temperature of the incoming air) by a heating resistance placed in contact with it. The mass of air flowing through the manifold tends to withdraw heat from the plate: therefore, to keep its temperature constant, a certain current needs to flow through the heating resistance: this current, suitably measured, is proportionate with the mass of flowing air.
N.B. This air flow meter measures directly the mass of air (and not the volume as in the previous versions with "floating port", thereby eliminating problems of temperature, altitude, pressure, etc.), enabling an optimum ratio between the weight of the air and the weight of the fuel.

cardiagn.com

Cylinder detection

Following the sequential and timed injection system, a timing sensor has been introduced (cam angle sensor): this makes it possible to detect which cylinder is in the bursting stroke when the engine is started, in order to be able to start the correct injection sequence. The sensor is formed of a Hall-effect device by which the voltage signal sent to the control unit "lowers" suddenly when the tooth machined on the camshaft pulley passes in front of the actual sensor; therefore a signal is sent every two turns of the crankshaft.
Conversely, the rpm sensor sends a reference signal for each turn of the engine and each subsequent tooth of the phonic wheel informs the control unit of an increase of the angular position of the crankshaft, so that injection is sent correctly from the suitable cylinder and the spark to the corresponding pair of cylinders.

Fuel pump

The control logic of the fuel pump carried out by the control unit (mainly based on the rpm signal) immediately cuts off the supply to the pump as soon as the engine stops.
Moreover, the pump will not operate with the key engaged and the engine not running.
In this car, this logic is integrated - in order to further higher the standards of safety - by the **inertial switch** device: this is an electromechanical switch which, in the event of heavy shocks, opens to cut off the circuit that takes the earth to the fuel pump, which stops instantaneously. This device is particularly important as an integration of the safety guaranteed by the logic of the control unit, especially if the car is hit from behind or in the case of other accidents in which the engine does not stop immediately.

Timing variator

This T.SPARK - 16 valve engine is fitted with an electro- mechanical-hydraulic timing variator which is connected to the camshaft and controls and adjusts intake timing (advance) in such a way that a larger amount of air is taken in. This device is activated by the control unit only after exceeding a determinate rpm and engine load to avoid adversely affecting correct operation of the engine at low speeds.

Percentage of exhaust gas recirculation

Nox (nitric oxide) is developed at high temperatures in the combustion chambers. To reduce these emissions an E.G.R. (Exhaust Gas Recirculation) system is adopted which by recirculating part of the exhaust gases, lowers the temperature, thus the Nox produced, in the combustion chambers.
In fact, part of the exhaust gas is withdrawn through the special EGR Valve and re-admitted to the intake box where it is mixed with the intaken air and burnt again in the engine. The EGR valve is modulated by a solenoid valve controlled by the injection control unit and, as a result of the type of control, in addition to reducing the amount of Nox, consumption levels are also optimised.
The percentage of exhaust gas to be returned to the engine is established by the control unit taking account of a specific characteristic curve which depends on the load, speed and temperature of the engine.

cardiagn.com

OPERATING LOGIC

– **Identification of the "operating point":**
the "point of operation of the engine" is located mainly through two sensors: the rpm sensor informs the control unit of the speed of rotation of the engine; the air flow meter supplies the value of the mass of air actually entering the cylinders, defining the instantaneous volumetric yield of the engine.

– **Adjustment of injection times (quantity of fuel):** the control unit controls the injectors very quickly and precisely, calculating the opening time on the basis of engine load (rpm and air flow), also taking into account the battery voltage and the temperature of the engine. Injection is "sequential", i.e. the injectors are opened in correspondence of the exhaust stroke of the corresponding cylinder.

– **Ignition adjustment (calculation of advances)**:
the control unit calculates the advance on the basis of the engine load (rpm and air flow); the value is also corrected according to the temperature of the intaken air and that of the engine: ignition is "static" as described previously.

– **Cold starting control:**
during cold starts the control unit uses special advance values and injection times.
When a determinate temperature/rpm ratio is reached, the control unit resumes normal operating conditions.

– **Control of enrichment during acceleration:**
upon the need for acceleration, the control unit increases injection in order to reach the required load as quickly as possible.
This function takes place through the potentiometer located on the throttle which instantaneously informs the control unit of the need to accelerate.

– **Fuel cut-off during deceleration:**
with the throttle closed and an engine speed above a certain threshold, the control unit de-activates fuel injection; this way the rpms decrease rapidly towards idle speed reducing the speed and fuel consumption. The cut-off threshold value varies according to the temperature of the engine and the speed of the car.

– **Control of idle speed:**
the adjustment of the engine idle speed is carried out through the special actuator fitted directly on the throttle body which acts on the throttle by-pass: in fact, when the throttle is closed, this valve adjusts the by-pass gap compensating the load required by the services in order to ensure that idle speed is as constant as possible.

– **Maximum Rpm limiting:**
above a certain threshold the control unit automatically stops the injection of fuel preventing the engine from "over-revving".

– **Combustion control -lambda probe-:**
the oxygen sensor (or "lambda" probe) informs the control unit of the amount of oxygen at the exhaust, and therefore the correct air-fuel metering.
The optimum mixture is obtained when the lambda coefficient = 1 (optimum stoichiometric mixture). The electric signal sent by the probe to the control unit changes abruptly when the composition of the mixture departs from lambda = 1. When the mixture is "lean" the control unit increases the amount of fuel, reducing it when the mixture is "rich": this way the engine operates as far as possible around the ideal lambda rating.
The signal from the lambda probe is processed inside the control unit by a special integrator which prevents sudden "oscillations".
The probe is heated by an electrical resistance so that it quickly reaches the correct operating temperature (appr. 300 °C).
Through this probe it is therefore possible to adjust engine carburetion precisely. Among other items, this makes it possible to meet emission limit regulations.

cardiagn.com

– **Timing variator control:**
The electro-mechanical-hydraulic timing variator, connected to the camshaft, controls and adjusts the intake timing according to the load and rpm of the engine. This device is activated by the control unit at higher engine operating speeds (above 1,600 rpm and with load above 30%).

– **Knocking control:**
Through a knock sensor the control unit is informed if any pinging or "knocking" occurs and it corrects the spark advance "delaying" it accordingly; a further correction also takes account of the air temperature, in fact, when the temperature of the intake air is high, pinging is more accentuated.
N.B. The intaken air temperature sensor to be found just downstream of the air-flow meter, is not used to calculate the engine load but to control the knocking parameters.

– **Fuel vapour recovery:**
the fuel vapours collected from the various points of the supply circuit in a special active carbon canister are ducted to the engine where they are burnt: this takes place through a solenoid valve which is opened by the control unit only when the engine is in a condition that allows correct combustion without adversely affecting the operation of the engine: in fact the control unit compensates this amount of fuel by reducing delivery to the injectors.

– **E.G.R. valve control**
The percentage of exhaust gas to be returned to the engine is determined by the control unit taking account of a specific characteristic curve which depends on the engine load and speed: recirculation is only activated when the engine speed is between 2500 and 4000 rpm., also in relation to the temperature of the engine (higher recirculation percentage with high temperatures).

– **Connection with the air conditioner compressor:**
the control unit is connected with the air conditioner compressor and it cuts in the compressor in relation to operation of the engine.
For specifications see GR. 50 - CLIMATE CONTROL.

– **Connection with ALFA ROMEO CODE system:**
on cars fitted with "electronic key" (ALFA ROMEO CODE), as soon as the Motronic control unit receives the signal that the key has been turned to MARCIA, it "asks" the Alfa Romeo CODE system for consent to start the engine: this consent is given only if the Alfa Romeo CODE control unit recognizes the code of the key engaged in the ignition switch as correct. This dialogue between the two control units takes place on diagnosis line K already used for the Alfa Romeo Tester (see specific paragraph).
N.B. Before working on the system you are advised to read the corresponding chapter.

– **Self-diagnosis:**
the control unit possesses a **self-diagnosis system**, which continuously monitors the plausibility of the signals from the various sensors and compares them with the limits allowed: if these limits are exceeded, the system detects a fault and turns on the corresponding warning light on the instrument cluster.
The warning light turns on when the engine is started to indicate the initial test of the entire system (appr. 4 seconds), it then turns off if no errors have been memorised: otherwise it stays on.
For certain parameters, the control unit replaces the abnormal values with suitable ones so that the car can "limp" to a point of the Service Network.
These "recovery" values depend on the other correct signals and they are defined individually by the control unit operating logic.
The self-diagnosis system also enables quick and effective location of faults connecting with the ALFA ROMEO Tester (see "Fault-finding"), through which all the errors memorised can be displayed. It is also possible to check the operating parameters recorded by the control unit and operate the single actuators to check whether they are working properly.

cardiagn.com

COMPONENTS OF THE MOTRONIC M 2.10 ELECTRONIC INJECTION AND IGNITION SYSTEM

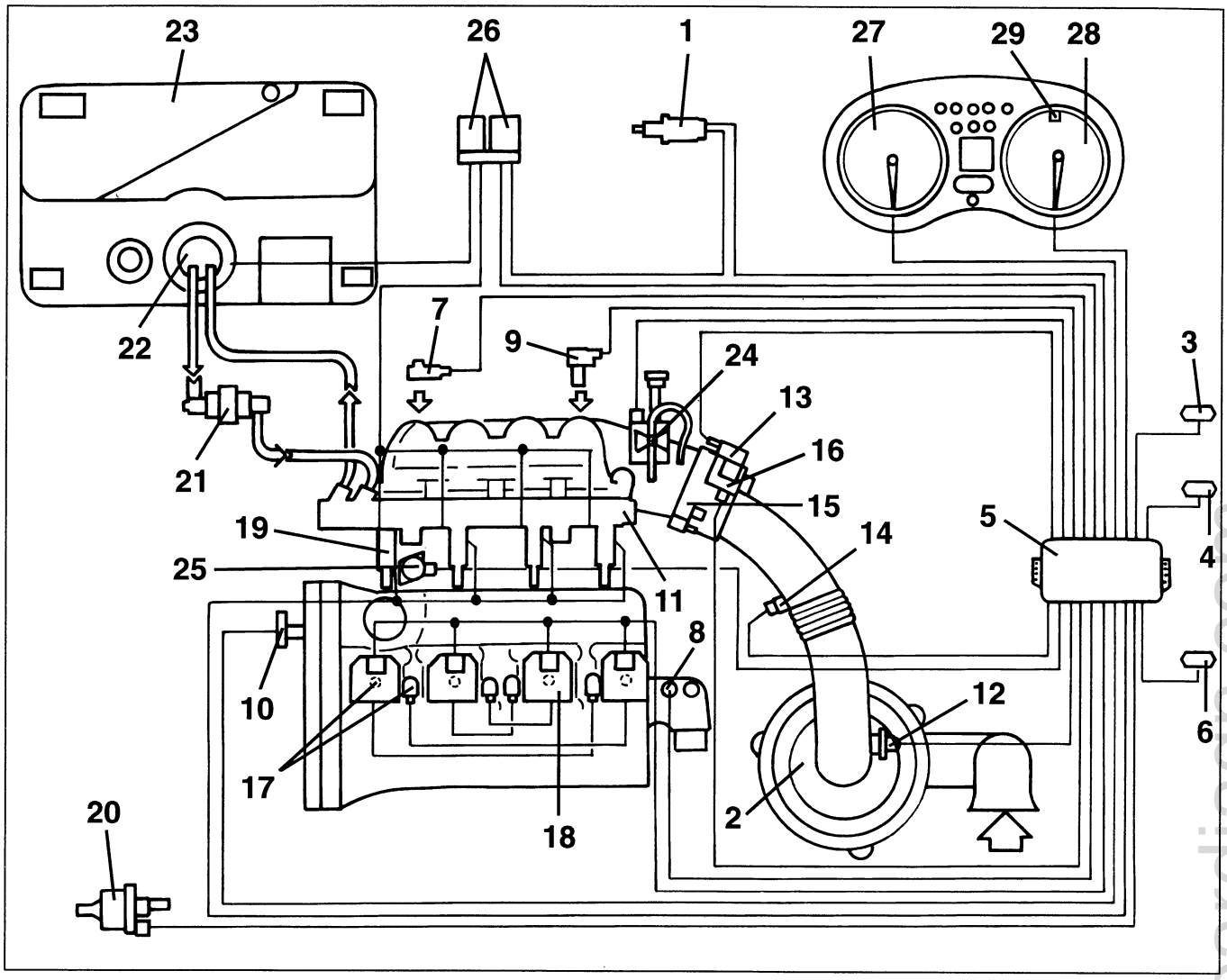

1. Lambda sensor
2. Air cleaner
3. Climate control system connector
4. Diagnosis socket (Alfa Romeo Tester)
5. Injection - ignition control unit
6. Alfa Romeo CODE control unit connector
7. Pinging sensor
8. Coolant temperature sensor (NTC)
9. Rpm and timing sensor
10. Timing sensor
11. Fuel pressure regulator
12. Air-flow meter
13. Throttle potentiometer
14. Intake air temperature sensor (NTC)
15. Throttle body
16. Constant idle speed actuator
17. Spark plugs
18. Ignition coils
19. Electroinjectors
20. Fuel vapour solenoid valve
21. Fuel filter
22. Electric fuel pump
23. Fuel tank
24. E.G.R. modulation solenoid valve
25. Timing variator
26. Set of relays
27. Rev counter
28. Speedometer
29. "Check engine" warning light

cardiagn.com

FUNCTIONAL LAYOUT OF MOTRONIC M 2.10.3 INJECTION - IGNITION SYSTEM

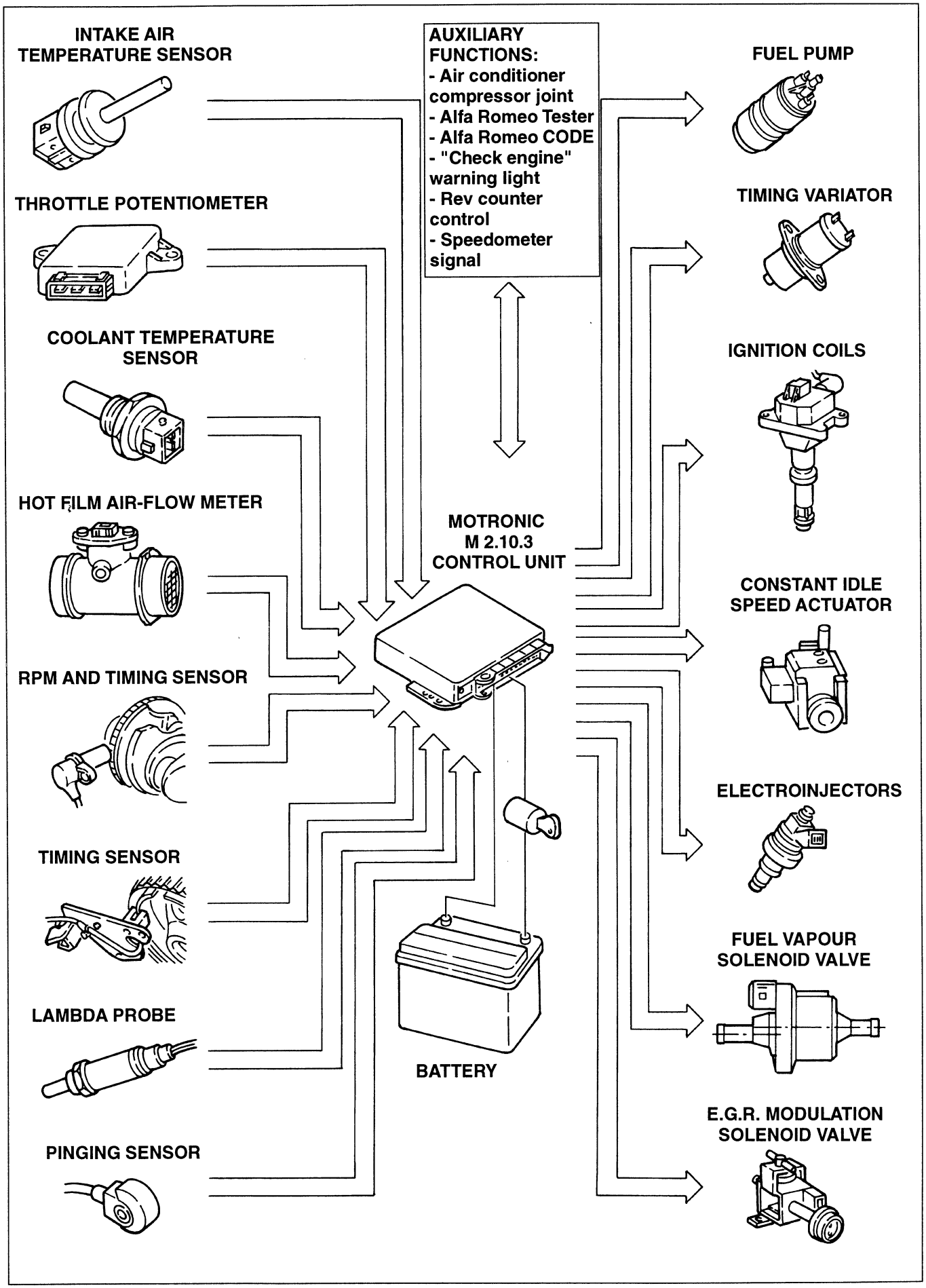

cardiagn.com

GENERAL DESCRIPTION

An electronic control system supervises and regulates all the parameters of the engine, optimising performance and consumption levels through response in real time to the different operating conditions.
This is the M 2.10.4 version of the proven and reliable BOSCH MOTRONIC system.
Compared with the previous versions this new M 2.10.4 system adopts a control unit - with 55 pins - with advanced design and production technology, it also possesses many possibilities for inserting auxiliary functions engine cooling fan). Owing to the use of new sensors and updated programmes the system also makes it possible to achieve considerable improvements in terms of consumption, emission levels and vehicle handling.
Another feature of this system is self-adaptation, namely the capability of detecting the changes that take place in the engine and compensate them, according to functions which mainly correct:
- mixture titration;
- carburetion parameters according to the command of the evaporative solenoid valve;
- the adaptation plan for idle speed control.

FUNCTIONS OF THE SYSTEM

Sequential and timed injection (S.E.F.I.)

With this control unit injection is sequential and timed for each cylinder: the injection instant (delivery of fuel into the intake manifolds actuated through the opening of the injectors) is not simultaneous for all the cylinders, but takes place for each cylinder in correspondence with the optimum point of injection, calculated by the control unit according to special maps according to the load, speed and temperature of the engine.

Static ignition

An ignition system has been adopted with "static distribution" (with semi-conductors, without distributor). This solution makes it possible to eliminate rotary components; in addition, it does not produce external sparks thus reducing the risk of interferences; lastly it reduces the number of high voltage cables and connectors.
Static ignition takes place through four coils, according to the logic known as "lost spark".
Each of the four coils supplies the spark plug of the cylinder below and simultaneously that of the cylinder paired cylinder but in the same position (central with central, side with side).
NOTE: this way it is impossible to invert the spark plug cables during servicing operations.
This solution exploits the different environment conditions existing contemporaneously in a pair of cylinders: when one of the cylinders approaches the bursting stroke, with a mixture of air and fuel, the spark is useful, whereas for the corresponding cylinder which is at the end of the exhaust stroke in the presence of exhaust gas, the spark is lost.
This T.SPARK - 16 valve engine requires the adoption of two spark plugs of different size: a "central" larger one and a smaller "side" one.

Metering the air flow rate

The air flow metering system has been newly designed and it is of the "heated film" type.
Outside the air-flow meter looks like a part of duct between the intake manifold and the air cleaner.
Inside the air-flow meter there is an electronic circuit and a plate that is crossed by air which passes into the duct. The film plate is kept at a constant temperature (appr. 120°C above the temperature of the incoming air) by a heating resistance placed in contact with it.
The mass of air flowing through the duct tends to withdraw heat from the plate; therefore, to keep its temperature constant, a certain current needs to flow through the heating resistance: this current, suitably measured, is proportionate with the mass of flowing air.
N.B. This air flow meter measures directly the mass of air (and not the volume as in the previous versions with "floating port"), thereby eliminating problems of temperature, altitude, pressure, etc.
This air flow meter does not incorporate the intaken air temperature sensor which is separate, to be found just upstream of the air flow meter itself.

cardiagn.com

Cylinder detection

Following the adoption of the sequential and timed injection system, a timing sensor has been introduced (cam angle sensor): this makes it possible to detect which cylinder is in the bursting stroke when the engine is started, in order to be able to start the correct injection sequence.
The sensor is formed of a Hall-effect device by which the voltage signal sent to the control unit "lowers" suddenly when the hollow machined on the camshaft pulley passes in front of the actual sensor; therefore a signal is sent every two turns of the crankshaft. Conversely, the rpm sensor sends a reference signal each turn of the engine and each subsequent tooth of the phonic wheel informs the control unit of an increase in the angular position of the crankshaft, so that the correct injection and ignition are sent to the appropriate cylinder.

Fuel pump

The complex control logic of the fuel pump carried out by the control unit (chiefly based on the rpm signal) immediately cuts off the supply to the engine as soon as the engine stops.
Moreover, the pump will not operate with the key engaged and the engine not running.
This logic is integrated - in order to further higher the standards of safety - by the **inertial switch** device: this is an electromechanical switch which, in the event of heavy shocks, opens to cut off the circuit that takes the earth to the fuel pump, which stops instantaneously.
This device is particularly important as an integration of the safety guaranteed by the logic of the control unit, especially if the car is hit from behind or in the case of other accidents which do not cause the engine to stop immediately.

Timing variator

This T. SPARK 16 valve engine is fitted with an electromechanical-hydraulic timing variator which is connected to the camshaft and controls and adjusts the intake timing (advance) so that timing that offers the best performance levels is obtained.
This mechanism is activated by the control unit only after exceeding a determinate engine rpm and load so that correct operation of the engine at low speed is not adversely affected.

Exhaust gas recirculation (only for certain cars)

NOx (nitric oxide) is generated at high temperatures in the combustion chamber.
To reduce these emissions an E.G.R. (Exhaust Gas Recirculation) system has been adopted which, by recirculating part of the exhaust gas, lowers the temperature in the actual chamber, thereby also the Nox.
Part of the exhaust gas is withdrawn by the special E.G.R. valve and then re-admitted to the intake box where it is mixed with the intake air and recycled in the engine. The E.G.R. valve is modulated by a control solenoid valve controlled by the control unit and as a result of the type of control, in addition to reducing Nox it is also possible to optimise consumption.
The percentage of exhaust gas to be sent back to the engine is determined by the control unit taking account of a specific characteristic curve which depends on the load, speed and temperature of the engine.

OPERATING LOGIC

- Identification of the "operating point":
the "point of operation of the engine" is located mainly through two sensors: the rpm sensor informs the control unit of the speed of rotation of the engine; the air flow meter supplies the value of the mass of air actually entering the cylinders, defining the instantaneous volumetric yield of the engine.

- Adjustment of injection times (quantity of fuel):
the control unit controls the injectors very quickly and precisely, calculating the opening time on the basis of engine load (rpm and air flow), also taking into account the battery voltage and the temperature of the engine.

cardiagn.com

- Ignition adjustment (calculation of advances):
the control unit calculates the advance on the basis of the engine load (rpm and air flow); the value is also corrected according to the temperature of the intaken air and that of the engine. Ignition is "static" as described previously.

- Cold starting control:
during cold starts the control unit uses special advance values and injection times in order to reach the required load more rapidly.

- Control of enrichment during acceleration:
upon the need for acceleration, the control unit increases injection in order to reach the required load as quickly as possible. This function takes place through the potentiometer located on the throttle which instantaneously informs the control unit of the need to accelerate.

- Fuel cut-off during deceleration:
with the throttle closed and an engine speed above a certain threshold, the control unit de-activates fuel injection; this way the rpms decrease rapidly towards idle speed reducing the speed and fuel consumption. The cutoff threshold values varies according to the temperature of the engine and the speed of the car.

- Control of idle speed:
the adjustment of the engine idle speed is carried out through the special actuator, fitted directly on the throttle body, which acts on the throttle by-pass.
This device acts as a regulator for cutting in the various services (e.g. conditioner compressor): in fact, when the throttle is closed, this valve adjusts the by-pass gap compensating the load required by the services in order to ensure that idle speed is as constant as possible.
The system also controls the cutting in of the radiator cooling fan, if necessary, compensating the engine idling speed.

- Maximum Rpm limiting:
above a certain threshold the control unit automatically stops the injection of fuel preventing the engine from "over-revving".

- Combustion control -lambda probe-:
the oxygen probe (or "lambda" probe) informs the control unit of the amount of oxygen at the exhaust, and therefore the correct air-fuel metering.
The optimum mixture is obtained when the lambda coefficient = 1 (optimum stoichiometric mixture).
The electric signal sent by the probe to the control unit changes abruptly when the composition of the mixture departs from lambda = 1. When the mixture is "lean" the control unit increases the amount of fuel, reducing it when the mixture is "rich": this way the engine operates as far as possible around the ideal lambda rating.
The probe is heated by an electrical resistance so that it quickly reaches the correct operating temperature (appr. 300°C).
Through this probe it is also possible to adjust engine carburetion precisely. Among other items, this makes it possible to meet emission limit regulations.

- Timing variator control:
the electromechanical-hydraulic timing variator, connected to the camshaft, controls and adjusts intake timing depending on the engine load and rpm. This device is activated by the control unit over idle speed (over 1,600 rpm and with load above 30%).

- Pinging control:
the control unit is informed about pinging or "knocking" through the pinging sensor and it corrects ignition advance delaying it accordingly.

- Fuel vapour recovery:
the fuel vapours collected from the various points of the supply circuit in a special active carbon canister are ducted to the engine where they are burnt: this takes place through a solenoid valve which is opened by the control unit only when the engine is in a condition that allows correct combustion without adversely affecting the operation of the engine: in fact the control unit compensates this amount of fuel by reducing delivery to the injectors.

cardiagn.com

- E.G.R. control valve (only for certain cars):
the percentage of exhaust gas to be sent back to the engine is determined by the control unit taking account of a specific characteristic curve which depends on the engine load and speed: recirculation is operated only when the engine speed is between 2500 and 4000 rpm, also depending on the temperature of the engine (recirculation percentage higher with high temperatures).

- Connection with the conditioner compressor:
the control unit is connected with the air conditioning system and controls the cutting in of the compressor and fan according to the operating conditions of air conditioning system.

- Connection with the radiator cooling fan:
in this version the cooling fan control thermal contact on the radiator has been eliminated.
The fan command for the first and second speed is supplied by the injection control unit depending on the temperature measured by the coolant fluid temperature sensor of the MOTRONIC system.

- Connection with the Alfa Romeo Code system:
as soon as the Motronic control unit receives the "key at MARCIA" signal, it "asks" the Alfa Romeo CODE control unit for consent to start the engine; this consent only takes place if the Alfa Romeo CODE control unit recognises the code of the key engaged in the ignition switch as correct. This conversation between the two control units takes place on the special serial line that connects them.

- Self-diagnosis:
The control unit possesses a diagnosis system which continuously monitors the signals leading from the various sensors checking their plausibility and comparing them with the permissible limits: if these limits are exceeded, the system detects a fault and turns on the warning light on the instrument cluster.
The warning light turns on when the engine is started to indicate the initial test of the whole system (appr. 4 seconds), then it goes off if no errors are memorised: otherwise it stays on.
For certain parameters, the control unit replaces the abnormal values with suitable mean ones to enable the car to "limp" to a point of the Service Network.
These are known as "recovery" values, they depend on the other correct signals and are defined individually by the control unit operating logic.
The system also makes it possible to quickly and effectively locate any faults connecting to the Alfa Romeo Tester (using the special cartridge MA15-A), through which all the errors memorised can be displayed.
It is also possible to check the operating parameters recorded by the control unit and command the turning on of the single actuators to check whether they are working properly.

cardiagn.com

COMPONENTS OF THE MOTRONIC M 2.10.4 INJECTION-IGNITION SYSTEM

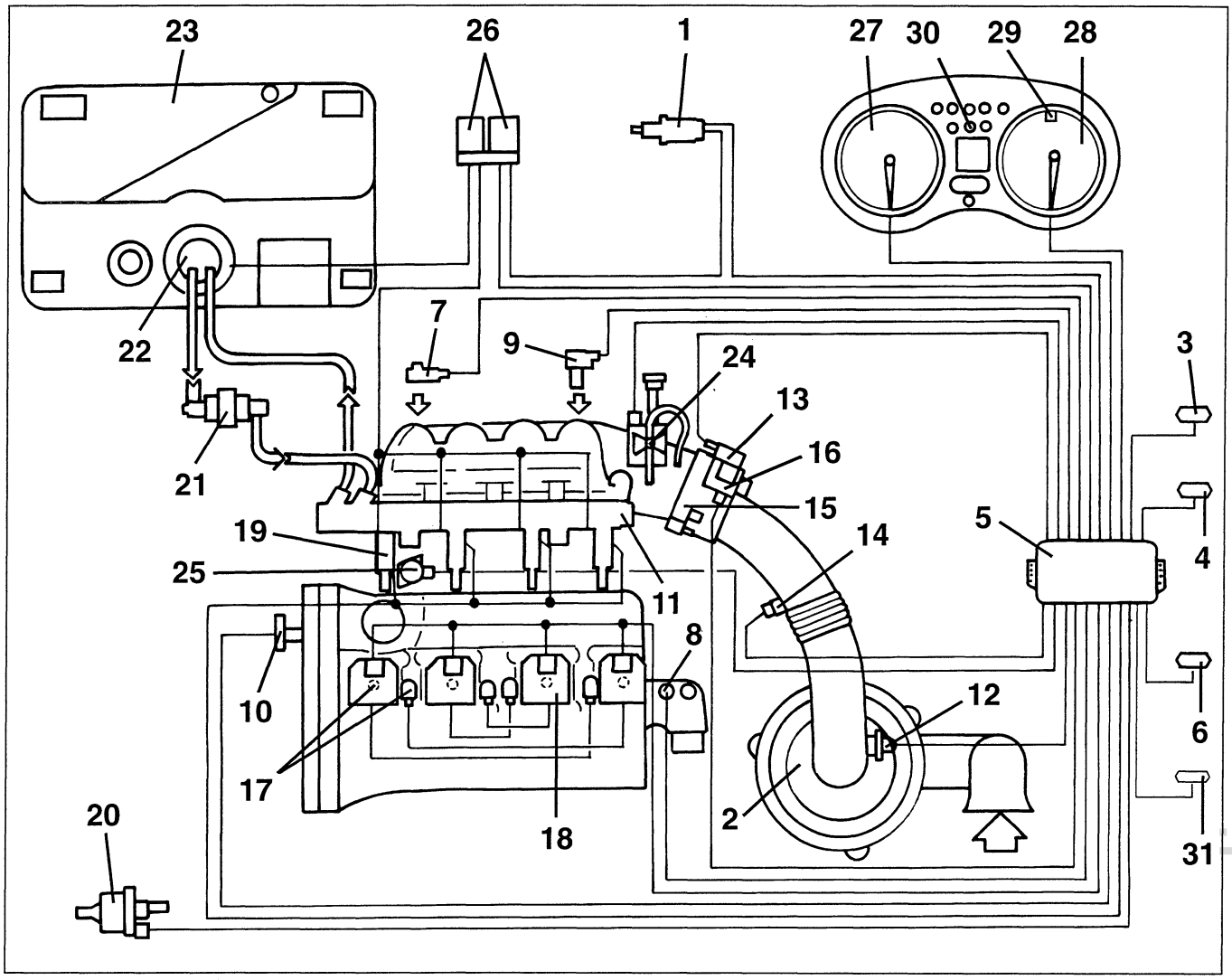

1. Lambda sensor
2. Air cleaner
3. Climate control system connector
4. Diagnosis socket (Alfa Romeo Tester)
5. Injection - ignition control unit
6. Alfa Romeo CODE control unit connector
7. Pinging sensor
8. Coolant temperature sensor (NTC)
9. Rpm and timing sensor
10. Timing sensor
11. Fuel pressure regulator
12. Air-flow meter
13. Throttle potentiometer
14. Intake air temperature sensor (NTC)
15. Throttle body
16. Constant idle speed actuator
17. Spark plugs
18. Ignition coils
19. Electroinjectors
20. Fuel vapour solenoid valve
21. Fuel filter
22. Electric fuel pump
23. Fuel tank
24. E.G.R. modulation solenoid valve (only for certain cars)
25. Timing variator
26. Set of relays
27. Rev counter
28. Speedometer
29. "Check engine" warning light
30. Alfa Romeo CODE warning light
31. Connector coupling engine cooling system

cardiagn.com

FUNCTIONAL LAYOUT OF THE MOTRONIC M 2.10.4 INJECTION-IGNITION SYSTEM

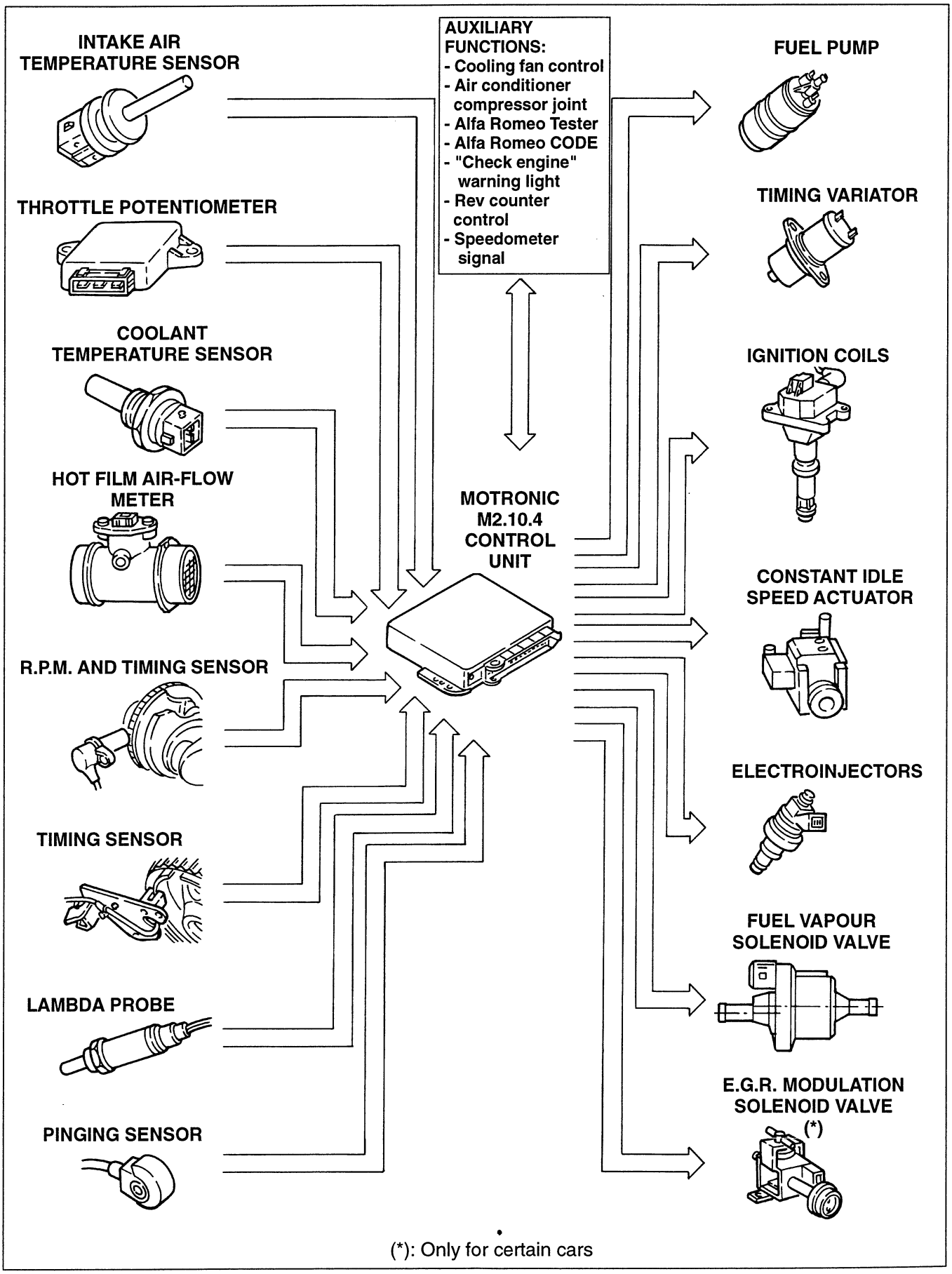

(*): Only for certain cars

cardiagn.com

DESCRIPTION OF SYSTEM

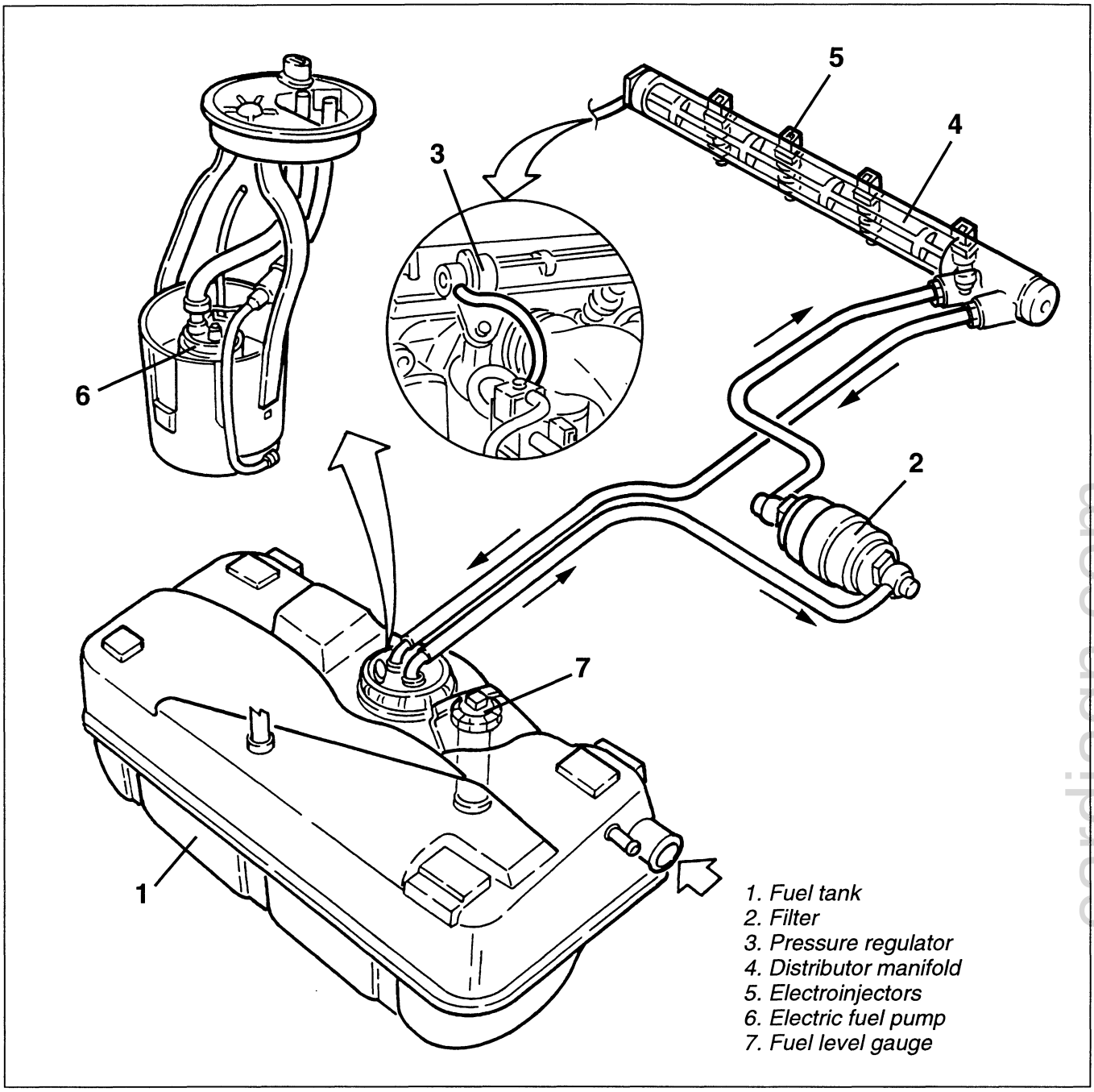

The fuel supply circuit comprises an electric fuel pump (6) located in the fuel tank (1) which sends the fuel under pressure through a special tube to the filter (2). From here the fuel is sent to the distributor manifold (4) which distributes it to the electroinjectors (5).
The fuel in excess returns to the fuel tank via a special tube, through the pressure regulator (3) fitted directly on the distributor manifold and controlled by the vacuum withdrawn from the intake box.
The amount of fuel injected depends solely on the inejection time which is controlled by the control unit.

The different sections of the fuel pipes are connected by special connectors (for their disconnection see specific paragraph).
The fuel supply system is fitted with an inertial switch which is triggered in the event of a crash, cutting off the connection to earth of the fuel pump thereby also the injection system supply.

Notes on serviceable fuels:
correct operation of the engine requires the use of unleaded fuels (95 R.O.N.) as the presence of lead would quickly bring about consumption of the catalytic converter at the exhaust.

cardiagn.com

WARNINGS

Before doing any work on components of the fuel supply system, in order to prevent any dangerous leaks, proceed as follows:
- Disconnect the fuel pump supply relay (1).

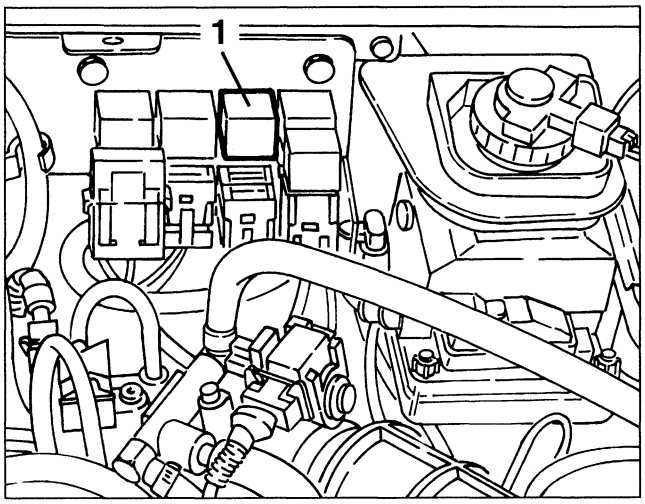

- Run the engine until it stops.

FUEL PIPE CONNECTION FITTINGS

Cleaning for disconnection

Preferably use one of the following systems described in order of effectiveness.
a) Jet of warm water (max. 50°C) on the fitting and drying with jets of compressed air to prevent residual water in the interstices getting into the pipe after disconnection.
b) Jet of cold water and drying with compressed air.
c) Jet of hot water with neutral soap.
d) Jet of cold water with neutral soap.

Never use solvents and/or materials that are not compatible with the pipes in general and, for the fitting in particular, not compatible with nylon and acetalic resin.

Disconnection operations

When installed, the fitting tends to act as follows for a certain length of time:
- pincer "A" grips the tang with its steel teeth;
if they are in plastic the teeth might mark the tang slightly without adversely affecting tightness.
- the seals (O'Rings) "B" tend to stick to the surface of the tang in time whether it is of plastic or metal, as a result of this the coupling seems to be seized and impossible to release by only pressing the fins "E" and pulling the coupling.

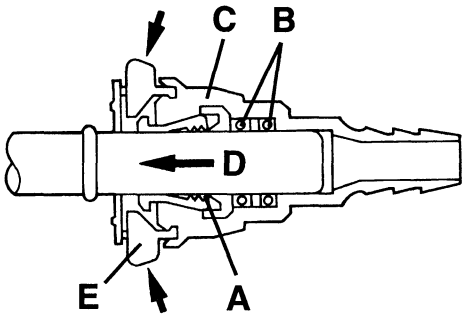

Therefore, to disconnect proceed as follows:
- Turn 1/4 - 1/2 of a turn to right and left several times (at least five) body "C" of the fitting in relation to the tang in order to eliminate friction of the seals on the tang and at the same time push the fitting towards the arrow "D" to loosen the grip of the pincers.
- Press with the fingers on the release buttons.
- Pull the fitting to disconnect it.
If disconnecting is still difficult, repeat these operations firstly checking that the pipe fitting is clean and that there is no mud or dirt in the interstices hindering the movement of the release mechanisms.

NOTE: Do not use pliers, screwdrivers, etc.. for disconnecting.
If the coupling has not been tampered with and the above operations are correctly carried out, no tools are necessary.

FUEL DISTRIBUTOR MANIFOLD

This device is die-cast and incorporates the pressure regulator and the injectors fastened on the manifold itself by special catches.
The fuel returns to the tank through a pipe contained inside the manifold connected to the fuel pressure regulator.

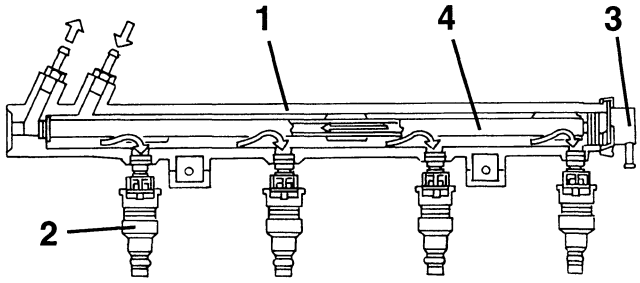

1. Fuel distributor manifold
2. Electroinjectors
3. Pressure regulator
4. Excess fuel return pipe

NOTE: Never wash the fuel distributor manifold with aggressive fluids, this operation may only be carried out on the outside using a brush. Otherwise, damage may occur to the seals (O-rings) and to the return circuit plastic piping.

cardiagn.com

REMOVAL/REFITTING

- Disconnect the battery (-) terminal.
1. Disconnect the electrical connection from the timing variator.
2. Disconnect the electrical connections from the electroinjectors and move the wiring to one side.
3. Disconnect the vacuum takeoff pipe from the pressure regulator.
4. Disconnect the fuel return and delivery pipes from the distributor manifold.

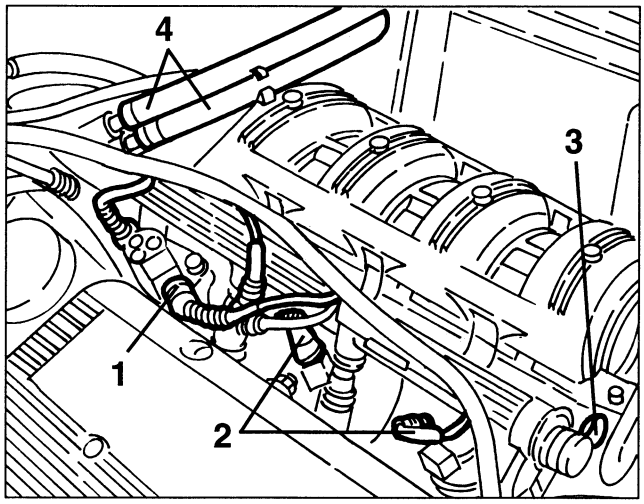

1. Slacken the two fastening screws and remove the fuel distributor manifold complete with injectors and pressure regulator and, if necessary, separate them on the bench.

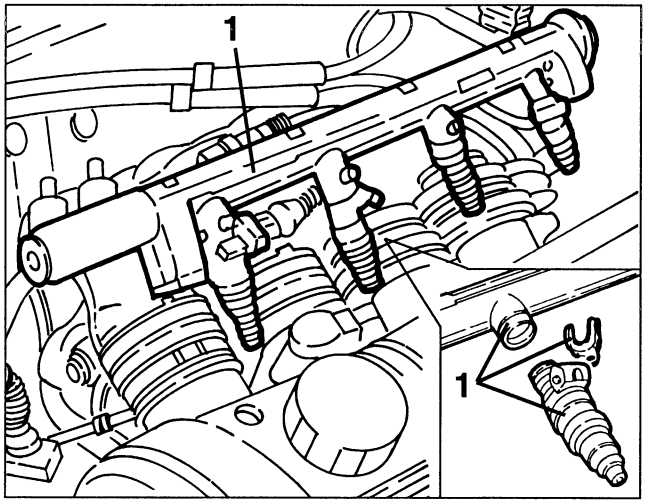

ELECTROINJECTORS

The electroinjectors are installed on a new aluminium distributor manifold which on one side incorporates the pressure regulator.
The injector nozzle is formed so that the jet of fuel atomizes into a 30° cone.
The injectors are locked by the fuel distributor which presses them into their housings machined on the intake ducts.
The injectors are also anchored to the fuel distributor by "safety catches" and sealed by two O-Rings.
The electroinjectors have the task of metering the amount of fuel needed by the engine.
They are "ON-OFF" devices i.e. they only have two possible conditions, either open or closed.
They will let the fuel pass when they are "open" and prevent it from being delivered when they are "closed".
They basically comprise a nozzle controlled by an electromagnet and by a return spring.
In the rest position, the needle, which forms one piece with the core, is pushed by the spring onto the electroinjector nose to close the hole and ensure that unwanted fuel is unable to come out.
As soon as the winding is energized, the core is attracted, it compresses the spring opening the nozzle hole, thereby allowing the fuel to flow out.
Considering the physical characteristics of the fuel (viscosity, density) and the pressure difference (pressure regulator) constant, the amount of fuel injected depends on the injector opening time only.
The winding energizing time is normally called the "injection time".

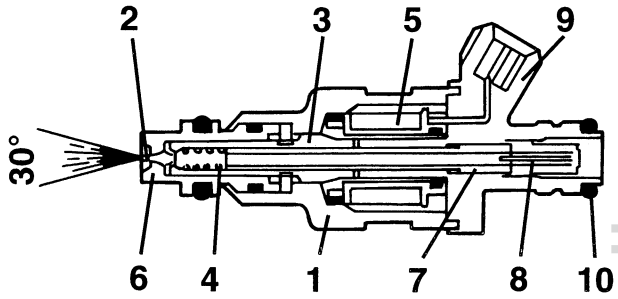

1. Injector body
2. Needle
3. Magnetic core
4. Helical spring
5. Winding
6. Injector nose
7. Adjustable pressure plate
8. Filter
9. Electrical connection
10. Seal rings

CHECKING FOR CORRECT OPENING OF ELECTROINJECTORS

- Measure the quantity of CO at the exhaust.
- Disconnect the electroinjector connectors one by one; each time measure for a reduction of the CO quantity at the exhaust and check that this value remains constant at each check.
- If not, locate and replace the faulty electroinjector; in any case a visual index of the efficiency of the electroinjectors is given by the spark plug electrodes:
• a mixture which is too rich corresponds to a black colour.
• a mixture which is too lean corresponds to a light colour.

cardiagn.com

CHECKING THE SEALING OF ELECTROINJECTORS

- Remove the electroinjectors complete with fuel distributor manifold, keeping the fuel supply circuit connected.
- Disconnect the electrical connections from the electroinjectors.
- Operate the starter motor and check that there are no leaks of fuel from the electroinjectors; if so replace the faulty injector.

REMOVAL/REFITTING

Proceed as described in the procedure "Fuel distributor manifold - Removal/Refitting".

FUEL PRESSURE REGULATOR

The task of the fuel pressure regulator is to keep the difference between the pressure of the fuel and the pressure in the intake manifold constant.
This way it is possible to meter the amount of fuel solely on the basis of the injector opening time.
The pressure regulator is fitted ddirectly on the fuel distributor manifold.
It is a limiting regulator a diaphragm which regulates the fuel pressure to appr. 3 bar.
When the fuel pressure exceeds the maximum rating, the diaphragm acts on a valve which opens the return pipe, through which the excess fuel is returned to the fuel tank.
A tube connects the regulator spring chamber to the air intake box.
An interdependence is created by this connection between the pressure in the fuel circuit and the pressure in the intake manifold, so that the pressure between the inlet and outlet of the electroinjectors is always the same, when they are open.

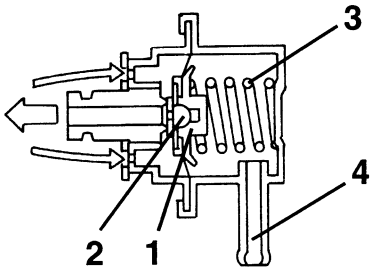

1. *Diaphragm*
2. *Flow valve*
3. *Adjustment spring*
4. *Vacuum takeoff*

REMOVAL/REFITTING

1. Disconnect the vacuum takeoff pipe from the fuel pressure regulator.
2. Remove the catch and withdraw the fuel pressure regulator complete with O-Ring from the fuel distributor manifold.

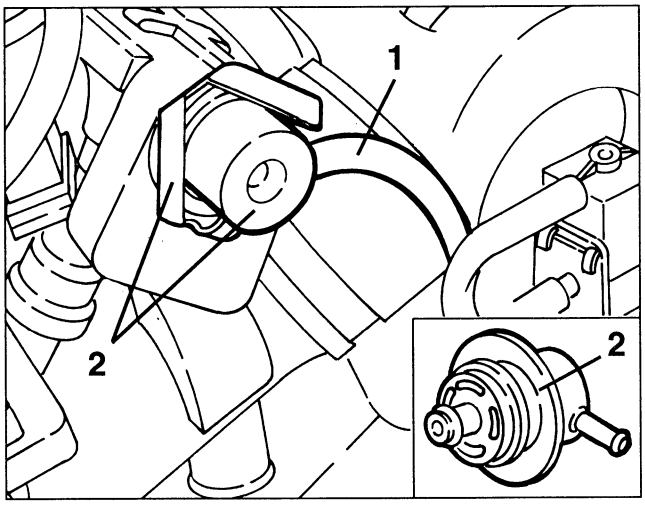

CHECKING THE PRESSURE AND TIGHTNESS OF THE FUEL CIRCUIT

1. Disconnect the fuel delivery pipe from the distributor manifold, then connect a pressure gauge, using a "T" adapter, between the damper and the disconnected pipe.

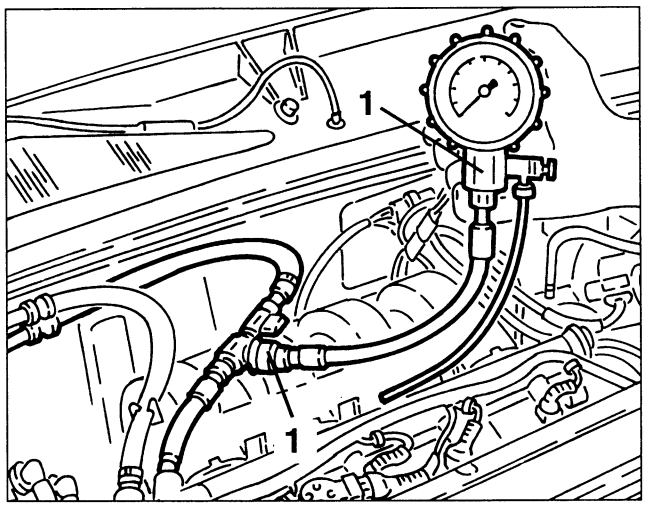

- Disconnect the fuel pressure regulator vacuum takeoff pipe to avoid any irregularities in the rotation speed from causing abnormal readings.
Start the engine and at idle speed check that the fuel pressure is within the specified limits.

Fuel pressure at idle speed
3 bar

cardiagn.com

- Reconnect the vacuum takeoff pipe on the regulator and check that the fuel pressure falls by ~ **0.5 bar** and then rises again when the throttle valve opens.
If this fails to occur, look for any leaks in the vacuum takeoff pipe.

- Keeping the vacuum takeoff pipe connected to the regulator and with the engine running at idle speed, choke the distributor manifold outlet pipe noting the increase in pressure up to ~ **4 bar** (do not allow the pressure to exceed this rating).
- If the pressure does not reach this rating and no leaks are detected, check the fuel filter and/or that the pump is working properly.

DESCRIPTION OF THE FUEL VAPOUR RECOVERY SYSTEM

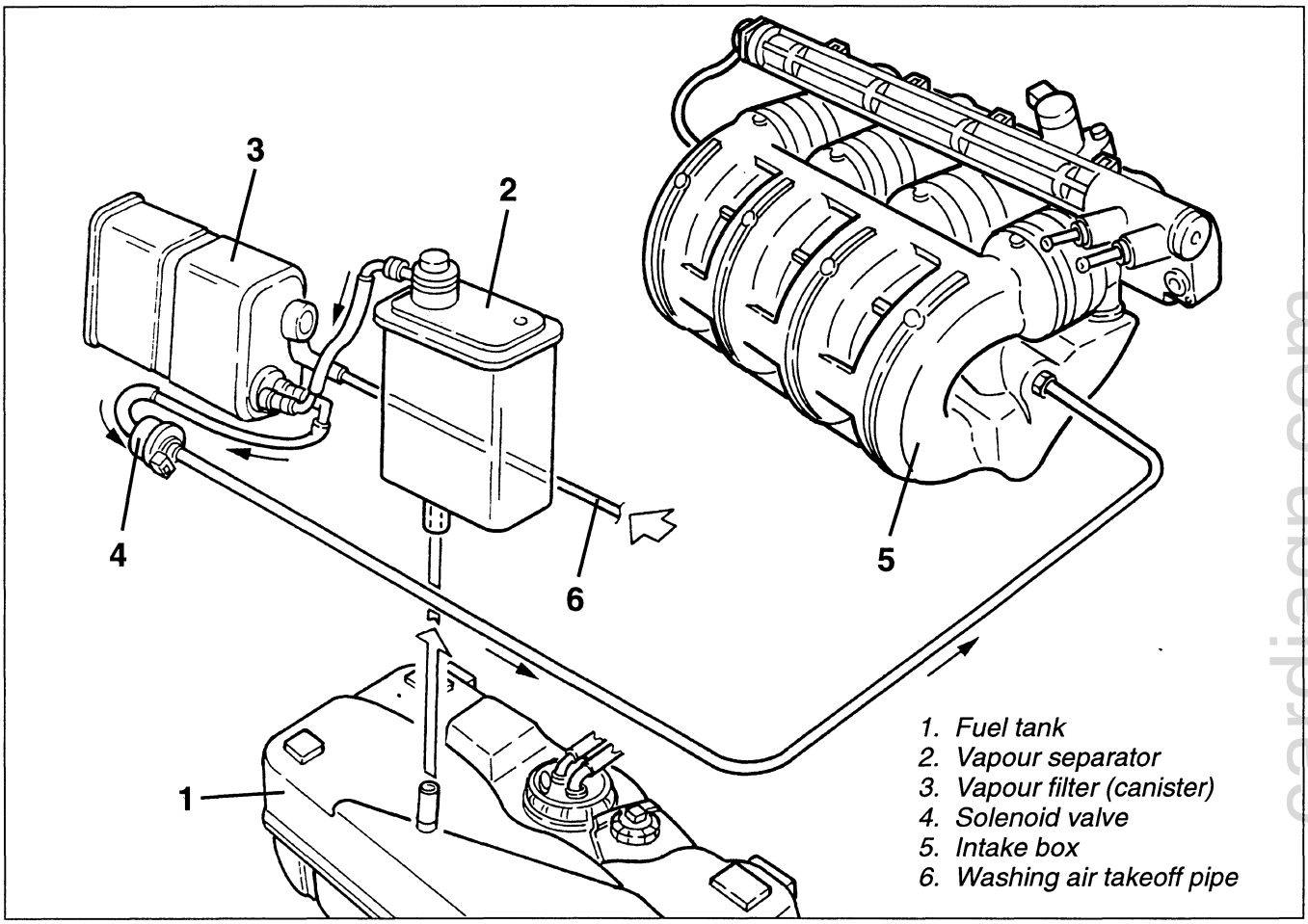

The fuel contained in the tank produces a considerable amount of vapours, which would pollute the environment if released.
The vapour control and recovery system gathers these vapours and burns them in the engine. The vapours leading from the fuel tank (1) through a special pipe reach the vapour separator (2) which due to its special shape allows the condensed fuel to return in droplet form to the fuel tank. The remaining vapours are then sent to the fuel vapour filter canister (3) where they are absorbed and stored by the active carbon contained in the filter.
There is a solenoid valve (4) between the fuel vapour filter and the engine intake; when the solenoid valve is not activated the connection with the intake is closed and the fuel vapours are collected in the canister in the active carbon.

Under certain load conditions the control unit controls the opening of the solenoid valve allowing any fuel vapours in the canister to be withdrawn. This condition remains even if at the exhaust the lambda sensor detects a reduction of oxygen which, due to the presence of too much fuel in the combustion chamber, is signalled to the control unit which delivers less fuel to the injectors so that the engine is always supplied under optimal conditions.
If there is a lack of fuel vapours in the canister, resulting in withdrawing only air, the lambda sensor detects this and signals the control unit of an increase in the oxygen.
In this case the control unit closes the solenoid valve thus preventing the connection of the canister with the intake box, thereby eliminating the excess air.

cardiagn.com

FUEL VAPOUR SEPARATOR

This is located in the luggage compartment, and its task is to limit the amount of fuel vapours reaching the canister, condensing part of them due to its shape. It is formed of a plastic container with two connections: a lower one for the inlet of fuel vapours and the return of condensed fuel to the tank and an upper one for sending vapours to the canister.

REMOVAL/REFITTING

- Remove the spare wheel and the luggage compartment front panel.
1. Disconnect the fuel vapour inlet pipe from the separator.
2. Disconnect the fuel vapour delivery pipe to the canister from the separator.
3. Slacken the two fastening screws and remove the fuel vapour separator.

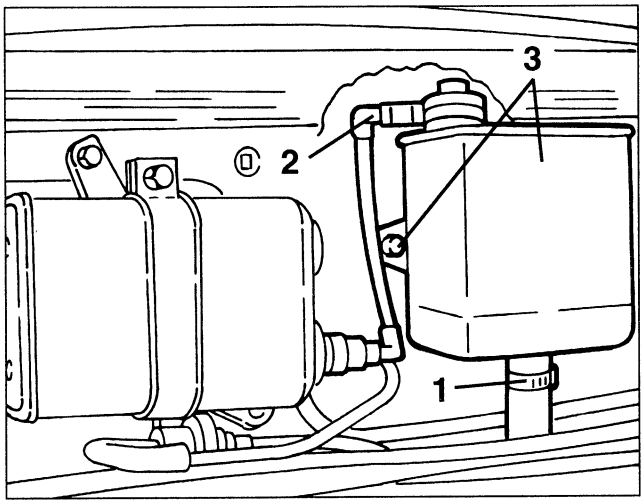

FUEL VAPOUR FILTER (CANISTER)

The filtering element is formed of active carbons enclosed in a plastic container. Their purpose is to absorb the fuel vapours leading from the separator.
A one-way valve, to which a special pipe is connected, admits outside air when the vapours are withdrawn to wash the active carbons.

REMOVAL/REFITTING

- Remove the spare wheel and the luggage compartment front panel.
1. Disconnect the fuel vapour inlet and outlet pipes from the canister.
2. Disconnect the outside air inlet pipe from the one-way valve on the canister.
3. Slacken the fastening clamp screw and remove the canister.

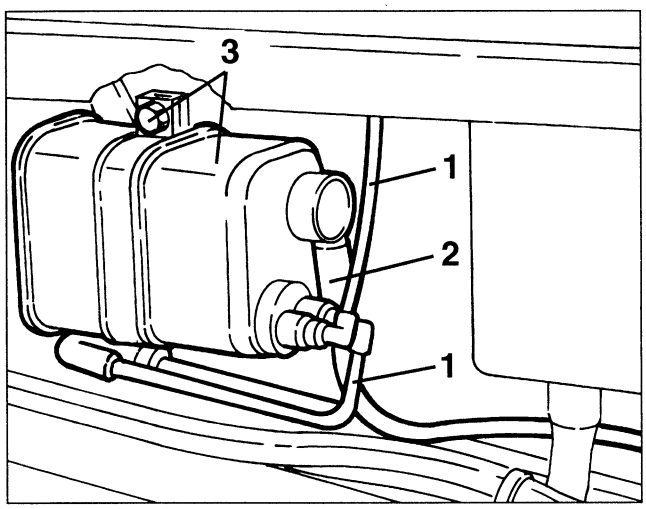

FUEL VAPOUR SOLENOID VALVE

The reason for the use of this valve, controlled by the electronic control unit, is to send the vapours stored in the canister to the engine intake.
This valve enclosed in a casing, comprises a mobile part or shutter, restrained to a plate spring; the fixed part is formed of a metal cylinder, perforated inside, on which the coil is wound.

REMOVAL/REFITTING

- Remove the spare wheel and the luggage compartment front panel.
- Disconnect the battery (-) terminal.
- Remove the canister without disconnecting it from its pipes.
1. Slacken the two fastening screws and remove the canister support bracket complete with solenoid valve.
2. Disconnect the electrical connection and the fuel inlet and outlet pipes, then slacken the fastening clamp screw and remove the solenoid valve.

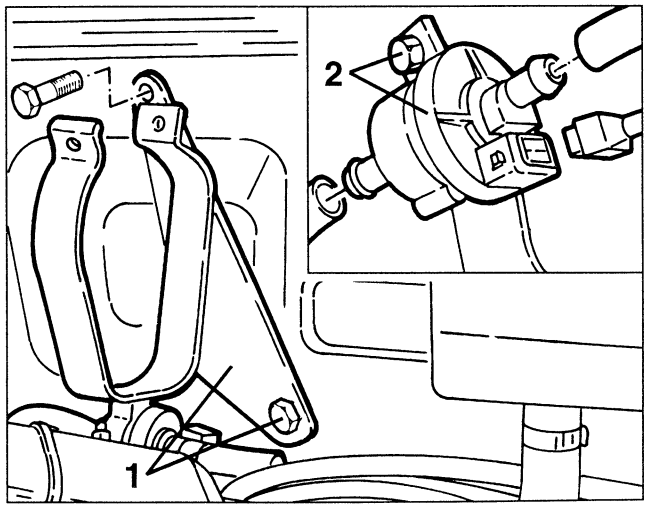

cardiagn.com

AIR SUPPLY AND OIL VAPOUR RECOVERY SYSTEM

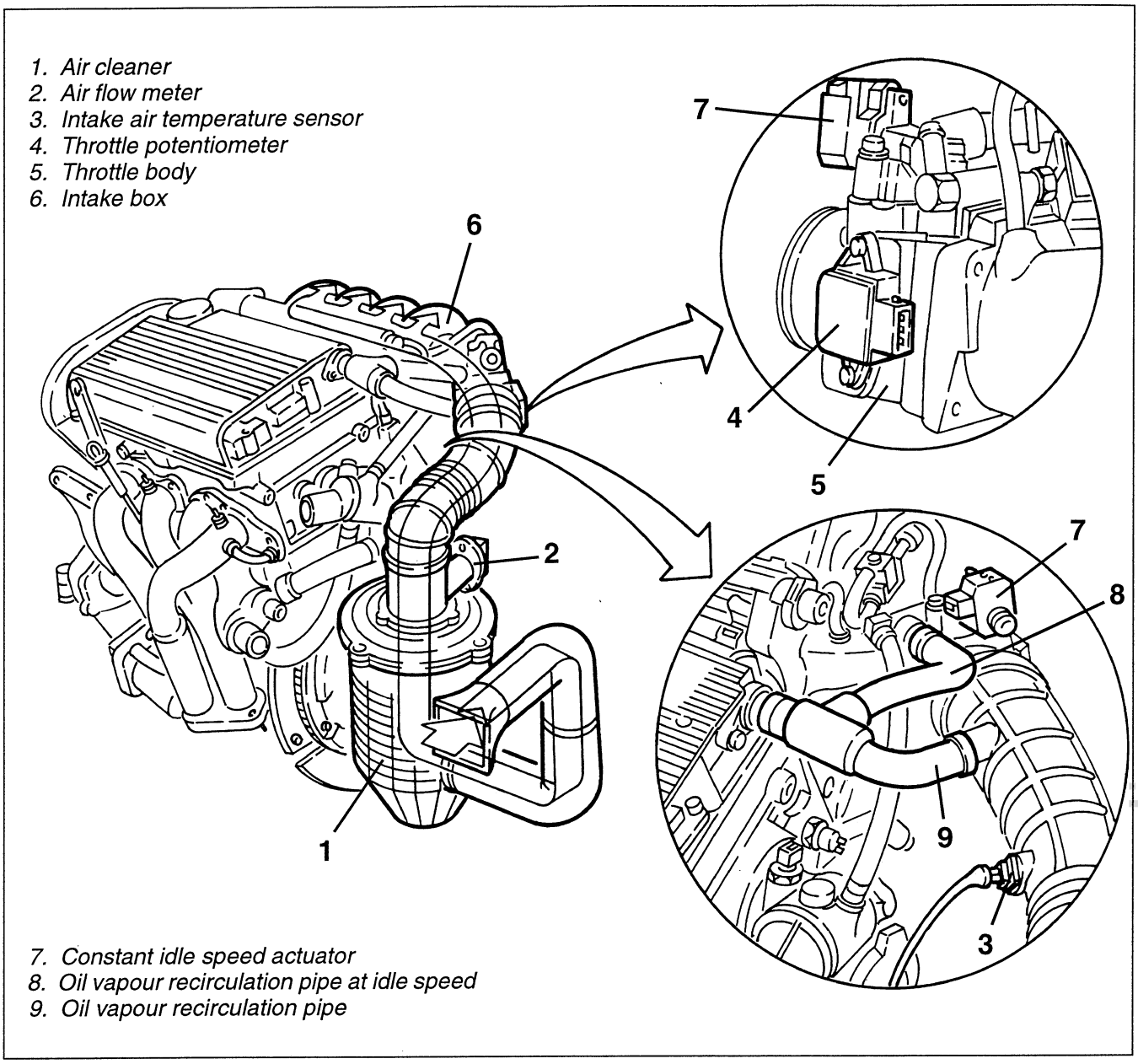

NOTE: From chassis no. ..... the air supply system is fitted with intake resounders (for removing/refitting see specific paragraph).

DESCRIPTION

The air taken in through a dynamic inlet and filtered by a cartridge element (1), passes through the hot film air-flow meter (2) and from this through the corrugated sleeve, which houses the intake air temperature sensor (3), it reaches the throttle body (5). The latter, controlled by the accelerator cable, adjusts the amount of air drawn into the box (6). On one side of the throttle body there is the potentiometer (4) fastened to the pivot pin of the throttle itself which informs the control unit of the position of the throttle. An additional air solenoid valve (7) on the throttle body by- passes the throttle through a special pipe to keep the idle rpm constant during particular operating conditions of the engine. The fuel vapours (see specific paragraph) and the oil vapours flow to the air supply system. The oil vapours are formed when the engine is running and they are collected in the cylinder head from which the condensed oil returns to the crankcase, while the remaining vapours are sent to the intake through two pipes.
When the engine is running at idle speed the oil vapours are ducted to the throttle body through the special pipe (8).
At higher loads, the vapours are sent upstream of the throttle valve through a pipe (9) connected with the corrugated sleeve and then burnt in the engine.

cardiagn.com

CHANGING THE AIR CLEANER CARTRIDGE

- Disconnect the battery (-) terminal.
1. Slacken the fastening clamp and disconnect the corrugated sleeve from the air cleaner cover, then move it to one side.
2. Disconnect the electrical connection from the air-flow meter.

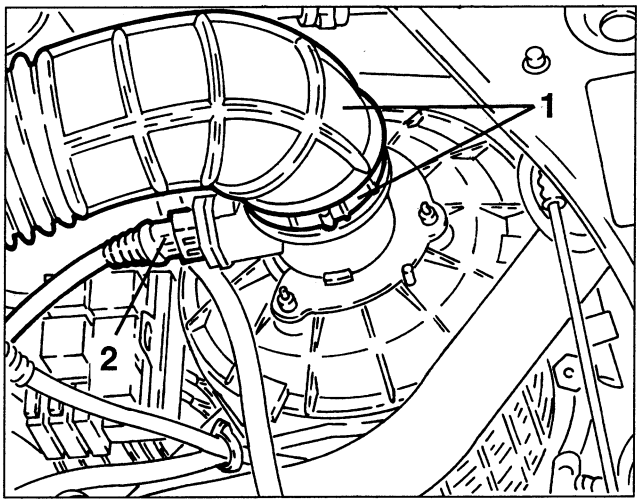

1. Release the catches and remove the air cleaner cover complete with air-flow meter.
2. Remove the filtering element.

WARNING:
Any cleaning operation on the filter can cause damage to it, and might compromise the correct functioning of the engine supply system.
If the filter shows traces of oil, check the whole air circuit for possible leaks.

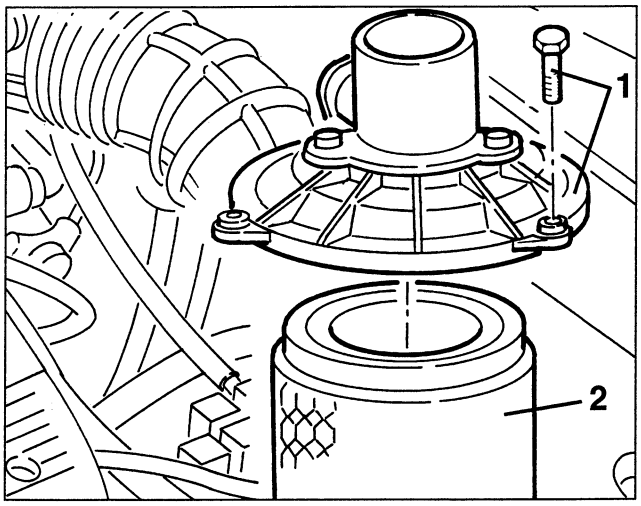

THROTTLE BODY

The throttle body adjusts the amount of air sent to the intake box in relation to the position of the accelerator pedal.

In fact, the accelerator acts on a specific sector of pulley locked on the throttle valve pivot pin.
A coil spring allows the throttle to return to the closed position.
To prevent the formation of ice on the throttle valve which would prevent it from closing, the throttle body is heated by the engine coolant fluid.
The constant idle speed actuator is installed directly on the throttle body.

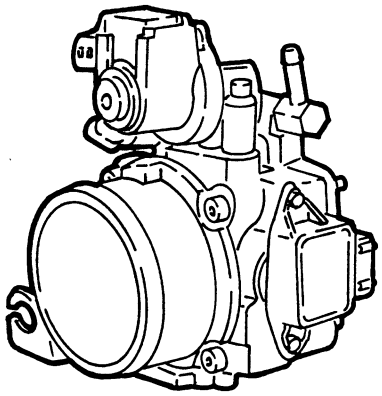

REMOVAL/REFITTING

- Disconnect the battery (-) terminal.
1. Disconnect the oil vapour recirculation pipes from the throttle body and from the corrugated sleeve.
2. Slacken the fastening clamp and disconnect the corrugated sleeve from the throttle body.
3. Disconnect the electrical connection from the constant idle speed actuator.
4. Disconnect the electrical connection from the throttle potentiometer.
5. Disconnect the two engine coolant fluid inlet and outlet pipes from the throttle body.

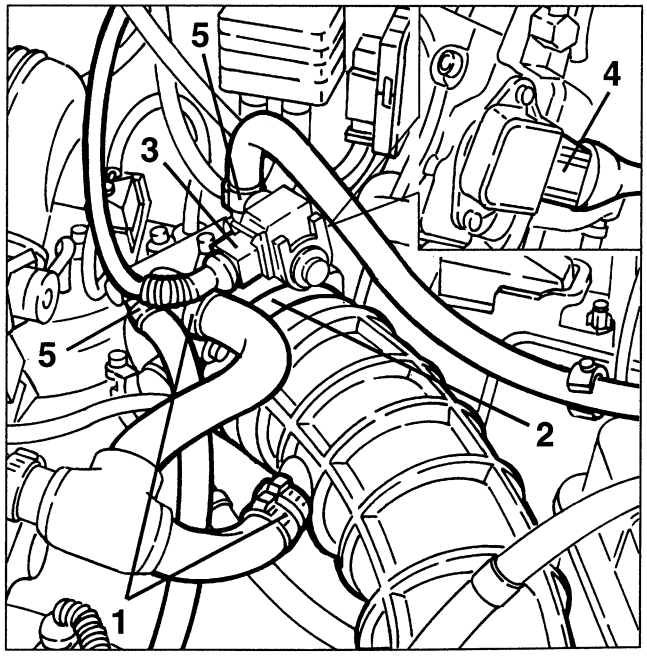

cardiagn.com

1. Disconnect the accelerator cable from the throttle.
- Release the pipes from the fastenings on the bracket under the throttle body.
2. Slacken the four fastening screws and remove the throttle body complete with potentiometer and constant idle speed actuator and separate them on the bench.
- Remove the throttle body seal.

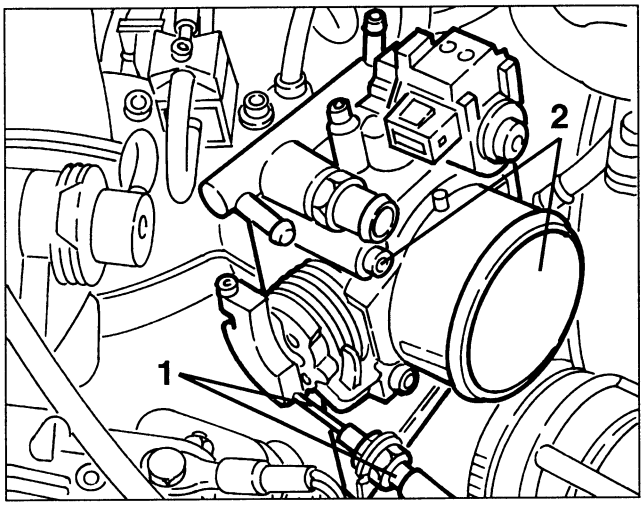

AIR-FLOW METER

The air flow meter is of the "heated film" type.
Its operating principle is based on a heated diaphragm interposed in a measurement duct through which the air admitted to the engine flows.
The hot film diaphragm is kept at a constant temperature (~ 120°C above the temperature of the incoming air) by the heating resistance in contact with it.
The mass of air crossing the measurement duct tends to withdraw heat from the diaphragm, therefore, in order to keep its temperature constant, a certain amount of current must flow through the resistance.
This current is measured by a suitable Wheatstone bridge.
Thus, the current is proportionate with the mass of flowing air.

NOTE: This air-flow meter measures directly the mass of air and not the volume) thereby eliminating problems of temperature, altitude, pressure, etc.

The correct operation of the air flow meter depends on the condition of the air cleaner, which must therefore be checked often.

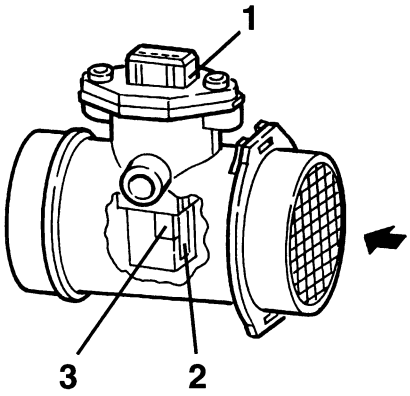

1. Connector
2. Measurement duct
3. Hot film sensor

CARATTERISTICHE TECNICHE	
Current that crosses the diaphragm:	
flow rate (kg/h)	current (A)
0	≤ 0.25
640	≤ 0.80

Characteristic curve of sensor

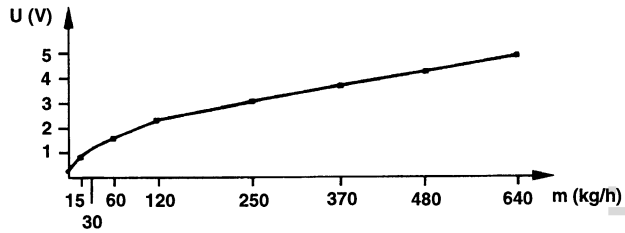

m = flow rate
U = voltage between pins 4 and 2

REMOVAL/REFITTING

1. Disconnect the electrical connection from the intake air temperature sensor.
2. Disconnect the electrical connection from the air-flow meter.
3. Disconnect the oil vapour recirculation pipe from the corrugated sleeve.

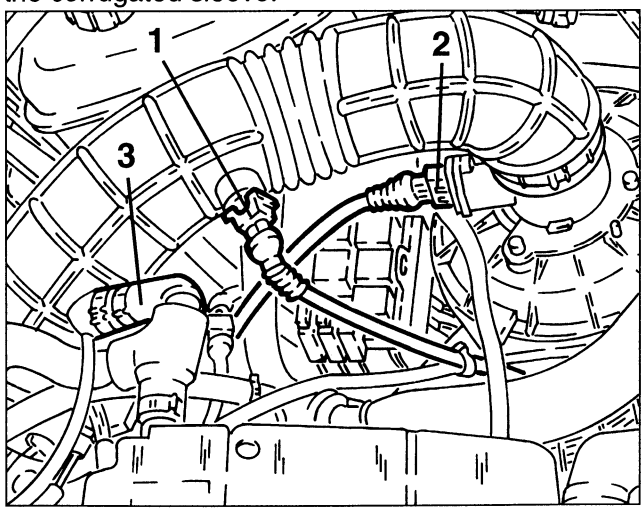

cardiagn.com

1. Slacken the clamp fastening the corrugated sleeve to the throttle body, slacken the air cleaner cover fastening screws, then remove it complete with air-flow meter and separate them on the bench.

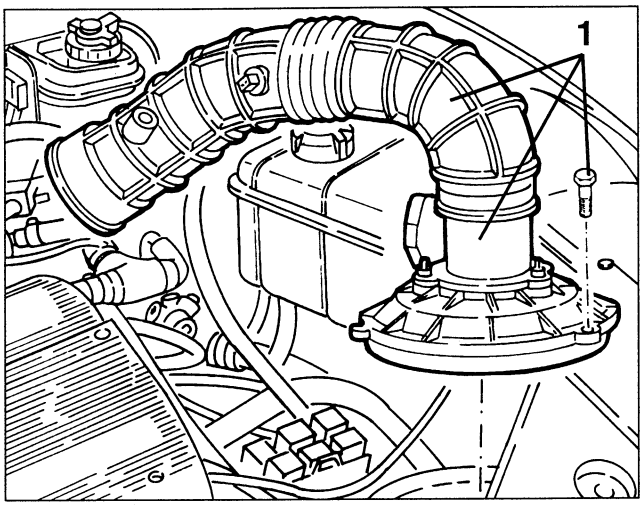

1. If necessary, slacken the two fastening screws and take the air-flow meter off its support.

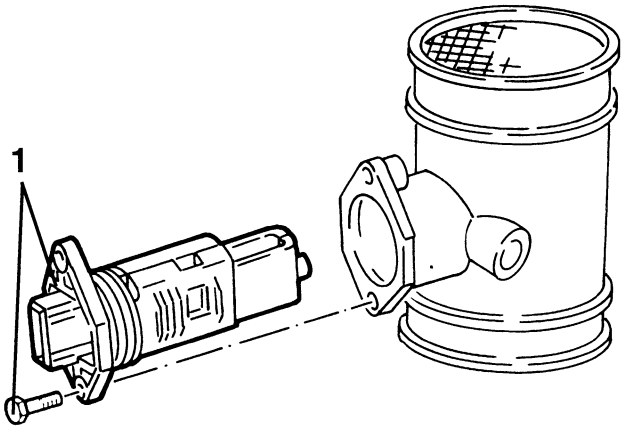

INTAKE AIR TEMPERATURE SENSOR (NTC)

The intake air temperature sensor is located on the air intake corrugated sleeve and measures the temperature of the air through an NTC thermistor with a negative resistance coefficient, i.e. capable of lowering its resistance as the temperature increases.
The electric signal obtained reaches the electronic control unit where it is used to calculate the density of the air.

REMOVAL/REFITTING

- Disconnect the battery (-) terminal.
1. Disconnect the electrical connection from the intake air temperature sensor.
2. Withdraw and remove the intake air temperature sensor from the corrugated sleeve.

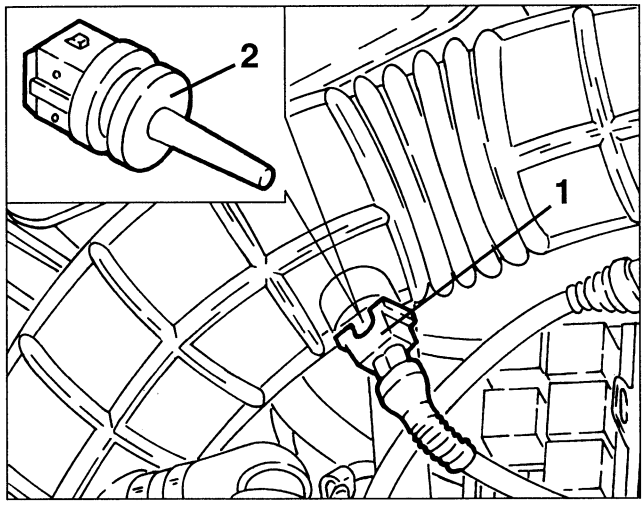

THROTTLE POTENTIOMETER

This is a potentiometer the mobile part of which is controlled directly by the throttle valve shaft.
The potentiometer signals the control unit instantaneously when there is the need for "full power", anticipating the signal from the air-flow meter which records a considerable increase of the flow of air, thereby obtaining a more immediate response.
The potentiometer automatically detects the throttle closed position through a "self-adapting" function.
This eliminates the need for potentiometer adjustment operations and makes it possible to follow in time any wear occurring on the throttle closing position.

REMOVAL/REFITTING

- Disconnect the battery (-) terminal.
1. Disconnect the electrical connection from the throttle potentiometer.
2. Slacken the two fastening screws and remove the throttle potentiometer.

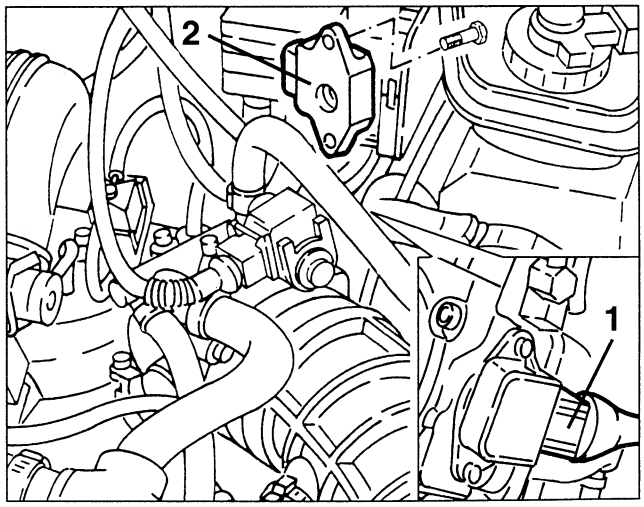

cardiagn.com

AIR INTAKE BOX

REMOVAL/REFITTING

- Set the car on a lift.
- Disconnect the battery (-) terminal.

Proceed as in the first steps of the procedure "Throttle body - Removal/Refitting" up to disconnecting the accelerator cable.

1. Disconnect the electrical connection from the E.G.R. modulation solenoid valve.
2. Disconnect the E.G.R. valve connection pipe from the modulation solenoid valve.
3. Disconnect the fuel pressure regulator vacuum takeoff pipe.

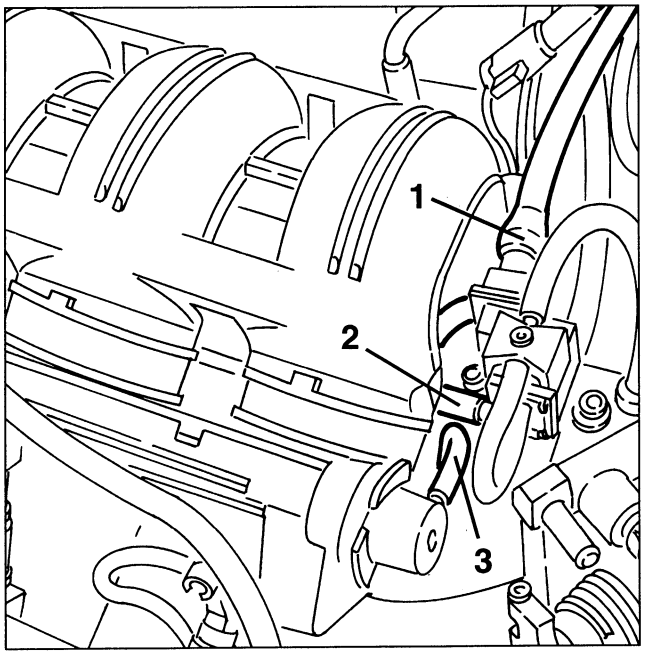

- Disconnect the vacuum takeoff pipe from the servo-brake.

1. Raise the car and slacken the two screws fastening the support to the intake box.
2. Slacken the two screws fastening the intake box to the cylinder head.

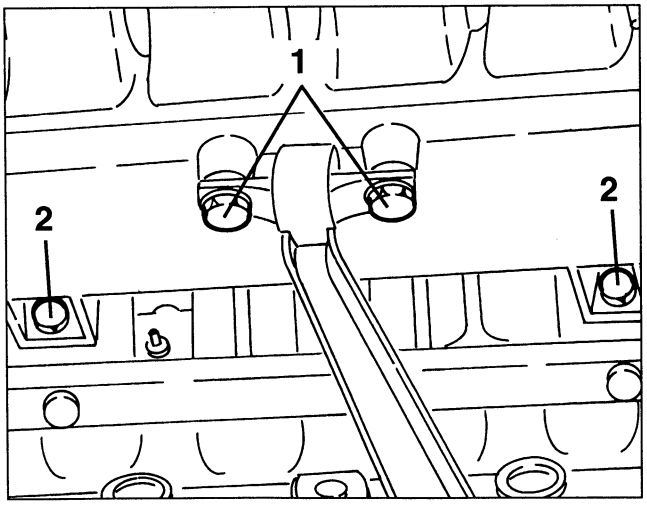

1. Disconnect the fuel vapour recirculation pipe from the intake box.

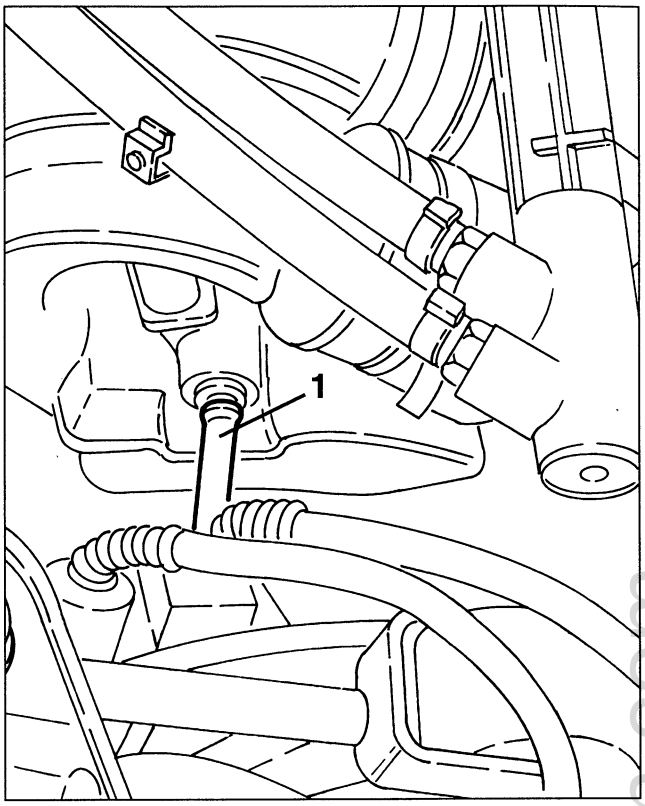

1. Slacken the fastening clamps and remove the intake box pulling it upwards.

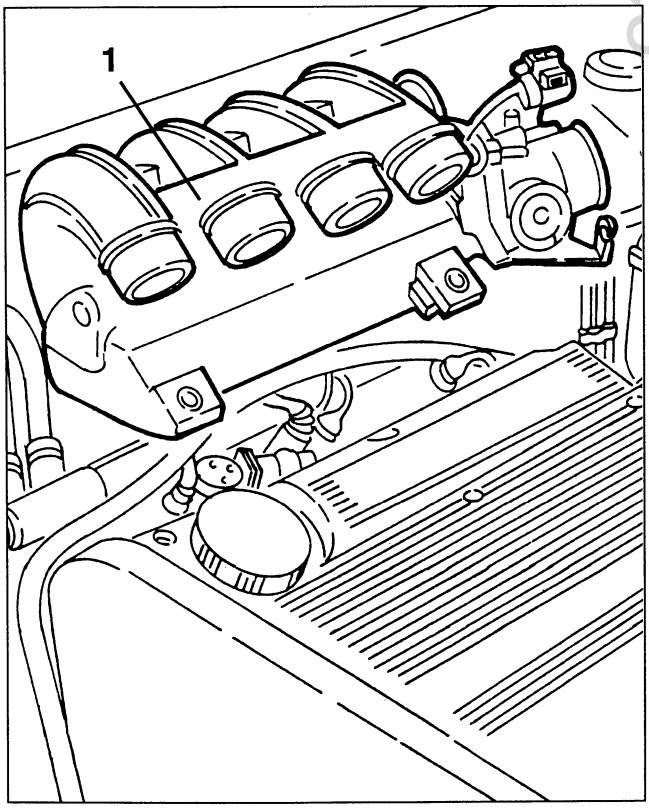

cardiagn.com

CONSTANT IDLE SPEED ACTUATOR

Idle speed rpm is controlled by an actuator fitted directly on the throttle body, but since it is more compact and can be operated individually, it is on the whole more cost- effective and reliable. The actuator adjusts the amount of air taken in by the engine when the throttle valve is closed. This makes it possible to compensate the power required by the various services (conditioner compressor, power steering, alternator) so that the engine speed remains unaffected.
The opening and closing controls are independent due to a double electromagnetic circuit with considerable advantages in terms of prompt adjustment.
In fact, as the control unit is "self-adaptive", it is necessary to follow and "detect" the changes that occur in the engine (different internal frictions at different temperatures, settling of the engine over the course of time etc.) so that idle speed remains constant under all conditions.
Lastly, in the event of a fault, a spring moves the actuator to an intermediate degree of opening to enable the car to reach an authorised service centre.

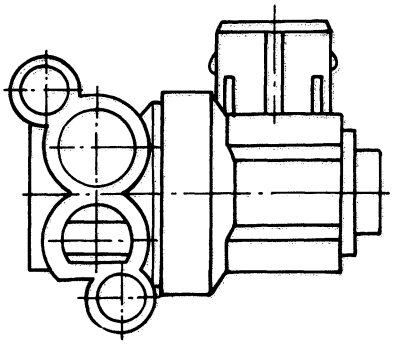

REMOVAL/REFITTING

- Disconnect the battery (-) terminal.
1. Disconnect the electrical connection from the constant idle speed actuator.

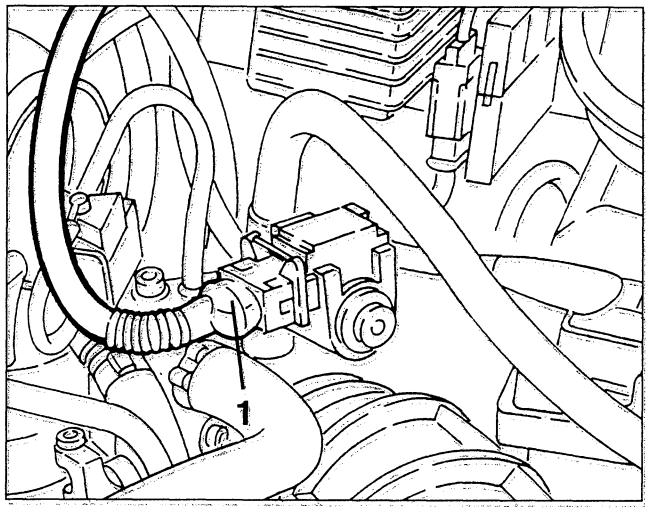

1. Slacken the two fastening screws and remove the constant idle speed actuator from the throttle body.
- Remove the seal.

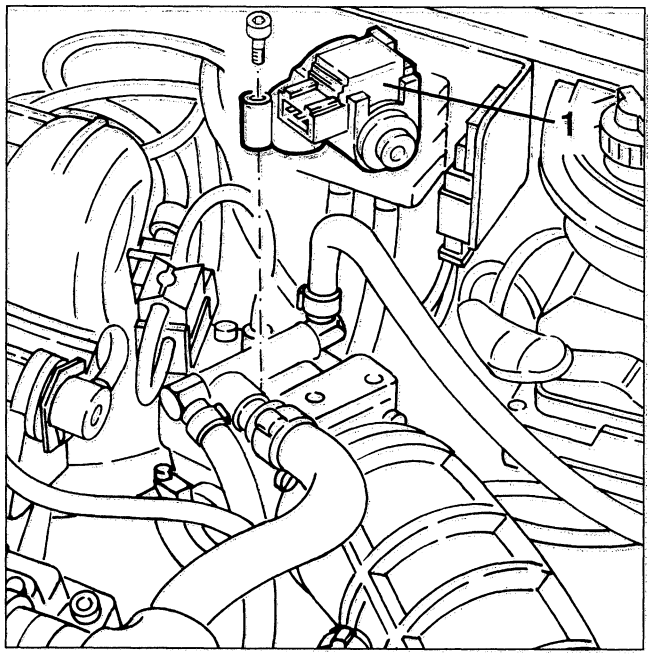

cardiagn.com

AIR INTAKE RESOUNDERS

REMOVING/REFITTING

- Set the car on a lift and raise it.
- Remove the front bumper.

1. Slacken the fastening and remove the air intake resounder upstream of the cleaner.

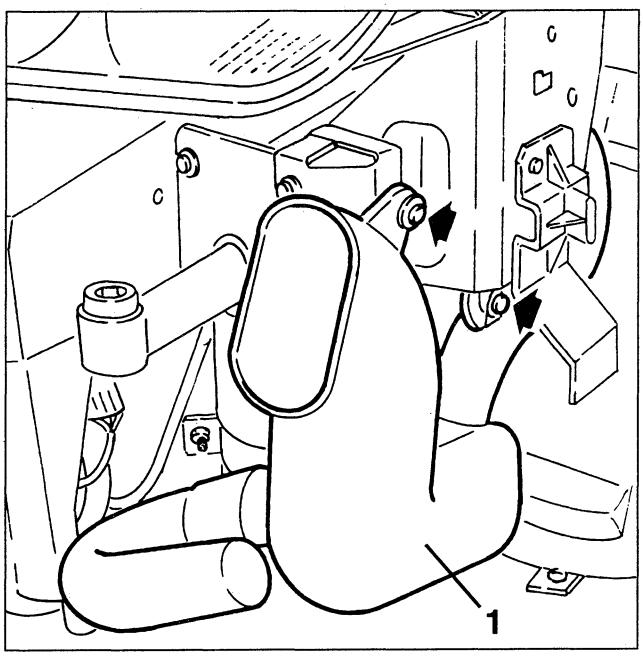

1. Lower the car and disconnect the electrical connection of the intake air temperature sensor.
2. Disconnect the oil vapour recirculation pipe from the corrugated sleeve.
3. Slacken the fastening clamps and remove the air intake resounder downstream of the cleaner complete with corrugated sleeve.

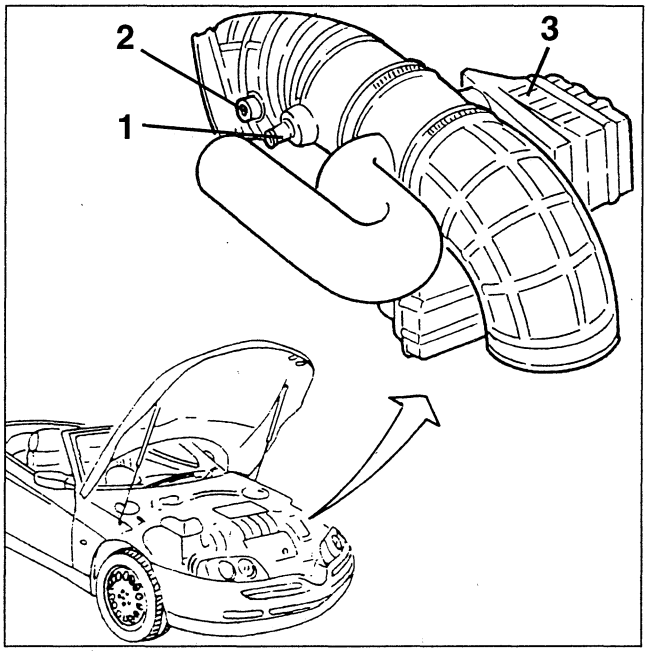

cardiagn.com

WHITE

cardiagn.com

DESCRIPTION OF SYSTEM

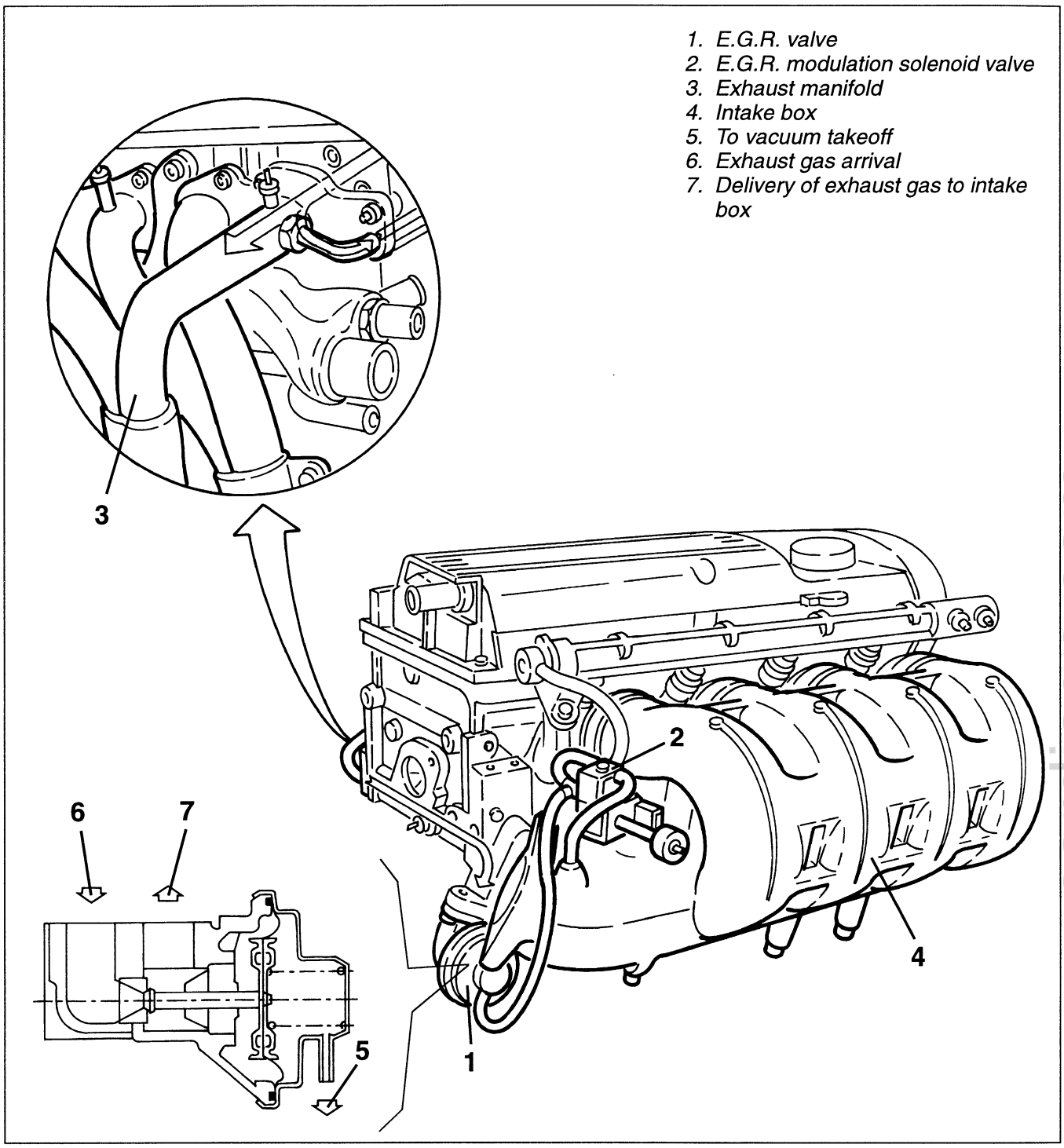

To further reduce emissions of NOx (nitric oxides) the supply system is fitted with an E.G.R. valve (1).
The E.G.R. valve (Exhaust Gas Recirculation) withdraws part of the exhaust gas and returns it to the intake box (4), where it is mixed with the intake air and burnt in the engine.
The E.G.R. valve is operated by the vacuum modulated by the solenoid valve (2) controlled by the MOTRONIC control unit.
The amount of exhaust gas sent to the engine is determined by the MOTRONIC control unit, taking account of the characteristic curve of the E.G.R. control depending on the engine load and speed and on the temperature of the coolant fluid.
Through the MOTRONIC control unit the solenoid valve modulates the vacuum to be sent to the E.G.R. valve for opening.
The E.G.R. valve is not activated at idle speed, in neutral gear and for engine speeds below 2000 rpm.
When the engine coolant fluid temperature excedds 60 °C the E.G.R. valve is operational and it it is completely closed at engine speeds in excess of 4600 rpm.

cardiagn.com

E.G.R. VALVE

REMOVAL/REFITTING

1. Working from the engine compartment, disconnect the connection pipe with the modulation solenoid valve from the E.G.R. valve.
2. Slacken the two fastening screws and remove the E.G.R. valve from the intake box.

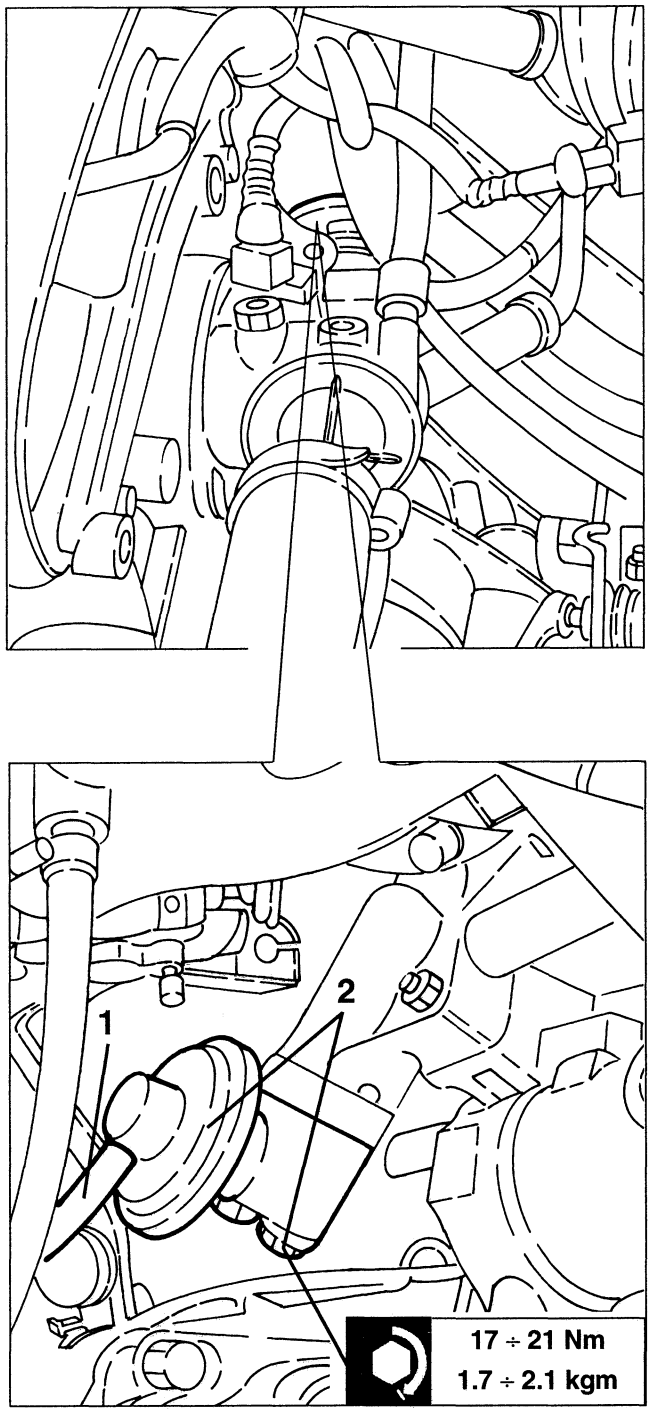

E.G.R. MODULATING SOLENOID VALVE

REMOVAL/REFITTING

- Disconnect the battery (-) terminal.
1. Disconnect the electrical connection from the E.G.R. modulating solenoid valve.
2. Disconnect the the connection pipe with the E.G.R. valve from the modulation solenoid valve.
3. Disconnect the vacuum takeoff pipe from the E.G.R. modulation solenoid valve.

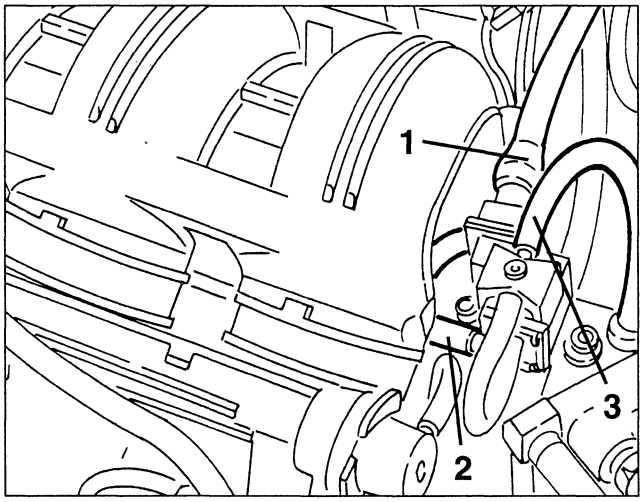

1. Slacken the two fastening screws and remove the E.G.R. modulation solenoid valve.

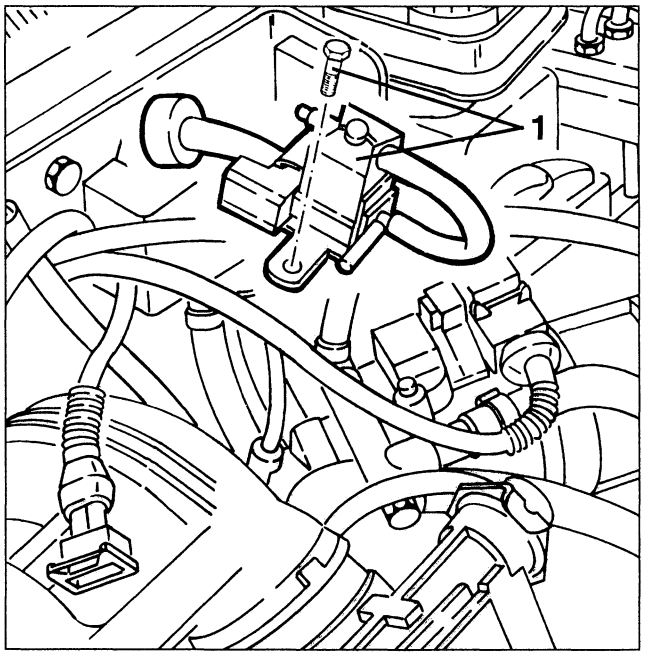

cardiagn.com

DESCRIPTION

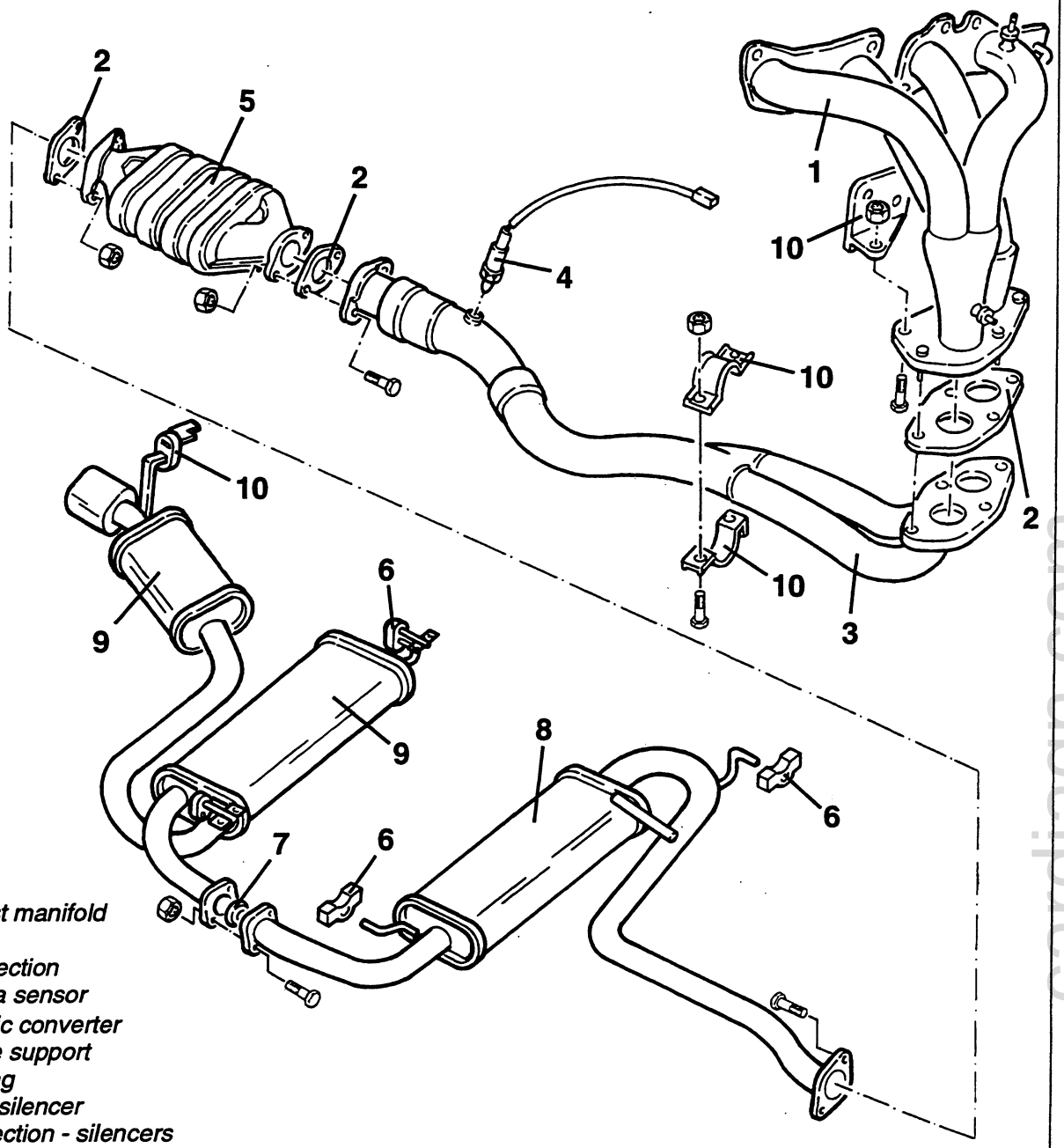

1. *Exhaust manifold*
2. *Seal*
3. *Front section*
4. *Lambda sensor*
5. *Catalytic converter*
6. *Flexible support*
7. *Seal ring*
8. *Centre silencer*
9. *Rear section - silencers*
10. *Support brackets*

The exhaust gas from the cylinder head converged in two double manifolds (1) connected below by a single flange. From these, via the front section of the exhaust pipe (3), it reaches the three-way catalytic converter (5) where most of the polluting substances are transformed.
On the front section of the exhaust pipe there is a flexible piece which limits the transmission of vibrations and allows the takeoff of exhaust gas upstream of the catalytic converter.
The lambda sensor (4) is fitted on the front section of the exhaust pipe at the inlet of the catalytic converter and it informs the control unit of the oxygen content in the exhaust gas making it possible to adjust the injection time to keep stoichiometric ratio (air-fuel) at an optimum level.
The exhaust gas leaving the catalytic converter crosses three special silencers (8 - 9).
The various parts of the exhaust pipe are connected by flanges with interposed seals and they are supported at the underbody by flexible supports.
The very high amount of heat radiated to the body by the catalytic converter is limited by a set of heat shields between the exhaust pipe and the body itself.

cardiagn.com

WARNING:
When the engine is running all the exhaust pipes and the catalytic converter in particular heat considerably. Before doing any work, it is therefore necessary to leave the engine off for an adequate length of time.
Never touch the catalytic converter without adequate protection, such as gloves, etc.
Do not leave easily inflammable materials nnear the catalytic converter.

LAMBDA SENSOR

For this subject, refer to the 1996 TB.

REMOVING/REFITTING

- Set the car on a lift.
- Disconnect the battery (-) terminal.

1. Disconnect the lambda sensor electrical connections.

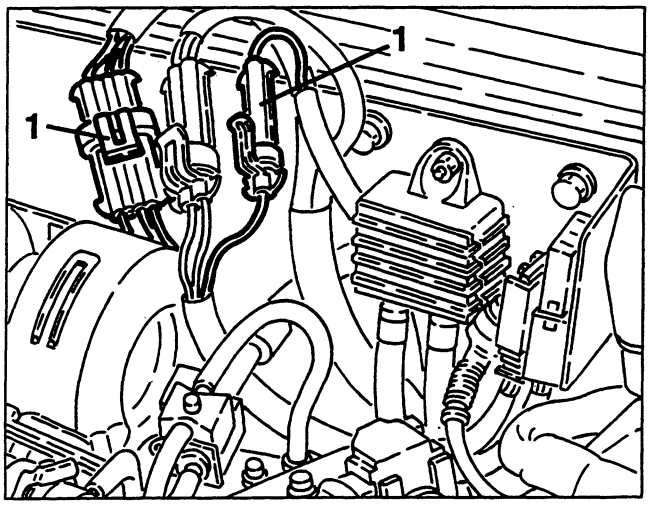

1. Slacken and remove the lambda sensor complete with wiring.

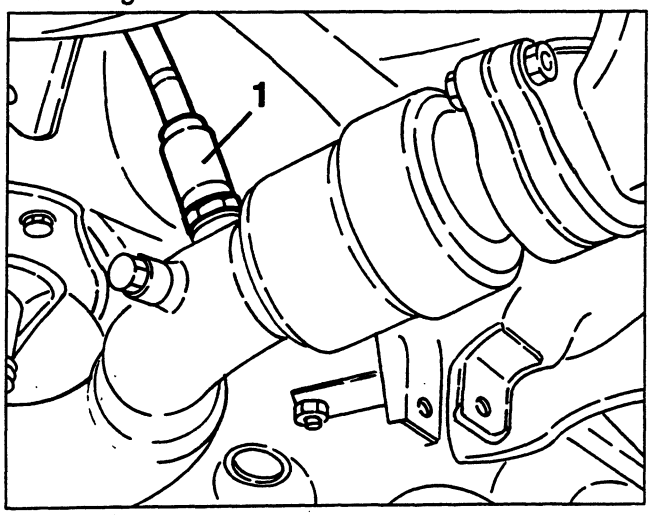

CHECKING EMISSIONS AT THE EXHAUST

WARNING:
Exhaust emissions must be checked outdoors, or at least in a suitable place equipped according to the regulations in force.

The control should be carried out with the engine at normal operating temperature (i.e. when the fan has turned on and then off) and running at idle speed.
If the idle speed is not within the specified limits, check the constant idle speed actuator.

- Check that the engine oil level is correct and that the air cleaner cartridge is clean.
- Start the engine and keep it at idle speed.

1. Insert the feeler of the analyzer in the end piece of the exhaust pipe anch check that the amount of CO and HC are within the specified limits.

CO at the exhaust	≤ 2.2 g x km
HC + NOx at the exhaust	0.5 g x km

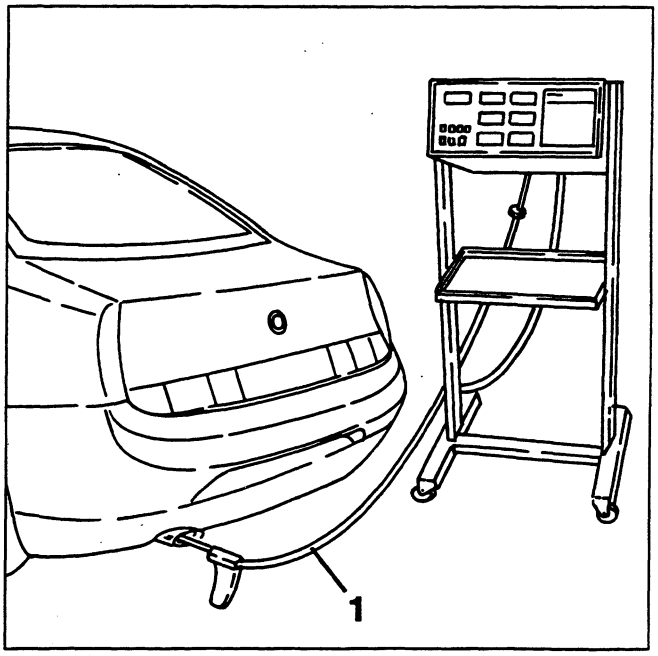

cardiagn.com

TIMING SENSOR

The timing sensor (cam angle sensor) comprises a Hall effect device.
The voltage signal "lowers" sharply when the tooth machined on the camshaft drive pulley opposite the sensor passes in front of it.

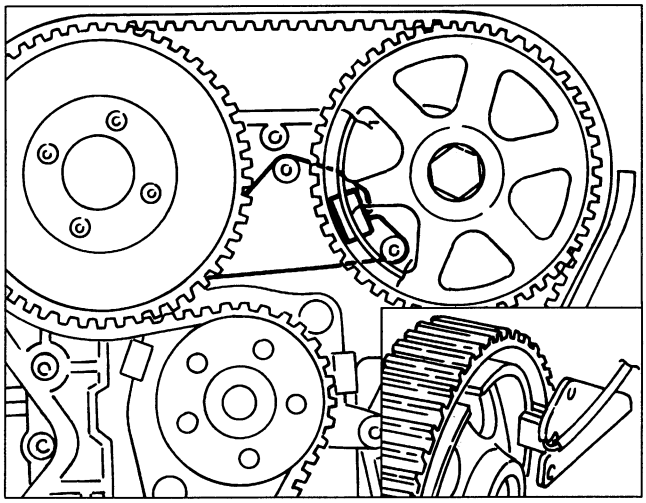

REMOVAL/REFITTING

- Set the car on a lift.
- Disconnect the battery (-) terminal.
- Remove the right front wheel and mud flap.

1. Raise the car and working as illustrated on the belt tensioner loosen the tension of the auxiliary components drive belt and remove it.
2. Slacken the four fastening screws and remove the auxliary components drive pulley.

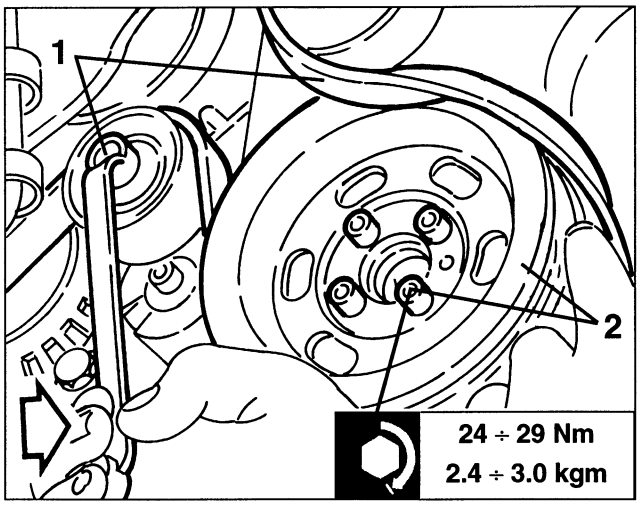

1. Slacken the fastening screw and remove the belt tensioner.
2. Slacken the fastening screw and remove the auxiliary components drive belt guide pulley.
3. Slacken the fastening screws and remove the lower cover of the timing gear and counter-rotating shaft drive belts.

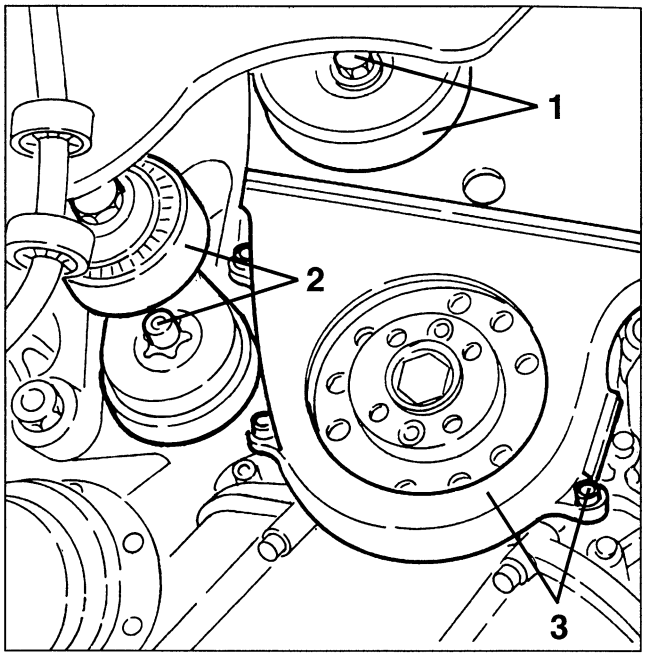

- Slacken the lower screws of the upper cover of the timing gear and counter-rotating shaft drive belts.

1. Lower the car, slacken the fastening screws and remove the upper cover.

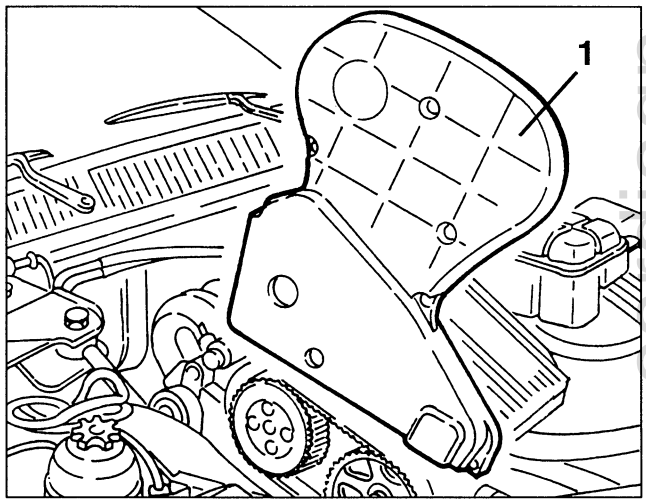

1. Disconnect and remove the oil vapour recovery pipes.

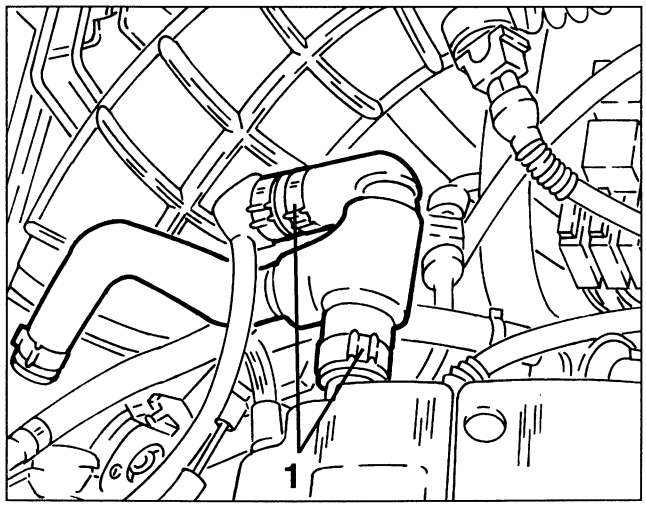

carpiagn.com

1. Slacken the fastening screws and remove the ignition coils cover.
2. Disconnect the electrical connections from the ignition coils.

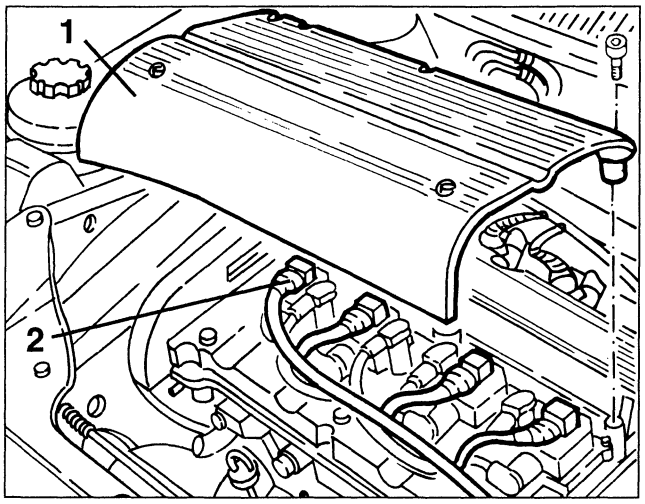

1. Slacken the fastening screws and remove the ignition coils.
2. Slacken the fastening screws and remove the ignition coils support bracket.

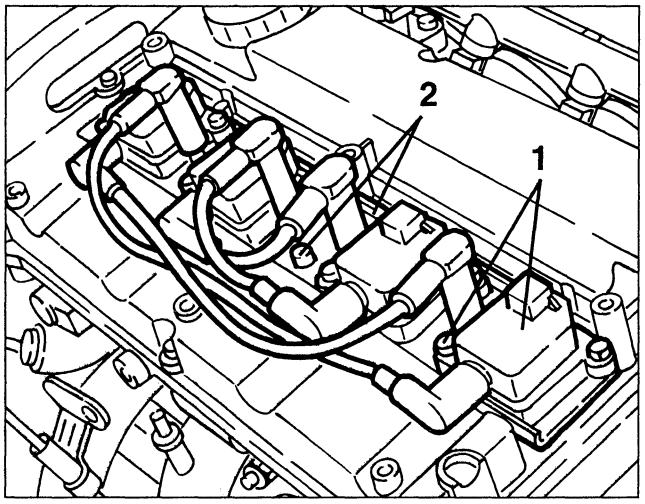

1. Slacken the fastening screws and remove the cylinder head cover complete with gasket.

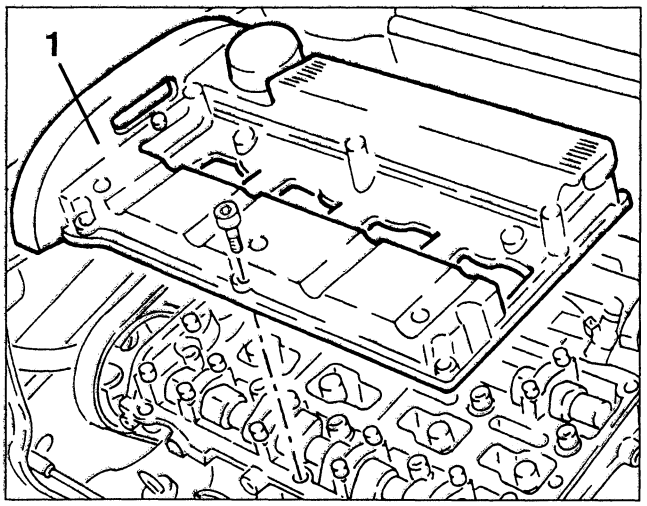

1. Working on the timing gear belt tensioner, loosen the tension on the belt, then take it off the timing gear drive pulleys.

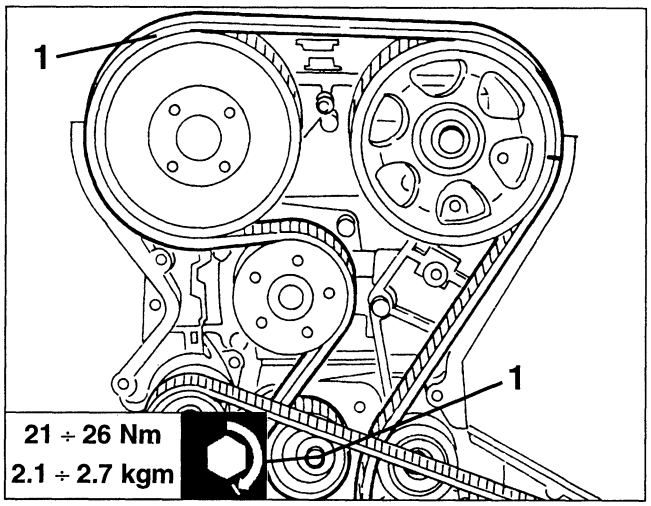

1. Using tools no. 1.822.146.000 and no. 1.822.156.000 slacken the screw fastening the timing gear exhaust side drive pulley and remove it.
2. Slacken the four screws fastening the timing gear intake side drive pulley and remove it.

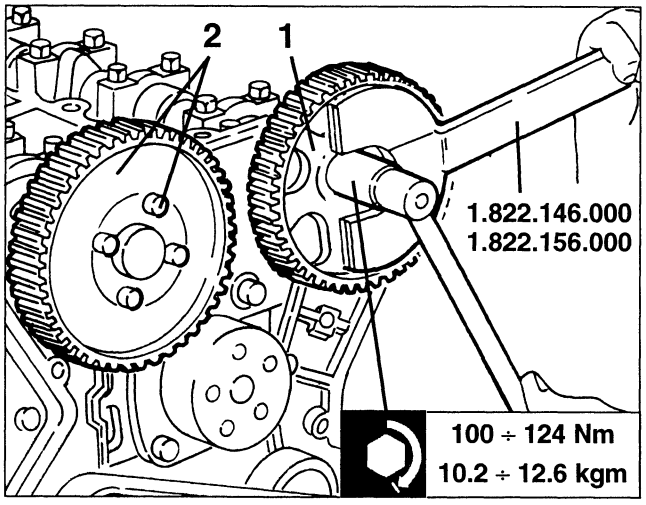

1. Slacken the fastening screws and remove the intake side cover.

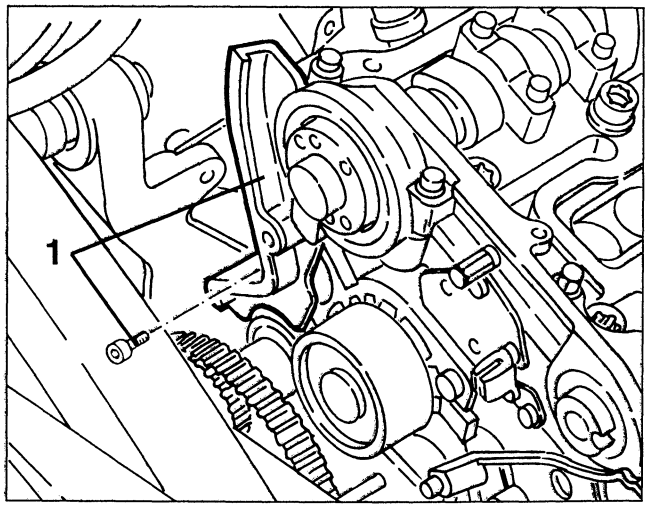

cardiagn.com

1. Disconnect the electrical connection, slacken the two fastening screws and remove the timing sensor complete with support plate.

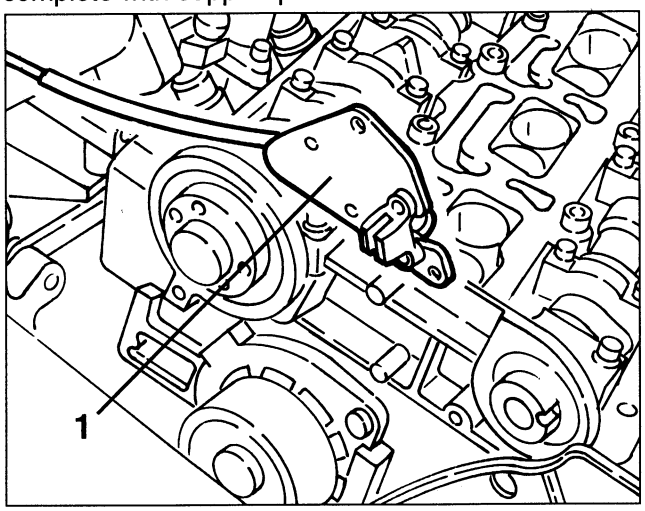

For re-assembly of the timing gear drive belt, valve gear timing and assembly and tensioning the auxiliary components drive belt see GROUP 00.

RPM SENSOR AND TIMING SENSOR

The sensor for detecting the rpm and engine timing is of the inductive type which operates through the change of a magnetic field generated by the passage of the teeth of a toothed pulley (phonic wheel) shrunk onto the crankshaft.
The teeth which pass in front of the magnetic field generator change the gap between the pulley and the sensor; therefore, the dispersed flux, which consequently varies, induces an alternate sinusoidal voltage in the coils of the sensor, the amplitude of which depends on the peripheral speed of the phonic wheel, the gap between the tooth and the sensor, the shape of the teeth, the magnetic characteristics of the sensor and on the support system.

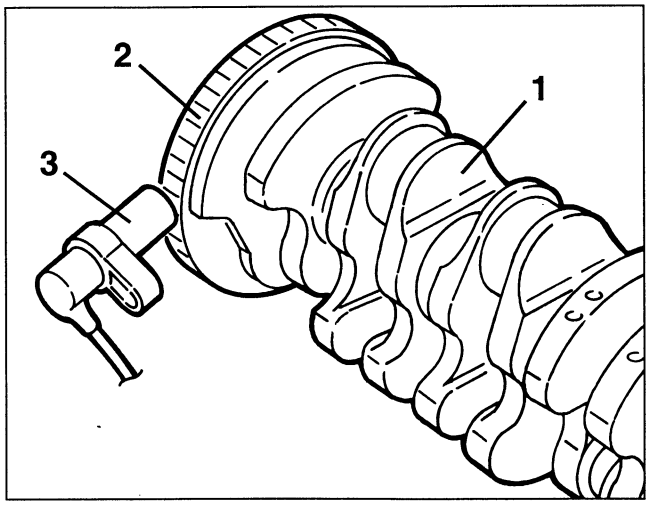

1. Crankshaft
2. Phonic wheel
3. Rpm and timing sensor

The output signal which varies in relation to the rpm is processed by the control unit to obtain a signal at each passage through zero and a constant rectangular oscillation of amplitude to enable the control of the digital circuits inside the control unit.
The interval between the start of one tooth and another is 6° with the exception of the reference mark which is made by eliminating two of the 60 teeth of the pulley.
The hollow due to the lack of two teeth gives the control unit a reference point of the crankshaft and each subsequent tooth of the phonic wheel informs the control unit of an increase in its angular position.

REMOVAL/REFITTING

- Set the car on a lift.
- Disconnect the battery (-) terminal.

1. Disconnect the timing sensor electrical connection.

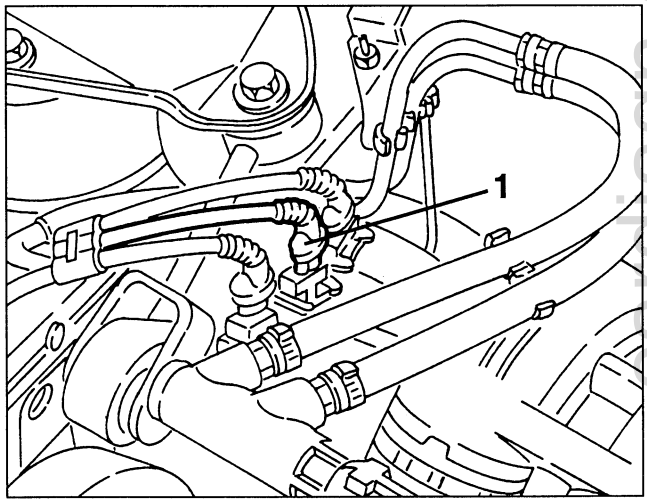

1. Raise the car, slacken the fastening screw and remove the rpm and timing sensor.

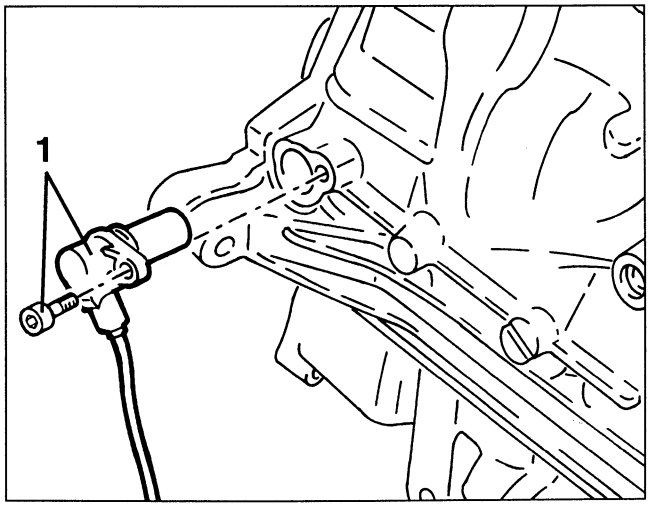

cardiagn.com

CHECKING THE GAP

- Set the car on a lift and remove the front section of the exhaust pipe.
- Remove the rpm and timing sensor (see specific procedure).

1. Using tool no. 1.820.079.000 (A.2.0449), find dimension "A".

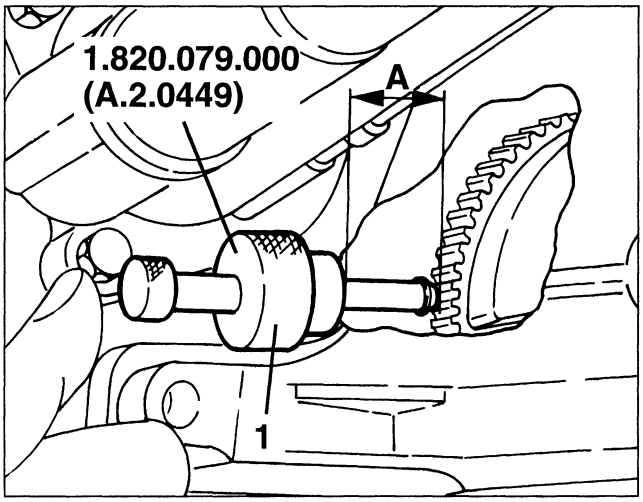

1. Using a gauge measure dimension "A".

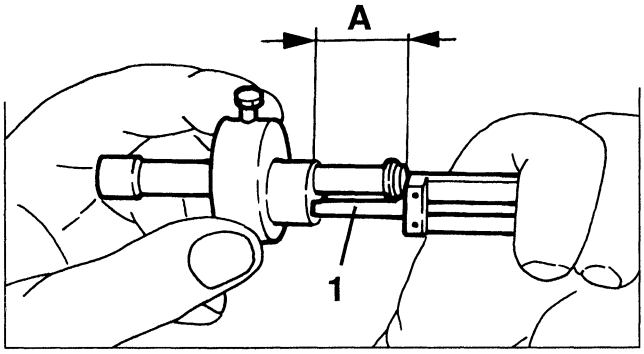

1. Using a gauge measure dimension "B" on the sensor.

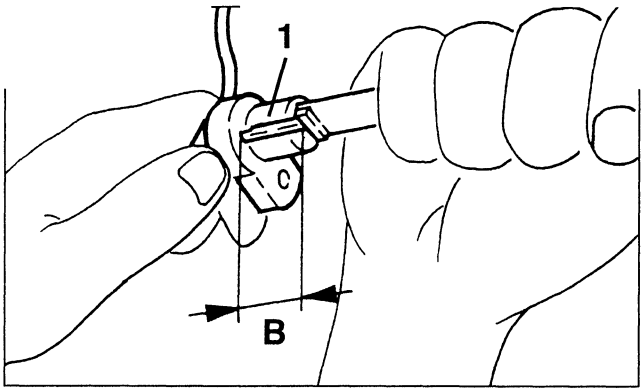

- Calculate the rpm and timing sensor gap and check that it is within the specified limits.

Rpm and timing sensor gap
A - B = 0.5 ÷ 1.5 mm

ENGINE COOLANT TEMPERATURE SENSOR (NTC)

This sensor detects the engine coolant temperature on the thermostatic cup through a thermistor (NTC) with a negative resistance coefficent, i.e. capable of lowering its resistance as the temperature increases. The electric signal obtained reaches the electronic control unit where it is used to correct the air-fuel mixture.

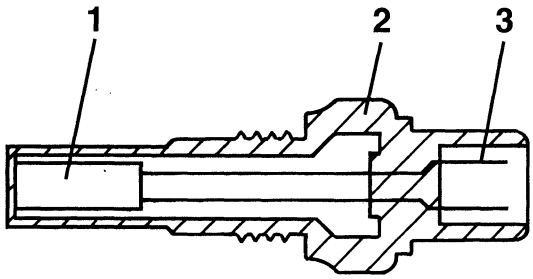

1. NTC resistance
2. Body
3. Connector

REMOVAL/REFITTING

- Disconnect the battery (-) terminal.

1. Disconnect the electrical connection from the engine coolant temperature sensor (NTC).
2. Slacken and remove the engine coolant temperature sensor from the thermostatic cup.

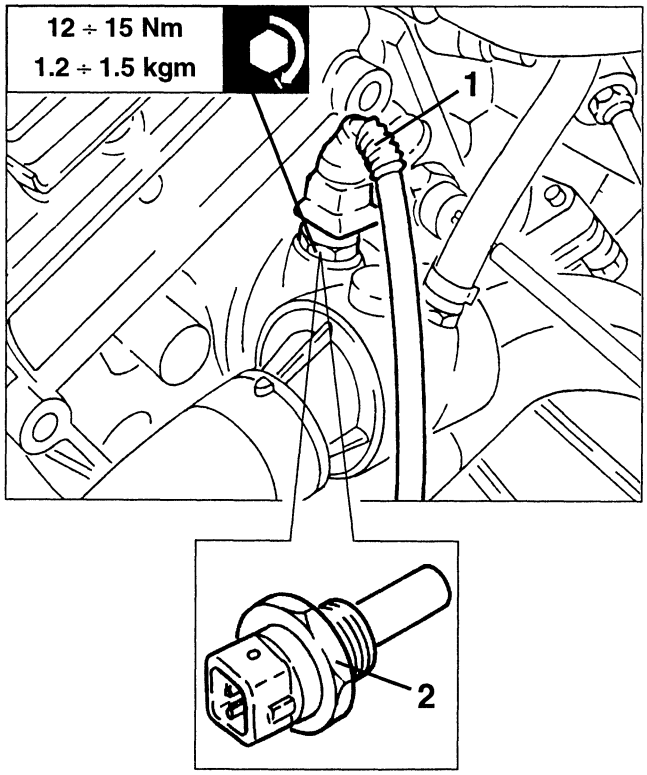

cardiagn.com

KNOCKING SENSOR

The knocking sensor detects the intensity of the vibrations (pinging in the cylinder head) caused by knocking in the combustion chamber.
In this condition the control unit increases the amount of fuel and reduces the advance ratings calculated from the special map, in order to eliminate knocking as quickly as possible: in fact the advance curves are reduced by appr. 2°, then if necessary by another 2° etc:, until pinging ceases, after which the normal advance corresponding to the original map is resumed.

REMOVAL/REFITTING

- Disconnect the battery (-) terminal.
1. Disconnect the electrical connection of the pinging sensor.

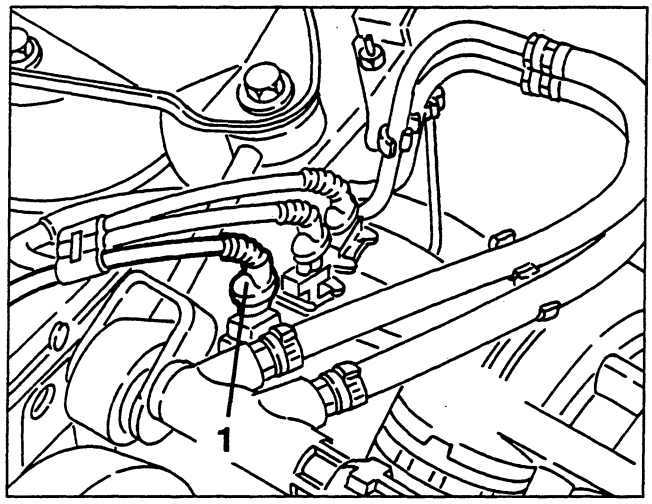

1. Slacken the fastening screw and remove the pinging sensor.

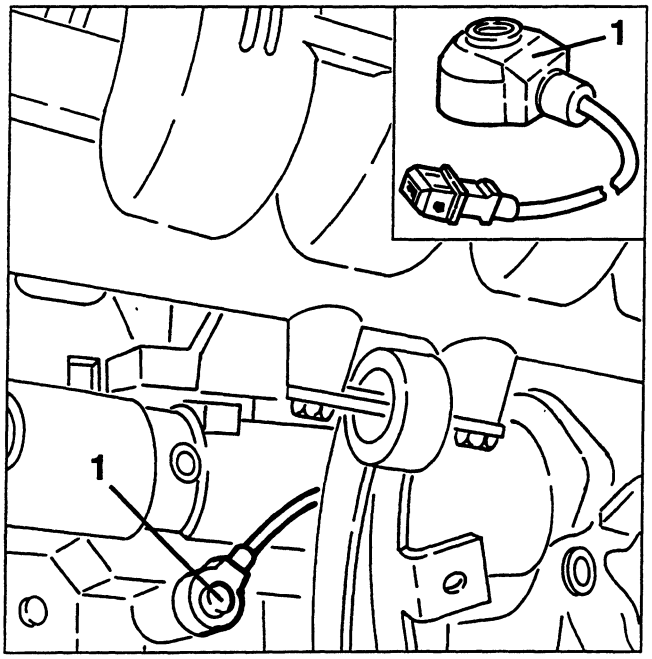

TIMING VARIATOR SOLENOID

REMOVAL/REFITTING

- Disconnect the battery (-) terminal.
1. Disconnect the electrical connection from the timing variator solenoid.

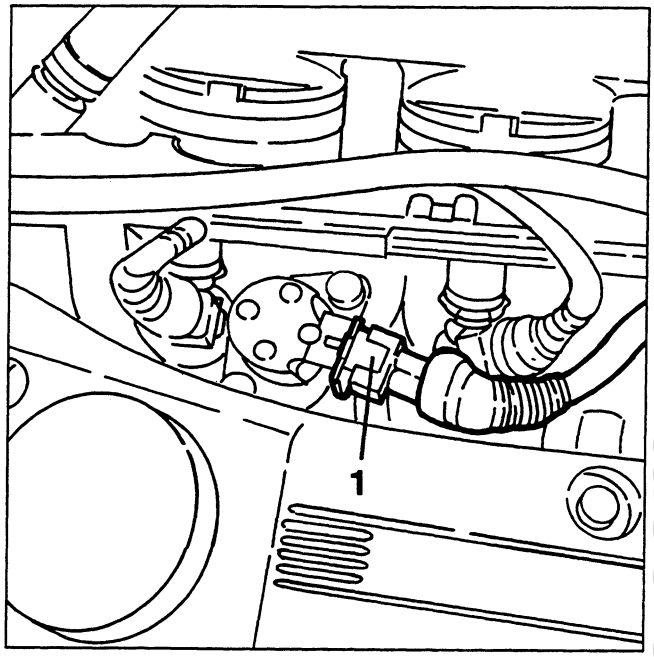

1. Slacken the two fastening screws and remove the timing variator solenoid.
2. Remove the valve complete with the timing variator spring.

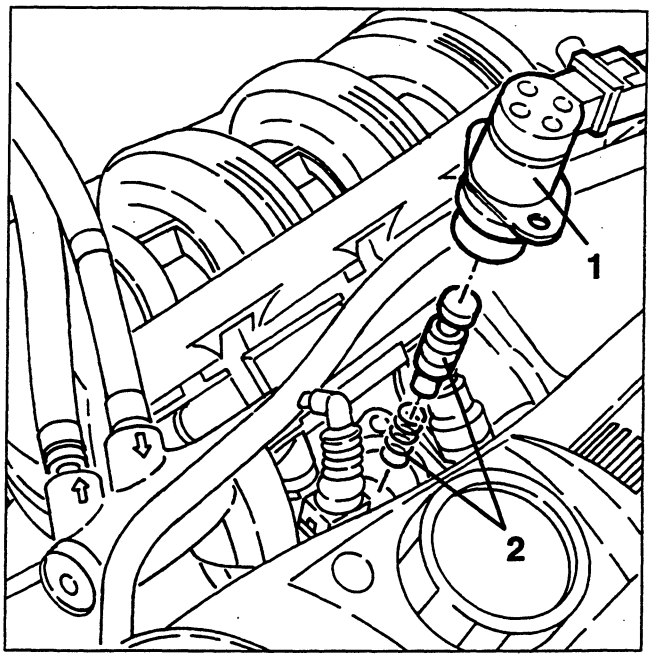

cardiagn.com

INERTIAL SWITCH

In the front side of the driver's seat there is a safety switch which is triggered in the case of an impact, cutting off the fuel pump connection to earth, thereby also the supply to the injection system.

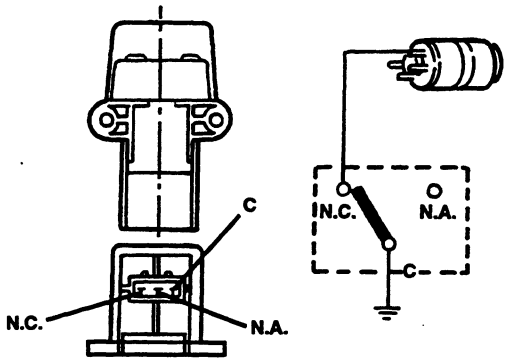

A steel ball fitted in a taper housing is normally held in place by the force of attraction of an adjacent magnet.
Under specific acceleration loads the ball releases itself from the magnetic force and gradually moves out of the taper support rising upwards following the angle of the taper.
A quick snap connection is fitted above the ball which forms the normally closed (N.C.) electric circuit.
When the mechanism is hit by the ball it changes position, from N.C. circuit to normally open circuit (N.A.), cutting off the fuel pump earth circuit.
In the event of impact in any one of the three orthogonal directions, the switch will be triggered above 12 g peak equivalent to a speed of 25 kph.
The switch can be reset pressing the pushbutton protected by a flexible cover (this also protects against foreign particles which might prevent the switch from operating or reprogramme it.

If after even a light crash, there is the smell of petrol or leaks are noted from the fuel supply system, do not reset the switch, but firstly seek the failure and repair it to prevent the hazard of fire.
Conversely, if there are no leaks and the car can be restarted, press the pushbutton to reactivate the fuel pump.

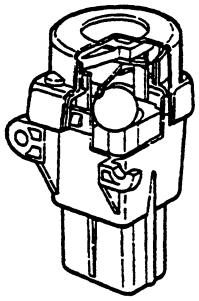

REMOVAL/REFITTING

- Disconnect the battery (-) terminal.
1. Slacken the two fastening screws and remove the plastic cover protecting the inertial switch.
- Slacken the two fastening screws, disconnect the electrical connection and remove the inertial switch.

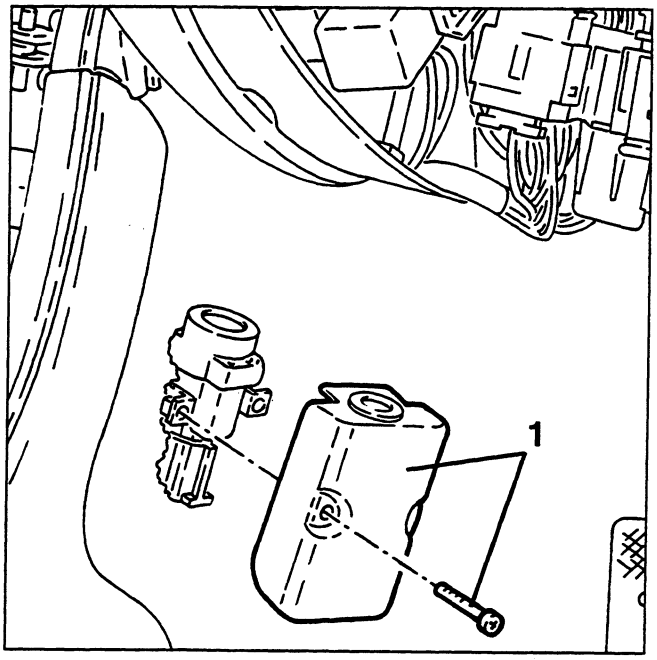

SPEEDOMETER SENSOR

REMOVAL/REFITTING

- Set the car on a lift.
- Disconnect the battery (-) terminal.
1. Disconnect the electrical connection of the speedometer sensor.
2. Raise the car and using wrench no. 1.822.161.000, slacken and remove the speedometer sensor.

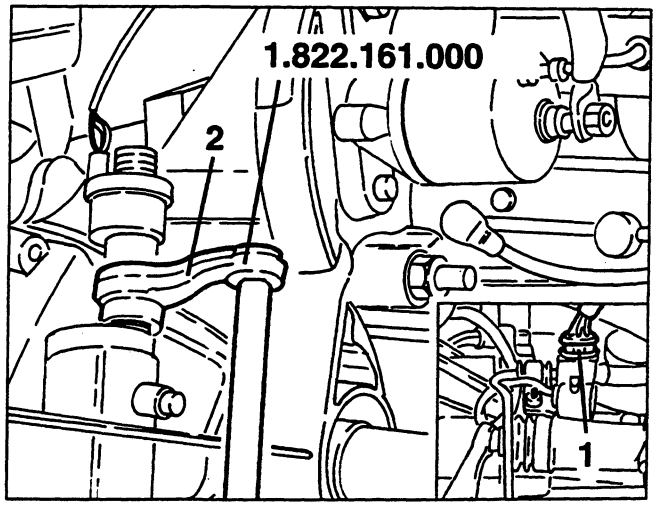

cardiagn.com

ENGINE COOLING SYSTEM

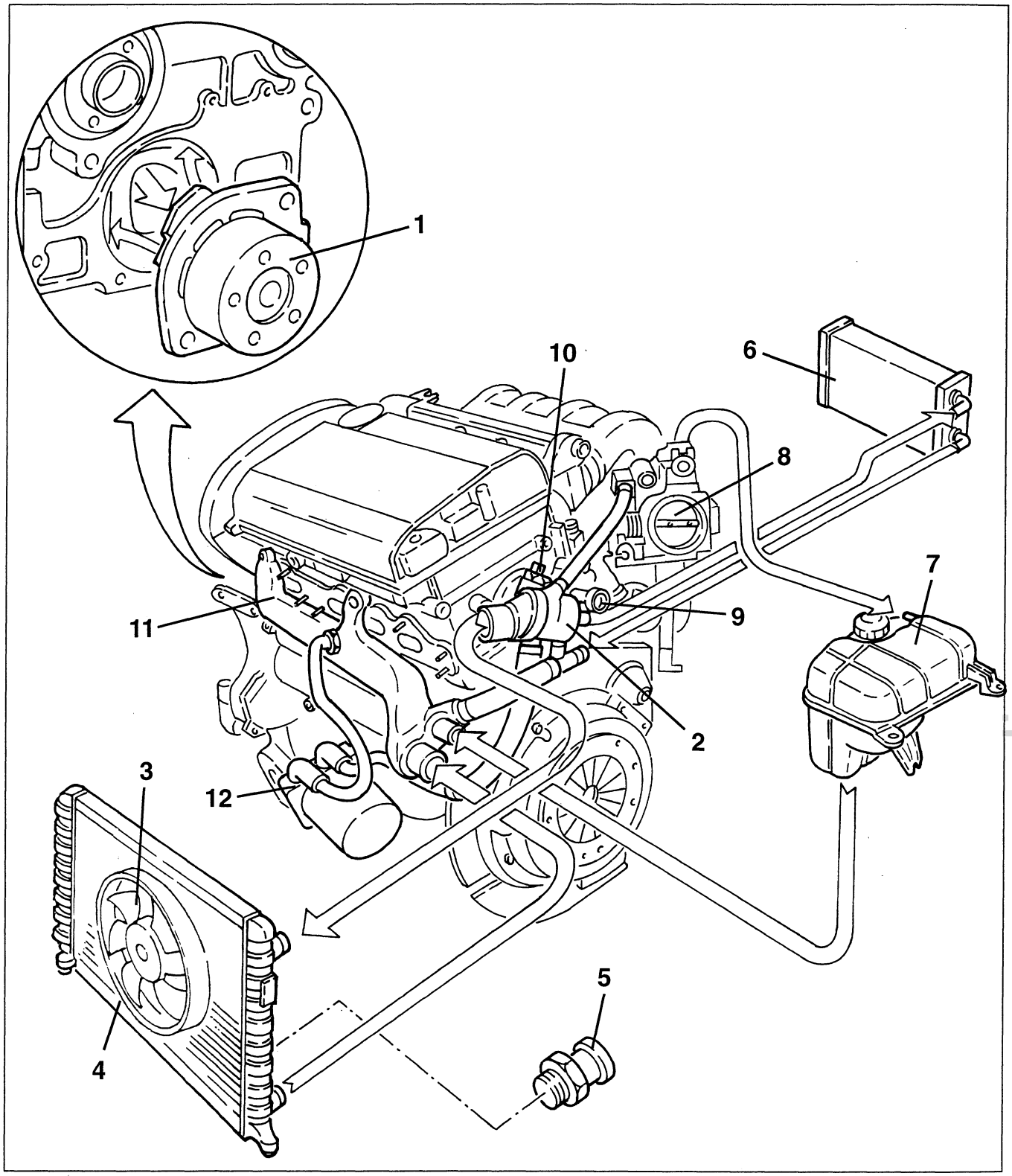

1. *Water pump*
2. *Thermostatic cup*
3. *Cooling fans*
4. *Radiator*
5. *Fan control thermal contact (Specific for versions with M2.10.3 injection-ignition system)*
6. *Climate control unit heater*
7. *Expansion tank*
8. *Throttle body*
9. *Coolant temperature gauge sender and maximum temperature warning light contact*
10. *Coolant temperature sensor (NTC)*
11. *Longitudinal manifold*
12. *Coolant - engine oil heat exchanger*

cardiagn.com

DESCRIPTION

The cooling system is of the sealed type with forced circulation by a centrifugal pump (1) located on the cylinder head and operated by the timing gear belt.
A thermostatic valve (2), fitted on the rear of the engine keeps the engine temperature at an optimum level; it opens when the coolant reaches a temperature of 83 °C.
The radiator (4) cools the engine fluid by the dynamic air and also by a fan (3) which is turned on:
- for versions with M2.10.3 injection-ignition system, by a thermal contact (5) on the radiator;
- for versions with M2.10.4 injection-ignition system, directly by the MOTRONIC control unit, depending on the signal received from the engine coolant temperature sensor (NTC).
(For further details about how the fan works, see ELECTRIC- ELECTRONIC DIAGNOSIS - Sect. 26 for versions with air conditioner and Sect. 27 for versions without air conditioner).
The expansion tank (7) tops up the circuit if the level falls and absorbs the changes in the volume of the coolant due to changes in temperature: it also vents air from the circuit.
The circuit is fitted with a coolant fluid temperature sender for the max. temperature gauge and thermal contact (9) for the warning light.

WATER PUMP

The water pump is of the centrifugal type with blades. It is fastened to the cylinder head and operated by the crankshaft via the timing gear belt. An O-Ring ensures tightness between the cylinder head and the pump. The water pump is kept running constantly to ensure that the coolant fluid circulates continuously.

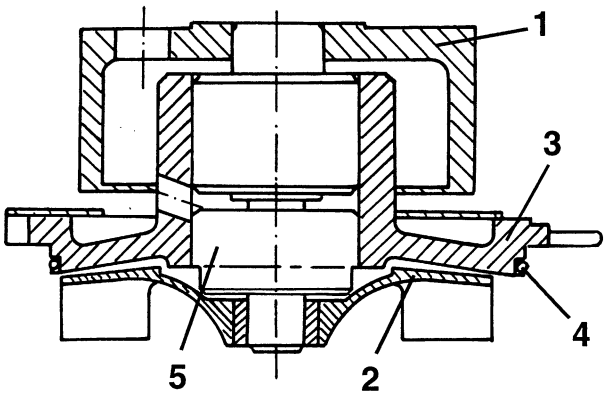

1. *Pulley*
2. *Impeller*
3. *Pump casing*
4. *O-Ring*
5. *Bearing*

OPERATION OF THE CIRCUIT

After the fluid has cooled the engine, it leaves the cylinder head and reaches the thermostatic unit (92). From here, if the temperature is below 83 °C, it is drawn into the pump (1) through a longitudinal coolant return manifold located on the left-hand side of the cylinder head.
Conversely, if the temperature exceeds this value, the fluid is directed to the radiator (4) through the opening of the thermostat.
After being cooled in the radiator, the fluid returns, still through the longitudinal manifold, to the pump which directs it to the engine.
From the thermostatic cup the fluid is also sent to:
- heat the throttle body (8) from which it flows to the expansion tank (7) also venting air from the system;
- the climate control system heater (6) from which it returns to the longitudinal manifold;
- the heat exchanger (12) for cooling the engine oil before being ducted directly into the longitudinal manifold through which it returns to the pump.
The expansion tank supplies the engine cooling system via a special pipe connected with the longitudinal manifold.

REMOVAL/REFITTING

- Set the car on a lift.
- Disconnect the battery (-) terminal.
- Remove the right front wheel and mud flap.

1. Raise the car and working as illustrated on the belt tensioner loosen the tension of the auxiliary components drive belt and remove it.
2. Slacken the four fastening screws and remove the auxliary components drive pulley.

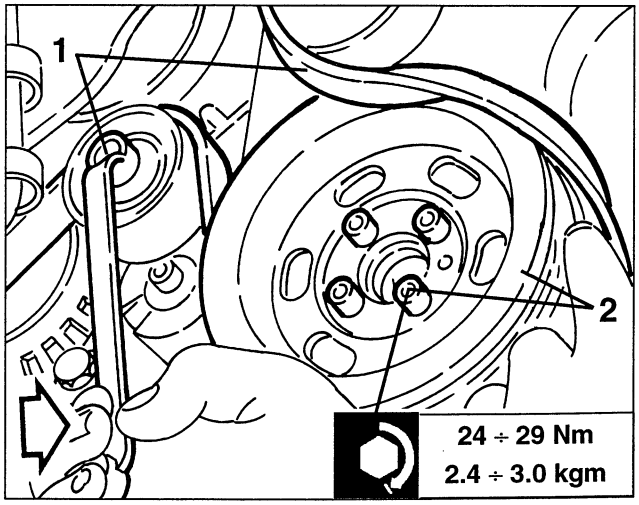

cardiagn.com

1. Slacken the fastening screw and remove the belt tensioner.
2. Slacken the fastening screw and remove the auxiliary components drive belt guide pulley.
3. Slacken the fastening screws and remove the lower cover of the timing gear and counter-rotating shaft drive belts.

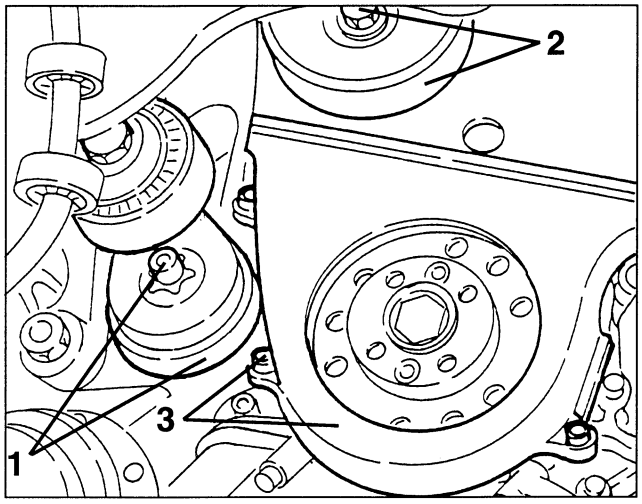

- Slacken the lower screws of the upper cover of the timing gear and counter-rotating shaft drive belts.
1. Lower the car, slacken the fastening screws and remove the upper cover.

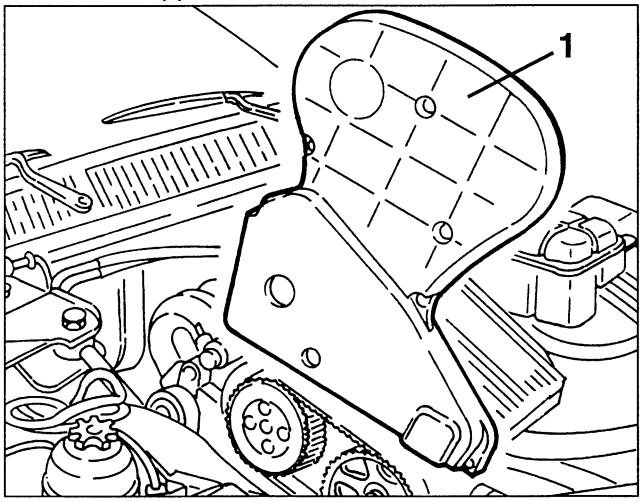

1. Disconnect and remove the oil vapour recovery pipes.

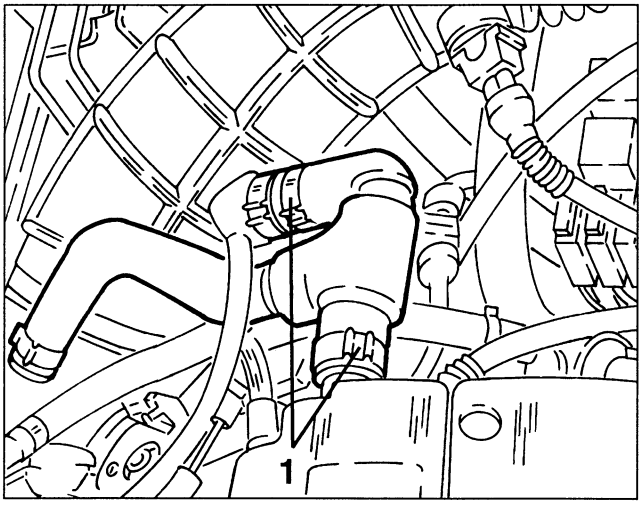

1. Slacken the fastening screws and remove the ignition coils cover.
2. Disconnect the electrical connections from the ignition coils.

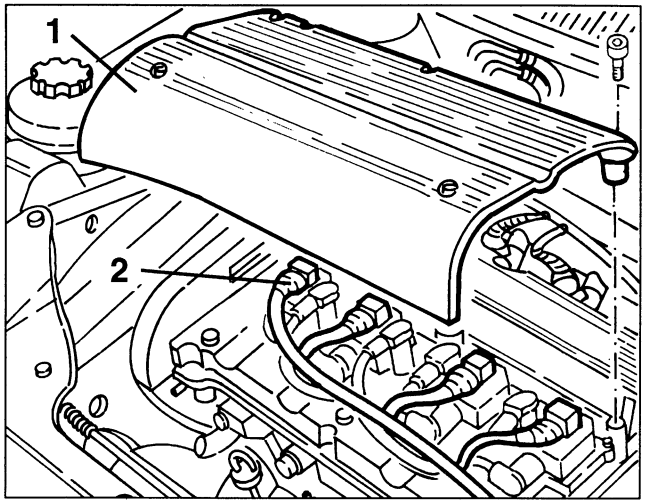

1. Slacken the fastening screws and remove the ignition coils.
2. Slacken the fastening screws and remove the ignition coils support bracket.

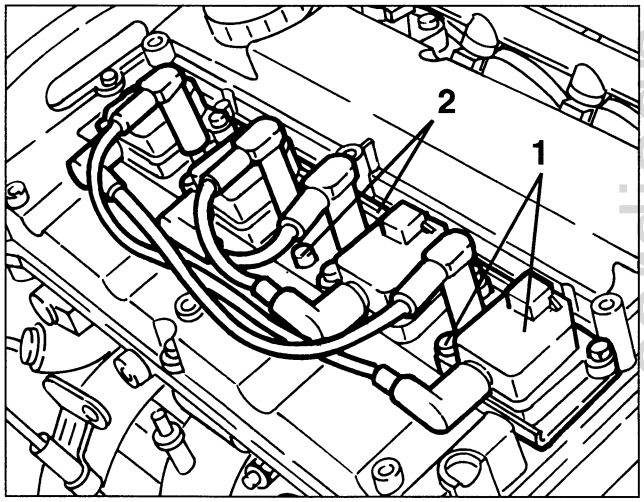

1. Slacken the fastening screws and remove the cylinder head cover complete with gasket.

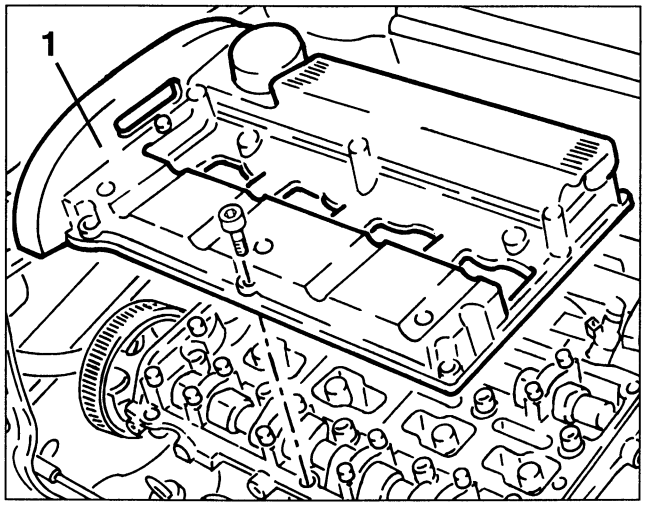

cardiagn.com

1. Working on the timing gear belt tensioner, loosen the tension on the belt, then take it off the timing gear drive pulleys.

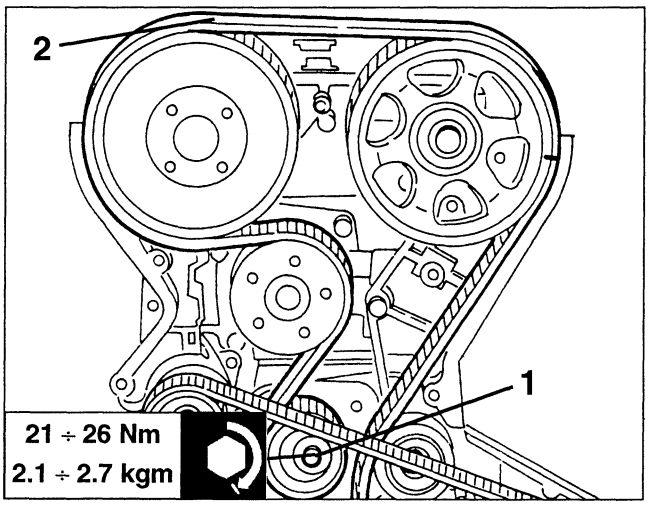

1. Using tools no. 1.822.146.000 and no. 1.822.156.000 slacken the screw fastening the timing gear exhaust side drive pulley and remove it.
2. Slacken the four screws fastening the timing gear intake side drive pulley and remove it.

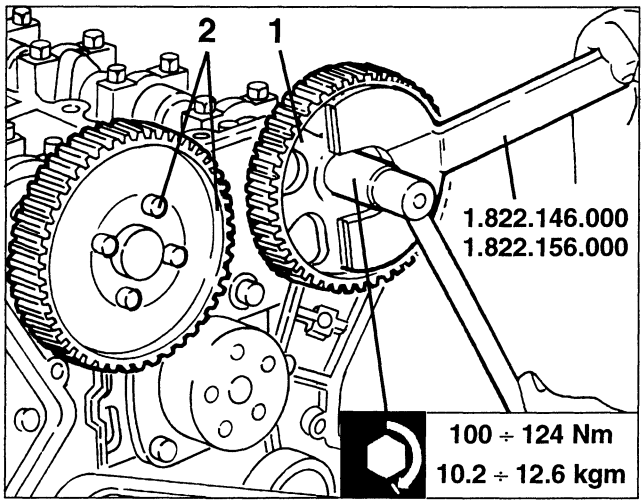

1. Slacken the fastening screws and remove the exhaust side cover.
2. Slacken the two fastening screws and remove the water pump complete with O-Ring.

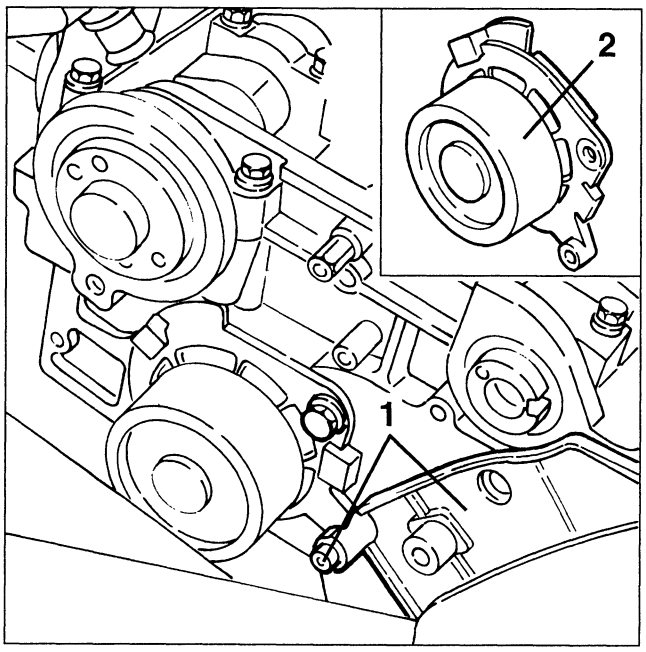

- Re-assembly reversing the sequence followed for removal.

For re-assembly of the timing gear drive belt and timing and for assembly of the auxiliary components drive belt see GROUP 00.

cardiagn.com

DESCRIPTION

The following information and illustrations allow quick engine removal and refitting.

Bench disassembly instructions for single components are contained in the "ENGINE OVERHAUL" volume.
The following procedures may be used only in part, according to requirements.
For additional information and details, refer to the specific component and assembly chapters.

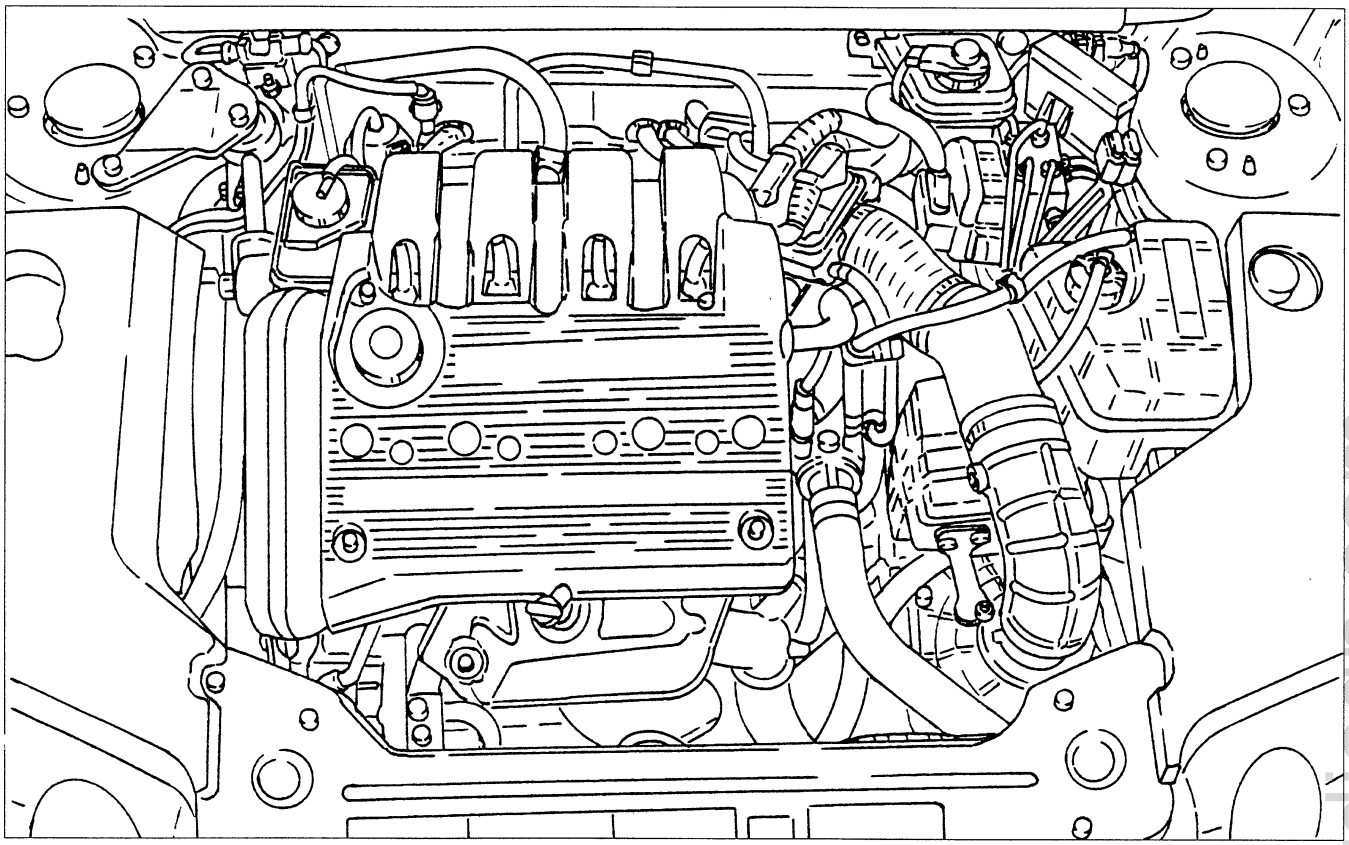

REMOVAL

- Position the vehicle on a shop jack.
- Make sure the ignition key is at "STOP" and disconnect the (-) battery terminal.
- Drain the conditioning system (see ASSEMBLY 50).
- Remove the front wheels and the respective mudguard.
- Lift the vehicle, loosen the fasteners and remove the guard under the engine.

1. Drain the engine coolant by disconnecting the radiator fluid output sleeve.

NOTE: Collect the coolant in a suitable container.

2. Loosen the clip fastening the front resonators to the air cleaner.

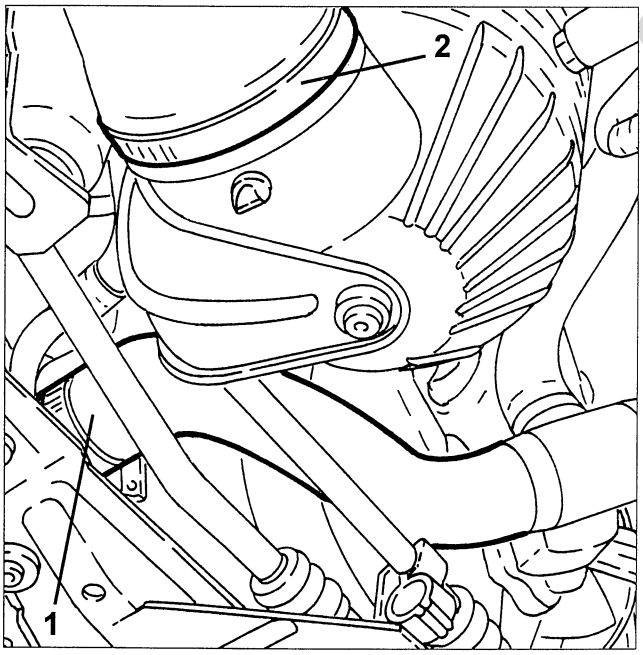

cardiagn.com

1. Lower the vehicle, loosen the fastening screws and remove the engine compartment side guards.

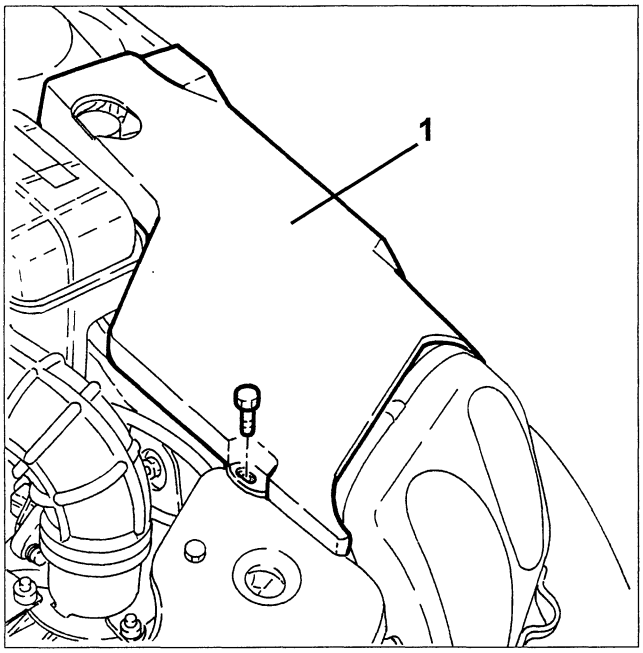

1. Remove the air cleaner manifold.
2. Remove the air cleaner.

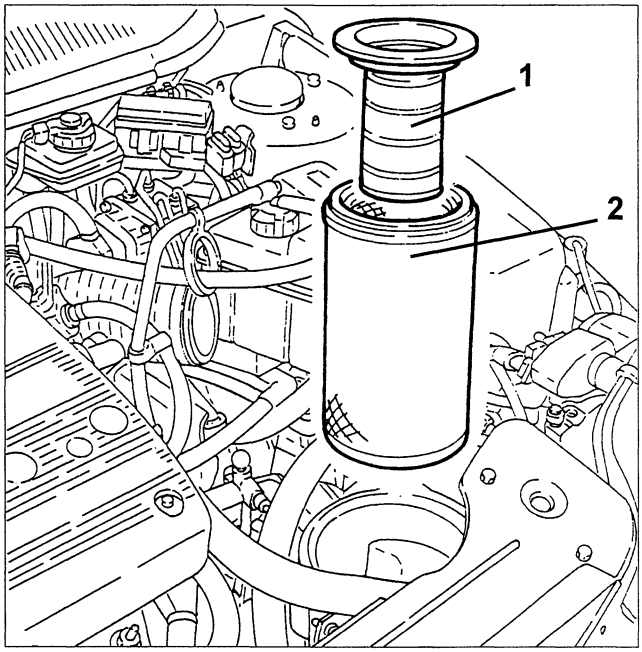

1. Disconnect the air flow meter electrical connection.
2. Loosen the clip fastening the resonator sleeve to the corrugated sleeve second section.
3. Loosen the air cleaner cover fastening screws.
4. Remove the first corrugated sleeve section with resonator, air flow meter and air cleaner cover.

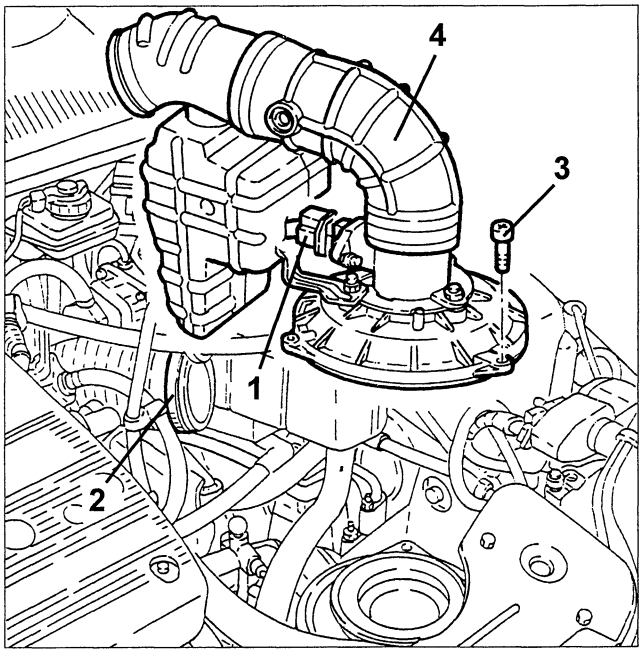

1. Remove the air cleaner casing.

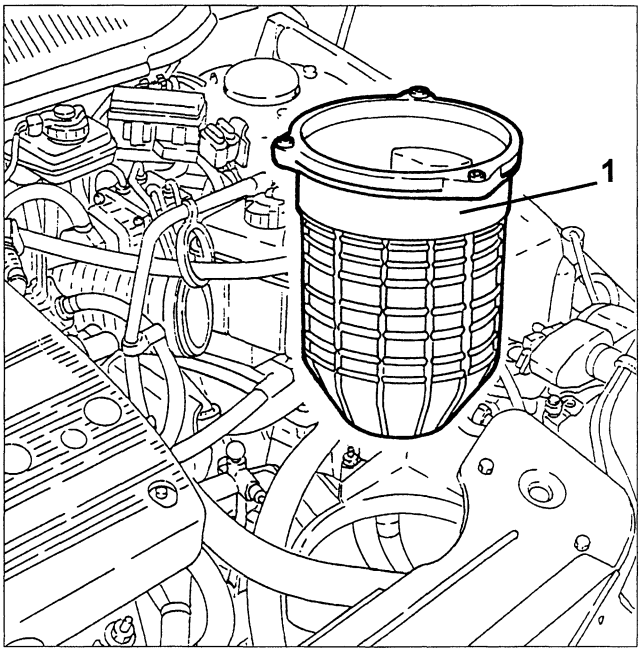

cardiagn.com

1. Loosen the fastening screws and remove the air cleaner bracket.

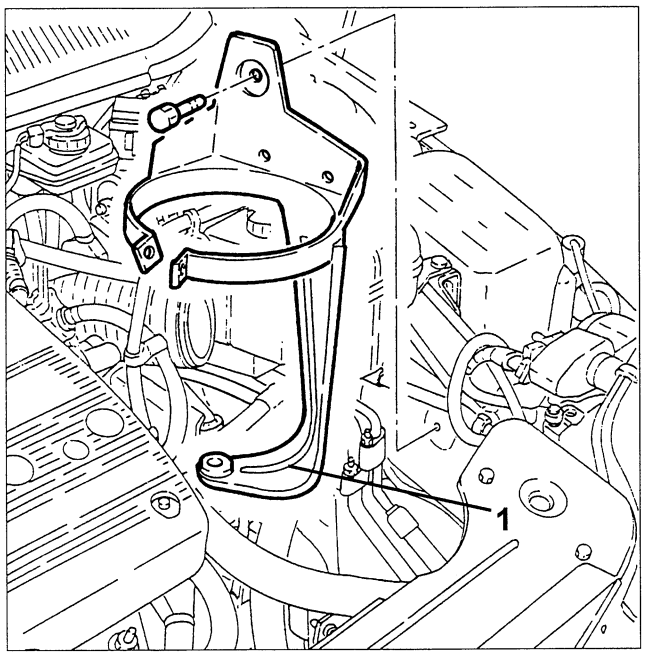

1. Disconnect the tachometer sensor electrical connection.
2. Loosen the fasteners and move the clutch cylinder aside without disconnect the respective pipes.

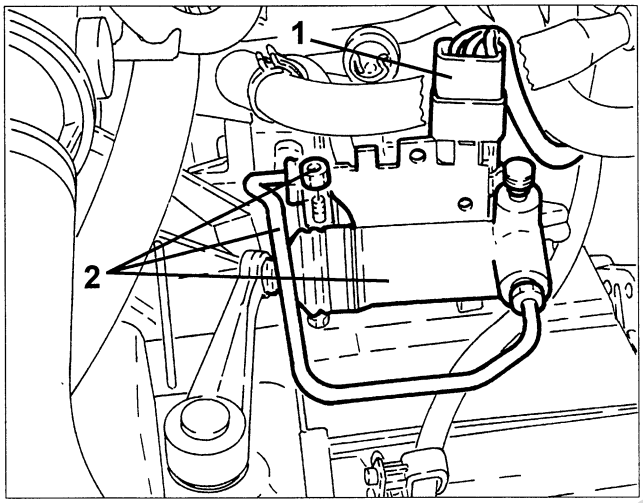

1. Disconnect the oil vapour recovery pipe form the corrugated sleeve second section.
2. Loosen the clip and remove the corrugated sleeve second section.

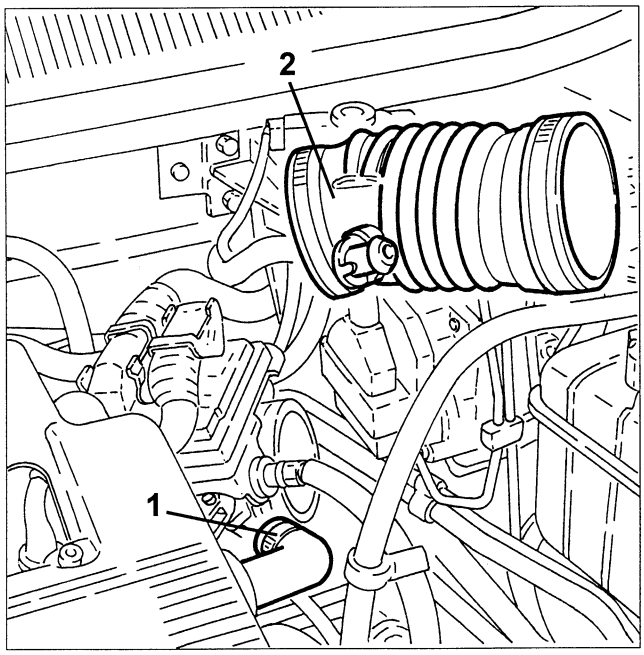

1. Remove the engine oil filler cap.
2. Loosen the fastening screws and remove the ignition coil covers.
- Refit the engine oil filler cap.

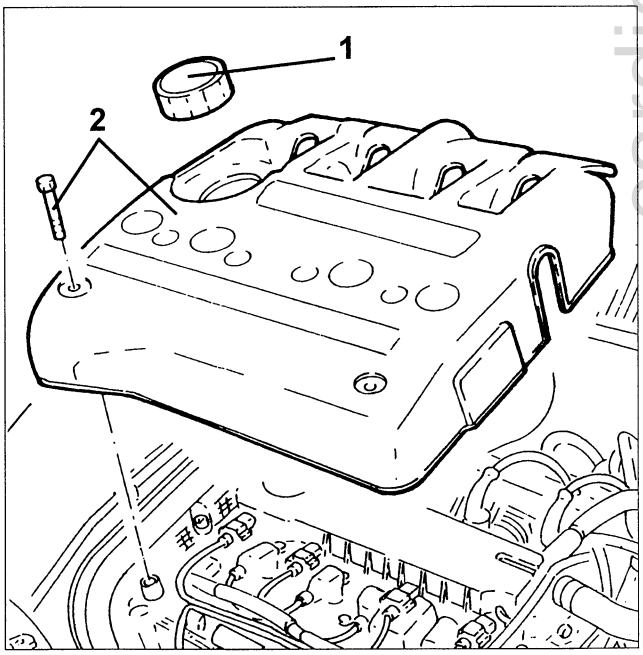

cardiagn.com

1. Disconnect the radiator coolant delivery sleeve from the thermostat cup.
2. Disconnect the climate control heater radiator coolant delivery sleeve from the thermostat cup.
3. Disconnect the climate control heater coolant return pipe from the coolant pump return pipe.
4. Disconnect the expansion reservoir delivery pipe from the thermostat cup.
5. Disconnect the radiator coolant outlet sleeve from the coolant pump return pipe.

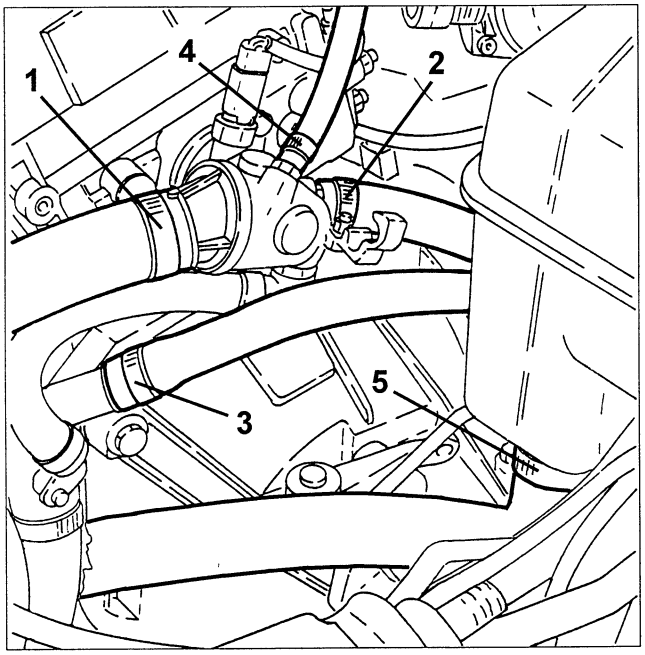

1. Disconnect the accelerator wire from the throttle casing with built-in MDS.
2. Disconnect the injection-ignition ECU electrical connection.
3. Disconnect the front engine wiring electrical connection.

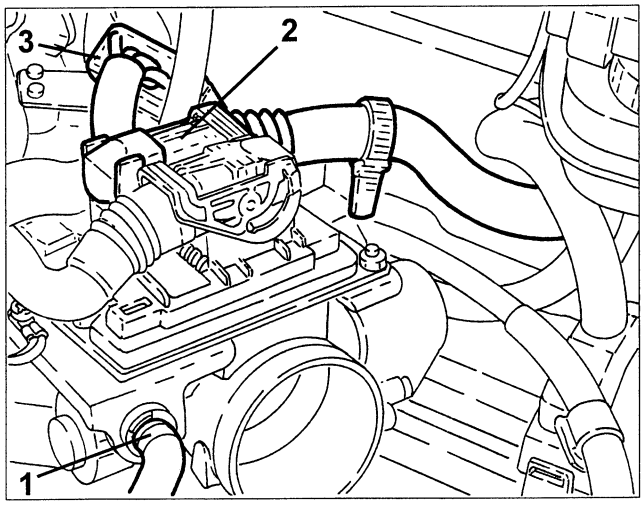

1. Disconnect the knock sensor electrical connection and release the wiring from the fastening clips.

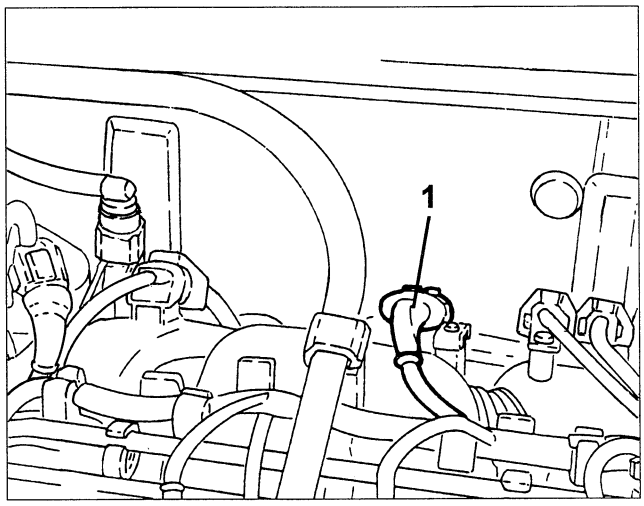

1. Disconnect the fuel delivery pipe from the fuel distribution manifold.
2. Disconnect the fuel vapour recirculation pipe quick coupling.
3. Loosen the reaction screws and remove the engine tie-rod.

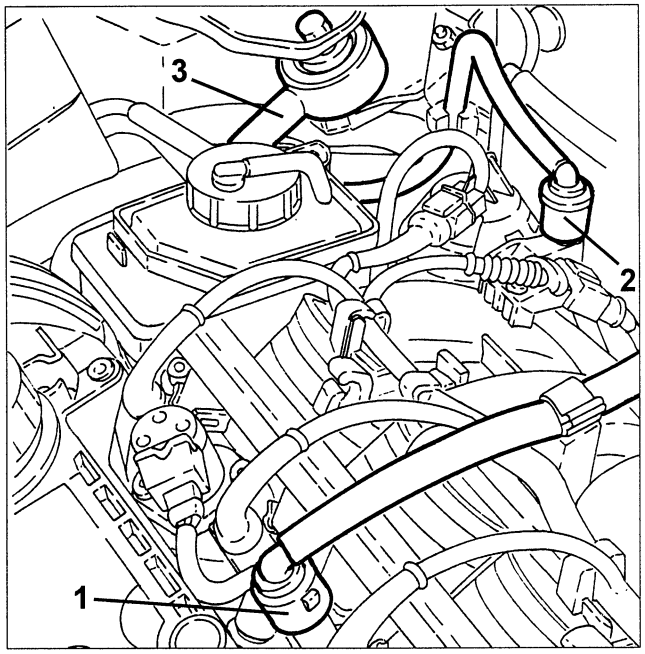

cardiagn.com

1. Open the junction box under the expansion reservoir and disconnect the starter motor power wire.

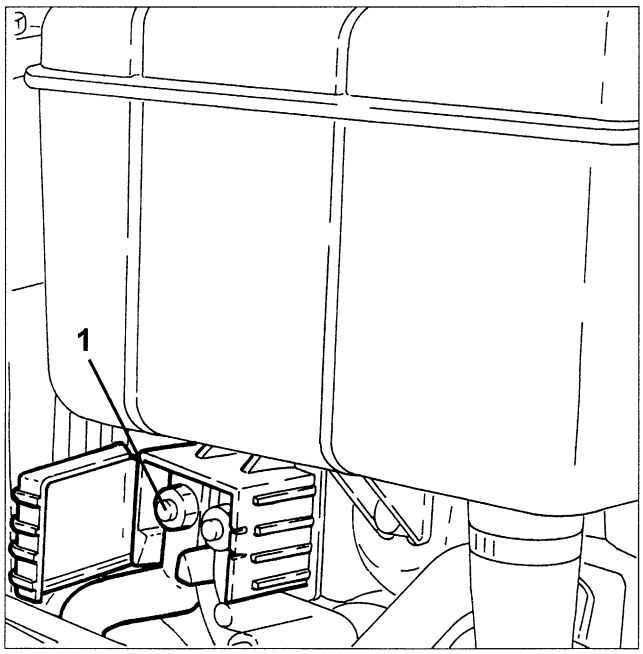

- Use a suitable syringe to empty the power steering reservoir.
- Disconnect the oil intake and delivery pipes from the power steering pump.
1. Loosen the screw and disconnect the coolant inlet and outlet pipes from the conditioner compressor.

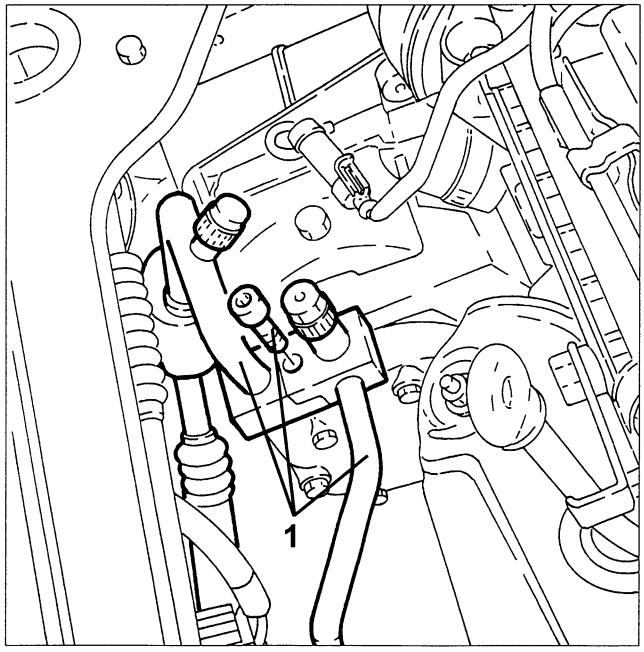

- Loosen the fastening screws and remove the upper radiator crossmember.
1. Disconnect the cooling fan electrical connection.
2. Disconnect the cooling fan resistor electrical connections.

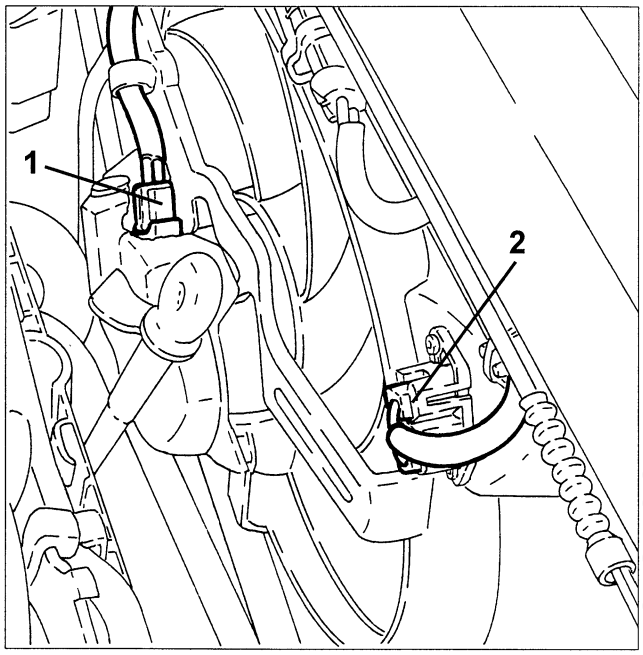

1. Loosen the fastening screws and remove the cooling fan.

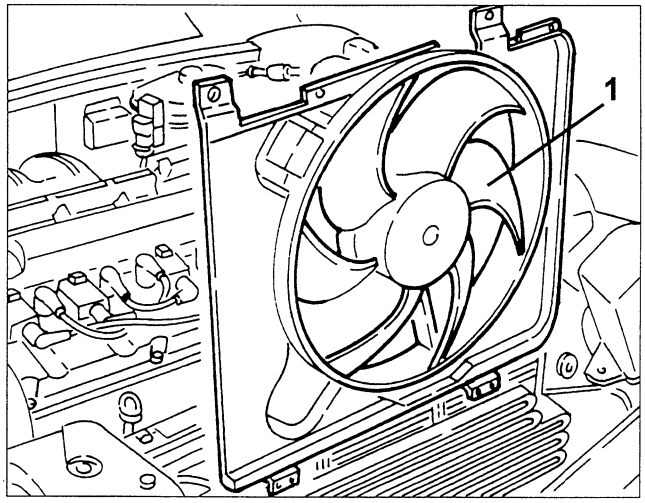

cardiagn.com

1. Disconnect the gearbox earth braid.
2. Disconnect the reversing light switch electrical connection.
3. Loosen the fastening bolts and disconnect the drive shafts.

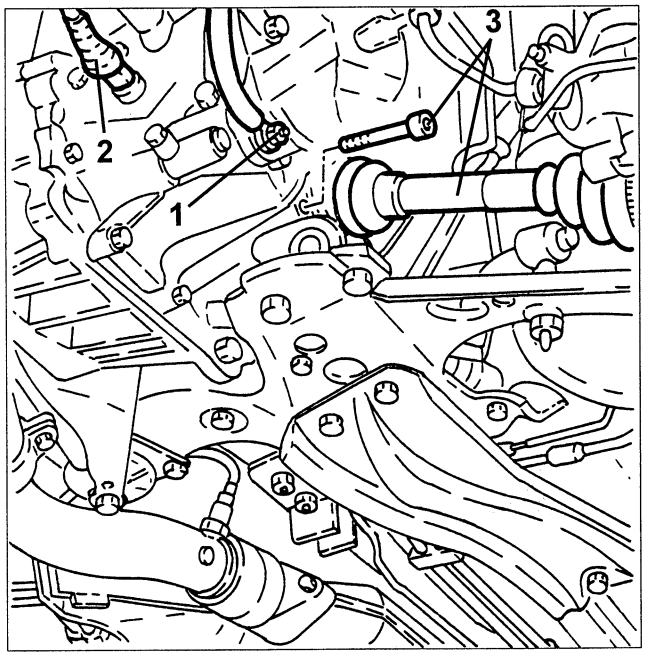

1. Loosen the fastening nuts and disconnect the gearbox control rods.

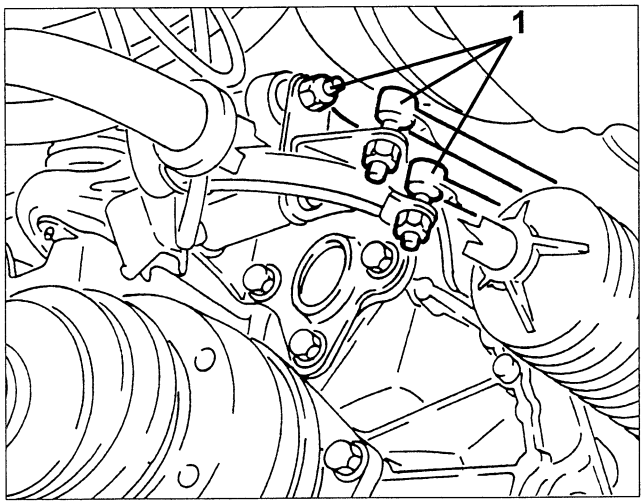

1. Loosen the fastening nuts and remove the reinforcement bar.
2. Loosen the fasteners and remove the front exhaust pipe section with lambda sensor.

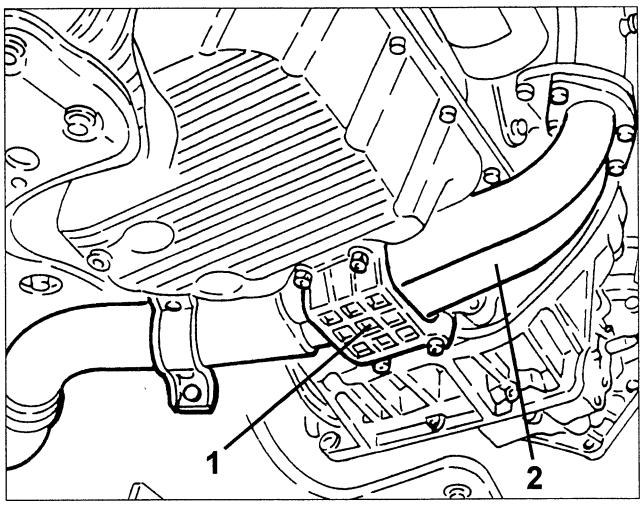

1. Loosen the fastening screws and remove the lower radiator crossmember after releasing the pipe clips from the crossmember.
2. Disconnect the radiator coolant outlet pipe from the coolant pump return pipe and remove it.

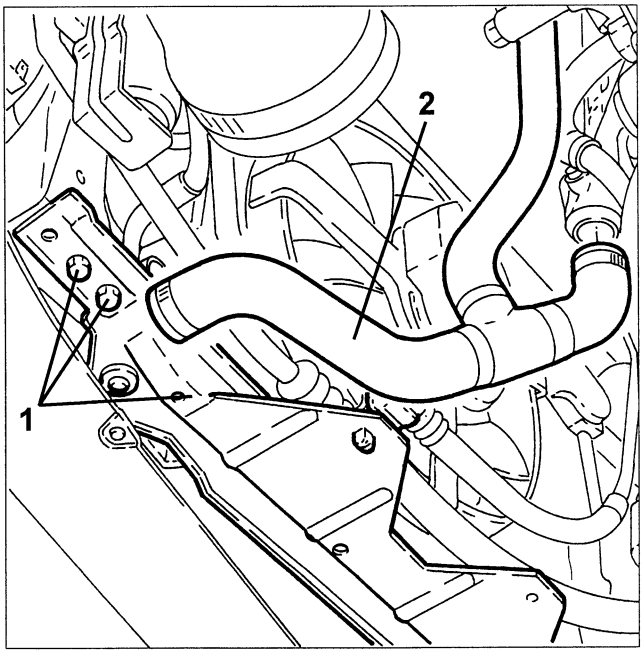

cardiagn.com

1. Position a hydraulic jack with tools no. 1.820.225.000 and no. 1.820.623.000.

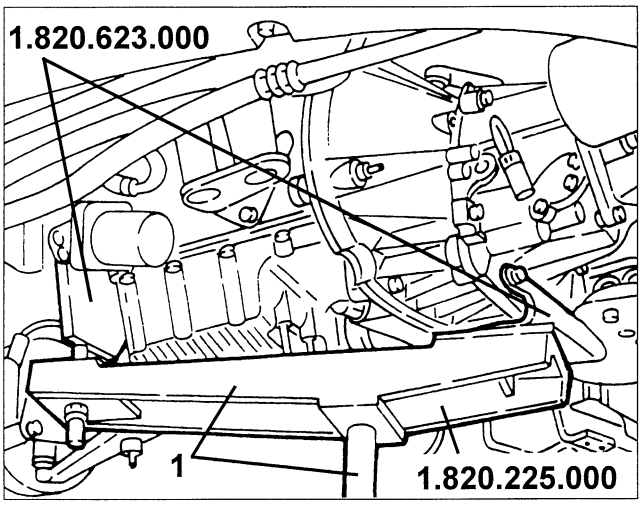

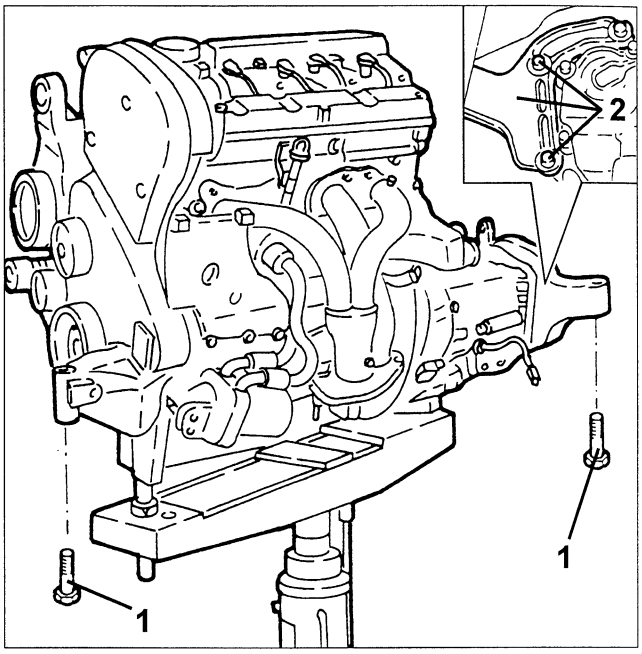

1. Loosen the fastening screws and remove the engine rear mount.

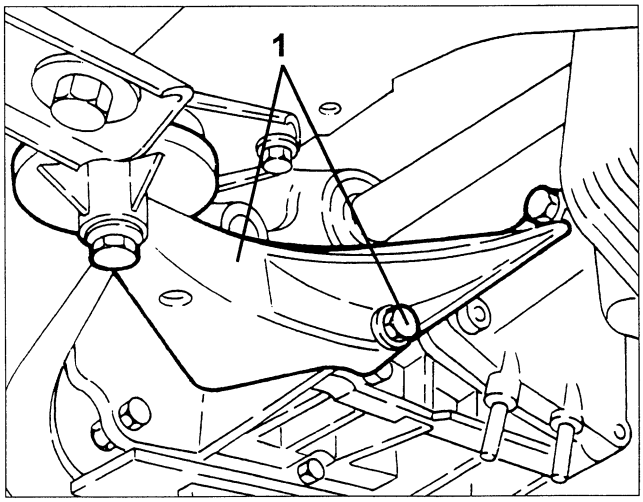

1. Loosen the screws fastening the engine mounts on gearbox side and timing side to the body.
2. Lower the engine slightly, loosen the fastening screws and remove the mount on gearbox side.
3. Lower the hydraulic jack and remove the engine from the engine compartment.

IMPORTANT: The hydraulic jack must have a payload of at least 1000 kg.

- Support the engine with the hydraulic jack used for removal and with a hydraulic crane.

IMPORTANT: Use a hydraulic crane to move the engine after releasing it from the hydraulic jack.

- Release the engine from the tools used for removal. Then position it on a stand.
1. Loosen the starter motor fastening screws.

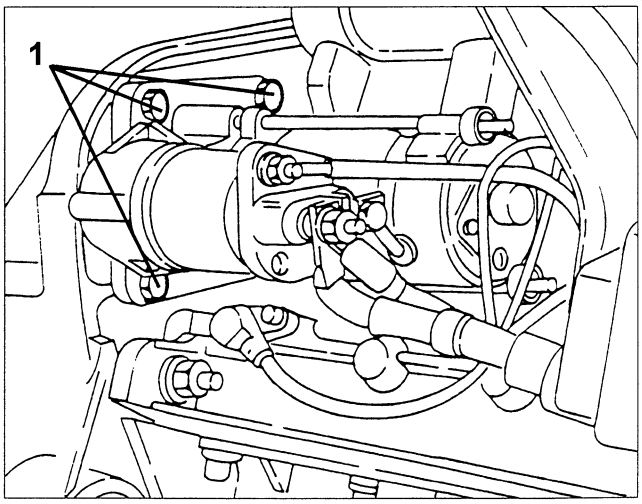

cardiagn.com

1. Loosen the fastening screws and nuts and remove the gearbox-differential assembly.
2. Remove the two heat exchanger coolant delivery and return pipes.

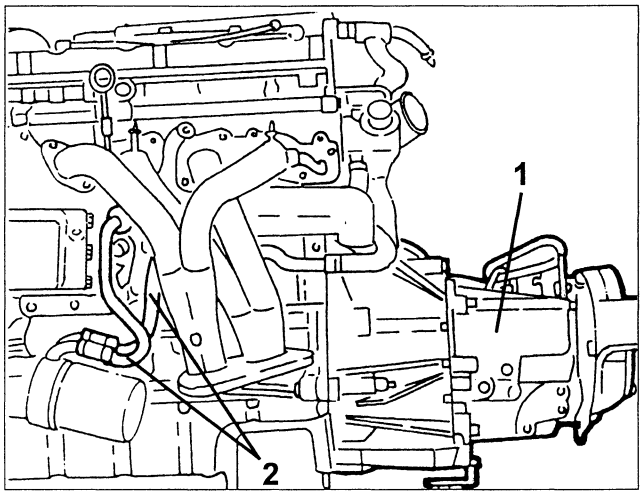

1. Loosen the fastening screws and remove the intermediate drive shaft.
2. Remove the dust guard ring.
3. Take the lower flywheel guard.

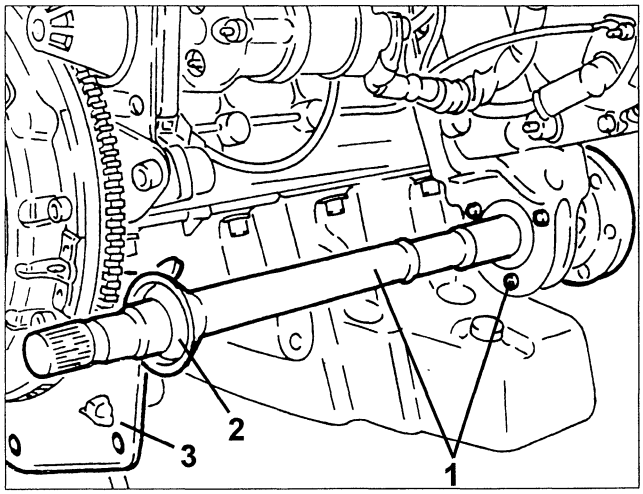

- Release the starter motor for its electrical wiring and remove it.
1. Loosen the fastening screws and remove the thrust plate and the clutch plate.

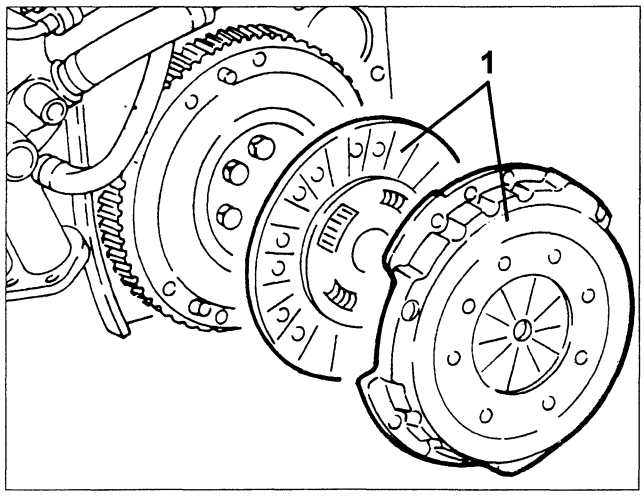

1. Loosen the engine unit belt take-up device fastening screw. Loosen the device and remove the belt.
2. Completely loosen the fastening belt and remove the engine unit belt take-up device.

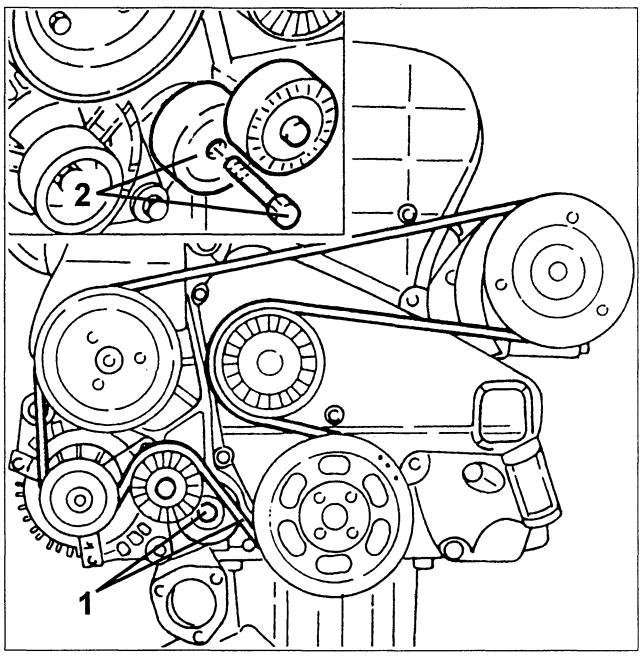

1. Loosen the two fastening bolts and remove the alternator.
2. Loosen the fastening screw and remove the engine unit belt runner.

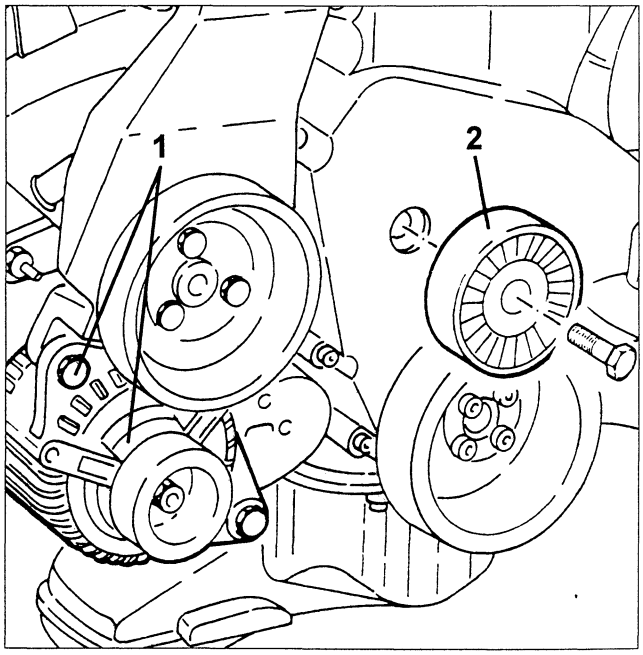

cardiagn.com

1. Use a 3/8" Allen wrench to contrast torque and loosen the three power steering pump pulley fastening screws. Remove the pulley.
2. Loosen the fastening screws and remove the power steering pump.

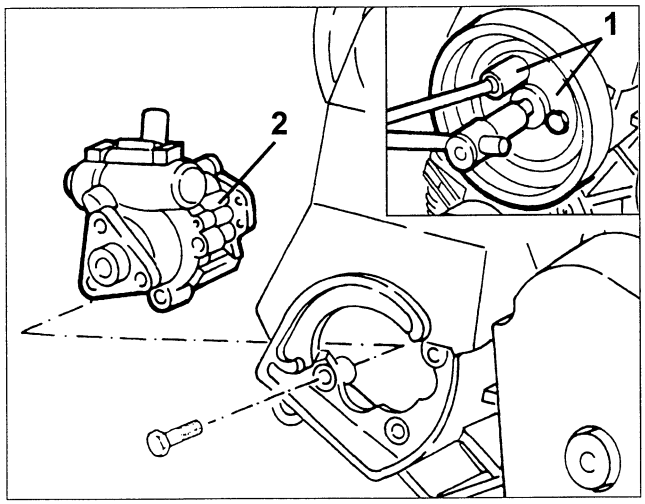

1. Loosen the fastening screws and remove the power steering pump and alternator bracket with intake manifold bracket.

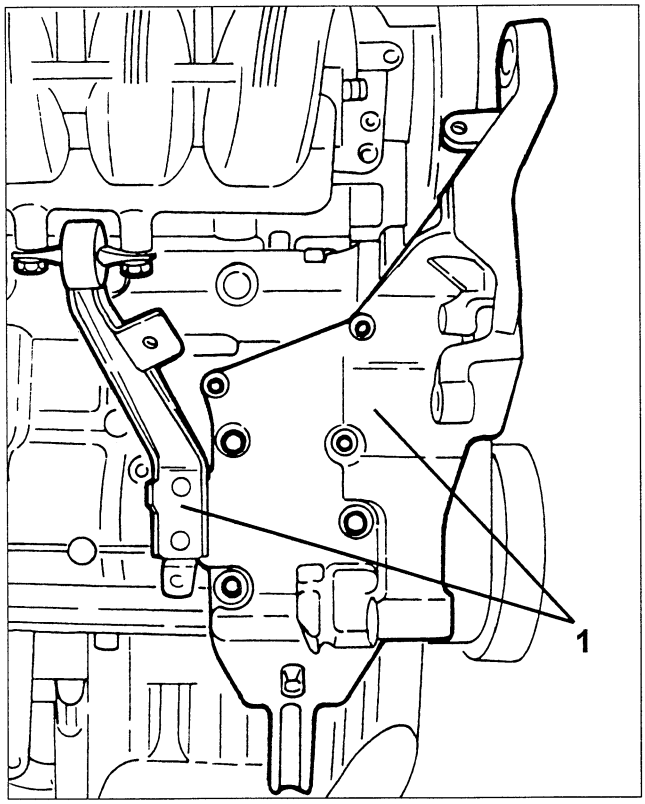

1. Loosen the fastening screw and remove the knock sensor from the crankcase.
2. Loosen and remove the minimum engine oil pressure sensor from the crankcase.

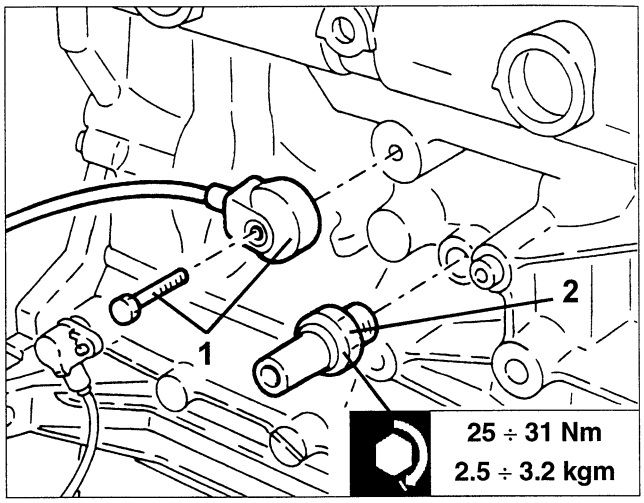

1. Loosen the four fastening screws and remove the conditioner compressor.
2. Loosen the five fastening screws and remove the conditioner compressor bracket.

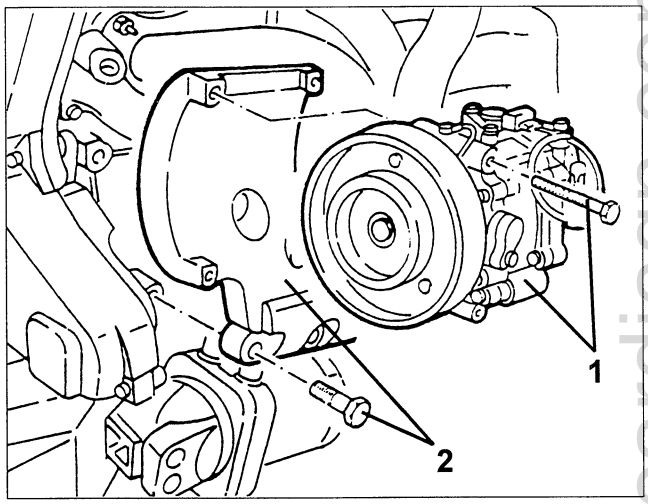

REFITTING

Reverse the removal sequence and observe the following warnings:
- Prepare the engine compartment to insert the engine assembly by positioning all the electrical wires, pipes, etc. so that they do not interfere with the refitting operations.

IMPORTANT: Make sure the engine assembly mounts are correctly fastened.

- After refitting, check correct belt tension and top up the various systems as required (see ASSEMBLY 00).
- Perform all the checks and interventions required (see Assembly 00).

cardiagn.com

CYLINDER HEAD

REMOVAL/REFITTING

- Position the vehicle on a shop jack.
- Make sure the ignition key is at "STOP" and disconnect the (-) battery terminal.
- Remove the front right-hand wheel and mudguard.
- Lift the vehicle, loosen the fasteners and remove the guard under the engine.

1. Drain the engine coolant by disconnecting the radiator outlet sleeve.

NOTE: Collect the engine coolant in a suitable container.

2. Loosen the clip fastening the front resonators to the air cleaner.

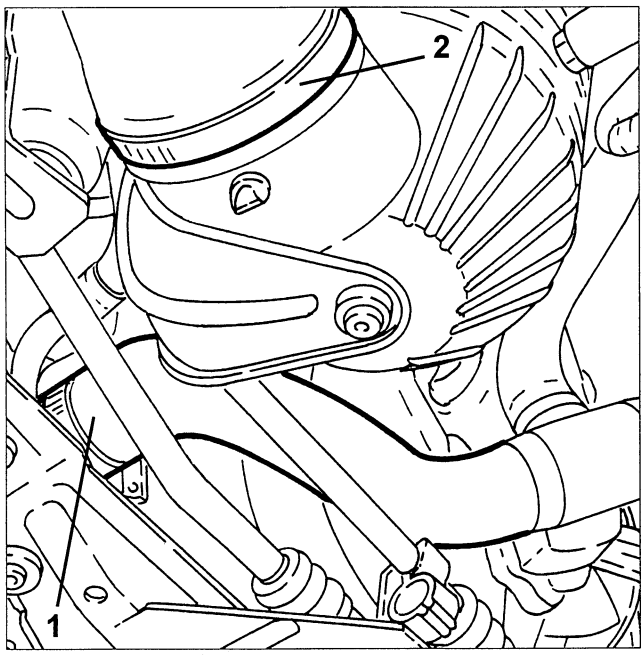

1. Lower the vehicle, loosen the fastening screws and remove the engine compartment side guards.

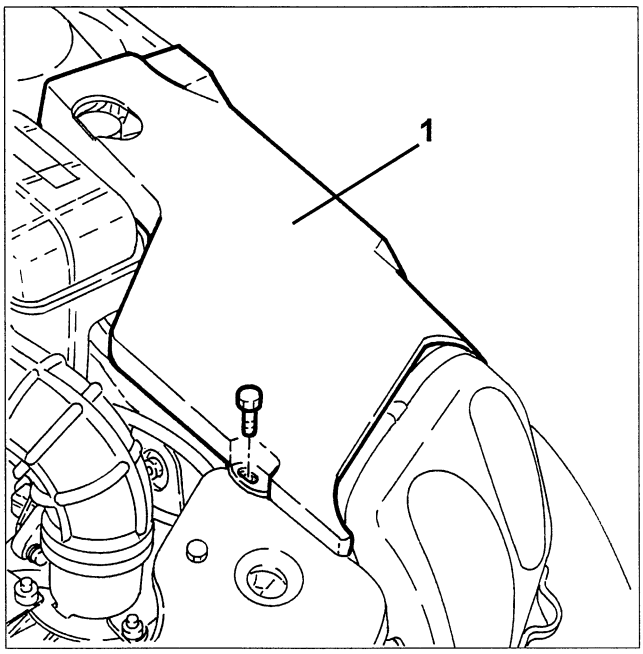

1. Disconnect the air flow meter electrical connection.
2. Loosen the clip fastening the resonator sleeve to the corrugated sleeve second section.
3. Loosen the screws fastening the air cleaner casing cover.
4. Remove the corrugated sleeve first section with air flow meter and air cleaner cover.

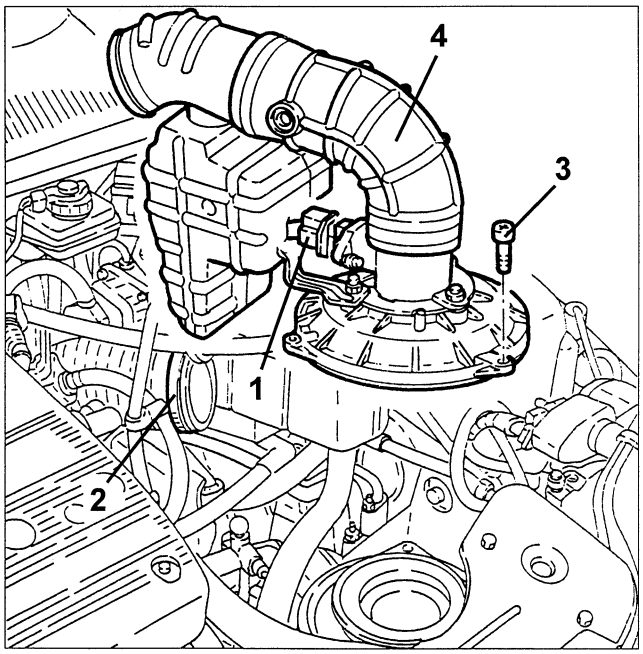

cardiagn.com

1. Remove the air cleaner conveyor.
2. Remove the air cleaner filter.

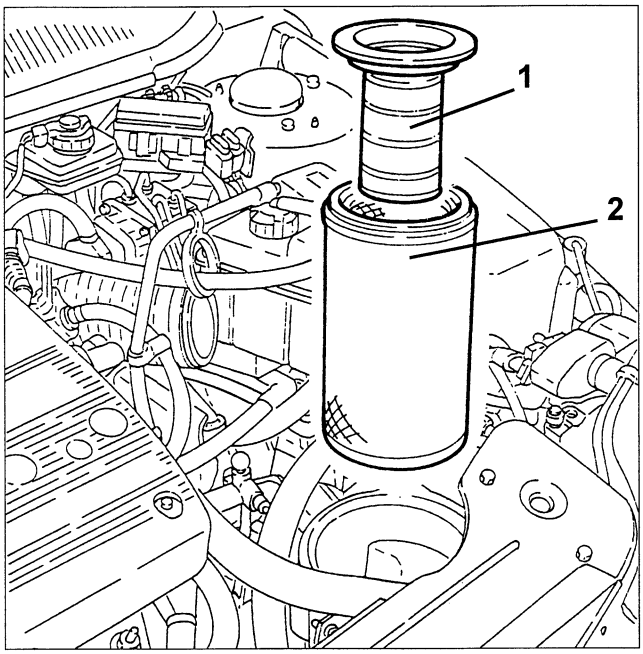

1. Disconnect the oil vapour recovery pipe from the second corrugated sleeve section.
2. Loosen the clip and remove the corrugated sleeve second section.

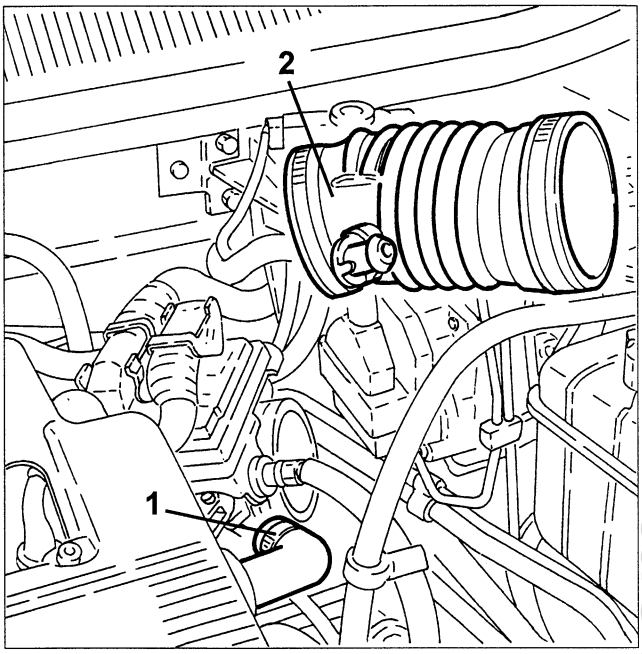

1. Remove the air cleaner casing.

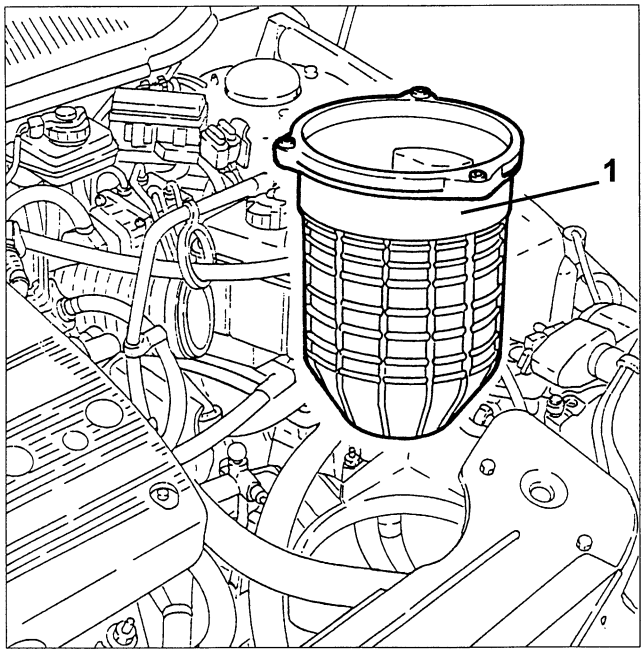

1. Remove the engine oil filler cap.
2. Loosen the fastening screws and remove the ignition coil covers.
- Refit the engine oil filler cap.

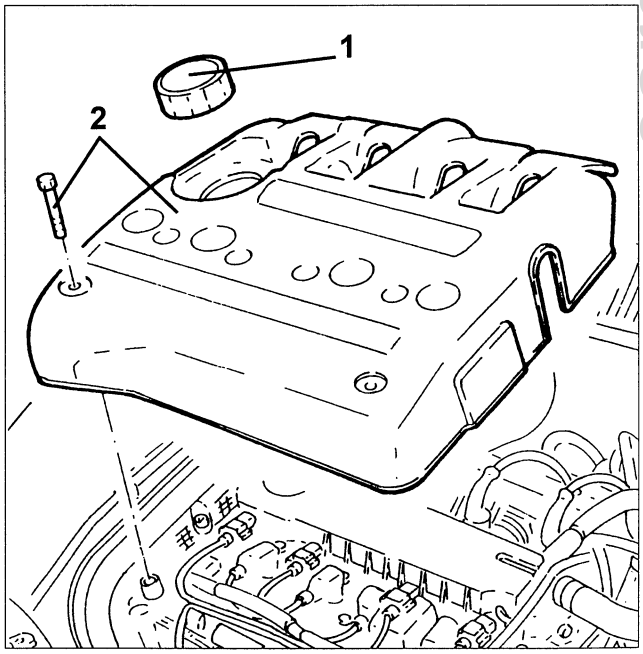

cardiagn.com

1. Disconnect the conditioner compressor electrical connection.
2. Loosen the engine oil level dipstick fastening screw.

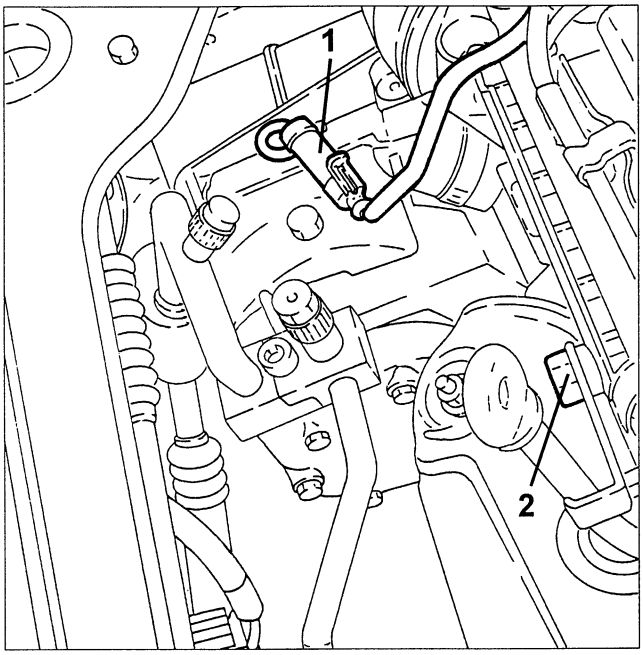

1. Disconnect the ignition coil electrical connections.

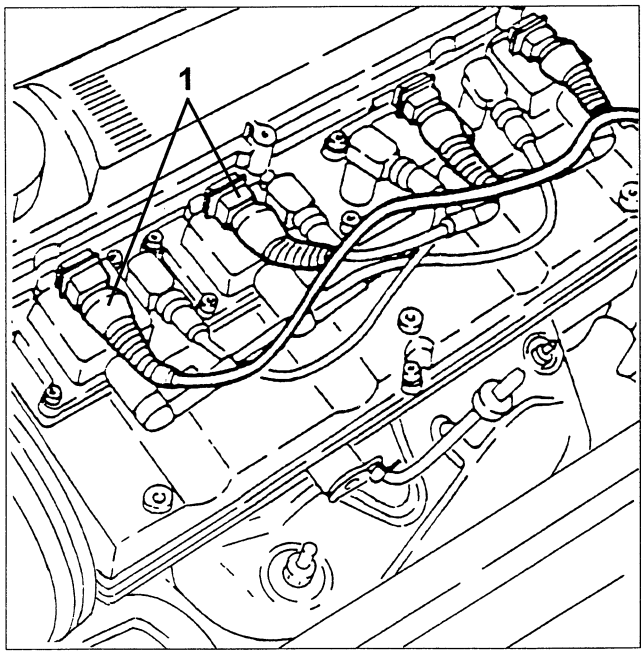

1. Disconnect the radiator coolant delivery sleeve from the thermostat cup.
2. Disconnect the climate control heater radiator coolant delivery sleeve from the thermostat cup.
3. Disconnect the climate control heater coolant return pipe from the coolant pump return pipe.
4. Disconnect the expansion reservoir delivery pipe from the thermostat cup.
5. Disconnect the radiator coolant outlet sleeve from the coolant pump return pipe.

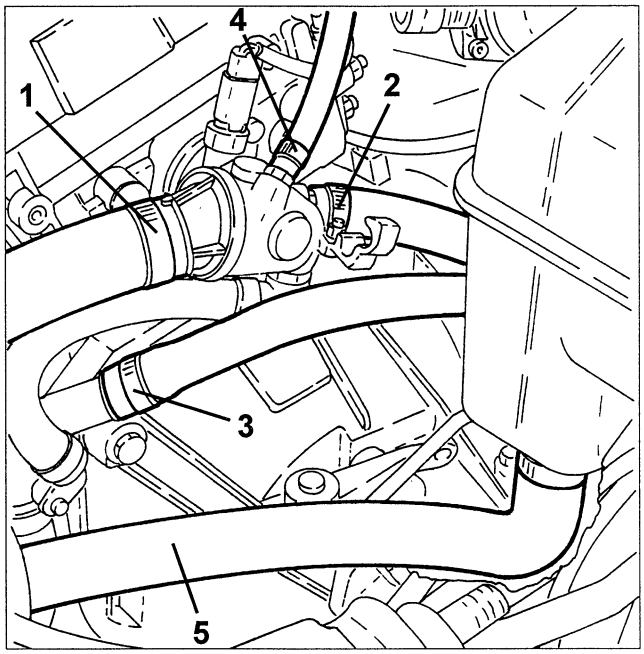

1. Disconnect the accelerator wire from the throttle casing with built-in MDS.
2. Disconnect the injection-ignition ECU electrical connection.
3. Disconnect the front engine wiring electrical connection.

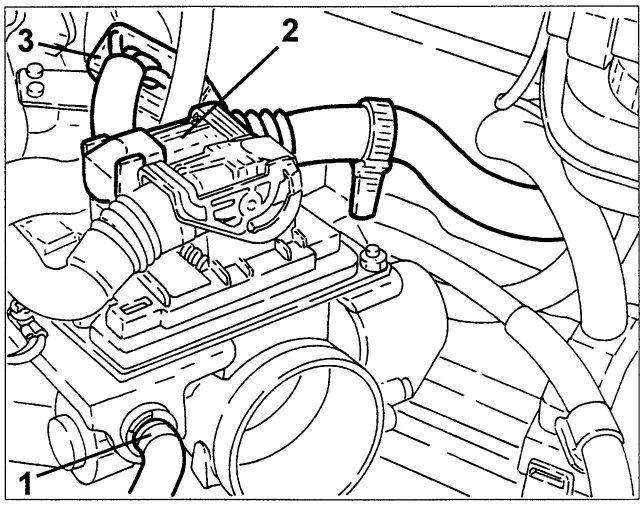

cardiagn.com

1. Disconnect the knock sensor electrical connection and release the wiring from the fastening clips.
2. Disconnect the rpm and phase sensor electrical connection and release the wiring from the fastening clips.
3. Disconnect the lambda sensor electrical connection and release the wiring from the fastening clips.

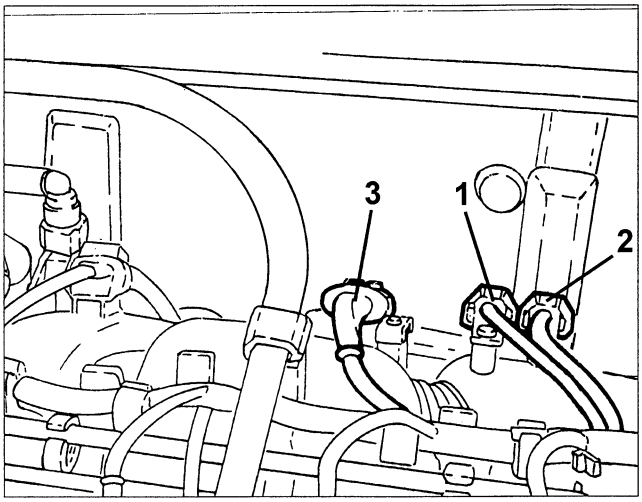

1. Disconnect the fuel delivery pipe from the fuel distribution manifold.
2. Disconnect the fuel vapour recirculation pipe quick coupling.
3. Loosen the reaction screws and remove the engine tie-rod.

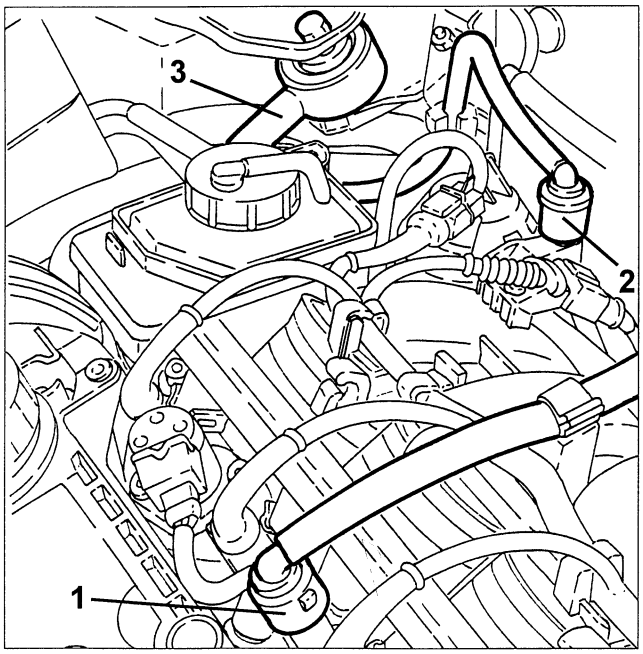

- Loosen the screws fastening the power steering reservoir to the modular intake manifold and move it aside without disconnecting the pipes.
1. Lift the vehicle and loosen the bolts fastening the front section of the exhaust pipe to the manifold.
2. Loosen the screws fastening the exhaust manifold bracket to the crankcase.

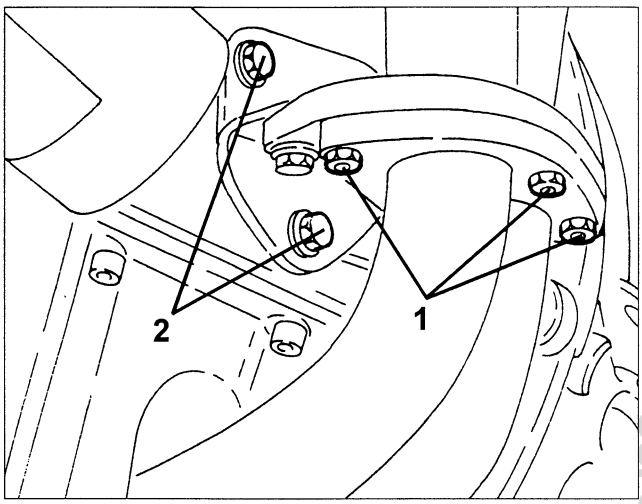

1. Loosen the two screws fastening the coolant delivery pipe to the heat exchanger.
2. Disconnect the coolant fluid outlet pipe from the heat exchanger.

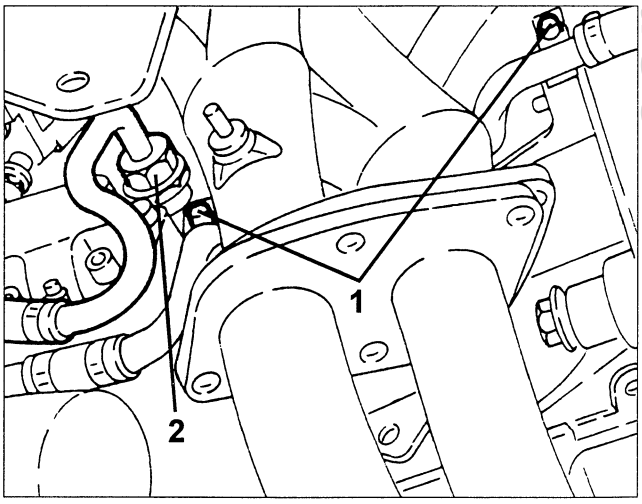

cardiagn.com

1. Move the engine unit belt take-up device as shown in the figure and remove it.
2. Loosen the fastening screws and remove the engine pulley.

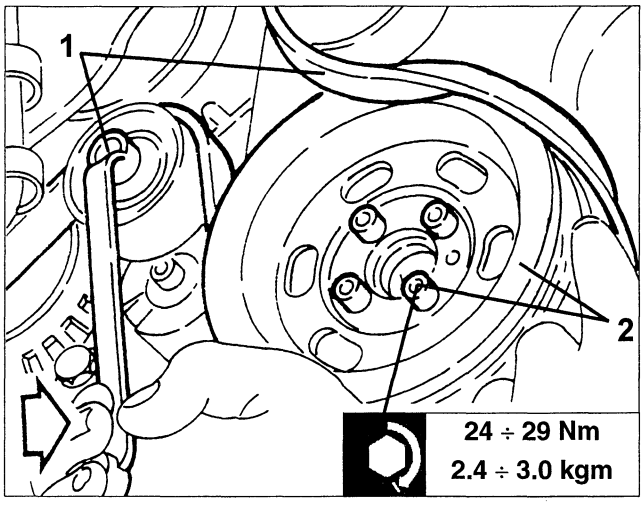

- Loosen the lower timing belt guard screws.
1. Lower the vehicle, loosen the remaining fastening screws and remove the timing belt guard.

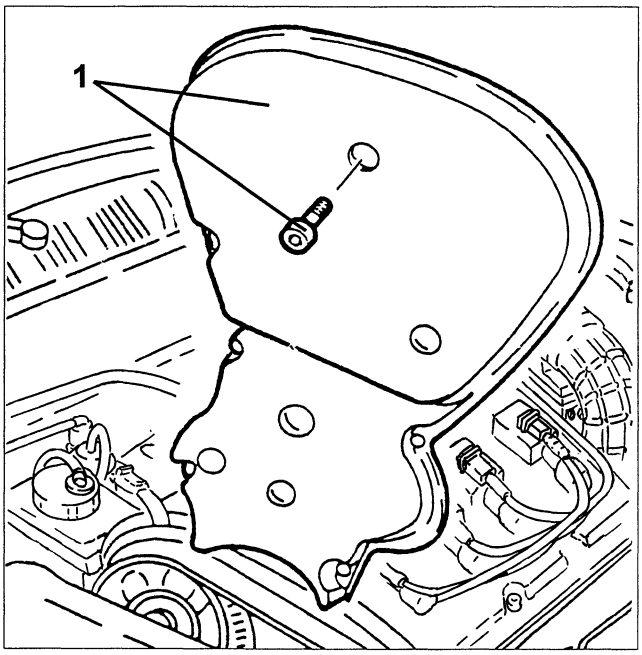

For versions without counter-rotating shafts
1. Loosen the fasten screw and remove the engine unit belt runner.

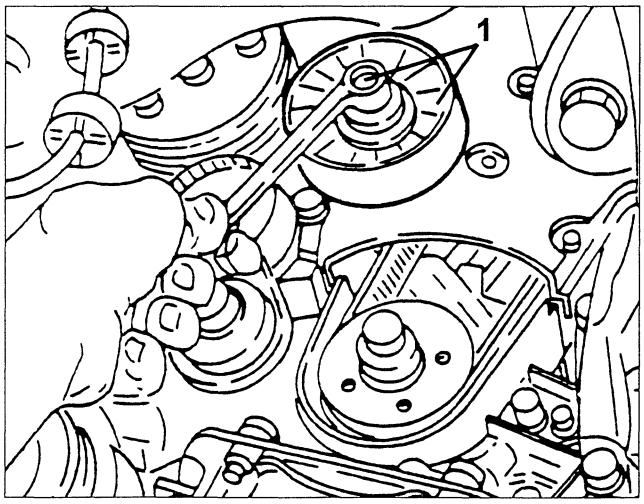

1. Turn the belt take-up and loosen the timing belt. Remove the belt from the camshaft pulleys.

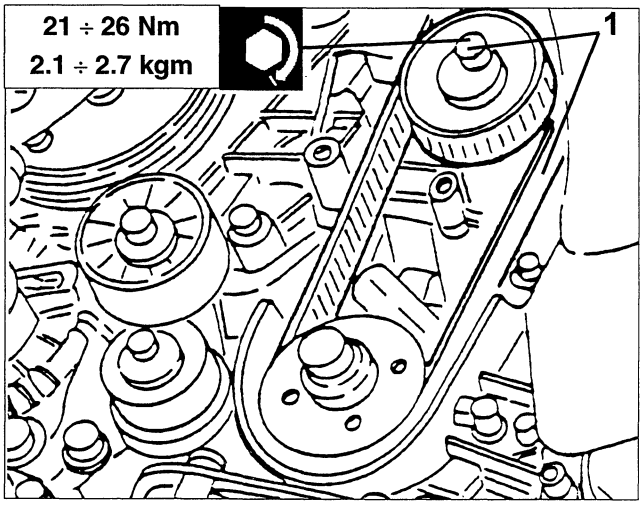

cardiagn.com

For versions with counter-rotating shafts

1. Loosen the fastening screw and remove the auxiliary unit belt runner.

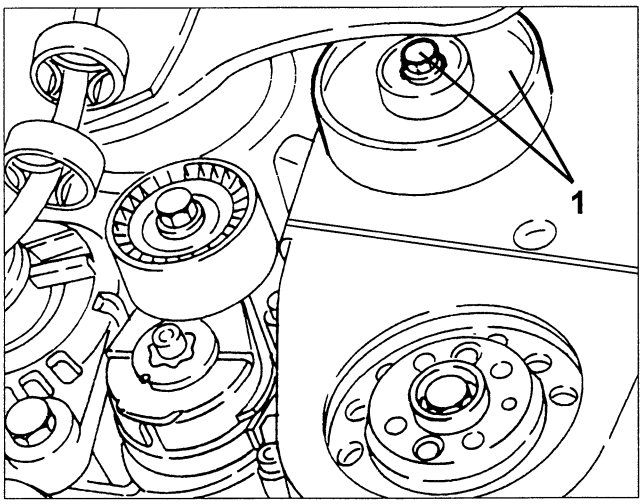

1. Loosen the fastening screws and remove the lower timing belt guard.

NOTE: Turn the auxiliary unit belt take-up device as shown in the figure to reach the rear screw.

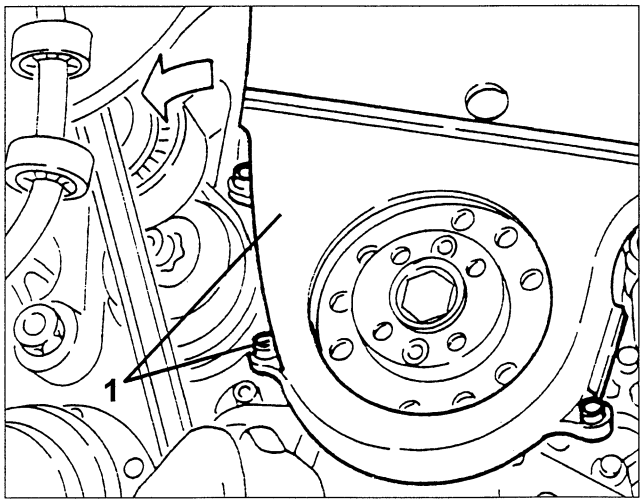

- Loosen the upper timing belt guard lower screws.

1. Lower the vehicle, loosen the remaining fastening screws and remove the upper timing belt guard.

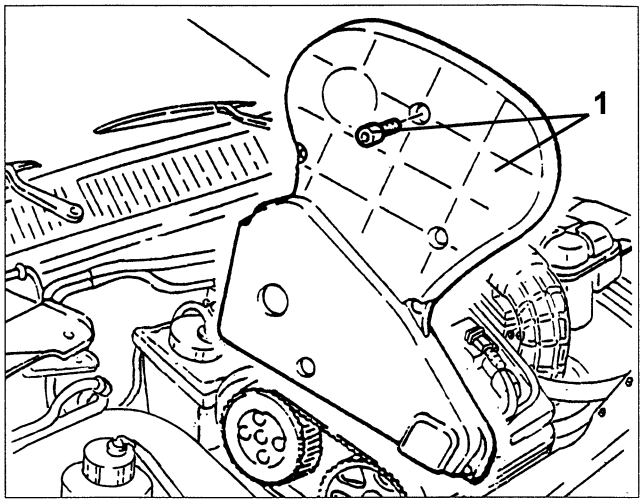

1. Turn the belt take-up, loosen the timing belt and remove it from the camshaft pulleys.

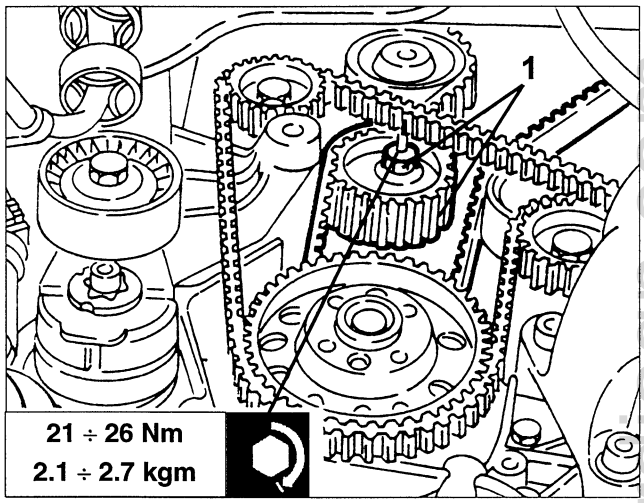

For all versions

1. Loosen the fastening screws and remove the two timing belt side guards.

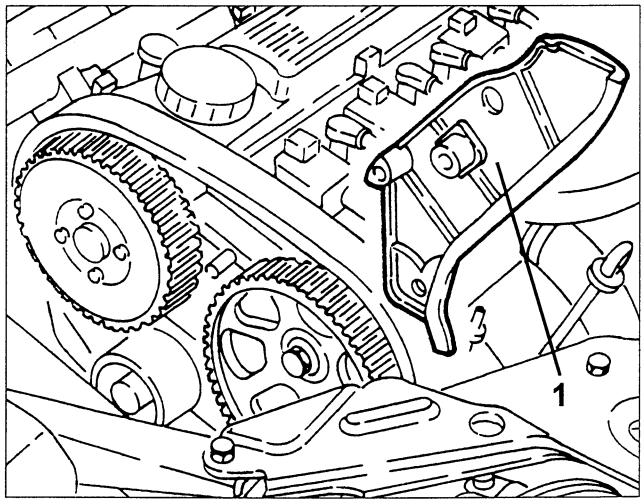

cardiagn.com

1. Lift the screws fastening the bracket to the modular intake manifold.

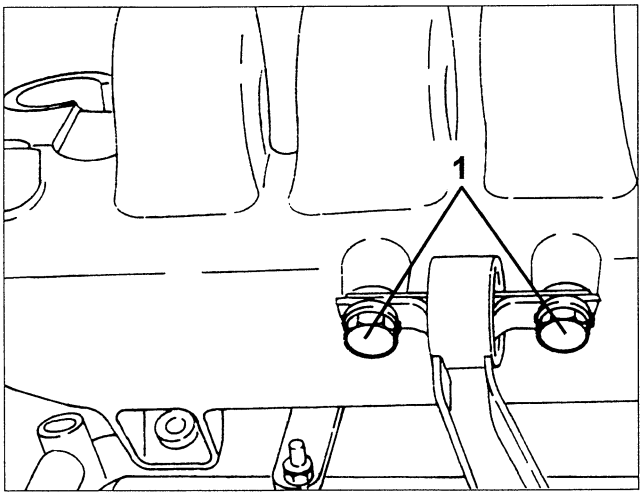

- Disconnect the brake booster vacuum intake pipe from the modular intake manifold.
1. Loosen the fastening screws and remove the ignition coils.
2. Loosen the fastening screws and remove the ignition coil bracket.

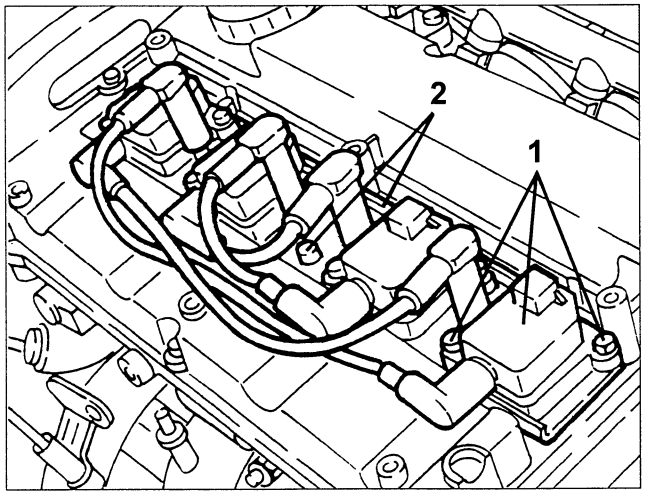

- Disconnect the oil vapour recirculation pipe from the tappet cover.
1. Loosen the fastening screws and remove the tappet cover and seal.

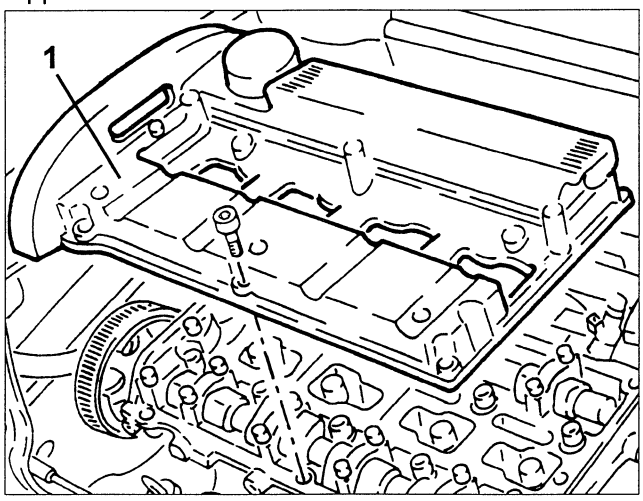

1. Loosen the fastening screws and remove the cylinder head.
2. Remove the respective seal.

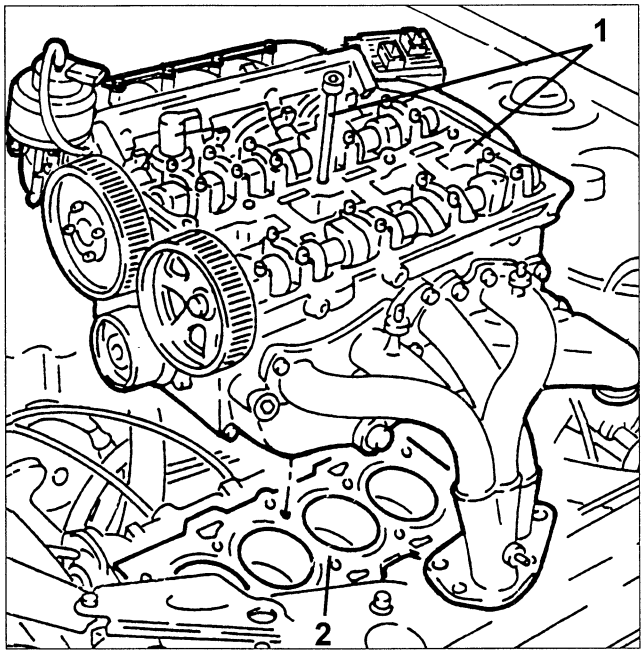

- Disassemble and overhaul the cylinder head as described in the "ENGINE OVERHAUL" book.

Refit the cylinder head by reversing the removal sequence. Observe the following precautions.
- Turn the crankshaft so that the pistons of cylinder 1 and 4 are at TDC.
- Position a new cylinder head seal on the crankcase.

NOTE: The cylinder head seal is made of aramidic fibre and no head re-torque is required for the entire engine life.

IMPORTANT: When refitting, clean the cylinder head and crankcase surfaces accurately.

- Fit the cylinder head on the crankcase.

cardiagn.com

- Torque the cylinder head fastening screws as described below according to the order shown in the figure.

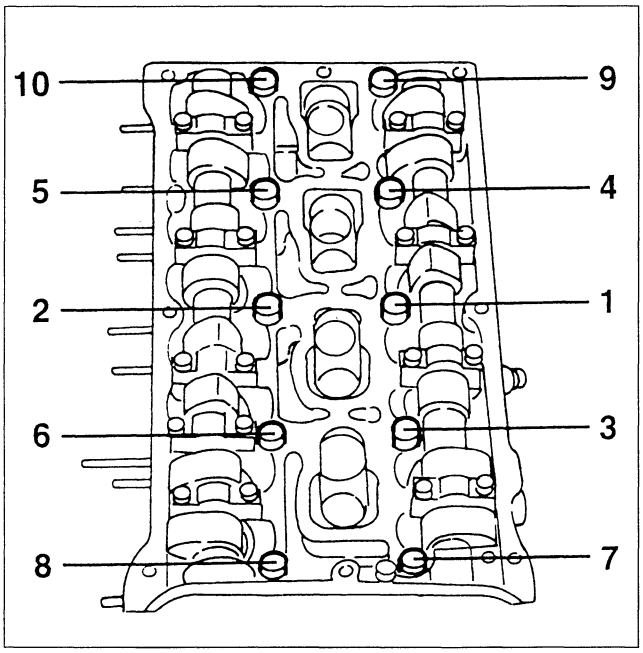

Tightening sequence	
Fasten all screws at a torque of:	20 Nm (2.0 kgm)
Torque all screws at a pre-torque of:	40 Nm (4.1 kgm)
Turn all screws by an angle of:	90° + 90° + 90°

- Use tool no. 1.820.277.000 as shown in the figure for angle torque.

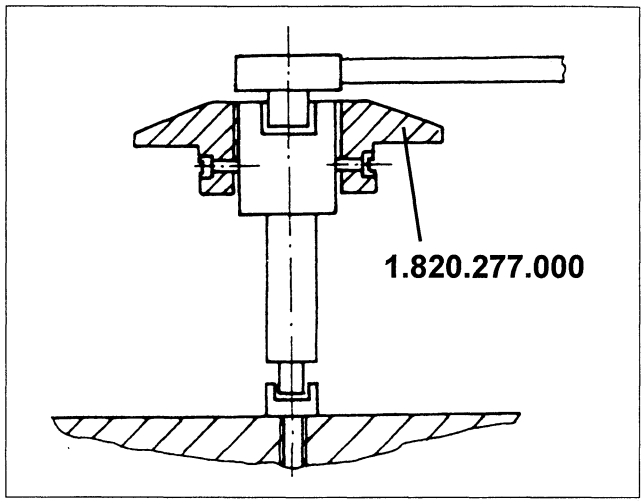

For refitting the timing belt, for timing and for refitting the auxiliary unit belt, see ASSEMBLY 00.

cardiagn.com

GENERAL DESCRIPTION

The Bosch Motronic M1.5.5 belongs to the category of integrated system governing:
- inductive discharge electronic ignition
- statistic timing
- phased sequential electronic injection (1-3-4-2).

When idling the ECU controls:
- spark instant
- air intake

to adjust the engine to changes in environmental parameters and applied loads.
The ECU controls and manages injection so that the stoichiometric ratio (air-to-fuel ratio) is constantly optimal.
Essentially, the main functions of the system are:
- injection time adjustment
- spark advance
- cold start control
- acceleration enrichment control
- fuel cut-off upon accelerator pedal release
- idling control and management
- engine rpm limitation;
- fuel-lambda sensor control
- cylinder position acknowledgement
- fuel vapour recovery
- connection to climate control system (where fitted)
- connection to Alfa Romeo CODE ECU (Immobilizer)
- system self-adapting
- self-test
- cooling fan control.

INJECTION SYSTEM

The essential conditions which should always be fulfilled in preparing the air-to-fuel mixture for the good operation of controlled ignition engines are mainly:
- "metering": the air-to-fuel ratio should be kept as close as possible to the stoichiometric value to ensure maximum catalytic converter efficiency.
- the mixture should be homogenous, i.e. consist of petrol diffused as finely and uniformly as possible.

The information processed by the ECU for controlling optimal metering is received in the form of electrical signals emitted by the:
- air flow meter and temperature sensor, for the exact quantity of intake air
- rpm sensor which produces an alternating single phase signal indicating the engine rpm
- throttle potentiometer (built-in the constant idling actuator) to acknowledge idling, partial and full charge
- lambda sensor to determine the oxygen content in exhaust gases.

IGNITION SYSTEM

The ignition system is the static advance induced discharge type (i.e. without high voltage distributor) with power modules inside the injection ECU.
The system has a single coil for each spark plug (MONOCOIL). The advantages of this solution are:
- less electrical overload;
- guarantee of constant discharge at each spark plug.

A map containing the entire set of optimal spark advance values (for each cylinder at power stroke) which the engine can adopt according to the ratio and the engine load is stored in the ECU. The ECU corrects spark advance mainly according to:
- air coolant temperature
- air intake temperature
- knock
- throttle position.

The information that the ECU processes to pilot the monocoils is received in the form of electrical signals emitted by:
- air flow meter and temperature sensor, for the exact quantity of intake air
- rpm sensor which produces an alternating single phase signal indicating the engine rpm
- knock sensors (on the rear part of the crankcase between cylinder 2 and 3) to acknowledge the cylinder where detonation is occurring and to correct spark advance
- throttle potentiometer (built-into the constant idling actuator) to acknowledge load conditions (idling, partial and full).

cardiagn.com

INJECTION SYSTEM OPERATING LOGIC

System self-adaption

The ECU is equipped with a self-adapting feature which acknowledged the changes in the engine and in its components due to time and ageing. The changes are memorised as basic maps and have the function of adapting the system to the progressive engine component alterations which respect to new conditions. The self-adapting feature also allows to compensate for the inevitable differences (due to production tolerance) of replaced components.
The exhaust fume analysis changes the basic mapping with respect to new engine conditions.
Self-adapting parameter as not deleted when the battery is disconnected.

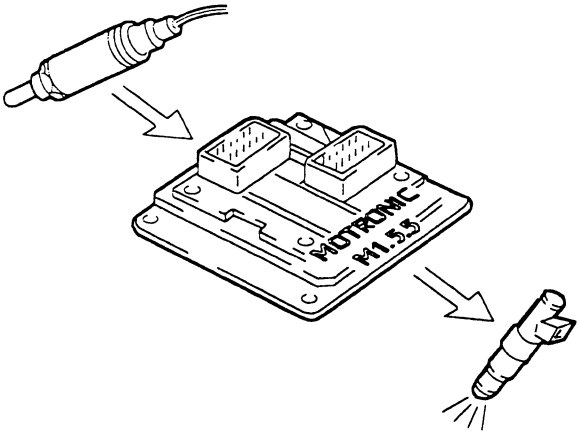

Self-test

The ECU self-test system checks the signals from the sensors and compares them against the allowed thresholds:
- fault signalling at key on
• warning light on for four seconds indicates test phase
• warning light off after four seconds indicates no faulty components which can alter the pollution prevention system effectiveness have been found
• warning light on after four seconds indicates a fault.

- fault signalling during operation
• warning light on signals a fault
• warning light off indicates no faulty components which can alter the pollution prevention system effectiveness have been found.
- recovery
• the ECU defines the type of recovery according to the faulty components
• the recovery parameter are controlled by the components which are not faulty.

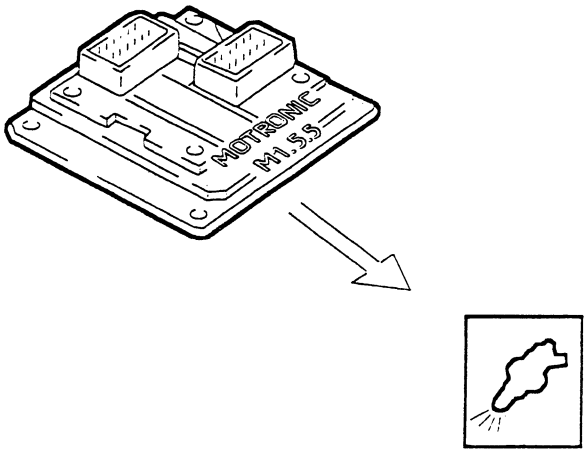

Alfa Romeo CODE acknowledgement

When the ECU receives the key on signal (key at "MAR") it interfaces with the Alfa Romeo CODE ECU to enable start-up. Communication is ensured via a two-way diagnostic serial line between the two ECUs.

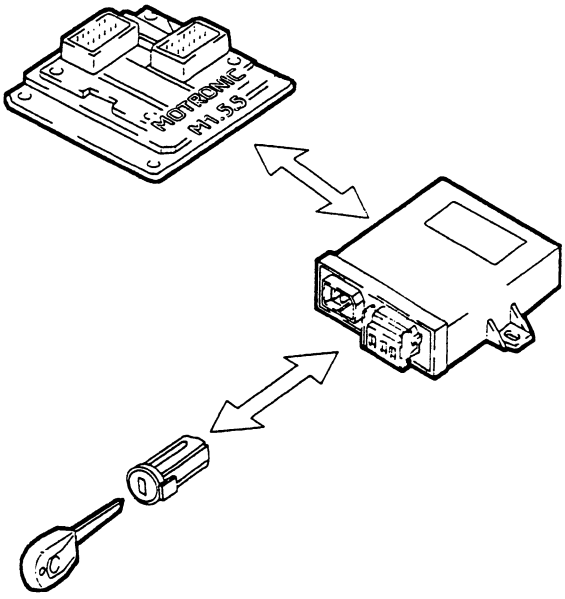

cardiagn.com

Cold start control

Normally, in cold start conditions:
- the mixture is naturally lean due to poor turbulence of the fuel particles at low temperatures
- fuel evaporation is reduced
- fuel condenses on the intake manifold internal walls
- lubricating oil is more viscous.

The ECU acknowledges this condition and corrects the injection time according to:
- coolant temperature
- intake air temperature
- battery voltage
- engine rpm.

Spark advance is exclusively controlled according to rpm and to engine coolant temperature.
During start-up, the ECU controls an initial simultaneous injection for all injectors (full-group injection) and, after acknowledging cylinder stroke, it starts the normal, sequential phased operation.
While the engine is being taken to temperature, the ECU pilots the idling actuator to adjust the amount of air required to ensure idling ratio.
Engine ratio is decreased as the coolant temperature increases until the engine temperature nominal value is reached.

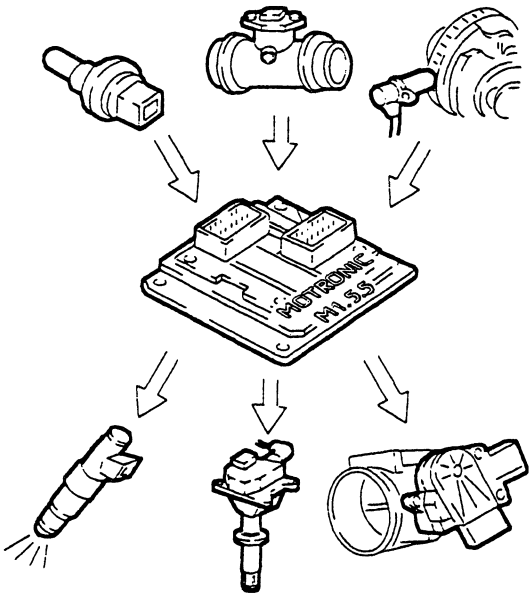

Fuel-lambda sensor control

The ECU processes with lambda sensor signal by means of a specific integrator and defines the injector opening time according to:
- idling ratio
- average load
- temperature > 30°C.

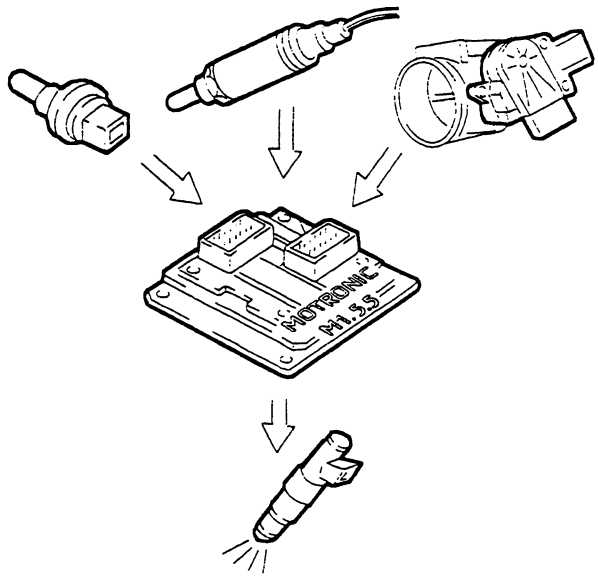

Phase variator control and modular intake manifold

The ECU, in order to optimise the amount of air taken in by the engine, controls:
- intake phasing on two angular positions
- intake manifold geometry on two lengths.

At maximum torque, the ECU sets the "open" phase:
- cam advanced by 25° engine
- long intake manifold ducts.

At maximum power, the ECU sets the "closed" phase:
- cam in normal position
- short intake manifold ducts.

cardiagn.com

At idling ratio, the ECU sets the "closed" phase:
- cam in normal position
- short intake manifold ducts.

In other conditions of engine operation, the ECU chooses the most suitable configuration to optimise performance, consumption and emission.
At cut-off the intake manifold ducts are always "short".

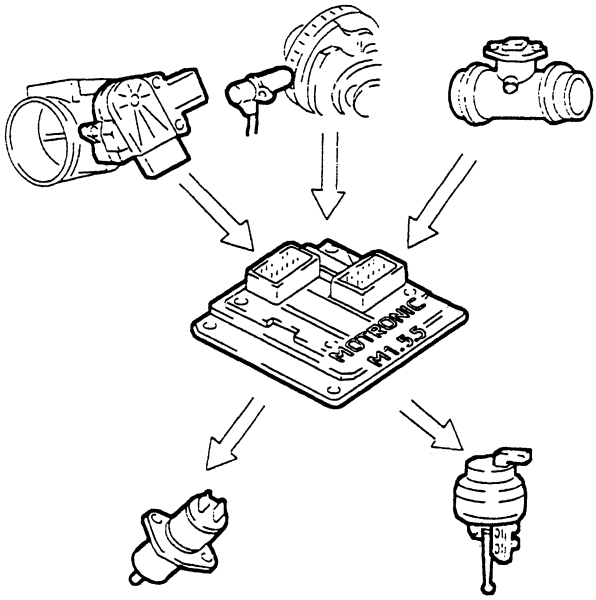

Knock control

The ECU acknowledges knock by processing the signal from the respective sensor. The ECU constantly checks the sensor signal with a threshold value. The threshold value is constantly updated considering basic noise and engine ageing.
Consequently, the ECU can acknowledge knock (or early knock) and reduces the spark advance by 3° steps to a maximum of 6° until the phenomenon disappears. Advance is then gradually restored to the basic value (in 0.8° steps).
During acceleration, the ECU employs a higher threshold to adapt to increased engine noise.
Knock control is also equipped with a self-adapting feature which memorises advance reductions which repeat constantly so to update the maps to the different conditions in which the engine is working.

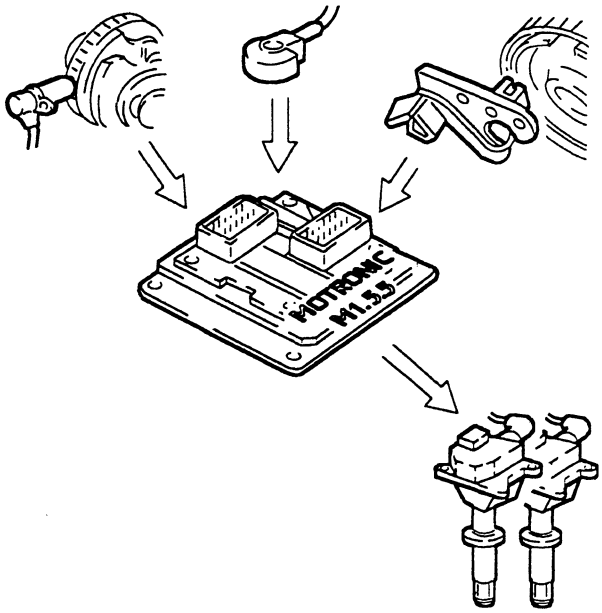

Acceleration enrichment control

If in acceleration, the air flow meter signal exceeds a certain predefined increase, the ECU increases injection (injection time) to rapidly reach the required rpm. As the define rpm approaches, the injection increase is progressively eliminated.
Recovery:
- the ECU replaces the signal from the faulty air flow meter with the signal from the throttle potentiometer.

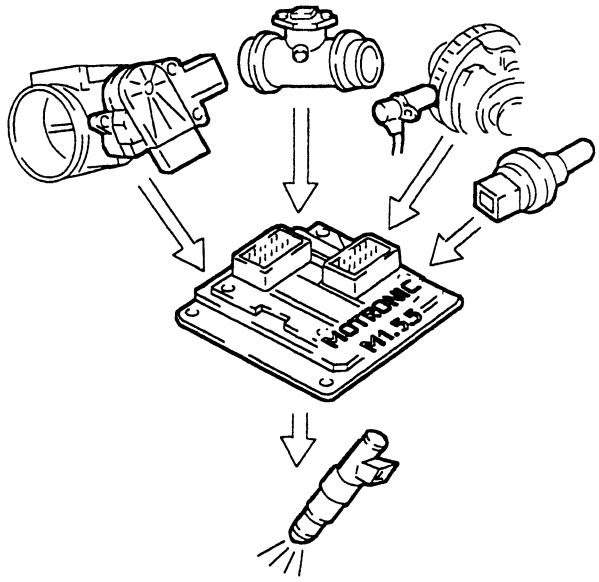

cardiagn.com

Fuel cut-off upon accelerator pedal release

When the accelerator pedal is released at over a predefined engine rpm threshold, the ECU:
- cuts feed to injectors
- supplies feed to injectors at 1300 - 1500 rpm.

When the throttle is closed and engine rpm exceeds 1700 rpm, the ECU inhibits injector opening.
When fuel is cut off, rpm decreases at different speeds according to vehicle speed. Before reaching idling speed, the rpm drop is checked. If it exceeds a certain threshold, fuel feed is partially reactivated to take the engine smoothly to idling speed.
The fuel start and cut-off thresholds vary according to:
- engine coolant temperature
- vehicle speed
- engine rpm.

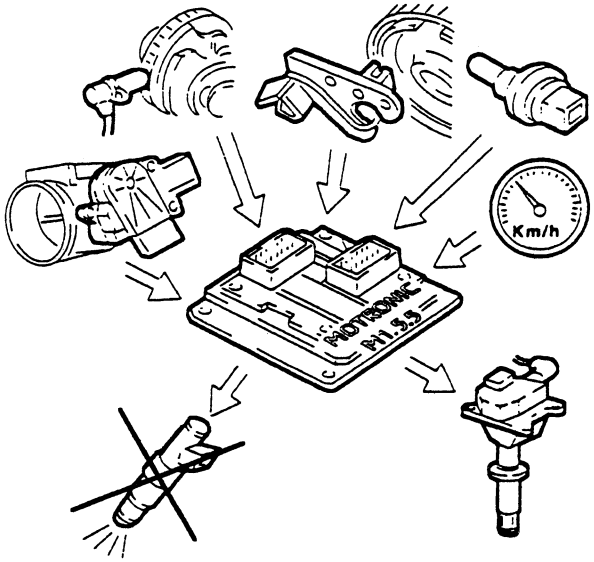

Fuel vapour recovery

Fuel vapours (pollutants) are collected in an active carbon canister and are conveyed to the intake ducts to be burnt. This is ensured by means of a solenoid valve controlled by the ECU when engine conditions allow.

The ECU in fact compensates for this amount of additional fuel by reducing feed to injectors.

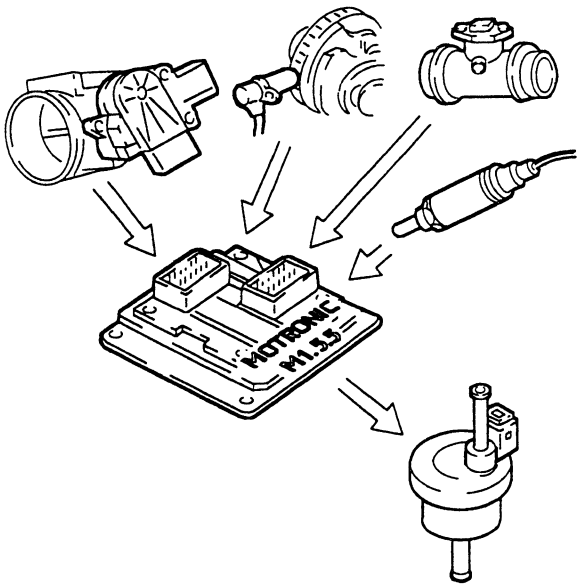

Engine rpm limitation

According to the engine rpm, the ECU:
- reduces injection time over 6800 rpm
- stops feed to the injectors at over 7000 rpm
- start piloting the injectors again under 6800 rpm.

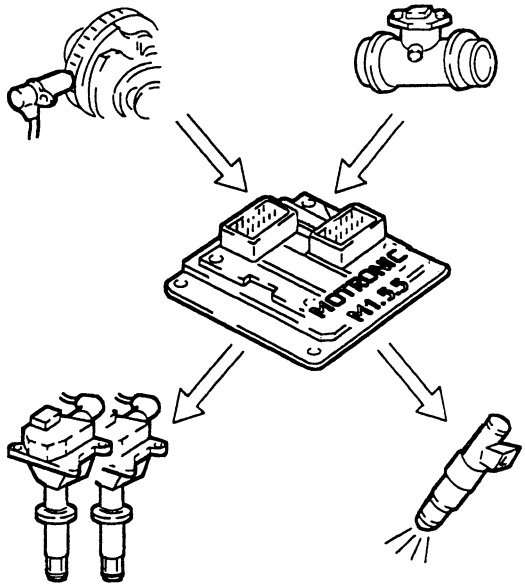

cardiagn.com

Fuel pump power control

The ECU powers the pump:
- with key is at MAR for 0.8 sec.
- with key at AVV and rpm > 23.

The ECU cuts pump power:
- with key at STOP
- with engine rpm < 23.

The fuel system is returnless and fuel pressure is constant at 3.5 bar.

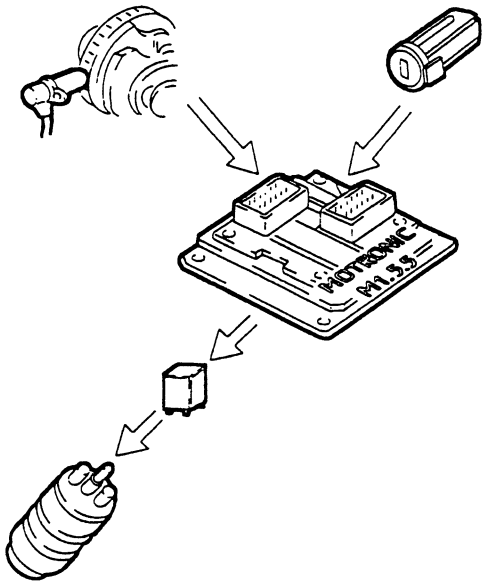

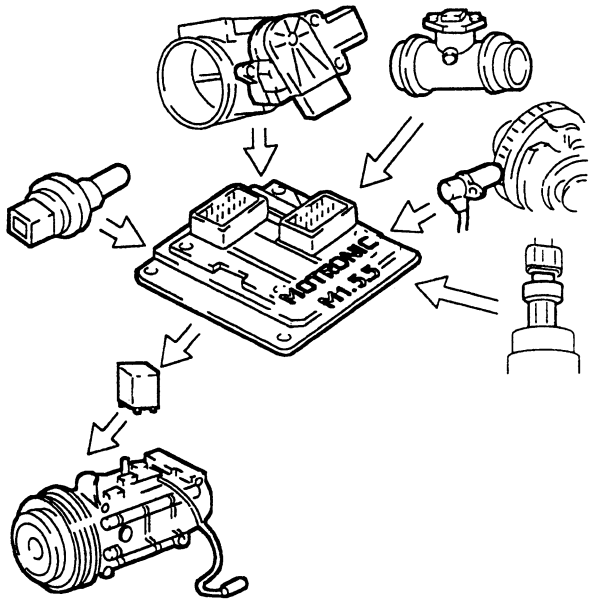

Cylinder position acknowledgement

At each engine revolution, the ECU acknowledges which cylinder is detonating and:
- controls the injection and ignition sequence to the suitable cylinder.

The ECU with no phase sensor signal:
- deactivates the knock sensor
- keeps injection timed when the vehicle is moving
- controls simultaneous ignition in cylinders 1-4 and 2-3 if the vehicle is stopped.

Climate control system connection

When the request for power increases due to the compressor operation, the ECU pilots the idling actuator to increase air delivery. In conditions of high power demand, the ECU temporarily cuts power to the compressor:
- at over 6500 rpm
- with engine coolant > 112°C.

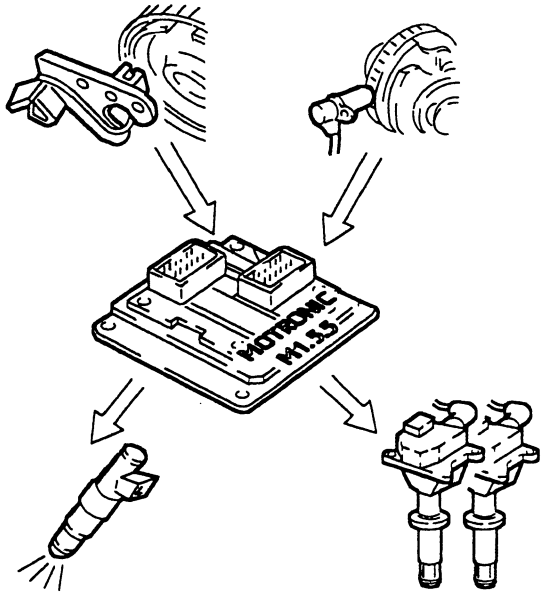

cardiagn.com

Injection time adjustment

The ECU computes the injector opening time and controls the injectors extremely fast and accurately according to:
- engine load (rpm and air intake)
- battery voltage
- engine coolant temperature.

Injection is sequential and phased for each cylinder and corresponds to the optimal injection start point while the injection end point is constant.

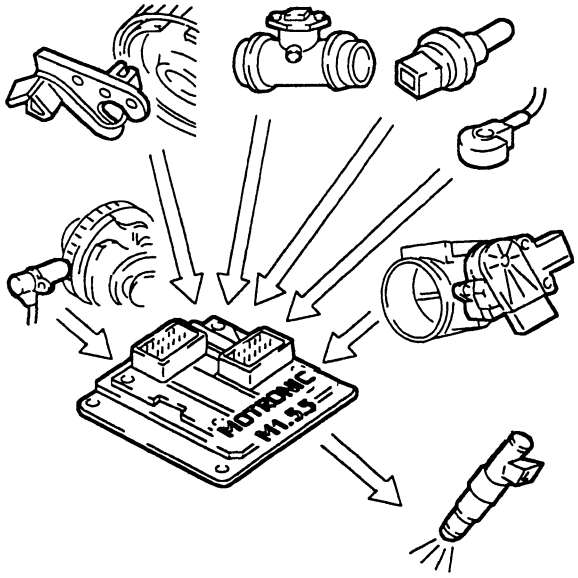

Spark advance adjustment

The ECU thanks to a memorised map computes spark advance according to:
- engine load (minimum, partial, full, according to rpm and air intake)
- air intake temperature
- engine coolant temperature.

It is possible to selectively delay ignition on the cylinder requiring it by a combination of the values recorded by the rpm and phase sensors.

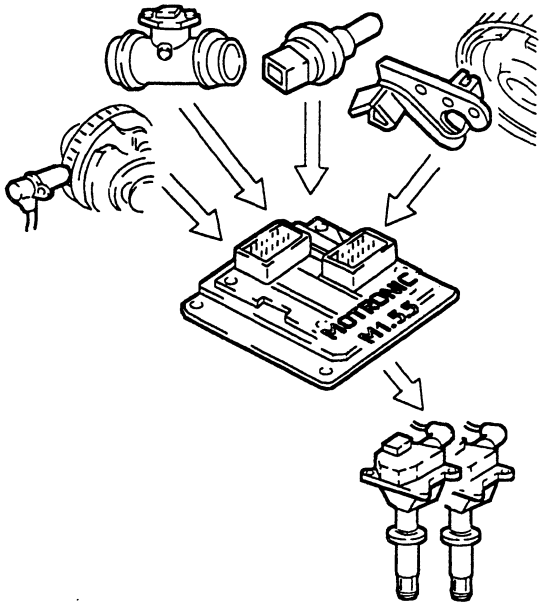

Idling control - management

Idling is acknowledged by the ECU by means of the potentiometer built into the idling actuator and fitted on the throttle casing (throttle axis).
The ECU according to the devices which are no controls idling ratio (850 ± 30 rpm) as follows:
- adjusting spark advance
- piloting the throttle position (0° - 15°) by means of the idling actuator to adjust air intake.

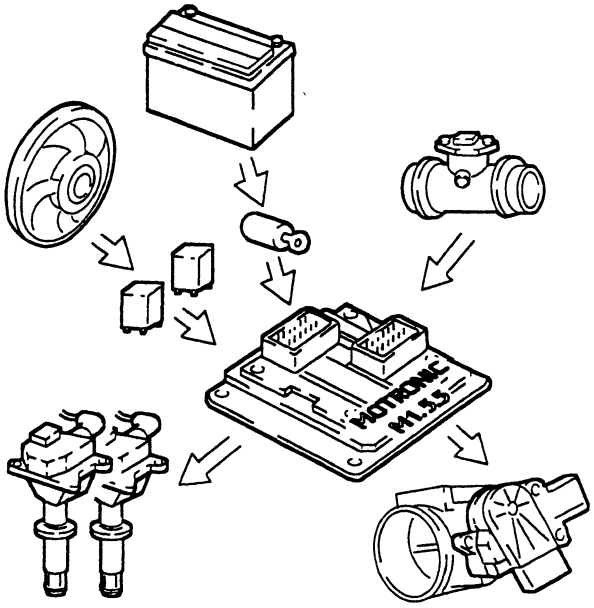

cardiagn.com

Radiator cooling fan control

The ECU controls fan operation according the to coolant temperature:
- 1st speed temperature threshold: 98°C
- 2nd speed temperature threshold: 101°C

Furthermore, an additional check (quadrinary signal) starts the fan at 1st or 2nd speed according to the cooling gas pressure when the climate control system is on.
If the coolant temperature signal is missing, the ECU implements a recovery strategy which starts the fan at 2nd speed until the error disappears.

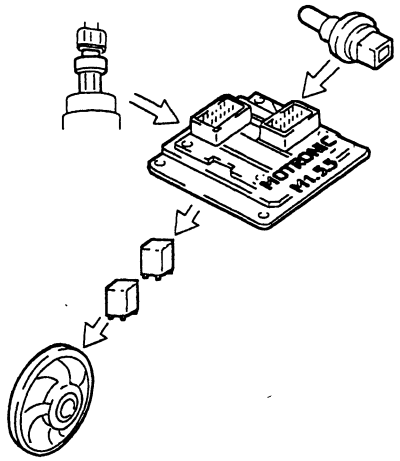

M1.5.5 INJECTION-IGNITION SYSTEM COMPONENTS

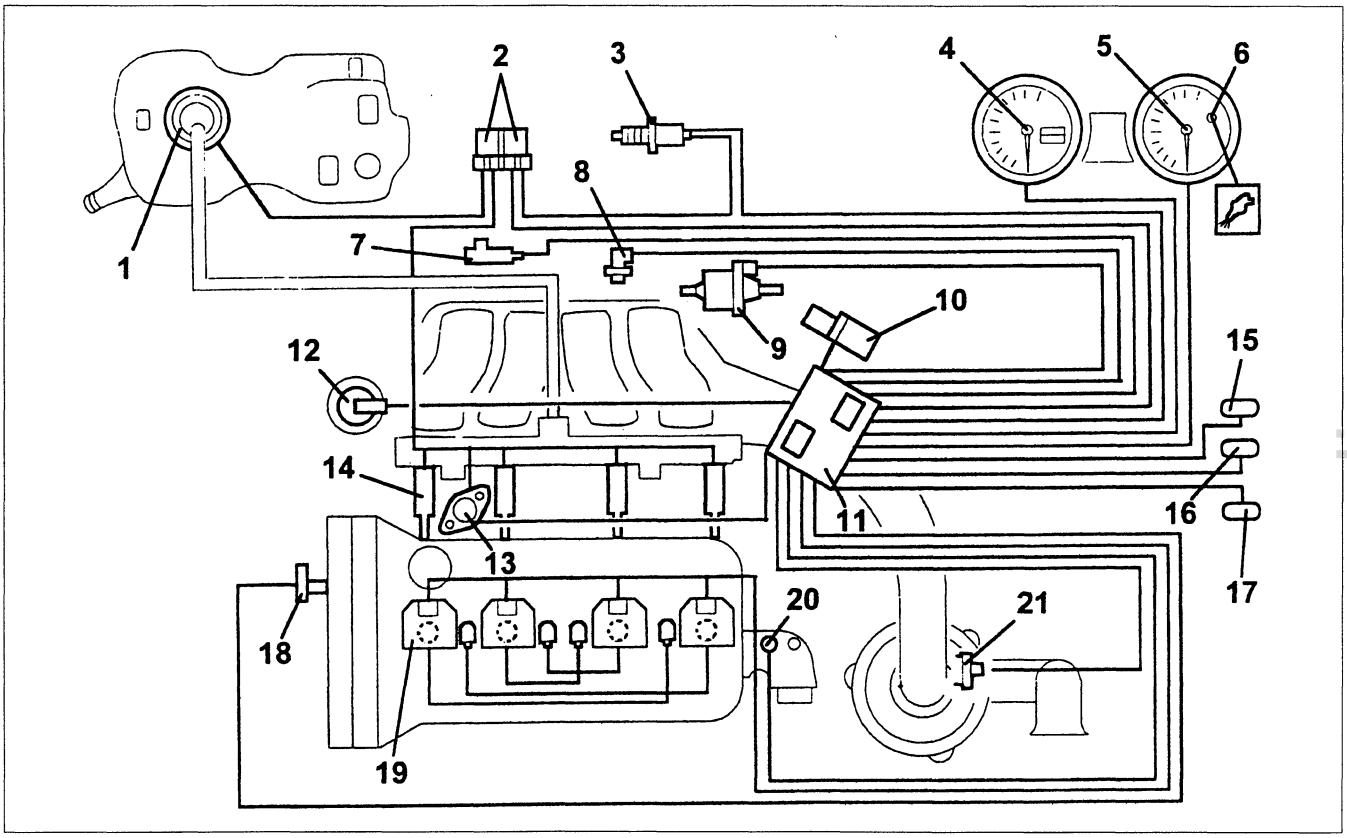

1. *Fuel pump*
2. *Relays*
3. *Lambda sensor*
4. *Tachometer*
5. *Rpm counter*
6. *Check Engine warning light*
7. *Knock sensor*
8. *Rpm sensor*
9. *Fuel vapour recirculation solenoid valve*
10. *Throttle casing with built-in MDS*
11. *Injection-ignition ECU*
12. *Modular intake manifold solenoid valve*
13. *Phase variator*
14. *Injectors*
15. *Climate control connection*
16. *Diagnostic connection*
17. *Alfa Romeo CODE connection*
18. *Phase sensor*
19. *Ignition coils*
20. *Coolant temperature sensor*
21. *Air flow meter with built-in air temperature sensor*

cardiagn.com

M1.5.5 INJECTION-IGNITION FUNCTIONAL DIAGRAM

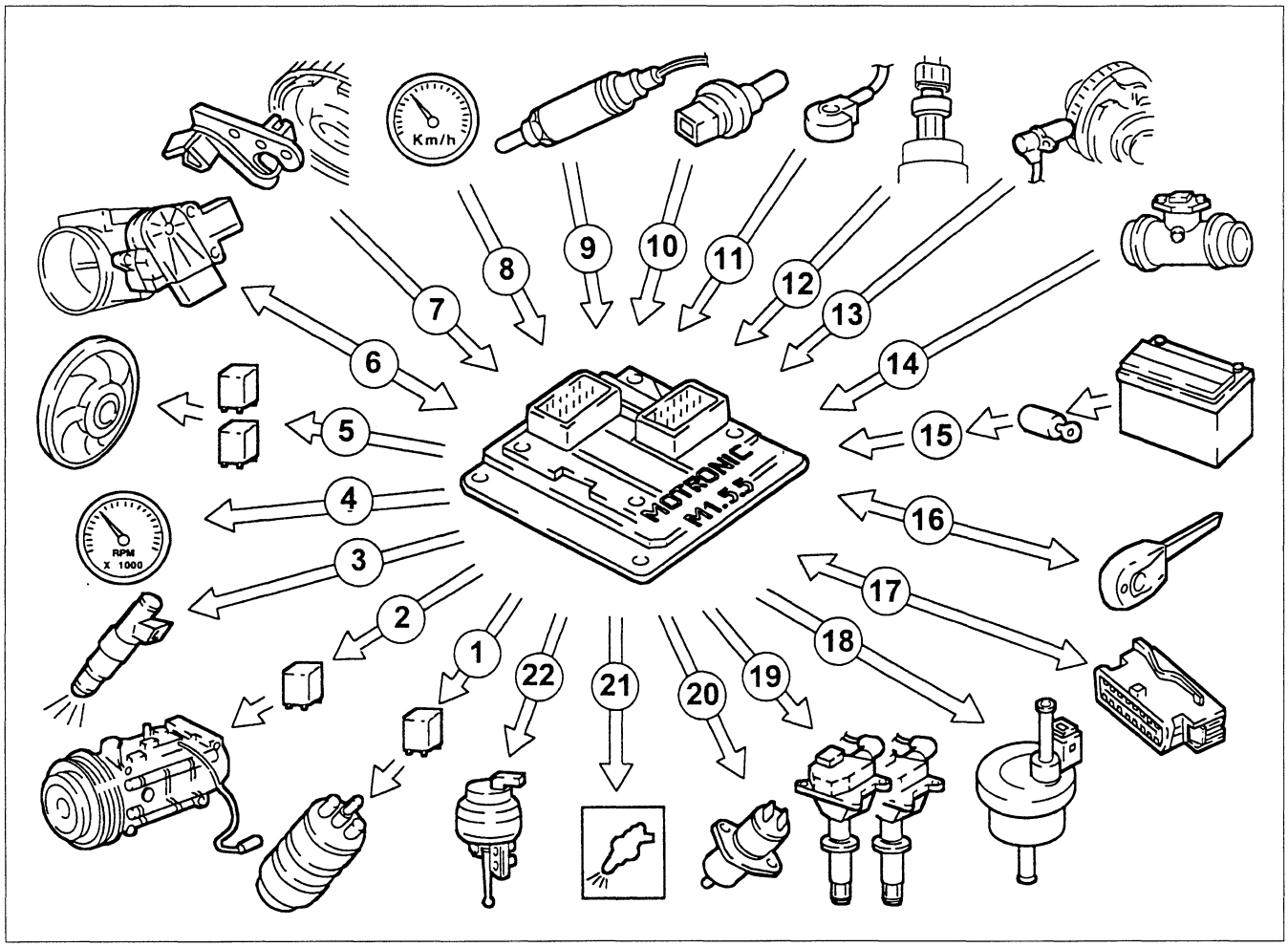

1. Fuel pump
2. Conditioner compressor
3. Injectors
4. Rpm counter
5. Fan
6. Throttle casing with built-in MDS
7. Phase sensor
8. Tachometer
9. Lambda sensor
10. Coolant temperature sensor
11. Knock sensor
12. Quadrinary
13. Rpm sensor
14. Flow meter with built-in air temperature sensor
15. Battery
16. Alfa Romeo CODE
17. Diagnostic socket
18. Fuel vapour recirculation solenoid valve
19. Ignition coils
20. Phase variator
21. Check Engine warning light
22. Modular intake manifold solenoid valve

cardiagn.com

SYSTEM DESCRIPTION

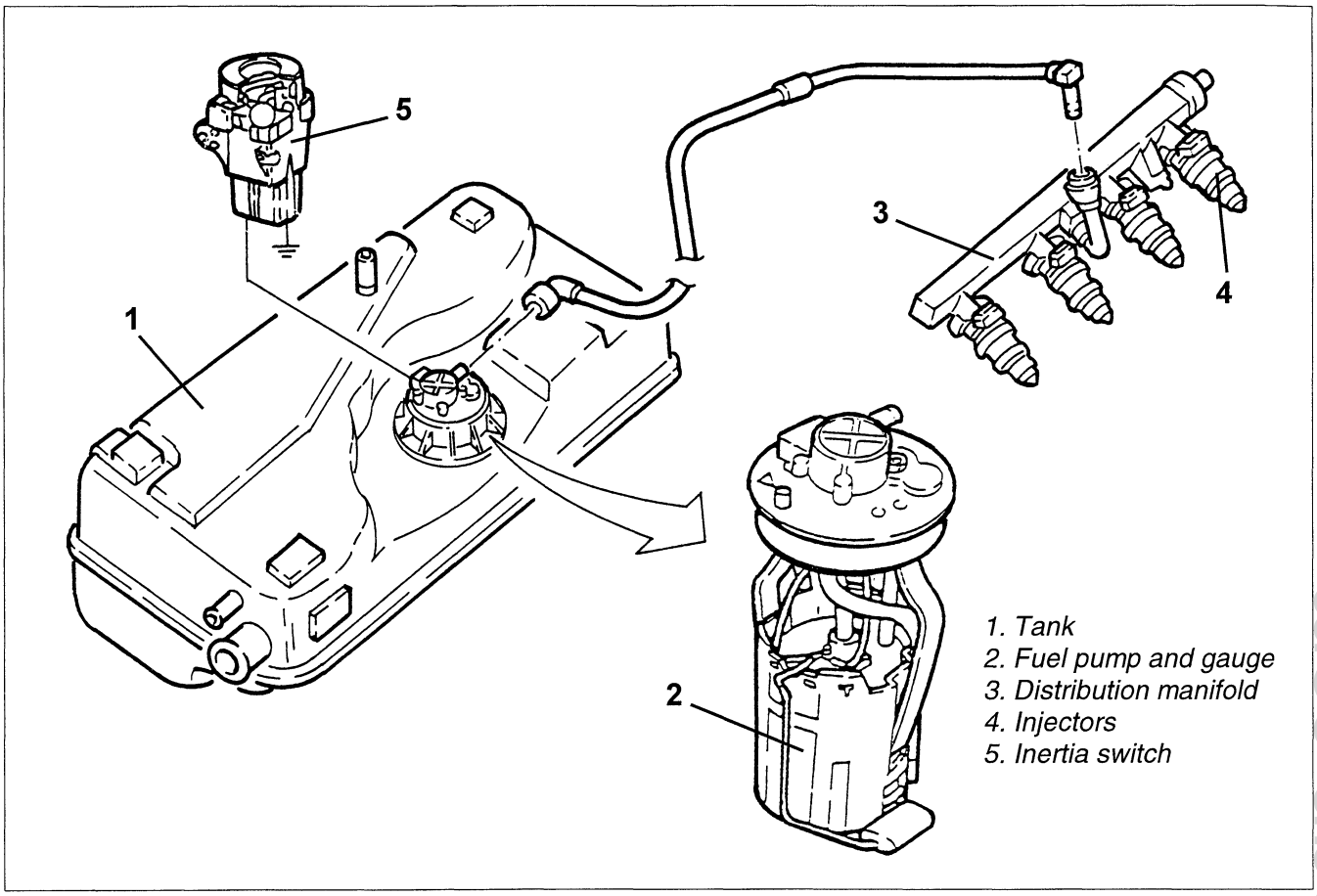

The fuel feed system is returnless, i.e. a single pipe connects the fuel pump and the engine. Advantages are:
- reduced possibility of the car catching fire after an accident
- reduced fuel vapour emission in the atmosphere.

The filler cap is fitted on the steel fuel tank main casing.

The electrical fuel pump is contained in a frame which also houses the following components:
- fuel pressure regulator
- fuel gauge
- fuel filter.

The system is equipped with an inertia switch which cuts fuel pump power in the event of an impact.

cardiagn.com

FUEL TANK

The fuel tank is made of steel and has a capacity of 70 litres including a reserve of approximately 9 litres. The fuel filler is fitted on the main casing in a specific compartment so that is can be removed.

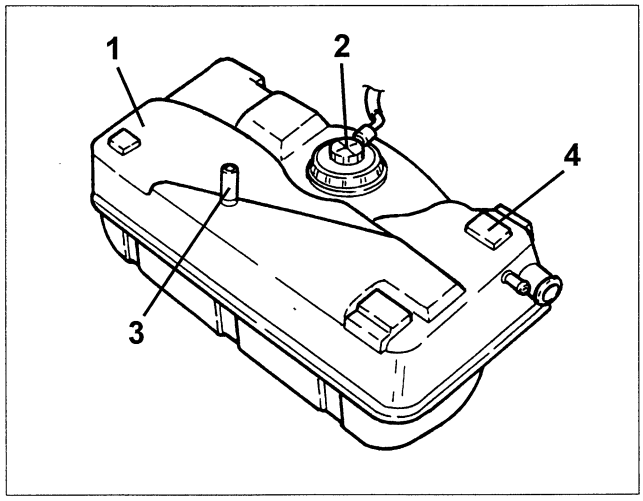

1. Tank
2. Fuel pump and gauge
3. Vapour recovery pipe
4. Vibration damper pads

The filler cap presents a system which ensures it can only be closed at the prescribed torque. Excessive torque (exceeding prescriptions) will cause the notches to turn without locking.
The tank is located:
- **Spider** version: under the hood compartment and is fastened by means of two metal belts to the underbody. It is protected by a steel partition;
- **Gtv** version: under the rear seat and is fastened by means of two metal belts to the underbody. It is protected by a steel partition.
The fuel filler pipe doubles as a breather. The fuel pump and gauge is housed above the tank. A specific pipe allows the fuel vapours to reach the separator from the tank.

REMOVAL/REFITTING
Spider version

- Position the vehicle on a shop jack.
- Make sure the ignition key is at "STOP" and disconnect the (-) battery terminal.
- Empty the tank by sucking fuel from the filler with a suitable tool.
- Lift the hood cover and open the upper hood bonnet.

1. Move the hood compartment panel. Loosen the fastening nuts and remove the fuel pump and gauge cover.
2. Disconnect the fuel pump and gauge electrical connection.
3. Disconnect the fuel pump and gauge delivery pipe.

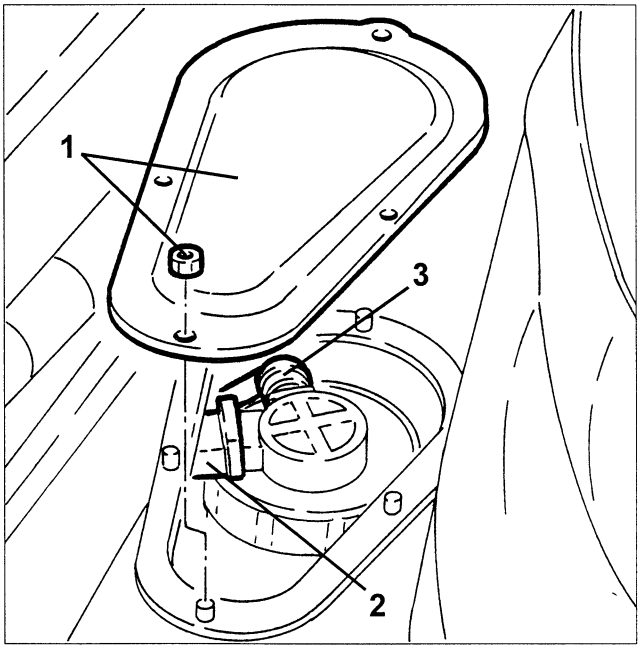

cardiagn.com

1. Loosen the fastening nuts and remove the fuel tank filler cover.
2. Loosen the fastening clip and disconnect the fuel filler from the tank.
3. Loosen the fastening clip and disconnect the breather pipe from the fuel tank.

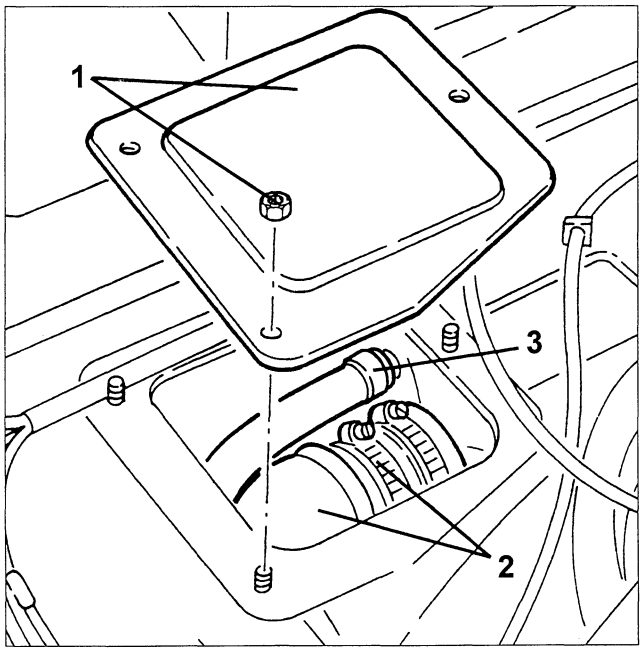

1. From inside the boot, lift the panel and disconnect the tank vapour pipe from the fuel vapour separator.

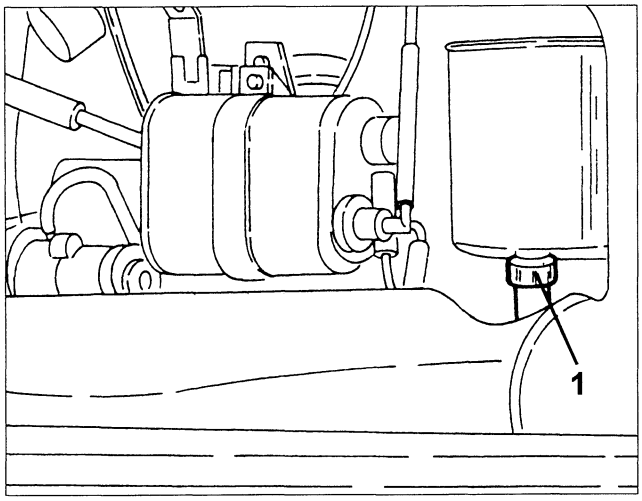

- Lift the vehicle and remove the rear suspension (see specific paragraph).

1. Loosen the fastening screws and remove the tank guard and reinforcement bar.

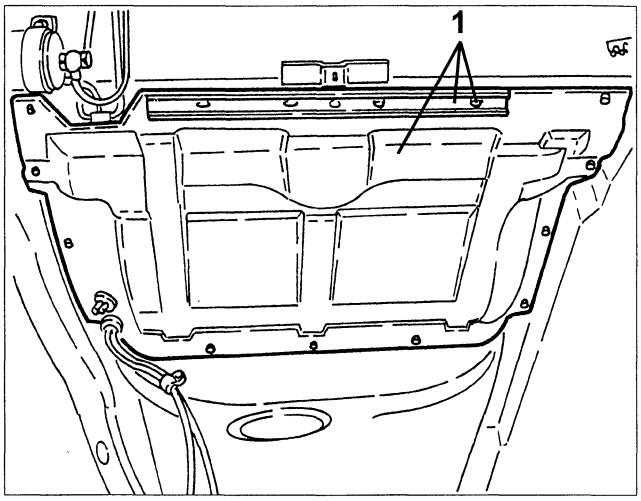

1. Position a hydraulic jack under the fuel tank.
2. Loosen the fuel tank metal belts and remove the tank by lowering the hydraulic jack.

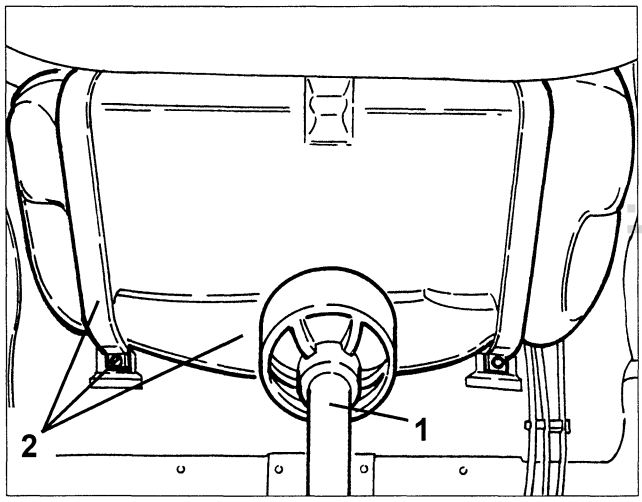

REMOVAL/REFITTING
GTV version

- See **Gtv** 2959 **24V** *'98.*

cardiagn.com

FUEL PUMP AND GAUGE

The main parts are:
- electrical fuel pump (1)
- fuel filter (2)
- float gauge (3)
- membrane pressure regulator (4)
- mesh pre-filter (5).

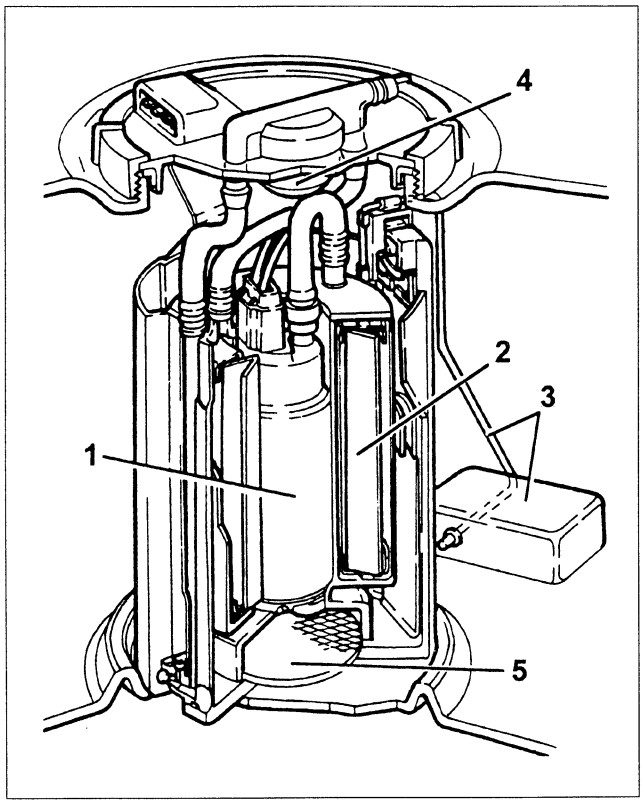

The fuel pump features a permanent magnet electrical motor (1) which controls the pump impeller (2) and a terminal guard (3) which contains the electrical and hydraulic connections.

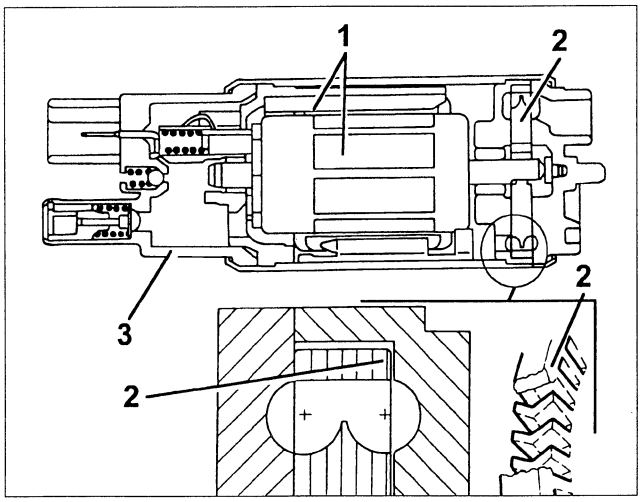

The pump is a single stage, peripheral flow device which ensures high performance at low voltage and temperature. The advantages with respect to volumetric pumps are:
- lower weight
- smaller size.

REMOVAL/REFITTING
Spider version

- Make sure the ignition key is at "STOP" and disconnect the (-) battery terminal.
- Lift the hood cover and open the upper hood bonnet.

1. Move the hood compartment panel. Loosen the fastening nuts and remove the fuel pump and gauge cover.
2. Disconnect the fuel pump and gauge electrical connection.
3. Disconnect the fuel pump and gauge delivery pipe.

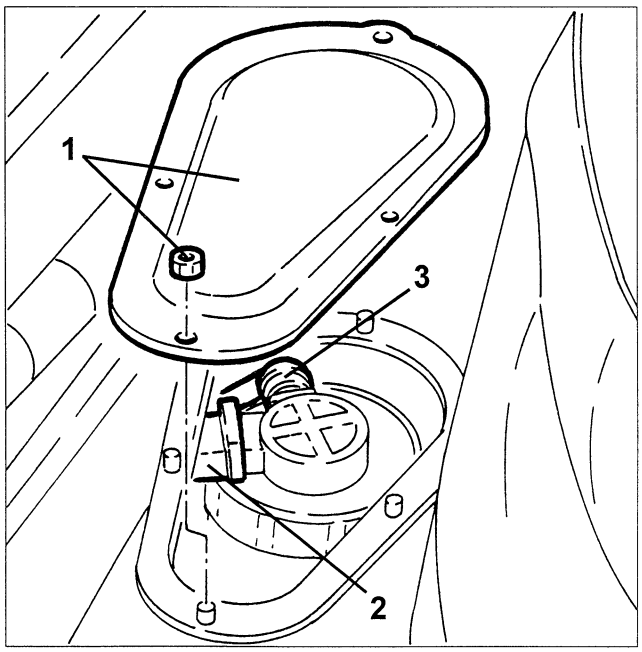

cardiagn.com

1. Use tool no. 1.821.167.000 to loosen the fuel pump and gauge fastening nut screw.
2. Remove the fuel pump and gauge.

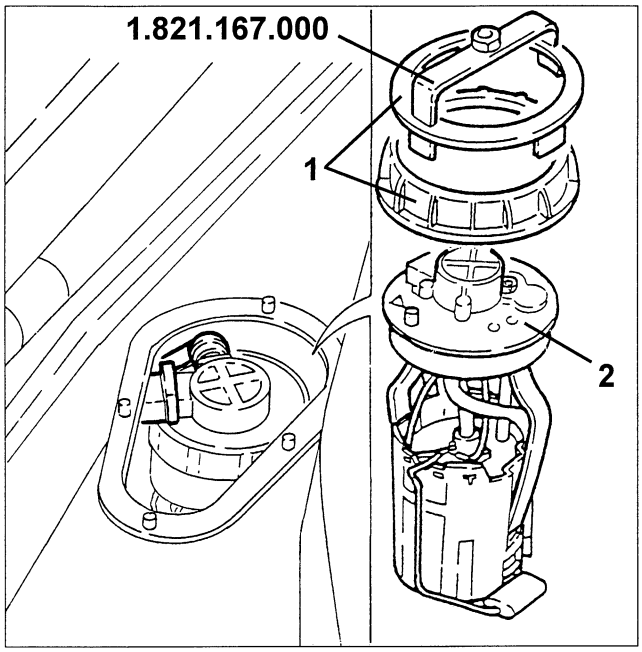

- Refit the fuel pump so that the arrow printed on the fuel pump guard is aligned with the reference mark on the tank.

REMOVAL/REFITTING
Gtv version

- See **Gtv** 2959 **24V** *'98.*

INJECTORS

The double jet injectors and fitted on the distribution manifold. They are fastened to the distribution manifold by means of a safety retainer. Tightness is ensured by two O-rings.
The injectors feed the feed required to the engine.

They are "all or nothing" devices: they present only two stable positions, i.e. open or closed. They let fuel through when they are open and stop the fuel flow when closed.

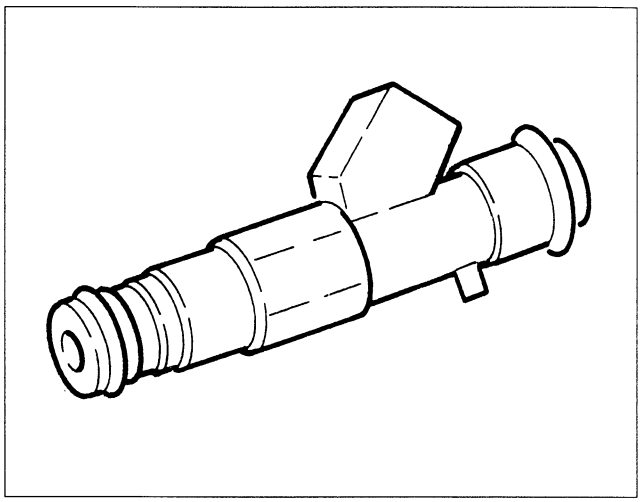

REMOVAL/REFITTING

- Remove the fuel distribution manifold (see specific paragraph).
1. At the bench, remove the retainers and remove the injectors from the distribution manifold.

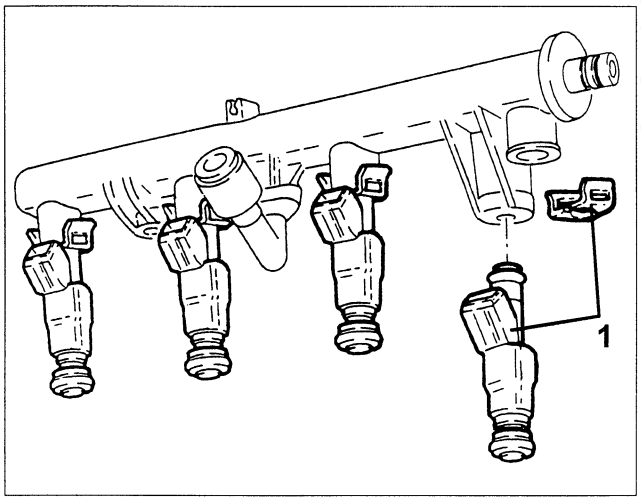

cardiagn.com

FUEL DISTRIBUTION MANIFOLD

REMOVAL/REFITTING

- Make sure the ignition key is at "STOP" and disconnect the (-) battery terminal.
1. Remove the engine oil filler cap.
2. Loosen the fastening screws and remove the ignition coil cover.
- Refit the engine oil filler cap.

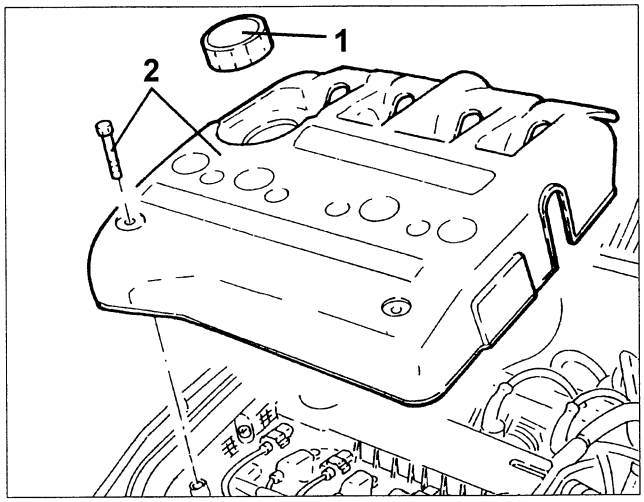

1. Connect tool no. 1.870.684.000 to the distribution manifold bleeder valve and drain the fuel pressure.
NOTE: Collect the fuel in a suitable container.

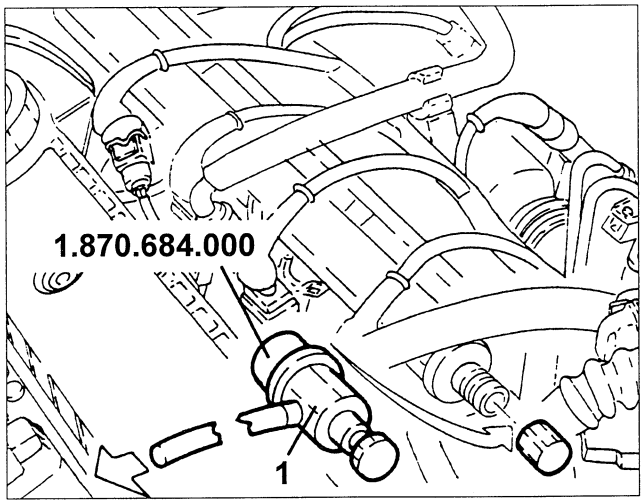

1. Disconnect the oil vapour recovery pipe from the tappet cover.
2. Disconnect the fuel delivery pipe from the fuel distribution manifold, release it from the clip on the modular intake manifold and move it aside.

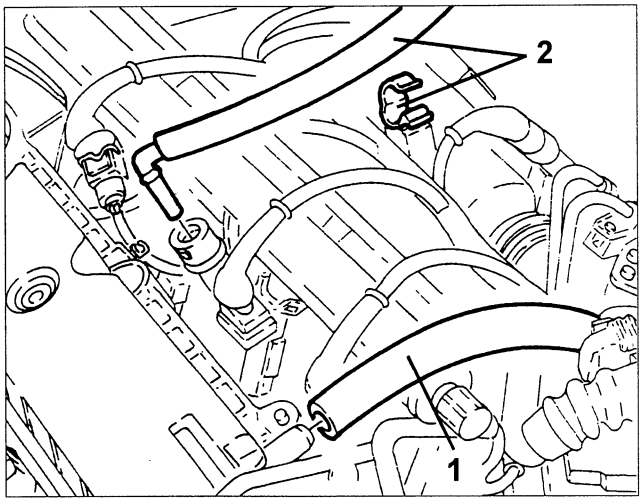

1. Disconnect the phase variator electromagnet electrical connection.
2. Disconnect the injector electrical connections.

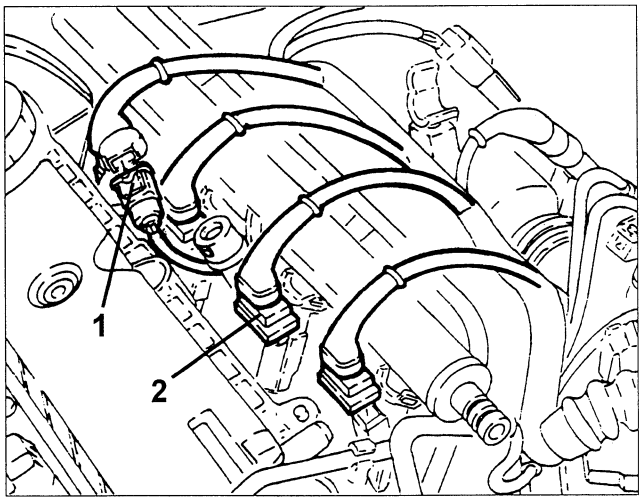

1. Loosen the fastening screws and remove the fuel distribution manifold and injectors.

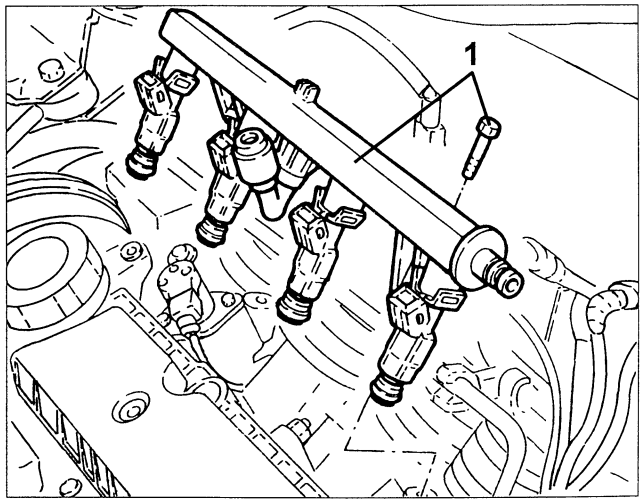

cardiagn.com

FUEL CIRCUIT PRESSURE CHECK

1. Connect tool no. 1.870.684.000 to the distribution manifold bleeder valve and drain the fuel pressure.
2. Disconnect the fuel delivery pipe from the distribution manifold.
3. Fit fittings no. 1.860.955.003 and no. 1.860.955.001 on pressure gauge no. 1.860.955.000.
- Connect the resulting equipment to the fuel delivery pipe and the fuel distribution manifold.
4. Open the ball valve.
5. Open the ball valve.
6. Close the ball valve.
- Start the engine and idle it. Check that the fuel pressure falls within prescribed values.

Idling fuel pressure
3.3 ÷ 3.7 bar

- Stop the engine.

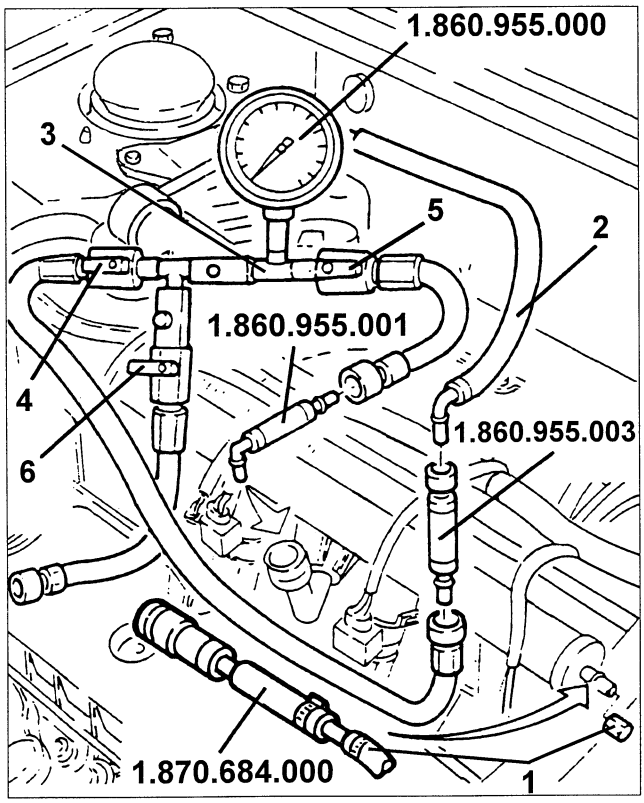

- Disconnect the test tools from the fuel distribution manifold and from the fuel delivery pipe.
- Connect the fuel delivery pipe to the distribution manifold.

cardiagn.com

FUEL VAPOUR RECOVERY SYSTEM DESCRIPTION

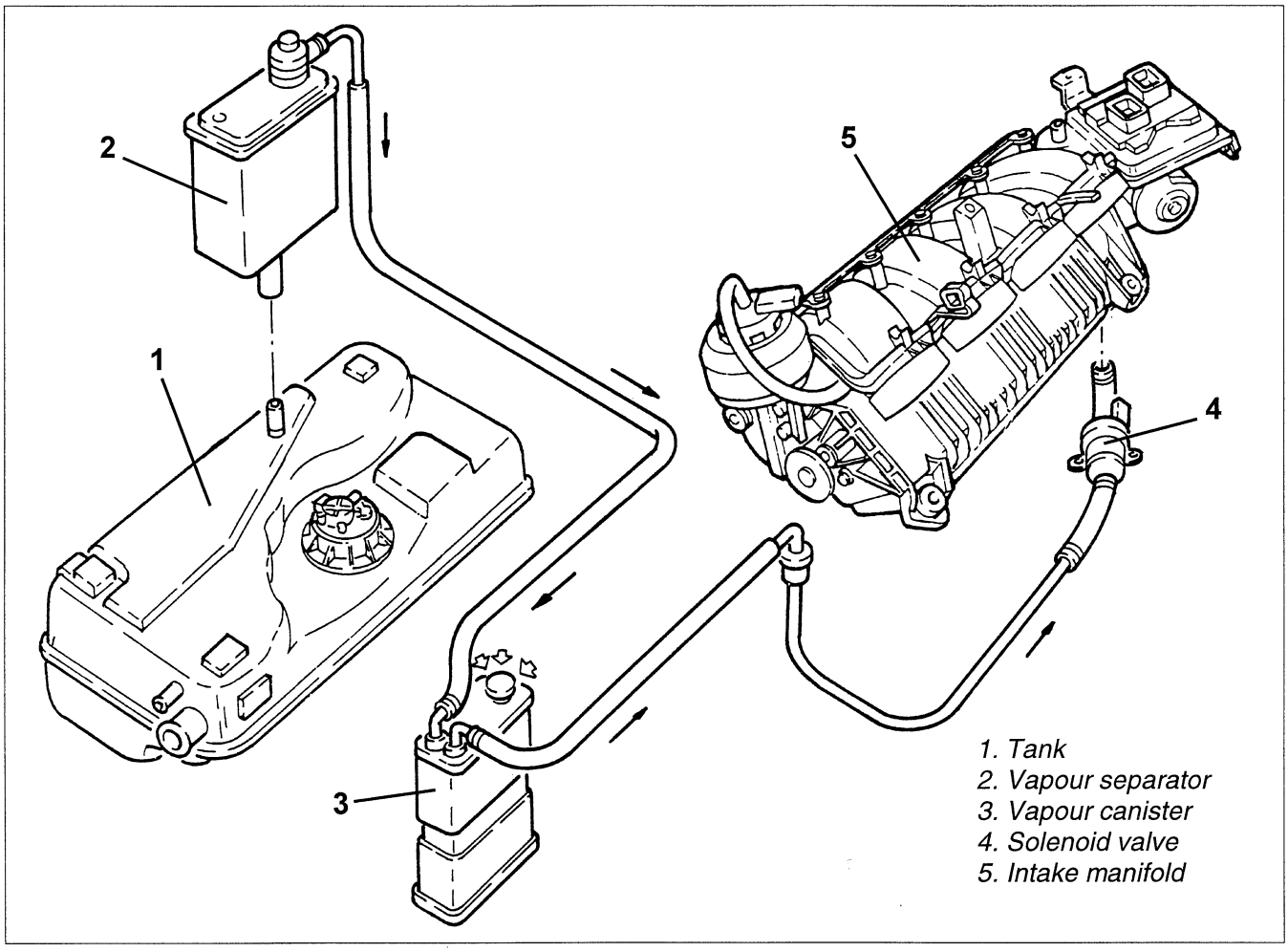

The fuel in the tank produces a considerable amount of potentially polluting vapours if released into the atmosphere. The purpose of the vapour control and recovery system is to recover the vapours and burn them in the engine.
The vapours from the tank (1) reach the separator (2) via a specific pipe which is shaped as to allow the condensed fuel to drip back into the tank. The remaining fuel vapours are sent to the canister (3) where they are absorbed and stored by the active carbon filter.
A solenoid valve (4) is located between the canister and the engine intake. When the solenoid is not activated, the connection is closed and the fuel vapours remain inside the canister.

In certain conditions of load, the ECU opens the solenoid valve allowing any vapours in the canister to be taken in.
This condition persists even when the lambda sensors detect decreased oxygen in exhaust due to excessive presence of fuel in the firing chamber. In this case, the ECU reduces injector feed so that the engine is constantly run at optimal conditions.
If there are no fuel vapours in the canister, and consequently only air is taken in, the lambda sensors detect and inform the ECU of an increase in oxygen. In this case, the ECU closes the solenoid valve and the connection with the canister thus eliminating the excessive air intake.

cardiagn.com

FUEL VAPOUR SEPARATOR

Located in the boot, the separator has the purpose of limiting the amount of fuel vapours which reach the canister by condensing a part of them, thanks to its shape. It consists of a plastic container with two connections: one lower vapour inlet and condensed fuel outlet and one upper outlet to the canister.

REMOVAL/REFITTING

- Remove the space saver spare wheel.
- Remove the boot upholstery.

1. Disconnect the tank fuel vapour inlet pipe from the separator.
2. Disconnect the canister fuel outlet pipe from the separator.
3. Loosen the fastening screws and remove the fuel vapour separator.

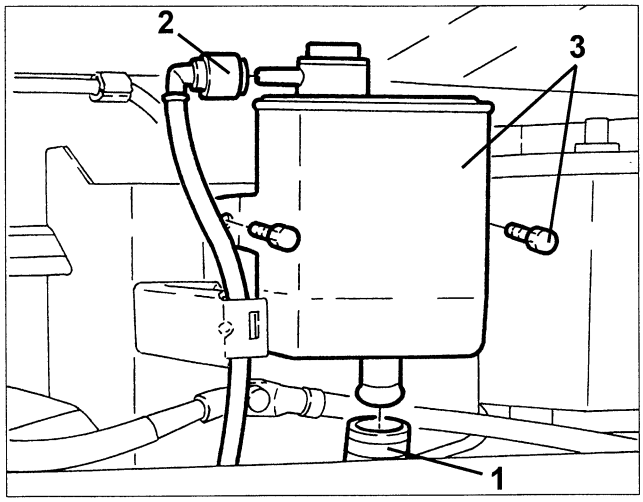

FUEL VAPOUR CANISTER

This device consists of an active carbon filtering element in a plastic casing which absorbs the fuel vapours from the separator. A one-way valve, to which it is connected via a specific pipe, allows to take in external air during vapour intake to wash the active carbon filter.

REMOVAL/REFITTING

- Position the vehicle on a shop jack.
- Remove the right-hand front wheel.
- Loosen the screws and remove the right side engine compartment guard.
- Remove the right front wheelhouse.

1. Loosen the canister fastening screw.
2. Disconnect the two canister pipes and remove the canister.

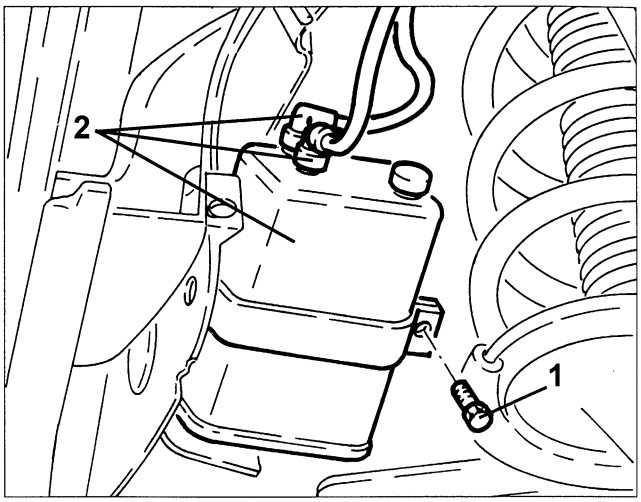

FUEL VAPOUR SOLENOID VALVE

This valve is controlled by the injection ECU and lets the fuel vapours stored in the canister into the intake manifold.

REMOVAL/REFITTING

- Remove the throttle casing (see specific paragraph).

1. Disconnect the pipe shown the figure from the modular intake manifold to reach the fuel vapour valve fasteners.
2. Disconnect the fuel vapour valve electrical connection.
3. Disconnect the pipes and remove the fuel vapour valve by removing it from the bracket.

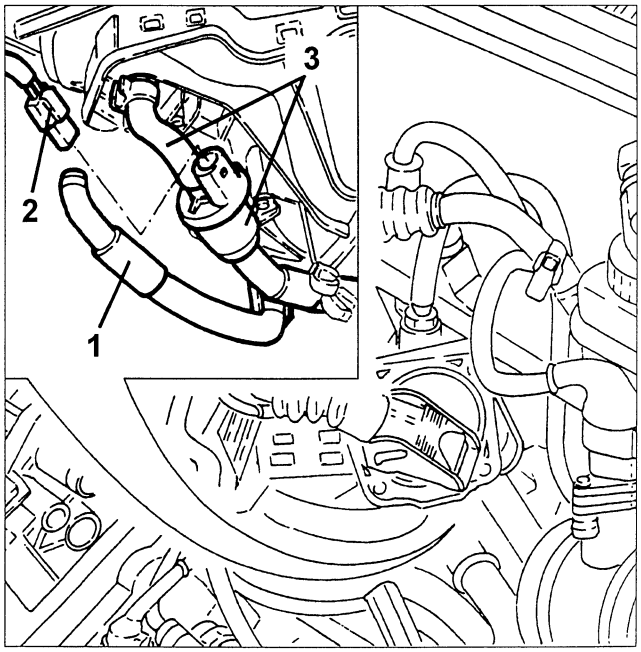

cardiagn.com

AIR FEED AND OIL VAPOUR RECOVERY SYSTEM

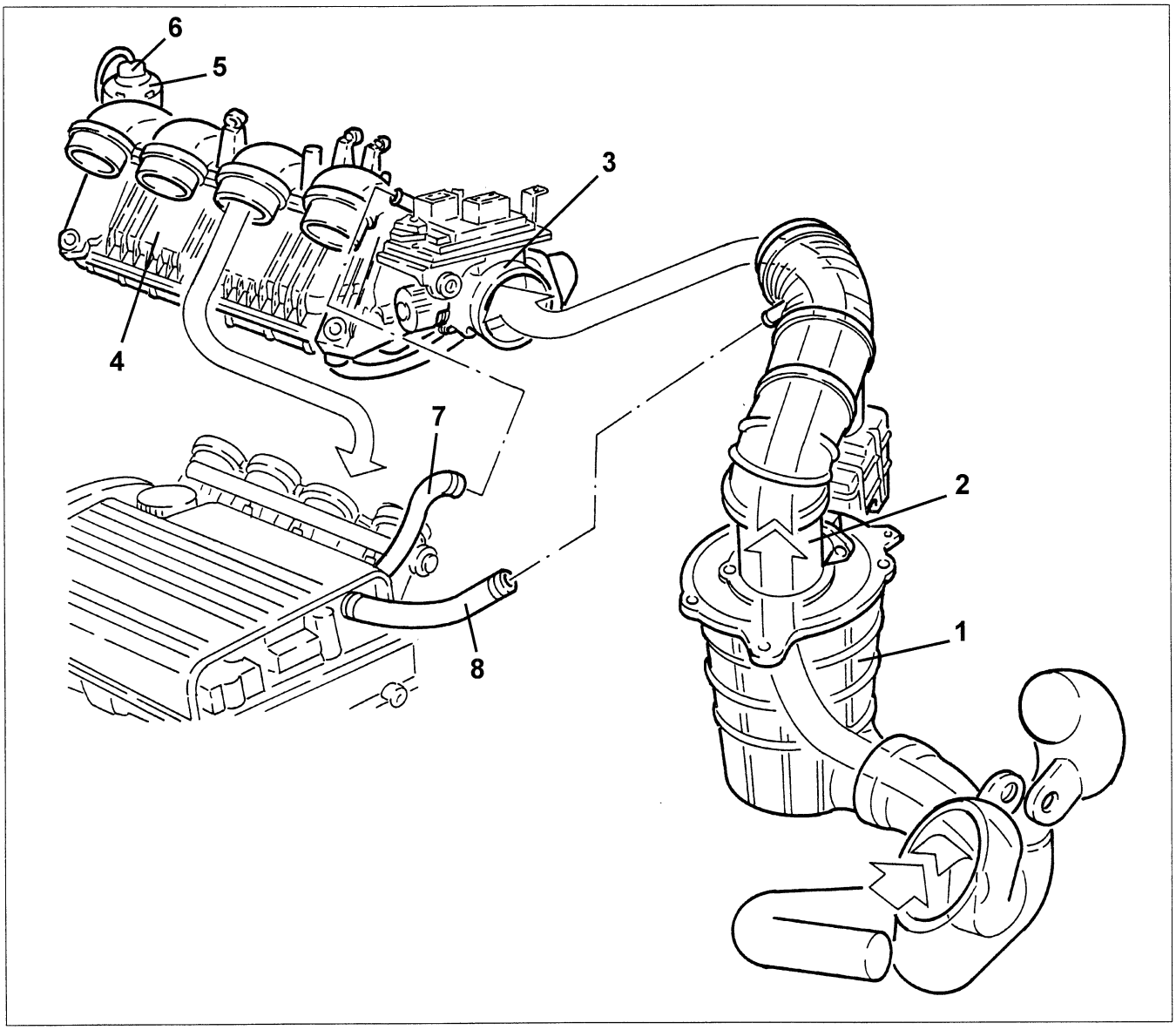

1. Air cleaner
2. Air flow meter with built-in temperature sensor
3. Idling actuator and throttle position sensor
4. Modular intake manifold
5. Modular intake manifold pneumatic actuator
6. Modular intake manifold solenoid valve
7. Idling oil vapour recirculation pipe
8. Oil vapour recirculation pipe

The air is taken in via a dynamic inlet and filtered by a cartridge element (1). It crosses the hot film flow meter (2) and reaches the throttle casing with built-in MDS (3) via the corrugated sleeve.
The throttle is controlled by the accelerator wire and regulates the amount of air taken into the manifold. The idling actuator and throttle position sensor (MDS) (3) is fitted on one side of throttle and controlled directly by the injection ECU.
The fuel vapours (see specific paragraph) and the oil vapours reach the feed system.

Oil vapours develop during engine operation and are collected in the cylinder head. The condensed oil drips into the crankcase while the remaining vapours are conveyed to the intake manifold via two pipes. During idling, oil vapours are conveyed to the throttle casing via specific pipe (7). At higher loads, the vapours are conveyed upstream with respect to the throttle via a fitting (8) to the corrugated sleeve to be burned in the engine.

cardiagn.com

THROTTLE CASING

REMOVAL/REFITTING

- Make sure the ignition key is at "STOP" and disconnect the (-) battery terminal.
1. Remove the engine oil filler cap.
2. Loosen the fastening screws and remove the ignition coil cover.
- Refit the engine oil filler cap.

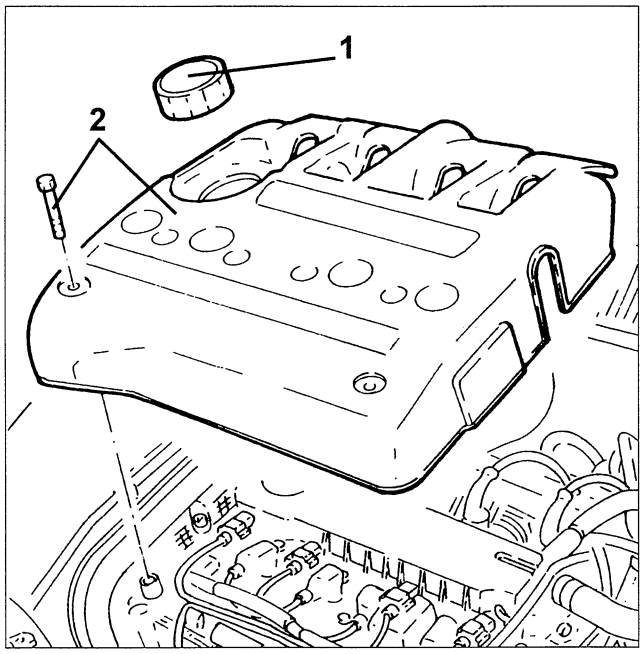

1. Disconnect the oil vapour recovery pipe from the tappet cover.
2. Loosen the fastening clips and remove the throttle casing air intake corrugated sleeve.

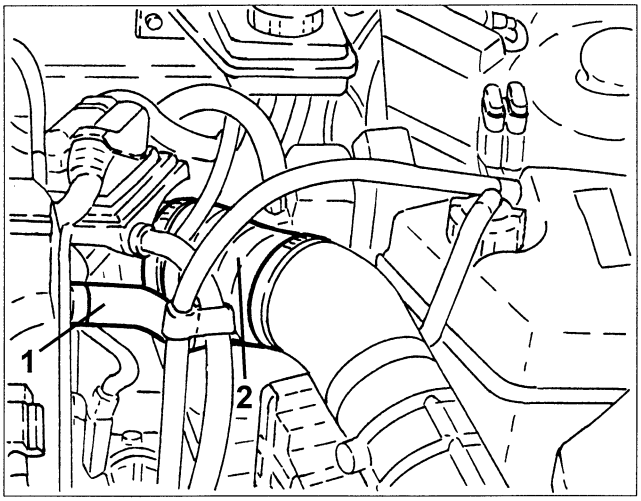

1. Remove the accelerator wire retainer from the bracket.
2. Release the accelerator wire from the throttle casing cam and move it aside.
3. Disconnect the injection-ignition ECU electrical connections.
4. Release the wiring from the clip on the ECU.

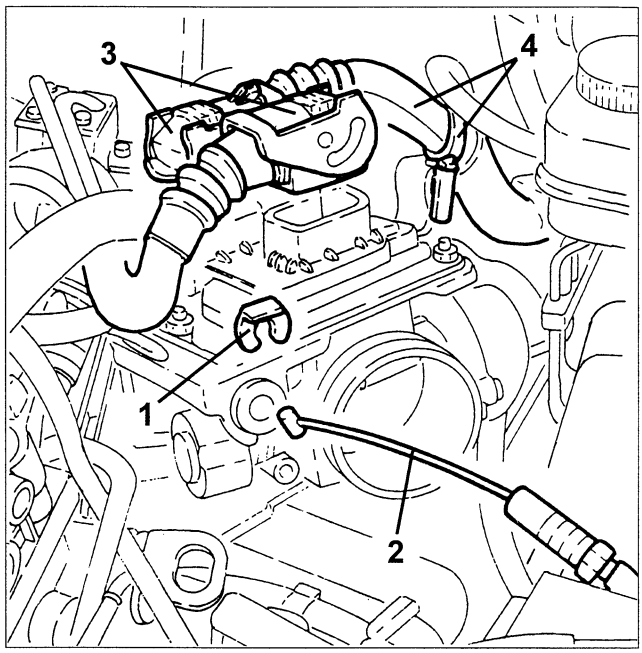

1. Disconnect the earth from the injection-ignition ECU bracket.

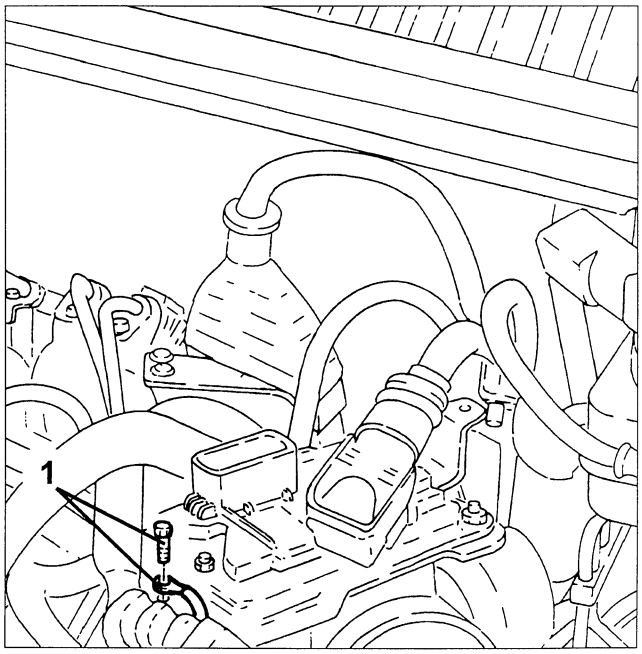

cardiagn.com

1. Loosen the fastening screws and remove the throttle. Disconnect the idling actuator electrical connection and throttle position sensor (MDS).

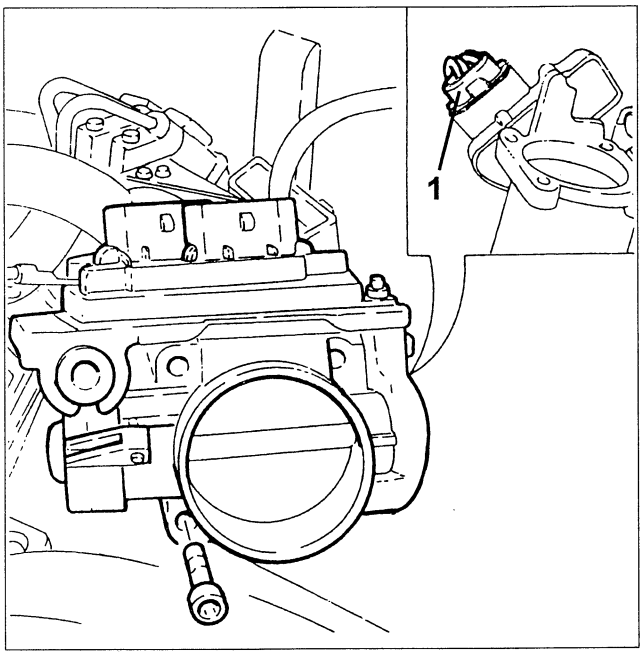

1. When refitting, calibrate the accelerator wire by means of the retainer so that the throttle is completely closed when the pedal is released and the wire has a play "H" of 5mm.

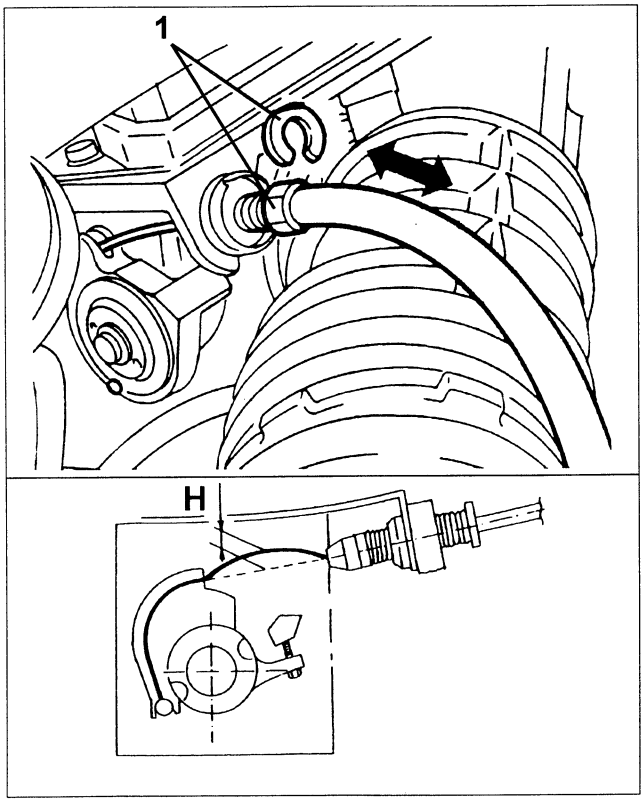

IMPORTANT: After replacing the throttle casing, repeat the throttle casing with built-in MDS self-learning procedure described below.

- Make sure the ignition key is at "STOP".
- Check that the conditioner is off, the accelerator pedal is never pressed and that the accelerator wire is positioned correctly.
- Connect tool no. 1.806.365.000 to the diagnostic socket and turn the knob to position 3.
- Connect Examiner.
- Go to Examiner "ECU Test" environment.
- Turn the ignition key to MAR.
- Go to Examiner "Active diagnosis" environment and select "Reset self-learning parameters" and "Idling actuator ".
- Press "Run active diagnosis".
- Turn the ignition key to STOP and wait for 30 seconds.
- Turn the ignition key to MAR and wait for 30 seconds.
- Restore the Examiner-engine control system communication.
- Go to Examiner "Parameter" environment and select "Idling acknowledgement test - done" and "Idling acknowledgement signals - synchronised" in the "Select" menu.

NOTE: If one or more parameters are not OK, turn the ignition key to STOP and repeat the procedure. If the problem persists, check the diagnostic wire is connected properly and that the diagnostic tool is working.

- Turn the ignition key to STOP and wait for 30 seconds.
- Start the engine without pressing the accelerator pedal.
- Disconnect the diagnostic tool.
- Run a road test (several kilometres) then when the engine is at running temperature, check correct idling operation.

cardiagn.com

IDLING ACTUATOR AND THROTTLE POSITION SENSOR (MDS)

The idling actuator/throttle position sensor (MDS) is built into the throttle and controlled by the injection ECU. It consists of a direct current motor which opens the throttle from 0° to 15°. Two potentiometers are built into the actuator. The potentiometers transmit the angle position to the injection ECU:
- 0° - 15° for idling ratio
- 0° - 83° for all other engine ratios.

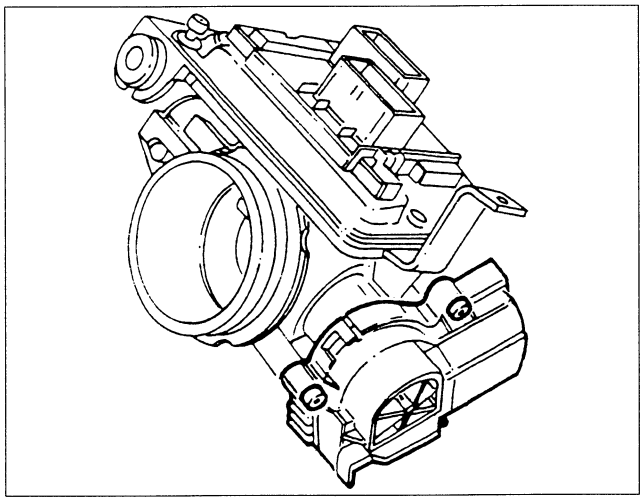

AIR FLOW METER WITH BUILT-IN AIR TEMPERATURE SENSOR

The flow meter is located on the intake air sleeve and is of the "hot film" type.

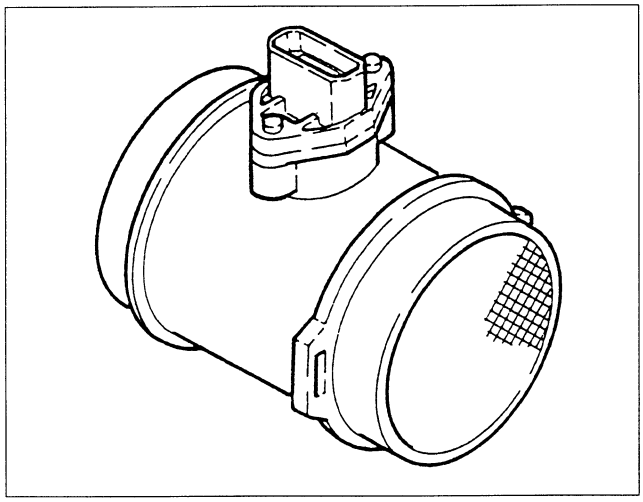

The intake air temperature sensor is built-into the flow meter.

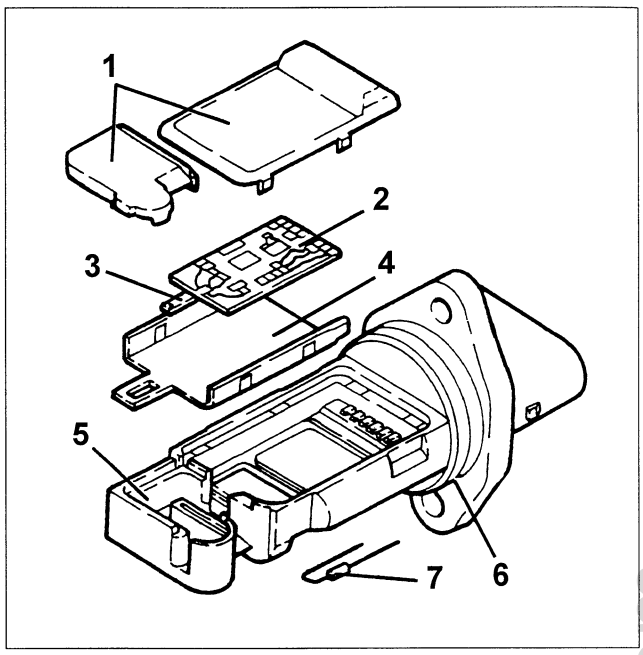

1. Covers
2. Electronic board
3. Sensor
4. Support plate
5. Bracket
6. O-Ring
7. Temperature sensor

IMPORTANT: The flow meter cannot be disassembled.

The operating principle consists of a heated membrane film in a measuring duct through which the engine intake air flows. The film is maintained at constant temperature (approximately 120°C warmer than the intake air temperature) by a resistance. The air flow in the duct tends to take heat from the film. Consequently, a certain current is required by the resistance to keep the temperature. This current is measured by means of a Wheatstone jumper and is proportional to the air flow. This air flow meter directly measures the air mass (and not volume) thus eliminating problems related to temperature, altitude, pressure, etc.

cardiagn.com

REMOVAL/REFITTING

- Make sure the ignition key is at "STOP" and disconnect the (-) battery terminal.

1. Loosen the fastening clips and remove the corrugated sleeve elbow.

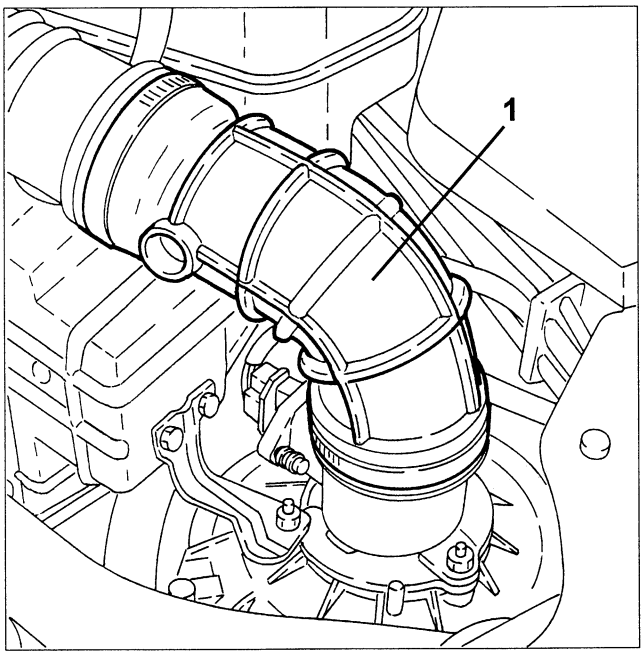

1. Disconnect the air flow meter electrical connection.

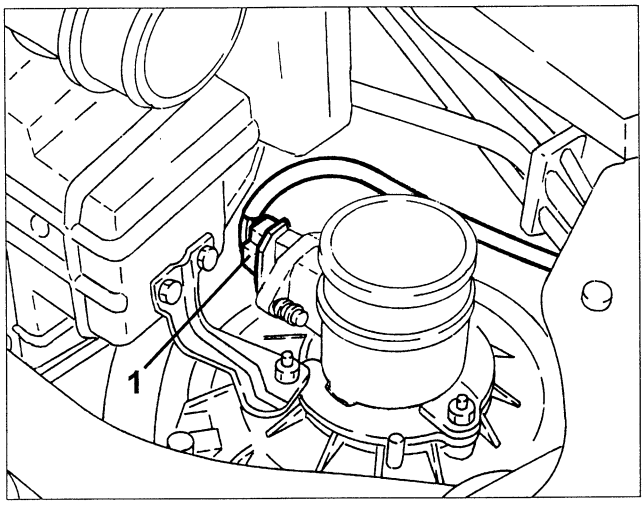

1. Loosen the nuts, remove the fastening brackets and remove the air flow meter.

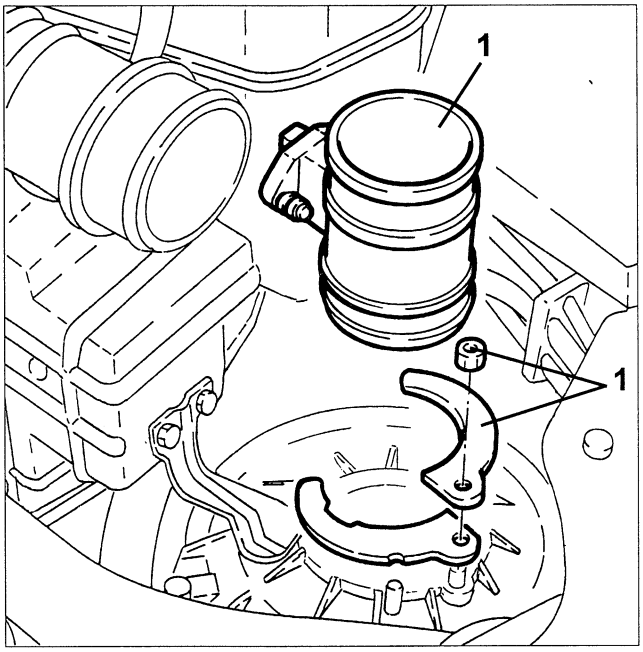

cardiagn.com

MODULAR INTAKE MANIFOLD

The modular length intake manifold is controlled by the injection-ignition ECU. It allows to increase the volumetric yield and consequently:
- optimise torque output at low/medium ratio
- increase power at high ratio.

The manifold consists of:
- two nylon half casings
- an internal rocking duct
- a vacuum accumulator inside the manifold
- a modular intake device actuator with built-in three-way solenoid valve.

OPERATION

The injection ECU controls the two-way solenoid valve (1) which connects the vacuum accumulator (2) and the pneumatic actuator (3). This moves the rocking duct (4) by means of linkages.
The rotation of the rocking duct allows the following manifold configurations:
- short power ducts, for ratio over 4900 rpm

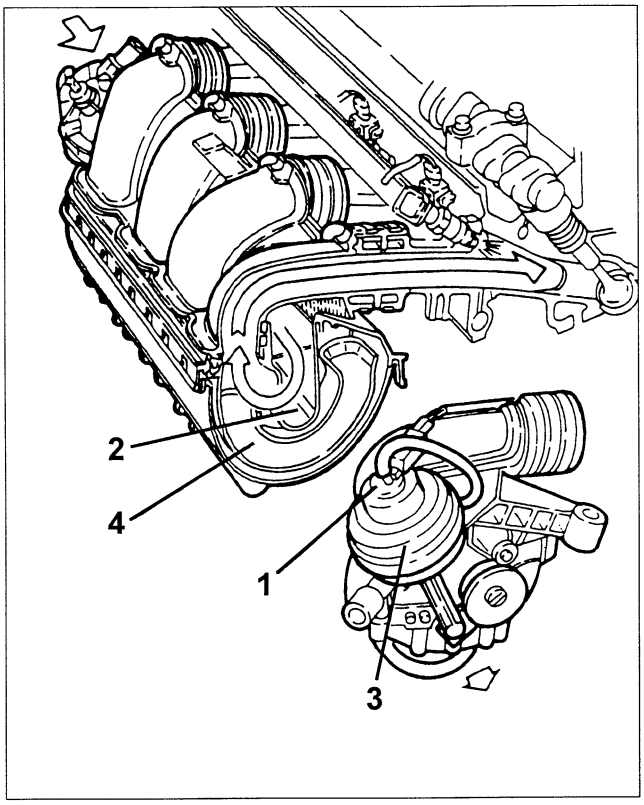

- long torque ducts, for ratios from 800 to 4900 rpm.

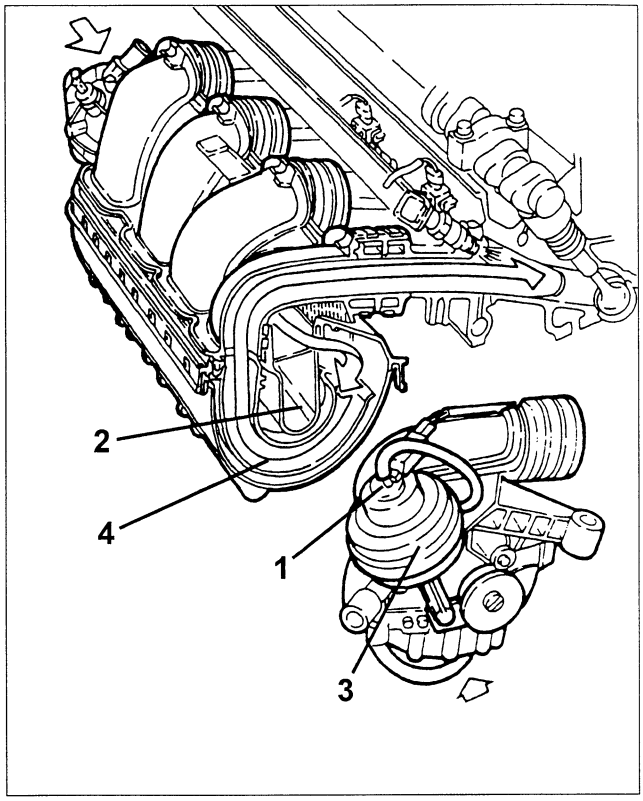

REMOVAL/REFITTING

- Position the vehicle on a shop jack.
- Make sure the ignition key is at "STOP" and disconnect the (-) battery terminal.

1. Remove the engine oil filler cap.
2. Loosen the fastening screws and remove the ignition coil cover.

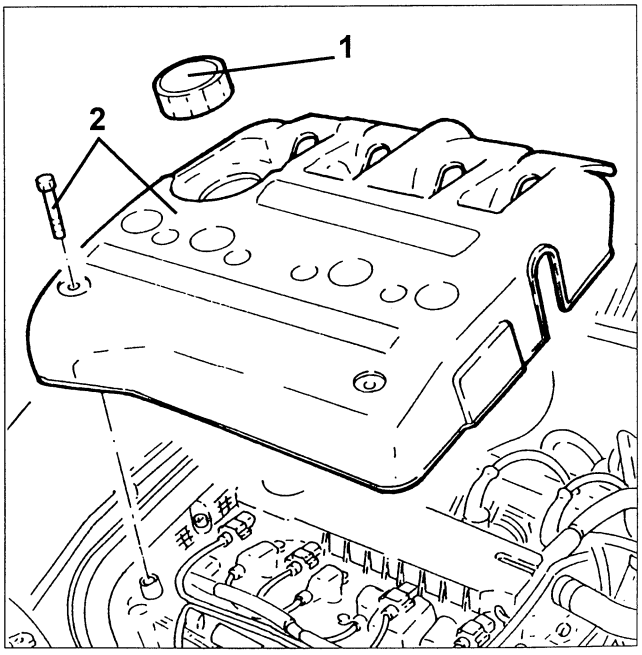

cardiagn.com

- Refit the engine oil filler cap.
1. Disconnect the oil vapour recovery pipe from the tappet cover.
2. Loosen the fastening clips and remove the throttle casing air intake corrugated sleeve.

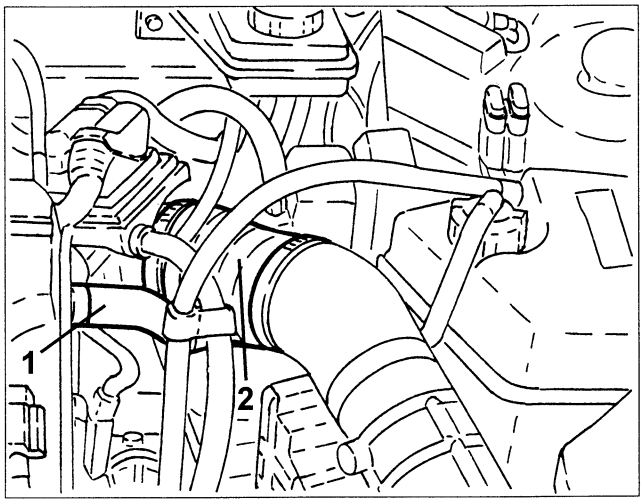

1. Remove the accelerator wire retainer from the bracket.
2. Release the accelerator wire from the throttle casing cam and move it aside.
3. Disconnect the injection-ignition ECU electrical connections.
4. Release the wiring from the clip on the ECU.
5. Disconnect the oil vapour recirculation pipe from the throttle casing.

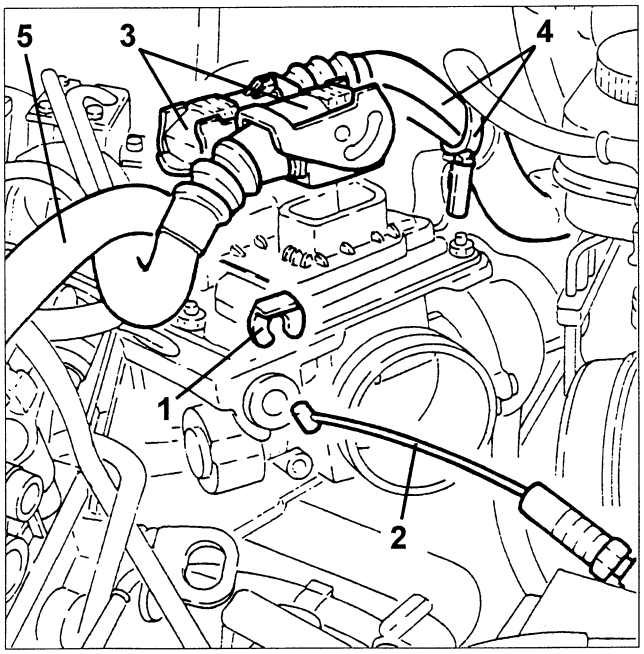

1. Disconnect the earth from the injection-ignition ECU bracket.
2. Disconnect the front engine joint wiring electrical connection.
3. Loosen the module intake manifold front engine joint wiring electrical connection bracket fastening screws.

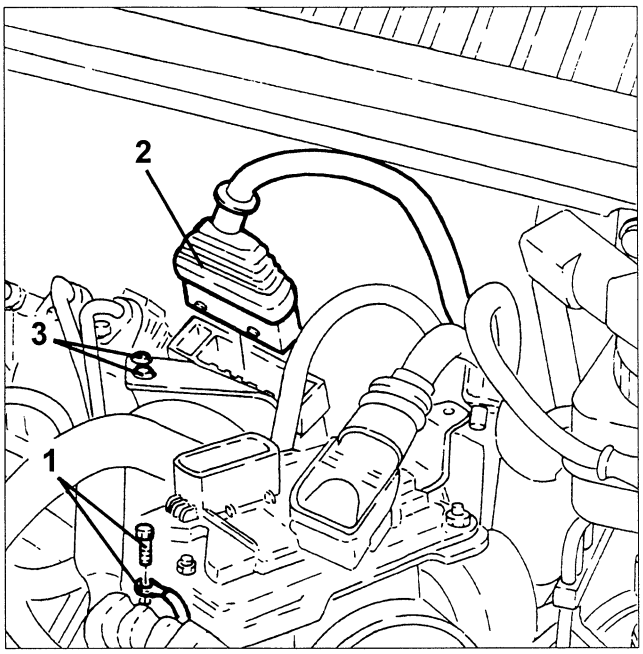

1. Disconnect the fuel vapour valve electrical connection.

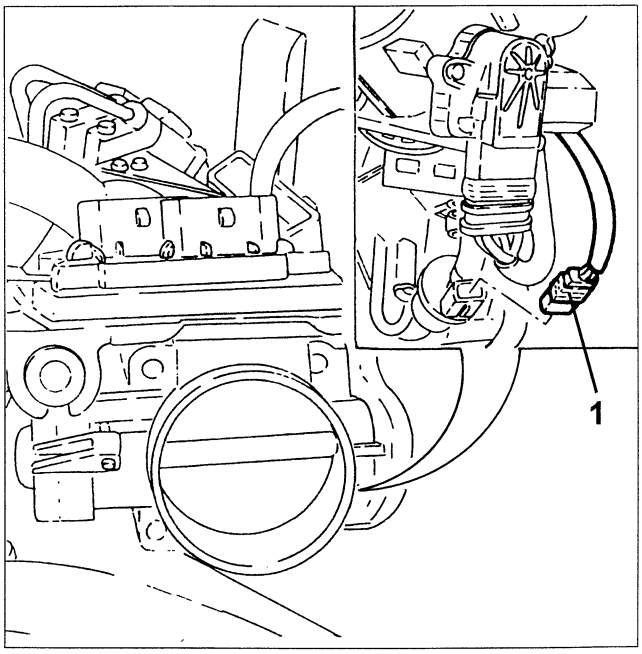

cardiagn.com

1. Disconnect the rpm and phase sensor electrical connection.
2. Disconnect the knock sensor electrical connection.
3. Disconnect the lambda sensor electrical connection.
4. Disconnect the phase sensor electrical connection.
5. Disconnect the modular intake manifold actuator electrical connection.
6. Disconnect the fuel vapour hose.
- Release the electrical wiring and the pipes from their respective clips on the modular intake manifold.

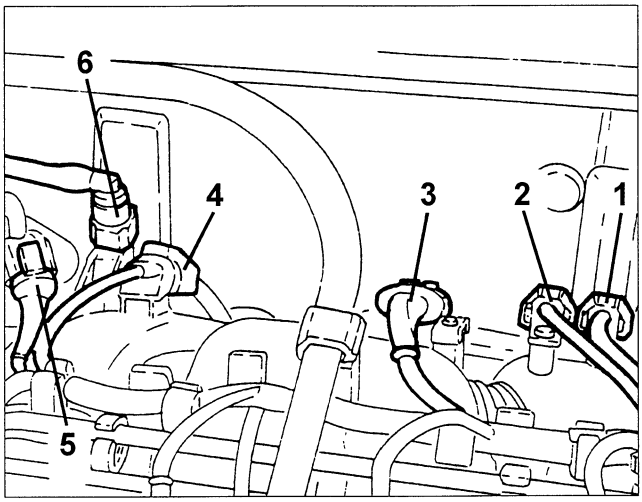

1. Disconnect the brake booster vacuum pipe.

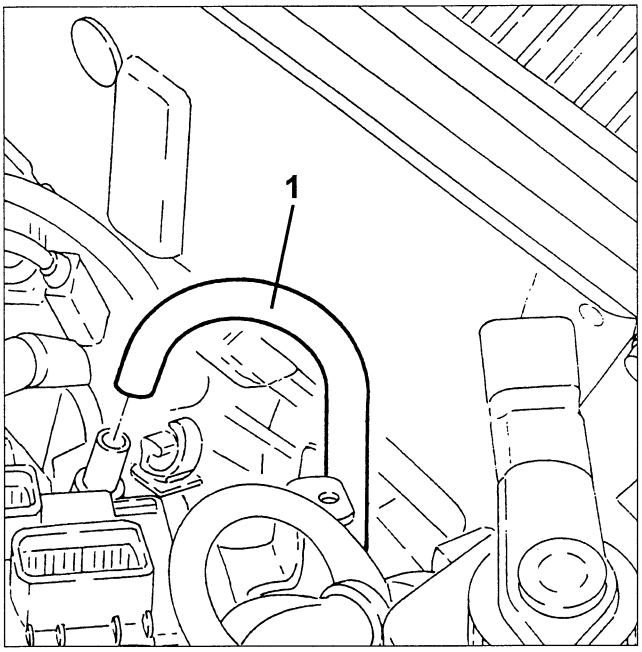

- Release the injector wiring from the fastening clips on the modular intake manifold.
- Release the coolant reservoir return pipe from the fasteners on the modular intake manifold.
- Lift the vehicle and remove the guard under the engine.
1. Loosen the fastening nuts and remove the exhaust pipe front section bracket.
2. Loosen the fasteners and remove the front exhaust pipe section with lambda sensor and seals.

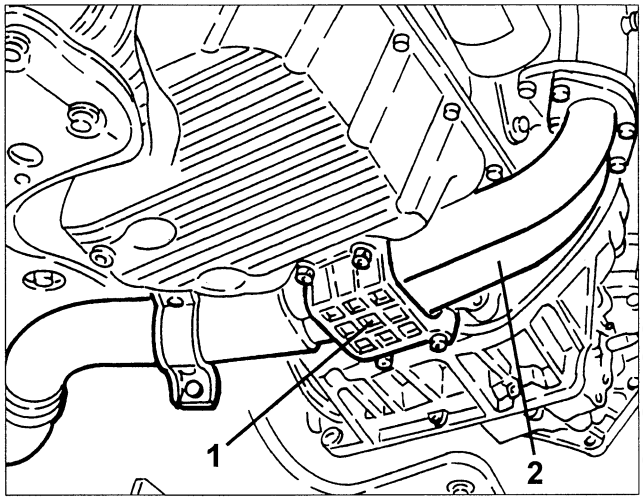

1. Loosen the fastening screws and remove the modular intake manifold bracket.
- Loosen the modular intake manifold fastening screw, right-hand side of the vehicle.

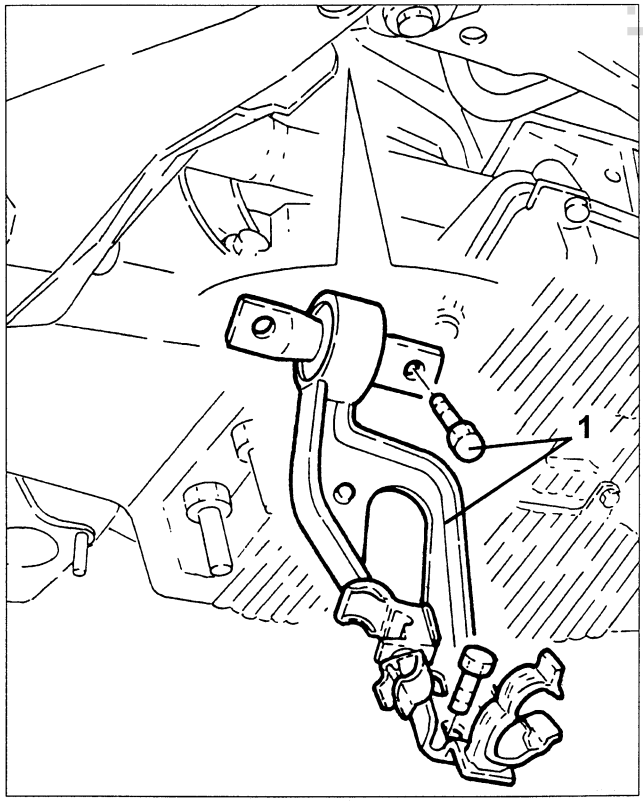

cardiagn.com

1. Lower the vehicle and loosen the modular intake manifold fastening screw, left-hand side of the vehicle.

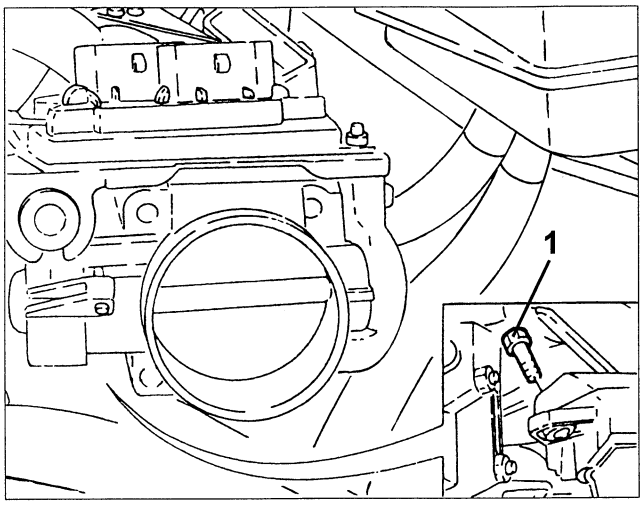

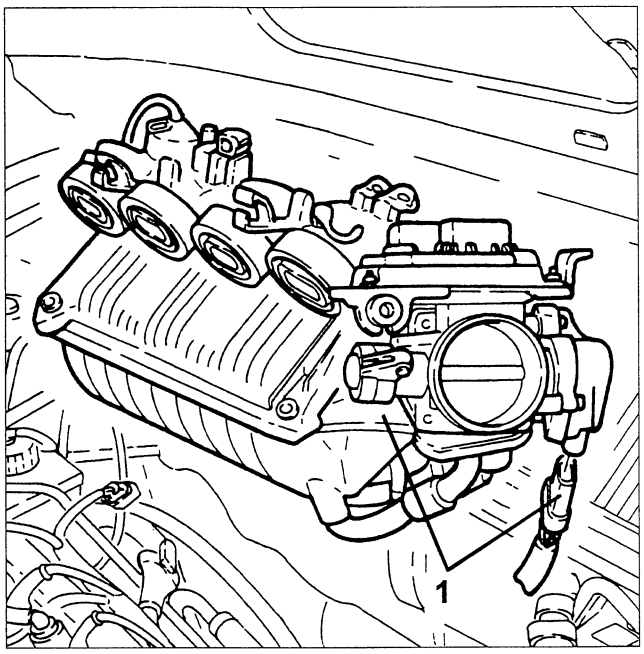

1. Loosen the fuel distribution manifold fastening screws and move it aside just enough to reach the air sleeve clips.
2. Loosen the air sleeve fastening clips and remove them after moving the modular intake manifold aside.

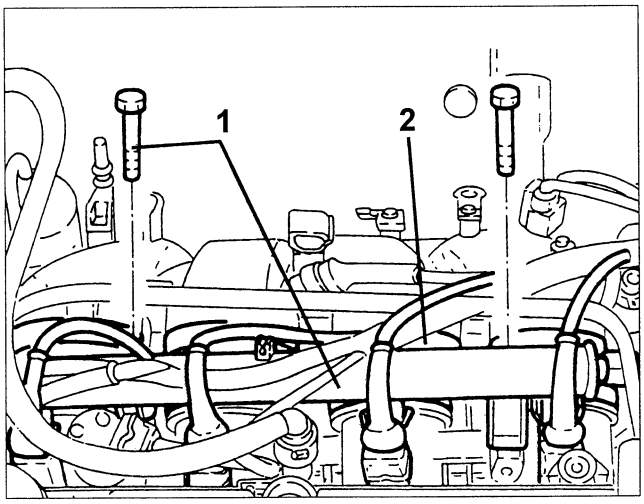

1. Remove the modular intake manifold after disconnecting the constant idling actuator electrical connection.

1. When refitting, calibrate the accelerator wire by means of the retainer so that the throttle is completely closed when the pedal is released and the wire has a play "H" of 5mm.

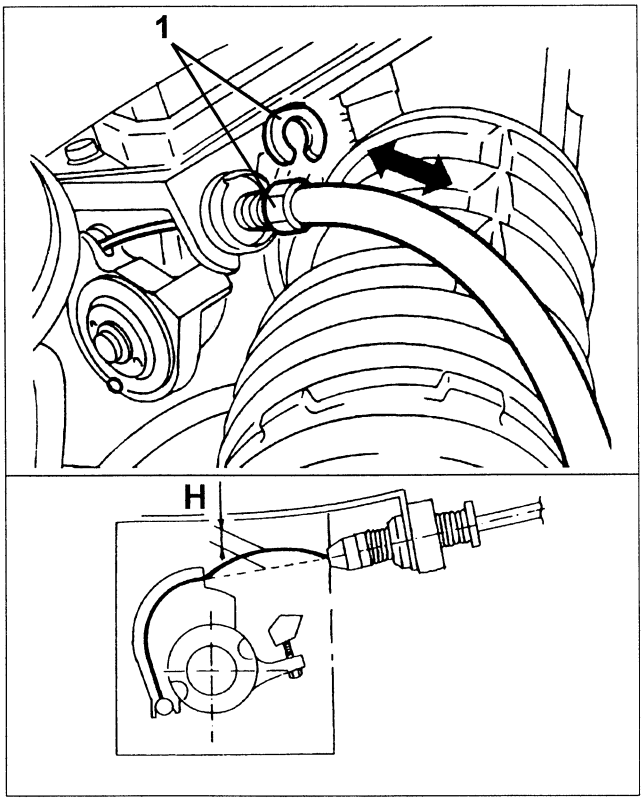

cardiagn.com

IMPORTANT: After replacing the modular intake manifold, repeat the self-learning procedure described below.

- Make sure the ignition key is at "STOP".
- Check that the conditioner is off, the accelerator pedal is never pressed and that the accelerator wire is positioned correctly.
- Connect tool no. 1.806.365.000 to the diagnostic socket and turn the knob to position 3.
- Connect Examiner.
- Go to Examiner "ECU Test" environment.
- Turn the ignition key to MAR.
- Go to Examiner "Active diagnosis" environment and select "Reset self-learning parameters" and "Idling actuator ".
- Press "Run active diagnosis".
- Turn the ignition key to STOP and wait for 30 seconds.
- Turn the ignition key to MAR and wait for 30 seconds.
- Restore the Examiner-engine control system communication.
- Go to Examiner "Parameter" environment and select "Idling acknowledgement test - done" and "Idling acknowledgement signals - synchronised" in the "Select" menu.

NOTE: If one or more parameters are not OK, turn the ignition key to STOP and repeat the procedure. If the problem persists, check the diagnostic wire is connected properly and that the diagnostic tool is working.

- Turn the ignition key to STOP and wait for 30 seconds.
- Start the engine without pressing the accelerator pedal.
- Disconnect the diagnostic tool.
- Run a road test (several kilometres) then when the engine is at running temperature, check correct idling operation.

MODULAR INTAKE MANIFOLD SOLENOID VALVE

This two way solenoid valve is built-into the variable geometry intake manifold pneumatic actuator and is controlled by the injection ECU. It allows the vacuum in the vacuum accumulator (inside the modular intake manifold) to act on the rocking duct pneumatic control.

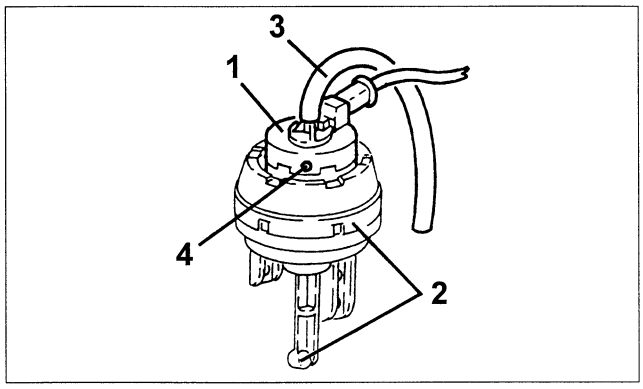

1. Modular intake manifold solenoid valve
2. Modular intake device actuator
3. Vacuum pipe
4. Atmospheric pressure air intake

REMOVAL/REFITTING

- Make sure the ignition key is at "STOP" and disconnect the (-) battery terminal.
1. Remove the engine oil filler cap.
2. Loosen the fastening screws and remove the ignition coil cover.
- Refit the engine oil filler cap.

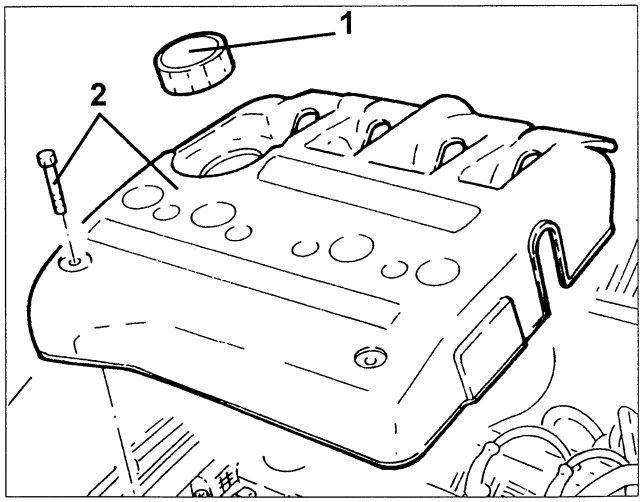

cardiagn.com

1. Disconnect the fuel vapour pipe quick coupling and release it from the clip on the power steering reservoir.
2. Disconnect the modular intake manifold actuator electrical connection.
3. Disconnect the vacuum pipe from the modular intake manifold actuator.
4. Loosen the fastening screws and remove the engine tie-rod.

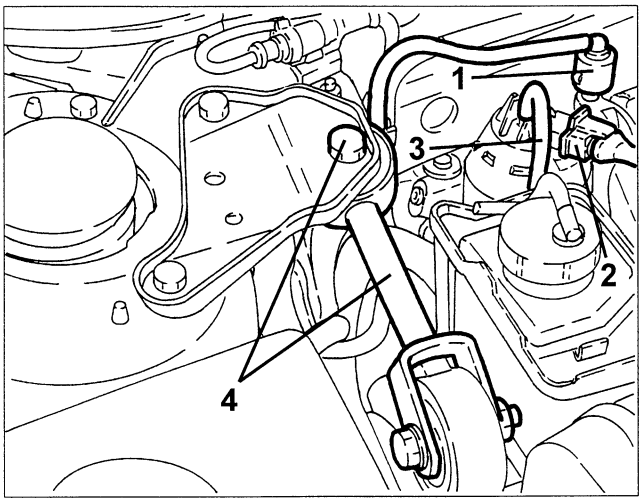

1. Release the right-hand ABS sensor electrical connection from the bracket.
2. Loosen the fastening nut and remove the ABS sensor electrical connection.
3. Loosen the fastening screws and remove the engine tie-rod upper bracket.
4. Loosen the fastening nut and screw. Then remove the engine tie-rod lower bracket.

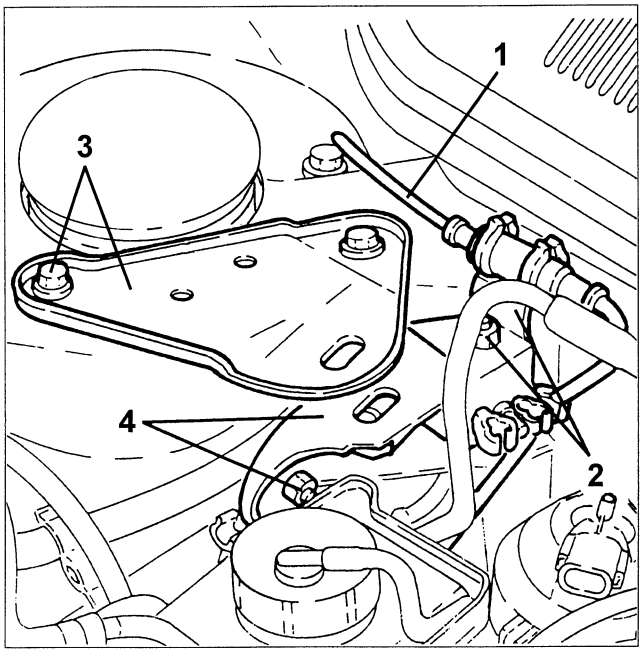

1. Loosen the fastening screws and remove the power steering reservoir.
2. Loosen the fastening screws, disconnect the tie-rod from the joint and remove the modular intake manifold actuator.

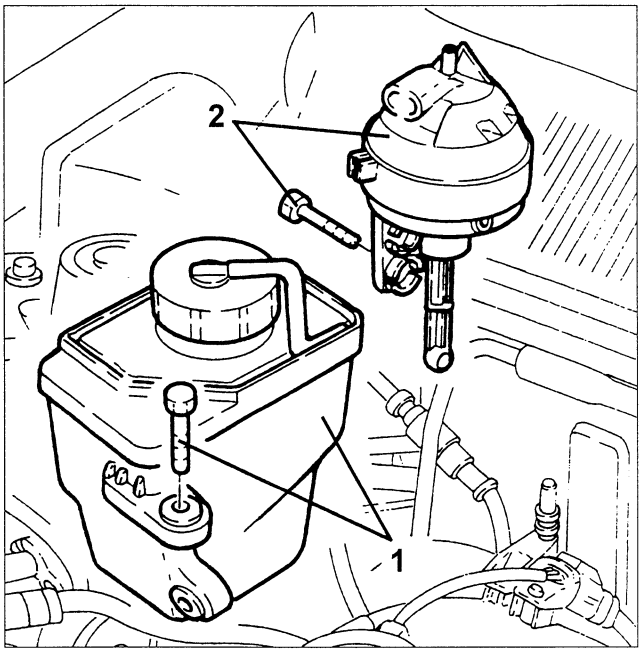

cardiagn.com

LAMBDA SENSOR

This "planar" sensor is fitted on the front section of the exhaust pipe and informs the injection-ignition ECU on the fuel metering (stoichiometric ratio). The injection ECU identifies the mixture compositions (lean or rich) according to the lambda sensor output voltage.
The ECU adjusts the amount of injected fuel to ensure optimal composition of the mixture ($\lambda = 1$), to create ideal conditions for the treatment of exhaust fumes in the catalytic converter. If the mixture is too rich ($\lambda < 1$) the amount of fuel is reduced and if the mixture is too lean ($\lambda > 1$) the amount of fuel is increased.

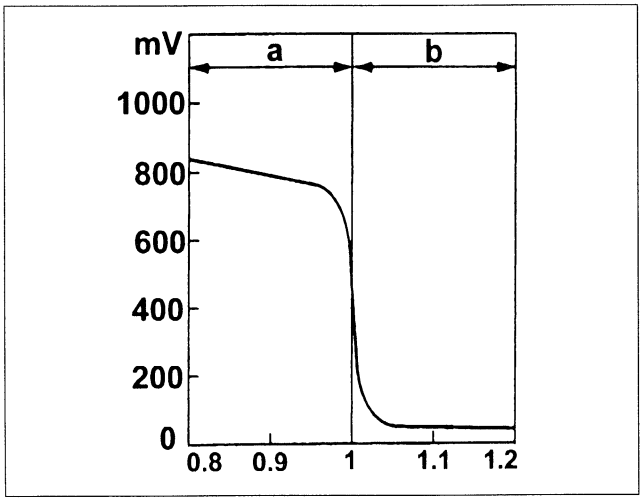

a. Rich mixture (no air)
b. Lean mixture (excessive air)

The lambda sensor, in contact with the exhaust fumes, generates an electrical signal with a voltage which varies according to the concentration of oxygen in the fumes. The voltage is characterised by a sudden variation with the composition of the mixture differs from $\lambda = 1$.
The lambda sensor heating is governed by the injection ECU proportionally according to exhaust fume temperature. This avoids thermal shocks to the ceramic casing due to the contact with condensed water in the exhaust fumes when the engine is cold.
The measuring cell and the heater and built-into the "planar" ceramic element (layered) with the advantage of rapid cell heating to allow a "closed loop" control ($\lambda = 1$) within 10 seconds from when the engine is started.

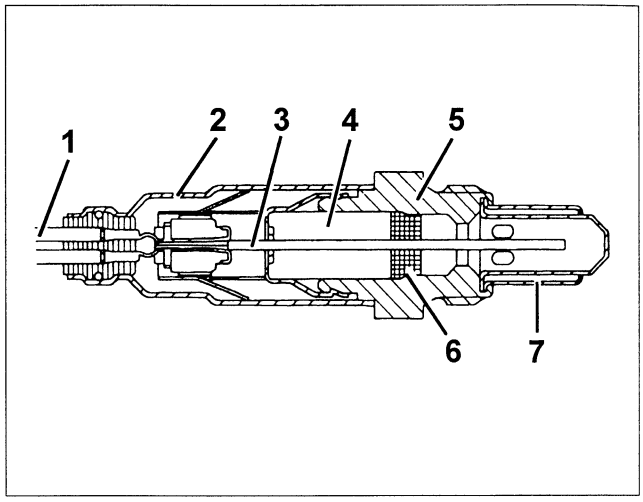

1. Connection wire
2. Protective sleeve
3. Planar sensor element
4. Ceramic supporting tube
5. Sensor seat
6. Ceramic seal
7. Protection pipe

The lambda sensor operation is based on the principle of a oxygen concentration cell and solid electrolyte.
The surfaces of the measuring cells are covered with noble material micro-pore layers.

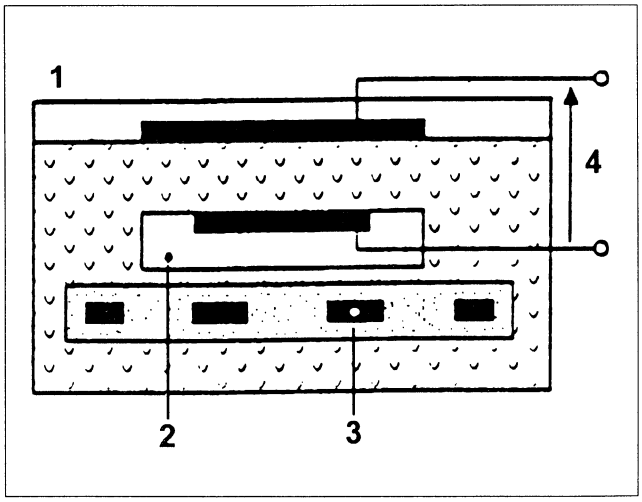

1. Exhaust fumes
2. Reference air passage
3. Heater
4. Lambda sensor voltage

cardiagn.com

REMOVAL/REFITTING

- Position the vehicle on a shop jack.
- Make sure the ignition key is at "STOP" and disconnect the (-) battery terminal.

1. Disconnect the lambda sensor electrical connection and release the respective electrical wiring from the clips on the modular intake manifold.

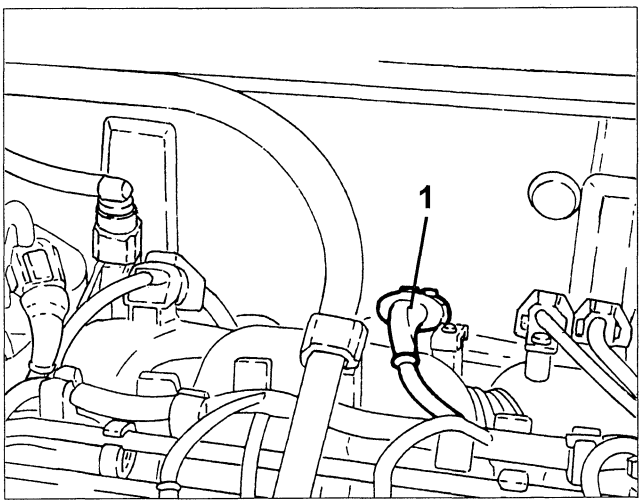

1. Lift the vehicle and remove the lambda sensor with its electrical wiring.

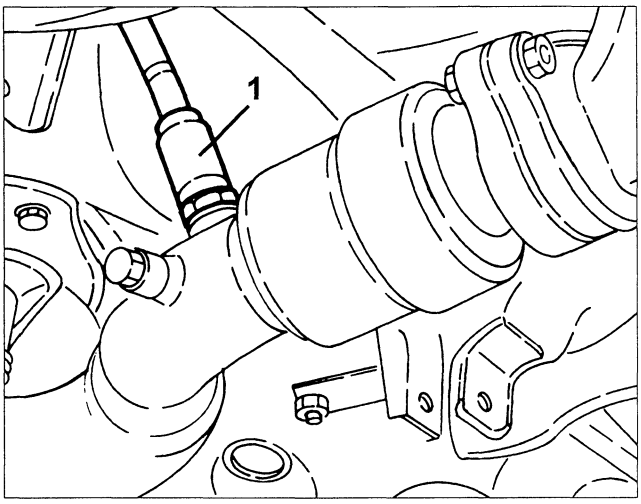

cardiagn.com

PHASE SENSOR

This "Hall" effect sensor is fitted on the cylinder head and faces the camshaft drive pulley (exhaust).
Four windows on the pulley allow the phase sensor to rapidly signal the timing position of the engine. The injection-ignition ECU uses the phase sensor signal to acknowledge TDC at the end of compression.

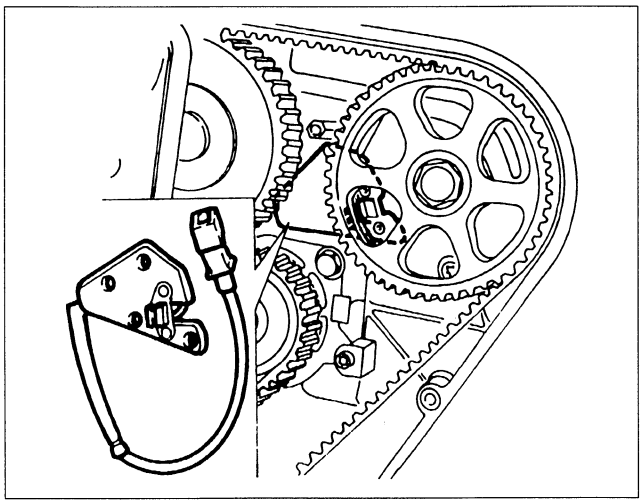

REMOVAL/REFITTING

- Position the vehicle on a shop jack.
- Make sure the ignition key is at "STOP" and disconnect the (-) battery terminal.
- Remove the front right wheel and mudguard.

1. Lift the vehicle. Loosen the engine unit drive belt by means of the belt take-up as shown in the figure and remove the belt.
2. Loosen the four fastening screws and remove the engine pulley.

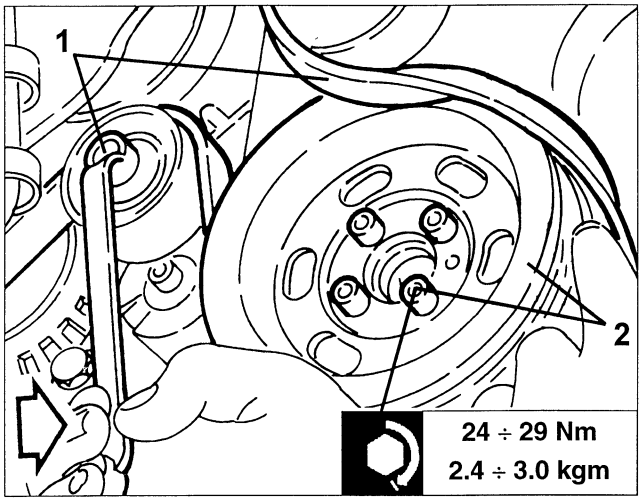

1. Loosen the fastening screw and remove the belt take up.
2. Loosen the fastening screw and remove the engine unit drive belt runner.
3. Loosen the fastening screws and remove the lower timing and counter-rotating shaft belt guard.

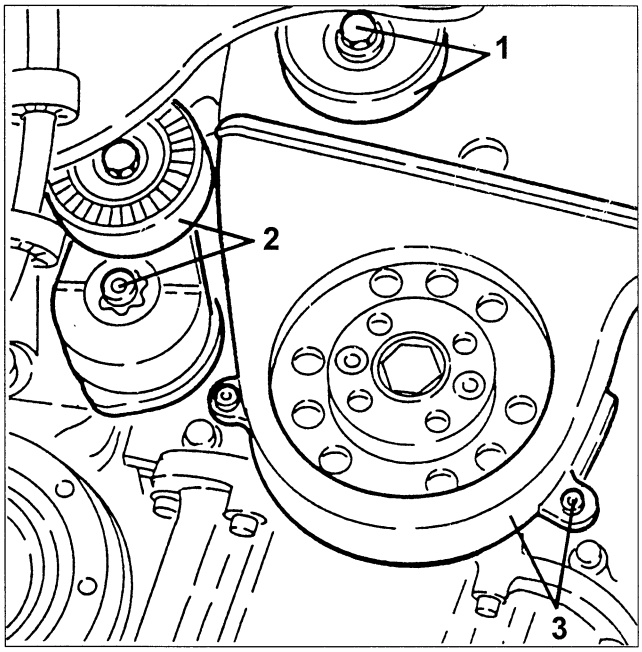

1. Remove the engine oil filler cap.
2. Loosen the screws and remove the ignition coil cover.
- Refit the engine oil filler cap.

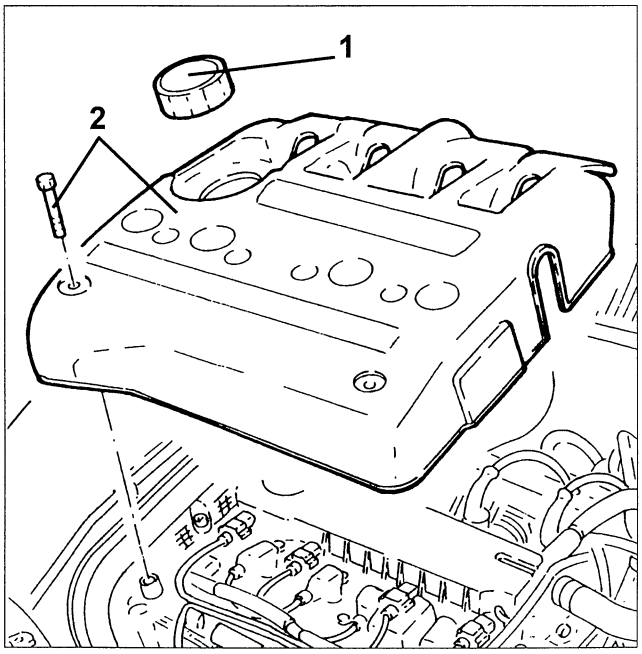

cardiagn.com

For 1.8 version

- Loosen the timing belt guard lower screws.

1. Lower the vehicle, loosen the remaining fastening screws and remove the timing belt guard.

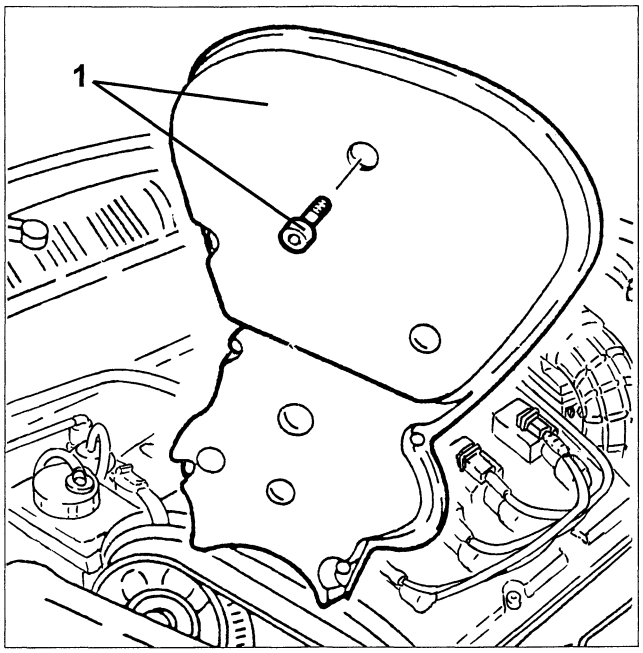

For 2.0 version

- Loosen the lower timing and counter-rotating shaft belt guard the fastening screws.

1. Lower the vehicle, loosen the remaining fastening screws and remove the upper guard.

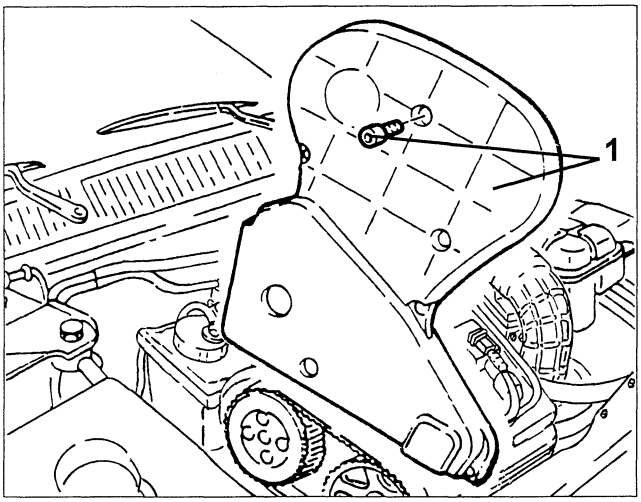

All types

1. Disconnect the phase sensor electrical connection and release the respective wiring from the clips.

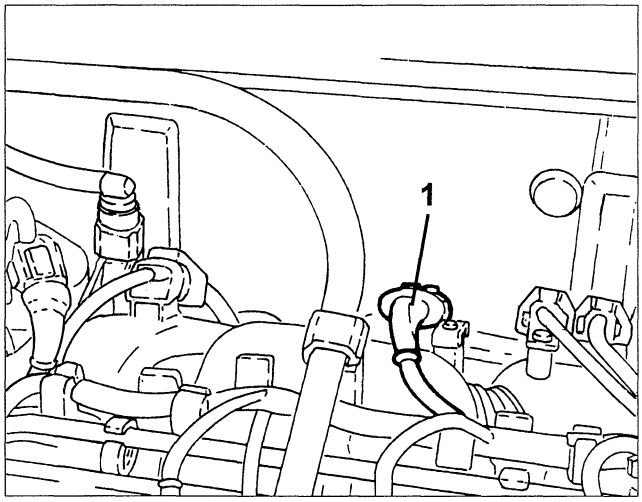

- Disconnect the oil vapour recirculation pipes from the tappet cover.

1. Disconnect the ignition coil electrical connections.

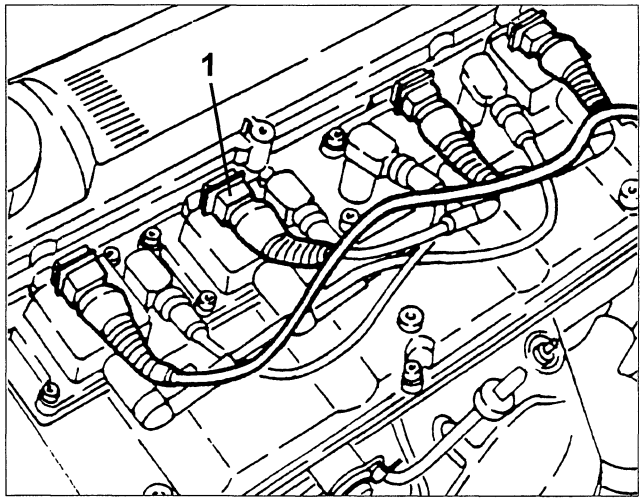

cardiagn.com

1. Loosen the fastening screws and remove the ignition coils.
2. Loosen the fastening screws and remove the ignition coil bracket.

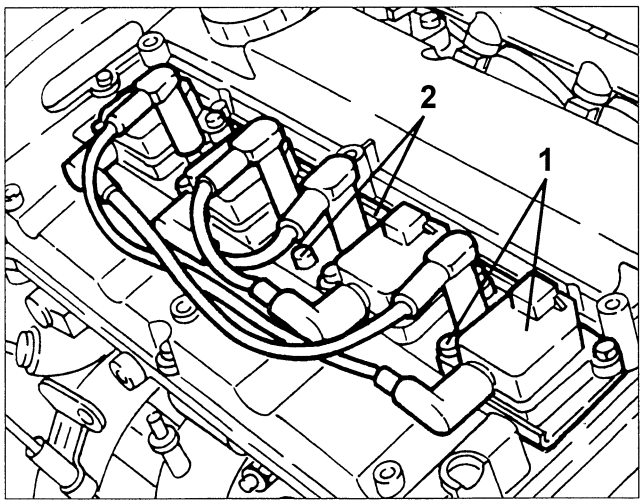

1. Loosen the fastening screws and remove the tappet cover.

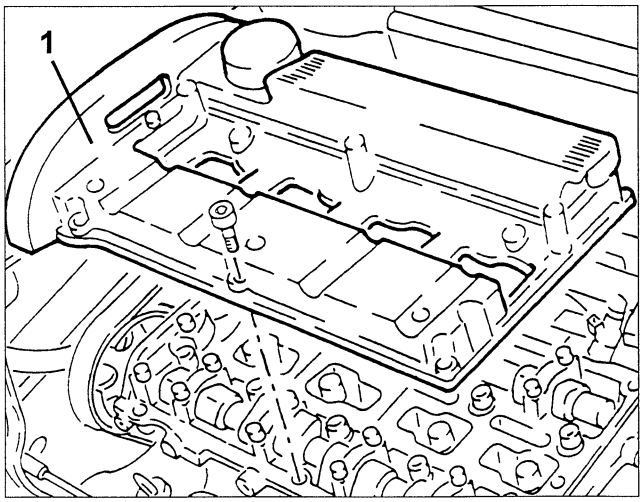

1. Loosen the belt by means of the belt take-up. Remove it from the camshaft drive pulleys.

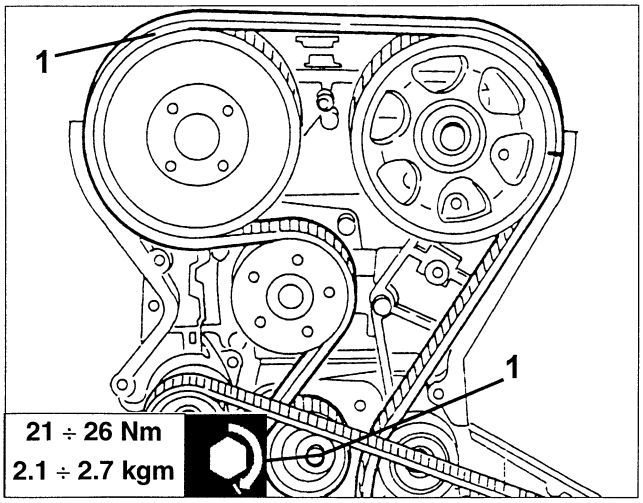

1. Use tools no. 1.822.146.000 and no. 1.822.156.000 to loosen the camshaft drive pulley fastening screws on exhaust side and remove it.
2. Loosen the fastening screws and remove the camshaft drive pulley on intake side.

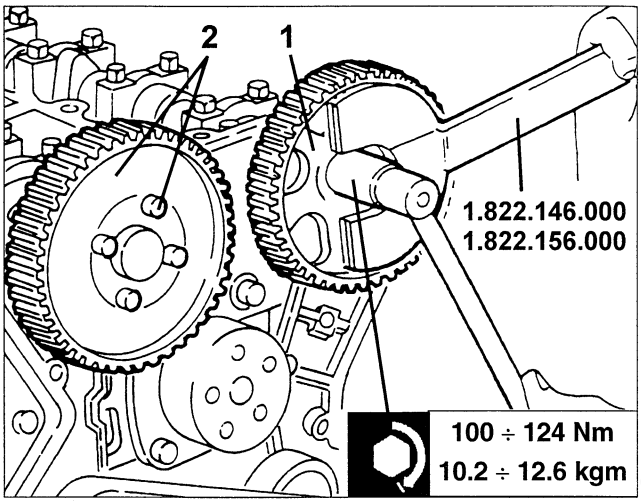

1. Loosen the fastening screws and remove the side guard on intake side.

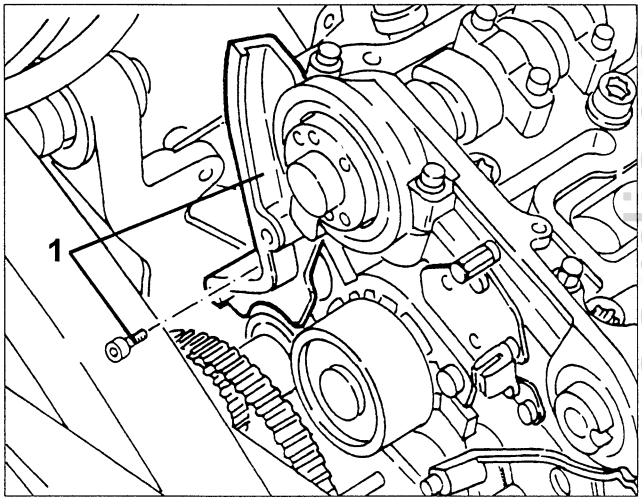

1. Loosen the fastening screws and remove the phase sensor.

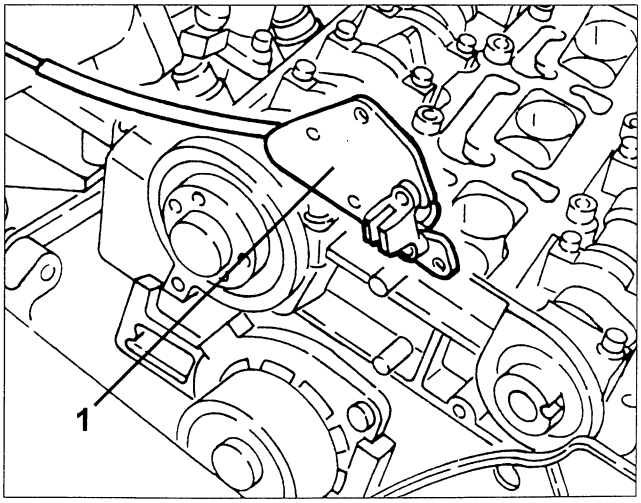

cardiagn.com

RPM AND PHASE SENSOR

This sensor is fitted on the crankcase and faces the phonic wheel on the flywheel. It is inductive, i.e. it works by means of the variations in the magnetic field generated by the passage of the phonic wheel teeth (60 - 2 teeth).
The injection ECU uses the rpm sensor signal to:
- define revolution speed
- define crankshaft angular position.

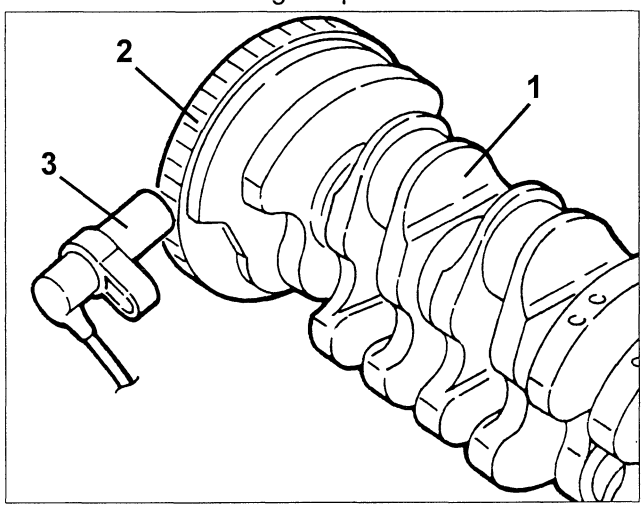

1. Crankshaft *2. Phonic wheel*
3. Rpm and phase sensor

Operation
The switchover from full to none, due to the presence or the absence of a tooth, causes magnetic flow variations which generate an induced alternated voltage by counting the teeth on the phonic wheel. The frequency and the width of the voltage sent to the ECU provides the engine angular speed measurement.

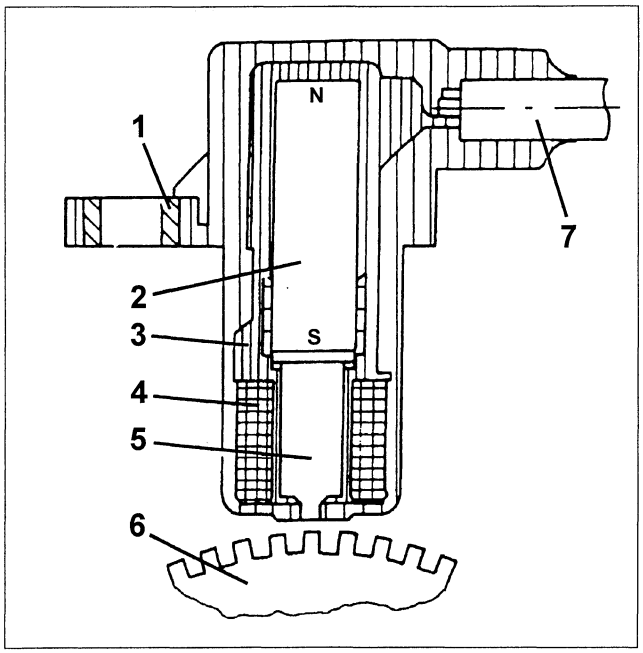

1. Brass bushing
2. Permanent magnet
3. Plastic sensor casing
4. Coil winding
5. Pole core
6. Crown or phonic wheel
7. Co-axial double wire or electrical connection

The prescribed gap between the sensor tip and the phonic wheel for correct signals must be between **0.8** and **1.5 mm**.
The gap cannot be adjusted. If the gap is out of tolerance, check intactness of sensor and phonic wheel.

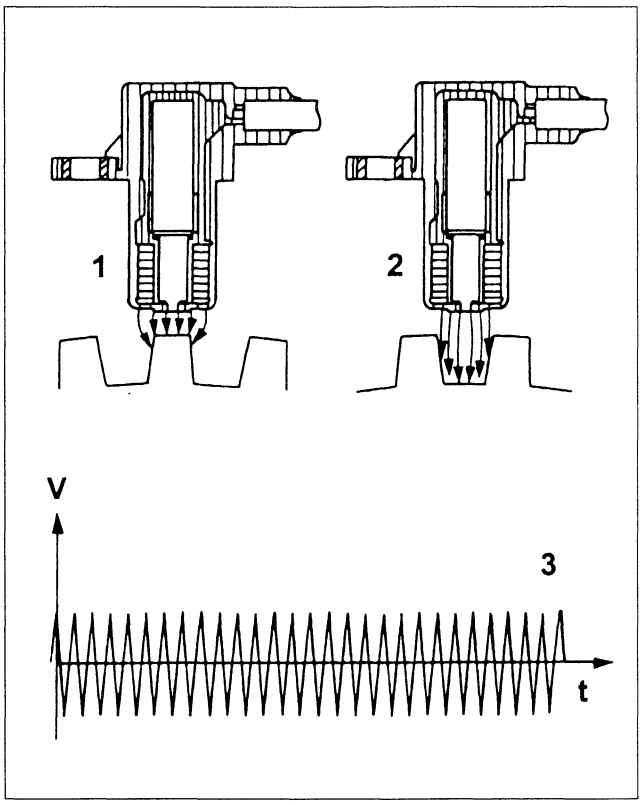

1. Maximum magnetic flow
2. Minimum magnetic flow
3. Induced alternating voltage trend.

REMOVAL/REFITTING

- Position the vehicle on a shop jack.
- Make sure the ignition key is at "STOP" and disconnect the (-) battery terminal.

cardiagn.com

1. Disconnect the rpm and phase sensor electrical connection and release the respective electrical wiring from the fastening clips.

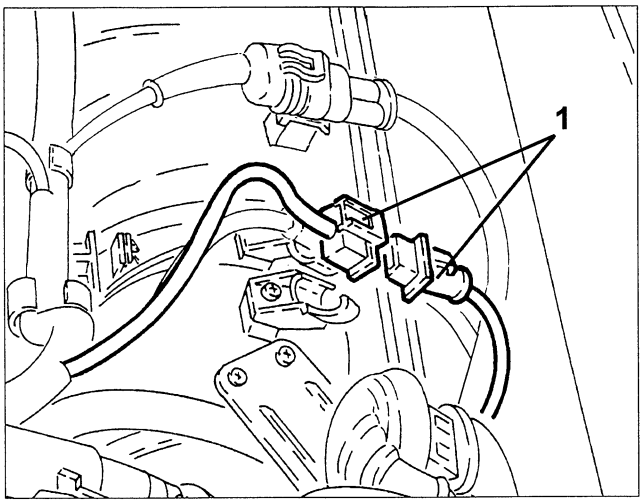

1. Lift the vehicle. Loosen the fastening screw and remove the rpm and phase sensor.

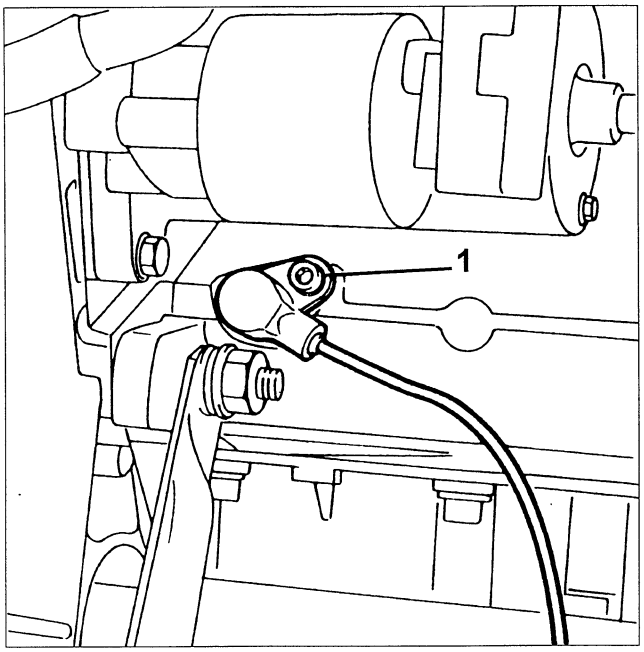

ENGINE COOLANT TEMPERATURE SENSOR

This sensor is fitted on the thermostat cap and measures the coolant temperature by means of a double NTC thermistor with negative resistance coefficient. One NTC thermistor sends a signal to the injection ECU while the other sends a signal to the instrument panel temperature gauge and warning light.

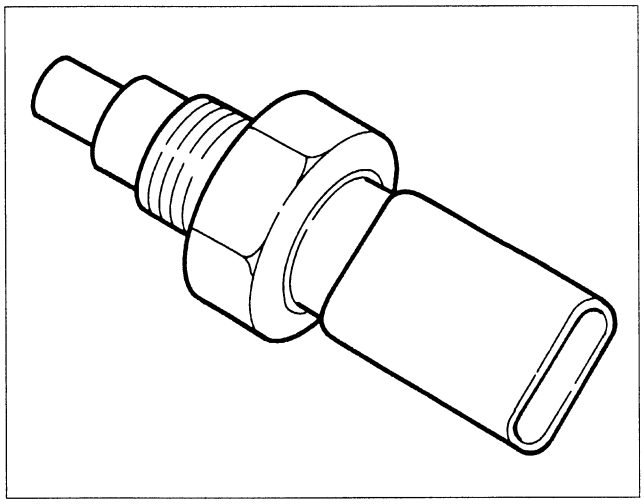

The sensor applies semiconductor technology. Consequently, the resistive value decreases as the sensor temperature increases with the coolant temperature. The resistance variation is not linear: consequently, it is higher at low temperatures with respect to higher temperatures.

REMOVAL/REFITTING

- Make sure the ignition key is at "STOP" and remove the (-) battery terminal.

cardiagn.com

1. Disconnect the engine coolant temperature sensor electrical connection.
2. Loosen and remove the engine coolant temperature sensor from the thermostat cap.

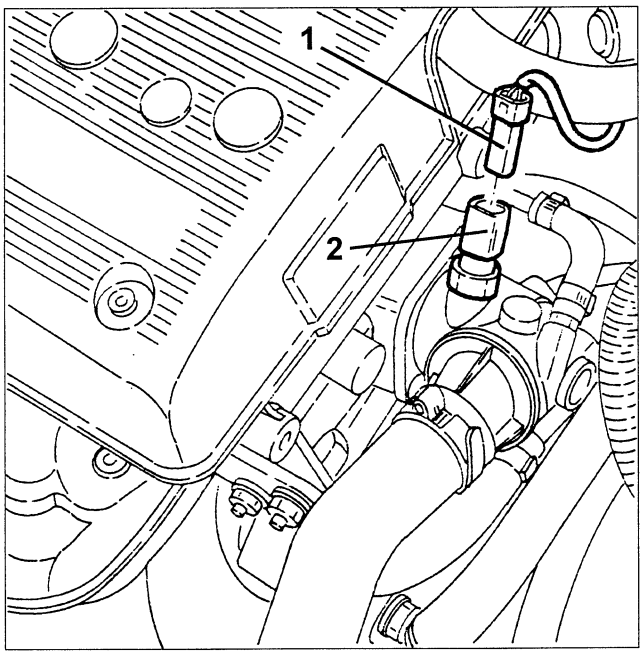

KNOCK SENSOR

The piezoelectric knock sensor is fitted on the crankcase and detects the intensity of the vibrations caused by the knock in the firing chamber. The sensor piezoelectric crystal detects vibrations generated at frequency included between 12 kHz and 16 kHz and generates electrical signals which are sent to the injection ECU.
The knock sensor fastening screw torque is 19.5 - 20.5 Nm.

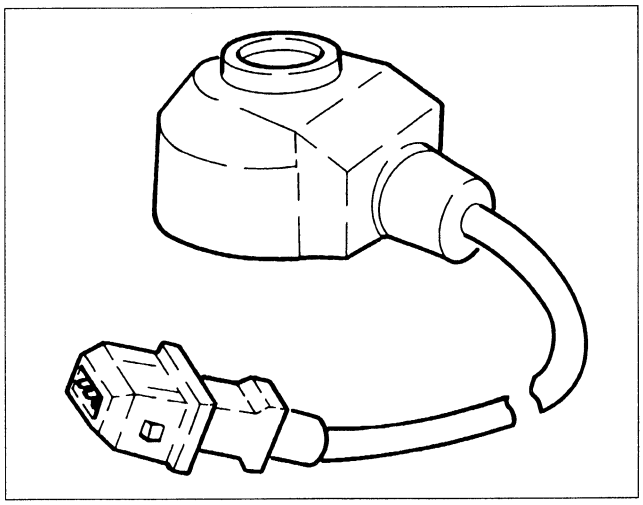

REMOVAL/REFITTING

- Position the vehicle on a shop jack.
- Make sure the ignition key is at "STOP" and disconnect the (-) battery terminal.

1. Disconnect the knock sensor electrical connection.

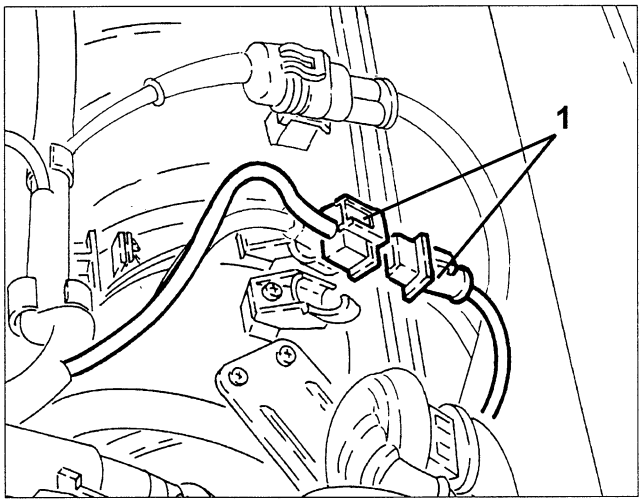

1. Lift the vehicle, loosen the fastening screw and remove the knock sensor.

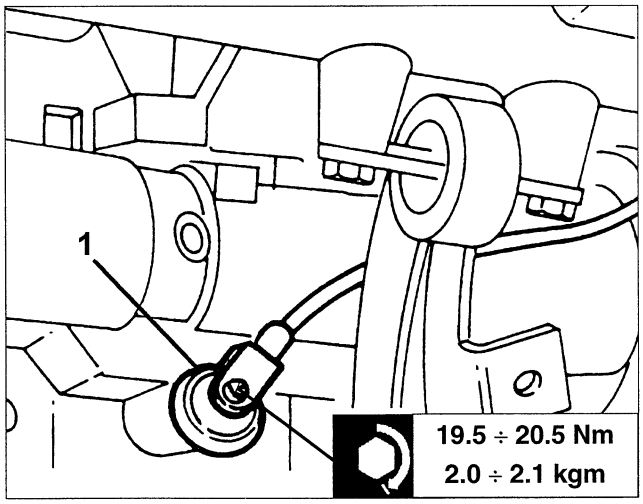

cardiagn.com

ENGINE COOLING SYSTEM

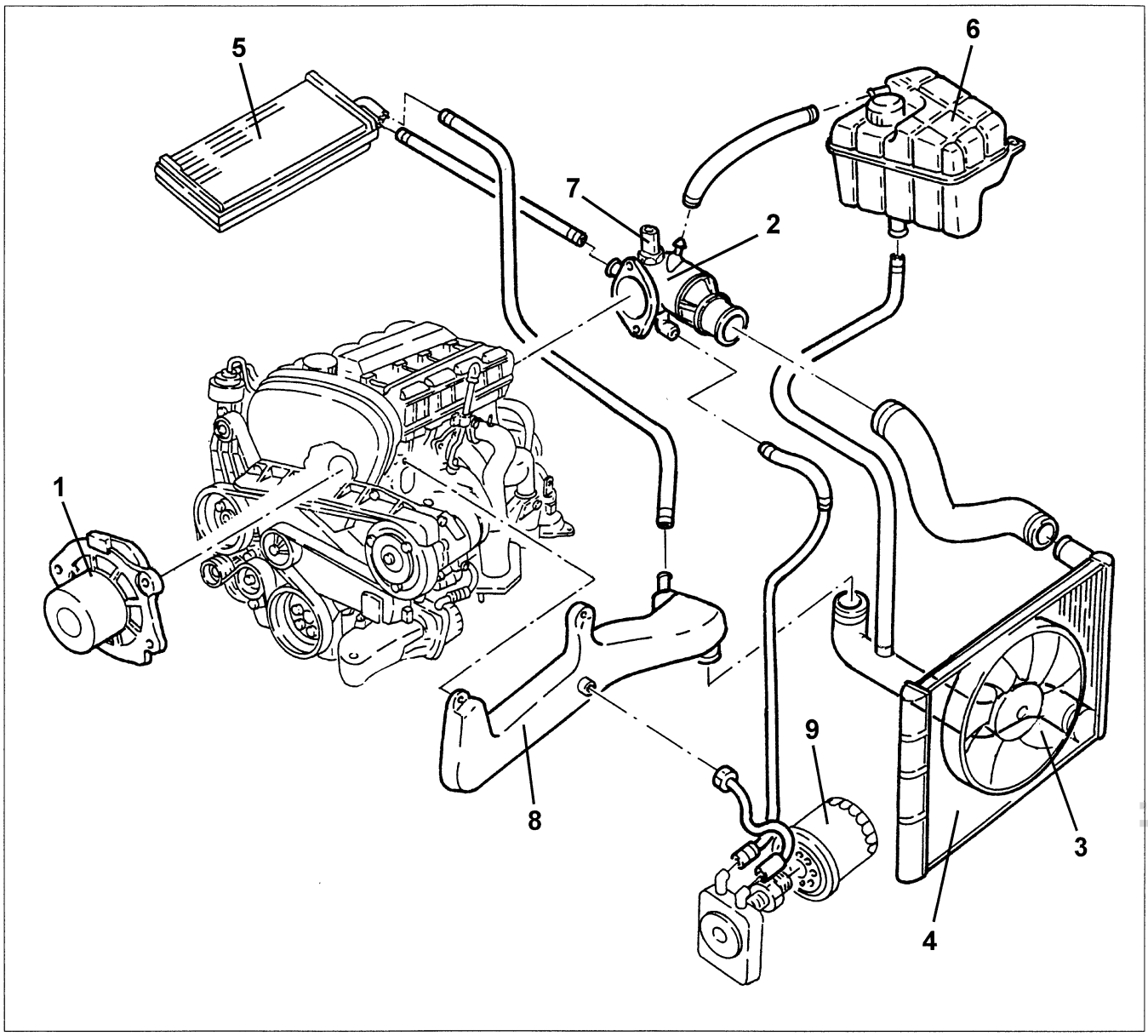

1. Coolant pump
2. Thermostat
3. Cooling solenoid valve
4. Radiator
5. Climate control heater
6. Expansion reservoir
7. Engine coolant temperature sensor
8. Longitudinal manifold
9. Engine oil/coolant heat exchanger

cardiagn.com

DESCRIPTION

The cooling system is sealed and of the forced circulation type. It features a centrifuge pump (1) operated by the crankshaft by the timing belt. A thermostat valve (2) located on the rear of the engine ensures optimal engine temperature. It opens when the coolant reaches a temperature of 83°C. The radiator (3) cools the fluid by means of dynamic air and a fan. The fan is controlled by the injection-ignition ECU according to a specific logic (for greater details see ELECTRIC-ELECTRONIC DIAGNOSTICS - Section 26 for versions with climate control and Section 27 for versions with heater). The expansion reservoir (7) feeds the circuit if the level decreases and absorbs the fluid variations in volume according to the temperature. Furthermore, it acts as a circuit air bleeder. A double NTC thermistor coolant temperature sensor is fitted on the thermostat cup. One NTC thermistor sends a signal to the injection ECU while the other sends a signal to the instrument panel temperature gauge and warning light.

CIRCUIT OPERATION

The fluid cools the engine a reaches the thermostat (2) via the cylinder head. If its temperature is lower than 83 °C, the coolant is sucked by the pump (1) via a longitudinal return manifold (11) located on the left-hand side of the cylinder head. If the temperature is higher than this value, the coolant is conveyed to the radiator (4) via the thermostat opening. After being cooled in the radiator, the coolant returned to the thermostat from where it is conveyed to the pump via the longitudinal manifold.
Furthermore, from the thermostat cup the coolant is conveyed to:
- the expansion reservoir also for bleeding the circuit;
- the climate control system to return to the longitudinal manifold;
- heat exchanger (12) for cooling engine oil. It is then let out and directly conveyed via the coolant return longitudinal manifold to the pump.

The expansion reservoir feeds the engine cooling circuit via a specific connection pipe on the longitudinal manifold.

cardiagn.com

INDEX

REMOVAL/REFITTING
- Description. 1
- Removal 1
- Refitting 9

OPERATIONS IN VEHICLE
- Cylinder heads. 10
- Oil sump 17

M 3.7 INJECTION - IGNITION
- General description 19

FUEL SUPPLY
- Description of system 25
- Fuel pipe connection fittings (John Guest type) 26
- Fuel pipe connection fittings (Huron type). 26
- Fuel tank 26/1
- Fuel level gauge 26/3
- Fuel pump 26/4
- Fuel filter 27
- Fuel pressure regulator 27
- Pulse damper 28
- Electroinjectors 28
- Checking the pressure and tightness of the fuel circuit 29
- Description of the fuel vapour recovery system 30
- Fuel vapour separator 31
- Fuel vapour filter (canister) 31
- Fuel vapour solenoid valve 31

AIR SUPPLY SYSTEM
- Air supply and oil vapour recovery system. 32
- Changing the air cleaner cartridge 33
- Throttle body 33
- Fluxing test 34
- Air-flow meter 34
- Intake air temperature sensor (NTC) 35
- Throttle potentiometer 35
- Air intake box 36
- Constant idle speed actuator 37
- Oil vapour separator. 37

EXHAUST GAS RECIRCULATION
- Description of system 38
- E.G.R. valve 39
- E.G.R. modulating solenoid valve 39

EXHAUST SYSTEM
- Description 39/1
- Catalytic converter . . . . . (*)
- Lambda sensor. 39/2
- Checking emissions at the exhaust 39/2

ELECTRICAL COMPONENTS
- Timing sensor. 40
- RPM sensor and timing sensor 41
- Engine coolant temperature sensor (NTC) 42
- Inertial switch 42
- Knocking sensors. 43

ENGINE COOLING SYSTEM
- Engine cooling system 44

(*) See 1996 TB

cardiagn.com

DESCRIPTION

The information and illustrations given below enable the rapid removal of the power unit from its housing and its subsequent refitting.

Dis-assembly of the single components on the bench is described in the volume "ENGINE OVERHAULING".
The following procedure may be used only in part according to requirements.
For further information and details, refer to the chapters concerning the components or specific groups.

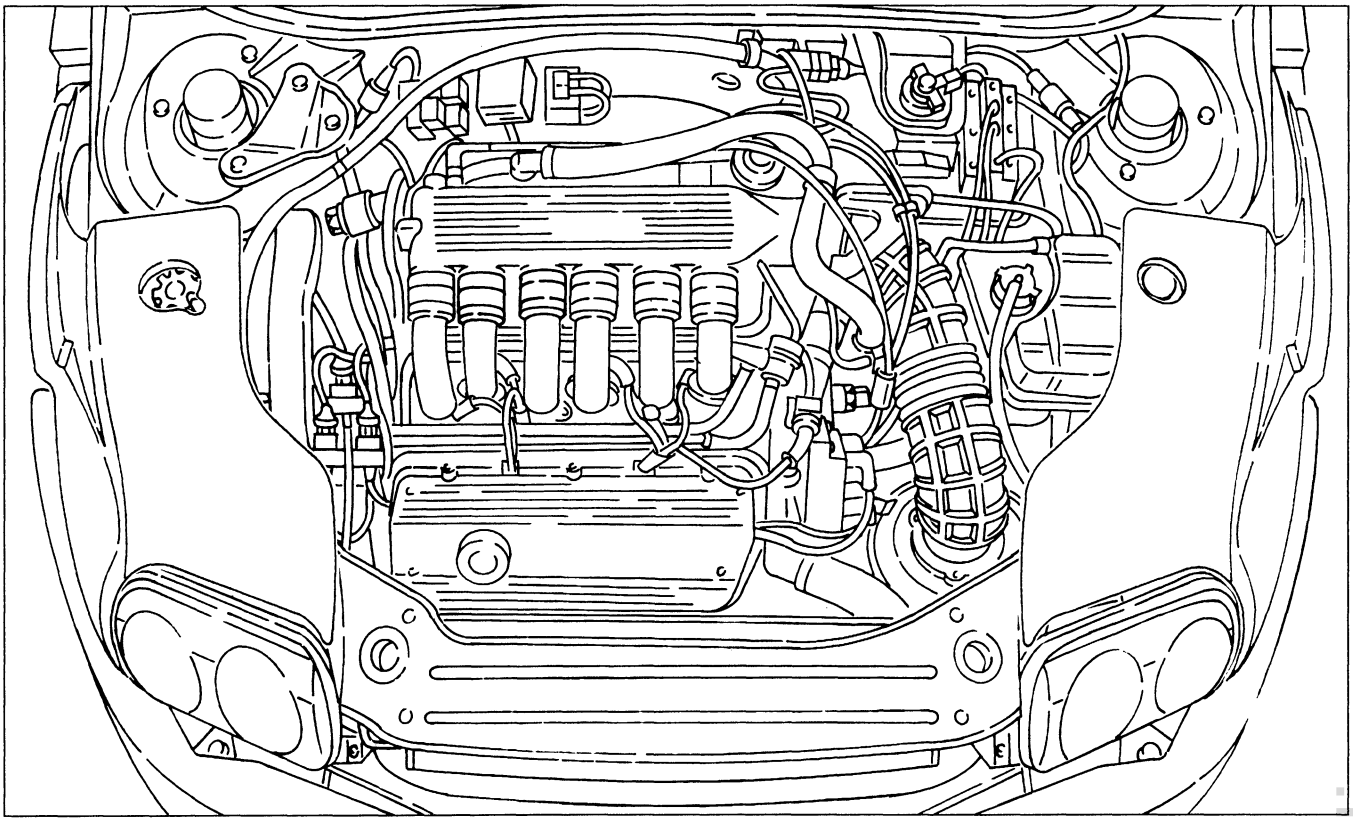

REMOVAL

- Set the car on a two-column lift.
- Disconnect the battery (-) terminal.
- Drain the coolant fluid from the air conditioning system (see specific paragraph).
- Remove the front wheels and wheel houses.

1. Raise the car and drain the coolant fluid disconnecting the radiator outlet sleeve.

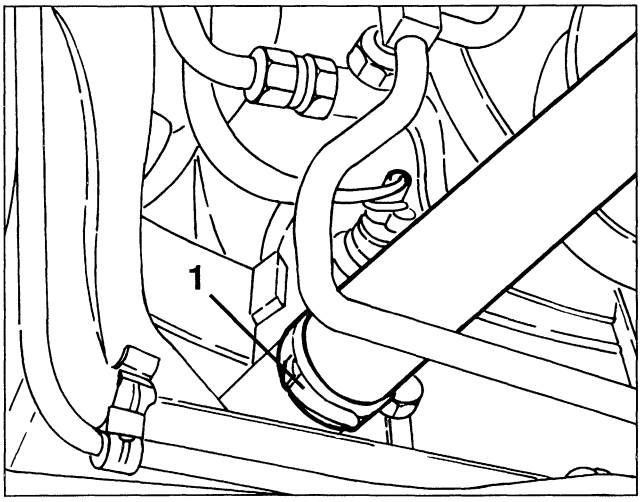

1. Lower the car and disconnect the electrical connection from the intaken air temperature sensor.
2. Disconnect the air inlet pipe for the idle speed actuator from the corrugated sleeve.
3. Disconnect the electrical connection from the throttle potentiometer

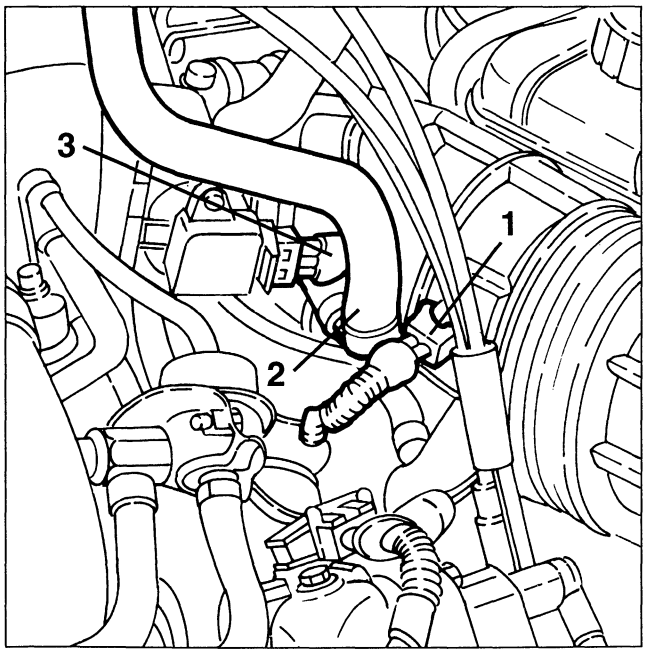

cardiagn.com

1. Disconnect the oil vapour recirculation pipe from the corrugated sleeve.

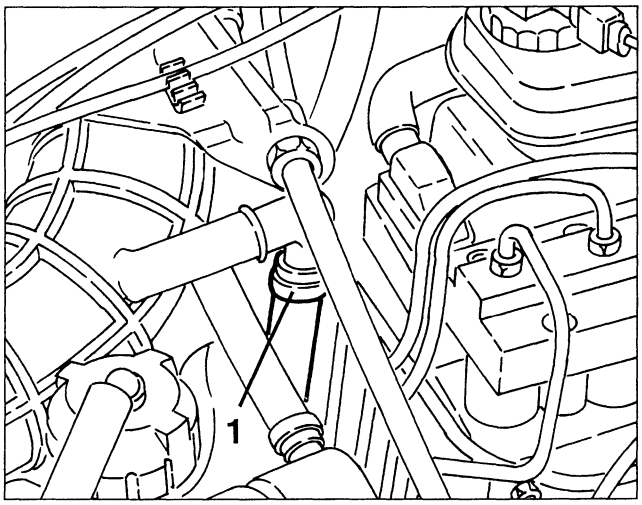

1. Disconnect the electrical connection from the air-flow meter.

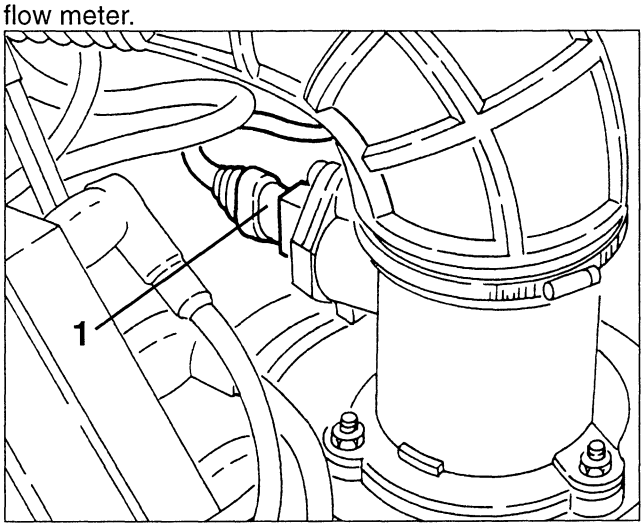

1. Remove the corrugated sleeve complete with air cleaner cover, after slackening the clamps fastening it to the throttle body and the clips fastening it to the air cleaner box.

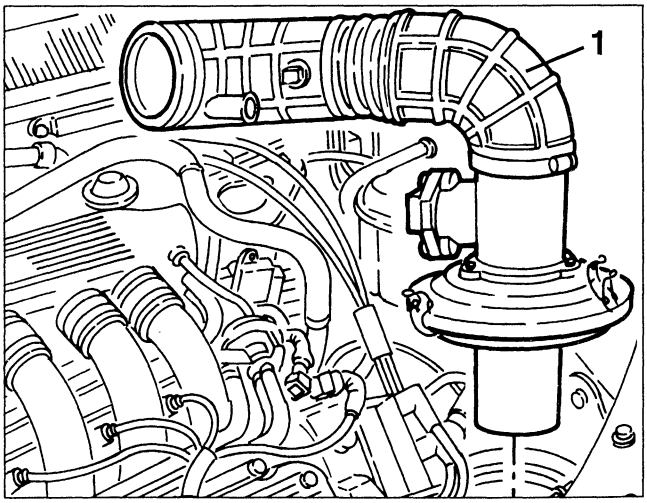

1. Remove the filtering element.

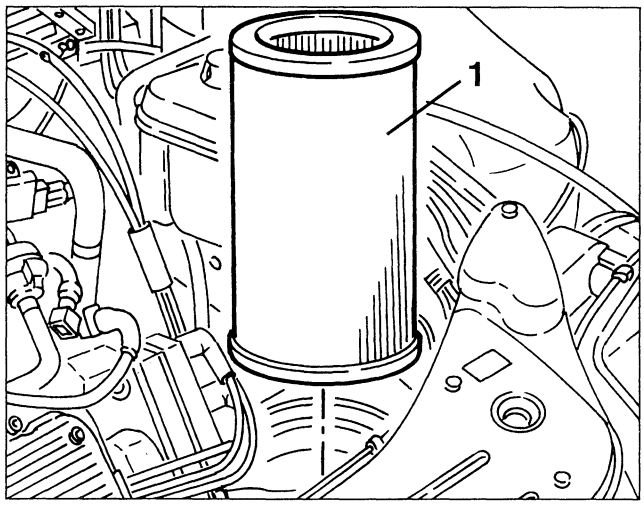

1. Slacken the three screws fastening the air cleaner box then remove it complete with elbow after disconnecting same.

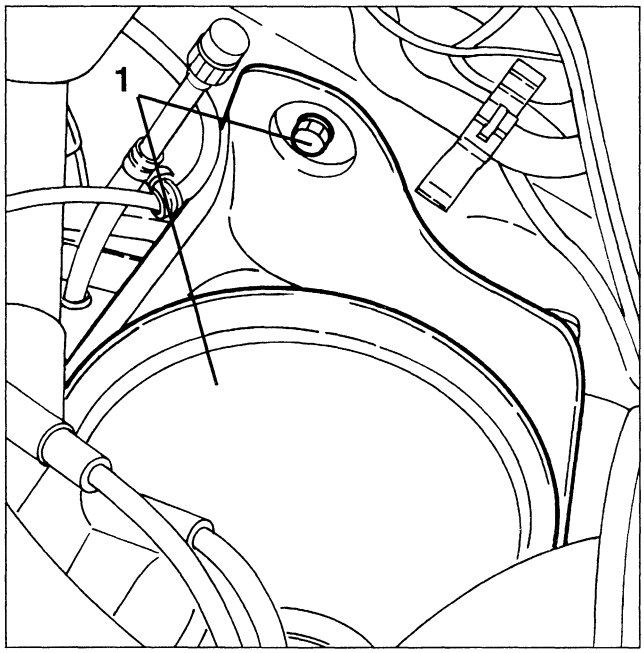

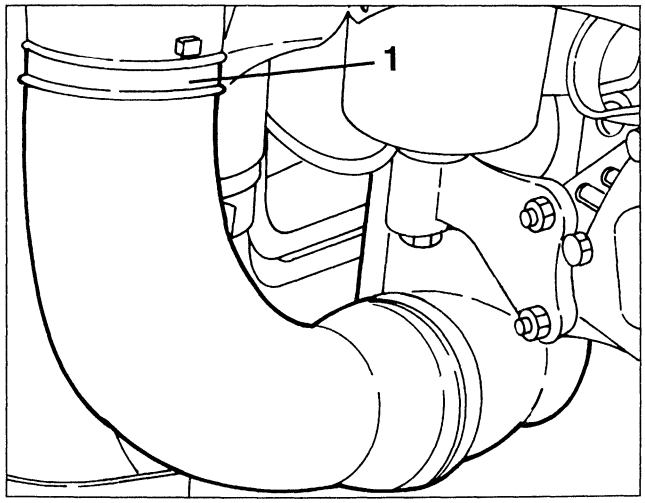

cardiagn.com

1. From the ignition coil support disconnect the coolant delivery sleeve to the radiator.

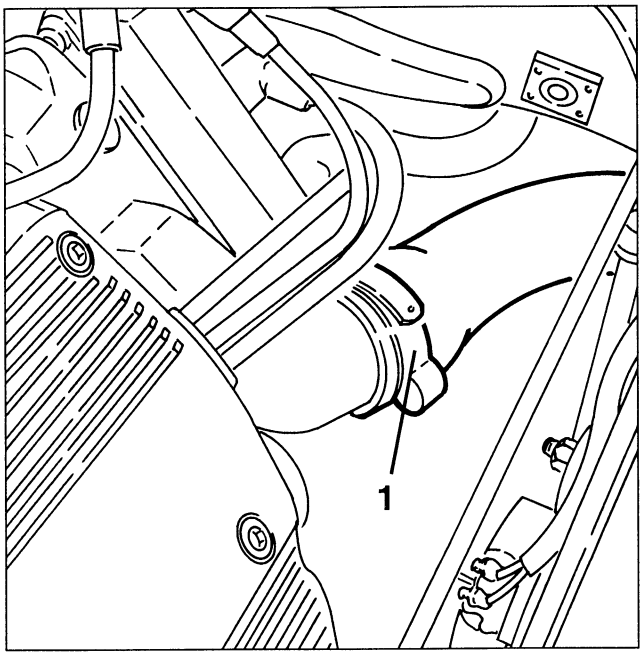

1. Disconnect the electrical connection from the coolant temperature sensor (NTC).
2. Disconnect the electrical connection from the coolant temperature gauge transmitter and max. temperature warning light contact.
3. Disconnect the electrical connection from the ignition coils.

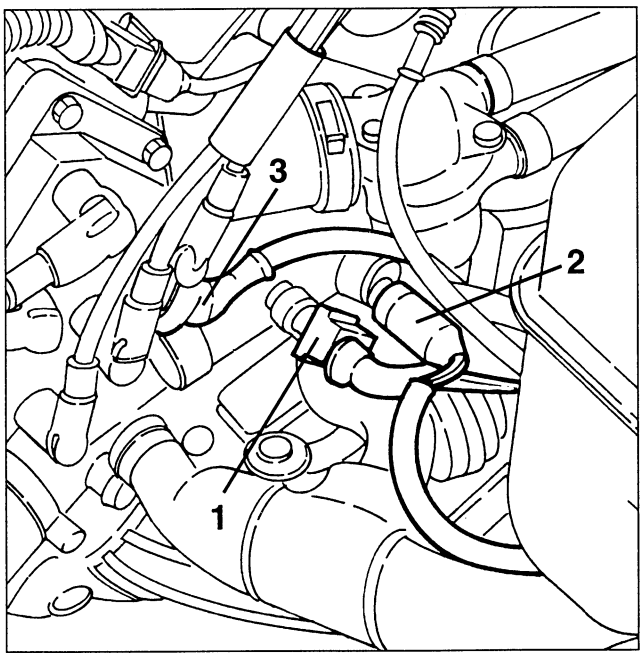

1. Disconnect the coolant return and air relief pipe from the header tank.
2. Disconnect the system supply pipe from the header tank.

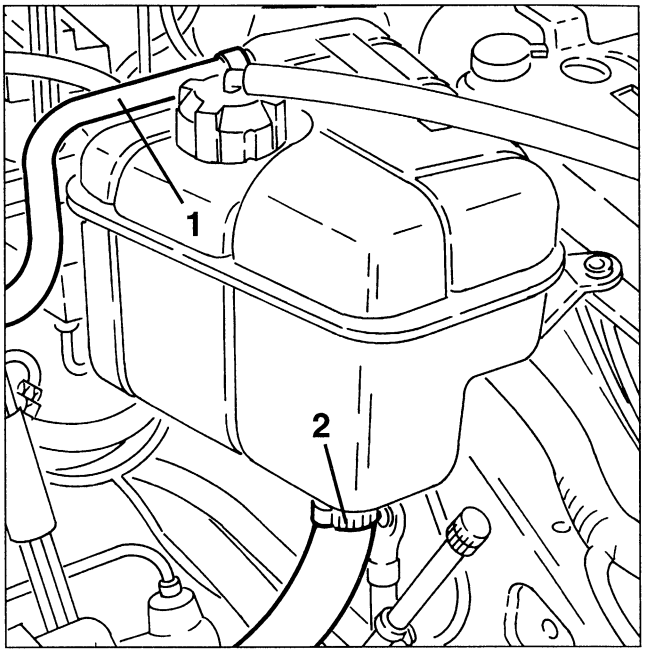

1. Disconnect the accelerator cable from the throttle body.

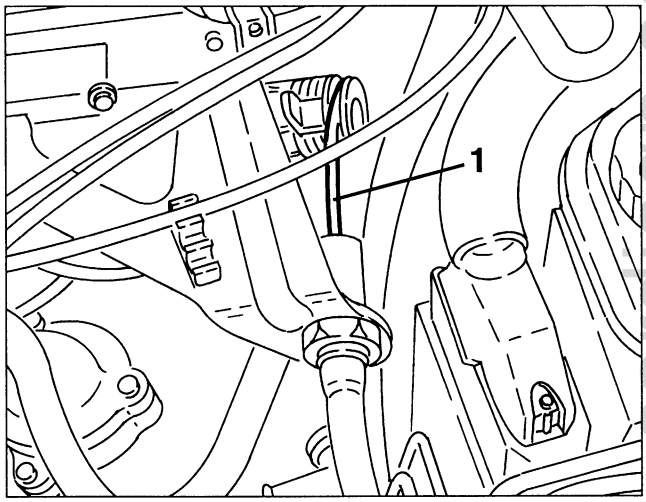

1. Slacken the three screws fastening the clutch control cylinder support bracket, then move the unit aside without disconnecting the piping.

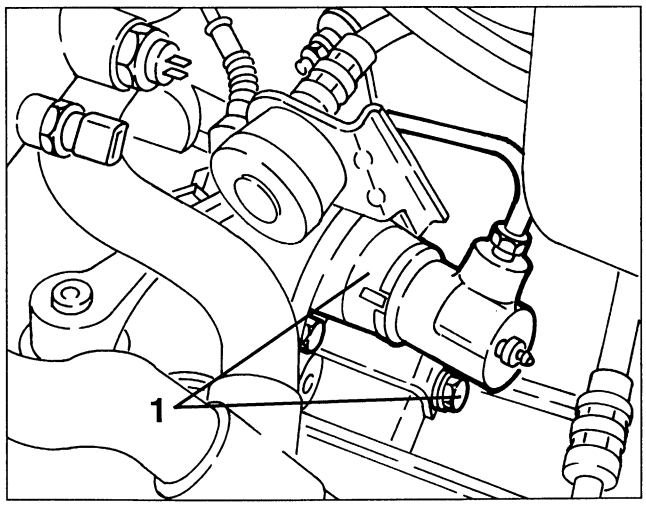

Carpiagn.com

1. Disconnect the electrical connection from the reverse gear switch.
2. Disconnect the electrical connection from the mileage recorder sensor.

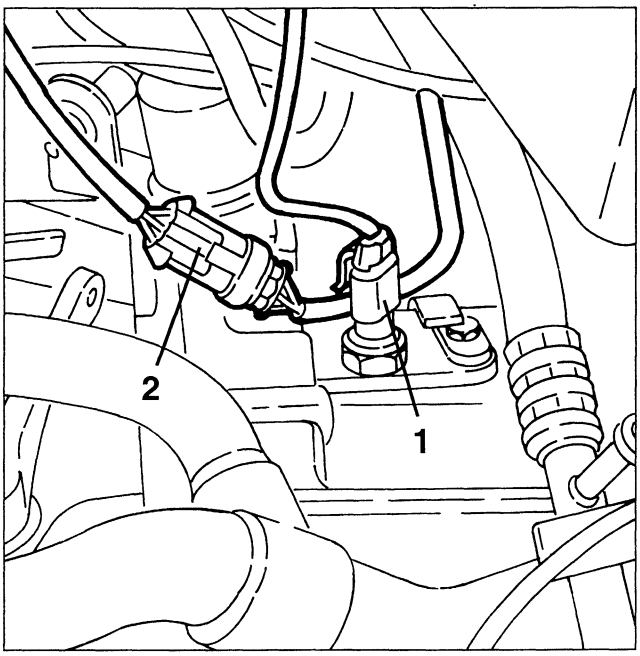

1. Disconnect the coolant delivery pipe to the heater.
2. Disconnect the coolant return pipe from the heater.

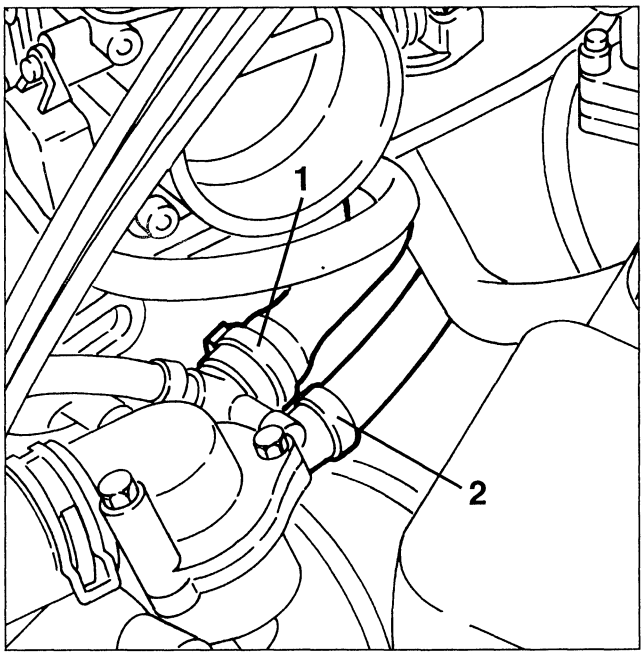

1. Disconnect the servobrake vacuum takeoff pipe.
2. From the pneumatic signal modulation solenoid valve disconnect the vacuum signal delivery pipe to the E.G.R. valve.
3. From the pneumatic signal modulation valve disconnect the vacuum takeoff pipe from the intake box.

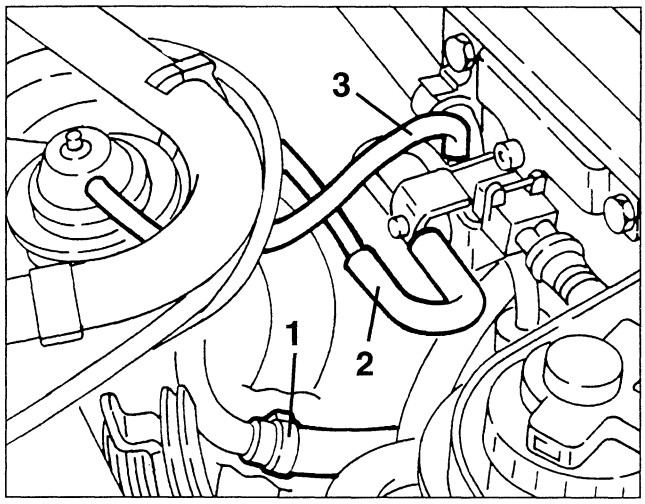

1. Disconnect the electrical connection from the constant idle speed actuator.

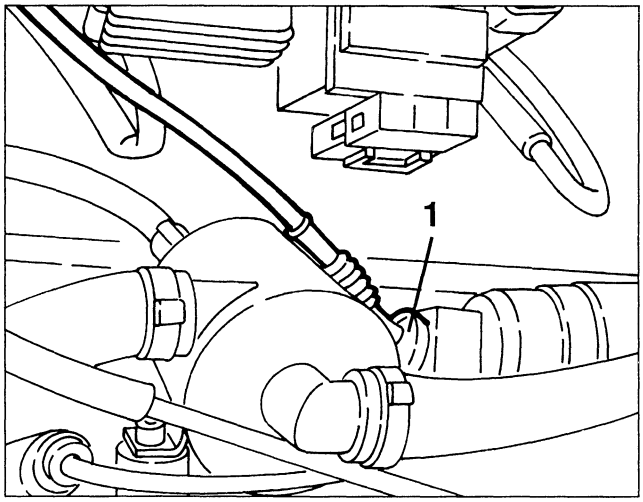

1. Disconnect the earth cables from the intake box.
2. Remove the engine stay connecting rod.

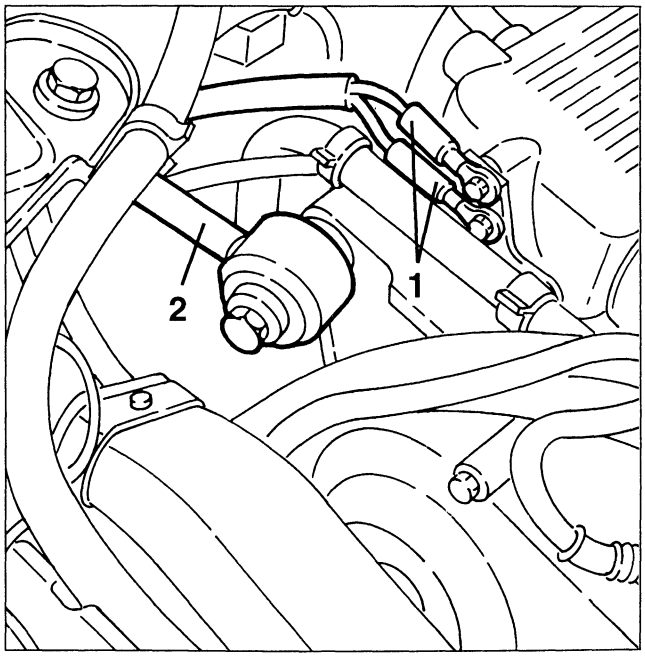

cardiagn.com

1. Disconnect the timing sensor connection.
2. Disconnect the pinging sensors connections.
3. Disconnect the rpm and timing sensor connection.

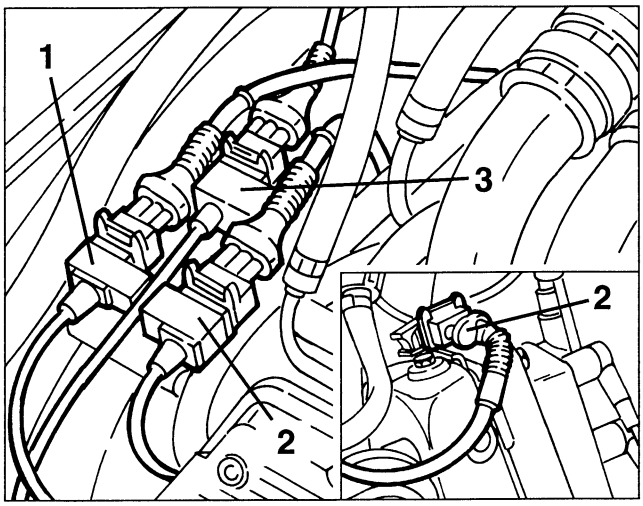

1. Slacken the four screws fastening and remove the left hand cylinder head.
2. Disconnect the connections from the electroinjectors.

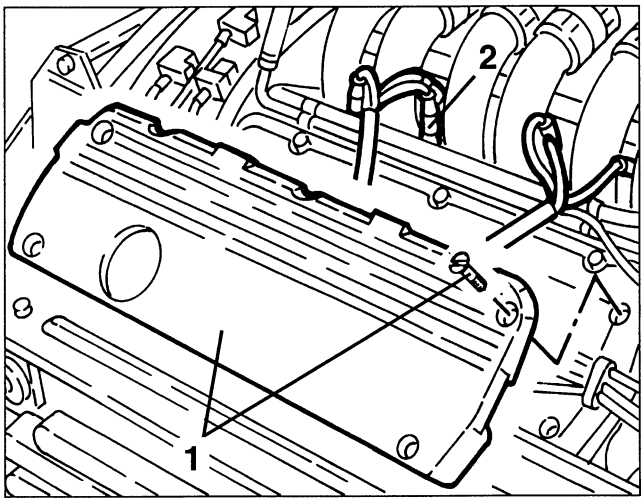

1. Disconnect the fuel inlet pipe from the distributor manifold.
2. Disconnect the fuel return pipe from the distributor manifold.

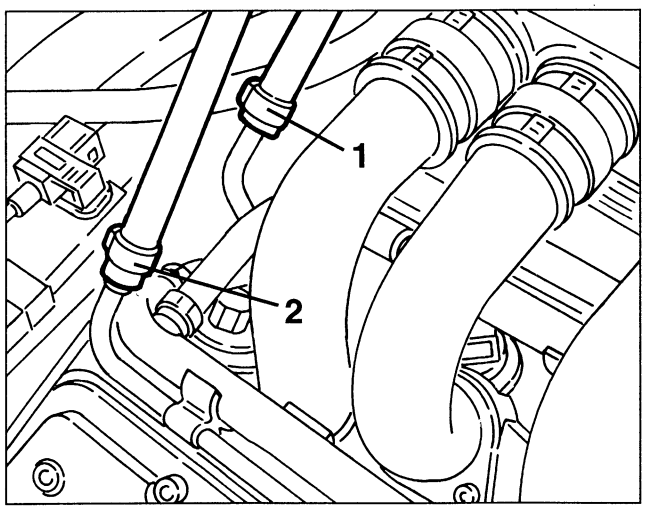

1. Disconnect the fuel vapour recirculation pipe and remove it, after removing the earth cable connection bracket from the box.

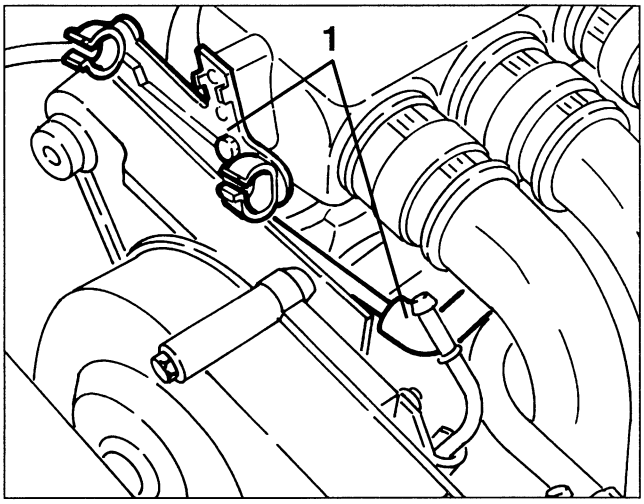

1. Open the cover of the terminal block and disconnect the electrical connections of the starter motor and alternator.

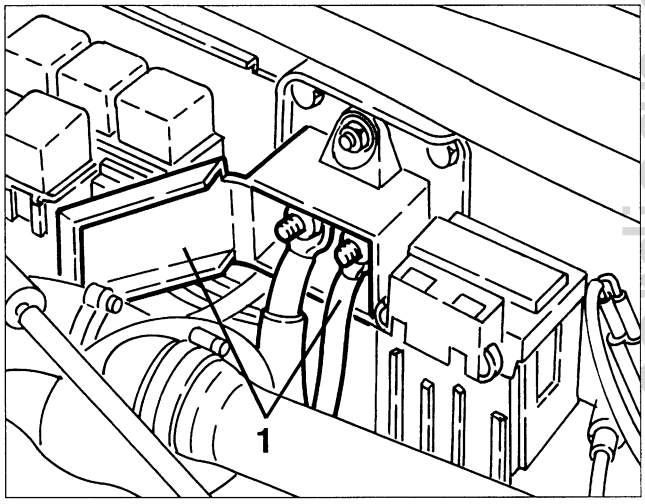

1. Disconnect the two electrical connections of the lambda sensor.

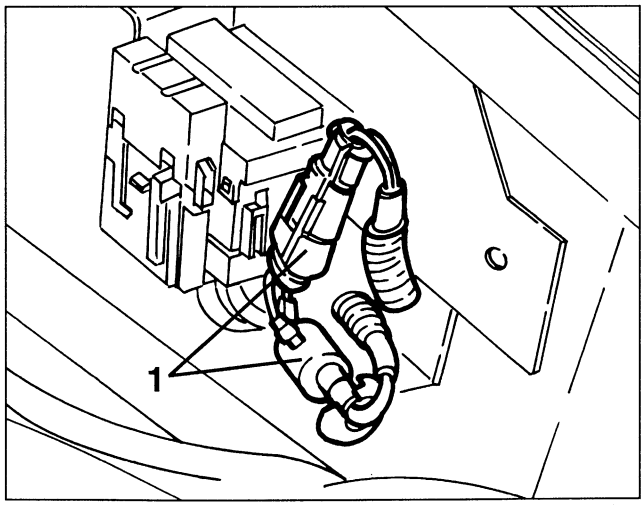

cardiagn.com

- Empty the power steering tank using a suitable syringe.
1. Disconnect the oil inlet pipe from the power steering pump.
2. Disconnect the intermediate connection of the oil delivery pipe from the power steering pump.
3. Disconnect the electrical connection from the conditioner compressor.

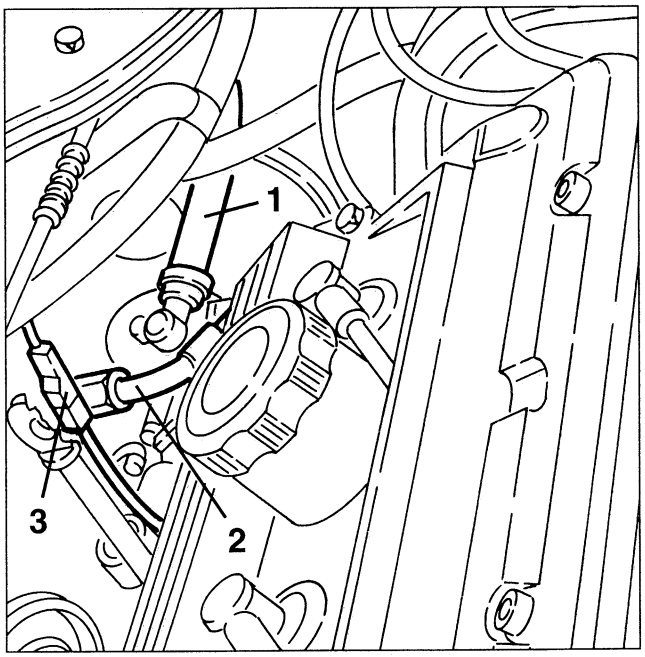

1. Working from the wheel house, disconnect the earth braid from the gearbox rear cover.
2. Slacken the fastening bolts and disconnect the axle shafts.

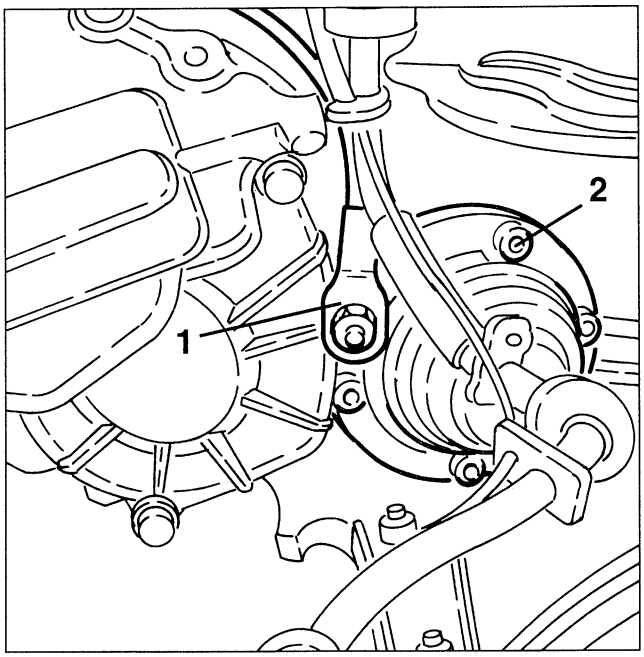

- Raise the car.
- Remove the front section of the exhaust pipe.
1. Slacken the bolts fastening the wishbones to the wheel uprights.

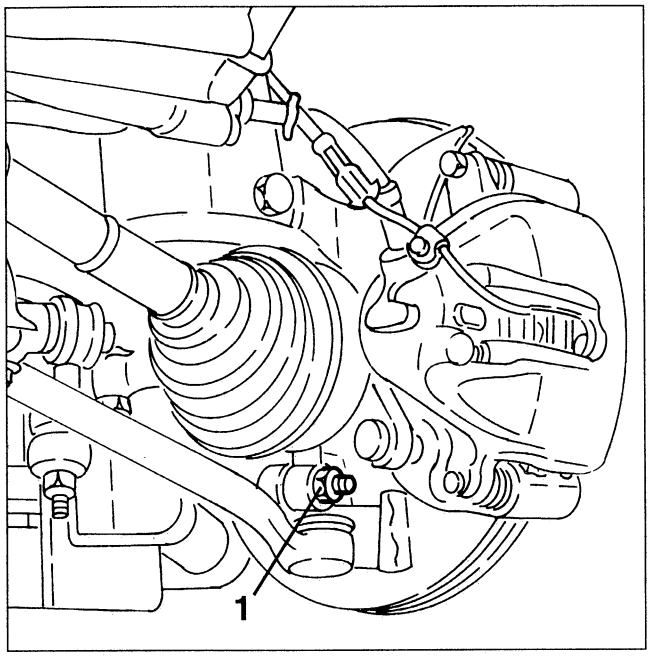

1. Slacken the fastening screws and remove the power unit rear support.

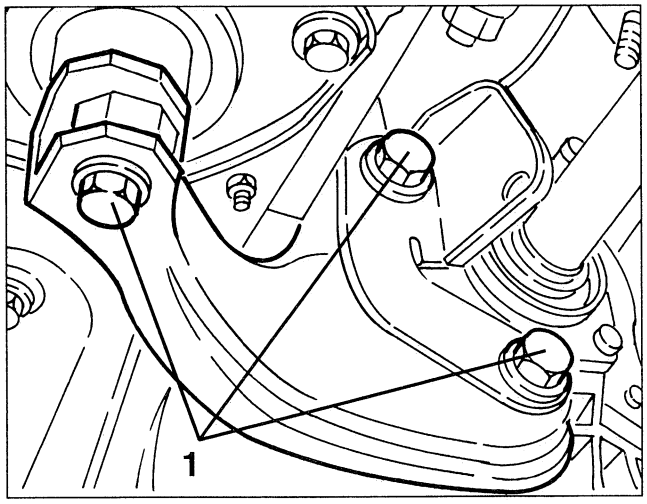

1. Slacken the screws and nuts fastening the crossmember to the body, then, using a hydraulic jack, remove it complete with wishbones and stabilizer bar, after slackening the power steering screws.

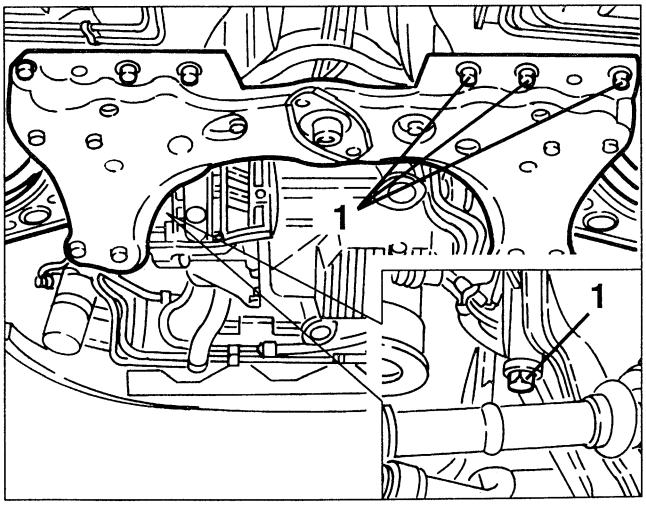

cardiagn.com

1. Disconnect the radiator oil delivery and return pipes, then move it aside after slackening the support bracket fastening screws.

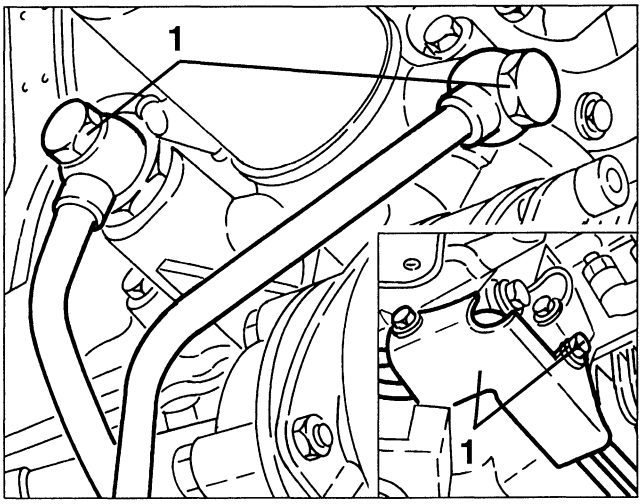

1. Position a hydraulic jack complete with tool no. 1.820.225.000 and no. 1.820.234.000 for supporting the power unit.

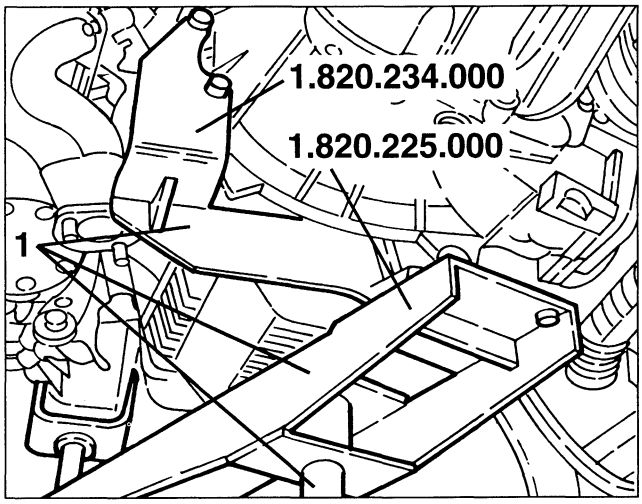

1. Slacken the three screws fastening the power unit support on the timing gear side.

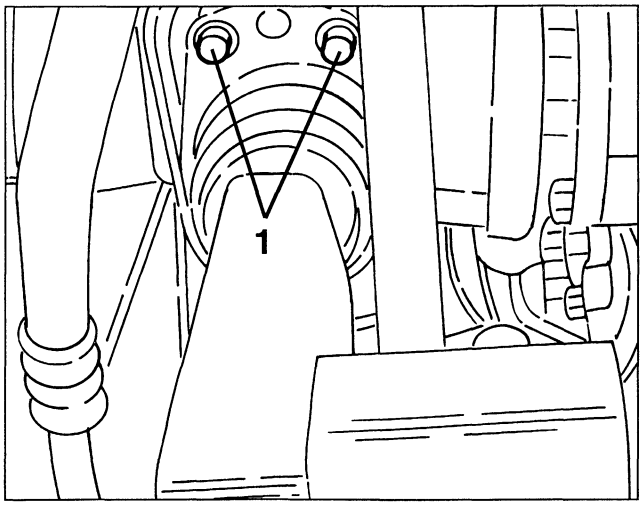

1. Slacken the screw fastening the power unit support on the gearbox side.

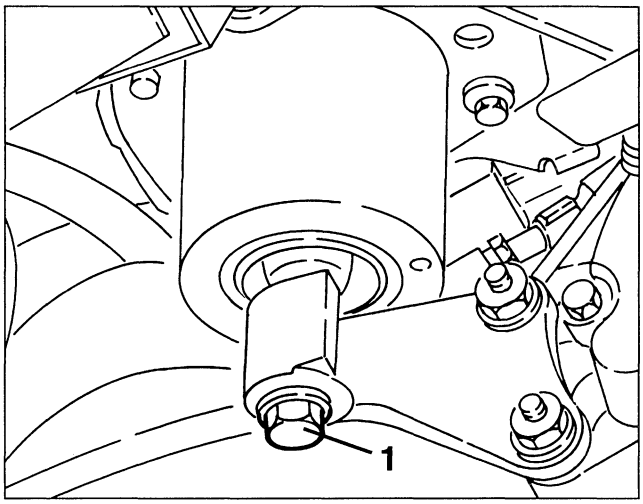

- Slightly lower the power unit with the hydraulic jack.
1. Slacken the fastening screw and disconnect the coolant inlet and outlet pipe flange from the conditioner compressor.

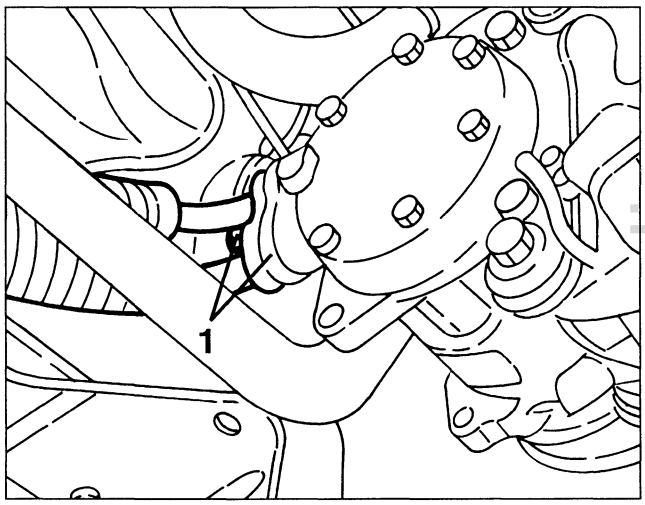

1. Remove the safety catches and disconnect the gear control cables.

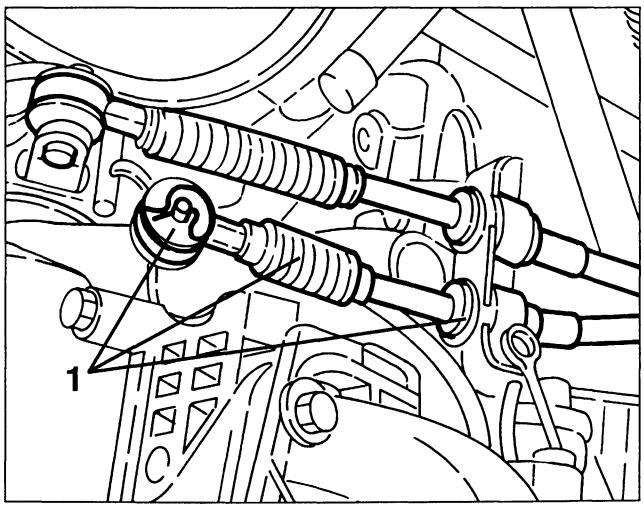

cardiagn.com

WARNING:
The hydraulic jack must have a capacity of at least 1000 kg.
Free the electrical wires from any cable clamps and move them away from the engine to prevent them from getting caught in the engine when it is removed.

1. Lower the hydraulic jack completely and remove the power unit from the engine compartment.

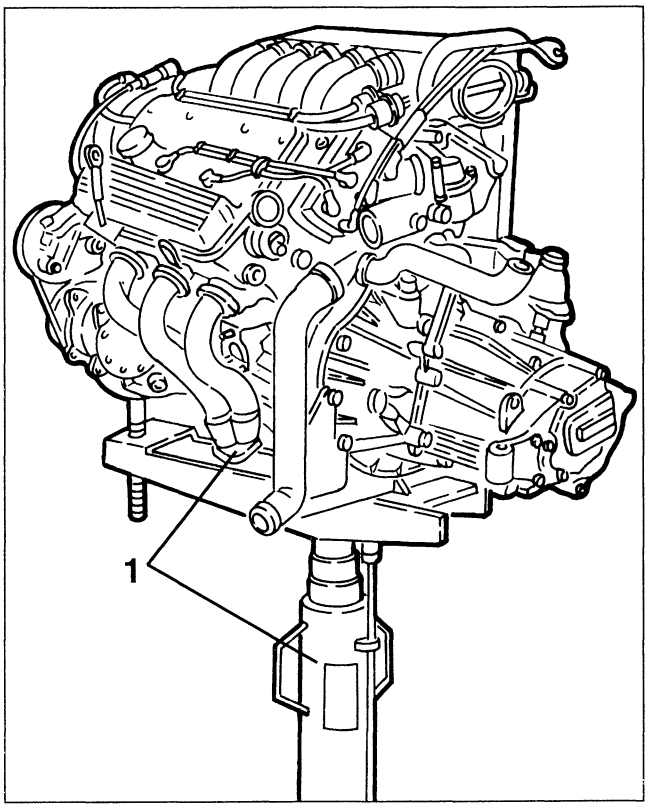

WARNING:
When lowering the car make sure that there are no cables or pipes still connected.
Take due care not to damage any components.

- Support the power unit with a hydraulic hoist as well as with the hydraulic jack used for removal.

WARNING:
For moving the power unit, use a hydraulic hoist after freeing it from the hydraulic jack.

1. Slacken the two fastening nuts and remove the heat shield from the starter motor.
2. Slacken the fastening screws and remove the gearshift control cables support bracket and heat shields.

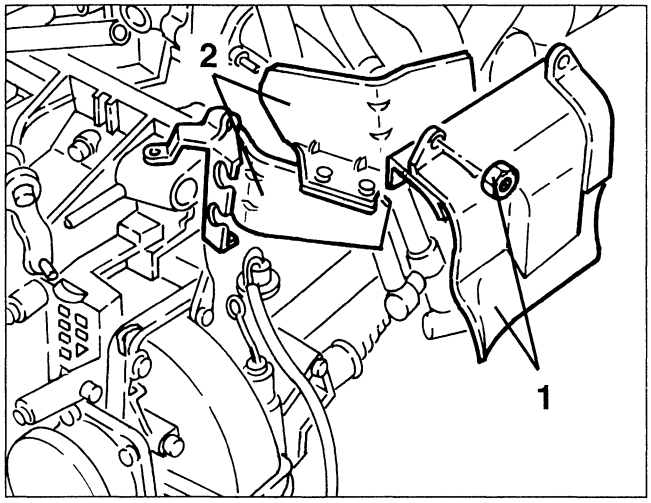

1. Disconnect the exhaust gas takeoff pipe connection from the E.G.R. valve.
2. Slacken the fastening nuts and remove the right-hand exhaust manifold.
- Remove the corresponding seals.

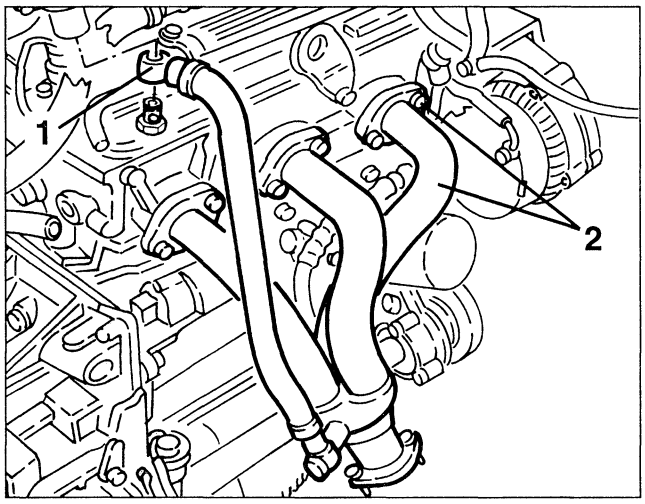

1. Disconnect the electrical connections from the starter motor.
2. Slacken the three fastening screws and remove the starter motor.

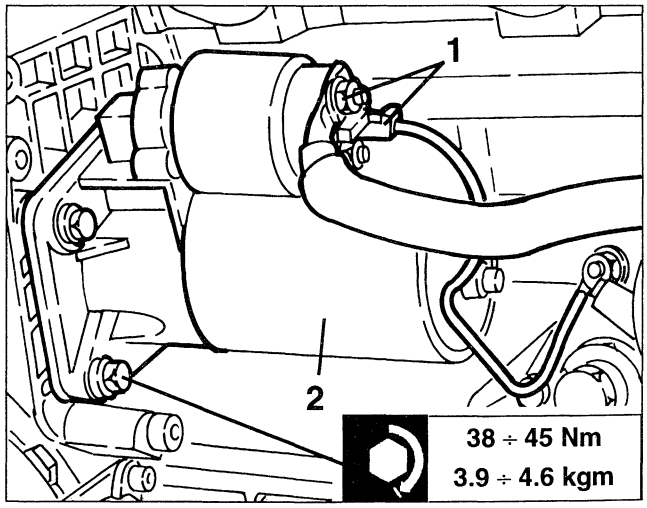

cardiagn.com

This page replaces pages 10 - 17/18.
Therefore page 10 - 18 is annulled.

REMOVAL/REFITTING LEFT HAND CYLINDER HEAD

It is not possible to remove the left-hand cylinder head on the vehicle.
When needing to carry out any work on the left-hand cylinder head, it is necessary to remove the power unit (see specific paragraph).

OIL SUMP

REMOVAL/REFITTING

- Set the car on a lift.
- Disconnect the battery (-) cable.
- Raise the car and drain the engine oil (see GROUP 00).
- Remove the front section of the exhaust pipe.

1. Slacken the fastening screws and remove the flywheel cover.

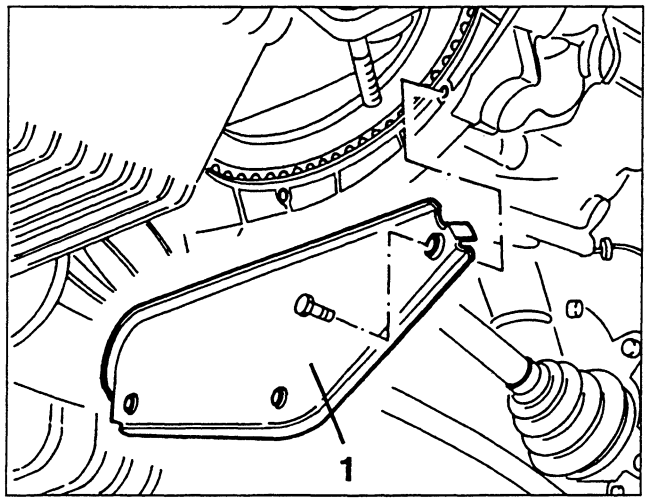

1. Remove the engine oil delivery and return pipes support bracket.

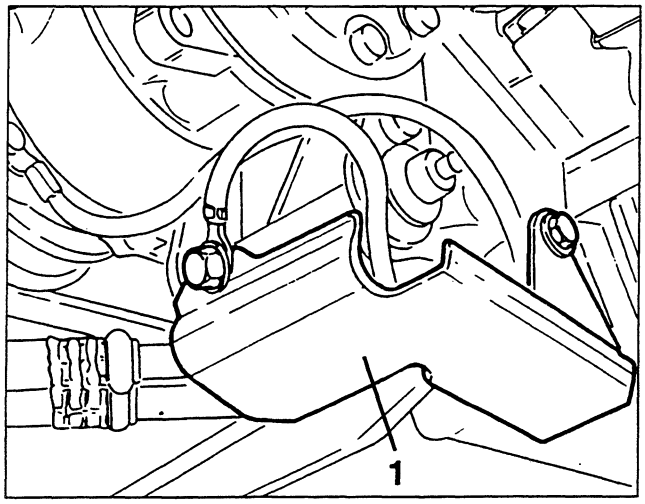

1. Disconnect the two oil delivery and return connections from the oil filter support, then leaving them connected to the radiator, fasten them at the side so that they do not hinder the removal of the oil sump.

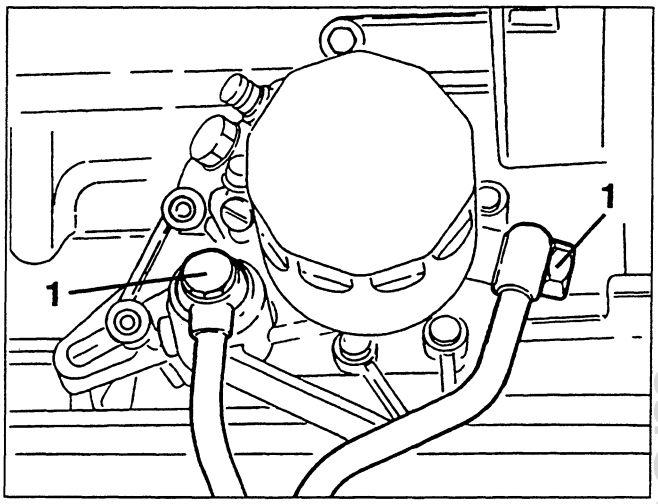

1. Slacken the fastening screws and remove the oil sump.

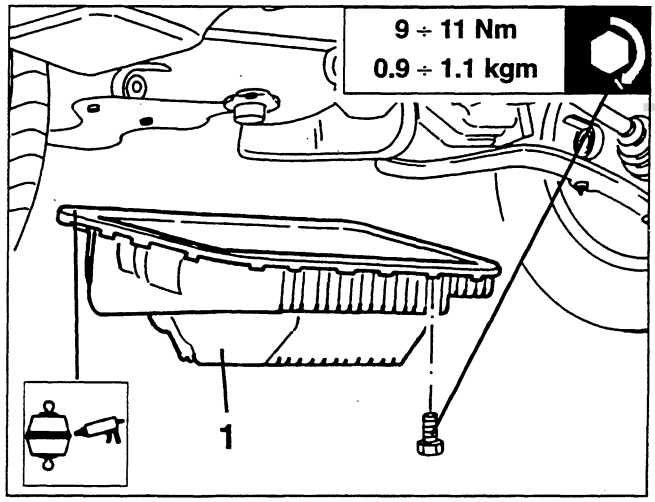

cardiagn.com

RESTORING SILICON SEALANT ON REAR CRANKSHAFT JOURNAL SEALING SURFACES

- Remove the gearbox (see Assembly 21).
- Remove the clutch (see Assembly 18).
- Remove the oil sump (see "Oil pump - Removal/Refitting").

1. Fit flywheel retainer no. 1.820.228.000.
2. Loosen the fastening screws and remove the flywheel.

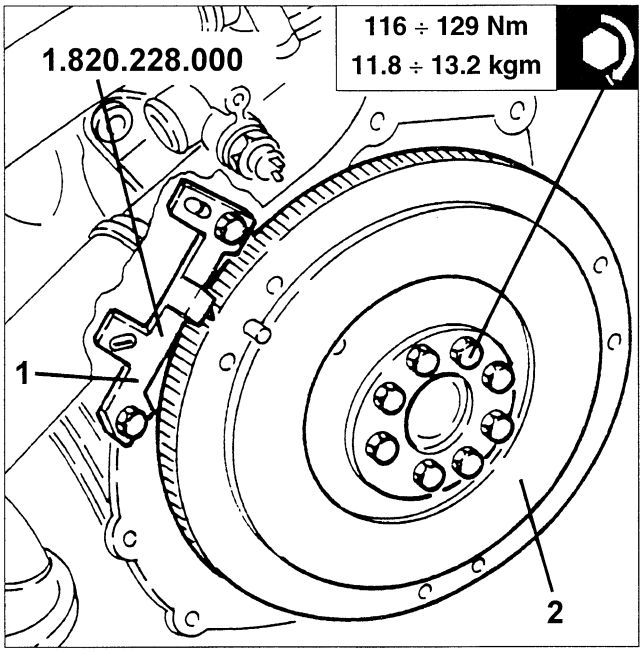

1. Loosen the rear main bearing fastening screws.
2. Remove the rear main bearing with tools no. 1.821.006.001 and 1.821.006.002.

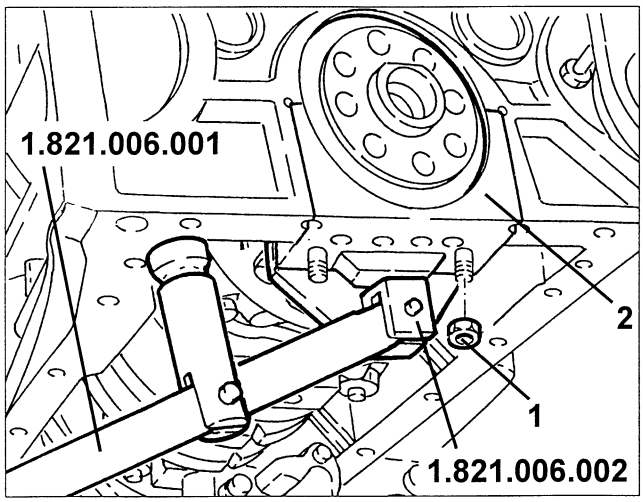

- Remove the main half bearing.
- Remove the seals (only for vehicles to engine no. 00708).
- Remove the engine crankshaft rear seal.
- Accurately remove the sealant residues from the rear main bearing seat, from the oil sump coupling surface and from the holes (only for vehicles to engine no. 00709).
- Accurately remove all traces of engine oil with heptane or similar solvent.
- Fit the rear main bearing with main half bearing (after lubricating it with engine oil) and fasten it with its nuts at a torque of **25 Nm + 79°**.

NOTE: Use tool no. 1.860.942.000 for angle torque.

1. Fit crankshaft rear oil seal with tool no. 1.821.150.000.

NOTE: The oil seal should be fitted in its seat and cover the holes (a).

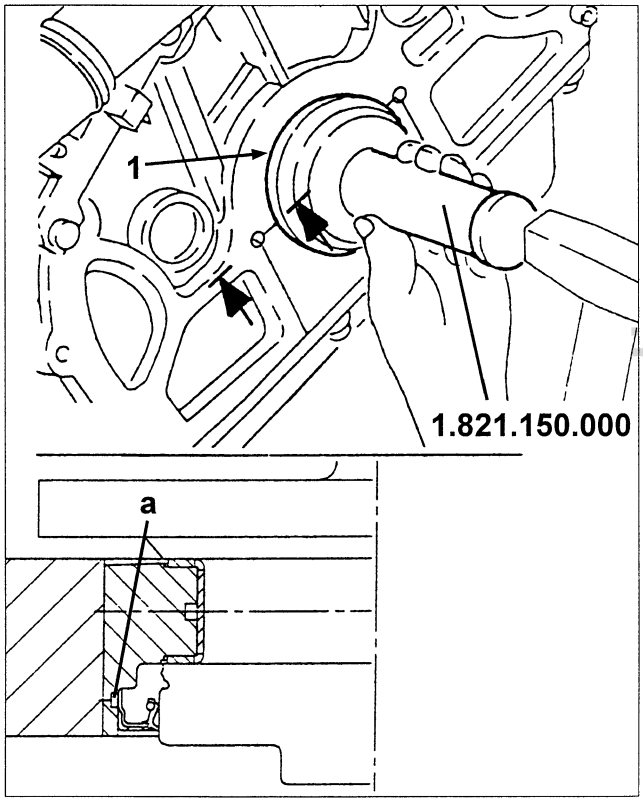

cardiagn.com

1. Apply **"DOW CORNING 7091"** silicon sealant with a mechanical gun through the holes shown in the figure.

NOTE: Make sure the sealant seeps out along the entire coupling surface of the main bearing with the crankcase and from the holes (a) only for vehicles up to engine no. 00708.

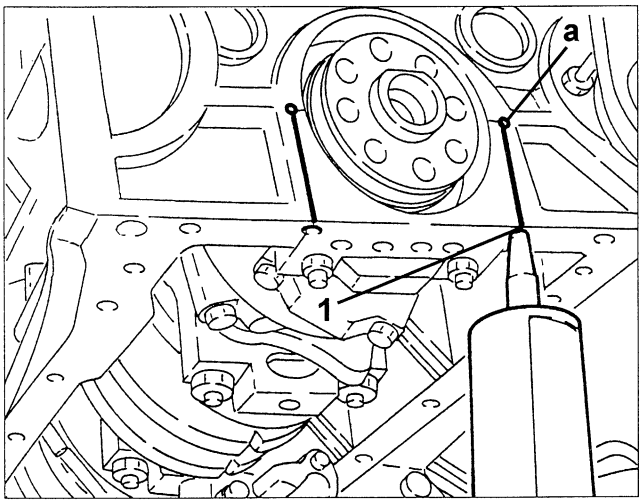

Refit by reversing the removal sequence: Observe the following precautions.

- Apply silicon sealant on the oil sump making sure the sealant strip (maximum diameter approximately 1.5 mm) is outside the oil sump fastening holes (between reservoir and hole).

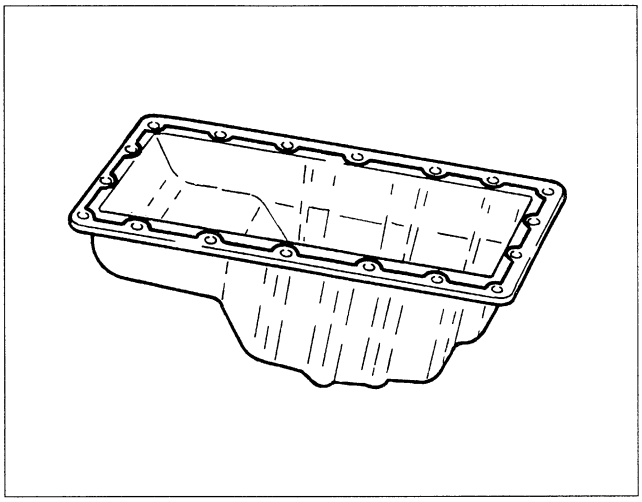

IMPORTANT: Fit the oil sump within 15 minutes from applying the sealant in the crankcase rear journal holes.

cardiagn.com

GENERAL DESCRIPTION

An electronic control system supervises and regulates all the parameters of the engine, optimising performance and consumption levels through response in real time to the different operating conditions: this sophisticated latest generation system comprises a single control unit which controls both ignition (static with lost spark) and injection (timed).
This is the M 3.7 version of the proven and reliable BOSCH MOTRONIC.
Compared with the previous versions this new M 3.7 system adopts a control unit - with 88 pins - with advanced design and production technology, it also possesses many possibilities for inserting auxiliary functions.
Owing to the use of new sensors and revision to the control programmes, the system makes it possible to achieve considerable improvements in terms of consumption, emission levels and handling of the vehicle.
Another feature of this system is self-adaptation, i.e. the capability to recognise the changes that take place in the engine and to compensate them, according to functions which mainly correct:
- mixture titration
- the carburetion parameters according to the command of the evaporative solenoid valve
- an adaptive programme for idle speed control.

FUNCTIONS OF THE SYSTEM

Sequential and timed injection (S.E.F.I.)

With this control unit injection is sequential and timed for each cylinder: the injection instant (delivery of fuel into the intake manifolds through the opening of the injectors) is not simultaneous for all the cylinders, but takes place for each cylinder in correspondence with the optimal point of injection, calculated by the control unit according to special maps according to the load, speed and temperature of the engine.
NOTE: the instant considered in the design of the maps is that of the start of injection (the cylinder is in the exhaust stroke - intake valve still closed).

Static ignition

An ignition system has been adopted with "static distribution" (with semi-conductors, without distributor). This solution makes it possible to eliminate rotary components; in addition, it does not produce external sparks thus reducing the risk of interferences; lastly it reduces the number of high voltage cables and connectors; as the power modules for controlling the primary windings of the coil are inside the control unit.
Static ignition takes place through three coils, according to the "lost spark" logic: this solution exploits the different pressures and environments existing contemporaneously in a pair of cylinders: when one of the cylinders approaches the bursting stroke, with a mixture of air and fuel, the corresponding cylinder is at the end of the exhaust stroke in the presence of exhaust gas.
In a V six-cylinder engine, the paired cylinders are 1/5 6/2 and 3/4.

Metering the air flow rate

The air flow meter adopted is of a more modern design known as the "hot film" type. Outside, the air-flow meter looks like a part of duct between the intake manifold and the air cleaner.
Inside the air-flow meter there is an electronic circuit and a plate that is crossed by the air which passes in the duct.
The film plate is kept at a constant temperature (appr. 120°C above the temperature of the incoming air) by a heating resistance placed in contact with it.
The mass of air flowing through the manifold tends to withdraw heat from the plate: therefore, to keep its temperature constant, a certain current needs to flow through the heating resistance: this current, suitably measured, is proportionate with the mass of flowing air.
N.B. This air flow meter measures directly the mass of air (and not the volume as in the previous versions with "floating port"), thereby eliminating problems of temperature, altitude, pressure, etc., enabling an optimum ratio between the air and the weight of the fuel.

cardiagn.com

Cylinder detection

Following the sequential and timed injection system, a timing sensor has been introduced (cam angle sensor): this makes it possible to detect which cylinder is in the bursting stroke when the engine is started, in order to be able to start the correct injection sequence. The sensor is formed of a Hall-effect device by which the voltage signal sent to the control unit "lowers" suddenly when the tooth machined on the camshaft passes in front of the actual sensor; therefore a signal is sent every two turns of the crankshaft.
Conversely, the rpm sensor sends a reference signal for each turn of the engine and each subsequent tooth of the phonic wheel informs the control unit of an increase of the angular position of the crankshaft, so that injection is sent correctly from the suitable cylinder and the spark to the corresponding pair of cylinders.

Fuel pump

The control logic of the fuel pump carried out by the control unit which is mainly based on the rpm signal immediately cuts off the supply to the pump as soon as the engine stops.
Moreover, the pump will not operate with the key engaged and the engine not running.
In this car, this logic is integrated - in order to further higher the standards of safety - by the **inertial switch** device: this is an electromechanical switch which, in the event of heavy shocks, opens to cut off the circuit that takes the earth to the fuel pump, which stops instantaneously. This device is particularly important as an integration of the safety guaranteed by the logic of the control unit, especially if the car is hit from behind or in the case of other accidents in which the engine does not stop immediately.

Percentage of exhaust gas recirculation

Nox (nitric oxide) is developed at high temperatures in the bursting chambers.
To reduce these emissions an E.G.R. (Exhaust Gas Recirculation) system is adopted which by recirculating part of the exhaust gases, lowers the temperature, thus the Nox produced, in the combustion chambers.
In fact, part of the exhaust gas is withdrawn through the special EGR Valve and re-admitted to the intake box where it is mixed with the intaken air and burnt again in the engine. The EGR valve is modulated by a solenoid valve controlled by the injection control unit and, as a result of the type of control, in addition to reducing the amount of Nox, consumption levels are also optimised.
The percentage of exhaust gas to be returned to the engine is established by the control unit taking account of a specific characteristic curve which depends on the load, speed and temperature of the engine.

cardiagn.com

OPERATING LOGIC

– **Identification of the "operating point":**
the "point of operation of the engine" is located mainly through two sensors: the rpm sensor informs the control unit of the speed of rotation of the engine; the air flow meter supplies the value of the mass of air actually entering the cylinders, defining the instantaneous volumetric yield of the engine.

– **Adjustment of injection times (quantity of fuel):** the control unit controls the injectors very quickly and precisely, calculating the opening time on the basis of engine load (rpm and air flow), also taking into account the battery voltage and the temperature of the engine. Injection is "sequential", i.e. the injectors are opened in correspondence of the exhaust stroke of the corresponding cylinder.

– **Ignition adjustment (calculation of advances)**:
the control unit calculates the advance on the basis of the engine load (rpm and air flow); the value is also corrected according to the temperature of the intaken air and that of the engine: ignition is "static" as described previously.

– **Cold starting control:**
during cold starts the control unit uses special advance values and injection times.
When a determinate temperature/rpm ratio is reached, the control unit resumes normal operating conditions.

– **Control of enrichment during acceleration:**
upon the need for acceleration, the control unit increases injection in order to reach the required rpm as quickly as possible.
This function takes place through the potentiometer located on the throttle which instantaneously informs the control unit of the need to accelerate.

– **Fuel cut-off during deceleration:**
with the throttle closed and an engine speed above a certain threshold, the control unit de-activates fuel injection; this way the rpms decrease rapidly towards idle speed reducing the speed and fuel consumption. The cutoff threshold value varies according to the temperature of the engine and the speed of the car.

– **Control of idle speed:**
the adjustment of the engine idle speed is carried out through the special actuator which acts on the throttle by-pass.
This device acts as a regulator for cutting in the various services (e.g. conditioner compressor): in fact, when the throttle is closed, this valve adjusts the by-pass gap compensating the load required by the services in order to ensure that idle speed is as constant as possible.

– **Maximum Rpm limiting:**
above a certain threshold the control unit automatically stops the injection of fuel preventing the engine from "over-revving".

– **Combustion control -lambda probe-:**
the oxygen sensor (or "lambda" probe) informs the control unit of the amount of oxygen at the exhaust, and therefore the correct air-fuel metering.
The optimum mixture is obtained when the lambda coefficient = 1 (optimum stoichiometric mixture). The electric signal sent by the probe to the control unit changes abruptly when the composition of the mixture departs from lambda = 1. When the mixture is "lean" the control unit increases the amount of fuel, reducing it when the mixture is "rich" so that in this way the engine operates as far as possible around the ideal lambda rating.
The signal from the lambda probe is processed inside the control unit by a special integrator which prevents sudden "oscillations".
The probe is heated by an electrical resistance so that it quickly reaches the correct operating temperature (appr. 300 °C).
Through this probe it is therefore possible to adjust engine carburetion precisely. Among other items, this makes it possible to meet emission limit regulations.

cardiagn.com

– **Knocking control:**
Through knocking sensors the control unit is informed if any pinging or "knocking" occurs and it corrects the spark advance "delaying" it accordingly; a further correction also takes account of the air temperature, in fact when the temperature of the intake air is high, pinging is more accentuated.
The intaken air temperature, to be found just downstream of the air-flow meter, is not used to calculate the engine load but to control the knocking parameters and spark advances.

– **Fuel vapour recovery:**
the fuel vapours collected from the various points of the supply circuit in a special active carbon canister are ducted to the engine where they are burnt: this takes place through a solenoid valve which is opened by the control unit only when the engine is in a condition that allows correct combustion without adversely affecting the operation of the engine: in fact the control unit compensates this amount of incoming fuel by reducing delivery to the injectors.

– **E.G.R. valve control**
The percentage of exhaust gas to be returned to the engine is determined by the control unit taking account of a specific characteristic curve which depends on the engine load and speed: recirculation is only activated when the engine speed is between 2500 and 4000 rpm., also in relation to the temperature of the engine (higher recirculation percentage with high temperatures).

– **Connection with the air conditioner compressor:**
the control unit is connected with the air conditioner compressor and it cuts in the compressor in relation to operation of the engine. As this service absorbs a considerable amount of power, the control unit:
- adapts the engine idle speed each time the compressor cuts in; if the engine speed falls below 700 rpm, the compressor is turned off;
- when there is the need for power (high throttle opening speed starting from below 3500 rpm, or full load, or high engine temperature - over 117°C), it momentaneously cuts out the compressor
- when the engine is being started the compressor is disabled until normal operating conditions have been reached.

– **Connection with the Alfa Romeo CODE system**
on cars fitted with the Alfa Romeo CODE system, as soon as the Motronic control unit receives the signal that the key has been turned to MARCIA, it "asks" the above-mentioned system for consent to start the engine: this consent is given only if the Alfa Romeo CODE control unit recognizes the code of the key engaged in the ignition switch as correct. This dialogue between the control units takes place on diagnosis line K already used for the Alfa Romeo Tester (see specific paragraph).
N.B. Before doing any work on the system it is advisable to read the corresponding chapter.

– **Self-diagnosis:**
the control unit possesses a **self-diagnosis system**, which continuously monitors the plausibility of the signals from the various sensors and compares them with the limits allowed: if these limits are exceeded, the system detects a fault and turns on the corresponding warning light on the instrument cluster.
The warning light turns on when the engine is started to indicate the initial test of the entire system (appr. 4 seconds), it then turns off if no errors have been memorised: otherwise it stays on.
For certain parameters, the control unit replaces the abnormal values with suitable mean ones so that the car can "limp" to a point of the Service Network.
These "recovery" values depend on the other correct signals and they are defined individually by the control unit operating logic.
The self-diagnosis system also enables quick and effective location of faults connecting with the ALFA ROMEO Tester (see "Fault-finding), through which all the errors memorised can be displayed. It is also possible to check the operating parameters recorded by the control unit and operate the single actuators to check whether they are working properly.

cardiagn.com

COMPONENTS OF THE MOTRONIC M3.7 ELECTRONIC INJECTION AND IGNITION SYSTEM

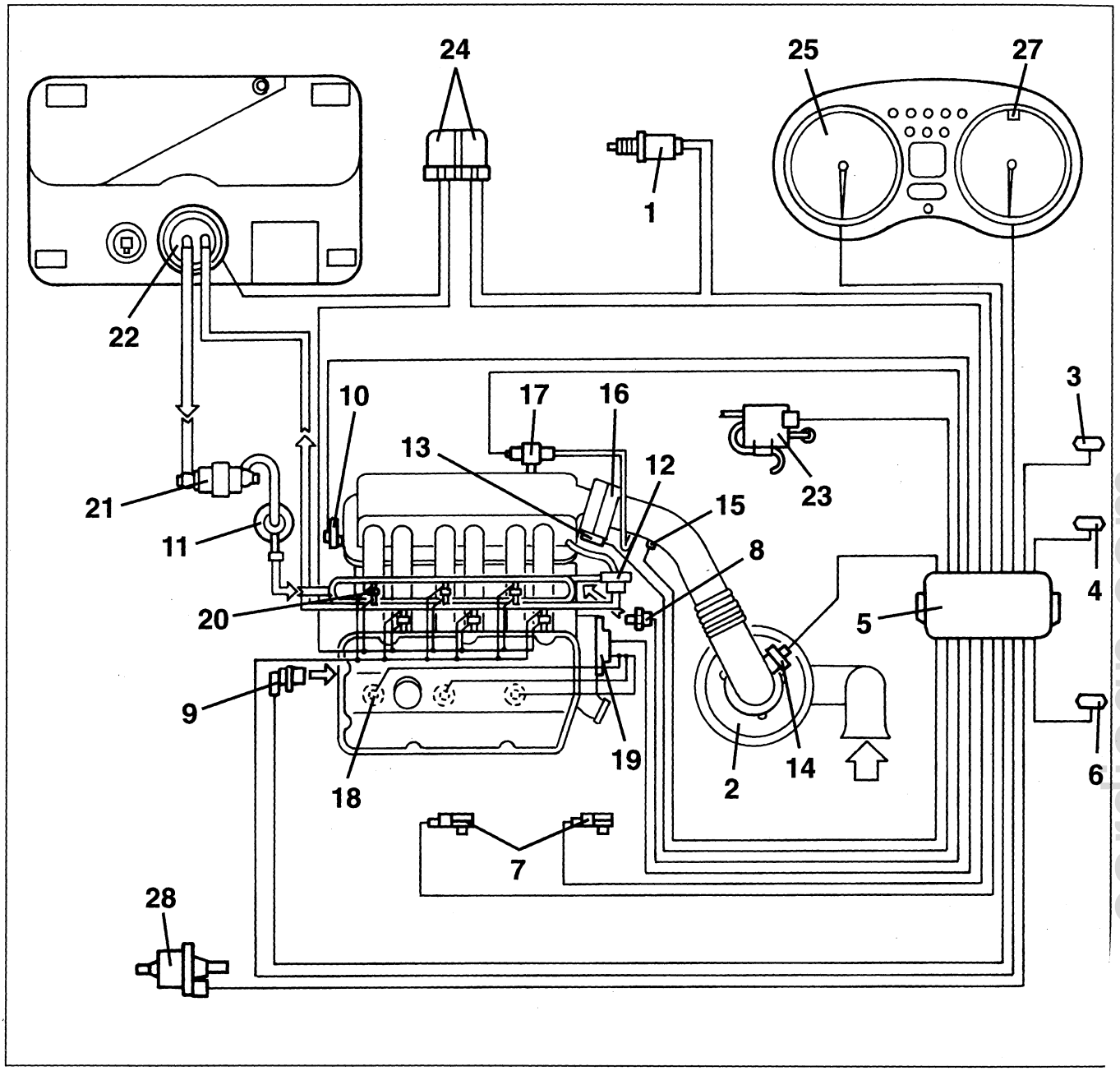

1. *Lambda sensor*
2. *Air cleaner*
3. *Climate control system connector*
4. *Diagnosis socket (Alfa Romeo Tester)*
5. *Injection - ignition control unit*
6. *Alfa Romeo CODE control unit connector*
7. *Pinging sensors*
8. *Coolant temperature sensor (NTC)*
9. *Rpm and timing sensor*
10. *Timing sensor*
11. *Pulse damper*
12. *Fuel pressure regulator*
13. *Throttle potentiometer*
14. *Air flow meter*
15. *Intake air temperature sensor (NTC)*
16. *Throttle body*
17. *Constant idle speed actuator*
18. *Spark plugs*
19. *Ignition coils*
20. *Electroinjectors*
21. *Fuel filter*
22. *Electric fuel pump*
23. *E.G.R. modulation solenoid valve*
24. *Set of relays*
25. *Rev counter*
26. *Speedometer*
27. *"Check engine" warning light*
28. *Fuel vapour solenoid valve*

cardiagn.com

FUNCTIONAL LAYOUT OF MOTRONIC M 3.7 INJECTION - IGNITION SYSTEM

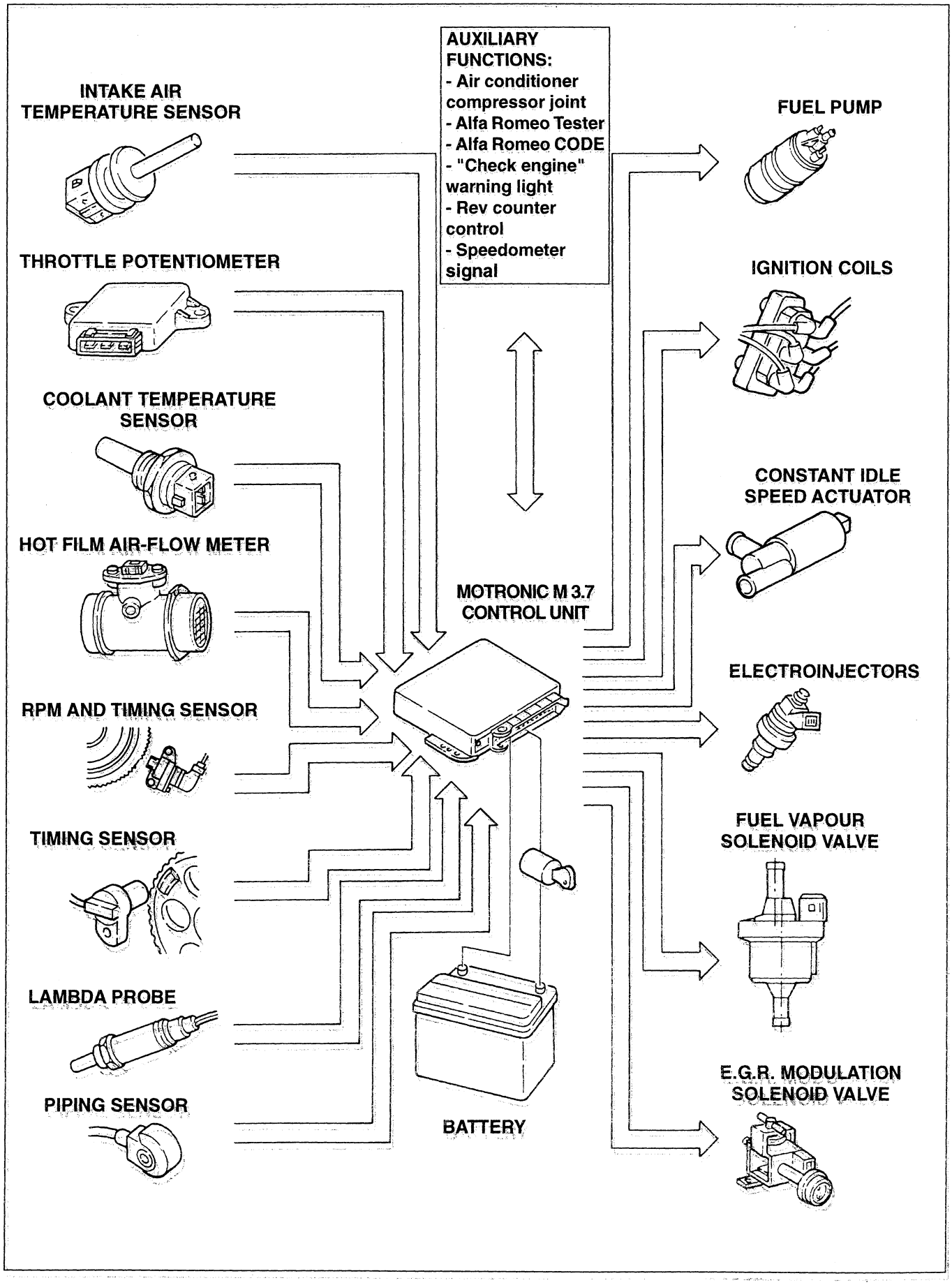

cardiagn.com

DESCRIPTION OF SYSTEM

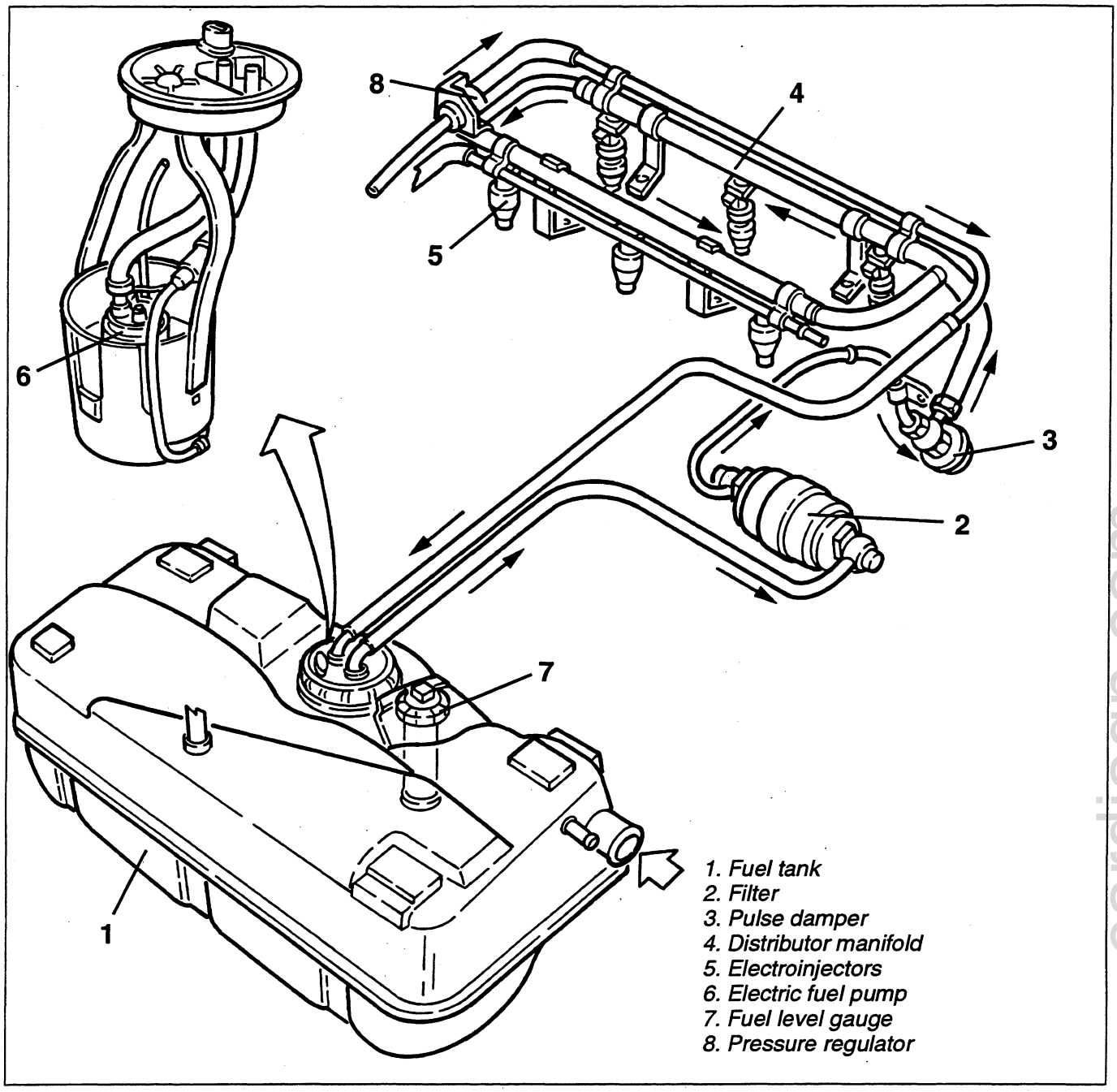

The fuel supply circuit comprises an electric fuel pump (6) located in the fuel tank (1) which sends the fuel under pressure through a special tube to the filter (2). From here the fuel is sent to the pulse damper (3) and from this to the distributor manifold (4) which distributes it to the electroinjectors (5).
The fuel in excess returns to the fuel tank via a special tube, through the pressure regulator (8) controlled by the vacuum withdrawn from the intake box.
The amount of fuel injected depends solely on the inejection time which is controlled by the control unit.

The different sections of the fuel pipes are connected by special connectors (for their disconnection see specific paragraph)
The fuel supply system is fitted with an inertial switch which is triggered in the event of of a crash, cutting off the connection to earth of the fuel pump thereby also the injection system supply.

Notes on serviceable fuels:
correct operation of the engine requires the use of unleaded fuels (95 R.O.N.) as the presence of lead would quickly bring about consumption of the catalytic converter at the exhaust.

cardiagn.com

WARNINGS

Before doing any work on components of the fuel supply system, in order to prevent any dangerous leaks, proceed as follows:
- Disconnect the fuel pump supply relay (1).

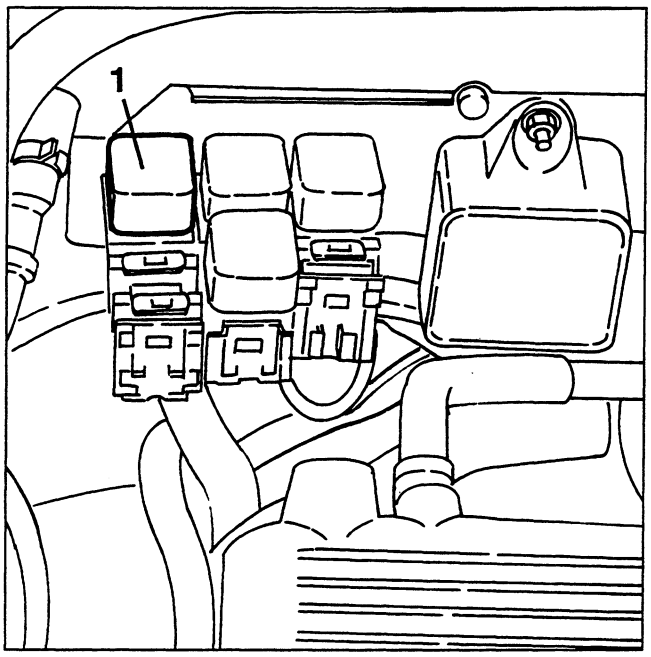

- Run the engine until it stops.

FUEL PIPE CONNECTION FITTINGS ("JOHN GUEST" TYPE)

Cleaning for disconnection

Preferably use one of the following systems described in order of effectiveness.
a) Jet of warm water (max. 50°C) on the fitting and drying with jets of compressed air to prevent residual water in the interstices getting into the pipe after disconnection.
b) Jet of cold water and drying with compressed air.
c) Jet of hot water with neutral soap.
d) Jet of cold water with neutral soap.

Never use solvents and/or materials that are not compatible with the pipes in general and, for the fitting in particular, not compatible with nylon and acetalic resin.

Disconnection operations

When installed, the fitting tends to act as follows for a certain length of time:
- pincer "A" grips the tang with its steel teeth;
if they are in plastic the teeth might mark the tang slightly without adversely affecting tightness.
- the seals (O'Rings) "B" tend to stick to the surface of the tang in time whether it is of plastic or metal, as a result of this the coupling seems to be seized and impossible to release by only pressing the fins "E" and pulling the coupling.

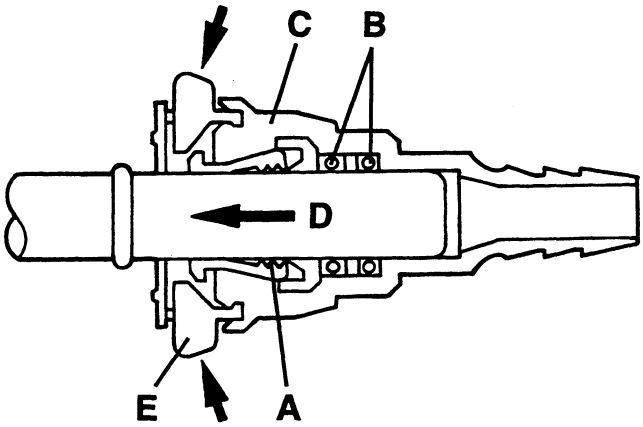

Therefore, to disconnect proceed as follows:
- Turn 1/4 - 1/2 of a turn to right and left several times (at least five) body "C" of the fitting in relation to the tang in order to eliminate friction of the seals on the tang and at the same time push the fitting towards the arrow "D" to loosen the grip of the pincers.
- Press with the fingers on the release buttons.
- Pull the fitting to disconnect it.
If disconnecting is still difficult, repeat these operations firstly checking that the pipe fitting is clean and that there is no mud or dirt in the interstices hindering the movement of the release mechanisms.

NOTE: Do not use pliers, screwdrivers, etc.. for disconnecting.
If the coupling has not been tampered with and the above operations are correctly carried out, no tools are necessary.

FUEL PIPE CONNECTION FITTINGS ("HURON" TYPE)

Operations to be carried out before disconnection

- Thouroughly clean the connector area with a jet of cold water (or hot, max 50°C) and dry with compressed air.
- A jet of water (hot or cold) may also be used with neutral soap.

Never use solvents and/or materials that are not compatible with the pipes in general and for the connector in particular, not compatible with nylon and acetalic resin.

cardiagn.com

Operations for disconnection/connection

- Pinch the white transparent insert "A" between the thumb and forefinger and keep it pressed.

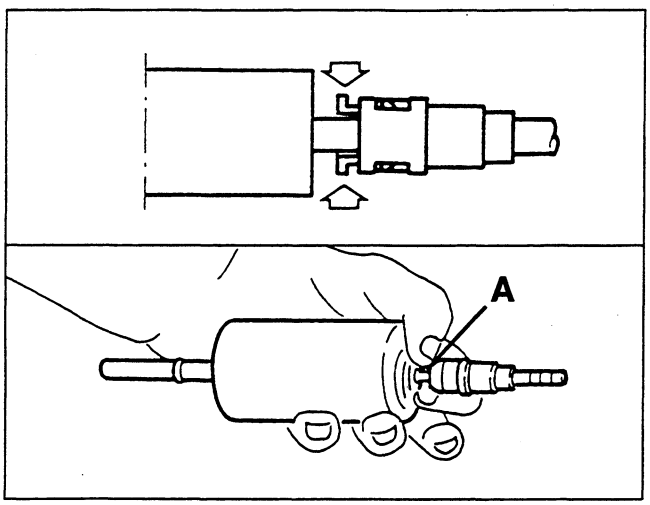

- With the other hand, grip the body "B" of the connector and pull in the direction of release.

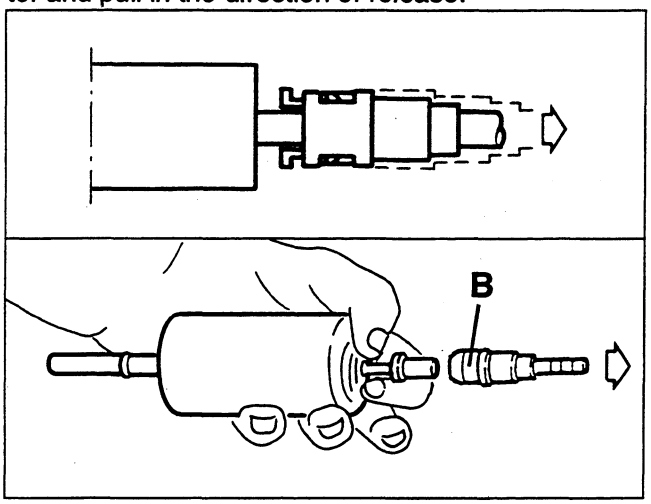

- Using a fine-tipped screwdriver in the points shown by the arrows, remove and retrieve the insert "A" taking care not to damage it.

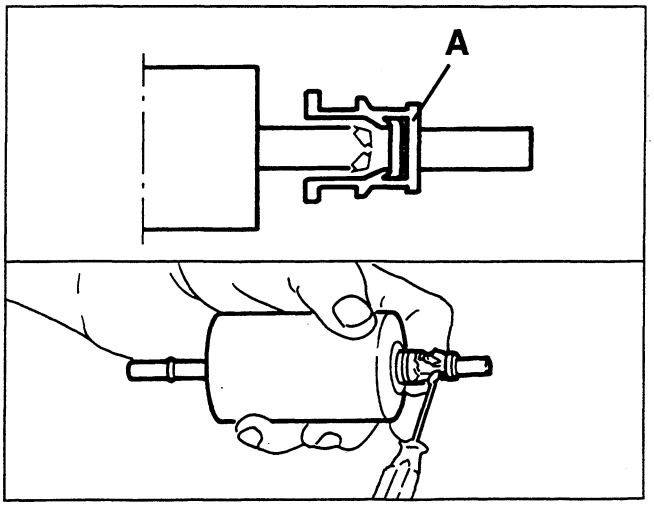

- Refit insert "A" on the body of the quick coupling, fitted on the pipe, until it clicks meaning that it has been fitted correctly.

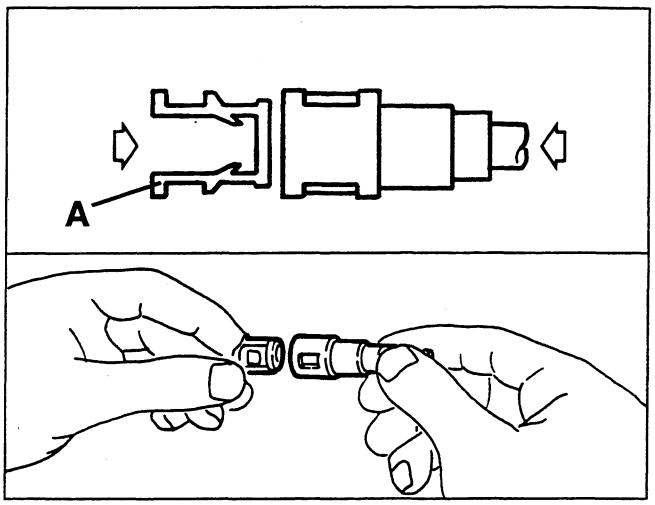

- Then connect the pipe with the quick coupling "C" pushing it until it clicks. Try to remove the coupling to make sure that it has been installed correctly.

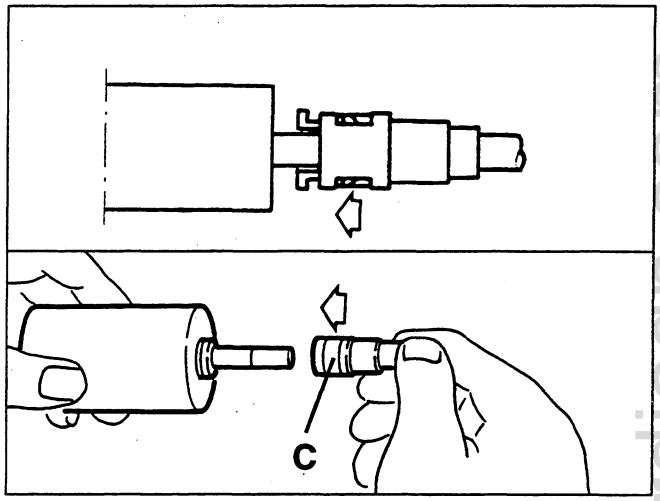

FUEL TANK

The fuel tank is made from sheet metal and has a capacity of 70 litres including a reserve of appr. 9 litres.
The fuel filler is on the main body and a special opening makes it possible to disconnect it from the tank for removal of the fuel tank itself.

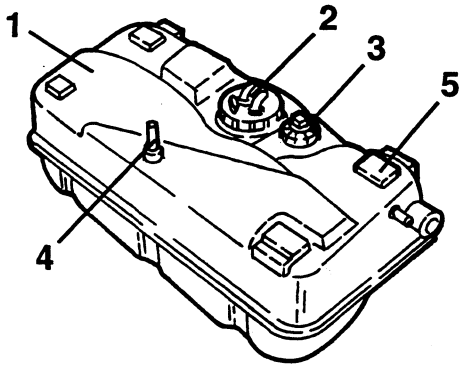

1. Fuel tank
2. Fuel pump
3. Fuel level gauge
4. Vapour breather pipe
5. Antivibration pads

cardiagn.com

The fuel filler cap has a special device which enables it to be tightened only to the specified torque, this way excessive tightening beyond the specified value is prevented.
The fuel tank located under the top compartment is fastened by two metal straps to the underbody and protected by a special sheet metal partition.
The pipe on the fuel filler acts as a breather.
There is an opening in the upper part of the tank for housing the fuel pump and fuel level gauge.
A special takeoff on the tank allows the fuel vapours to reach the vapour separator via a connection pipe.

REMOVING/REFITTING

- Set the car on a lift.
- Disconnect the battery (-) terminal.
- Empty the tank withdrawing the fuel through the filler using a special pump.
- Raise the rearscreen of the top and open the top upper lid.

1. Move aside the top compartment trim, then slacken the fastening screws and remove the lid to gain access to the pump and to the fuel level gauge.
2. Disconnect the electrical connection from the fuel pump.
3. Disconnect the electrical connection from the fuel level gauge.
4. Disconnect the fuel delivery and return pipes from the pump.

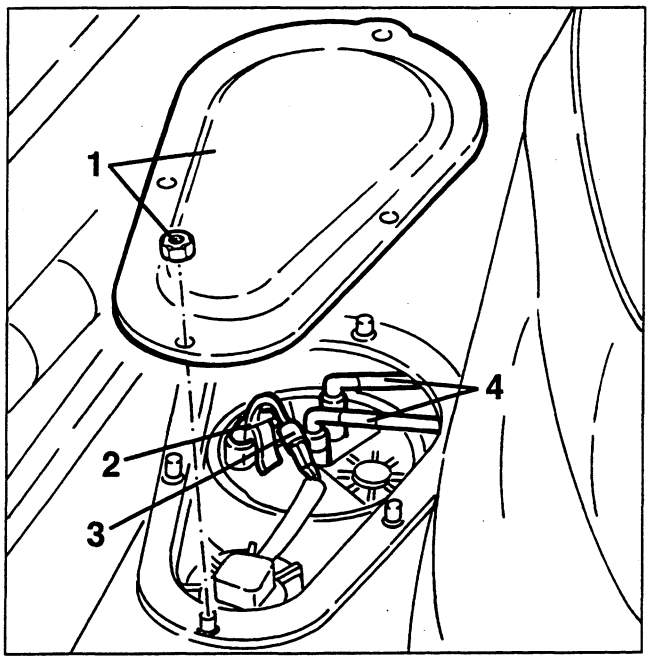

1. Slacken the fastening nuts and remove the access cover to the fuel filler.
2. Slacken the fastening clamp and disconnect the fuel filler from the tank.
3. Slacken the fastening clamp and disconnect the breather pipe from the fuel tank.

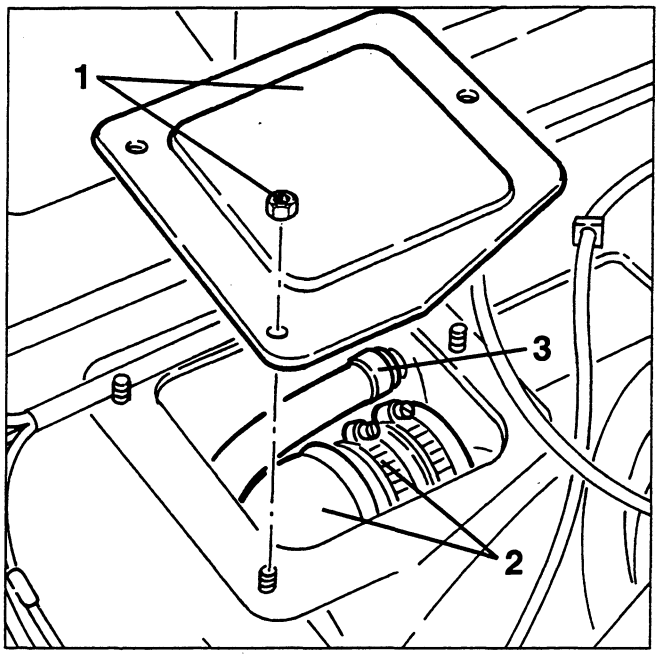

1. Working from the luggage compartment, pull back the trim and disconnect the the fuel vapour inlet pipe from the fuel vapour separator.

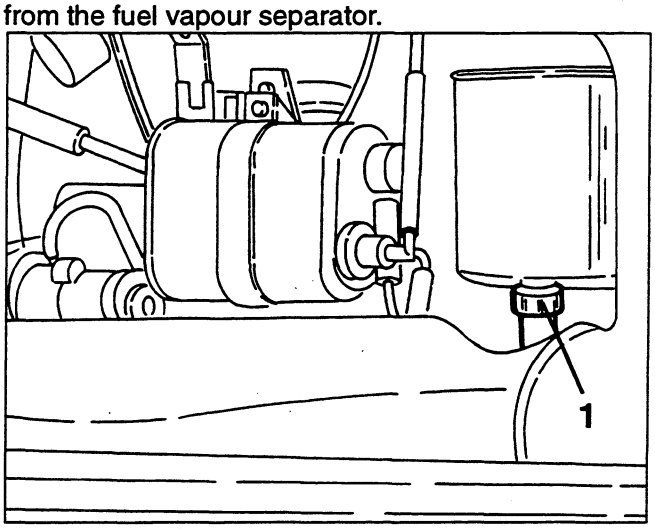

- Raise the car and remove the rear Multilink suspension (see specific paragraph).

1. Slacken the fastening screws and remove the sheet protecting the fuel tank complete with reinforcement bracket.

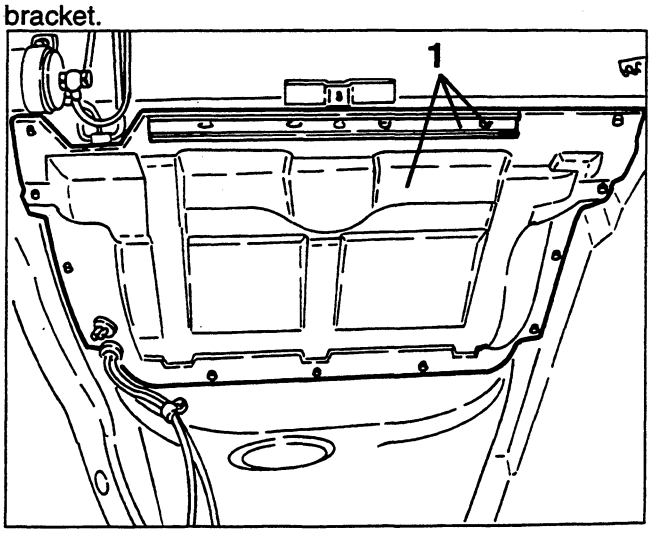

cardiagn.com

1. Position a hydraulic bracket under the tank.
2. Slacken the fastening screws of the fuel tank metal support straps, then remove the tank lowering the hydraulic jack.

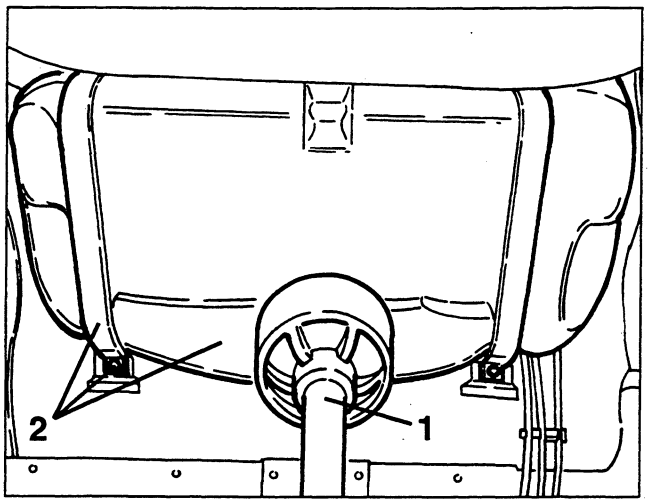

FUEL LEVEL GAUGE

This is of the axial floating type and it is fastened to the tank by a bayonet coupling.
Its main feature is that it prevents the gauge pointer from swaying when cornering and on twisting roads. This is because the float that runs inside the tube of the level gauge is submerged in the fuel and is therefore only sensitive to the hydrostatic thrust and not to the differences in level due to swaying of the vehicle.

1. Connector
2. O-Ring
3. Sliding blade
4. Resistance
5. Common blade
6. Upper spring
7. Tube
8. Float
9. Adjustment pin
10. Lower spring
11. Cup
12. Cap
13. Base

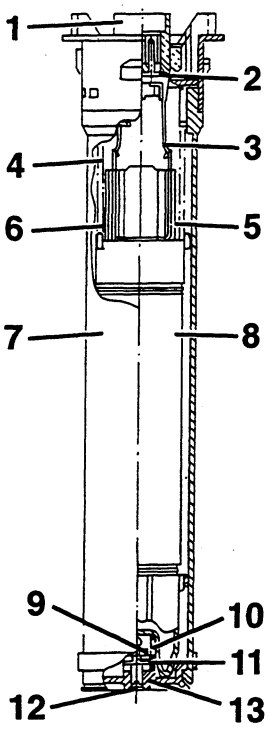

REMOVING/REFITTING

- Disconnect the battery (-) terminal.
- Raise the rearscreen of the top and open the top upper lid.

1. Move aside the top compartment trim, then sclacken the fastening nuts and remove the lid to gain access to the pump and to the fuel level gauge.

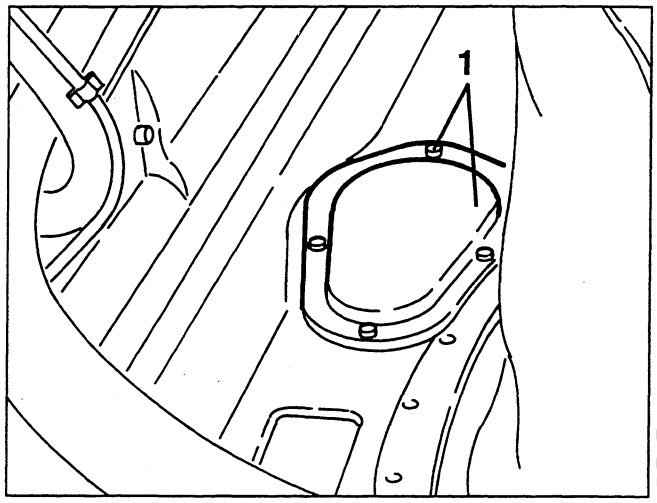

1. Disconnect the electrical connection of the fuel level gauge.
2. Using tool no. 1.822.159.000, slacken the locknut and remove the fuel level gauge complete with seal.

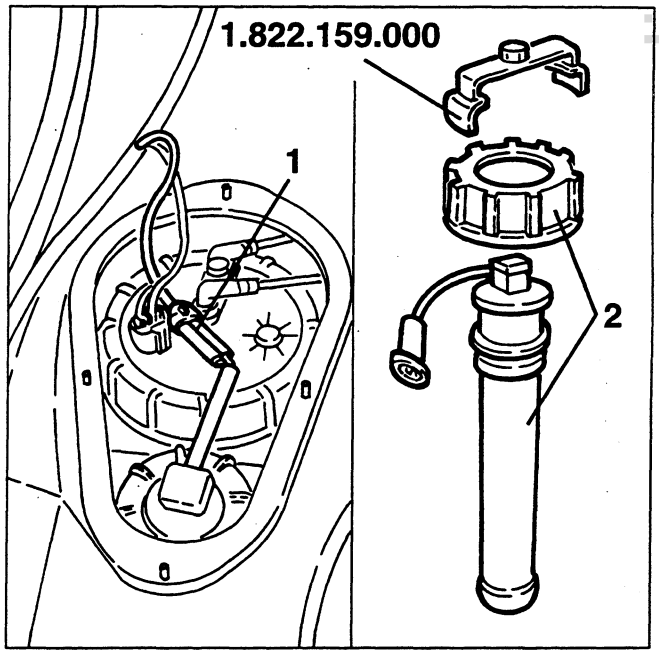

CHECKS AND INSPECTIONS

For a complete functional check, see GROUP 55 - ELECTRIC SYSTEM DIAGNOSIS.

cardiagn.com

FUEL PUMP

The electric pump, submerged in the tank is of the volumetric displacement type with rollers (4), with brush motor and excitation by permanent magnets.
The impeller (2) turns, pulled by the motor, creating volumes which move from the inlet port (1) to the delivery port (5).
These volumes are delineated by the rollers which during the rotation of the motor adhere to the outer ring.
The pump is fitted with two valves: one is a check valve (3) to prevent the fuel circuit from emptying, when the pump is not operating; the second is an overpressure valve which short circuits the delivery with the inlet when pressures build up above 5 bar, thereby avoiding overheating the electric motor.
The supply contacts are polarised to prevent the connections from being inverted.

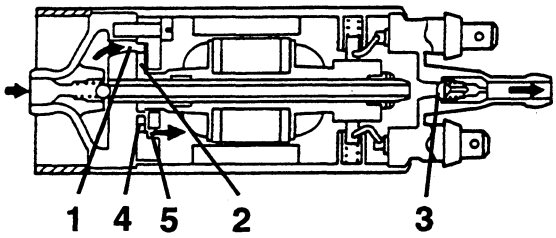

REMOVING/REFITTING

Proceed as described in the first three steps of the procedure "FUEL LEVEL GAUGE - Removing/Refitting".
1. Disconnect the electrical connection of the fuel pump.
2. Disconnect the fuel delivery and return pipes from the pump.
3. Using tool 1.822.135.000, slacken the locknut fastening the fuel pump, then withdraw it from its housing complete with seal.

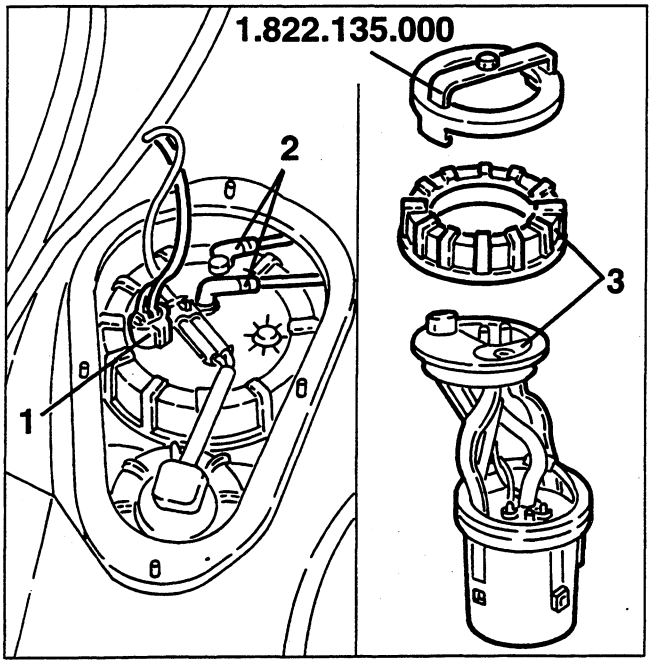

DIS-ASSEMBLY/RE-ASSEMBLY

1. Disconnect the two electrical connections from the fuel pump.
2. Disconnect the excess fuel return pipe from the pump tray.
3. Disconnect the delivery pipe from the fuel pump.
4. Prise the end of the spring, then separate the cover from the pump.

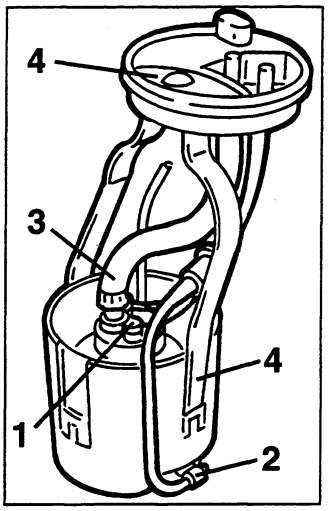

1. Withdraw the tray from the fuel pump assembly.
2. Slacken the fastening clamp and withdraw the fuel pump from the filtering support.

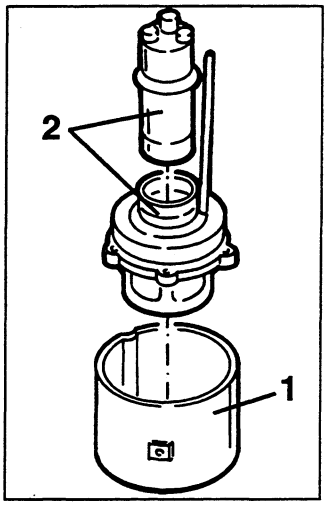

CHECKS AND INSPECTIONS

Accurately clean the mesh filter.
The presence of water in the fuel is particularly harmful to the pump as it causes inside rust. Carefully check the operation of the pump if the fuel is contaminated with water.
Also check the efficiency of the supply contacts since any rust would reduce the voltage at their terminals, thereby reducing delivery resulting in the formation of bubbles and reduction of the fuel injected.

NOTE: In the event of replacement, remember that the pump is supplied filled with protective oil and with the unions closed by special plugs. When installing on the vehicle, it is not necessary to empty the pump as the oil is burnt in the engine. If the protective oil is emptied from the pump, it is necessary to put it into operation within two weeks to prevent the formation of a film of dry oil on the motor collector which would ruin it due to the lack of electrical continuity.

cardiagn.com

FUEL FILTER

Inserted in the fuel delivery pipe to the injectors, under the car floor, next to the fuel tank.
It is formed of an outer aluminium cover and an inner polyurethane support which contains a paper element with a high filtering power (~ 5 μm) and a surface of appr. 1400 cm^2.
Fuel filtering is indispensible to ensure correct operation of the electrojectors, given their sensitivity to foreign particles contained in the fuel circuit.
There is an arrow on the outer filter cover which indicates the direction in which the fuel flows and therefore the correct assembly position.

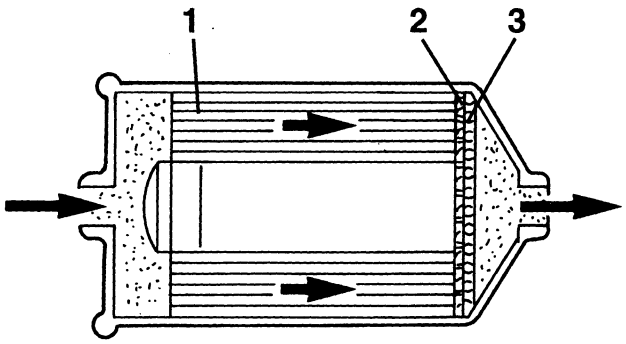

1. Paper filter *2. Fabric filter* *3. Mesh*

REPLACEMENT

1. Disconnect the fuel inlet pipe fitting from the filter.
2. Disconnect the fuel outlet pipe fitting from the filter.
3. Slacken the fastening clamp and remove the fuel filter.

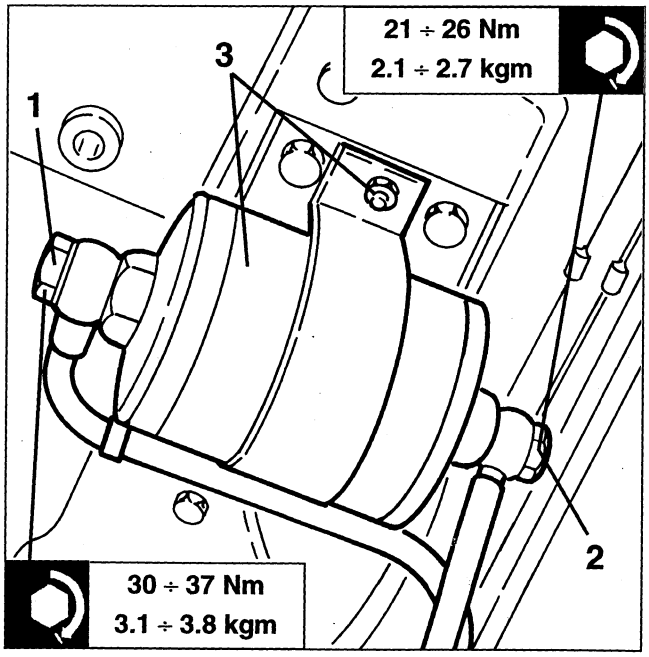

FUEL PRESSURE REGULATOR

The task of the fuel pressure regulator is to keep the difference between the pressure of the fuel and the pressure in the intake manifold constant.
This way it is possible to meter the amount of fuel solely on the basis of the injector opening time.
The pressure regulator is fitted downstream of the fuel distributor manifold.
It is a limiting regulator controlled by a diaphragm which regulates the fuel pressure to appr. **3 bar**.
When the fuel pressure exceeds the maximum rating, the diaphragm acts on a valve which opens the return pipe, through which the excess fuel is returned to the fuel tank.
A tube connects the regulator spring chamber to the air intake box. An interdependence is created by this connection between the pressure in the fuel circuit and the pressure in the intake manifold, so that the pressure between the inlet and outlet of the electroinjectors is always the same, when they are open.

REMOVAL/REFITTING

1. Disconnect the vacuum takeoff pipe from the fuel pressure regulator.
2. Disconnect the fuel return pipe from the pressure regulator.
3. Slacken the two fastening screws and remove the fuel regulator from the fuel distributor manifold and retrieve the O-Ring.

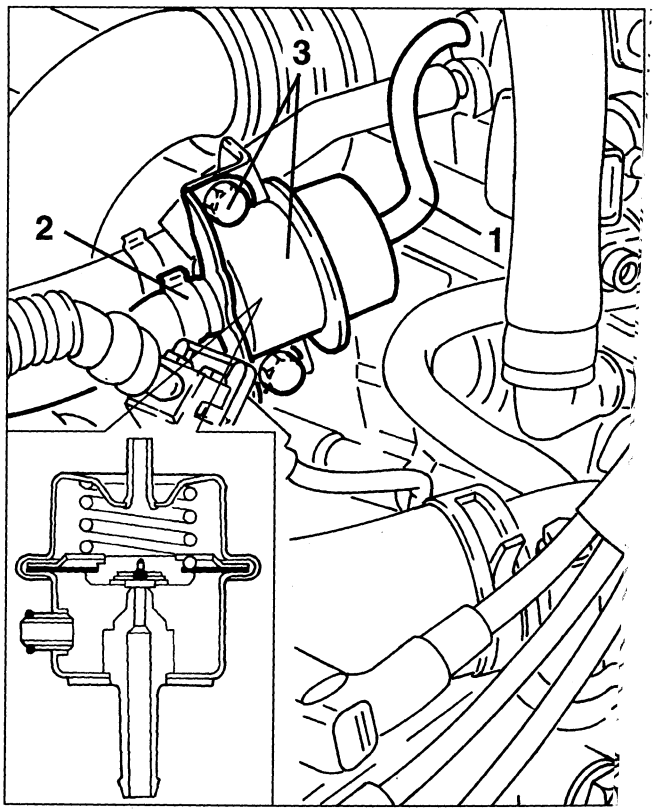

cardiagn.com

PULSE DAMPER

The pulse damper is connected to the inlet of the fuel distributor and it serves to suppress the pulsing noises that can occur especially at low engine rpm.
The pulsing is generated by pressure differences of the fuel deriving from the opening and closing of the electroinjectors or of the pressure regulator.

REMOVAL/REFITTING

- Remove the intake manifold of cylinder no. 4.
1. Disconnect the fuel distributor manifold connection pipe.
2. Disconnect the fuel inlet pipe from the pulse damper.
3. Disconnect the pulse damper from the fuel distributor manifold slackening its coupling.
4. Slacken the nut of the fastening clamp and remove the pulse damper complete with stiff pipes.

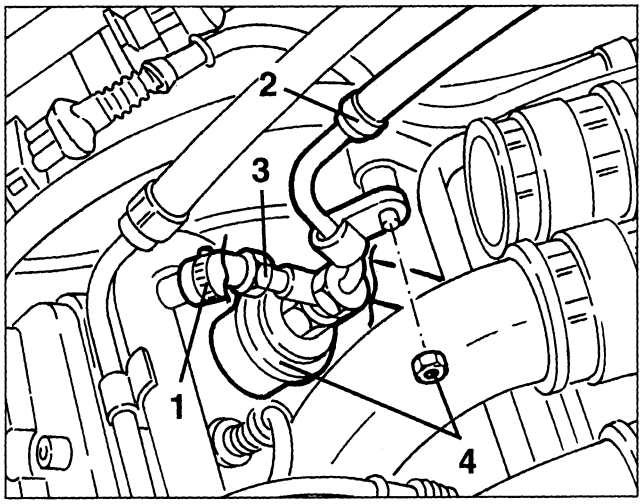

ELECTROINJECTORS

The injector nozzle is formed so that the jet of fuel atomizes into a 30° cone.
The injectors are locked by the fuel distributor which presses them into their housings machined on the intake ducts.
The injectors are also anchored to the fuel distributor by "safety catches" and sealed by two O-Rings.
The electroinjectors have the task of metering the amount of fuel needed by the engine.
They are "all or nothing" devices i.e. they only have two possible conditions, either open or closed.
They will let the fuel pass when they are "open" and prevent it from being delivered when they are "closed".
They basically comprise a nozzle controlled by an electromagnet and by a return spring.
In the rest position, the needle, which forms one piece with the core, is pushed by the spring onto the electroinjector nose to close the hole and ensure that unwanted fuel is unable to come out.
As soon as the winding is energized, the core is attracted, it compresses the spring opening the nozzle hole, thereby allowing the fuel to flow out.
Considering the physical characteristics of the fuel (viscosity, density) and the pressure difference (pressure regulator) constant, the amount of fuel injected depends on the injector opening time only.
The winding energizing time is normally called the "injection time".

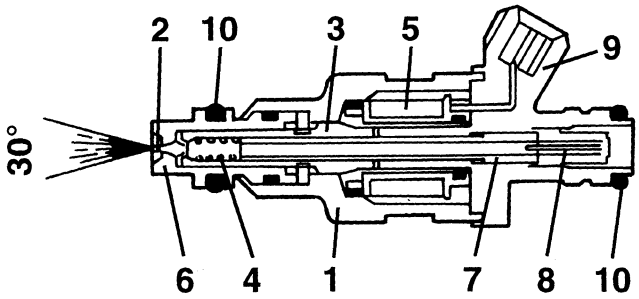

1. Injector body
2. Needle
3. Magnetic core
4. Helical spring
5. Winding
6. Injector nose
7. Adjustable pressure plate
8. Filter
9. Electrical connection
10. Seal rings

CHECKING FOR CORRECT OPENING OF ELECTROINJECTORS

- Measure the quantity of CO at the exhaust.
- Disconnect the electroinjector connectors one by one; each time measure for a reduction of the CO quantity at the exhaust and check that this value remains constant at each check.
- If not, locate and replace the faulty electroinjector; in any case a visual index of the efficiency of the electroinjectors is given by the spark plug electrodes:
• a mixture which is too rich corresponds to a black colour.
• a mixture which is too lean corresponds to a light colour.

cardiagn.com

CHECKING THE SEALING OF ELECTROINJECTORS

- Remove the electroinjectors complete with fuel distributor manifold, keeping the fuel supply circuit connected.
- Disconnect the electrical connections from the electroinjectors.
- Operate the starter motor and check that there are no leaks of fuel from the electroinjectors; if so replace the faulty injector.

REMOVAL/REFITTING

- Disconnect the battery (-) terminal.
1. Disconnect the electrical connections from the electroinjectors.
2. Remove the intake ducts.

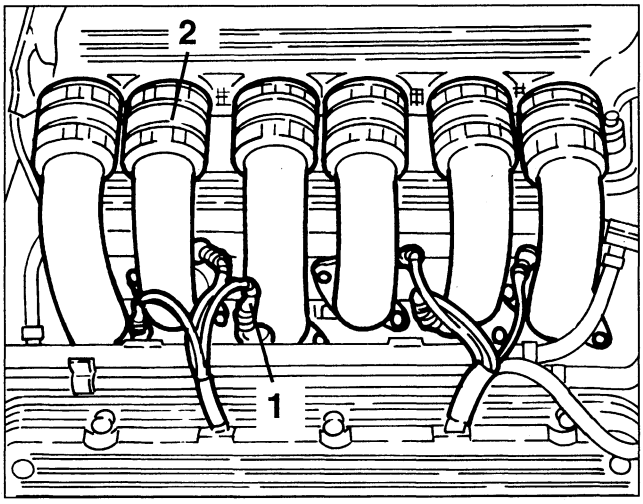

1. Disconnect the fuel delivery and return pipes from the fuel distributor manifold.
2. Disconnect the fuel vapour recirculation pipe.

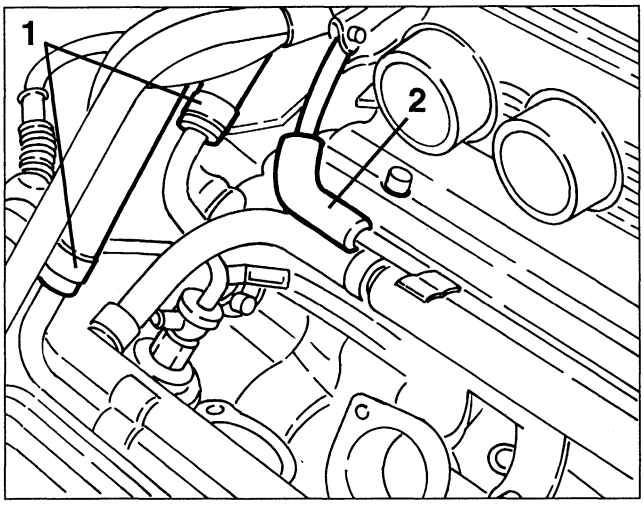

1. Disconnect the vacuum takeoff pipe for the fuel pressure regulator from the intake box.
2. Disconnect the fuel vapour recirculation pipe from the intake box.
3. Slacken the fastening screws and remove the fuel distributor manifold complete with injectors, fuel pressure regulator and pulse damper.
- Working on the bench remove the safety catches and remove the injectors from the fuel distributor manifold.

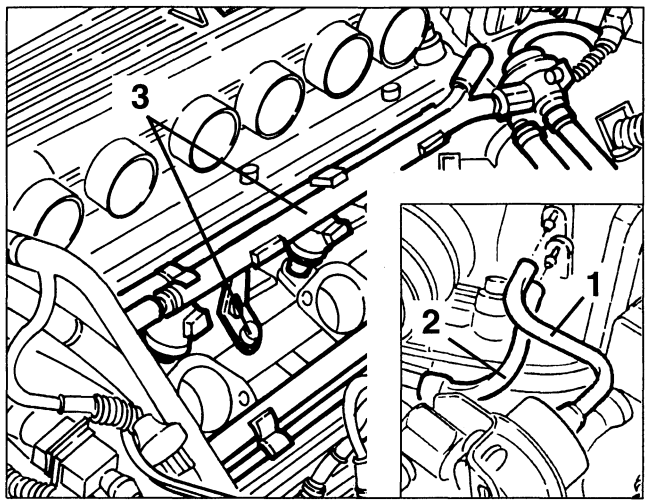

CHECKING THE PRESSURE AND TIGHTNESS OF THE FUEL CIRCUIT

1. Disconnect the fuel delivery pipe from the pulse damper, then connect a pressure gauge, using a "T" adapter, between the damper and the disconnected pipe.
- Disconnect the fuel pressure regulator vacuum takeoff pipe to avoid any irregularities in the rotation speed from causing abnormal readings.
- Start the engine and at idle speed check that the fuel pressure is within the specified limits.

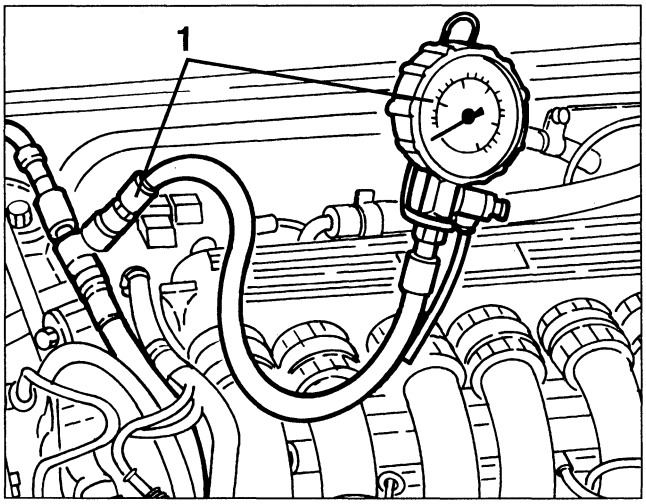

Fuel pressure at idle speed
2.8 ÷ 3.2 bar

cardiagn.com

- Reconnect the vacuum takeoff pipe on the regulator and check that the fuel pressure falls by ~ **0.5 bar** and then rises again when the throttle valve opens.
If this fails to occur, look for any leaks in the vacuum takeoff pipe.

- Keeping the vacuum takeoff pipe connected to the regulator and with the engine running at idle speed, choke the regulator fuel outlet pipe noting the increase in pressure up to ~ **4 bar** (do not allow the pressure to exceed this rating).
- If the pressure does not reach this rating and no leaks are detected, check the fuel filter and/or that the pump is working properly.

DESCRIPTION OF THE FUEL VAPOUR RECOVERY SYSTEM

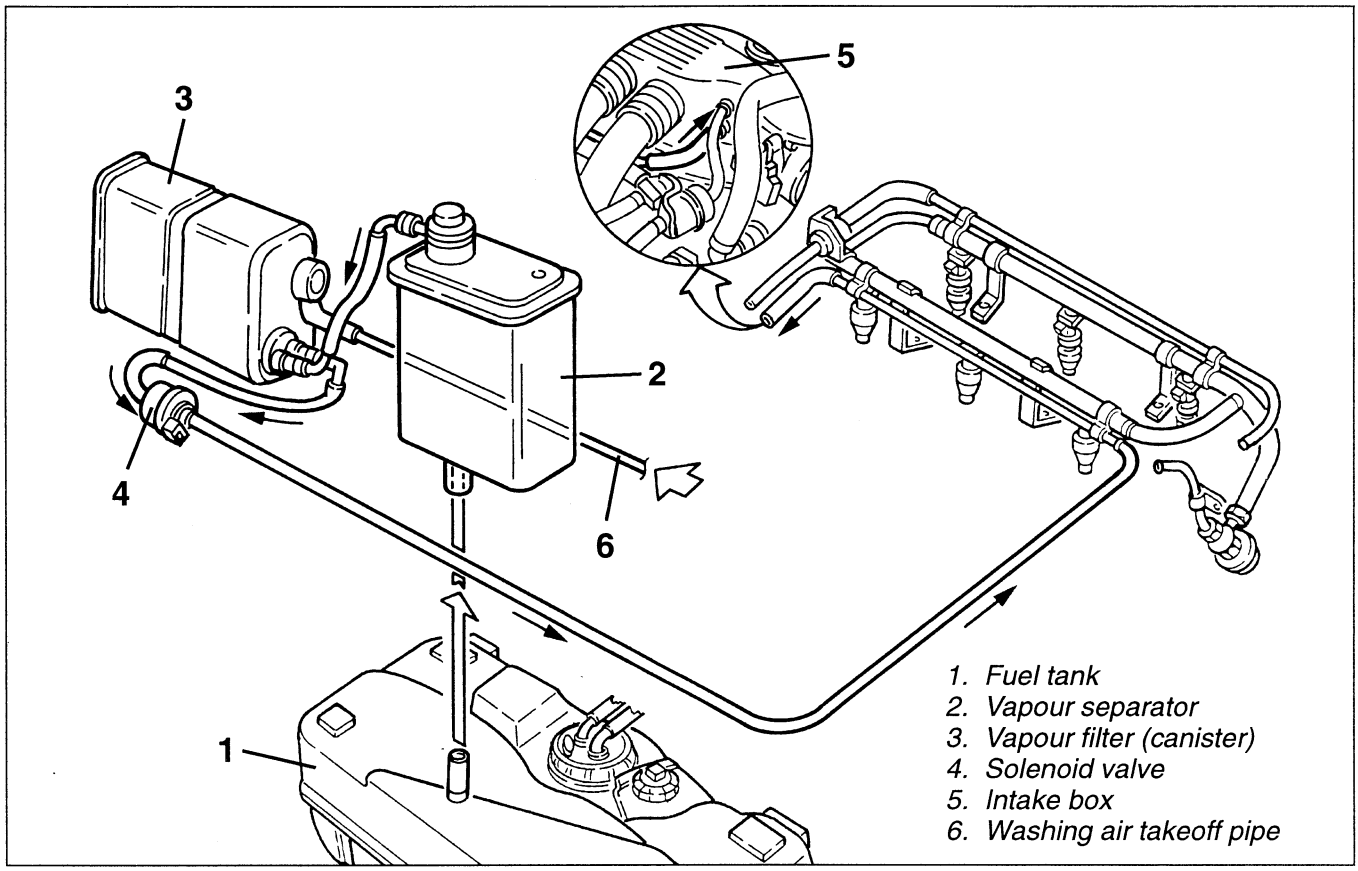

The fuel contained in the tank produces a considerable amount of vapours, which would pollute the environment if released.
The vapour control and recovery system gathers these vapours and burns them in the engine.
The vapours leading from the fuel tank through a special pipe reach the vapour separator which due to its special shape allows the condensed fuel to return in droplet form to the fuel tank. The remaining vapours are then sent to the fuel vapour filter canister where they are absorbed and stored by the active carbon contained in the filter.
There is a solenoid valve between the fuel vapour filter and the intake box: when the solenoid valve is not activated the connection with the intake is closed and the fuel vapours are collected in the canister in the active carbon.

Under certain load conditions the control unit controls the opening of the solenoid valve allowing any fuel vapours in the canister to be withdrawn. This condition remains even if at the exhaust the lambda sensor detects a reduction of oxygen which, due to the presence of too much fuel in the combustion chamber, is signalled to the control unit which delivers less fuel to the injectors so that the engine is always supplied under optimal conditions.
If there is a lack of fuel vapours in the canister, resulting in withdrawing only air, the lambda sensor detects this and signals the control unit of an increase in the oxygen.
In this case the control unit closes the solenoid valve thus preventing the connection of the canister with the intake box, thereby eliminating the excess air.

cardiagn.com

FUEL VAPOUR SEPARATOR

This is located in the luggage compartment, and its task is to limit the amount of fuel vapours reaching the canister, condensing part of them due to its shape. It is formed of a plastic container with two connections: a lower one for the inlet of fuel vapours and the return of condensed fuel to the tank and an upper one for sending vapours to the canister.

REMOVAL/REFITTING

- Remove the spare wheel and the luggage compartment front panel.
1. Disconnect the fuel vapour inlet pipe from the separator.
2. Disconnect the fuel vapour delivery pipe to the canister from the separator.
3. Slacken the two fastening screws and remove the fuel vapour separator.

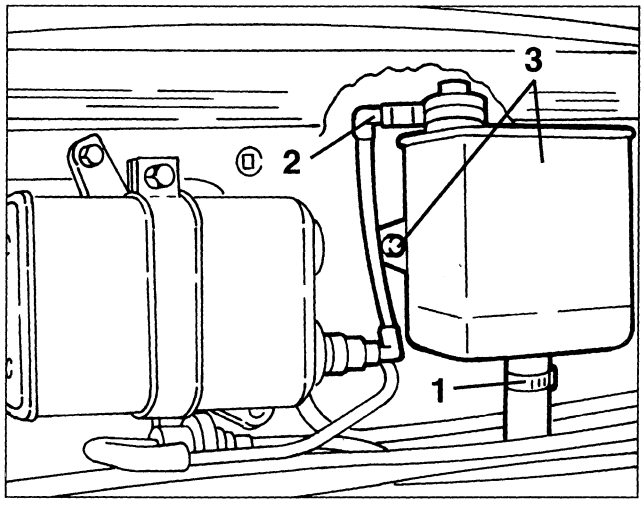

FUEL VAPOUR FILTER (CANISTER)

The filtering element is formed of active carbons enclosed in a plastic container. Their purpose is to absorb the fuel vapours leading from the separator. A one-way valve, to which a special pipe is connected, admits outside air when the vapours are withdrawn to wash the active carbons.

REMOVAL/REFITTING

- Remove the spare wheel and the luggage compartment front panel.
1. Disconnect the fuel vapour inlet and outlet pipes from the canister.
2. Disconnect the outside air inlet pipe from the one-way valve on the canister.
3. Slacken the fastening clamp screw and remove the canister.

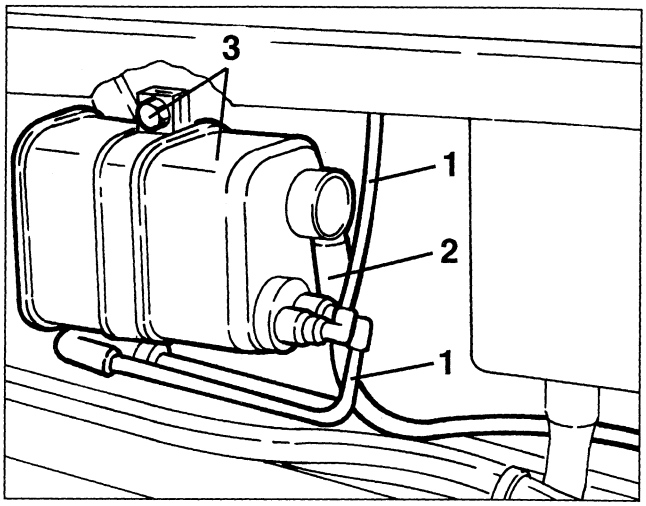

FUEL VAPOUR SOLENOID VALVE

The reason for the use of this valve, controlled by the electronic control unit, is to send the vapours stored in the canister to the engine intake.
This valve enclosed in a casing, comprises a mobile part or shutter, restrained to a plate spring; the fixed part is formed of a metal cylinder, perforated inside, on which the coil is wound.

REMOVAL/REFITTING

- Remove the spare wheel and the luggage compartment front panel.
- Disconnect the battery (-) terminal.
- Remove the canister without disconnecting it from its pipes.
1. Slacken the two fastening screws and remove the canister support bracket complete with solenoid valve.
2. Disconnect the electrical connection and the fuel inlet and outlet pipes, then slacken the fastening clamp screw and remove the solenoid valve.

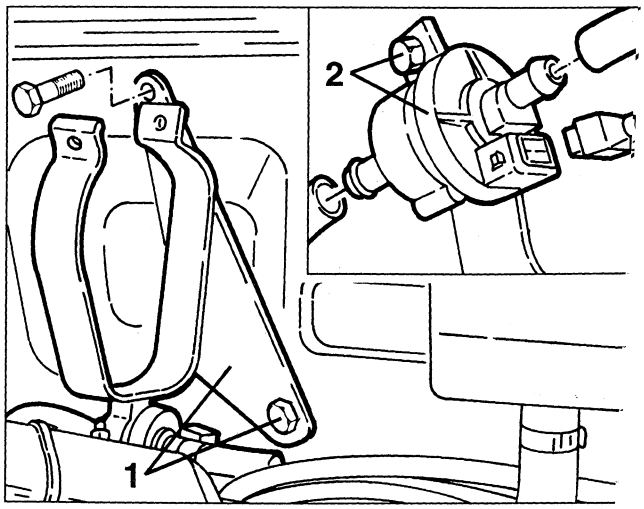

cardiagn.com

AIR SUPPLY AND OIL VAPOUR RECOVERY SYSTEM

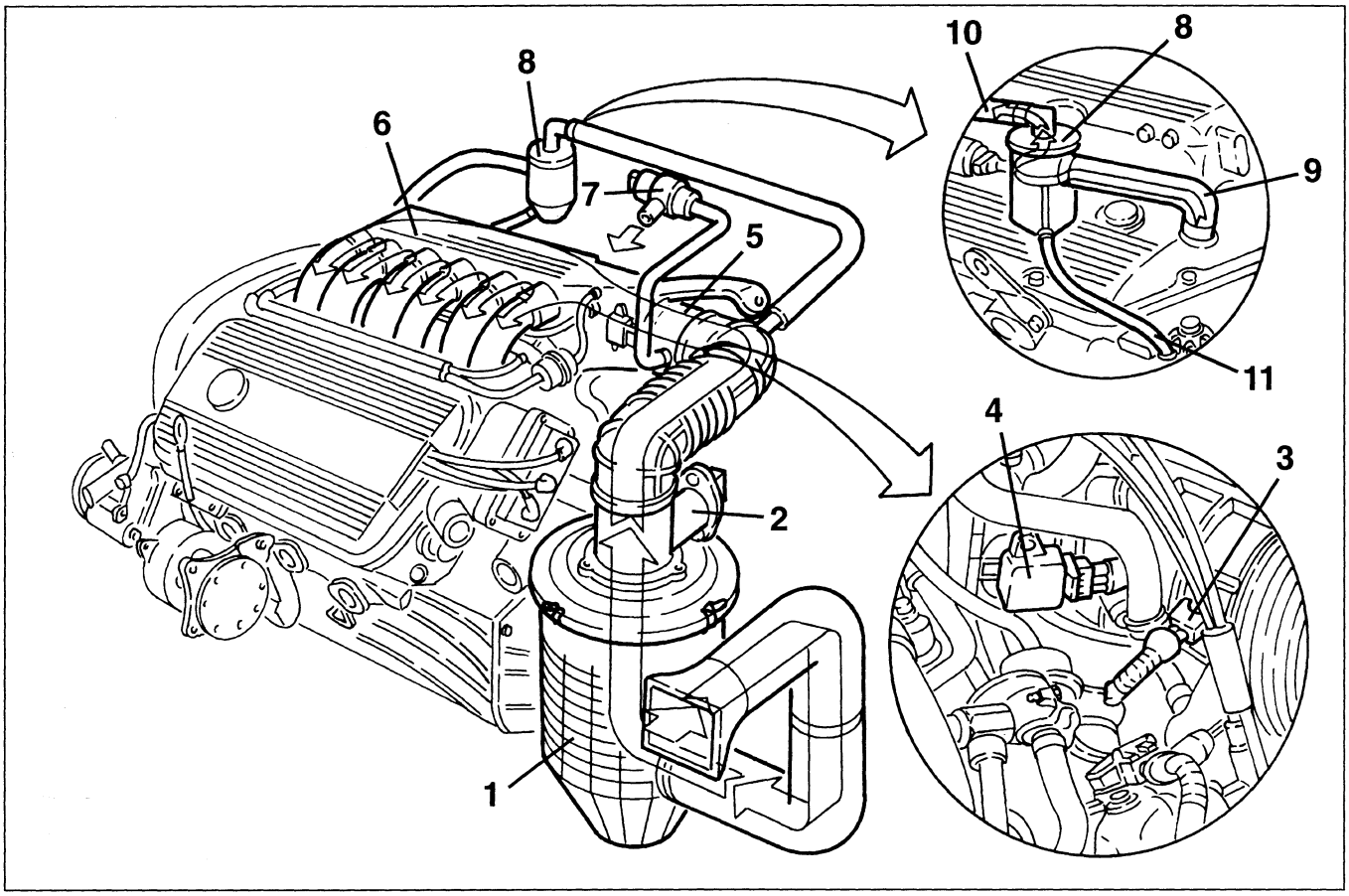

1. *Air cleaner*
2. *Air flow meter*
3. *Intake air temperature sensor*
4. *Throttle potentiometer*
5. *Throttle body*
6. *Intake box*
7. *Constant idle speed actuator*
8. *Oil vapour separator*
9. *Oil vapour recovery pipe*
10. *Oil vapour recriculation pipe*
11. *Condensed oil recovery pipe*

DESCRIPTION

The air taken in through a dynamic inlet and filtered by a cartridge element (1), passes through the hot film air-flow meter (2) and from this through the corrugated sleeve, which houses the intake air temperature sensor (3), it reaches the throttle body (5).
The latter, controlled by the accelerator cable, adjusts the amount of air drawn into the box (6). On one side of the throttle body there is the potentiometer (4) fastened to the pivot pin of the throttle itself which informs the control unit of the position of the throttle.
An additional air solenoid valve (7) on the intake box by- passes the throttle body through a special pipe to keep the idle rpm constant during particular operating conditions of the engine.

The fuel vapours (see specific paragraph) and the oil vapours flow to the air supply system.
The oil vapours are formed when the engine is running and they are collected in the separator through a pipe (9) leading from the right-hand cylinder head; as the temperature of the separator is lower, part of the oil vapours are condensed.
The condensed oil returns to the engine via a special pipe (11), while the remaining vapours are sent to the corrugated sleeve, upstream of the throttle body and then burnt in the engine.

cardiagn.com

CHANGING THE AIR CLEANER CARTRIDGE

- Disconnect the battery (-) terminal.
1. Slacken the fastening clamp and disconnect the corrugated sleeve from the air cleaner cover, then move it to one side.
2. Disconnect the electrical connection from the air-flow meter.

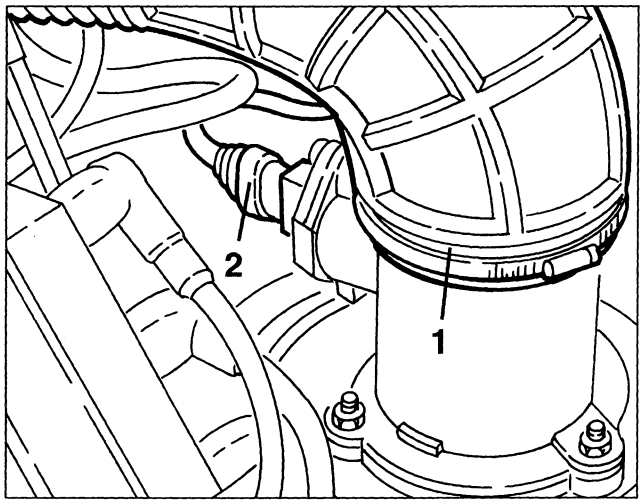

1. Release the catches and remove the air cleaner cover complete with air-flow meter.
2. Remove the filtering element.

WARNING:
Any cleaning operation on the filter can cause damage to it, and might compromise the correct functioning of the engine supply system.

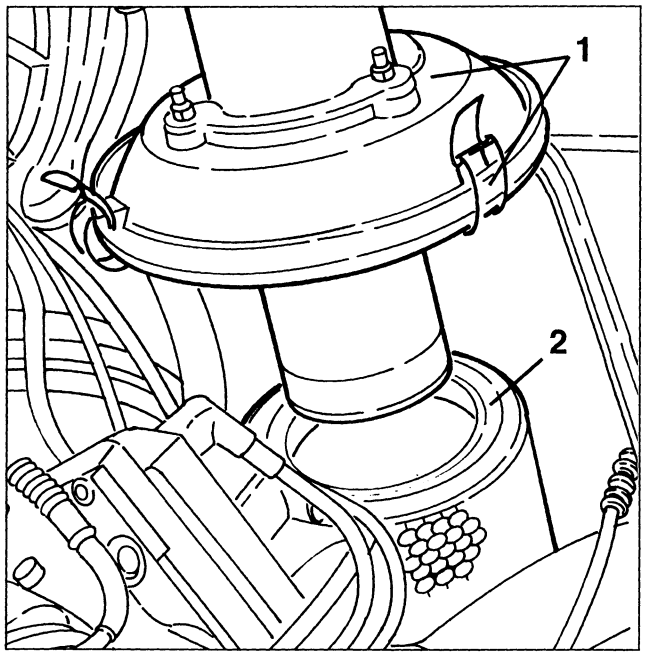

THROTTLE BODY

The throttle body adjusts the amount of air sent to the intake box in relation to the position of the accelerator pedal.

In fact, the accelerator acts on a specific sector of pulley locked on the throttle valve pivot pin.
A coil spring allows the throttle to return to the closed position.
To prevent the formation of ice on the throttle valve which would prevent it from closing, the throttle body is heated by the engine coolant fluid.

REMOVAL/REFITTING

- Disconnect the battery (-) terminal.
1. Disconnect the idle speed oil vapour recirculation pipe from the corrugated sleeve.

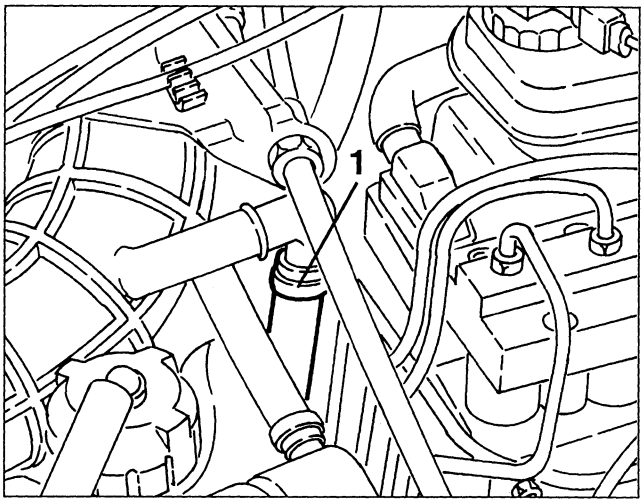

1. Disconnect the electrical connection from the throttle potentiometer.
2. Disconnect the electrical connection from the intake air temperature sensor.
3. Disconnect the constant idle speed actuator air takeoff pipe from the corrugated sleeve.
4. Slacken the fastening clamp and disconnect the corrugated sleeve from the throttle body.

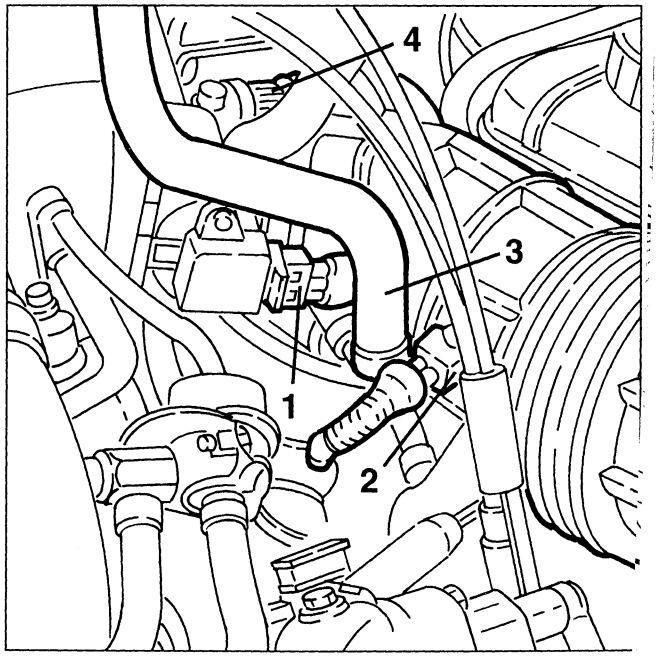

cardiagn.com

1. Disconnect the accelerator cable from the throttle.
2. Disconnect the two coolant inlet and outlet pipes from the throttle body.
3. Slacken the fastening screws and remove the throttle body complete with potentiometer and accelerator cable support bracket and if necessary, separate them on the bench.
- Remove the throttle body seal.

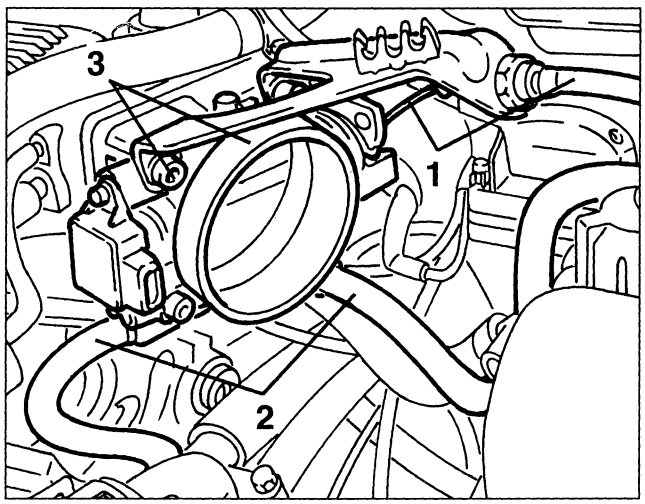

FLUXING TEST

- Proceed as described in the first four steps of the procedure for "Throttle body - Removal/Refitting".
1. Make sure that the throttle is in the closed position, then using tool no. 1.824.011.000 (C.2.0056) connected to the flow meter, check that the flow is within the specified limits.

Accelerator throttle blow-by in closed position (Solex flow meter)
300 ± 10 Scale N

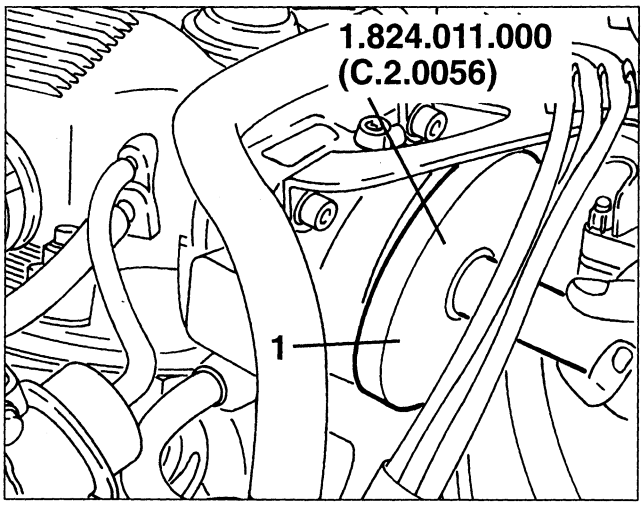

AIR-FLOW METER

The air flow meter is of the "heated film" type.

Its operating principle is based on a heated diaphragm interposed in a measurement duct through which the air admitted to the engine flows.
The hot film diaphragm is kept at a constant temperature (~ 120°C above the temperature of the incoming air) by the heating resistance in contact with it.
The mass of air crossing the measurement duct tends to withdraw heat from the diaphragm, therefore, in order to keep its temperature constant, a certain amount of current must flow through the resistance.
This current is measured by a suitable Wheatstone bridge.
Thus, the current is proportionate with the mass of flowing air.

NOTE: This air-flow meter measures directly the mass of air and not the volume) thereby eliminating problems of temperature, altitude, pressure, etc.
The correct operation of the air flow meter depends on the condition of the air cleaner, which must therefore be checked often.

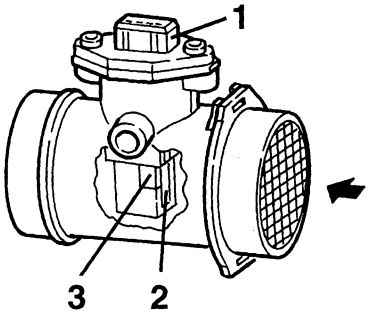

1. *Connector*
2. *Measurement duct*
3. *Hot film sensor*

REMOVAL/REFITTING

- Proceed as described in "Removal/Refitting Throttle body" up to disconnection of the corrugated sleeve.
1. Disconnect the electrical connection from the air-flow meter.

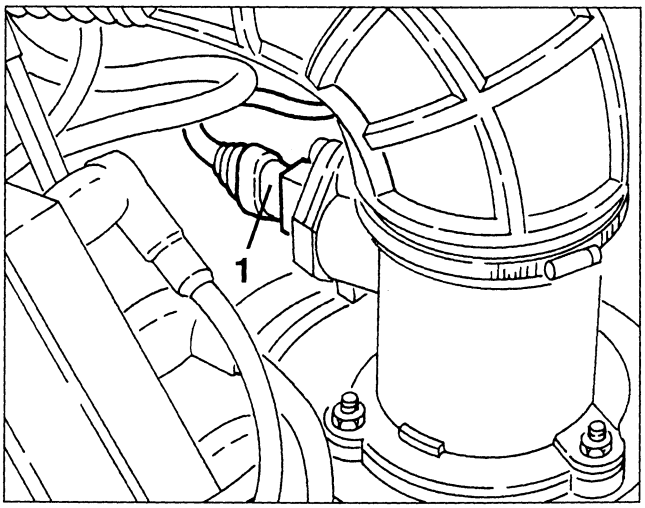

cardiagn.com

1. Release the catches, then remove the air cleaner cover complete with air-flow meter and corrugated sleeve and separate them on the bench.

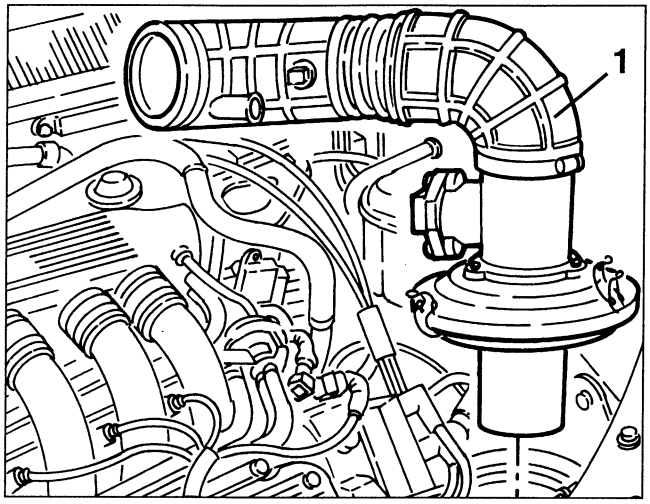

1. If necessary, slacken the two fastening screws and remove the air-flow meter from its support.

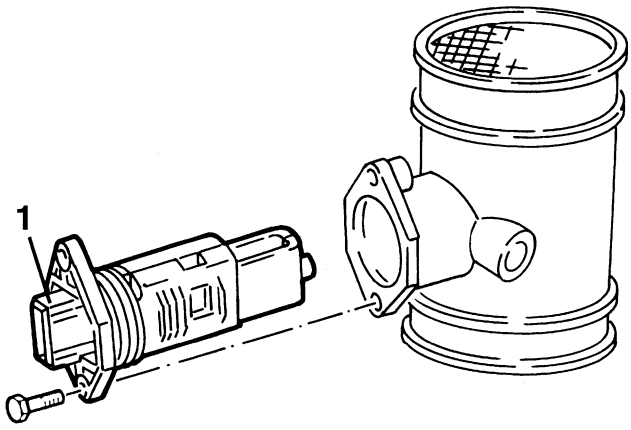

INTAKE AIR TEMPERATURE SENSOR (NTC)

The intake air temperature sensor is located on the air intake corrugated sleeve aria and measures the temperature of the air through an NTC thermistor with a negative resistance coefficient, i.e. capable of lowering its resistance as the temperature increases.
The electric signal obtained reaches the electronic control unit where it is used to calculate the density of the air.

REMOVAL/REFITTING

- Disconnect the battery (-) terminal.
1. Disconnect the electrical connection from the intake air temperature sensor.
2. Withdraw and remove the intake air temperature sensor from the corrugated sleeve.

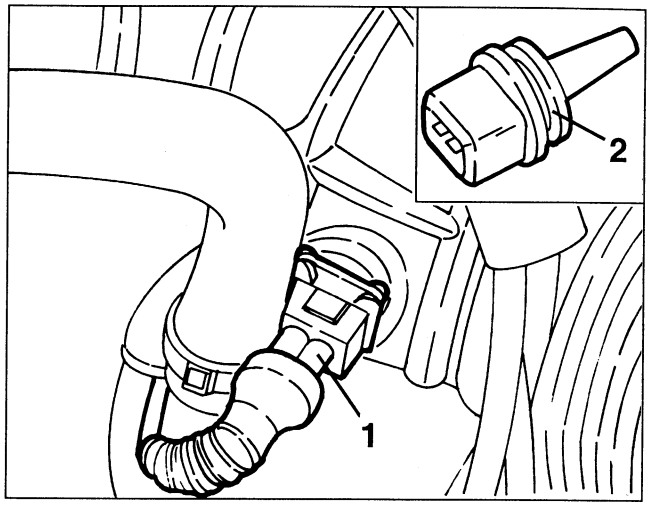

THROTTLE POTENTIOMETER

This is a potentiometer the mobile part of which is controlled directly by the throttle valve shaft.
The potentiometer signals the control unit instantaneously when there is the need for "full power", anticipating the signal from the air-flow meter which records a considerable increase of the flow of air, thereby obtaining a more immediate response.
The potentiometer automatically detects the throttle closed position through a "self-adapting" function.
This eliminates the need for potentiometer adjustment operations and makes it possible to follow in time any wear occurring on the throttle closing position.

REMOVAL/REFITTING

- Disconnect the battery (-) terminal.
1. Disconnect the electrical connection from the throttle potentiometer.
2. Slacken the two fastening screws and remove the throttle potentiometer.

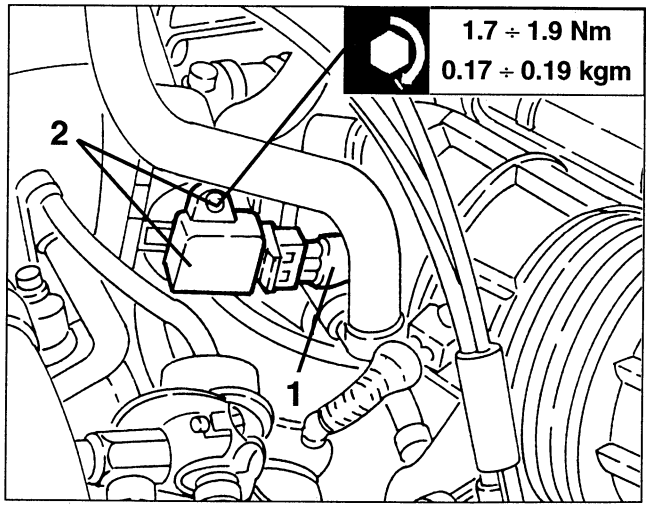

cardiagn.com

AIR INTAKE BOX

REMOVAL/REFITTING

- Proceed as described in "Removal/Refitting Throttle body" up to disconnection of the corrugated sleeve.
1. Disconnect the fuel vapour recirculation pipe from the intake box.
2. Disconnect the fuel pressure regulator vacuum takeoff pipe from the intake box.
3. Disconnect the coolant inlet and outlet pipes from the throttle body.
4. Disconnect the accelerator cable from the throttle.
- Free the spark plug cables from the fastenings on the accelerator cable support bracket.

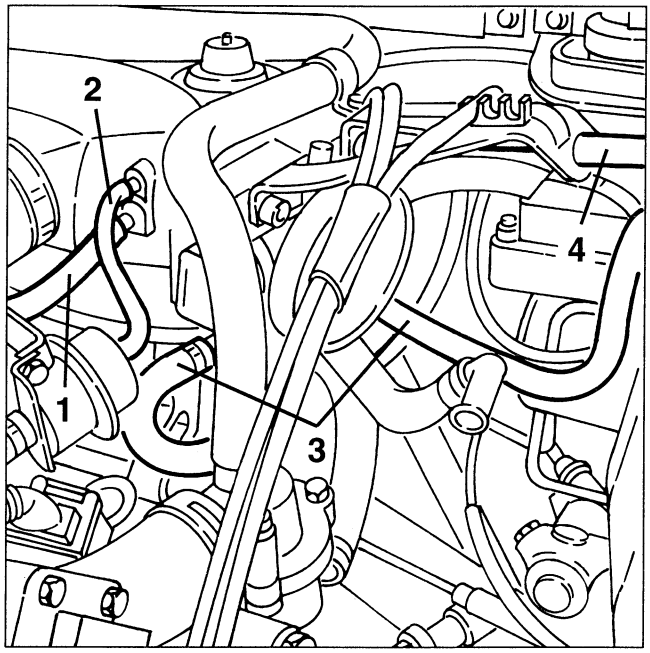

1. Disconnect the pipe that sends the vacuum signal to the E.G.R. valve from the pneumatic signal modulation solenoid valve.

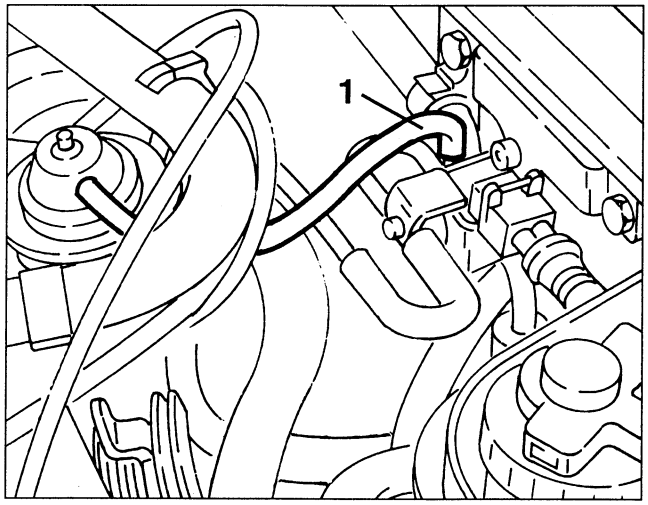

- Disconnect the exhaust gas takeoff pipe from the E.G.R. valve.

1. Disconnect the electrical connection from the constant idle speed actuator.

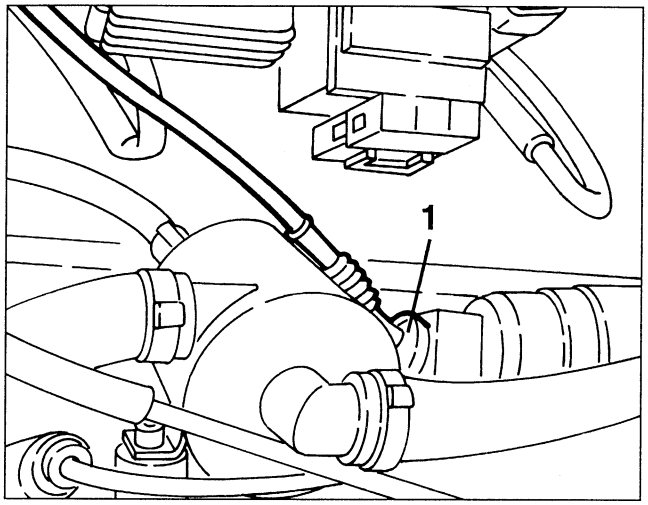

1. Disconnect the earth cables from the box.
2. Disconnect the vacuum takeoff socket for the E.G.R. pneumatic signal modulating solenoid valve from the intake box.

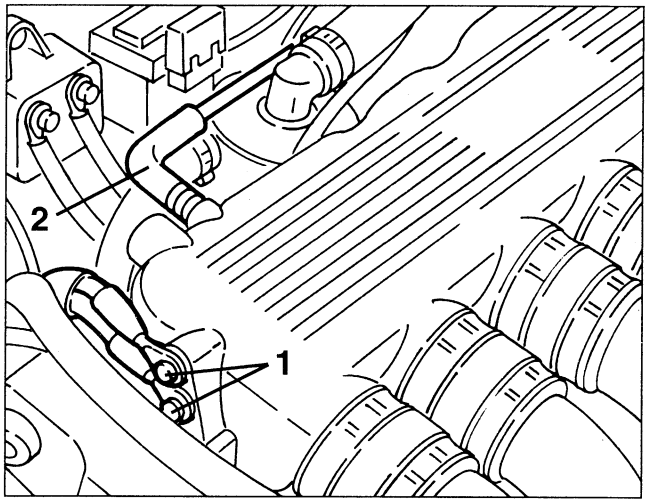

1. Disconnect the servobrake vacuum takeoff pipe from the box.
2. Disconnect the oil vapour recovery pipe and the oil recovery pipe from the separator.

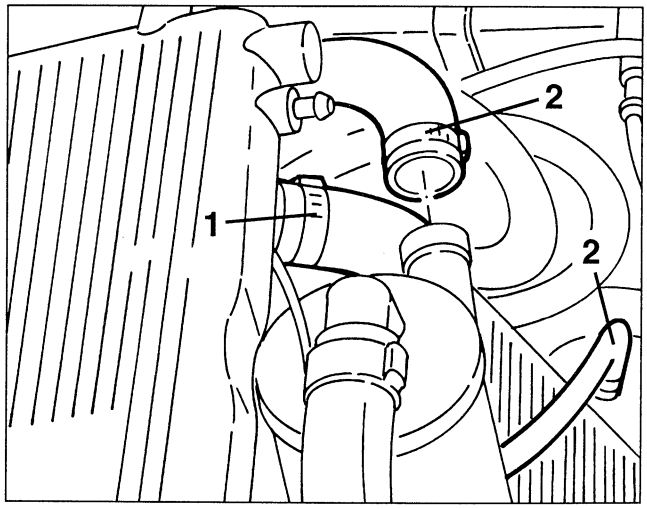

cardiagn.com

1. Slacken the clamps fastening the intake ducts to the box, then remove the box.

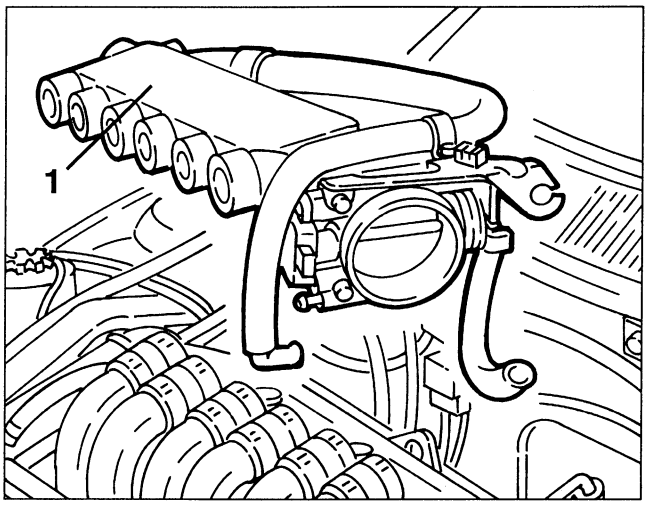

- Working on the bench, separate the E.G.R. valve, constant idle speed actuator, oil vapour separator and throttle body from the intake box.

CONSTANT IDLE SPEED ACTUATOR

Idle speed rpm is controlled by an actuator which adjusts the amount of air taken in by the engine when the throttle valve is closed.
This makes it possible to compensate the power required by the various services (conditioner compressor, power steering, alternator) so that the engine speed remains unaffected.
The opening and closing controls are independent due to a double electromagnetic circuit with considerable advantages in terms of prompt adjustment.
In addition, the control unit is "self-adaptive", i.e. it can follow and "detect" the changes that occur in the engine (different internal frictions at different temperatures, settling of the engine over the course of time etc.) so that idle speed remains constant under all conditions.
Lastly, in the event of a fault, a spring moves the actuator to an intermediate degree of opening to enable the car to reach an authorised service centre.

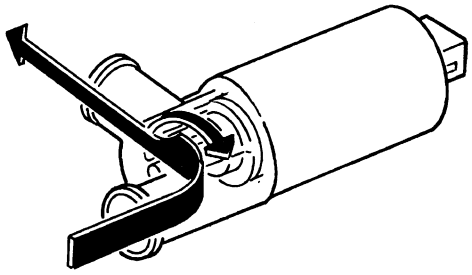

REMOVAL/REFITTING

- Disconnect the battery (-) terminal.
1. Disconnect the electrical connection from the constant idle speed actuator.
2. Disconnect the air inlet pipe from the constant idle speed actuator.
3. Slacken the two fastening screws and remove the constant idle speed actuator loosening the clamp and disconnecting the air delivery pipe to the intake box.

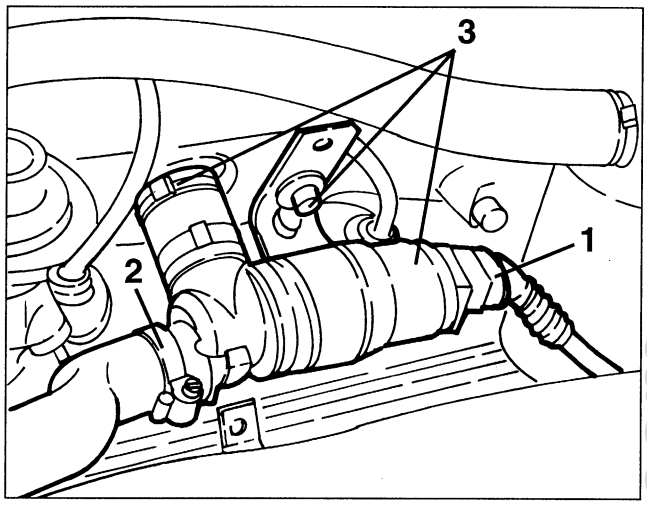

OIL VAPOUR SEPARATOR

REMOVAL/REFITTING

1. Disconnect the oil vapour recirculation pipe from the separator.
2. Disconnect the oil vapour recovery pipe from the separator.
3. Disconnect the oil recovery pipe from the separator.
4. Slacken the two fastening screws and remove the oil vapour separator.

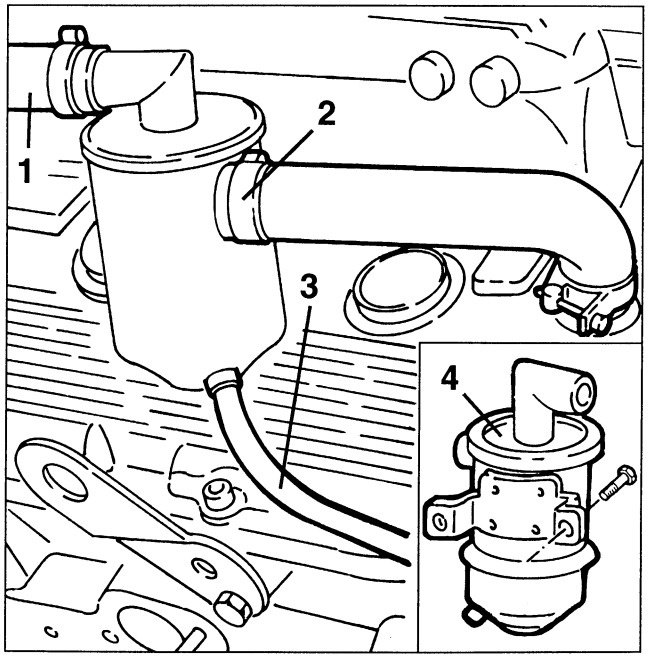

cardiagn.com

DESCRIPTION OF SYSTEM

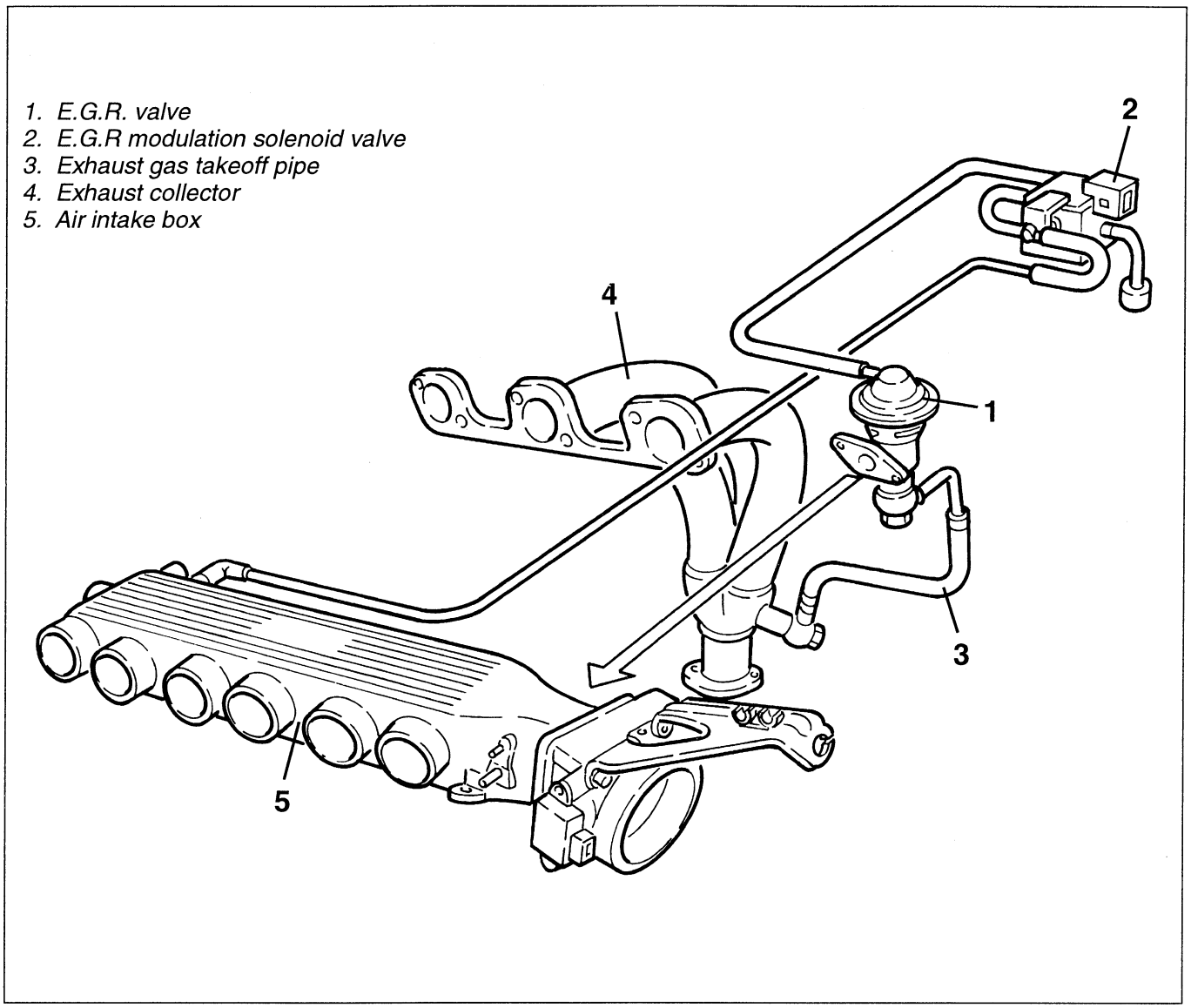

To further reduce emissions of NOx (nitric oxides) the supply system is fitted with an E.G.R. valve (1).
The E.G.R. valve (Exhaust Gas Recirculation) withdraws part of the exhaust gas and returns it to the intake box (5), where it is mixed with the intake air and burnt in the engine.
The E.G.R. valve is operated by the vacuum modulated by the solenoid valve (2) controlled by the MOTRONIC control unit.

The amount of exhaust gas sent to the engine is determined by the MOTRONIC control unit, taking account of the characteristic curve of the E.G.R. control depending on the engine load and speed and on the temperature of the coolant fluid.
Through the MOTRONIC control unit the solenoid valve modulates the vacuum to be sent to the E.G.R. valve for opening.
The stainless steel exhaust gas takeoff pipe (3), is fitted with an expansion compensation bellows and is covered with a screening braid.

cardiagn.com

E.G.R. VALVE

REMOVAL/REFITTING

1. Disconnect the modulated vacuum pipe leading from the solenoid valve from the E.G.R. valve.

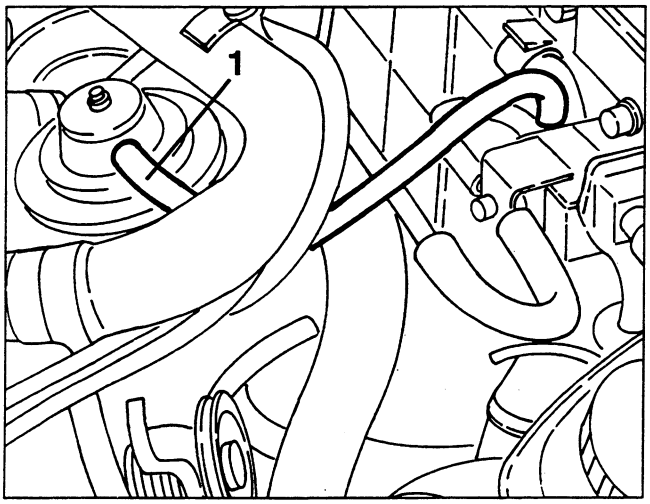

1. Disconnect the exhaust gas takeoff pipe from the E.G.R. valve.
2. Slacken the two fastening nuts and remove the E.G.R. valve from the intake box.
- Remove the seal.

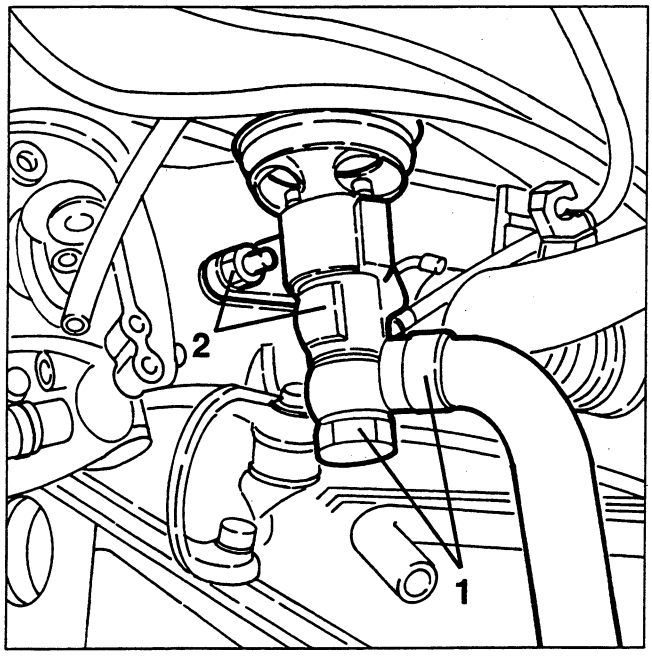

E.G.R. MODULATING SOLENOID VALVE

REMOVAL/REFITTING

- Disconnect the battery (-) terminal.
1. Disconnect the electrical connection from the E.G.R. modulating solenoid valve.
2. Disconnect the vacuum pipe from the intake box from the solenoid valve.
3. Disconnect the vacuum signal delivery pipe to the E.G.R. valve from the solenoid valve.
4. Slacken the fastening screw and remove the E.G.R. modulating solenoid valve.

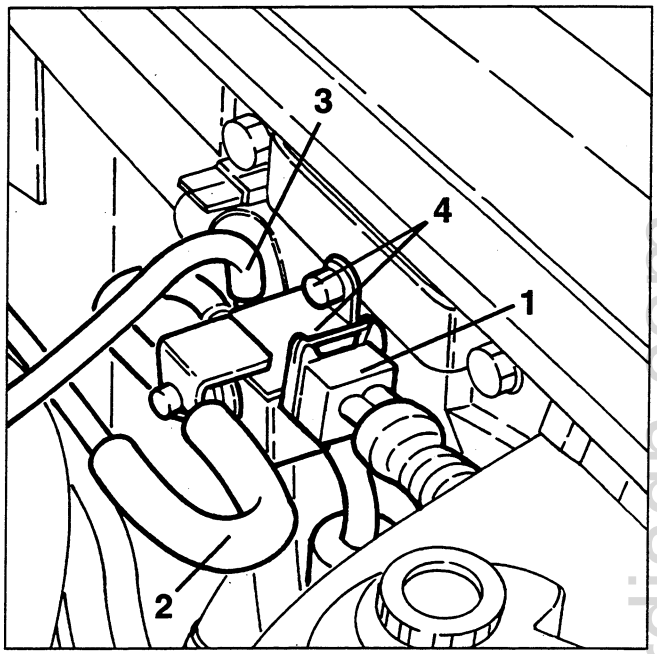

cardiagn.com

DESCRIPTION

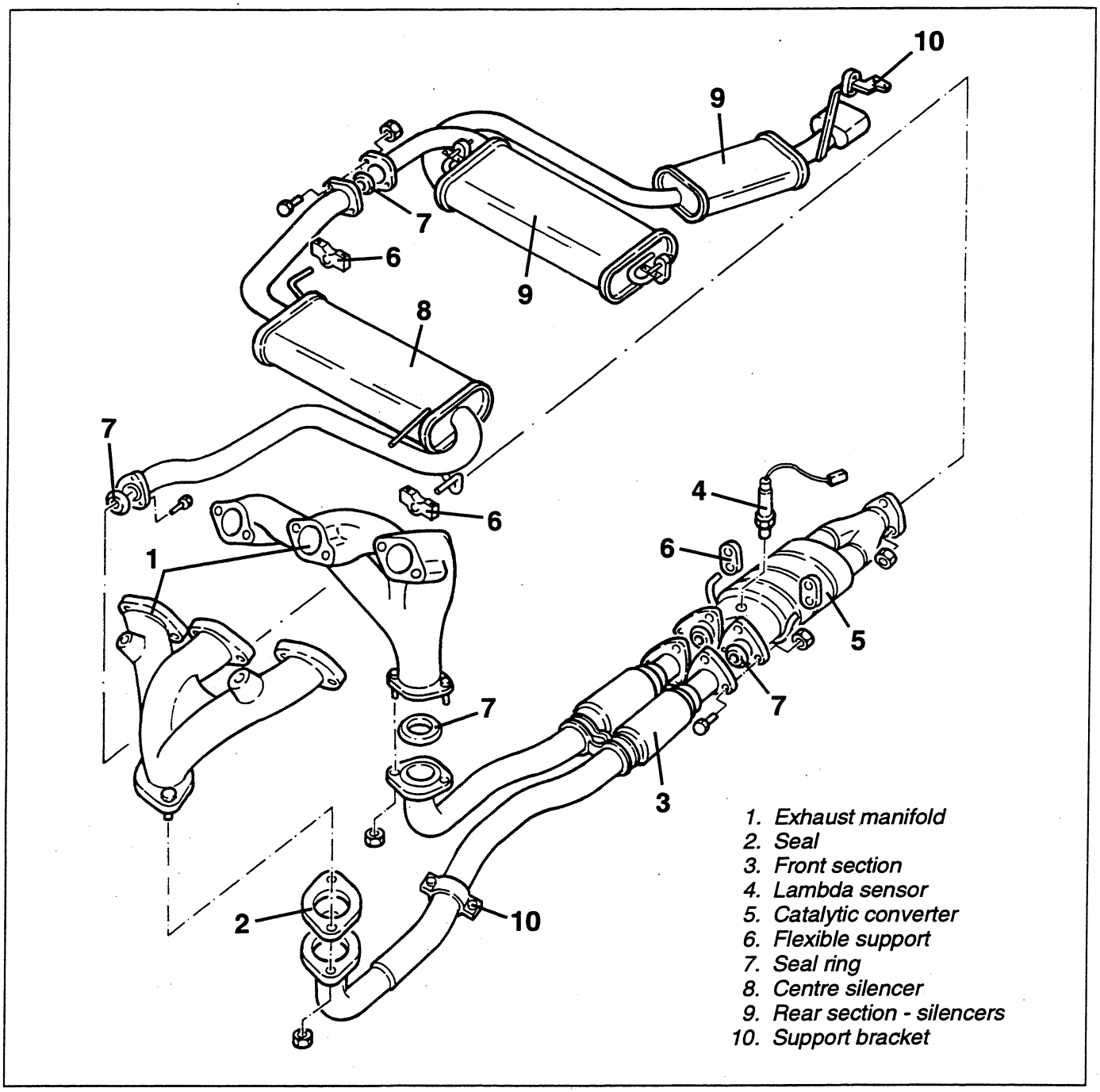

The exhaust gas leading from the cylinder head flows through the manifolds (1), to the front section of the exhaust piping (3) on which there are two flexible pieces which enable the limitation of vibrations. From the front section, the exhaust gas reaches the three-way catalytic converter (5) where most of the polluting substances are transformed.
At the beginning of the catalytic converter there is the lambda sensor (4) which informs the control unit of the amount of oxygen contained in the exhaust gas so that the injection time can be adjusted accordingly to keep the stoichiometric ratio (air-fuel) at an optimum level.

The exhaust gas leaves the catalytic converter and crosses three special silencers (8 - 9).
The various sections of the exhaust piping are connected by flanges with interposed seals and support to the underbody is by brackets with flexible supports.
The high amount of heat radiated towards the body due to the catalytic converter is limited by a set of heat shields between the exhaust piping and the body itself.

cardiagn.com

WARNING:
When the engine is running all the exhaust pipes and in particular the catalytic converter get very hot.
It is therefore necessary to leave the engine off for a suitable length of time before doing any work. Never touch the catalytic converter without suitable protection, such as gloves, etc. Never leave easily inflammable materials near the catalytic converter.

LAMBDA SENSOR

For this description, refer to 1996 TB.

REMOVING/REFITTING

- Set the car on a lift.
- Disconnect the battery (-) terminal.

1. Disconnect the electrical connections from the lambda sensor.

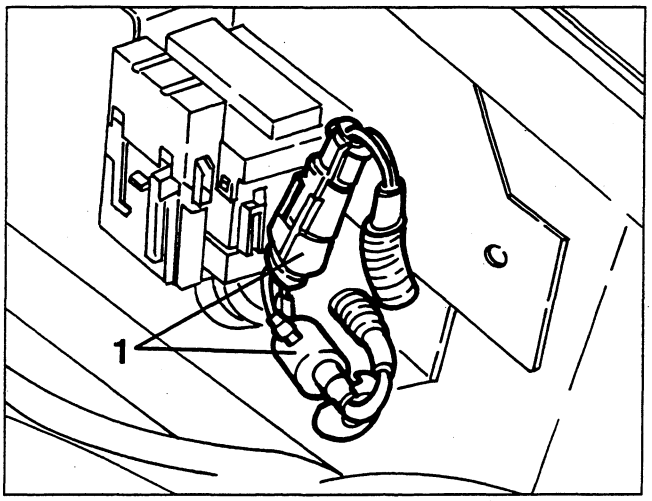

1. Slacken the bolts fastening the catalytic converter to the front section of the exhaust piping, then lower the piping just enough to gain access to the lambda sensor.
2. Slacken and remove the lambda sensor complete with wiring.

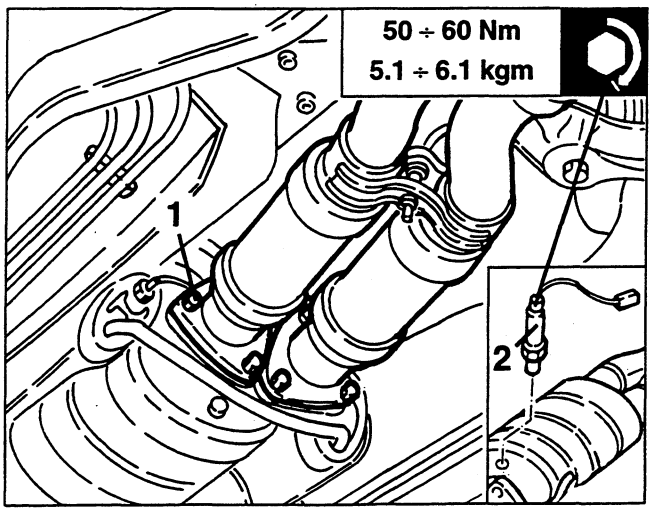

CHECKING EMISSIONS AT THE EXHAUST

WARNING:
Exhaust emissions must be checked outdoors, or at least in a suitable place equipped according to the regulations in force.

The control should be carried out with the engine at normal operating temperature (i.e. when the fan has turned on and then off) and running at idle speed.
If the idle speed is not within the specified limits, check the constant idle speed actuator.

- Check that the engine oil level is correct and that the air cleaner cartridge is clean.
- Start the engine and keep it at idle speed.

1. Insert the feeler of the analyzer in the end piece of the exhaust pipe anch check that the amount of CO and HC are within the specified limits.

CO at the exhaust	≤ 2.2 g x km
HC + NOx at the exhaust	0.5 g x km

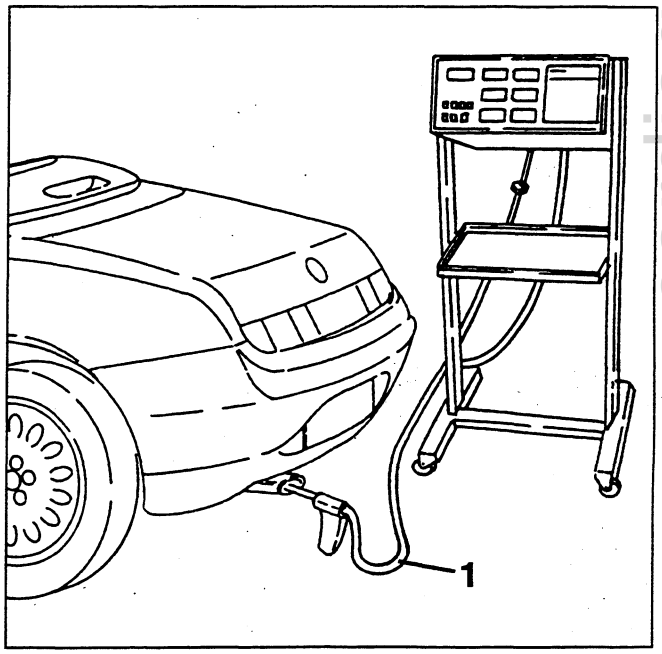

cardiagn.com

TIMING SENSOR

The timing sensor (cam angle sensor) comprises a Hall effect device.
The voltage signal "lowers" sharply when the tooth machined on the camshaft drive pulley opposite the sensor passes in front of it.

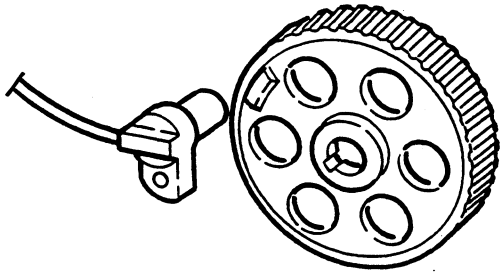

REMOVAL/REFITTING

- Disconnect the battery (-) terminal.
1. Remove the intake duct of cyl. no. 4.
2. Disconnect the electrical connection of the timing sensor.

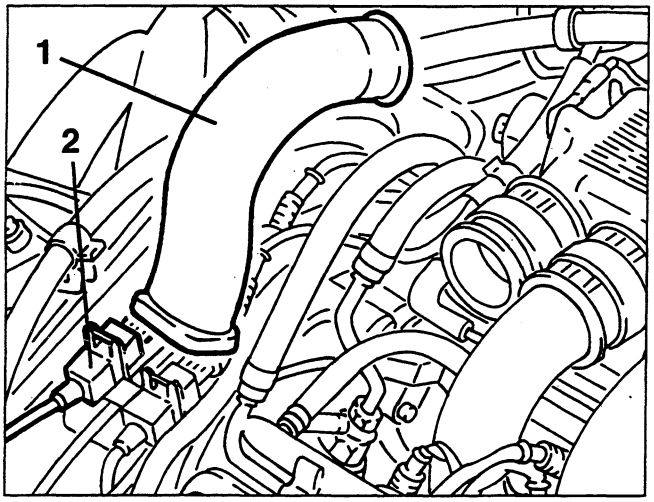

1. Slacken the fastening screw and remove the timing sensor .

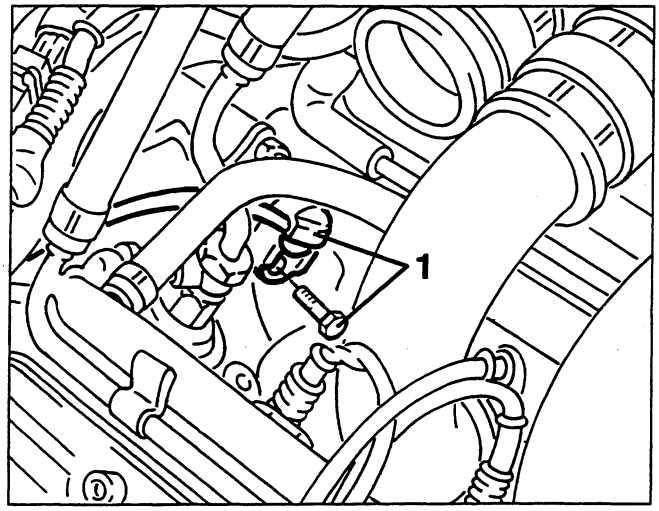

CHECKING THE GAP

- Remove the timing sensor (see specific procedure).
1. Using tool N° 1.820.079.000 (A.2.0449), measure dimension "A".

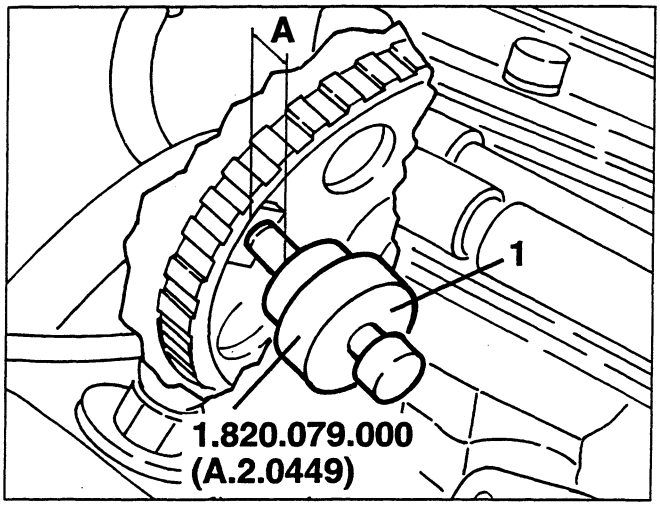

1. Using a gauge measure dimension "A".

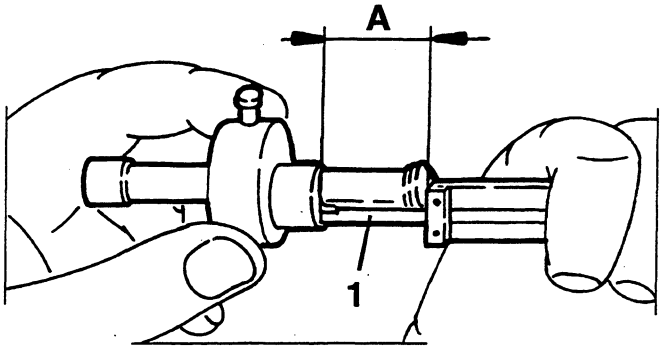

1. Using a gauge measure dimension "B" on the sensor.

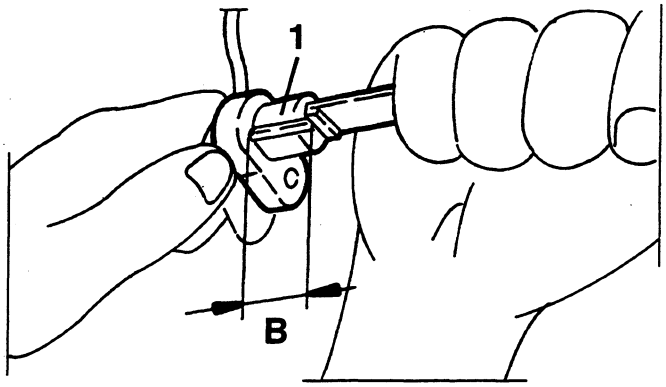

- Calculate the timing sensor gap and check that it is within the specified limits.

A - B = 0.1 ÷ 1.5 mm

cardiagn.com

RPM SENSOR AND TIMING SENSOR

The sensor for detecting the rpm and engine timing is of the inductive type which operates through the change of a magnetic field generated by the passage of the teeth of a toothed pulley (phonic wheel) fitted on the flywheel.
The teeth which pass in front of the magnetic field generator change the gap between the pulley and the sensor; therefore, the dispersed flux, which consequently varies, induces an alternate sinusoidal voltage in the coils of the sensor, the amplitude of which depends on the peripheral speed of the phonic wheel, the gap between the tooth and the sensor, the shape of the teeth, the magnetic characteristics of the sensor and on the support system.
The output signal which varies in relation to the rpm is processed by the control unit to obtain a signal at each passage through zero and a constant rectangular oscillation of amplitude to enable the control of the digital circuits inside the control unit. The interval between the start of one tooth and another is 6° with the exception of the reference mark which is made by eliminating two of the 60 teeth of the pulley. The hollow due to the lack of two teeth gives the control unit a reference point of the crankshaft and each subsequent tooth of the phonic wheel informs the control unit of an increase in its angular position.

1. *Phonic wheel*
2. *Core*
3. *Winding*
4. *Permanent magnet*

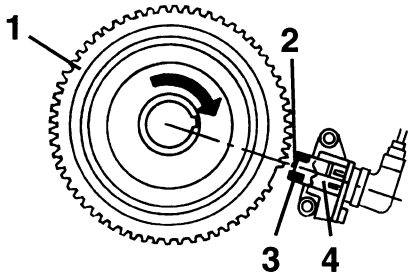

REMOVAL/REFITTING

1. Disconnect the connection of the rpm and timing sensor.

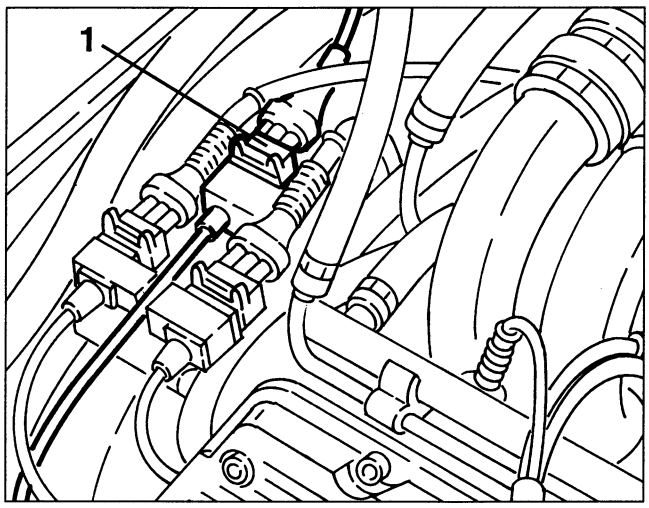

- Remove the right front wheel and mud flap.
1. Slacken the two fastening screws and remove the rpm and timing sensor complete with support.

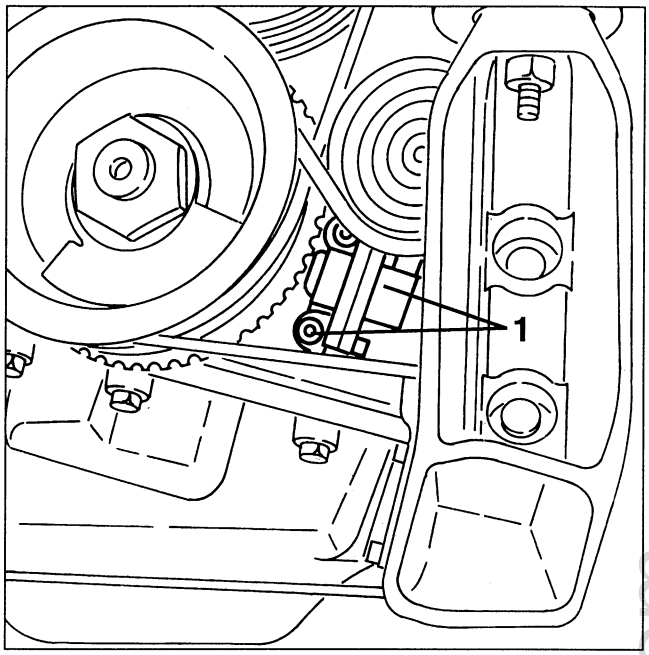

CHECKING THE GAP

- Remove the right front wheel and dust guard.
1. Using a thickness gauge, check that the gap between the sensor and phonic wheel is between the specified limits.

Rpm and timing sensor gap
0.5 ÷ 1.5 mm

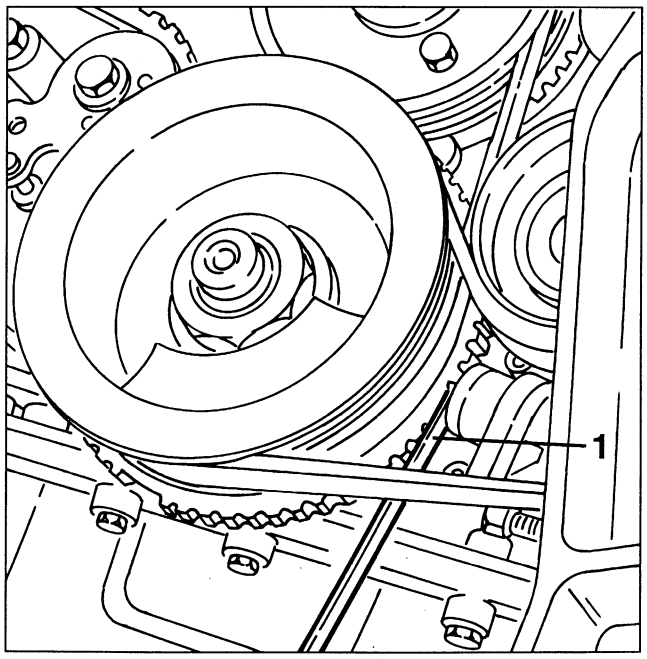

Cardiagn.com

ENGINE COOLANT TEMPERATURE SENSOR (NTC)

This sensor detects the engine coolant temperature on the thermostatic cup through a thermistor (NTC) with a negative resistance coefficent, i.e. capable of lowering its resistance as the temperature increases. The electric signal obtained reaches the electronic control unit where it is used to correct the air-fuel mixture.

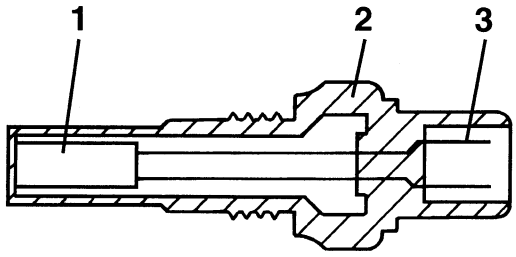

1. NTC resistance
2. Body
3. Connector

REMOVAL/REFITTING

- Disconnect the battery (-) terminal.
1. Disconnect the electrical connection from the engine coolant temperature sensor (NTC).
2. Slacken and remove the engine coolant temperature sensor from the thermostatic cup.

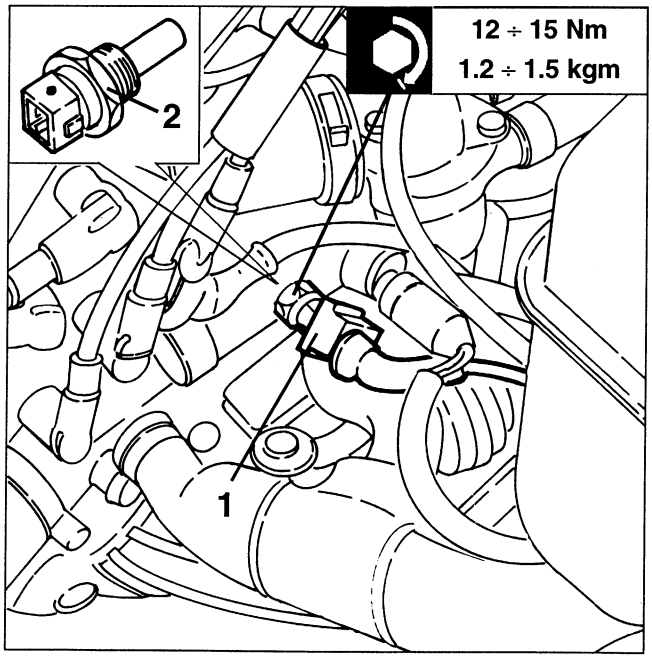

INERTIAL SWITCH

In the front side of the driver's seat there is a safety switch which is triggered in the case of an impact, cutting off the fuel pump connection to earth, thereby also the supply to the injection system.

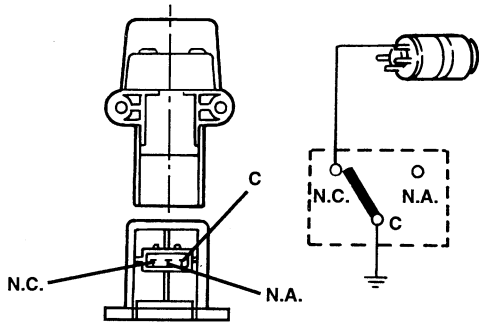

A steel ball fitted in a taper housing is normally held in place by the force of attraction of an adjacent magnet.
Under specific acceleration loads the ball releases itself from the magnetic force and gradually moves out of the taper support rising upwards following the angle of the taper.
A quick snap connection is fitted above the ball which forms the normally closed (N.C.) electric circuit.
When the mechanism is hit by the ball it changes position, from N.C. circuit to normally open circuit (N.A.), cutting off the fuel pump earth circuit.
In the event of impact in any one of the three orthogonal directions, the switch will be triggered above 12 g peak equivalent to a speed of 25 kph.
The switch can be reset pressing the pushbutton protected by a flexible cover (this also protects against foreign particles which might prevent the switch from operating or reprogramme it.

If after even a light crash, there is the smell of petrol or leaks are noted from the fuel supply system, do not reset the switch, but firstly seek the failure and repair it to prevent the hazard of fire.
Conversely, if there are no leaks and the car can be restarted, press the pushbutton to reactivate the fuel pump.

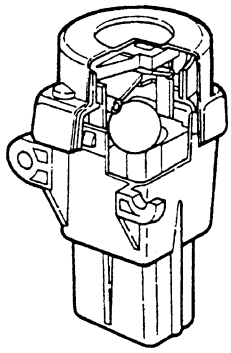

cardiagn.com

REMOVAL/REFITTING

- Disconnect the battery (-) terminal.
1. Slacken the two fastening screws and remove the plastic cover protecting the inertial switch.

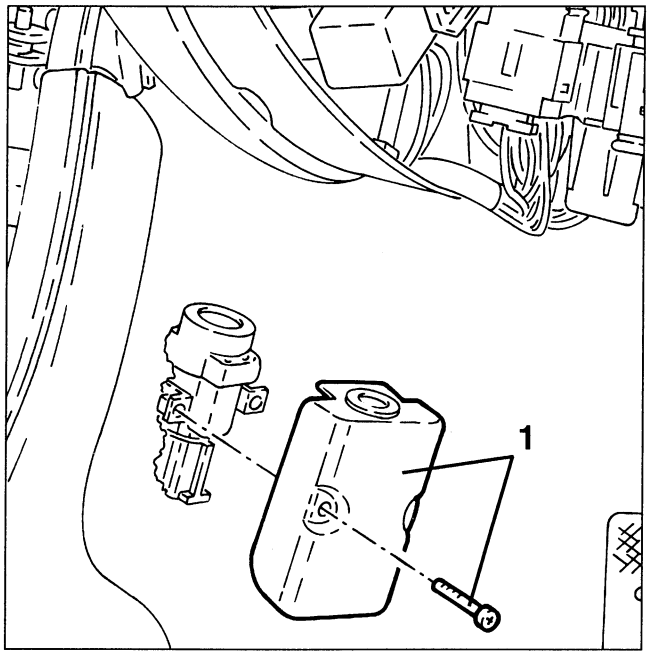

1. Slacken the two fastening screws, disconnect the electrical connection and remove the inertial switch.

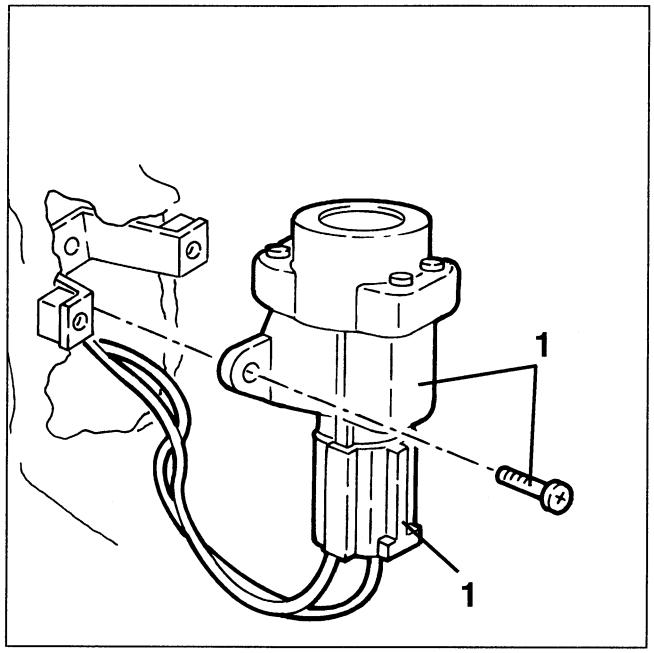

KNOCKING SENSORS

The knocking sensors detect the intensity of the vibrations (pinging) caused by knocking in the combustion chambers.
In this condition the control unit increases the amount of fuel and reduces the advance ratings, calculated by a special map, so that pinging is stopped in the shortest time possible: the advance curves are in fact reduced by appr. 2°, then if necessary by another 2° etc., until knocking ceases, after which the normal advance corresponding to the original map is resumed.

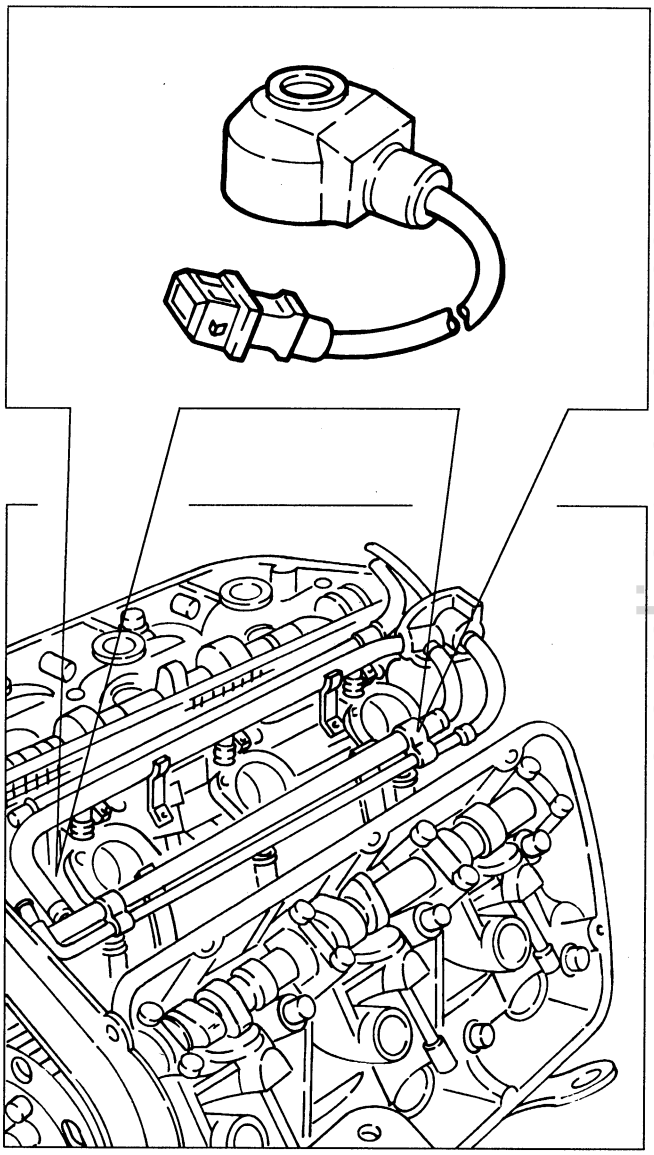

cardiagn.com

ENGINE COOLING SYSTEM

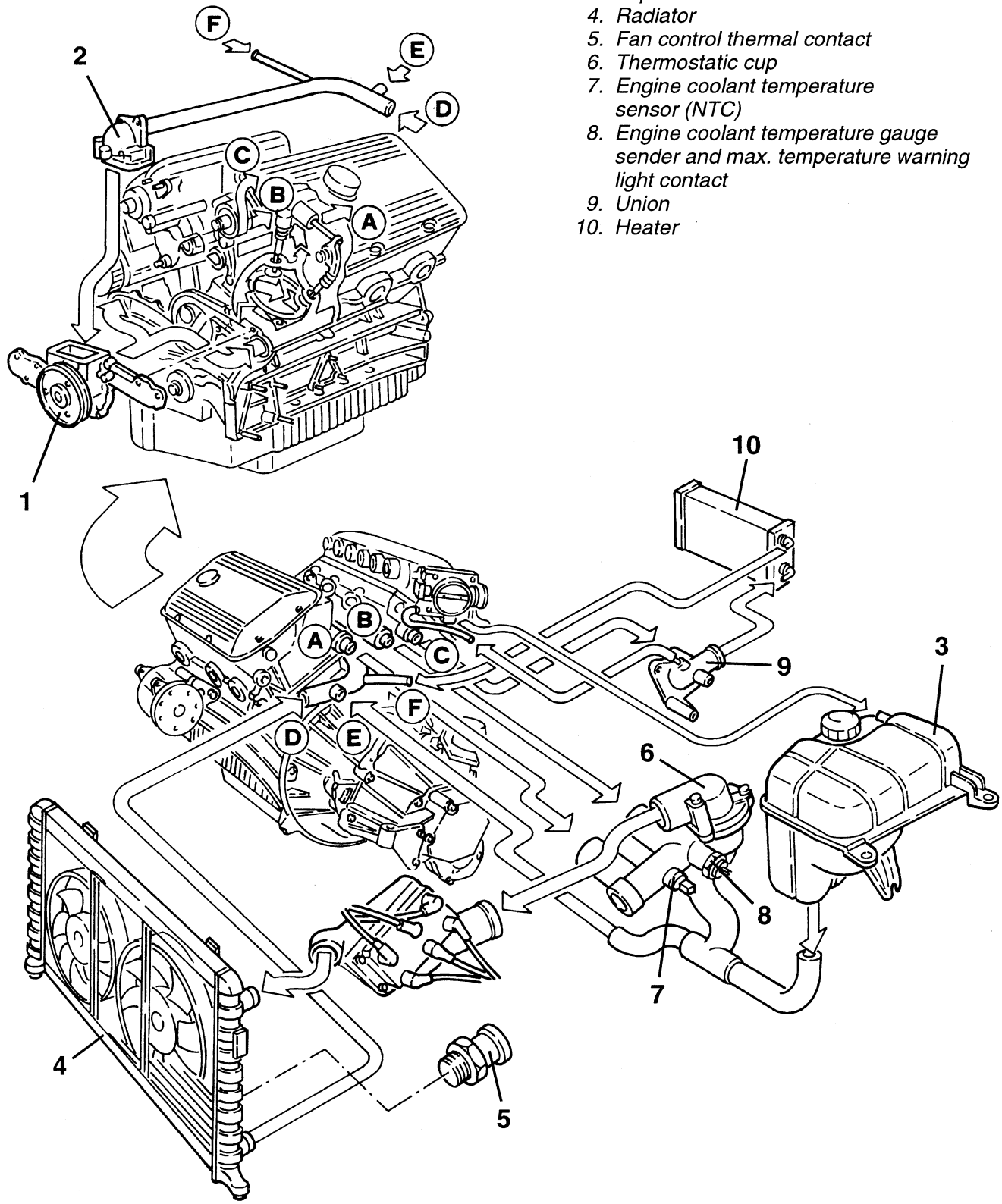

1. *Water pump*
2. *Water pump cover*
3. *Expansion tank*
4. *Radiator*
5. *Fan control thermal contact*
6. *Thermostatic cup*
7. *Engine coolant temperature sensor (NTC)*
8. *Engine coolant temperature gauge sender and max. temperature warning light contact*
9. *Union*
10. *Heater*

cardiagn.com

DESCRIPTION

The cooling system is of the sealed type with forced circulation by a centrifugal pump (1) operated by the crankshaft through a POLY-V belt.
A thermostatic valve (6) fitted on the rear of the engine keeps the engine temperature at an optimum level: it opens when the coolant reaches a temperature of 87 ± 2°C.
The radiator (4) cools the fluid by dynamic air and by two fans with two speeds which are turned on by a thermal contact (5) located on the radiator; two additional resistances and a relay operate the higher fan speed if high temperatures are reached.
The expansion tank (3) tops up the circuit if the level falls and absorbs the changes in the volume of the coolant due to changes in temperature: it also vents air from the circuit.
The circuit also includes a coolant temperature gauge sender (8) and a thermal contact for the maximum temperature warning light which turns on when the coolant temperature exceeds 115 °C.

OPERATION OF THE CIRCUIT

After the fluid has cooled the engine it leaves the cylinder heads and reaches the thermostatic unit (9). From here, if the temperature is below 87 °C it is drawn into the pump (1) through a longitudinal coolant return manifold located between the two cylinder heads. Conversely, if the temperature exceeds this value, the fluid is directed to the radiator (4) through the opening in the thermostat, also heating the ignition coils through a special support.
After being cooled in the radiator, the fluid returns, still through the longitudinal manifold, to the pump which directs it to the engine.
A special union on the right-hand cylinder head receives the coolant from an additional groove on the head and sends it through two special pipes to the heater (10) of the climate control system and to the throttle body to warm it.
The latter is connected to the expansion tank (3) via a special pipe which in addition to returning the coolant fluid also vents air from the system.

cardiagn.com

1. Disconnect the electrical connection from the minimum engine oil pressure sensor.
2. Disconnect the electrical connections from the alternator, then remove the electric wiring after freeing from the fasteners.

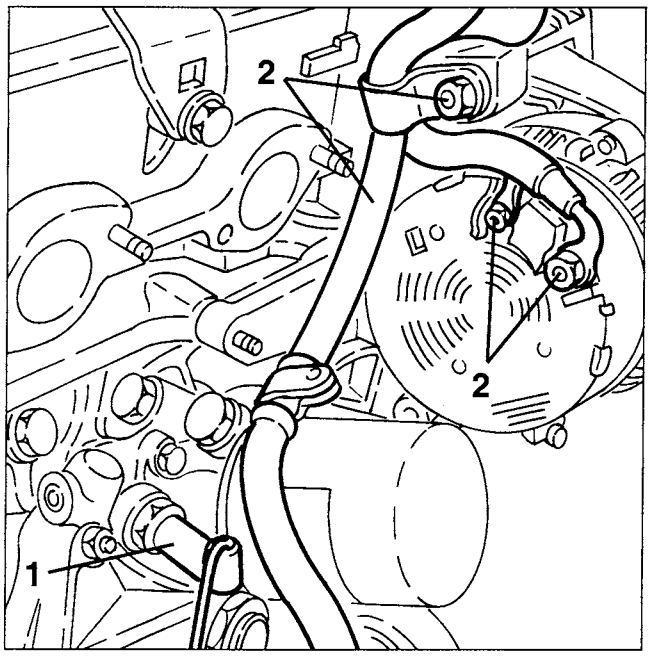

- Drain the gearbox-differential oil.
1. Slacken the three fastening screws and withdraw the intermediate shaft.
2. Remove the dust guard ring.
3. Slacken the screws and fastening nuts and remove the oil filter support complete.

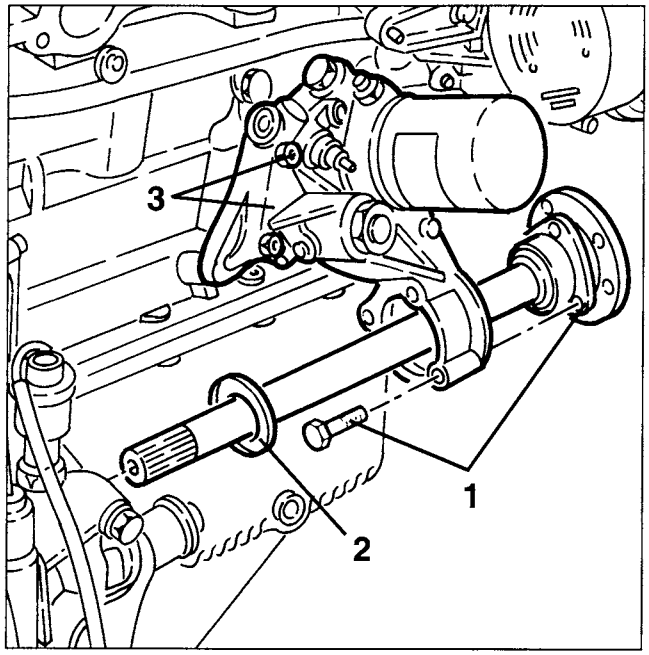

1. Slacken the fastening nuts and remove the left-hand exhaust manifold.
- Remove the corresponding seals.

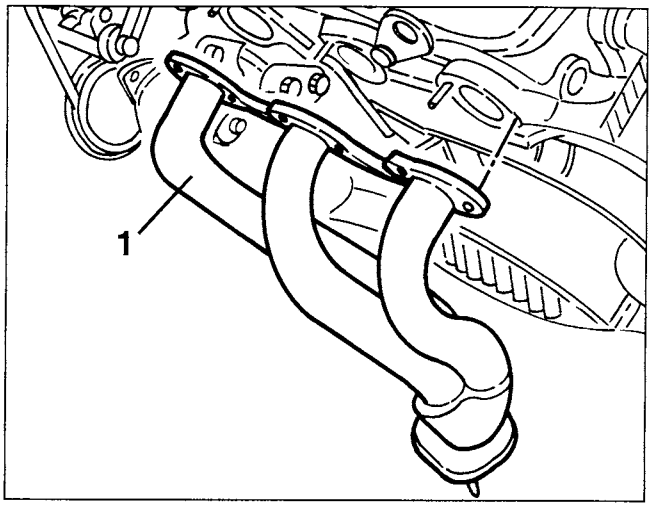

1. Slacken the screws and fastening nuts and, using a hydraulic hoist, remove the gearbox-differential unit.

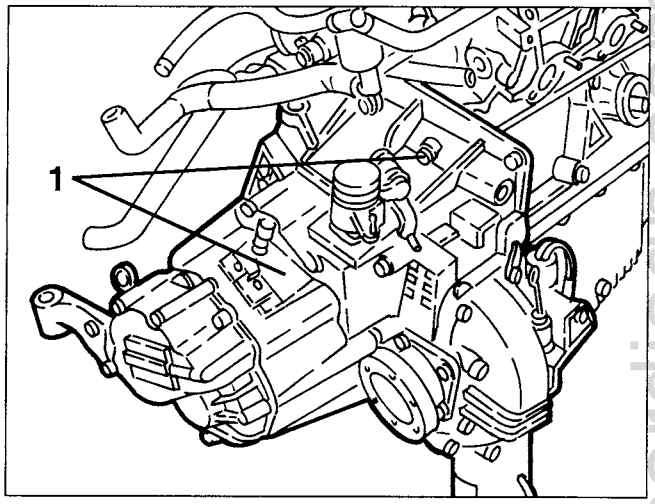

REFITTING

Reverse the sequence followed for removing operations adhering to the following instructions:
- Prepare the engine compartment to receive the power unit assembly, positioning all the electrical cables, pipes, etc. so that they do not interfere with assembly operations.
- Take due care when refitting the power unit to avoid damaging the single components.

WARNING:
Make sure that the support points of the power unit have been fastened correctly.

- Upon completion of assembly operations, check that the belts are tensioned correctly, refill the various systems as specified (see GROUP 00).
- Carry out all the necessary checks and adjustments (see GROUP 00).

cardiagn.com

CYLINDER HEADS

REMOVAL/REFITTING RIGHT HAND CYLINDER HEAD

- Set the car on a lift.
- Disconnect the battery (-) terminal.
- Remove the right front wheel and mud flaps.

1. Raise the car and drain the coolant fluid disconnecting the radiator outlet sleeve.

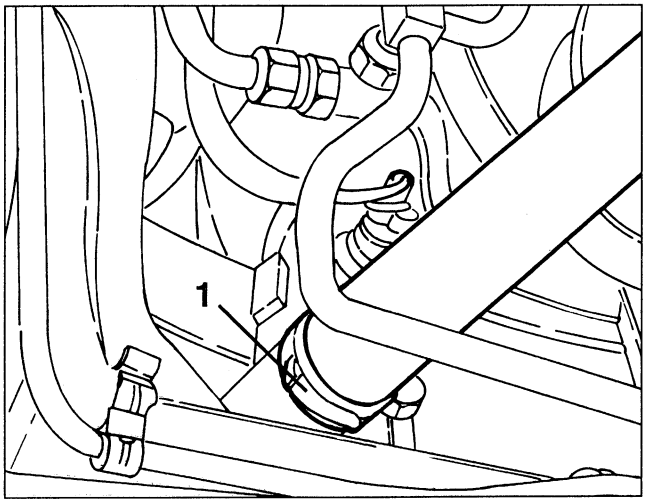

- Using a suitable syringe, empty the power steering fluid tank.

1. Slacken the fastening screws and remove the radiator upper crossmember.

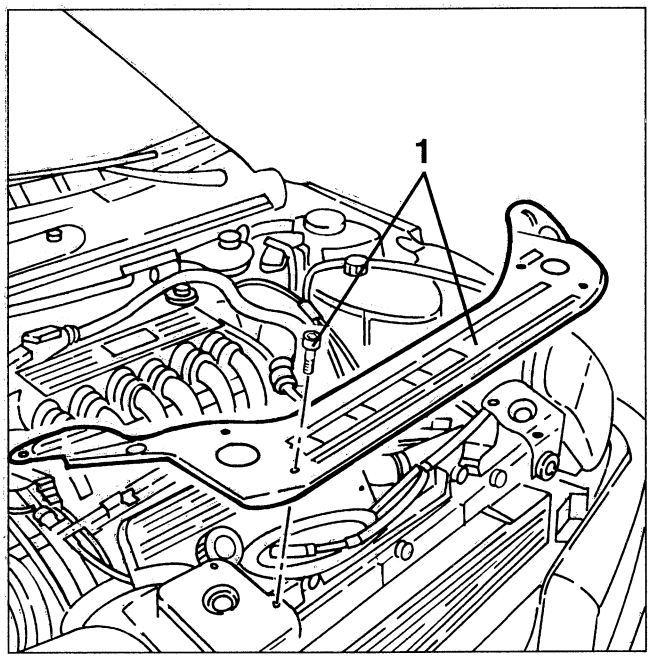

1. Disconnect the electrical connections from the cooling fans.
2. Disconnect the electrical connections from the fan speed coil.

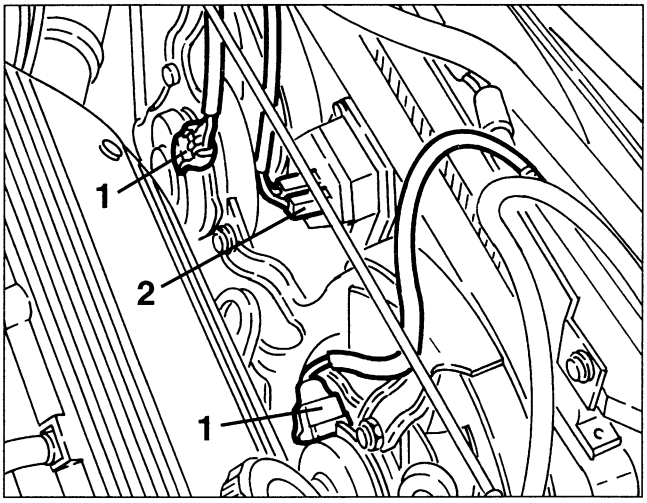

1. Disconnect the coolant delivery sleeve to the radiator from the ignition coils support.

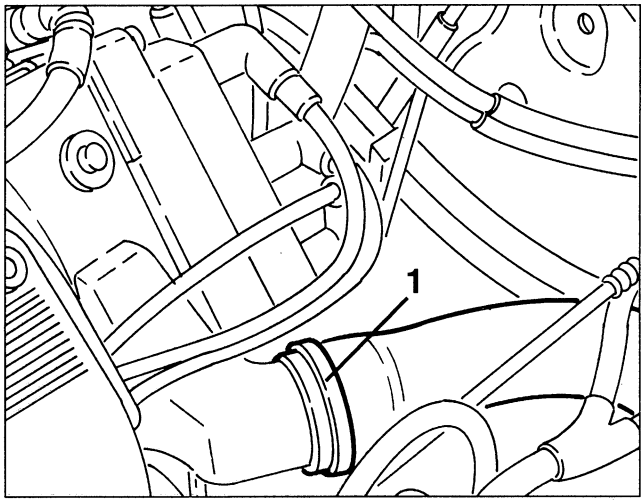

1. Slacken the four fastening screws, lower the lower radiator crossmember just enough to remove the two clamps supporting the engine oil delivery-return pipes to the radiator, then remove it after freeing it from the conditioner pipes.

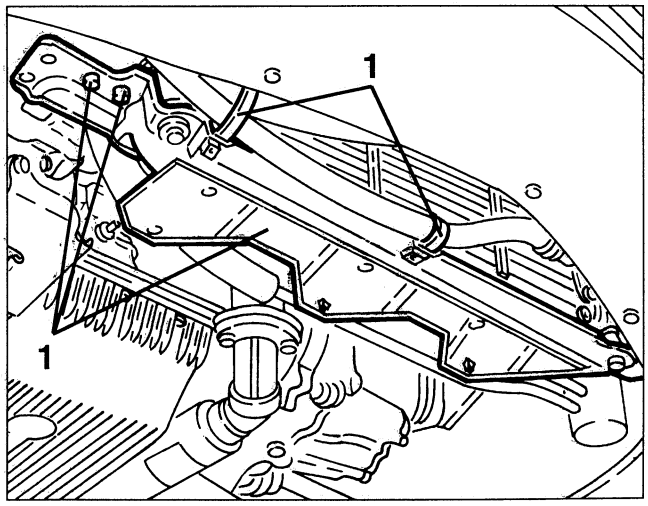

cardiagn.com

1. Disconnect the bonnet opening cable from the locks.

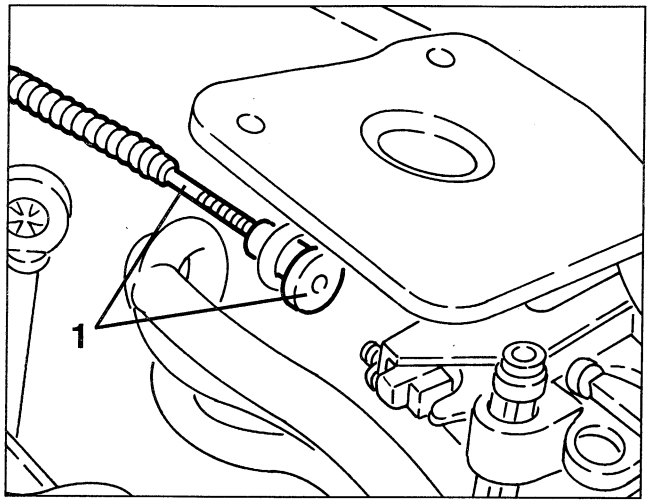

1. Slacken the fastening screws and remove the cooling fans.

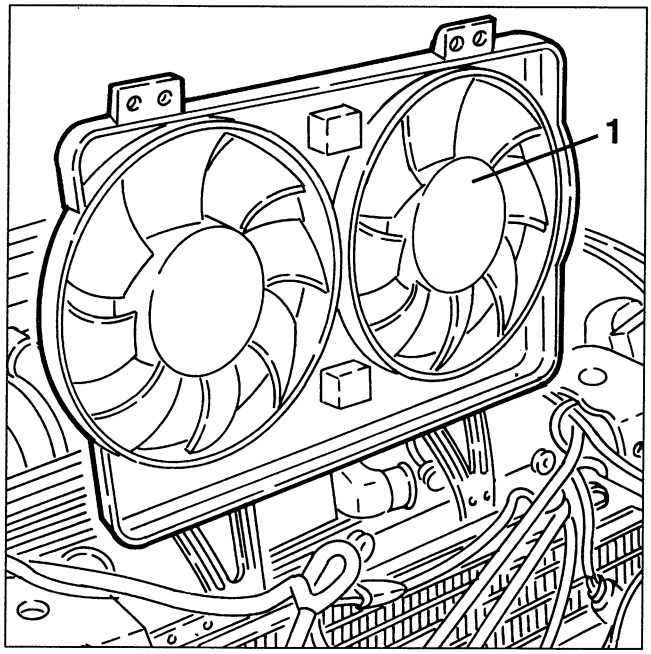

1. Disconnect the earth cables from the body.

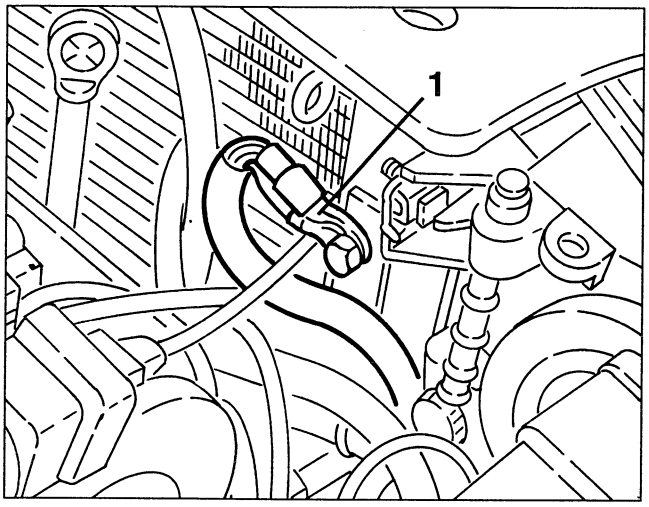

- Working from under the car remove the power steering pump (see GROUP 41).

1. Disconnect the front section of the exhaust pipe from the corresponding manifolds.

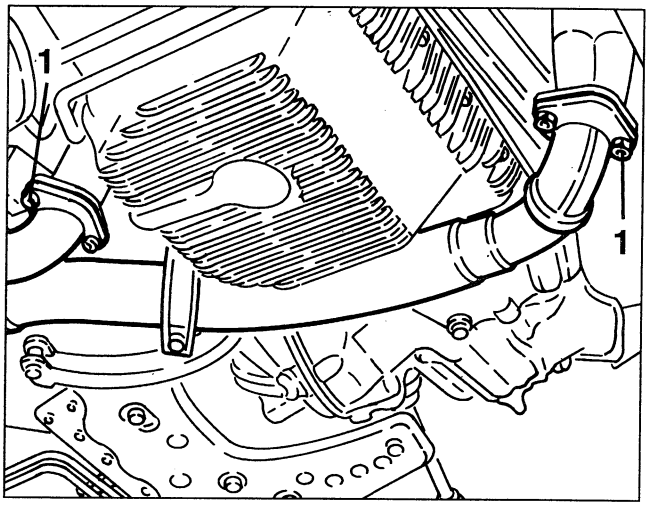

1. Disconnect the connections of the exhaust gas takeoff pipe for the E.G.R. valve, then remove it.

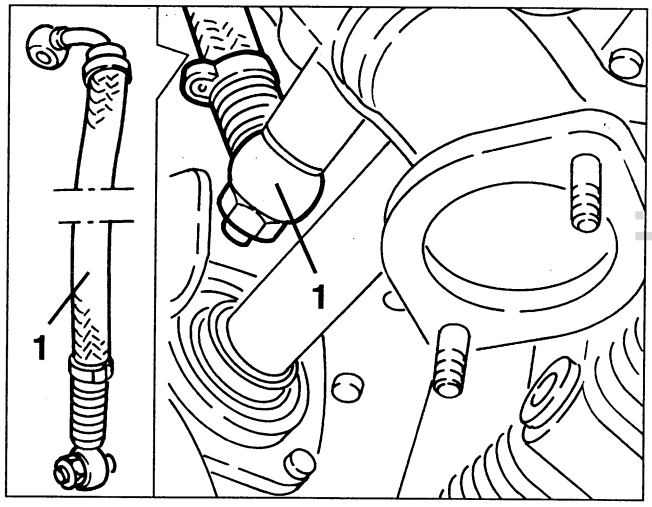

1. Remove the engine stay rod and corresponding support.

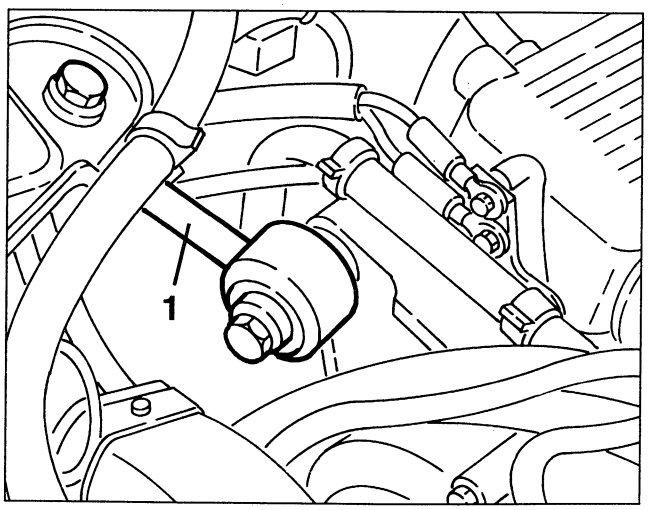

cardiagn.com

- Remove the corrugated sleeve complete with air cleaner cover proceeding as described in "Removing the Engine".
- Remove the intake box (see specific paragraph).

1. Remove the engine oil dipstick complete with guide.

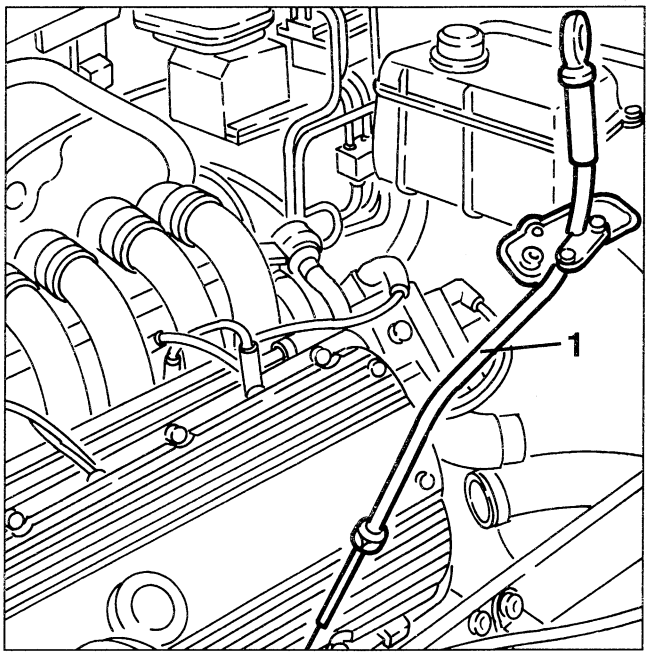

1. Disconnect the electrical connection from the coolant fluid temperature sensor (NTC).
2. Disconnect the electrical connection from the coolant temperature gauge transmitter and max. temperature warning light contact.
3. Disconnect the electrical connection from the ignition coils.

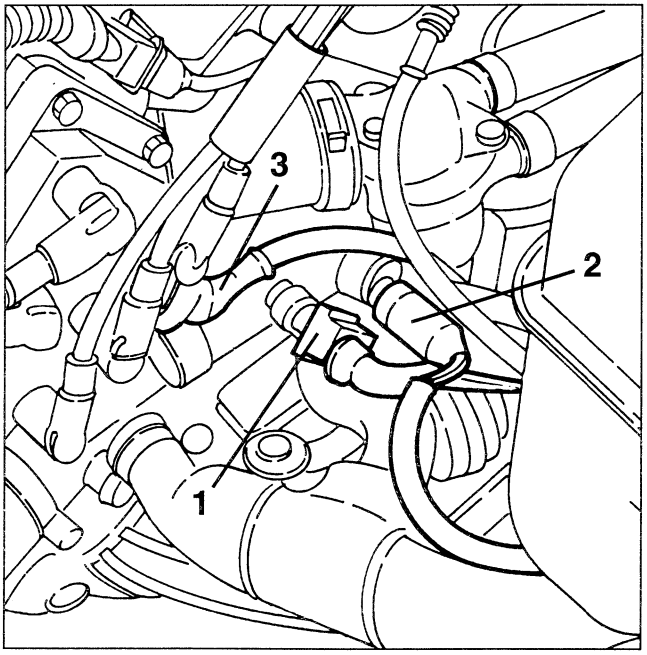

1. Slacken the four fastening screws and remove the left hand cylinder head.

2. Disconnect the electrical connections from the electroinjectors.

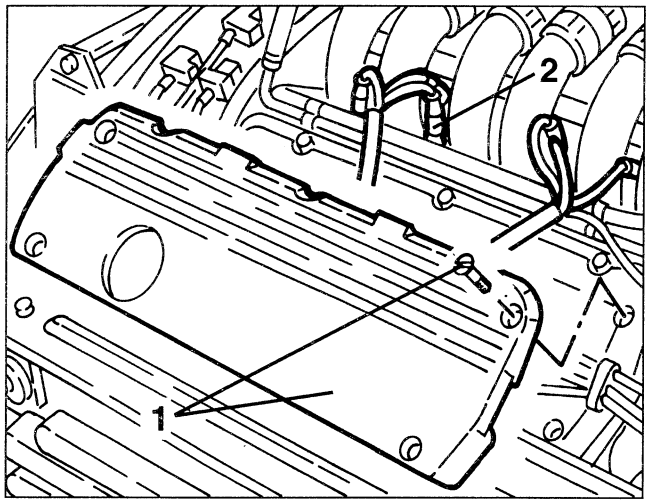

1. Disconnect the high voltage cables from the spark plugs.
2. Slacken the fastening screws and remove the ignition coils complete with spark plug cables.

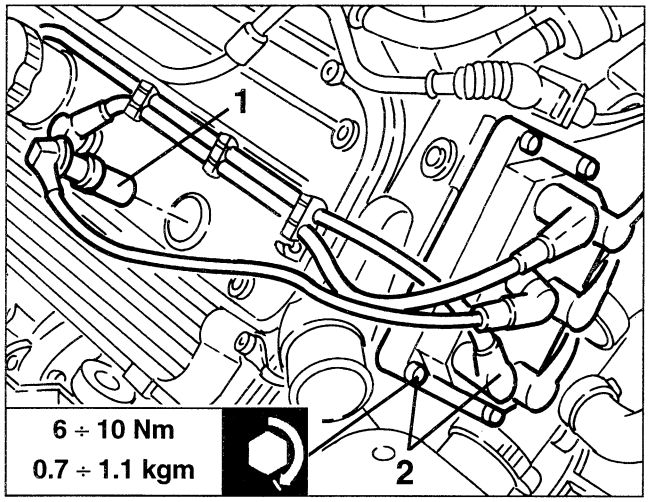

6 ÷ 10 Nm	
0.7 ÷ 1.1 kgm	

1. Disconnect the engine cooling pipes involved, slacken the fastening screws, then remove the thermostatic cup complete with ignition coils support and sleeves.

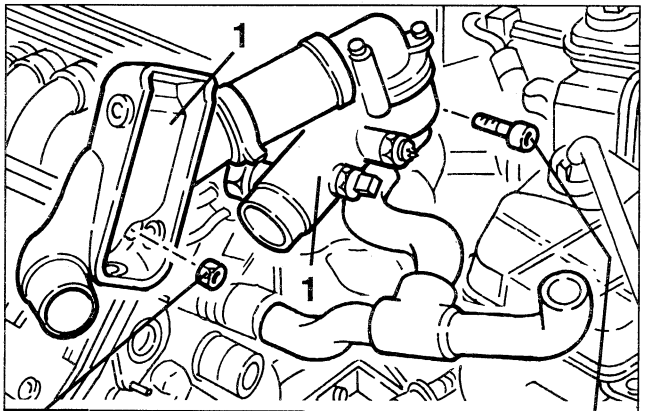

14 ÷ 17 Nm	32 ÷ 39 Nm
1.4 ÷ 1.7 kgm	3.3 ÷ 4.1 kgm

cardiagn.com

1. Disconnect the timing sensor connection.
2. Disconnect the pinging sensor connection.
3. Disconnect the rpm and timing sensor connection, then move the wiring to one side.
4. Disconnect the fuel delivery and return pipes from the distributor manifold.

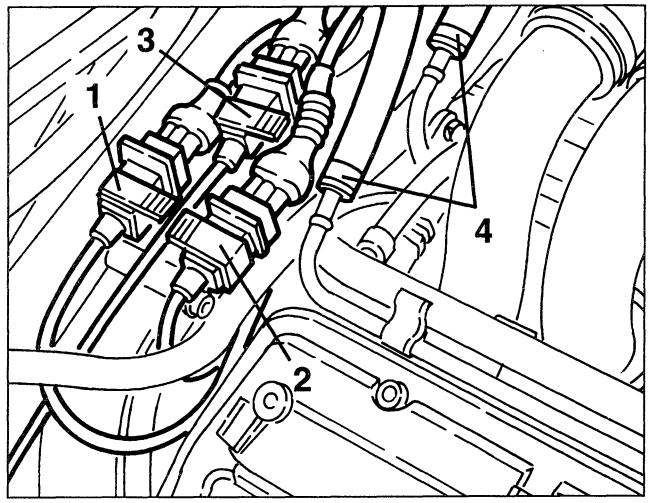

1. Disconnect the fuel vapour recirculation pipe.

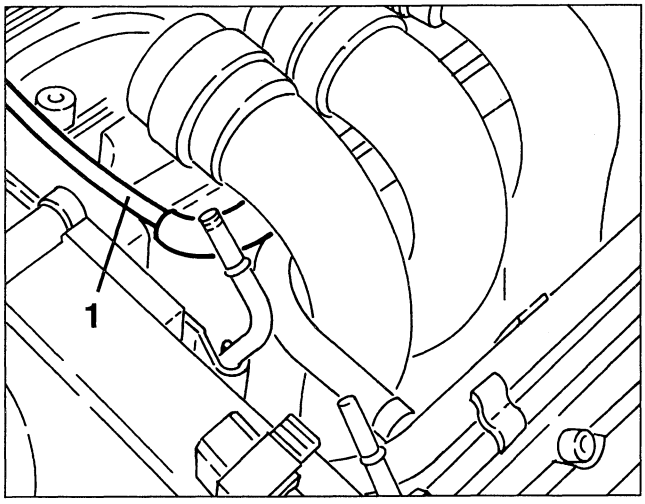

1. Disconnect and remove the servobrake vacuum takeoff pipe.

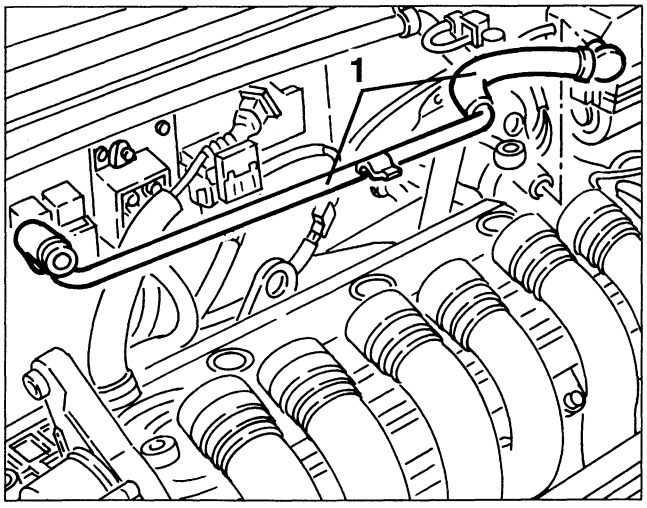

1. Set a hydraulic jack under the gearbox, then slacken the power unit support fastening screw on the gearbox side.

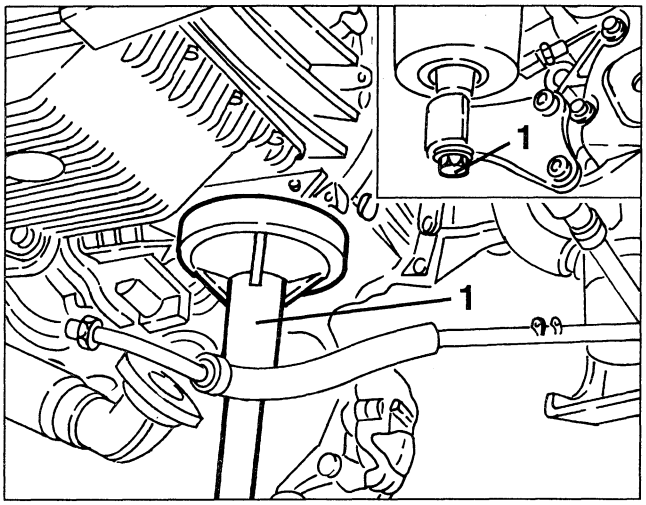

1. Lower the power unit just enough to slacken the fastening nuts and remove the right hand exhaust manifold.
- Retrieve the seals.

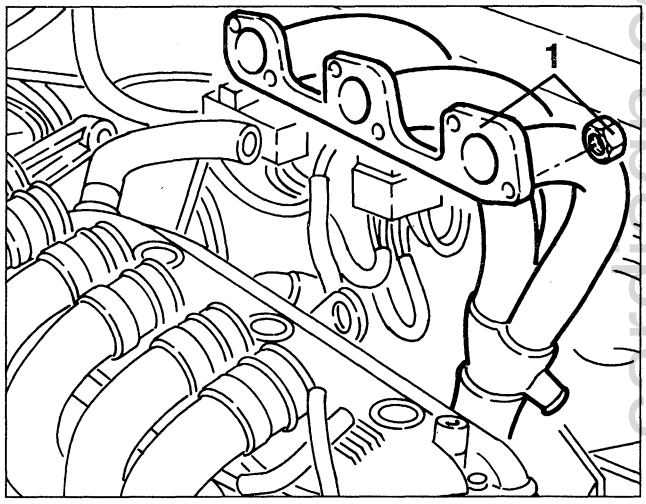

1. Slacken the fastening screws and remove the timing belt cover.

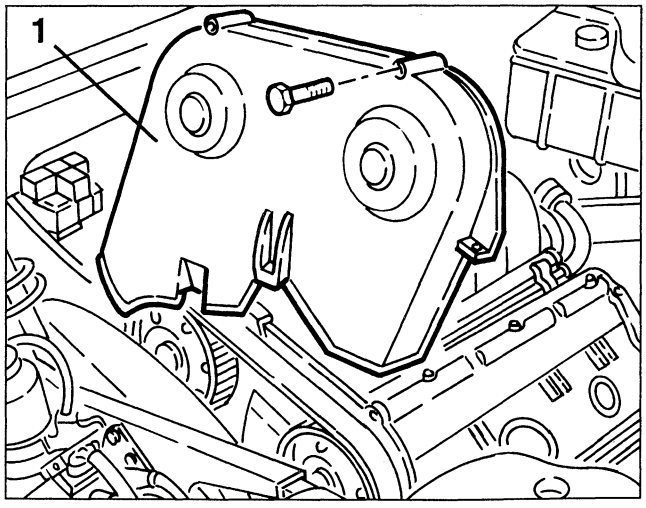

cardiagn.com

1. Slacken the screws fastening the alternator and upper support bracket, remove the drive belt and from above, remove the alternator complete with bracket.

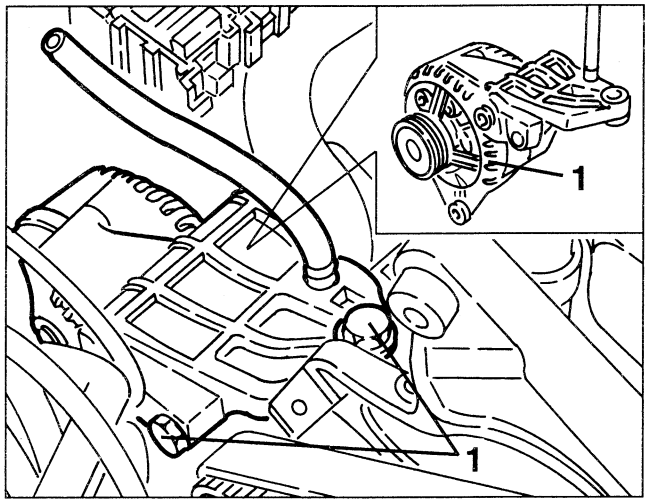

1. Slacken the fastening screws and remove the intake ducts.

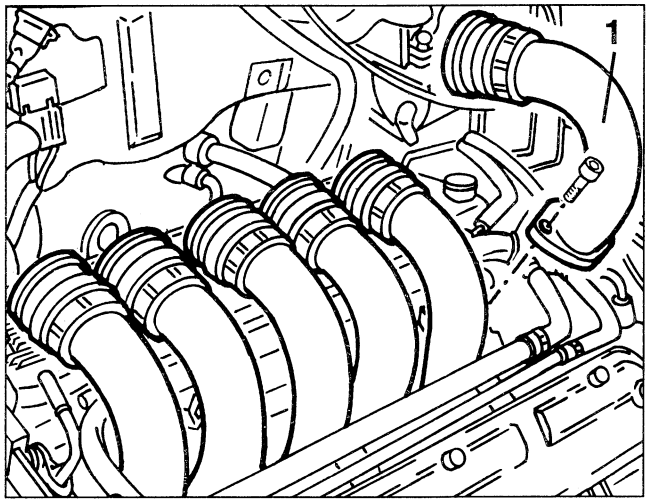

1. Slacken the fastening screws and remove the fuel distributor manifold complete with electroinjectors, pressure regulator and pulse damper.

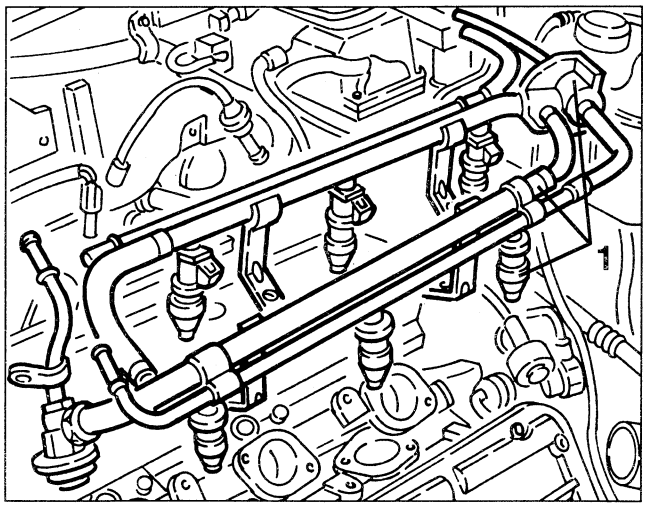

1. Slacken the fastening screw and remove the timing sensor from the right hand cylinder head.

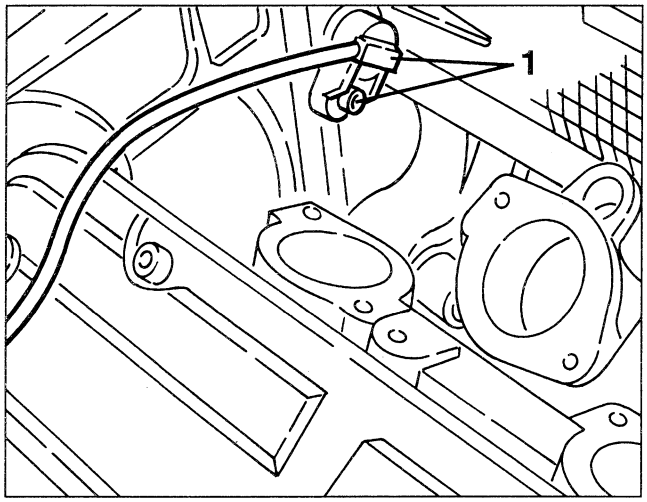

1. Slacken the fastening screws and remove the timing gear covers from the cylinder heads.

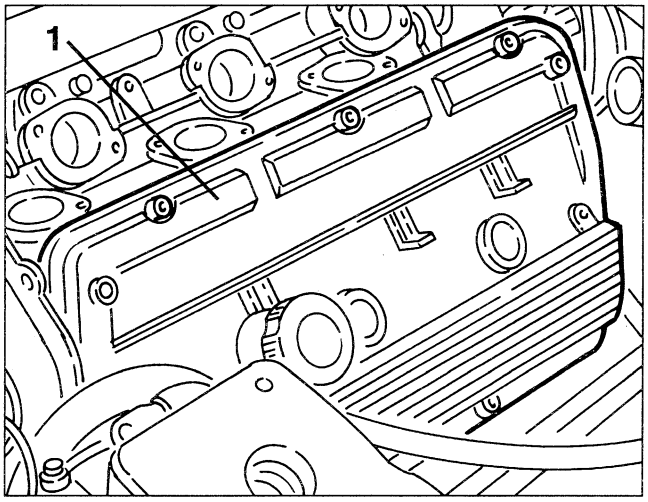

1. Turn the crankshaft until the notches on the camshafts coincide with those on the corresponding caps.

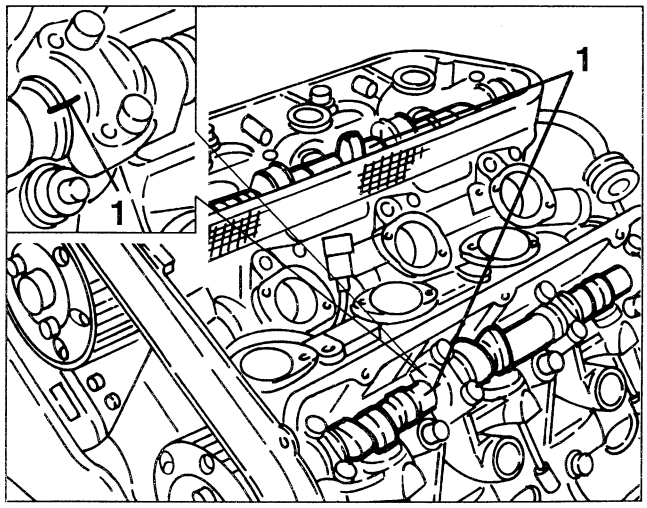

cardiagn.com

1. Slacken the two nuts fastening the timing belt tensioner, then remove the belt.

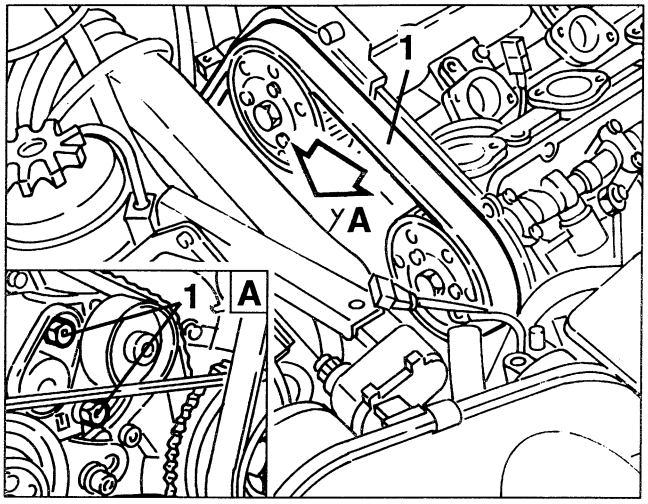

1. Levering with tool no. 1.822.146.000 and no. 1.822.151.000, slacken the nut and the three screws fastening the right-hand timing gear drive pulley, then remove it.

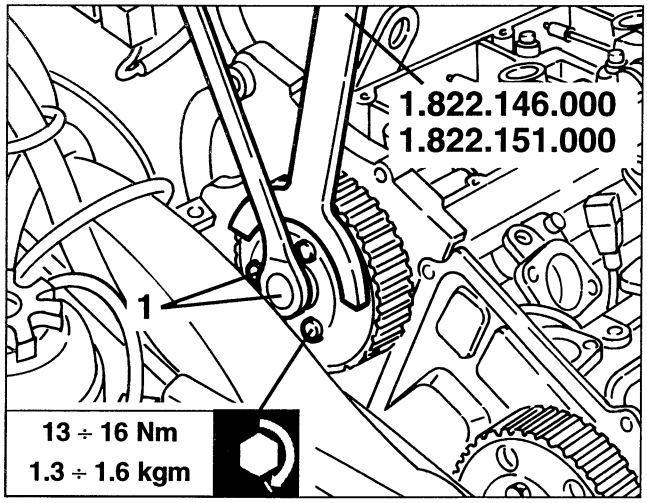

1. Slacken the fastening screws and remove the rear timing belt cover.

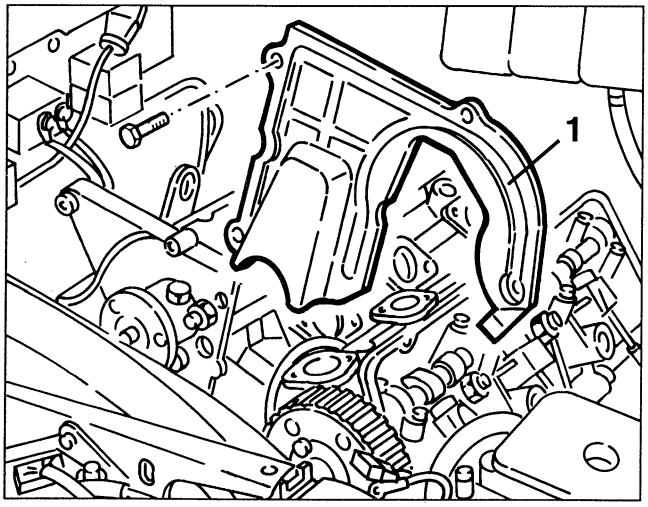

1. Slacken the nut fastening the intermediate oil pump driving gear.

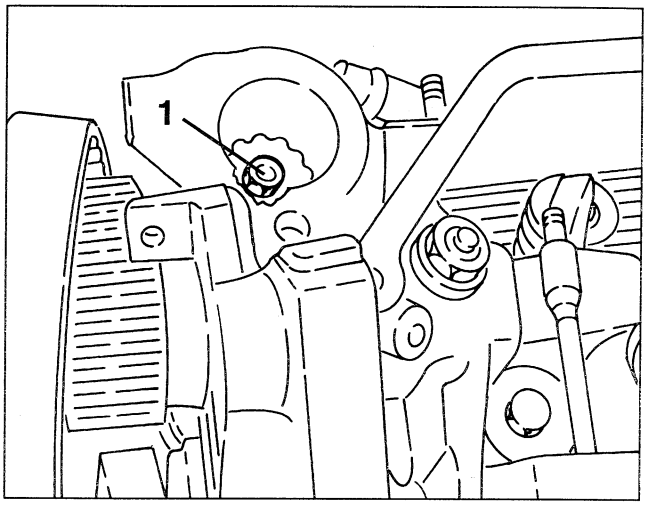

1. Disconnect the coolant delivery pipe to the radiator from the connection on the right hand cylinder head and remove it.

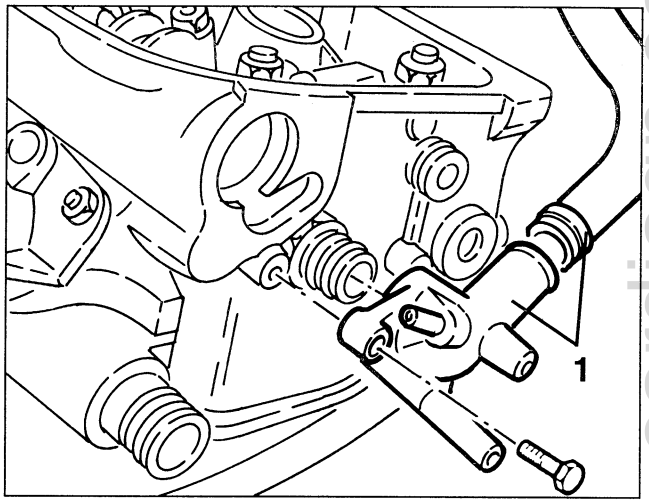

1. Slacken the fastening nuts and remove the right hand cylinder head.
- Remove the corresponding seal.

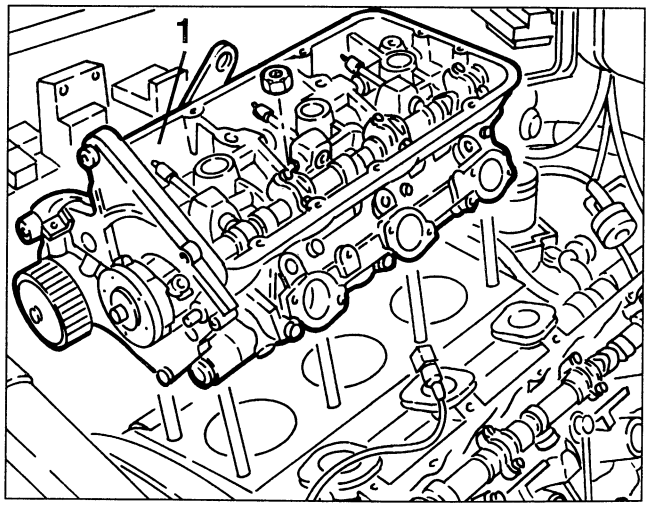

cardiagn.com

1. Install the cylinder liner stopper tools no. 1.820.279.000 on studs "a".

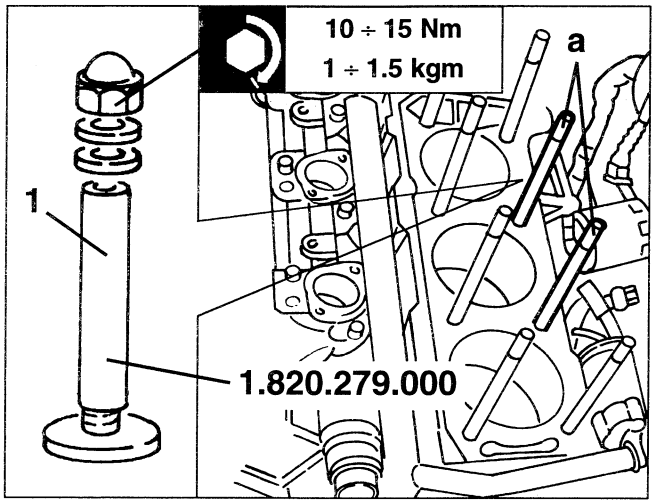

PRECAUTIONS FOR REFITTING

Reversing the sequence described for removal, adhere to the following instructions.
- Assemble the right hand cylinder head with the timing references aligned.
- Tighten the cylinder head fastening screws as described below and bearing in mind that, for each step, the tightening sequence is the one illustrated.

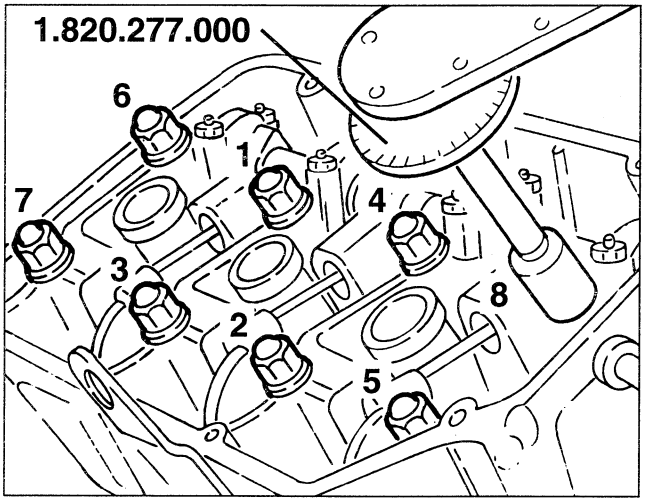

Tightening procedure	
Set in all the screws to a torque of:	25 Nm
Complete tightening with a further angle of:	230° ± 2°

1. Using tool no. 1.825.013.000 (C.6.0183) fitted with dial gauge turn the crankshaft until the piston of the first cylinder reaches the T.D.C. in the bursting stroke.
2. Check that the notches on the camshafts are aligned with those on the corresponding caps.

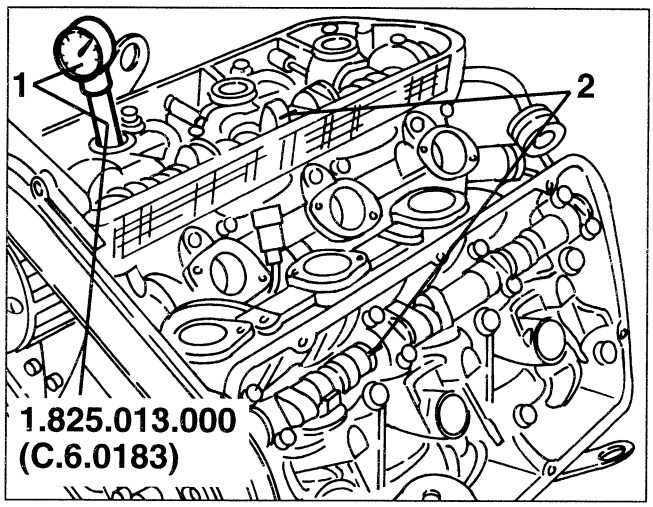

1. Position the timing belt tensioner so that stud "a" is as illustrated, then completely tighten the two fastening nuts locking them lightly.
- Fit the timing belt on the corresponding pulleys starting from the driving pulley, then continue counter-clockwise.
- Slacken the two belt tensioner fastening nuts.
2. Insert the 10mm square of tensioning lever "b" (3/8" ratchet) in the square hole of the belt tensioner, then turn it counter-clockwise so that the dial "c" moves by 2-3 mm with respect to notch "d", then turn clockwise until they coincide; tighten the two belt tensioner fastening nuts without locking them.
- Turn the crankshaft twice until the piston of cylinder no. 1 reaches the T.D.C.
- Check that dial "c" coincides with the centre notch "d" and tighten the two belt tensioner fastening nuts to the specified torque.
- Remove the tensioning lever "b" from the belt tensioner.

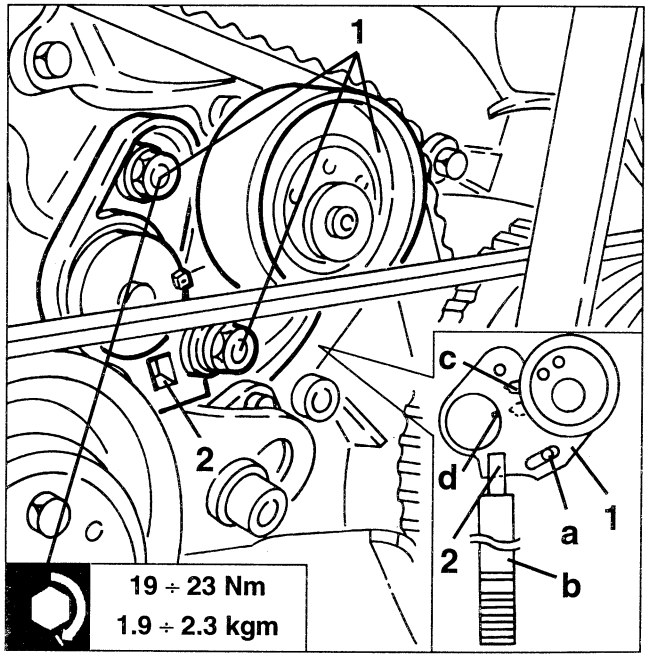

cardiagn.com

REMOVAL/REFITTING LEFT HAND CYLINDER HEAD

Proceed as described for removing and refitting the right hand head, with the following differences.
- Do not remove the E.G.R. exhaust gas takeoff pipe.
- Do not remove the servobrake vacuum pipe.
- The left hand exhaust manifold is to be removed instead of the right hand one, therefore it is not necessary to lower the power unit.
- Do not remove the alternator.
- Do not remove the timing sensor.
- Do not slacken the intermediate oil pump driving gear fastening nut.
- Do not remove the coolant connection from the right hand cylinder head.

1. Slacken the nuts fastening the left hand cylinder head.

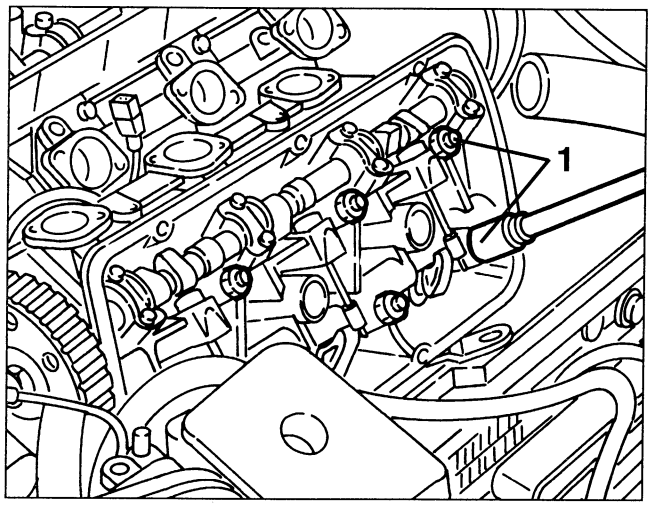

1. Install cross rail no. 1.820.581.000 (R.4.0194) complete with supports no. 1.820.239.000 to support the power unit

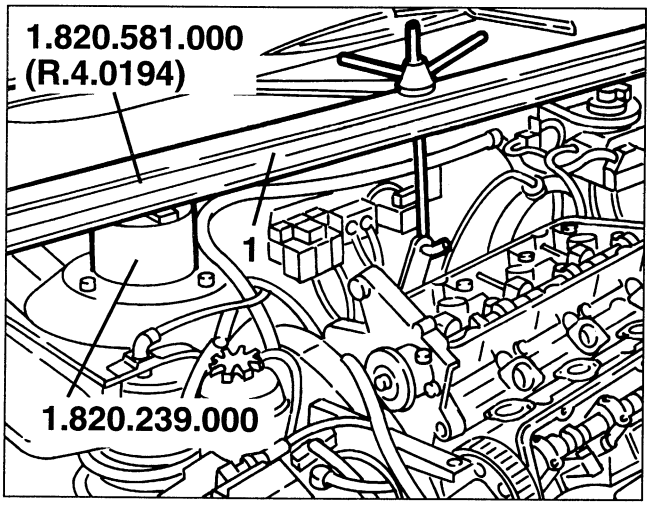

- Remove the front suspension crossmember (see GROUP 44).
- Lower the power unit using the centre tie-rod of the support crossrail just enough to withdraw the left hand cylinder head from its studs.
- Install cylinder liner stopper tools no. 1.820.279.000.

WARNING:
While waiting to refit the cylinder head, move the power unit to its initial position restoring the rear fastening.

PRECAUTIONS FOR REFITTING

Rfit the left hand cylinder head as described for the right hand cylinder head.

cardiagn.com

OIL SUMP

REMOVAL/REFITTING

- Set the car on a lift.
- Disconnect the battery (-) cable.
- Raise the car and drain the engine oil (see GROUP 00).
- Remove the front section of the exhaust pipe.

1. Slacken the fastening screws and remove the flywheel cover.

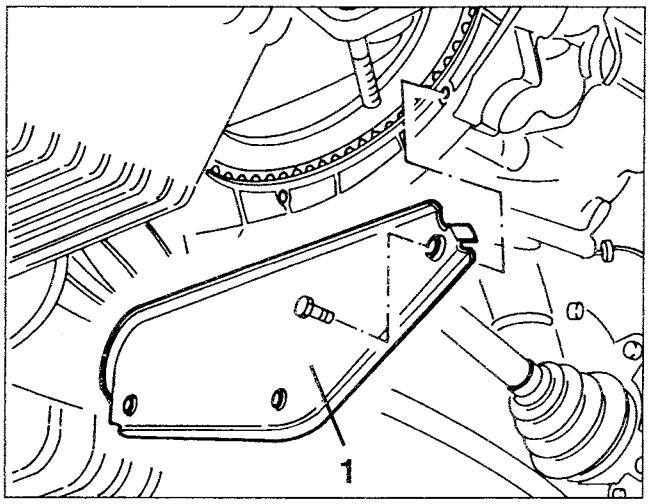

1. Remove the engine oil delivery and return pipes support bracket.

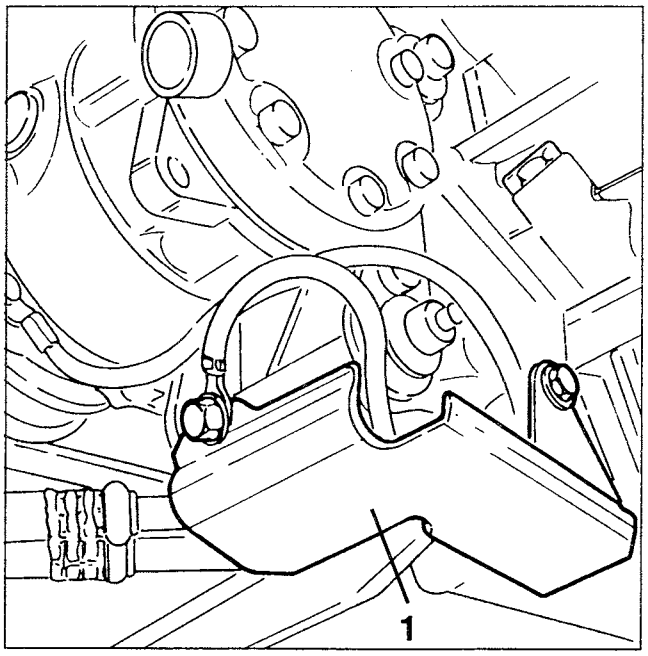

1. Disconnect the two oil delivery and return connections from the oil filter support, then leaving them connected to the radiator, fasten them at the side so that they do not hinder the removal of the oil sump.

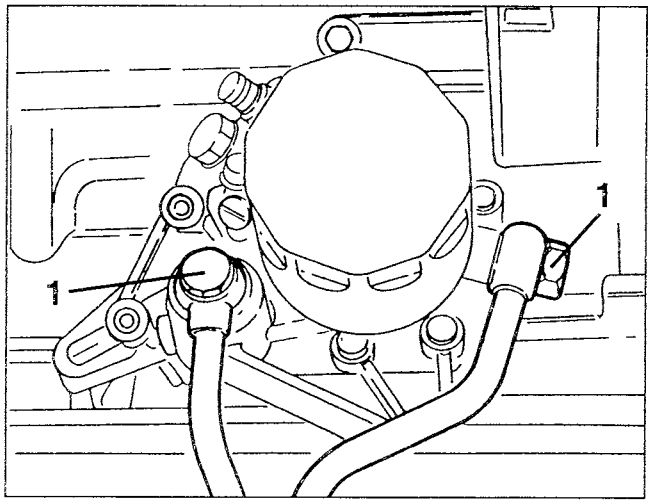

1. Slacken the fastening screws and remove the oil sump.

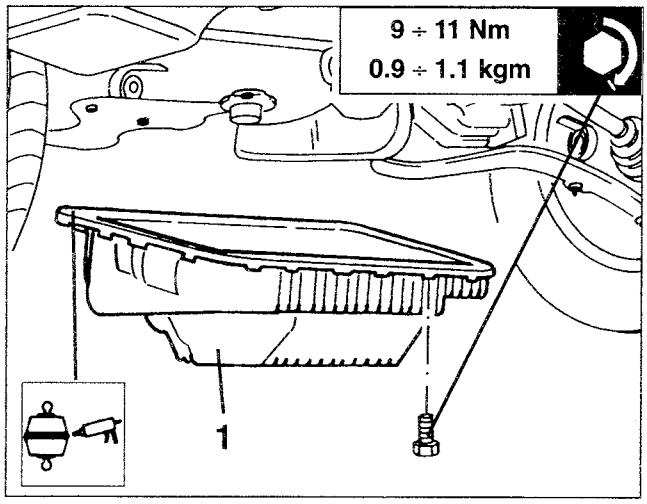

cardiagn.com

CLUTCH

INDEX

CLUTCH SYSTEM

- Description 1
- Clutch plate and pressure plate 2
  - Removal/refitting 2
  - Checks and inspections 3

CLUTCH CONTROL

- Clutch pump 4
  - Removal/refitting 4
  - Dis-assembly/reassembly 4
- Clutch control pedal 5
  - Removal/refitting 5
- Clutch control cylinder 5
  - Removal / refitting (6-cylinder engine) 5
  - Removal / refitting (4-cylinder engine) 6
  - Dis-assembly/reassembly 6
  - Checks and inspections 6
- Relieving the air from the hydraulic system . . . 7
- Minimum brake-clutch fluid level sensor 7
  - Removal / refitting 7

cardiagn.com

CLUTCH SYSTEM

DESCRIPTION

The clutch adopted is single-plate, dry with diaphragm pressure plate.

The clutch is disengaged by a hydraulic device comprising a reservoir (1) shared with the braking system, a pump (2) fastened to the pedal unit, a control cylinder (3) fastened to the gearbox cover and a thrust bearing (4).

The pump, operated by the pedal, transmits the fluid pressure increase to the control cylinder piston through the special pipe.

Through a prod, the piston acts on the lever and transmits the control to the fork which moves the thrust bearing overcoming the action of the diaphragm pressure plate.

In addition to reducing the effort required on the pedal, the adoption of the hydraulic clutch release device makes it possible to obtain:

- increased reliability in relation to the conventional, mechanical solution.
- improved smoothness due to the damping of the hydraulic system during disengagement which avoids jerking, particularly when the transmitted torque is high.
- greater operating precision as this device permits constant adjustment of the height of the clutch pedal.
- increased driving comfort as a result of the reduction of the level of vibrations transmitted from the engine, due to the damping effect of the oil.

In order to meet the current laws concerning environmental pollution problems, ecological material (asbestos free) material has been used for the friction linings. For the six cylinder version a damper has been fitted on the hydraulic control circuit to graduate its action.

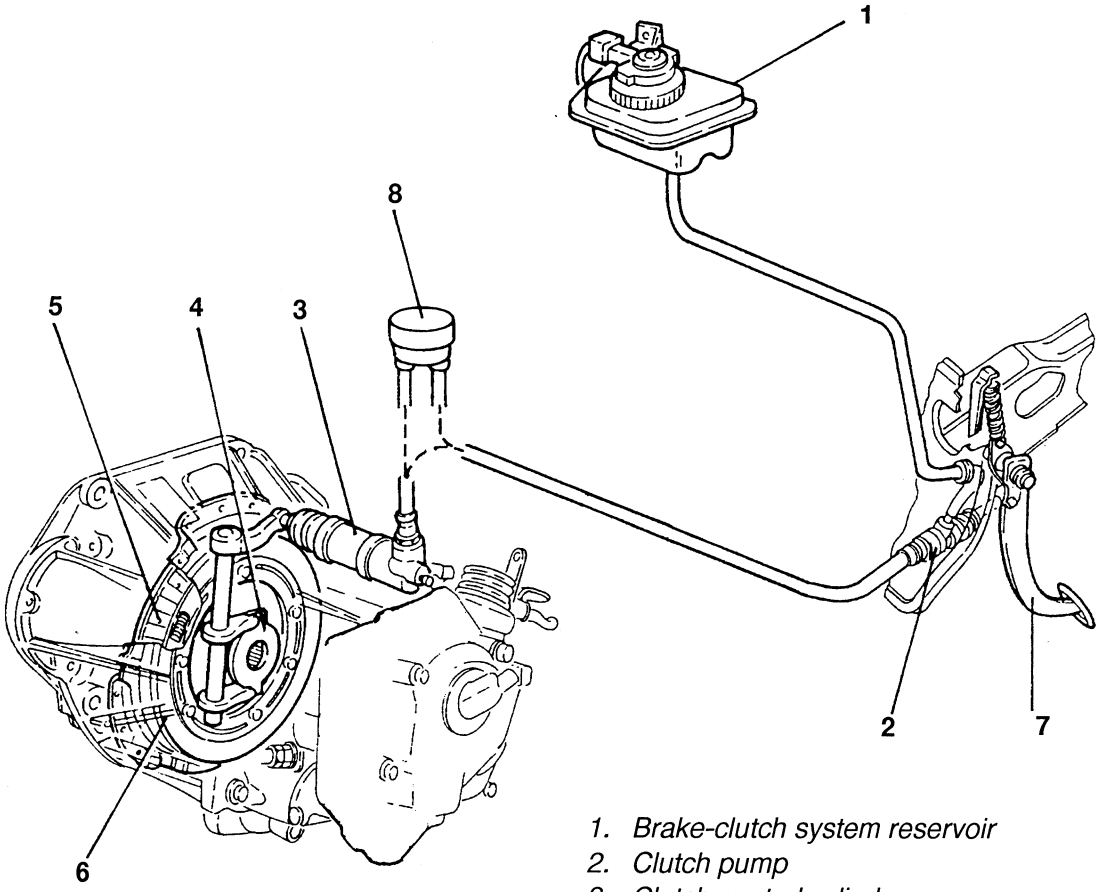

1. *Brake-clutch system reservoir*
2. *Clutch pump*
3. *Clutch control cylinder*
4. *Thrust bearing*
5. *Clutch plate*
6. *Pressure plate*
7. *Clutch pedal*
8. *Damper*

cardiagn.com

CLUTCH PLATE AND PRESSURE PLATE

REMOVAL/REFITTING

– Remove the differential-gearbox unit (see GROUP 21).
– When replacing only the clutch plate, mark the corresponding positione between the pressure plate and flywheel to simplify refitting operation.
1. Install flywheel stopper tool no. 1.820.228.000.
2. Install tool no. 1.820.126.000 in the clutch plate hub.
3. Slacken the screws fastening the presure plate to the flywheel.

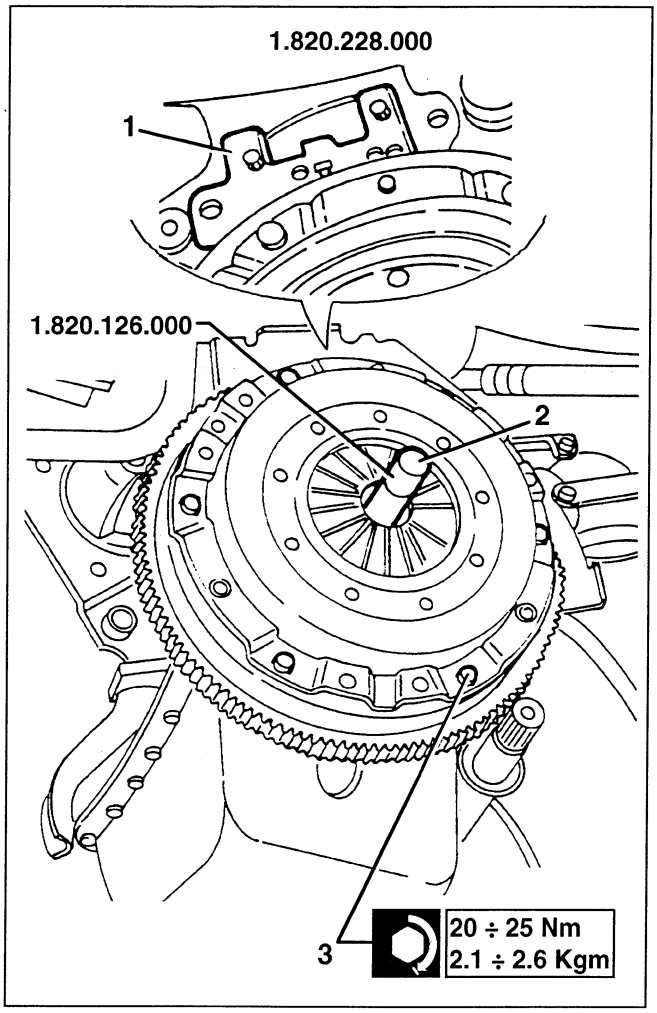

1. Remove the pressure plate.
2. Remove the clutch plate.

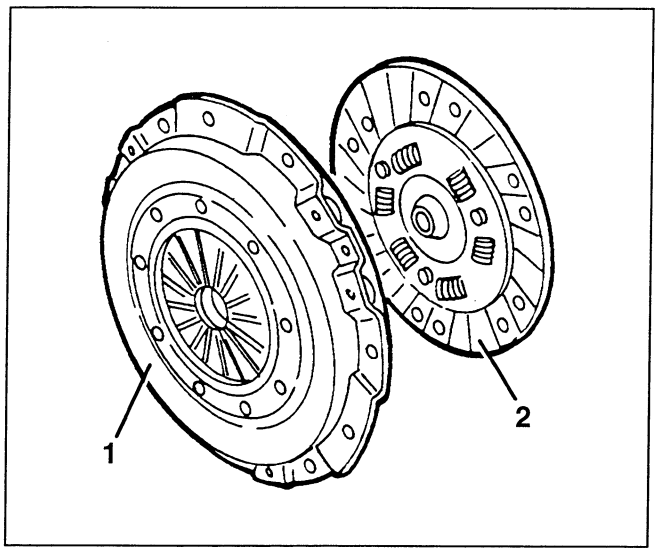

1. Withdraw the thrust bearing from its sleeve in the gearbox cover.

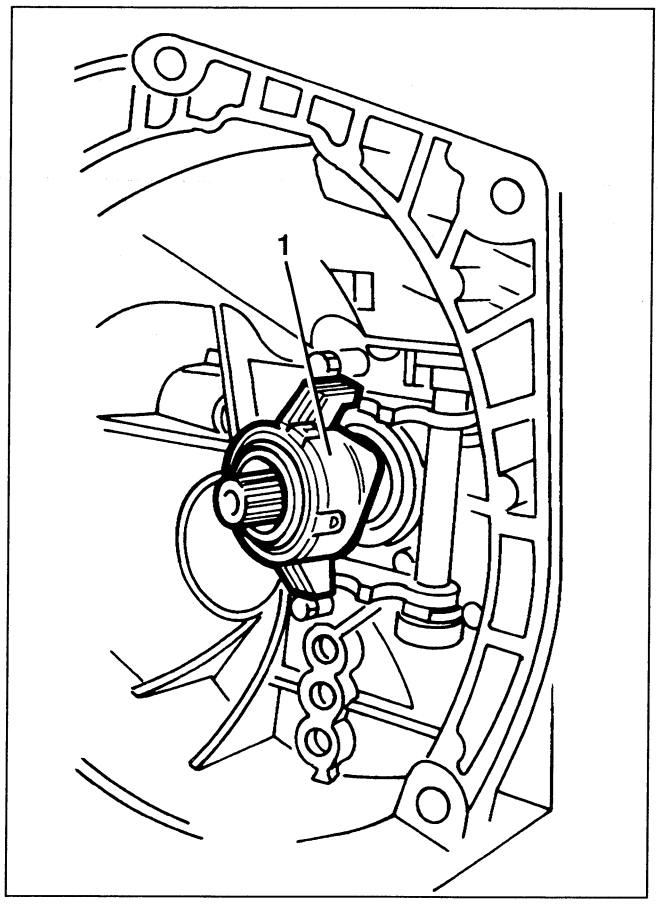

When refitting the bearing it must not stick or turn noisily, otherwise it must be replaced.

cardiagn.com

– Only if necessary:

1. **Remove the seeger lockring and withdraw the clutch engagement control lever.**
2. Prise and remove the gearbox cover antislip bush.
3. Working from inside the gearbox cover withdraw the clutch engagement sleeve pin and control fork.
4. Slacken the screws fastening the thrust bearing sleeve and remove it.

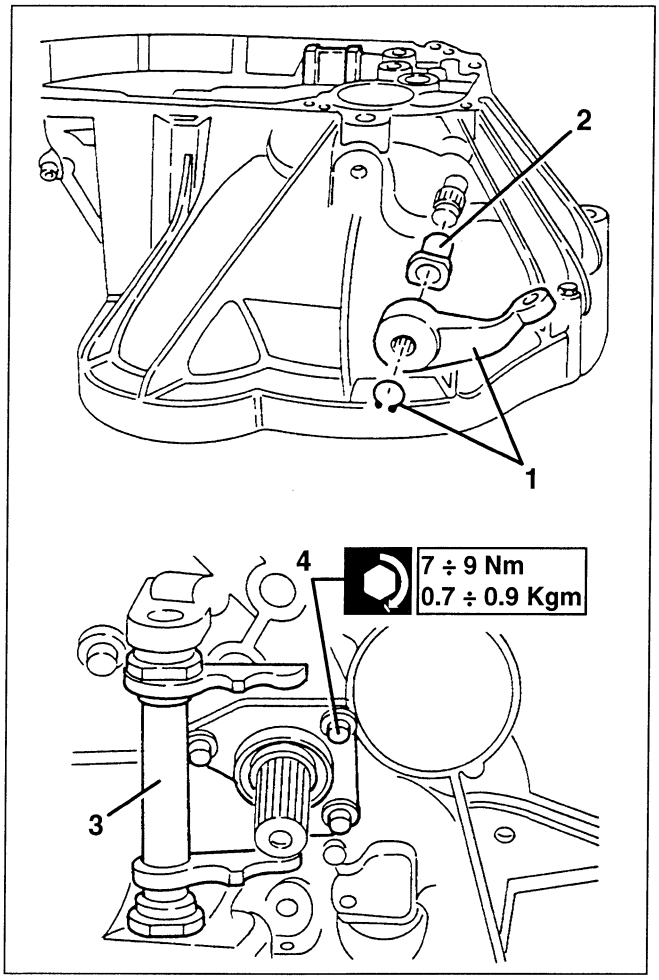

When refitting install a new antislip bush every time the play of the pin is excessive.
When refitting, grease the bushes and sleeve with the specified product. The sleeve complete with oil seal should be changed each time there are oil leaks.

CHECKS AND INSPECTIONS

1. Check that the wear of the seals is uniform and that the thickness of the clutch plate is no lower than the minimum allowed limit.

Clutch plate thickness "S" (mm)	
New	At wear limit
7.1 ÷ 7.7	6.3

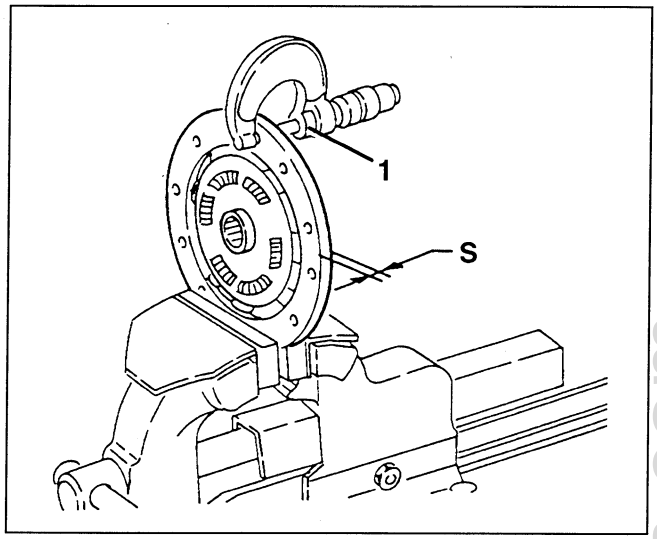

– Check that there are no burns or signs of vitrification, and that the springs are intact and correctly fastened.
– Check that the clutch plate hub is intact and runs freely without excessive play on the coupling of the power takeoff shaft.
– Check the working surfaces of the flywheel and pressure plate for signs of overheating, uneven wear, nicks or missing material.

1. Check the thrust bearing for noise, excessive play and freedom of movement on the guide quill.
2. Check the fork for cracks, distorsion, freedom of movement and excessive wear of the working surfaces.

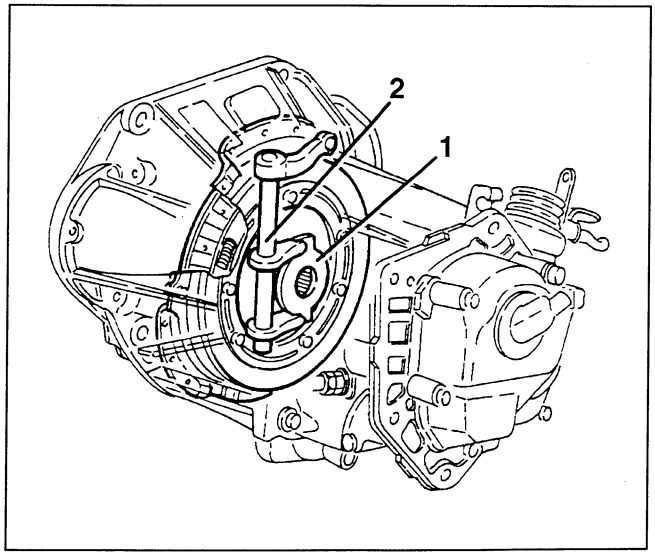

cardiagn.com

CLUTCH CONTROL

CLUTCH PUMP

REMOVAL/REFITTING

- Empty the brake-clutch fluid reservoir, using a suitable syringe.

1. Disconnect the reservoir connection pipe from the clutch pump.

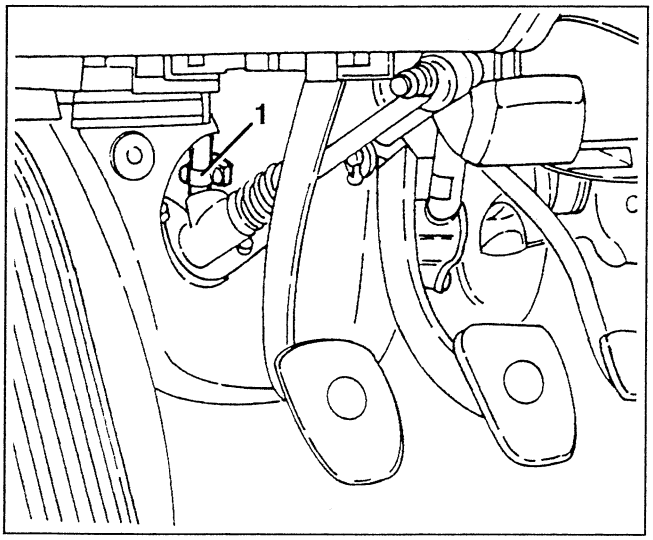

1. Remove the safety stopper and disconnect the clutch pump from the pedal.
2. Slacken the two clutch pump fastening nuts.

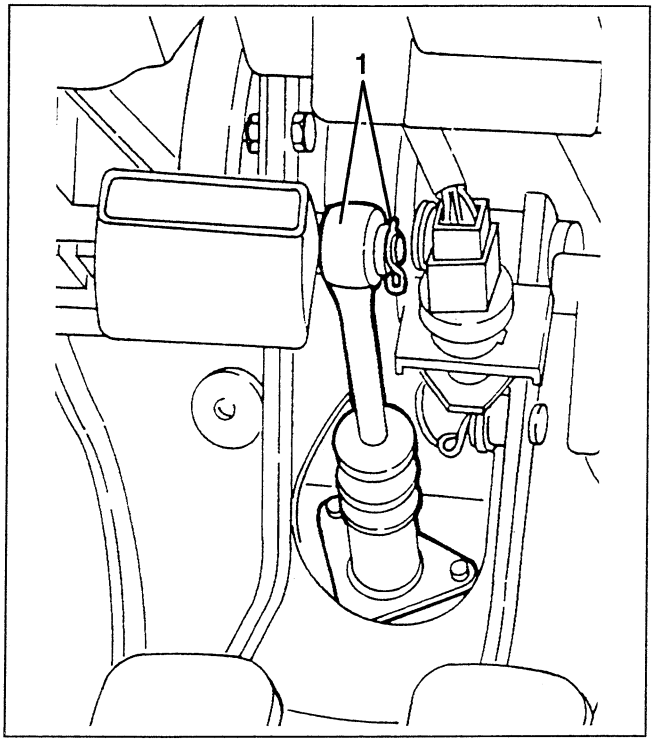

1. Move the clutch pump backwards just enough to disconnect the fitting of the connection pipe to the cylinder, then remove the pump.

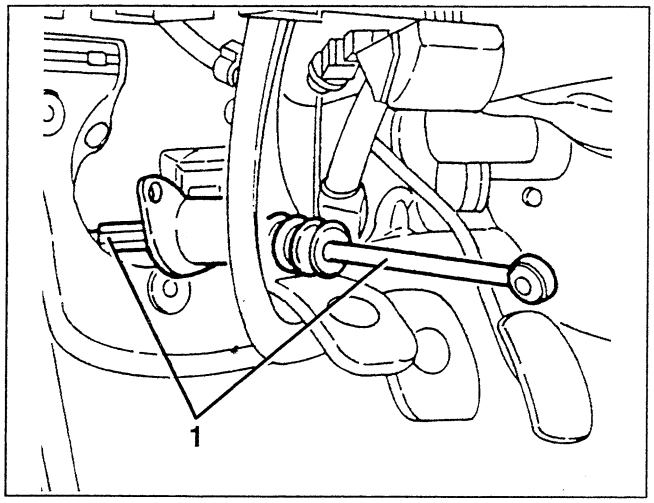

DIS-ASSEMBLY/REASSEMBLY

1. Remove the protective boot.
2. Remove the piston retainer ring.

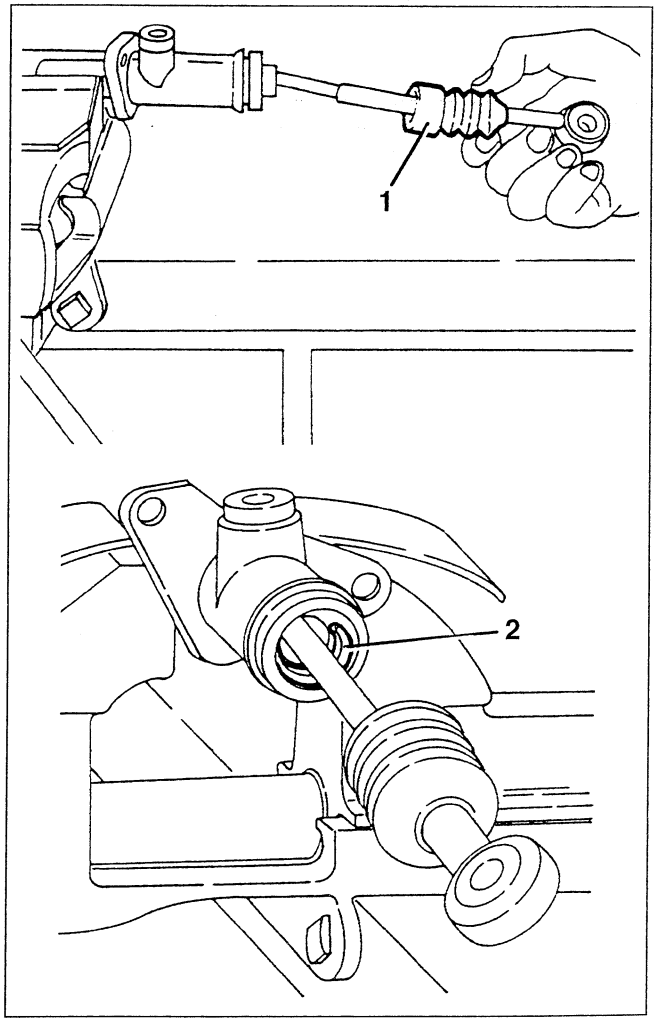

cardiagn.com

1. Withdraw the piston and operating lever.
2. Remove the seal.

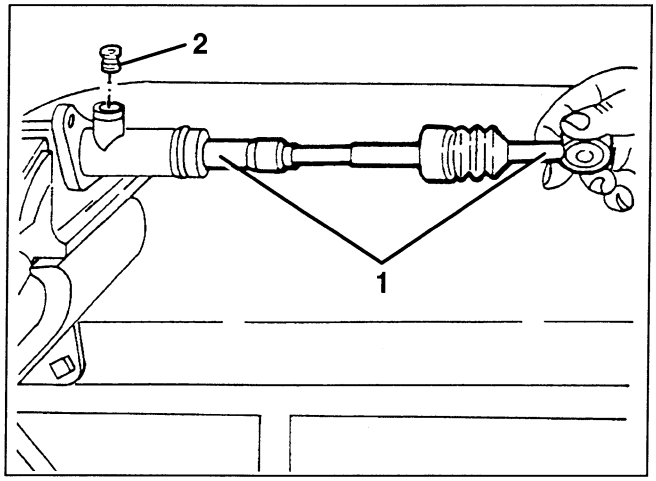

– Check that on the piston and inside the cylinder there are no marks, scores, scrapes or rust, otherwise change the pump assembly.

CLUTCH CONTROL PEDAL

REMOVAL/REFITTING

1. Remove the safety stopper and disconnect the clutch pump from the pedal.
2. Slacken the fastening bolt and remove the clutch pedal.

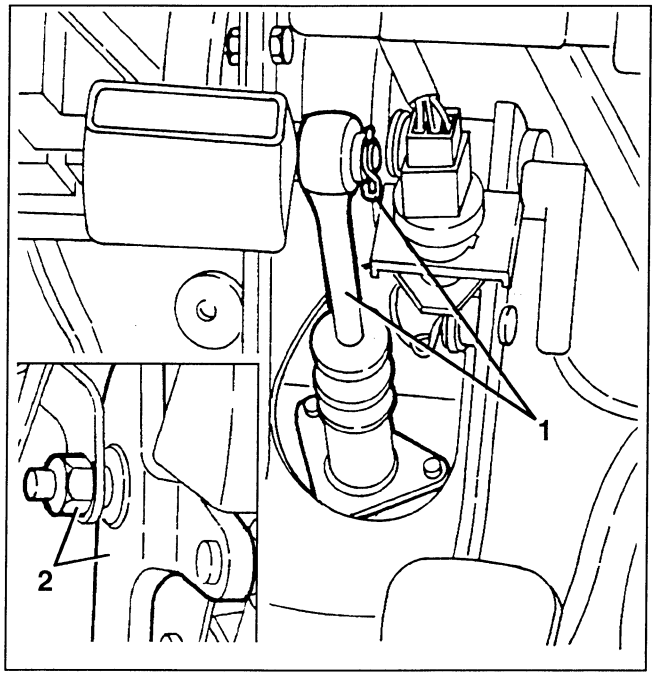

CLUTCH CONTROL CYLINDER

REMOVAL / REFITTING (6-CYLINDER ENGINE)

– Disconnect the battery.
– Working from the engine compartment, remove the air cleaner cover complete with sleeve di aspirazione (see GROUP 10).
- Empty the brake-clutch fluid reservoir, using a suitable syringe.
1. Disconnect the electrical connections of the engine temperature sensor.
2. Disconnect the hydraulic damper hose.
3. Slacken the three bracket fastening screws.
4. Retrieve clutch cylinder support bracket and damper.

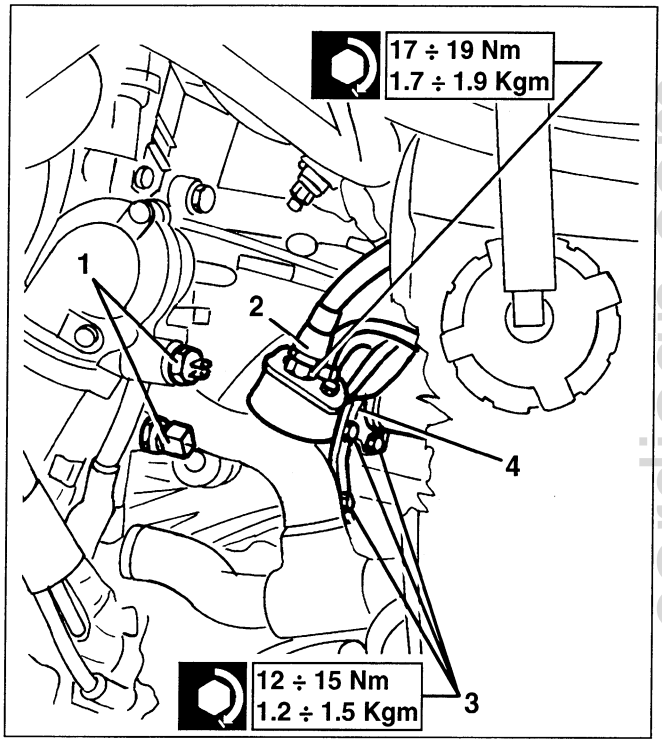

1. Slacken the stiff pipe fitting from the clutch cylinder.
2. Remove the seeger ring.
3. Withdraw the clutch cylinder.

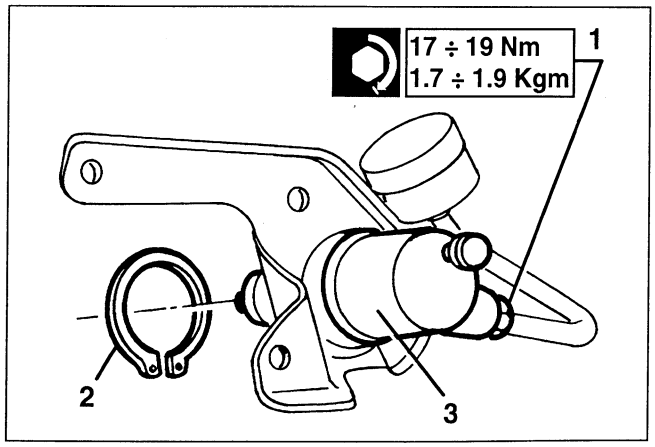

cardiagn.com

REMOVAL / REFITTING (4-CYLINDER ENGINE)

- Working from the engine compartment remove the air cleaner cover complete with intake sleeve (see GROUP 10).
- Empty the brake-clutch fluid reservoir, using a suitable syringe.
- Move the injection wiring to gain access to the clutch cylinder.

1. Slacken the two screws fastening the clutch control cylinder.
2. Disconnect the hose leading from the pump from the clutch control cylinder.
3. Remove the clutch control cylinder.

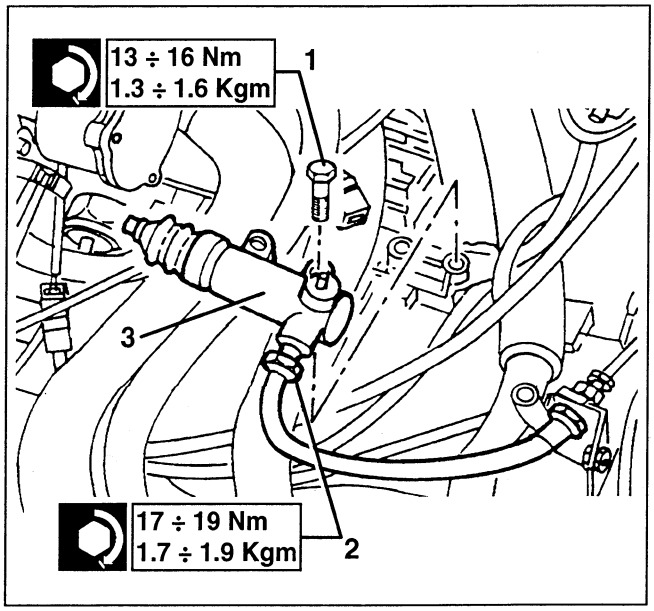

DIS-ASSEMBLY/REASSEMBLY

1. Withdraw the rubber protective boot and remove it together with the control prod.
2. Withdraw the piston from the cylinder body, with its seals.
3. Remove the spring.
4. Only if necessary, remove the bleed screw.

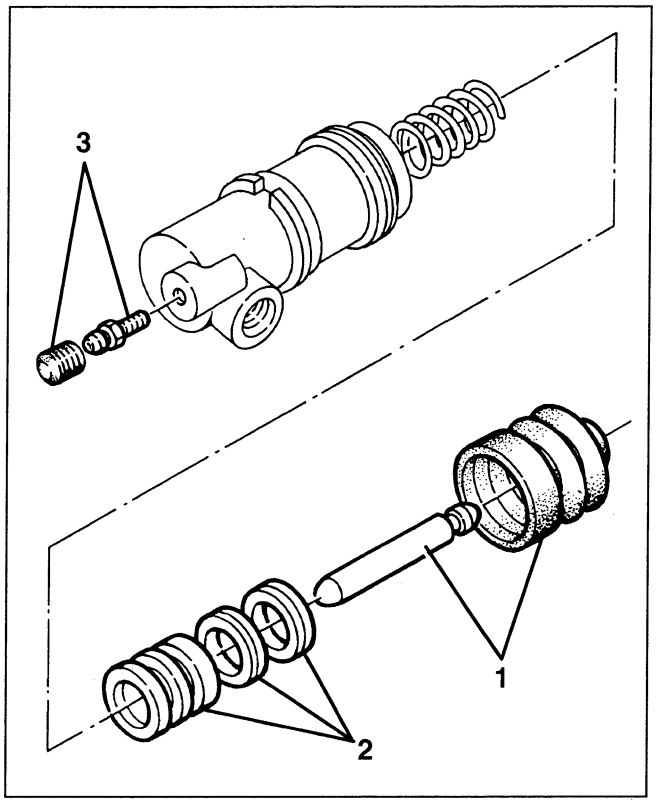

WARNING:
Always change the seals when refitting.

CHECKS AND INSPECTIONS

- Check that on the piston and inside the cylinder there are no scores or traces of rust, otherwise replace the cylinder assembly.
- Check that the spring is intact.
- Check that the air relief hole is not clogged.

cardiagn.com

RELIEVING THE AIR FROM THE HYDRAULIC SYSTEM

WARNING:
Never re-use the hydraulic fluid drained during the air relieving procedure.

1. Remove the plug of the brake-clutch hydraulic circuit supply reservoir and, if necessary, top up with the specified fluid.
2. Remove the protection cap of the bleed screw on the cylinder and fit it on a hose with the opposite end dipped in a transparent recipient containing the same fluid as the circuit.
3. Slacken the bleed screw and at the same time press the clutch pedal letting it return slowly; repeat this operation until all the air bubbles have issued.
– With the pedal fully depressed, tighten the bleed screw, remove the tube and assemble the protective cap.

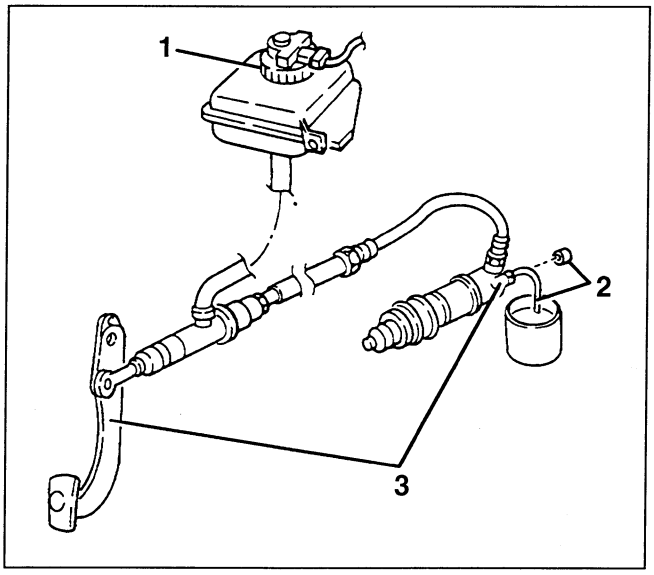

During the air relieving operation, keep the level of the fluid in the reservoir above the "MIN" mark.

– Top up the level of the fluid in the reservoir and install the plug.

The brake/clutch fluid can damage the bodywork. Work carefully.

– After relieving the air, check that the clutch disengages normally and that the gears engage properly.

MINIMUM BRAKE-CLUTCH FLUID LEVEL SENSOR

REMOVAL / REFITTING

– Disconnect the battery.
1. Disconnect the electrical connection of the minimum brake-clutch fluid level sensor.
2. Slacken the plug incorporating the minimum brake-clutch fluid level sensor and remove it.

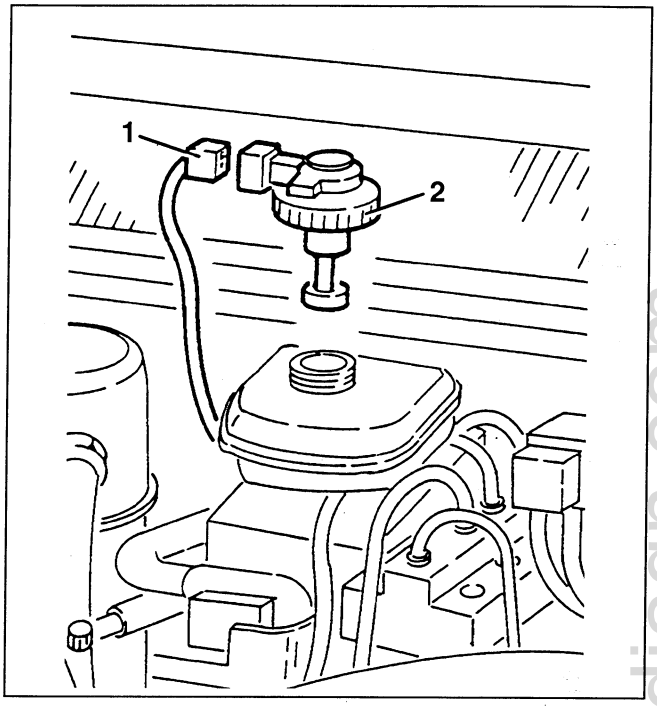

cardiagn.com

INDEX

GEARBOX UNIT 2959

- Removing/refitting 1

GEARBOX UNIT 1970

- Removing / refitting 7

GEARBOX UNIT 1970 2959

- On-vehicle operations 12
  - Differential carrier oil seal gearbox side . 12
  - Differential carrier oil seal engine side. . . 13

OUTSIDE GEARBOX CONTROLS

- Description 14
  - Version with rods and tie-rods 14
  - Synchronized reverse gear 15
- Control with rods and tie-rods 16
  - Gearshift control tie-rods 16
  - Gearshift control rod 16
  - Gearshift lever. 17
- Cable control 18
  - Gear engagement and selection cables . 18
  - Reversing gear release cable 19
  - Gearshift lever. 19
  - Gearshift lever knob 20

cardiagn.com

GEARBOX UNIT 2959

REMOVING/REFITTING

– Set the car on a lift.
– Disconnect the battery.
– Remove the front wheels.
1. Remove the left gravel guard.

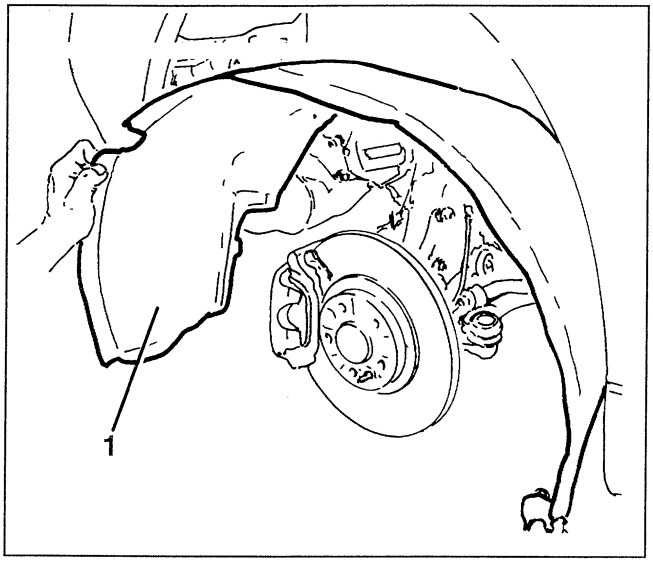

– Remove the engine compartment protection, right-hand side (see GROUP 70).
– Remove the air cleaner unit complete with inlet sleeve and tray with fastening bracket (see GROUP 10).
1. Disconnect the electrical connections of the engine temperature sensors
2. Slacken the three screws fastening the clutch cylinder bracket.
3. Move the cylinder aside without disconnecting the pipes.

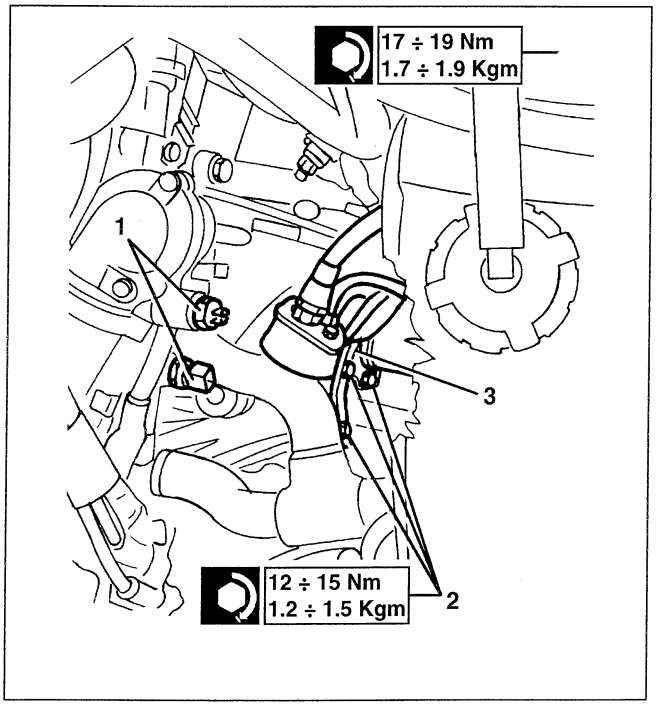

1. Disconnect the electrical connection of the mileage recorder sensor.
2. Disconnect the reverse gear release cable from the gearbox.
3. Disconnect the electrical connection of the reversing switch.

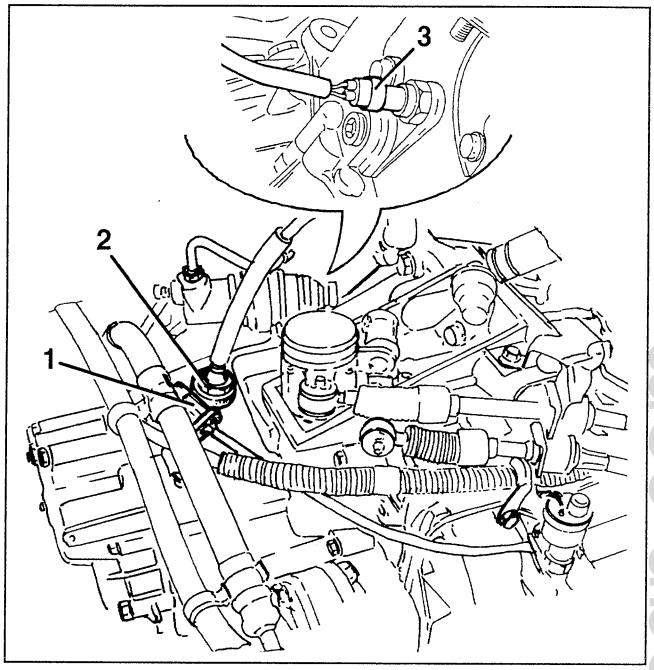

1. Using tools 1.820.239.000, 1.820.581.000 and 1.820.226.000 suitably support the engine with a chain.

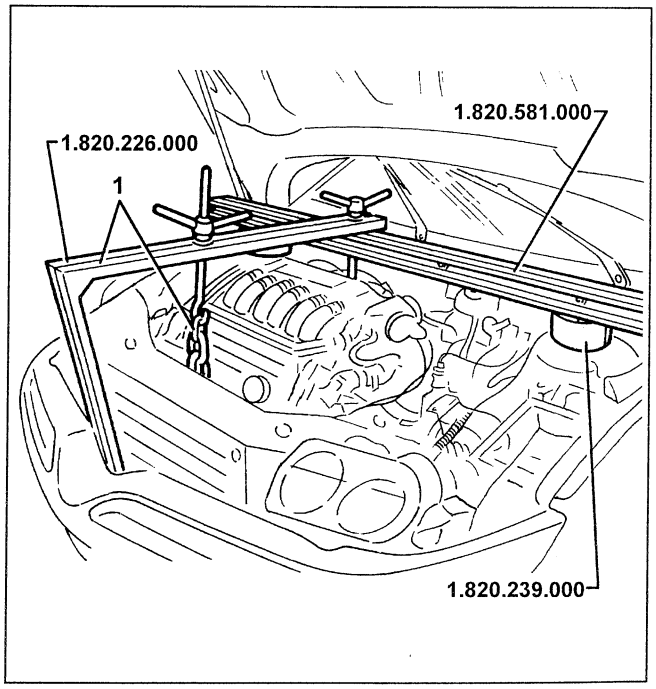

cardiagn.com

1. Slacken the three upper screws fastening the gearbox cover to the crankcase.
2. Raise the gearbox oil level dipstick.

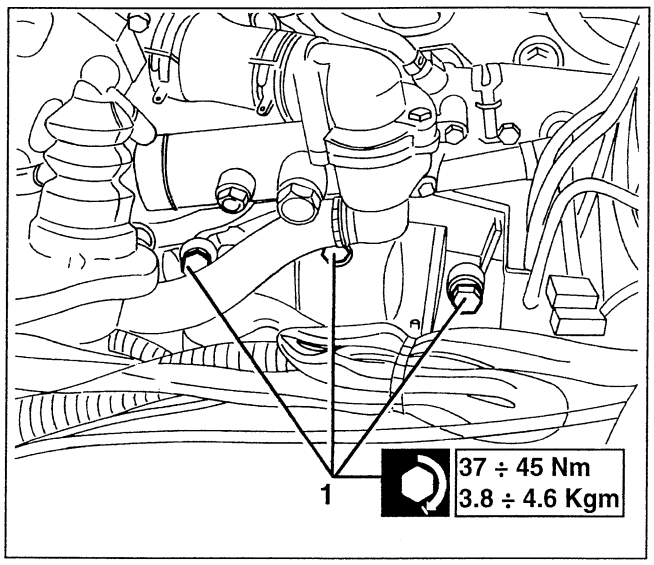

– Raise the car.
– Set a suitable recipient under the engine compartment.
1. Slacken the plug and drain the gearbox oil.
2. Slacken the plug and drain the differential oil.

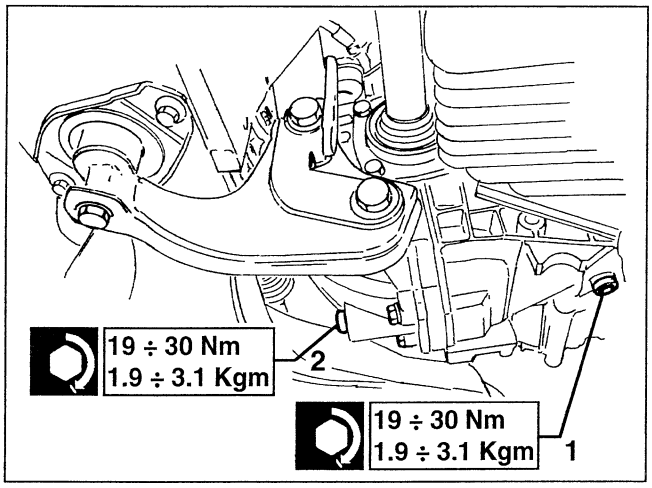

1. Slacken the nuts fastening the front exhaust pipes to the exhaust manifold.
2. Slacken the bolts fastening the pipes to the catalyst.
3. Slacken the bolt and disconnect the collar.
4. Slacken the nut and remove the collar.
5. Remove the front exhaust pipes.

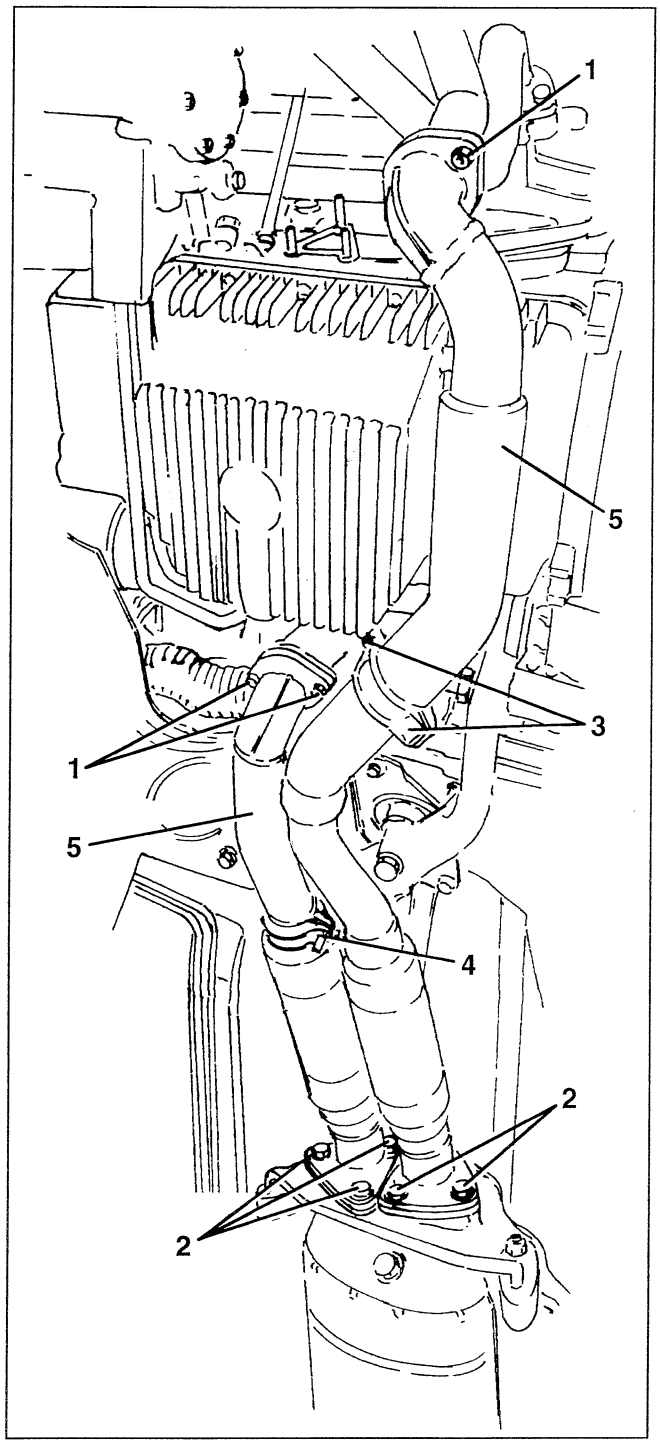

cardiagn.com

1. Working from both sides of the car, slacken the bolt fastening the suspension wishbone to the wheel hub.
2. Withdraw the ball pin from the suspension wishbone.

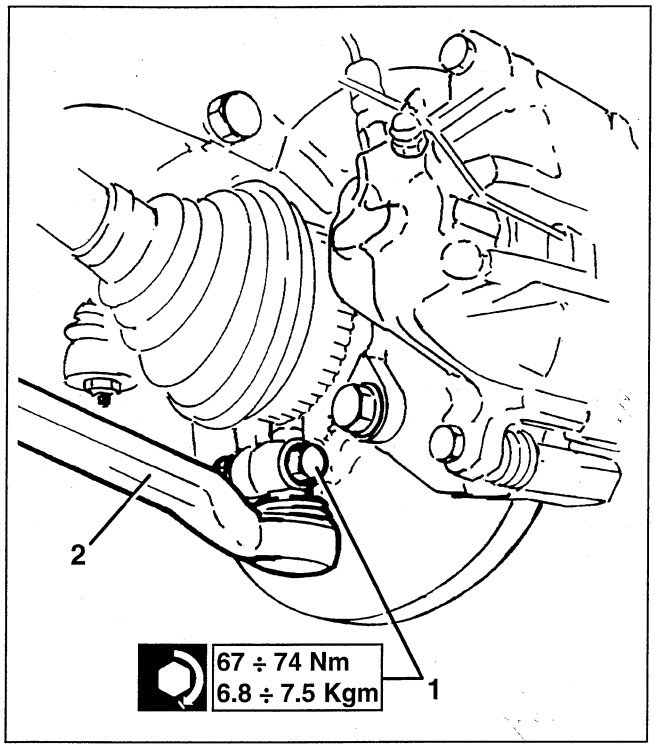

1. Working on the left-hand side of the car, slacken the nut and disconnect the earth braid from the gearbox.
2. Slacken the six bolts and disconnect the axle shaft from the differential.
3. Retrieve the safety plates.

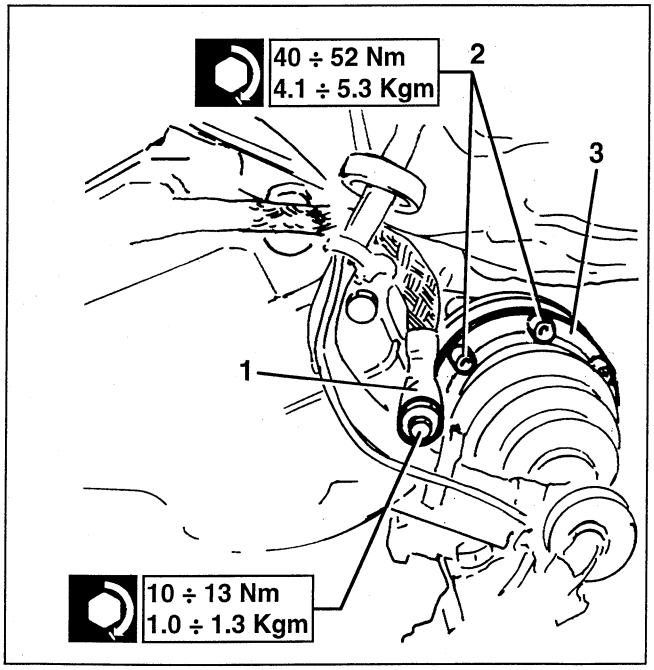

1. Working from under the car, slacken the four screws fastening each of the front crossmember reinforcement struts.
2. Retrieve the reinforcement struts.
3. Slacken the screws fastening the steering box to the crossmember.

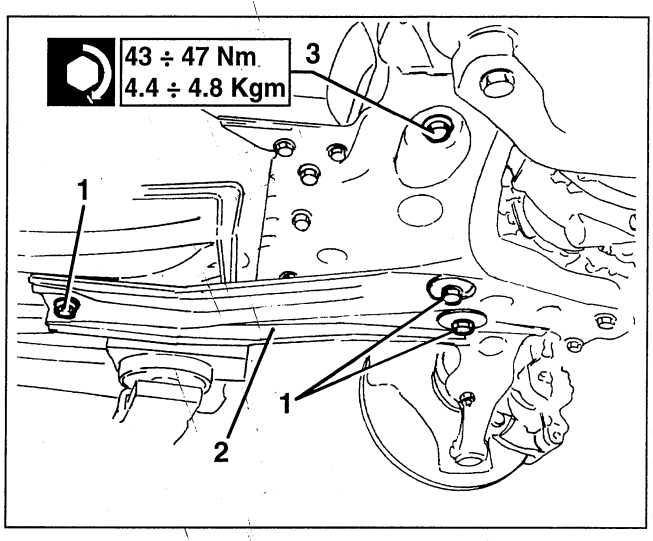

1. Slacken the three fastening screws.
2. Remove the engine rear support.

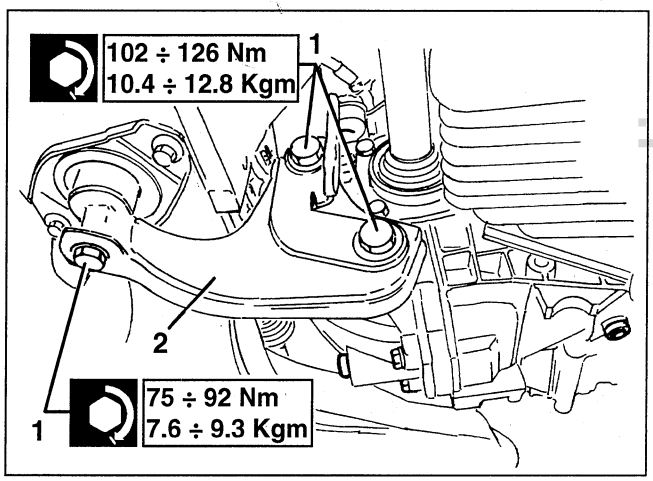

cardiagn.com

– Install tool 1.860.978.000 on a hydraulic jack.
1. Fasten the tool to the centre of the crossmember
2. Slacken the nuts fastening the crossmember to the gearbox controls support.
3. Slacken the screws fastening the crossmember to the body.

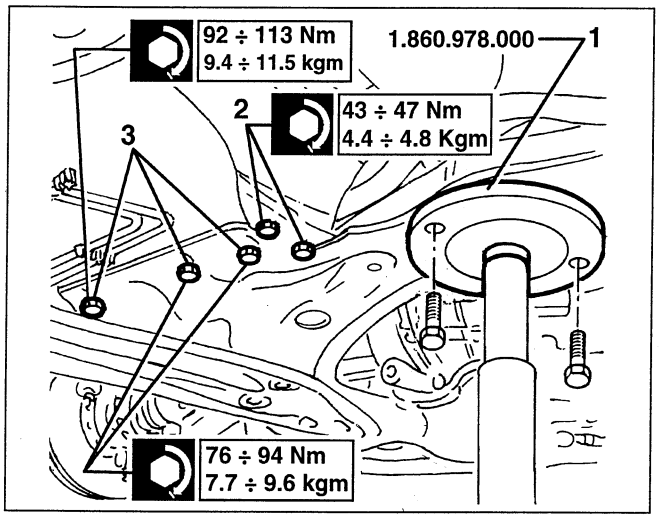

1. Slacken the screw on each side fastening the upper crossmember.
2. Slowly lower the hydraulic jack and remove the crossmember complete with wishbones and stabilizer bar.

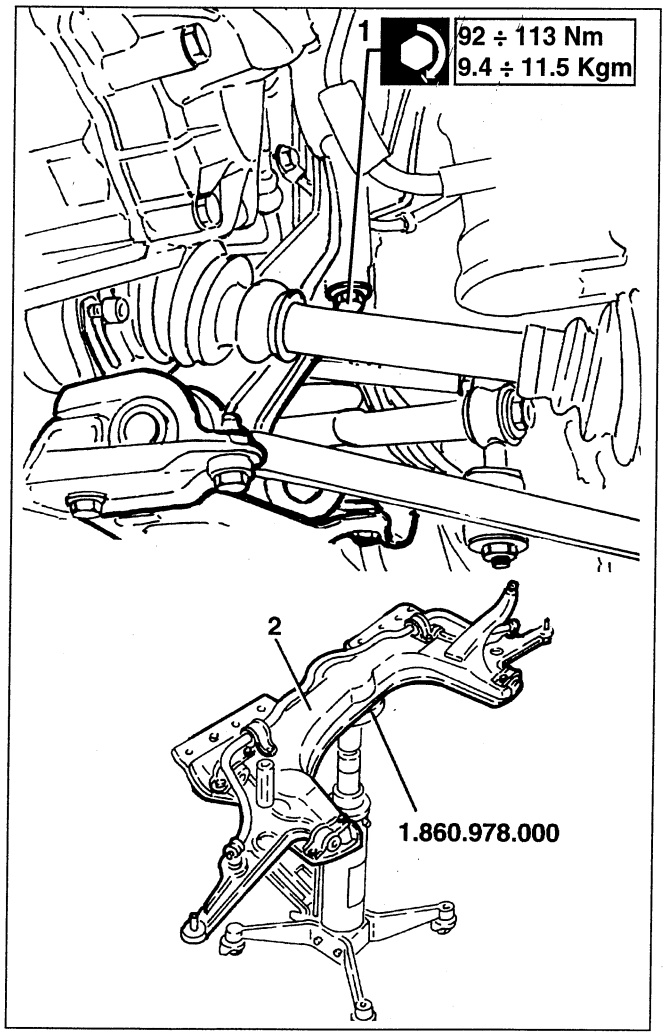

1. Slacken the screws fastening the lower flywheel cover and remove it.

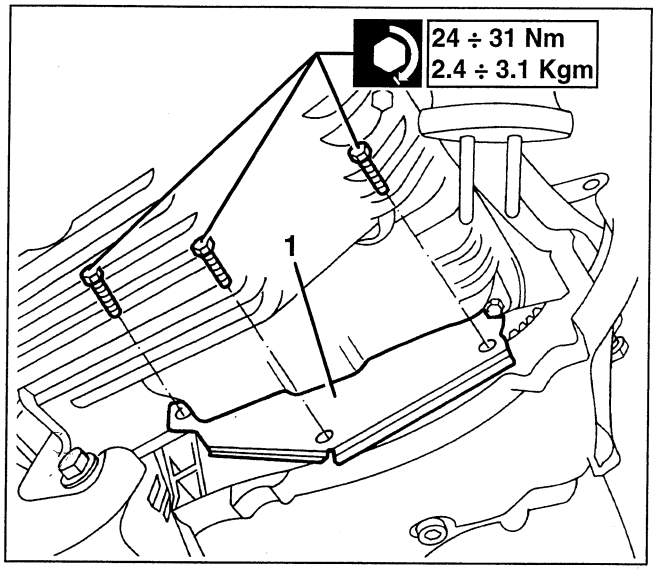

1. Slacken the two nuts fastening the upper cover of the gearbox control cables.
2. Slacken the two screws fastening the lower cover of the gearbox control cables.
3. Retrieve the two covers.

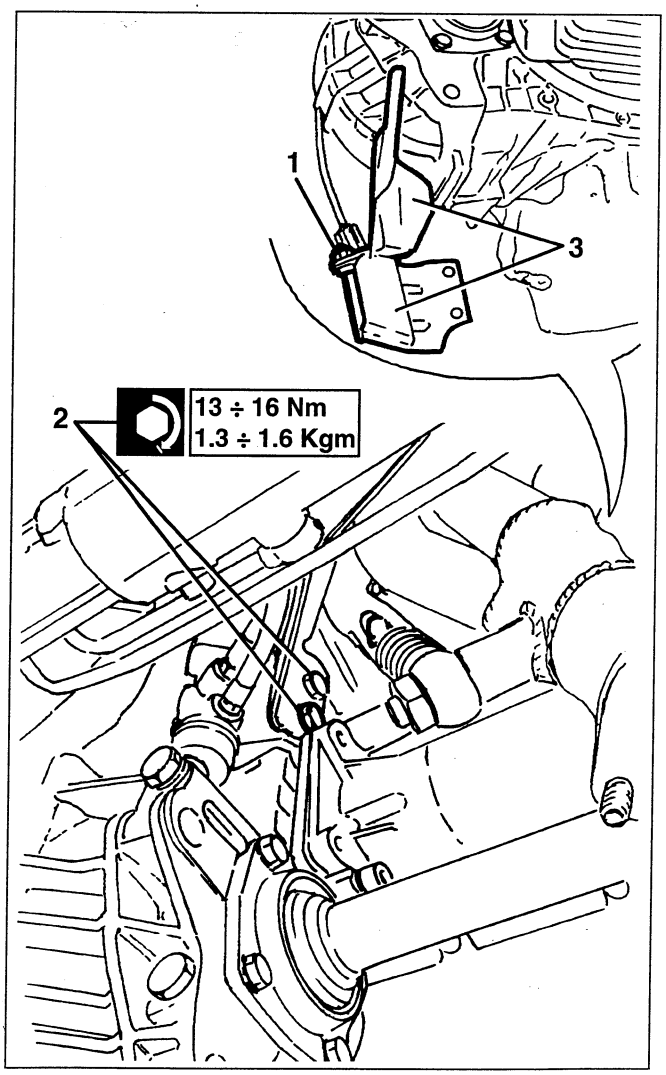

cardiagn.com

1. Slacken the screws fastening the starter motor heat shield.
2. Slacken the starter motor fastening screws.

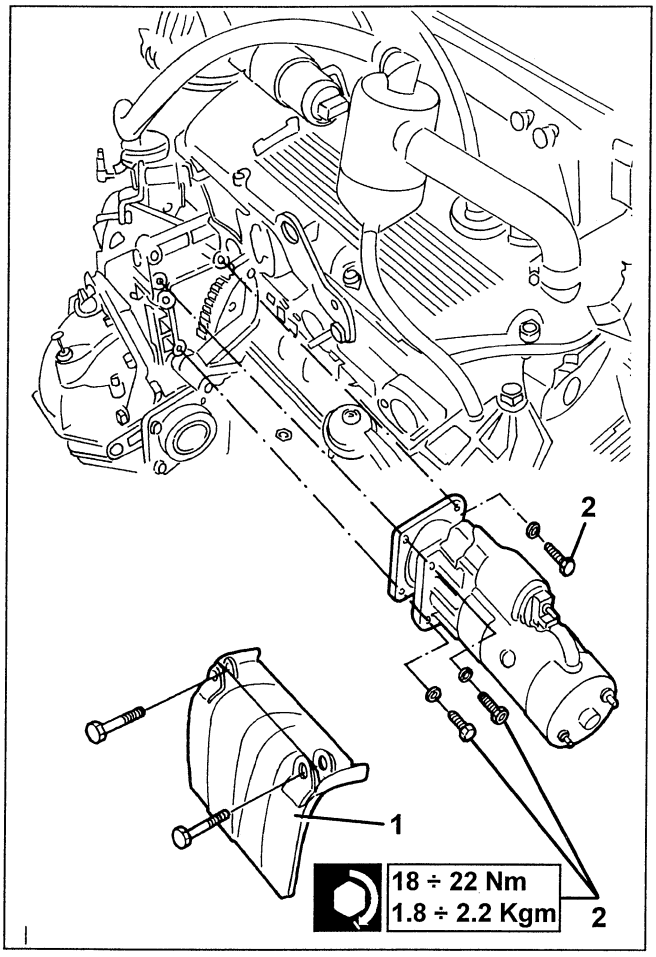

1. Remove the retainer clamps and remove the gearbox control cables from the pins.
2. Slacken the upper screw fastening the gearbox control cables support bracket.

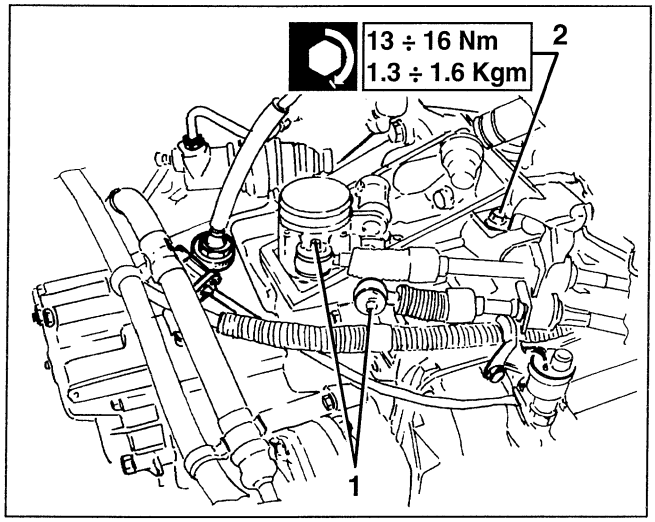

1. Slacken the screw fastening the rear gearbox support.
2. Slacken the nuts fastening the support to the gearbox.
3. Remove the support.

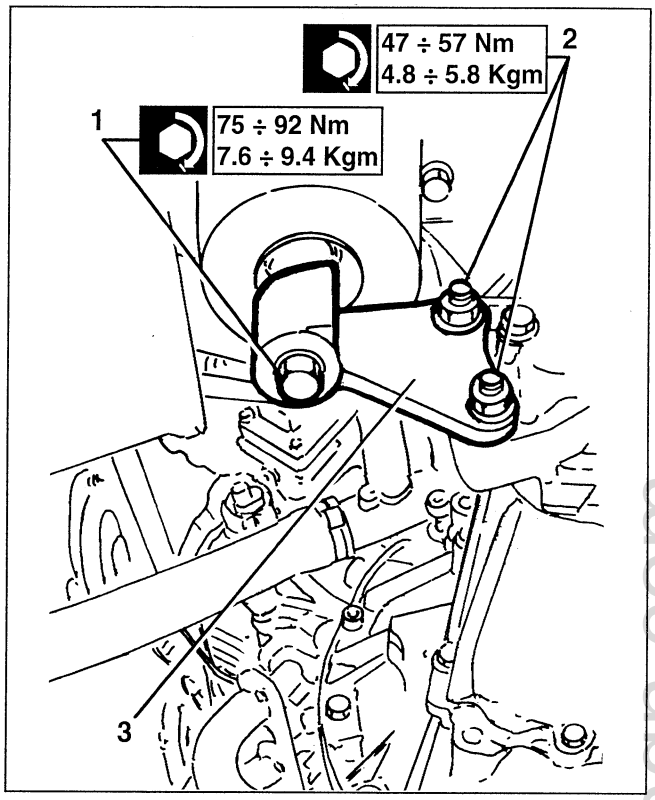

cardiagn.com

1. Slacken two of the screws fastening the gearbox cover and fasten bracket no. 1.820.230.000 and support no. 1.820.208.000.
2. Using a hydraulic hoist support the gearbox unit.

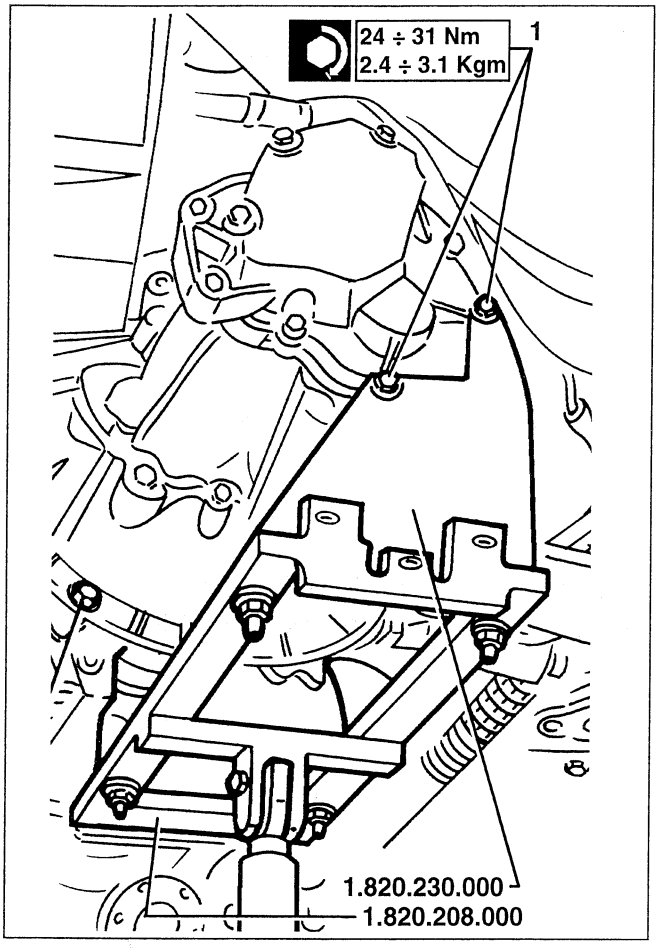

1. Slacken the rear Allen screw fastening the engine to the gearbox.
2. Slacken the four screws fastening the intermediate shaft support to the differential.

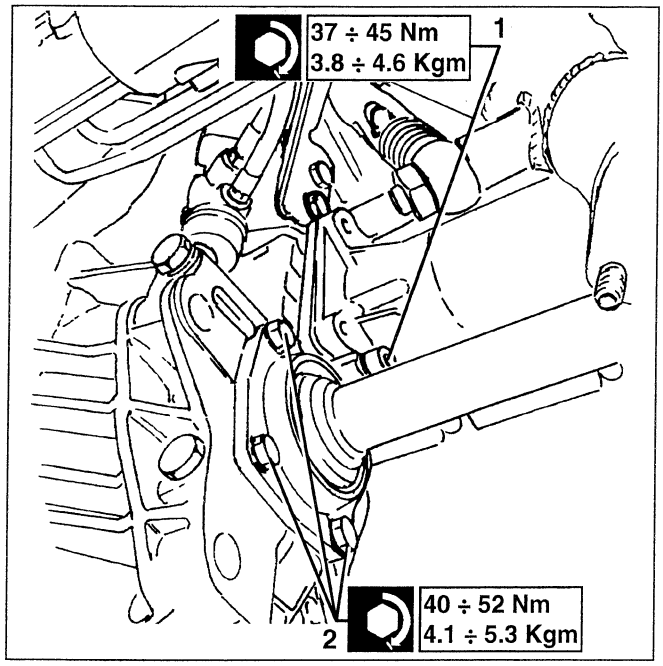

1. Slacken the three remaining screws fastening the gearbox to the engine.
2. Move the gearbox away from the engine and lower it using the hydraulic jack.

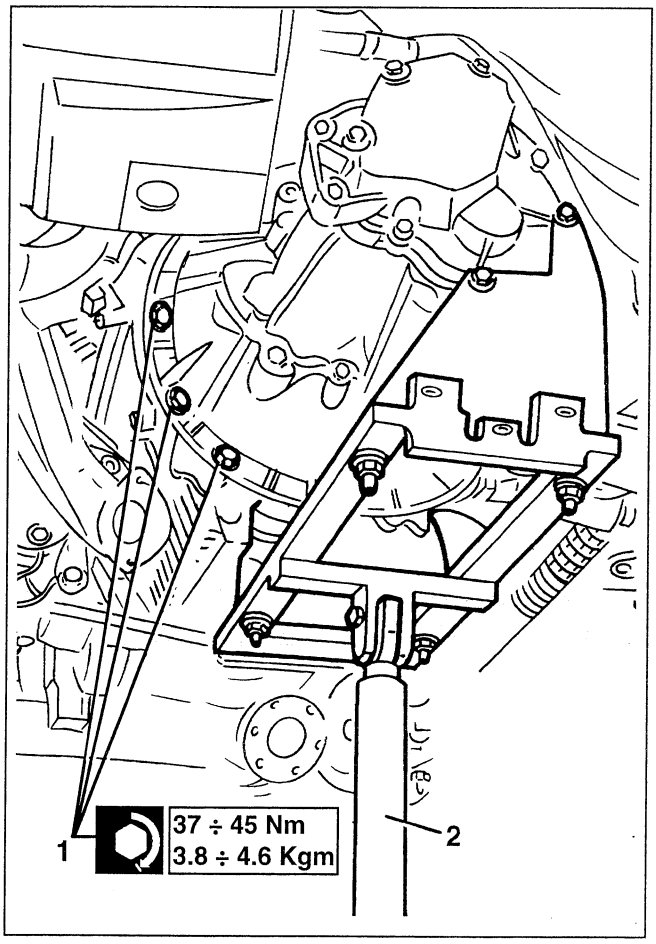

cardiagn.com

GEARBOX UNIT

1970

REMOVING / REFITTING

– Set the car on a lift.
– Disconnect the battery.
– Remove the front wheels and gravel guards (see GROUP 70).
– Remove the engine compartment protection, right-hand side (see GROUP 70).
– Remove the air cleaner unit complete with tray and inlet sleeve and bracket (see GROUP 10).
– Move aside the injection wiring, freeing access to the gearbox.

1. Disconnect the connections of the reverse switch and tachometric sensor from the gearbox.
2. Slacken the two screws and remove the clutch cylinder from the gearbox, moving it upwards: in fact the cylinder is restrained by the pipe leading from the clutch pump.

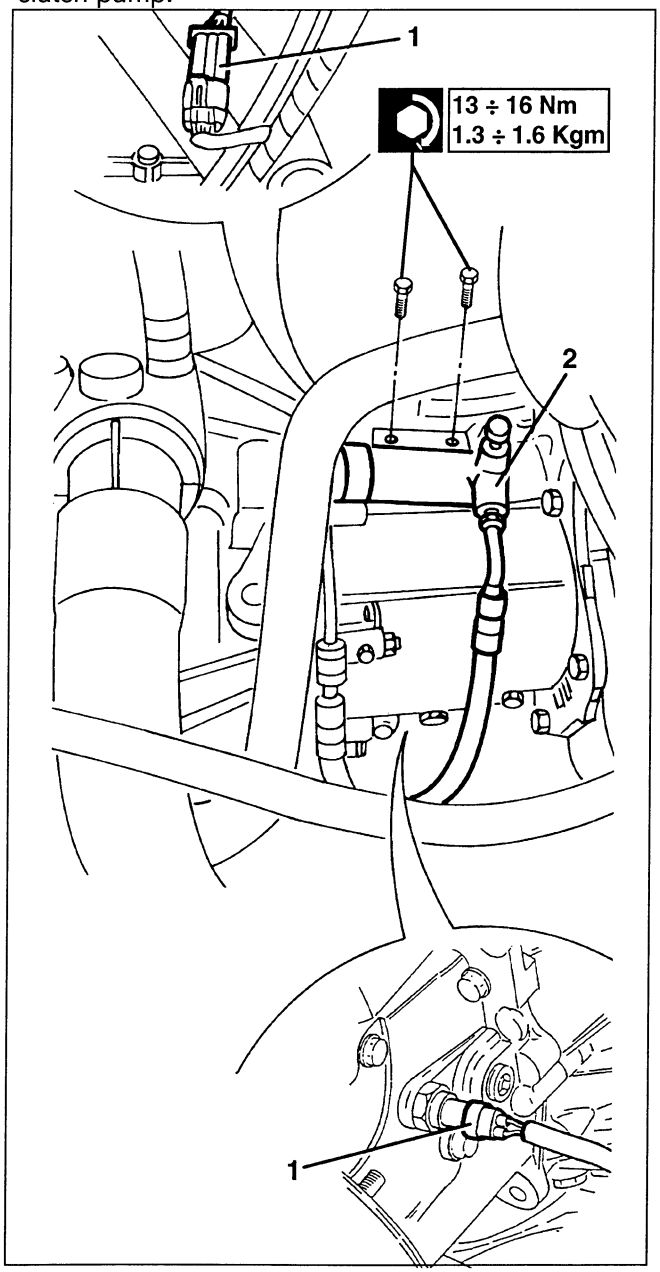

1. Remove the heater pipe fastening clamps from the throttle body.
2. Disconnect the connection of the lambda probe, disconnecting it from the stay clamp.

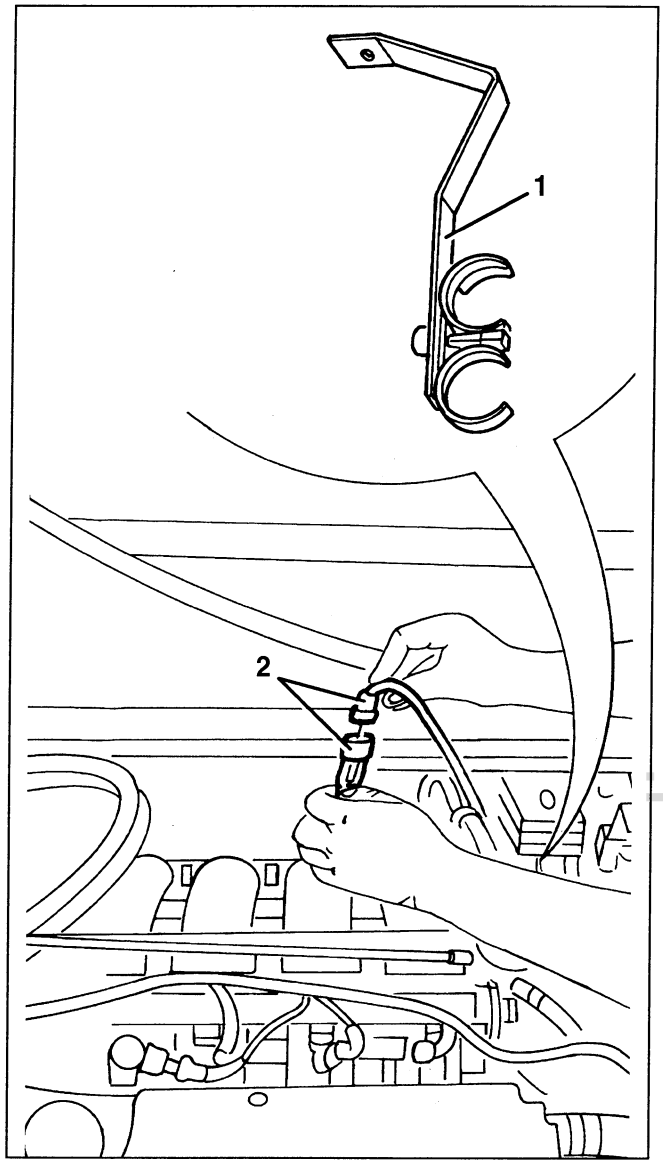

cardiagn.com

1. Slacken the two upper screws fastening the gearbox to the engine.

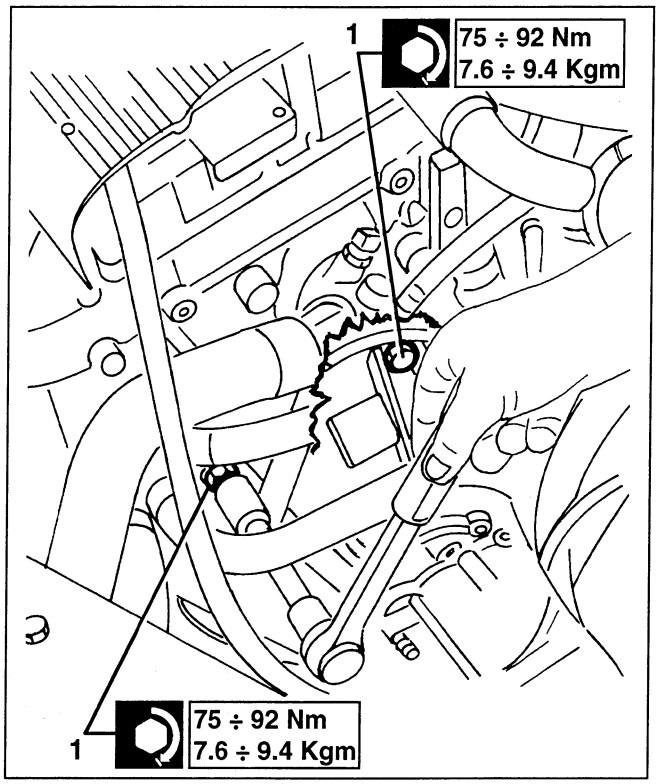

1. Position engine support 1.820.226.000, with supports 1. 820.239.000 and cross rail 1.820.581.000.
2. Place a support square on the front of the crankcase.
3. Place a support square on the rear of the crankcase, between two injectors.
– Set a chain between the two squares and the support, hooking the engine to the support.

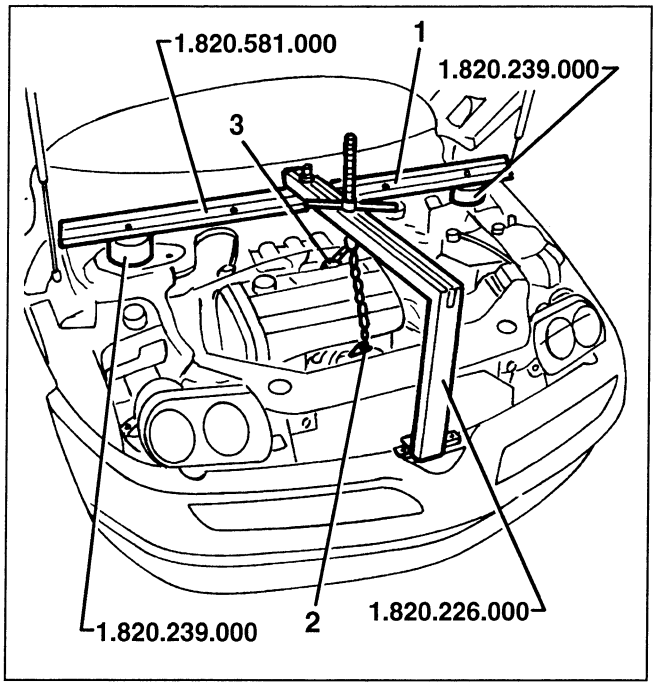

CAUTION:
To avoid damaging the power steering piping housed at the front of the radiator, interpose a suitable thickness between the front connection of the tool and its resting surface.

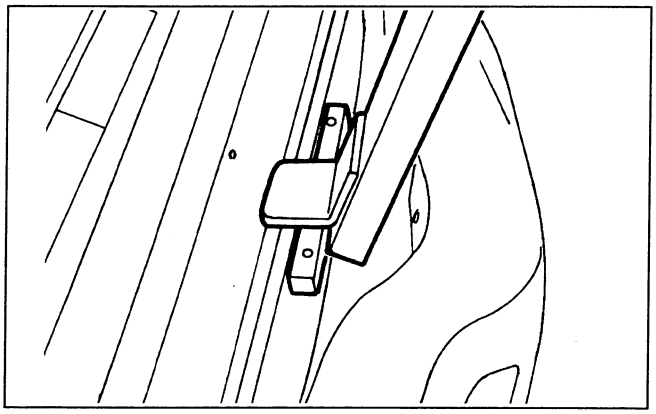

– Raise the car.
1. Slacken the plug and drain the gearbox-differential oil recovering it in a suitable recipient.
2. Disconnect the earth braid from the gearbox.

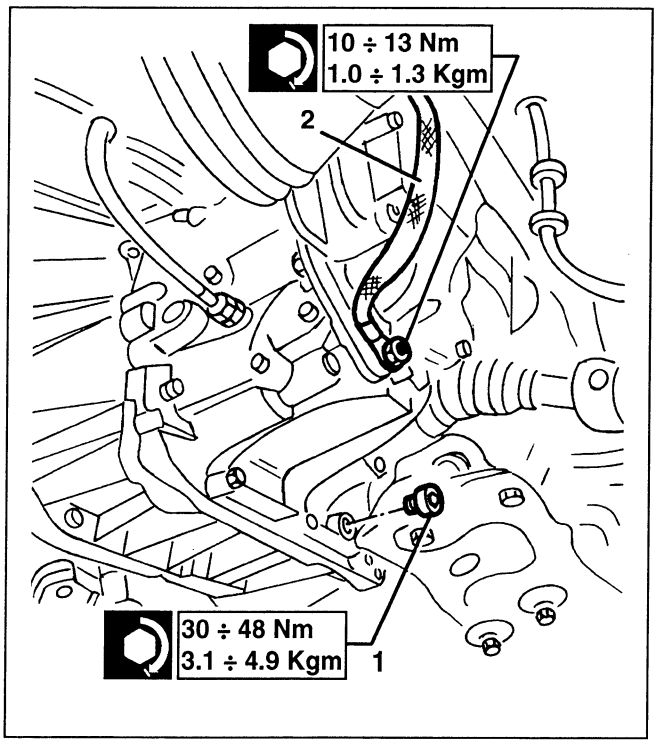

cardiagn.com

1. Remove the reinforcement under the exhaust pipe.
2. Disconnect the exhaust pipe fastening bracket.
3. Remove the exhaust pipe, front section.

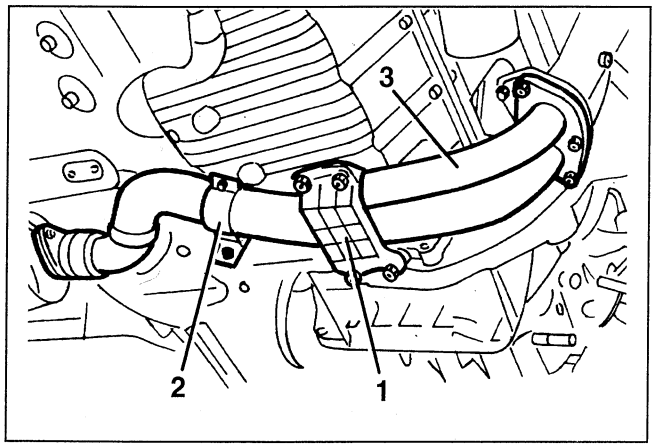

NOTE: retrieve the lambda probe wiring carefully to avoid jerking or damaging it.

1. Removing the two screws, disconnect the front of the two front crossmember reinforcement struts and turn them rearward removing one of the rear screws.

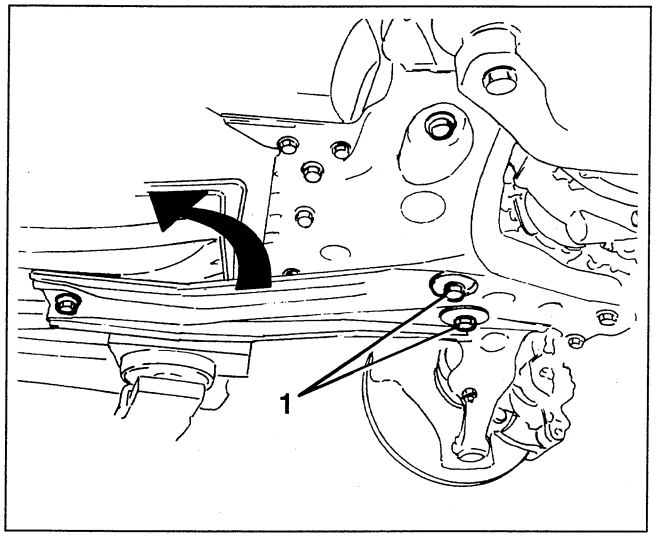

1. For both sides, slacken the two screws fastening the front crossmember to the wheel hub.

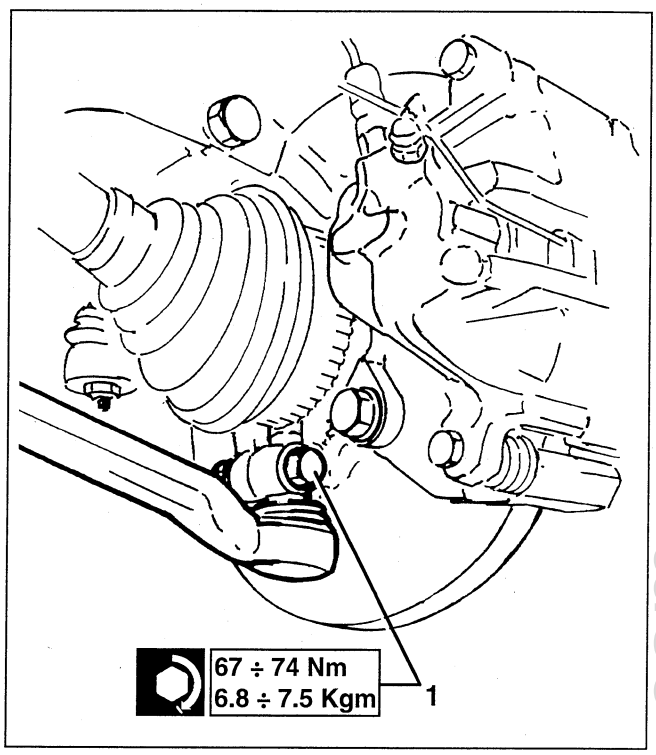

1. Slacken the two screws fastening the power steering to the front crossmember.
2. Slacken the four front nuts and slacken the other fastening screws of the gearbox controls support, which must be slightly lowered to make it possible to free the front crossmember.

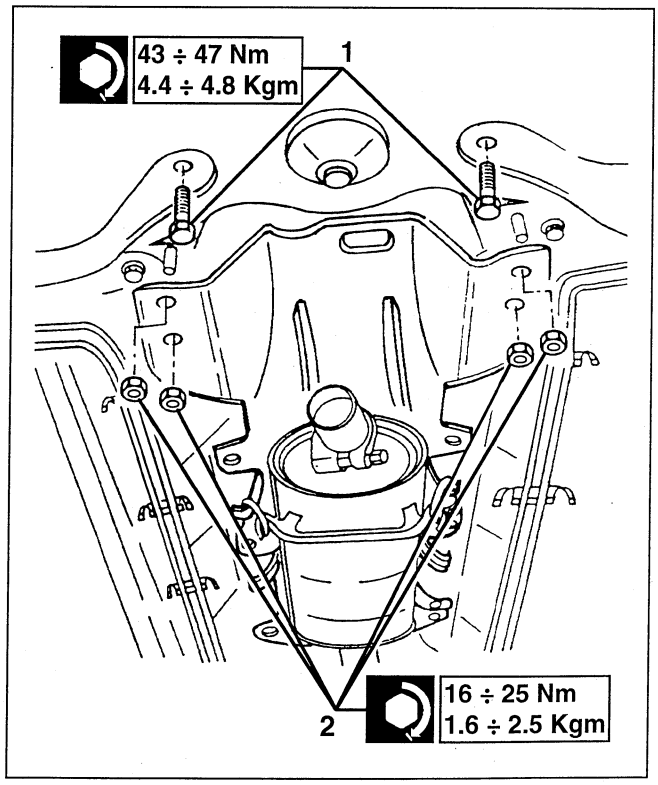

cardiagn.com

1. Remove the rear engine support.
2. Install tool 1.860.978.000 on a hydraulic jack. Fasten the tool to the centre of the crossmember.
3. Slacken the six rear screws fastening the crossmember to the body.

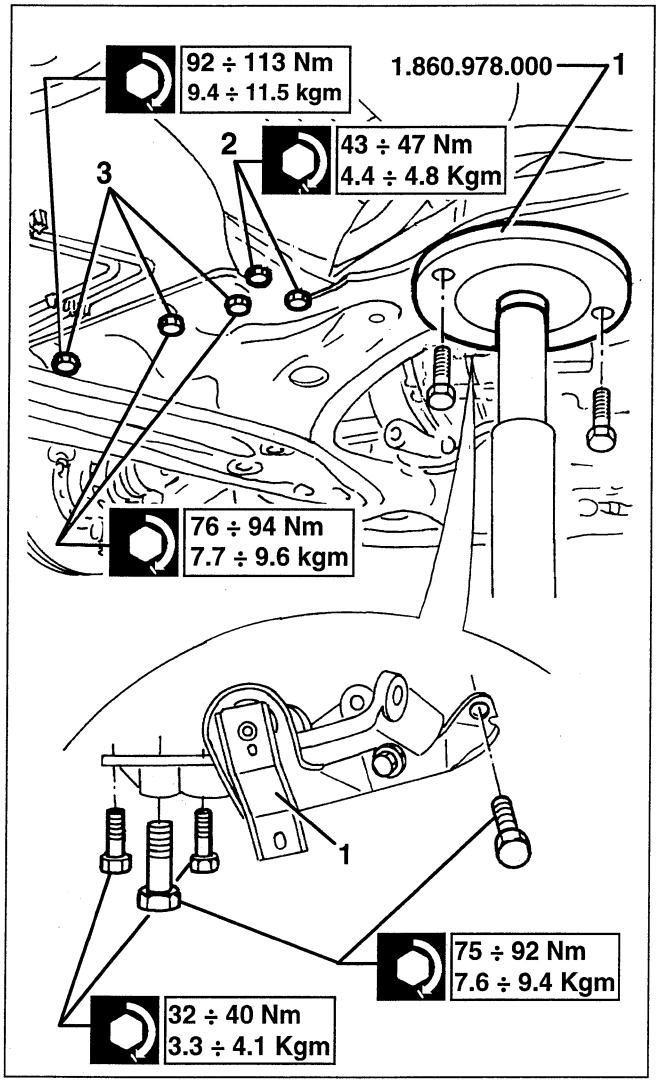

1. Slacken the two front screws fastening the crossmember to the body.
2. Lower the front crossmember and remove it.

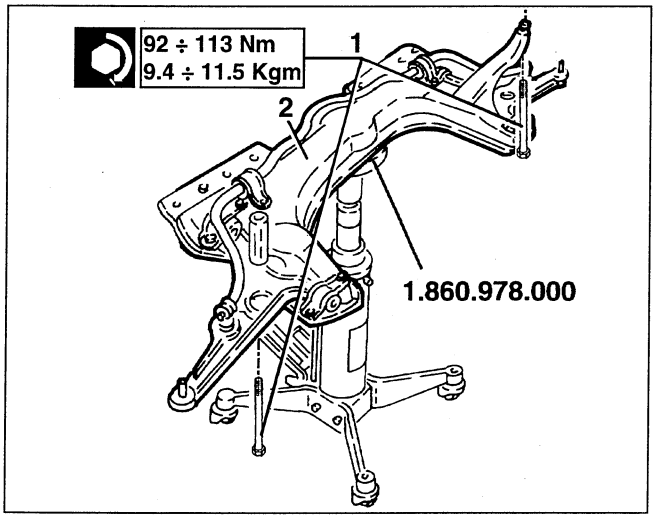

1. Slacken the six fastening bolts and disconnect the left constant velocity joint from the differential side axle shaft.
2. Disconnect the three gearbox control rods.

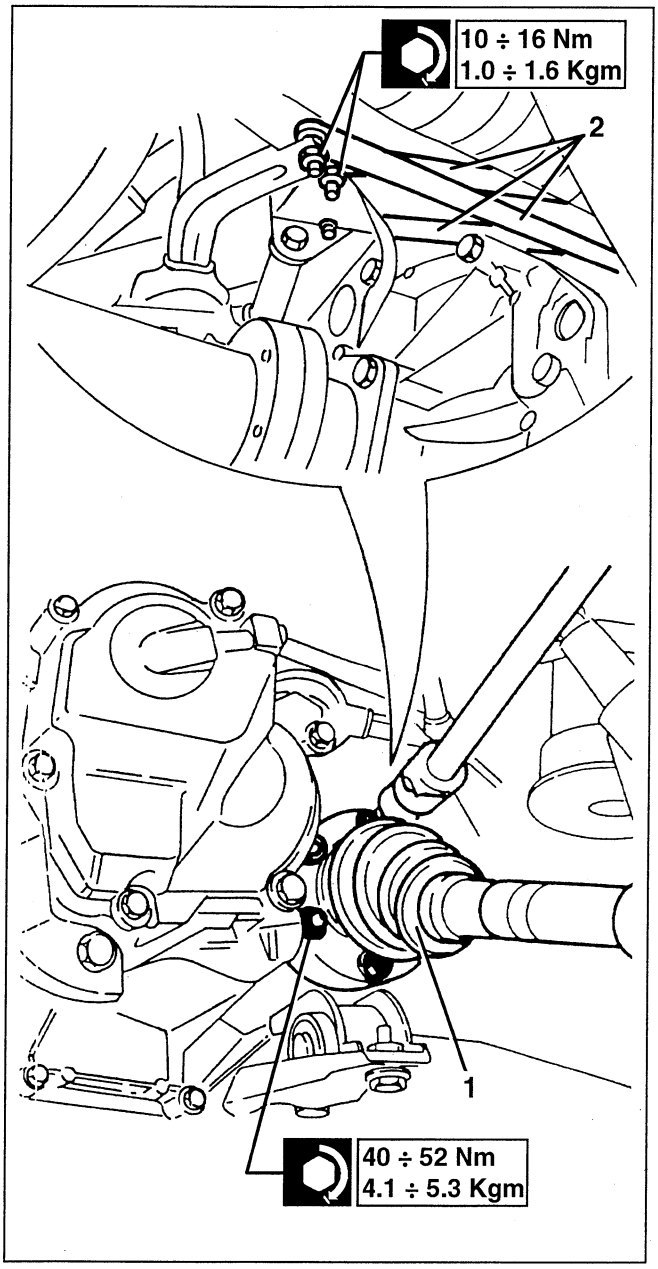

cardiagn.com

1. Slacken the three screws fastening the starter motor to the gearbox.

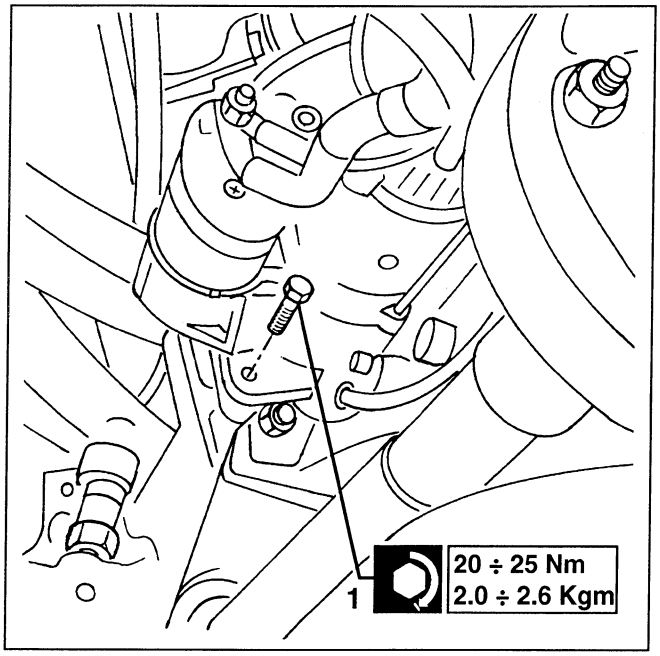

1. Slacken the three screws fastening the rear gearbox support to the gearbox itself.
2. Slacken the bolt fastening the support to the body and remove it.

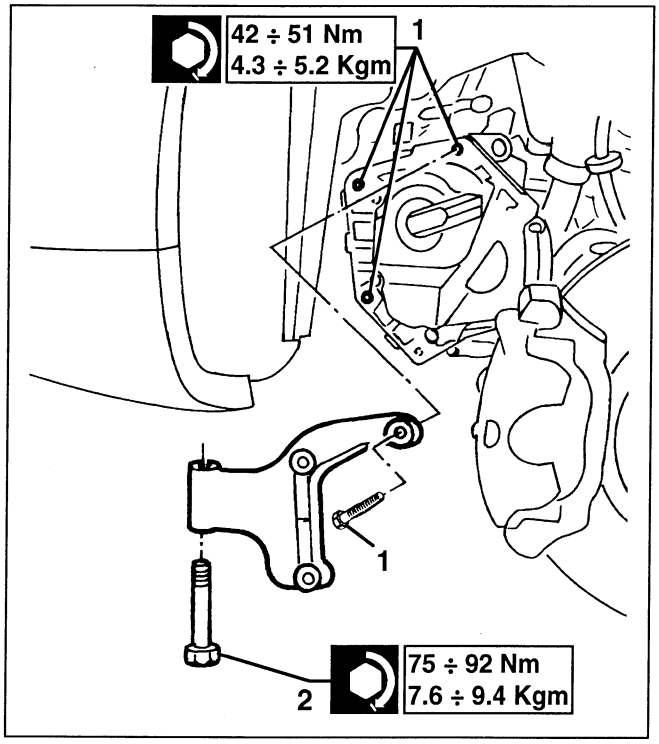

1. Slacken the two lower screws fastening the gearbox cover and in the holes fasten bracket no. 1.820.623.001 with support no. 1.820.208.000.

NOTE: use screws slightly longer than the ones removed.

2. Add a bolt of suitable size in the hole on the right.
3. Slacken the two fastening screws and remove the lower cover.
4. Slacken the bolt fastening the gearbox to the engine.

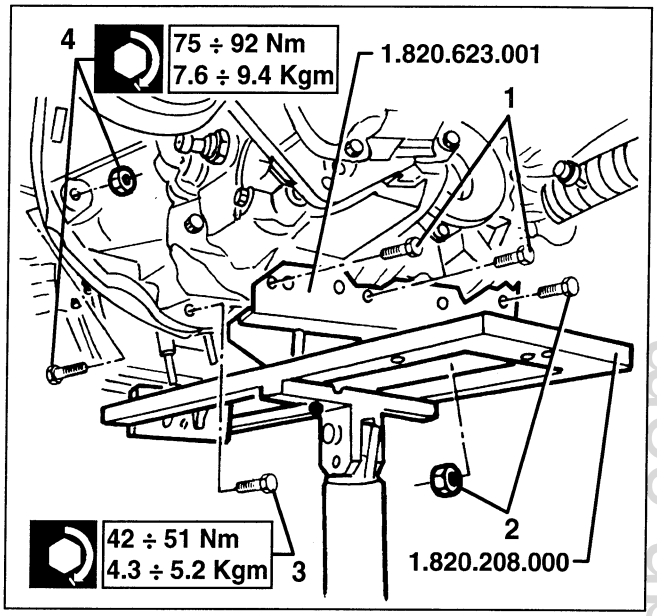

1. Slacken the nut fastening the gearbox to the engine.
2. Lower the gearbox disconnecting it from the engine.

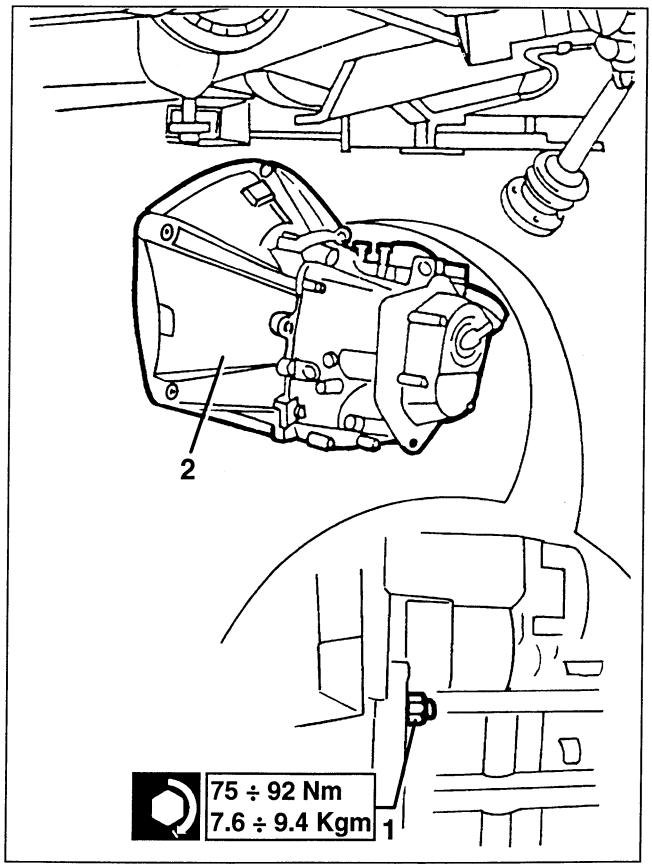

cardiagn.com

GEARBOX UNIT 1970 2959

ON-VEHICLE OPERATIONS

DIFFERENTIAL CARRIER OIL SEAL GEARBOX SIDE

Replacement

- Set the car on a lift.
- Disconnect the battery.
- Raise the car.
- Remove the left front wheel and mud flap.
- Working from the left wheelhouse, disconnect the electrical connection of the brake pad wear sensor.
- Release the ABS inductive sensor from the support bracket.

1. Unscrew the left axle shaft fastening screws from the differential.

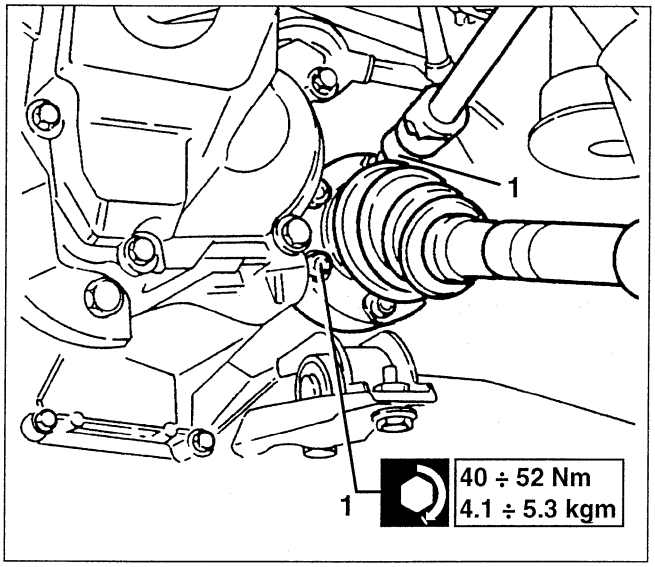

1. Slacken the two bolts fastening the left upright to the shock absorber, then remove only the upper bolt.

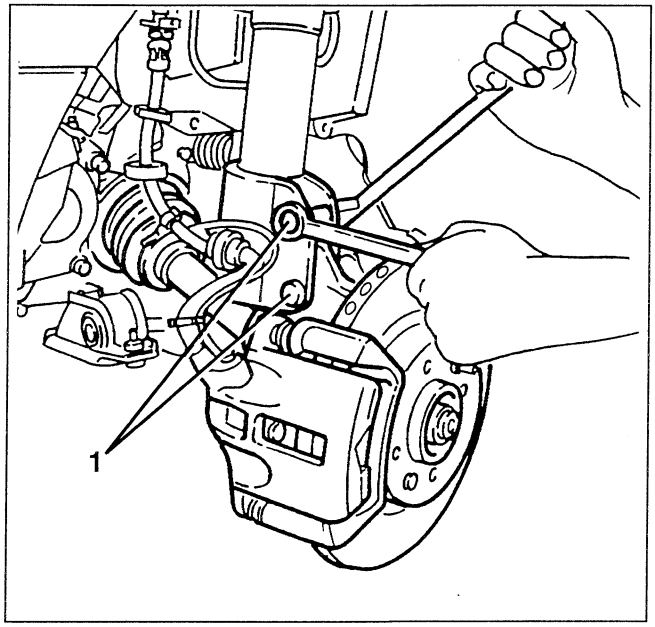

1. Using tools no. 1.820.229.000 and no. 1.821.161.000, remove the flange from the differential.
2. Prise off the seal to be replaced.

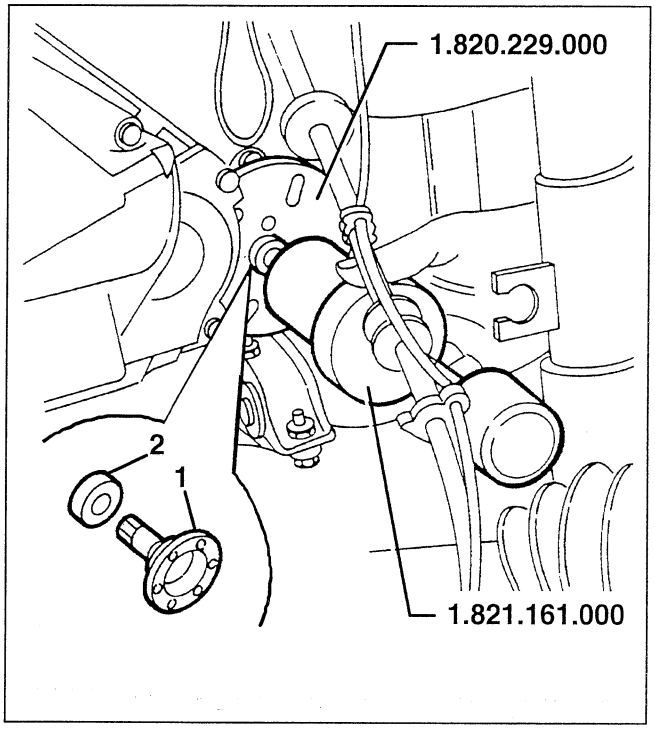

1. Using tools no. 1.821.170.000 and no. 1.821.171.000 insert the new oil seal.
Complete refitting reversing the sequence followed for removal.

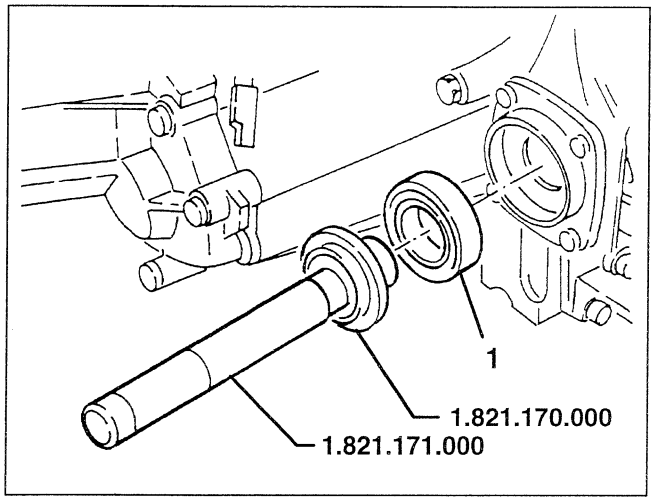

cardiagn.com

DIFFERENTIAL CARRIER OIL SEAL ENGINE SIDE

REPLACEMENT

– Set the car on a lift.
– Disconnect the battery.
– Raise the car.
– Remove the left front wheel and mud flap.
– Working from the left wheelhouse, disconnect the electrical connection of the brake pad wear sensor.
– Release the ABS inductive sensor from the support bracket.

1. Slacken the screws fastening the right axle shaft from the intermediate shaft.
2. Slacken the two bolts fastening the right upright, then remove only the upper bolt.

– Move back the axle shaft just enough to disconnect it from the intermediate shaft.

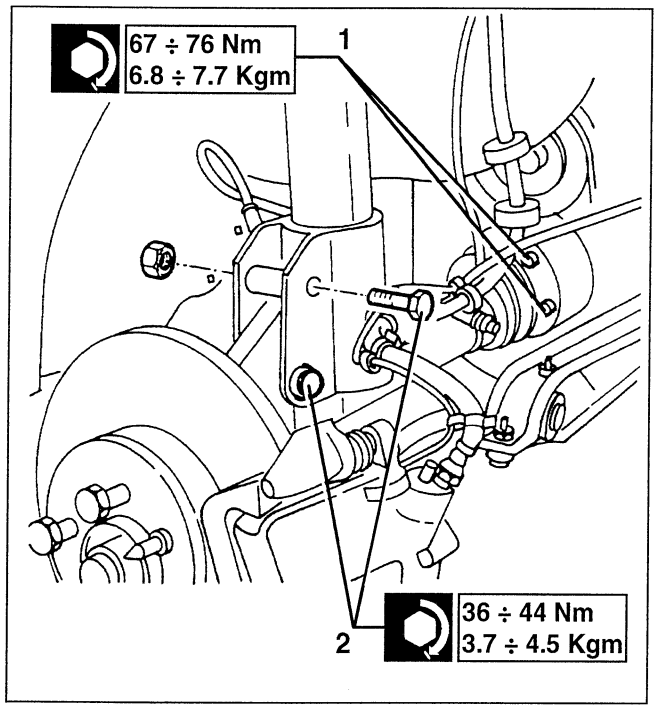

1. Slacken the three bolts fastening the intermediate shaft.

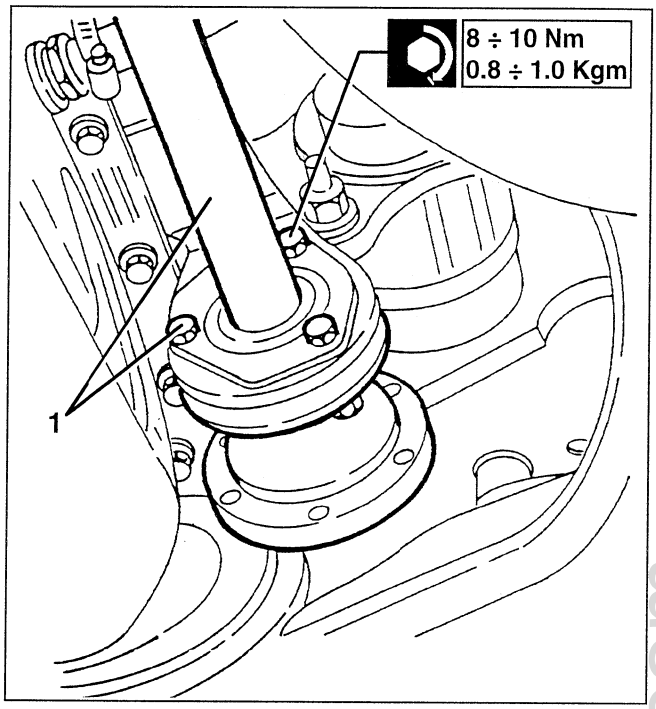

1. Withdraw the intermediate shaft from the differential and withdraw the oil seal to be replaced.
2. Using tools no. 1.821.170.000 and no. 1.821.171.000 insert the new oil seal.

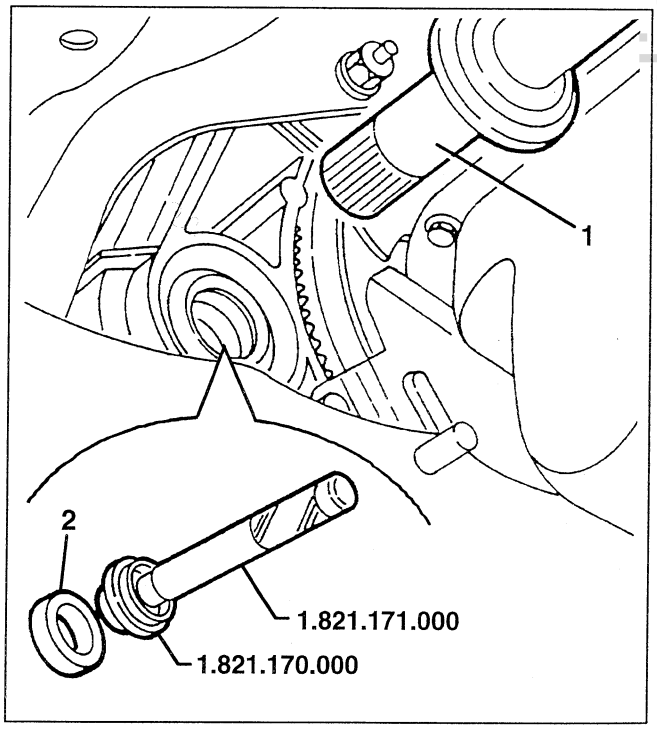

cardiagn.com

OUTSIDE GEARBOX CONTROLS

DESCRIPTION

The set of outside gearshifting controls differs in two types according to the type of gearbox used.

For the 2.0 T.S. 16v engine the traditional solution with rods and tie-rods has been adopted.

For the 3.0 V6 engine, a cable control system has been used which, in addition to improving the maintainability of the system, compared with the conventional system, it enables a considerable reduction of vibrations and the resulting noise, at the same time improving smoothness and precision in gear engagement: also for this version a gearbox control with synchronized reverse has been adopted: this is an innovative system which improves the engagement of reverse gear and prevents it from being engaged without synchronization.

This type of control is made with the addition of a supplementary cable, in addition to the two normal gear engagement and selection control cables.

The end of the cable, formed of a pin, locks the axial movement of the rreverse gear selection fork.

Raising the sleeve under the lever knob, the cable is pulled, therefore also the pin which leaves the movement of the fork free thereby allowing engagement of reverse gear.

VERSION WITH RODS AND TIE-RODS

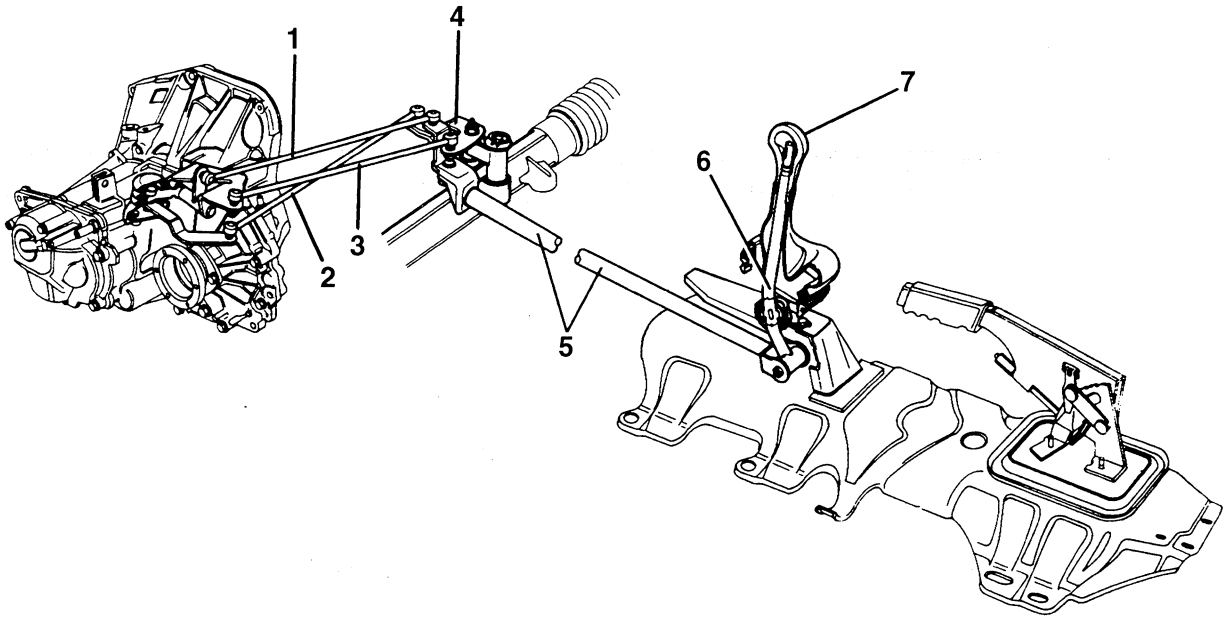

1. *Gear selection lever control tie-rod*
2. *Gear engagement lever control tie-rod*
3. *Reaction rod*
4. *Tie-rod relay support*
5. *Gear control rod*
6. *Gearshift lever*
7. *Gearshift lever knob*

cardiagn.com

SYNCHRONIZED REVERSE GEAR

The version for the 6-cylinder engine has a synchronizer for reverse gear, which enables accurate and noiseless engagement.
The motion is reversed by the lay shaft (1) on which the following are to be found:

– a gear (2), with housing for the synchronizer, which constantly meshes with the gear (3) machined on the sleeve for engaging 1st and 2nd speed on the transmission shaft;

– a sliding gear (4) with synchronizer, which constantly meshes with the reverse gear (5) on the main shaft.

Reverse gear is engaged by the movement of the reverse gear selection rod with the corresponding fork (6) and consequently of the ssliding gear (4) which becomes integral with the gear (2) through the synchronizer.

A safety device prevents the inadvertent engagement of reverse gear. This device comprises a pin (7) which blocks the axial movement of the reverse gear selection rod; the pin is controlled by a flexible cable (8) operated by a sleeve (9) under the gearshift lever knob. Raising the sleeve (9), the cable (8) releases the pin (7), allowing the rod to move freely thereby enabling the engagement of reverse gear.

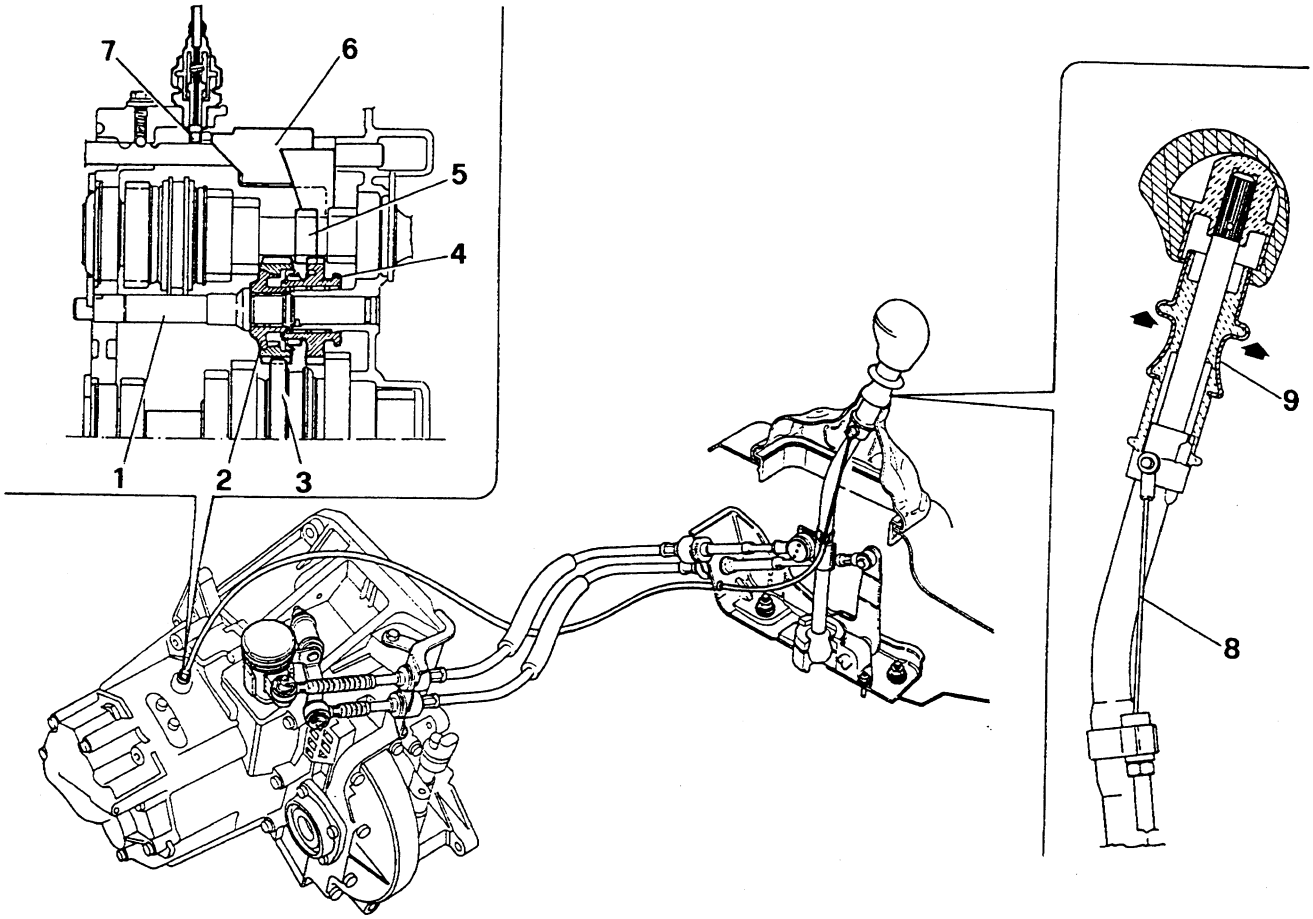

1. *Reverse gear layshaft*
2. *Reverse idler gear*
3. *1st and 2nd gear engagement sleeve*
4. *Reverse gear with synchronizer*
5. *Reverse driving gear*
6. *Reverse gear selection rod fork*
7. *Reverse gear selection rod release pin*
8. *Selection rod release pin control cable*
9. *Reverse gear selection rod release pin control sliding sleeve*

cardiagn.com

CONTROL WITH RODS AND TIE-RODS

GEARSHIFT CONTROL TIE-RODS

Removing / Refitting

– Set the car on a lift.

1. Work from under the car, disconnect the three tie-rods slackening the nuts fastening them to the bracket on the gearbox.

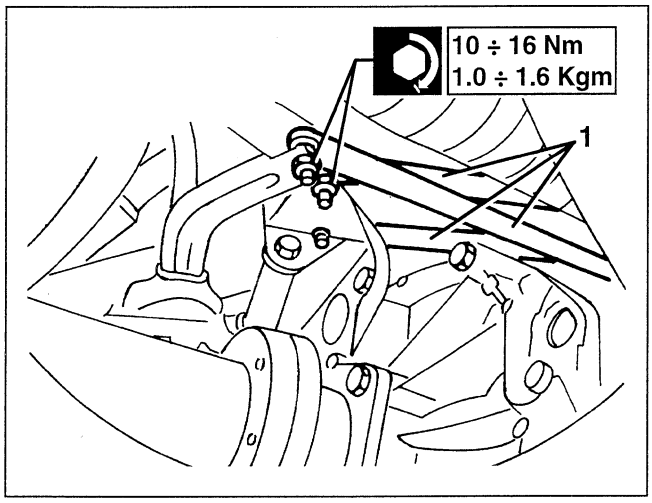

1. Disconnect the three tie-rods of the support fastened to the power steering, and then retrieve them.
2. If necessary remove the support, slacken the nut fastening it to the control rod.
3. Remove the support from the fastening pin on the steering box.

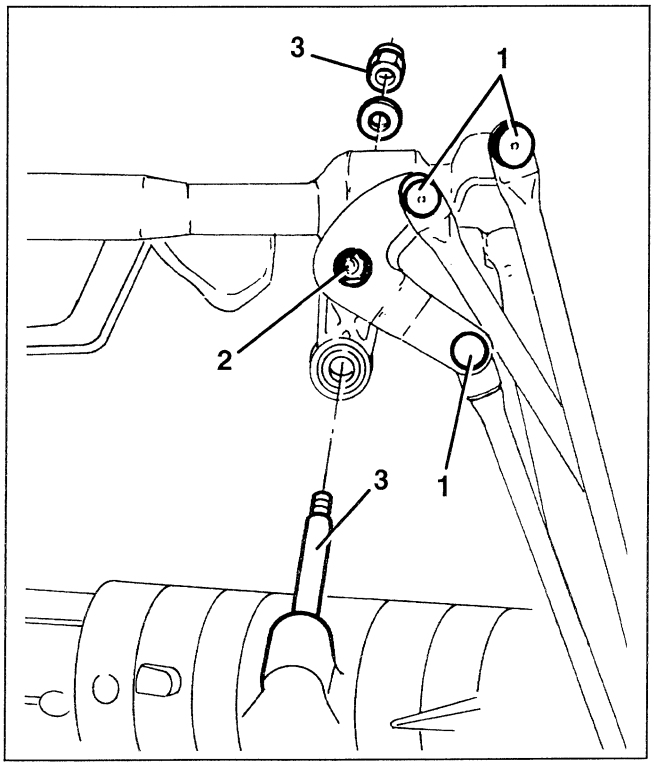

GEARSHIFT CONTROL ROD

Removing / Refitting

– Set the car on a lift.

– Remove the exhaust piping, front section (see GROUP 10).

1. Slacken the four front nuts and loosen the other screws of the gearbox controls support, to lower the gearbox and gain access to the control rod.
2. Disconnect the gearshift control rod from the gearshift lever slackening the fastening bolt.

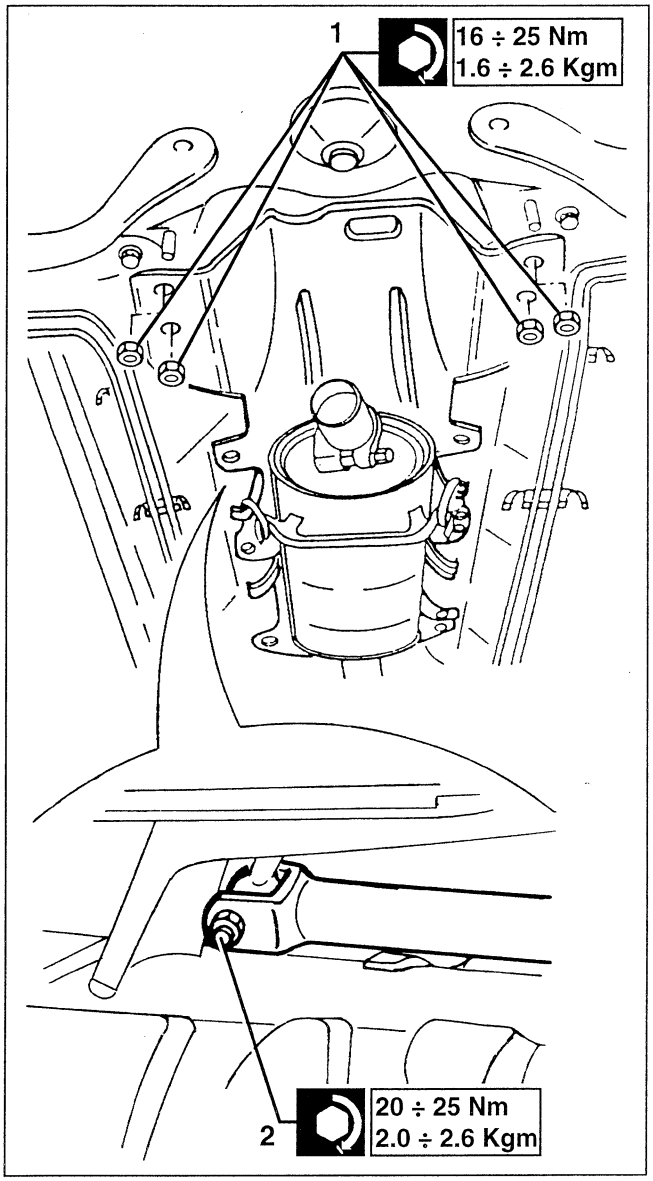

cardiagn.com

1. Disconnect the gearshift control rod from the support on the power steering box.
2. Retrieve the rod.

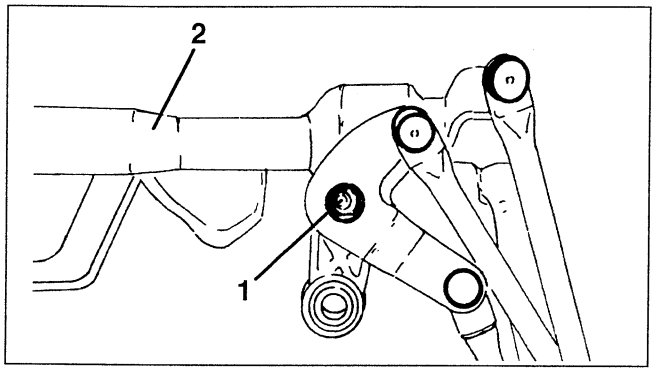

GEARSHIFT LEVER

Removing / Refitting

– Set the car on a lift.
– Working from inside the car, remove the tunnel console (see GROUP 70).
1. Slacken the bolt fastening the gearshift controls support on the body.
2. Slacken the two screws fastening the lever to the support, after eliminating the caulking.

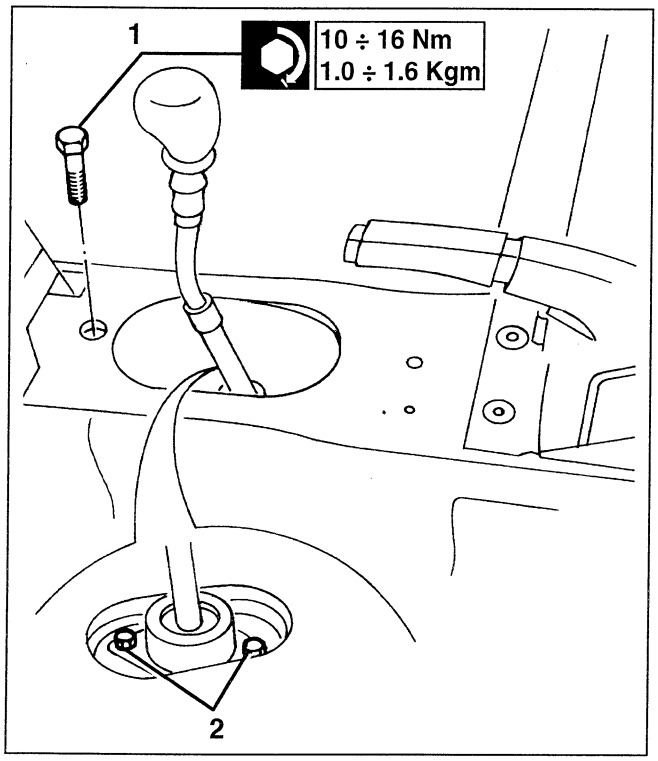

– Raise the car and remove the exhaust piping, front section (see GROUP 10).
1. Loosen the rear fastenings and unscrew all the other fastenings of the gearbox controls support, to lower it.
2. Disconnect the gearshift control rod from the gearshift lever slackening the fastening bolt.
– Retrieve the gearshift lever complete with ball joint.

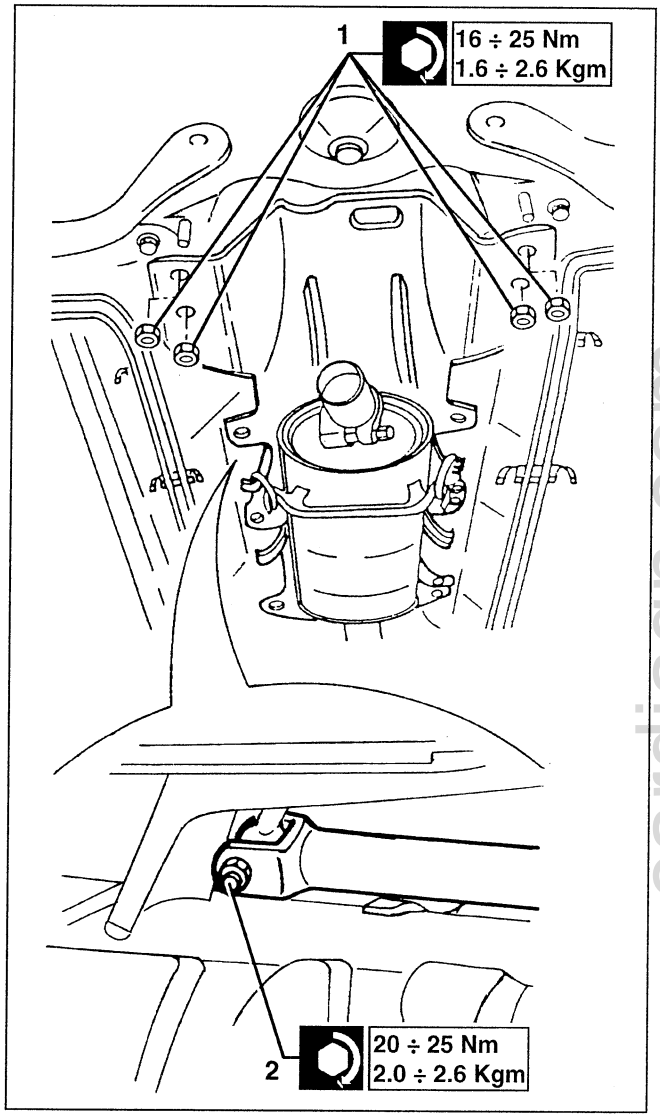

cardiagn.com

CABLE CONTROL

GEAR ENGAGEMENT AND SELECTION CABLES

Removing / Refitting

– Set the car on a lift.
– Remove the tunnel console (see GROUP 70).
1. Disconnect the gear engagement cable from its fastening pin.
2. Disconnect the gear selection cable from the lever.

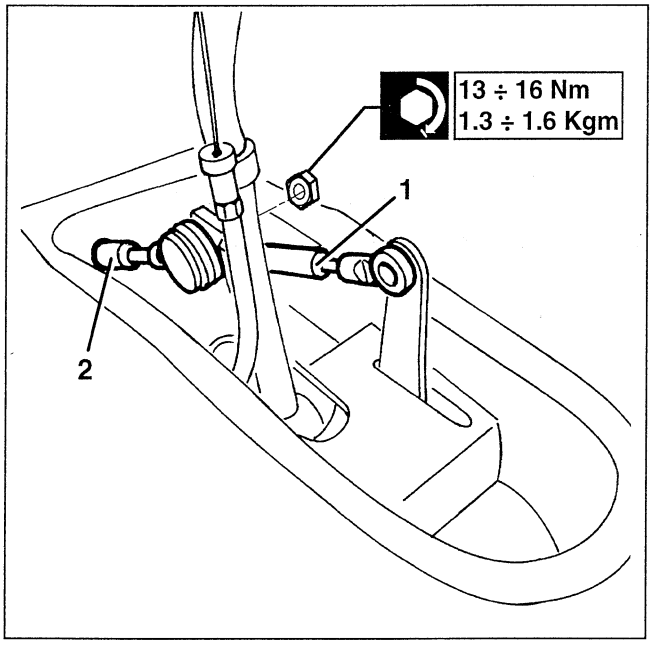

1. Raise the mat and remove the cable fastening clamps.

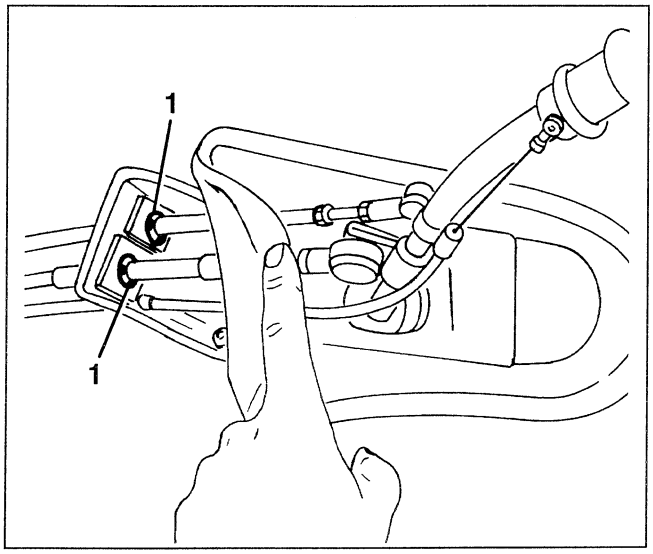

– Working under the car, remove the front and centre section of the exhaust piping (see GROUP 10).
– Remove the heat shield of the catalyst.

1. Withdraw the cable lead grommet from the body pulling the cables downwards.
NOTE: Take care not to damage the reverse gear release cable (A) which is fastened to the gearshift lever.
2. Retrieve the cables pulling them from below. If necessary cut the cable lead grommet.

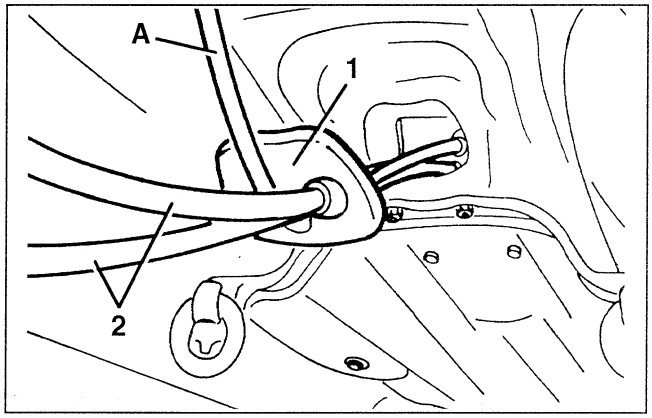

– Working in the engine compartment, remove the air cleaner complete with inlet sleeve (see GROUP 10).
1. Disconnect the cables from the gear engagement device.
2. Remove the clamps fastening the cable to the bracket on the gearbox.
– Retrieve the cables.

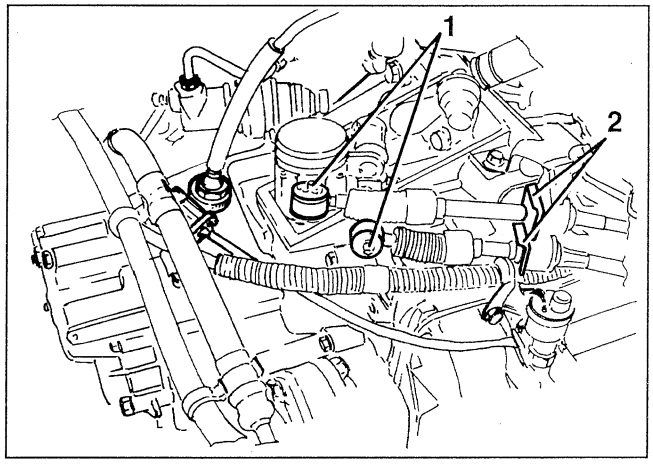

cardiagn.com

REVERSING GEAR RELEASE CABLE

Removing / refitting

– Set the car on a lift.
– Remove the tunnel console (see GROUP 70).
1. Remove the retainer ring and disconnect the reverse gear cable releasing it from the fastening clamps.

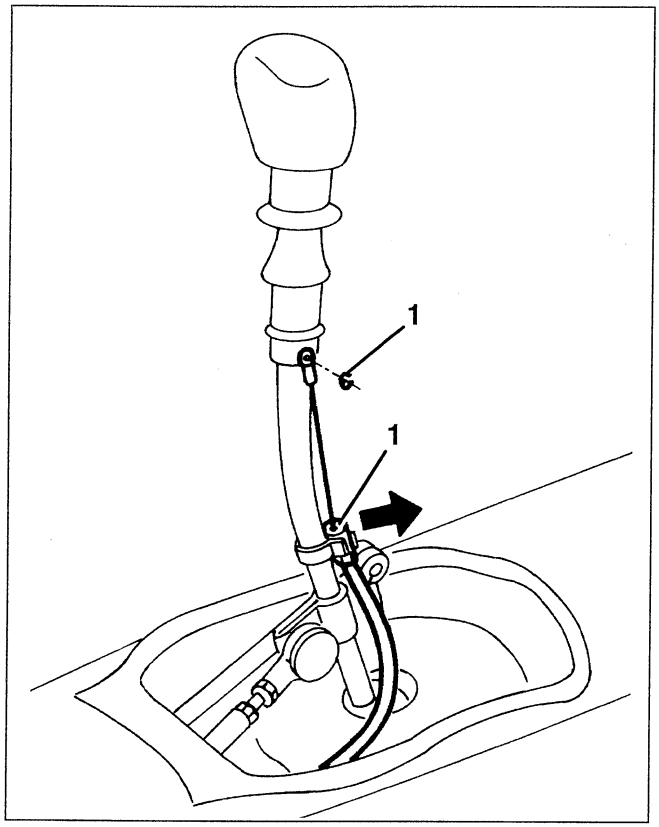

– Working under the car, remove the front and centre section of the exhaust (see GROUP 10).
– Remove the catalyst heat shield.
1. Withdraw the cable lead grommet from the body pulling the cables downwards.
2. Retrieve the cable pulling from below. If necessary cut the cable lead rubber.

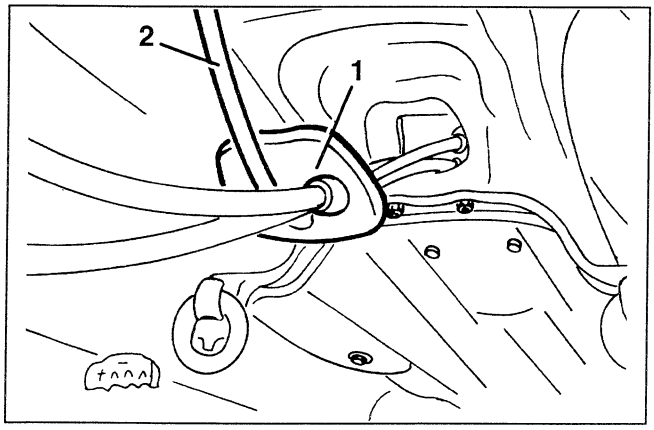

– Working in the engine compartment, remove the air cleaner complete with inlet sleeve (see GROUP 10).
1. Disconnect reverse gear release cable from the gearbox slackening the pin.
– Retrieve the cable.

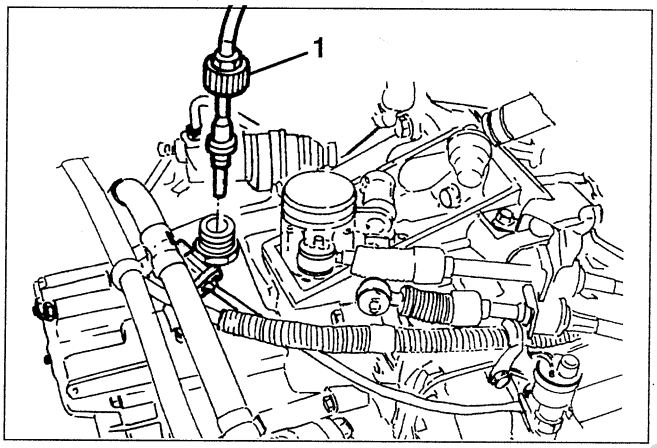

GEARSHIFT LEVER

Removing / Refitting

– Remove the tunnel console (see GROUP 70).
1. Disconnect the the gear selection lever from the cable.
2. Remove the retainer ring and disconnect the gear engagement cable.
3. Remove the retainer ring and disconnect the reverse gear cable from the lever.
4. Separate the reverse gear cable from the lever releasing it from the fastening clamps.

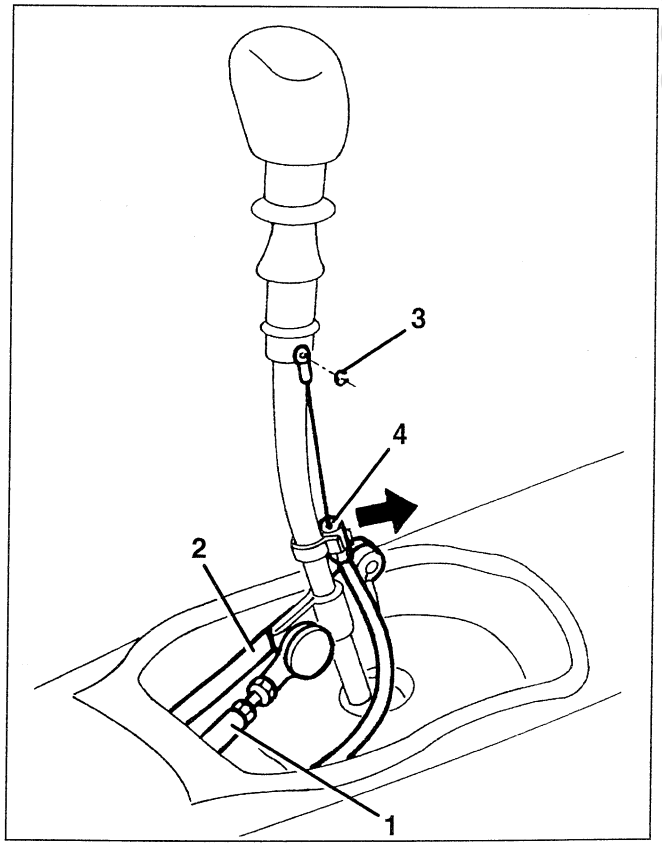

cardiagn.com

1. Raising the sound deadener mat remove the three fastening nuts and remove the lever complete with ball joint.

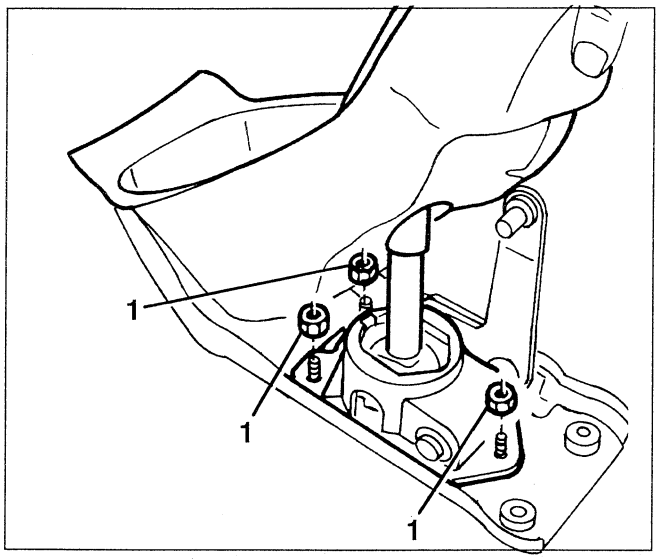

GEARSHIFT LEVER KNOB

Replacement

– Remove the gearshift lever (see previous paragraph).

1. Clamp the lever in a vice (with plastic jaws).
2. Compress the sliding sleeve moving it away from the knob.
3. Withdraw the knob using a flat-headed punch.

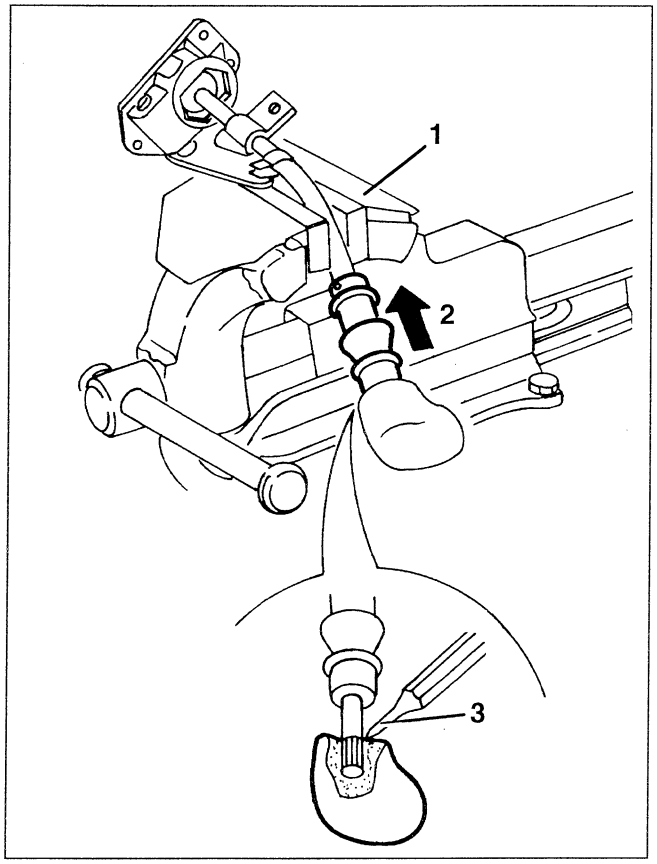

1. Withdraw the sliding sleeve and the spring.

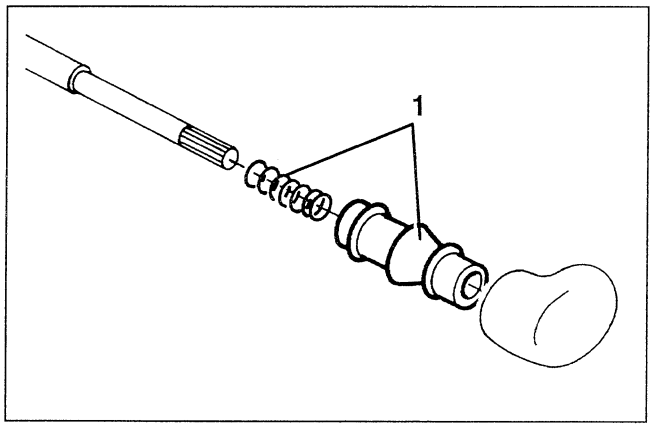

When refitting use a press, forcing the knob to prevent it from turning.
To prevent damage to the knob, interpose a suitable plastic spacer between the press and the knob.
NOTE: If the knob can be re-used re-assemble it using LOCTITE.
The presence of drops of LOCTITE on the stem will not adversely affect operation of the mobile guide.

cardiagn.com

INDEX

AXLE SHAFTS

- Description 1
- Removal / refitting 2
- Gearbox side costant velocity joint. 3
  - Dis-assembly 3
  - Inspections 3
  - Re-assembly 4
- Wheel side constant velocity joint 4
  - Dis-assembly 4
  - Inspections 5
  - Re-assembly 5
- Intermediate shaft. 6
  - Removal / refitting. 6
- Left axle shaft damping mass (only 4-cylinder) 7
  - Removal / refitting. 7

cardiagn.com

AXLE SHAFTS

DESCRIPTION

The axle shafts, constant velocity joints and the intermediate shaft form the assembly of the devices which transmit motion from the gearbox to the drive wheels.

This set of devices, commonly called "transmission" when allied with the gearbox, is composed of:

- right and left-hand axle shafts;
- constant velocity joints on gearbox and wheel side;
- intermediate shaft.

The axle shafts (6), made from high strength steel, have grooved ends for coupling with the constant velocity joints (1) and (5), which contain the housing for the flexible rings (2) which secure the joints themselves.

The constant velocity joints are composed of an inner core (1d) known as "drive", keyed onto the input shaft, and by an outer shell (1a) called "driven", which forms the outgoing element of the joint.

The inner core has six grooves on the outer surface containing six balls (1b), held in place by a retainer cage (1c).

These balls are the parts which actually transmit the motion and they are contemporaneously housed in grooves machined on the inner surface of the shell.

On the versions with 4-cylinder engine, the left-hand axle shaft is fitted with a vibration damper (8) formed of two half shells and a rubber pad (9) for positioning.

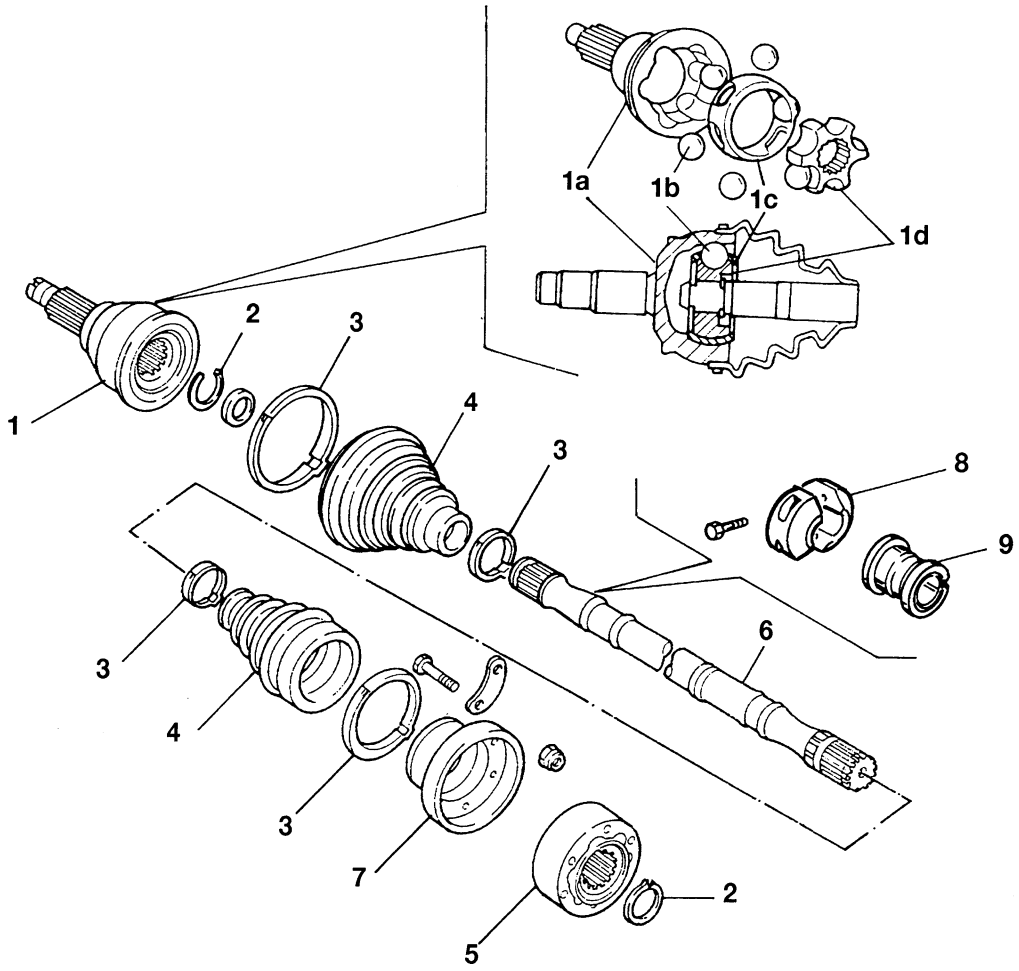

1. *Wheel side constant velocity joint*
2. *Flexible ring*
3. *Retainer clamp*
4. *Protection boot*
5. *Retainer clamp*
6. *Axle shaft*
7. *Constant velocity joint coupling flange*
8. *Damper*
9. *Rubber pad*

cardiagn.com

The intermediate shaft is also grooved and, like the axle shafts, it is made from high strength steel. Its purpose is to connect the output of the differential with the right hand axle shaft to which it is connected by a flange.

For this reason, to limit the overhang between the connection points, the intermediate shaft is supported by a seat machined especially on the gearbox.

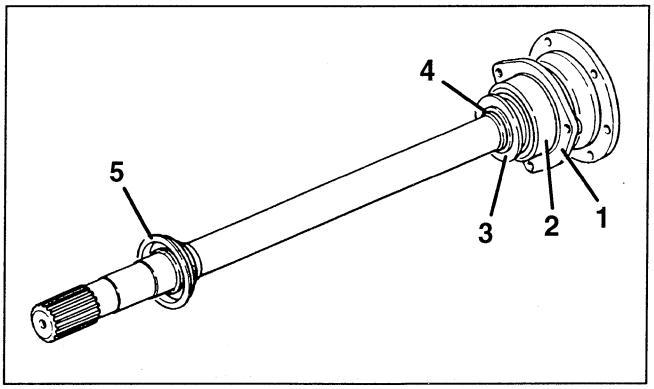

1. *Bearing retainer plate*
2. *Ball bearing*
3. *Spring washer*
4. *Bearing retainer ring*
5. *Cup for bearing*

REMOVAL / REFITTING

The following procedure refers to removing/refitting the left-hand axle shaft.
It is however posible to follow the whole procedure also for removing the right-hand axle shaft.

– Set the car on a lift.
– Disconnect the battery.
– Raise the car.
– Remove the wheel and mud flap from the left-hand wheel house.
– Working from the left-hand wheelhouse, disconnect the brake pad wear sensor electrical connection.
– Release the ABS inductive sensor from the support bracket.

1. Slacken the bolts fastening the left constant velocity joint from the differential flange retrieving the safety plates.

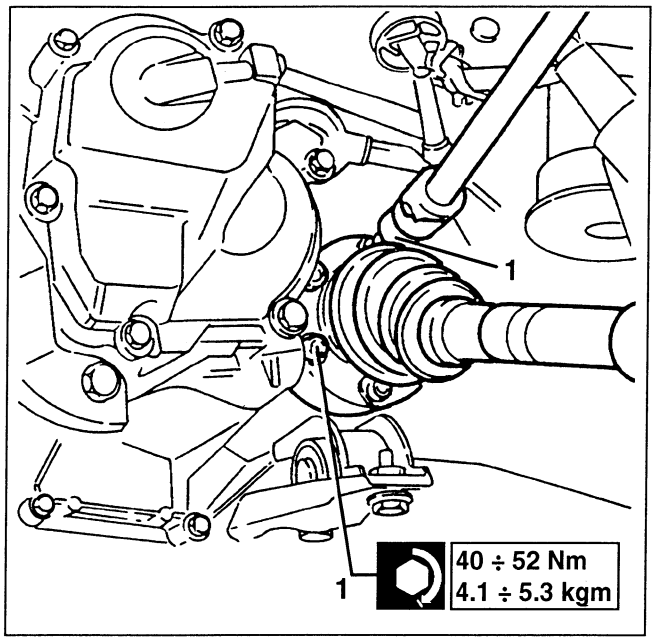

1. Slacken the two bolts fastening the left wheel upright to the shock absorber, then withdraw only the upper bolt.
This operation makes it possible to move back the axle shaft just enough to disconnect the constant velocity joint.

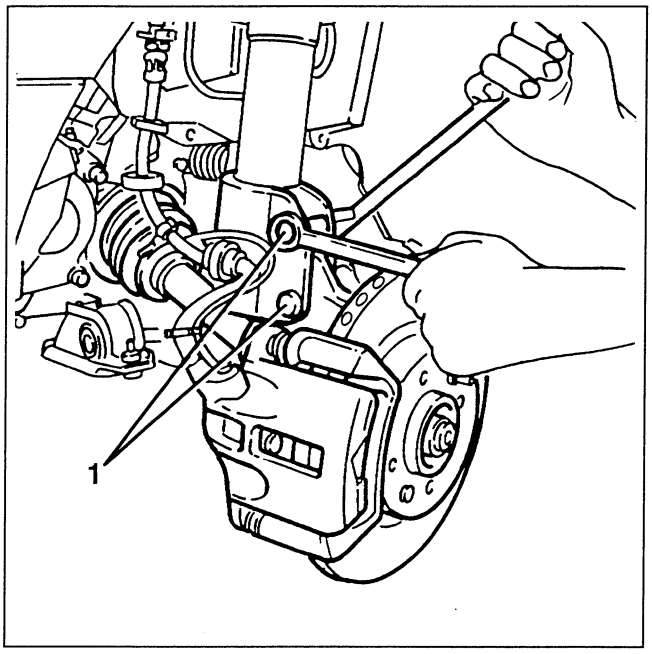

cardiagn.com

1. Remove the caulking and slacken the nut fastening the constant velocity joint to the wheel hub.
2. Withdraw the axle shaft and remove it.

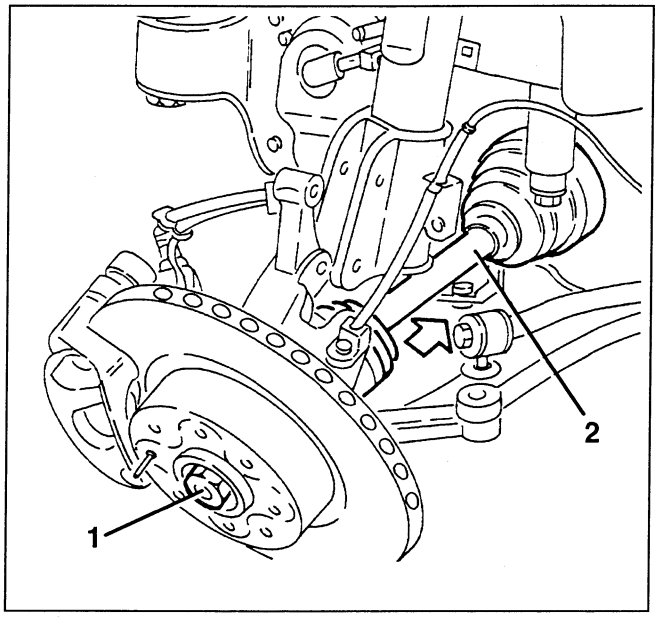

When refitting tighten the nut fastening the axle shaft to the hub and the bolts fastening the upright to the shock absorber as described iN GROUP 44 - Wheels and Hubs.

GEARBOX SIDE COSTANT VELOCITY JOINT

DIS-ASSEMBLY

1. Remove the flexible retainer ring.
2. Remove the the gearbox side boot fastening clamps.
3. Withdraw the gearbox side constant velocity joint from the axle shaft.
4. Separate the protective boot from the constant velocity joint.

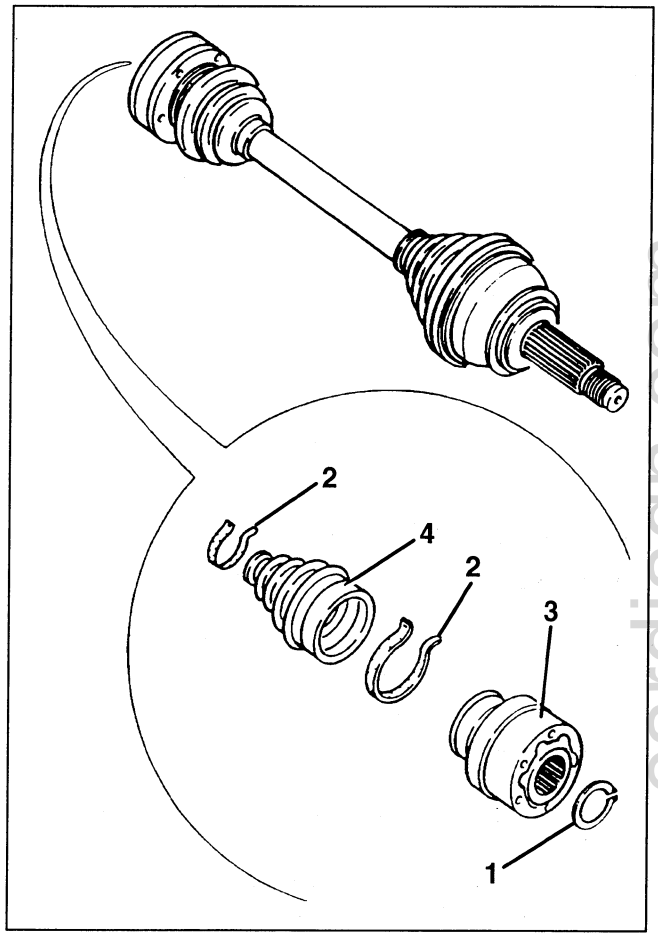

WARNING:
When refitting change the boot and its clamps.

INSPECTIONS

Degrease the joint components with fuel oil and check the balls and their housings for traces of wear and cracks. Check the shaft for distorsion, cracks and signs of wear.

cardiagn.com

RE-ASSEMBLY

1. Fit a new boot on the axle shaft.
2. If disassembled previously, re-assemble the components of the constant velocity joint as illustrated.
Fill the boot ad grease the joint with appr. 120 g of the specified grease.
3. Assemble the gearbox side constant velocity joint.
4. Fit the flexible retainer ring.

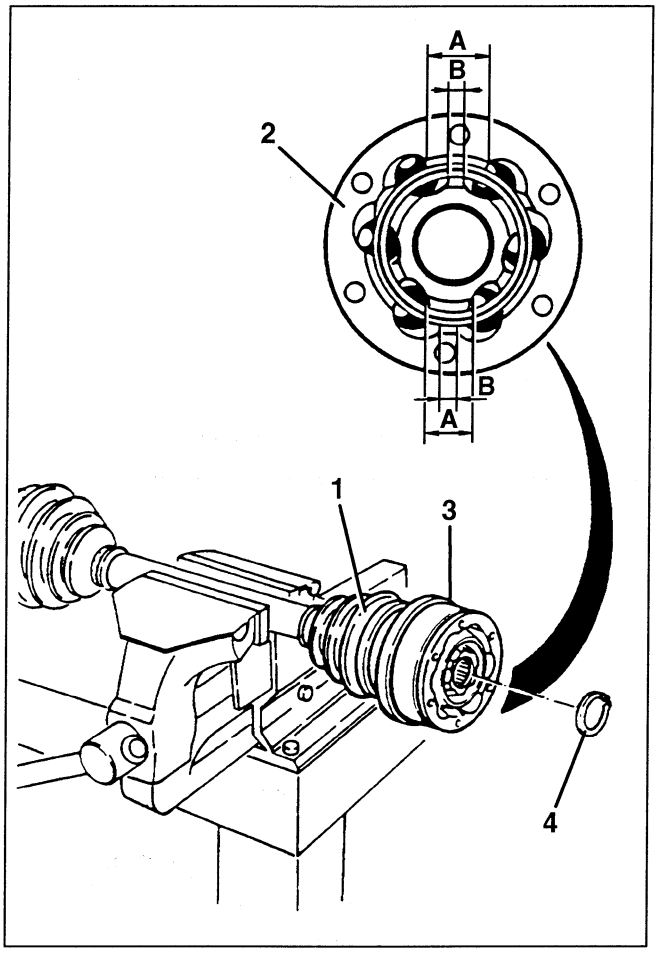

A = Greater distace between balls
B = Smallest distance between balls

1. Using tool no. 1.820.082.000 install the inner boot fastening clamp.

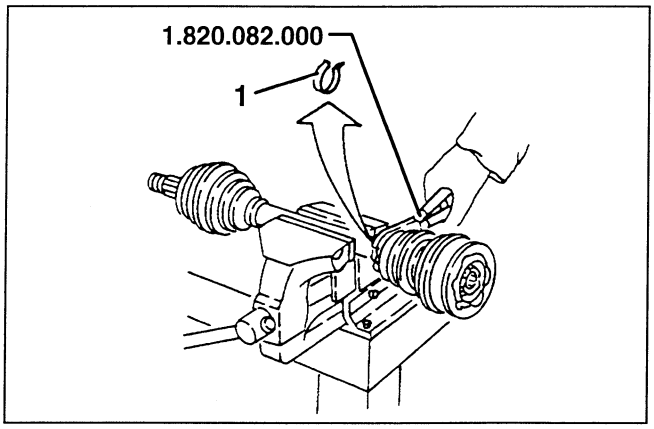

1. Using tool no. 1.820.084.000 install the outer boot fastening clamp.

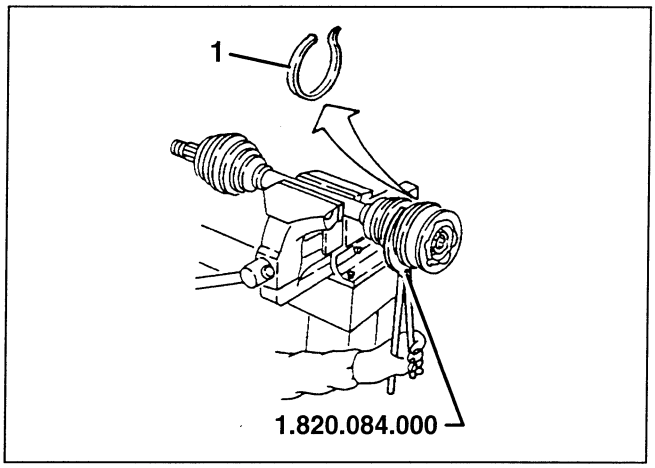

WHEEL SIDE CONSTANT VELOCITY JOINT

DIS-ASSEMBLY

1. Clamp the axle shaft in a vice with protective jaws.
2. Remove the wheel side boot fastening clamps.
When refitting change the boot and its fastening clamps.

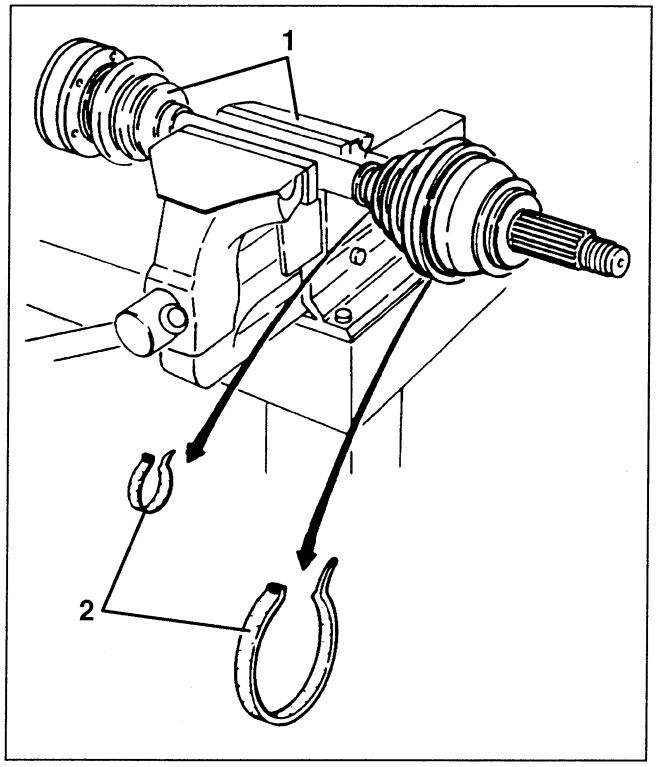

cardiagn.com

1. Remove the flexible retainer ring.
2. Using tools no. 1.821.165.000 and no. 1.821.161.000, remove the constant velocity joint from the axle shaft.

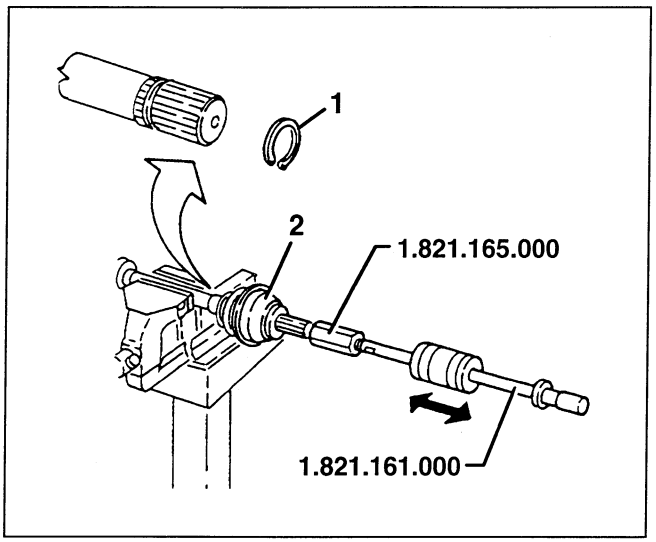

INSPECTIONS

Degrease the joint components with fuel oil and check the balls and their housings for signs of wear and cracks. Check the shaft for distorsion, cracks and signs of wear.

RE-ASSEMBLY

1. Install a new protection boot.
2. Position the flexible retainer ring in its housing.
3. Compress the ring with the fastening clamp.

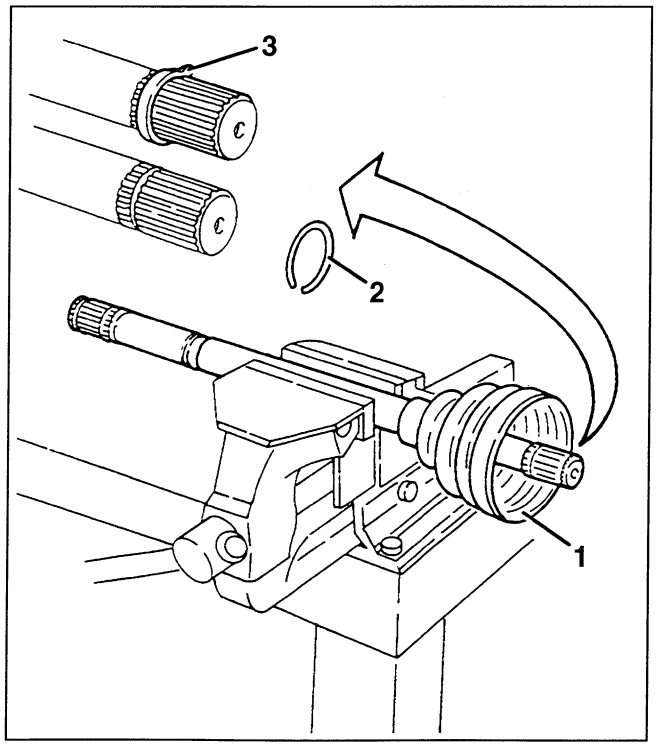

1. Position the constant velocity joint on the axle shaft and using a soft hammer, push it into its housing.
Fill the boot and grease the joint with appr. 120 g of the specified grease.

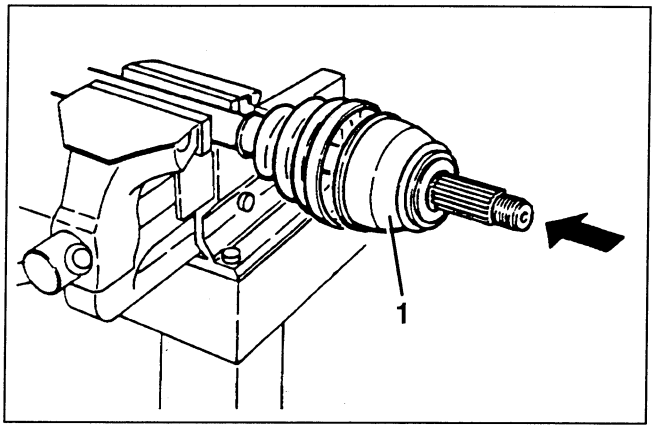

1. Using tool no. 1.820.082.000 install the inner boot fastening clamp.

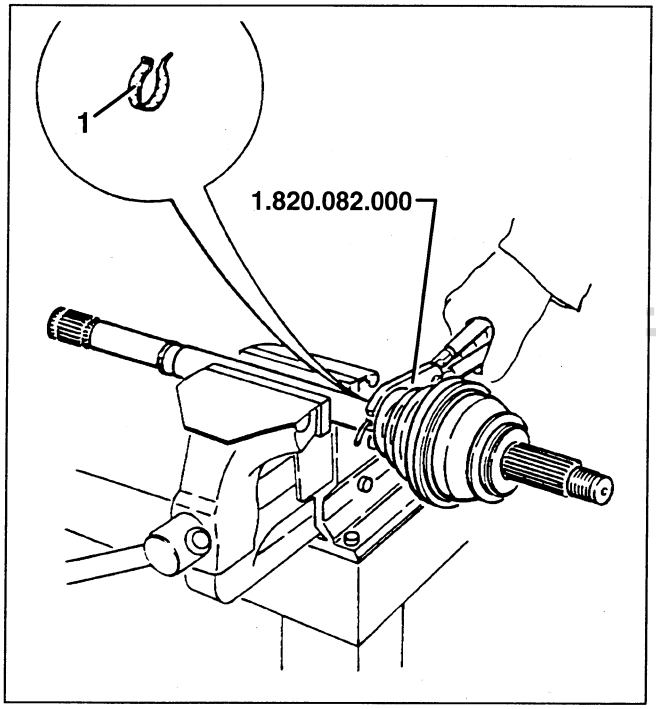

cardiagn.com

1. Using tool no. 1.820.084.000 install the outer boot fastening clamp.

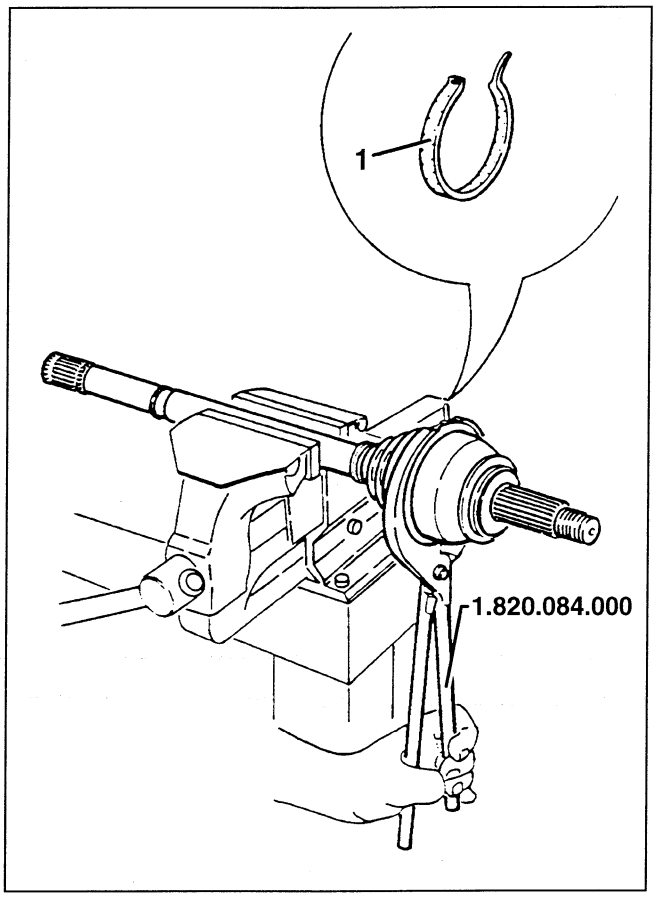

INTERMEDIATE SHAFT

REMOVAL / REFITTING

– Set the car on a lift.
– Disconnect the battery.
– Raise the car.
– Remove the wheel and mud flap from the right-hand wheel house.
– Working from the right wheelhouse, disconnect the electrical connection of the brake pad wear sensor.
– Release the ABS inductive sensor cable from the support bracket.

1. Slacken the six fastening bolts and disconnect the constant velocity joint from the intermediate shaft.
2. Slacken the two bolts fastening the right upright to the shock absorber then withdraw only the upper bolt.

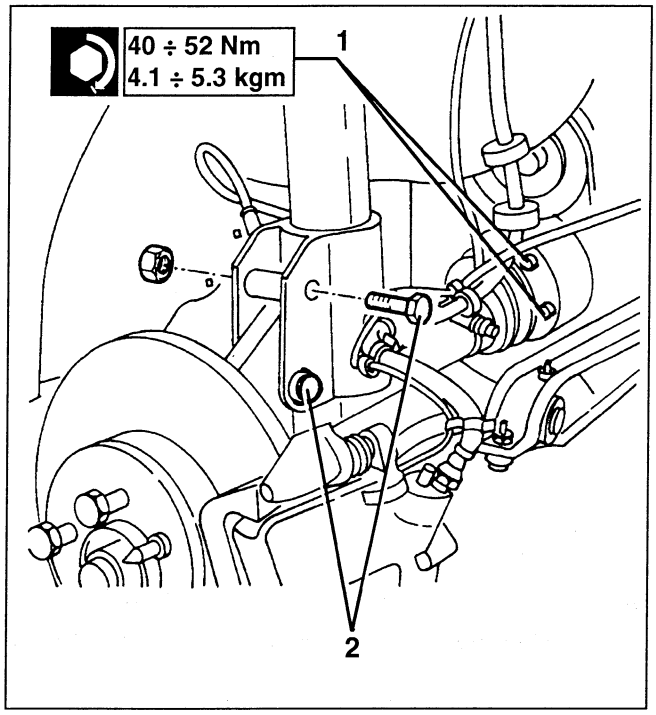

1. Move the axle shaft back just enough to disconnect it from the intermediate shaft and set it as illustrated.

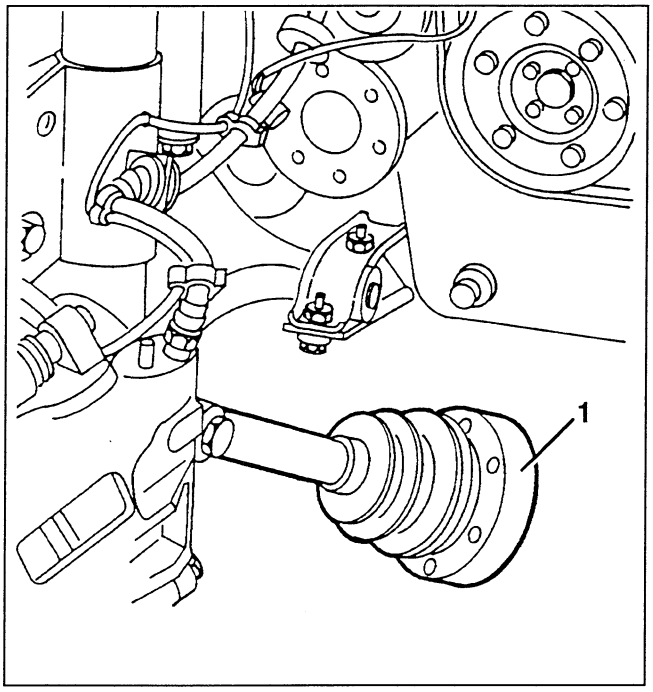

cardiagn.com

1. Slacken the three fastening bolts and withdraw the intermediate shaft
2. Remove the dust guard.

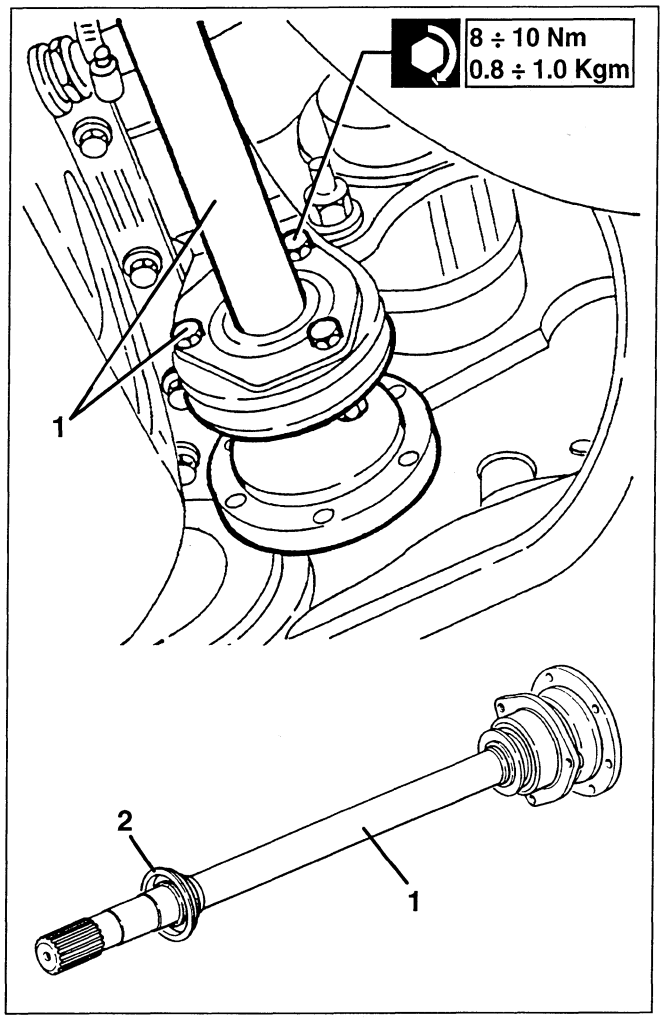

Refit the intermediate shaft reversing the sequence followed for removal. Tighten the bolts fastening the upright to the shock absorber as described in GROUP 44 - Wheels ad Hubs.

LEFT AXLE SHAFT DAMPING MASS (Only 4-cylinder)

REMOVAL / REFITTING

– On the left-hand side of the car, proceed as follows:

1. Slacken the screws fastening the two half shelld forming the damping mass.
2. Remove the mass together with the rubber pad below.

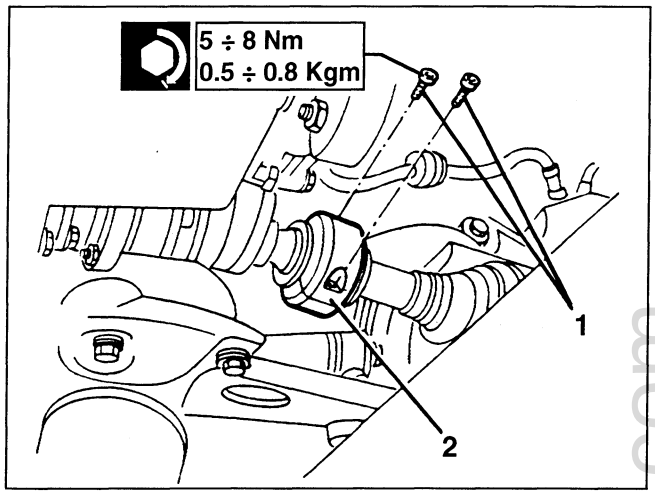

Refit reversing the sequence followed for removal taking care to position the mass according to the dimensions illustrated.

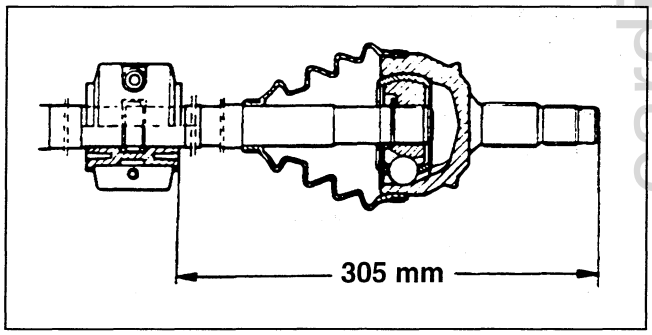

cardiagn.com

BRAKES

INDEX

HYDRAULIC BRAKE SYSTEM

- Description 1
- Brake pedal 2
  - Removal/refitting 2
- Brake-clutch fluid reservoir 2
  - Removal/refitting 2
- Brake - clutch fluid minimum level sensor 3
- ABS BOSCH 2Si hydraulic unit/electronic control unit 3
  - Removal / refitting 3
- BOSCH 5.3 ABS with EBD 4
  - Components 4/2
  - Repair operations on the unit 4/4
  - ABS hydraulic unit/electronic control unit 4/4
- Servobrake 4/5
  - Removal/refitting 4/5
- Braking load proportioning valve (up to chassis no.6023215) 4/6
  - Removal / refitting 4/6
  - Adjustment 4/6
- Braking load proportioning valve (from chassis no.6023216 to chassis no.___) . . 5
  - Description 5
  - Removal / refitting 5
- Brake system pipes 5
  - Checks and inspections 5
- Bleeding the air from the system 6
  - Recovery in the case of air in the piston . . . 7
- Stop lights switch 7
  - Removal / refitting 7
- Front inductive sensors 7
  - Removal / refitting 7
- Rear inductive sensors 8
  - Removal / refitting 8
- Checking the gap 8
- Right front active sensor (6 Cylinder Version) 8/1
- Left front active sensor (6 Cylinder Version) . 8/2
- Rear active sensors (6 Cylinder Version) . . . 8/3

BRAKE GROUPS

- Front brake disk 9
  - Removal / refitting 9
  - Checks and inspections 9
- Front brake caliper 10
  - Removal / refitting 10
  - Disassembly / reassembly 11
  - Checks and inspections 11
  - Changing the front brake pads 11
- Rear brake disk 12
  - Removal / refitting 12
  - Checks and inspections 13
- Rear brake caliper 13
  - Removal / refitting 13
  - Dis-assembly 14
  - Reassembly 15
  - Checks and inspections 16
  - Changing the rear brake pads 16

PARKING BRAKE

- Control lever 17
  - Removal/refitting 17
- Front control cable 17
  - Removal/refitting 17
- Rear control cables 18
  - Removal / refitting 18
- Adjusting the control cables 19
- Handbrake on warning switch 19
  - Removal/refitting 19

cardiagn.com

cardiagn.com

HYDRAULIC BRAKE SYSTEM

DESCRIPTION

For the braking system particular solutions have been adopted in all the components to ensure **stable and powerful braking** suited to the high performance of the car.

The main features of the system are the following:

- **BOSCH 2Si ABS** (up to chassis no.___).
- **BOSCH 5.3 ABS** with EBD (from chassis no. ___).
- Large disk diameter (front ventilated): ensure high heat dispersion thus effectiveness also during prolonged braking.
- **Crossed circuit with braking load proportioning valve**: ensuring high levels of safety in the event of a failure and preventing the rear wheels from locking.
- **Servobrake with reduced loadless stroke**: limits the pedal stroke and warrants quicker accurate braking.
- **Brake linings in ecological material:** in keeping with current environmental regulations.

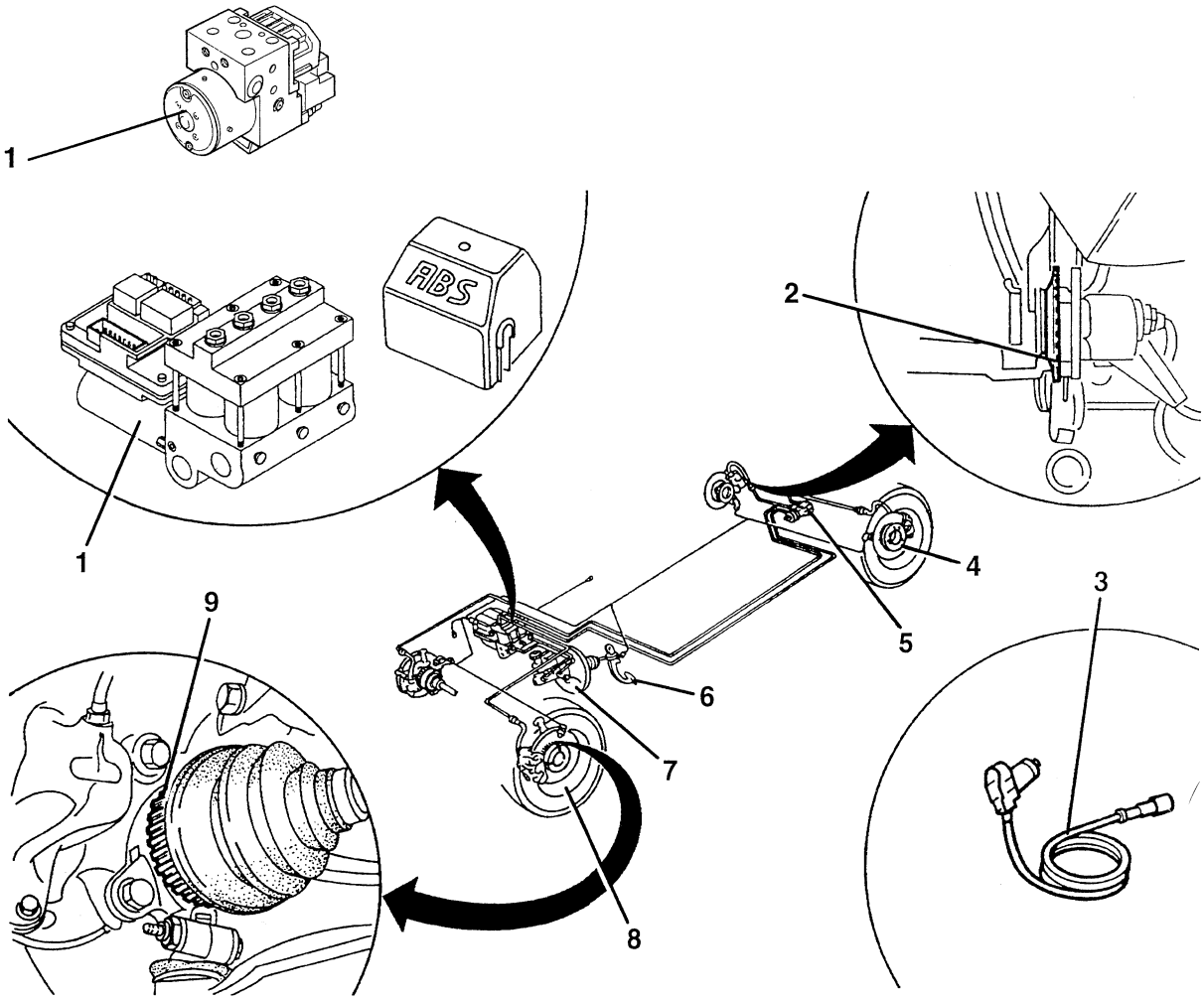

Hydraulic brake circuit

1. *ABS hydraulic unit/electronic control unit*
2. *Rear phonic wheel*
3. *Inductive sensor*
4. *Rear disk*
5. *Braking load proportioning valve (up to chassis no.___)*
6. *Brake pedal*
7. *Servobrake*
8. *Ventilated front disk*
9. *Front phonic wheel*

cardiagn.com

BRAKE PEDAL

REMOVAL/REFITTING

1. Twist and remove the stop light switch from its housing.
2. Remove the pin fastening the brake pedal to the servobrake.
3. Slacken the fastening nut and remove the brake pedal.

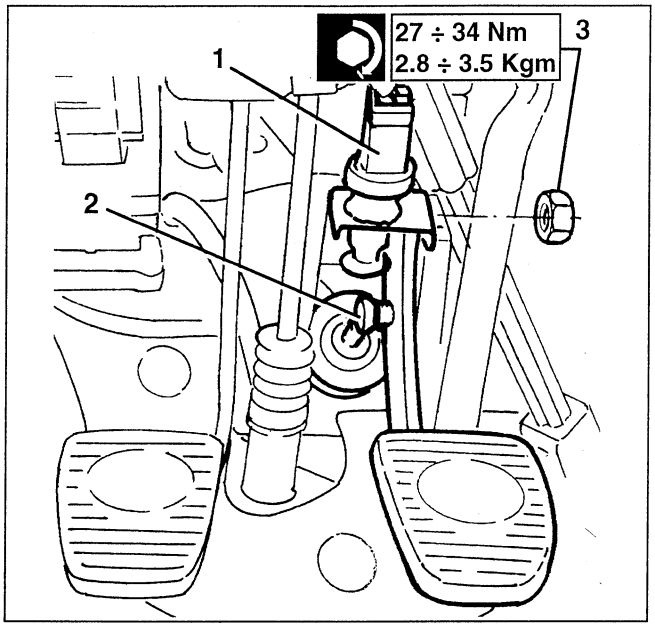

BRAKE-CLUTCH FLUID RESERVOIR

REMOVAL/REFITTING

– Disconnect the battery negative terminal.
– Remove the air inlet corrugated pipe (see GROUP 10).
1. Disconnect the low fluid level warning device.
– Empty the reservoir using a syringe.
2. Disconnect the reservoir from the services tray slackening the two screws; remove the clip.
3. Disconnect the two pipes leading from the reservoir from the pump.
4. Disconnect the clutch circuit pipe from the reservoir

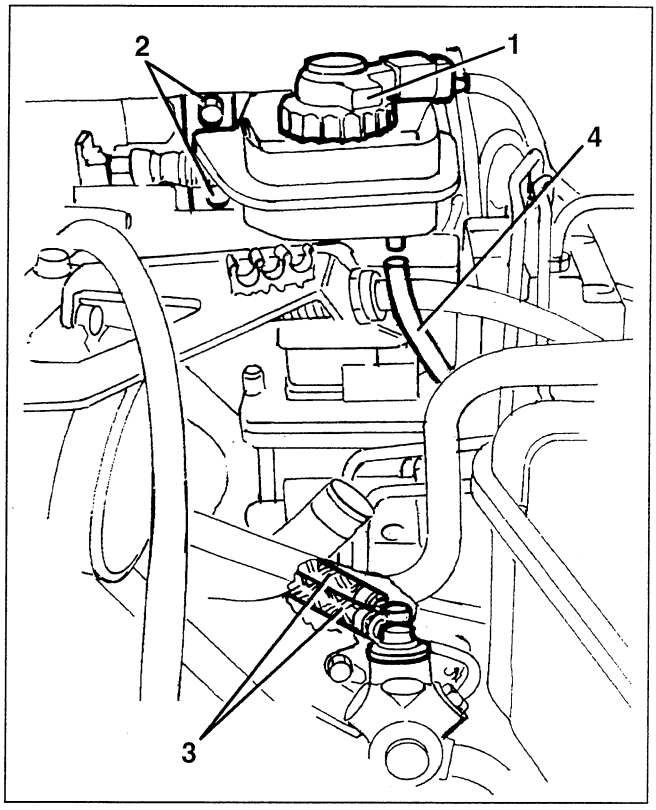

1. Remove the reservoir

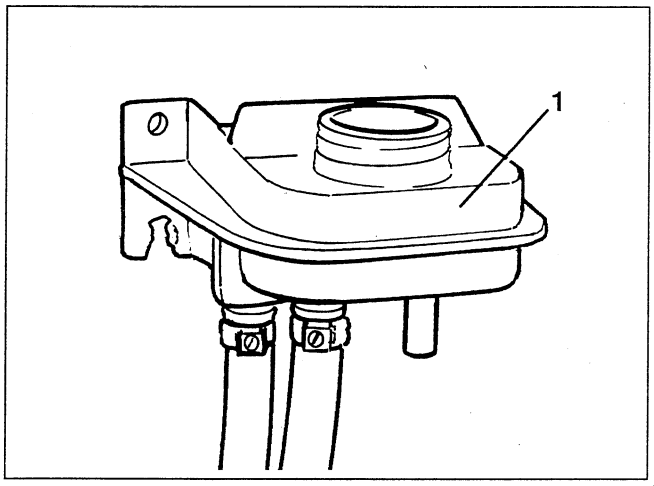

When refitting bleed the air from the system; then top up the level in the reservoir.

cardiagn.com

BRAKE - CLUTCH FLUID MINIMUM LEVEL SENSOR

(See GROUP 18).

ABS BOSCH 2Si (up to chassis no.___) HYDRAULIC UNIT/ ELECTRONIC CONTROL UNIT

REMOVAL / REFITTING

– Disconnect the battery negative terminal.
– Remove the corrugated air inlet pipe (see GROUP 10).
– Empty and then remove the brake - clutch fluid reservoir (see specific paragraph).
1. Disconnect the connection of the ABS control unit
2. Remove the protective cover.
3. Disconnect the connection of the relays.
4. Disconnect the earth cable.

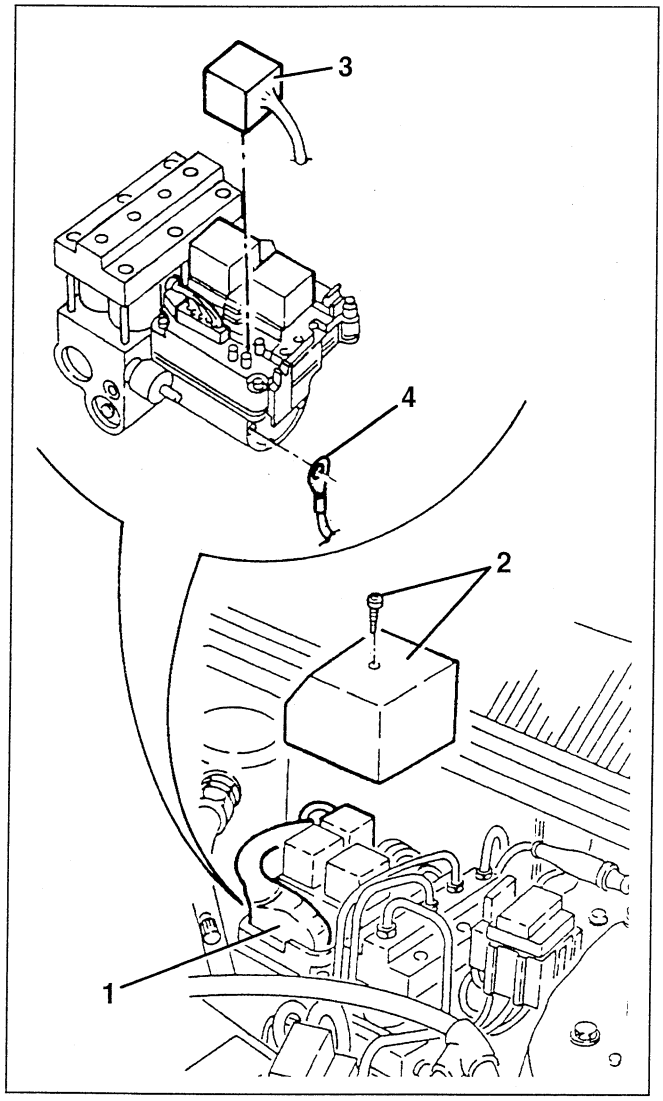

1. Disconnect the four stiff pipes from the valve unit (grey) and the two pipes from the pump (black).
2. Slacken the two screws and remove the unit from the bracket

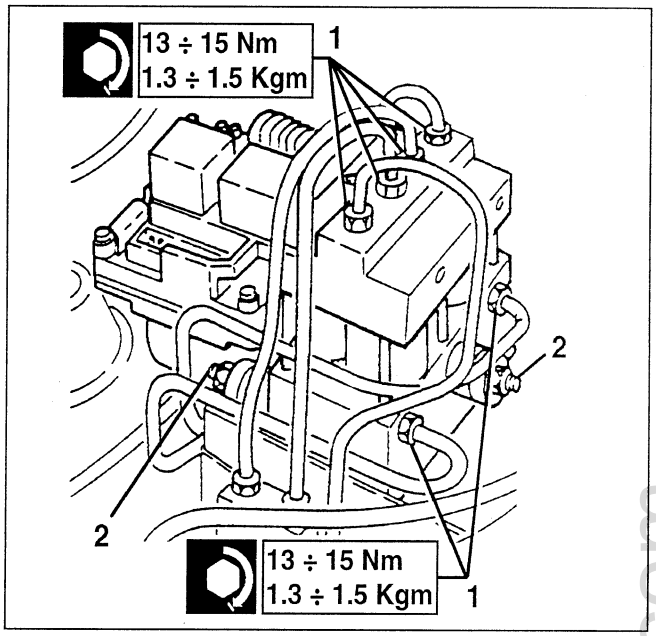

When refitting relieve the air from the braking system (see specific paragraph)

NOTE: For further details about operation and system diagnosis see "GROUP 55 - ELECTRIC SYSTEM DIAGNOSIS".
Diagnosis for fault-finding should be carried out using the ALFA ROMEO TESTER.

cardiagn.com

BOSCH 5.3 ABS WITH EBD

(from chassis no. ...)

DESCRIPTION

The BOSCH 5.3 ABS optimises the compactness (ease of assembly), lightness and reliability of the previous versions of anti-lock systems.

The use of new micro-hybrid electronic components, optimisation of the flows owing to the study of new more compact shapes of the valve bodies and the reduction of the number of hydraulic components, have made it possible to improve the characteristics of the solenoid valves.

An EBD (Electronic Braking force Distribution) function has also been implemented in the system which makes adjustment of the braking force at the rear wheels directly by the electronic control unit, eliminating the mechanical pressure regulator.

The main components of the system are:
- new electronic control unit which is more powerful and versatile than the previous models, integrated in the electrohydraulic control unit;
- electrohydraulic control unit which modulates the braking pressure at the brake calipers through eight solenoid valves, two per wheel.
- four sensors, one per wheel, which detect the angular rotation speed of the wheels themselves.

The system is completed by:
- hydraulic system piping;
- a specific wiring loom;
- a switch on the brake pedal to detect the braking condition;
- two warning lights on the check panel.

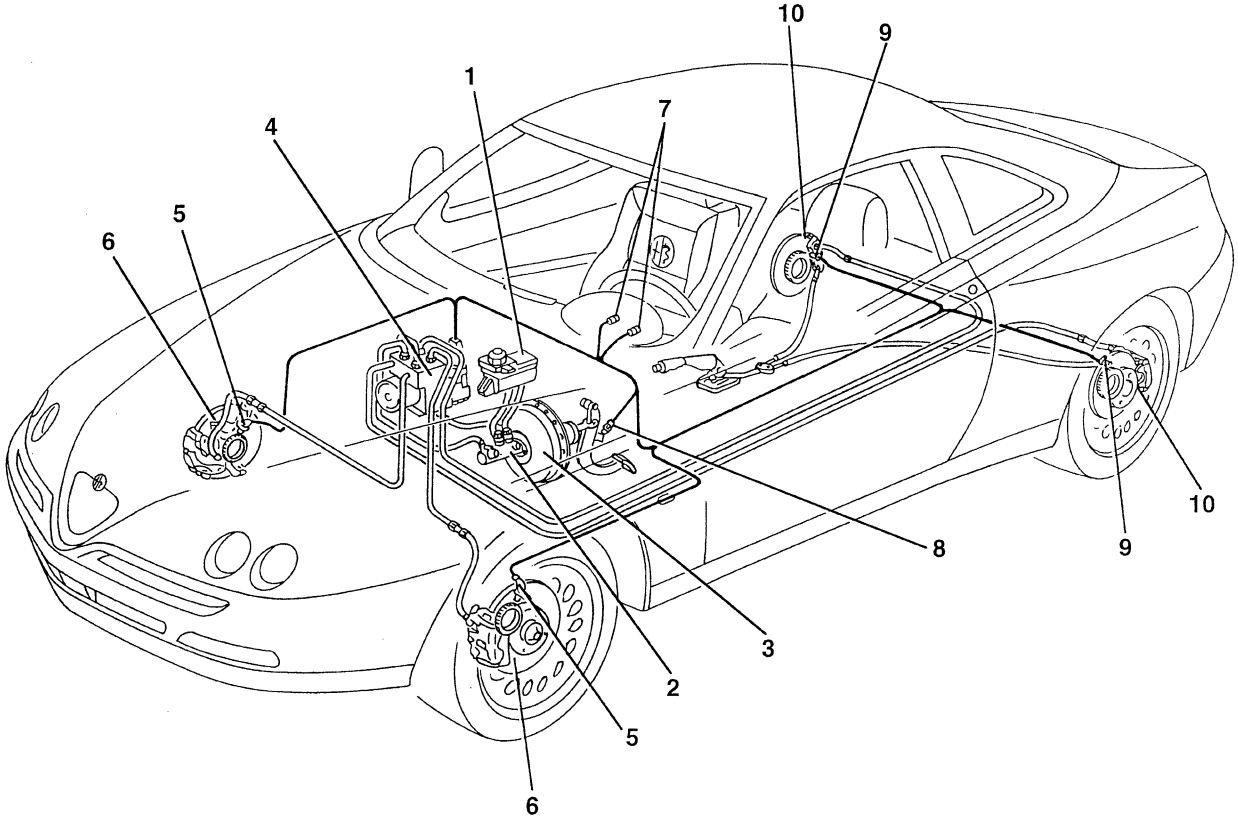

Layout of the Bosch 5.3 A.B.S. anti-lock system

1. *Brake fluid reservoir*
2. *Brake pump*
3. *Vacuum servobrake*
4. *Electrohydraulic control unit with incorporated electronic control unit*
5. *Front wheel revolution sensor*
6. *Front brakes*
7. *Failure warning lights*
8. *Stop lights control switch*
9. *Rear wheel revolution sensor*
10. *Rear brakes*

cardiagn.com

Hydraulic layout of BOSCH 5.3 A.B.S. System

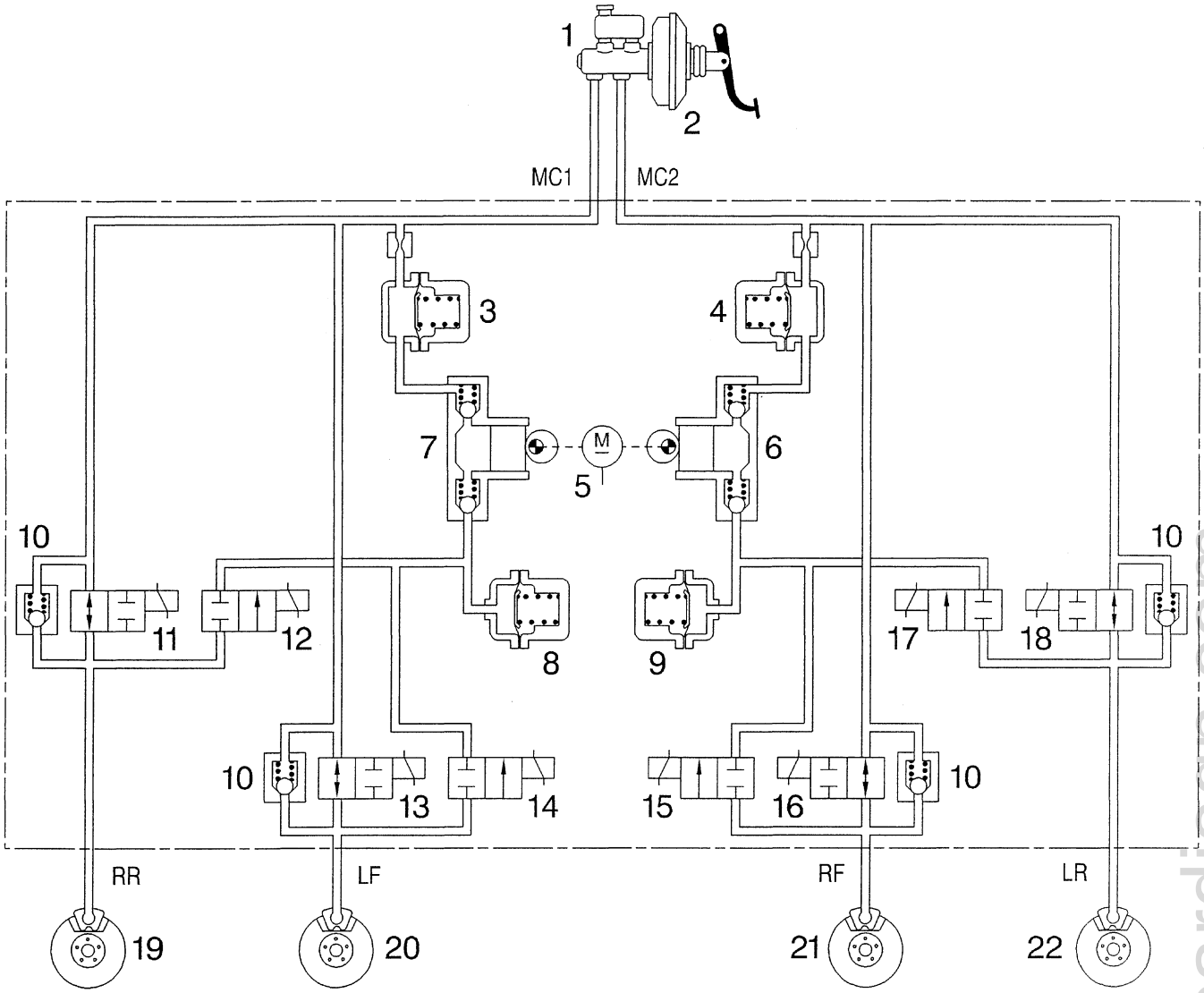

Braking system with double crossed circuit

1. *Brake control pump*
2. *Servobrake*
3. *High pressure accumulator (damping chamber)*
4. *High pressure accumulator (damping chamber)*
5. *Recovery pump drive motor*
6. *Recovery pump*
7. *Recovery pump*
8. *Low pressure accumulator (reservoir)*
9. *Low pressure accumulator (reservoir)*
10. *Fast pressure reduction valve*
11. *Right rear charge solenoid valve*
12. *Right rear discharge solenoid valve*
13. *Left front charge solenoid valve*
14. *Left front discharge solenoid valve*
15. *Right front charge solenoid valve*
16. *Right front discharge solenoid valve*
17. *Left rear charge solenoid valve*
18. *Left rear discharge solenoid valve*
19. *Right rear drum brake*
20. *Left front disk brake*
21. *Right front disk brake*
22. *Left rear drum brake*

MC1. Supply union for brake pump 1st stage
MC2. Supply union for brake pump 2nd stage
RR. Delivery union to right rear cylinder
FL. Delivery union to left front caliper
FR. Delivery union to right front caliper
RL. Delivery union to left rear cylinder

cardiagn.com

COMPONENTS

Electrohydraulic control unit

The electrohydraulic control unit comprises two sections fastened to one another: an electronic control unit and an electrohydraulic control unit.

On the basis of the signals received from the sensors and with the help of characteristic programmes mapped in its memories, the electronic control unit commands the electrohydraulic control unit.

The electrohydraulic control unit is connected to the brake pump and to the A.B.S. system components through the pipes of the braking system.

The main change with respect to the previous versions is the replacement of the three-way valves with two 2-way solenoid valves for each wheel.

Electronic control unit

The electronic control unit is formed of hybrid circuits with resistances, diodes, transistors and integrated logic circuits. The heart of the system are two CMOS microprocessors with 12K ROM which autonomously carry out the same programme and monitor one another mutually. Both receive the same input signals which each processes individually and only when the results obtained are identical, the control unit sends the operative command to the electrohydraulic control unit.

Conversely, if for example there is a fault in the wheel anti-lock system, the device cuts itself out and braking takes place conventionally: simultaneously, the fault warning light on the check panel comes on.

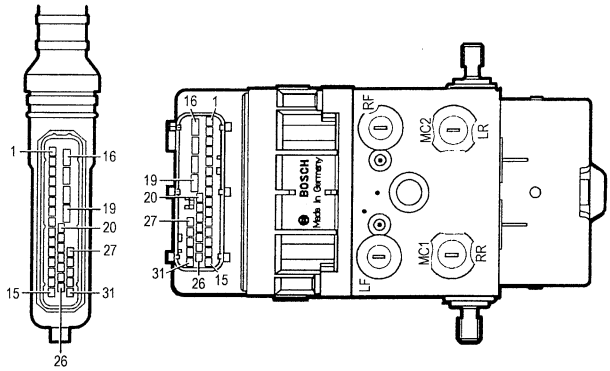

Operating logic

The signals (alternate or analogue) sent by the rpm sensors to the electronic control unit are transformed by the input amplifier into square wave signals.

The frequency of these signals gives the control unit the corresponding values of speed, acceleration or deceleration of the single wheels.

From the combination of the single wheel peripheral speeds, a reference speed is processed which is continuously updated and indicates the speed of the car at all times.

When the driver presses the brake pedal the wheels can each decelerate to a different extent: comparison of the peripheral speed of each wheel with the reference speed keeps the skidding of each wheel constantly under control.

If the braking force causes a wheel to skid with respect to the others, the electronic control unit sends the command to the solenoid valves of the electrohydraulic control unit to reduce the braking force on the wheel that has lost grip. This way the wheel concerned regains speed.

The memory of the electronic control unit also contains threshold acceleration and deceleration values that none of the wheels may ever exceed.

Therefore, through systematic, very rapid comparison of the wheel skidding, deceleration and acceleration values, rolling of the tyre during braking is kept under control.

As soon as the foreseen combined acceleration/deceleration and skid values are exceeded, the electronic control unit intervenes with commands to the solenoid valves of the electrohydraulic control unit, in the three adjustment phases to lower, maintain or return the pressure generated by the driver on the brake pedal to the brake calipers, bringing the braking condition to the optimum values set by the system.

These phases determine an intermittent but extremely fast adjustment cycle which is repeated until the car stops. The electronic control unit commands the different phases supplying the solenoid valves pulses with different current intensities. It also makes sure that both rear wheels are given the same braking force applicable to the rear wheel that is more subjected to locking, i.e. the one with lower grip (to ensure stability).

If a fault is detected, the wheel anti-lock device cuts out and alerts the driver by turning on the warning light on the check panel, while however ensuring operation of the conventional braking system.

The electronic control unit is informed that the driver is braking by the signal from the switch on the brake pedal. Besides controlling braking, this information is also helpful under certain particular conditions, such as for eaxmple if a sharp acceleration that makes the wheels skid is followed by heavy braking, or in the case of irregular road surfaces (humps, steps) that can involve changes in speed of the wheel due to causes not linked with the braking in progress.

cardiagn.com

In these conditions the microprocessors process a strategy connected with the changes of speed of the wheels of these particular moments, bringing braking back to the correct parameters. Since these are particular conditions of braking control, the lack of connection of the switch on the brake pedal to the control unit does not compromise the efficiency of the system. For this reason it is not signalled by the warning light, nor is the A.B.S. system disabled.

Electrohydraulic control unit

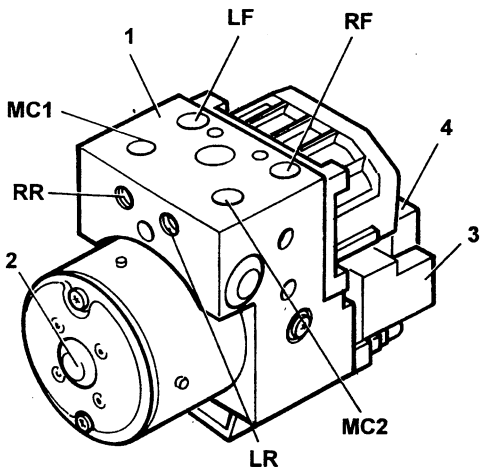

1. *Electrohydraulic control unit*
2. *Elecric recovery pump*
3. *Electronic control unit*
4. *Control unit connector*

The electrohydraulic control unit is connected to the brake pump and to the brake caliper cylinders through the brake system lines and together with the electronic control unit it fosrms the electrohydraulic control unit.

Its task is to change the pressure of the brake fluid in the brake caliper cylinders according to the command signals leading from the electronic control unit.

It comprises eight two-way solenoid valves (two for each hydraulic circuit) and an electric recovery pump (2) with double circuit. The eight solenoid valves and the electric recovery pump are driven by the electronic control unit depending on the signals of the four rpm sensors. The pump makes it possible to recover the brake fluid during the pressure reduction phase making it available again upstream of the solenoid valves for the next pressure increase phase.

The accumulators absorb the brake fluid during pressure reduction.

The unit is connected to the braking system through unions identified by the codes stamped on them as illustrated.

Pipe outlets

MC1 Supply union from brake pump- circuit 1
MC2 Supply union from brake pump - circuit 2
LF Delivery union to left front brake caliper
LR Delivery union to left rear brake caliper
RF Delivery union to right front brake caliper
RR Delivery union to right rear brake caliper

Inductive sensors (up to October '99)

These are quite the same as those used for the previous versions.

Active sensors (from November '99)

These are made up of two basic elements:
- a multipolar magnetic codifier (1) integrated in the wheel hub bearing;
- a Hall effect receiver (2) facing the codifier.

Active sensors offer the following advantages:
- reducing sensitivity to electro-magnetic interference;
- resistance to interference produced by the heating of the road surface;
- savings in weight and size;
- simplifying the transmission couplings to eliminate flywheels.

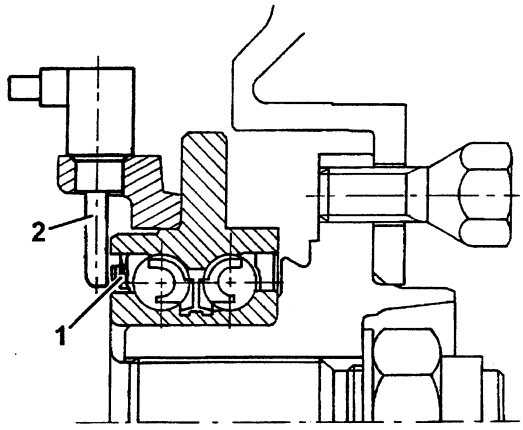

EBD Function

The EBD function (Electronic braking force Distribution) in the system logic also integrates the function of reducing the pressure at the rear brakes to prevent the wheels from locking when the load is transferred to the front axle as the vehicle is braked in the typical ABS braking control strategy.

This way the conventional pressure regulator (braking distributor) has been eliminated which, depending on the types, reduced the pressure at the rear brakes

cardiagn.com

either depending on braking pressure (fixed cut) or according to the elongation of the rear suspension.

As a result of this new strategy the control unit controls the tendency of the rear wheels to skid through the ABS sensors, reducing the braking pressure only when this is needed.

The result is better adaptation of the braking force to the conditions of the road surface and maximised efficiency of braking at the rear.

Any fault on the EBD system is shown by the turning on of the "low brake fluid level/handbrake on" warning light on the instrument cluster.

In these conditions the pressure reduction function at the rear wheels is not active. Use the vehicle with extreme caution (see Group 55 - Electric System Diagnosis).

REPAIR OPERATIONS ON THE UNIT

Instructions for correct repairing

- **To replace the electronic control unit it is necessary to disassemble the whole hydraulic unit, owing to reasons of space and to avoid damaging the internal connector.**
- **The electrohydraulic control unit cannot be overhauled and it is fault-proof until it is tampered with. It must be replaced if found to be faulty.**
- **After each replacement of a hydraulic unit, rpm sensor, electronic control unit or wiring (especially if after an accident) the entire A.B.S. system must be checked with the Tester.**
- **After all operations on the hydraulic system of the A.B.S. or brake system, it is necessary to fill with DOT 4 brake fluid, relieve the air, and check the tightness of all the connection points.**
- **The electrohydraulic control unit is supplied filled with DOT 4 brake fluid and with the solenoid valves not supplied. The operation for filling with fluid and relieving the air is the same as for a conventional system, but requires more time.**
- **During removal of the electrohydraulic unit avoid overturning it to prevent spilling the oil contained in the hydraulic part.**
- **When refitting pay attention to the unions: to prevent mistakes in connecting the various parts of the braking circuit during repair operations, the connections of the hydraulic modulator unit are of different sizes (M10x1 and M12x1), the unions are also identified by the codes stamped on them.**

ABS HYDRAULIC UNIT/ELECTRONIC CONTROL UNIT

Removing/Refitting

— Disconnect the battery

— Remove the corrugated air intake pipe (see group 10).

— Drain the brake-clutch fluid.

— Remove the components that prevent free access to the hydraulic unit.

1. Pull control unit comb locking device forward, then remove it from its housing.
2. Disconnect the pipe fittings from the hydraulic aggregate.
3. Slacken the two fastening nuts and remove the hydraulic aggregate.

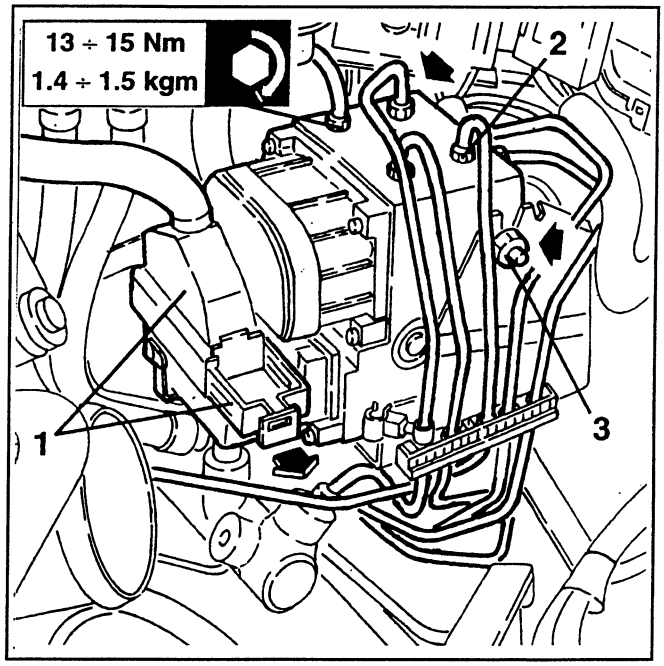

When refitting relieve the air from the braking system (see specific paragraph).

NOTE: For further details about system operation and diagnosis, see "GROUP 55 - ELECTRIC SYSTEM DIAGNOSIS".
Diagnosis for seeking any faults must be carried out using the ALFA ROMEO TESTER.

cardiagn.com

SERVOBRAKE

REMOVAL / REFITTING

– Empty and remove the brake - clutch fluid reservoir (see specific paragraph).
– Remove the il ABS hydraulic unit/electronic control unit(see specific paragraph).

Working in the car:

1. Remove the brake pedal fastening clamp, releasing it from the servobrake control rod.
2. Remove the lower part of the pedal protection detaching the two rubber fastening plugs.
3. Slacken the two nuts and remove the accelerator pedal bracket.

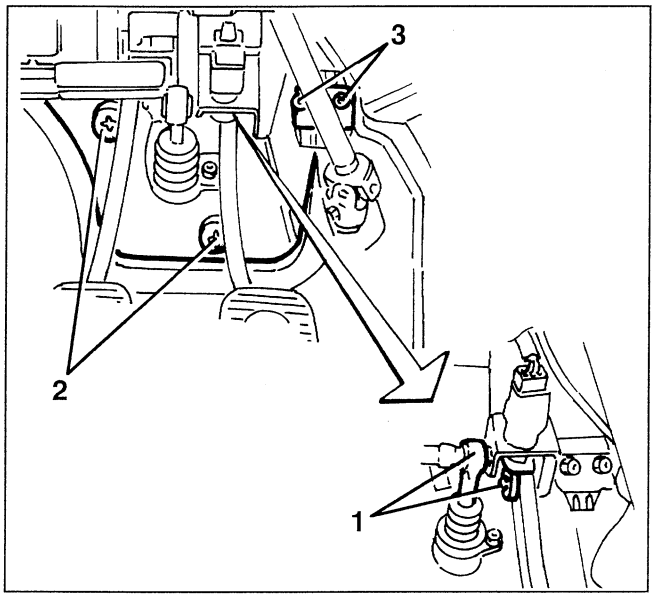

1. Slacken the two nuts fastening the clutch pump, to gain access to the nut below.
2. Slacken the four fastening nuts and free the servobrake pump.

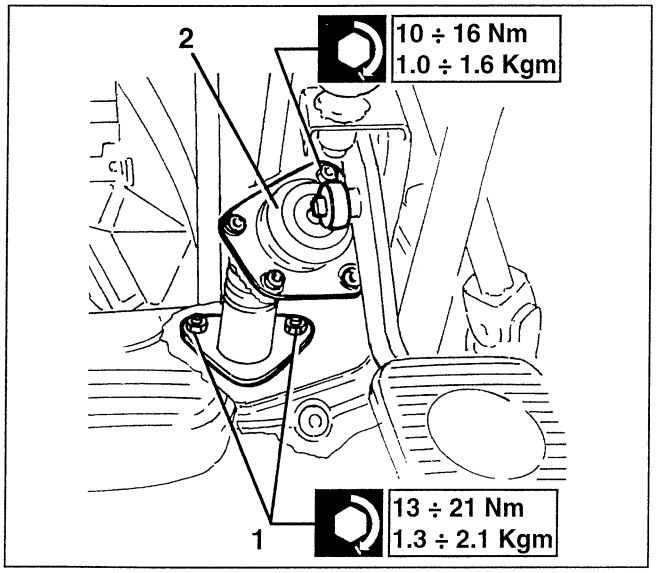

Working in the engine compartment

– Remove the right-hand engine compartment protection
– Disconnect the engine coolant fluid reservoir from the side panel (N.B. do NOT disconnect the pipes: it is not necessary to empty the system).
1. Disconnect the two stiff delivery pipes from the brake pump.
2. Disconnect the servobrake vacuum takeoff pipe
3. Retrieve the servobrake together with the brake pump

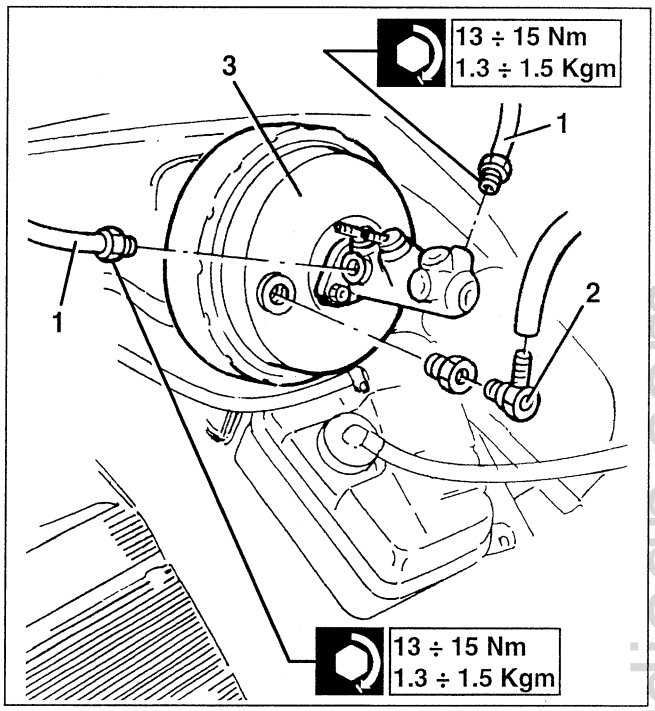

– If necessary, separate the unit disconnecting the pump from the servobrake; Spares however supply a single servobrake-pump unit.

When refitting bleed the air from the system; after bleeding the air, restore the correct level in the reservoir.

cardiagn.com

BRAKING LOAD PROPORTIONING VALVE (up to chassis no.6023215)

REMOVAL / REFITTING

– Set the car on a lift.
– Empty the brake-clutch fluid reservoir.
– Remove the exhaust pipe rear section (see Group 10).
1. Slacken the fittings of the stiff pipes from the braking load proportioning valve.
2. Slacken the two fastening screws and remove the il braking load proportioning valve after disconnecting the spring.

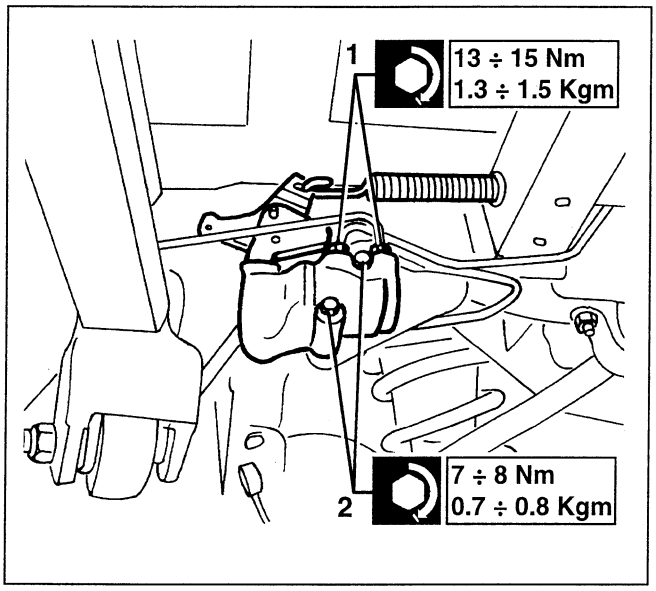

When refitting bleed the air from the braking system (see specific paragraph).

ADJUSTMENT

– Set the car in running order with driver) and set it on a horizontal surface with the wheels on the ground, in order to settle the suspensions.
1. Slacken the screw fastening the braking load proportioning valve bracket.
2. On the eyelet of the bracket apply a weight **P** of **4.5 kg**.
– Keeping the bracket in this position, lock the fastening screw to the specified torque.

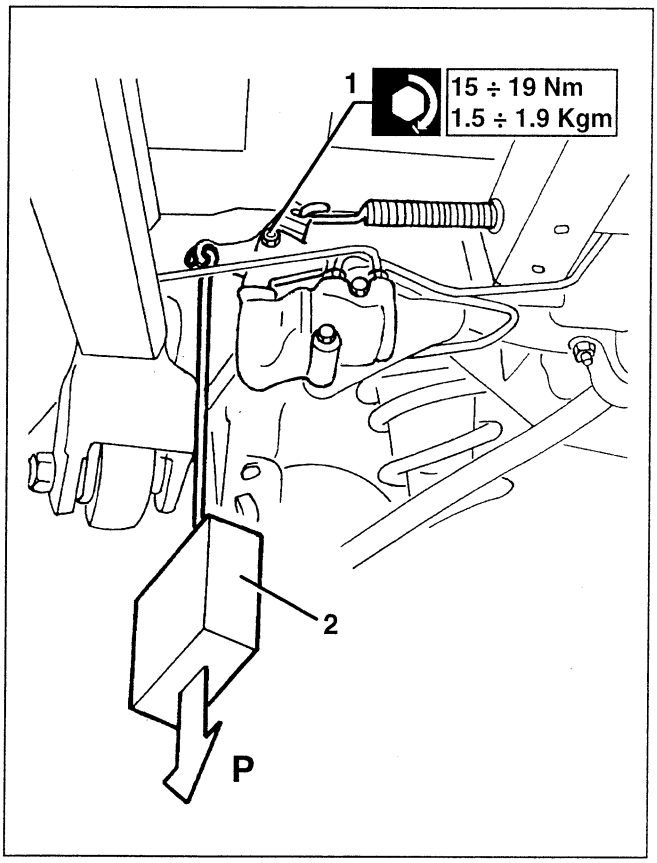

cardiagn.com

BRAKING LOAD PROPORTIONING VALVE (from chassis no.6023216 to chassis no.___)

DESCRIPTION

The braking load proportioning valve is assembled in the same way as the previous one, but it is without the control spring; since the operating procedure depends on the pressure in the braking circuit and not on the position of the suspension.

In fact, up to a pressure in the circuit of 42 kg/cm, the output pressure (Pu) equals the inlet pressure (Pe).

The further increase of inlet pressure, acting on the surfaces of the piston inside the proportioning valve, determines a reduction in the growth of the outlet pressure as shown below.

Therefore the proportioning valve needs no adjustment and it is fastened by two screws in the same housing as the previous version.

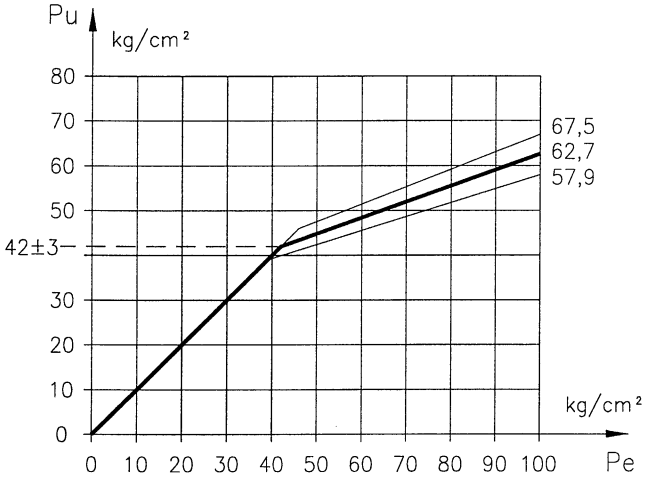

REMOVING/REFITTING

– Set the car on a lift.
– Drain the brake/clutch fluid reservoir.
– Remove the rear section of the exhaust piping (see Group 10).
1. Slacken the stiff pipe fittings from the braking load proportioning valve.
2. Slacken the two fastening screws and remove the braking load proportioning valve.

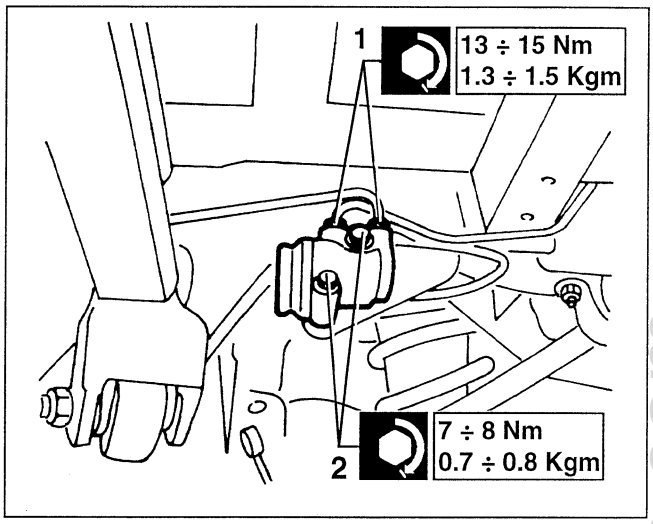

When refitting, relieve the air from the braking system (see specific paragraph).

WARNING:
From chassis no. ... the braking load proportioning valve is NOT present on cars fitted with BOSCH 5.3 ABS system with EBD as the rear axle brake distributing function is controlled by the ABS system itself.

BRAKE SYSTEM PIPES

CHECKS AND INSPECTIONS

– Check the stiff pipes and hoses for cracks, swellings, rust and fluid leaks.
– When changing the pipes, empty the brake-clutch fluid reservoir using a syringe and plug the ends of the actual pipes to prevent foreign substances from getting in.
– When refitting fill the brake-clutch fluid reservoir and bleed the air from the brake system (see specific paragraph).

The stiff pipes must never be bent or twisted.

cardiagn.com

BLEEDING THE AIR FROM THE SYSTEM

When filling the hydraulic circuit or doing any work on it, proceed as described below.

1. Using the special air relief device fitted on the brake fluid reservoir bleed the air in the following sequence:
1. LH front wheel
2. RH front wheel
3. LH rear wheel
4. RH rear wheel

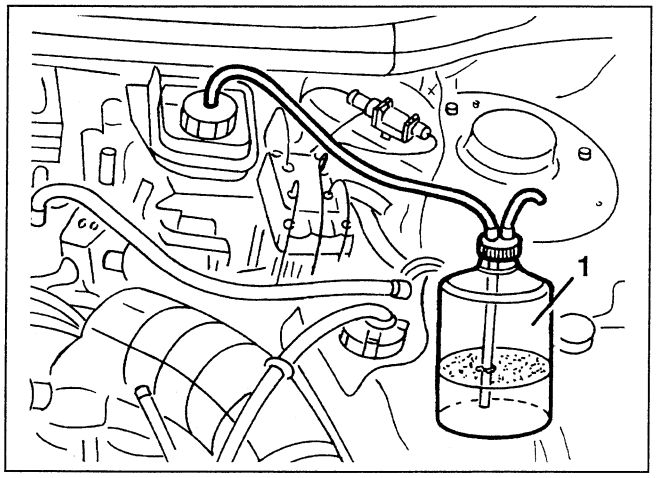

For each wheel proceed as follows:

– Fill the brake-clutch fluid reservoir up to the "MAX" level withe the specified fluid.

– If necessary, remove the wheel concerned.

1. Fit a tube on the bleed screw. Dip the end of the tube in a recipient containing the specified fluid.

2. Slacken the bleed screw and repeatedly depress the brake pedal (wait a few seconds between one press and the next). When fluid free of bubbles goes into the recipient, depress the pedal completely and lock the bleed screw to the specified torque.

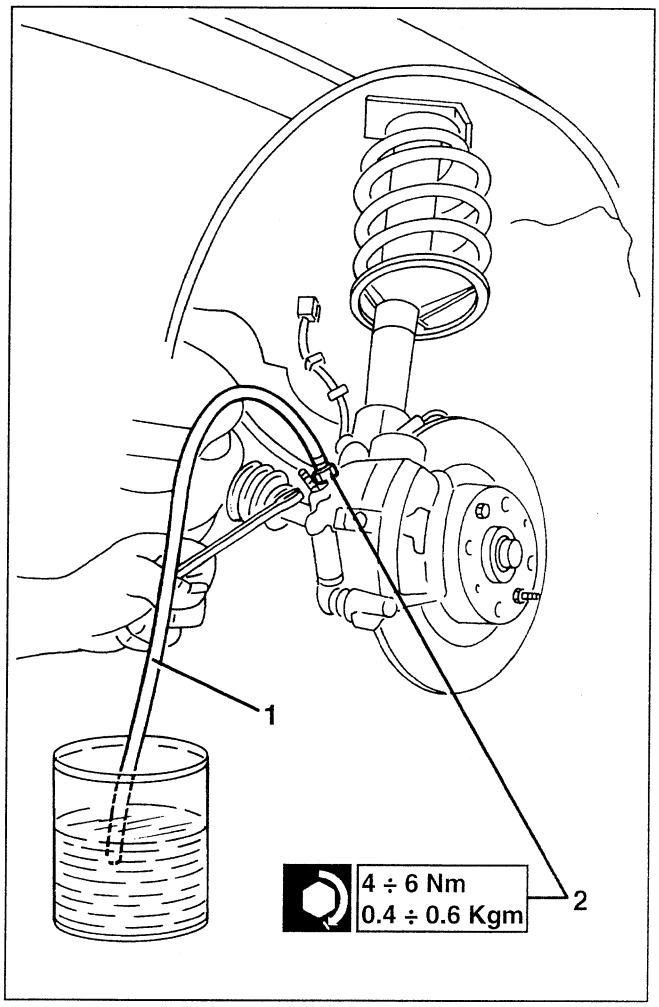

NOTE: The air should be relieved separately on each wheel.

WARNING:
When relieving the air check that the fluid does not fall below the minimum level.
Never re-use the fluid discharged during this operation.
Prevent the fluid from contacting painted parts and damaging them.

NOTE: If the above procedure is not followed, air might get into the piston leading to lengthening of the brake pedal stroke, in which case proceed as follows.
Air may also get into the ABS hydraulic unit from which any kind of air bleeding is impossible.

cardiagn.com

RECOVERY IN THE CASE OF AIR IN THE PISTON

Should air enter the brake control cylinder as a result of an incorrect air bleeding procedure, proceed as follows:

– Press the brake pedal quickly and repeatedly and bleed the air in the following sequence:
1. RH rear wheel
2. LH rear wheel
3. LH front wheel
4. RH front wheel

WARNING
The operation should be repeated five times for each wheel before going on to the next.

– Lastly carry out the normal air bleed procedure in the following sequence.
1. LH front wheel
2. RH front wheel
3. LH rear wheel
4. RH rear wheel

STOP LIGHTS SWITCH

REMOVAL / REFITTING

– Disconnect the battery (-) terminal.
1. Disconnect the electrical connection from the switch.
2. Turn the switch 45° clockwise and remove it.

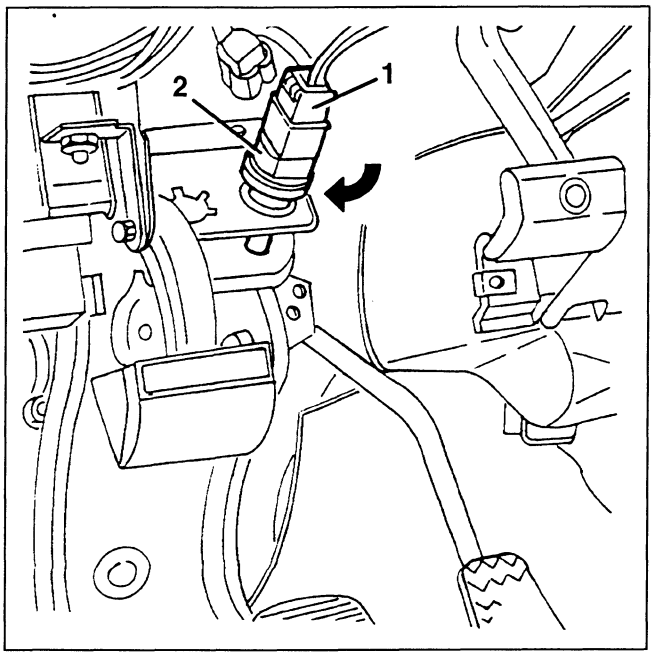

When refitting adjust the stroke of the "mobile part" using the special lockring.

FRONT INDUCTIVE SENSORS

REMOVAL / REFITTING

1. Slacken the inductive sensor fastening screw from the wheel upright.

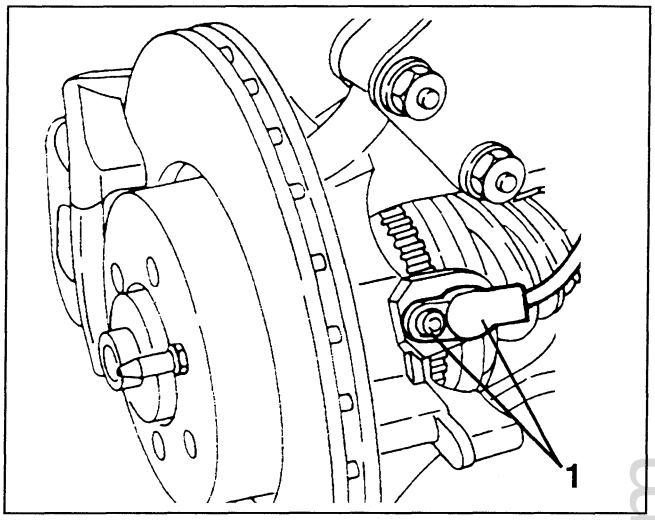

1. Disconnect the electrical connection next to the shock absorber dome and remove the inductive sensor together with the wiring, after releasing from the fastenings.

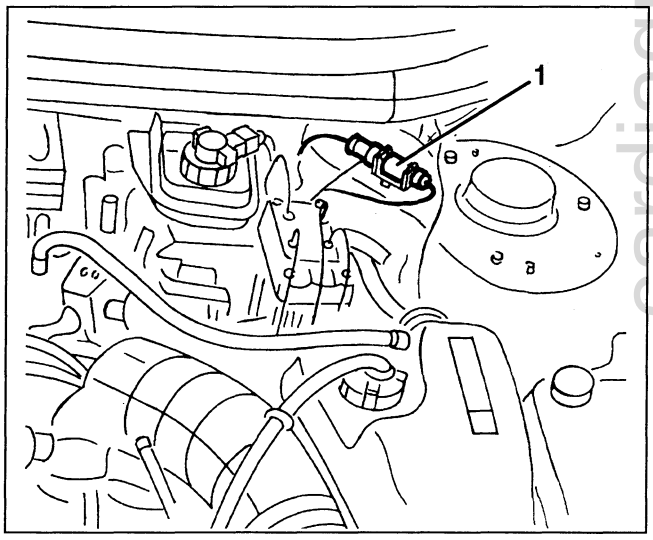

When refitting grease the inductive sensor seat with the specified grease.

cardiagn.com

REAR INDUCTIVE SENSORS

REMOVAL / REFITTING

1. Slacken the screw fastening the inductive sensor to the brake disk boot.

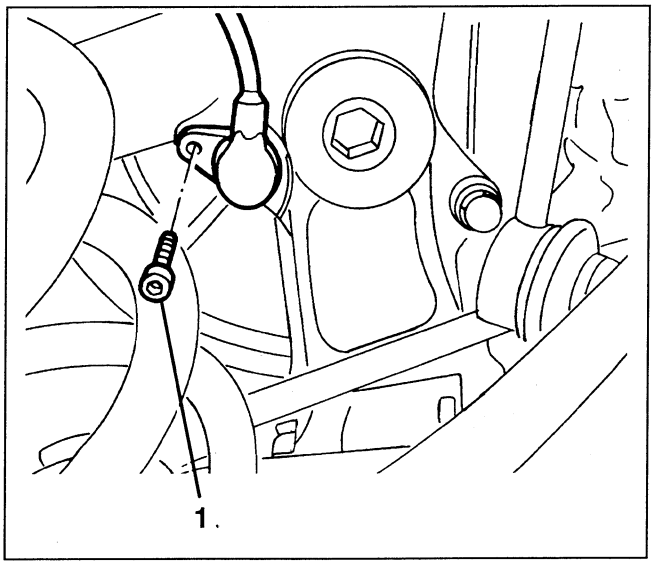

Spider

– Open the boot, raise and gain access to the connector.

Gtv

– Remove the side panel (see GROUP 70).

1. Disconnect the electrical connection of the inductive sensor and remove it.

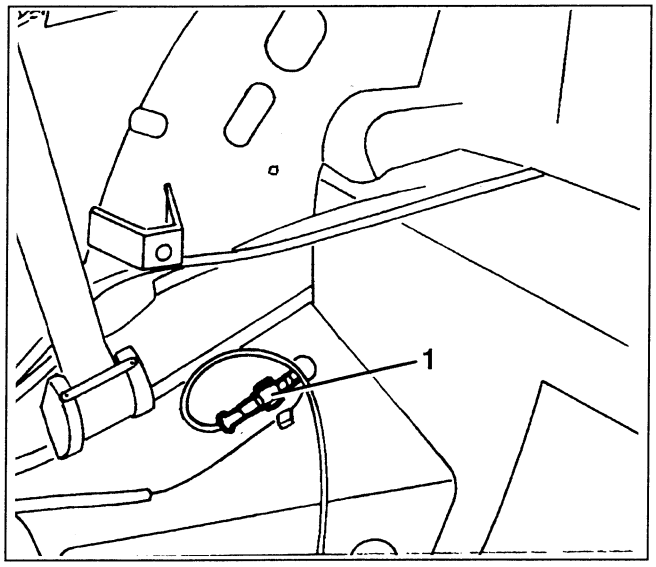

When refitting grease the seat of the inductive sensor with the specified grease.

CHECKING THE GAP

– **Using a thickness gauge, check the gap between the inductive sensor and the corresponding phonic wheel**

Front gap	Rear gap
0.3 ÷ 1.05 mm	0.37 ÷ 0.9 mm

WARNING:
The gap is not adjustable as no thicknesses are supplied for this purpose. Check that the sensor and the phonic wheel teeth are intact and if they are not within the specified tolerance.

cardiagn.com

RIGHT FRONT ACTIVE SENSOR (6 Cylinder Version)

REMOVING / REFITTING

– Remove the wheel.
1. Undo the bolt fixing the active sensor.
2. Remove the active sensor from the housing.
3. Disconnect the wiring for the active sensor from the retainers.

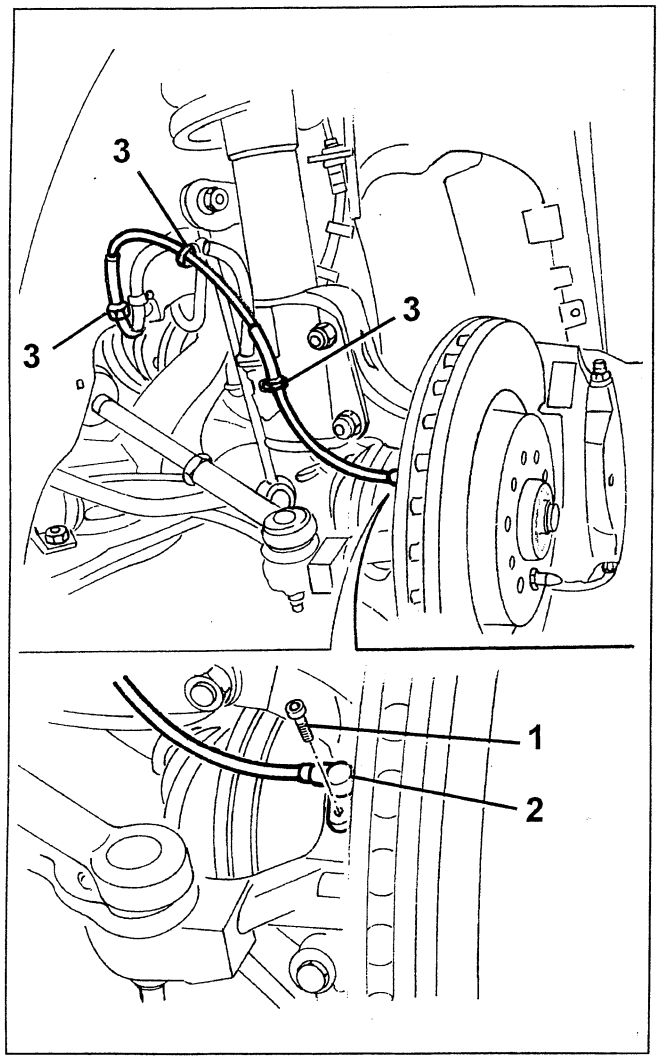

– Open the bonnet lid.
1. Disconnect the wiring from the retainers.
2. Disconnect the electrical connection for the sensor.
3. Remove the sensor with the wiring.

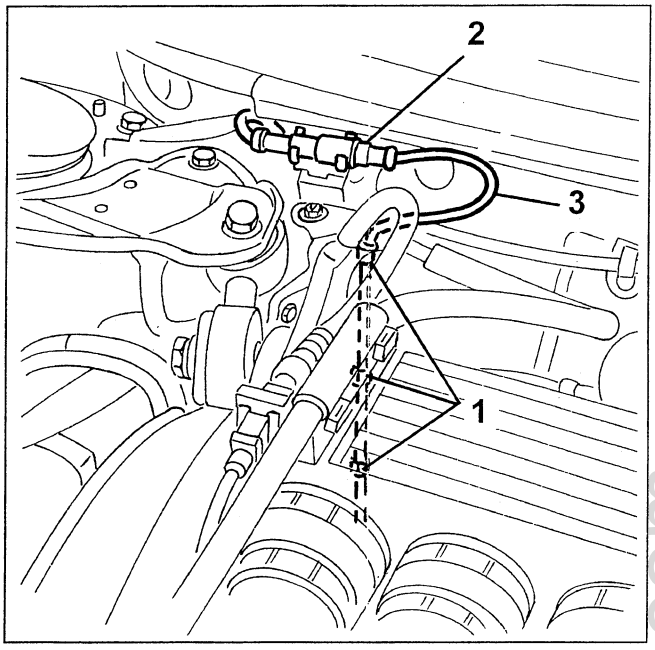

Proceed with the refitting, reversing the order of the operations carried out for the removal.

cardiagn.com

LEFT FRONT ACTIVE SENSOR (6 Cylinder Version)

REMOVING / REFITTING

– Remove the wheel.
1. Undo the bolt fixing the active sensor.
2. Remove the active sensor from the housing.
3. Disconnect the wiring for the active sensor from the retainers.
4. Undo the bolts
5. Move the protection.
6. Disconnect the wiring for the sensor from the inner retainer.

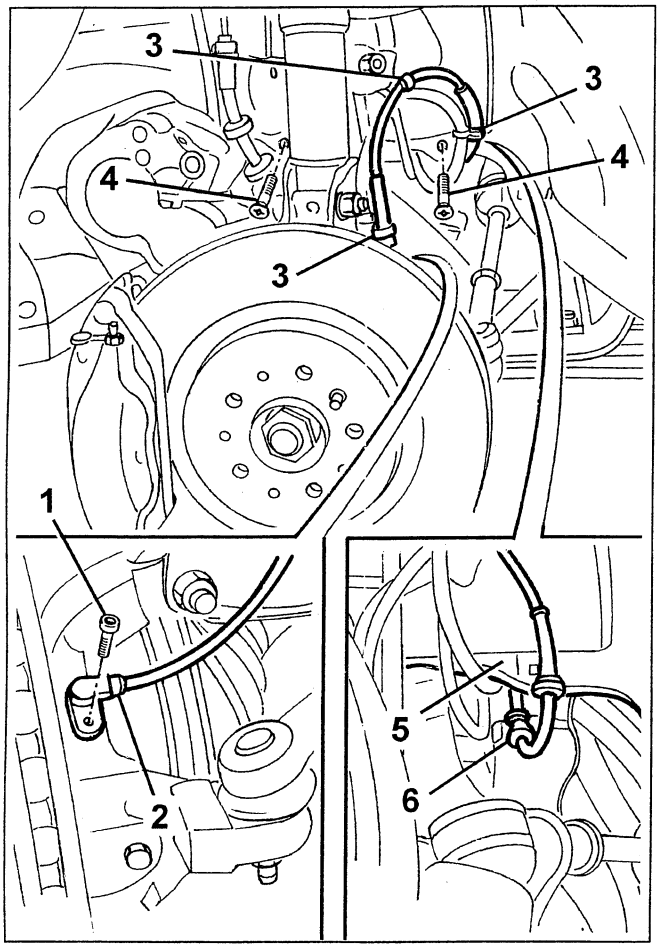

– Open the bonnet lid.
1. Open the retaining bands.
2. Remove the corrugate pipe connecting the chamber with the flow meter, complete with resonator.

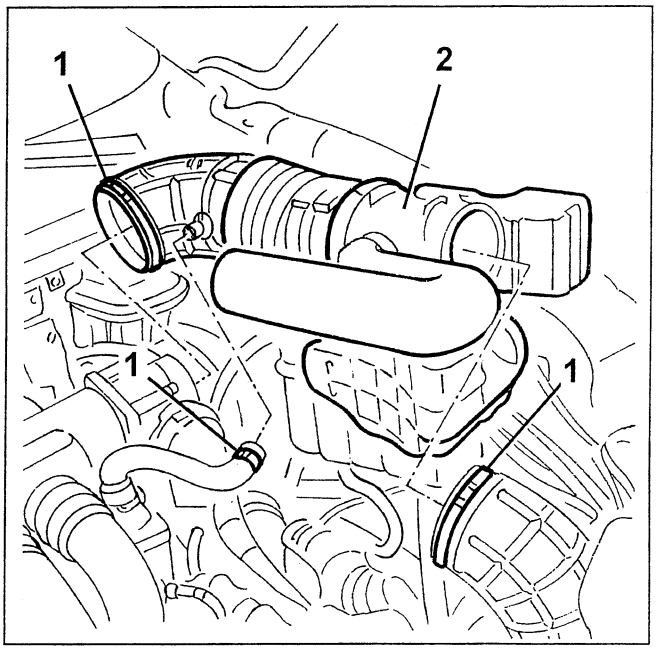

1. Disconnect the electrical connection for the sensor after having released it from the retainers.
2. Undo the nut.
3. Move the support with the fuse carrier.
4. Remove the sensor with the wiring.

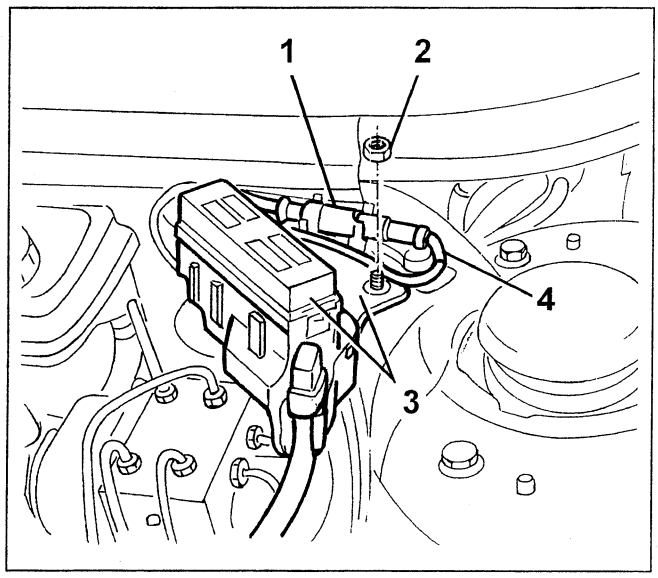

Proceed with the refitting, reversing the order of the operations carried out for the removal.

cardiagn.com

REAR ACTIVE SENSORS (6 Cylinder Version)

REMOVING / REFITTING

– Remove the wheel.
1. Undo the bolt fixing the active sensor.
2. Remove the active sensor from the housing.

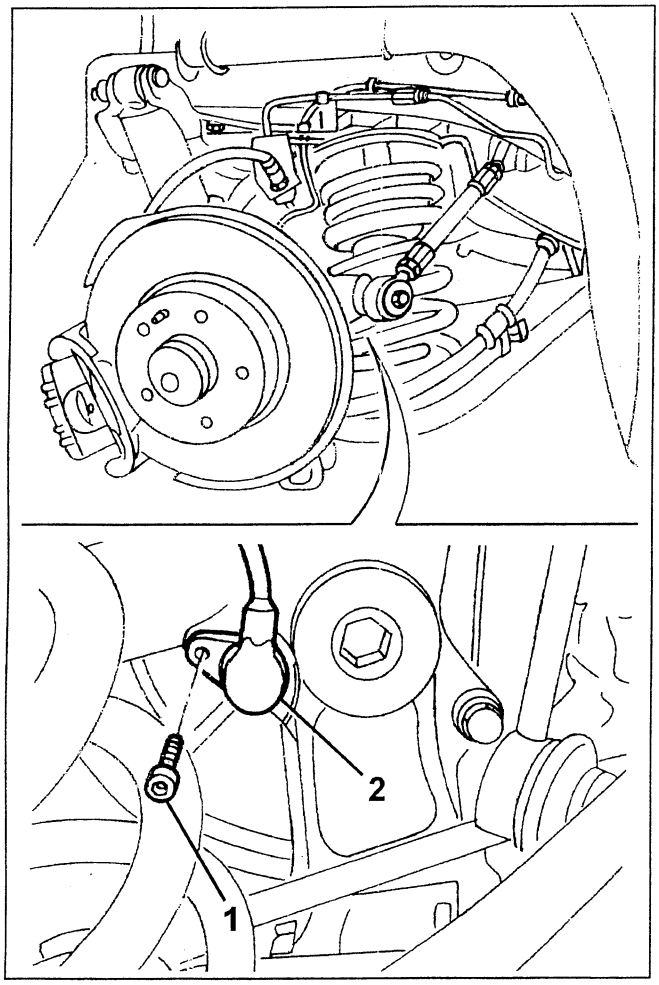

1. Disconnect the wiring for the active sensor from the retainers.

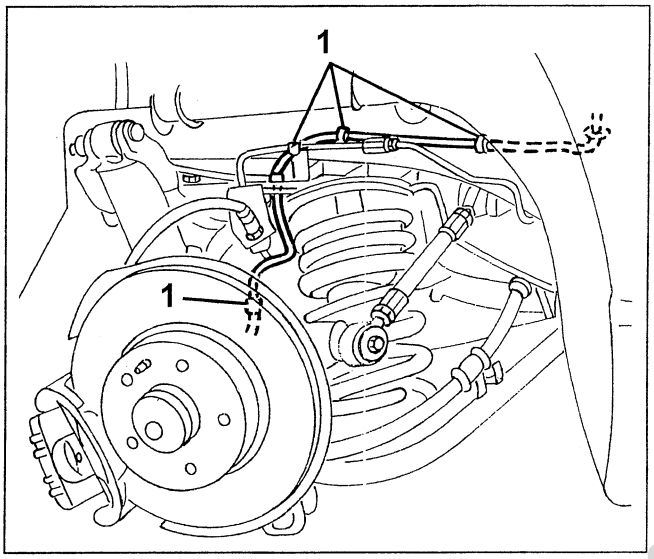

Spider

– Open the rear lid, lift up the side cover and gain access to the connector.

Gtv

– Remove the side panel (see GROUP 70)

1. Disconnect the electrical connection for the sensor. Remove the sensor, extracting the connector from the lower side of the vehicle.

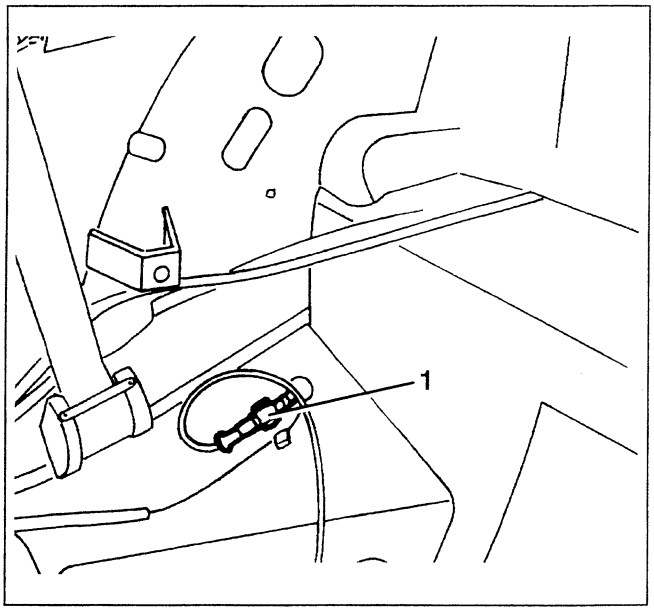

Proceed with the refitting, reversing the order of the operations carried out for the removal.

cardiagn.com

cardiagn.com

BRAKE GROUPS

FRONT BRAKE DISK

REMOVAL / REFITTING

– Set the car on a lift.
– Remove the wheel on the side concerned.

1. Slacken the two screws fastening the brake caliper support plate.
2. Remove and move aside the complete brake caliper without removing the piping and wiring.

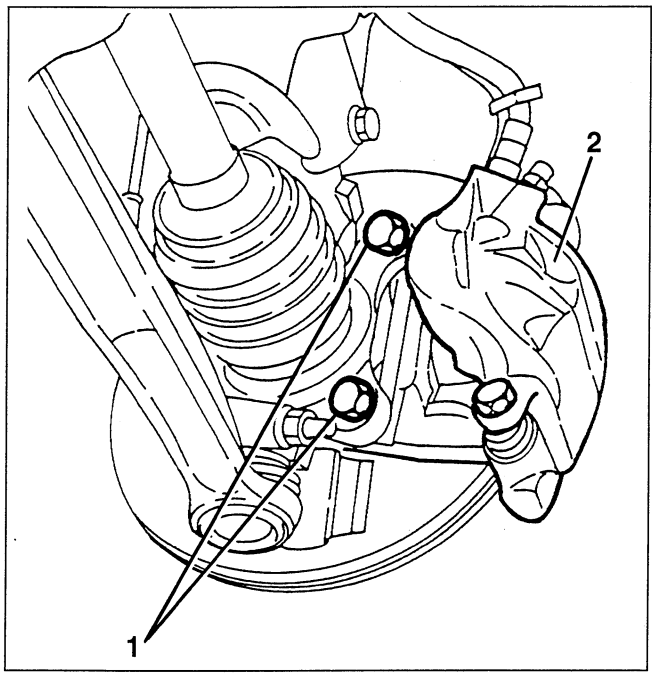

When refitting change the screws and tighten them to the specified torque (see GROUP 00).

1. Slacken the fastening pin and remove the brake disk.

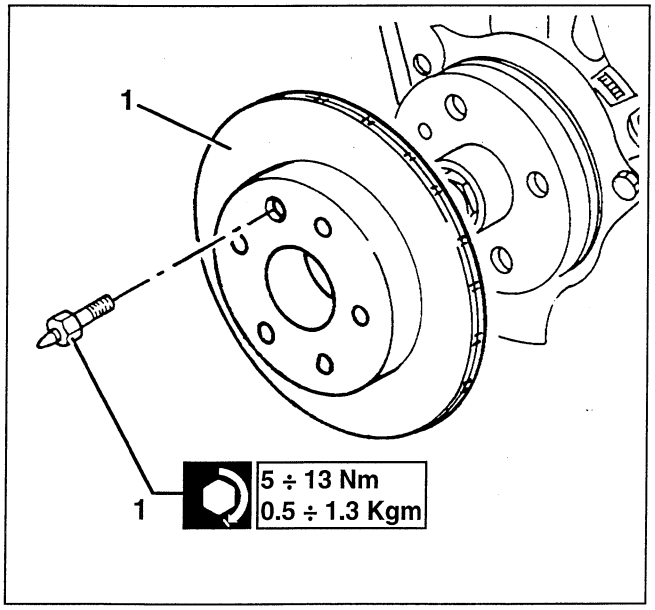

CHECKS AND INSPECTIONS

1. Check the thickness of the disks and check that the working surfaces have no deep scores or porosity. If necessary, grind respecting the specified tolerances.

Disk thickness	At use limit	Minimum after grinding
Spider 4 cyl.	18.2 mm	19.2 mm
Other versions	20.2 mm	21.9 mm

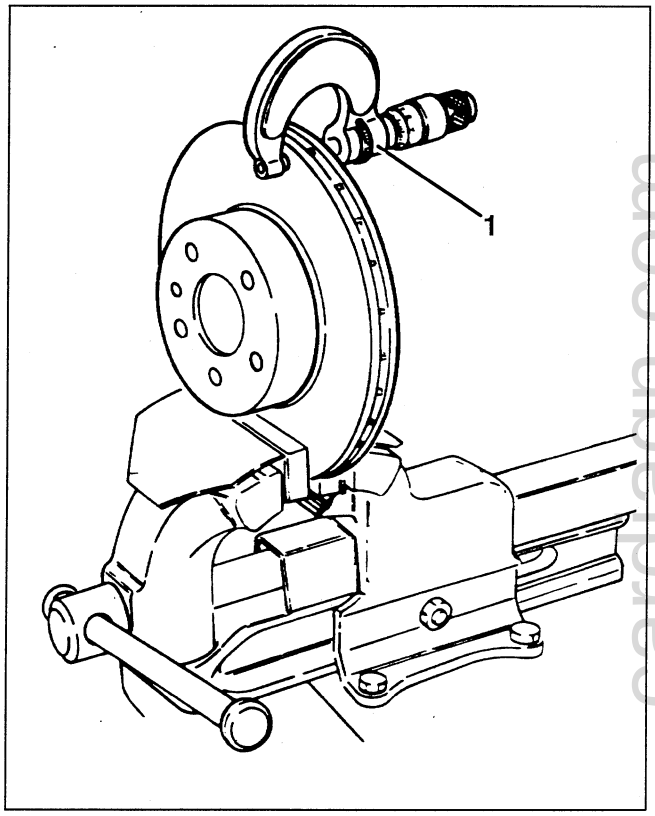

cardiagn.com

1. When changing the brake pads only, check that the oscillation of the disk, in relation to the axis of rotation, is within the specified limits (0.15 mm max).

NOTE: The value must be measured 2 mm from the outside diameter of the disk.

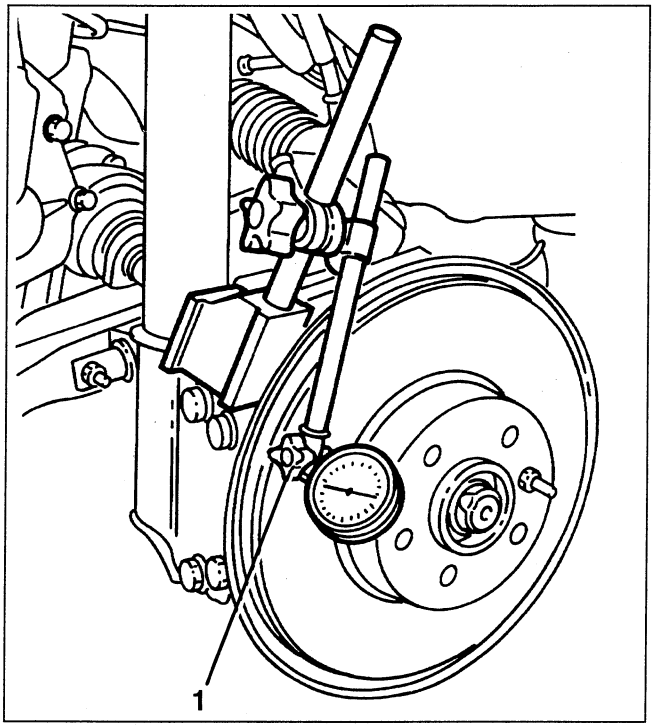

FRONT BRAKE CALIPER

REMOVAL / REFITTING

- Set the car on a lift.
- Disconnect the battery (-) terminal.
- Remove the wheel on the side concerned.

1. Disconnect the intermediate union between the stiff pipe and the fluid delivery hose to the brake caliper.
2. Disconnect the electrical connection of the brake pad wear sensor, then free them from the fastening on the shock absorber.

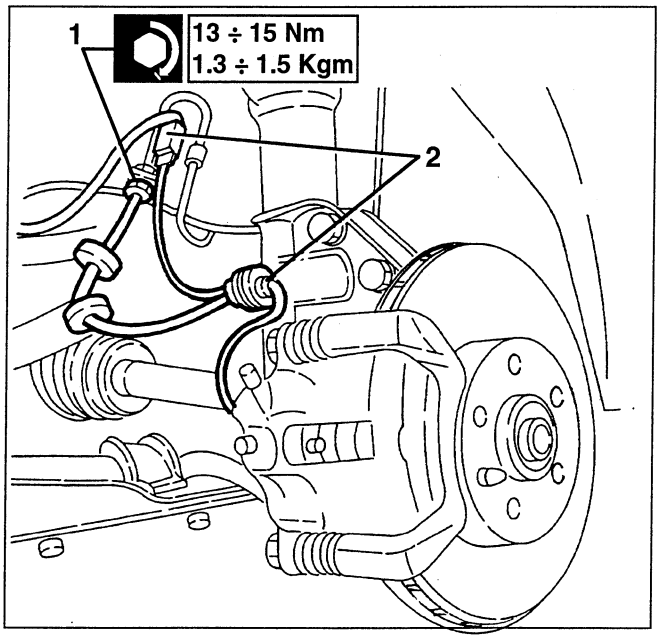

1. Slacken the two fastening screws and remove the brake caliper and pads.
2. If necessary also remove the caliper body, slackening the two hub fastening screws.

NOTE: When refitting replace the caliper body fastening screws, tightening them to the specified torque.

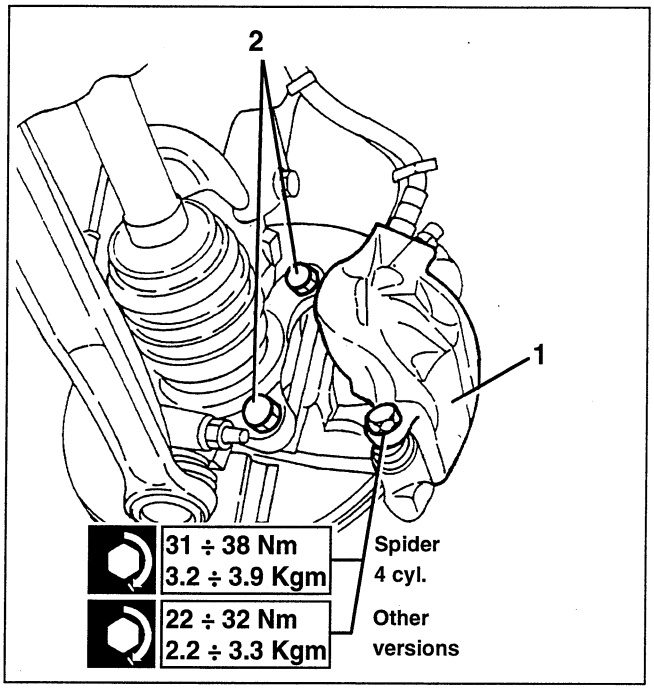

WARNING:
When refitting check that the rubber protection bellows of the fastening pin threads are intact, otherwise replace them.
When refitting the brake pad, with the wear sensor, it must be installed on the inner side of the disk (brake caliper piston side): at the same time check that the relief, machined on the outer side of the pad, is positioned at the rear with respect to the direction of travel.

When refitting bleed the air from the braking system (see specific paragraph).

cardiagn.com

DISASSEMBLY / REASSEMBLY

1. Disconnect the hose fitting from the caliper.
2. Remove the bleed screw.

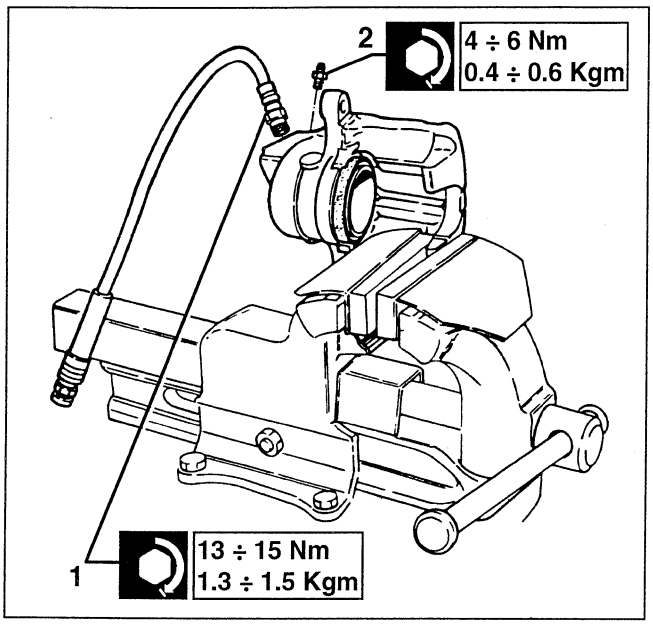

1. Blow a jet of compressed air in the brake fluid filler hole to make the piston come out.
2. Remove the piston (2A), the seal (2B) and the protective boot (2C).

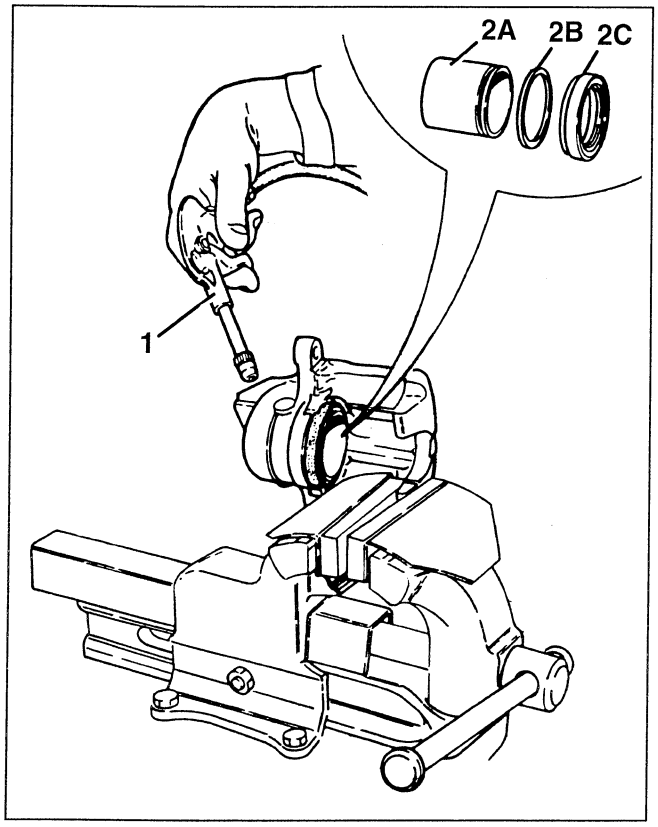

CHECKS AND INSPECTIONS

– The piston and body should not show signs of scrapes or seizure; otherwise replace the caliper complete with piston.
– Always replace the protection boot and the seal.
– Make sure the bleed screw is not clogged.
– Make sure that the hose is not swollen or cracked.
– Change the brake pads if the thickness of the friction material turns on the instrument cluster warning light.
– Check the brake caliper support bracket for cracks and distorsion.

CHANGING THE FRONT BRAKE PADS

– Remove the front wheel.
1. Disconnect the electrical connection of the brake pad wear sensor.
2. Slacken the caliper body upper fastening screw.

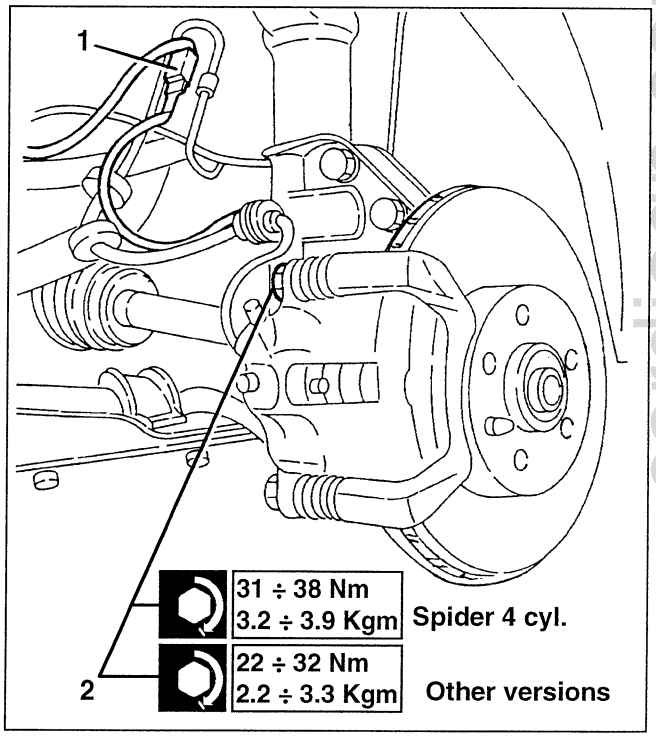

cardiagn.com

1. Turn the caliper as illustrated and change the brake pads.

NOTE: The brake pad, with the wear sensorn must be fitted on the inner side of the disk (brake caliper piston side); at the same time, check the relief machined on the outer part of the pad, which should be positioned at the rear with respect to the direction of travel.

2. When refitting the caliper adjust the position of the piston using tool no. 1.820.248.000.

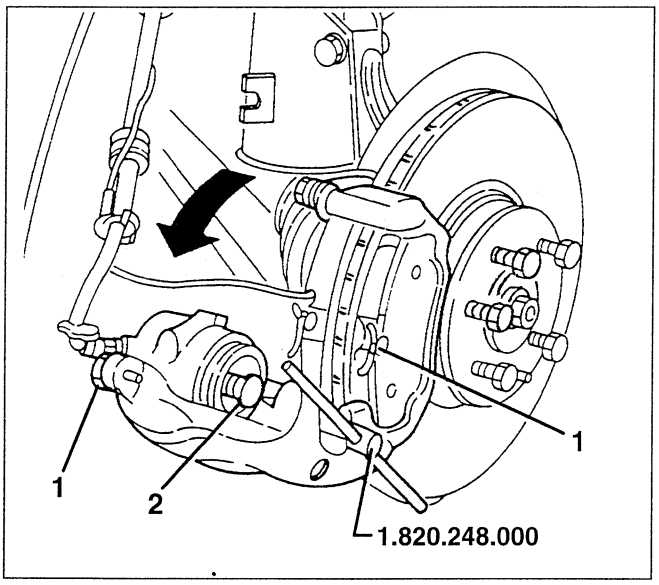

REAR BRAKE DISK

REMOVAL / REFITTING

– Set the car on a lift.
– Remove the wheel on the side concerned.

1. Slacken the two screws fastening the brake caliper to its support and move it to one side without disconnecting the piping and the handbrake cable.

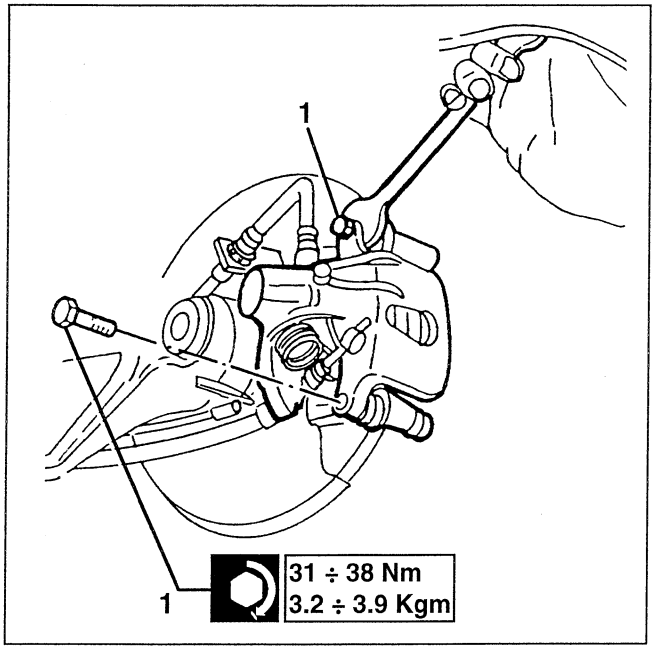

1. Remove the brake pads.

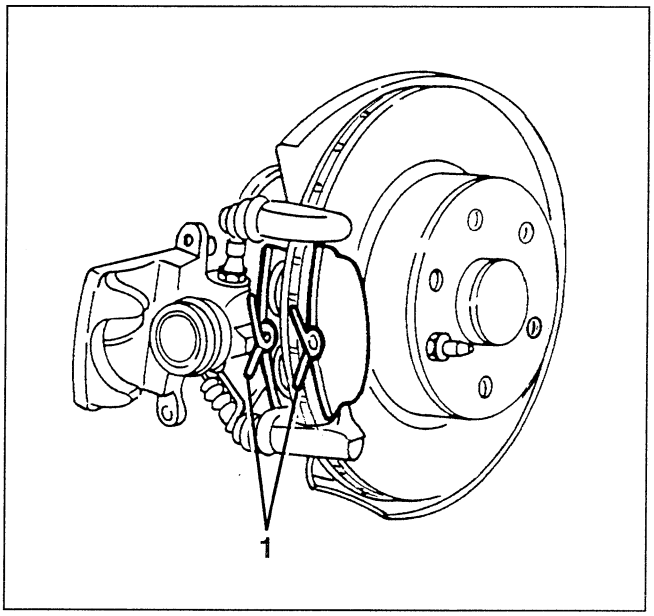

1. Slacken the fastening pin and remove the brake disk.

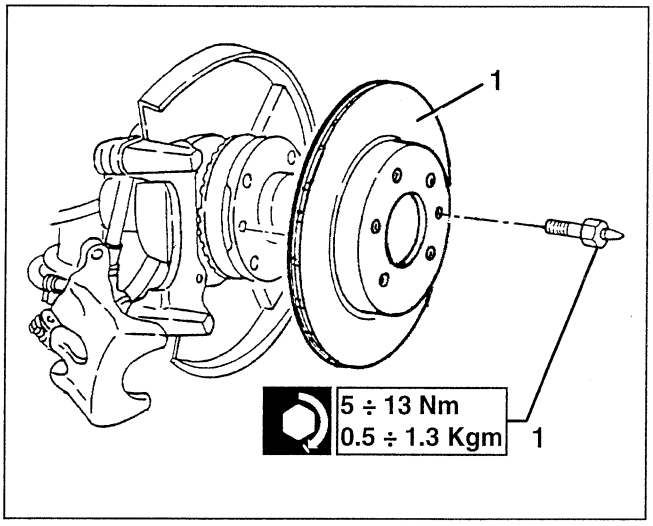

cardiagn.com

CHECKS AND INSPECTIONS

1. Check the thickness of the disks and check that the working surfaces have no deep scores or porosity. If necessary grind within the specified tolerances.

At use limit	At grinding limit
9.2 mm	10.65 mm

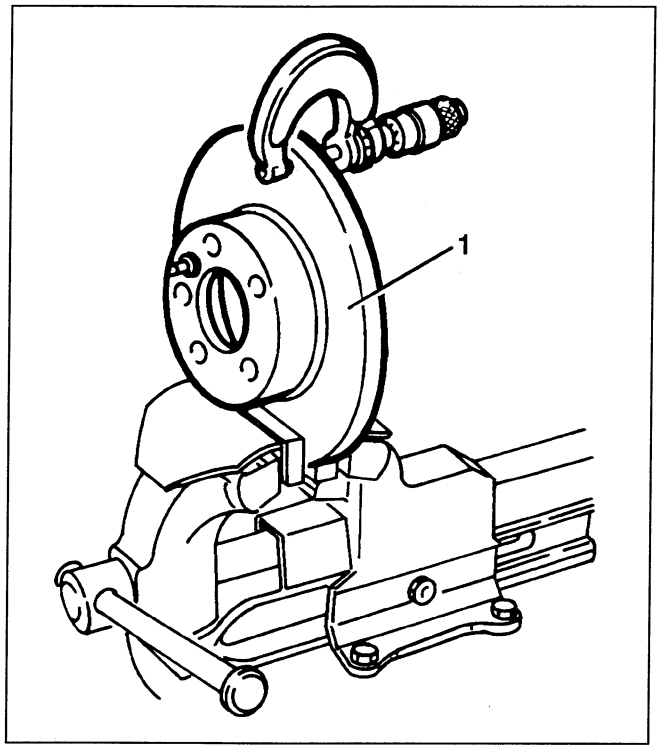

1. When changing the brake pads only, check that disk oscillation, with respect to the axis of rotation, is within the specified limits (0.15 mm max.).

NOTE: The value must be measured 2 mm from the outside diameter of the disk.

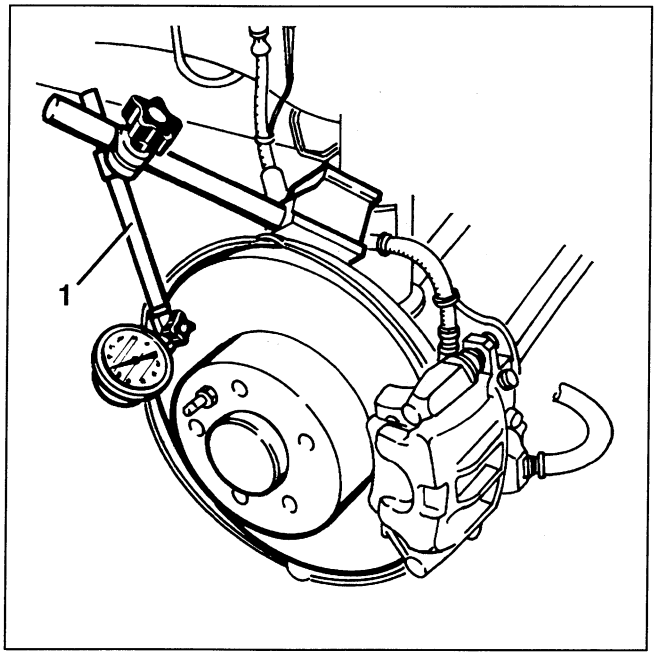

REAR BRAKE CALIPER

REMOVAL / REFITTING

- Set the car on a lift.
- Empty the brake - clutch fluid reservoir.
- Remove the wheel on the side concerned.
- Remove the handbrake lever cover.

1. Working on the special adjustment nut on the handbrake lever, loosen the tension of the cables.

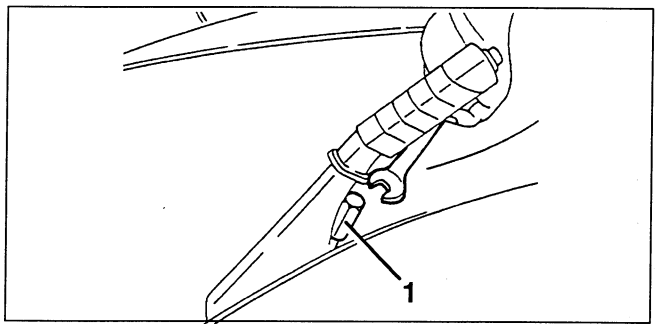

1. Disconnect the handbrake cable from the brake caliper.
2. Slacken the hose fitting.
3. Prise the brake and withdraw the hose fitting.

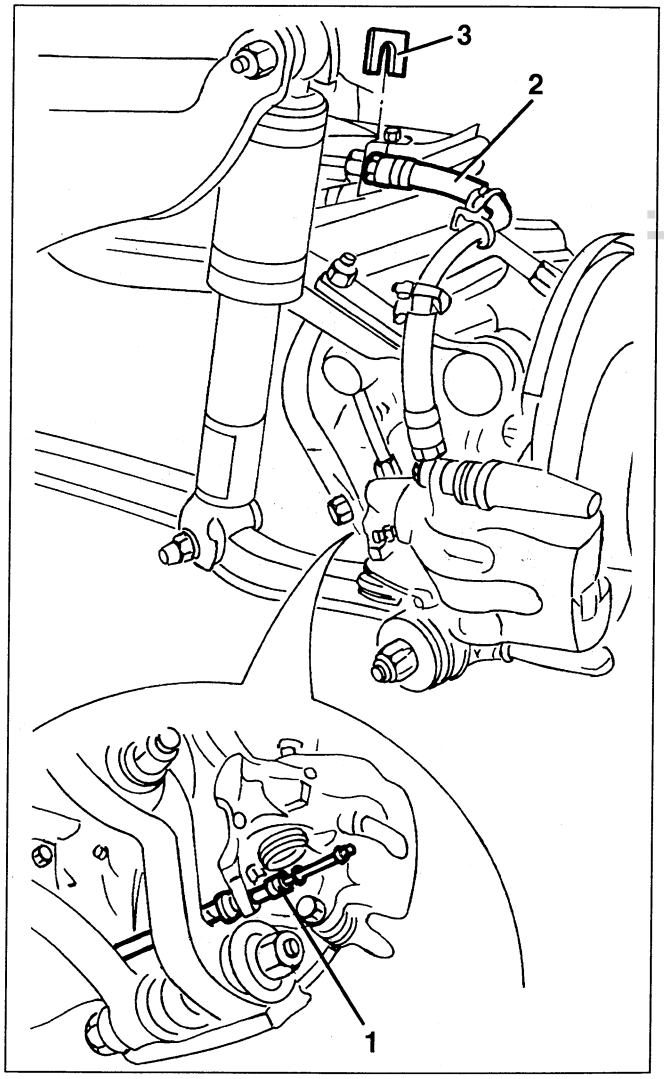

cardiagn.com

1. Slacken the two screws fastening the complete brake caliper.

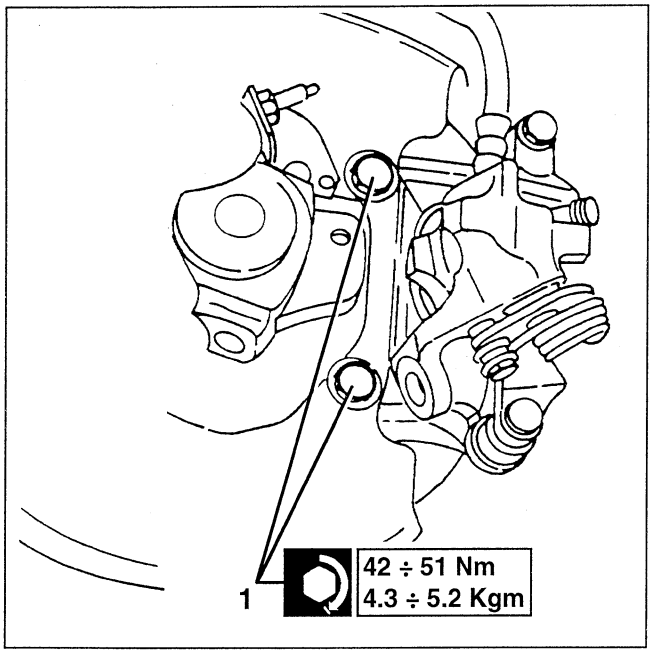

1. Remove the complete brake caliper.
2. Retrieve the thickness.

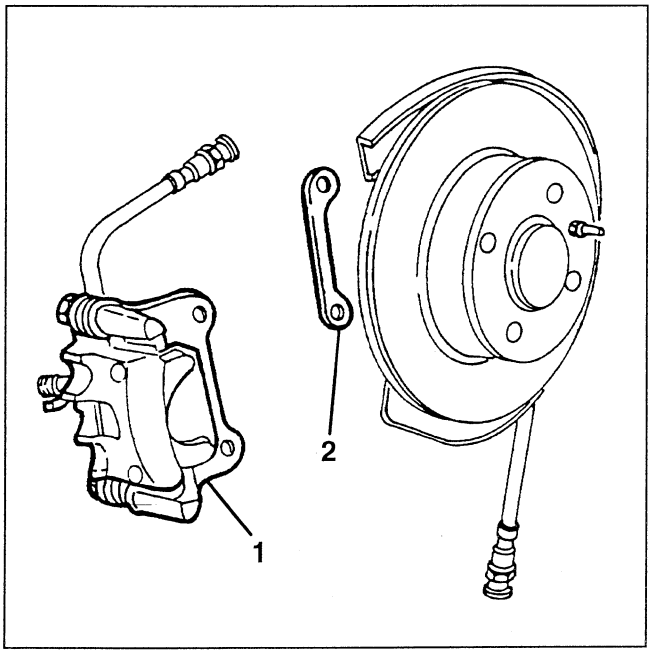

DIS-ASSEMBLY

1. Disconnect the brake caliper hose fitting.

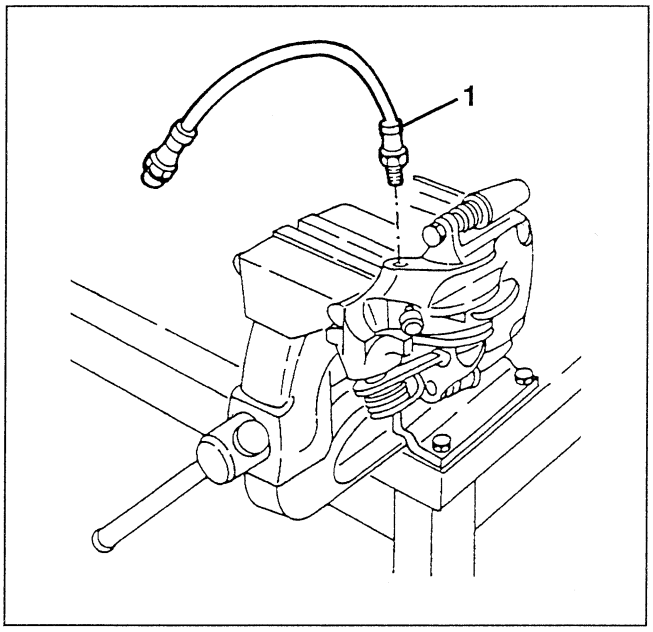

1. Slacken the two screws fastening the brake caliper to the support bracket and remove it.
2. Retrieve the brake pads.

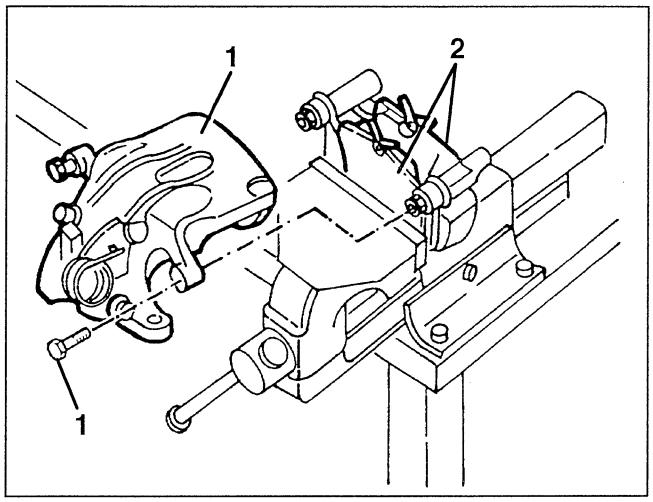

cardiagn.com

1. Remove the bleed screw.
– Using tool no. 1.822.108.000, remove the piston (A), protection boot (B) and seal ring (C).

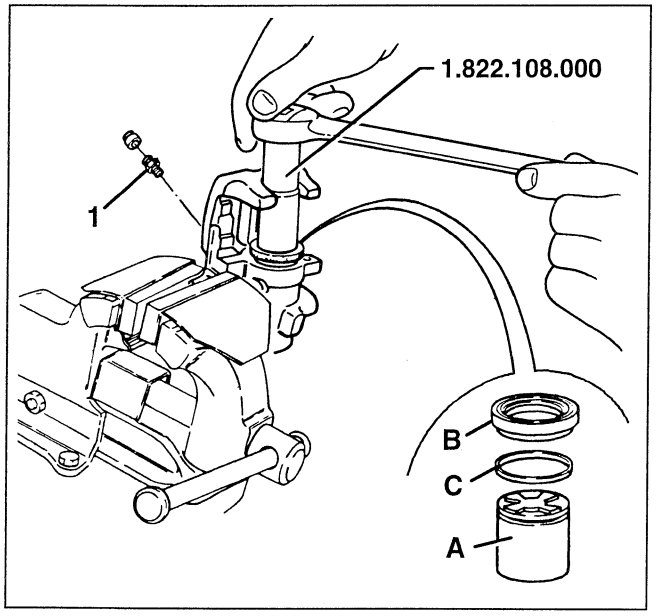

REASSEMBLY

1. Fit the seal ring in the caliper body.
2. Position the protection boot on the rear of the piston.
3. Assemble the piston and adjust its position using tool no. 1.822.108.000.

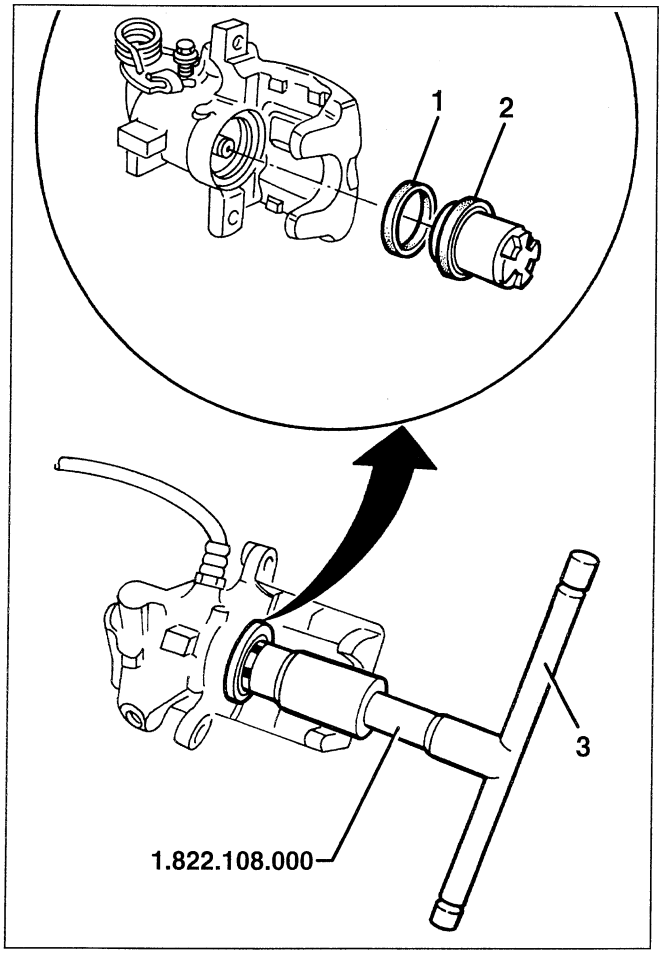

1. Partially tighten the bleed screw.
2. Fill the caliper with the specified brake fluid until fluid without air bubbles comes out of the connection hole of the hose.

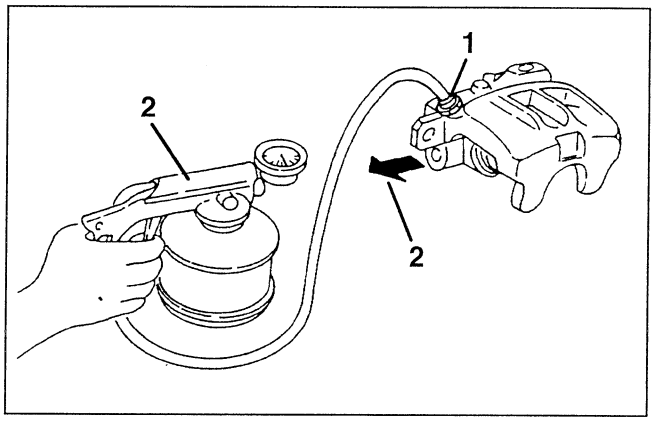

1. Tighten the bleed screw to the specified torque.
2. Assemble the hose and lock the fitting to the specified torque.

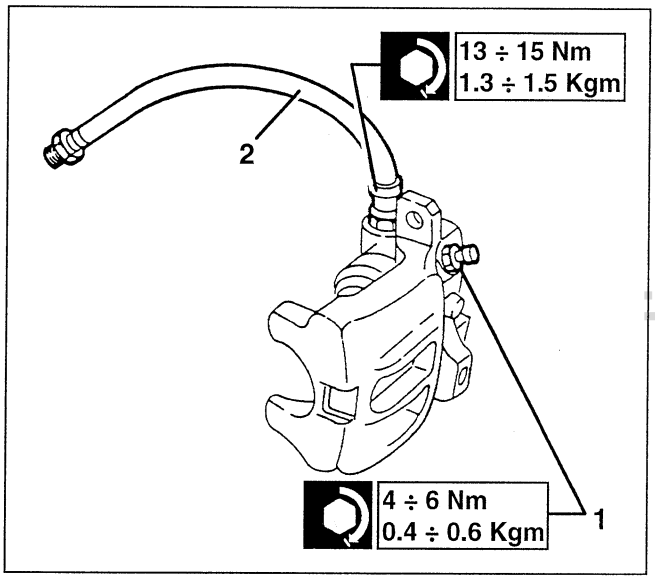

1. Position the brake pads, then assemble the brake caliper on the support tightening the new fastening screws to the specified torque.

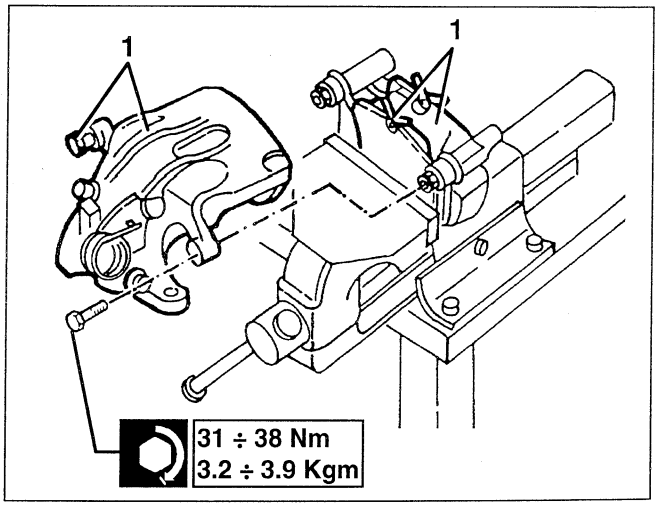

cardiagn.com

CHECKS AND INSPECTIONS

– The piston and caliper body should show no signs of scrapes or seizing; otherwise replace the caliper complete with piston.
– Always replace the protection boot and the seal.
– Make sure the bleed screw is not clogged.
– Make sure that the hose is not swollen or cracked.
– Change the brake pads if the thickness of the friction material is below 1.5 mm.
– Check the brake caliper support bracket for cracks and distorsion.
– If the handbrake cable automatic stroke adjustment device is not working properly replace the complete caliper.

CHANGING THE REAR BRAKE PADS

– Remove the rear wheel.
1. Slacken the two screws fastening the caliper body and move it to facilitate replacement of the pads.

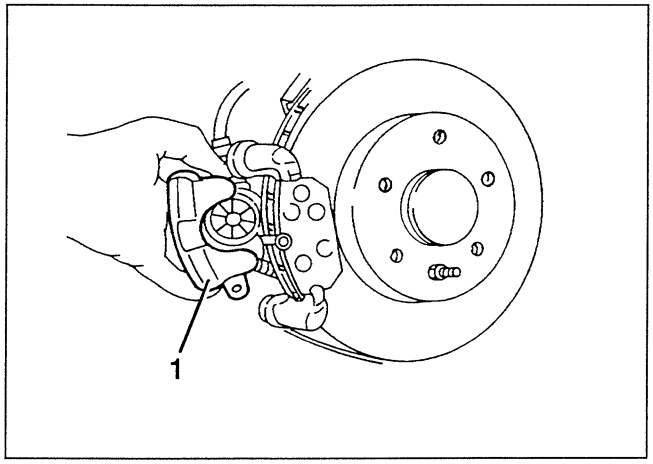

1. Change the brake pads.

NOTE: There is no particular direction of assembly for the rear brake pads.

2. Using tool no.1.822.108.000 move back the piston to simplify assembly of the caliper, then refit the caliper.

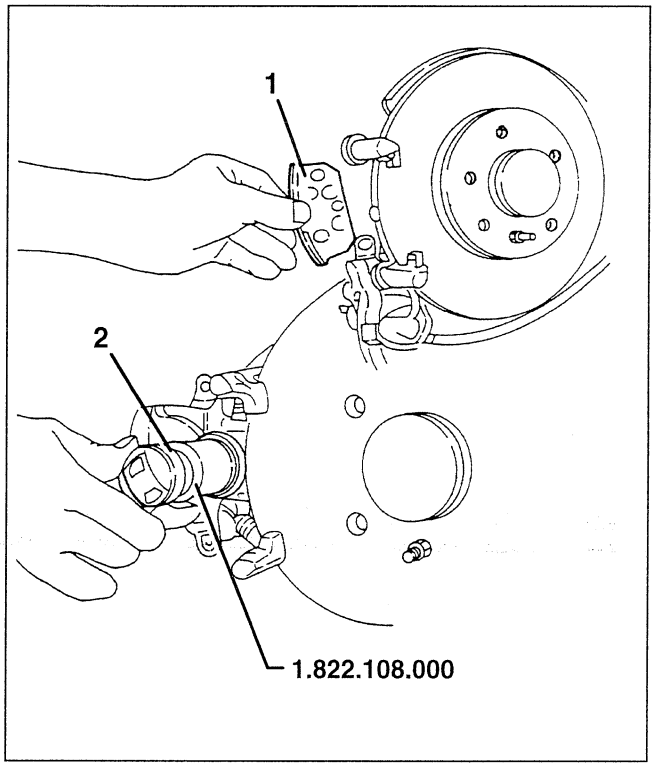

cardiagn.com

PARKING BRAKE

CONTROL LEVER

REMOVAL/REFITTING

– Set the car on a lift.
– Remove the lever cover (see GROUP 70).
1. Completely slacken the parking brake lever adjustment nut and release the control cable.
2. Disconnect the electrical connection from the parking brake switch.

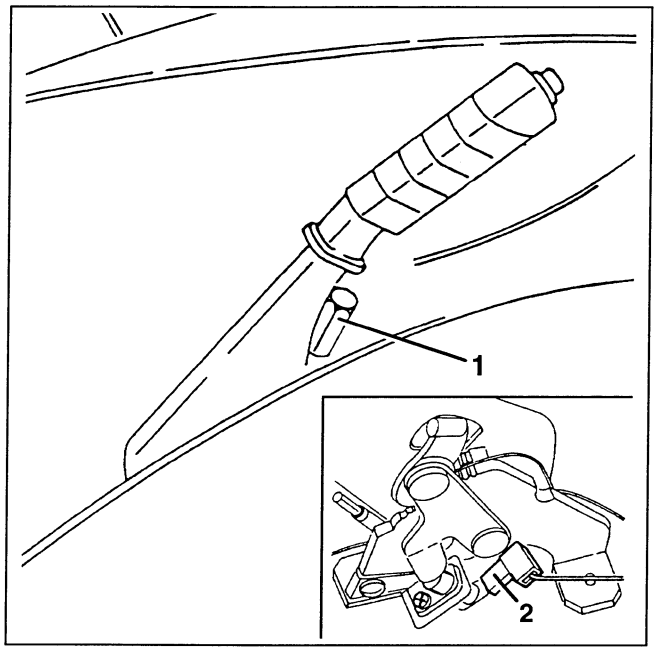

– Raise the car.
– Slacken the fastenings of the exhaust pipe heat guards. (If necessary remove them see GROUP 10).
1. Slacken the two screws fastening the parking brake lever.

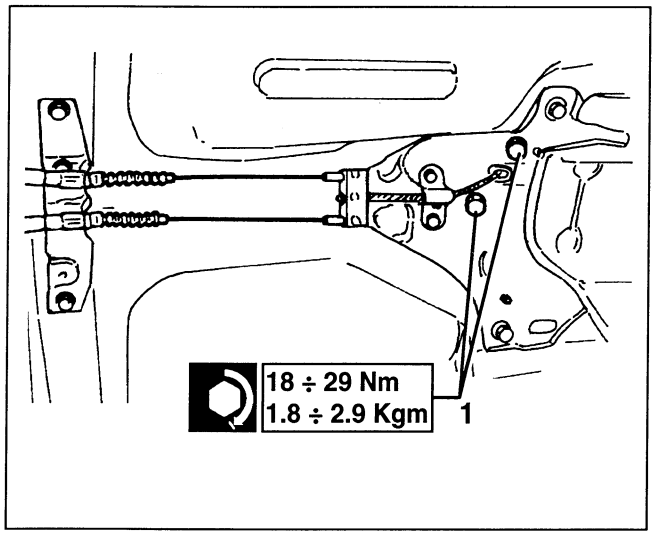

– Lower the car and work from inside.
1. Remove the parking brake control lever.

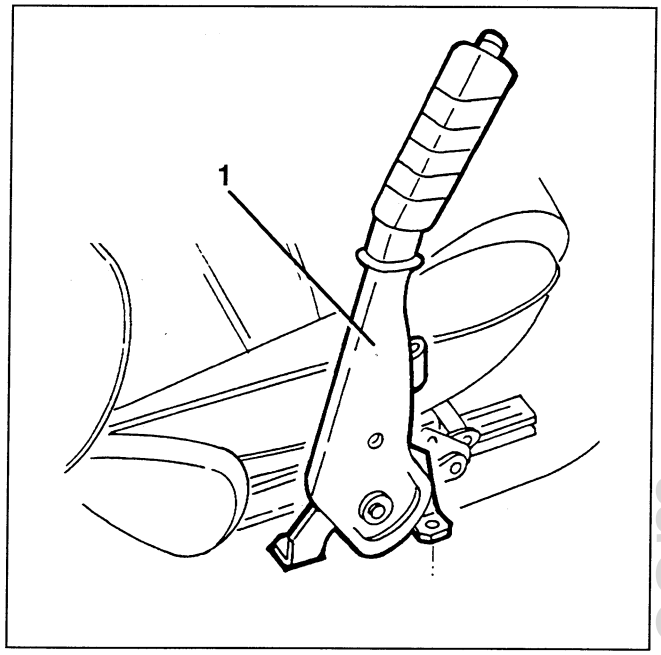

FRONT CONTROL CABLE

REMOVAL/REFITTING

– Set the car on a lift.
– Remove the parking brake control lever cover.
1. Slacken completely the parking brake lever adjustment nut and free the control cable.

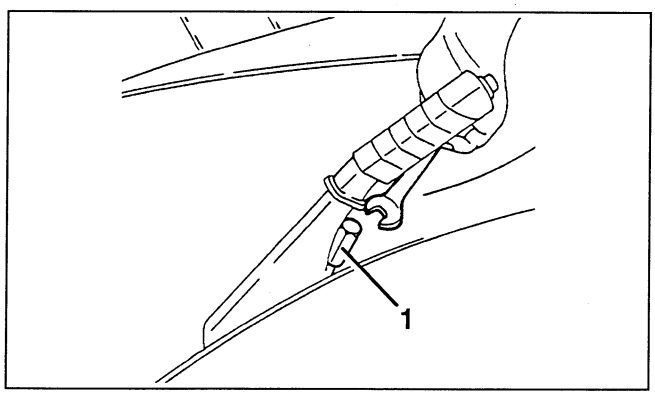

cardiagn.com

– Raise the car.
1. Disconnect the parking brake cables from the clamping bracket.

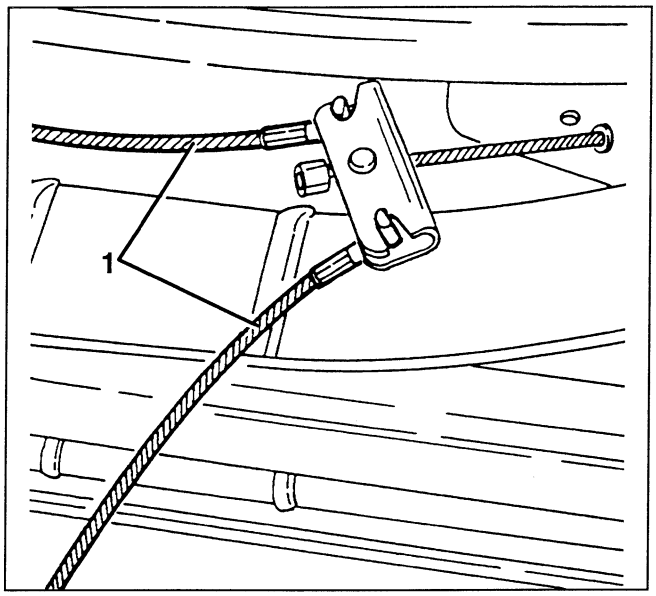

– Slacken the fastenings of the exhaust pipe heat guards. (If necessary remove them, see GROUP 10).
1. Slacken the two screws fastening the front parking brake cable support.

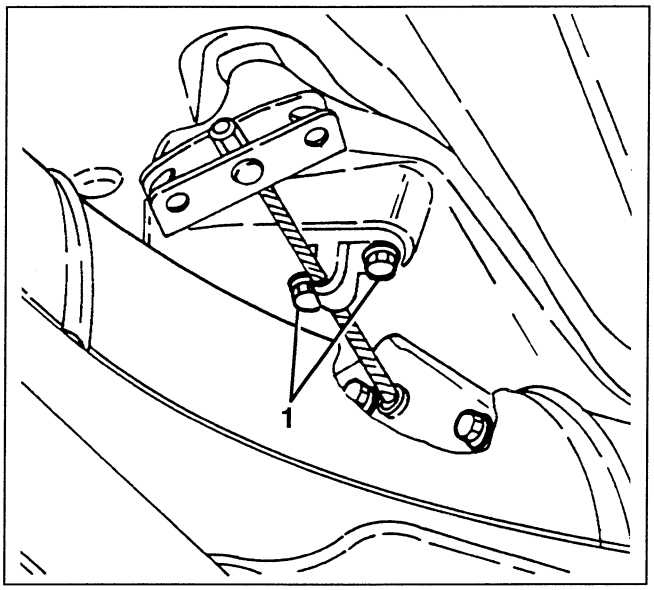

– Retrieve the front parking brake cable withdrawing it from the cable lead grommet.

When refitting, make sure of the presence and correct positioning of the cable lead grommet.

REAR CONTROL CABLES

REMOVAL / REFITTING

– Remove the lever cover (see GROUP 70).
1. Working on the adjustment nut loosen the tension of the parking brake cables.

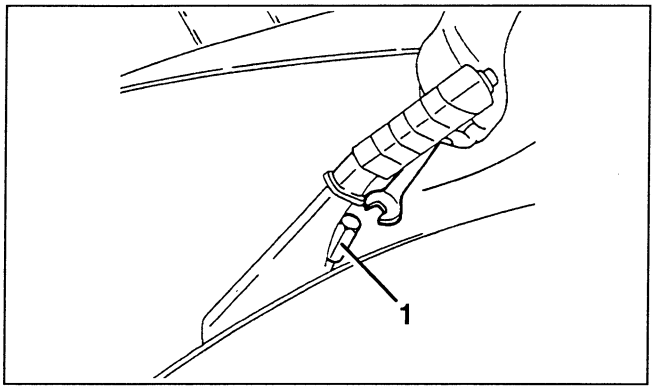

– Raise the car.
1. Disconect the parking brake cables from the clamping bracket.
2. Disconnect the cables from the body fastening bracket.

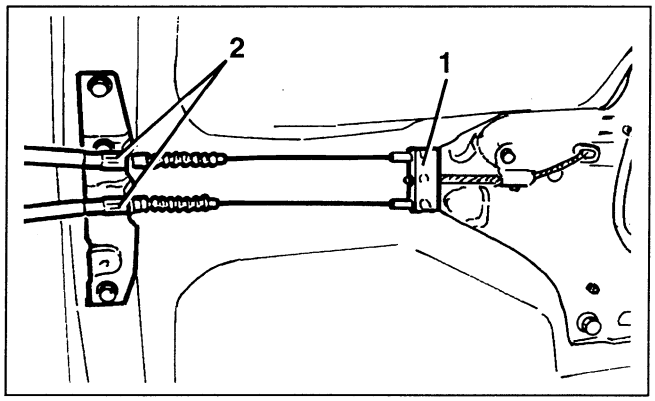

1. Disconnect the parking brake rear cables from the brake calipers.
2. Release the rear parking brake cables.

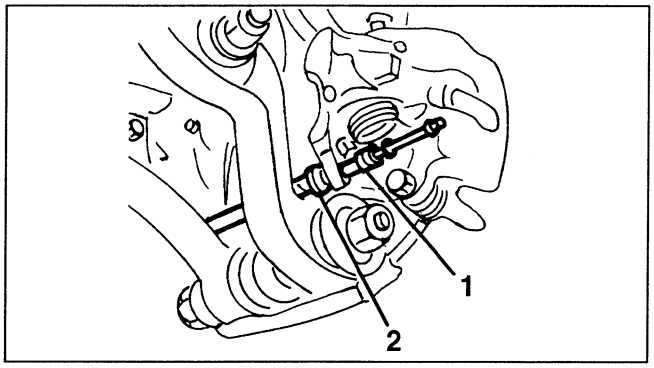

cardiagn.com

ADJUSTING THE CONTROL CABLES

The parking brake should only be adjusted after changing the brake pads, or the control cables or the brake caliper, as play takeup due to wear is automatic.

1. Disconnect the parking brake cables from the brake calipers and operate the brake pedal forcefully at least ten times.
– Reconnect the parking brake cables to the calipers.
2. Move the parking brake control lever to the third notch on the toothed sector.
3. Tighten the adjustment nut until the rear wheels are braked.

With the lever in the rest position, check that the wheels are free.

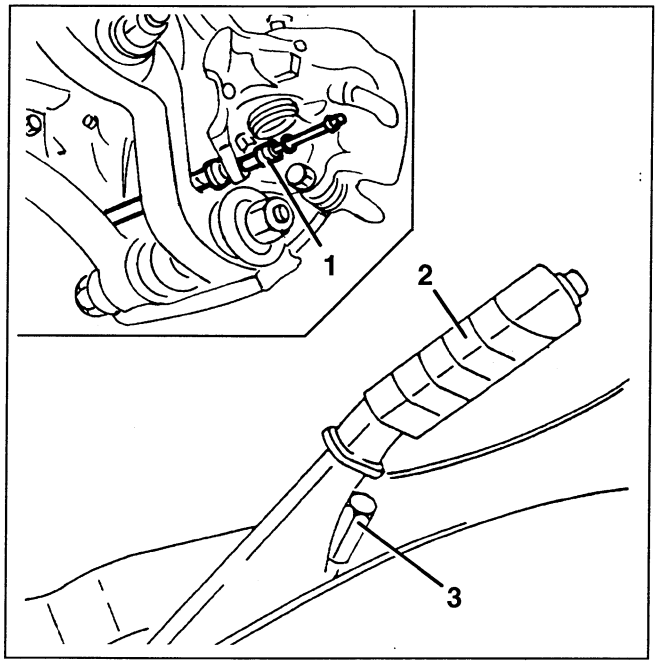

HANDBRAKE ON WARNING SWITCH

REMOVAL/REFITTING

– Disconnect the battery (-) terminal.
– Remove the parking brake lever cover (see GROUP 70).
1. Disconnect the electrical connection from the switch.
2. Slacken the fastening screw and remove the switch.

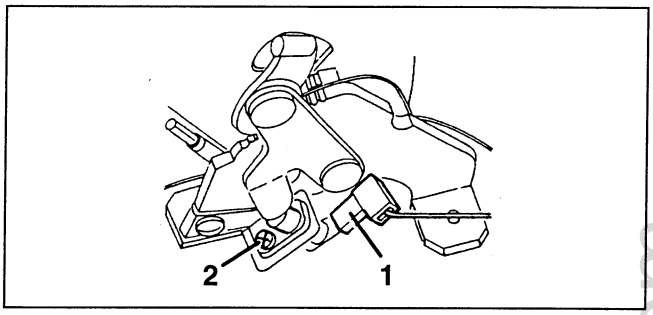

cardiagn.com

STEERING 41

INDEX

STEERING CONTROL

- Description 1
- Steering wheel 2
  - Removing / refitting 2
- Steering column 3
  - Description 3
  - Removing/refitting (to '97 versions) 4
  - Removing/refitting ('98 versions) 4/1
  - Dis-assembly/reassembly 5
- Steering lock 6
  - Removing/refitting 6

POWER STEERING

- Power steering box 7
  - Description 7
  - Removing/refitting 7
  - Dis-assembly/reassembly 8
  - Checks and inspections 9
- Power steering pump 9
  - Removal / refitting (6-cylinder engine) 9
  - Removing/refitting (4-cylinder engine) 10
  - Checks and inspections 11
- Filling the power steering circuit and bleeding air 11
- Power steering oil reservoir (1.8 - 2.0 TS engines - '98 versions) 11
  - Removing/refitting 11

cardiagn.com

STEERING CONTROL

DESCRIPTION

The power-assisted steering system enables the effort required to turn the steering wheel to be reduced when maneouvring at low speeds and keeps the steering steady at high speeds.

The system comprises a pump (1) operated directly by the engine through a belt. The pump draws fluid through the inlet pipe from the reservoir (2) located in the engine compartment and sends it under pressure through the delivery hose to the distribution valve located on the power steering box (3).

The distribution valve, operated by the rotation of the steering wheel, sends the oil under pressure from one side or the other of the hydraulic cylinder which is integral with the rack and pinion inside the steering box.

A hose allows the fluid to return to the reservoir, thereby closing the circuit.

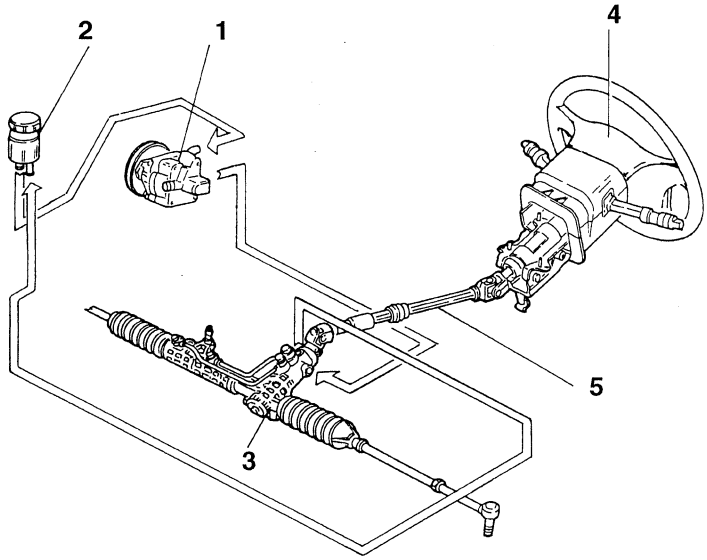

4-CYLINDER ENGINE

6-CYLINDER ENGINE

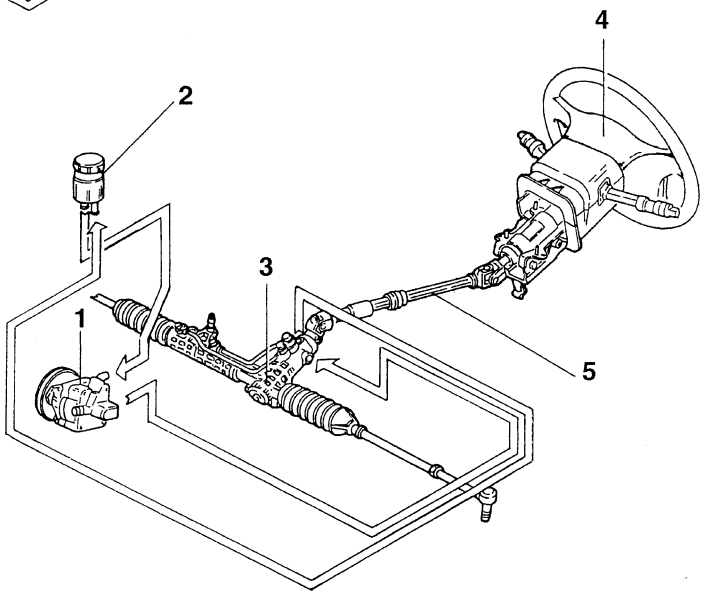

1 Power steering pump
2 Reservoir
3 Power steering box
4 Steering wheel
5 Steering column

cardiagn.com

STEERING WHEEL

REMOVING / REFITTING

NOTE: From chassis no.___ the steering wheel is of the type with three spokes, but the procedure remains unchanged.

– Remove the Air Bag module (see GROUP 55).

WARNING:
Before doing any work on the system closely adhere to the SAFETY INSTRUCTIONS concerning the Air Bag system described in Group "55 - ELECTRIC SYSTEM DIAGNOSIS", Section "Air Bag and Pre-tensioners".
Disconnect both the battery terminals, isolate them accurately and wait for 10 minutes before doing any work.

1. Remove the steering wheel fastening nut.

CAUTION:
Before carrying out this operation make sure that the wheels are perfectly straight ("spoked" steering wheel).

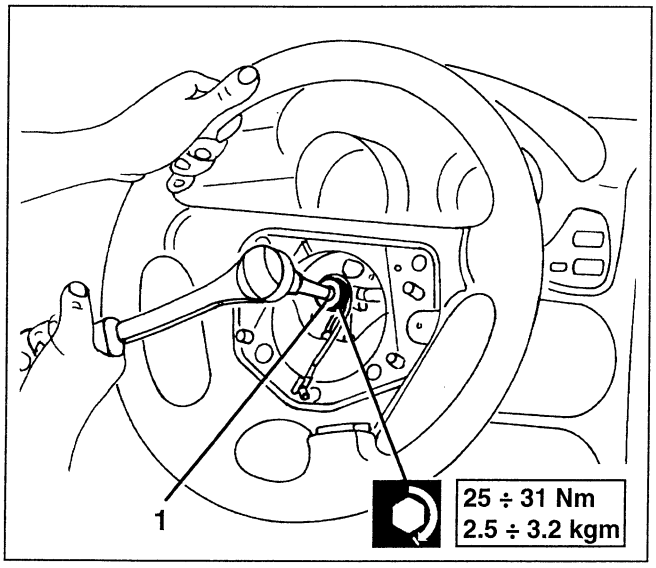

1. Using tool no. 1.821.105.000 remove the steering wheel from the steering column.
2. Disconnect the clock spring connection.

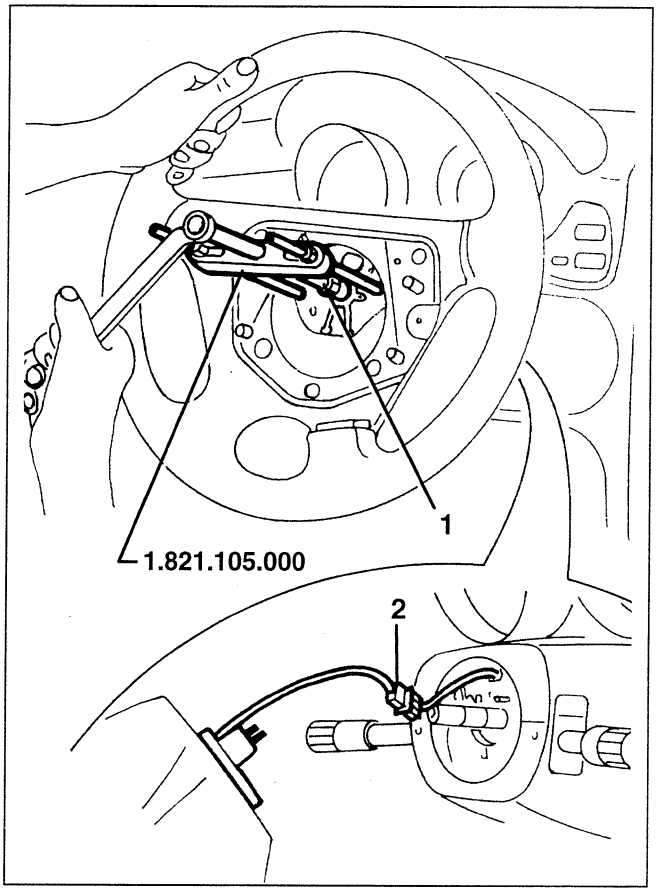

CAUTION:
Take car at this stage not to turn the clock spring with respect to the steering wheel, as the device is locked only when separated from the steering wheel (see next step). Therefore, you are advised to fix the clock spring to the steering wheel, for example using adhesive tape

cardiagn.com

1. Disconnect the connections of the horns.
2. Slacken the two screws and remove the safety spring.
3. Slacken the three screws and separate the clock spring from the steering wheel.

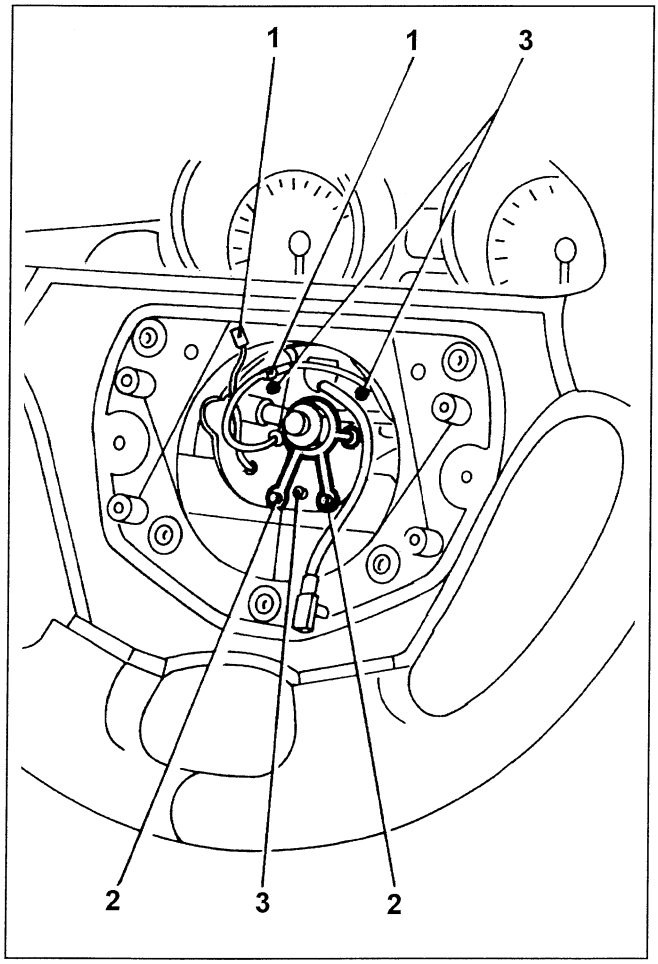

1. Slacken the three screws and separate the horn control from the steering wheel.

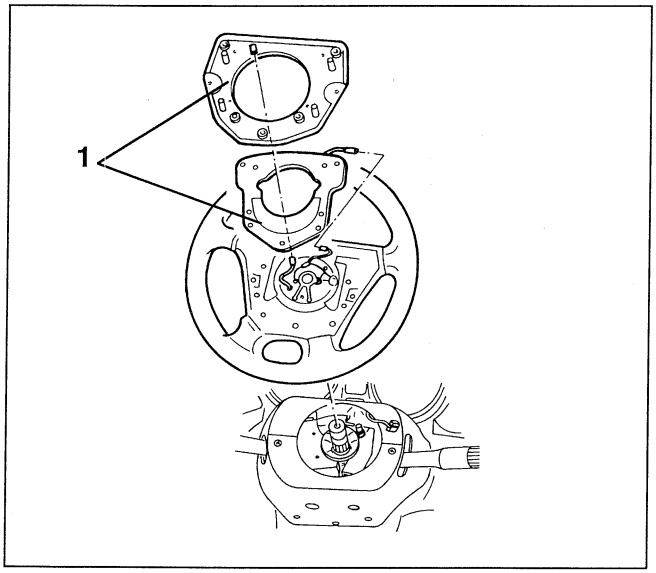

STEERING COLUMN

DESCRIPTION

In order to higher the degree of passive safety of the vehicle, a new "collapsible" steering column has been designed which considerably improves behaviour in all types of front crashes.

This sophisticated project involves splitting the control shaft in two trunks. The lower section is by telescopic sliding sleeve (collapse stroke: max 80 mm) with absorption of the movements leading from the steering box.

The upper section is supported by a corrugated sleeve which absorbs energy.

In fact, in the event of a crash the impact of the driver's head and chest against the steering wheel results in distorsion of the coils of the corrugated sleeve, thus the steering column "gives in" upon impact.

To '97 versions

Next to the steering column there is a reaction rod which also has an easily deformible section.

The purpose of this rod is to make the fastening of the steering column more rigid in the event of impact.

'98 versions

The steering column is supported by a specific crossmember.

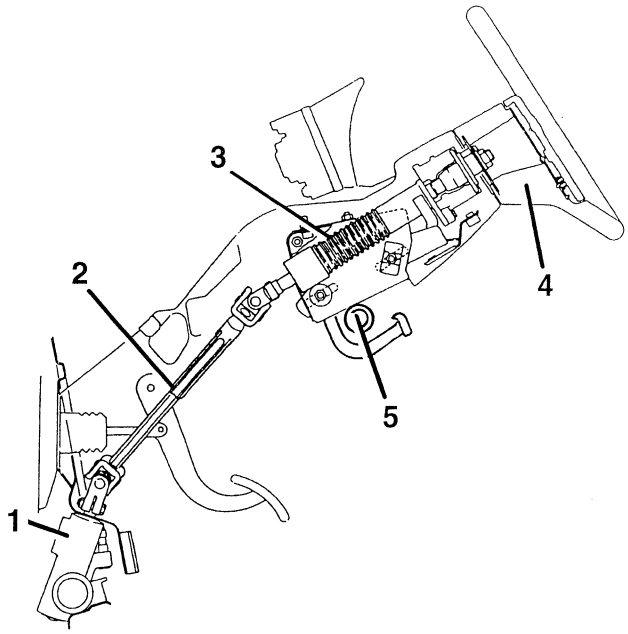

1. *Steering box*
2. *Sliding sleeve*
3. *Corrugated sleeve*
4. *Steering wheel*
5. *Steering column crossmember*

cardiagn.com

REMOVING/REFITTING (to '97 versions)

– Remove the steering wheel (see specific paragraph).

1. Slacken from below the screws fastening the steering column cover halves.
2. Remove the steering column cover halves.

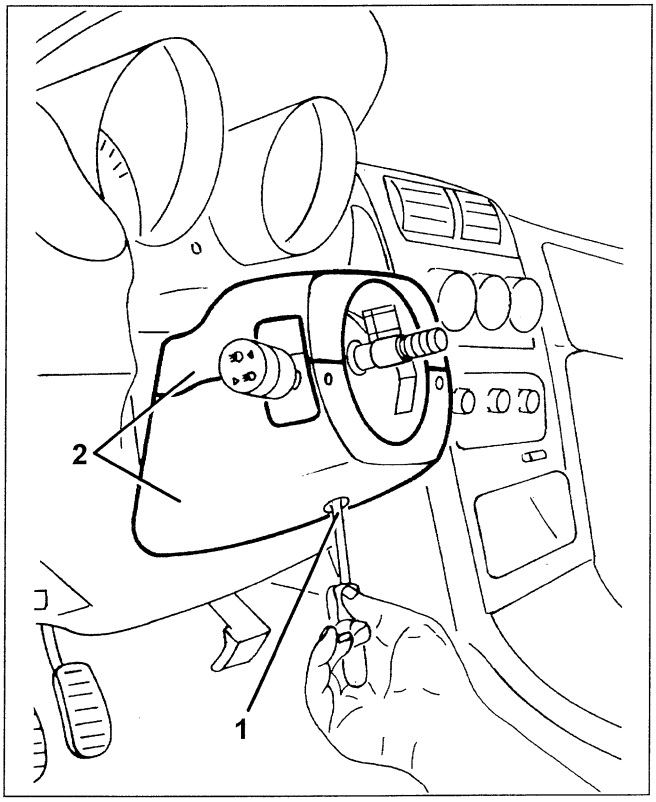

– Remove the steering column lever unit (see GROUP 55).

– Remove the fusebox cover from the dashboard lower panel (see GROUP 70).

1. Slacken and remove the bolt of the lower slotted bracket for axial steering column adjustment.
2. Slacken the nut of the upper bracket.
3. Disconnect the connection of the ignition switch.
4. Withdraw the aerial of the "ALFA ROMEO CODE" system.

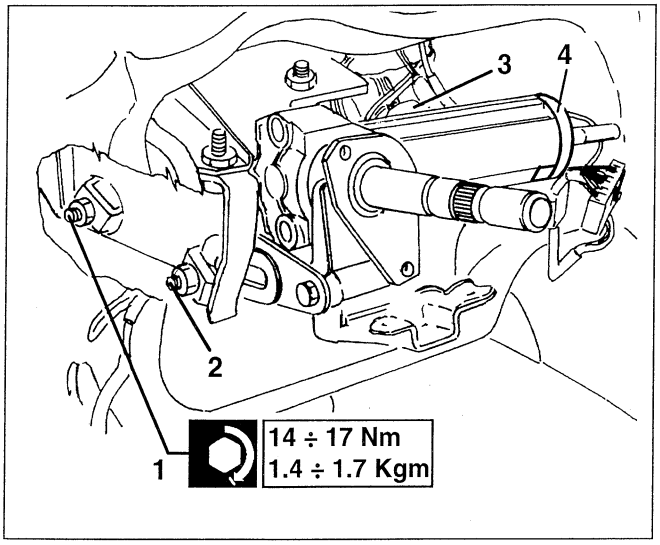

1. Withdraw the retainer pin.
2. Withdraw the steering wheel adjustment lever.
3. Remove the pin from the upper slotted bracket.

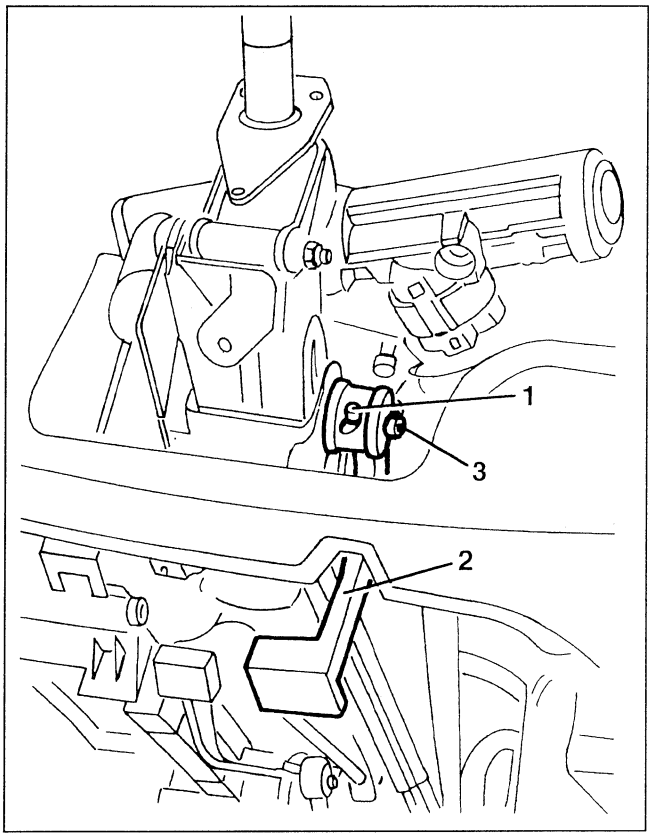

1. Slacken the bolt fastening the lower cardan joint to the steering box shaft.
2. Remove the complete steering column.

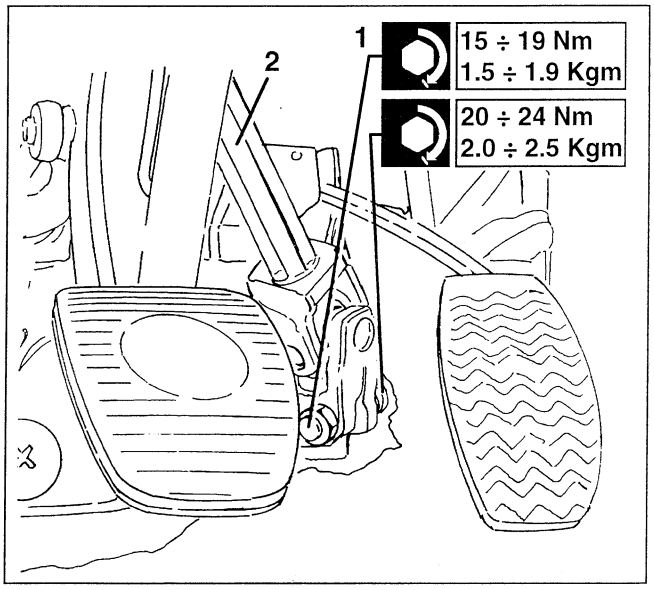

cardiagn.com

1. If necessary, slacken the four bolts connecting the steering column support.
2. Retrieve the steering column support.
3. Slacken the lower nut and remove the reaction rod.

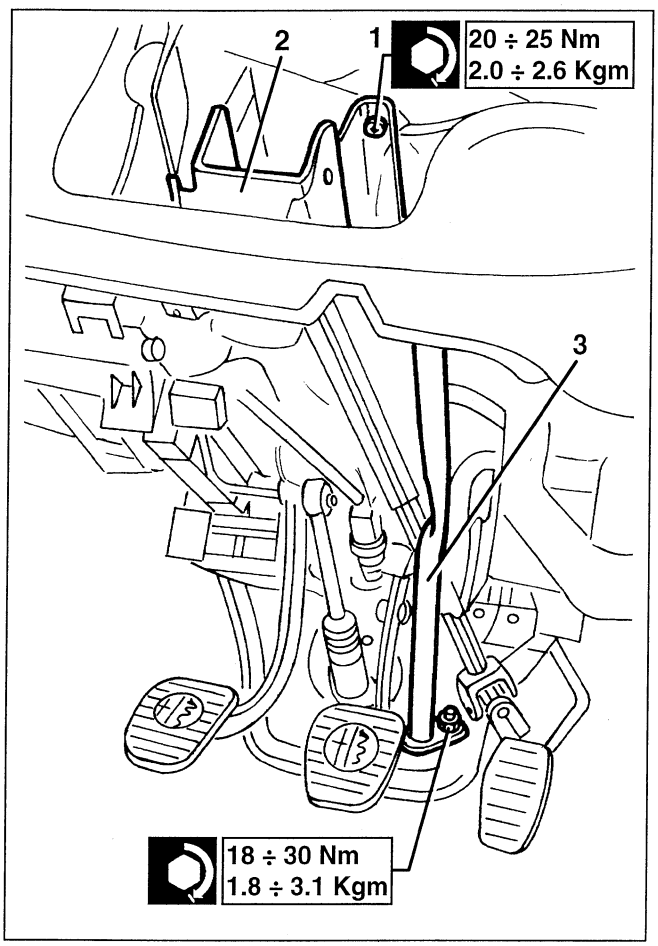

Refit reversing the sequence followed for removal and observing the following instructions.

– Check the steering wheel adjustment device as follows:
1. Move the lever to the locked position.
2. Screw the nut and tighten it to the specified torque.
3. Move the lever to the release position.
4. Check that steering column adjustment takes place correctly.
– Move the lever back to the locked position.

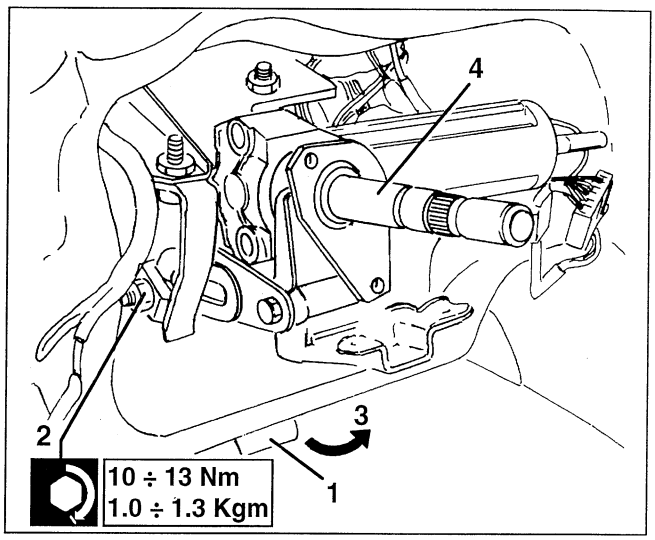

REMOVAL/REFITTING ('98 versions)

– Remove the steering wheel (see specific paragraph).
1. Loosen the steering column half casings lower side fastening screws.
2. Take the half casings.

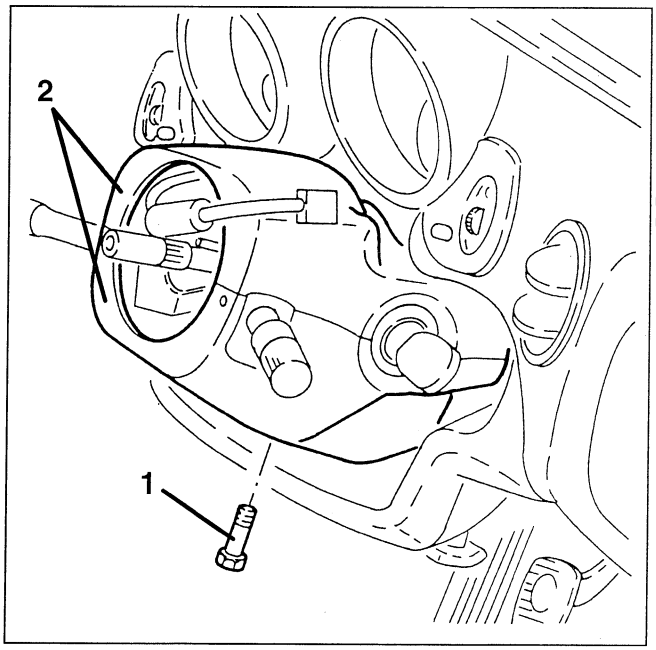

– Remove the steering column stalk assembly (see ASSEMBLY 55).
– Remove the valve guard from the panel under the dashboard (see ASSEMBLY 70).
1. Loosen the screws and remove the panel under the dashboard.

cardiagn.com

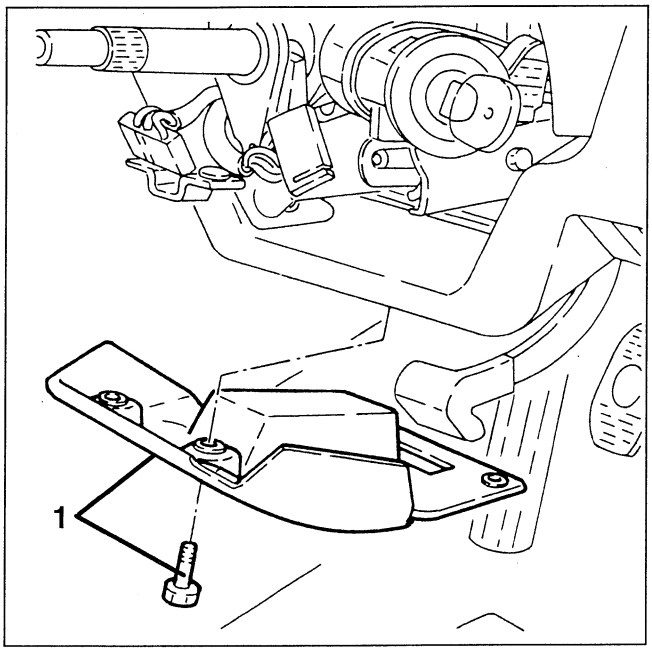

1. Disconnect the ignition switch electrical connections.
2. Remove the Alfa Romeo CODE system aerial.

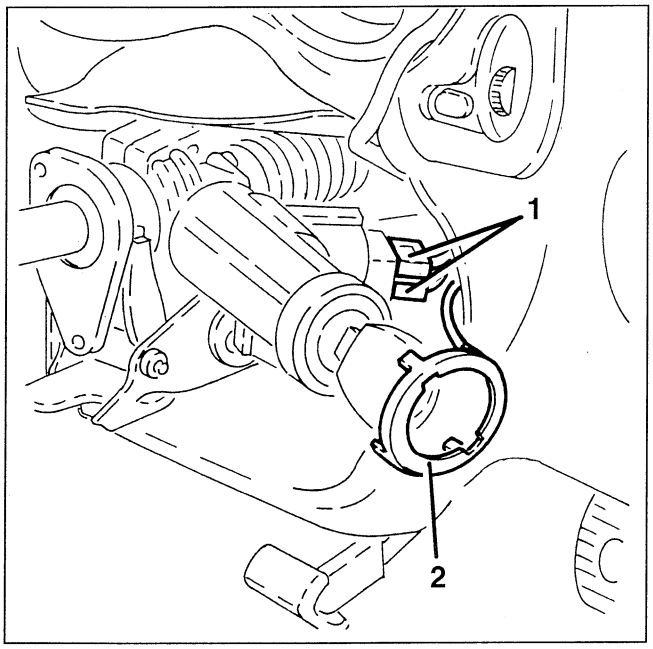

1. Loosen the fastening nut and lower the fuse bracket.

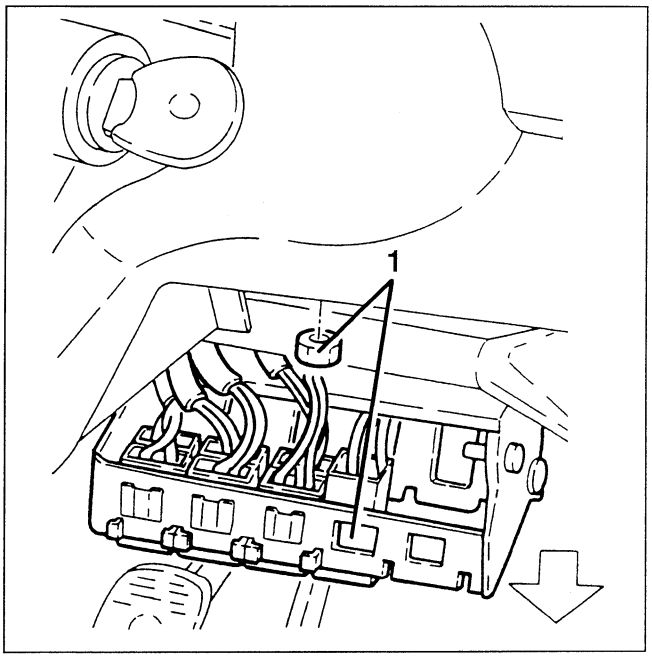

1. Loosen the nut and remove the steering wheel adjustment lever and pin.

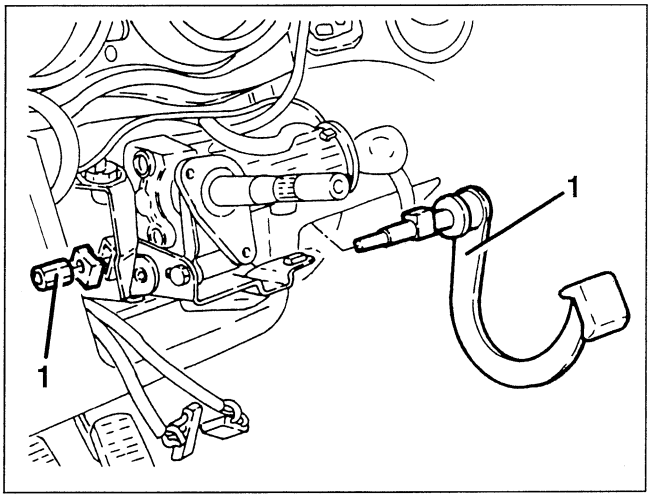

1. Loosen the steering column fastening bolt from the bracket.
2. Loosen the bolt fastening the lower CV joint to the steering unit pinion.
3. Extract the complete steering column.

cardiagn.com

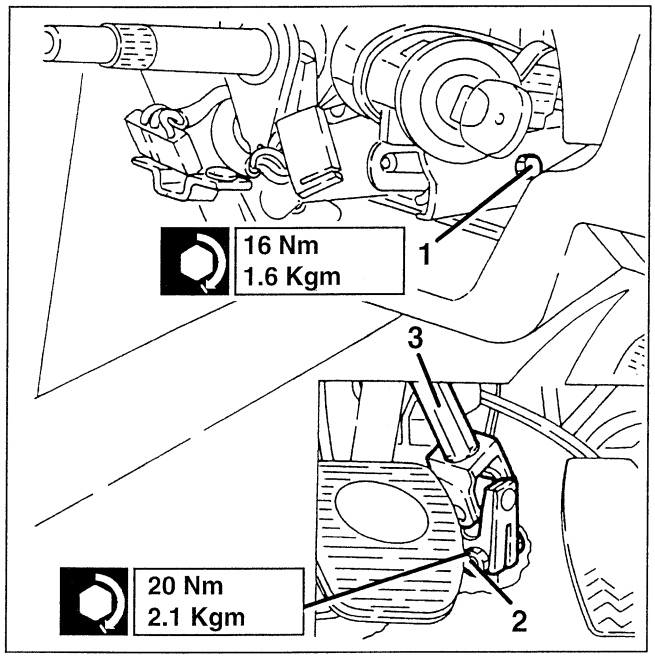

– Check the steering wheel adjustment device as follows:

1. Move the lever to the locked position.
2. Screw the nut and tighten it to the specified torque.
3. Move the lever to the release position.
4. Check that steering column adjustment takes place correctly.

– Move the lever back to the locked position.

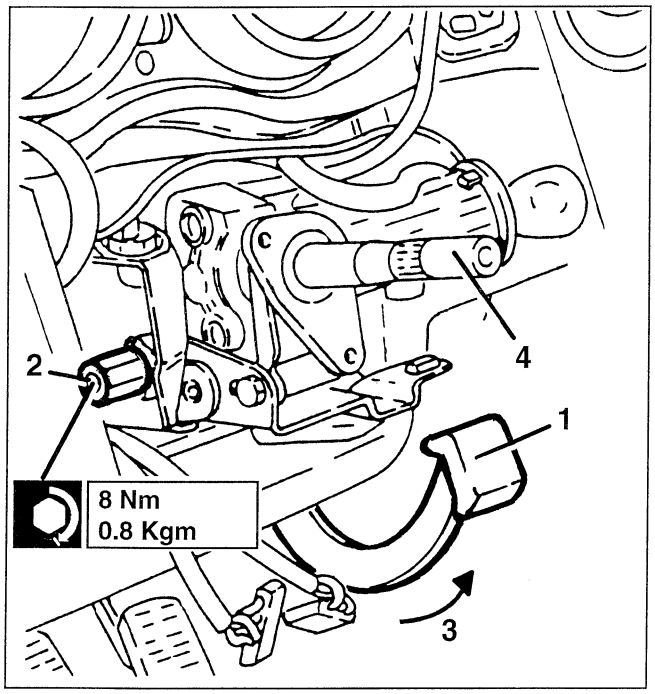

DIS-ASSEMBLY/REASSEMBLY

1. Clamp the steering column in a vice.
2. Using a resin hammer, remove the steering column shaft.

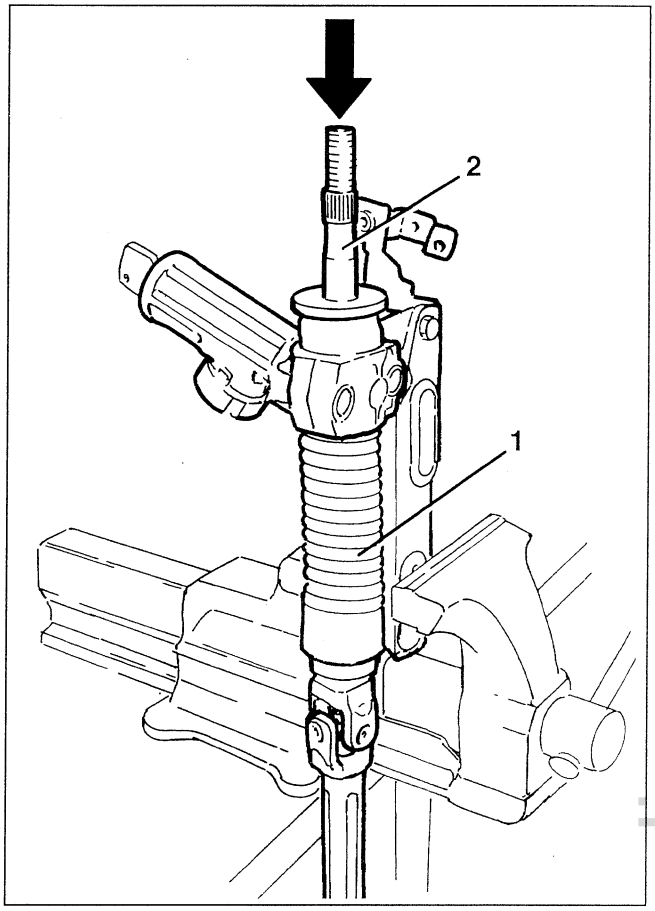

cardiagn.com

1. If necessary, using a suitable puller tool, remove the steering column upper bearing.

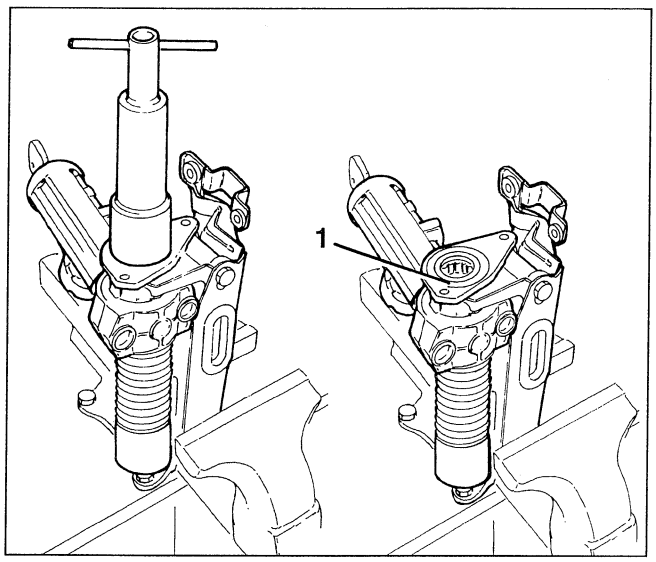

Re-assemble reversing the sequence followed for dis- assembly.

STEERING LOCK

REMOVING/REFITTING

– Insert the key in the ignition switch and check that the steering wheel is released.
– Move the steering wheel as near as possible to the driver and lock the steering column in this position.
– Disconnect the battery.
1. Slacken from below the screws fastening the steering column half covers.
2. Remove the cover halves.

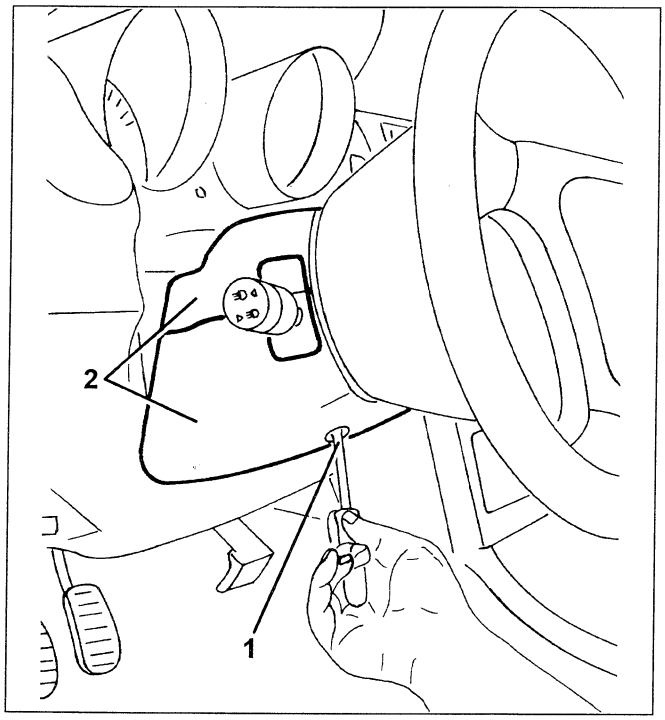

1. Using a punch, slacken the two safety screws and remove the collar.
2. Disconnect the steering lock electrical connection and remove the aerial of the "ALFA ROMEO CODE" system.
3. Remove the steering lock.

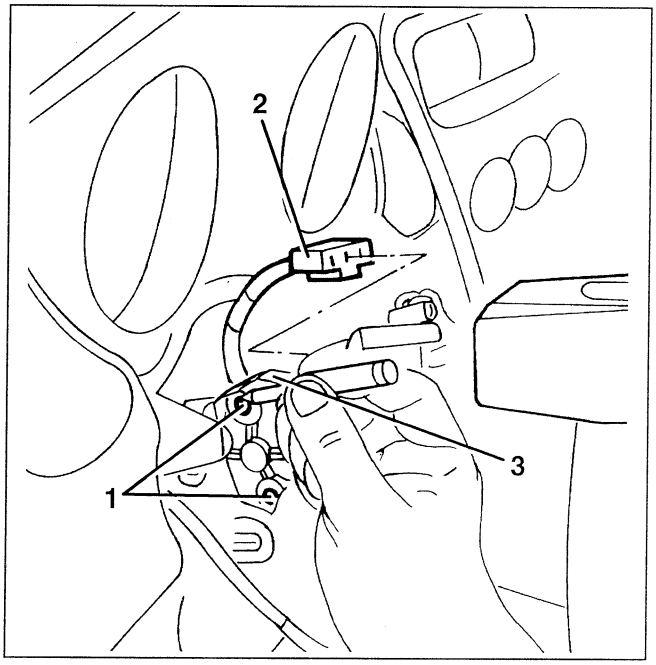

When refitting the steering lock, preverse the procedure followed for removal.
Fasten the steering lock with the special safety screws supplied as spares, tightened until the head breaks.

cardiagn.com

POWER STEERING

POWER STEERING BOX

DESCRIPTION

The steering box assembly comprises a rack and pinion steering box assisted by the hydraulic oil under pressure supplied by a special pump operated by the engine.

In the steering box there is an operating cylinder (2) in which a double-acting piston (1) runs which is integral with the rack and pinion rod.

In the seat of the worm screw there is a distributor valve (3) with the corresponding ducts which is controlled by a torsion device (4) on the end of the worm screw.

Depending on the torsion transmitted to the device by the steering wheel, the pump oil is sent to the tank or to one of the two chambers A or B of the operating cylinder. The thrust generated by the pressure of the oil on the side surface of the piston causes it to move, thus also the rack and pinion.

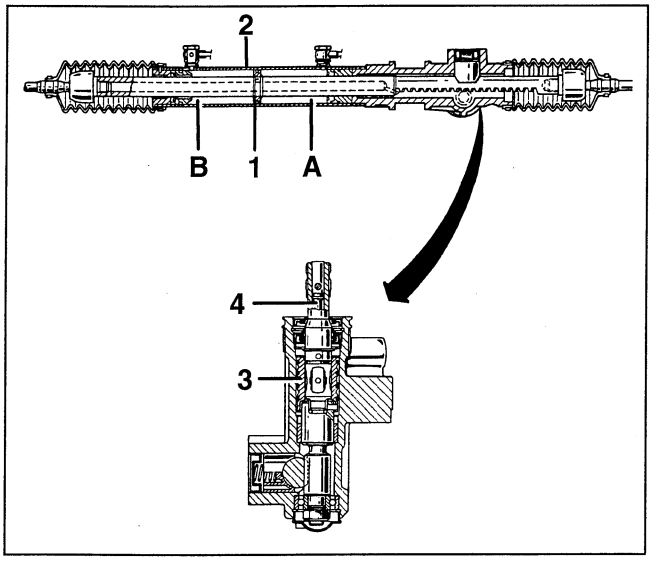

1. *Double-acting piston*
2. *Operating cylinder*
3. *Distributor valve*
4. *Torsion device*

A. *Operating cylinder right chamber*
B. *Operating cylinder left chamber*

Two guards made of sound deadening material are fitted at the ends of the power steering box as illustrated.

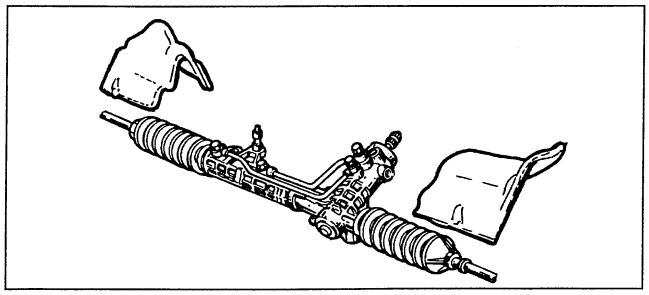

REMOVING/REFITTING

– Using a suitable syringe, empty the power steering system tank.
– Remove the front wheels.

1. Working from inside the car, slacken the bolt fastening the steering column to the power steering box pinion.

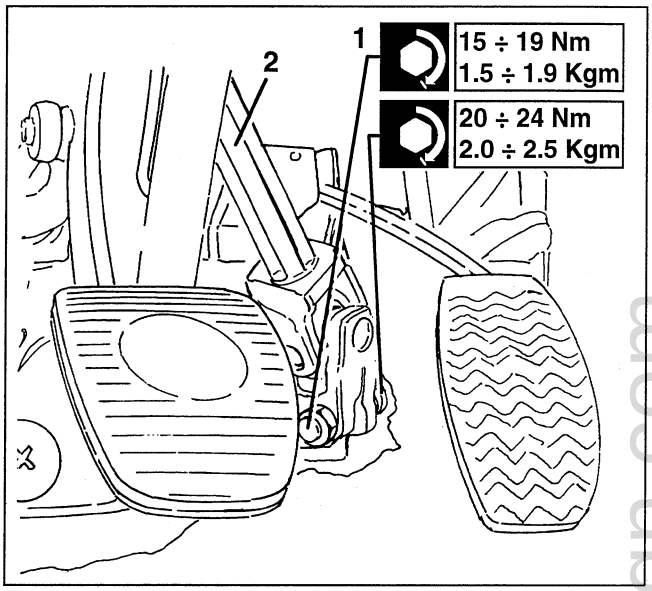

1. Slacken the nuts fastening the track ball joints to the wheel hubs.
2. Using tool no. 1.821.169.000 disconnect the track rod joints from the hubs.

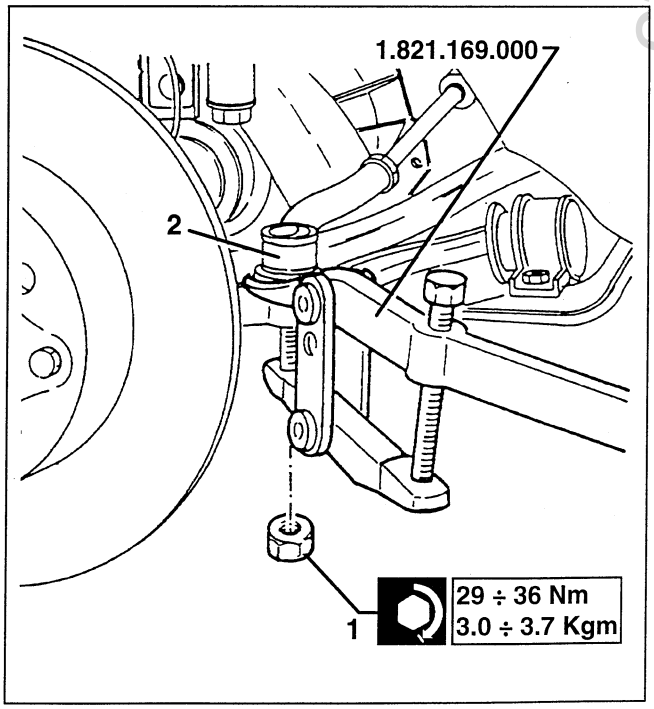

cardiagn.com

1. Disconnect the unions of the oil inlet and outlet pipes from the power steering box.

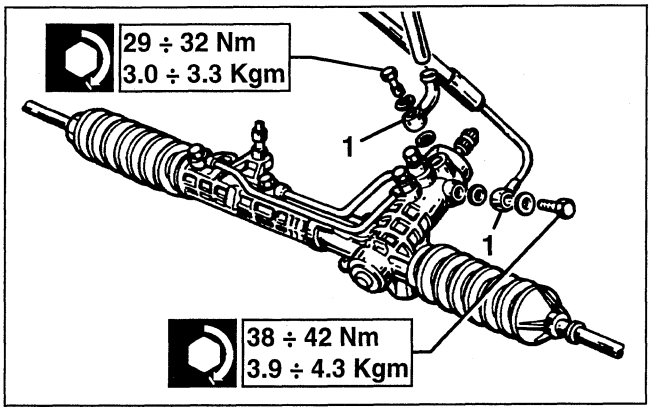

Only for version with 4-cylinder engine

1. Disconnect the relay rod of the gear engagement rods from the pin on the steering box.

– Remove the front crossmember (see GROUP 44).

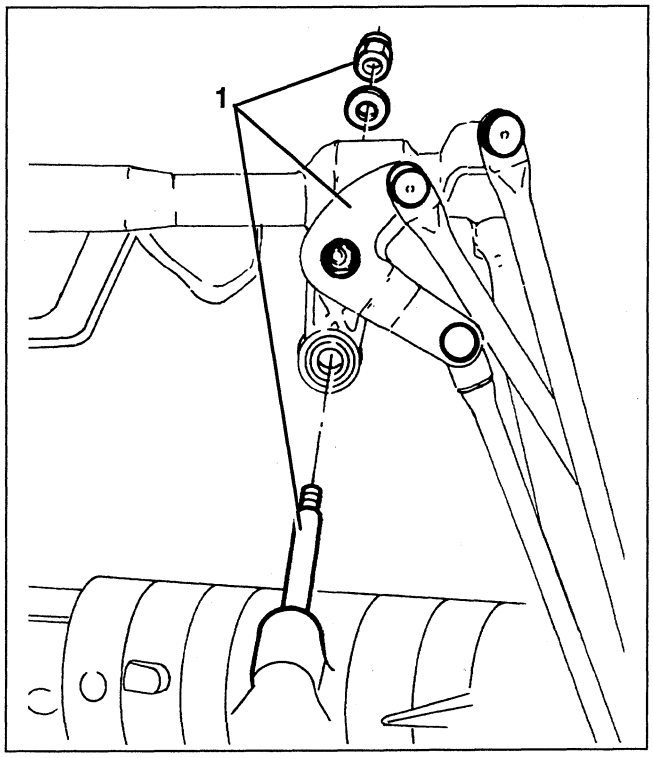

1. Slacken the two screws and separate the steering box from the crossmember.

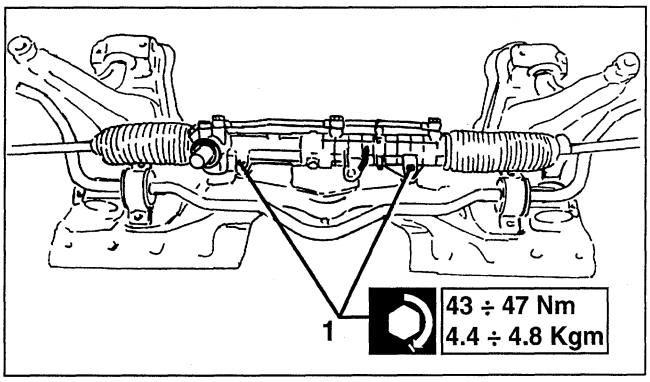

When refitting, if necessary, adjust the track rods to the correct toe-in value as described in GROUP 44.

DIS-ASSEMBLY/REASSEMBLY

1. Slacken the track rod locknut.
2. Slacken the track rods and remove them from the arm.
3. Slacken the clamps and remove the bellows.

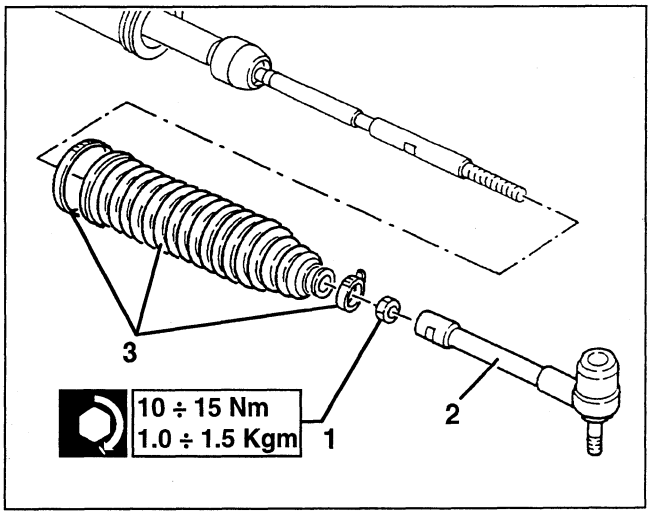

When reassembling lubricate the contact area between the bellows and the shaft with silicone grease so that with the clamp installed and closed at the next to last or third to last tooth, the side arm turns freely inside the bellows.

cardiagn.com

CHECKS AND INSPECTIONS

1. Check the ball joints for damage or wear and that they turn in their housings without jamming or excessive play.
2. Chec the track rods for damage or distorsion.
3. Make sure the bellows are intact.

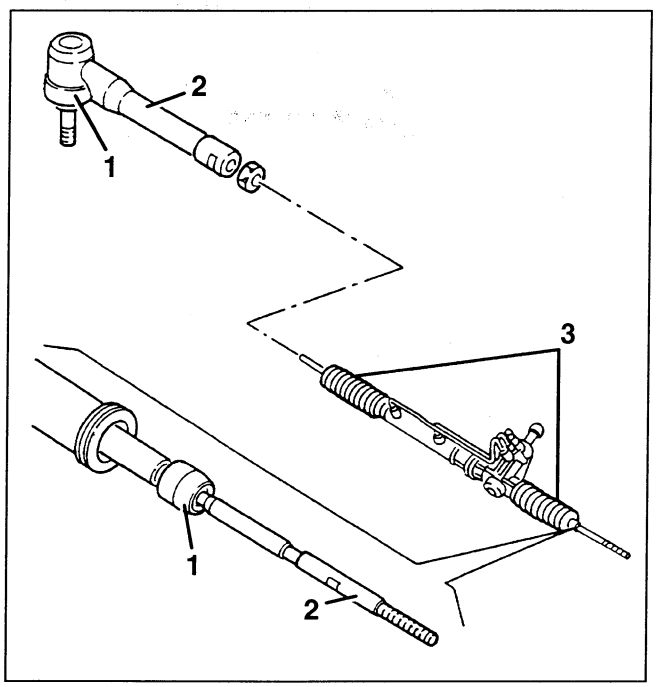

POWER STEERING PUMP

REMOVAL / REFITTING (6-CYLINDER ENGINE)

– Set the car on a lift.
– Remove the right front wheel with gravel guard (see GROUP 70).
– Remove the engine compartment protection, right-hand side.
– Using a syringe, withdraw the oil from the power steering tank
– Remove the upper radiator crossmember and engine cooling fans (see GROUP 10).

1. Disconnect the oil delivery intermediate union.
2. Disconnect the oil suction pipe from the pump.
3. Slacken the belt tensioner prod.
4. Slacken the three pump support fastening screws.
5. Prise off the belt.
6. Remove the pump complete with support.

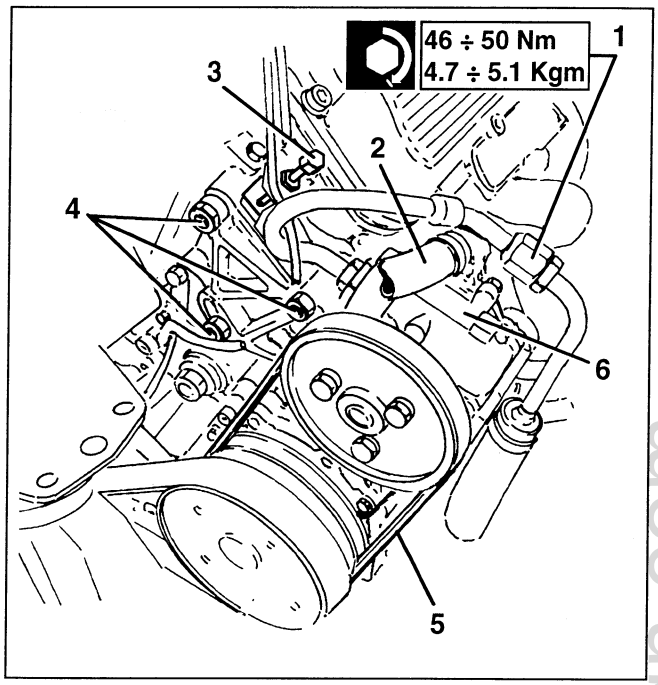

1. Slacken the screws and separate the pump from the support.
2. Slacken the oil delivery union.
3. If necessary, slacken the three screws and separate the pulley.

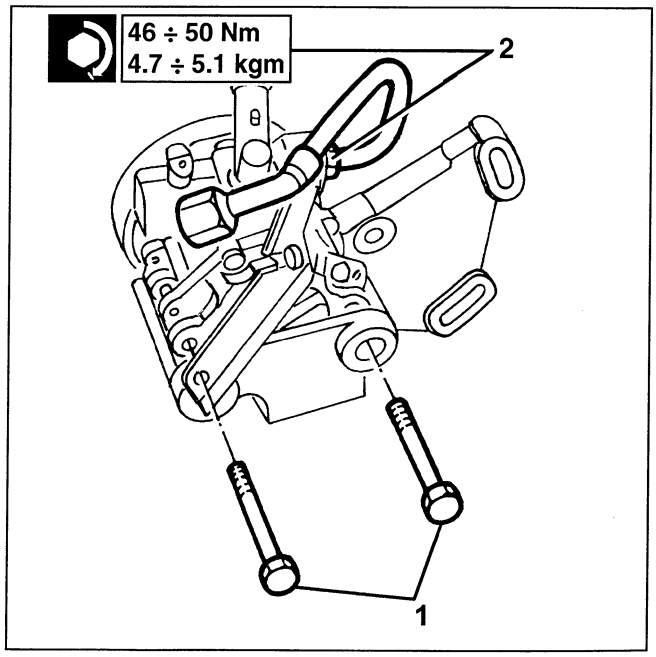

cardiagn.com

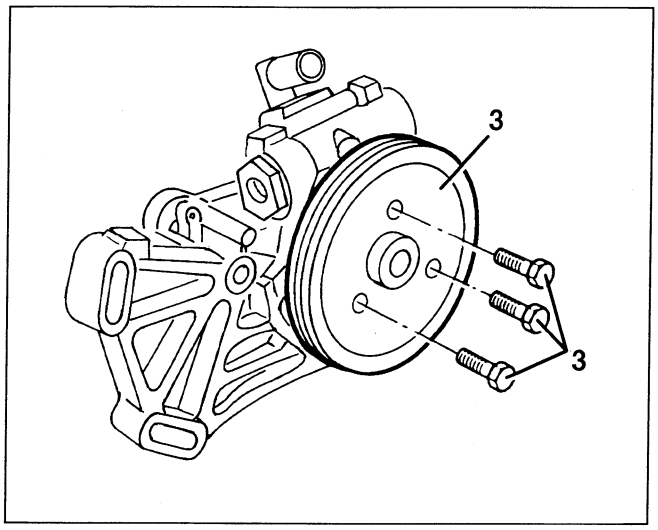

Refit the pump reversing the sequence followed for removal. Tension the belt as described in GROUP 00.
Fill the hydraulic circuit and bleed the air (see specific paragraph).

POWER STEERING PUMP

REMOVING/REFITTING (4-CYLINDER ENGINE)

– Set the car on a lift.
– Remove the right front wheel with gravel guard (see GROUP 70).
– Remove the engine compartment protection, right-hand side.
– .Using a syringe, withdraw the oil from the power steering tank
1. Slacken the belt tensioner and remove the guide pulley
2. Remove the services drive belt.

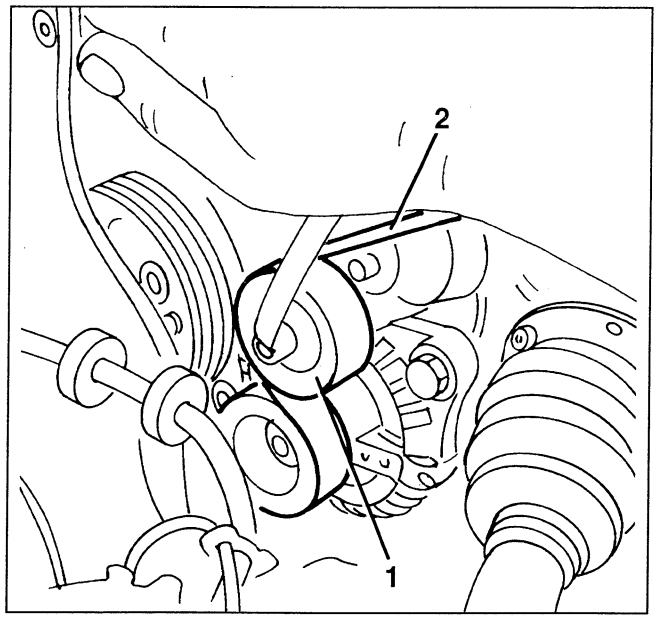

1. Holding the pump shaft still, slacken the three screws fastening the power steering pump pulley and remove it.
2. Working from above, disconnect the two pump suction and delivery pipes.

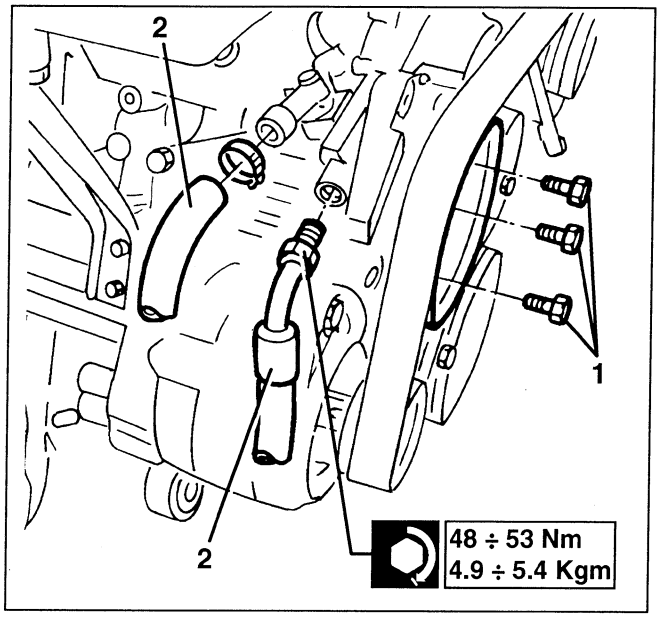

1. Slacken the three fastening screws and remove the power steering pump.

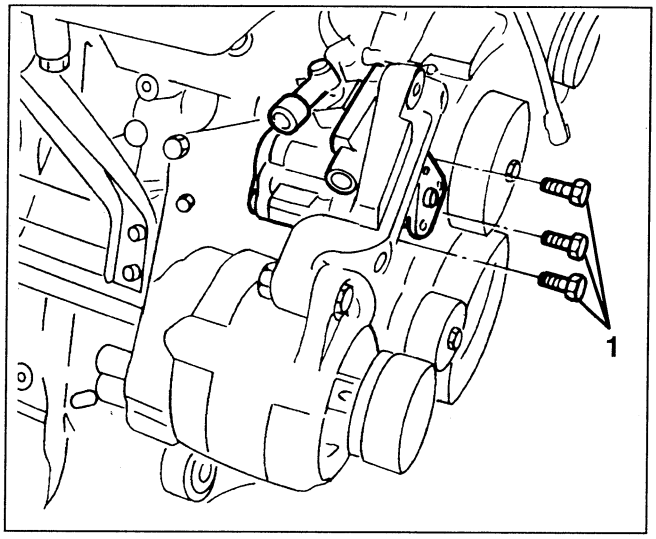

Refit the pump reversing the sequence followed for removal. Tension the belt as described in GROUP 00.
Fill the hydraulic circuit and bleed the air (see specific paragraph).

cardiagn.com

CHECKS AND INSPECTIONS

WARNING:
The power steering pump, like the steering box, should never be dis-assembled for any reason whatsoever, they must be sent to the Manufacturer for overhauling.
Check the steering wheel rolling torque with the car stationary and the engine running. The torque should bet between 0.6 daN with the engine running at idle speed and 0.75 daN with the engine at top speed: if this value is exceeded check the pressure of the system with the wheels completely steered.

For this purpose, insert a pressure gauge using a suitable "Tee" union on the pressurised oil delivery pipe to the power steering leading from the pump, and steer completey to one side. Further forcing the steering wheel to turn, the pressure reading on the gauge should rise to appr. 85 bar. If this fails to occur there is an operating failure in the pump or in the distributor valve from the power steering box

FILLING THE POWER STEERING CIRCUIT AND BLEEDING AIR

– Remove the plug and fill the tank with the specified oil.
– With the engine at idle speed, making sure that the tank does not empty, turn the steering wheel a few complete turns to bleed the air. Then top up the tank to the maximum level mark.

WARNING:
The power steering tank is self-relieving; this is obtained by completely turning the steering wheel to the right and to the left with the engine running and the vehicle stationary. This operation should be carried out each time the connection pipes are removed and refitted.
Steering stiffness may be due to slipping of the pump pulley belt or low oil level. In the event of an operating failure on the pump, operating cylinder or distributor valve, the power steering system will operate as a normal mechanical steering box.

POWER STEERING OIL RESERVOIR (1.8 - 2.0 TS engines - '98 versions)

REMOVAL/REFITTING

– Open the bonnet.
1. Remove the power steering reservoir cap and suck the oil with a suitable syringe. Refit the cap.
2. Remove the engine oil filler cap.
3. Loosen the engine cover fastening screws.
4. Remove the cover.
5. Refit the engine oil filler cap.
6. Loosen the engine tie-rod fastening screws.
7. Remove the tie-rod.
8. Loosen the upper bracket fastening screws.
9. Remove the bracket.

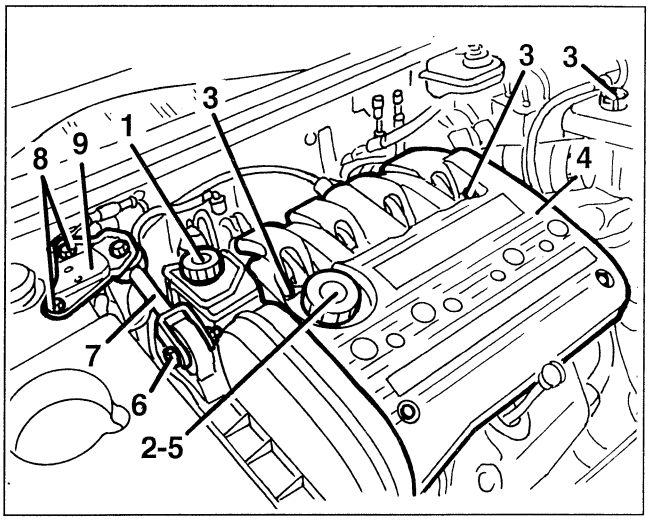

1. Loosen the power steering reservoir fastening screws.
2. Open the clips and disconnect the reservoir-pump return (2a) and delivery (2b) pipes.
3. Take the reservoir.

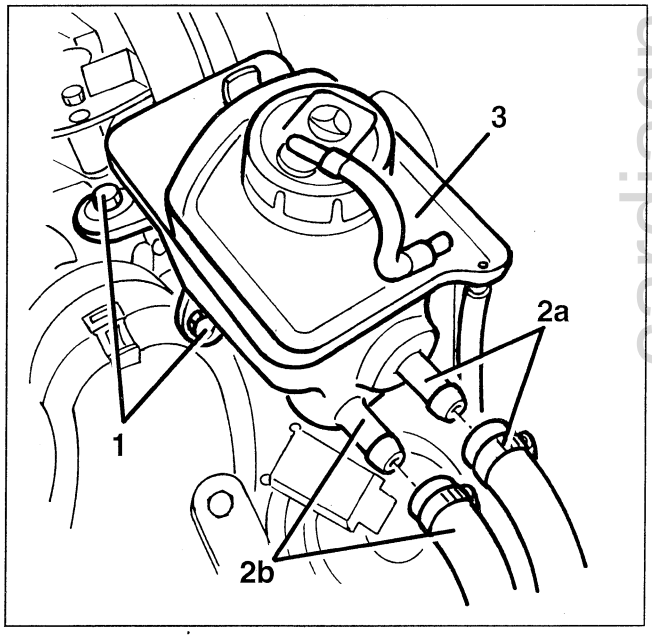

Refit the power steering oil reservoir by reversing the removal sequence.

cardiagn.com

cardiagn.com

SUSPENSION AND WHEELS

INDEX

FRONT SUSPENSION

- Description 1
- Coil spring and shock absorber assembly 2
  - Removing/refitting 2
  - Dis-assembly/reassembly 2
  - Checks and inspections 3
- Wishbone 3
  - Removing/refitting 3
  - Checks and inspections 4
- Front crossmember and antiroll bar 4
  - Removing/refitting 4
- Checks and inspections 6

REAR MULTILINK SUSPENSION

- Description 7
- Complete suspension frame 10
  - Removing / refitting 10
- Shock absorber 11
  - Removing / refitting 11
  - Checks and inspections 11
- Coil spring 11
  - Removing / refitting 11
  - Checks and inspections 12

WHEELS AND HUBS

- Front wheel upright 13
  - Removing/refitting 13
  - Caulking the front wheel hub fastening nut 13
  - Adjusting the position of the front suspension upright 14
  - Dis-assembly 15
  - Checks and inspections 16
  - Reassembly 16
- Rear wheel hub 18
  - Removing / refitting 18
  - Checks and inspections 18

WHEELS AND HUBS (Versions with ABS active sensors)

- FRONT STEERING KNUCKLE (6 cylinder version) 18/1
- Removing/refitting 18/1
- Staking front wheel hub fixing nut 18/1
- Adjusting front suspension steering knuckle position 18/2
- Dismantling 18/3
- Inspections and checks 18/4
- Reassembly 18/5
- Rear wheel hub (6 Cylinder Version) 18/6
- Removing / refitting 18/6
- Inspections and checks 18/6
- Wheels 18
  - Rims 18
  - Tyres 18
  - Tyre pressure and wear 19
  - Wheel balancing 19

WHEEL GEOMETRY

- Checking the front wheel geometry 20
- Checking the rear wheel geometry 21
- Checking the characteristic angles 21
  - Checking the front wheel toe-in 21
  - Hecking the front wheel camber and caster 22
  - Checking the rear wheel toe-in 23
  - Checking the rear wheel camber 23

cardiagn.com

cardiagn.com

FRONT SUSPENSION

DESCRIPTION

The front suspension is Mc Pherson type, independent with telescopic struts.

The front suspension can be mainly knocked down into the following components:

- The front crossmember (3) which is fastened rigidly to the body and, in addition to reinforcing the bearing structure, supports the steering box and cast iron wishbones of the suspension.
- The telescopic struts which comprise the helical springs (6) and the shock absorbers (5).
  This way, the offset, tapered springs reduce the thrust on the shock absorber stem and simplify steering.
  This solution also eliminates any shock absorber noise when the car is travelling, thereby improving comfort.
  The pressurised shock absorbers with lamellar disc-type inlet valves with particularly fine tolerances, enable excellent results in terms of comfort and noiselessness on the various types of road surfaces, while maintaining the necessary damping action.
- The cast iron wishbones (2), support the ball joints connecting the wheel upright (4) and the silent-blocks with the sheet metal reinforcement for fastening the wishbones to the crossmember (3).

The rotation of the wishbones on silent blocks gives the suspension high crosswise rigidity and low longitudinal rigidity, thereby enabling:

- improved behaviour of the car even under particularly critical roadholding conditions (the former);
- improved riding comfort (the latter).

The stabilizer bar (7) increases the rigidity of the suspension of one side of the car and lowers it proportionately on the other side. Its purpose is to limit the crosswise lean of the bearing body. This makes it possible to increase the speed limits when cornering as it counters the increase of roll of the car body caused by centrifugal stresses, which occur with the increase of speed.

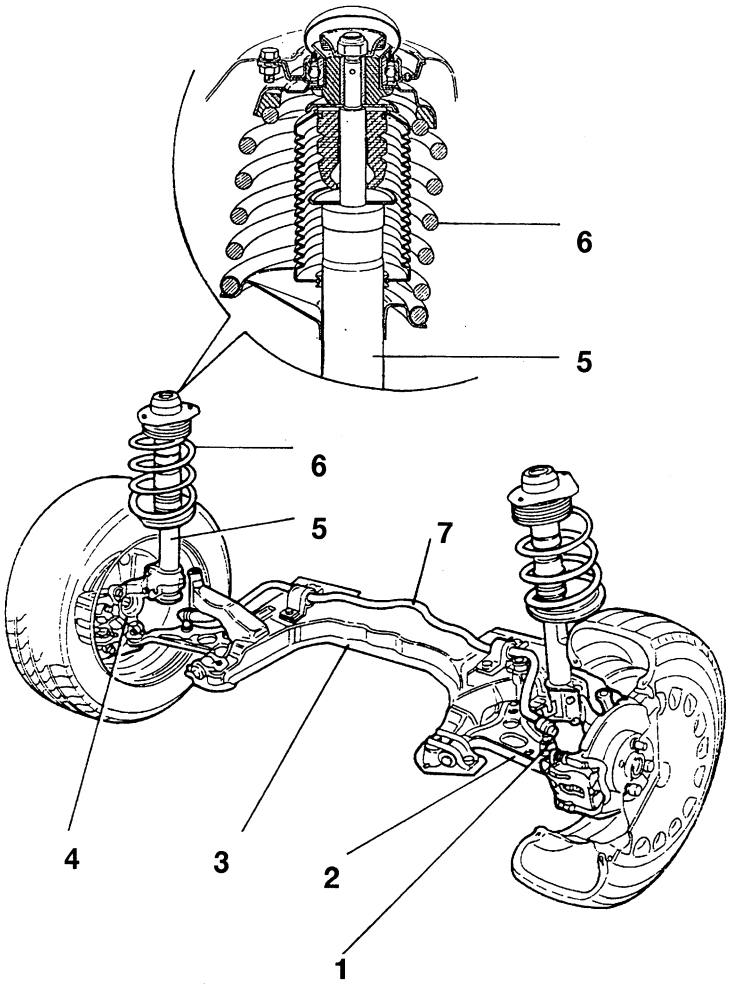

1. *Stabilizer bar - wishbone connecting rod*
2. *Wishbone*
3. *Front crossmember*
4. *Wheel upright*
5. *Shock absorber*
6. *Spring*
7. *Stabilizer bar*

cardiagn.com

COIL SPRING AND SHOCK ABSORBER ASSEMBLY

REMOVING/REFITTING

– Remove the front wheel on the side concerned.
1. Disconect, from the vertical guide with shock absorber, the brake pipe retainer grommet.
2. Disconnect the ABS inductive sensor from its clamp.
3. Slacken the the two bolts fastening the shock absorber guide to the wheel upright.

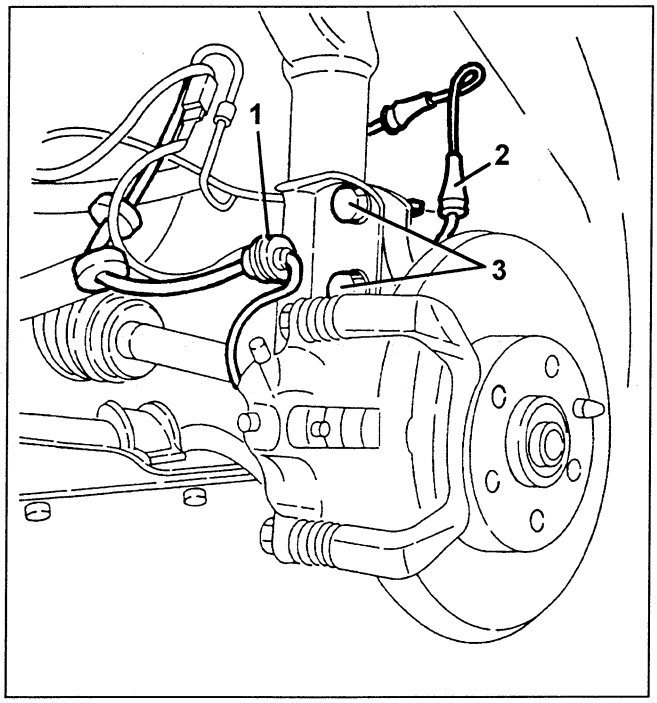

1. Remove the protective boot.
2. Slacken the three screws fastening the shock absorber to the dome and remove the coil spring and shock absorber assembly.

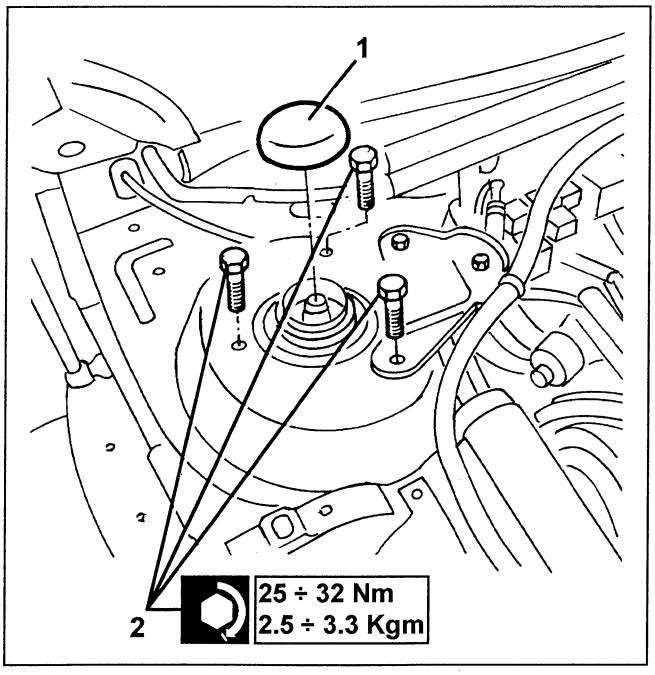

DIS-ASSEMBLY/REASSEMBLY

1. Position the coil spring-shock absorber assembly on tool no. 1.820.089.000 fitted with rest plates no. 1.820.238.000 and compress it.

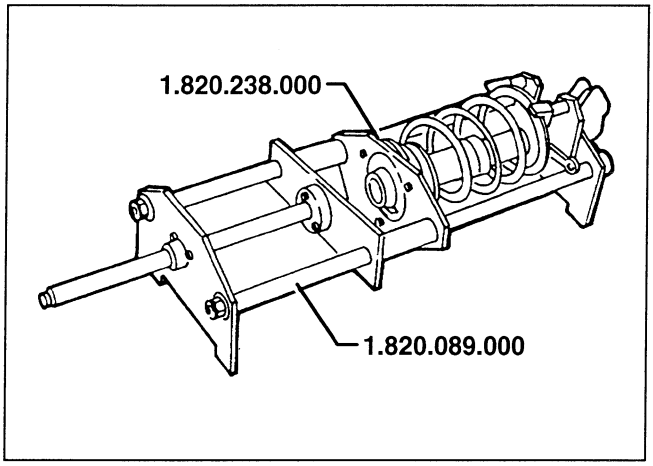

1. Insert a 6 mm Allen wrench in the shock absorber stem centre pin.
2. Using the extension for wrench no. 1.822.117.000, and levering with the Allen wrench, slacken the spring-shock absorber upper nut.

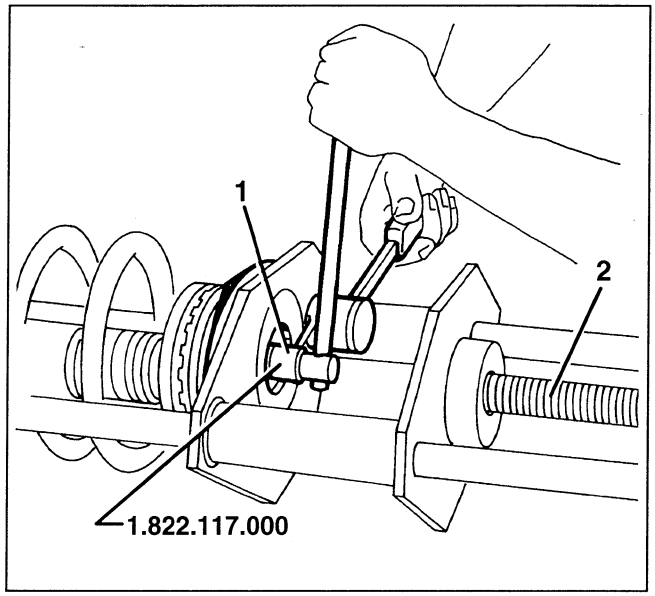

cardiagn.com

Decompress the spring-shock absorber assembly and dis- assemble the different parts.

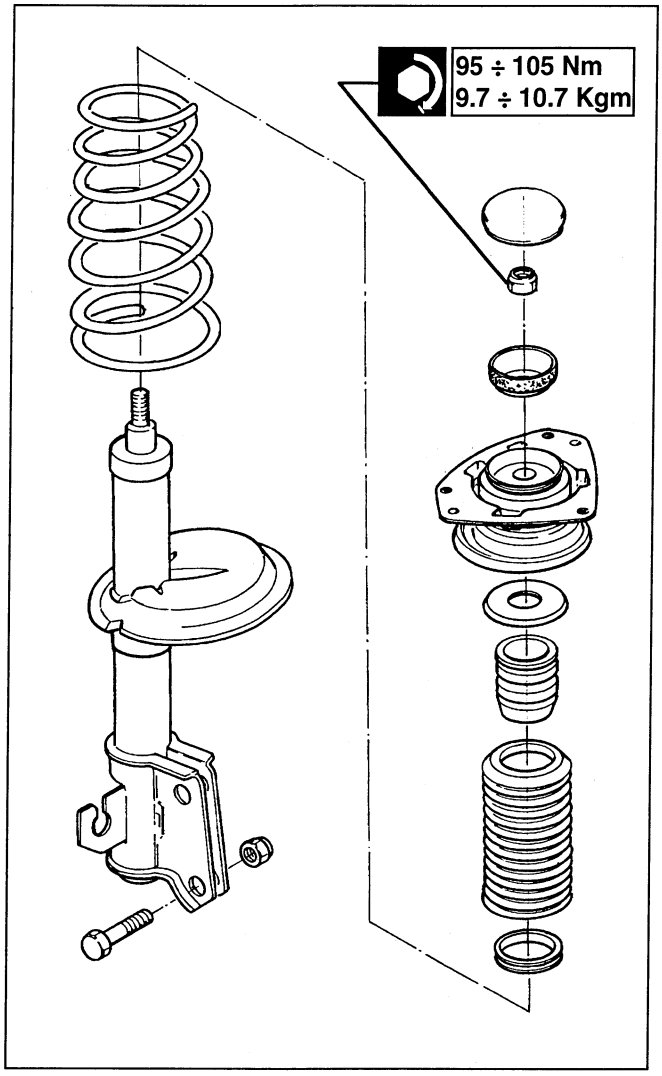

Refit the spring-shock absorber assembly reversing the sequence followed for dis-assembly and tightening the centre nut to the specified torque.

CHECKS AND INSPECTIONS

– Check that the fastening components of the coil spring shock absorber assembly have no abnormalities that might adversely affect operation.
– Check that the shock absorber is functional and for oil leaks, in which case change the whole shock absorber.
– Visually check the springs for cracks, distorsion and abnormalities in general, that might adversely affect operation.

The coil springs are subdivided into classes of rigidity and marked with paint of different colours to simplify their identification. When changing one or both springs, always make sure that the new springs are distinguished by paint of the same colour as the ones replaced.

– Check that the rubber parts are intact, and change them if they are distorted or excessively worn.

WISHBONE

REMOVING/REFITTING

– Remove the front wheel on the side concerned.
1. Slacken the two bolts fastening the wheel upright to the shock absorber stem.

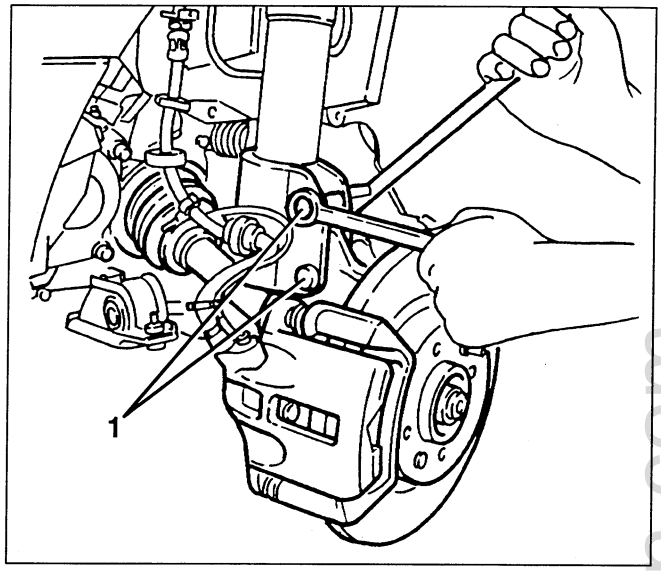

1. Slacken the nut fastening the connecting rod to the wishbone (1a) and remove it together with the rubber pad (1b) then slacken the connecting rod-stablilizer bar fastening nut (1c), and remove it.
2. Slacken the bolt fastening the connection ball pin between the wishbone and wheel upright, then, disconnect the ball joint from the wishbone.

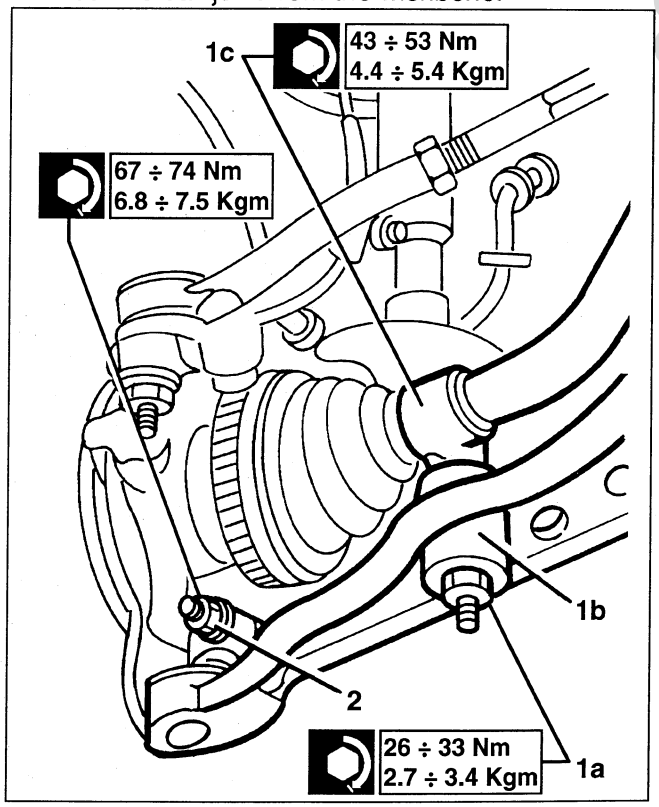

cardiagn.com

1. Slacken the screws fastening the wishbone U-bolts to the front crossmember and remove the wishbone.

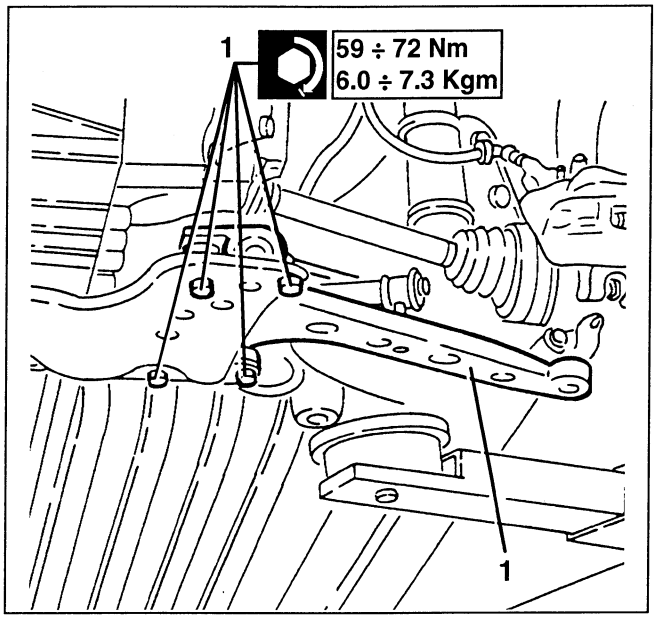

Refit the wishbone reversing the sequence followed for removal.

– Tighten the bolts fastening the wheel upright to the shock absorber stem as described in the specific paragraph (Front Wheel Upright).

CHECKS AND INSPECTIONS

1. Check the intactness and wear conditions of the ball pin between the wishbone and wheel upright and, if necessary, change it.
2. Check the intactness and wear conditions of the U-bolts between the wishbone and front crossmember, and, if necessary replace.
3. Check the intactness and wear conditions of the bushes of the U-bolts between the wishbone and front crossmember and, if necessary, replace.
4. Check the intactness and wear conditions of the rubber boots of the ball pin between the wishbone and the wheel upright and, if necessary, replace.

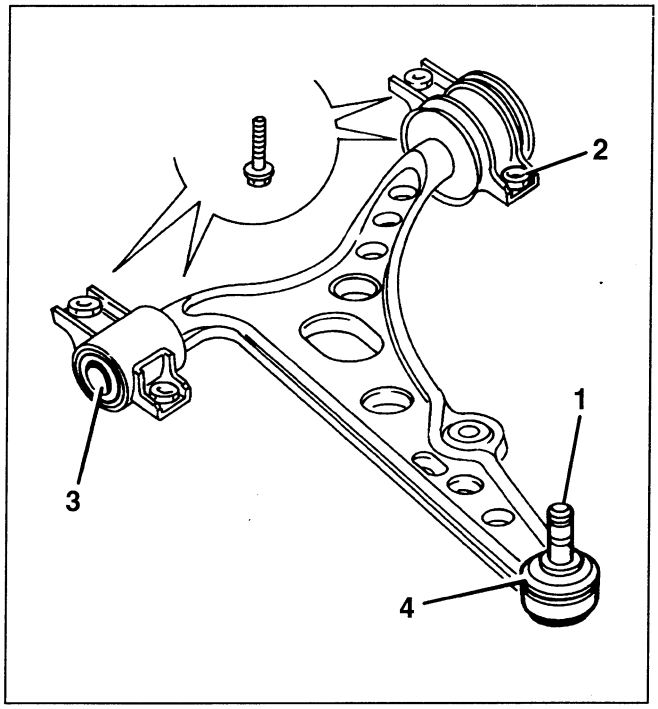

FRONT CROSSMEMBER AND ANTIROLL BAR

REMOVING/REFITTING

When needing to replace only the antiroll bar or the front crossmember, it is still necessary to remove the whole crossmember proceeding as follows:
– remove the front section of the exhaust pipe (see GROUP 10).

Working from both sides:
– Remove the front wheel.
1. Slacken the bolts fastening the wheel upright to the shock absorber stem.

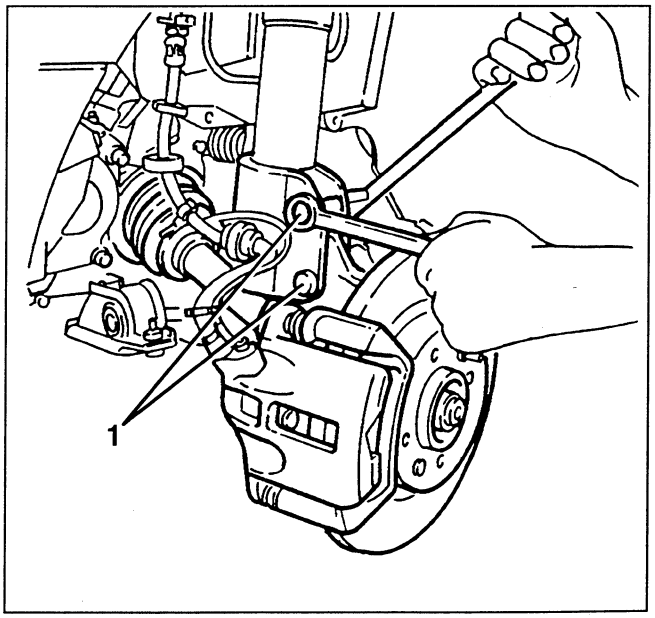

cardiagn.com

1. Slacken the bolt fastening the ball pin connecting the wishbone to the wheel upright.
2. Remove the wishbone ball joint.

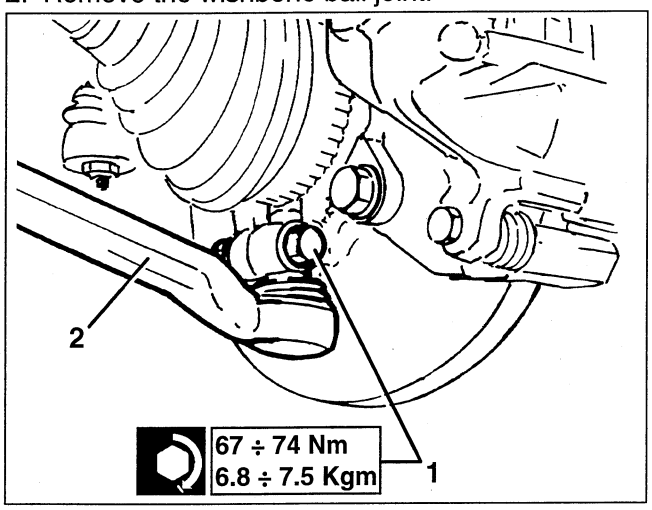

1. Working from under the car, slacken the four screws fastening each of the front crossmember reinforcement struts.
2. Remove the reinforcement struts.
3. Slacken the screws fastening the steering box to the crossmember.

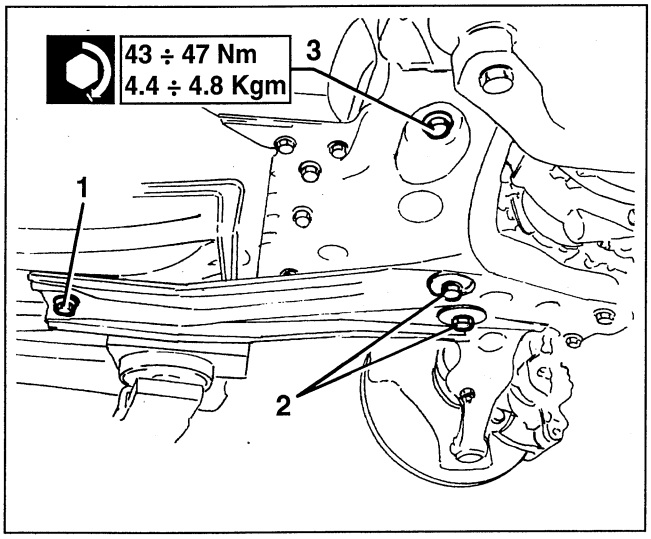

1. Slacken the three fastening screws.
2. Remove the rear engine mount.

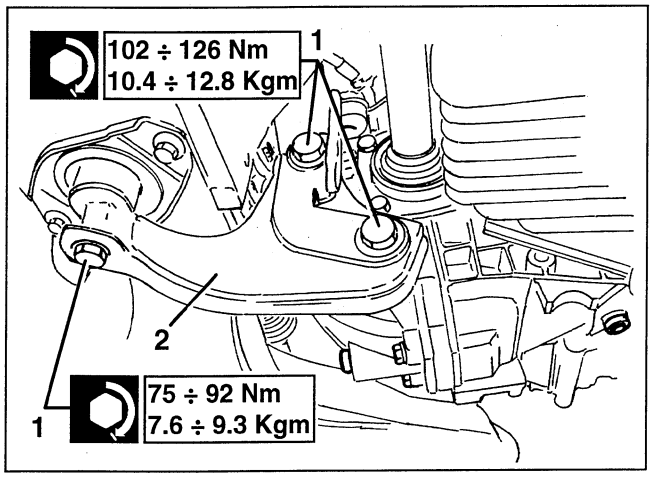

– Install tool 1.860.978.000 on a hydraulic jack.
1. Fasten the tool to the centre of the crossmember
2. Slacken the nuts fastening the crossmember to the gearbox controls support.
3. Slacken the screws fastening the crossmember to the body.

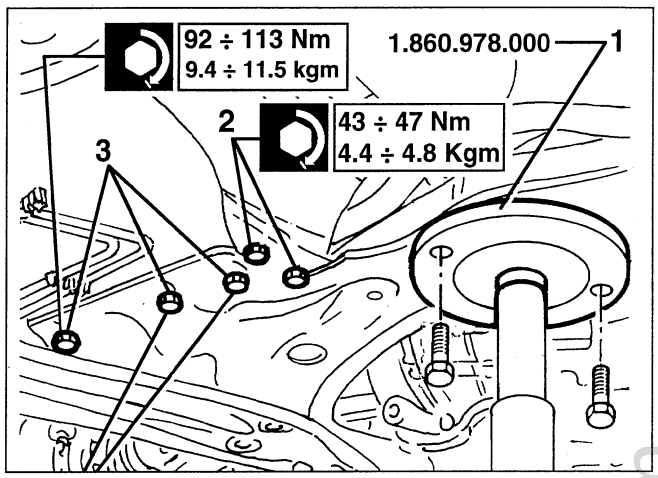

1. Slacken on each side the crossmember upper fastening screw.
2. Slowlt lower the hydraulic jack and remove the crossmember complete with wishbones and stabilizer bar.

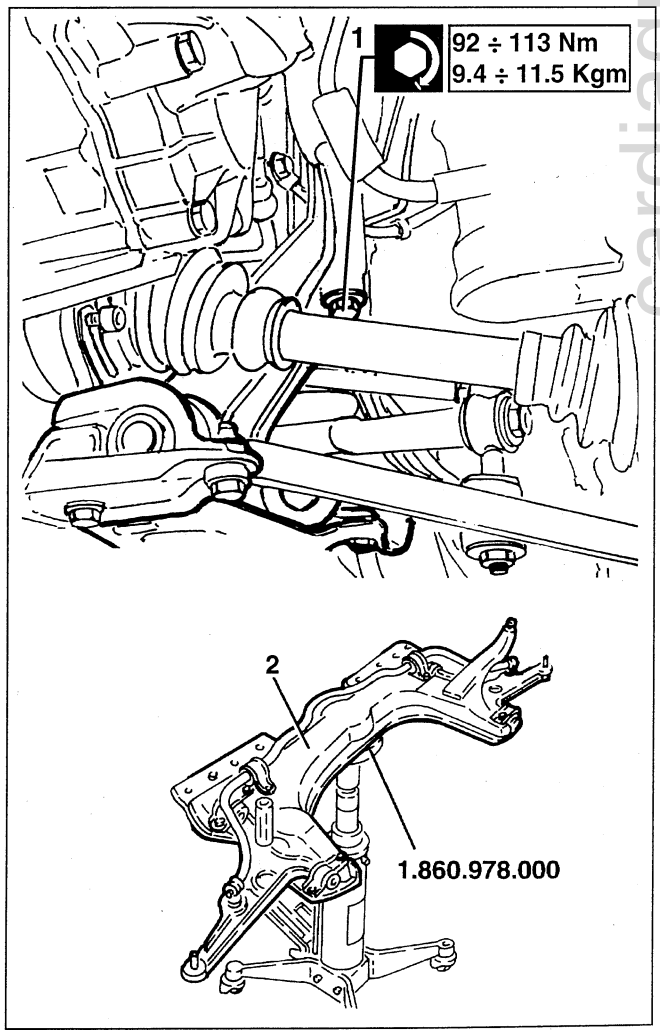

cardiagn.com

1. If necessary, remove the stabilizer bar slackening the nuts fastening the U-bolts supporting the bar itself to the crossmember and the nuts fastening the stabilizer bar connecting rod to the wishbones.
2. If necessary, remove the wishbones.

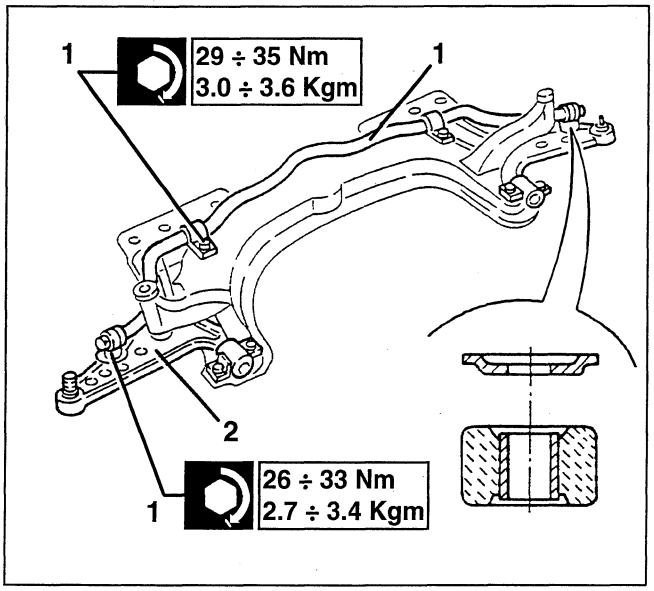

When refitting the stabilizer bar on the crossmember check that the washers face towards the rubber pad, as incorect assembly could adversely affect the life of the pad itself.

When refitting the front crossmember it is necessary temporarily fasten it, then, using two 17.5 mm diameter pins, centre it with the holes on the body and lastly fasten it definitively tightening the screws to the specified torque.

Tighten the bolts fastening the wheel upright to the shock absorber stem as described in the specific paragraph (Front Wheel Upright).

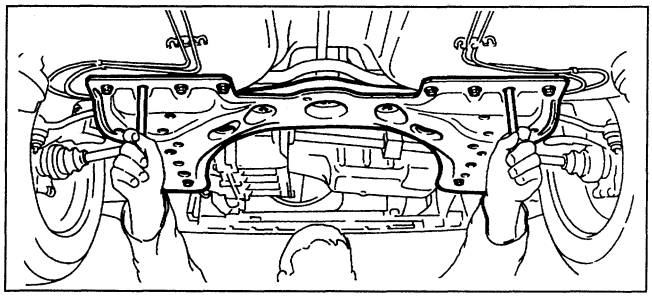

CHECKS AND INSPECTIONS

1. Visually check the crossmember making sure there are no cracks or distorsions that might adversely affect operation, if so, change it.
2. Visually check the stabilizer bar for cracks and distorsion, if so change it.
3. Check that the U-bolts connecting the stabilizer bar to the crossmember are intact without signs of distorsion or rust, if so, change them.
4. Check the conditions of the rubber pads and change them if they are not satisfactory.
5. Check that the ball pins between the stabilizer bar and the wishbones are intact and free of distorsion or signs of rust, in which case, change them.

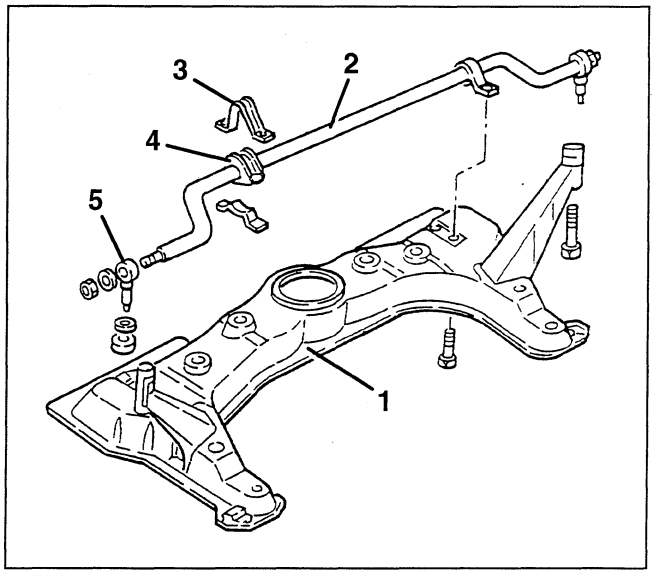

cardiagn.com

REAR "MULTILINK" SUSPENSION

DESCRIPTION

Multilink suspensions are the most advanced in the specific field.

On the Alfa Romeo SPIDER and GTV multilink suspension has been adopted on the rear axle.

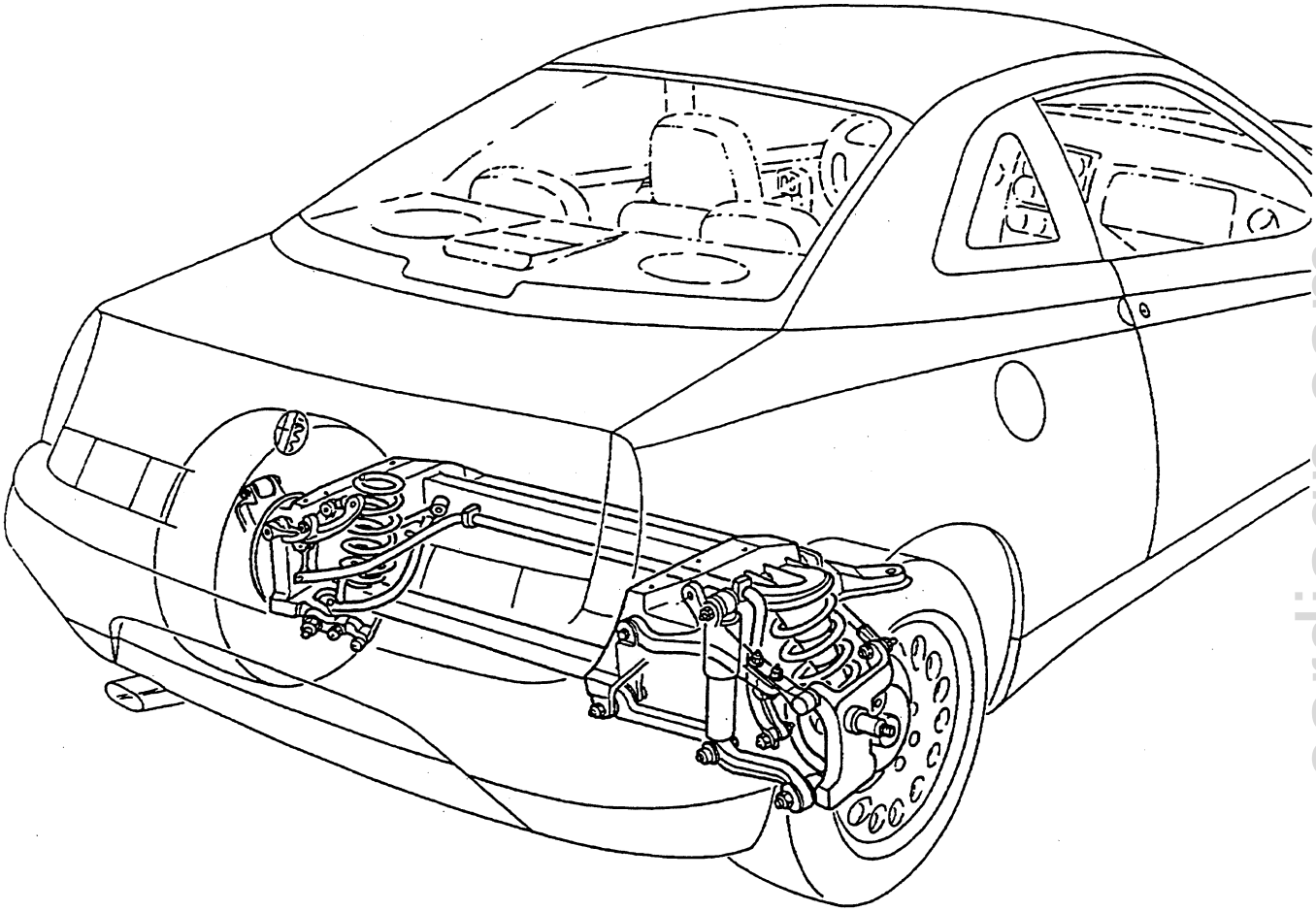

cardiagn.com

Through a suitable arrangement of the links, it is possible to set the centre of roll (1) near the centre of gravity (3); this means that when lateral forces are applied, it is possible to **limit the extent of roll** and changes of camber.

The movement of the suspension caused by roll of the car also ensures that the wheels are kept vertical also when cornering: this way the **entire tyre tread is exploited to develop lateral adherence.**

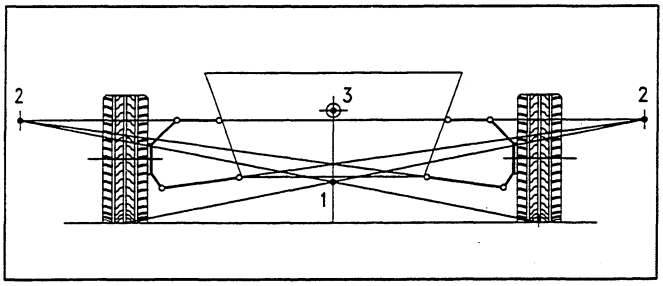

1. Centre of roll
2. Centre of instantaneous rotation
3. Centre of gravity of the car

Multilink suspension **also limits pitchhing movement**; therefore, in addition to improving comfort, during acceleration the weight on the front wheels is reduced less, thus the **traction force that can be transmitted to the ground is not limited.**

The position of the centre of instantaneous rotation (2) of the car depends on the position of the connection points to the body of the suspension arms.

Also during braking, the multilink system, even though it has only been adopted on the rear suspension, **makes it possible to keep the car parallel to the ground.**

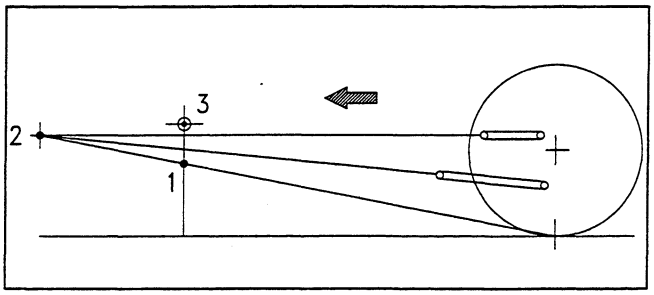

1. Centre of pitching
2. Centre of instantaneous rotation
3. Centre of gravity of the car

Multilink suspensions involve the use of a number of links between the wheel hub and the body. The trajectories of the points of anchorage are of different radius and they are arranged on planes that are not parallel with one another.

The resulting complex geometrical system which is the outcome of extensive experiments, makes it possible to maintain the centre of instantaneous rotation (2) in such a position as to allow a reduced distance between the centre of pitching (1) and the centre of gravity of the car (3); thus it is possible to minimise the pitching movement.

It is a known fact that a car with front wheel drive, tends to understeer when cornering, due to the prevalence of drift on the driving wheels.

Multilink suspension systems, have better control over the wheel angles (camber and toe-in) and make it possible to **recover the understeering effect** with better performance when entering a bend, therefore it is not necessary to carry out a series of corrections of the steering angle.

In fact, these suspensions make it possible to control (and optimise both in the project and experimentally) the wheel angles under the effect of lateral and vertical loads developed when cornering and in changes of direction and also the longitudinal ones induced by braking independently.

cardiagn.com

On the Alfa Romeo SPIDER and GTV a light alloy frame has been fitted in correspondence of the rear suspension which is hooked to the floor panel of the car in the anchorage points provided for conventional suspension.

This frame has the supports needed for the installation of the multilink suspension.

Fastening of the components to the frame:

The spring carrier arm (2) is in position A; in B and C the fork (8)is coupled, to which also the stabilizer bar (6) is connected by link (7) with the spacer (11); in D there is the coupling of the arm (9) on which the shock absorber (10) is fitted; in E there is the adjustment arm (4).

En el chasis (1) también se fija la parte superior del amortiguador (10) en F y el muelle (3) en G.

En el montante de la rueda se engancha la horquilla (8) en H, el brazo con el tornillo de reglaje (4) en I, el brazo porta-amortiguador (9) en J y el brazo porta-muelle (2) en K.

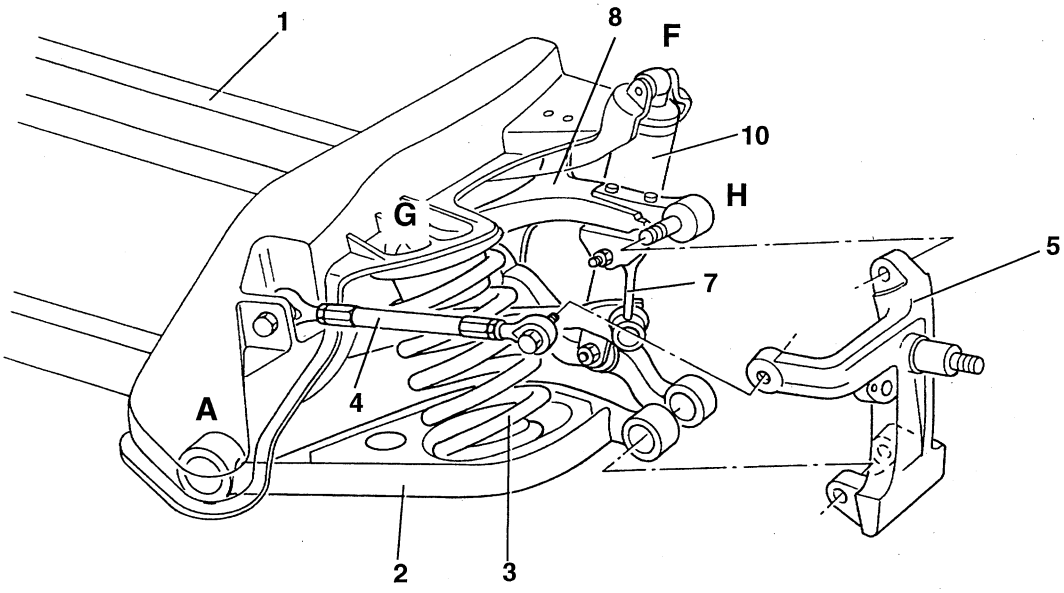

1. *Rear suspension frame*
2. *Spring holder arm*
3. *Spring*
4. *Adjustment tierod*
5. *Wheel upright*
6. *Stabilizer bar*
7. *Stabilizer bar connecting rod*
8. *Fork*
9. *Shock absorber carrier arm*
10. *Shock absorber*
11. *Spacer*

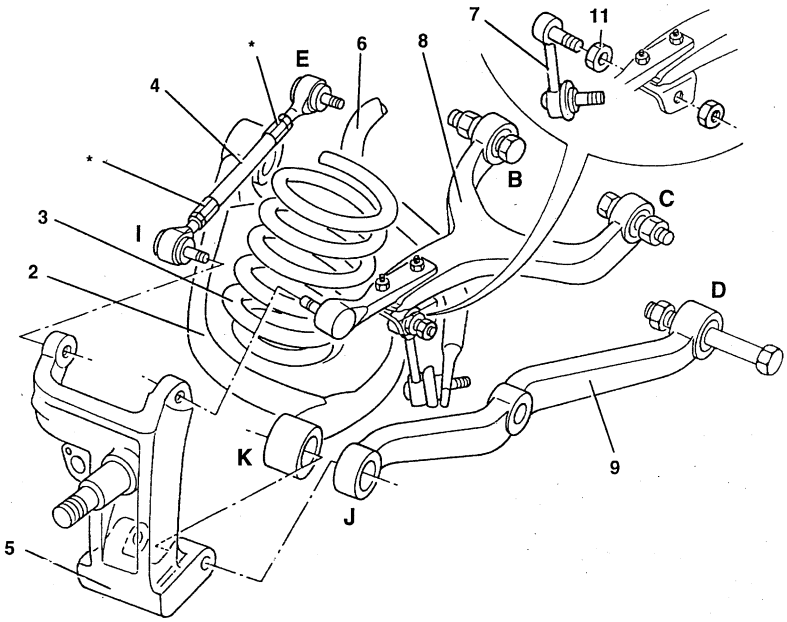

NOTE : the adjustment tierod (4) enables **correct toe- in adjustment of the rear wheels** through the two lock nuts (*) (see paragraph "GEOMETRIES").

cardiagn.com

COMPLETE SUSPENSION FRAME

REMOVAL / REFITTING

– Set the car on a lift.
– Working inside the car, loosend the handbrake lever adjustment nut. (see GROUP 33).
– Raise the car.
– Remove the rear section of the exhaust, including the heat shields (see GROUP 10).
1. Disconnect the ABS sensor connections.

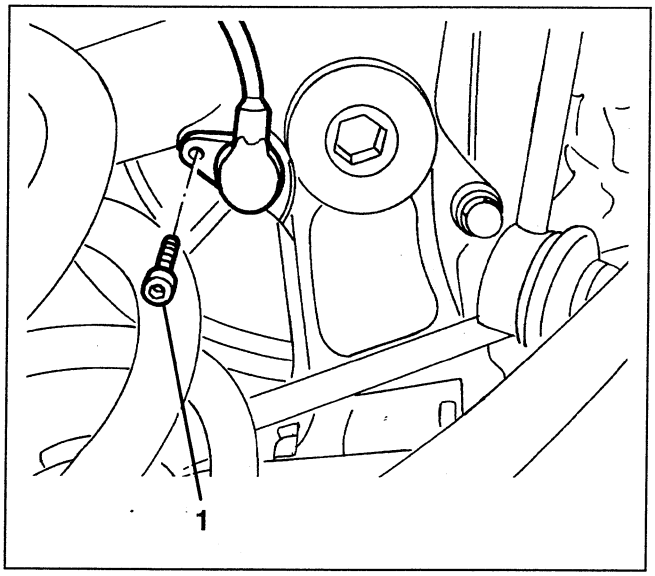

1. Disconnect the two handbrake cables from their clamp.
2. Disconnect them from the rear fastening.

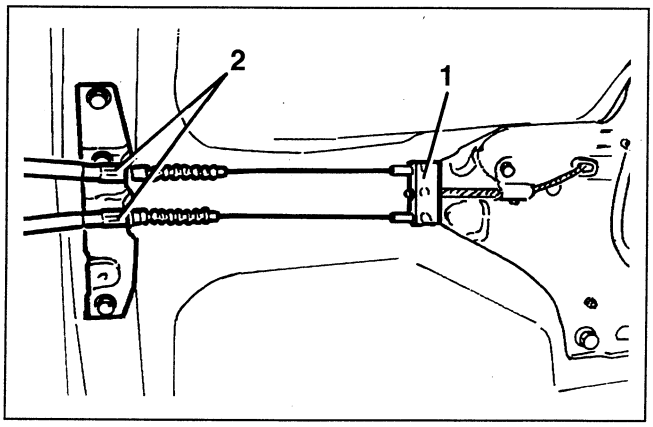

1. Disconnect the brake pipes, suitably plugging the holes.
2. Disconnect the pipes from the fastenings to the body.

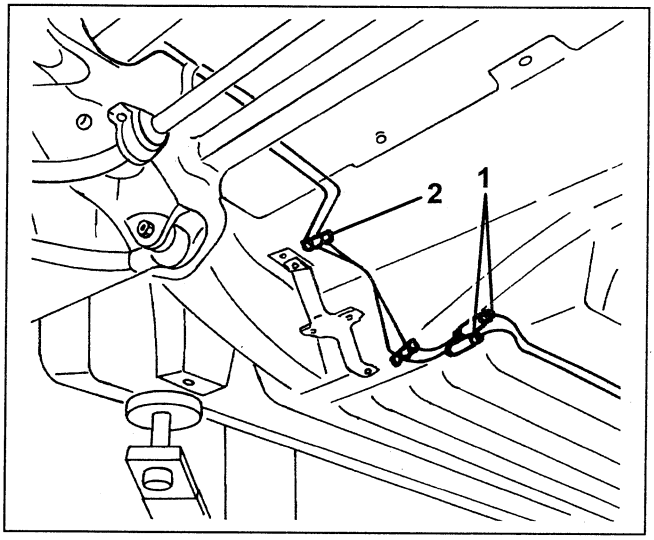

1. Prepare a hydraulic jack with support 1.820.625.000 and set it under the suspension unit, and slacken the four screws fastening the frame to the body (two per side).

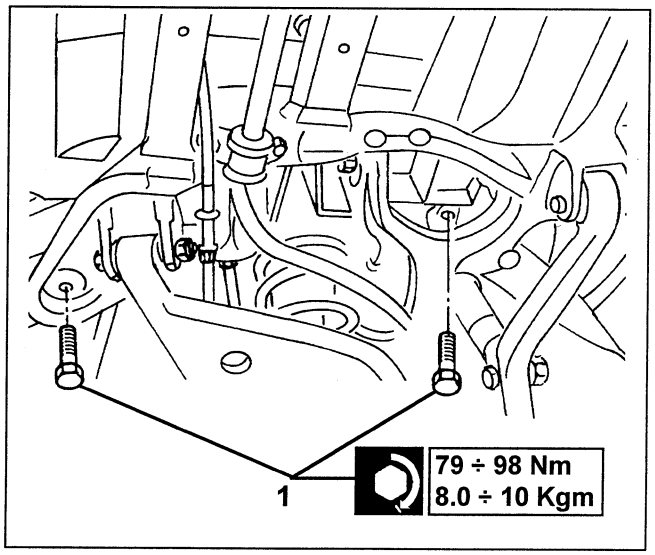

cardiagn.com

1. Lower the complete suspension frame.

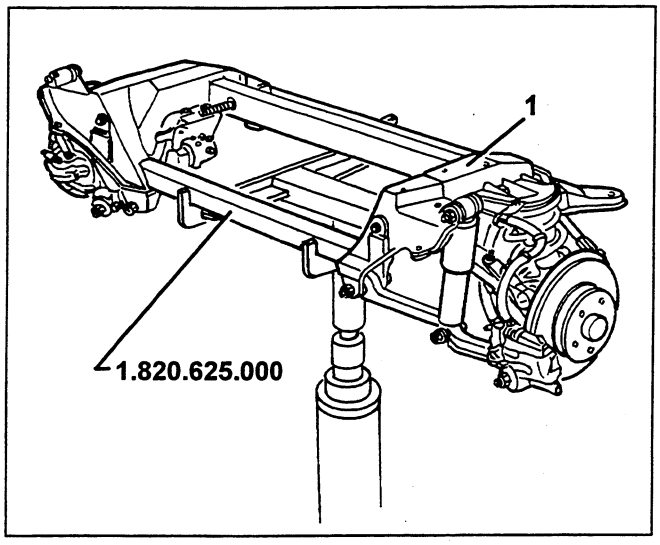

SHOCK ABSORBER

REMOVAL / REFITTING

– Set the car on a lift and remove the wheel on the side concerned.

1. Position a hydraulic jack with plastic plate under the spring carrier arm to lightly compress the spring.
2. Remove the shock absorber upper fastening bolt.
3. Remove the shock absorber lower fastening bolt.
4. Remove the shock absorber.

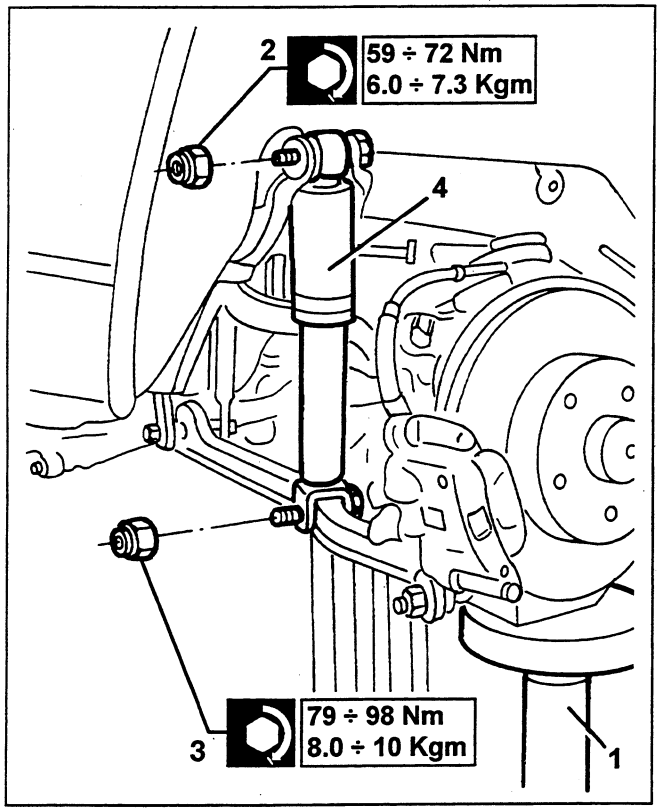

CHECKS AND INSPECTIONS

– Check the conditions of the shock absorber for functionality and oil leaks; if necessary change the shock absorber.

COIL SPRING

REMOVAL / REFITTING

– Set the car on a lift and remove the wheel on the side concerned.

NOTE:

When removing the spring, a special end piece, to be made as illustrated, should be installed on the hydraulic jack.

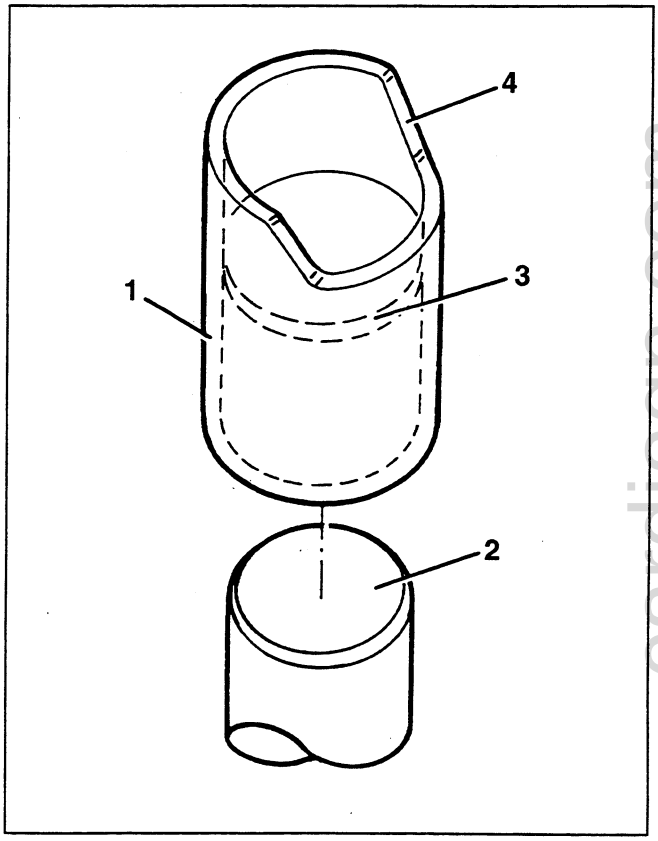

1. Piece of pipe
2. Hydraulic jack stem
3. Contact cap (welded)
4. Rest seat for spring carrier arm

cardiagn.com

1. Remove the handbrake cable.
2. Slacken the nut fastening the spring carrier arm to the frame.

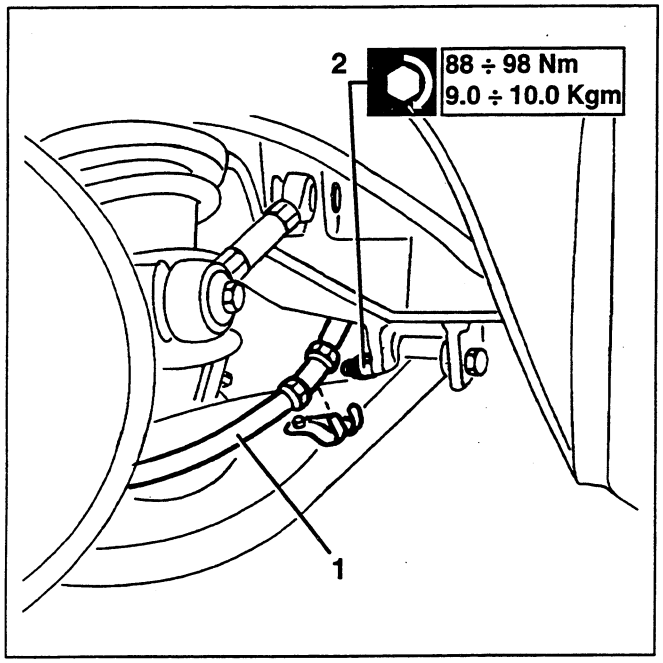

1. Set a hydraulic jack - with the support described previously - under the spring carrier arm and remove the fastening screw
2. Remove the lower spring rebound buffer

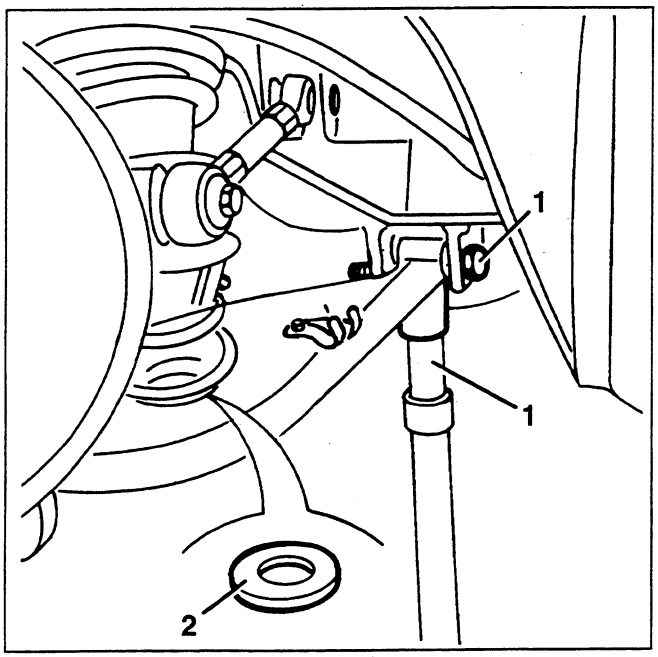

1. Lower the jack and remove the spring

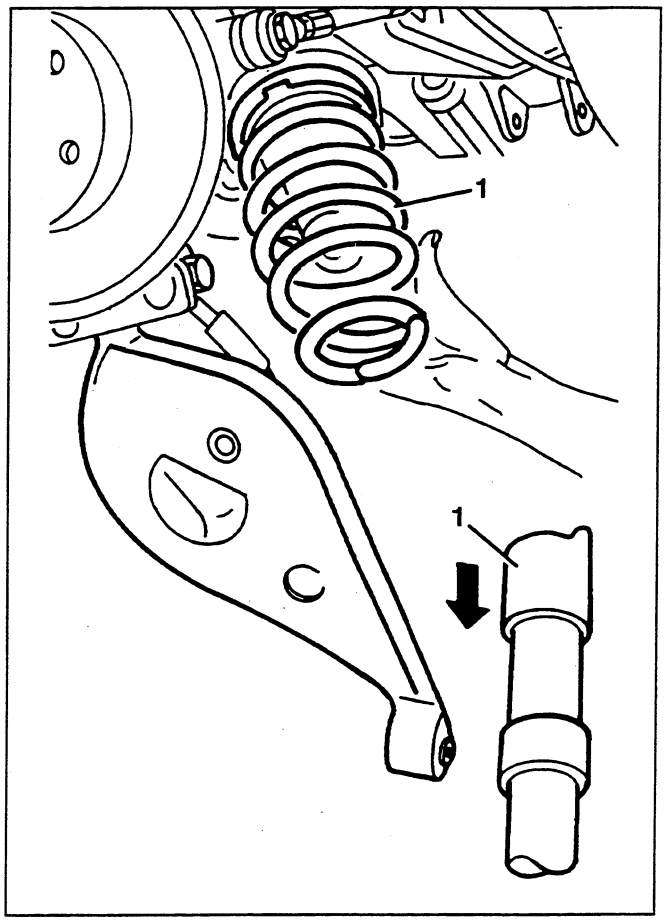

CHECKS AND INSPECTIONS

1. Visually check the springs for cracks, distorsion and faults in general that might adversely affect their operation.
2. Check that the rubber parts are intact and change them if they are damaged, distorted or heavily worn.

NOTE: Coil springs are subdivided into classes of rigidity and distinguished by spots of paint of different colours. When replacing one or both springs, check that the new springs are marked with the same colour as the old ones

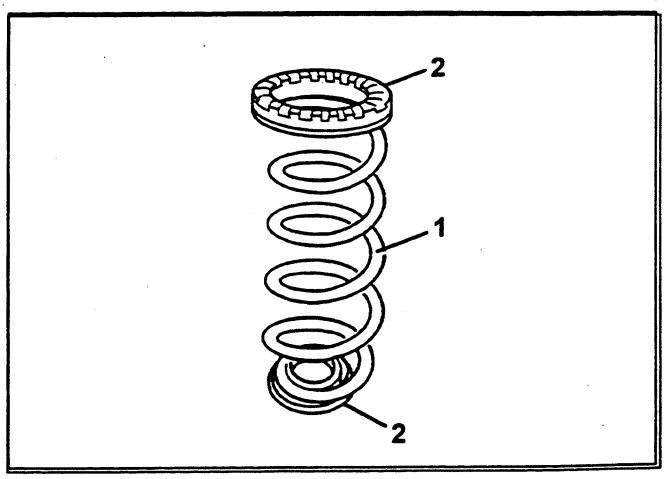

cardiagn.com

SHOCK ABSORBER CARRIER ARM

REMOVAL / REFITTING

- Set the car on a lift and remove the wheel on the side concerned.

1. Remove the three nuts fastening the arm
2. Position a hydraulic jack with plastic plate under the wheel upright.
3. Remove the screws and retrieve the shock absorber carrier arm.

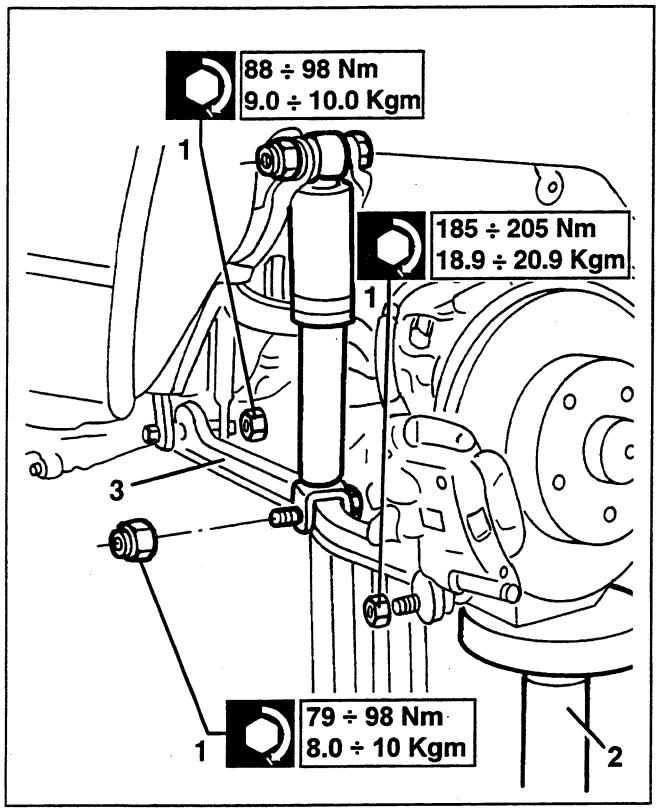

SPRING CARRIER ARM

REMOVAL / REFITTING

- Set the car on a lift and remove the wheel on the side concerned
- Remove the spring (see specific paragraph)

1. Slacken the bolt fastening the spring carrier arm to the wheel upright and retrieve the arm

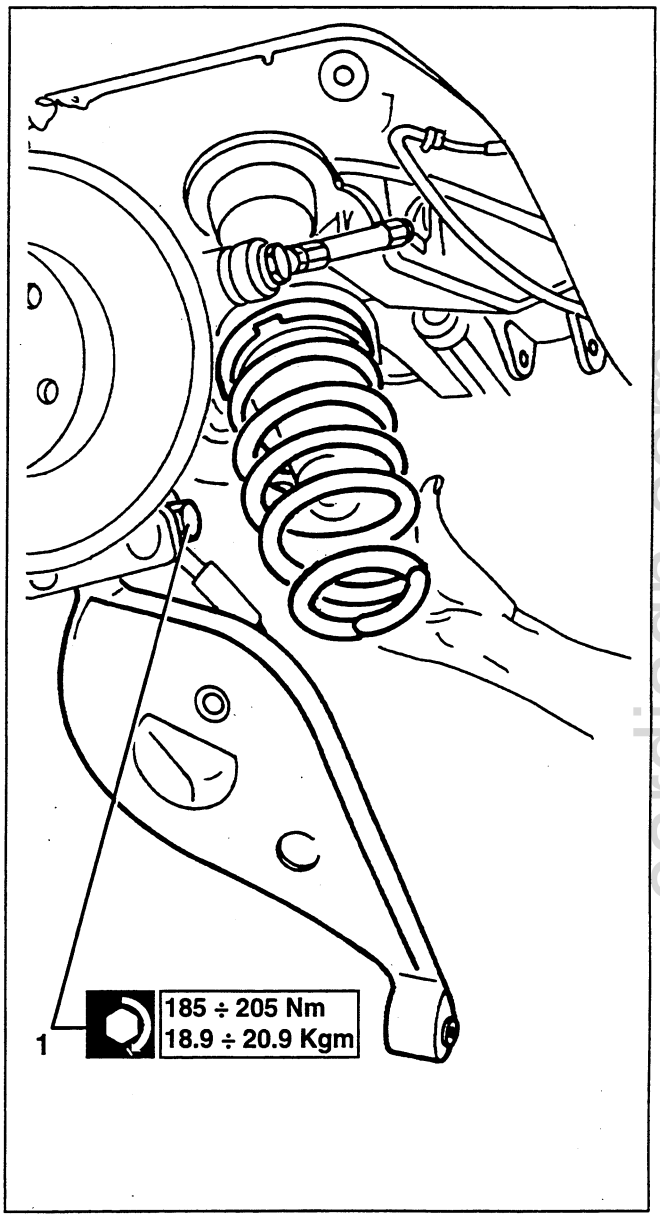

CHECKS AND INSPECTIONS

- Visually check the arm for cracks, signs of wear on the wheel side surface and distorsion.
- Check the condition of the flexible parts; if excessive noise or play is noted, replace the arm.

cardiagn.com

WHEEL UPRIGHT

REMOVAL / REFITTING

– Set the car on a lift and remove the wheel on the side concerned

1. Slacken the two screws fastening the brake caliper to the support and move it aside without disconnecting the pipe and the handbrake cable.

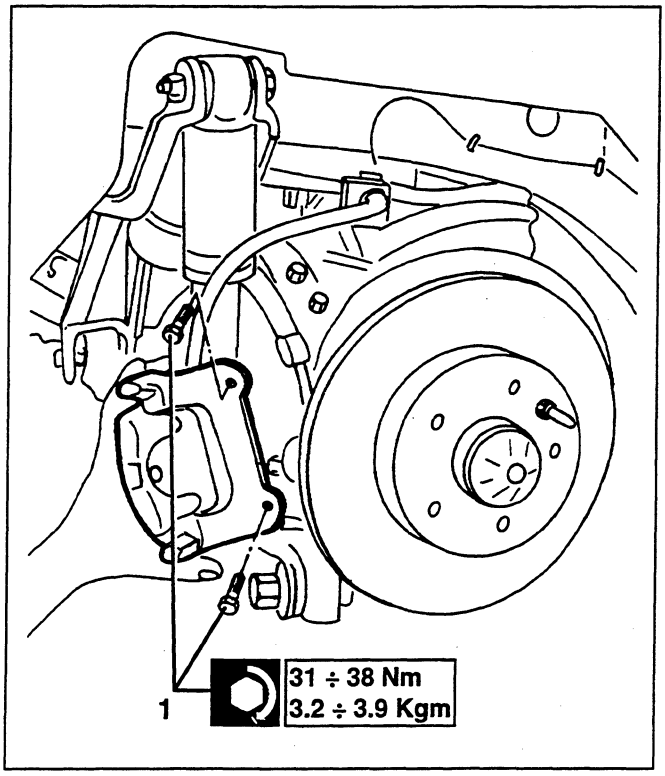

1. Remove the hub cover plate.
2. Slacken the fastening pin and remove the brake disk.

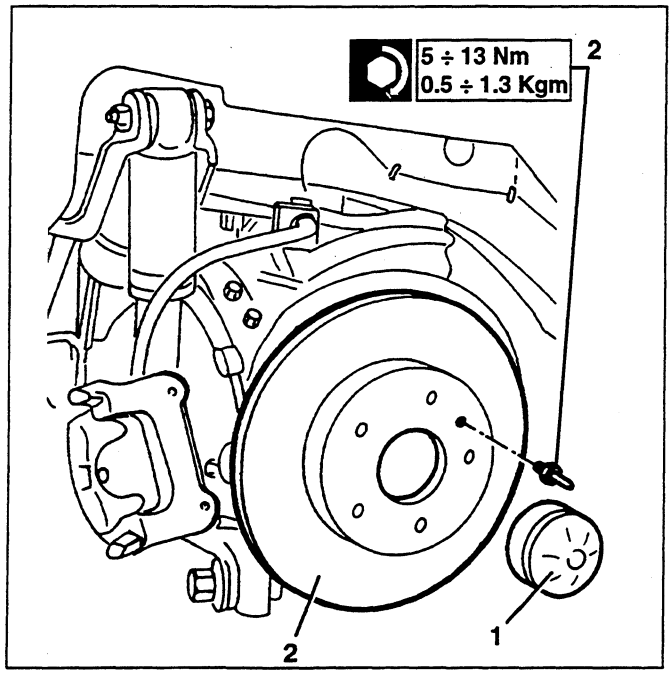

1. Slacken the hub fastening nut and remove the hub complete with phonic wheel.
2. Remove the brake disk guard.

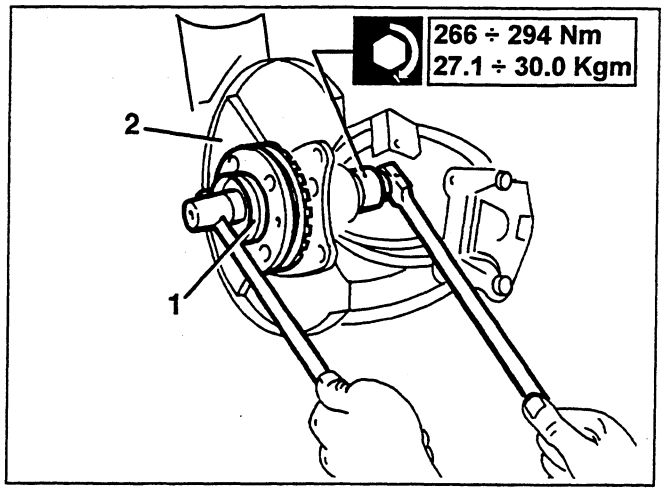

N.B.: it is absolutely necesary to replace the nut when refitting.

1. Remove the ABS sensor.
2. Remove the spring (see specific paragraph)
3. Remove the lower fastening bolt and retrieve the spring carrier arm.

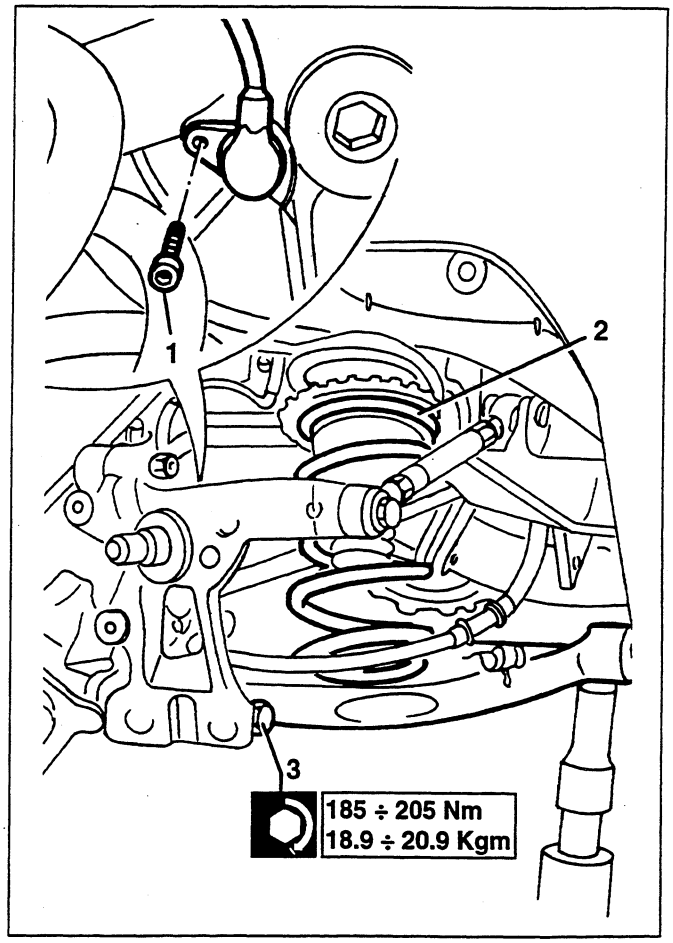

cardiagn.com

1. Remove the adjustment tie-rod fastening screw.
2. Remove the nut fastening the fork.
3. Retrieve the wheel upright complete with hub fastening pin. (If necessary remove the hub and use a press because the upright is force-fitted on the pin).

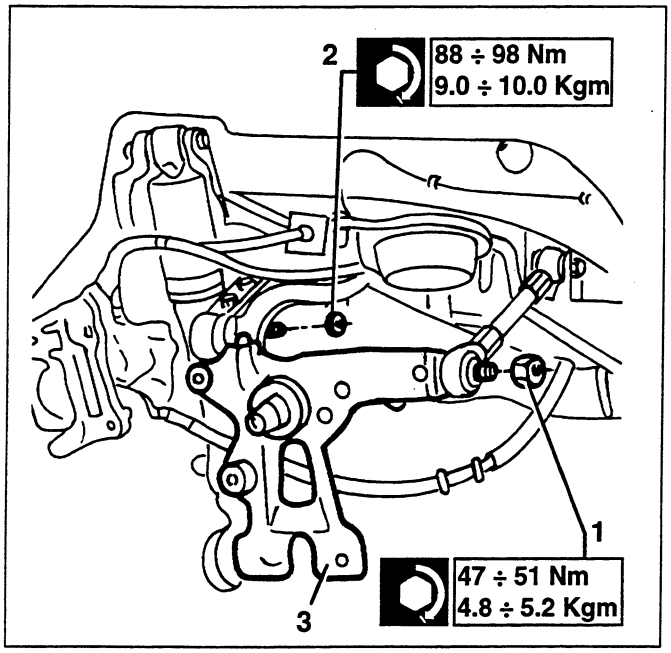

FORK

REMOVAL / REFITTING

- Set the car on a lift and remove the wheel on the side concerned.

1. Remove the two nuts fastening the fork to the frame.
2. Remove the two nuts fastening the fork to the stabilizer bar connecting rod bracket
3. Remove the corresponding screws and retrieve the front section of the fork.
4. If necessary also remove the rear section of the fork slackening the nut fastening to the wheel upright.

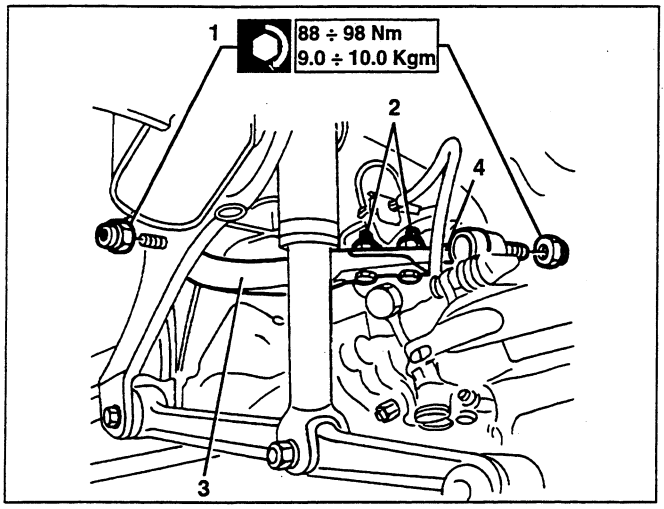

CHECKS AND INSPECTIONS

- Visually check the fork for cracks, signs of wear and distorsion.
- Check the conditions of the flexible parts; if excessive noise or play is noted replace the fork.

STABILIZER BAR

REMOVAL / REFITTING

- Set the car on a lift and remove both wheels.
- Remove the rear section of the exhaust pipe (see GROUP 10).

1. Remove the nuts fastening the connecting rods to the stabilizer bar
2. Remove the braking load proportioning valve spring.
3. Slacken and remove the two supports.
4. Retrieve the stabilizer bar

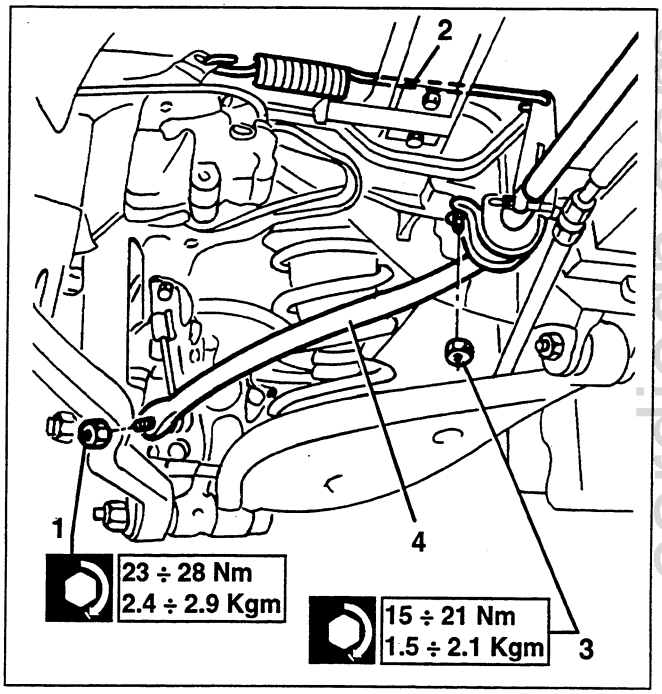

WARNING
When refitting adjust the braking load proportioning valve (see GROUP 33)

CHECKS AND INSPECTIONS

- Visually check the stabilizer bar for cracks and distorsion, if so, replace it.
- Check that the connection supports between the stabilizer bar and chassis are intact and do not show signs of distorsion or rust, otherwise, change them.
- Check the flexible pads for traces of ageing, if so, replace them

cardiagn.com

WHEELS AND HUBS

FRONT WHEEL UPRIGHT

REMOVING/REFITTING

– Remove the wheel.
1. Eliminate the caulkings and slacken the nut fastening the wheel hub to the constant velocity joint.
– Remove the complete caliper and move it aside, without disconnecting the pipes from the braking system (see GROUP 33).
2. Slacken the steering knuckle nut connecting the side track rod to the wheel upright.
3. Using tool no. 1.821.169.000 disconnect the knuckle from the wheel upright.
4. Disconect the bolt connecting the wishbone to the upright and remove it from tha ball pin.

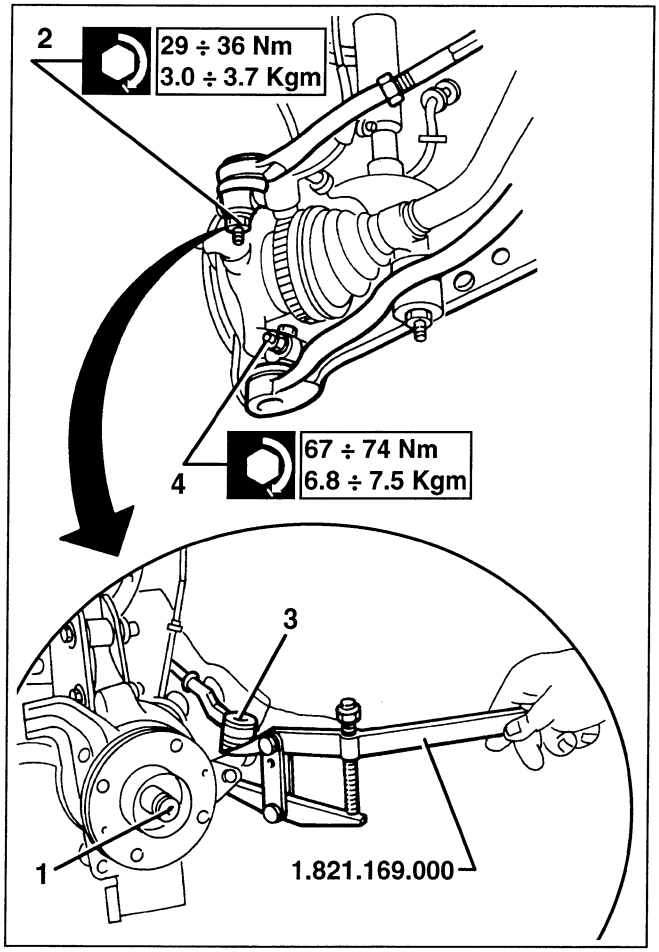

1. Slacken the two bolts.
2. Remove the upright/wheel hub assembly..

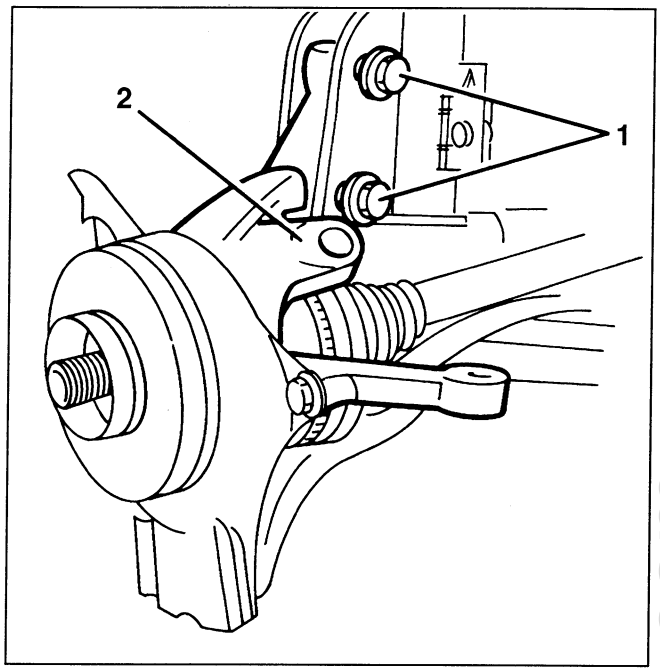

Refit, reversing the sequence followand for removal, tightening the nuts and screws to the specifiand torque and following the instructions for caulking the wheel hub fastening nut and the caulking procedures for the wheel hub fastening nut and adjustment of the position of the wheel upright.

CAULKING THE FRONT WHEEL HUB FASTENING NUT

– Always use a new nut.
– Accurately clean the threadand tang of the axle shaft using a metal brush and then blow with compressand air.
– Clean the nut and tang thread with ehtyl spirits or epthane.

cardiagn.com

1. Tighten the new nut to the specifiand torque and then turn it further as specified, using tool no. 1.820.622.000.

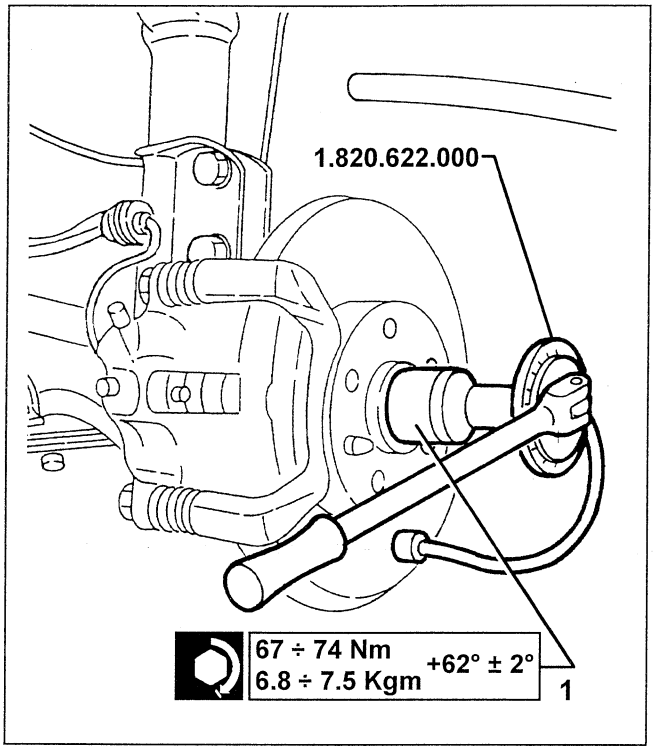

1. Using a scalpel, caulk the collar of the nut with two caulks (restore the condition of the removand nut).

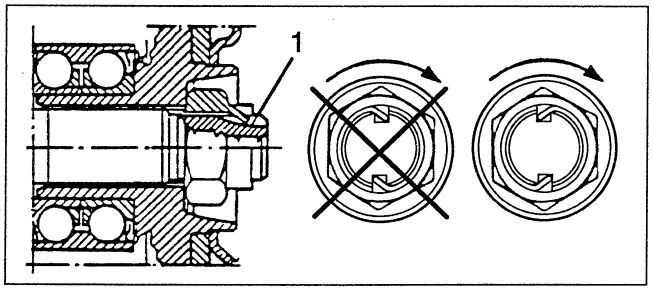

NOTE: The cuts of the collar must be made on the notch of the hun from the opposite side from nut tightening: this way the safety tang is more resistant to accidental slackening.

ADJUSTING THE POSITION OF THE FRONT SUSPENSION UPRIGHT

NOTE The operation describand below, to be carriand out each time it is necessary to slacken or remove the two bolts fastening the wheel upright to the shock absorber stem, is to eliminate the clearance between the fastening screws and the screw holes, to maintain the wheel camber angle within the specifiand limits (see: specific paragraph).

– Position a suitable wooden reaction piece between the spring plate and the body.

CAUTION:
Make sure that the rest point of the reaction piece is in correspondence with the plate and not with the spring coils, which could cause accidental movements and/or distorsion during the operation of the spring itself.

1. Temporarily position one of the wheel stdus and work on it in the direction illustratand using a wrench.
2. Position a fixand wrench to hold the nut of the fastening bolt.
3. Tighten the fastening bolt screws to the specifiand torque.

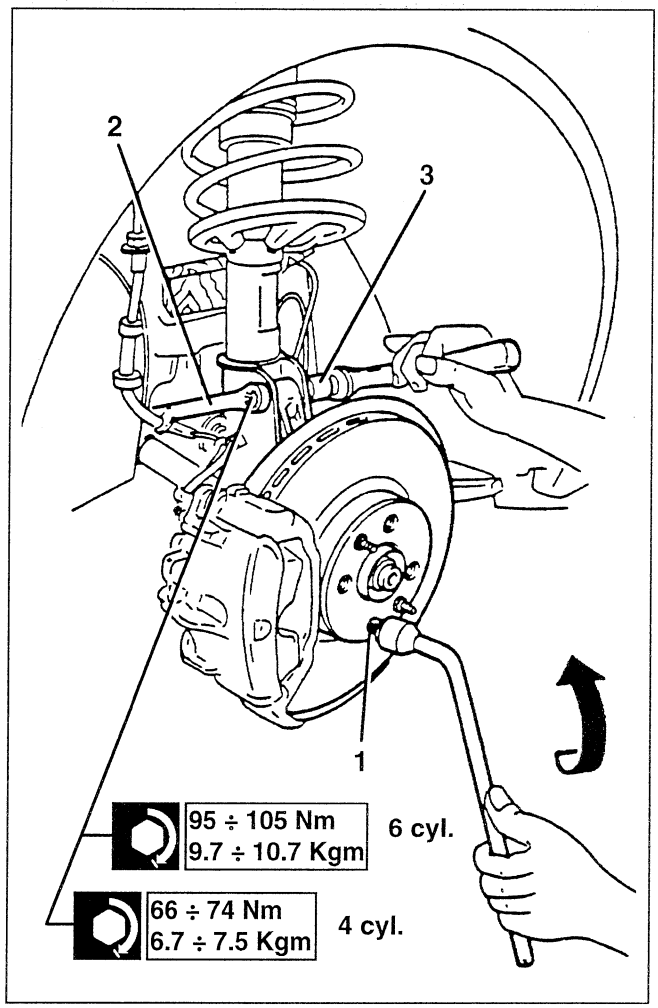

cardiagn.com

DIS-ASSEMBLY

1. Clamp the upright/wheel hub assembly in a vice and remove the flexible hub retainer ring.

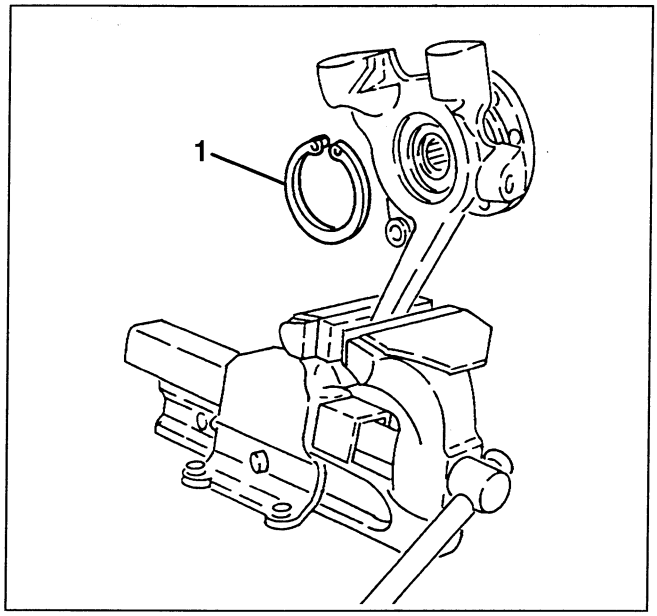

1. Slacken the screw fastening the brake disk protection.

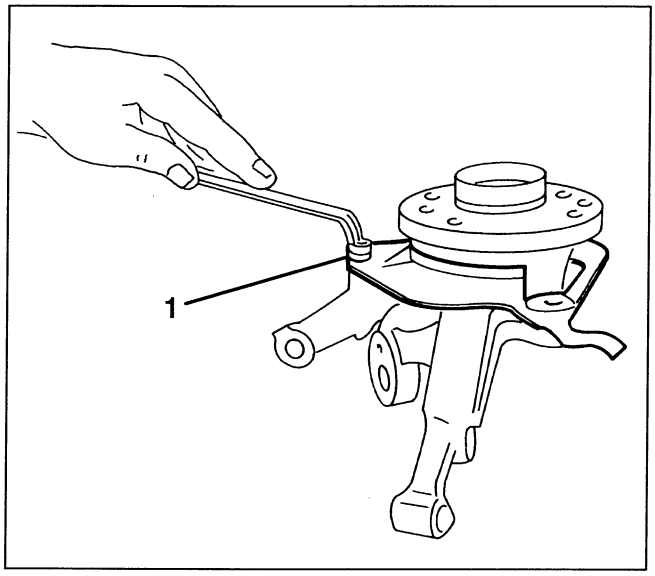

1. Working under the press, withdraw the wheel hub from the upright using:
- (for 4-cylinder only) puller tool no, 1.821.051.000
- (only for 6-cylinder) puller tool no, 1.821.037.000

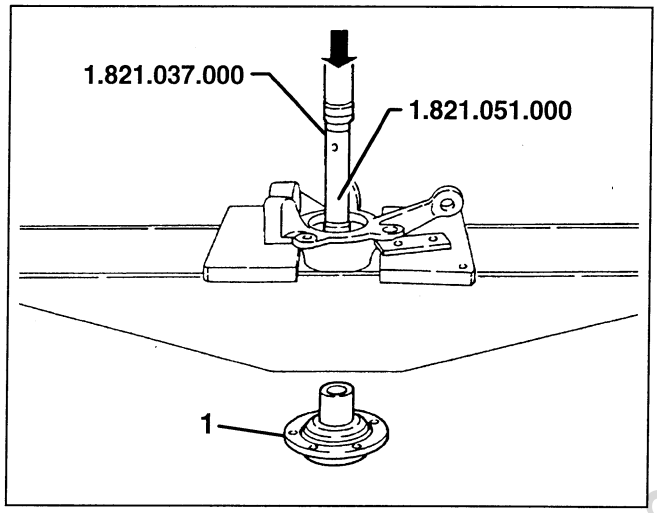

1. Working under the press, remove the outer bearing ring from the upright using:
- (for 4-cylinder only) support no. 1.821.149.000 and puller tool no, 1.821.045.000
- (only for 6-cylinder) support 1.821.220.000 and puller tool no, 1.821.099.000.

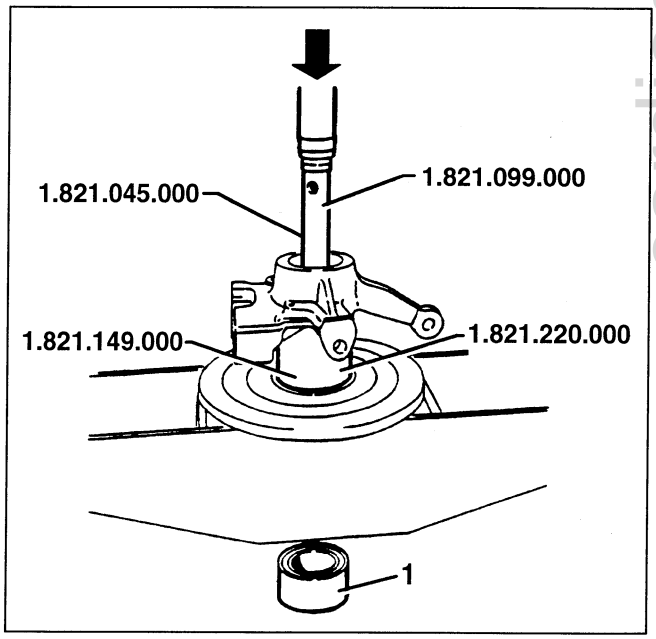

cardiagn.com

– Move aside, using a suitable tool, the bearing inner race from the contact area of the wheel hub.

1. Working under the press, and using plate no. 1.820.047.002, half rings no. 1.820.223.000 and puller tool no, 1.821.051.000, withdraw the bearing inner race from the wheel hub.

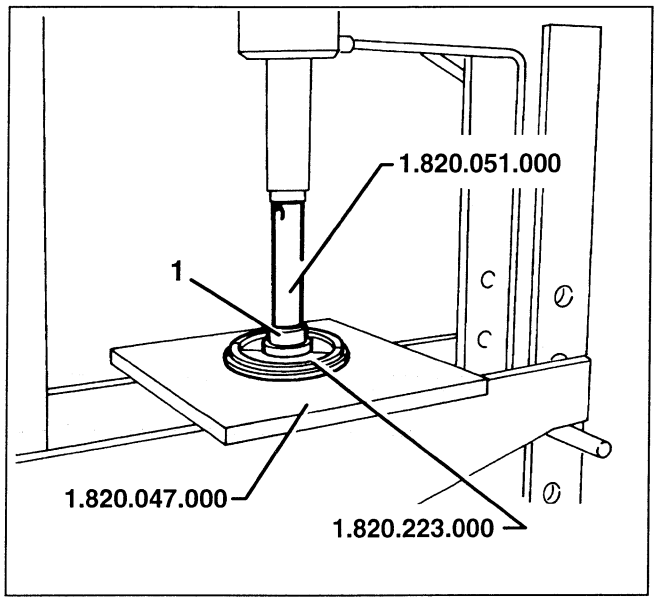

CHECKS AND INSPECTIONS

1. Check that the inner surfaces of the wheel upright show no signs of seizure, that the arms are not damaged or reveal clear signs of shocks, distorsion or traces of breakage, if so change the upright.
2. Check that the surfaces of the wheel hub are not damaged or reveal clear signs of impact or signs of wear, if so change the wheel hub.
3. Check the conditions of the rolling bearing for cracks, seizing or jamming, cracks, seizure or sticking, if necessary replace the bearing.
4. Always, in any case, change the nut locking the constant velocity joint before refitting.
5. Check the conditions of the ball pin fastening the wheel upright to the wishbone, for distorsion, excessive wear, cracks, sticking or signs of rust and, if necessary, replace the ball pin.

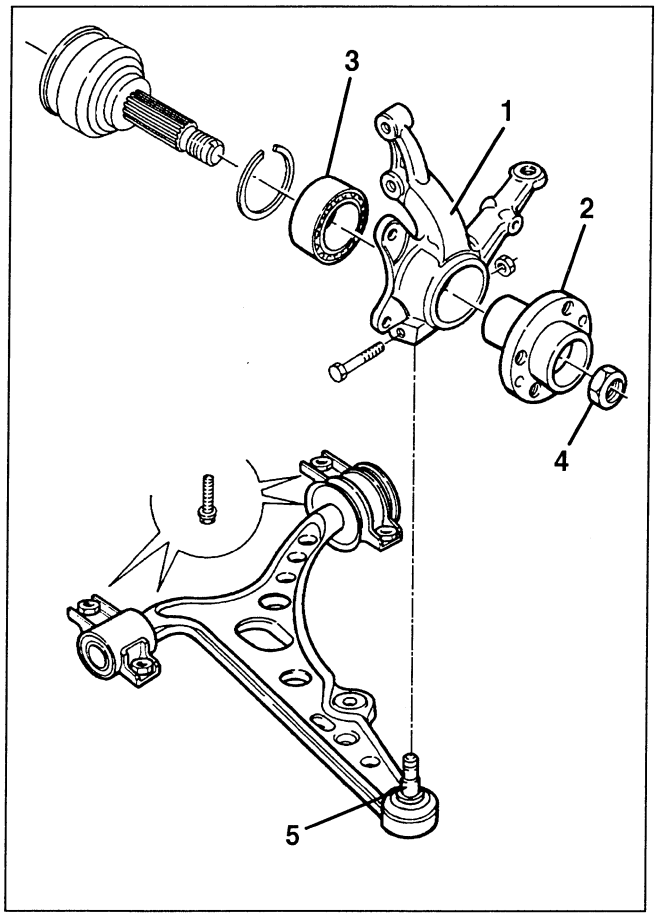

REASSEMBLY

Only for 4-cylinder vehicles

1. Working under the press and using installing tool no.. 1.821.209.000, insert the bearing in the wheel upright.

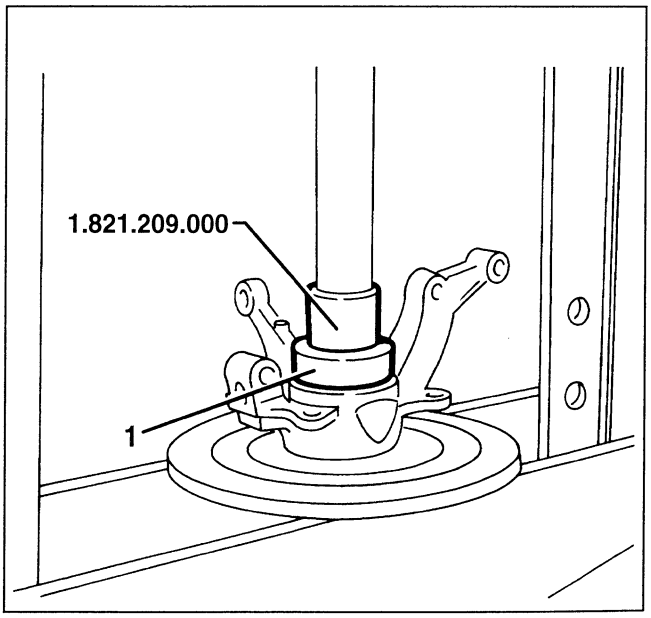

cardiagn.com

1. Arrange the brake disk protection (1a) on the wheel hub (1b) then, working under the press and overturning installing tool no. 821.209.000 compared with the previous step, insert the hub in the wheel upright (1c).

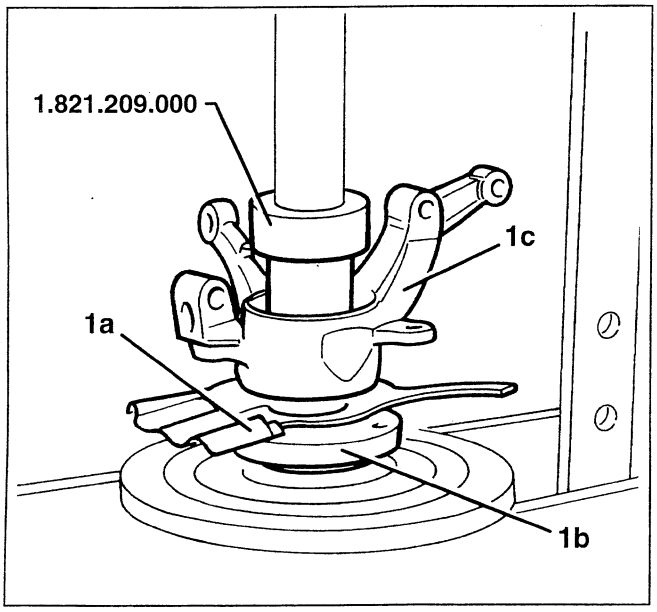

1. Assemble, in the seat provided on the wheel upright, the flexible bearing retainer ring.

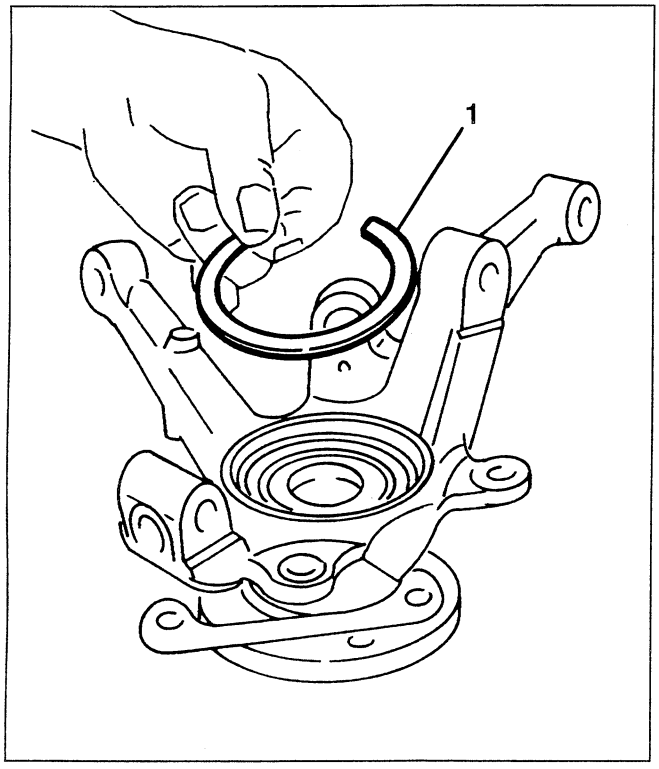

Only for 6-cylinder vehicles

1. Working under the press and using installing tool no. 1.821.217.000, insert the bearing in the wheel upright.
2. In the seat on the wheel upright, install flexible bearing retainer ring.

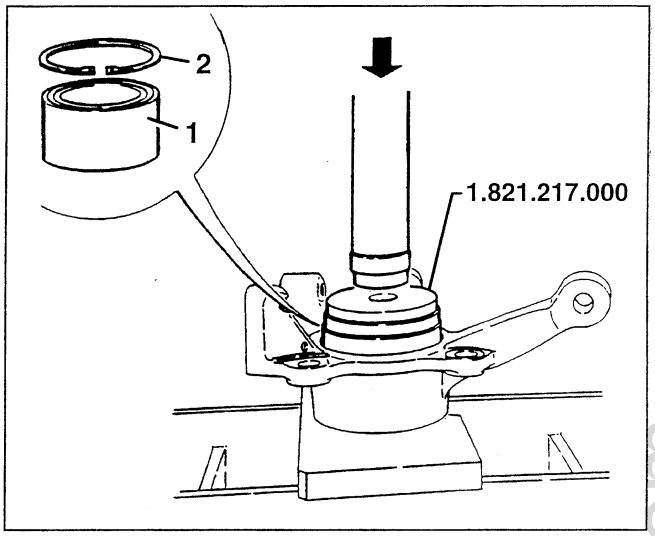

1. Working under the press and using installing tool no.. 1.821.045.000, insert the hub in the wheel upright.

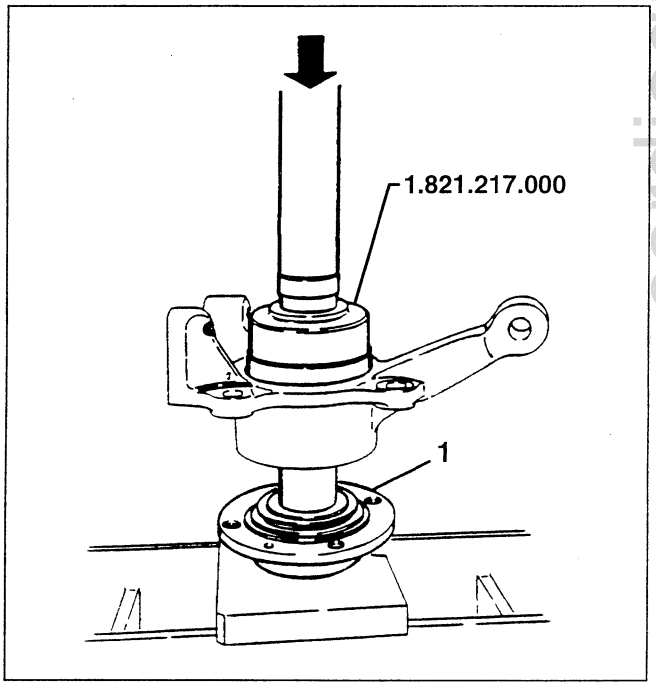

cardiagn.com

REAR WHEEL HUB

REMOVING / REFITTING

– Remove the wheel.
– Remove the brake caliper and disks (see GROUP 33).
1. Remove the dust cover.
2. Slacken the fastening nut and remove the hub from the wheel upright.

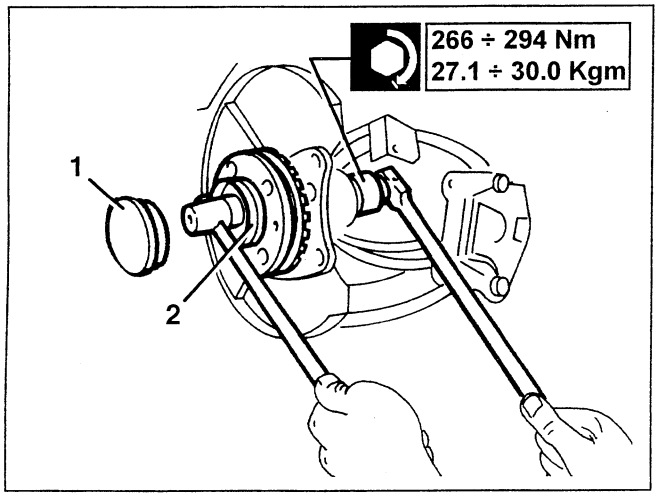

CHECKS AND INSPECTIONS

CAUTION:
When removing the nut fastening the upright, it is absolutely necessary to change the nut when refitting.

1. Check the wheel bearing splined inside the hub for wear. In the event of excessive play or noise, change the complete hub.
2. Check the spacer for wear and replace it if necessary.
3. Replace the wheel hub fastening nut.

NOTE: If necessary, check the pin (*) for wear cracks or distorsion and replace it if necessary.

N.B. To remove the pin from the wheel upright the use of a press is necessary as it is force-fitted.

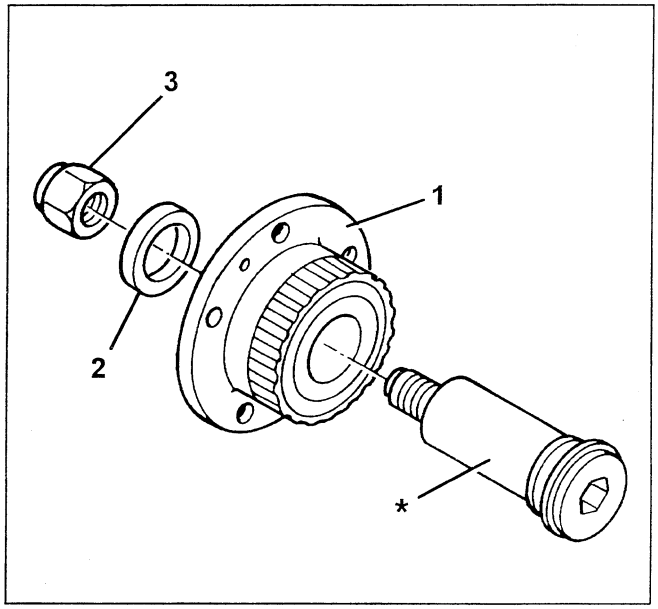

cardiagn.com

WHEELS AND HUBS
(Versions with ABS active sensors)

FRONT STEERING KNUCKLE (6 cylinder version)

REMOVING/REFITTING

– Remove the wheel.
1. Remove the bevelling and undo the nut fixing the wheel hub to the constant velocity joint.
2. Disconnect the pad wear electrical connection.
3. Remove the retainer.
– Remove the complete caliper and move it aside, without disconnecting the braking system pipes (see GROUP 33).
– Remove the brake disc (See Group 33).
4. Undo the nut for the ball joint connecting the side steering rod to the steering knuckle.
5. Using tool N° 1.821.169.000, disconnect the ball joint from the steering knuckle.
6. Undo the bolt connecting the track control arm to the steering knuckle and remove it from the ball joint.

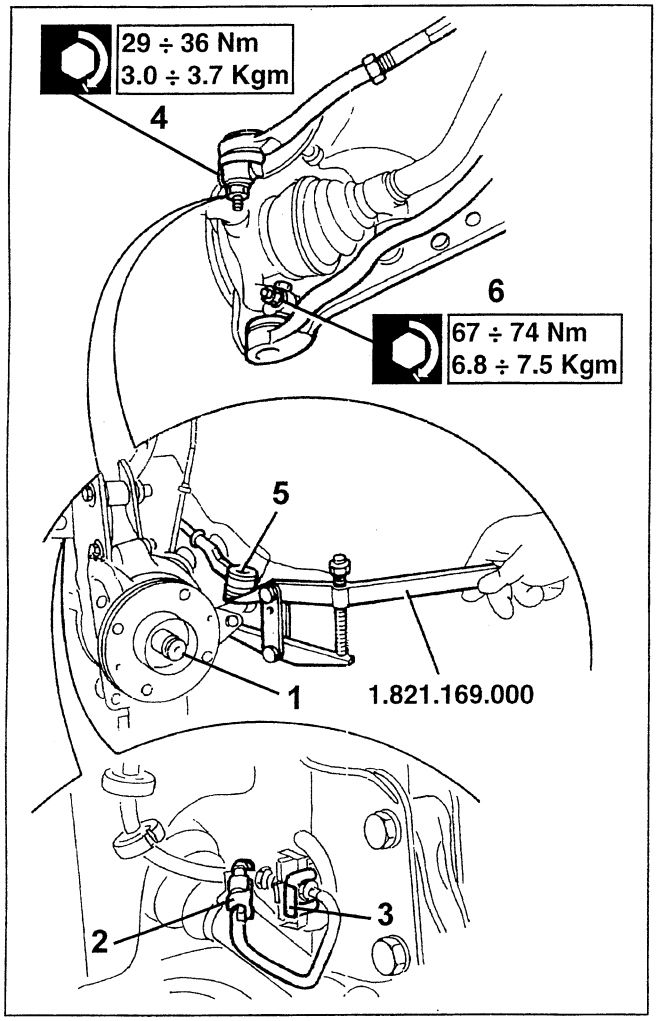

1. Undo the two bolts.
2. Remove the steering knuckle/wheel hub assembly.

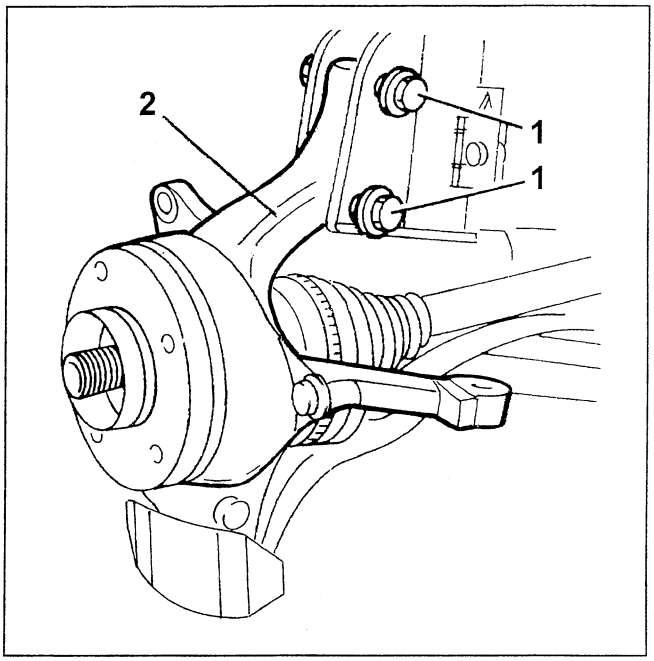

Proceed with the refitting, reversing the order of the operations carried out for the removal, tightening the nuts and bolts to the recommended torque and following the instructions below for staking the wheel hub fixing nuts and adjusting the position of the steering knuckle.

STAKING FRONT WHEEL HUB FIXING NUT

– Always use a new nut.
– Thoroughly clean the threaded end of the drive-shaft using a wire brush and then blow through with compressed air.
– Clean the thread of the nut and the element using ethyl alcohol or heptane.

cardiagn.com

1. Tighten the new nut to the recommended torque and then rotate the nut further as described using tool No. 1.820.622.000.

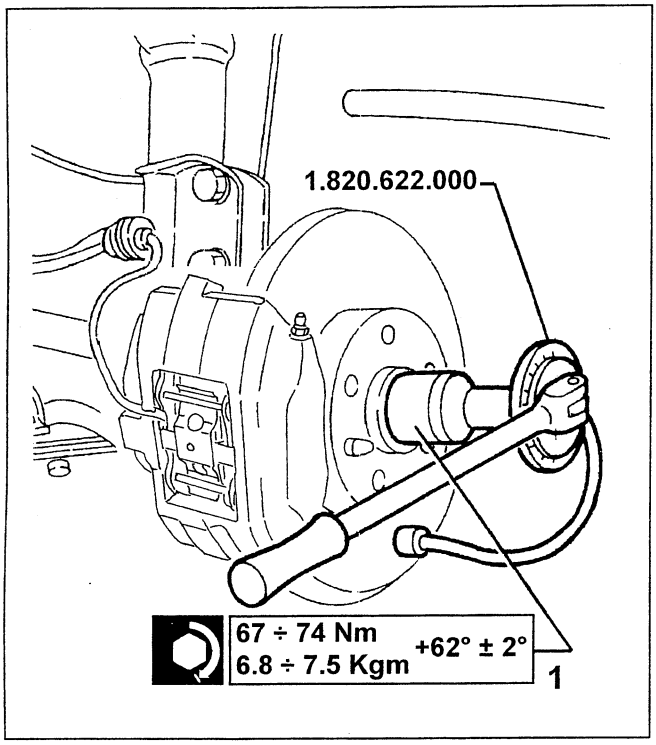

1. Using a chisel, stake the collar of the nut twice (the same as the nut which was removed).

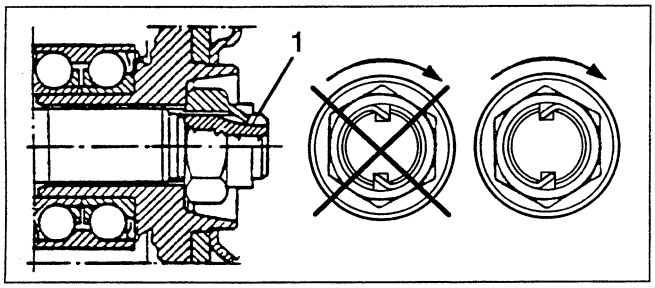

NOTE: The cuts in the collar are made in the notch in the hub on the opposite side to which the nut is tightened: in this way, the safety element is more resistant to any accidental loosening.

ADJUSTING FRONT SUSPENSION STEERING KNUCKLE POSITION

NOTE The operation described below, which must be carried out each time the two bolts fixing the steering knuckle to the shock absorber stem have to be loosened or removed, is aimed at keeping the wheel camber angle within the recommended limits by cancelling the clearance between the fixing bolts and the openings for the actual bolts (see specific paragraph).

– Position a suitable wooden reaction element between the spring plate and the bodyshell.

WARNING:
Make sure that the reaction element support point corresponds to the spring plate and not the coils because if that were the case it could cause involuntary movements and/or distortion of the actual spring during operation.

1. Temporarily position one of the wheel bolts and adjust it in the direction illustrated in the diagram using a spanner.
2. Position a fixed spanner in order to retain the fixing bolt nut.
3. Tighten the fixing bolts to the recommended torque.

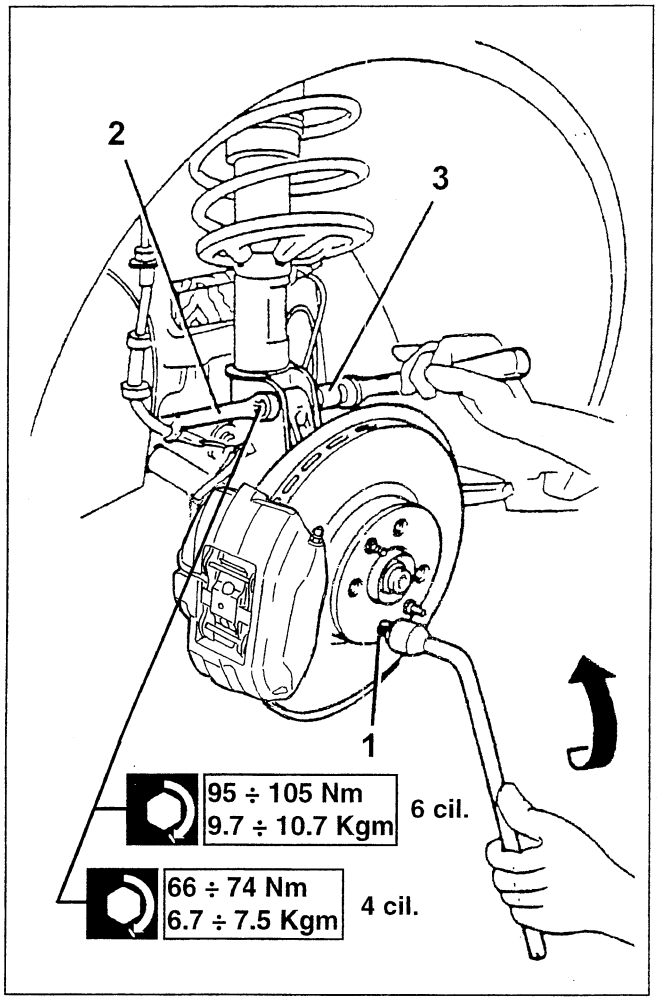

cardiagn.com

DISMANTLING

1. Tighten the steering knuckle/wheel hub assembly in a vice and remove the hub retaining circlip.

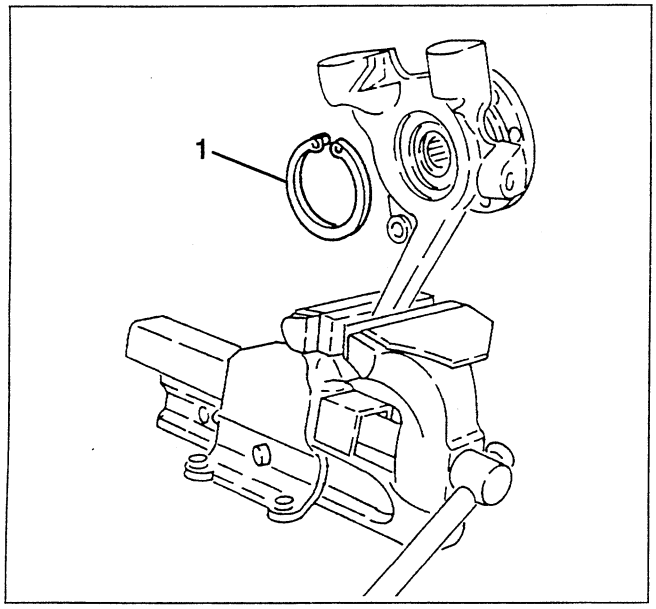

1. Position the steering knuckle/hub assembly on the press using plate N° 1.820.047.002.
2. Fit a suitable shim (2a), under the fixing tabs (2b), in order to ensure that the steering knuckle is in a flat position.
3. Working on the press, remove the wheel hub from the steering knuckle using extractor N° 1.821.037.000.

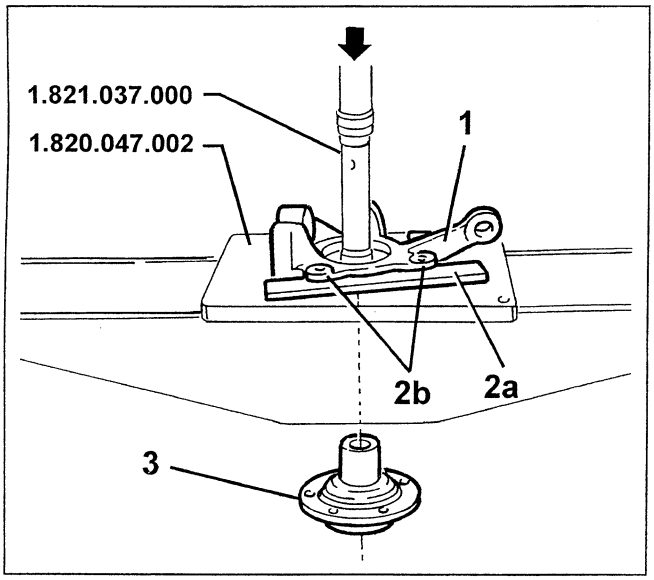

1. Working on the press, extract the bearing outer race from the steering knuckle using support N° 1.870.800.000 and extractor N° 1.870.800.001.

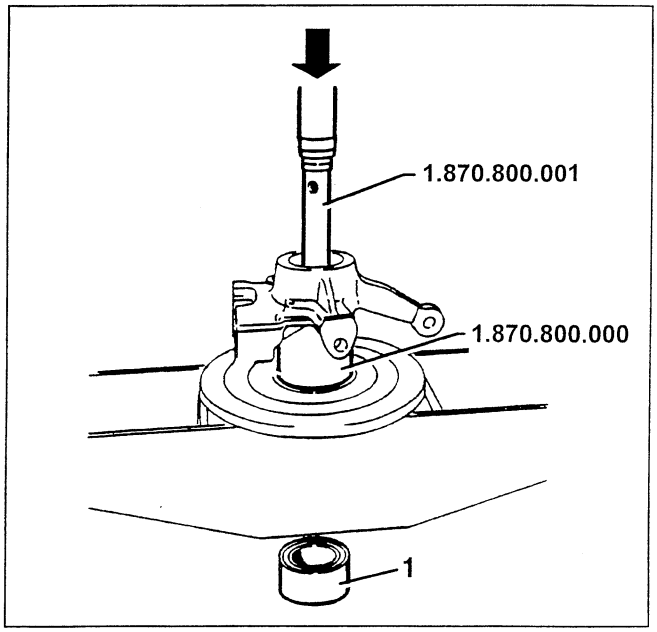

1. Using a screwdriver, remove the dust seal from the wheel hub.

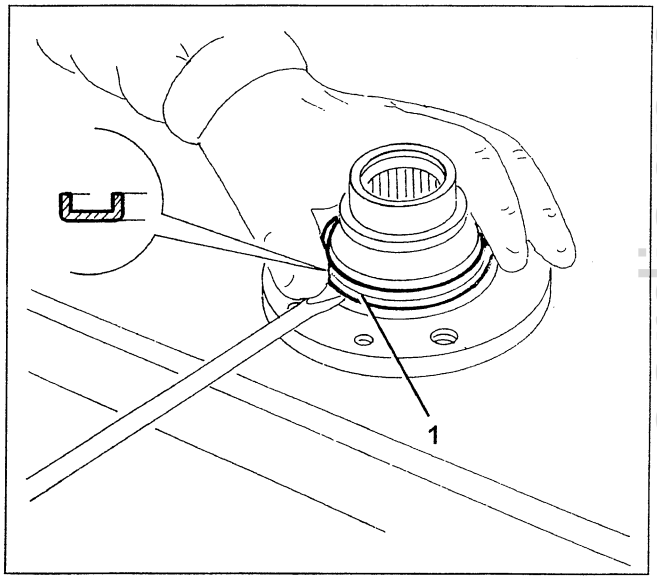

WARNING: suitable protective clothing (protective goggles) must be worn for the next operation involving the use of a chisel.

cardiagn.com

1. Using a suitable chisel, move the bearing inner race away from the wheel hub.

NOTE: the inner race must be moved sufficiently to allow the plate described in the next point to be inserted.

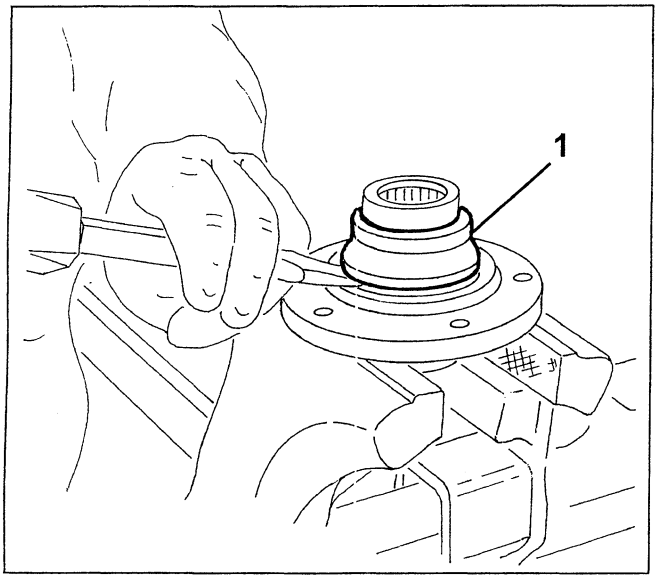

1. Working on the press and using plate N° 1.820.047.002, half-rings N° 1.820.223.000 and extractor (grip) N° 1.821.171.000, remove the bearing inner race from the wheel hub.

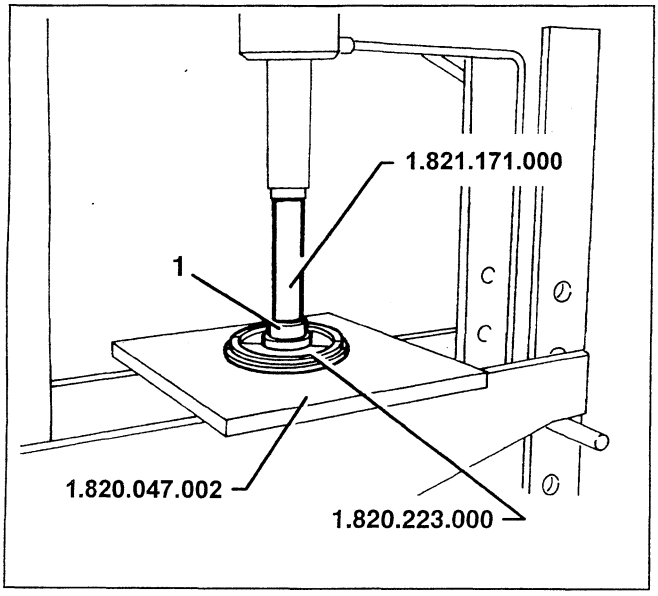

INSPECTIONS AND CHECKS

1. Check that the inner surfaces of the steering knuckle do not show signs of seizing, that the arms are not damaged and do not show signs of impact, distortions or breaks; if this is not the case, proceed with replacing the steering knuckle.
2. Check that the surfaces of the wheel hub are not damaged and do not show signs of impact or breaks; if this is not the case, proceed with replacing the wheel hub.
3. Check the rolling bearing for signs of cracks, seizing or sticking; if necessary, replace the bearing.
4. Proceed with replacing the nut securing the constant velocity joint before refitting.
5. Check the condition of the ball joint fixing the steering knuckle to the track control arm looking for distortions, excess wear, cracks, sticking or signs of oxidation and, if necessary, replace the ball joint.

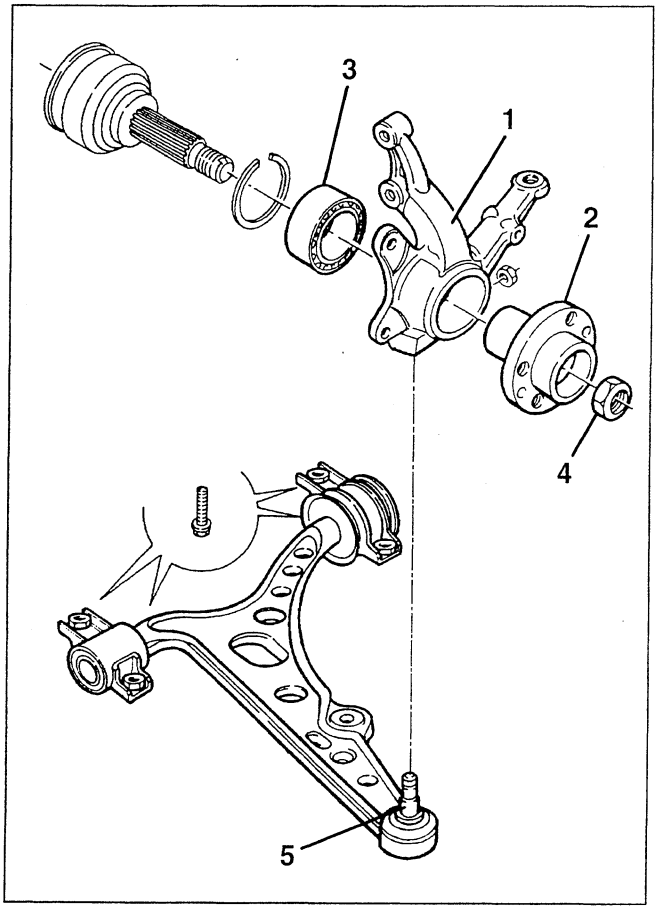

cardiagn.com

REASSEMBLY

WARNING:
For fitting bearing (A) with multi-pola magnetic codifier (B)

– Remove the plastic protection for the magnetic codifier (B) (black) just before fitting the bearing.
– The bearing should be fitted with the magnetic codifier facing towards the ABS sensor.
– Avoid any impacts to the magnetic codifier.
– Do not get the surface of the magnetic codifier dirty.
– Avoid any contact between the magnetic codifier and magnetic sources.
– At the end of the magnetic codifier fitting operations, check that it is clean, if not clean it with a clean cloth.

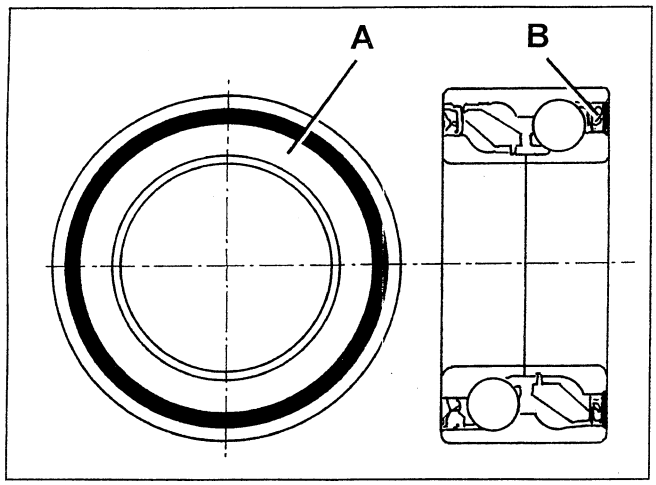

1. Working on the press and using tool N° 1.870.800.002, fit the bearing on the steering knuckle.

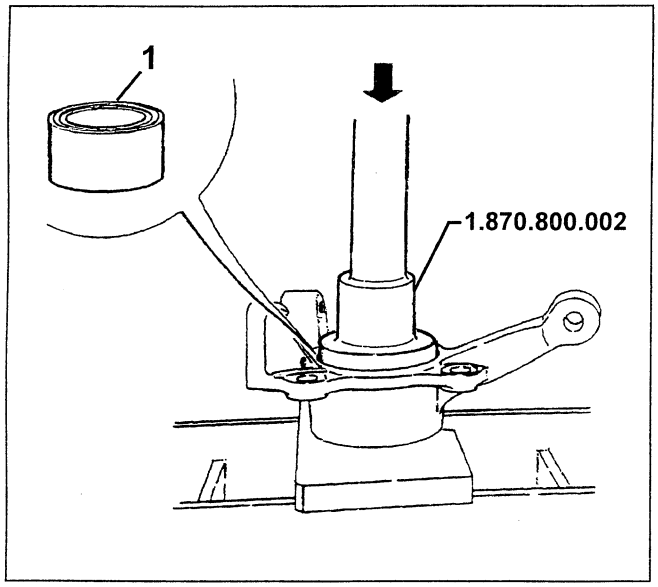

1. Working on the press and using tool N° 1.870.800.002, fit the hub on the steering knuckle.

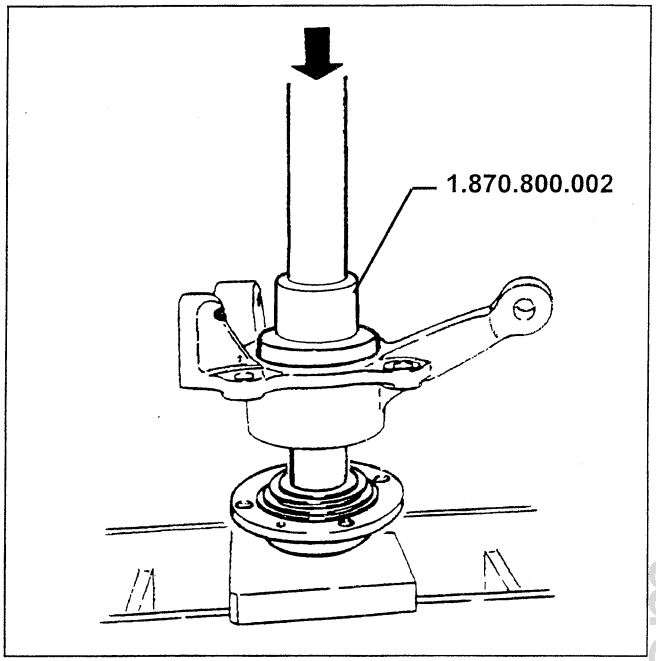

1. Fit the bearing retaining circlip in the housing in the steering knuckle.

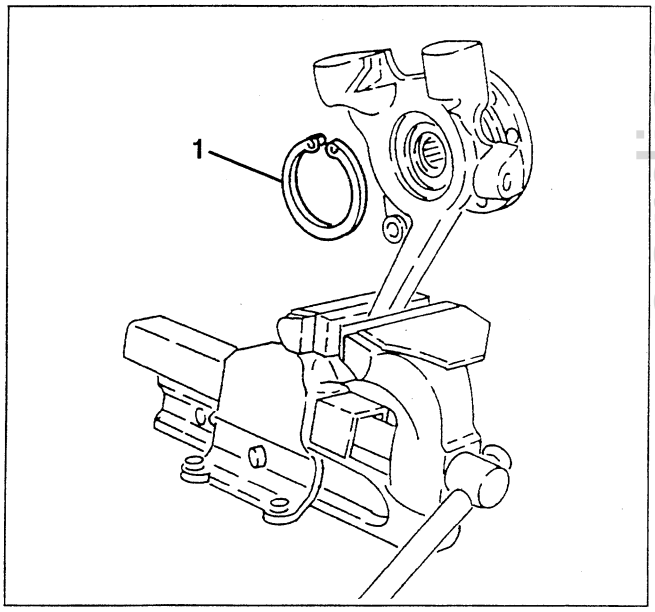

cardiagn.com

REAR WHEEL HUB (6 Cylinder Version)

REMOVING / REFITTING

– Remove the wheel.
– Remove the brake calipers and discs (see GROUP 33)
1. Remove the protective dust cover.
2. Undo the bolt fixing the active sensor.
3. Remove the active sensor from the housing.

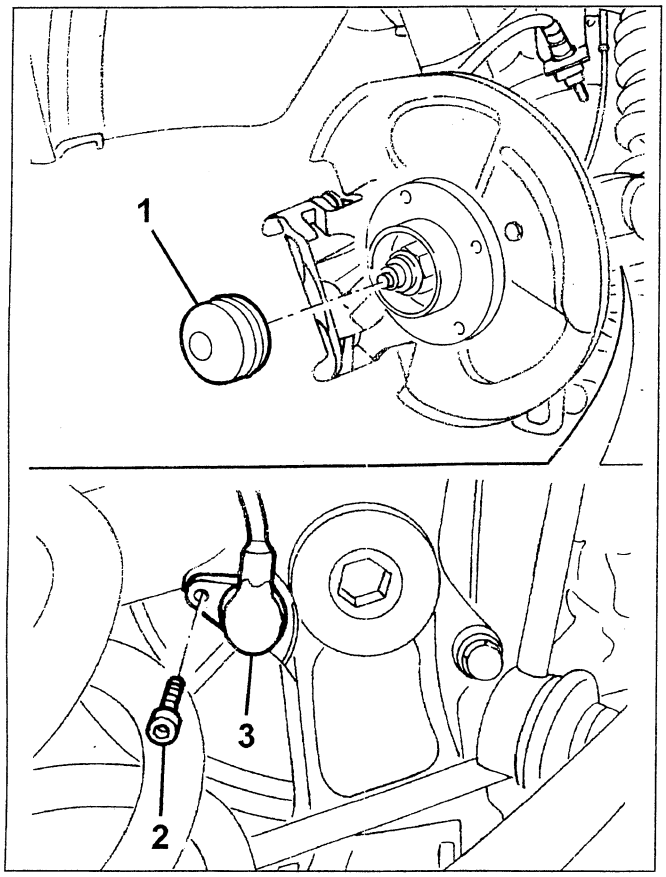

1. Undo the nut fixing the hub.
2. Remove the hub from the steering knuckle.
3. Recover the spacer.

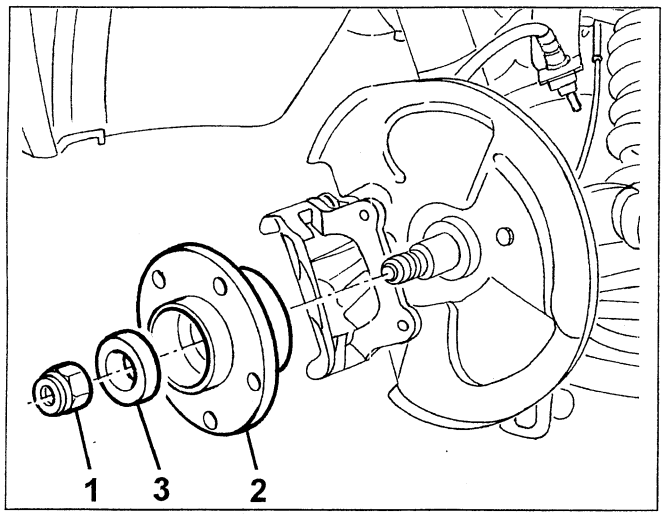

INSPECTIONS AND CHECKS

WARNING:
If the steering knuckle fixing nut is removed, it is vital for this nut to be replaced when refitting.

1. Check the wheel bearing fitted inside the hub for wear. If there is excess wear or excess noise, the complete hub should be replaced.
2. Check the spacer for wear and, if necessary, replace it.
3. Proceed with replacing the wheel hub fixing nut.

NOTE: If necessary, check the bearing (*) for wear, cracks or distortions and, if necessary, replace it.

N.B. A press must be used in order to remove the bearing from the steering knuckle because it is a forced fit.

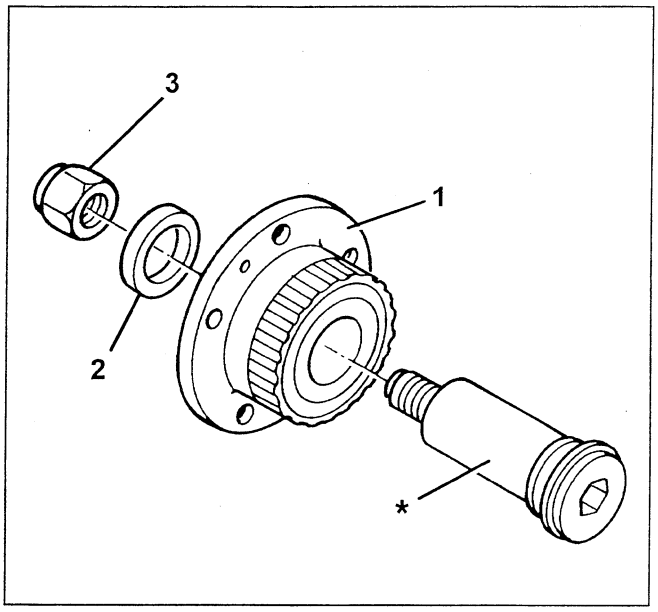

Proceed with the refittign, reversing the order of the operations carried out for the removal.

cardiagn.com

WHEELS

The wheels (rims and tyres) are the most suitable ones for the features of the car and ensure the highest degree of safety and comfort under all normal conditions of driving Before changing the rims and tyres installed on the vehicle always consult the table of the types allowed. Always keep to the original rim-tyre match.

RIMS

The steel or alloy rims must be installed using specific studs for each type of rim.

Therefore, when replacing steel rims with alloy rims or vice-versa, it is absolutely necessary to use the specific studs for the type of wheel fitted.

TYRES

The tyres fitted on the vehicle are "tubeless", i.e. without inner tube. In order to maintain driving comfort, and ensure long life of the tyres, it is advisable to:

- Pay attention to the balancing of the wheels and the correct balancing of the front and rear carriage.
- Do not insert tools of any kind between the rim and the tyre.
- If the rim is distorted, change it.
- When balancing use specific counterweights for tubeless tyres.
- The tyre pressure (including the spare wheel) must be as specified.
- With tubeless tyres no inner tube must be used.

To ensure uniform wear between the front and rear wheels, it is advisable to switch the tyres between the axles every 10.000 - 15.000 km keeping them on the same side of the car to avoid inverting the direction of rotation.

CAUTION:
Do not cross the tyres over.

Some types of tyres have wear indicators; they must be changed as soon as these indicators can be seen on the tread.

Also check the tyrees for uneven wear of the tread.

Tread wear graddually increases the risk of aquaplaning on wet surfaces.

Violent shocks against kerbs, holes in the road and obstacles of various kinds, as well as prolonged driving on rough roads may cause damage to the tyres that may not always be easily visible.

This results in swelling, distorsion or cuts on the side of the tyre that often cannot be seen, but which can cause deflation or bursting of the tyre.

TYRE PRESSURE AND WEAR

The observance of the correct tyre pressure not only determines the life of the tyre, but also driving safety as it affects roadholding of the actual vehicle.

The pressure of each tyre, including the spare, must be checked at regular intervals and before long journeys.

The tyre pressure should be checked cold; use a pressure gauge keeping to the specified ratings.

Incorrect pressure causes abnormal wear of tyres:

A. Normal pressure

The correct inflating pressure of the tyre ensures maximum life on its whole width and wear is more even.

This condition also involves:

- Better vehicle roadholding.
- The highest degree of steering smoothness and accuracy
- Lower fuel consumption, due to the lower resistance to roll of the wheel.

B. Low pressure

A low tyre pressure causes uneven wear of the tread (gigher on the side bands) and overheating can lead to the detachment of parts of the tyre and cause damage to the carcass. Such damage may cause sudden swelling or bursting of the tyre.

C. Excessive pressure

Excessive pressure involves:

- Uneven tread wear, more accentuated in the centre.
- Lower comfort of the vehicle.
- Higher vulnerability of the car.

WHEEL BALANCING

Each wheel, complete with tyre, has been balanced dynamically and statically in the factory. When changing tyres the wheels must be re-balanced, to avoid unstable driving, wear of the steering components and uneven wear of the tyres.

WARNING:
For balancing light alloy wheels only use original Alfa Romeo counter-weights.

cardiagn.com

WHEEL ALIGNMENT

CHECKING THE FRONT WHEEL ALIGNMENT

- Inflate the tyres to the specified pressure.
- Fill with fuel and the specified oils and fluids.
- Set the car on a lift.
- Sway the car a few times to settle the suspensions.

1. Position the reference tool on the on the car resting surface.
2. Using a surface gauge measure the distance "**A**" between the car resting surface and the centre of the steering knuckle fastening screw.
- With the help of a millimetred rule measure the distance found.
3. Using the surface gauge measure the distance "**B**" between the car resting surface and the centre of the wishbone pin.
- With the help of the millimetred rule measure the distance found.

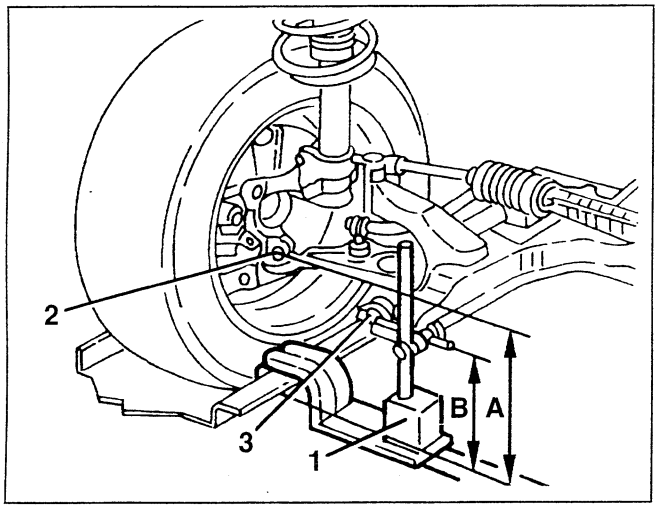

- Calculate the difference between dimension "**B**"and dimension "**A**" and check that it is with the specified limits.

Front alignment B-A		
SPIDER 3.0 V6	**SPIDER 1.8 T.S. 16v 2.0 T.S. 16v**	**GTV 1.8 T.S. 16v 2.0 T.S. 16v**
-36 ± 5 mm*	-33 ± 5 mm*	-32 ± 5 mm*
-46 ± 5 mm**	-42 ± 5 mm**	-43 ± 5 mm**

* To '97 versions
** '98 versions

NOTE: If the alignment values are not within the specified values change both suspension springs.

CHECKING THE REAR WHEEL ALIGNMENT

- Inflate the tyres to the specified pressure.
- Fill with fuel and the specified oils and fluids
- Set the car on a lift.
- Sway the car a few times to settle the suspensions.

1. Position the reference tool on the car resting surface.
2. Using a surface gauge measure the distance "**C**" between the car resting surface and the fulcrum of the spring carrier arm.
- With the help of a millimetred rule measure the distance found.
3. Using the surface gauge measure the distance "**D**" between the car resting surface and the rear wheel centre.
- With the help of the millimetred rule measure the distance found.

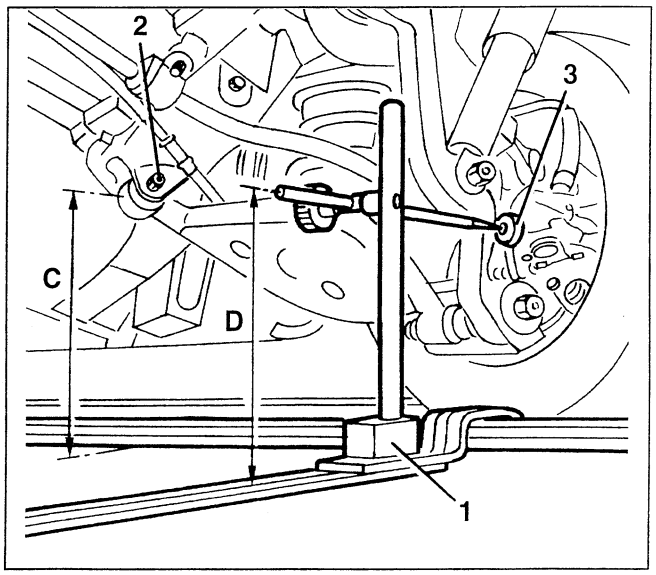

- Calculate the difference between dimension "**C**"and dimension "**D**" and check that it is with the specified limits.

Rear alignment C - D		
SPIDER 3.0 V6	**SPIDER 1.8 T.S. 16v 2.0 T.S. 16v**	**GTV 1.8 T.S. 16v 2.0 T.S. 16v**
-74 ± 5 mm*	-74 ± 5 mm*	-77 ± 5 mm*
-72 ± 3 mm**	-74 ± 5 mm**	-77 ± 5 mm**

* To '97 versions
** '98 versions

NOTE: If the alignment values are not within the specified values change both suspension springs.

cardiagn.com

CHECKING THE CHARACTERISTIC ANGLES

Preliminary operations

– Inflate the tyres to the specified pressure.
– Fill with fuel and the specified oils and fluids.
– Fill with fuel and the specified oils and fluids
– Check that the eccentricity and orthogonality of the wheel rims does not exceed:

- 1 mm for steel rims
- 0.3 mm for alloy rims

CHECKING THE FRONT WHEEL TOE-IN

– Using suitable tools, check that the toe-in is within the specified limits.

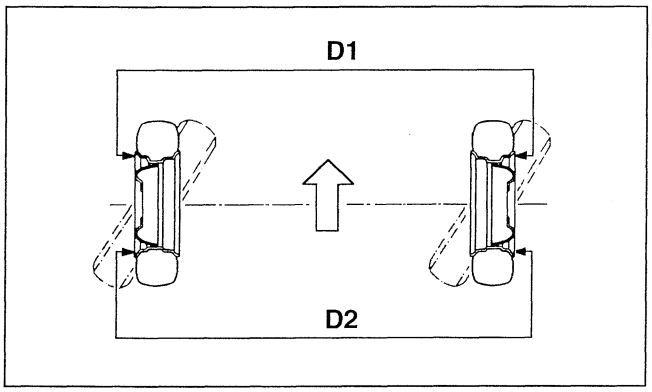

Front wheel toe-in D2 - D1
SPIDER - GTV
-1.5 ± 0.5 mm*
-2.0 ± 0.5 mm**

* To '97 versions
** '98 versions

If the toe-in is other than specified, proceed as follows:

1. Slacken the fastenings for adjusting the track rods.

WARNING:
Each time the front wheel toe-in is adjusted, it is necessary to check that the boots turn freely on the rod and if necessary remove them and lubricate with the specified grease.

2. Turn the rods, until reaching the specified value without changing the position of the steering wheel spokes

NOTE: Adjustment should be carried out on the rods of both wheels.

– Tighten the track rod adjustment fastenings to the specified torque.

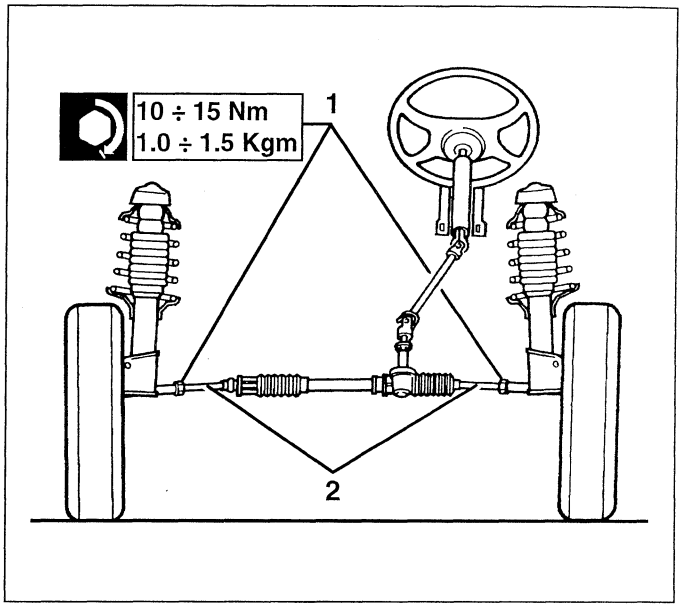

CHECKING THE FRONT WHEEL CAMBER AND CASTER

– Check that the camber and caster angles (not adjustable) are within the specified limits.

Front wheel camber "α"		
SPIDER		GTV
3.0 V6	1.8 T.S. 16v 2.0 T.S. 16v	1.8 T.S. 16v 2.0 T.S.16v
-0°39' ± 20'*	-0°39' ± 20'	-0°39' ± 20'
-0°56' ± 20'**	-0°30' ± 20'**	-0°30' ± 20'**

* To '97 versions
** '98 versions

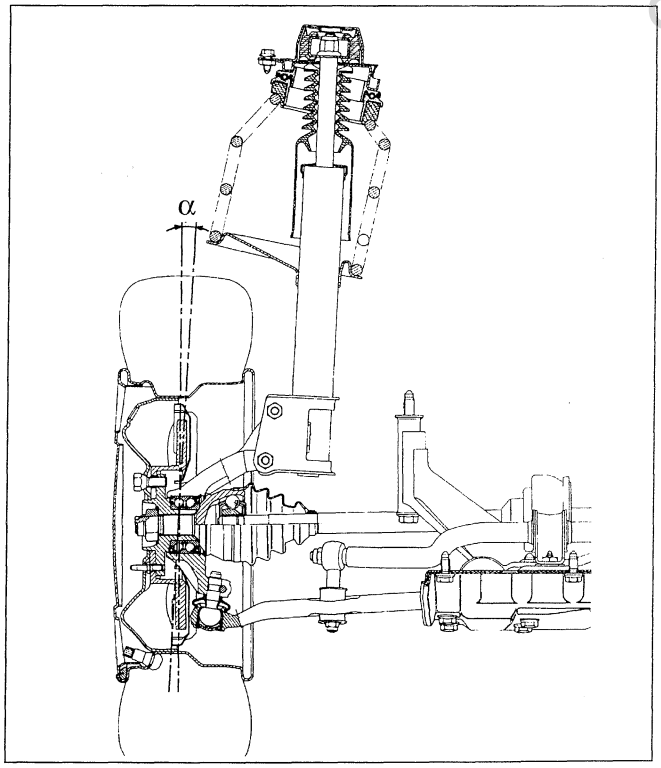

cardiagn.com

Caster "β"		
SPIDER		GTV
3.0 V6	1.8 T.S. 16v 2.0 T.S. 16v	1.8 T.S. 16v 2.0 T.S.16v
3°8' ± 30'*	3°9' ± 30'*	3°12' ± 30'*
2°45' ± 30'**	2°55' ± 30'**	2°59' ± 30'**

* To '97 versions
** '98 versions

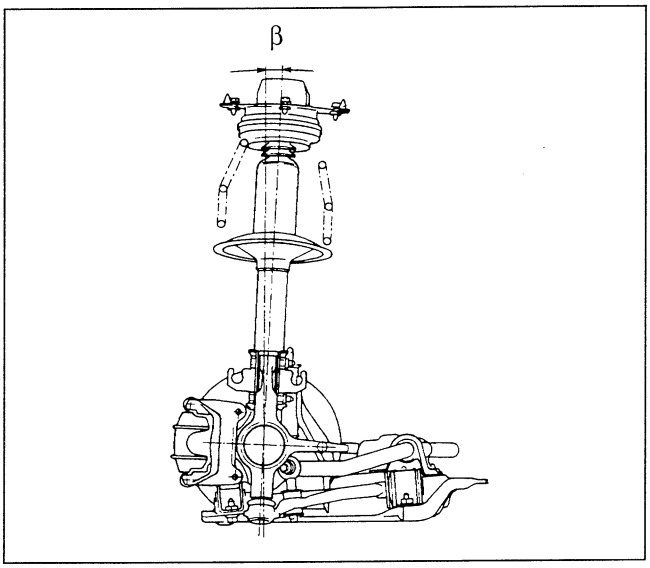

NOTE: If the values are not within the specified limits, body squaring should be checked (see GROUP 70).

CHECKING THE REAR WHEEL TOE-IN

– Using suitable tools, check that the toe-in is within the specified limits.

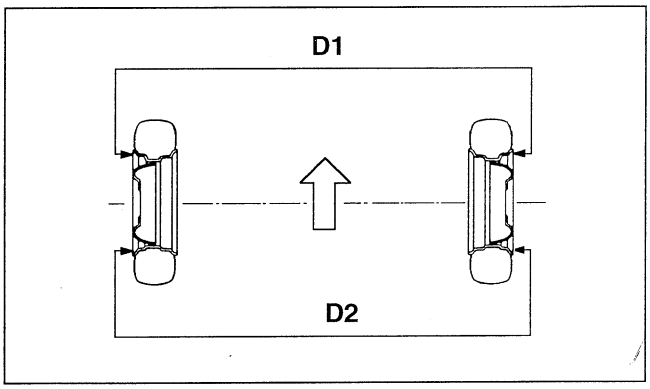

Rear wheel toe-in D2 - D1
SPIDER - GTV
+2.5 ± 0.5 mm*
+3.0 ± 0.5 mm**

* To '97 versions
** '98 versions

If the toe-in is other than specified proceed as follows:

1. Slacken the fastenings of the adjustment rods.
2. Turn the rods, until reaching the specified value

NOTE: Adjustment should be carried out working on the rods of both wheels.

– Tighten the rod fastenings to the specified torque.

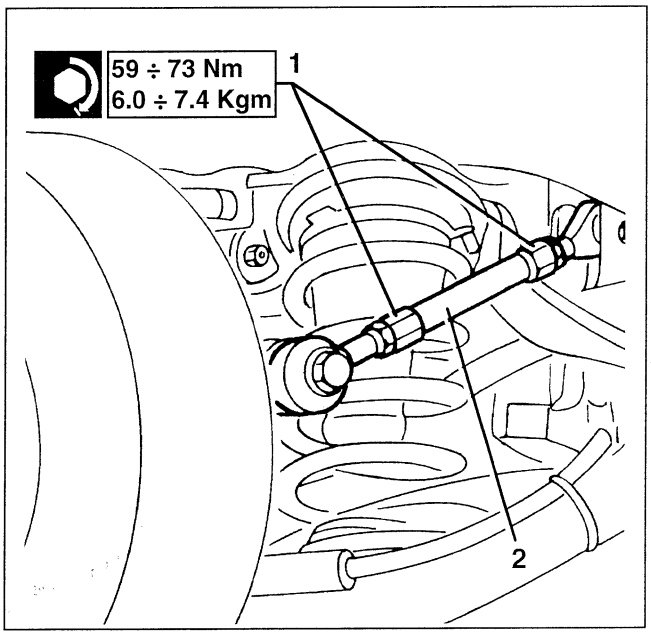

cardiagn.com

CHECKING THE REAR WHEEL CAMBER

– Check that the camber angle (not adjustable) is within the specified limit.

Rear wheel camber "γ"		
SPIDER		GTV
3.0 V6	1.8 T.S. 16v 2.0 T.S. 16v	1.8 T.S. 16v 2.0 T.S.16v
-1°10' ± 20'*	-1°5' ± 20' *	-1°8' ± 20'*
-0°52' ± 20'**	-0°59' ± 20' **	-1°14' ± 20'**

* To '97 versions
** '98 versions

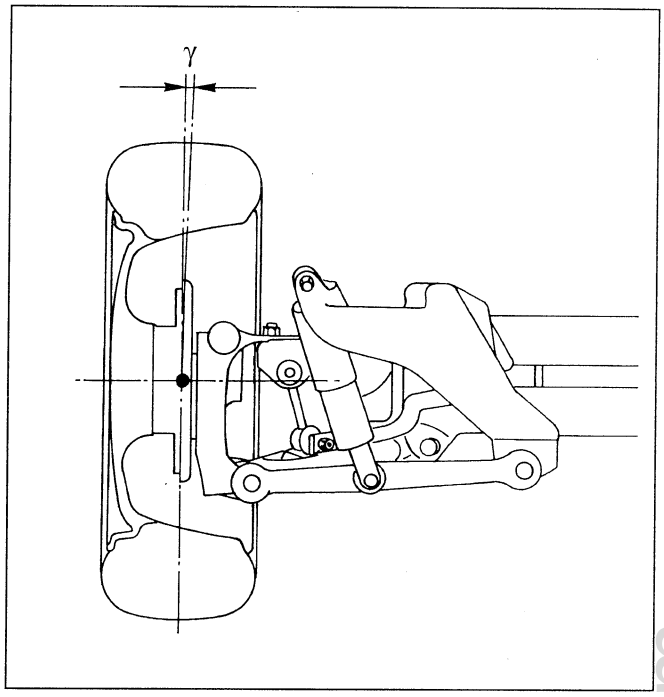

cardiagn.com

VARIANTS FOR Glv 1996 TB

INDEX

TECHNICAL DATA 00

VEHICLE
- Model identification 1
- Location of identification labels 1
- Data plate 2
- Paint identification label. 2
- Dimensions 2
- Weights and loads. 3
- Wheels and tyres. 3
- Fluids and lubricants 4
- Approximate servicing capacities 5
- Car lifting points. 6
- Car tow points 6

ENGINE
- Technical specifications. 7

ENGINE SUPPLY - COOLING
- Fuel system 12/1
- Air supply. 12/1
- Sensors 12/1
- Cooling system 12/2

MECHANICAL GROUPS
- Clutch 13
- Gearbox. 13
- Brakes 13
- Front suspensions 14
- Rear suspensions. 15
- Wheel geometry and angles 15
- Steering 15

ELECTRICAL SYSTEM
- Ignition system 15/1
- Starting 15/1
- Charging. 15/1

HEATING-VENTILATION
- Three-level pressure switch setting (Trinary). . . 16
- Compressor 16

TIGHTENING TORQUES 17

SPECIFIC TOOLS. 19

MAINTENANCE
- Maintenance operations. 20
- Engine maintenance. 22
- Maintenance of mechanical groups (See GROUP 00 of 2959 V6 engine)

ENGINE 10

REMOVAL/REFITTING
- Description. 1
- Removal. 1
- Refitting 11

OPERATIONS IN VEHICLE
- Cylinder heads. 12

ML4.1/EZ212K INJECTION - IGNITION
- General description 20
- System functions 20
- Functional layout of the ML4.1/EZ212K injection - ignition system. 23
- Components of the ML4.1/EZ212K injection - ignition system. 24

FUEL SUPPLY
- Description of the system 25
- Fuel pipe connectors 26
- Fuel tank 27
- Fuel level gauge 29
- Fuel pump 30
- Fuel filter 32
- Fuel pressure regulator 32
- Pulse damper 33
- Electroinjectors. 33
- Checking the pressure and tightness of the fuel circuit 34
- Description of the fuel vapour recovery system 35
- Fuel vapour separator 36
- Fuel vapour filter (Canister) 36
- Fuel vapour solenoid valve. 36

AIR SUPPLY SYSTEM
- Air supply and oil vapour recovery system 37
- Boost-Drive management. 38
- Replacing the air cleaner cartridge. 40
- Throttle body. 40
- Fluxing test 41
- Air-flow meter 41
- Throttle position sensor 41
- Intake box. 42
- Constant idle speed actuator 44
- Oil vapour separator. 44
- Turbocharger 45

(Continued)

cardiagn.com

INDEX

ENGINE *(Continued)* 10

- Checking the setting of the Waste-Gate overpressure valve 49
- Intercooler 49
- Antistalling valve 50

EXHAUST SYSTEM
- Description of the exhaust system 51
- Catalytic converter. 52
- Lambda probe 53
- Checking emissions at the exhaust. 54

ELECTRICAL COMPONENTS
- Rpm sensor and timing sensor 55
- Engine coolant temperature sensor (NTC) 55
- Pinging sensors 56
- Inertial switch 56
- Boost-Drive device control solenoid valve (Pierburg) 57
- Altitude sensor 58
- 1st cylinder detection sensor 58

ENGINE COOLING SYSTEM
- Engine cooling system 59

GEARBOX 21

GEARBOX UNIT
- Removal / Refitting 1

SUSPENSION AND WHEELS 44

WHEEL ALIGNMENT
- Checking the front wheel alignment 1
- Checking the rear wheel alignment. 1
- Checking the characteristic angles 2
  - Checking the front wheel toe-in. 2
  - Checking the front wheel camber and caster 2
  - Checking the rear wheel toe-in 3
  - Checking the rear wheel camber 4

FOR THE INFORMATION NOT GIVEN HEREIN, REFER TO THE CORRESPONDING GROUP OF "SPIDER-GTV".
THE REFERENCE ENGINE IS THE "6 CYLINDER " (3.0 V6 ENGINE)

cardiagn.com

MODEL IDENTIFICATION

Brand name	GTV V6 TB
Version	Coupé
Version (on identification plate)	916C2A
Chassis (in engine compartment, on upper right-hand shock absorber bracket)	-
Progressive chassis number	6000001
Engine (code)	AR 16202
Engine symbol	1996 TB
Gearbox (code)	C.503.5.29.21

IDENTIFICATION PLATE LOCATION

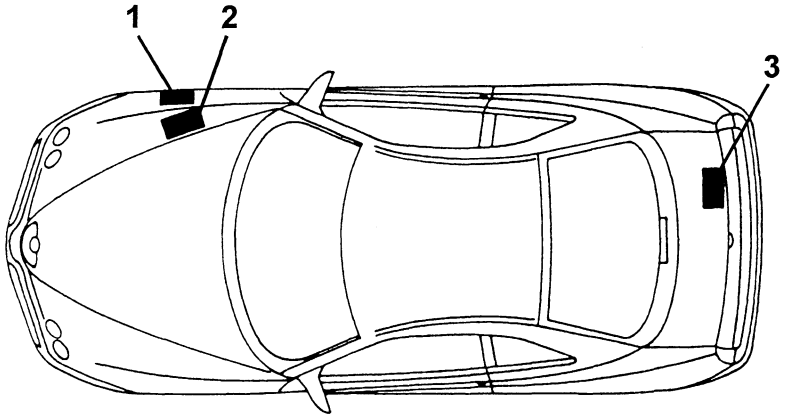

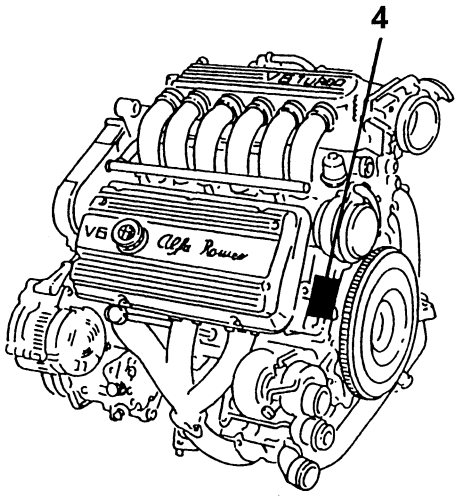

1. *Identification data plate*
2. *Chassis marking*
3. *Paintwork identification plate*
4. *Engine marking*

cardiagn.com

IDENTIFICATION DATA PLATE

The plate is applied in the engine compartment on the upper left-hand shock absorber bracket. It contains the following data:

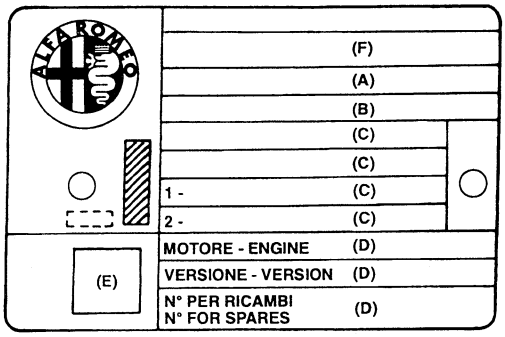

A. National homologation
B. Chassis number punch mark
C. Maximum authorised weights prescribed by national laws, where relevant
D. Version identification (e.g. 916C2A) Version identification
E. Smokiness
F. Manufacturer's name punch mark

PAINTWORK IDENTIFICATION PLATE

This plate is applied on the inside of the boot and contains the following data:

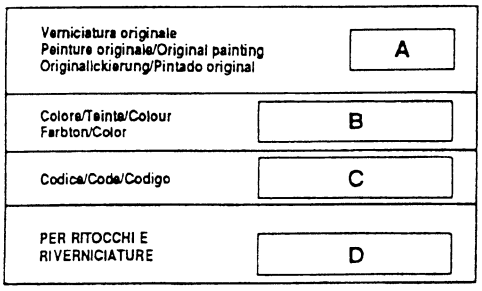

A. Paint manufacturer
B. Colour name
C. Colour code
D. Touch-up and re-spray code

DIMENSIONS

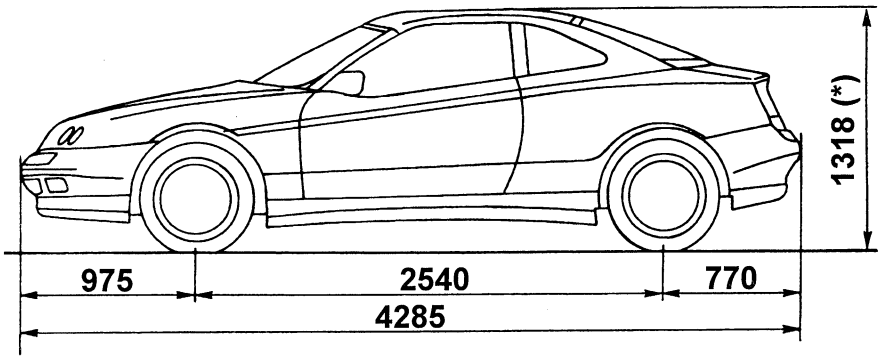

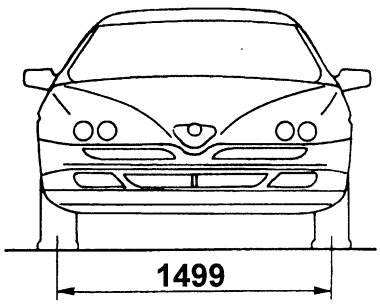

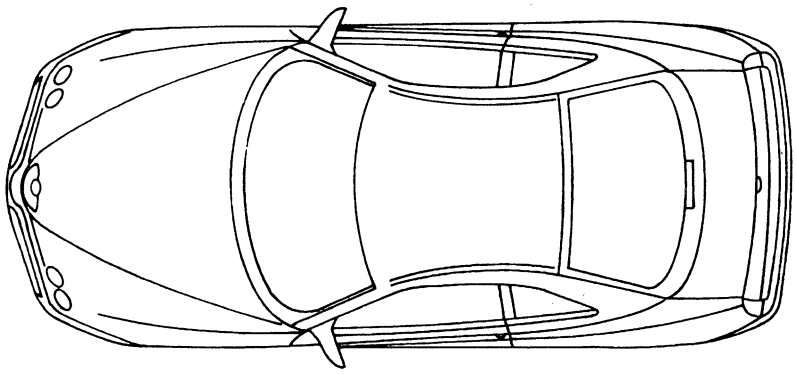

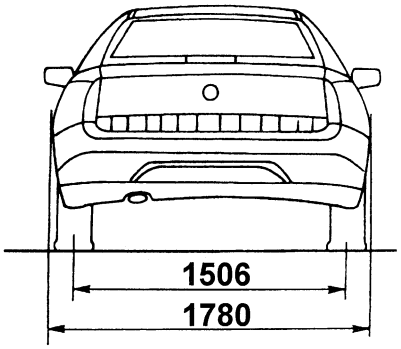

(*): Unladen vehicle

cardiagn.com

WEIGHTS AND LOADS

Unit: kg

Features / Version		916C2A
Kerb weight (without driver)		1430
Maximum admitted load		1820
Load		390
Maximum weight allowed on each axle	front	1060
	rear	870
Towable weight	trailer with brakes	1000
	trailer without brakes	500
Maximum load on tow hitch		50

WHEELS AND TYRES

Features / Versions		916C2A	916C2A '98 models
Rim size	standard	6.5J x 16" (alloy)	
	optional	-	7.5J x 17" (alloy)
Tyre size	standard	205/50 ZR16	205/50 R16 87Y
	optional	-	225/45 ZR17 91Y (*)
Tyre pressure (cold)	bar (kg/cm^2)	front 2.7 rear 2.5	
Space saver spare wheel	Rim size	4J x 15" (steel)	4J x 15" C26
	Tyre size	T125/80 R15 96M	
	Tyre pressure bar (kg/cm^2)	4.2	

(*): Snow chains cannot be fitted on these tyres.

IMPORTANT:
Increase pressure by 0.3 bar in the event of constant driving at top speed.

cardiagn.com

FLUIDS AND LUBRICANTS

Type	Assembly ref.	Application	Classification	Name
OIL	10 - Engine	Engine (filling)	API SJ CCMCG5 ACEA A3-96 SAE 10W/40	SELENIA 20 K (*)
	21 - Gearbox	Gearbox-differential (filling)	API GL-5 SAE 75W 90	TUTELA ZC 75 SYNTH
	50 - Add. units	Compressor (filling)	-	SANDEN SP 10 "PAG"
FLUID	10 - Engine	Cooling circuit (filling)	-	ALFA ROMEO CLIMAFLUID SUPER PERMANENT -40°C
	18 - Clutch 33 - Brakes	Hydraulic brake-clutch circuit (filling)	DOT 4 SAE J 1703 F	ALFA ROMEO BRAKE FLUID SUPER DOT 4
	41 - Steering	Power steering (filling)	G.M. DEXRON II	TUTELA GI/A
	50 - Additional units	Climate control system (filling)	-	RIVOIRA: SUVA R134a HOECHST - TAZZETTI: FRIGEN R134a ICI - TAZZETTI: KLEA R134a
GREASE	18 - Clutch	Clutch thrust bearing and lever Clutch cylinder strut	-	TUTELA MR3
	21 - Gearbox	Gear engage rod and ball lever bushings	-	TUTELA ZETA 2 ISECO MOLYKOTE LONGTERM N. 2
	27 - Front axle	Drive shaft CV joints	-	OPTIMOL PU 035 BERUTOX GKN HTB
	33 - Brakes	Pedal board joints and bushing ABS inductive sensor seats	-	TUTELA ZETA 2

(*): For sportier use, we recommend **SELENIA Racing 10W/60** fully synthetic engine oil.

cardiagn.com

FLUIDS AND LUBRICANTS (Continued)

Type	Assembly ref.	Application	Classification	Name
GREASE	41 - Steering	Roller bushing seat on steering column	-	SPCA SPAGRAPH ISECO ERGON RUBBER GREASE REINACH SFERUL B2 AR
	44 - Suspensions and wheels	Wishbone brackets	-	GREASE MOLYKOTE 7544 PG54 TUTELA MR3
		Side steering linkage	-	MOLYGUARD SYL 113

INDICATIVE CAPACITIES

Capacity \ Version		916C2A
Fuel tank		70 litres
Fuel reserve		~ 9 litres
Engine oil	Sump + filter (for regular replacement)	6.5 litres
Gearbox-differential oil		2 litres
Power steering system oil		1.3 kg
Brake and clutch circuit oil		0.4 kg
Engine coolant		11.7 litres
Climate control compressor oil		240 ± 15 cm^3
Climate control system fluid		0.700 kg + 0.05 kg (1)

(1): Additional amount to be computed considering the fluid which remains the recharge device lines.

cardiagn.com

JACKING POINTS

With arm hoist or shop jack.

- Position the arms or the jack in the areas shown.

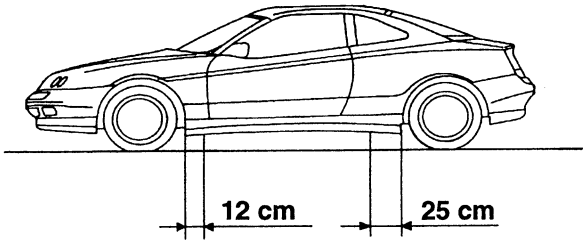

IMPORTANT:
Be very careful when positioning the arms or the jack in the front jacking points to avoid squeezing the brake and fuel lines.

TOWING POINTS

The vehicle is equipped with two threaded attachments - one at the front and the other at the back - where to screw the tow hitch which is provided in the tool bag (in the boot).

Attain scrupulously to the laws regulating towing.

IMPORTANT:
Before towing the vehicle, turn the key to MAR and back to STOP without removing it to prevent the steering wheel from locking.

Consider that while towing, the brake booster system is not running. Consequently, more effort on the brake pedal will be required.

Furthermore, when the engine is not running, the power steering system is neither working. Consequently, more effort on the steering wheel is required.

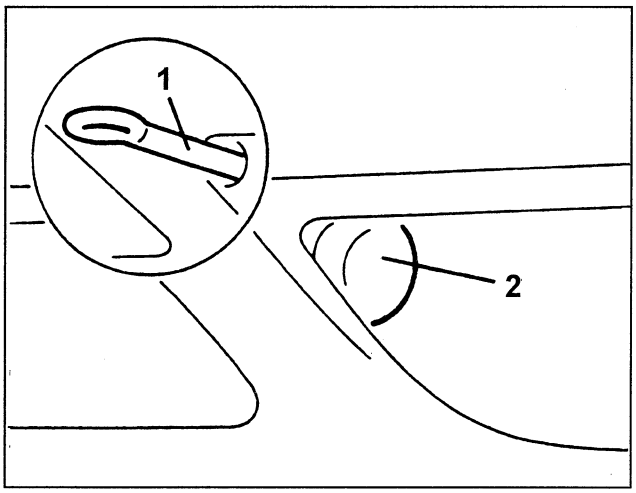

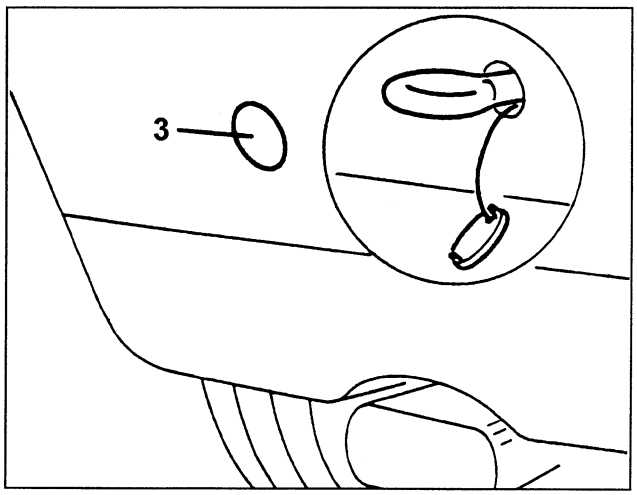

1. Front tow hitch
2. Front bumper slot
3. Rear bumper cover

cardiagn.com

TECHNICAL FEATURES

CHARACTERISTIC DATA

Engine		AR 16202
Stroke		Otto, four stroke
Injection/Ignition		Motronic ML4.1 / EZ212K
Firing order		1 - 4 - 2 - 5 - 3 - 6
Capacity	cm^3	1996
Number of cylinders		6 V positioned a 60°
Bore	mm	80
Stroke	mm	66.2
Maximum power	CV CEE (kW CEE) rpm	200 (147) 6000
Maximum torque	kgm CEE Nm CEE rpm	27.6 (28.5 *) 271 (280 *) 2400
Compression ratio		8 : 1
Engine oil pressure (oil at 100°C) - Idling - 4000 rpm	bar	 0.7 3.8
Idling ratio	rpm	800 ± 20

(*): With overboost running.

CRANKCASE

Crankcase

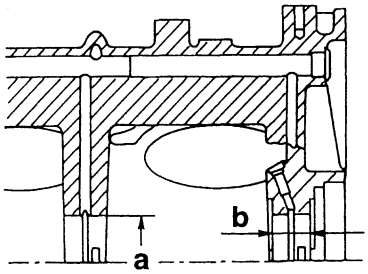

Unit: mm

Main journal diameter "a"	Class A - Red	63.657 ÷ 63.663
	Class B - Blue	63.663 ÷ 63.669
	Class C - Green	63.669 ÷ 63.675
Rear main journal shoulder length "b"		26.450 ÷ 26.500

Crankshaft

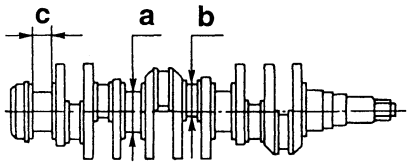

Unit: mm

Main bearing diameter "a"	Class A - Red	59.973 ÷ 59.979
	Class B - Blue	59.967 ÷ 59.973
	Class C - Green	59.961 ÷ 59.967
Connecting rod pin diameter "b"	Class A - Red	51.990 ÷ 52.000
	Class B - Blue	51.980 ÷ 51.990
Rear main bearing length "c"		31.300 ÷ 31.335
Maximum main bearing-rod ovality		0.004
Maximum main bearing-rod taper ratio		0.010
Maximum main bearing-rod parallel error		0.015
Maximum main bearing eccentricity		0.040

cardiagn.com

Main half-bearings

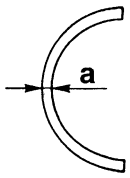

Unit: mm

Main half-bearing thickness "a"	Class A - Red	1.833 ÷ 1.839
	Class B - Blue	1.839 ÷ 1.845
	Class C - Green	1.845 ÷ 1.851
Main half-bearing and bearing operating play		0.000 ÷ 0.024

Thrust half-rings

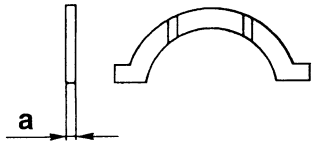

Unit: mm

Thrust half-ring thickness "a"	2.310 ÷ 2.360
Crankshaft axial play	0.080 ÷ 0.265

Flywheel

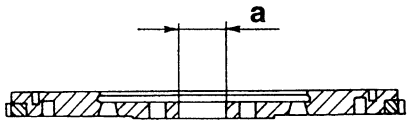

Unit: mm

Central bush internal diameter (bore) "a"	35.000 ÷ 35.025
Crown wheel heating temperature for fitting on flywheel	120° ÷ 140°C

Cylinder liner

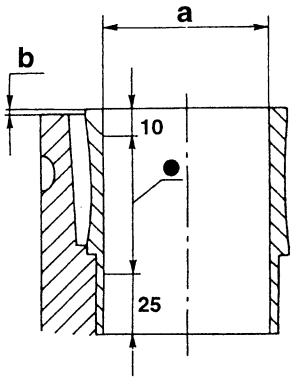

(•) Dimensional check area

Unit: mm

Cylinder liner diameter "a"	Class A - Blue	79.985 ÷ 79.994
	Class B - Pink	79.995 ÷ 80.004
	Class C - Green	80.005 ÷ 80.014
Cylinder liner projection from crankcase "b"		0.01 ÷ 0.06
Cylinder liner ovality/taper limit		0.01

Oil pump

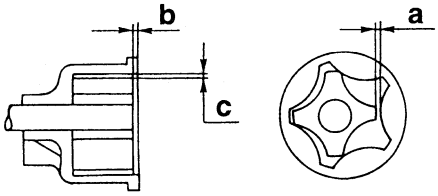

Unit: mm

Driven and internal gear play "a"	0.040 ÷ 0.290
Pump casing surface and upper gear axial play "b"	0.025 ÷ 0.075
Pump casing and driven gear axial play "c"	0.170 ÷ 0.275

cardiagn.com

CONNECTING ROD - PISTON ASSEMBLY

Piston

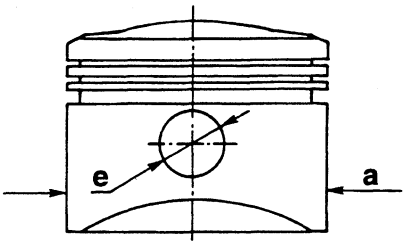

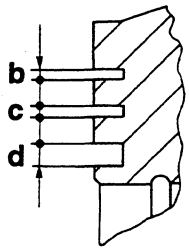

Unit: mm

Diameter of pistons "a" (1)	Class A - Blue	79.935 ÷ 79.945
	Class B - Pink	79.945 ÷ 79.955
	Class C - Green	79.955 ÷ 79.965
Height of seats of first seal ring "b"		1.525 ÷ 1.545
Height of seats of second seal ring "c"		1.525 ÷ 1.545
Height of seats of oil scraper ring "d"		3.515 ÷ 3.535
Diameter of gudgeon pin holes in pistons "e"	Class A - Black	22.001 ÷ 22.003
	Class B - White	22.003 ÷ 22.005
Clearance between liners and pistons		0.040 ÷ 0.059
Difference in weight between pistons		≤ 4 g

(1) To be measured perpendicularly to the gudgeon pin hole at a distance of 17 mm from lower edge of skirt.

Seal rings

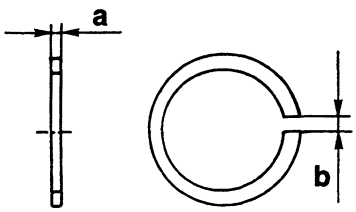

Unit: mm

Thickness of rings "a"	First ring	1.478 ÷ 1.490
	Second ring	1.478 ÷ 1.490
	Oil scraper ring	3.478 ÷ 3.490
Ring gap "b" (1)	First ring	0.30 ÷ 0.50
	Second ring	0.30 ÷ 0.50
	Oil scraper ring	0.25 ÷ 0.50
Axial play between rings and their seats	First ring	0.035 ÷ 0.067
	Second ring	0.035 ÷ 0.067
	Oil scraper ring	0.025 ÷ 0.057

(1) To be measured in the ckeck ring nut or in the cylinder liner

Gudgeon pins

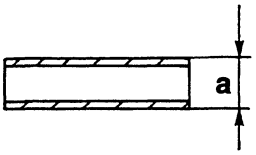

Unit: mm

Outside diameter of gudgeon pins "a"	Class A - Black	21.994 ÷ 21.997
	Class B - White	21.997 ÷ 22.000
Clearance between pins and their housings on pistons	Class A - Black	0.004 ÷ 0.009
	Class B - White	0.003 ÷ 0.008

Connecting rods

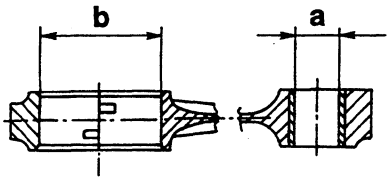

Unit: mm

Diameter of connecting rod bush hole "a"		22.004 ÷ 22.014
Inside diameter of big ends "b"		55.511 ÷ 55.524
Difference in weight between connecting rods		≤ 2 g
Big end end float		0.2 ÷ 0.3
Clearance between gudgeon pins and small end bushes	Class A - Black	0.007 ÷ 0.020
	Class B - White	0.004 ÷ 0.017

cardiagn.com

Connecting rod half bearings

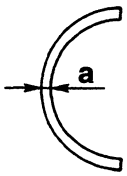

Unit: mm

Thickness of connecting rod half bearings "a"	Class A - Red	1.737 ÷ 1.745
	Class B - Blue	1.741 ÷ 1.749
Operating clearance between rod pins and their half bearings	Class A - Red	0.034 ÷ 0.060
	Class B - Blue	0.036 ÷ 0.062

CYLINDER HEADS

Heads

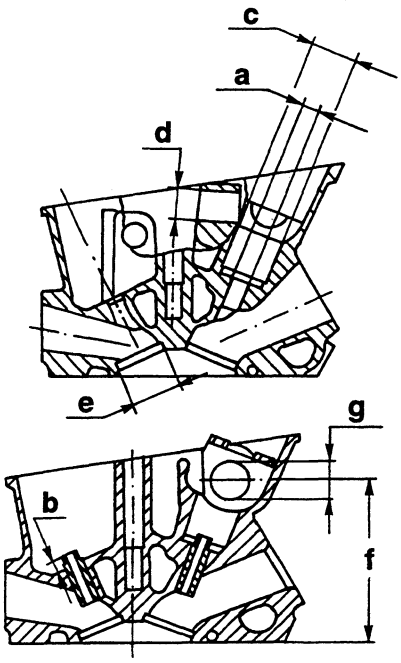

Unit: mm

Diameter of valve guide seats "a"		13.990 ÷ 14.018
Valve guide protrusion "b"		9.7 ÷ 10.1
Diameter of valve cup seats	Intake "c"	35.000 ÷ 35.025
	Exhaust "d"	22.000 ÷ 22.021
Diameter of valve seat housings "e"	Intake	37.500 ÷ 37.525
	Exhaust	32.500 ÷ 32.52
Minimum permissible height of heads after refacing "f"		124.85 ÷ 125.15
Maximum error of flatness of head lower surface		0.05
Diameter of camshaft supports "g"		27.000 ÷ 27.033
Length of camshaft support		26.851 ÷ 26.940
Diameter of camshaft pulley hub bush		32.000 ÷ 32.025
Diameter of oil pump drive shaft hub bush (1)		19.000 ÷ 19.021
Diameter of oil pump driving gear bush (1)		19.000 ÷ 19.021

(1) Specific for right-hand cylinder head

Valve guides

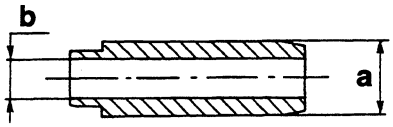

Unit: mm

Outside diameter of valve guides "a"	Intake	14.033 ÷ 14.044 14.047 ÷ 14.058 (1)
	Exhaust	14.048 ÷ 14.059 14.062 ÷ 14.073 (1)
Inside diameter of valve guides (bore) "b"		9.000 ÷ 9.015
Interference between valve guides and their seats	Intake	0.015 ÷ 0.054
	Exhaust	0.030 ÷ 0.069

(1) For Spares only

Valve cups

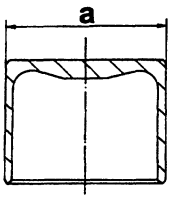

Unit: mm

Diameter of valve cups "a"	Intake	34.973 ÷ 34.989
	Exhaust	21.971 ÷ 22.989
Radial clearance between valve cups and seats	Intake	0.011 ÷ 0.052
	Exhaust	0.011 ÷ 0.050

cardiagn.com

Valve seats

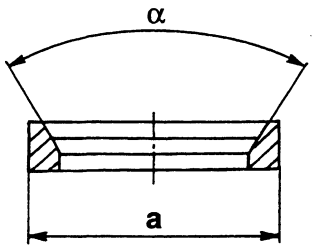

Unit: mm

Outside diameter of valve seats "a"	Intake	37.565 ÷ 37.600 37.865 ÷ 37.900 (1)
	Exhaust	32.610 ÷ 32.626 32.910 ÷ 32.926 (1)
Valve seat taper "α"		90° ± 20'
Interference between valve seats and their seats	Intake	0.040 ÷ 0.100
	Exhaust	0.085 ÷ 0.126
Heating temperature of cylinder heads for fitting valve seats		100 °C

(1) For Spares only

Valves

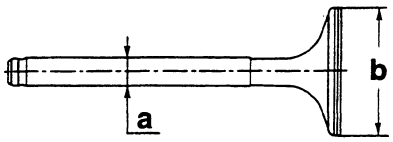

Unit: mm

Diameter of valve stems "a"	Intake	8.972 ÷ 8.987
	Exhaust	8.940 ÷ 8.955
Diameter of valve mushrooms "b"	Intake	36.35 ÷ 36.50
	Exhaust	32.45 ÷ 32.60
Radial clearance between valve stems and valve guides	Intake	0.015 ÷ 0.043
	Exhaust	0.045 ÷ 0.075

Valve springs

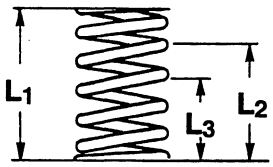

	Inner spring	Outer spring
Free length "L_1"	44.6 mm	44.1 mm
Length with valves closed "L_2"	32.5 mm	30.5 mm
Corresponding load at "L_2"	243 ÷ 252 N (24.8 ÷ 25.7 kg)	126 ÷ 130 N (12.8 ÷ 13.3 kg)
Length with valves open "L_3"	23.5 mm	21.5 mm
Corresponding load at "L_3"	470 ÷ 488 N (47.9 ÷ 49.7 kg)	222 ÷ 231 N (22.7 ÷ 23.5 kg)

Camshafts

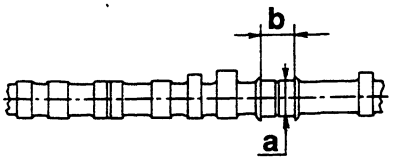

Unit: mm

Diameter of camshaft journals "a"		26.949 ÷ 26.970
Maximum eccentricity between journals		0.03
Width of camshaft shoulders "b"		27.000 ÷ 27.052
Nominal cam lift	Intake	7.65
	Exhaust	6.40
Clearance between camshaft journals and their seats		0.030 ÷ 0.084
Camshaft end float		0.060 ÷ 0.201

cardiagn.com

Rockers

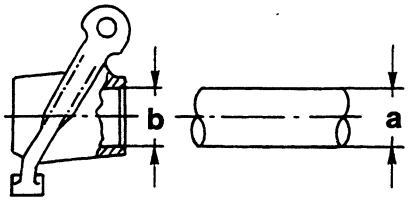

Unit: mm

Diameter of rocker shaft "a"	15.988 ÷ 16.000
Inside diameter of rockers "b"	16.016 ÷ 16.034
Radial clearance between rockers and shafts	0.016 ÷ 0.046

Valve clearance

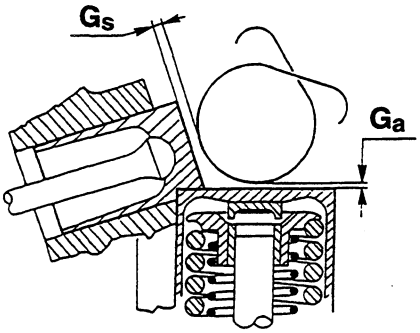

Unit: mm

Valve clearance (with engine cold)	Intake "G_a"	0.475 ÷ 0.500
	Exhaust "G_s"	0.275 ÷ 0.300

ANGLES OF ACTUAL TIMING DIAGRAM

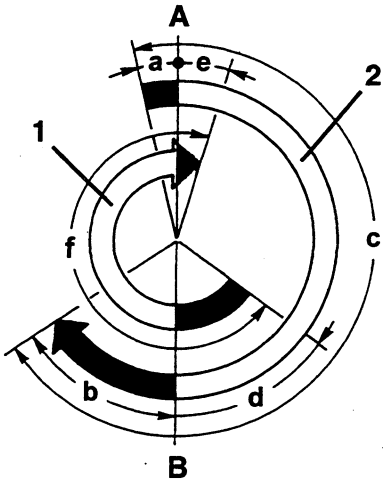

Intake	Opens (before T.D.C.)	"a"	28°
	Closes (after B.D.C.)	"b"	59°
	Intake angle	"c"	268°
Exhaust	Opens (before B.D.C.)	"d"	65°
	Closes (after T.D.C.)	"e"	38°
	Exhaust angle	"f"	284°

(1) Exhaust (2) Intake
(A) T.D.C. (B) B.D.C.

cardiagn.com

Valve seats

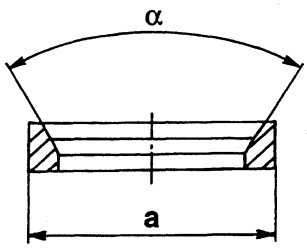

Unit: mm

Outside diameter of valve seats "a"	Intake	37.565 ÷ 37.600 37.865 ÷ 37.900 (1)
	Exhaust	32.610 ÷ 32.626 32.910 ÷ 32.926 (1)
Valve seat taper "α"		90° ± 20'
Interference between valve seats and their seats	Intake	0.040 ÷ 0.100
	Exhaust	0.085 ÷ 0.126
Heating temperature of cylinder heads for fitting valve seats		100 °C

(1) For Spares only

Valves

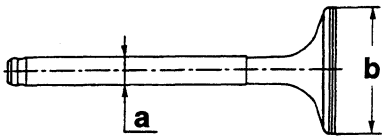

Unit: mm

Diameter of valve stems "a"	Intake	8.972 ÷ 8.987
	Exhaust	8.940 ÷ 8.955
Diameter of valve mushrooms "b"	Intake	36.35 ÷ 36.50
	Exhaust	32.45 ÷ 32.60
Radial clearance between valve stems and valve guides	Intake	0.015 ÷ 0.043
	Exhaust	0.045 ÷ 0.075

Valve springs

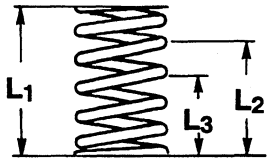

	Inner spring	Outer spring
Free length "L_1"	44.6 mm	44.1 mm
Length with valves closed "L_2"	32.5 mm	30.5 mm
Corresponding load at "L_2"	243 ÷ 252 N (24.8 ÷ 25.7 kg)	126 ÷ 130 N (12.8 ÷ 13.3 kg)
Length with valves open "L_3"	23.5 mm	21.5 mm
Corresponding load at "L_3"	470 ÷ 488 N (47.9 ÷ 49.7 kg)	222 ÷ 231 N (22.7 ÷ 23.5 kg)

Camshafts

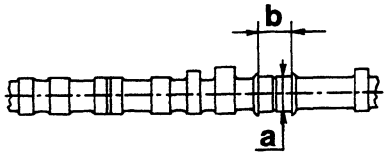

Unit: mm

Diameter of camshaft journals "a"		26.949 ÷ 26.970
Maximum eccentricity between journals		0.03
Width of camshaft shoulders "b"		27.000 ÷ 27.052
Nominal cam lift	Intake	7.65
	Exhaust	6.40
Clearance between camshaft journals and their seats		0.030 ÷ 0.084
Camshaft end float		0.060 ÷ 0.201

cardiagn.com

Rockers

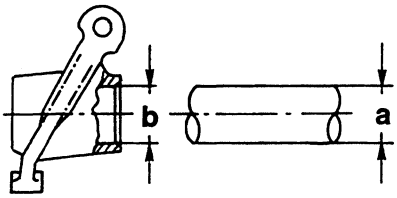

Unit: mm

Diameter of rocker shaft "a"	15.988 ÷ 16.000
Inside diameter of rockers "b"	16.016 ÷ 16.034
Radial clearance between rockers and shafts	0.016 ÷ 0.046

Valve clearance

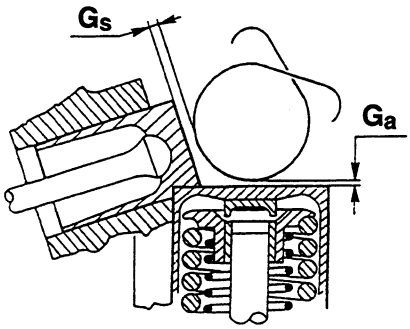

Unit: mm

Valve clearance (with engine cold)	Intake "G_a"	0.475 ÷ 0.500
	Exhaust "G_s"	0.275 ÷ 0.300

ANGLES OF ACTUAL TIMING DIAGRAM

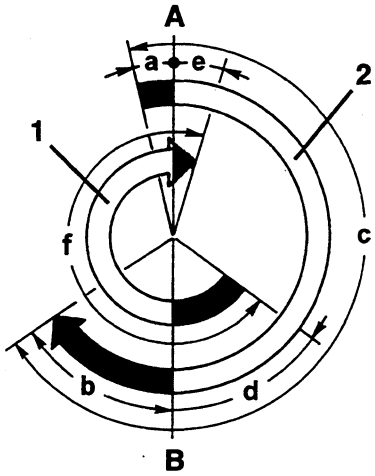

Intake	Opens (before T.D.C.)	"a"	28°
	Closes (after B.D.C.)	"b"	59°
	Intake angle	"c"	268°
Exhaust	Opens (before B.D.C.)	"d"	65°
	Closes (after T.D.C.)	"e"	38°
	Exhaust angle	"f"	284°

(1) Exhaust (2) Intake
(A) T.D.C. (B) B.D.C.

FUEL SYSTEM

FUEL	Unleaded petrol	minimum R.O.N. = 95
FUEL TANK	Total capacity	70 litres
	Reserve	~ 9 litres

SPARK PLUGS

GOLDEN LODGE 25HL

CHARGING

BATTERY	Nominal voltage	12 V
	Capacity	70 A/h

cardiagn.com

FUEL SYSTEM

FUEL

Unleaded petrol	minimum R.O.N. = 95

FUEL TANK

Total capacity	70 litres
Reserve	~ 9 litres

CHECKING FUEL SUPPLY PRESSURE

Fuel pressure at idle speed	3 bar
Maximum control pressure	~ 4 bar

AIR SUPPLY

FLUXING TEST

Air blow-by with accelerator throttle in closed position (Solex flow meter)	280 ± 10 Scale "N"

TURBINE IMPELLER CLEARANCE

End float	0.013 ÷ 0.081 mm
Radial clearance	0.076 ÷ 0.145 mm

WASTE-GATE OVERPRESSURE VALVE SETTING

Control pressure	Corresponding actuator stroke
0.55 ÷ 0.61 bar	1 mm
0.64 ÷ 0.75 bar	4 mm

CHECKING EMISSION AT THE EXHAUST

CO at exhaust	% vol.	≤ 0.5
HC at exhaust	p.p.m.	≤ 50

SENSORS

RPM AND TIMING SENSOR GAP

0.5 ÷ 1.5 mm

cardiagn.com

COOLING SYSTEM

THERMOSTAT

Temperature at start of opening	83 ± 2°C

COOLING FAN THERMAL CONTACT

Fan cut-in/cut-out temperature		
1st speed	Cut-in (contacts closed)	92 ± 2°C
	Cut-out (contacts open)	87 ± 2°C
2nd speed	Cut-in (contacts closed)	97 ± 2°C
	Cut-out (contacts open)	92 ± 2°C

MAXIMUM COOLANT TEMPERATURE SENDER

Conctact closing temperature	115 ± 3°C
Contact opening temperature	≥ 102°C

cardiagn.com

CLUTCH

Clutch disk thickness	New	7.1 ÷ 7.7 mm
	Worn to minimum	6.3 mm
Clutch disk diameter		235 mm

GEARBOX

RATIOS

Axle ratio	Gear engaged	Gear ratio	Total ratio
17/57 1 : 3.353	1^ 2^ 3^ 4^ 5^ RM	1 : 3.800 1 : 2.235 1 : 1.520 1 : 1.156 1 : 0.914 1 : 3.545	1 : 12.471 1 : 7.494 1 : 5.100 1 : 3.876 1 : 3.065 1 : 11.886

DIFFERENTIAL

Bearings pre-load (discharged) = 0.12 mm

NOTE: The bearings preload adjustment is obtained with spare rings having a thickness ranging from 1.70 mm to 2.60 mm in steps of 0.05 mm.

Crown wheel - side pinion clearance = 0.07 ÷ 0.20 mm

BRAKES

BRAKE DISK

		FRONT	REAR
Diameter	(mm)	284	240
Minimum thickness for use	(mm)	20.2	9.2
Minimum thickness after grinding	(mm)	21.9	10.1
Nominal thickness	(mm)	22.1	11

BRAKES PUMP

Type	ISOVAC
Diameter	15/16" (23.8 mm)
Stroke	9/16" (14 + 14 mm)

cardiagn.com

BRAKES SERVO

Type	ISOVAC
Working cylinder diameter	7" + 8" (17.8 + 20.3 cm)

FRONT BRAKE CALIPERS

Type	LUCAS
Piston diameter	54 mm
Brake shoes area	50 cm^2
Shoe nominal thickness	18.3 ± 0.2 mm

REAR BRAKE CALIPERS

Type	LUCAS
Piston diameter	34 mm
Brake shoes area	21 cm^2
Shoe nominal thickness	14 ÷ 14.4 mm

BRAKE SHOES

	FRONT	REAR
Minimum thickness for use of friction gasket	1.5 mm (Indicated by brake pad wear sensor)	1.5 mm

INDUCTIVE SENSORS AIR GAP - PHONIC WHEELS A.B.S.

Front wheels	0.3 ÷ 1.05 mm
Rear wheels	0.37 ÷ 0.9 mm

FRONT SUSPENSIONS

HELICAL SPRING

Wire diameter	12.9 mm
Free length	442 mm

SHOCK ABSORBERS

Rod diameter	22 mm
Stroke	158 mm

STABILISER BAR

Bar diameter	20 mm

cardiagn.com

REAR SUSPENSIONS

HELICOID SPRINGS

Wire diameter	13.9 mm
Free length	227 mm

SHOCK ABSORBERS

Stem diameter	39 mm
Stroke	94 mm

STABILISER

Bar diameter	18 mm

TRIM AND CHARACTERISTIC ANGLES (unladen with fluids)

Features		To '97 versions	'98 versions
Front trim (B - A)	(mm)	-37 ± 5	-48 ± 5
Rear trim (C - D)	(mm)	-77 ± 5	-77 ± 3
Front wheel toe-in (D_2 - D_1)	(mm)	-1.5 ± 0.5	-2.0 ± 1
Rear wheel toe-in (D_2 - D_1)	(mm)	+2.5 ± 0.5	+3.0 ± 1
Front wheel camber (α)		-0°40' ± 20'	-0°56' ± 20'
Caster (β)		3°10' ± 30'	2°54' ± 30'
Rear wheel camber (γ)		-1°8' ± 20'	-1°14' ± 20'

STEERING

Steering circle	10.8 m
Steering wheel turns (end to end)	2.23

cardiagn.com

THREE-LEVEL (TRINARY) PRESSURE SWITCH CALIBRATION

1. Level	contact open	2.45 ± 0.25 bar
	contact closed	2.85 ± 0.50 bar
2. Level	contact closed	15.2 ± 0.98 bar
	contact open	11.28 ± 1.99 bar
3. Level	contact open	25 ÷ 30 bar
	contact closed	17 ÷ 26 bar

COMPRESSOR

Make		SANDEN
Type		SD7 V16
Cylinder diameter		29.3 mm
Stroke	min.	2.2 mm
	max.	34.2 mm
Theoretic capacity	min.	10.4 cm^3 at tour
	max.	161.3 cm^3 at tour
Cylinders number		7
Rotation direction		clockwise
Max. continuous running		6000 rpm
Oil quantity ("PAG" SP10 or equivalent)		240 ± 15 cm^3
Electromagnetic coupling working voltage		12 V
Electromagnetic coupling min. insertion voltage		7.5 V
Power absorbed from electromagnetic coupling		48 W

cardiagn.com

IGNITION SYSTEM

SPARK PLUGS

Type	GOLDEN LODGE 25HL

STARTING

STARTER MOTOR

Nominal voltage		(V)	12
Nominal power rating		(kW)	Not available at time of going to press
Test under load	Voltage	(V)	
	Absorption	(A)	
	Revolutions	(rpm)	
	Torque	(Nm)	
Loadless test	Voltage	(V)	
	Absorption	(A)	
	Revolutions	(rpm)	
Short circuit test	Voltage	(V)	
	Absorption	(A)	
	Torque	(Nm)	

CHARGING

BATTERY

Nominal voltage	12V
Capacity	70 A/h

ALTERNATOR

Nominal voltage	12V
Nominal current	90A
Maximum continuous speed	Not available at time of going to press
Inductor winding resistance (measured between collector rings at 20°C)	

cardiagn.com

THREE-LEVEL PRESSURE SWITCH SETTING (TRINARY)

1. Level	contact opening	2.45 ± 0.25 bar
	contact closing	2.85 ± 0.50 bar
2. Level	contact closing	15.2 ± 0.98 bar
	contact opening	11.28 ± 1.99 bar
3. Level	contact opening	25 ÷ 30 bar
	contact closing	17 ÷ 26 bar

COMPRESSOR

Brand		SANDEN
Type		SD7 V16
Cylinder bore		29.3 mm
Stroke	min.	2.2 mm
	max.	34.2 mm
Theoretic capacity	min.	10.4 cm^3 per turn
	max.	161.3 cm^3 per turn
Number of cylinders		7
Direction of rotation		clockwise
Max. continuous speed		6000 rpm
Quantity of oil ("PAG" SP10 or equivalent)		240 ± 15 cm^3
Electromagnetic joint operating voltage		12 V
Minimum electromagnetic joint cut-in voltage		7.5 V
Power absorbed by electromagnetic joint		48 W

cardiagn.com

NOTE: For the tightening torques of the groups not mentioned here, refer to those for the engine 2959 V6

Group 00 - Engine maintenance

Part	Nm	kgm
Cylinder head cover fastening screws	9 ÷ 11	0.9 ÷ 1.1
Nut fastening camshaft pulley support hubs	97 ÷ 117	9.9 ÷ 11.9
Nuts fastening camshaft caps (1)	16 ÷ 18	1.6 ÷ 1.8
Nuts fastening timing belt tensioner	19 ÷ 23	1.9 ÷ 2.3
Fuel filter inlet union	30 ÷ 37	3.1 ÷ 3.8
Fuel filter outlet union	21 ÷ 26	2.1 ÷ 2.7
Spark plugs	25 ÷ 34	2.5 ÷ 3.5

(1): Lubricate with engine oil

Group 10 - Engine Removing/Refitting

Part		Nm	kgm
Power steering pump outlet pipe fitting		46 ÷ 50	4.7 ÷ 5.1
Screw fastening flange for turbocharger coolant inlet & outlet pipes		22 ÷ 24	2.2 ÷ 2.4
Axle shaft fastening bolts		40 ÷ 52	4.1 ÷ 5.3
Bolts fastening wishbones to wheel uprights		67 ÷ 74	6.8 ÷ 7.5
Screws fastening rear power unit support to gearbox		102 ÷ 126	10.4 ÷ 12.8
Rear screws fastening suspension crossmember to the body	Two side screws	93 ÷ 113	9.4 ÷ 11.5
	Four central	76 ÷ 94	7.7 ÷ 9.6
Side screws fastening suspension crossmember to the body		92 ÷ 113	9.4 ÷ 11.5
Screws fastening power steering box to suspension crossmember		43 ÷ 47	4.4 ÷ 4.8
Screws fastening gearbox side power unit support to gearbox		47 ÷ 57	4.8 ÷ 5.8
Screws fastening starter motor		18 ÷ 22	1.8 ÷ 2.2
Rpm and timing sensor fastening screw		8	0.8
Screw fastening gearbox side power unit support to flexible mount		75 ÷ 92	7.6 ÷ 9.4
Dash pot		10 ÷ 16	1 ÷ 1.6
Screws fastening throttle potentiometer		2 ÷ 4	0.2 ÷ 0.4
Lambda sensor		50 ÷ 60	5.1 ÷ 6.1
Engine coolant fluid temperature sensor (NTC)		30	2.9
Screws fastening pinging sensor		20	2
Cylinder head tightening			
Set all the screws to a torque of:	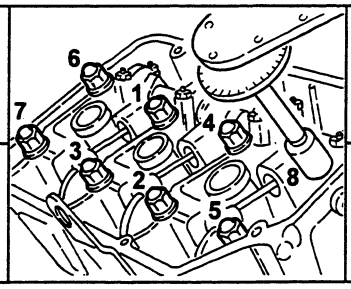	25	2.5
Turn all the screws an angle of:		240° ± 1°30'	

cardiagn.com

Group 10 - Engine overhauling

Part	Nm	kgm
Nuts fastening main bearing caps to supports on crankcase (1)	84 ÷ 93	8.6 ÷ 9.5
Main bearing cap locknuts	20 ÷ 25	2 ÷ 2.5
Screws fastening flywheel to crankshaft (with fixer)	113	11.5
Nut fastening crankshaft front pulley (1)	235	24
Screws fastening connecting rod caps (1)	53 ÷ 59	5.4 ÷ 6
Screws fastening water pump casing to crankcase	8 ÷ 9	0.8 ÷ 1
Nuts fastening camshaft caps (1)	16 ÷ 18	1.6 ÷ 1.8
Nut fastening timing gear pulley support hubs	97 ÷ 117	9.9 ÷ 11.9
Spark plugs	25 ÷ 34	2.5 ÷ 3.5
Screws fastening ignition distributor cap	4 ÷ 5	0.4 ÷ 0.5
Nuts fastening ignition distributor body	18 ÷ 22	1.8 ÷ 2.2
Screws fastening ignition distributor brush	2.5 ÷ 3	0.2 ÷ 0.3
Nuts fastening exhaust ducts	25	2.5
Cylinder head tightening		
Set all the screws to a torque of: 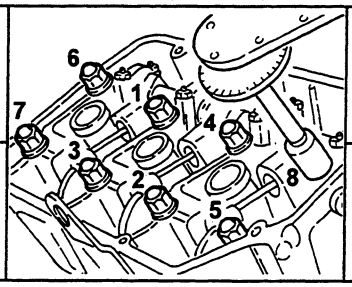	25	2.5
Turn all the screws an angle of:	240° ± 1°30'	

(1): Lubricate with engine oil

Group 55 - Electric system

Part	Nm	kgm
Screws fastening ignition distributor cap	4 ÷ 5	0.4 ÷ 0.5
Screws fastening ignition distributor brush	2.5 ÷ 3	0.2 ÷ 0.3
Nuts fastening ignition distributor body	18 ÷ 22	1.8 ÷ 2.2
Spark plugs	25 ÷ 34	2.5 ÷ 3.5
Screws fastening starter motor	18 ÷ 22	1.8 ÷ 2.2
Screw fastening gearbox side power unit support to flexible mount	75 ÷ 92	7.6 ÷ 9.4

cardiagn.com

Generalities

Special tools play an important part in vehicle maintenance, as they are essential in ensuring accurate, quick and reliable service.
It should be noted that the times of the various operations have been calculated assuming the use of these tools.

This manual lists and illustrates the special tools developed expressly by the Manufacturer for the vehicle overhauling, servicing and repair operations.
The service network can supply specific tools following the procedures already in course c/o the single Alfa Romeo Dealers.
Below, we are giving the list of the special tools used.

NOTE: For the tools of the groups not mentioned herein, refer to those for the engine 2959 V6

Group 00 - Engine maintenance

1.820.150.000 (R.9.0001)	Container for valve clearance adjustment caps
1.820.232.000	Puller tool for camshaft pulleys
1.822.016.000 (A.5.0220)	Wrench for adjusting exhaust side tappets
1.822.146.000	Support for pulley wrenches
1.822.151.000	Wrench for timing gear pulleys
1.824.018.000 (C.2.0131)	Tool for checking belt tensioning
1.824.034.000	Dial guage for checking valve caps
1.825.013.000 (C.6.0183)	Tool for checking T.D.C.
1.825.018.000 (C.6.0197)	Curved thickness guage for checking valve clearance

cardiagn.com

Group 10 - Engine overhauling

1.820.011.000 (A.2.0192)	Tool for supporting valves
1.820.012.000 (A.2.0195)	Base for cylinder head support tool
1.820.049.000 (A.2.0359)	Special nut for valve support tool
1.820.050.000 (A.2.0360)	Cylinder head support fork
1.820.115.000 (A.4.0195)	Guide for reaming oil pump drive pulley/shaft
1.820.145.000 (R.4.0178)	Engine support brackets for assembly on overhauling stand
1.820.150.000 (R.9.0001)	Container for valve adjustment caps

(CONTINUED)

(CONTINUED)

1.820.228.000	Flywheel stopper tool
1.820.232.000	Puller tool for camshaft pulleys
1.820.277.000	Graduated disk for angle torque tightening
1.820.279.000	Cylinder liner stopper
1.821.002.000 (A.3.0113)	Tool for installing seals on rear main bearing cap
1.821.005.000 (A.3.0134)	Puller tool for valve guides
1.821.006.001 (A.3.0139/0001)	Lever for removing rear main bearing cap
1.821.006.002 (A.3.0139/0002)	Fork for removing rear main bearing cap
1.821.010.000 (A.3.0178)	Tool for installing crankshaft rear oil seal
1.821.016.000 (A.3.0244)	Tool for installing valve guide oil seal
1.821.018.000 (A.3.0247)	Puller tool for valve guide oil seal
1.821.058.000 (A.3.0324)	Lever for removing/refitting valves
1.821.122.000 (A.3.0520)	Cage for removing/refitting valves
1.821.124.000 (A.3.0522)	Support for removing/refitting valves
1.821.125.000 (A.3.0524)	Tool for installing crankshaft front oil seal
1.821.126.000 (A.3.0525)	Tool for installing camshaft front oil seal
1.821.127.000 (A.3.0526)	Tool for installing intake valve guides
1.821.128.000 (A.3.0527)	Tool for installing exhaust valve guides
1.821.129.000 (A.3.0528)	Puller - installing tool bushes on oil pump pulley/drive shaft and front camshaft bush
1.822.016.000 (A.5.0220)	Wrench for adjusting exhaust side tappets
1.822.146.000	Support for pulley wrenches and wrench for oil pump drive pulley
1.822.151.000	Wrench for camshaft pulleys
1.824.034.000	Dial gauge for checking valve caps
1.825.003.000 (C.6.0148)	Tool for checking cylinder liner protrusion
1.825.013.000 (C.6.0183)	Tool for checking T.D.C.
1.825.018.000 (C.6.0197)	Curved thickness gauge for checking valve clearance

cardiagn.com

Group 10 - Engine removing/refitting

1.820.225.000	Support for removing/refitting power unit
1.820.234.000	Bracket for removing/refitting power unit
1.820.239.000	Supports for supporting engine support crossrail
1.820.277.000	Graduated disk for angle torque tightening
1.820.279.000	Cylinder liner stopper
1.820.581.000 (R.4.0194)	Engine support crossrail
1.825.013.000 (C.6.0183)	Tool for checking T.D.C.

Group 10 - Engine supply

1.820.098.000 (A.2.0471)	Tool for checking Waste-Gate overpressure valve setting
1.822.135.000	Wrench for removing locknut fastening fuel pump unit to fuel tank
1.822.159.000	Wrench for removing locknut fastening fuel level gauge to fuel tank
1.824.011.000 (C.2.0056)	Plug for flux test

cardiagn.com

MAINTENANCE OPERATIONS

The maintenance operations comprise checking and restoring the efficiency of certain parts of the vehicle on which wear and phase displacement are foreseeable after normal use.
The following table gives the list of maintenance operations to be carried out at the specified mileage intervals.

WARNINGS:
Precautions to be taken before maintenance operations. The engine compartment contains many moving parts, high temperature components and high voltage cables that can be dangerous.
Carefully follow the precautions given below:
- Turn the engine off and allow it to cool down.
Do not smoke or use naked flames. The presence of fuel can cause a fire hazard.
- Always work with a fire extinguisher handy.

Operations to have done at the mileage shown	km x 1.000									
	20	40	60	80	100	120	140	160	180	200
Change engine oil and filter (at all events once a years) and checking lubrication circuit for leaks	EVERY 10.000 km									
Checking valves clearance (except engines with hydraulic tappets)		●		●		●		●		●
Changing timing belts						●				
Checking conditions of trapezoidal belts		●		●		●		●		●
Checking conditions of Poly V belts				●				●		
Changing air cleaner cartridge		●		●		●		●		●
Changing fuel filter cartridge				●				●		
Checking operation of exhaust gas oxygen sensor (lambda probe)				●				●		
Changing spark plugs	●	●	●	●	●	●	●	●	●	●
Changing anti-freeze mixture				●				●		
Checking level of gearbox and differential oil				●				●		
Checking conditions of protective bellows for axle shafts, power steering and steering knuckle caps		●		●		●		●		●
Checking brake and fuel system piping for leaks		●		●		●		●		●
Checking handbrake travel		●		●		●		●		●
Checking power steering oil level		●		●		●		●		●

cardiagn.com

IMPORTANT:

Attain to the following instructions to ensure good car operation:

Every 500 km (or when refilling) check:
- engine oil level;
- coolant level;
- brake/clutch fluid level;
- windscreen washer fluid level.

Engine oil and filter

Change/replace as scheduled, however once a year.

Air cleaner

Replace the air cleaner more frequently than scheduled if the car is normally used on dusty roads.

Brake pads

Front brake pad wear is signalled by a warning light on the instrument panel. Check the rear brake pads when replacing the front brake pads. The rear brake pads may not require immediate replacement, according to the vehicle conditions of use. In this case, check them later.

Brake/clutch fluid

Brake fluid is hygroscopic, i.e. it absorbs moisture. To prevent faulty braking, change the brake fluid every two years, regardless of the mileage.

Battery

Check the electrolyte level frequently during the summer.

Dust and/or pollen filter (where fitted)

Check the dust and/or pollen filter once a year, preferably at the beginning of summer. If the car is mainly used in cities, on motorways or on dusty roads, check the filter more frequently. The climate control system efficacy may be considerably reduced if the filter is not replaced.

Anti-freeze

We recommend topping up with Climafluid Super Permanent -40°C Alfa Romeo to preserve the protective features of the mixture.

Notes

In particular conditions of use (e.g. on roads sprinkled with ice salt and/or corrosive substances, badly surfaced roads, etc.), check the drive shaft bellows and the steering unit frequently. Furthermore, clean and lubricate joints, hinges, door locks, bonnet lock, etc.
If in an emergency fuel, lubricant and/or fluids with features not corresponding to the manufacturer's specifications are used, change the fluid and replace the filters in the circuit as soon as possible.

cardiagn.com

'98 MODELS

Operations to be performed at the indicated km	Km x 1.000								
	20	40	60	80	100	120	140	160	180
Check tyre conditions and wear	●	●	●	●	●	●	●	●	●
Check front disc brake pad wear warning light operation	●	●	●	●	●	●	●	●	●
Check rear disc brake pad wear		●		●		●		●	
Check intactness of drive shaft bellows, power steering, joint caps and tightness of fuel and brake lines	●	●	●	●	●	●	●	●	●
Inspect conditions of: external bodywork and underbody protection (exhaust - fuel feed - brakes); rubber parts (boots - sleeves - bushings - etc.)	●	●	●	●	●	●	●	●	●
Inspect conditions of accessory drive Poly-V belt		●							●
Check tension of accessory drive belt and adjust, if required	●						●		
Check handbrake lever travel		●		●		●		●	
Check/adjust tappet clearance	●	●	●	●	●	●	●	●	●
Check exhaust emissions		●		●		●		●	
Check evaporation system operation				●				●	
Replace air cleaner cartridge		●		●		●		●	
Check fluids and top up if required (brakes, hydraulic clutch, power steering, windscreen washer, battery, engine coolant, etc.)	●	●	●	●	●	●	●	●	●
Replace timing belt and accessory drive Poly-V belt						●			
Replace spark plugs	●	●	●	●	●	●	●	●	●
Check engine control system operation (via diagnostic socket)		●		●		●		●	
Check gearbox and differential oil level				●				●	
Change engine oil and filter (*)	●	●	●	●	●	●	●	●	●
Change brake fluid (or every 24 months)			●			●			●
Check dust/pollen filter	●	●	●	●	●	●	●	●	●

(*): Or every 18 months for lower mileage.

cardiagn.com

IMPORTANT:
Perfect operation and long working life of a car is strictly related to its good use and, above all, to the care with which regular service is performed. Considering product evolution, new service schedules have been adopted. The scheduled service coupons are planned at 20,000 km. It is, however, important to note that the car requires ordinary precautions, such as systematic fluid checks and topping up, tyre pressure checks, etc. In any case, remember that the correct car maintenance is certainly the best way to ensure performance, safety, environmental friendliness and low running costs in time.

Additional operations
The following precautions are required in addition to the operations shown in the Service Schedule to ensure good operation of the car:
Every 1000 km or before long trips, check and top up if required:
- engine oil
- engine coolant
- brake/clutch fluid
- power steering fluid
- battery electrolyte
- tyre pressure
- windscreen washer fluid.

Engine oil
If the car is mainly used in one of the following especially demanding conditions:
- towing trailers
- dusty roads
- short, repeated trips (less than 7-8 km) with temperature below zero degrees centigrade
- engine frequently idling or long distances at slow speed (or after a long storage period)

we recommend changing the engine oil more frequently than shown in the Service Schedule.

Air cleaner
Replace the air cleaner more frequently than prescribed if the car is mainly used on dusty roads.

Brake pads
The brake pads are subject to different use and wear, according to conditions of use and to driving style. Have the pad thickness checked at an Alfa Romeo Dealership as soon as the front brake pad warning light comes on. As the car is equipped with front brake pad wear sensors only, check the rear pads when the front pads are replaced. According to the car use, the rear brake pads may not need to be replaced immediately. We recommend in this case to check them later.

Brake/clutch fluid
Brake fluid is hygroscopic, i.e. it absorbs moisture. To prevent faulty braking, change the brake fluid every two years, regardless of the mileage (see the Service Schedule).

Battery
Check the battery charge status, preferably at the beginning of winter, to prevent the electrolyte from freezing. Perform this check more frequently if the car is mainly used for short trips or if permanent intake devices also running when the key is removed are fitted, especially those fitted after market.

Climate control system
To keep the system in perfect shape, simply turn it on every fortnight - also in winter - and run the compressor for a few minutes. Furthermore, we recommend having the system checked before the summer, when the system will be used.

Dust/pollen filter (cars with climate control only)
Have the filter checked once a year, preferably at the beginning of summer, by an Alfa Romeo Dealership. If the car is frequently used in dusty or very polluted environments, we recommend you have the filtering element checked more frequently than shown in the Service Schedule. The filter should be replaced in particular if decreased air intake into the passenger compartment is noticed.

Anti-freeze
We recommend topping up with Climafluid Super Permanent -40°C Alfa Romeo to preserve the protective features of the mixture.

Rubber hoses
The rubber hoses in the brake, power steering, fuel feed lines, etc. should be carefully checked at the frequency shown in the Service Schedule.

Wheels
Periodically and before long trips, check the pressure of each tyre, including the spare. Check pressure on cold tyres.
Periodically check that the depth of the tread complies with the minimum legal prescriptions. Periodically check that the tyres are not cut, swollen or present irregular wear. If this is so, go to an Alfa Romeo Dealership.
If a tyre is punctured, stop immediately and replace it to prevent damage to the tyre, the rim, the suspension and the steering.
The factory fitted wheels (rims and tyres) are suited to the features of the car and ensure maximum safety and comfort in all normal conditions of use. Before replacing the rims or tyre fitted on the car, check the allowed type table. However, attain to the rim-tyre coupling of the original fitting. Always fit new tyres. Avoid tyres from unknown sources.

cardiagn.com

ENGINE MAINTENANCE

ENGINE OIL AND FILTER REPLACEMENT

IMPORTANT:
Engine oil is harmful for skin: avoid contact. In the event of contact, wash the affected part with soap and water.

1. With the engine warm, remove the filler cap.
2. Remove the dipstick and check oil level.

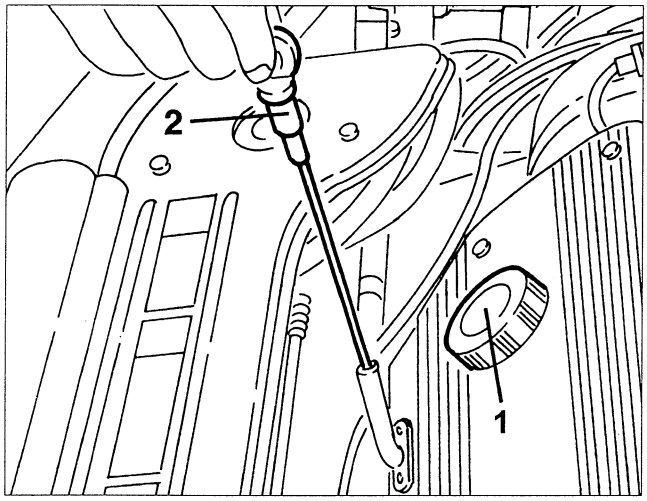

- Lift the vehicle.
1. Remove the drain cap and drain all the oil into a suitable container.

IMPORTANT:
Remove the drain cap with care: the oil could be very hot.

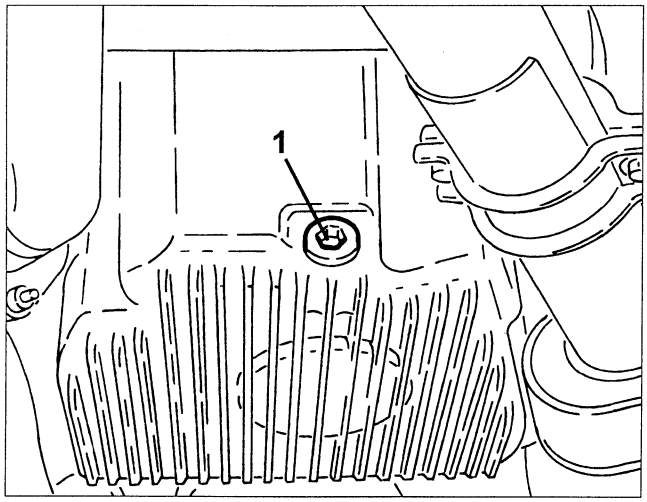

IMPORTANT:
Do not disperse oil in the environment: waste oil is a potential environmental hazard.

1. From under the vehicle, release and remove the oil filter with the specific wrench.

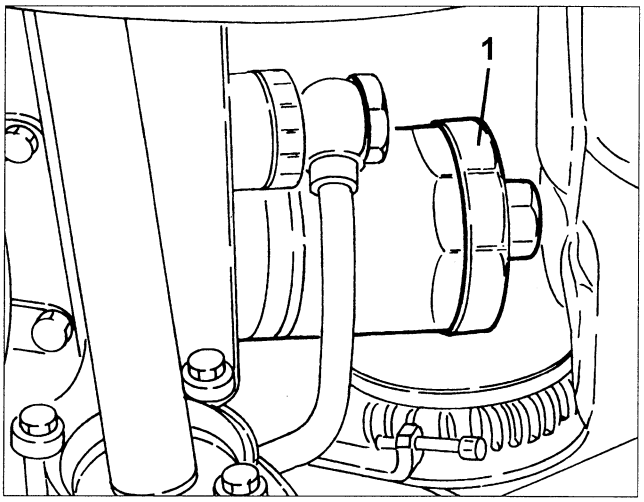

- Clean the drain cap and fasten it with its seal.
- Dampen the new filter with engine oil and fasten by hand.
- Lower the vehicle.
- Fill the engine with oil of the prescribed type and amount.
- Check the correct engine oil level with the dipstick.

IMPORTANT:
Check the level with the vehicle on level ground. The oil may evaporate excessively and lead to drops in pressure if the level exceeds the MAX notch.

- Refit the filler cap and idle the engine for approximately 2 minutes. Stop the engine and wait for a few minutes.
- Check level. Check for any leaks.

IMPORTANT:
When topping up, be very careful not to drip engine oil accidentally on the alternator ventilation fins. This could seriously damage the alternator and cause fires.

cardiagn.com

CHECKING AND ADJUSTING THE VALVE CLEARANCE

- Remove the intake box (see specific paragraph).
1. Disconnect the connection of the rpm and timing sensor.
2. Disconnect the connection of the pinging sensor.
3. Disconnect the connection of the lambda sensor.

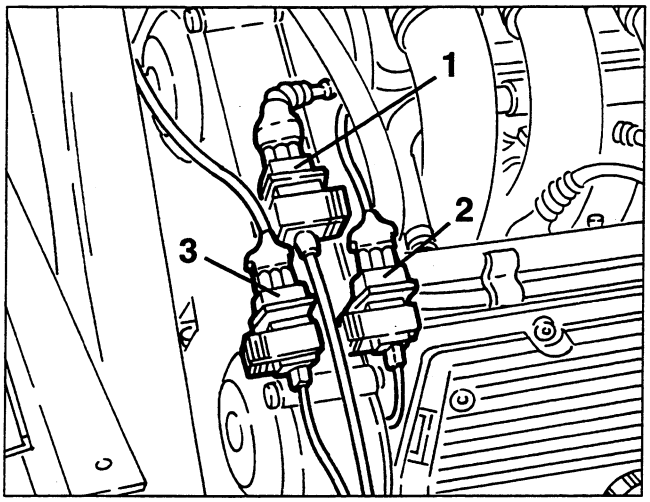

1. Slacken the fastening screws and remove the timing belt cover.

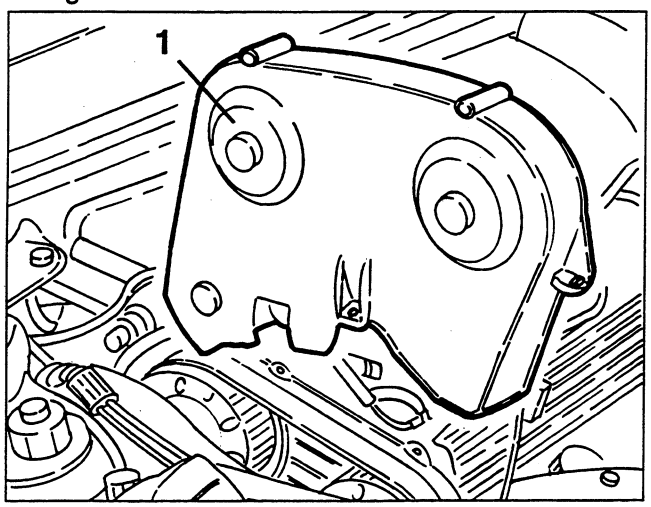

1. Remove the oil filler cap.
2. Slacken the fastening screws and remove the lefthand cylinder head cover.

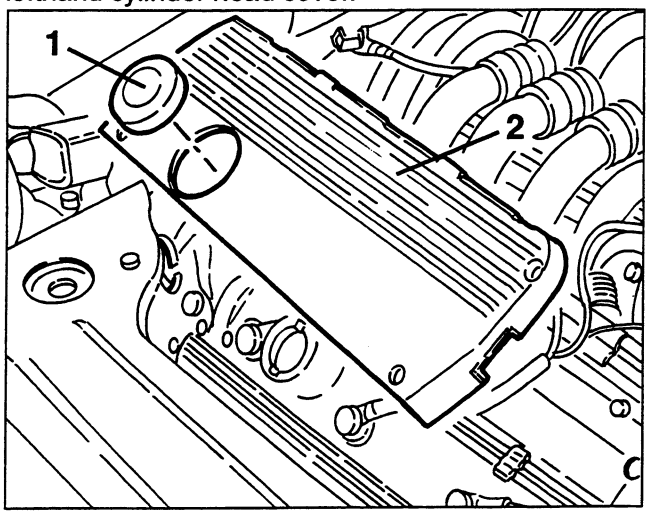

1. Slacken the fastening screws and remove the intake manifolds.
2. Disconnect the high voltage cables from the spark plugs.
3. Slacken the fastening screws and remove timing covers from the cylinder heads.

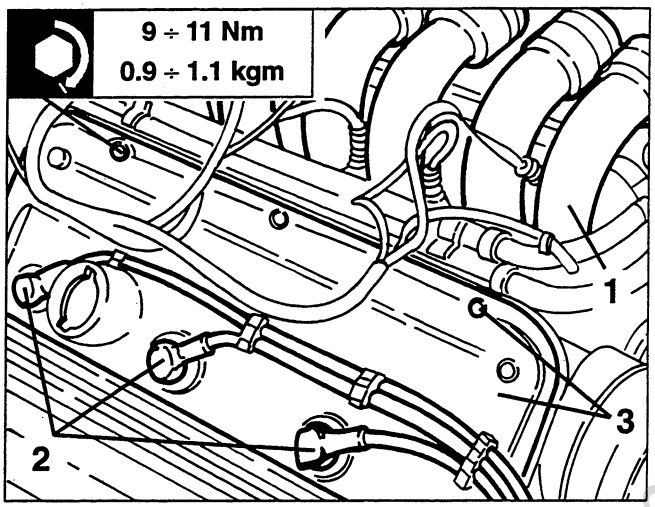

1. With the engine cold, check that the clearance between the lowered cam radius and the crown of the corresponding cups is within the specified limits.

Intake side valve clearance "Ga"	0.475 ÷ 0.500 mm
Exhaust side valve clearance "Gs"	0.275 ÷ 0.300 mm

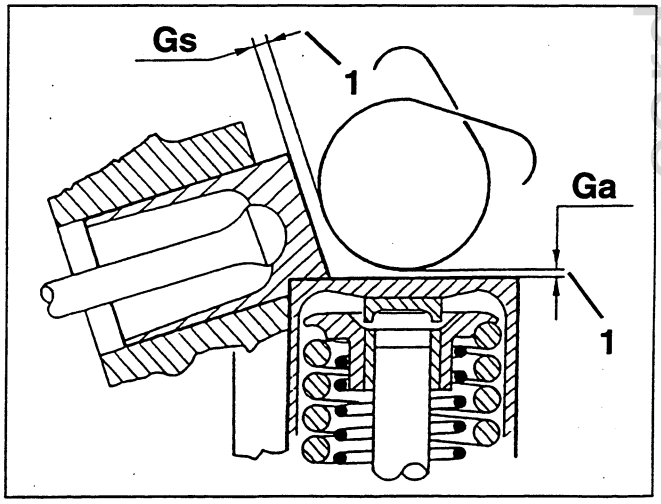

NOTE: To measure the clearance of the intake valves, use thickness gauge no. 1.825.018.000 (C.6.0197).

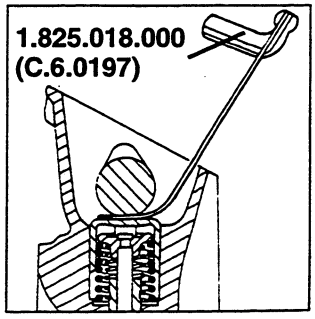

cardiagn.com

- If the valve clearance is not within the specified limits, adjust as described below.

Adjusting the intake valve clearance

- Remove the complete ignition distributor (see specific paragraph).
1. Turn the crankshaft until the notches on the camshafts are aligned with those on the corresponding caps.

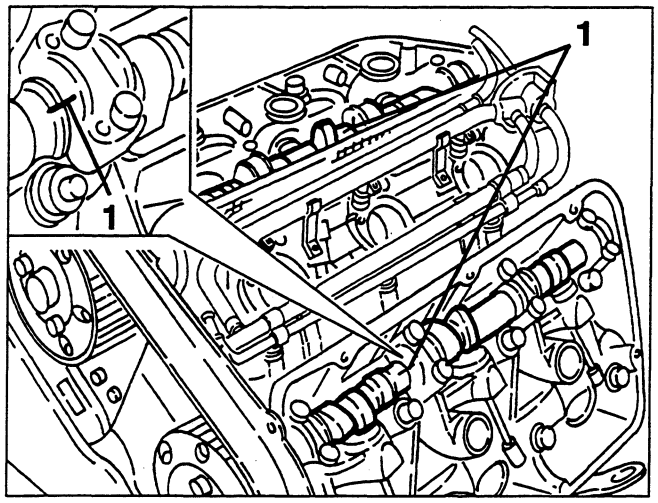

- Remove the right front wheel and mudflap.
1. Slacken the fastening screws and remove timing belt tensioner guard.
2. Check the alignment of the notch on the phonic wheel with the reference pin on the crankcase front cover.

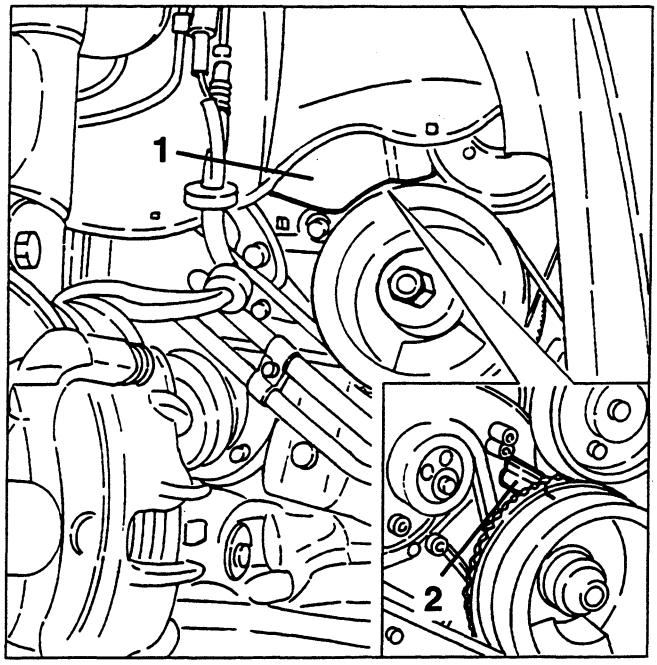

1. Slacken the screws fastening the pulley to the support hub.
2. Levering with tool no. 1.822.151.000 complete with tool no. 1.822.146.000 release and remove the hub fastening nut.

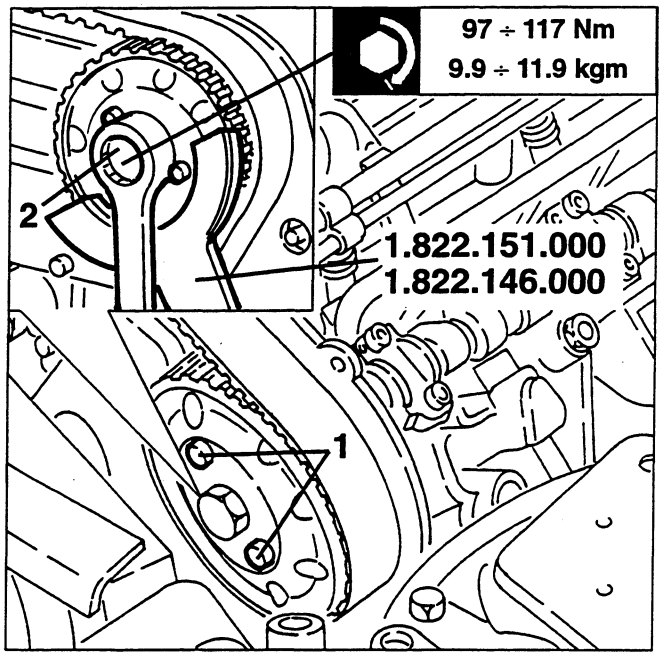

- Slacken and remove the screws fastening the timing gear pulley to the hub slackened previously.
1. Install tool no. 1.820.232.000 on the timing gear pulley tightening the three screws to the support hub.
2. Tighten the nut of tool no. 1.820.232.000 and locking the pulley with tool no. 1.822.151.000 and no. 1.822.146.000, move the pulley and hub forwards to release them from the camshaft.

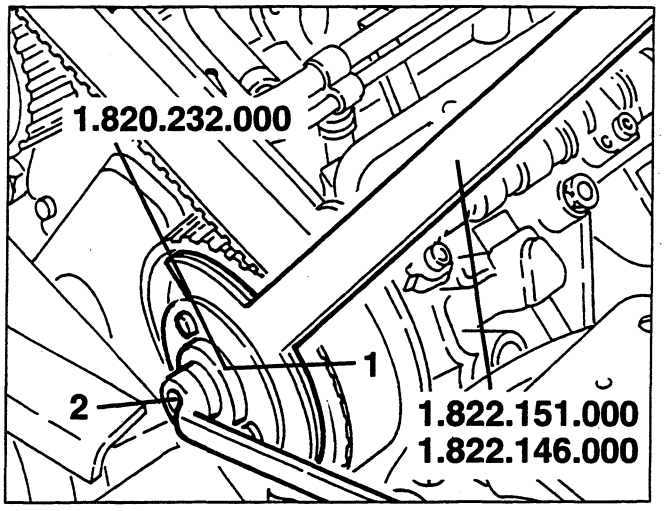

- Slacken the fastening nuts and remove the camshaft caps.

cardiagn.com

1. Remove the camshaft raising it from the rear.
2. Withdraw a cup and the corresponding valve clearance adjustment cap.

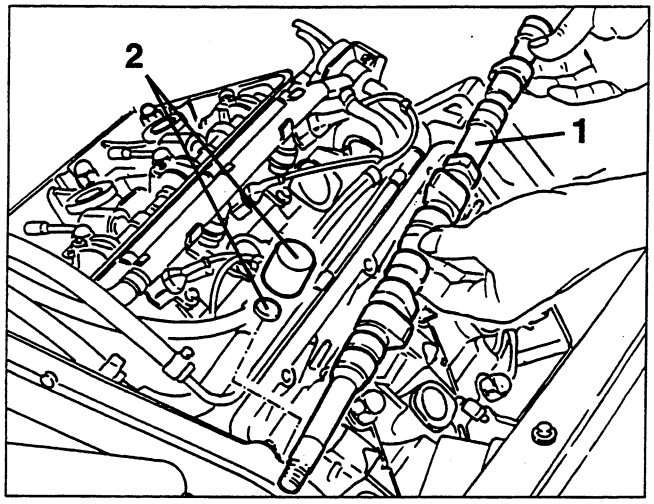

1. Measure the thickness of the caps using tool no. 1.824.034.000 then, calculating the difference against the values measured previously, choose from set no. 1.820.150.000 (R.9.0001) the suitable ones to restore the correct clearance of each valve.

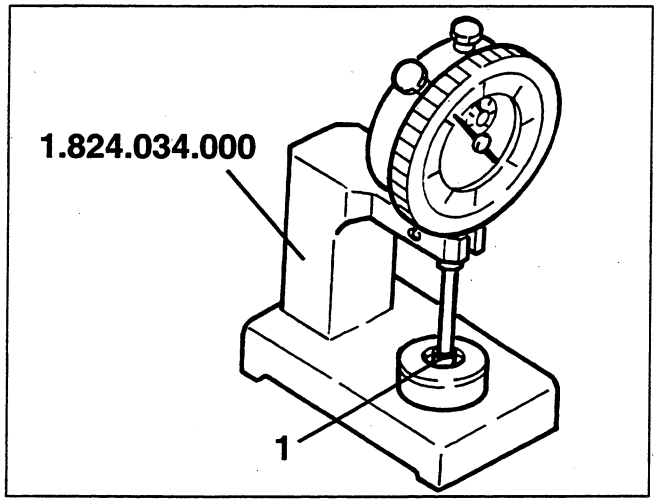

- Install the new cap and the valve cup after lubricating with engine oil.
- Do the same on the remaining pairs of cups - caps.
1. Remove the centre part of tool no. 1.820.232.000.
2. Assemble the camshaft checking from the hole of the tool that the key is positioned correctly.
- Push the camshaft drive pulley to the initial assembly position, then remove tool no. 1.820.232.000.

3. Tighten the three screws fastening the pulley and the hub fastening nut levering with tools no. 1.822.151.000 and no. 1.822.146.000.
4. Assemble the camshaft caps and tighten the fastening nuts to the specified torque.

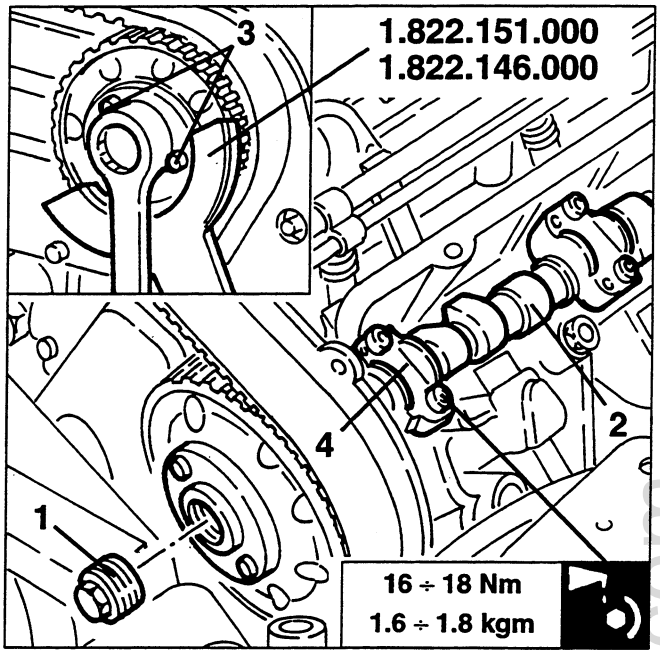

Adjusting the exhaust valve clearance

1. Using tool no. 1.822.016.000 (A.5.0220), slacken the locknut of the adjustment screw working on the intermediate lever of the tool.
2. Still using the same tool, work on the adjustment screw until reading the specified valve clearance.
- Lock the locknut and check the valve clearance again.

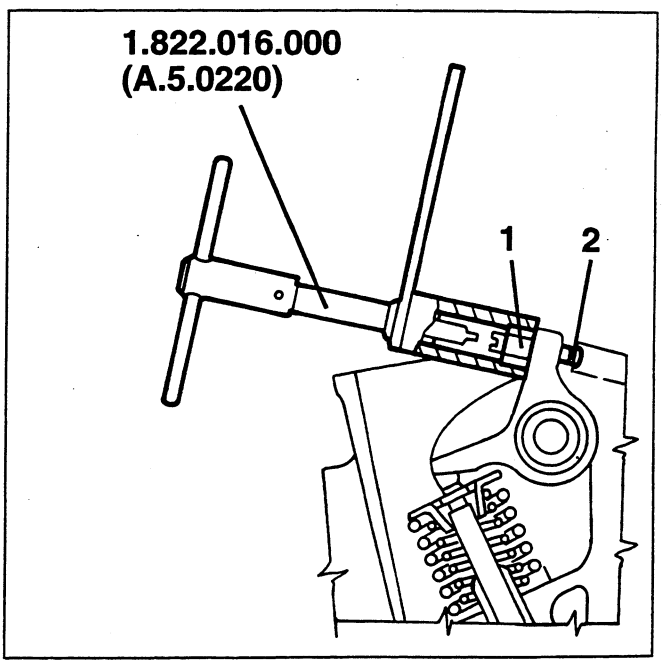

cardiagn.com

- Before re-assembly, position the camshafts correctly as follows:
1. Install tool no. 1.825.013.000 (C.6.0183), fitted with a dial gauge, in the seat of the spark plug of the first cylinder.
- Turn the crankshaft to take the piston of the 1st cylinder to the T.D.C. in the bursting stroke.
2. Check the alignment of the notches on the camshafts with those on the corresponding caps.

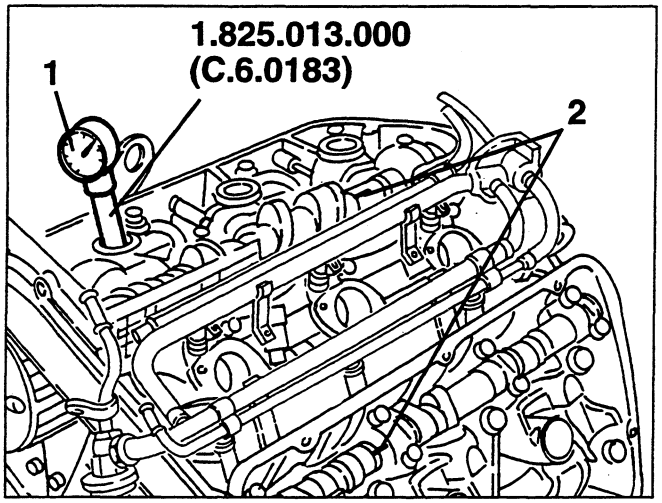

1. Check the alignment of the notch on the phonic wheel with the reference pin on the crankcase front cover.

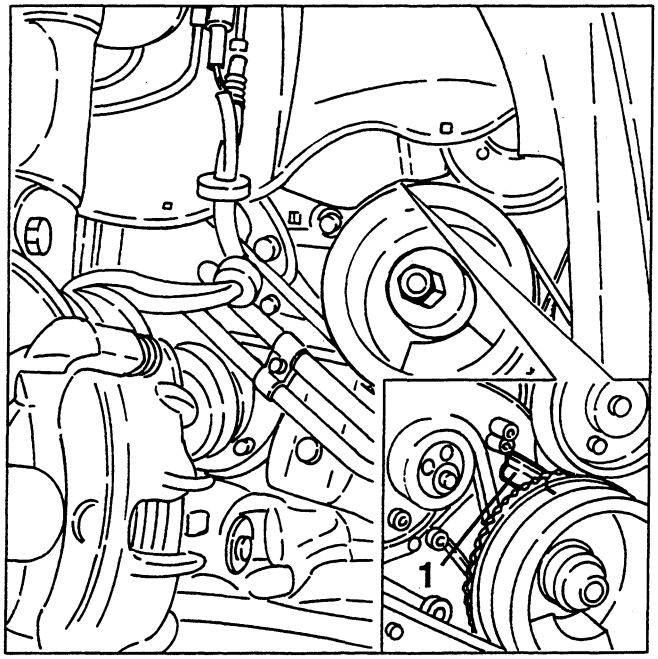

- Complete re-assembly reversing the sequence followed for removal.

CHANGING THE TIMING GEAR BELT

- Proceed as described in "CHECKING AND ADJUSTING THE VALVE CLEARANCE" up to removal of the timing gear covers from the cylinder heads.
- Remove the right front wheel and mudflap.
- Raise the car, slacken the fastening screws and remove the timing gear belt tensioner guard.
- Remove the conditioner compressor drive belt and the alternator-water pump drive belt (see specific paragraphs).
1. Slacken the fastening screws and remove the water pump pulley.
2. Slacken the two screws and remove the timing gear belt lower cover.
3. Slacken the fastening screws, then remove the rpm and timing sensor complete with support.

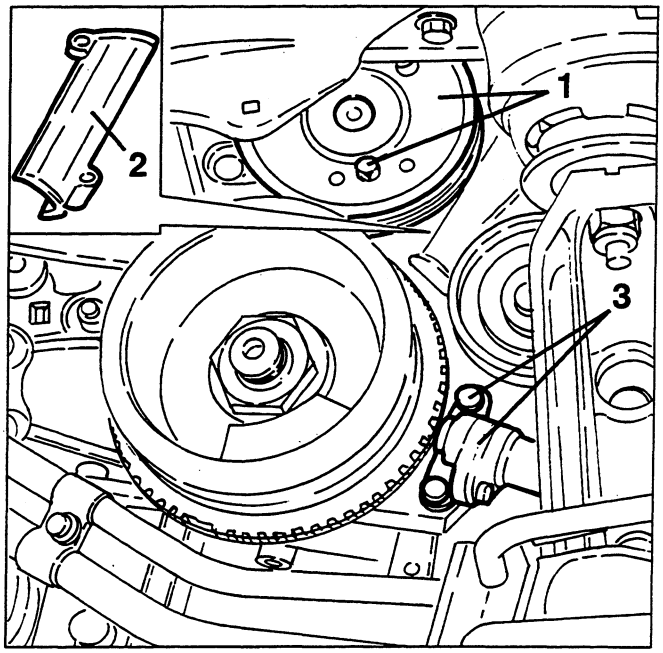

1. Lower the car and turn the crankshaft until the notches on the camshafts coincide with those on the corresponding caps.

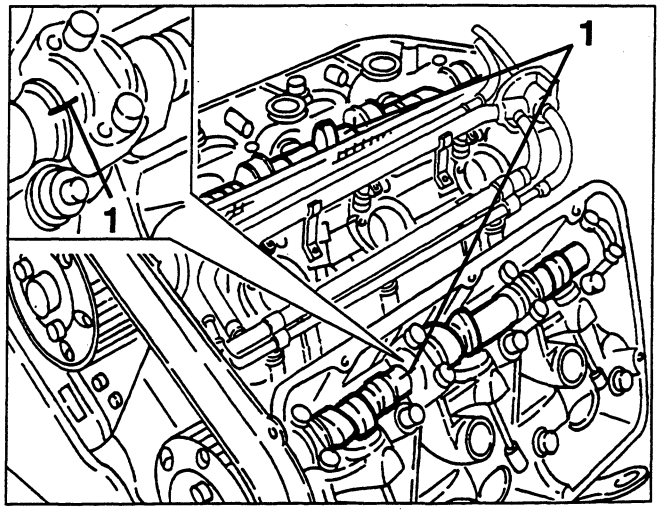

cardiagn.com

1. Slacken the fastening screws and remove the timing gear belt tensioner guard.

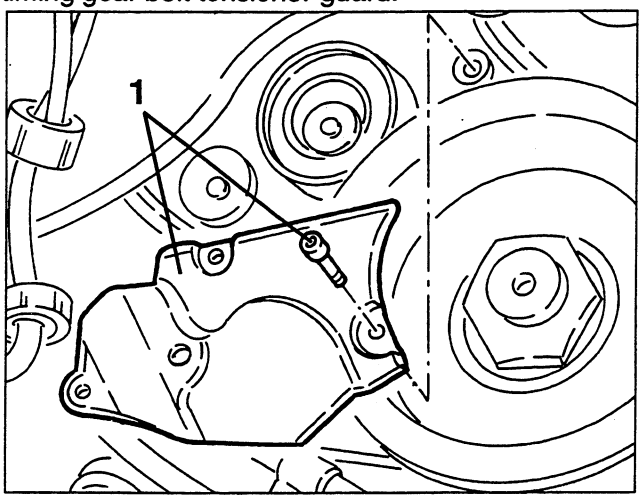

1. Raise the car and check the alignment of the notch on the phonic wheel with the reference pin on the crankcase front cover.

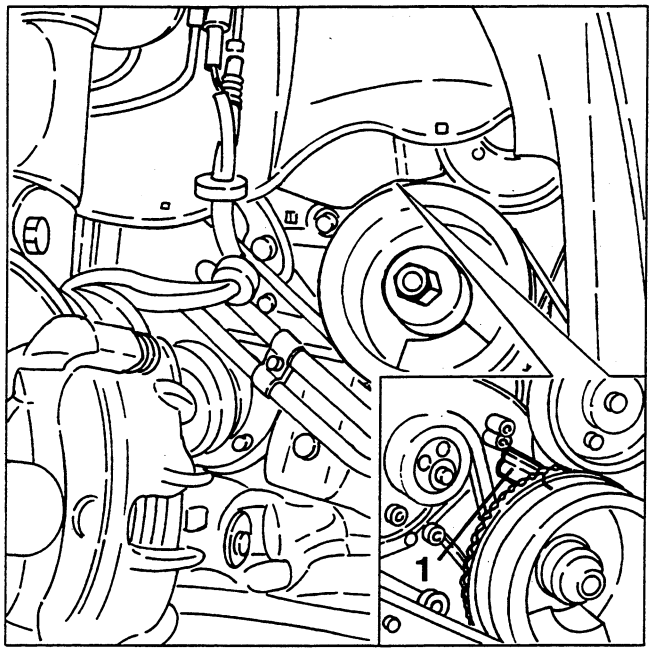

1. Slacken the two nuts fastening the timing gear belt tensioner, then position it in the slack belt position: stud "a" as illustrated, then tighten the two belt tensioner fastening nuts locking them lightly.

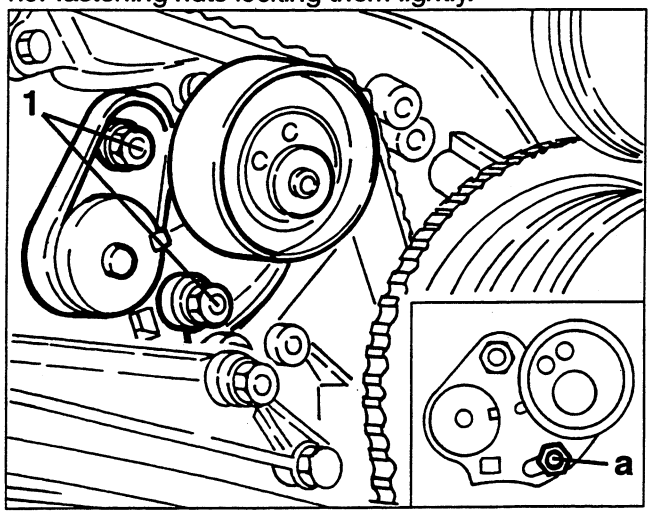

- Lower the car, then prise the timing gear belt from the pulleys.
- Raise the car and remove the timing gear belt.
- Fit a new timing gear belt on the pulleys starting from the drive pulley and continuing counter-clockwise.

1. Slacken the two belt tensioner fastening nuts.
2. Insert the 10mm square of the tensioning lever "**b**" (3/8" ratchet) in the hole of the belt tensioner, then turn it clockwise to move the pointer "**c**" by 2 ÷ 3 mm in relation to notch "**d**", then turn clockwise until they coincide, without locking the two belt tensioner fastening nuts.

- Turn the crankshaft twice in its normal direction of rotation to take the piston of cylinder 1 to the T.D.C. in the bursting stroke checking that the timing references coincide.
- Check that pointer "**c**" coincides with notch "**d**" and tighten the two belt tensioner fastening nuts to the specified torque.
- Remove the tensioning lever "**b**" from the belt tensioner.

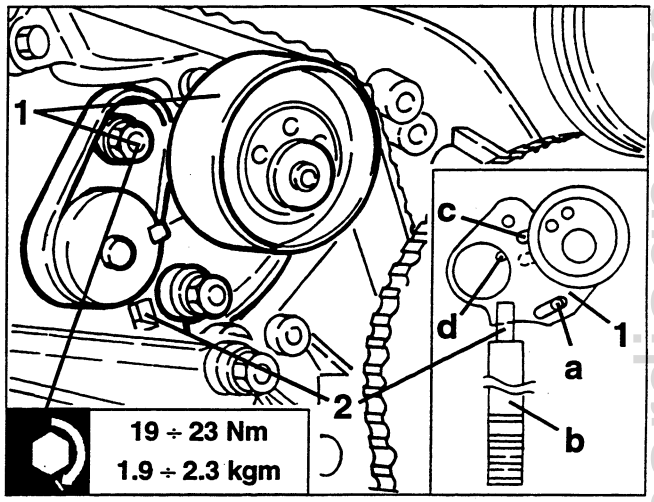

AUXILIARY COMPONENTS BELT

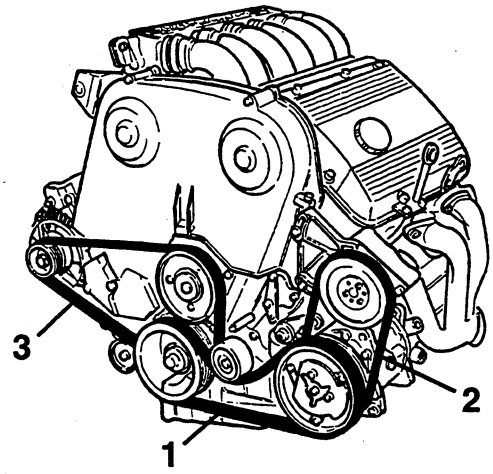

1. Conditioner compressor drive belt
2. Power steering pump drive belt
3. Alternator - water pump drive belt

cardiagn.com

When checking the tension of the belt, visually check that the belt is intact and in particular that there are no:
- cuts and cracks
- surface wear of the material (smooth and shiny)
- Dry or stiff parts (loss of grip)

If the above defects are found, change the belt.

WARNING:
The contact of the belts with oil or solvents can reduce the flexibility of the rubber thereby their grip.

Conditioner compressor drive belt

Checking and tensioning

- Set the car on a lift and raise it.

1. Working as illustrated, measure the belt tension using tool no. 1.824.018.000 (C.2.0131).

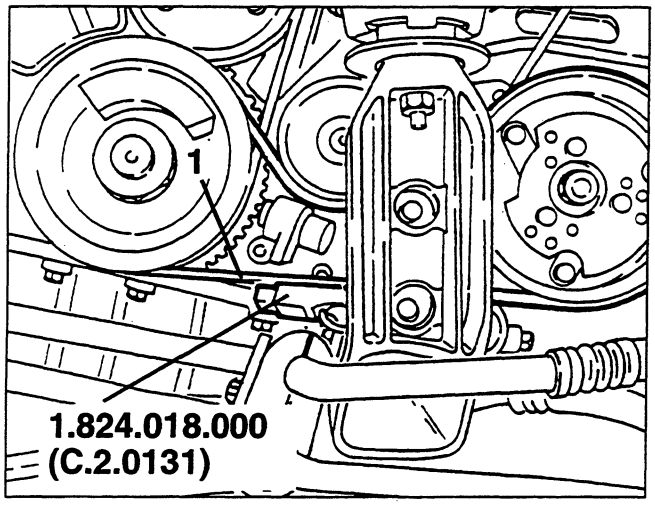

- Check that the tension values measured, with the special tool, are within the specified limits.

Tensionig the "Poly V" conditioner compressor drive belt	
At assembly	630 ÷ 800 N
Retensioning	360 ÷ 520 N

NOTE: The belt can be re-tensioned after a brief running-in period, proceeding as follows:
- take the engine to normal operating temperature;
- turn off the engine and wait for it to cool down;
- re-tension the belt to the specified value.

- If the belt tensioning is not correct proceed as follows:

1. Slacken the two screws fastening the belt tensioner guide.
2. Slacken the locknut, then work on the screw of the micrometric tensioner until obtaining the specified belt tension.

- Tighten the locknut of the micrometric tensioner and the two belt tensioner fastening screws.

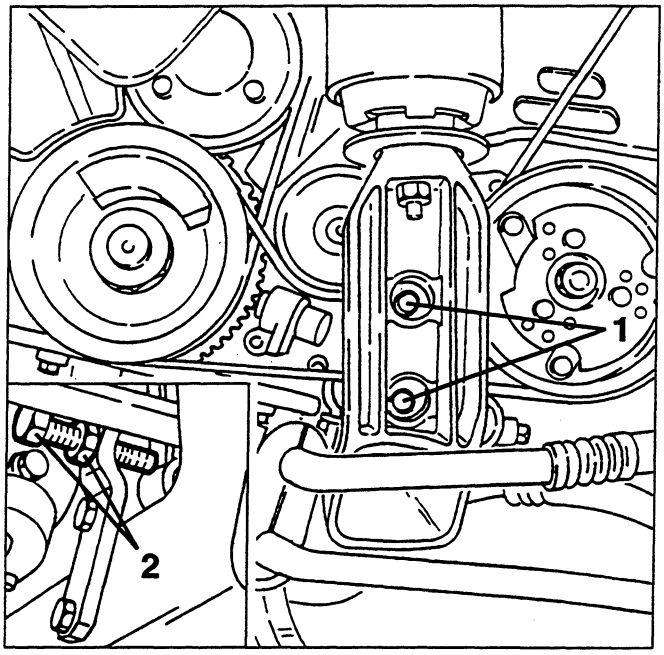

- To replace the conditioner compressor drive belt, suitably adapt the above procedure.

Power steering pump drive belt

Checking and tensioning

- Set the car on a lift and raise it.

1. Working as illustrated, measure the belt tension using tool no. 1.824.018.000 (C.2.0131).

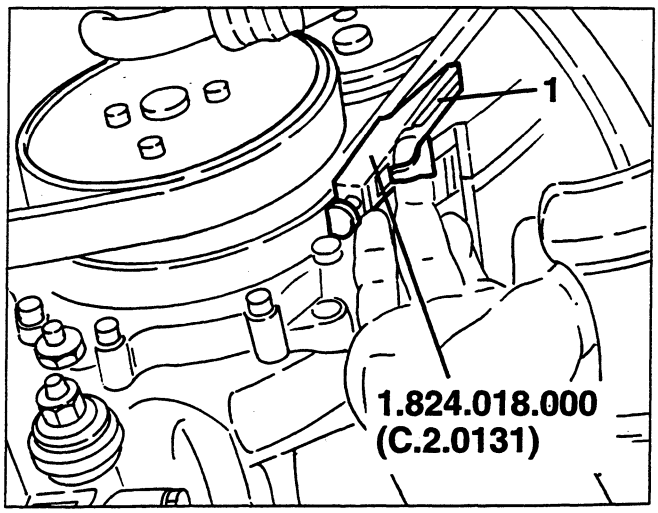

cardiagn.com

- Check that the tension values measured, with the special tool, are within the specified limits.

Tensioning the "Poly V" power steering pump drive belt	
At assembly	420 ÷ 550 N
Retensioning	240 ÷ 360 N

NOTE: The belt can be re-tensioned after a brief running-in period, proceeding as follows:
- take the engine to normal operating temperature;
- turn off the engine and wait for it to cool down;
- re-tension the belt to the specified value.

- If the belt tensioning is not correct proceed as follows:
1. Working from the engine compartment, slacken the three screws fastening the power steering pump support bracket.
2. Slacken the locknut, then work on the screw of the micrometric tensioner until obtaining the specified belt tension.
- Tighten the locknut of the micrometric tensioner and the three screws fastening the power steering pump support bracket.

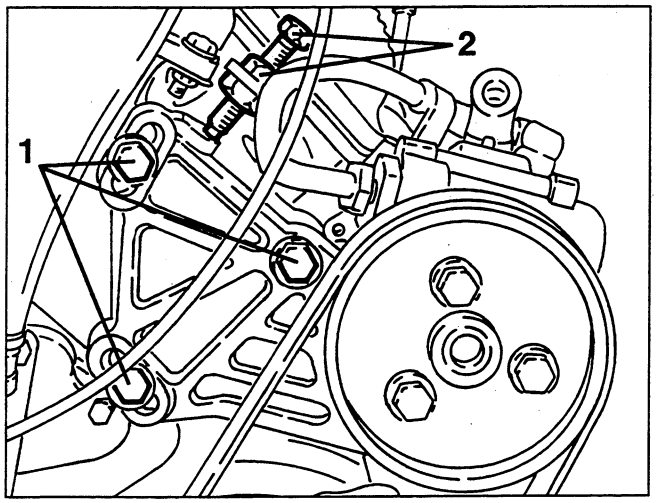

- To replace the power steering pump drive belt, suitably adapt the above procedure.

Alternator - water pump drive belt

Checking and tensioning

- Set the car on a lift and raise it.
1. Working as illustrated, measure the belt tension using tool no. 1.824.018.000 (C.2.0131).

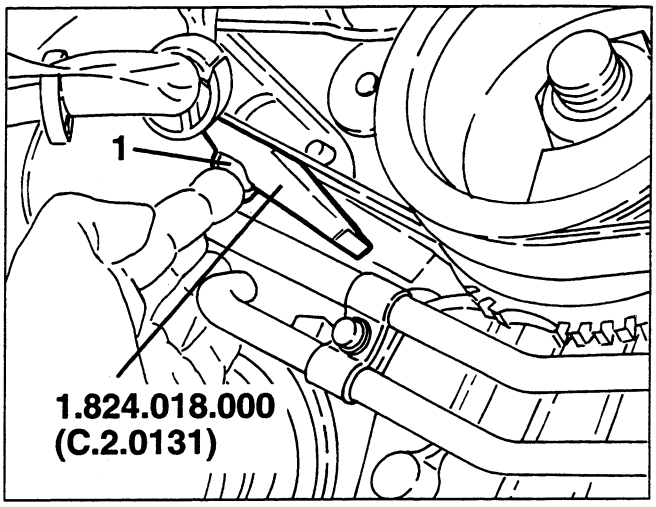

- Check that the tension values measured, with the special tool, are within the specified limits.

Tensioning the "Poly V" alternator - water pump drive belt	
At assembly	520 ÷ 670 N
Retensioning	300 ÷ 450 N

NOTE: The belt can be re-tensioned after a brief running-in period, proceeding as follows:
- take the engine to normal operating temperature;
- turn off the engine and wait for it to cool down;
- re-tension the belt to the specified value.

- If the belt tensioning is not correct proceed as follows:
1. Slacken the two bolts fastening the alternator to the support brackets.
2. Slacken the locknut, then work on the screw of the micrometric tensioner until obtaining the specified belt tension.
- Tighten the locknut of the micrometric tensioner and the two bolts fastening the alternator.

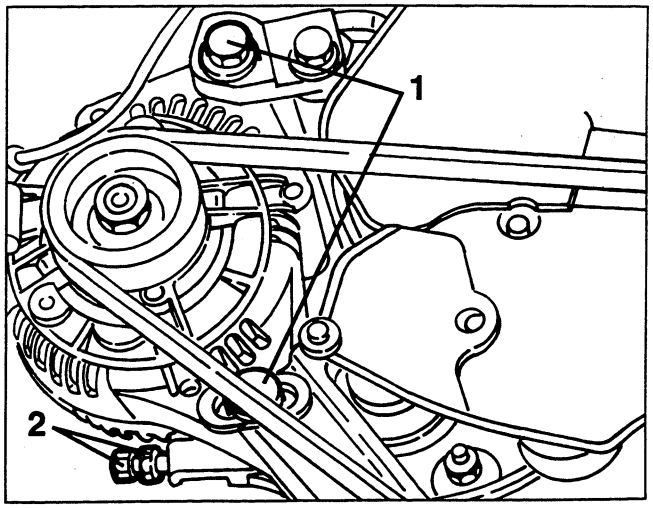

- To replace the alternator - water pump drive belt, suitably adapt the above procedure.

cardiagn.com

CHANGING THE AIR CLEANER CARTRIDGE

WARNING:
Any filter cleaning operation might damage it, thereby adversely affecting the correct operation of the engine.

1. Slacken the five screws fastening the air cleaner cover.

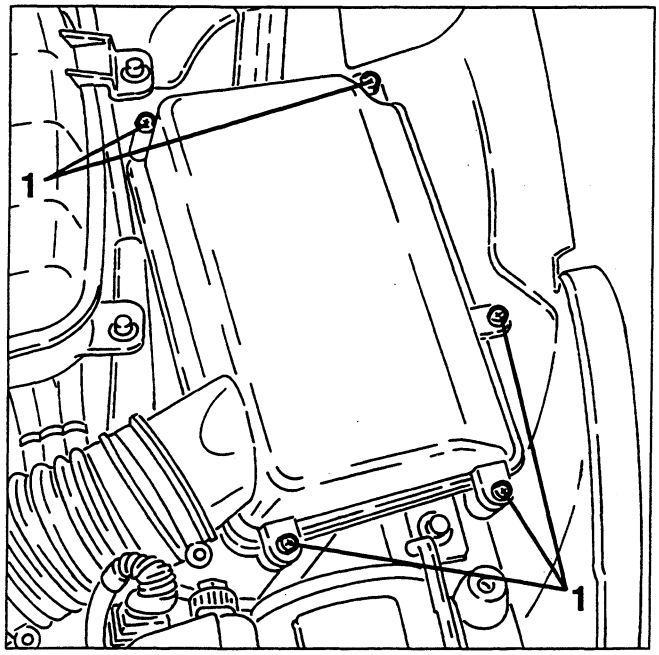

1. Raise the air cleaner cover without disconnecting the corrugated sleeve.
2. Remove the filtering element.

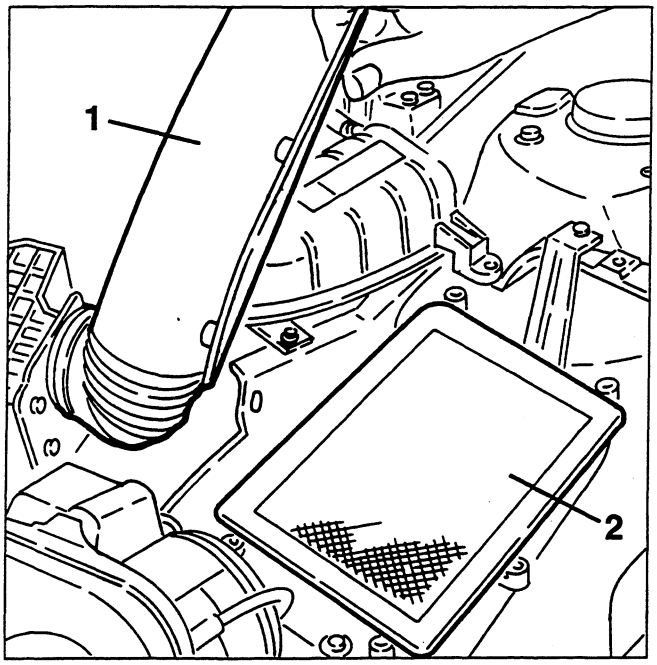

CHANGING THE FUEL FILTER

- Set the car on a lift and raise it.
1. Disconnect the fuel inlet hose connection from the filter.
2. Disconnect the fuel outlet hose connection from the filter.
3. Slacken the fastening clamp and remove the fuel filter.

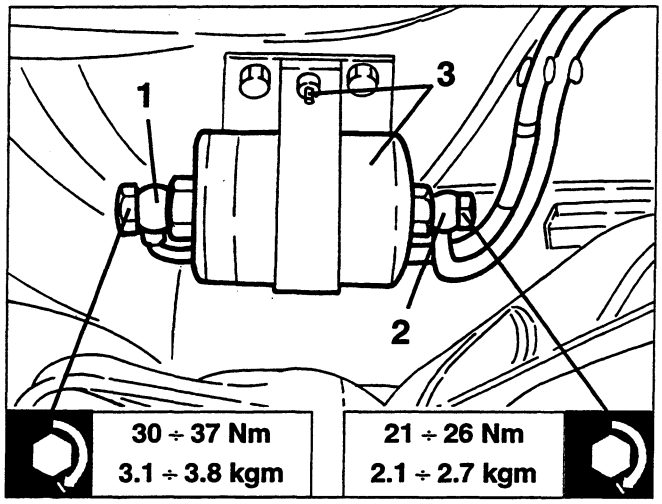

- Install the new filter reversing the sequence followed for removal and taking care to:
• change the copper gaskets of the connections;
• assemble the filter with the arrow stamped on it pointing in the direction of the flow of fuel.

CHECKING AND CHANGING SPARK PLUGS

The standard spark plugs are of the surface discharge type with four peripheral points and a centre electrode.

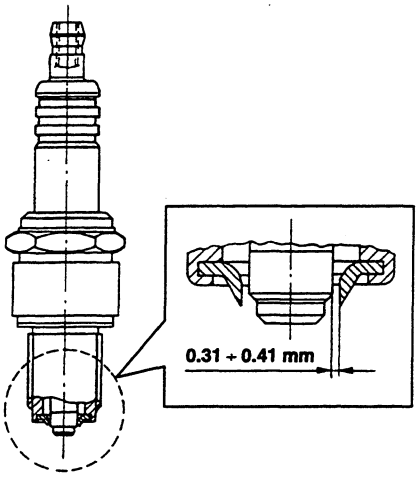

Spark plugs	Golden Lodge 25HL

cardiagn.com

- With the engine cold, remove the spark plugs, firstly blowing inside the spark plug openings to remove any impurities and traces of dirt.
- Check the spark plugs for dirt and the ceramic insulation for breaks. In this case replace the spark plugs.

WARNING: The use of spark plugs with different characteristics or sizes than those specified can cause serious damage to the engine and change the level of harmful emission at the exhaust.

WARNING: A dirty or worn out spark plug is often the sign of a failure in the engine supply system. For example:
- **Traces of carbon dust: incorrect mixture, air cleaner very dirty.**
- **Spots of oil: oil leaking from the piston rings.**
- **Formation of ash: presence of aluminium materials, contained in the oil.**
- **Burnt electrodes: overheating due to unsuitable fuel, defects in the valves.**
- **High electrode wear: harmful additives in the fuel or in the oil, pinging in the cylinder head, overheating;**
- **Etc.**

- When installing tighten the spark plugs to a torque of:

25 ÷ 34 Nm 2.5 ÷ 3.5 kgm

CHECKING THE LEVEL AND CHANGING THE ENGINE COOLANT FLUID

Checking

- With the engine cold, check that the level in the coolant in the header tank is between the MIN and MAX marks.

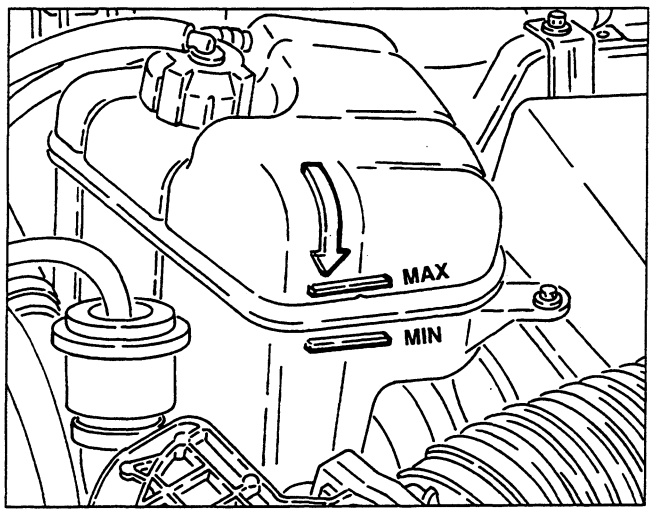

Replacement

- Set the car on a lift.
- Slacken and remove the header tank plug.

WARNING:
Absolutely never remove the header tank plug when the engine is hot!

1. Raise the car, disconnect the radiator outlet sleeve and drain the coolant into a suitable recipient.

WARNING:
The anti-freeze mixture used as coolant can harm the paintwork: therefore avoid any contact with painted components.

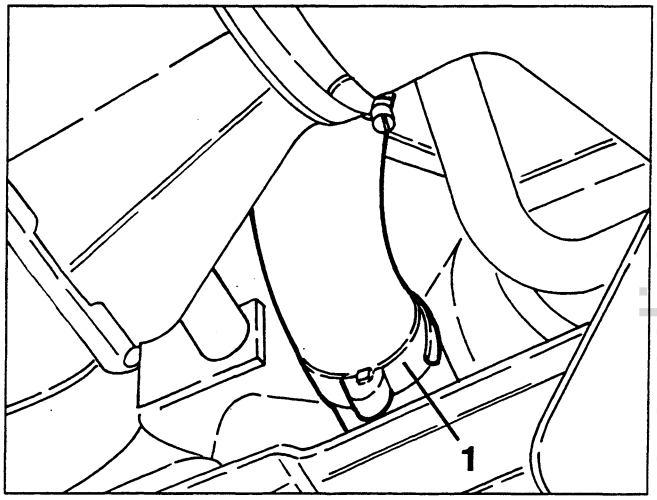

- Reconnect the sleeve to the radiator and any disconnected pipes, checking that all the clamps are firmly tightened.
- Fill the header tank to the MAX mark with fluid of the specified type and quantity.
- Start the engine and bring it to normal operating temperature so that the thermostat opens to release the amount of residual air in the circuit.
- With the engine cold, top up to the MAX mark on the header tank.
- Retighten the pressurised cap on the header tank.

WARNING:
It is unwise to mix anti-freeze fluids of different types or brands!
Never use antirust additives: they might not be compatible with the anti-freeze in use.

cardiagn.com

DESCRIPTION

The information and illustrations given below enable the rapid removal of the power unit from its housing and its subsequent refitting.

Dis-assembly of the single components on the bench is described in the volume "ENGINE OVERHAULING".
The following procedure may be used only in part according to requirements.
For further information and details, refer to the chapters concerning the components or specific groups.

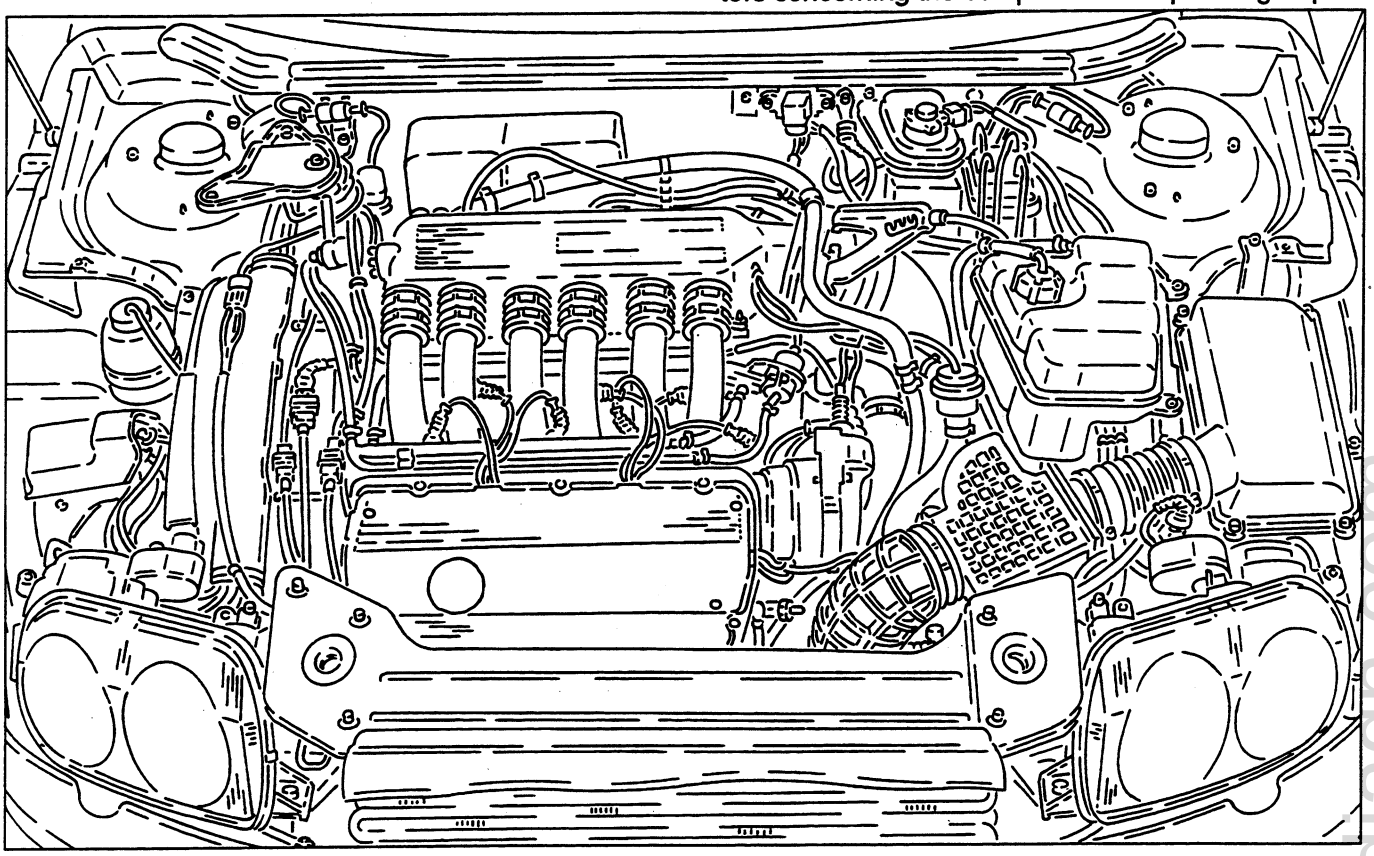

REMOVAL

- Set the car on a lift.
- Disconnect the battery (-) terminal.
- Remove the front wheels and mud flaps.
- Drain the coolant fluid (R13a) from the air conditioning system (see specific paragraph).

1. Raise the car and drain the coolant fluid into a suitable recipient disconnecting the radiator outlet sleeve.

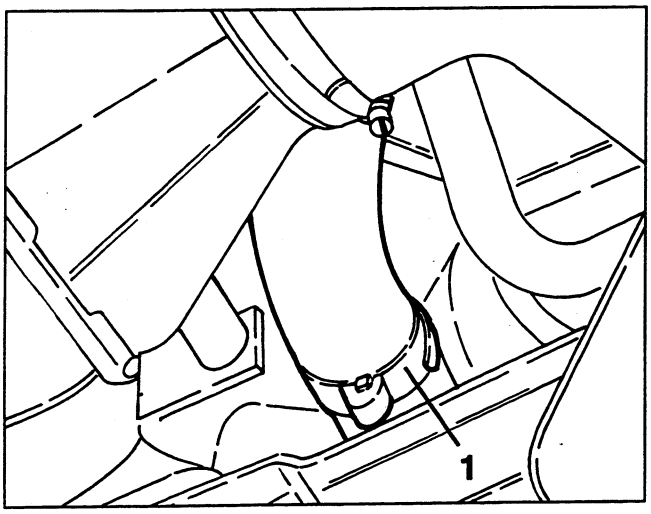

1. Lower the car, slacken the fastening screws and remove the upper radiator crossmember.
2. Disconnect and move to one side the bonnet lock opening cable.

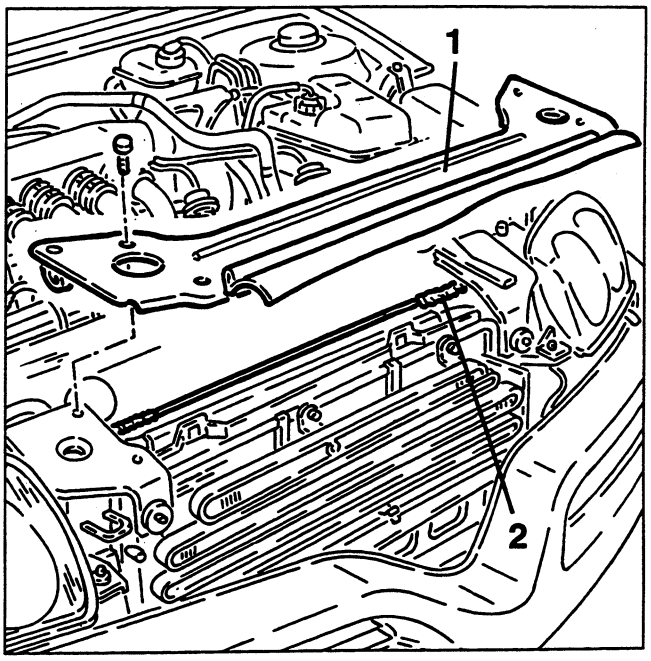

cargraph.com

1. Disconnect the electrical connections from the cooling fans.
2. Slacken the fastening screws, then move aside the cable fairing complete with electric cables.

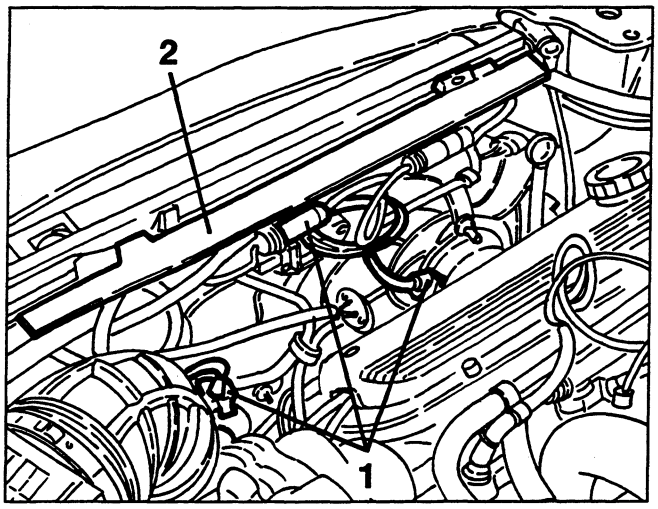

1. Withdraw and remove the cooling fans.

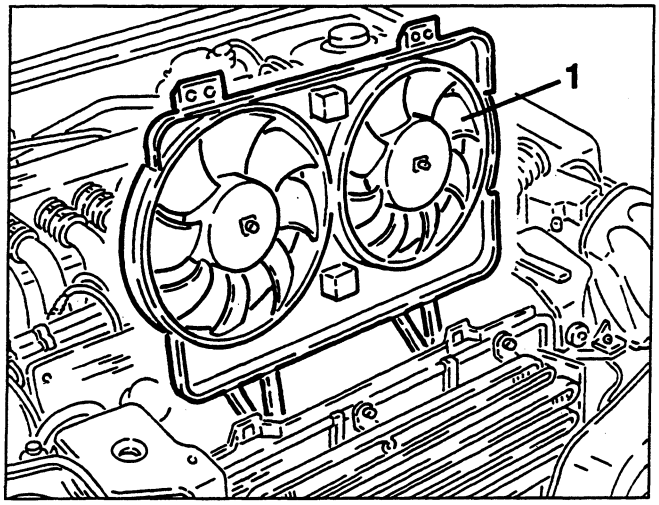

1. Slacken the fastening screws and remove the heat shield from the exhaust manifolds.

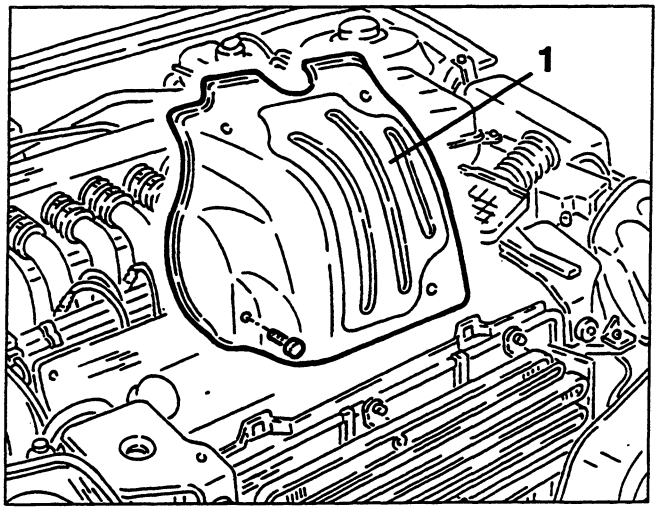

1. Disconnect the electrical connection from the air flow meter .
2. Slacken the two clamps fastening to the corrugated sleeve, then remove the air-flow meter complete with support bracket.

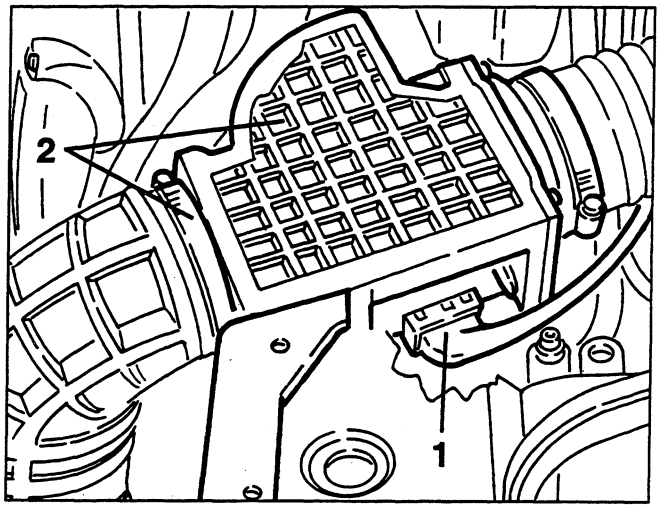

1. Disconnect the high voltage cable from the ignition coil.

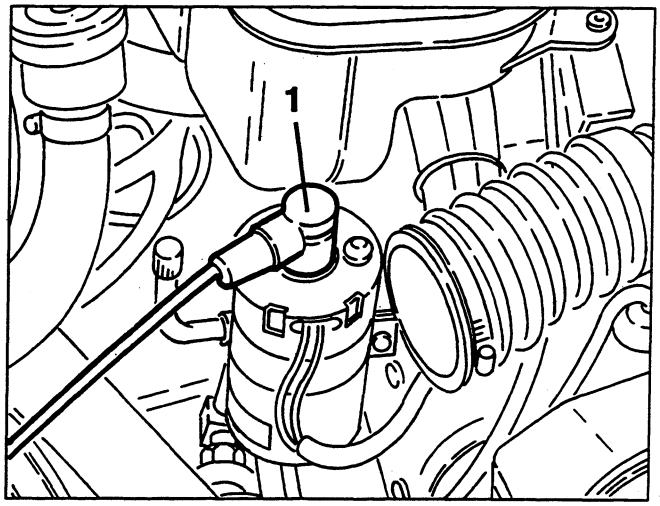

1. Disconnect the oil vapour recirculation pipe from the oil vapour separator.

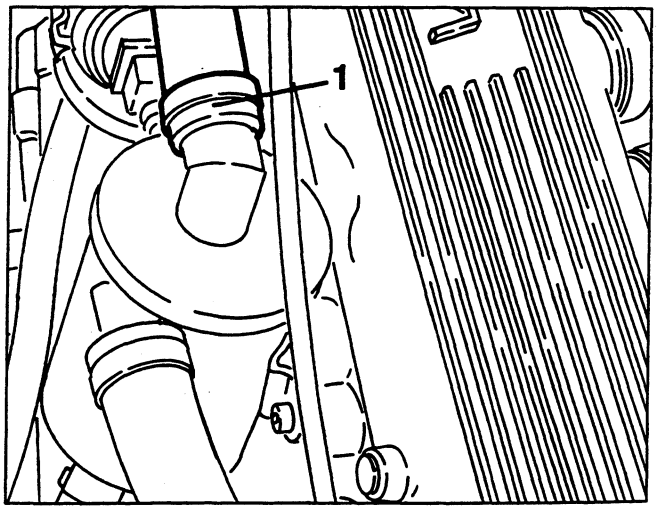

cardiagn.com

1. Disconnect the fuel vapour recirculation pipe from the corrugated sleeve.
2. Disconnect the electrical connection from the "Pierburg" solenoid valve of the supercharging control system.
3. Slacken the clamp fastening the corrugated sleeve to the turbocharger air intake elbow.
4. Disconnect the connection pipe to the "Pierburg" solenoid valve from the Waste-Gate valve control actuator.
5. Disconnect the "Pierburg" solenoid valve connection pipe from the turbocharger.

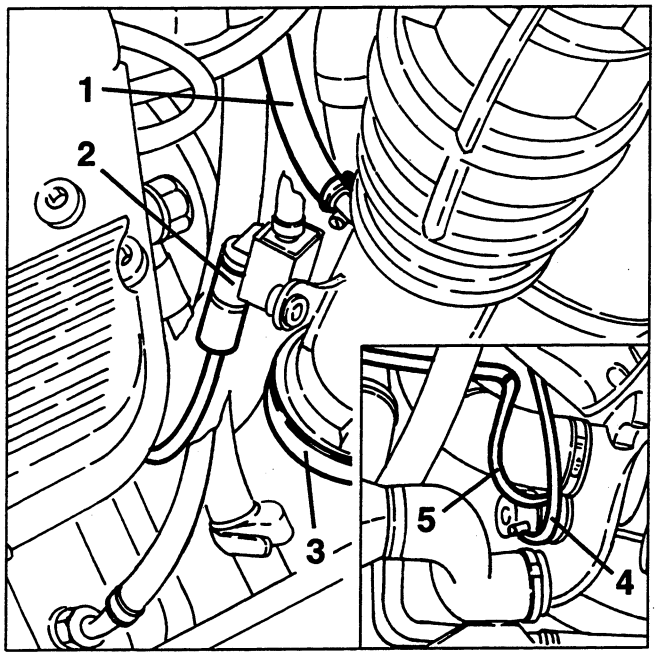

1. Disconnect the vacuum takeoff pipe for the antistalling valve from the intake box.
2. Disconnect the antistalling valve by-pass pipe from the throttle exhaust manifold.

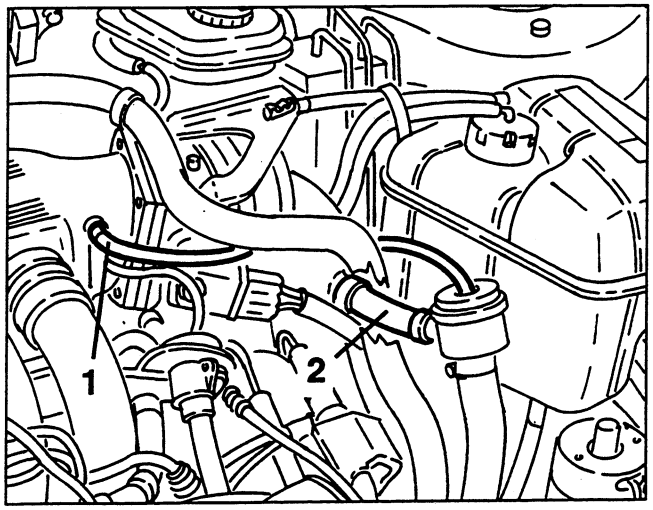

1. Remove the air intake corrugated sleeve, complete with antistalling valve, "Pierburg" solenoid valve and their connection pipes.

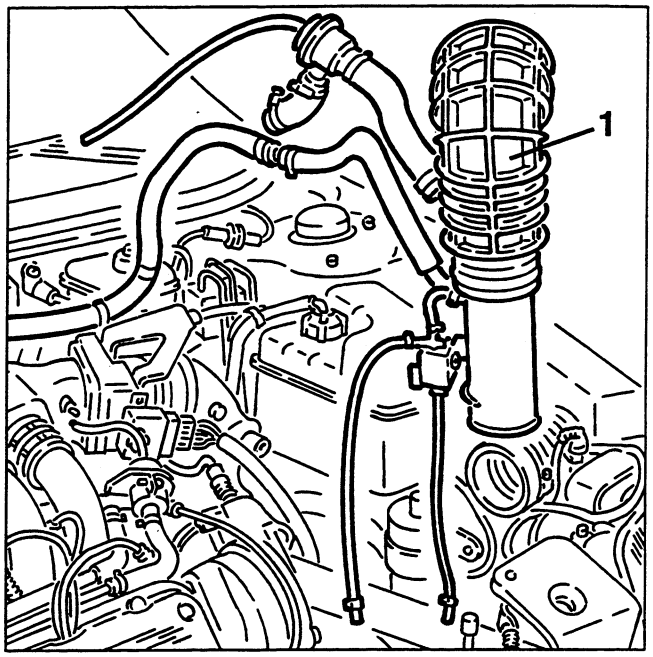

1. Disconnect the electrical connection from the throttle potentiometer.
2. Disconnect the coolant fluid delivery pipe to the radiator from the thermostatic cup.

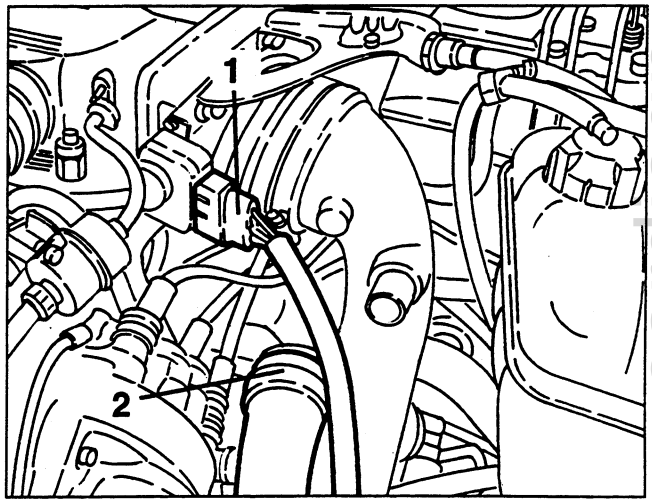

1. Disconnect the air takeoff pipe from the constant idle speed actuator.

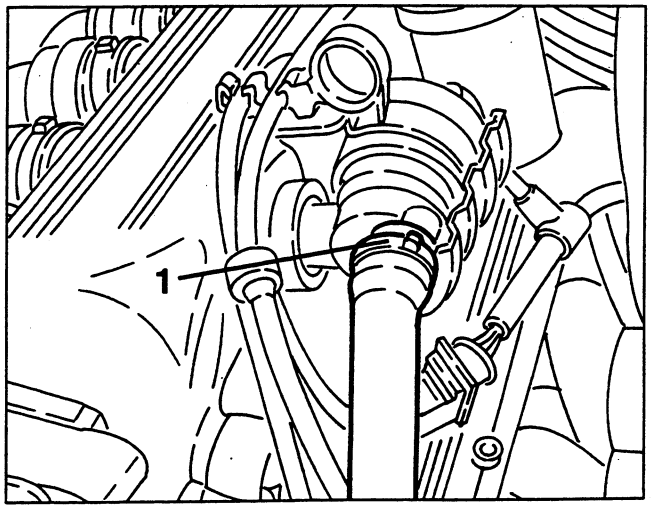

cardiagn.com

1. Slacken the two fastening clamps and remove the throttle intake manifold.

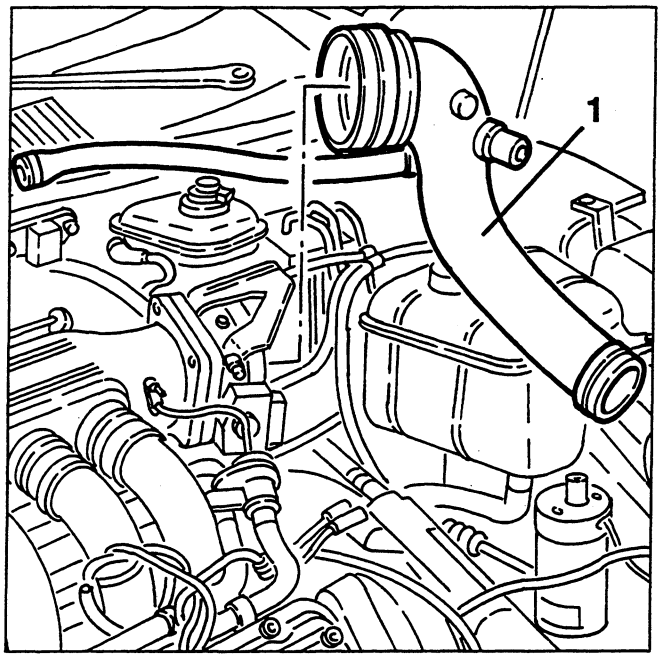

1. Disconnect the electrical connection from the engine coolant temperature sensor (NTC).
2. Disconnect the electrical connection from the engine coolant temperature gauge sender and maximum temperature warning light contact.
3. Disconnect the electrical connection from the reversing switch.

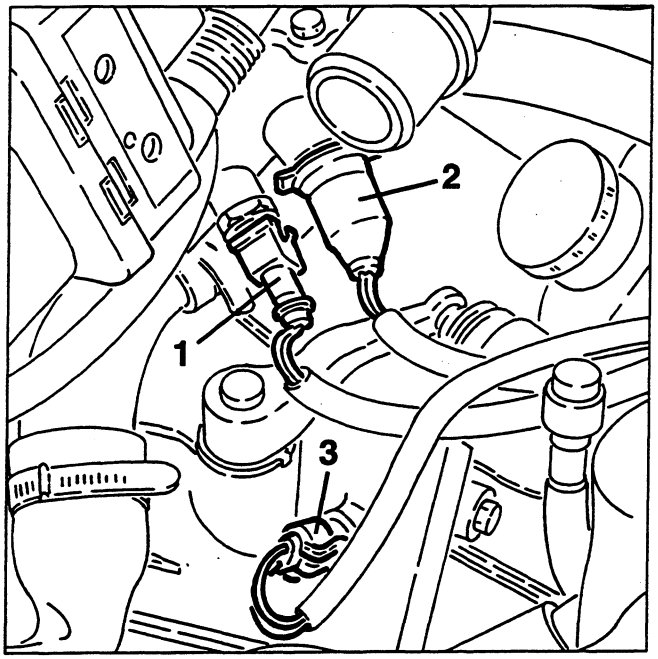

1. Disconnect the electrical connection from the constant idle speed actuator.
2. Disconnect the electrical connection of the 1st cylinder detection sensor.
3. Disconnect the servobrake vacuum takeoff pipe from the intake box.

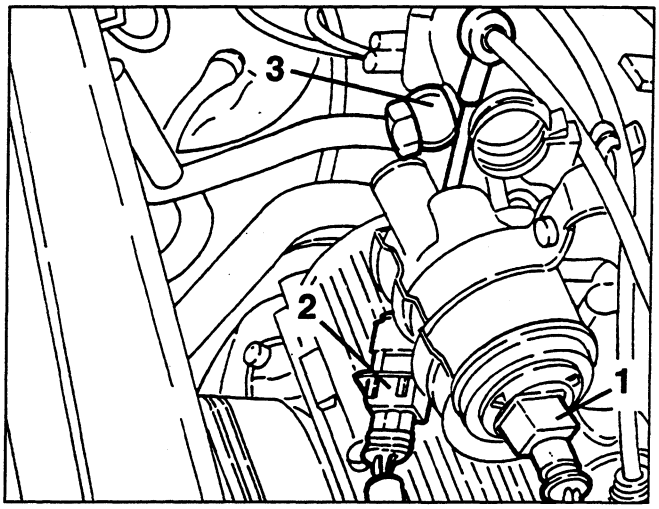

1. Disconnect the coolant delivery and return pipes to the climate control system heater from the thermostatic cup.
2. Disconnect the delivery sleeve leading from the header tank from the thermostatic cup.

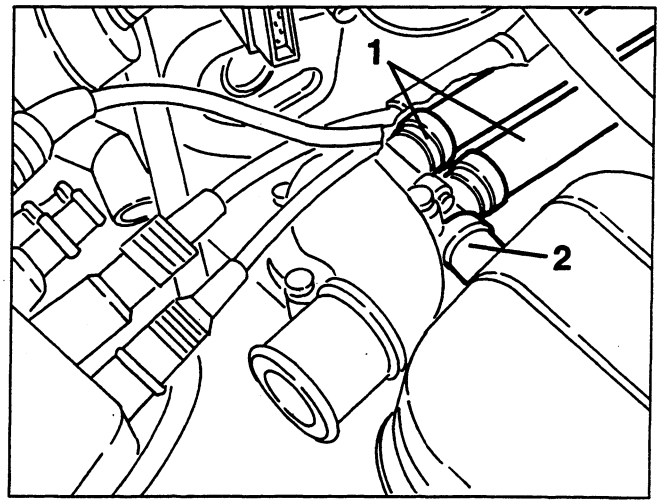

1. Disconnect the electrical connection of the tachometric sensor.
2. Slacken the three screws fastening the clutch control cylinder support bracket, then move all aside without disconnecting the pipes.

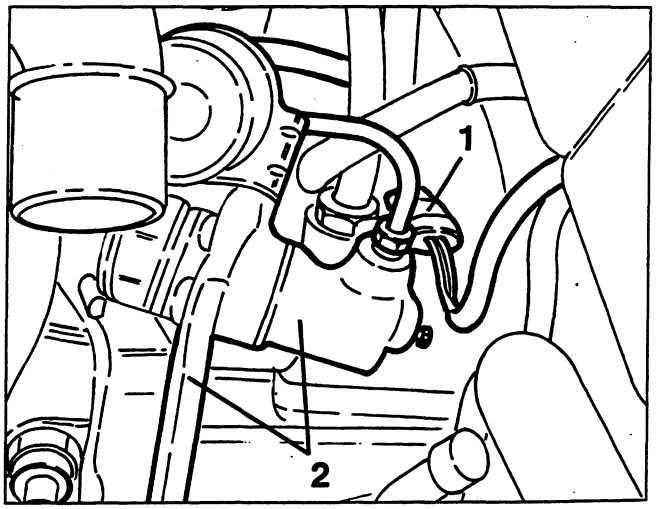

cardiagn.com

1. Disconnect the cable for synchronized reverse gear engagement.

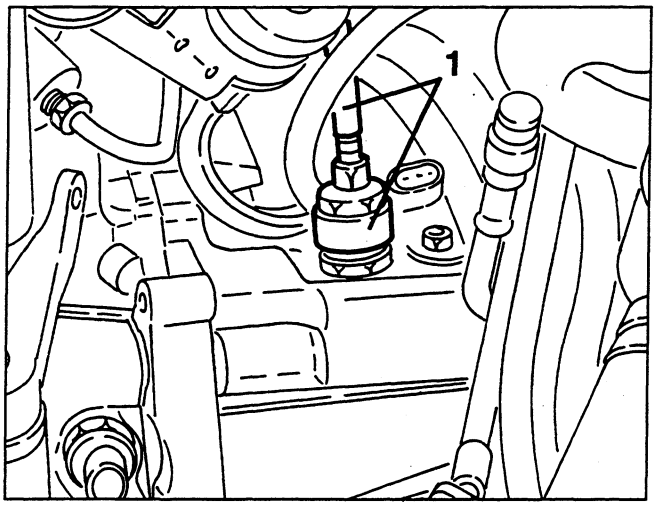

1. Disconnect the accelerator cable from the throttle.
2. Disconnect the header tank coolant delivery and system air relief pipe from the throttle body.

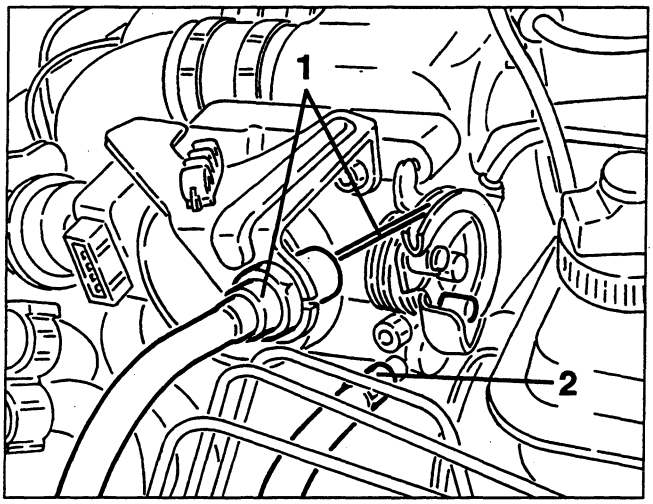

1. Disconnect the starter motor supply cable from the branch terminal box located under the header tank.

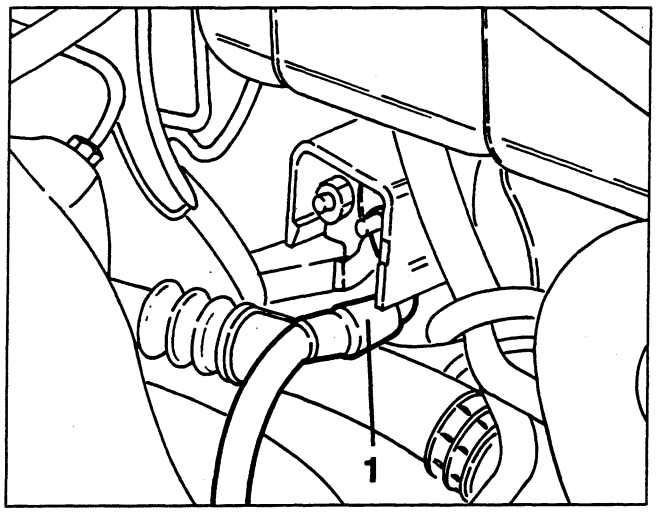

1. Using a suitable syringe empty the power steering tank.

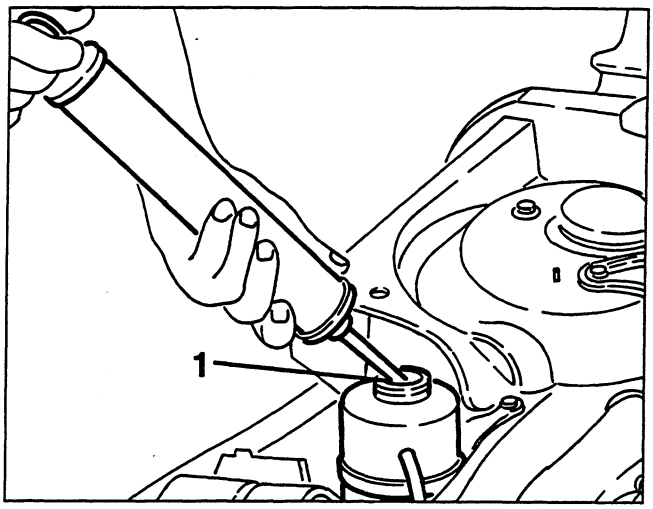

1. Disconnect the conditioner compressor electro-magnnetic joint supply connection.
2. Disconnect the two oil inlet and delivery pipes from the power steering pump.
3. Slacken the fastening screw and disconnect the coolant inlet and delivery pipes from the conditioner compressor.

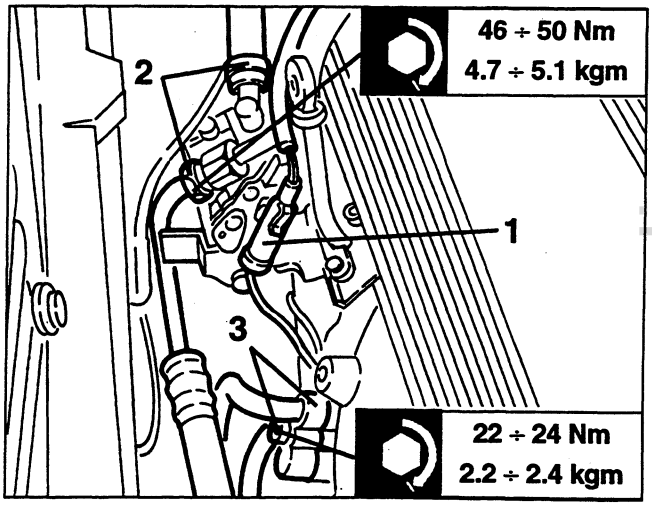

1. Slacken the fastening screws and remove the accelerator cable support bracket from the throttle body.

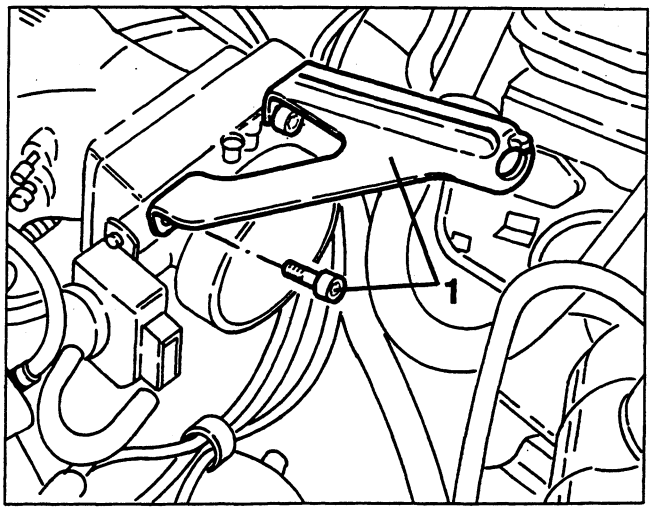

cardiagn.com

1. Slacken the four fastening screws and remove the lefthand cylinder head cover.
2. Disconnect the electrical connections from the injectors.
3. Disconnect the electrical connections (3a) of the rpm and timing sensor, (3b) pinging sensors and (3c) lambda sensor, then move the wiring to one side.
4. Disconnect the two fuel inlet and outlet pipes from the distributor manifold.

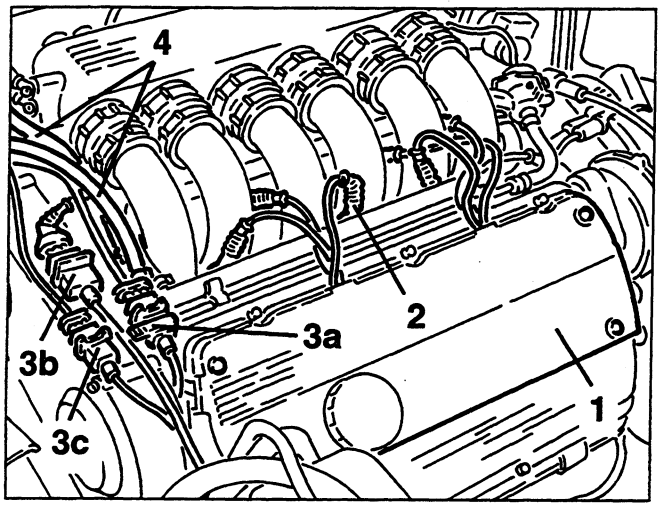

1. Disconnect the earth cables from the intake box.
2. Slacken the fastening screws and remove the engine stay connecting rod.

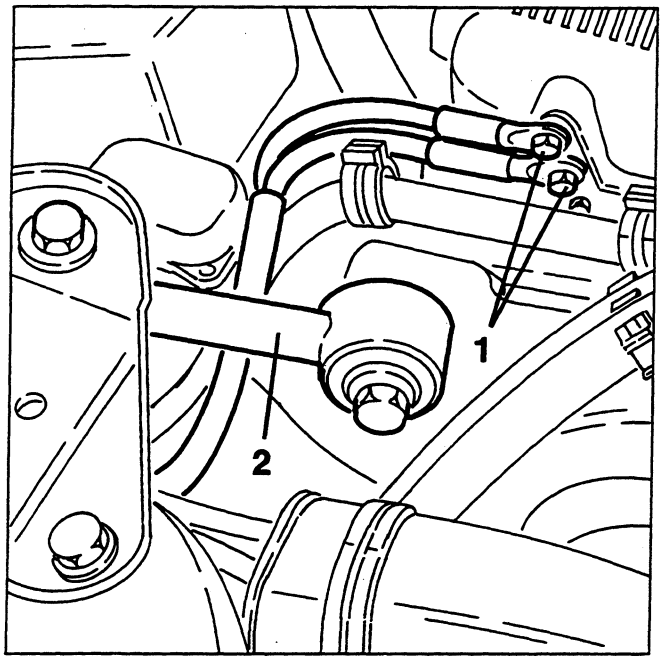

1. Slacken the fastening screw and remove the earth cables support bracket from the intake box.
2. Disconnect the fuel vapour recirculation pipe from the fuel distributor manifold.

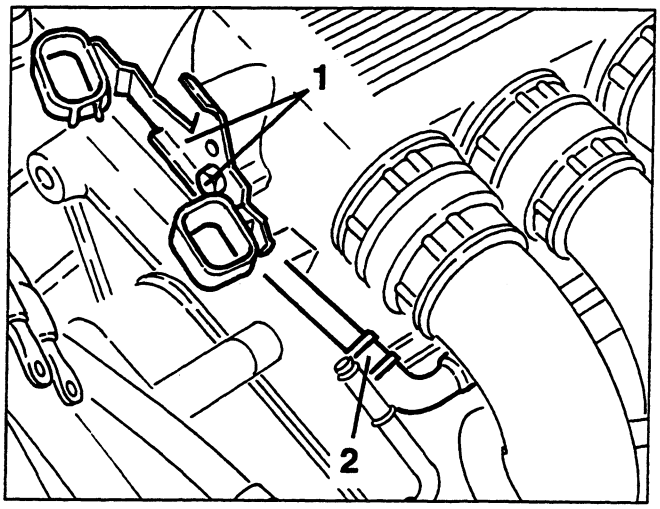

1. Remove the protective cover, then disconnect the electrical connection for energizing the starter motor, of the low battery charge warning light and of the minimum engine pressure warning light.

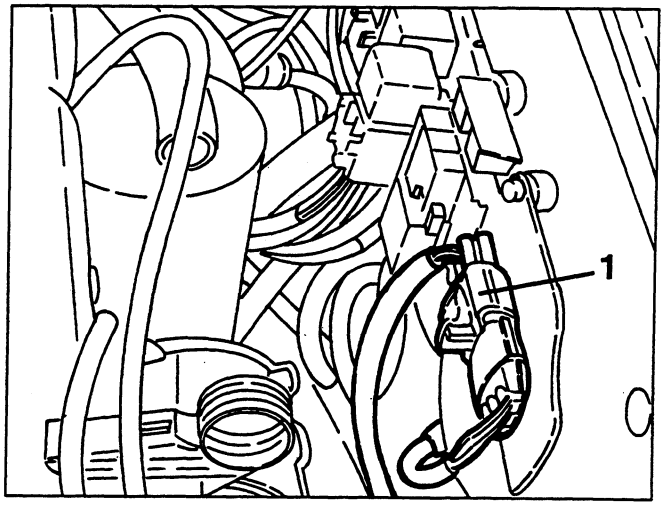

1. Install crossrail no.1.820.581.000 (R.4.0194) complete with supports no. 1.820.239.000 to support the power unit.

WARNING: Interpose suitable thicknesses between the crossrail and the side panel.

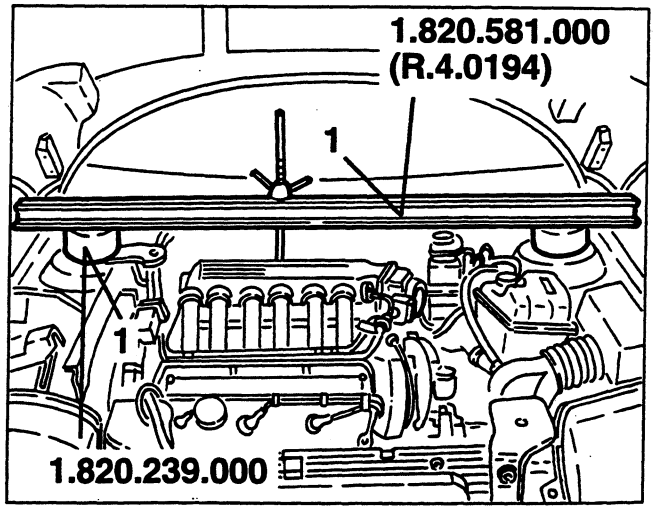

cardiagn.com

1. Raise the car, slacken the fastenings and remove the exhaust gas delivery pipes from the cylinder heads to the turbocharger.
2. Slacken the fastenings and remove the front section of the exhaust pipe complete with lambda sennsor.

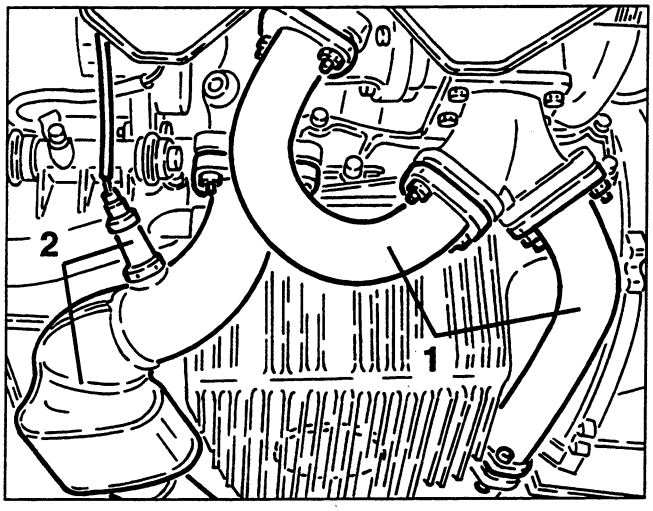

1. Disconnect the earth braid from the rear gearbox cover.
2. Slacken the fastening bolts and disconnect the axle shafts.

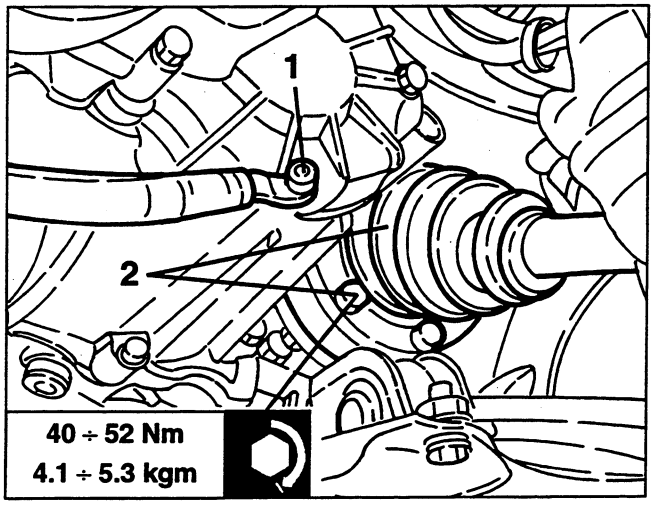

1. Disconnect the two oil delivery and return pipes to the cooling radiator from the oil filter support.

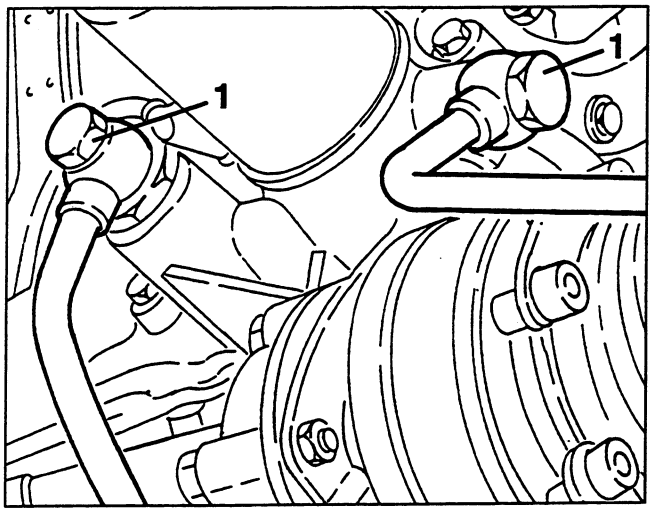

1. Slacken the intermediate clamps supporting the oil delivery and return pipes to the cooling radiator.
2. Slacken the fastening screws and remove the engine oil cooling radiator complete with the pipes.

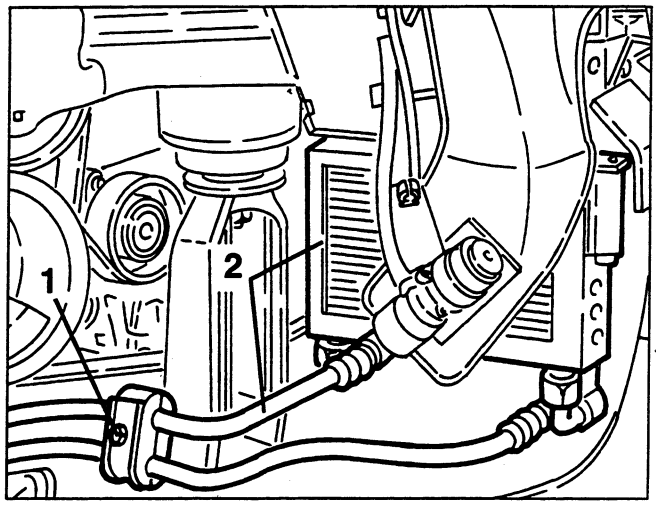

1. Slacken the fastening clamps and remove the air delivery pipe from the turbocharger to the intercooler.

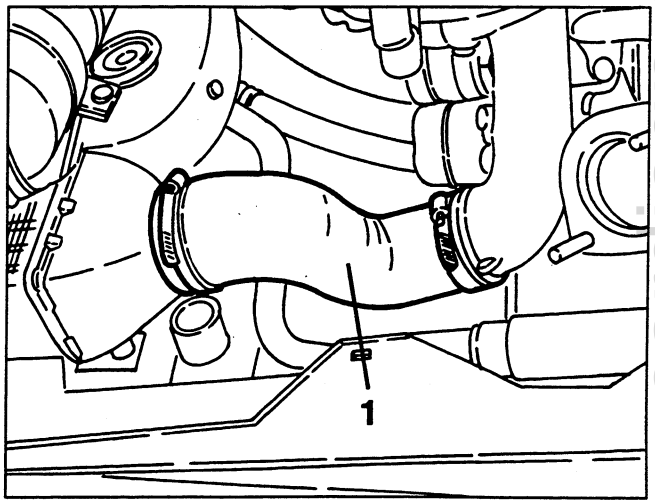

1. Slacken the fastening screws and remove the two reinforcements from the suspension crossmember.

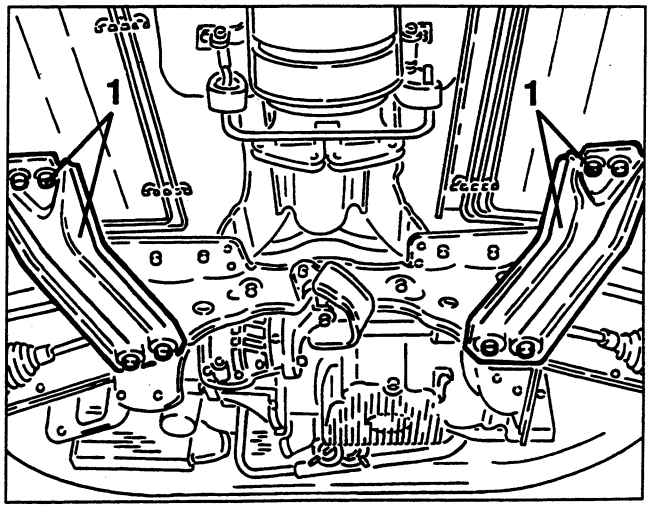

cardiagn.com

1. Slacken the bolts fastening the wishbones to the wheel uprights.

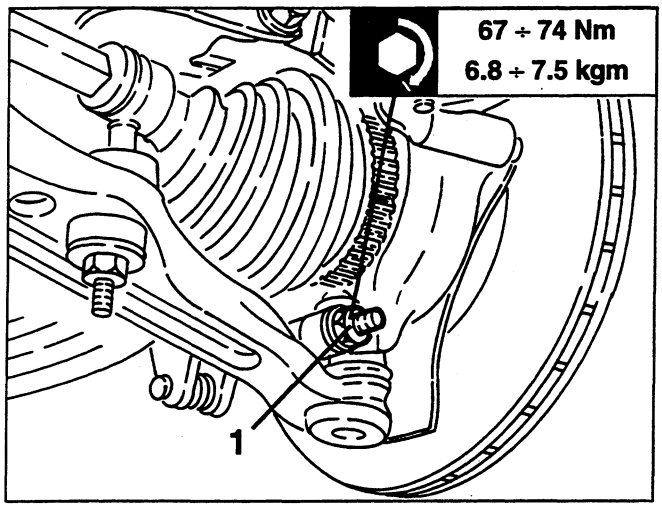

1. Slacken the fastening screws and remove the lower flywheel cover.

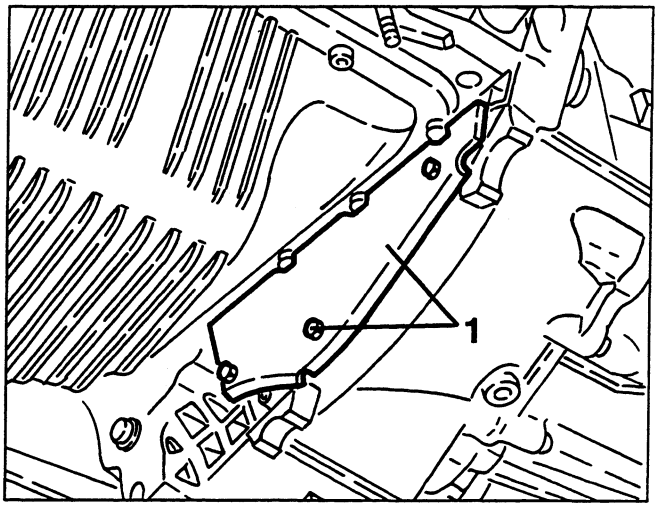

1. Slacken the fastenings and remove the two heat shields of the power steering box.

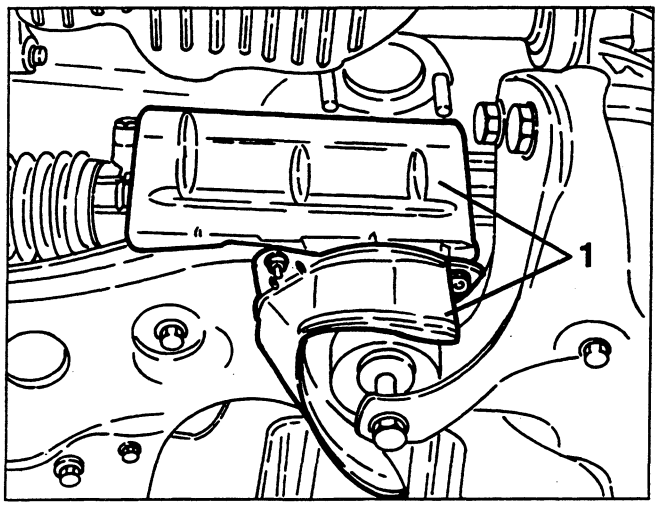

1. Slacken the fastening screws and nuts, then, using a hydraulic jack, remove it complete with wishbones and stabilizer bar.

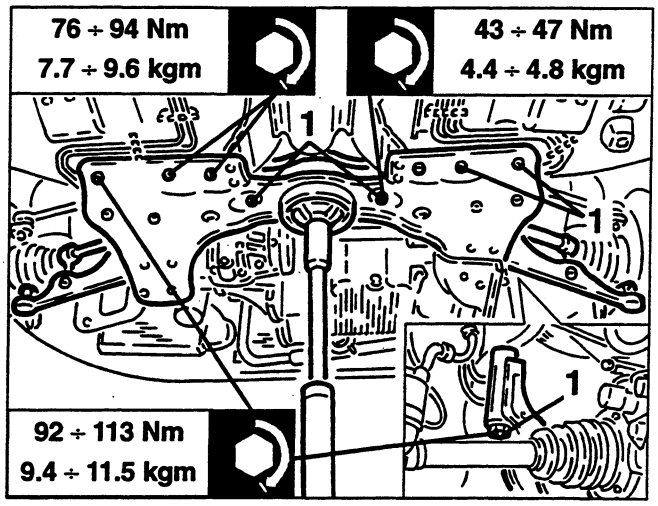

1. Position a hydraulic jack under the gearbox as illustrated.
2. Slacken the fastening screws and remove the power unit rear support.

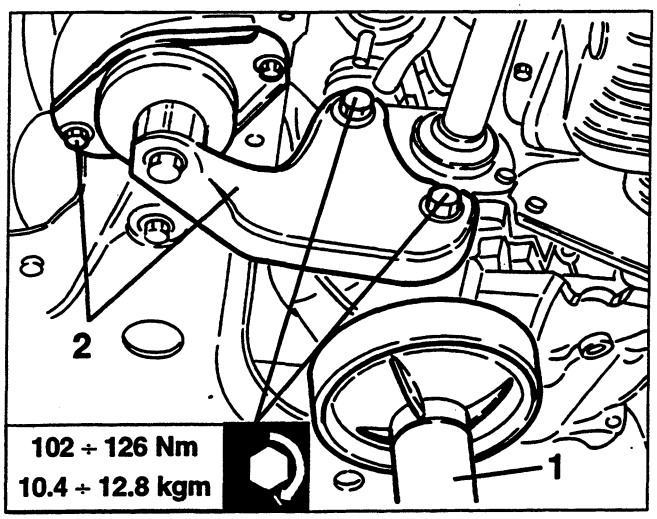

1. Position a hydraulic jack complete with tools No. 1.820.225.000 and No. 1.820.234.000 to support the power unit.

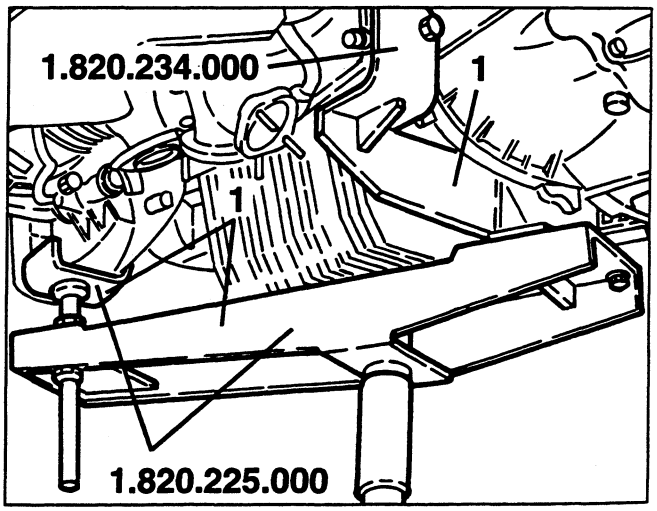

cardiagn.com

1. Slacken the bolt fastening the power unit support on the camshaft side.

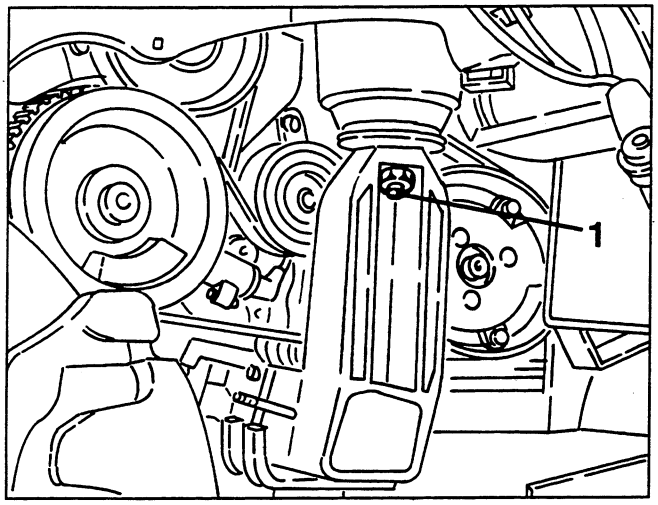

1. Slacken the fastening screws of the power unit support on the gearbox side.

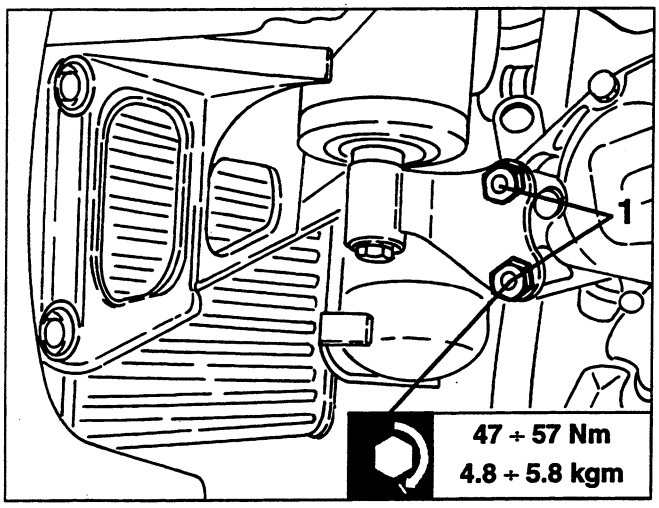

- Remove the power unit support crossrail No. 1.820.581.000 (R.4.0194) complete with supports No. 1.820.239.000, installed previously.
1. Lower the power unit just enough to disconnect the gear control cables.

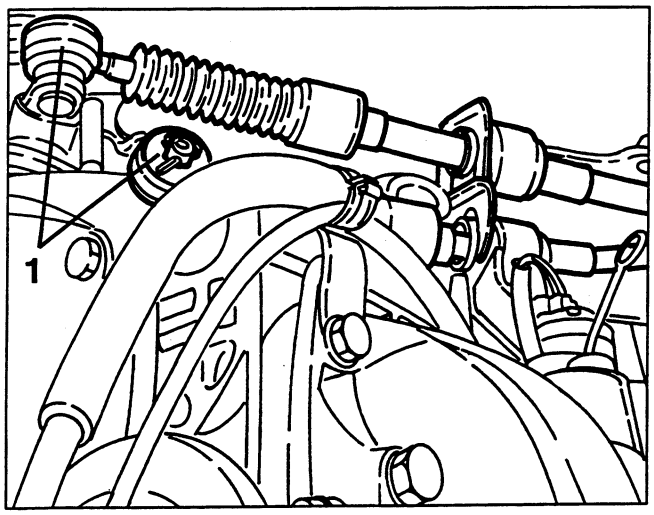

WARNING:
The hydraulic jack must have a capacity of at least 1000 kg.
Free the electrical wires from any cable clamps and move them away from the engine to prevent them from getting caught in the engine when it is removed.

1. Lower the hydraulic jack completely and remove the power unit from the engine compartment.

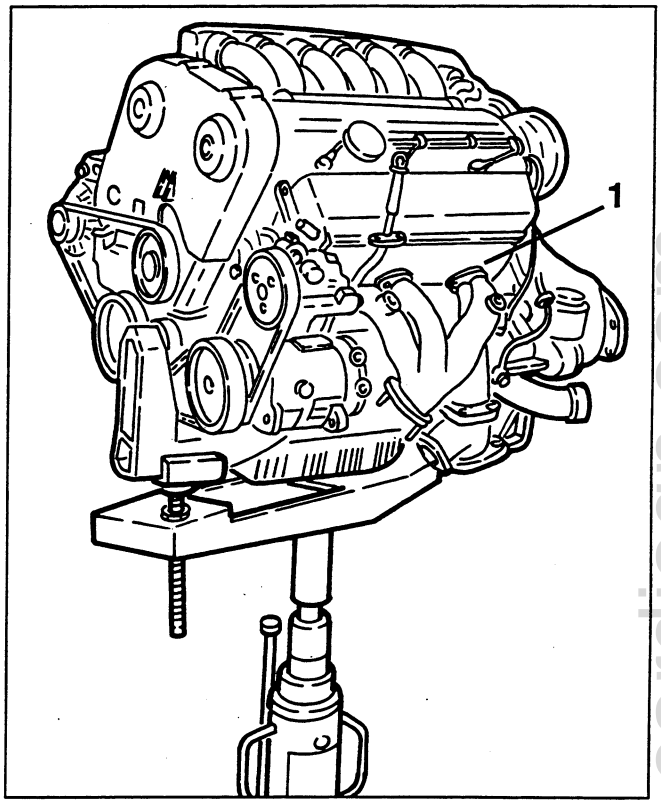

WARNING:
When lowering the car make sure that there are no cables or pipes still connected.
Take due care not to damage any components.

- Support the power unit with a hydraulic hoist as well as with the hydraulic jack used for removal.

WARNING:
For moving the power unit, use a hydraulic hoist after freeing it from the hydraulic jack.

cardiagn.com

1. Slacken the two fastening nuts and remove the heat shield from the starter motor.
2. Slacken the fastening screws and remove the gearshift control cables support bracket and heat shields.

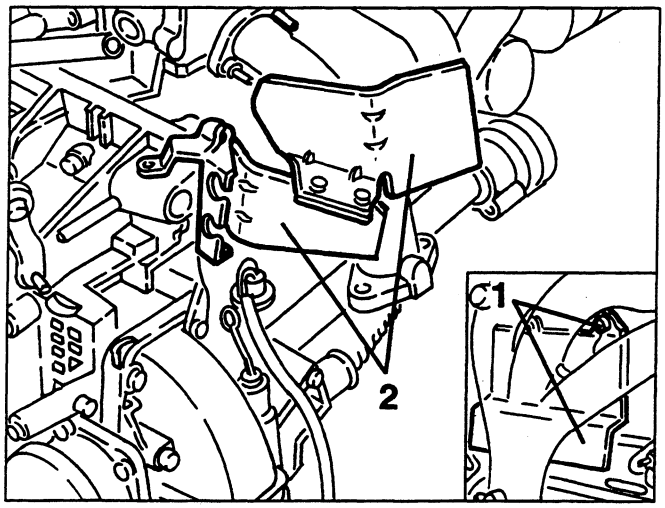

1. Slacken the fastening nuts and remove the right-hand exhaust manifold.
- Remove the corresponding seals.

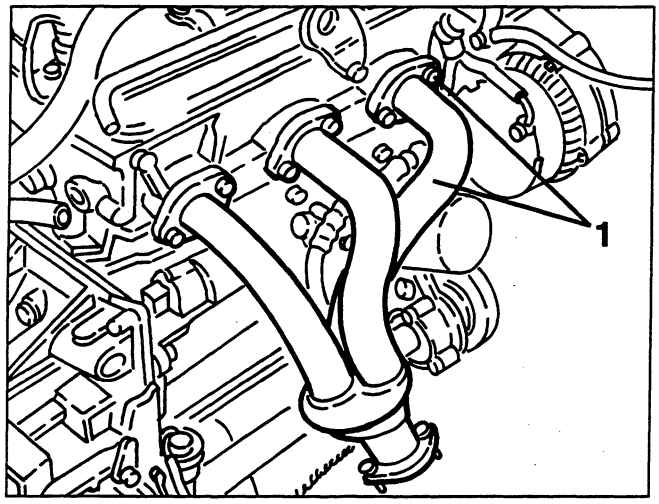

1. Disconnect the electrical connections from the starter motor.
2. Slacken the three fastening screws and remove the starter motor.

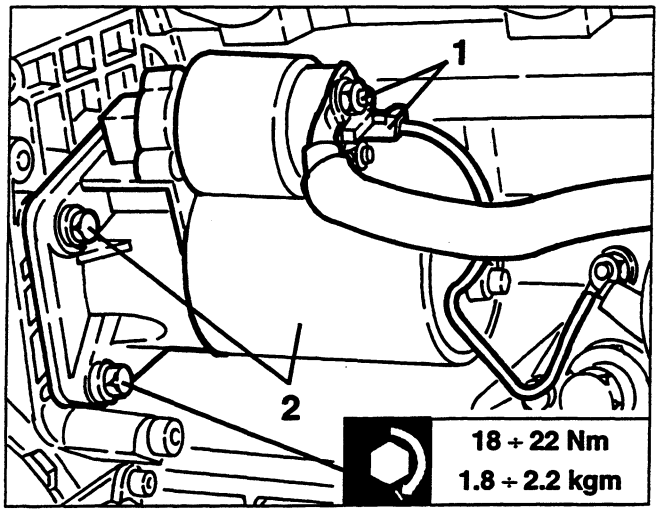

1. Disconnect the electrical connections from the engine oil minimum pressure sensor.
2. Disconnect the electrical connections from the alternator, then remove the electric wiring after freeing from the fasteners.

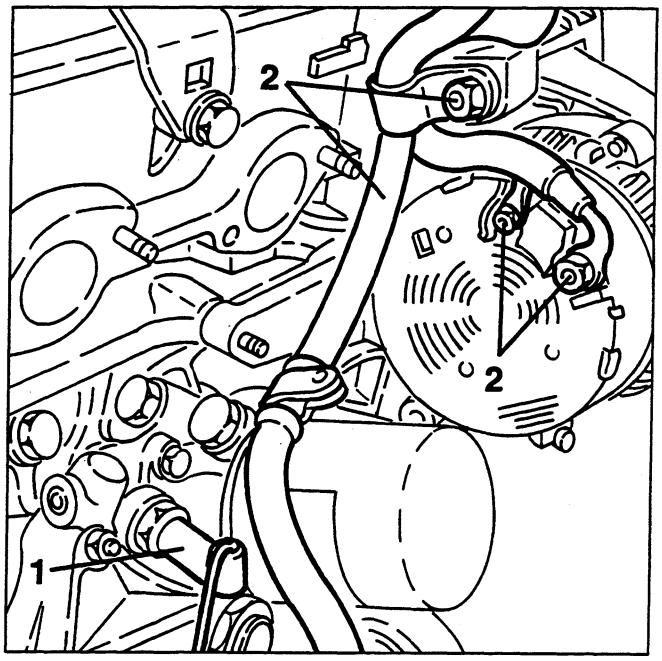

- Drain the gearbox-differential oil.
1. Slacken the three fastening screws and withdraw the intermediate shaft.
2. Remove the dust guard ring.
3. Slacken the screws and fastening nuts and remove the oil filter support complete.

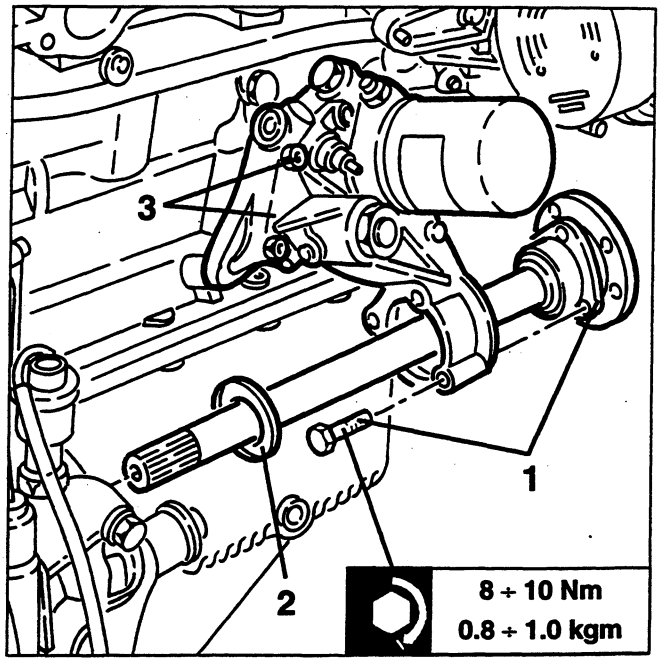

cardiagn.com

1. Slacken the fastening nuts and remove the left-hand exhaust manifold.
- Remove the corresponding seals.
2. Disconnnect the coolant fluid inlet and outlet pipes from the turbocharger.
3. Disconnect the engine oil delivery pipe to the turbocharger from the cylinder head.

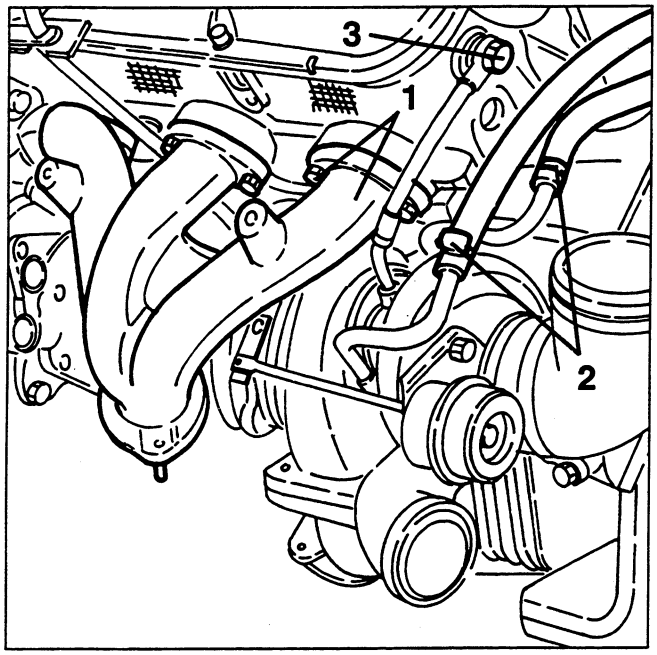

1. Disconnect the engine oil return pipe leading from the turbocharger from the sump.

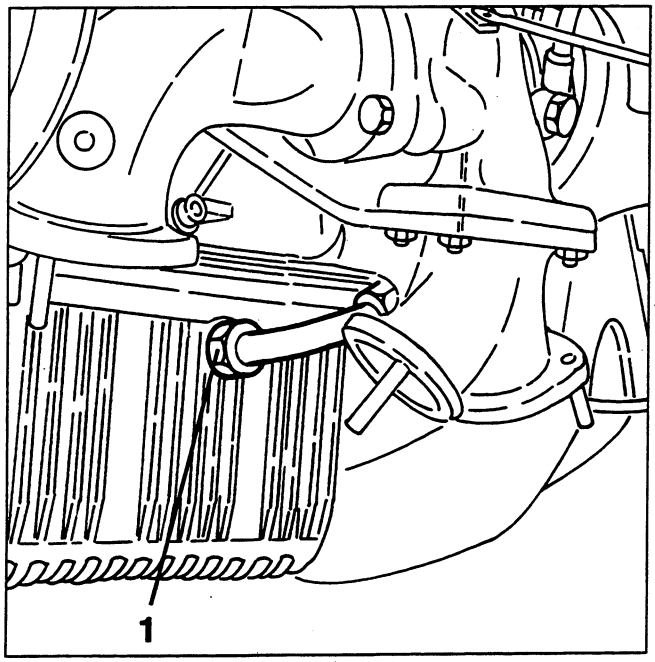

1. Slacken the fastening nuts and remove the turbocharger.

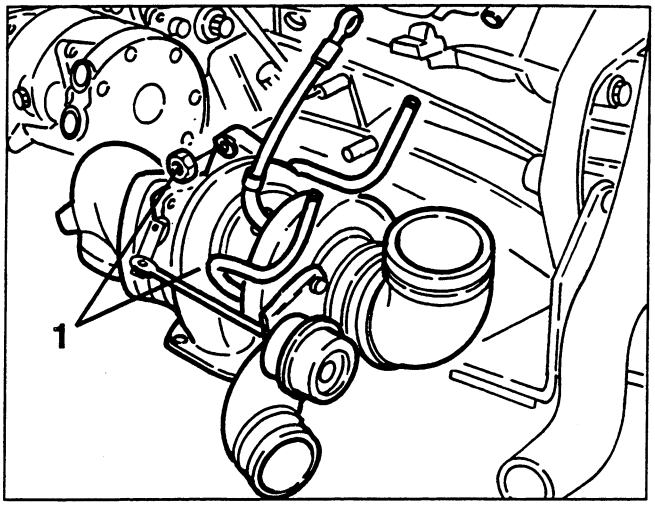

1. Slacken the screws and fastening nuts and, using a hydraulic hoist, remove the gearbox-differential unit.

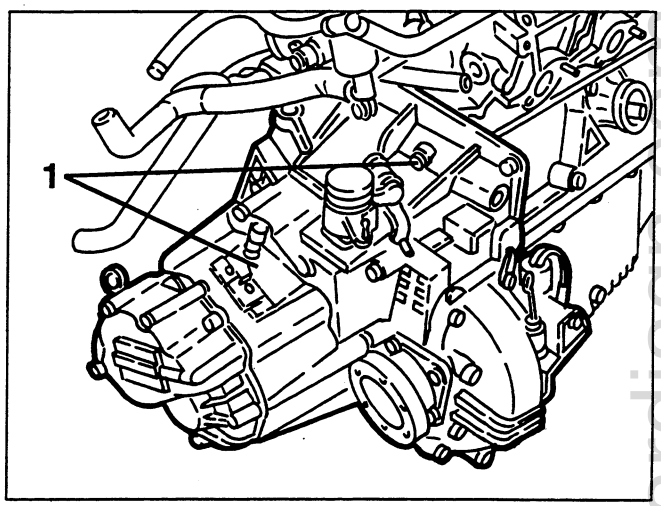

REFITTING

Reverse the sequence followed for removing operations adhering to the following instructions:
- Prepare the engine compartment to receive the power unit assembly, positioning all the electrical cables, pipes, etc. so that they do not interfere with assembly operations.
- Take due care when refitting the power unit to avoid damaging the single components.

WARNING:
Make sure that the support points of the power unit have been fastened correctly.

- Upon completion of assembly operations, check that the belts are tensioned correctly, refill the various systems as specified (see GROUP 00).
- Carry out all the necessary checks and adjustments (see GROUP 00).

cardiagn.com

CYLINDER HEADS

NOTE: On the vehicle it only possible to remove the right- hand cylinder head as described below. Should it be necessary to remove the left-hand cylinder head, it is necessary to remove the power unit (see specific paragraph).

REMOVING/REFITTING THE RIGHT-HAND CYLINDER HEAD

- Set the car on a lift.
- Disconnect the battery (-) terminal.
- Remove the front wheels and mud flaps.

1. Raise the car and drain the coolant fluid into a suitable recipient disconnecting the radiator outlet sleeve.

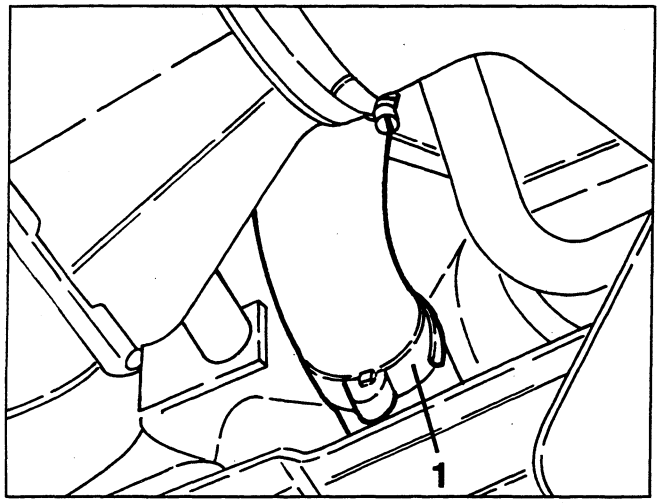

1. Lower the car, slacken the fastening screws and remove the upper radiator crossmember.
2. Disconnect and move to one side the bonnet lock opening cable.

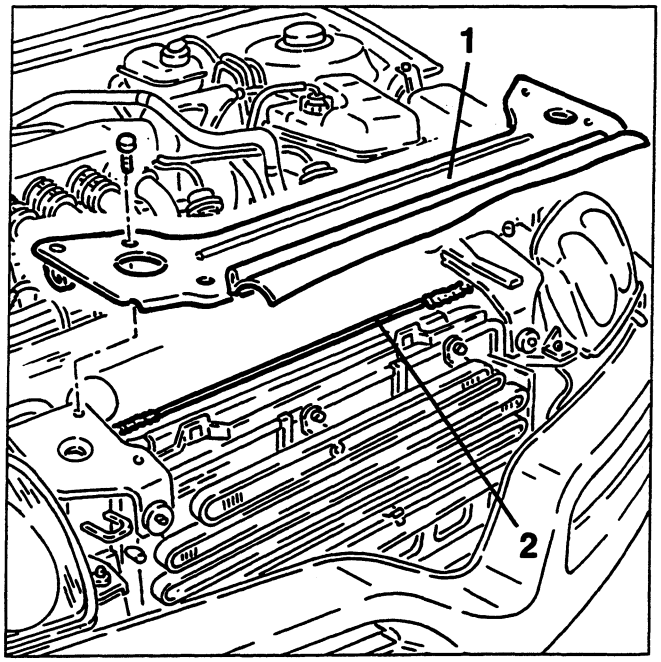

1. Disconnect the electrical connections from the cooling fans.
2. Slacken the fastening screws, then move aside the cable fairing complete with electric cables.

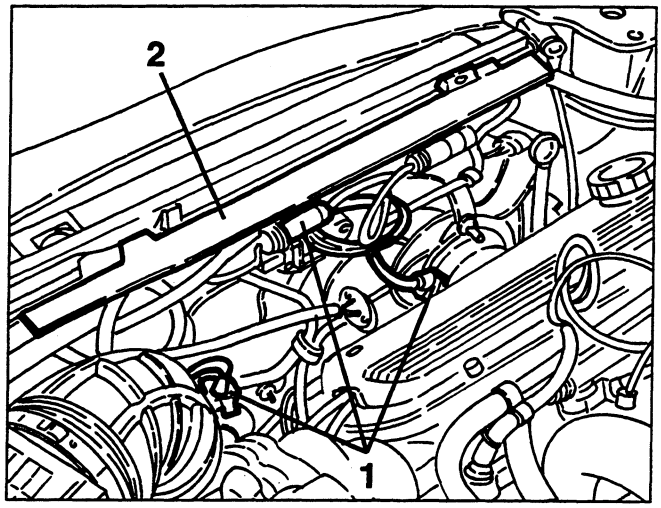

1. Withdraw and remove the cooling fans.

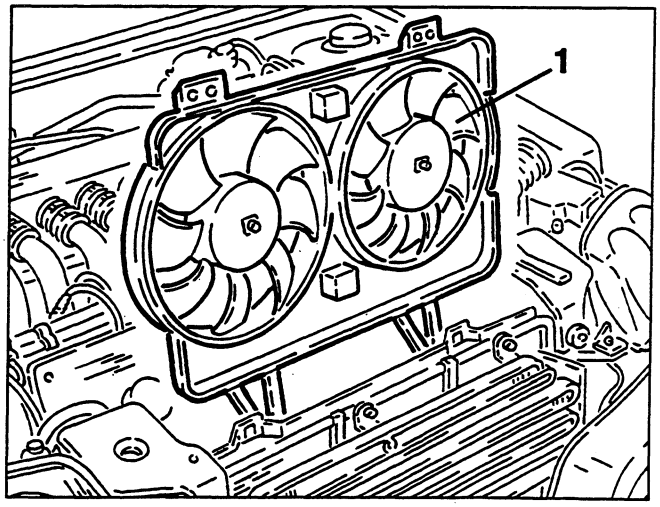

1. Disconnect the the vacuum takeoff pipe for the antistalling valve from the intake box.
2. Disconnect the the antistalling valve by-pass pipe from the throttle exhaust manifold.

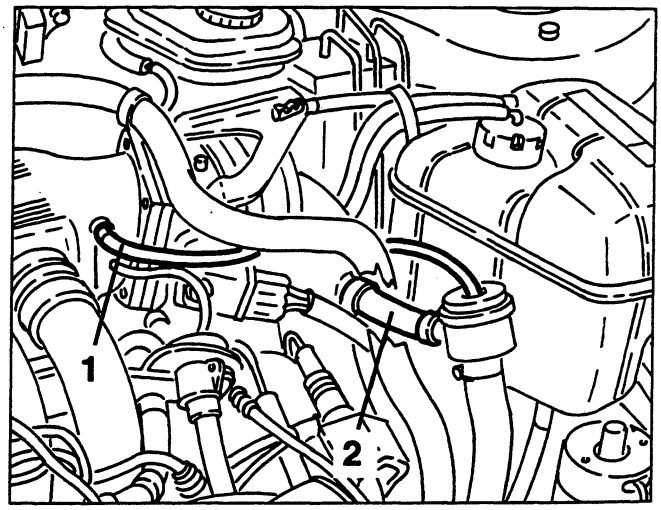

cardiagn.com

1. Disconnect the electrical connection from the air flow meter .
2. Slacken the clamps fastening the two sections of the corrugated sleeve to the air cleaner and to the turbocharger intake pipe.

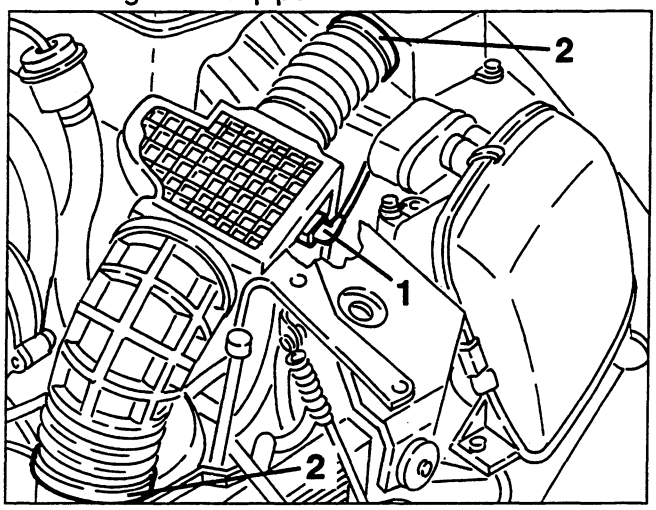

1. Remove the air-flow meter, corrugated sleeve and antistalling valve assembly complete with connection pipes.

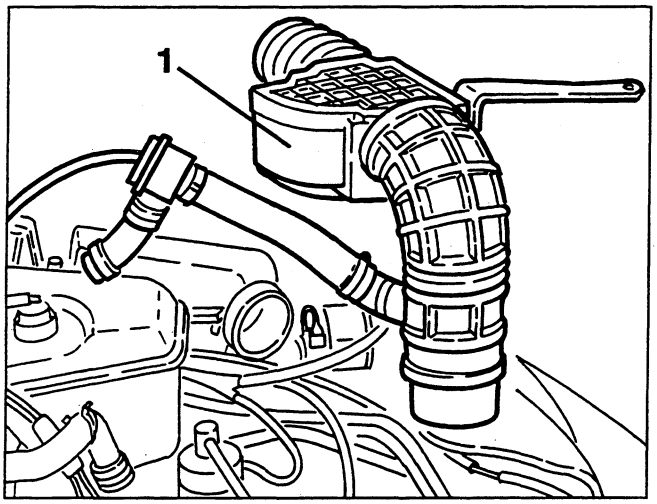

1. Disconnect the electrical connection from the throttle potentiometer.
2. Disconnect the high voltage cable from the ignition coil.

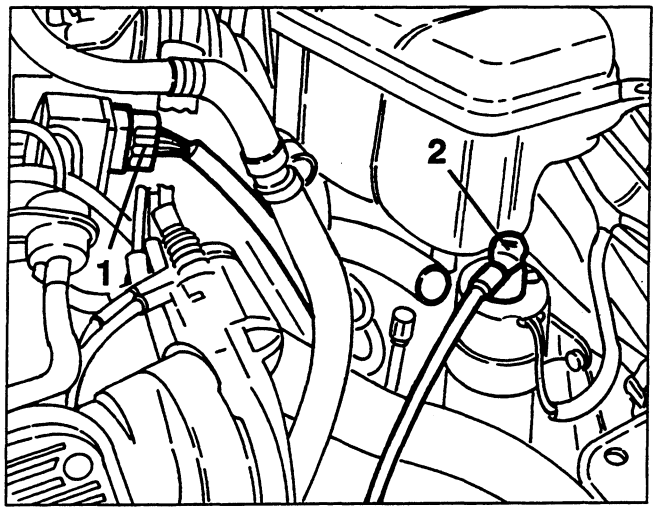

1. Disconnect the air intake pipe from the constant idle speed actuator.

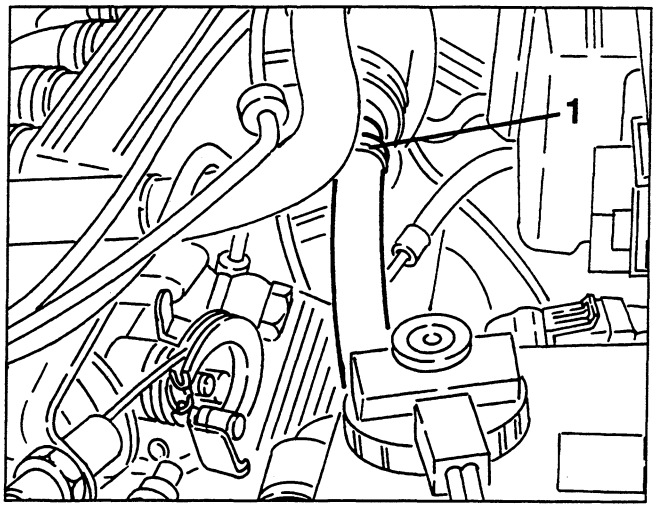

1. Slacken the fastening clamps and remove the air delivery manifold from tirbocharger to throttle body complete with the air takeoff pipe from the constant idle speed actuator.

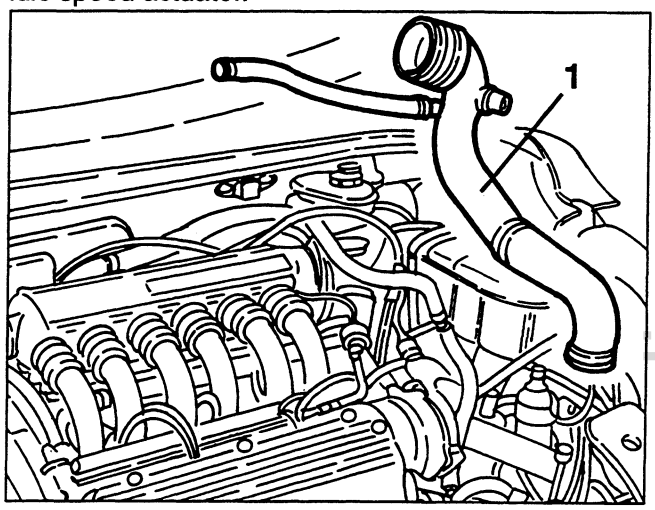

1. Slacken the fastening clamp and remove the oil vapour recirculation pipe.

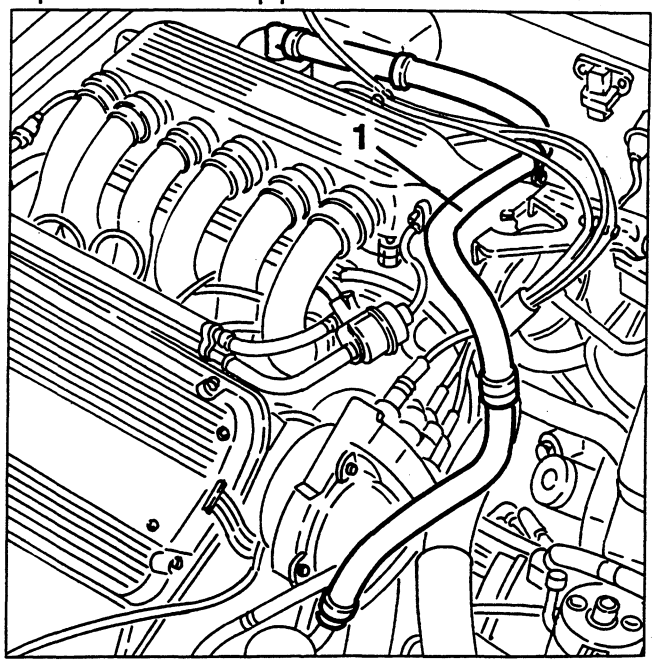

cardiagn.com

1. Disconnect the coolant oil delivery sleeve to the radiator from the thermostatic cup.

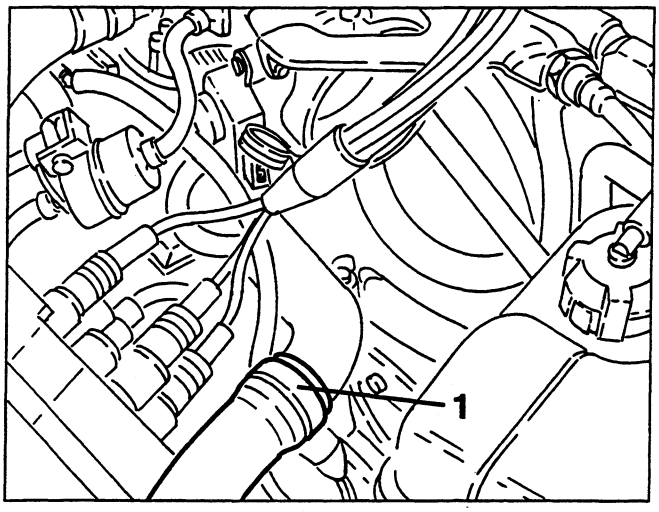

1. Disconnect the electrical connection from the constant idle speed actuator.
2. Disconnect the electrical connection of the 1st cylinder detection sensor.
3. Disconnect the servobrake vacuum takeoff pipe from the intake box.

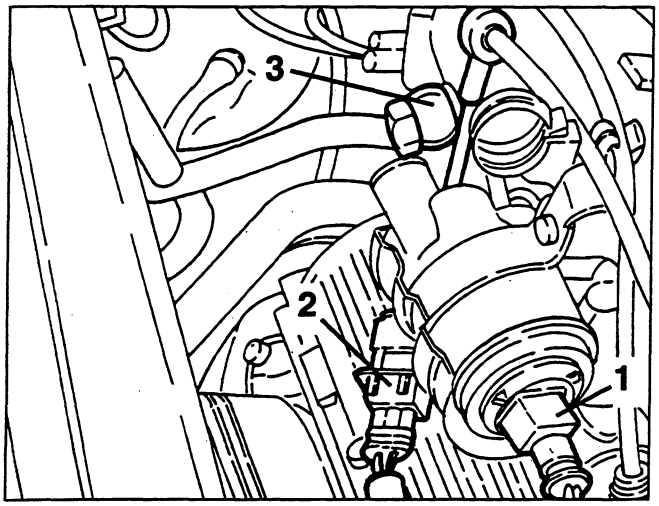

1. Disconnect the accelerator cable from the throttle.
2. Disconnect the header tank coolant delivery and system air relief pipe from the throttle body.

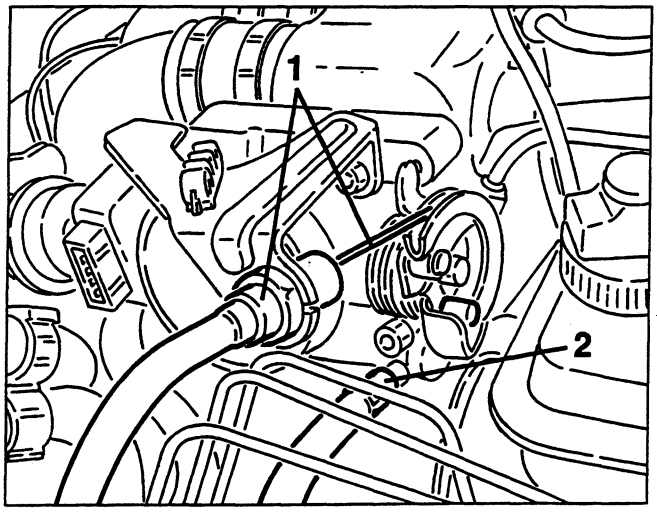

1. From the throttle body disconnect the coolant inlet pipe.
2. Disconnect the vacuum takeoff pipe for the fuel pressure regulator from the intake box.

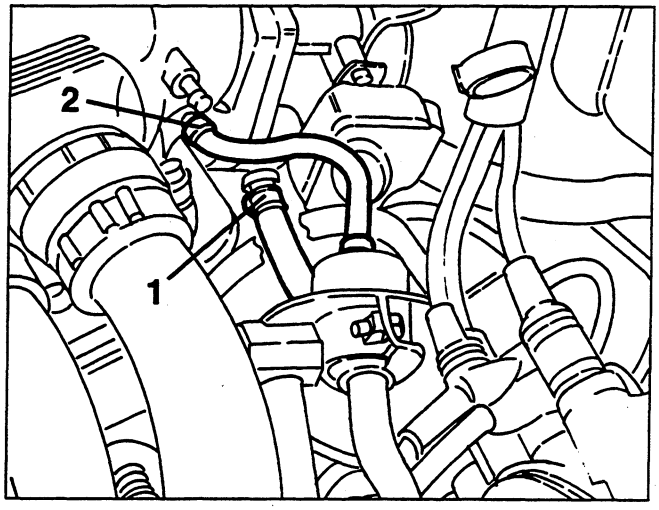

- Disconnect the high voltage cables from the spark plugs of the righthand cylinder head.
1. From the oil vapour separator disconnect the oil vapour recovery pipe (1a) and the condensed oil recovery pipe (1b).

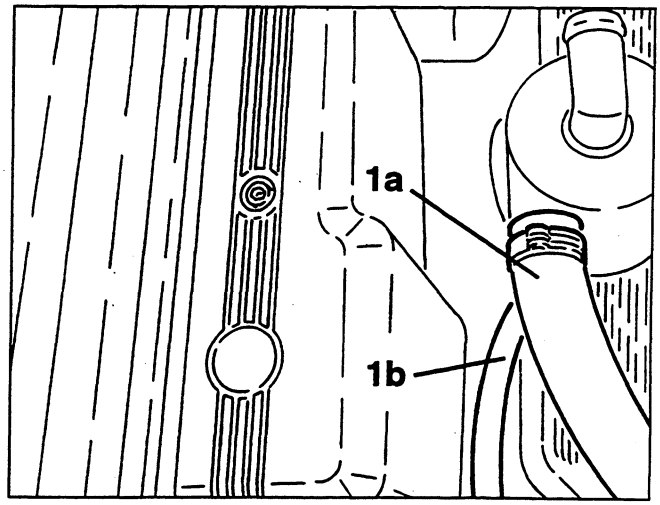

1. Disconnect the earth cables from the intake box.

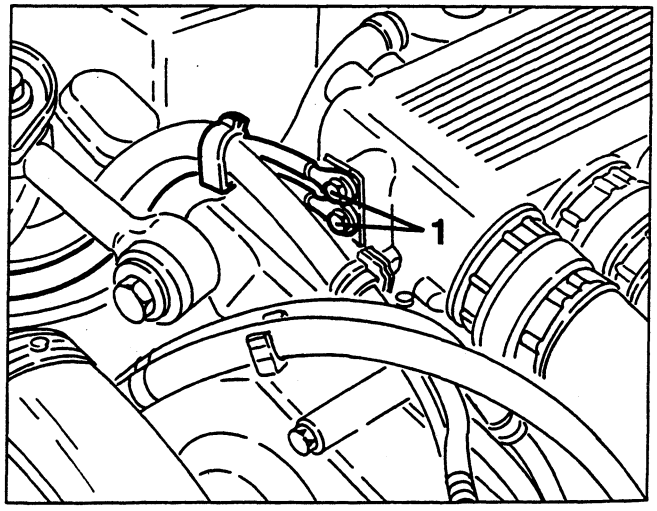

cardiagn.com

1. Slacken the clamps fastening the intake manifold to the intake box then remove the latter after unscrewing the two fastening screws.

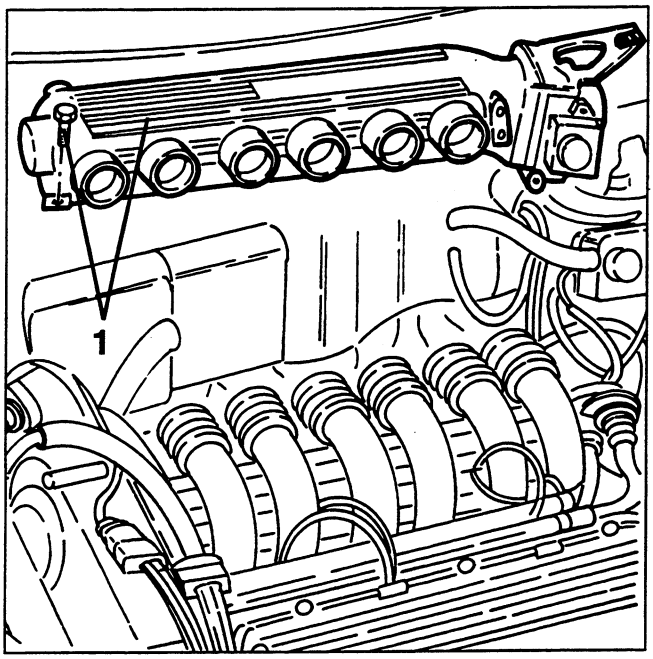

1. Slacken the fastenings and remove the engine stay connecting rod.
2. Disconnect the fuel inlet and outlet pipes from the distributor manifold.
3. Disconnect the fuel vapour recirculation pipe from the fuel distributor manifold.

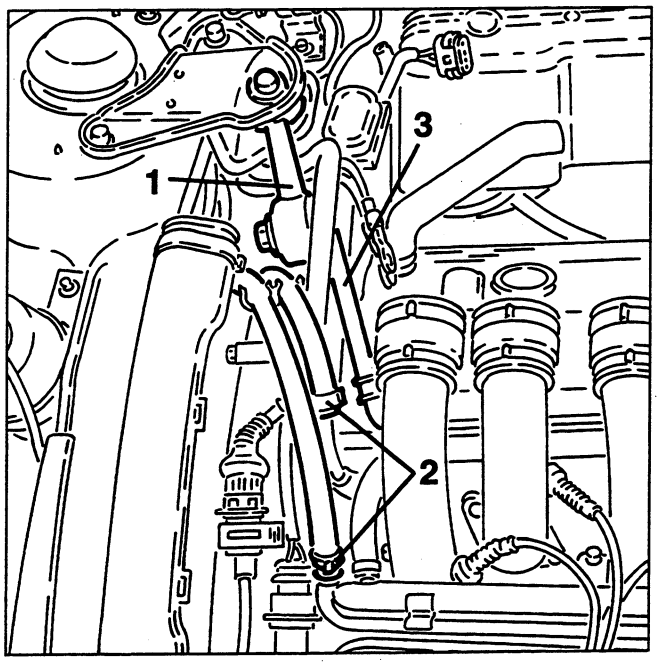

1. Disconnect the electrical connection from the rpm and timing sensor.
2. Disconnect the electrical connection of the pinging sensor.
3. Disconnect the electrical connection of the lambda probe.

4. Slacken the fastening screws and remove the timing gear belt cover.

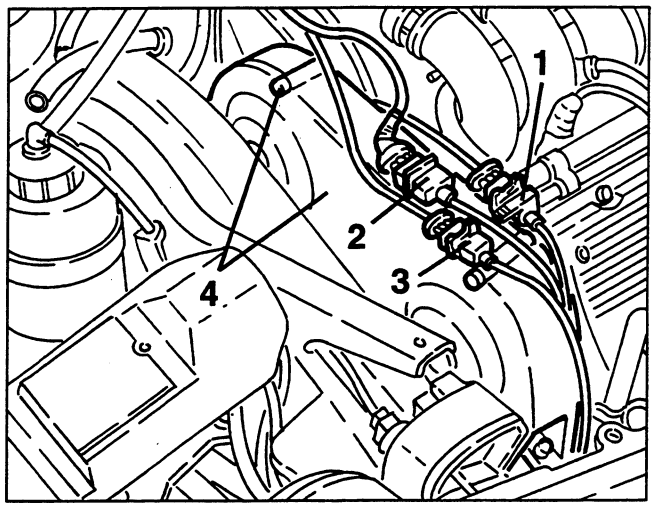

1. Disconnect the coolant delivery and return pipes to the climate control heater.

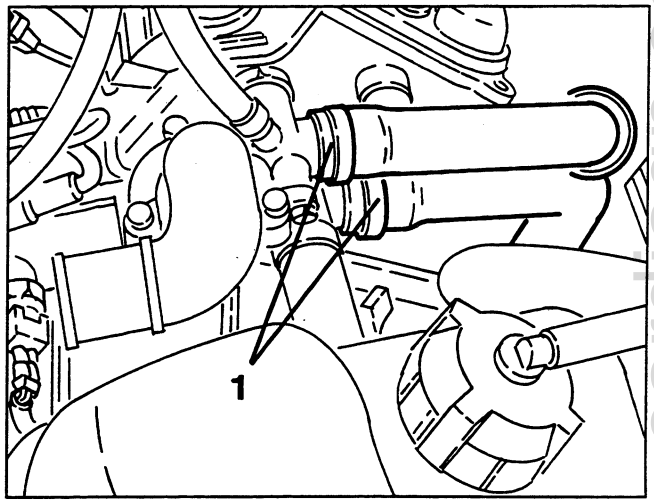

1. Slacken the four fastening screws and remove the left- hand cylinder head.

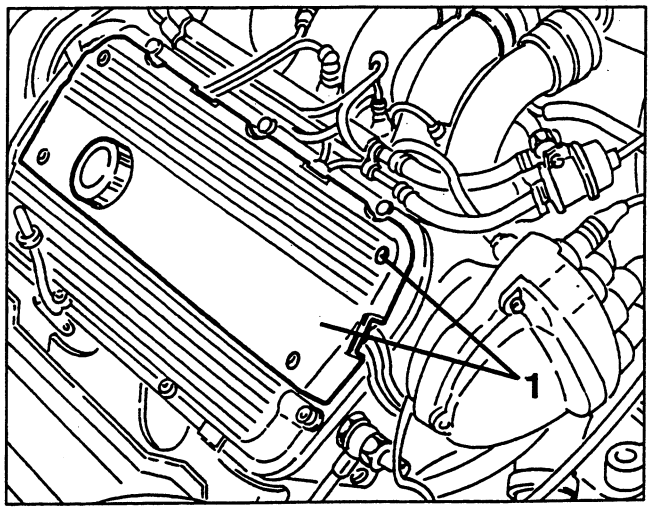

cardiagn.com

1. Disconnect the high voltage cables from the spark plugs of the left-hand cylinder head.
2. Slacken the three fastening screws and remove the ignition distributor cap complete with spark plug cables.

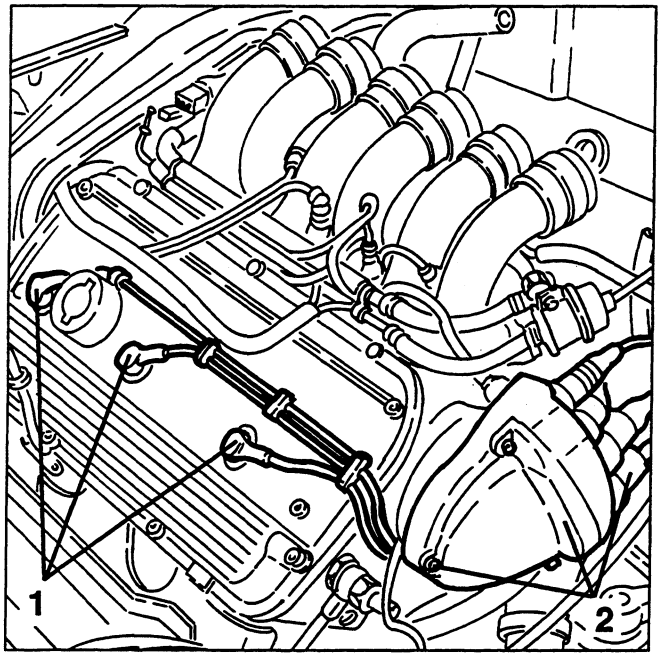

1. Disconnect the electrical connections from the injectors.
2. Disconnect the electrical connections from the rear pinging sensor, then move the wiring to one side.
3. Disconnect the fuel vapour recovery pipe from the fuel distributor manifold.

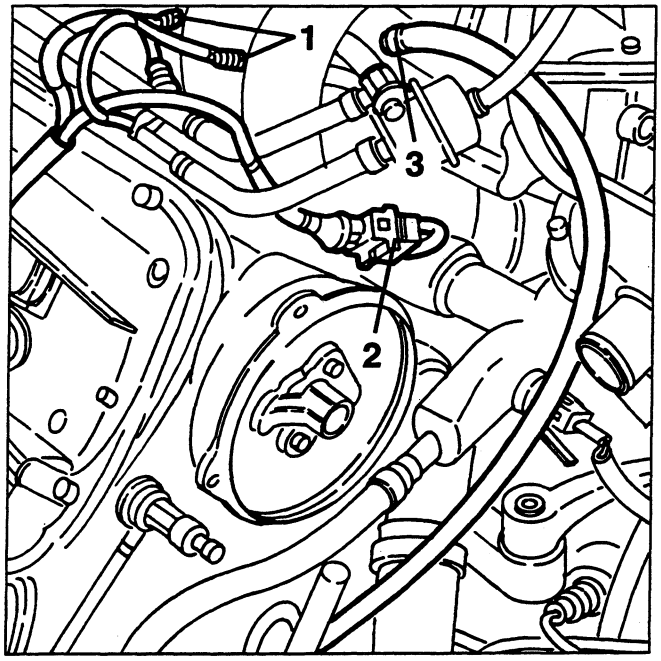

1. Slacken the clamp fastening the coolant fluid outlet sleeve from the left-hand cylinder head.

2. Slacken the two fastening screws and move aside the thermostatic cup with its pipes.

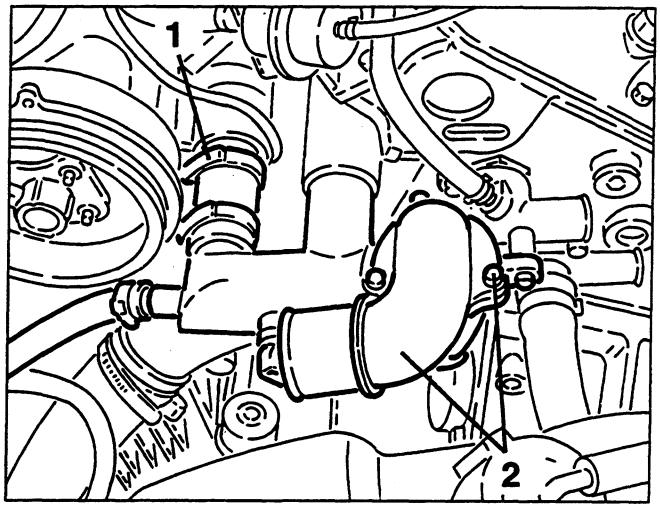

1. Slacken the two fastening screws and remove the coolant outlet union from the right-hand cylinder head.

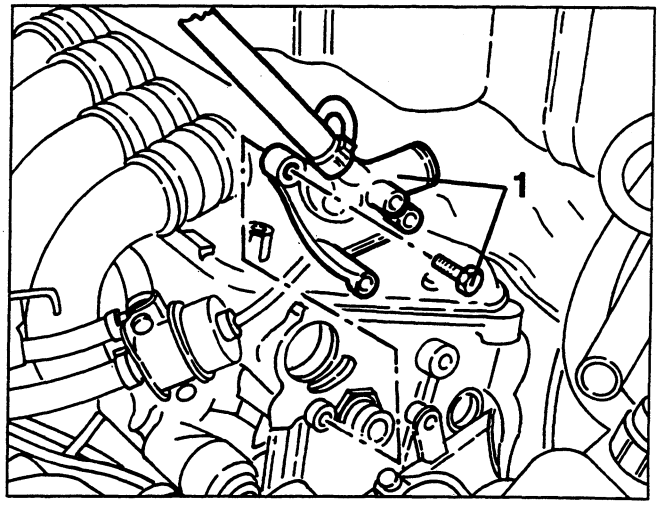

1. Slacken the fastening screws and remove the intake manifolds.

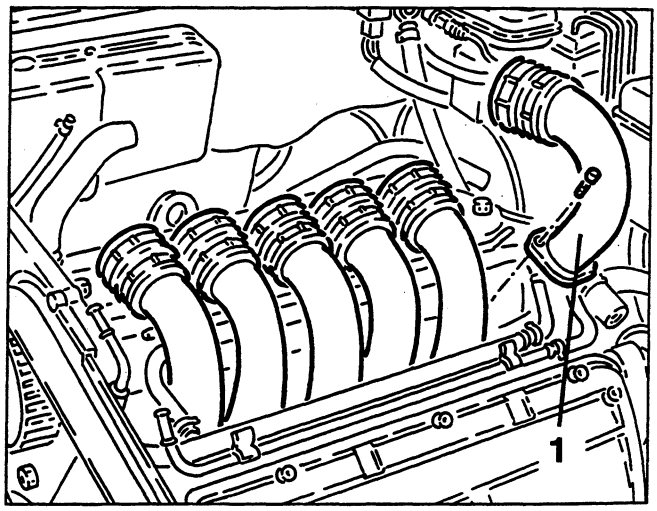

cardiagn.com

1. Slacken the fastening screws and remove the fuel distributor manifold complete with pressure regulator and pulse damper.

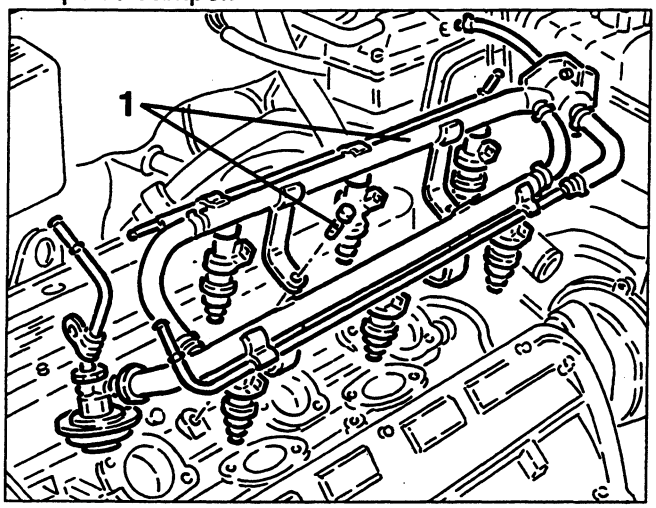

1. Raise the car, slacken the fastening screws and remove the exhaust gas delivery pipe from the manifold of the right-hand cylinder head to the turbocharger.
2. Slacken the fastenings and remove the front section of the exhaust pipe complete with lambda sensor.

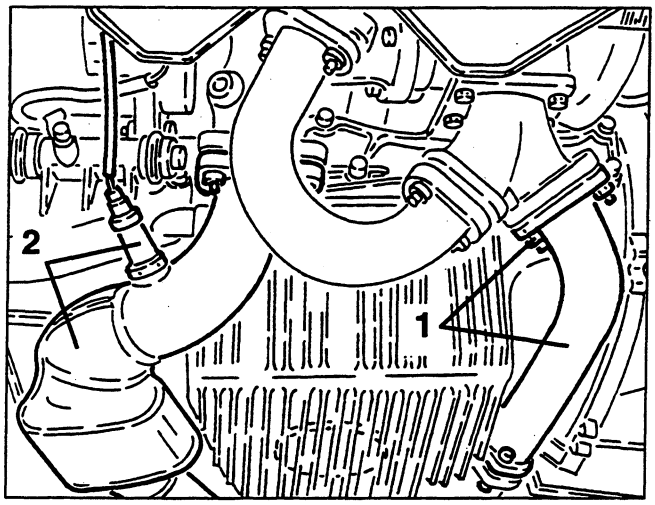

1. Set a hydraulic jack under the gearbox, then slacken the screw fastening the power unit support on the gearbox side

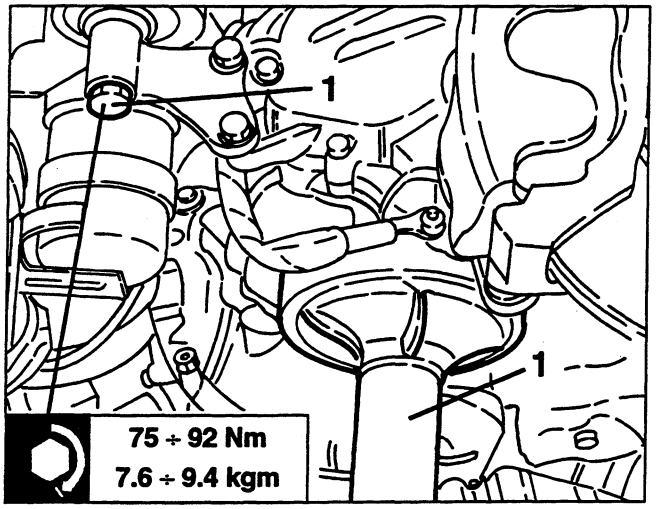

1. Lower the power unit just enough to unscrew the fastening nuts and remove the right-hand side exhaust manifold.

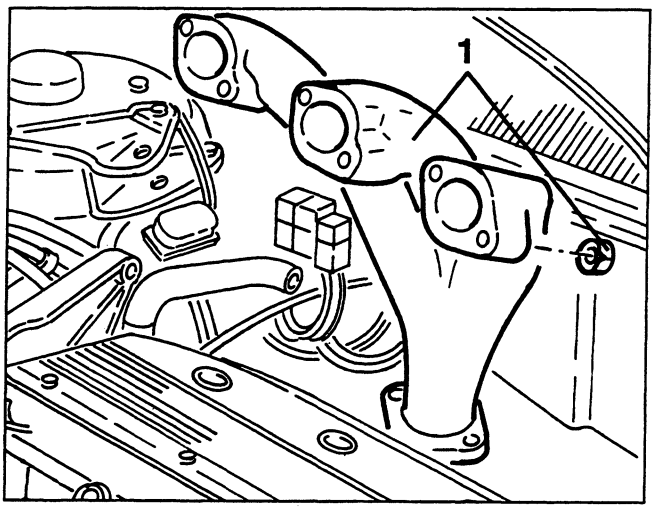

1. Slacken the screws fastening the alternator and upper bracket, remove the drive belt and move it to one side.

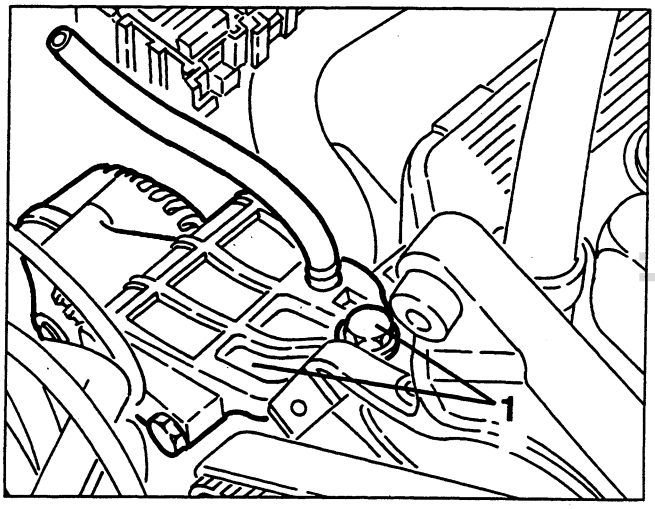

1. Slacken the fastening screws and remove the timing gear covers from the cylinder heads.

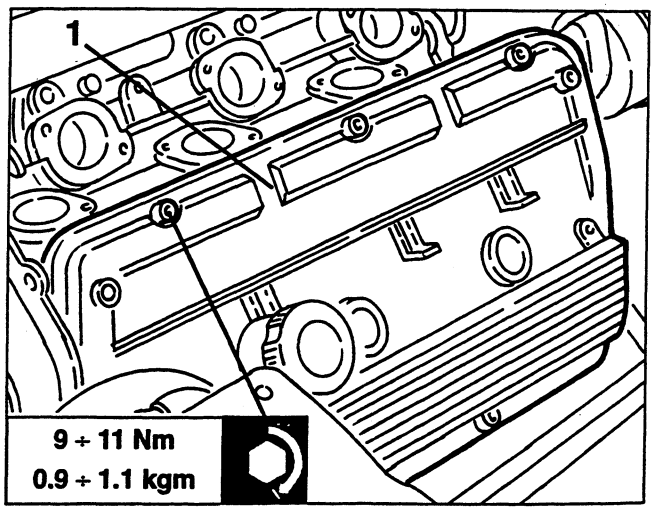

cardiagn.com

1. Turn the crankshaft until the noteches on the camshafts coincide with those on the corresponding caps.

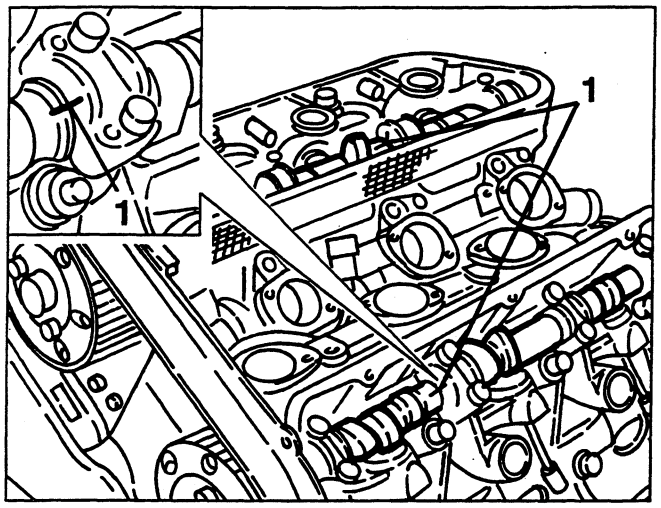

1. Slacken the two nuts fastening the timing gear belt tensioner, then prise off the belt.

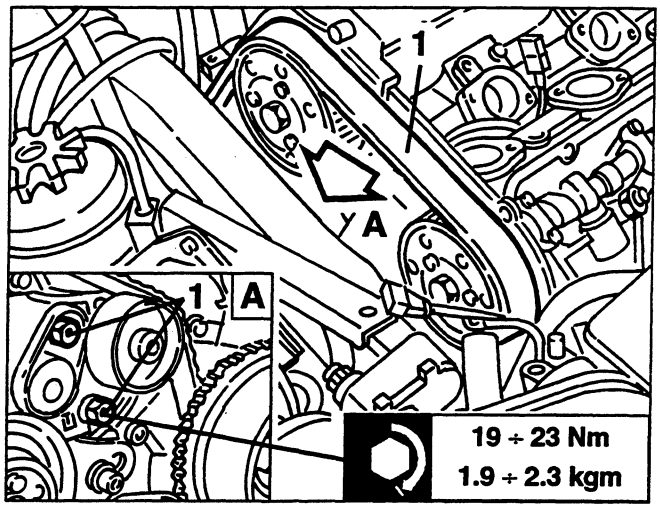

1. Slacken the fastening screws and remove the rear timing belt cover.

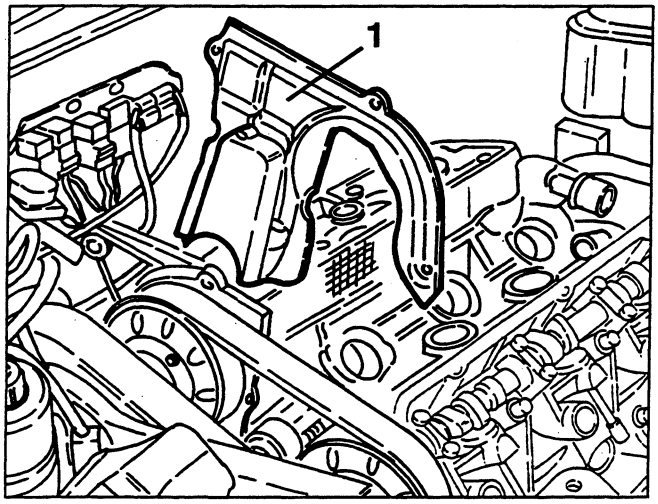

1. Slacken the fastening screws and move aside the relay support bracket and electrical connections.

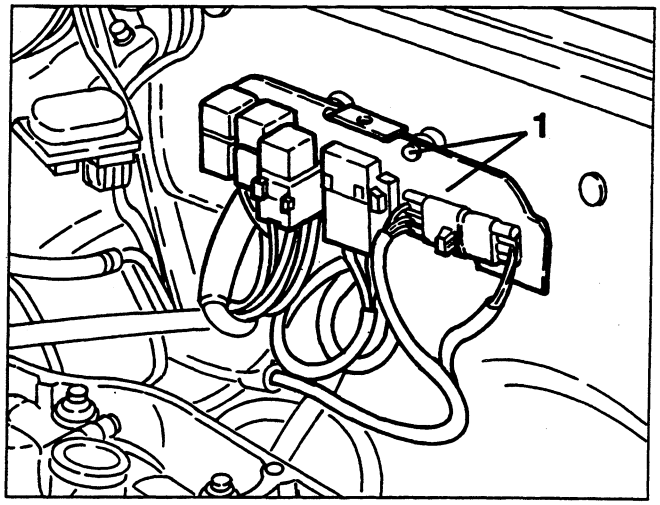

1. Slacken the nut fastening the intermediate oil pump drive gear.

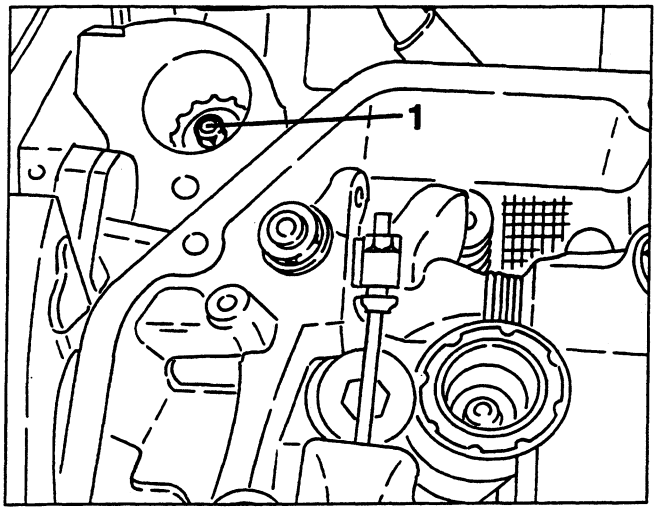

1. Slacken the fastening nuts and remove the right-hand cylinder head.
- Remove the seal.

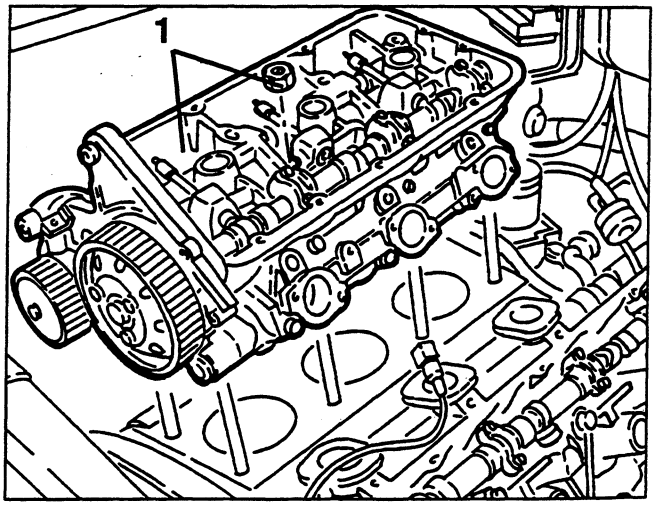

cardiagn.com

1. Install the cylinder liner tools no. 1.820.279.000 as illustrated.

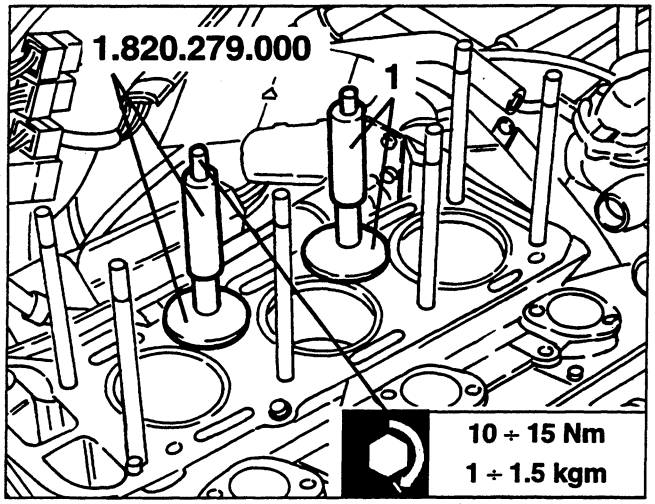

INSTRUCTIONS FOR REFITTING

Reverse the sequence followed for removal observing the following instructions.
- Assemble the right-hand cylinder head with the timing references aligned.
- Tighten the cylinder head fastening screws proceeding as described below and bearing in mind that, for each step, the tightening sequence is the one illustrated.

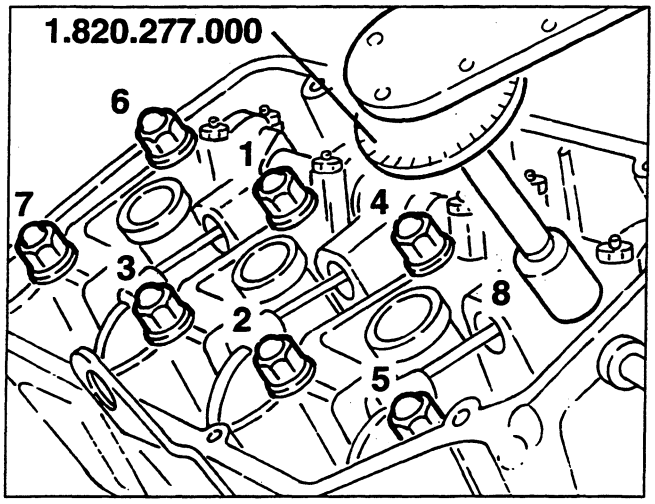

Tightening procedure	
Set all the screws to a torque of:	25 Nm 2.5 kgm
Complete tightening by a further angle of:	240° ± 1°30'

1. Using tool no. 1.825.013.000 (C.6.0183) fitted with a dial gauge, turn the crankshaft until the piston of the first cylinder is at the T.D.C. in the bursting stroke.
2. Check the alignment of the notches on the camshafts with those on the corresponding caps.

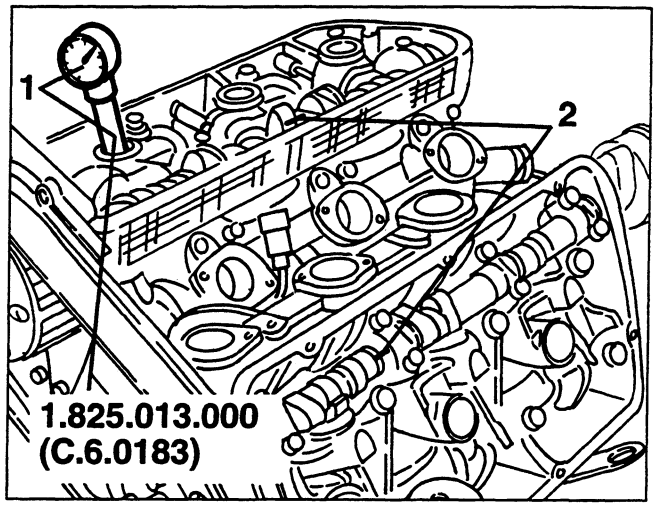

1. Position the timing gear belt tensioner so that stud "**a**" is as illustrated, then fully tighten the two fastening nuts, locking them lightly.
- Fit the timing gear belt on the pulleys starting from the drive pulley and continuing counter-clockwise.
- Slacken the two belt tensioner fastening nuts.
2. Insert the 10 mm square of the tensioning lever "**b**" (3/8" ratchet in the square hole of the belt tensioner, then turn it counter-clockwise to move pointer "**c**" by 2-3 mm in relation to notch "**d**", then turn clockwise until they coincide; tighten the two belt tensioner fastening nuts without locking them.
- Turn the crankshaft twice to take the piston of cylinder 1 to the T.D.C.
- Check that pointer "**c**" coincides with the centre notch "**d**" and tighten the two belt tensioner fastening nuts to the specified torque.
- Remove the tensioning lever "**b**" from the belt tensioner.

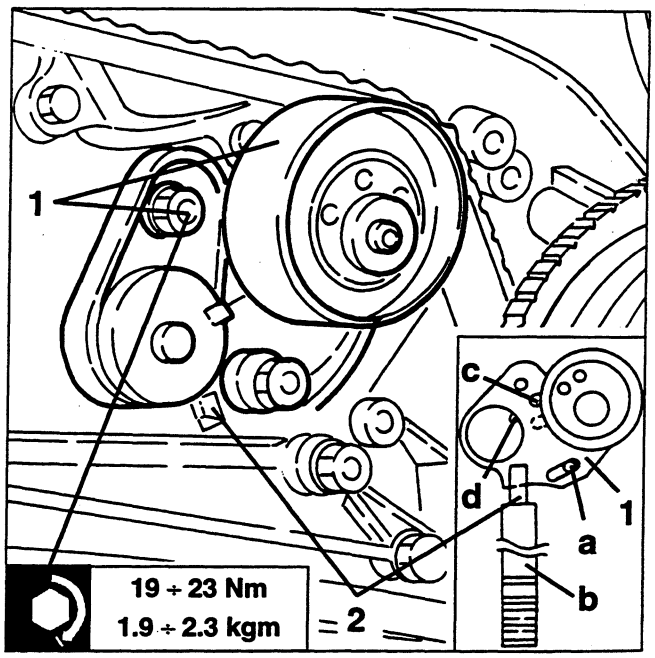

cardiagn.com

GENERAL DESCRIPTION

In this system the ignition and injection functions are operated by two control units, the Motronic ML4.1 and EZ212K both made by BOSCH.
The experience acquired and the continuous research developed in this sector have made it possible to bring forward an up-dated, fine-tuned system, simplifying and reducing as far as possible the data detection sensors and making the control actuators more precise and powerful.
In order to optimise the performance of the vehicle during acceleration and at top speeds, in the EZ212K control unit, a new OVERBOOST function control has been implemented which makes it possible to increase the supercharging pressure according to a certain logic, while the ML4.1 control unit determines the necessary fuel enrichment.

SYSTEM FUNCTIONS

The system functions are essentially the following:
- injection times adjustment;
- spark advance adjustment;
- cold starting control;
- control of enrichment during acceleration;
- fuel cut-off during deceleration;
- constant idle speed control;
- maximum rpm limiting;
- evaporative solenoid valve control;
- lambda probe control;
- connection with the ALFA ROMEO CODE system;
- self-diagnosis.

Injection times adjustment

Digital technology has made it possible to optimise consumption and performance levels through programmed maps memorised inside the electronic control unit, in relation to engine rpm and load.
With the help of sensors which detect the many variables involved, the ML4.1 control unit controls the electroinjectors extremely quickly and accurately. The injection time is mainly corrected on the basis of the battery voltage and engine temperature.

Spark advance adjustment

The gap on the phonic wheel due to the lack of two teeth gives the ML4.1 control unit a reference; each side of the subsequent tooth determines the angular position of the crankshaft. This reference is sent to the ML4.1 control unit, which, according to a map programmed inside the control unit itself and in relation to the engine rpm and load, establishes the correct advance rate. The advance determined in this way is transferred to the EZ212K control unit which, on the basis of the signals received from the pinging, temperature and throttle angle sensors, delays the advance if necessary, selectively on the cylinder that needs it.

Control of cold starting

During cold starting, the system controls the spark advance and the injection time.
The spark advance depends solely on engine rpm and temperature and the advance rate is at its highest at a temperature of -30°C.

cardiagn.com

The injection time is obtained from a value programmed in the ML4.1 control unit and corrected through the measurement of the intake air temperature, engine temperature, battery voltage and engine rpm.
During starting, the control unit provides injection at each ignition pulse, therefore in four phases per engine cycle. Once a pre-established rpm (depending on the engine temperature) has been reached, the control unit operates injection at each turn of the crankshaft.

Control of enrichment during acceleration

Each time acceleration is required if the change in the signal of the air-flow meter exceeds a predetermined increase, the ML4.1 control unit not only adapts injection to the new requirement, but increases it further in order to quickly reach the rpm required.
When nearing the established rpm, the increase of injection is gradually eliminated.

Fuel cut-off during deceleration

Fuel cut-off during deceleration is of the adapted type. With the detection of the throttle closed condition and engine speeds above 1080, fuel injection is de- activated.
As the supply is lacking, the engine rpm will fall more or less rapidly according to the conditions of the vehicle. Before reaching idle speed, the dynamics of the lowering of the rpm is monitored. If this is above a certain value, the fuel supply is partially re-activated according to a logic which involves smoothly accompanying the engine to idle speed.
Once this condition has been reached, the normal idle speed functions are reactivated and fuel cut-off will only be reactivated after exceeding the fuel cut-off threshold to prevent the engine from "gasping"
The thresholds for resuming the fuel supply and cut off vary depending on the temperature of the engine. Another fuel cut off logic is developed inside the ML4.1 control unit which comes into operation during partial deceleration, i.e. when a lower engine load is required. This function is active only if the new condition lasts for a pre-established length of time and after adapting the ignition angle to the new situation.

Constant idle control

The adjustment of idle speed is controlled under all operating conditions by the constant idle speed actuator with single coil.
When the engine is running at idle speed, the purpose of the actuator is to bring the real rpm to the nominal rpm rating acting on the throttle by-pass.
In addition to controlling the idle speed, it also acts as an additional air valve and regulator for the cutting in of the air conditioner compressor.
In addition to the constant idle speed actuator, idle rpm is also corrected by the adjustment of the spark angle (advance) as this has a more rapid effect.

Maximum rpm limiting

After exceeding a maximum rpm threshold (6,500 rpm) the injection of fuel is cut off to prevent the engine from over-loading.

Evaporative solenoid valve control

The fuel vapours gathered by the various points of the circuit in a special active carbon canister are sent to the engine where they are burnt: this takes place through a solenoid valve which is opened by the control unit only when the engine is in a condition to allow correct combustion without "disturbing" it: in fact, the control unit compensates this amount of incoming fuel by reducing delivery to the injectors.

cardiagn.com

Lambda probe control

The oxygen sensor (or "lambda" probe) informs the control unit of the amount of oxygen present at the exhaust, therefore of the correct fuel-air metering.
The optimum mixture is obtained when the lambda coefficient = 1 (optimum stoichiometric ratio).
The electric signal that the probe sends to the control unit changes abruptly when the mixture composition departs from lambda = 1. When the mixture is "lean" the control unit increases the amount of fuel and reduces it when the mixture is "fat": this way the engine always operates as far as possible around the ideal lambda rating.
The lambda probe signal is processed inside the control unit by a special integrator which prevents sharp "oscillations".
The probe is heated by an electrical resistance so that it quickly reaches the correct operating temperature (appr. 300°C).
Therefore through this probe it is possible to adjust engine carburetion accurately.
Among other things, this makes it possible to keep exhaust emission within the specified limits.

Connection with the ALFA ROME CODE system

On vehicles fitted with ALFA ROMEO CODE, as soon as the Motronic control unit receives the signal that the "key is at MARCIA", it "asks" the ALFA ROMEO CODE system for consent to start the engine: this consent is only given if the ALFA ROMEO CODE control unit recognises the code of the key engaged in the ignition as correct. This dialogue between the two control units takes place on diagnosis line K already used for the Alfa Romeo Tester.

Self-diagnosis

The Motronic ML4.1 and EZ212K control units are fitted with a self-diagnosis system. In the event of a system malfunction, the control units detect the fault and, where possible, they replace the missing signals with fixed parameters. However, only the Motronic ML4.1 control unit is capable of memorising and maintaining the data also when the engine is turned off. Therefore, also the errors of the EZ212K control unit are stored in the ML4.1 control unit, via the serial line which connects them.
When required by the operator, the faults can be read on the Motronic ML4.1 control unit using the ALFA ROMEO TESTER.

cardiagn.com

FUNCTIONAL LAYOUT OF THE ML4.1/EZ212K INJECTION - IGNITION SYSTEM

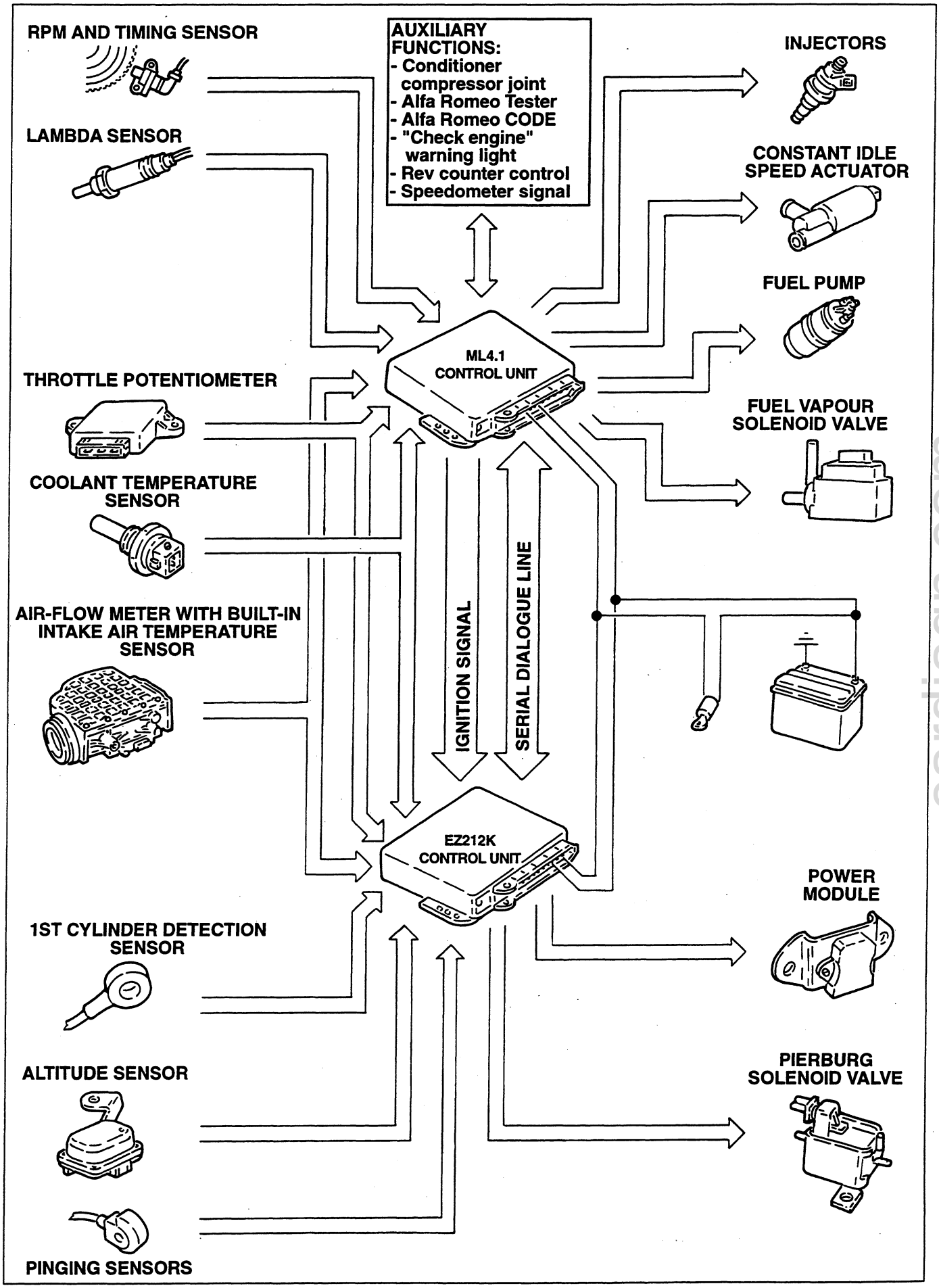

cardiagn.com

COMPONENTS OF THE ML4.1/EZ212K INJECTION - IGNITION SYSTEM

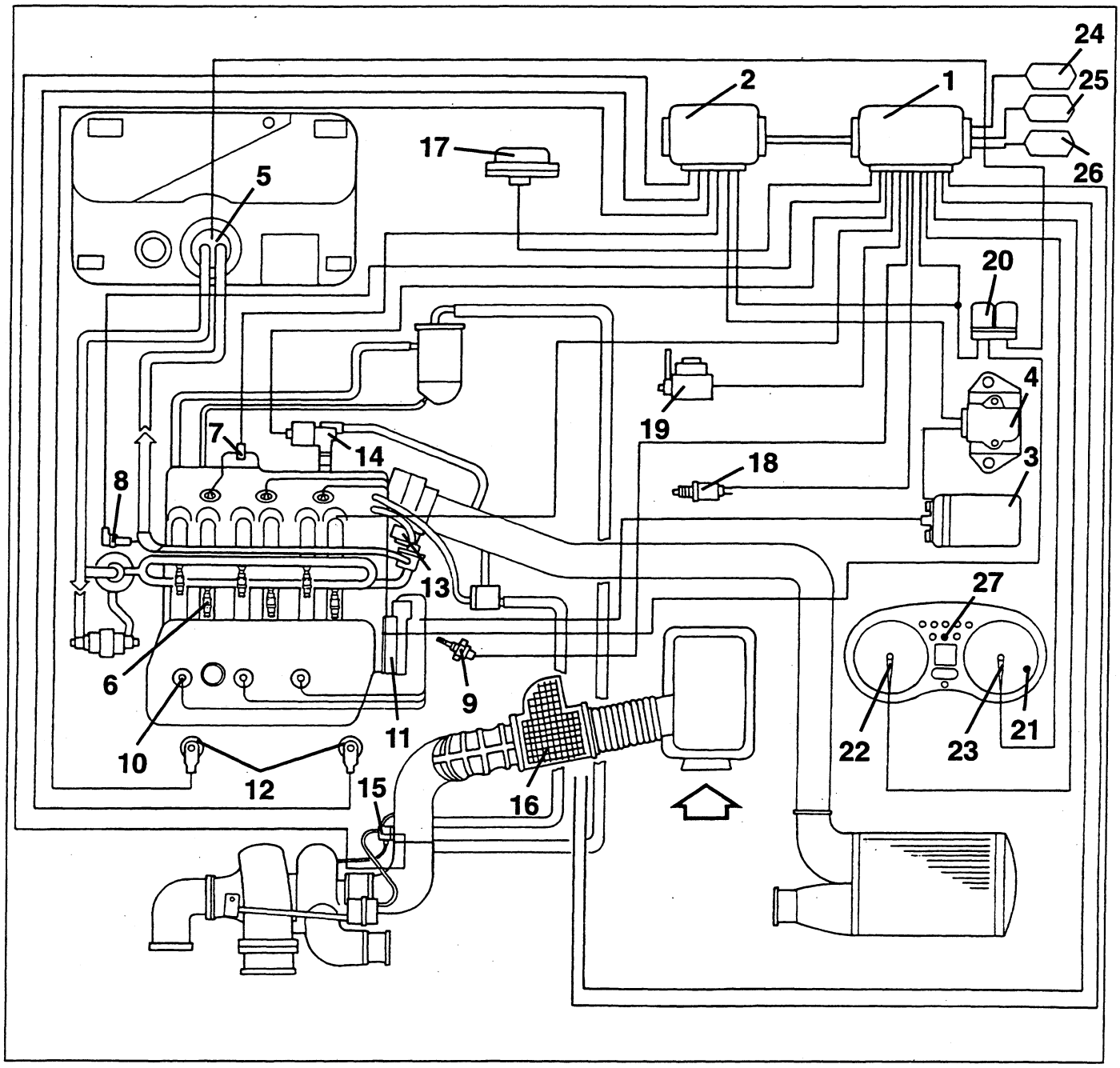

1. *Motronic ML4.1 control unit*
2. *EZ212K control unit*
3. *Ignition coil*
4. *Power module*
5. *Fuel pump*
6. *Injectors*
7. *1st cylinder detection sensor*
8. *Rpm and timing sensor*
9. *Engine coolant temperature sensor*
10. *Spark plugs*
11. *Ignition distributor*
12. *Pinging sensors*
13. *Throttle potentiometer*
14. *Constant idle speed actuator*
15. *Pierburg solenoid valve*
16. *Air-flow meter with built-in intake air temperature sensor*
17. *Altitude sensor*
18. *lambda sensor*
19. *Fuel vapour solenoid valve*
20. *Set of relays*
21. *"Check engine" warning light*
22. *Speedometer*
23. *Rev counter*
24. *Connector for connection with Alfa Romeo Code control unit*
25. *Diagnosis socket (Alfa Romeo Tester)*
26. *Climate control system connector*
27. *Alfa Romeo Code warning light*

cardiagn.com

DESCRIPTION OF THE SYSTEM

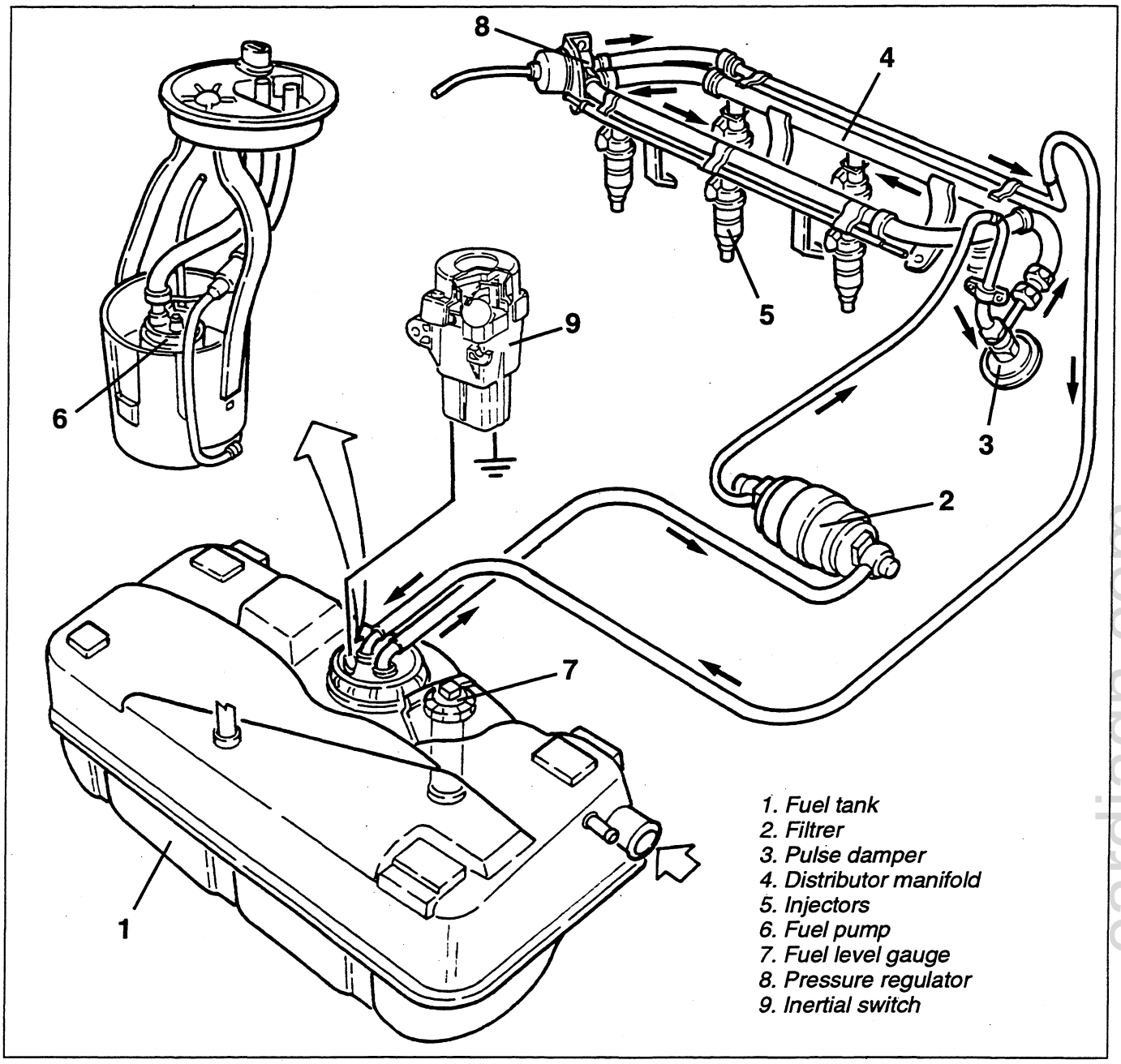

The fuel supply circuit comprises an electric fuel pump (6) located in the tank (1) which sends the pressurised fuel through a special pipe to the filter (2).
From here, the fuel is sent to the pulse damper (3) and then to the distributor manifold (4) which distributes it to the injectors (5).
The excess fuel returns to the tank through a special tube via the pressure regulator (8) operated by the vacuum withdrawn from the intake box.
The amount of fuel injected depends solely on the injection time which is controlled by the control unit.

The connection between the various sections of the fuel lines is made by special connectors (to disconnect them see specific paragraph).
The fuel supply system is fitted with an inertial switch (9) which is triggered in the event of a crash cutting off the fuel pump connection to earth, thereby also the flow of fuel to the injection system.

Note on serviceable fuels:
in order to work correctly, the engine must run on unleaded fuel (95 R.O.N.) as the presence of lead would quickly wear out the catalytic converter of the exhaust system.

cardiagn.com

WARNINGS

Before doing any work on the components of the fuel supply system, to prevent dangerous leaks of fuel, proceed as follows:
- Disconnect the fuel pump supply relay (1).

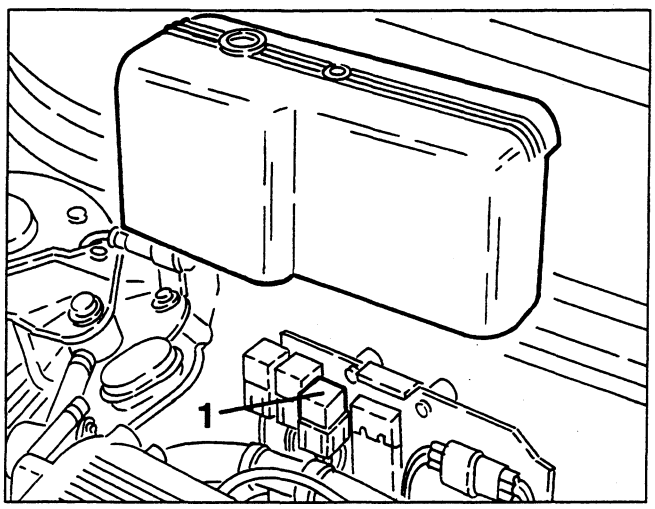

- Run the engine until it stops.

FUEL PIPE CONNECTORS

"JOHN GUEST" TYPE

Cleaning for disconnection

Preferably use one of the following systems which are given in the order of their degree of efficiency.
a) Jet of lukewarm water (max 50 °C) on the connector and drying with jets of compressed air to prevent any residual water in the interstices from entering the pipe after disconnection.
b) Jet of cold water and drying with a jet of compressed air.
c) Jet of hot water with neutral soap.
d) Jet of cold water with neutral soap.

Never use solvents and/or materials that are not compatible with the pipes in general and for the connector in particular, not compatible with nylon and acetalic resin.

Operations for disconnection

After a certain length of time the connector tends to act as follows:
- The clamp "A" bites the tang with the steel teeth; if in plastic, the teeth can slightly dent the tang without adversely affecting sealing.
- Over the course of time, the seals (O-Ring) "B" nel tempo, tend to stick on the surface of the tang regardless of whether it is plastic or metal, this way the coupling appears to be stuck and impossible to release only pressing on the tab "E" and pulling.

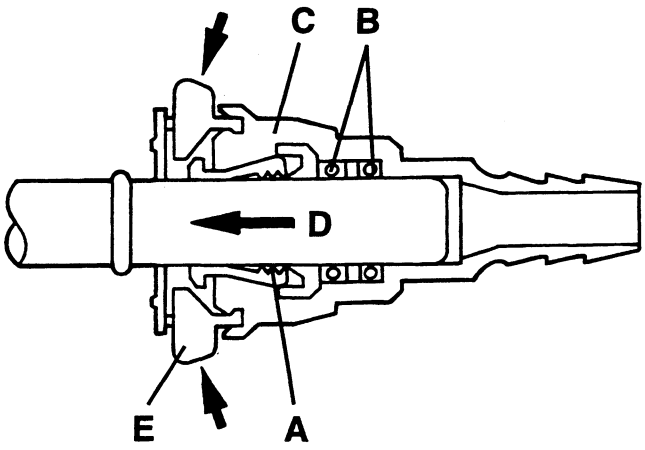

In this case, to disconnect proceed as follows:
- Turn 1/4 - 1/2 a turn right and left several times (at least five) the body "C" of the connector with respect to the tang to eliminate friction of the seals on the tang itself and at the same time push the connector in the direction of the arrow "D" to loosen the grip of the clamps.
- Press the release buttons with the fingers.
- Pull the connector to disconnect it.

If this is still difficult, repeat the above operations checking that the connector is clean and that there is no mud or dirt in the interstices hindering the movement of the release mechanisms.

NOTE: Do not use pliers, screwdrivers, etc. to disconnect the connector. If the connector has not been tampered with and the operations have been carried out correctly, no tools are necessary.

"HURON" TYPE

Operations to be carried out before disconnection

- Thouroughly clean the connector area with a jet of cold water (or hot, max 50°C) and dry with compressed air.
- A jet of water (hot or cold) may also be used with neutral soap.

Never use solvents and/or materials that are not compatible with the pipes in general and for the connector in particular, not compatible with nylon and acetalic resin.

cardiagn.com

Operations for disconnection/connection

- Pinch the white transparent insert "A" between the thumb and forefinger and keep it pressed.

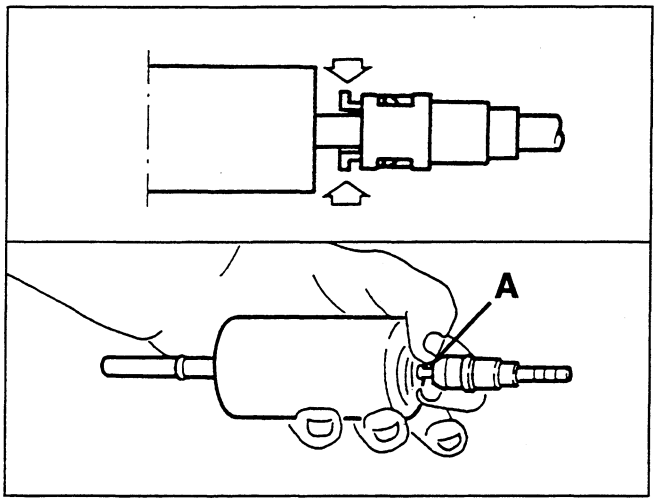

- With the other hand, grip the body "B" of the connector and pull in the direction of release.

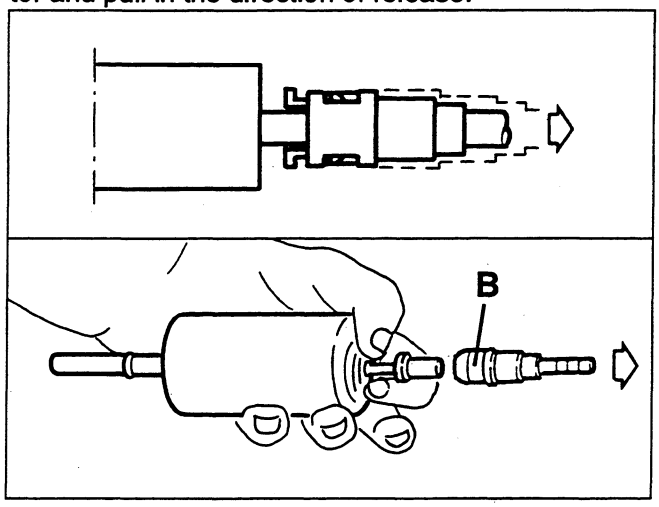

- Using a fine-tipped screwdriver in the points shown by the arrows, remove and retrieve the insert "A" taking care not to damage it.

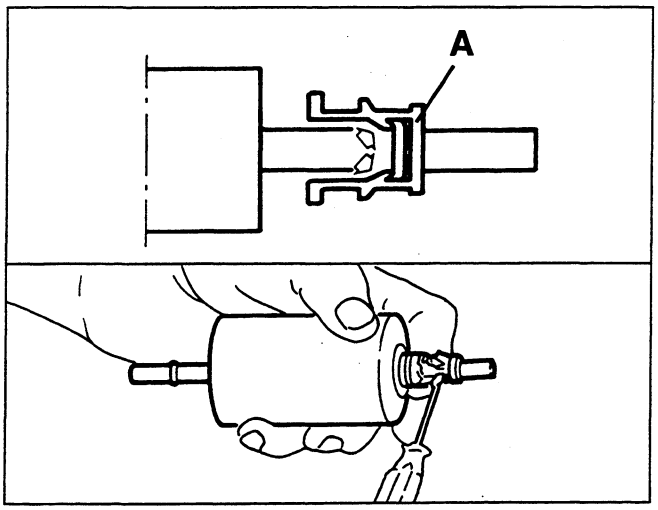

- Refit insert "A" on the body of the quick coupling, fitted on the pipe, until it clicks meaning that it has been fitted correctly.

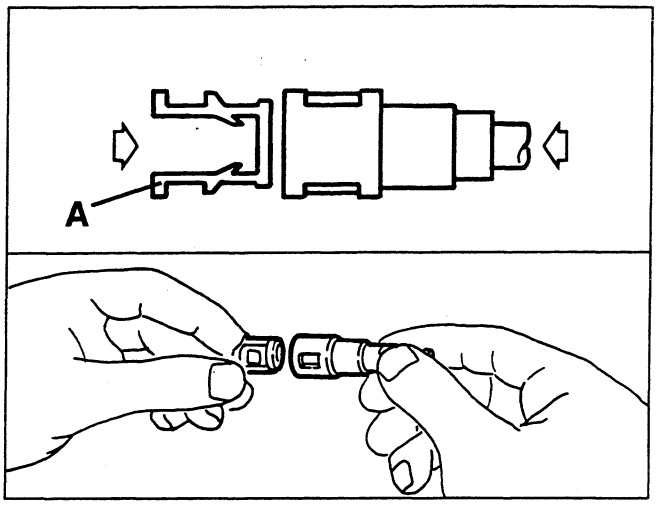

- Then connect the pipe with the quick coupling "C" pushing it until it clicks. Try to remove the coupling to make sure that it has been installed correctly.

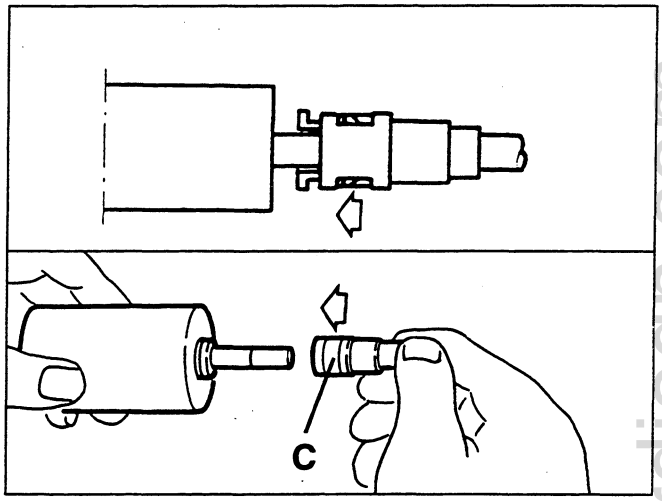

FUEL TANK

The fuel tank is made from sheet metal and has a capacity of 70 litres including a reserve of appr. 9 litres.
The fuel filler is on the main body and a special opening makes it possible to disconnect it from the tank for removal of the fuel tank itself.

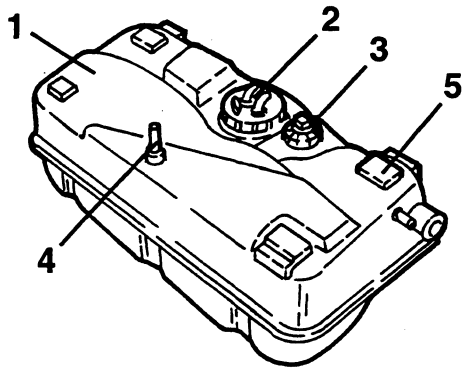

1. Fuel tank
2. Fuel pump
3. Fuel level gauge
4. Vapour breather pipe
5. Antivibration pads

cardiagn.com

The fuel filler cap has a special device which enables it to be tightened only to the specified torque, this way excessive tightening beyond the specified value is prevented.
The tank is positioned in correspondence of the rear seat and fastened by two metal straps to the underbody and it is protected by a special sheet metal partition.
The pipe on the fuel filler acts as a breather.
There is an opening in the upper part of the tank for housing the fuel pump and fuel level gauge.
A special takeoff on the tank allows the fuel vapours to reach the vapour separator via a connection pipe.

REMOVING/REFITTING

- Set the car on a lift.
- Disconnect the battery (-) terminal.
- Empty the tank withdrawing the fuel through the filler using a special pump.
- Remove the rear seat cushion and back (see specific paragraph).

1. Slacken the fastening screw and remove the rear seat belt "whips".

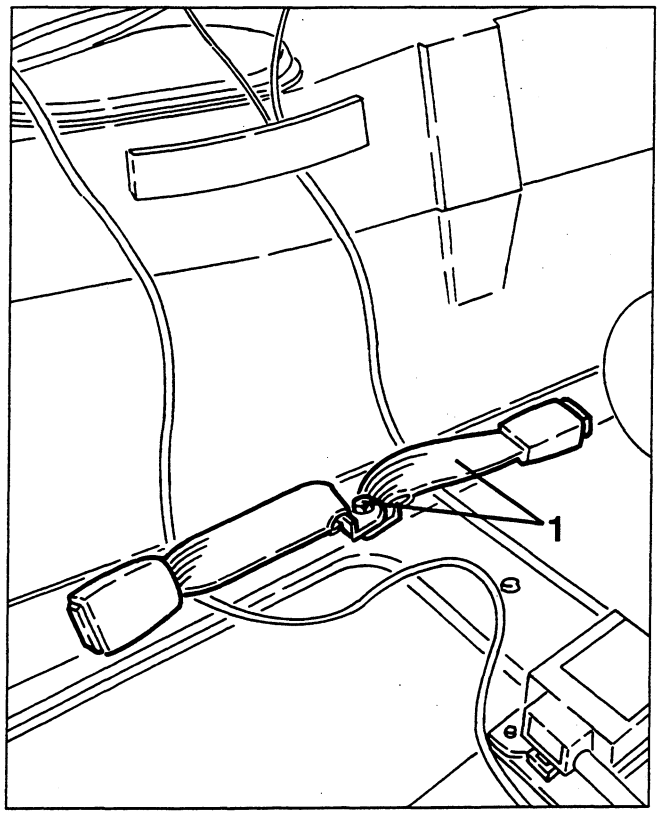

1. Slacken the fastening nuts and remove the access cover to the fuel filler.

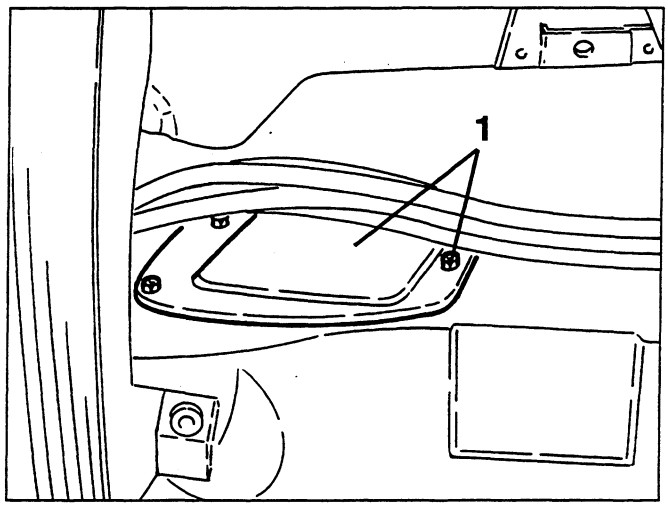

1. Slacken the fastening clamp and disconnect the fuel filler from the tank.
2. Slacken the fastening clamp and disconnect the breather pipe from the fuel tank.

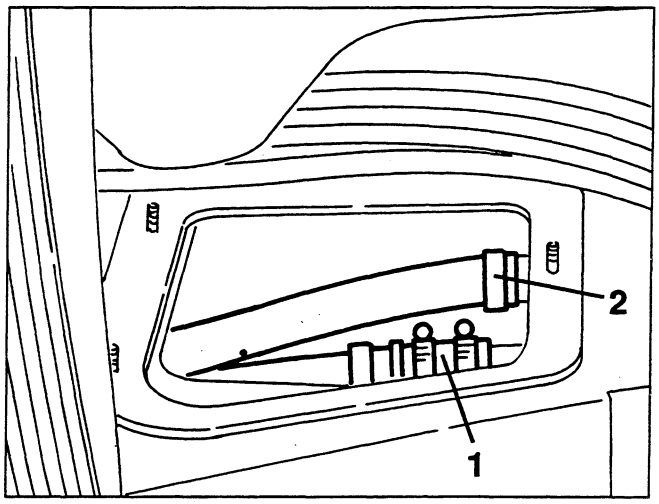

1. Slacken the fastening nuts and remove the access cover to the fuel pump and fuel level gauge.

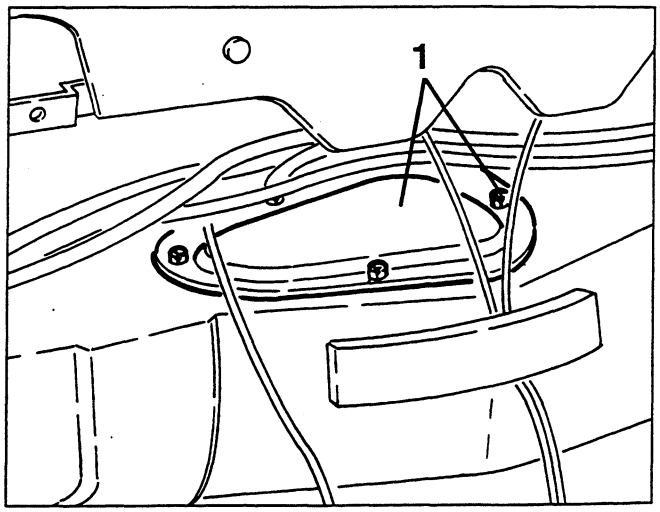

cardiagn.com

1. Disconnect the electrical connection from the fuel level gauge.
2. Disconnect the electrical connection of the fuel pump.
3. Disconnect the fuel delivery and return pipes from the pump.

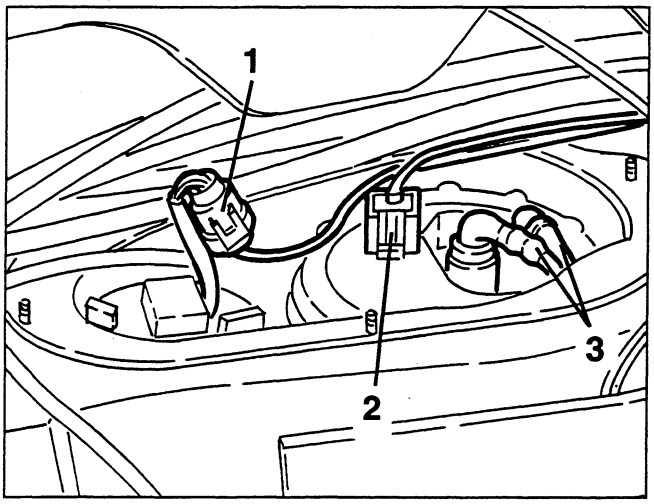

1. Working from the luggage compartment, pull back the trim and disconnect the the fuel vapour inlet pipe from the fuel vapour separator.

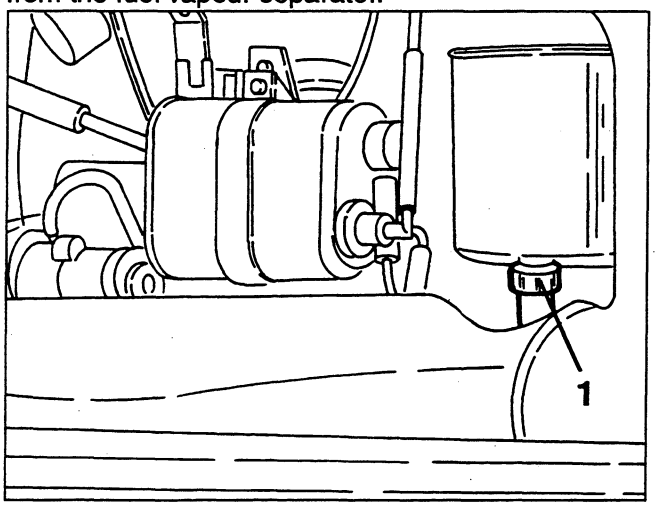

- Raise the car and remove the rear Multilink suspension (see specific paragraph).
1. Slacken the fastening screws and remove the sheet protecting the fuel tank complete with reinforcement bracket.

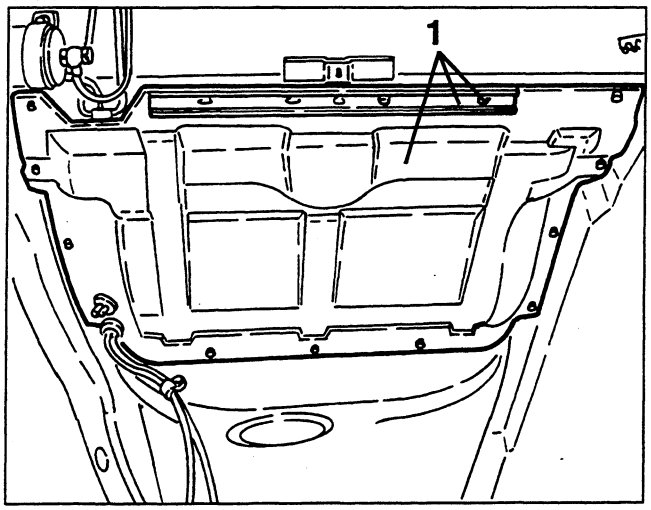

1. Position a hydraulic bracket under the tank.
2. Slacken the fastening screws of the fuel tank metal support straps, then remove the tank lowering the hydraulic jack.

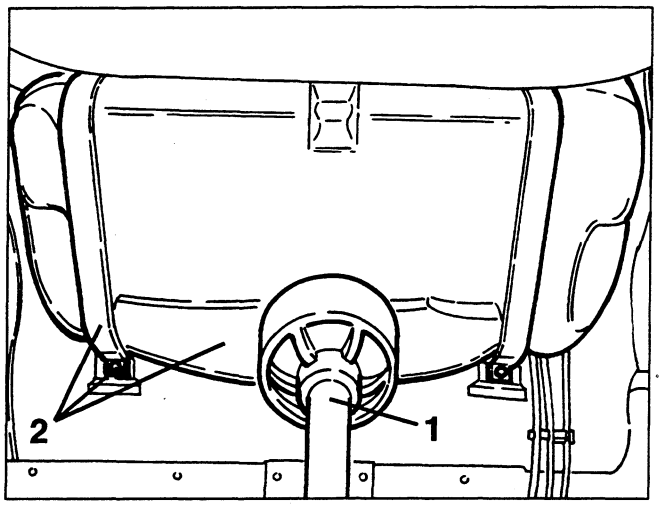

FUEL LEVEL GAUGE

This is of the axial floating type and it is fastened to the tank by a bayonet coupling.
Its main feature is that it prevents the gauge pointer from swaying when cornering and on twisting roads. This is because the float that runs inside the tube of the level gauge is submerged in the fuel and is therefore only sensitive to the hydrostatic thrust and not to the differences in level due to swaying of the vehicle.

1. Connector
2. O-Ring
3. Sliding blade
4. Resistance
5. Common blade
6. Upper spring
7. Tube
8. Float
9. Adjustment pin
10. Lower spring
11. Cup
12. Cap
13. Base

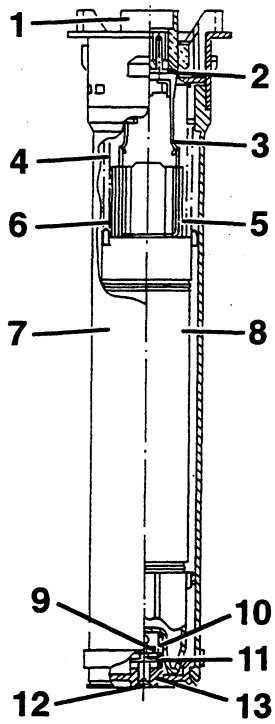

cardiagn.com

REMOVING/REFITTING

- Disconnect the battery (-) terminal.
- Remove the back of the rear seats (see specific paragraph).

1. Slacken the fastening nuts and remove the access cover to the fuel pump and to the fuel level gauge.

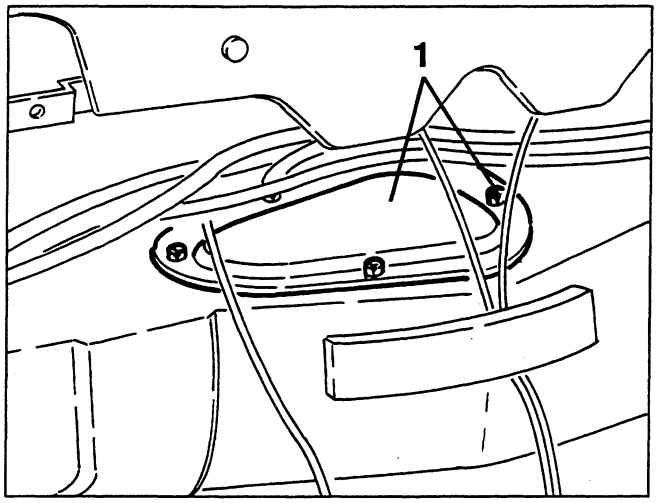

1. Disconnect the electrical connection of the fuel level gauge.
2. Using tool no. 1.822.159.000, slacken the locknut and remove the fuel level gauge complete with seal.

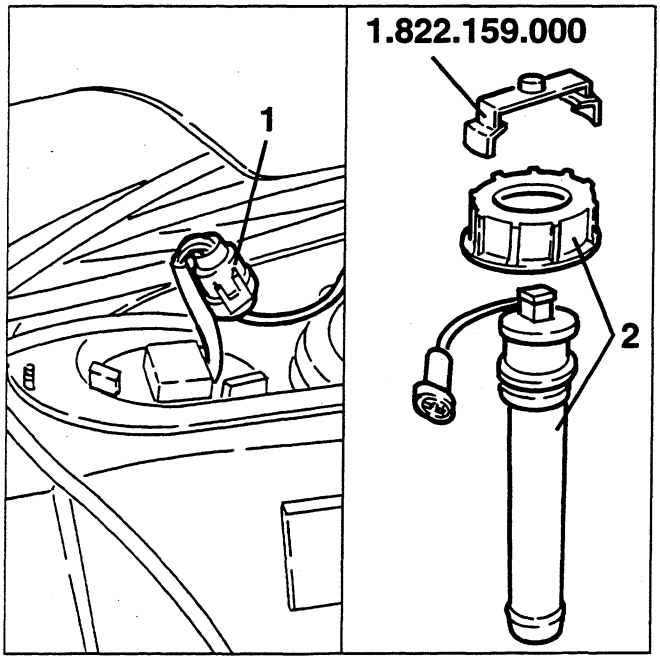

CHECKS AND INSPECTIONS

For a complete functional check, see GROUP 55 - ELECTRIC SYSTEM DIAGNOSIS.

FUEL PUMP

The electric pump, submerged in the tank is of the volumetric displacement type with rollers (4), with brush motor and excitation by permanent magnets.
The impeller (2) turns, pulled by the motor, creating volumes which move from the inlet port (1) to the delivery port (5).
These volumes are delineated by the rollers which during the rotation of the motor adhere to the outer ring.
The pump is fitted with two valves: one is a check valve (3) to prevent the fuel circuit from emptying, when the pump is not operating; the second is an overpressure valve which short circuits the delivery with the inlet when pressures build up above 5 bar, thereby avoiding overheating the electric motor.
The supply contacts are polarised to prevent the connections from being inverted.

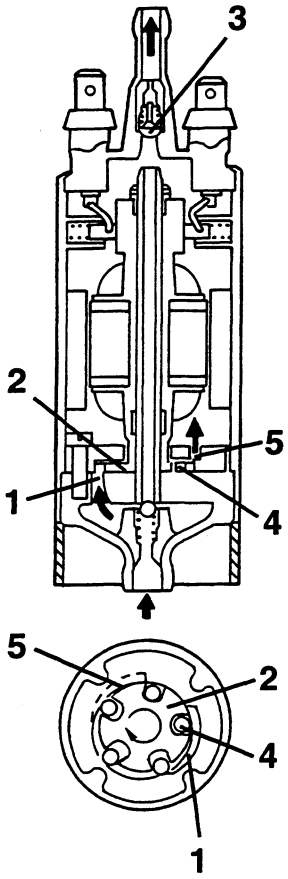

REMOVING/REFITTING

- Disconnect the battery (-) terminal.
- Remove the back of the rear seats (see specific paragraph).

1. Slacken the fastening nuts and remove the access cover to the fuel pump and to the fuel level gauge.

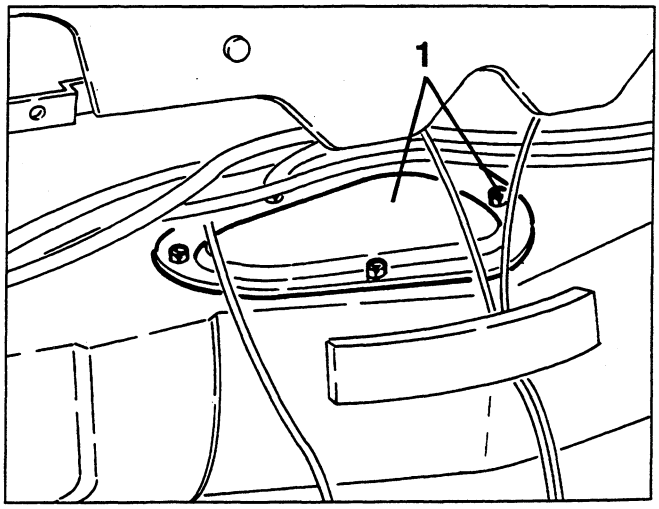

cardiagn.com

1. Disconnect the electrical connection of the fuel pump.
2. Disconnect the fuel delivery and return pipes from the pump.

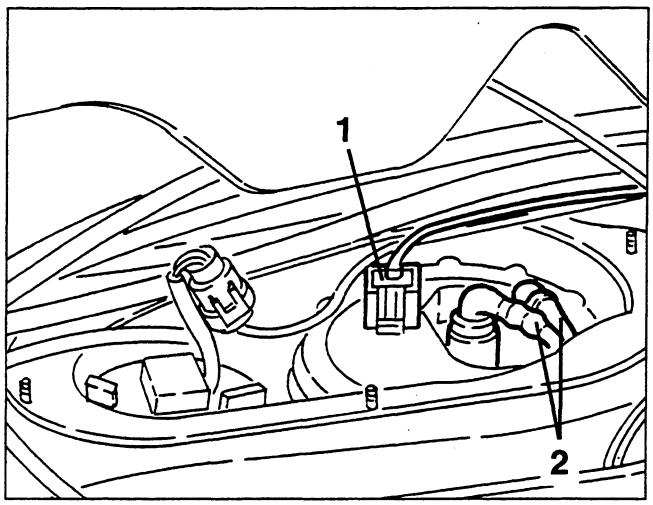

1. Using tool 1.822.135.000, slacken the locknut fastening the fuel pump, then withdraw it from its housing complete with seal.

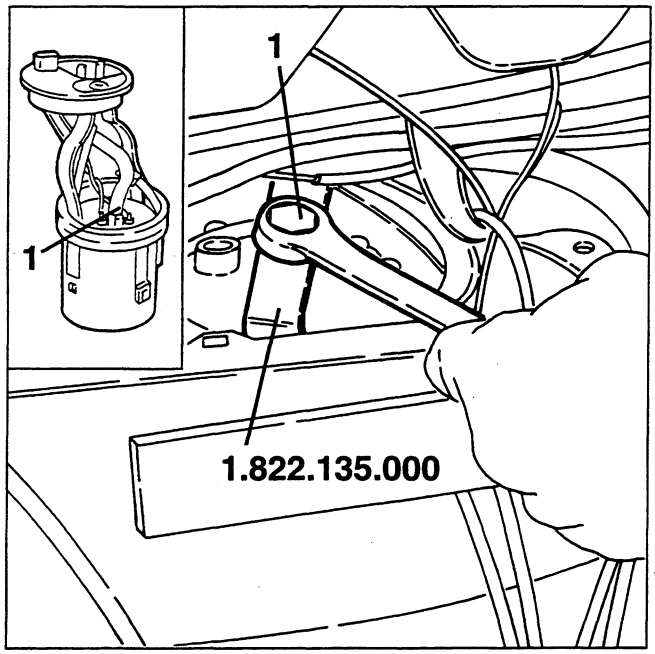

DIS-ASSEMBLY/RE-ASSEMBLY

1. Disconnect the two electrical connections from the fuel pump.
2. Disconnect the excess fuel return pipe from the pump tray.
3. Disconnect the delivery pipe from the fuel pump.
4. Prise the end of the spring, then separate the cover from the pump.

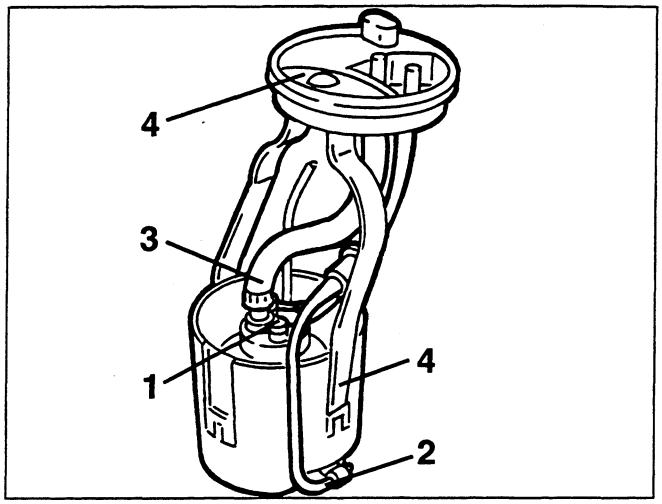

1. Withdraw the tray from the fuel pump assembly.
2. Slacken the fastening clamp and withdraw the fuel pump from the filtering support.

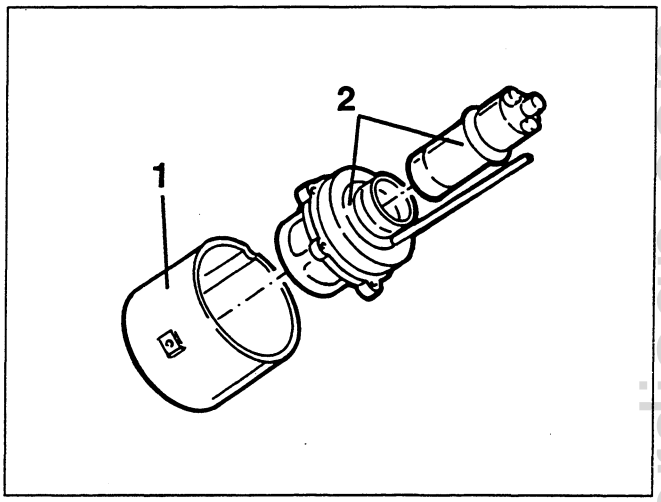

CHECKS AND INSPECTIONS

Accurately clean the mesh filter.
The presence of water in the fuel is particularly harmful to the pump as it causes inside rust. Carefully check the operation of the pump if the fuel is contaminated with water.
Also check the efficiency of the supply contacts since any rust would reduce the voltage at their terminals, thereby reducing delivery resulting in the formation of bubbles and reduction of the fuel injected.

NOTE: In the event of replacement, remember that the pump is supplied filled with protective oil and with the unions closed by special plugs. When installing on the vehicle, it is not necessary to empty the pump as the oil is burnt in the engine. If the protective oil is emptied from the pump, it is necessary to put it into operation within two weeks to prevent the formation of a film of dry oil on the motor collector which would ruin it due to the lack of electrical continuity.

cardiagn.com

FUEL FILTER

The filter is inserted in the fuel delivery pipe to the injectors, under the car floor, next to the fuel tank.
It is formed of an outer aluminium cover and an inner polyurethane support which contains a paper element with a high filtering power (~ 5 µm) and a surface of appr. 1400 cm^2.
Fuel filtering is indispensible to ensure correct operation of the electrojectors, given their sensitivity to foreign particles contained in the fuel circuit.
There is an arrow on the outer filter cover which indicates the direction in which the fuel flows and therefore the correct assembly position.

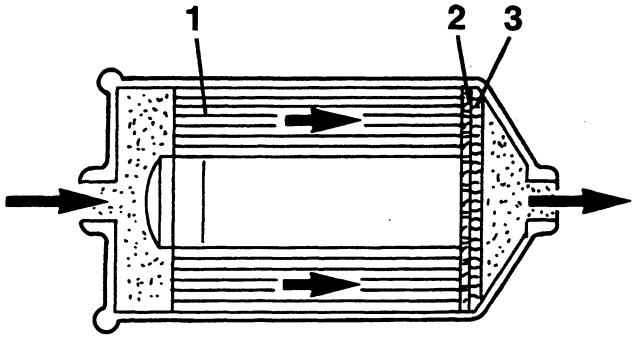

1. Paper filter *2. Fabric filter* *3. Mesh*

FUEL PRESSURE REGULATOR

The task of the fuel pressure regulator is to keep the difference between the pressure of the fuel and the pressure in the intake manifold constant.
This way it is possible to meter the amount of fuel solely on the basis of the injector opening time.
The pressure regulator is fitted downstream of the fuel distributor manifold.
It is a limiting regulator controlled by a diaphragm which regulates the fuel pressure to appr. 3 bar.
When the fuel pressure exceeds the maximum rating, the diaphragm acts on a valve which opens the return pipe, through which the excess fuel is returned to the fuel tank.
A tube connects the regulator spring chamber to the air intake box.
An interdependence is created by this connection between the pressure in the fuel circuit and the pressure in the intake box, so that the pressure between the inlet and outlet of the electroinjectors is always the same, when they are open.

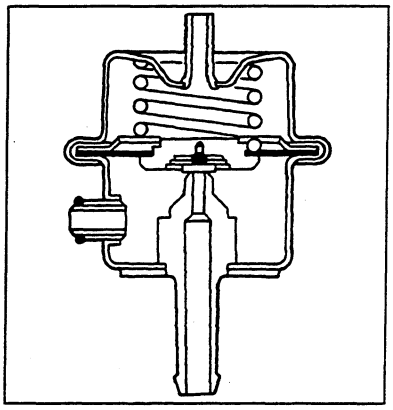

REPLACEMENT

- Set the car on a lift and raise it.
1. Disconnect the fuel inlet pipe fitting from the filter.
2. Disconnect the fuel outlet pipe fitting from the filter.
3. Slacken the fastening clamp and remove the fuel filter.

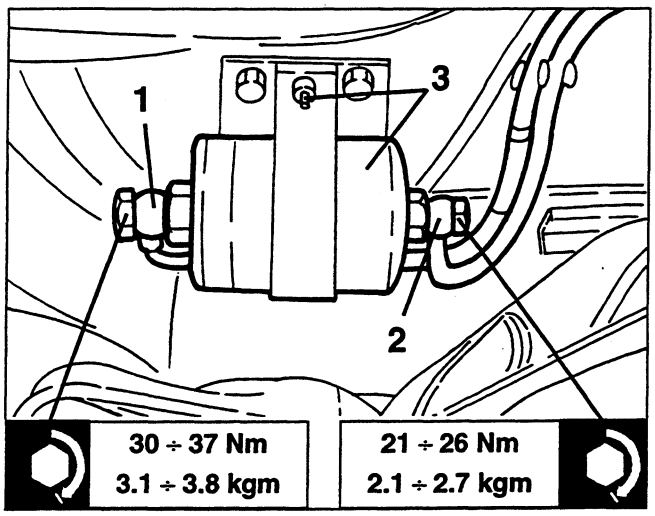

REMOVAL/REFITTING

1. Disconnect the vacuum takeoff pipe from the fuel pressure regulator.
2. Disconnect the excess fuel return pipe from the pressure regulator.
3. Slacken the two fastening screws and remove the fuel regulator from the fuel distributor manifold and retrieve the O-Ring.

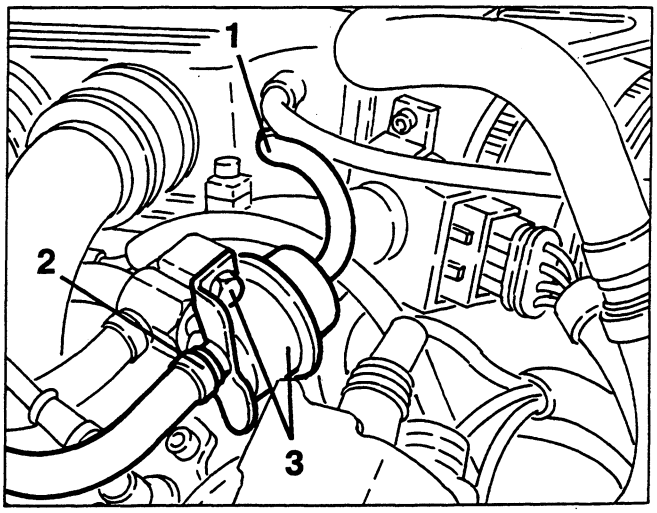

cardiagn.com

PULSE DAMPER

The pulse damper is connected to the inlet of the fuel distributor and it serves to suppress the pulsing noises that can occur especially at low engine rpm.
The pulsing is generated by pressure differences of the fuel deriving from the opening and closing of the electroinjectors or of the pressure regulator.

REMOVAL/REFITTING

- Remove the intake manifold of cylinder no. 4.
1. Disconnect the fuel distributor manifold connection pipe.
2. Disconnect the fuel inlet pipe from the pulse damper.
3. Disconnect the pulse damper from the fuel distributor manifold slackening its coupling.
4. Slacken the nut of the fastening clamp and remove the pulse damper complete with stiff pipes.

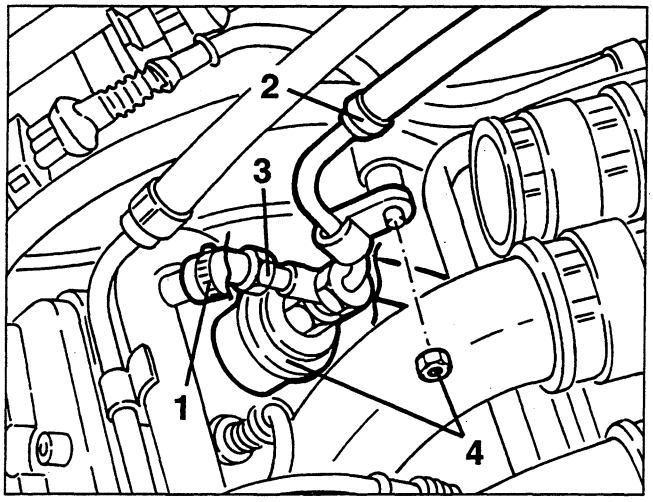

ELECTROINJECTORS

The injector nozzle is formed so that the jet of fuel atomizes into a 30° cone.
The injectors are locked by the fuel distributor which presses them into their housings machined on the intake ducts.
The injectors are also anchored to the fuel distributor by "safety catches" and sealed by two O-Rings.
The electroinjectors have the task of metering the amount of fuel needed by the engine.
They are "all or nothing" devices i.e. they only have two possible conditions, either open or closed.
They will let the fuel pass when they are "open" and prevent it from being delivered when they are "closed".
They basically comprise a nozzle controlled by an electromagnet and by a return spring.
In the rest position, the needle, which forms one piece with the core, is pushed by the spring onto the electroinjector nose to close the hole and ensure that unwanted fuel is unable to come out.
As soon as the winding is energized, the core is attracted, it compresses the spring opening the nozzle hole, thereby allowing the fuel to flow out.
Considering the physical characteristics of the fuel (viscosity, density) and the pressure difference (pressure regulator) constant, the amount of fuel injected depends on the injector opening time only.
The winding energizing time is normally called the "injection time".

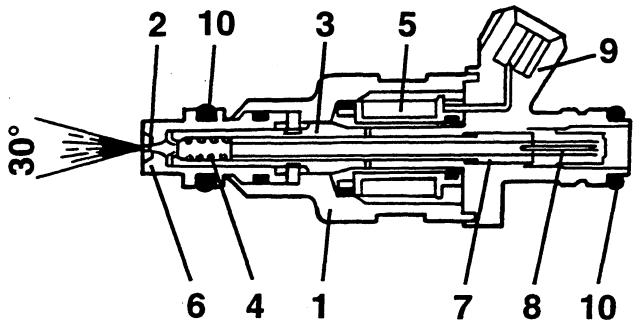

1. Injector body
2. Needle
3. Magnetic core
4. Helical spring
5. Winding
6. Injector nose
7. Adjustable pressure plate
8. Filter
9. Electrical connection
10. Seal rings

CHECKING FOR CORRECT OPENING OF ELECTROINJECTORS

- Measure the percentage of CO at the exhaust.
- Disconnect the electroinjector connectors one by one; each time measure for a reduction of the CO percentage at the exhaust and check that this value remains constant at each check.
- If not, locate and replace the faulty electroinjector; in any case a visual index of the efficiency of the electroinjectors is given by the spark plug electrodes:
• a mixture which is too rich corresponds to a black colour.
• a mixture which is too lean corresponds to a light colour.

cardiagn.com

CHECKING THE SEALING OF ELECTROINJECTORS

- Remove the electroinjectors complete with fuel distributor manifold, keeping the fuel supply circuit connected.
- Disconnect the electrical connections from the electroinjectors.
- Operate the starter motor and check that there are no leaks of fuel from the electroinjectors; if so replace the faulty injector.

REMOVAL/REFITTING

- Disconnect the battery (-) terminal.

1. Disconnect the electrical connections from the electroinjectors.
2. Remove the intake ducts.

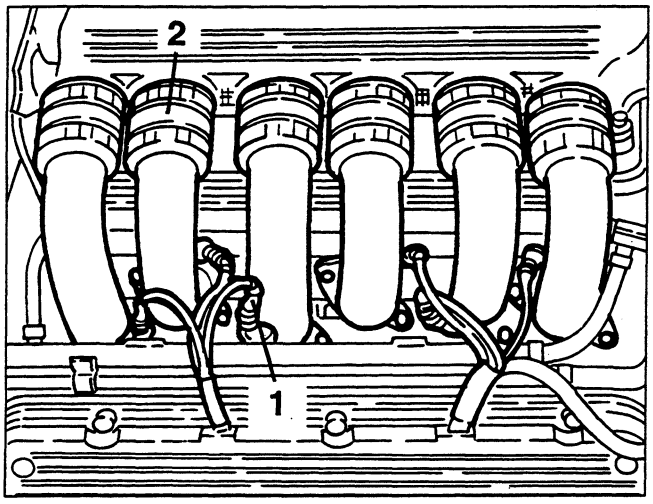

1. Disconnect the fuel delivery and return pipes from the fuel distributor manifold.
2. Disconnect the fuel vapour recirculation pipe.

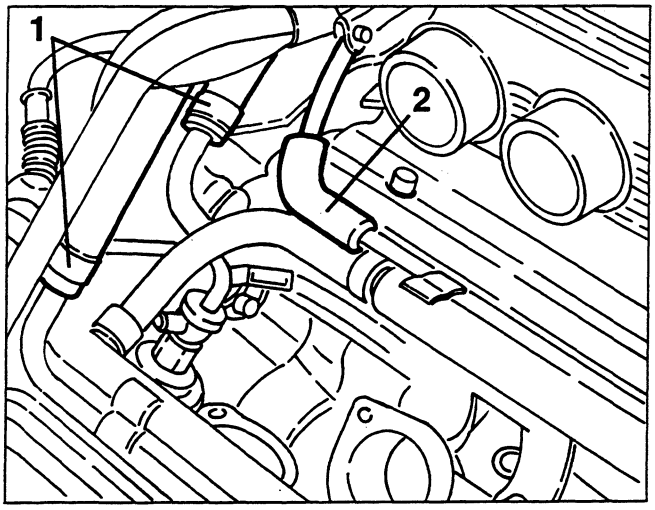

1. Disconnect the vacuum takeoff pipe for the fuel pressure regulator from the intake box.
2. Disconnect the fuel vapour delivery pipe to the intake from the distributor manifold.
3. Slacken the fastening screws and remove the fuel distributor manifold complete with injectors, fuel pressure regulator and pulse damper.

- Working on the bench remove the safety catches and remove the injectors from the fuel distributor manifold.

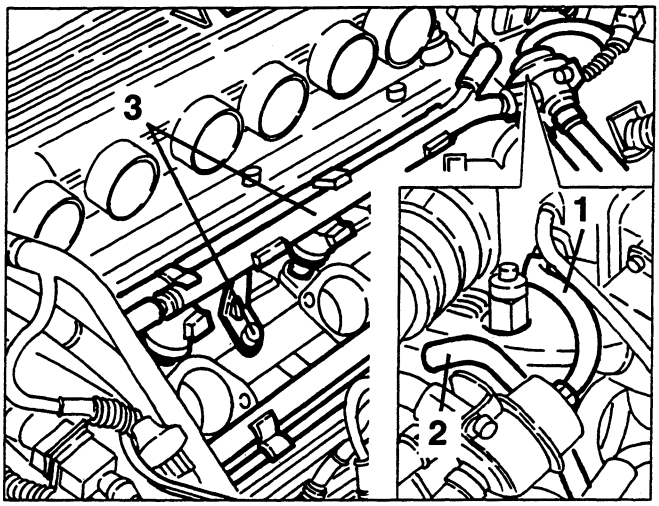

CHECKING THE PRESSURE AND TIGHTNESS OF THE FUEL CIRCUIT

1. Disconnect the fuel delivery pipe from the pulse damper, then connect a pressure gauge, using a "T" adapter, between the damper and the disconnected pipe.

- Disconnect the fuel pressure regulator vacuum takeoff pipe to avoid any irregularities in the rotation speed from causing abnormal readings.
- Start the engine and at idle speed check that the fuel pressure is within the specified limits.

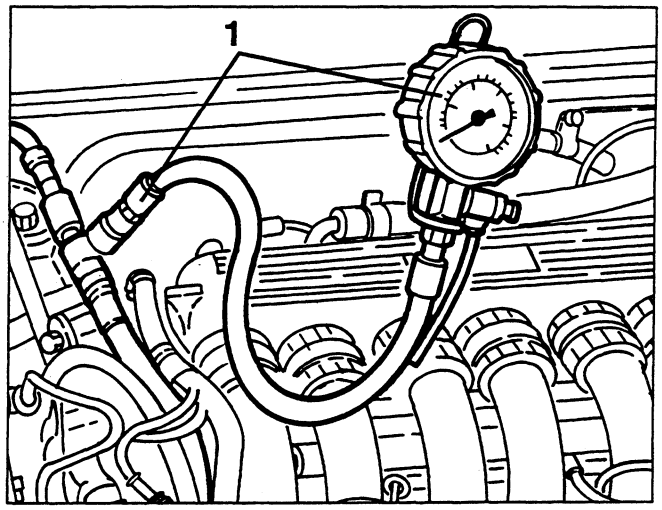

Fuel pressure at idle speed
3 bar

cardiagn.com

- Reconnect the vacuum takeoff pipe on the regulator and check that the fuel pressure falls by ~ **0.5 bar** and then rises again when the throttle valve opens.
If this fails to occur, look for any leaks in the vacuum takeoff pipe.

- Keeping the vacuum takeoff pipe connected to the regulator and with the engine running at idle speed, choke the regulator fuel outlet pipe noting the increase in pressure up to ~ **4 bar** (do not allow the pressure to exceed this rating).
- If the pressure does not reach this rating and no leaks are detected, check the fuel filter and/or that the pump is working properly.

DESCRIPTION OF THE FUEL VAPOUR RECOVERY SYSTEM

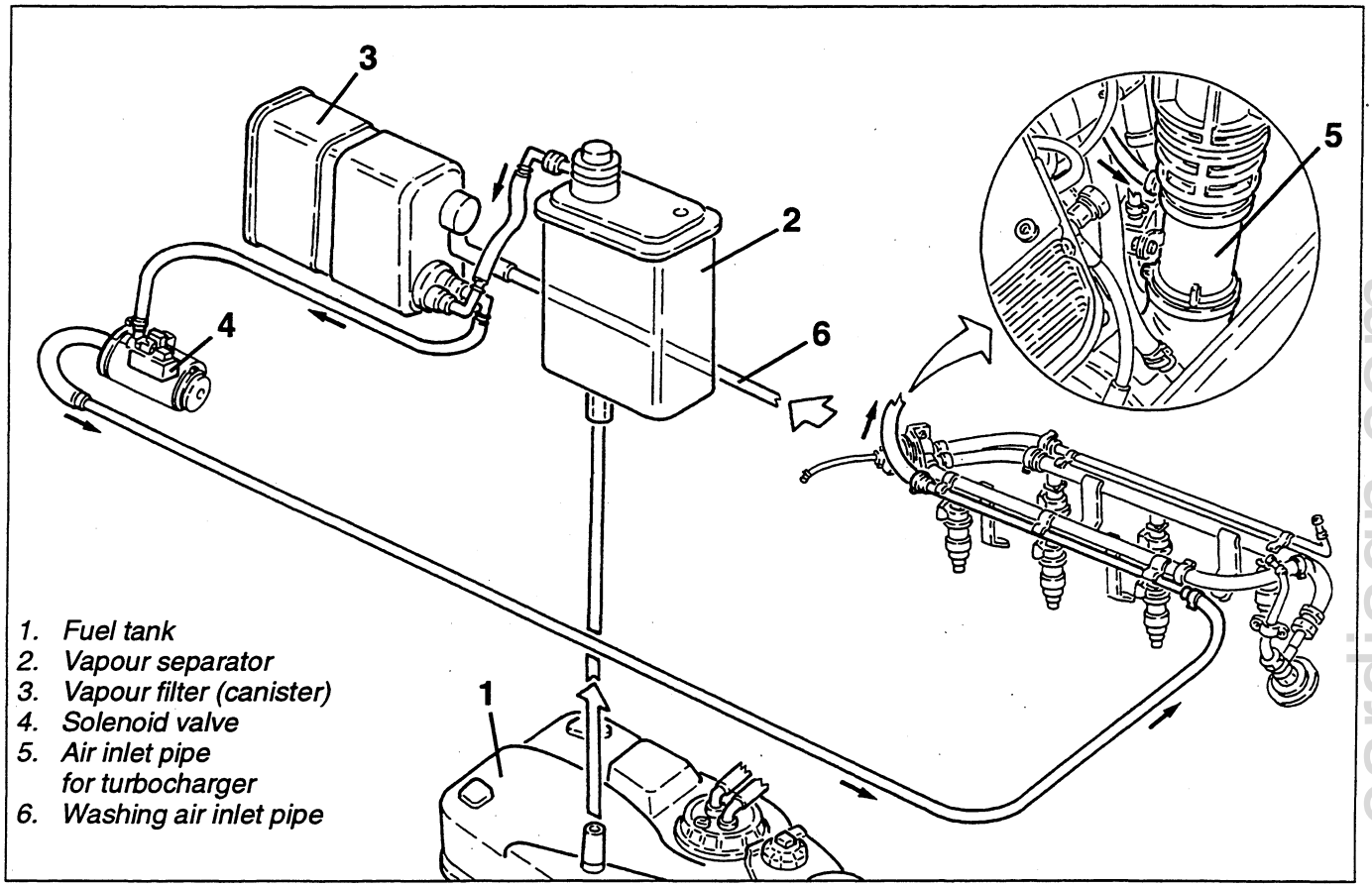

The fuel contained in the tank produces a considerable amount of vapours, which would pollute the environment if released.
The vapour control and recovery system gathers these vapours and burns them in the engine.
The vapours leading from the fuel tank through a special pipe reach the vapour separator which due to its special shape allows the condensed fuel to return in droplet form to the fuel tank. The remaining vapours are then sent to the fuel vapour filter canister where they are absorbed and stored by the active carbon contained in the filter.
There is a solenoid valve between the fuel vapour filter and the intake box: when the solenoid valve is not activated the connection with the intake is closed and the fuel vapours are collected in the canister in the active carbon.

Under certain load conditions the control unit controls the opening of the solenoid valve allowing any fuel vapours in the canister to be withdrawn. This condition remains even if at the exhaust the lambda sensor detects a reduction of oxygen which, due to the presence of too much fuel in the combustion chamber, is signalled to the control unit which delivers less fuel to the injectors so that the engine is always supplied under optimal conditions.
If there is a lack of fuel vapours in the canister, resulting in withdrawing only air, the lambda sensor detects this and signals the control unit of an increase in the oxygen.
In this case the control unit closes the solenoid valve thus preventing the connection of the canister with the intake box, thereby eliminating the excess air.

cardiagn.com

FUEL VAPOUR SEPARATOR

This is located in the luggage compartment, and its task is to limit the amount of fuel vapours reaching the canister, condensing part of them due to its shape.
It is formed of a plastic container with two connections: a lower one for the inlet of fuel vapours and the return of condensed fuel to the tank and an upper one for sending vapours to the canister.

REMOVAL/REFITTING

- Remove the spare wheel and turn over the special luggage compartment trim. panel.
1. Disconnect the fuel vapour inlet pipe from the separator.
2. Disconnect the fuel vapour delivery pipe to the canister from the separator.
3. Slacken the two fastening screws and remove the fuel vapour separator.

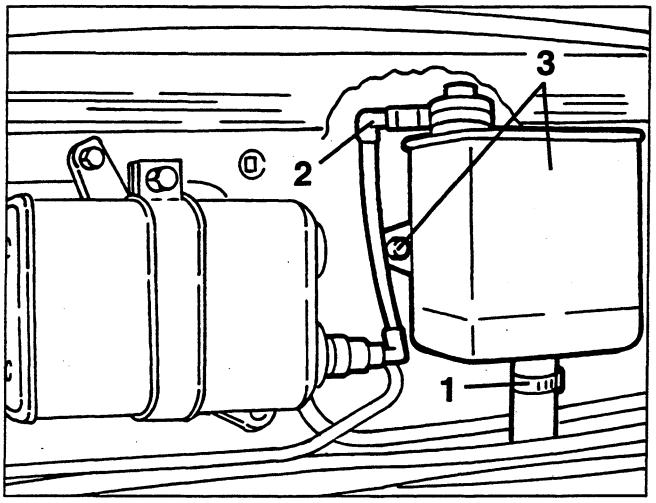

FUEL VAPOUR FILTER (CANISTER)

The filtering element is formed of active carbons enclosed in a plastic container. Their purpose is to absorb the fuel vapours leading from the separator.
A one-way valve, to which a special pipe is connected, admits outside air when the vapours are withdrawn to wash the active carbons.

REMOVAL/REFITTING

- Remove the spare wheel and turn over the special luggage compartment trim.
1. Disconnect the fuel vapour inlet and outlet pipes from the canister.
2. Disconnect the outside air inlet pipe from the one-way valve on the canister.
3. Slacken the fastening clamp screw and remove the canister.

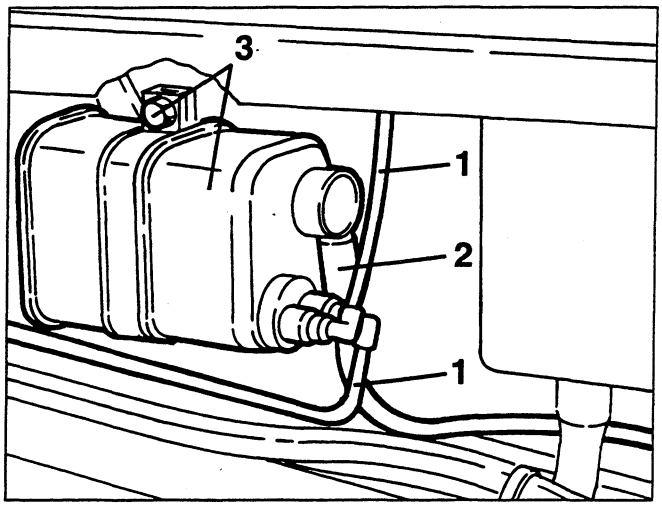

FUEL VAPOUR SOLENOID VALVE

The reason for the use of this valve, controlled by the electronic control unit, is to send the vapours stored in the canister to the engine intake.

REMOVAL/REFITTING

- Remove the spare wheel and turn over the special luggage compartment trim.
- Disconnect the battery (-) terminal.
1. Remove the fuel vapour solenoid valve from its support.
2. Remove the clamps and release the solenoid valve from its protective case.
3. Disconnect the electrical connection from the fuel vapour solenoid valve.
4. Disconnect the fuel vapour inlet and outlet pipes, then remove the solenoid valve.

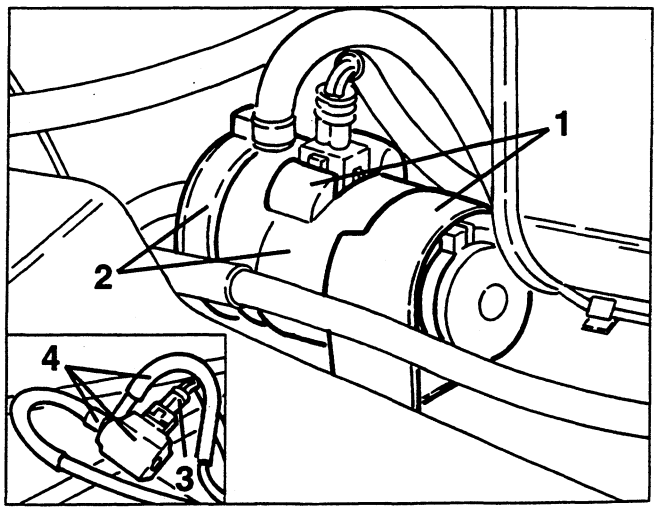

cardiagn.com

AIR SUPPLY AND OIL VAPOUR RECOVERY SYSTEM

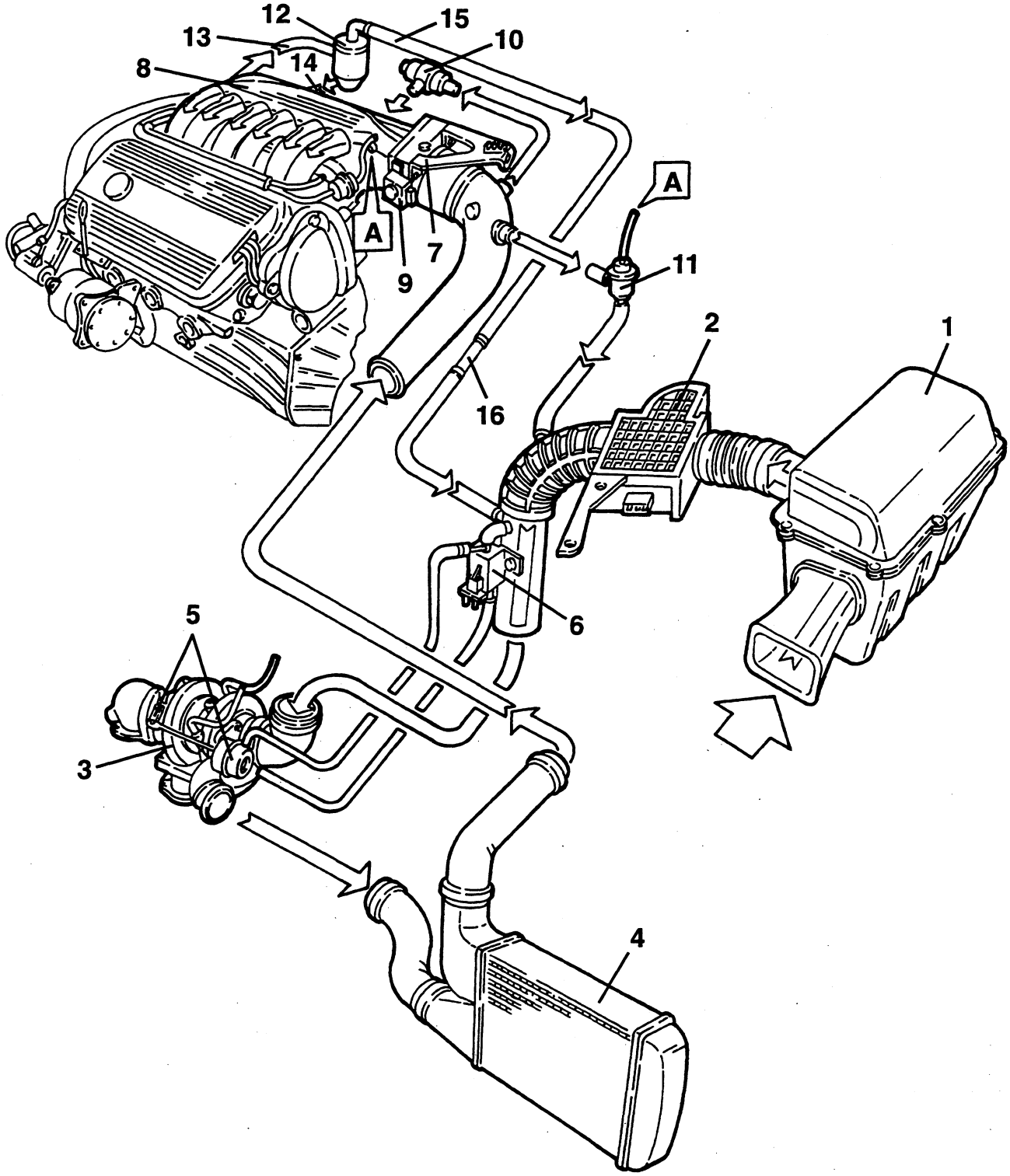

1. Air cleaner
2. Air-flow meter with built-in intake air temperature sensor
3. Turbocharger
4. Intercooler
5. Waste Gate overpressure valve
6. Solenoid valve for controlling Over-Boost devices
7. Throttle body
8. Intake box
9. Throttle potentiometer
10. Constant idle speed actuator
11. Antistalling valve
12. Oil vapour separator
13. Oil vapour recovery pipe
14. Condensed oil recovery pipe
15. Oil vapour recirculation pipe
16. Sleeve with calibrated diameter

cardiagn.com

DESCRIPTION

The air taken in through a dynamic inlet and filtered by a cartridge element (1), passes through the corrugated sleeve via the air-flow meter (2) with built in intake air temperature sensor.
From the corrugated sleeve the air reaches the turbocharger (3) which sends it under pressure, via a special pipe, to the intercooler (4) which lowers its temperature enabling better filling of the cylinders due to the greater density.
Supercharging is managed by the ignition control unit which, after reading a whole series of parameters (rpm, throttle position, etc.), electronically controls the adjustment pressure in the Waste Gate overpressure valve (5) through a special Pierburg solenoid valve (6); for further details on supercharging management, see the following paragraph.
The air is sent from the intercooler through a special pipe to the throttle body (7) which is controlled by the accelerator cable and adjusts the amount of air to be sent to the intake box (8). On one side of the throttle body there is a potentiometer (9) fastened to the throttle pivot pin. The potentiometer informs the control unit of the position of the throttle.

On the intake box, there is an additional air solenoid valve (10) which, via a special pipe, by-passes the throttle body making it possible to keep engine rpm constant under particular operating conditions of the engine. The supercharging system is fitted with an antistalling valve (11) which has the purpose of reducing and eliminating "ramming" which occurs when the accelerator pedal is released abruptly when the engine is supercharging; it is controlled by a vacuum signal picked up from the intake box. When the throttle valve closes, the vacuum transmitted by the connection pipe to the intake box, the antistalling valve opens allowing the pressure upstream of the throttle (closed) from discharging into the intake pipe. The fuel vapours flow and oil vapours to the air supply system (see specific paragraph). These are produced while the engine is running and are gathered in the special separator (12) through a pipe (13) leading from the right-hand cylinder head; as the separator is lower in temperature, the oil vapours are partially condensed. The condensed oil returns to the engine through a special pipe (14), while the remaining vapours are sent through a pipe (15) to the intake and then burnt in the engine.

BOOST-DRIVE MANAGEMENT

The Pierburg solenoid valve is supplied directly from a key-operated positive signal controlled permanently by the electronic control unit.
With the solenoid valve electrically de-energized cylinder D closes duct C, leaving ducts A and B in communication; the pressure of the supply arriving in duct B acts on the Waste-Gate valve, thereby adjusting the boost pressure.

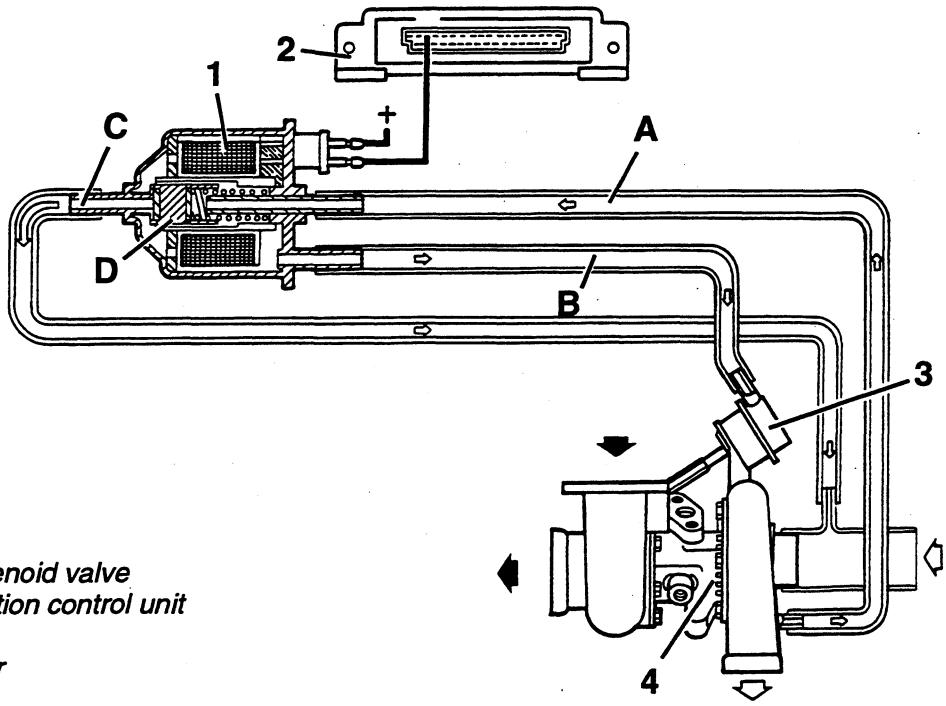

1. *Pierburg solenoid valve*
2. *Injection ignition control unit*
3. *Waste-Gate*
4. *Turbocharger*

cardiagn.com

When the control unit reads precise parameters such as the throttle valve opening and engine rpm, memorised inside it, it engergizes the Pierburg solenoid valve.
With the solenoid valve electrically energised, cylinder D opens duct C putting it into communication with duct A, at the same time closing duct B; the pressure supplied by the turbocharger, instead of acting totally on the Waste-Gate valve, it is partially relieved into the intake duct thereby enabling the supercharging of the engine to be increased.
When the solenoid valve is activated by the control unit cylinder D, controlled by a Duty-Cycle signal at a fixed frequency, opens duct C with variable times.
The Duty-Cycle varies on the basis of master curves memorised in the control unit which take account of the pressure in the intake manifold, engine rpm and the position of the throttle valve.

This new strategy enables continuous modulation of the supercharging pressure, thereby obtaining:
- high torque in a broader field of engine rpm;
- the power is delivered more gradually and smoothly;
- a guarantee of constant performance over time of the engines.

Owing to safety reasons, the control unit immediately suppresses the injection pulses if the supercharging pressure exceeds ~ **1.5 bar** and resumes them when the pressure has fallen below that rating.
When the pinging sensor signals the presence of pinging the control unit reduces the spark advance up to a maximum of **-6°** in **-3°** steps.

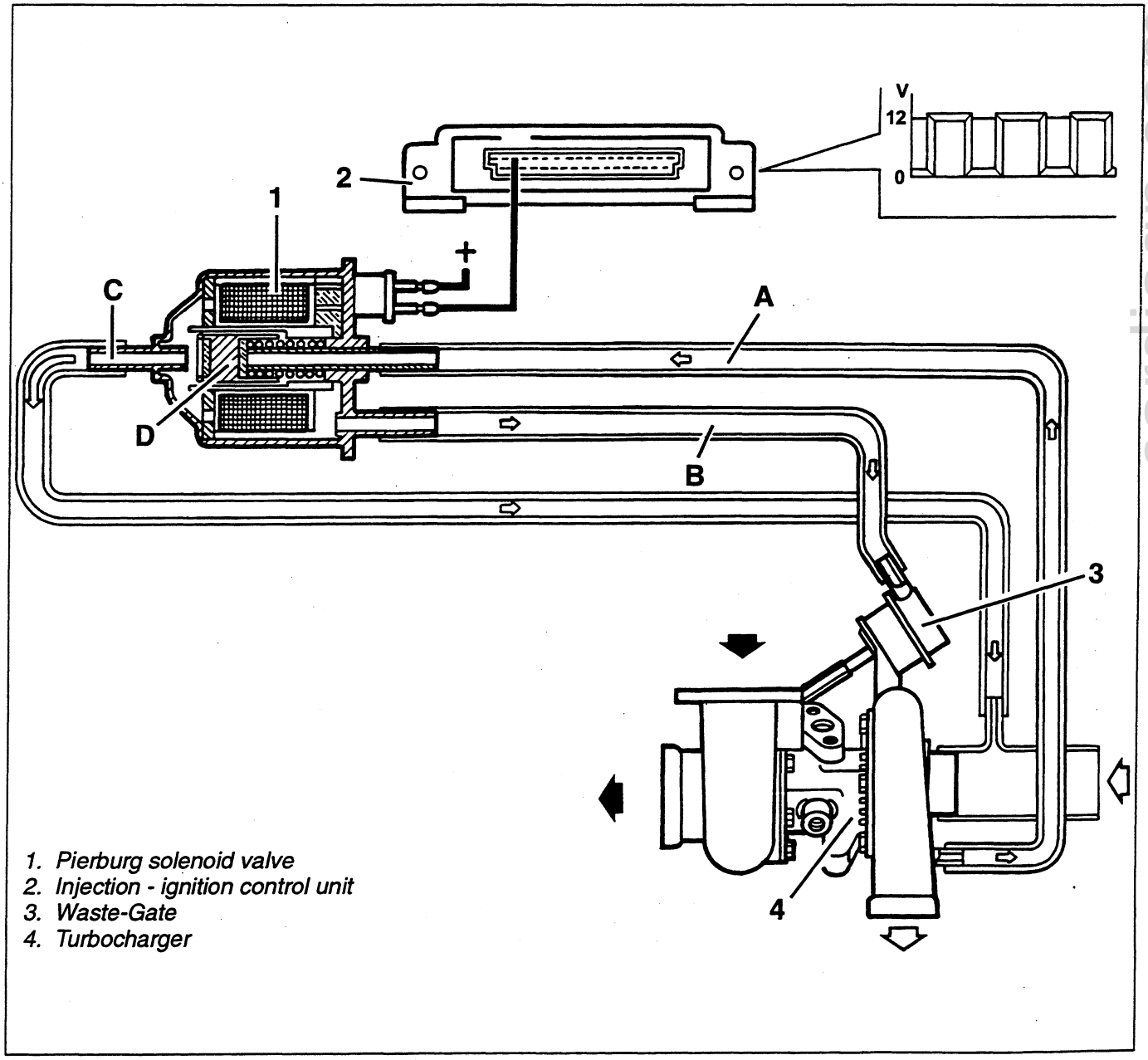

1. *Pierburg solenoid valve*
2. *Injection - ignition control unit*
3. *Waste-Gate*
4. *Turbocharger*

cardiagn.com

REPLACING THE AIR CLEANER CARTRIDGE

WARNING:
Any cleaning operation can damage the cleaner and may adversely affect operation of the engine.

1. Slacken the five screws fastening the air cleaner cover.

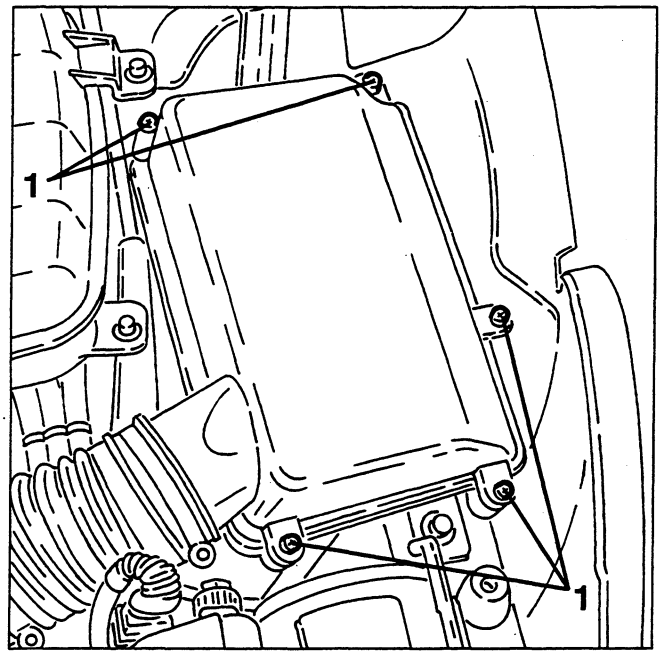

1. Raise the air cleaner cover without disconnecting it from the corrugated sleeve.
2. Remove the filtering element.

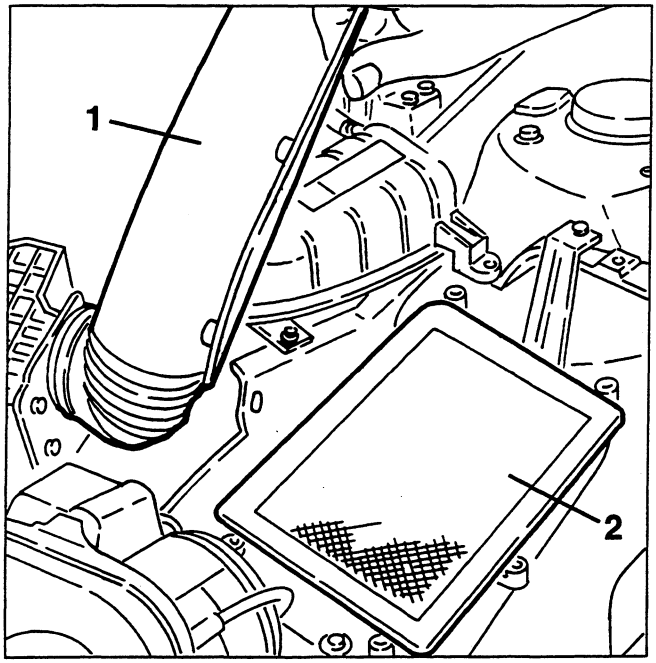

THROTTLE BODY

The throttle body adjusts the amount of air sent to the intake box in relation to the position of the accelerator pedal. In fact, the accelerator acts on a specific sector of pulley locked on the throttle valve pivot pin.
A coil spring allows the throttle to return to the closed position.
To prevent the formation of ice on the throttle valve which would prevent it from closing, the throttle body is heated by the engine coolant fluid.

REMOVAL/REFITTING

- Disconnect the battery (-) terminal.
1. Disconnect the electrical connection from the throttle potentiometer.
2. Slacken the fastening clamp and disconnect the intake duct from the throttle body.

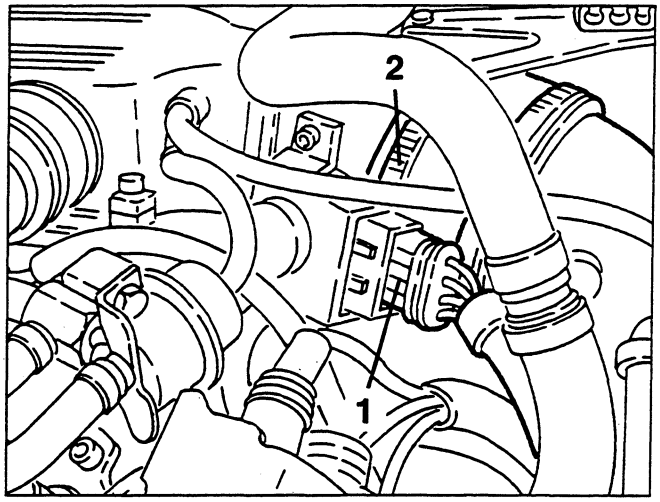

1. Disconnect the accelerator cable from the throttle.
2. Disconnect the two coolant fluid inlet and outlet pipes from the throttle body.
3. Slacken the fastening screws and remove the throttle body complete with potentiometer and accelerator cable support bracket and if necessary separate them on the bench.
- Remove the throttle body seal.

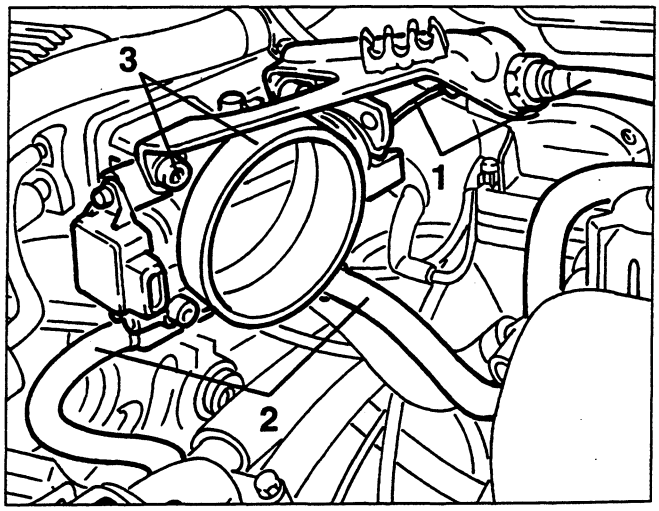

cardiagn.com

FLUXING TEST

- Proceed as described in the first two steps of the procedure for "Throttle body - Removal/Refitting".
1. Make sure that the throttle is in the closed position, then using tool no. 1.824.011.000 (C.2.0056) connected to the flow meter, check that the flow is within the specified limits.

Accelerator throttle air blowby in closed position (Solex flow meter)
280 ± 10 Scale N

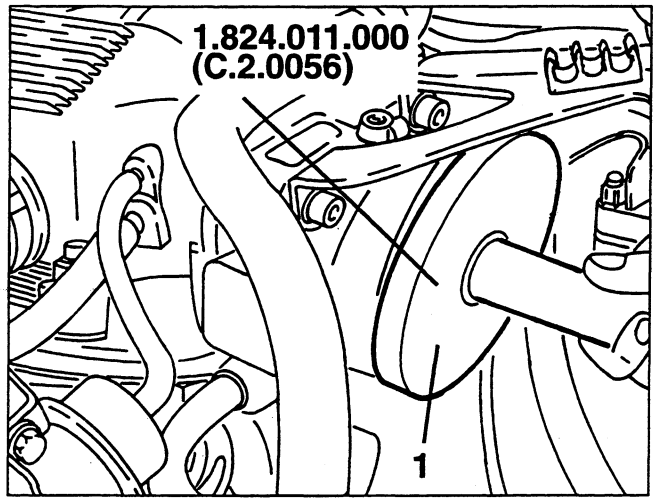

AIR-FLOW METER

The air-flow meter quantifies the amount of air taken in by the engine through the throttle valve controlled by the accelerator pedal and sends the control unit a signal on the base of which the control unit determines the fuel injection time.
The air-flow meter works on the principle of fluctuating throttle: a coil spring acts as an opposing force on the actual throttle, therefore with a determinate amount of air there will be a precise angular position.
The compensation for oscillating pressure due to the stroke of the pistons is carried out through a compensating throttle strictly connected to the detecting throttle.
The electric signal is generated by the pulling of a potentiometer fastened to the pivot pin of the fluctuating throttle.
Inside the air-flow meter there is the intake air temperature sensor which is also connected to the control unit and made with negative coefficient resistance (NTC), i.e. capable of lowering its resistance as the temperature increases.
This sensor allows the control unit to take account of the changes in density of the air during injection.

REMOVING/REFITTING

- Disconnect the battery (-) terminal.
1. Disconnect the electrical connection from the air-flow meter.
2. Slacken the clampsaggio manicotto corrugato al misuratore portata aria. fastening the corrugated sleeve to the air- flow meter.

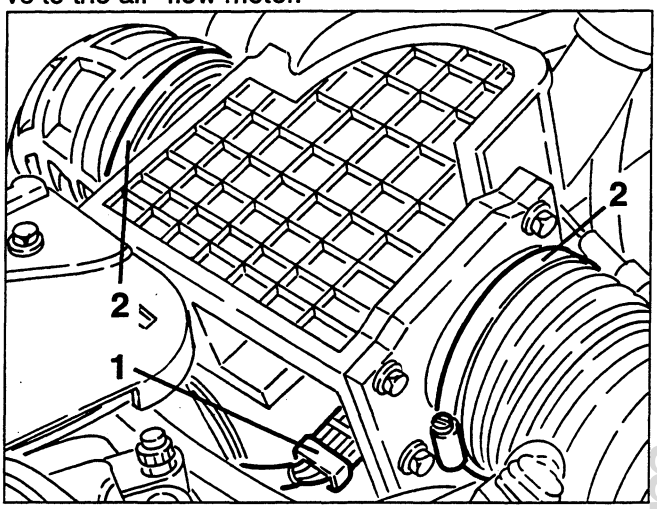

1. Slacken the two fastening screws and remove the air-flow meter complete with support bracket.

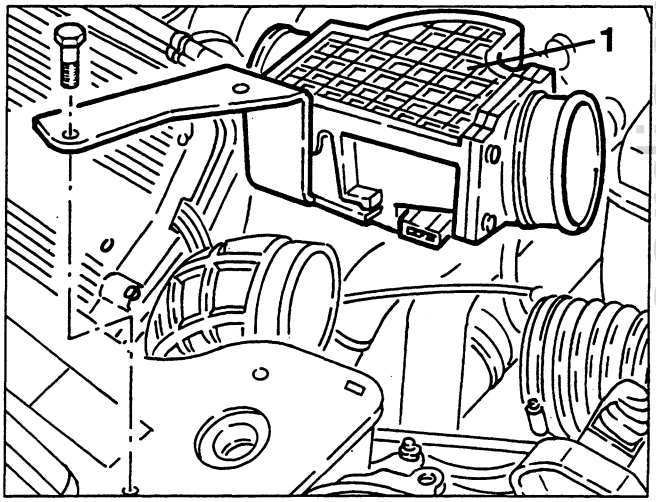

THROTTLE POSITION SENSOR

The throttle position sensor comprises a microswitch which supplies the injection control unit a single for a throttle angle of 0° (completely closed) and a potentiometer which measures the degree of opening of the throttle and sends a signal to the ignition control unit.
The first signal allows fuel cut off during deceleration and engine management at idle speed, while the second signal enables supercharging and full power engine control.

cardiagn.com

REMOVING/REFITTING

- Disconnect the battery (-) terminal.
1. Disconnect the electrical connection from the throttle potentiometer.
2. Slacken the two fastening screws and remove the throttle potentiometer.

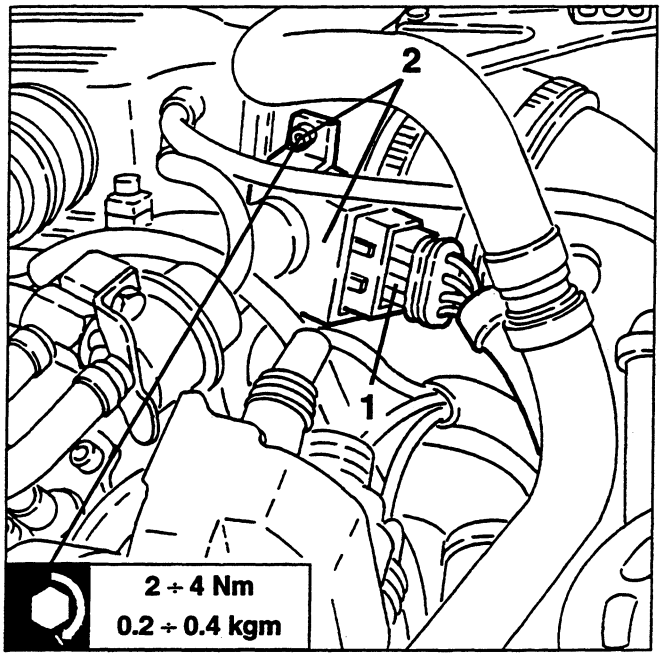

INTAKE BOX

REMOVING/REFITTING

- Disconnect the battery (-) terminal.
1. Disconnect the condensed oil recovery pipe (1a), the oil vapour recovery pipe (1b) and the oil vapour recirculation pipe (1c), from the oil vapour separator, then release the latter from the fastening clamps and set it on one side.

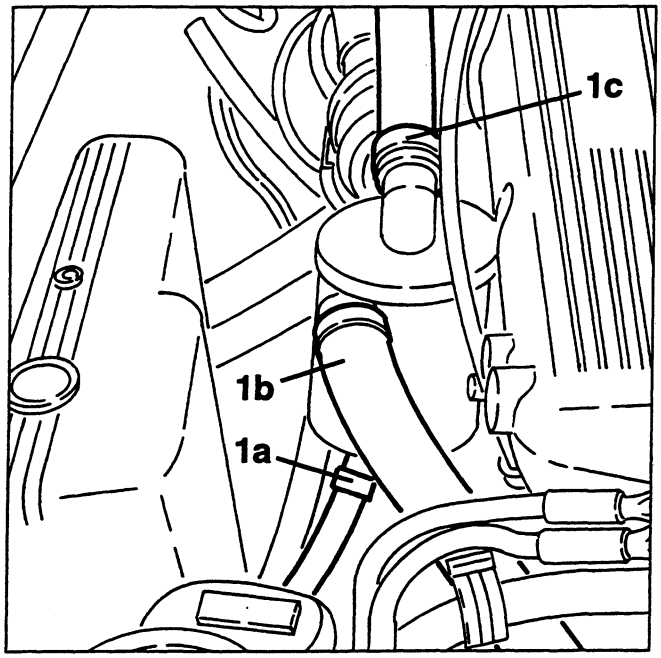

1. Disconnect the two earth cables from the intake box.

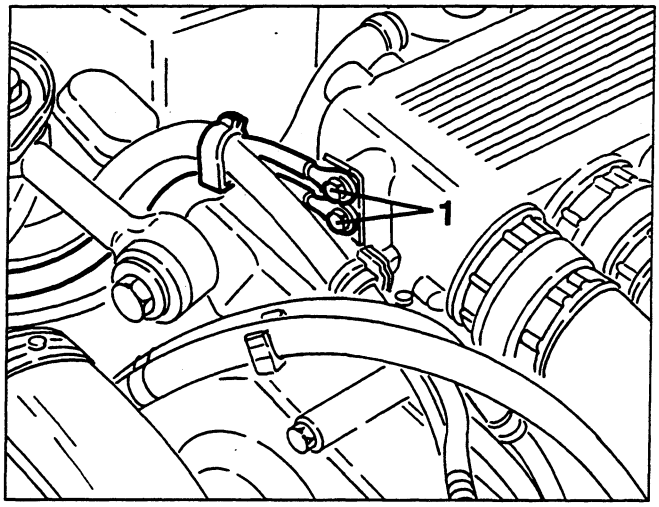

1. Disconnect the electrical connection from the constant idle actuator.
2. Disconnect the electrical connection 1st cylinder detection sensor.
3. Disconnect the high voltage cables from the spark plugs of the right-hand cylinder head.
4. From the constant idle speed actuator disconnect the air takeoff pipe.

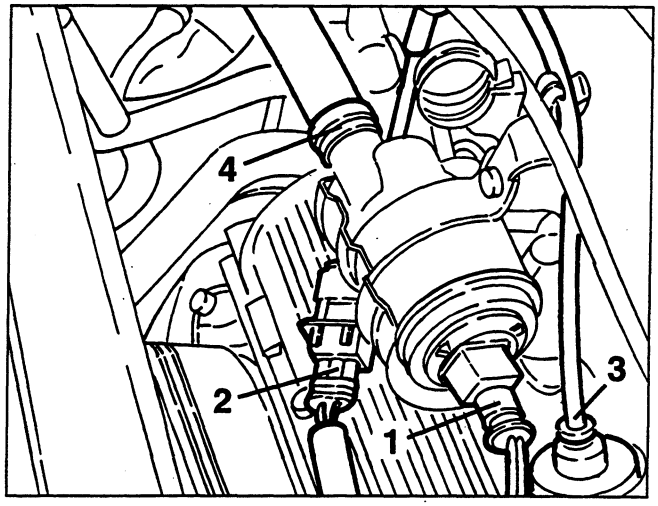

1. Disconnect the servobrake vacuum takeoff pipe from the intake box.

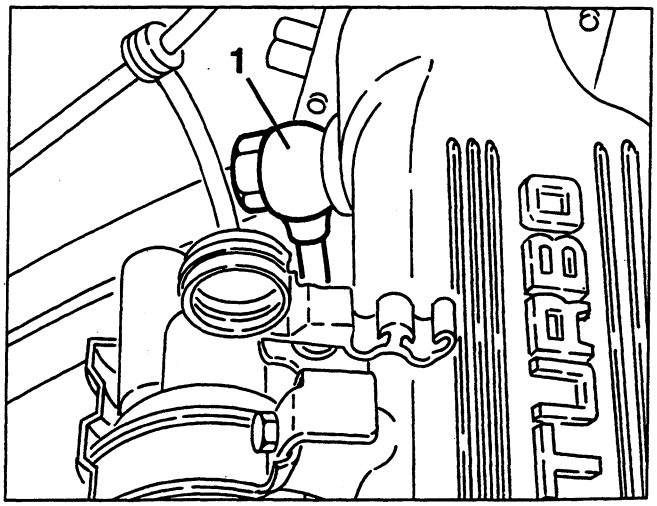

cardiagn.com

1. From the intake box disconnect the vacuum takeoff pipe for the fuel pressure regulator.
2. From the intake box disconnect the vacuum takeoff pipe for the antistalling valve.
3. Disconnect the electrical connection from the throttle potentiometer.
4. Disconnect the coolant inlet pipe from the throttle body.

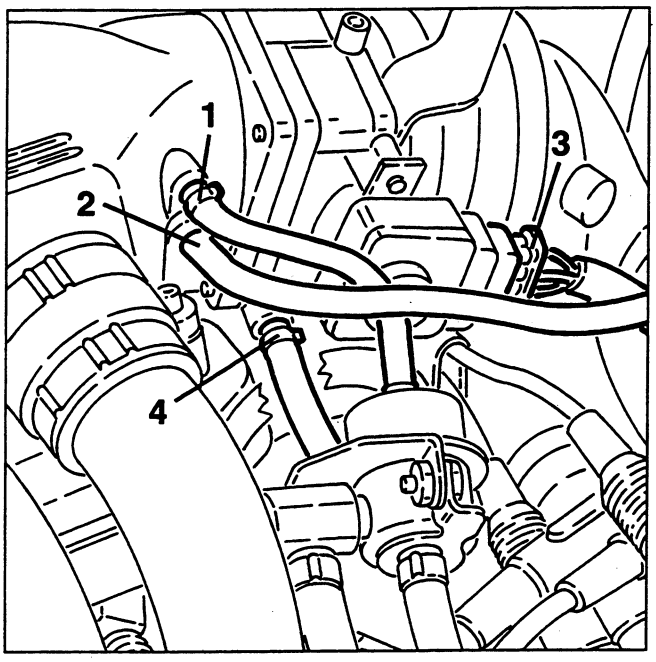

1. Disconnect the accelerator cable from the throttle body.
2. Disconnect the coolant outlet pipe from the throttle body.

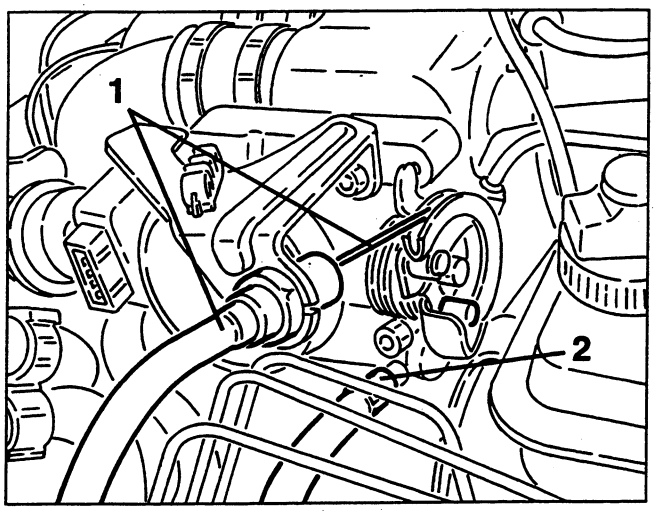

1. Slacken the fastening of the air intake manifold for the throttle body.
2. Loosen the clamp fastening the air intake manifold to the throttle body.

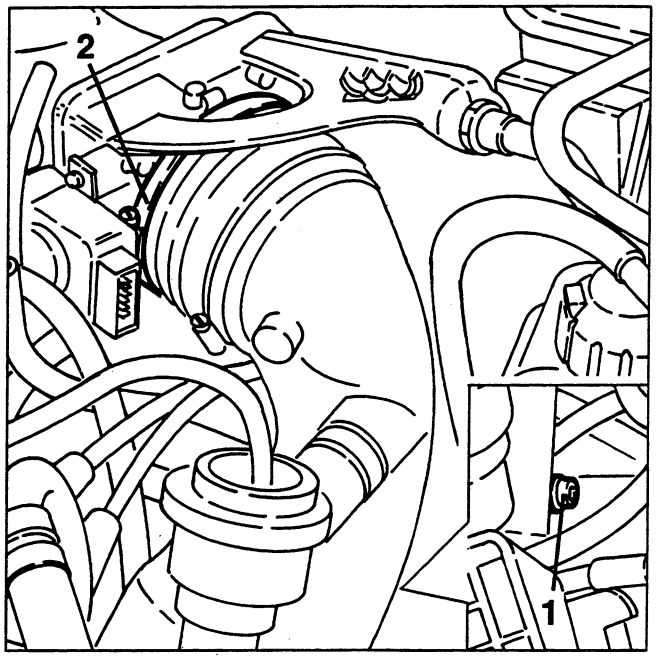

1. Loosen the clamps fastening the intake ducts to the intake box.

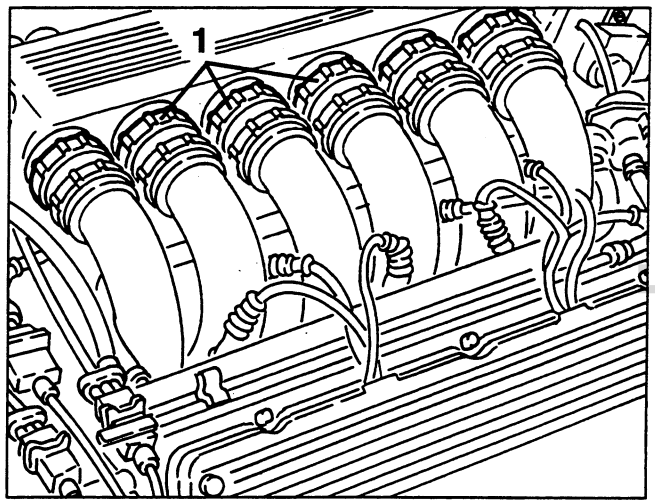

1. Slacken the fastening screws and remove the air intake box complete with throttle body, constant idle speed actuator, oil vapour separator and, if necessary, separate them on the bench.

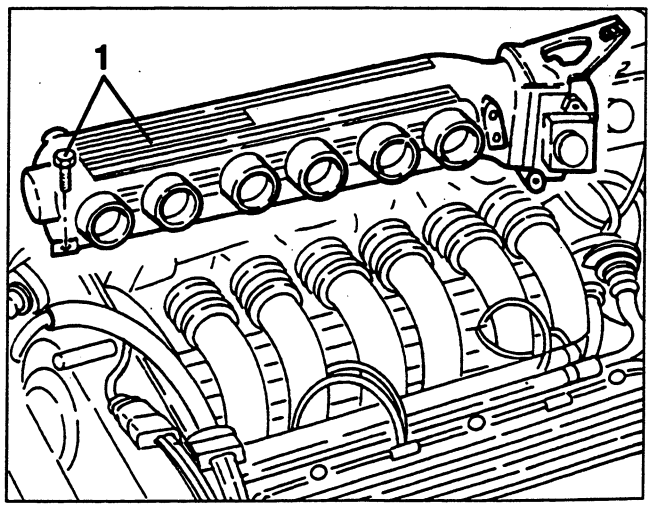

carplan.com

CONSTANT IDLE SPEED ACTUATOR

Idle rpm is controlled through an actuator which adjusts the amount of air taken in by the engine when the throttle valve is closed.
This makes it possible to compensate the power required by the different services (conditioner compressor, etc.) so that the engine speed remains unaffected.
The actuator used is a rotary regulator with single winding which, upon a command from the injection control unit, moves a rotary valve in the opening direction. Rotation in the closing direction is ensured by a counter spring which opposes the command from the control unit.
The control of the constant idle speed actuator is made with a variable number of pulses (alternating between current and pause) at a fixed frequency of 100 Hz. A determinate number of pulses, at constant battery voltage and winding temperature corresponds to a well-defined angular position of the rotary valve and, thus, a precise by-pass diameter.

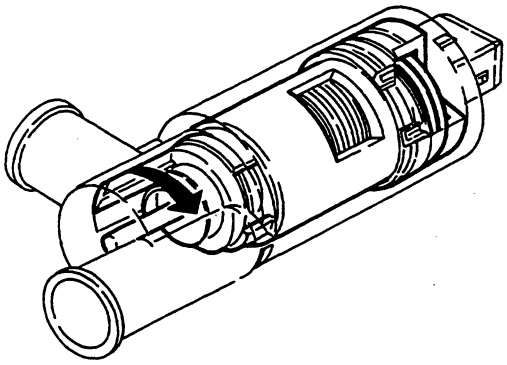

REMOVING/REFITTING

- Disconnect the battery (-) terminal.
1. Disconnect the electrical connection from the constant idle speed actuator.
2. Disconnect the air takeoff pipe from the constant idle speed actuator.

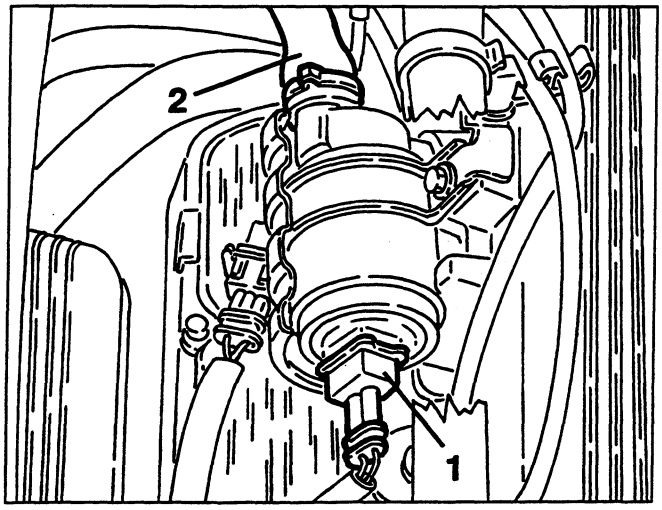

1. Slacken the two screws of the fastening clamp and remove the constant idle speed actuator withdrawing it from the intake box.
2. Retrieve the seal.

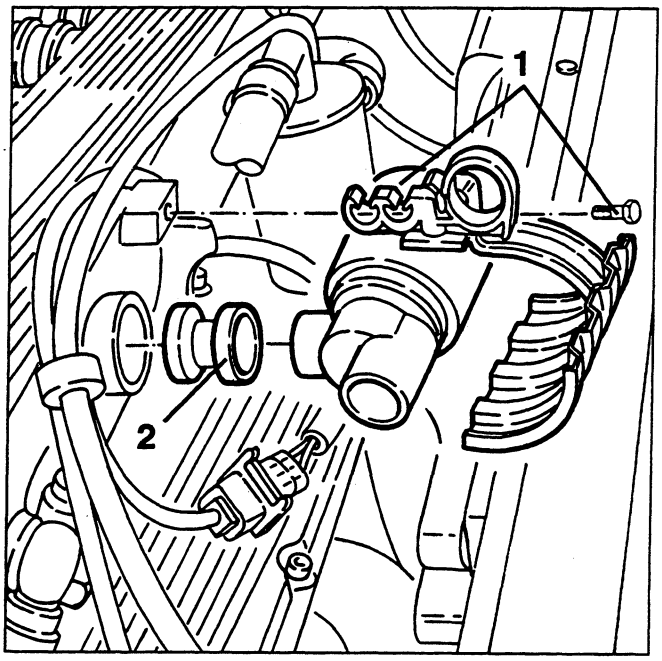

OIL VAPOUR SEPARATOR

REMOVING/REFITTING

1. Disconnect the oil vapour recovery pipe from the separator.
2. Disconnect the oil vapour recovery pipe from the separator.
3. Disconnect the condensed oil recovery pipe from the separator.
4. Slacken the two fastening screws and remove the oil vapour separator.

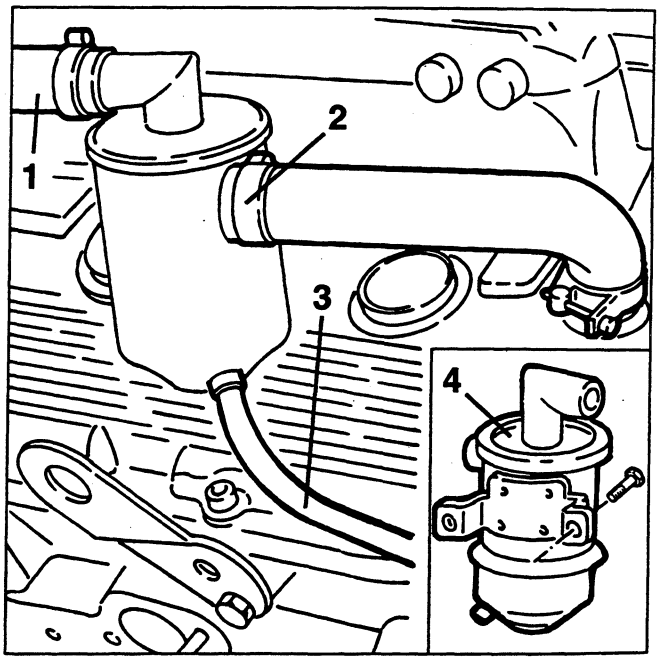

cardiagn.com

TURBOCHARGER

This substantially comprises two impellers splined onto the same shaft, which turns on two special lubricated supports through two branches (input and output) of the lubrication circuit of the engine.
Two special pipes (6 - 7) branched from the engine cooling circuit are connected to the turbocharger and their purpose is to disperse most of the heat released by the turbine exhaust gas.
An impeller (3) "turbine", connected to the exhaust manifolds (9), is turned by the energy still possessed by the exhaust gas ducted to it. The turbine sets into motion, at the same speed, the other impeller (4) "compressor" which is connected to the intake manifold.

Due to its speed of rotation and the particular shape of the blades, the charger withdraws outside air and compresses it in the intake manifold, consequently in the cylinders of the engine.
If the engine increases the number of revolutions, also the turbine and the charger increase their speed of rotation thereby increasing the quantity of air delivered to the engine.
On the turbocharger there is a Waste-Gate valve (2) which, through a command from the Pierburg solenoid valve, allows part of the axhaust gas to by-pass (or not to by-pass) the turbine depending on the engine's need for power/torque.

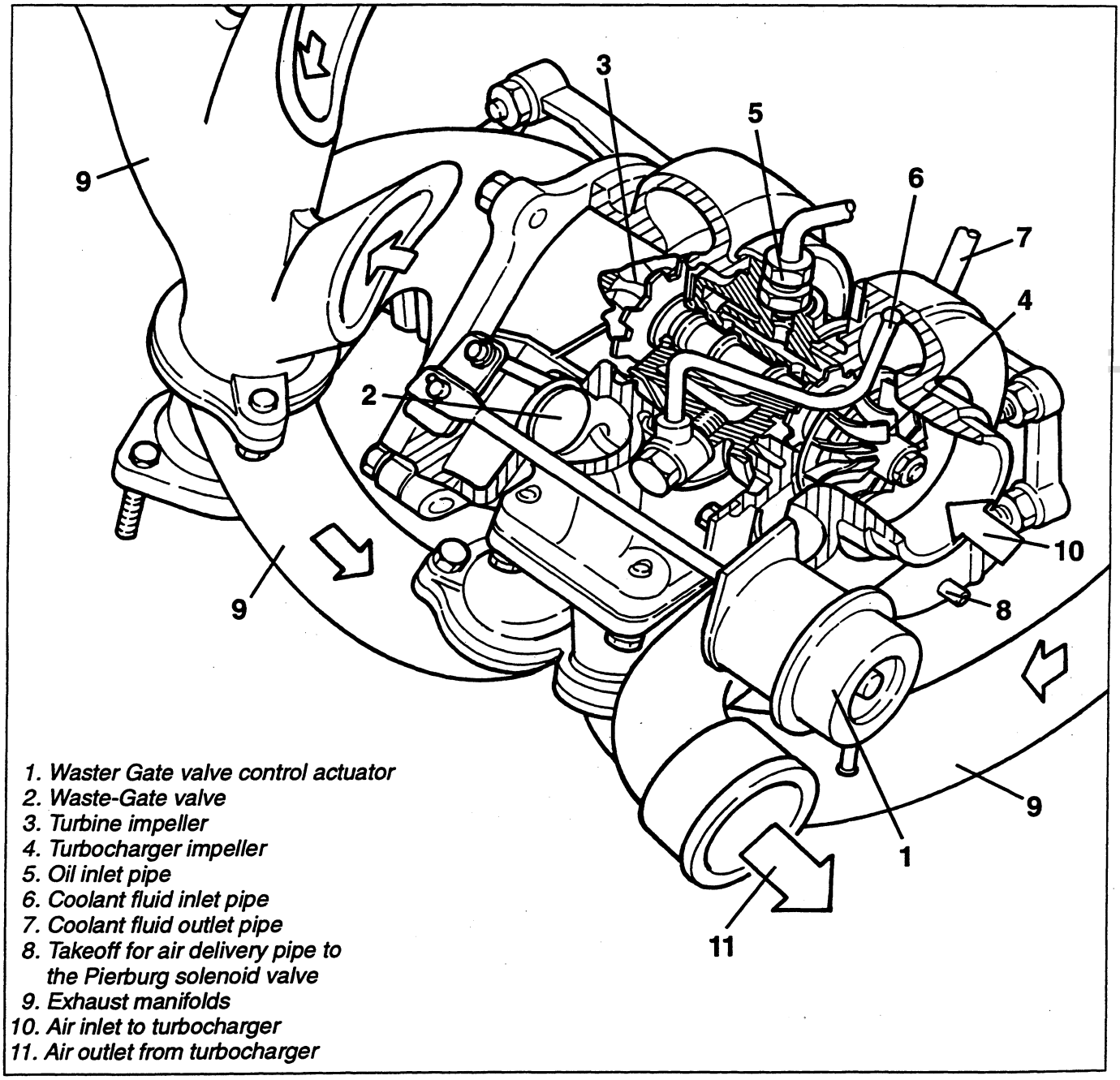

1. Waster Gate valve control actuator
2. Waste-Gate valve
3. Turbine impeller
4. Turbocharger impeller
5. Oil inlet pipe
6. Coolant fluid inlet pipe
7. Coolant fluid outlet pipe
8. Takeoff for air delivery pipe to the Pierburg solenoid valve
9. Exhaust manifolds
10. Air inlet to turbocharger
11. Air outlet from turbocharger

cardiagn.com

REMOVING/REFITTING

ATTENZIONE:
When carrying out work on the turbocharger strictly adhere to the following instructions for cleaning:
- before dis-assembly clean the connection points and carefully close or cover open or exposed parts;
- remove foreign matter or dirt from all the pipes and fittings connected to the turbocharger;
- refit the parts after cleaning them thoroughly.

- Set the car on a lift.
- Disconnect the battery (-) terminal.

1. Slacken the fastening screws and remove the upper radiator crossmember.
2. Disconnect and move aside the bonnet opening cable.

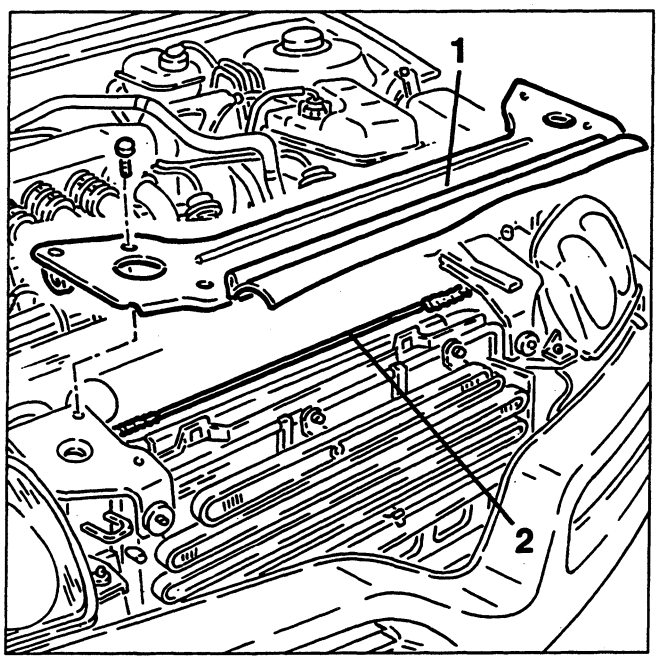

1. Disconnect the electrical connections from the cooling fans.
2. Slacken the fastening screws, then move to one side the cable fairing complete with electric cables.

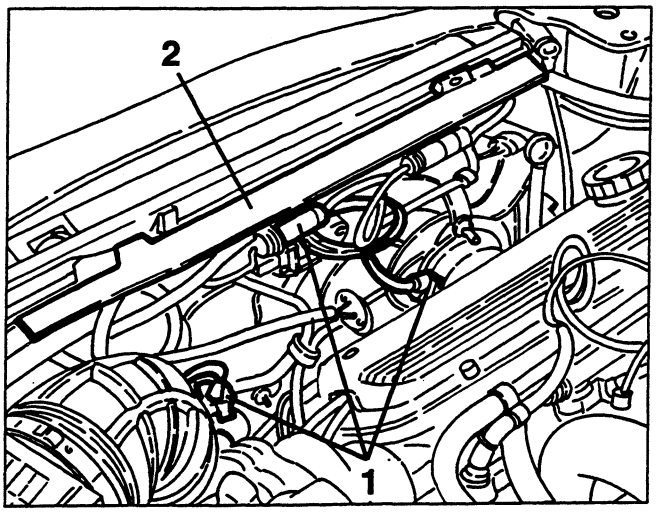

1. Withdraw and remove the cooling fans.

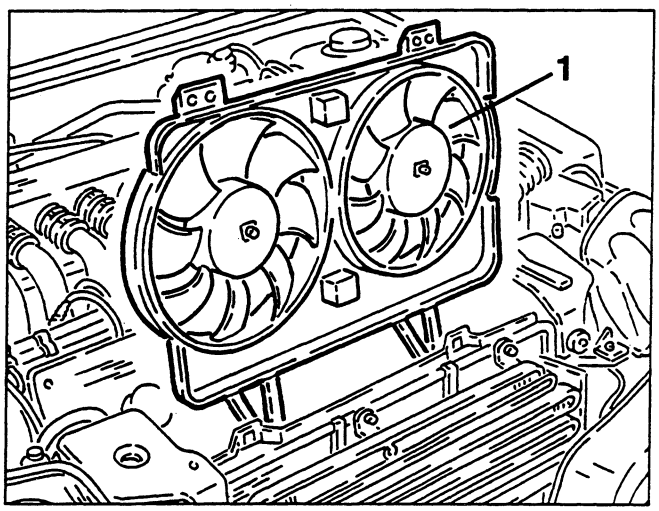

1. Slacken the fastening screws and remove the heat shield from the exhaust manifolds.

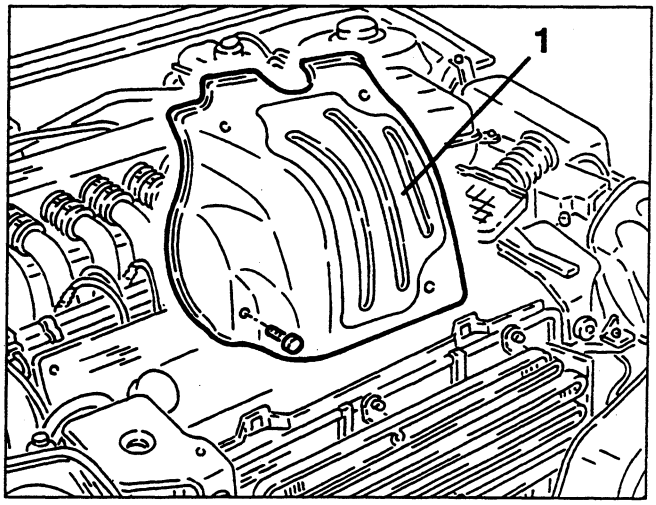

1. Disconnect the coolant fluid outlet pipe from the turbocharger.

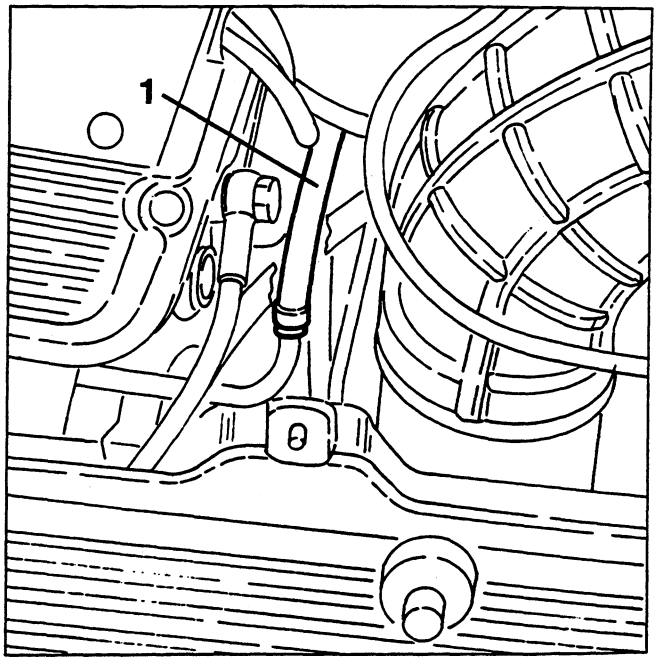

cardiagn.com

1. Disconnect the lubricating oil pipe fitting from the turbocharger.
2. Disconnect the ball joint of the coolant fluid inlet pipe from the turbocharger.

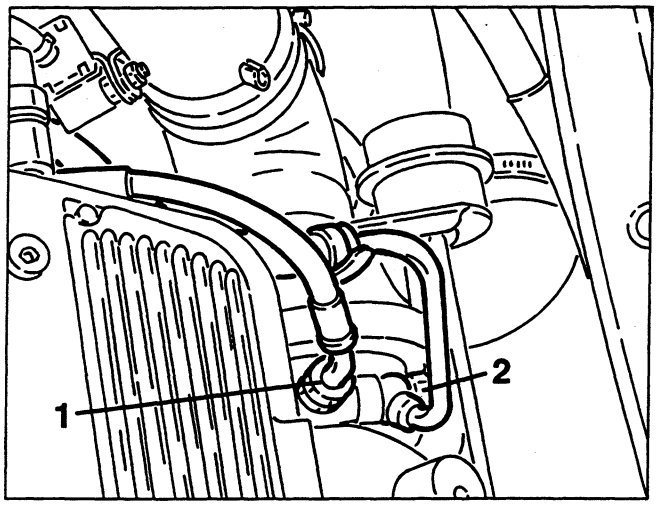

1. Disconnect the electrical connection of the lambda sensor.

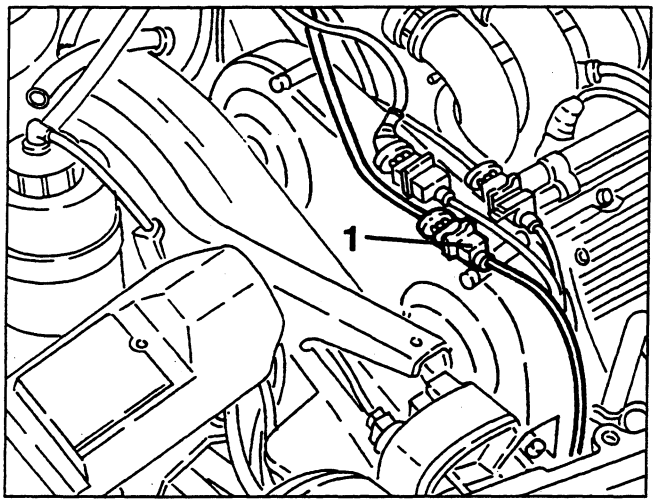

1. Raise the car, slacken the fastenings and remove the exhaust gas delivery pipes from the cylinder head manifolds to the turbocharger.
2. Slacken the fastenings and remove the front section of the exhaust pipe complete with lambda sensor.

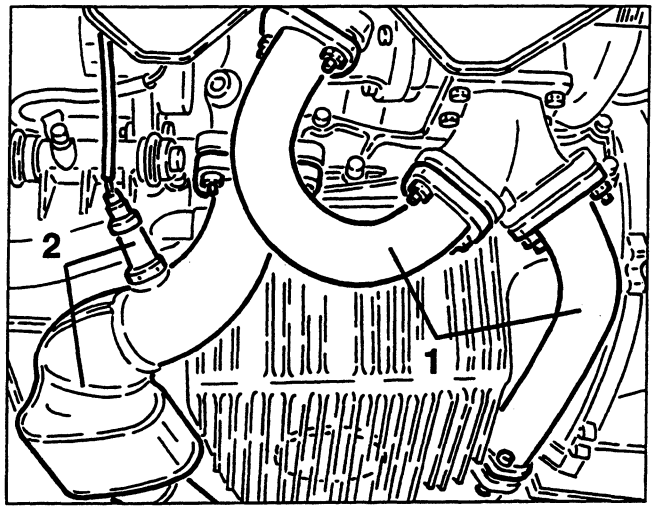

1. Slacken the cylinder head fastening nuts, then remove the left-hand exhaust manifold.

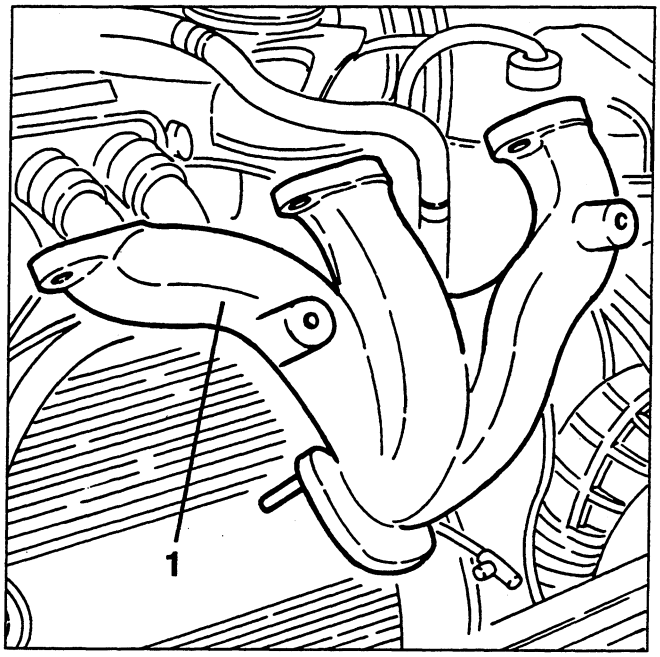

1. Slacken the fastening clamps and remove the air delivery sleeve from the turbocharger to the intercooler.
2. Disconnect the connection pipe to the Pierburg solenoid valve from the Waste-Gate overpressure control valve actuator.
3. Disconnect the Pierburg valve connection pipe from the turbocharger.
4. Slacken the fastening clamps and remove the turbocharger air inlet elbow.

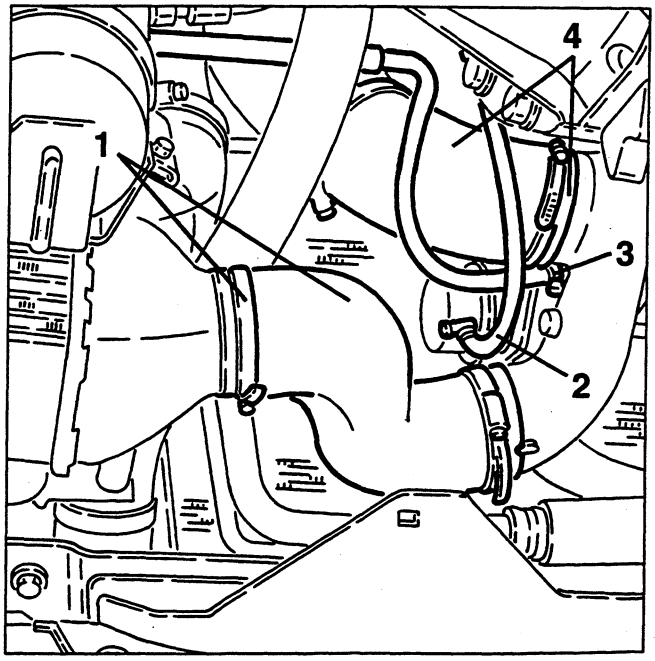

cardiagn.com

1. Disconnect the turbocharger oil outlet pipe fitting from the oil sump.

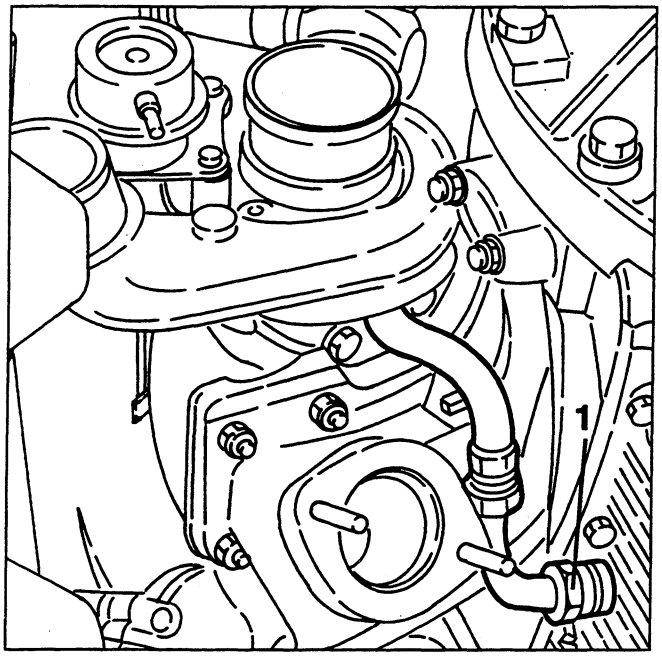

1. Slacken the nuts fastening the turbocharger assembly to the crankcase, then remove it complete.

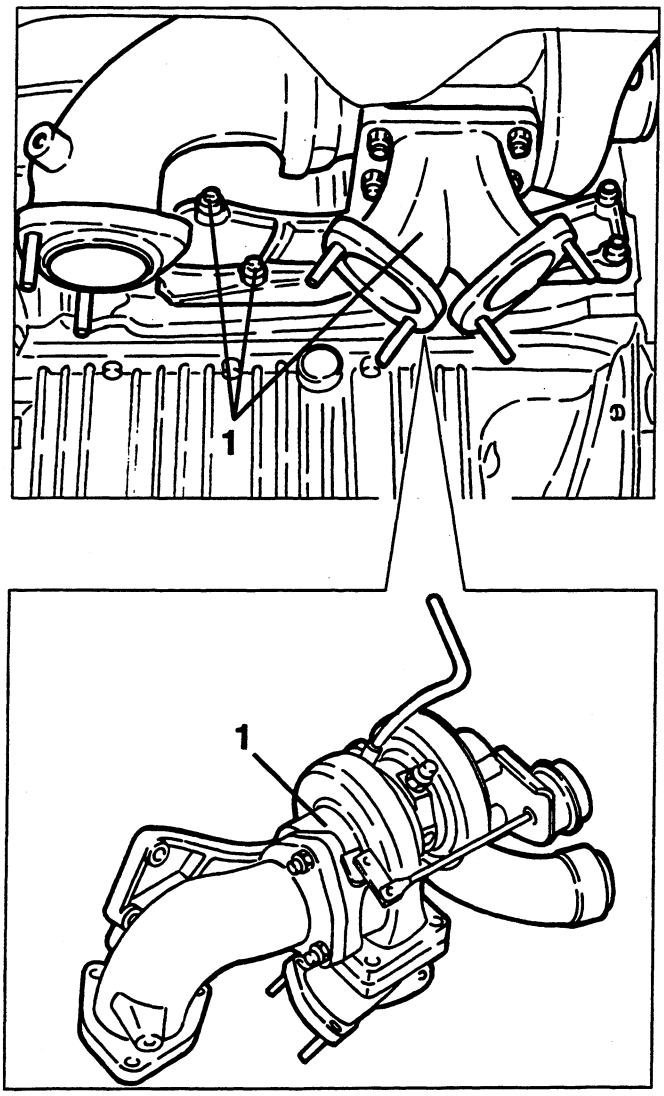

1. On the bench slacken the fastening nut and remove the exhaust gas outlet elboz from the turbocharger.
2. Slacken the fastening nuts and remove the exhaust gas inlet manifold in the turbocharger with the corresponding seal.
3. Slacken the ball joint and remove the turbocharger coolant outlet pipe.
4. Slacken and remove the turbocharger oil inlet pipe fitting.
5. Slacken the fastening screws and remove the turbocharger oil outlet pipe.

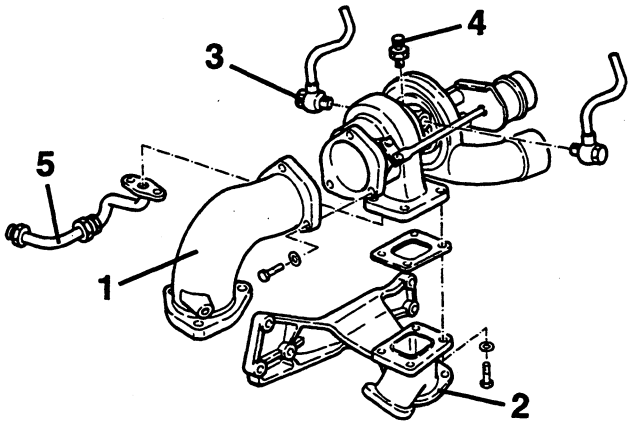

CHECKS AND INSPECTIONS

Checking the end float

1. Position the feeler of a dial gauge set on a special support, in contact with the centre line of the turbine as illustrated.
- Working acially on the other side of the turbine centre line check that the end float is within the specified limits.

End float of turbine impeller
0.013 ÷ 0.081 mm

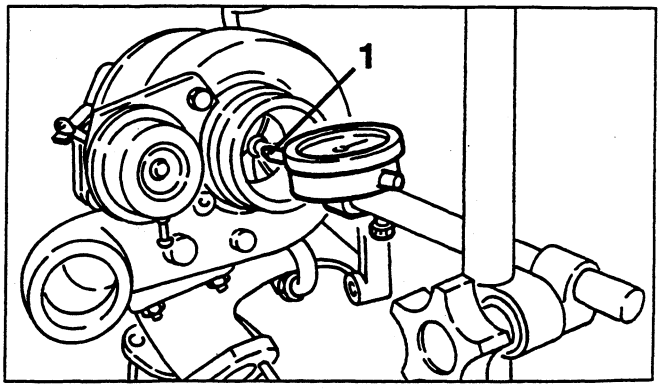

cardiagn.com

Checking the radial clearance

1. Position the feeler of a dial gauge set on a special support, in contact with the blades of the turbine as illustrated.
- Working transversally with respect to the turbine centre line, check that the turbine radial clearance is within the specified limits.

Turbine impeller radial clearance
0.076 ÷ 0.145 mm

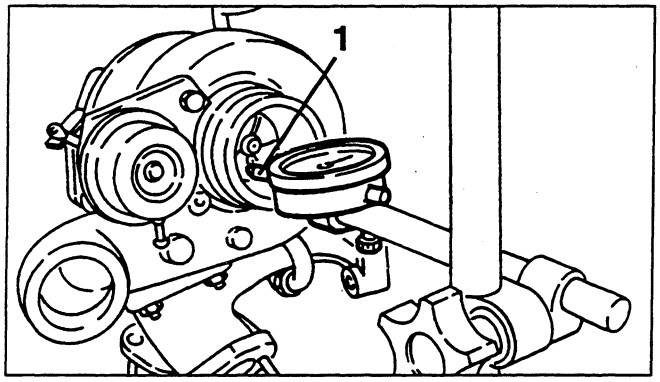

WARNING:
Overhauling operations of the turbocharger unit are not allowed, once an operating fault has been found, the unit must be replaced completely.

CHECKING THE SETTING OF THE WASTE-GATE OVERPRESSURE VALVE

- Disconnect the connection pipe to the Pierburg solenoid valve from the Waste-Gate overpressure valve actuator.
1. Install tool no. 1.820.098.000 (A.2.0471) fitted with a dial gauge on the Waste-Gate overpressure valve actuator.
2. Connect to the actuator a compressed air pipe with pressure gauge.
- Inject air at the pressure given and check on the dial gauge that the corresponding compressor stroke is as specified.

Waste - Gate valve setting	
Control pressre	Corresponding stroke of the actuator
0.55 ÷ 0.61 bar	1 mm
0.64 ÷ 0.75 bar	4 mm

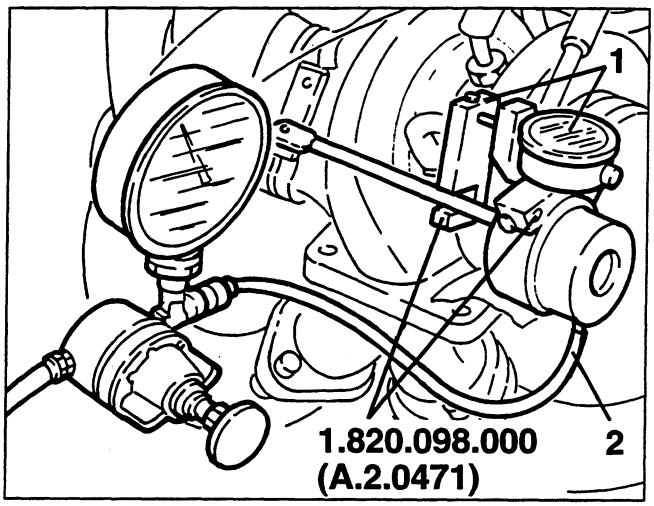

INTERCOOLER

This is an air-air heat exchanger which makes it possible to improve engine performance levels, as the lowering of the temperature of the air in the cylinders improves their filling due to the greater density.
The intercooler is located in front of the left front wheelhouse and a special duct improves the flow of outside air to it.

REMOVING/REFITTING

- Set the car on a lift and raise it.
- Remove the left front wheel and wheelhouse.
1. Slacken the fastening clamps and remove the air delivery sleeve from the turbocharger to the intercooler.
2. Slacken the fastening clamps and remove the turbocharger air inlet elbow.

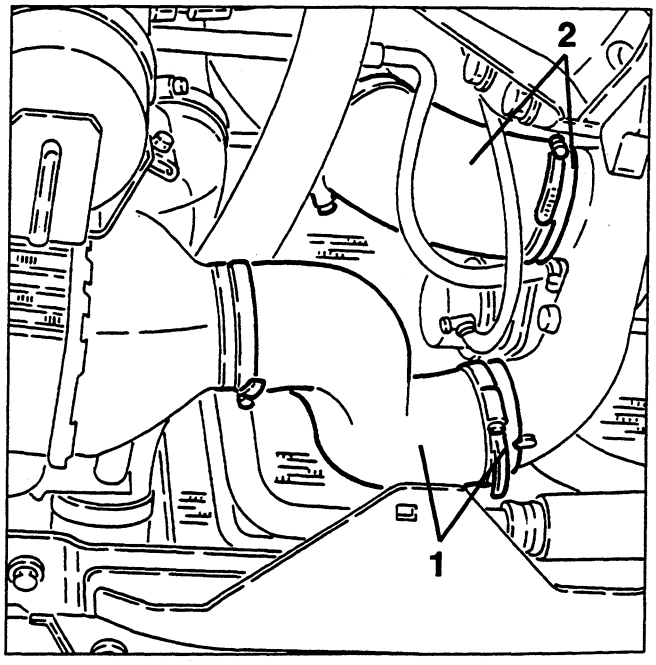

cardiagn.com

1. Slacken the fastening clamp and disconnect the engine intake air delivery pipe from the intercooler.

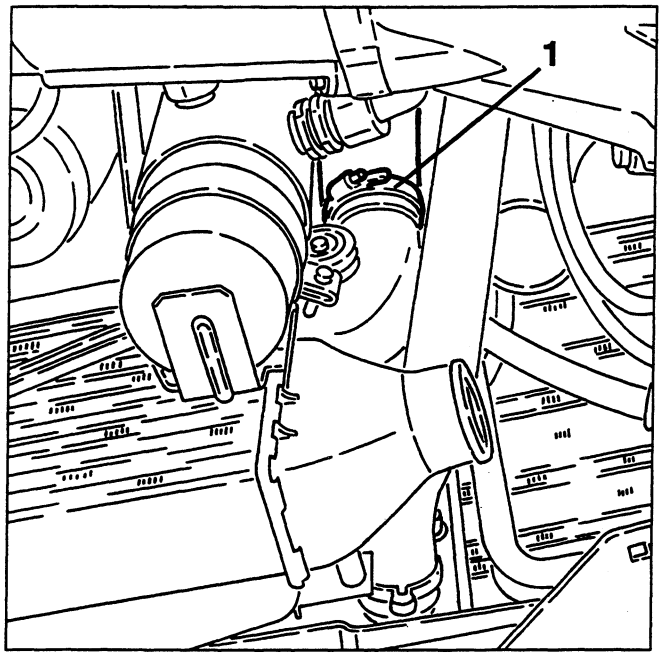

- Slacken the two screws fastening the front bumper, then remove only the one on the left-hand side and move the bumper forwards just enough to gain access to the intercooler fastening screws.
1. Slacken the three fastening bolts and the screw and remove the intercooler.
2. Retrieve the air duct.

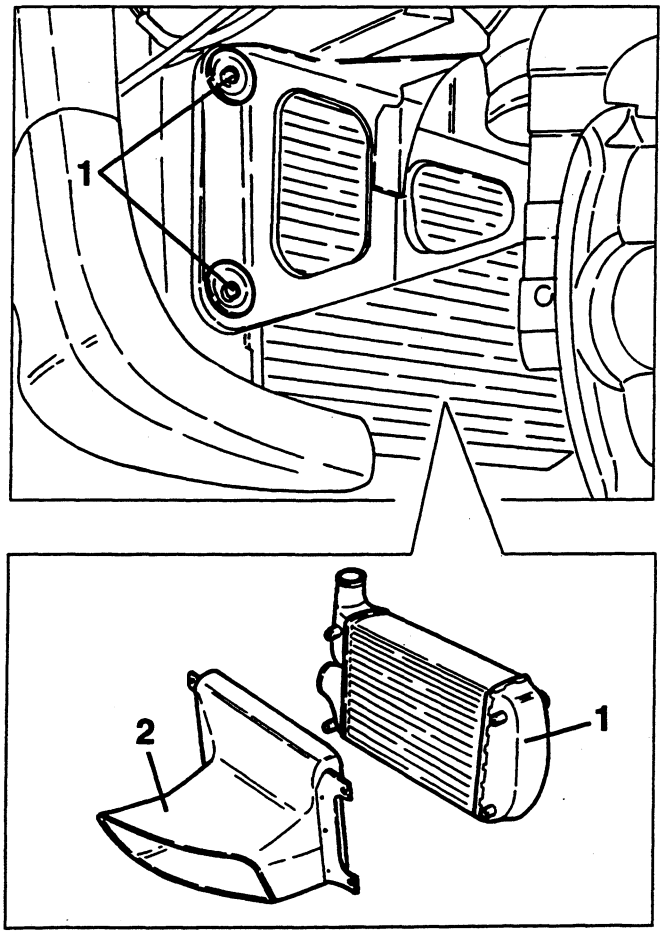

ANTISTALLING VALVE

This is a by-pass valve with the purpose of eliminating the "ramming effect" which occurs each time the accelerator pedal is released abruptly when the engine is supercharged; it is controlled by a vacuum signal picked up from the intake box.
When the throttle valve closes, the vacuum transmitted from the connection pipe to the intake box, opens the antistalling valve; this enables the pressure upstream of the throttle (closed) to be relieved in the intake duct.

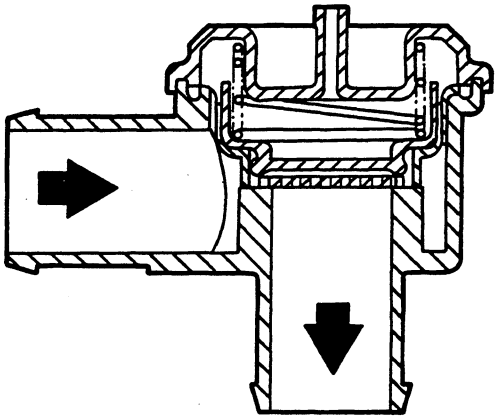

REMOVING/REFITTING

1. Disconnect the vacuum takeoff pipe from the antistalling valve.
2. Slacken the fastening clamps, disconnect the two pipes, then remove the antistalling valve.

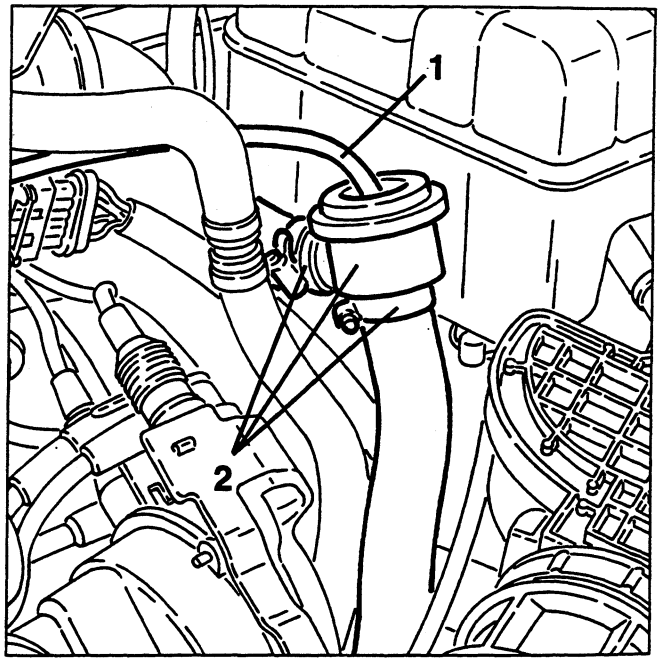

cardiagn.com

DESCRIPTION OF THE EXHAUST SYSTEM

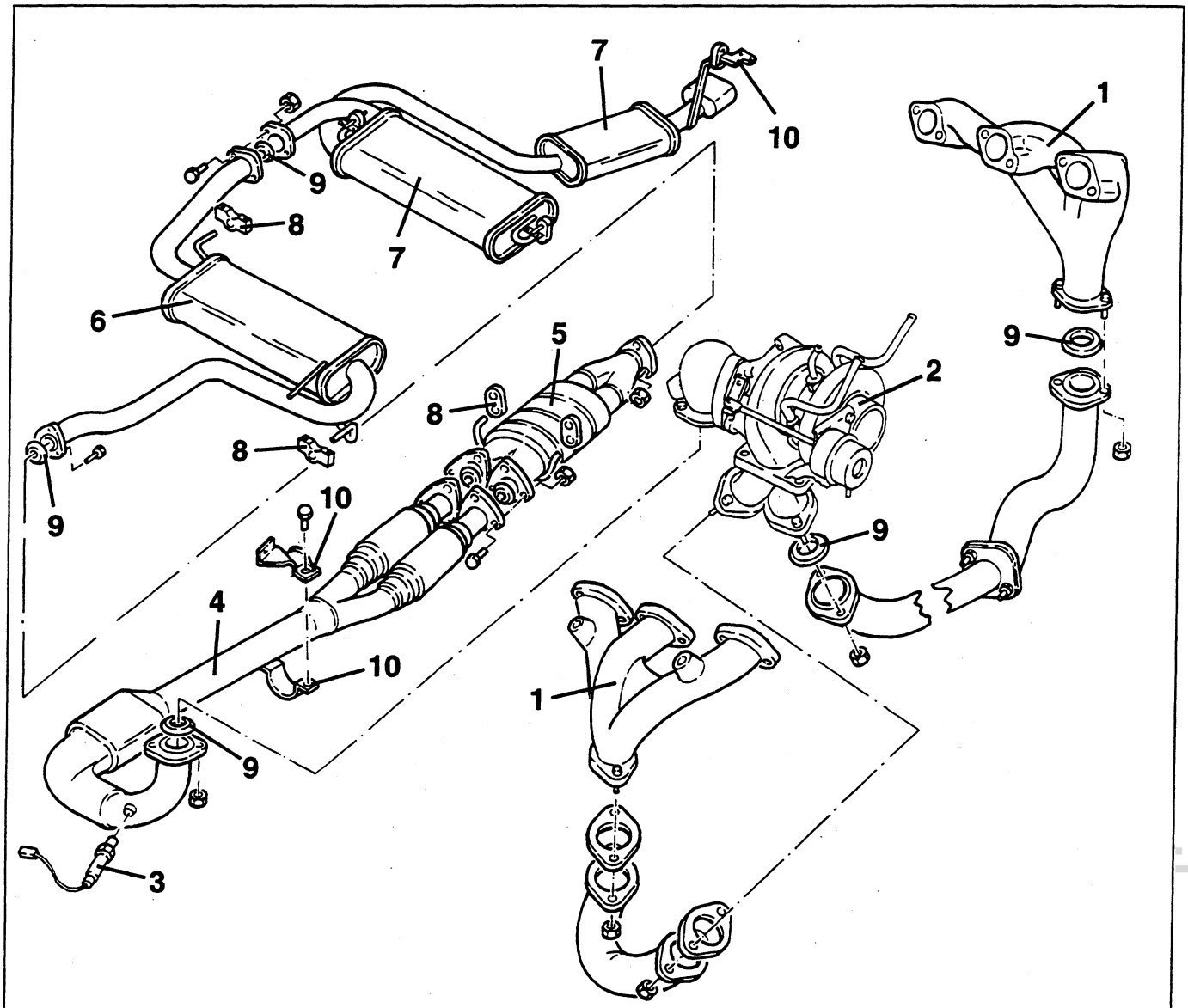

1. *Exhaust manifolds*
2. *Turbocharger*
3. *Lambda sensor*
4. *Front section*
5. *Catalytic converter*
6. *Centre silencer*
7. *Rear section - silencers*
8. *Flexible ring*
9. *Seal ring*
10. *Supports*

The exhaust gas leading from the cylinder heads is ducted into the manifolds (1) which in turn, via special pipes, send it to the turbine for boosting the engine. From the turbine the exhaust gas passes through an elbow to the front section of the exhaust pipe (4), in the first section of which there is a precatalyst followed by the lambda sensor (3) which informs the control unit of the amount of oxygen contained in the exhaust gas making it possible to adapt the injection time to keep the stoichiometric ration (air - fuel) at an optimum level. The last part of the front section branches into two trunks in which two "flexible sections" are inserted to compensate heat expansion and vibrations transmitted from the engine.

From the front section the exhaust gas is sento to the three-way catalytic converter (5) in which most of the polluting substances are transformed.
From the catalytic converter the exhaust gas flows towards a centre silencer (6) and from this to another two rear silencer (7) which are inseparable.
The various lengths of the exhaust pipe are connected by flanges with interposed seals and connection to the body is by brackets with flexible rings.
The very high amount of heat radiation to the body due to the presence of the catalytic converter is limited by a set of heat guards.

cardiagn.com

WARNING:
When the engine is running all the exhaust pipes and the catalytic converter in particular get considerably hot.
Therefore, before doing any work it is necessary to leave the engine off for an adequate length of time.
Never touch the catalytic converter without suitable protection, such as gloves, etc. Never place inflammable materials near the catalytic converter.

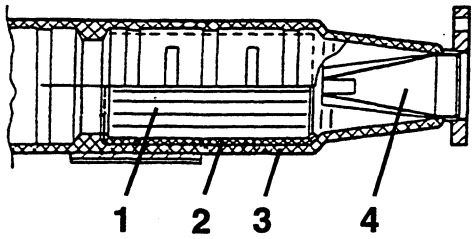

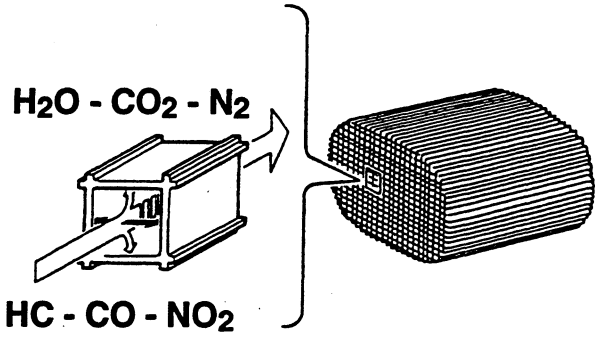

1. Ceramic monolith
2. Metal support
3. Outer casing
4. Perforated sheet metal cone

CATALYTIC CONVERTER

Closed loop mixture titration is activated by the lambda sensor which detects the amount of oxygen contained in the exhaust gas upstream of the catalytic converter.
The measurements of the lambda sensor allow the electronic control unit to continuously correct the mixture titration keeping the air-fuel ratio constant. This way harmful emissions at the exhaust are controlled and this is completed by the three-way catalytic converter. The effectiveness of the catalytic converter, thus the amount of harmful gas at the exhaust depends on the air-fuel ratio with which the engine is supplied.
The trivalent catalytic converter removes the three polluting substances contained in the exhaust gas:
- unburnt hydrocarbons (HC);
- carbon monoxide (CO);
- nitric oxide (NOx).
Two types of chemical reactions take place inside the converter:
- oxidation of CO and HC, turned into carbon dioxide (CO_2) and water (H_2O);
- reduction of NOx turned into Nitrogen (N_2).
The converter comprises a monolith, a metal mesh support to dampen shocks and vibrations and an outer stainless steel casing resistant to high temperatures and the weather.
The monolith is made with a honeycomb structure composed of ceramic material coated with a fine layer of catalytically acyive substances (platinum or rhodium) which quicken the chemical decomposition of the harmful substances contained in the exhaust gas which cross the cells of the heart at temperatures above 300 ÷ 350°C, activating the catalysts and starting the chemical reduction and oxidation processes.
In order to optimise the efficiency and life of the catalyst, a perforated sheet metal cone improves the diffusion of the exhaust gas in the cells of the ceramic heart.

The causes which quickly and irreparably put the catalytic converter out of order are the following:
- the presence of lead in the fuel, which lowers the degree of conversion to levels that make the presence of the system useless;
- presence of unburnt fuel in the converter: indeed a flow of petrol for 10 seconds in an environment at a temperature of 800°C (inside temperature of the catalyst) is sufficient to melt and break the catalyst.
The ignition system must absolutely be in perfect operating conditions and for no reason whatsoever may the spark plugs be disconnected with the engine running, therefore in the event of tests, the catalytic converter must be replaced by an equivalent length of piping.
If used correctly the catalytic converter works effectively for at least 80,000 km or five years.

WARNING:
The precious metals contained in the catalytic converter are chemically attacked by the presence of lead because of the high temperature.
Because of this leaded fuels must be avoided as they quickly and irreversibly ruin the converter.
Never use petrol containing lead, not even for a very short time in an emergency.

cardiagn.com

LAMBDA PROBE

The lambda sensor informs the injection-ignition control unit about the progress of the combustion of the air-fuel mixture and enables the system to keep the stoichometric ratio of the mixture as close as possible to the theoretical value.
In order to obtain an optimal mixture the amount of air taken in by the engine should be the equivalent of the theoretical amount that would be needed to burn all the fuel injected.
In this case, it is said that the lambda factor (λ) is 1, in fact:

$$\lambda = \frac{\text{QUANTITY OF INTAKE AIR}}{\text{THEORETICAL AMOUNT OF AIR NEEDED TO BURN ALL THE INJECTED FUEL}}$$

Therefore:
$1 = 1$ IDEAL MIXTURE
$\lambda > 1$ LEAN MIXTURE
$\lambda < 1$ RICH MIXTURE

The lambda sensor set in contact with the exhaust gas, generates an electric signal, the voltage rating of which depends on the concentration of oxygen contained in the gas. This voltage is characterised by a sharp variation when the composition of the mixture departs from $\lambda = 1$.

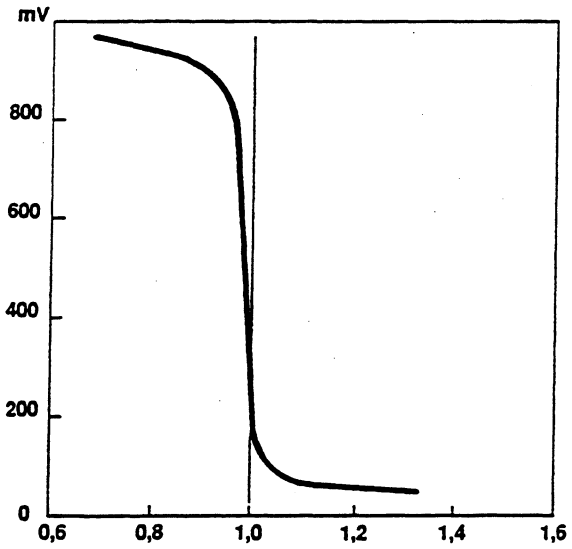

The lambda sensor comprises a ceramic body, based on zirconium bioxide, coated with a fine layer of platinum closed at one end, inserted in a protective tube and housed in a metal container which offers further protection and makes assembly on the exhaust manifolds possible.
The outer part of the ceramic is exposed to the flow of the exhaust gas, while the inner part communicates with the environment.

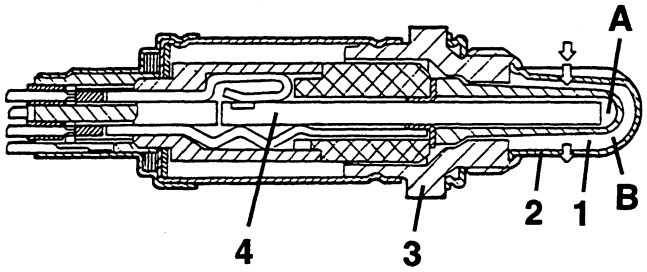

1. Ceramic body
2. Protective tube
3. Metal body
4. Electric resistance

A. Inner ceramic part
B. Outer ceramic part

The sensor works on the basis of the fact that, with temperatures of above 300 °C, the ceramic material used becomes a conductor of oxygen ions.
Under these conditions, if the quantity of oxygen at the two sides (A and B) of the sensor is in different percentages, a voltage difference between the two ends is originated, which is the index of measurement for the difference of the amount of oxygen in the two environments (outside air side and exhaust gas side) and it informs the control unit that the oxygen remaining in the exhaust gas is not in sufficient percentage to warrant combustion with a low quantity of harmful by-products.
For temperatures below 300 °C the ceramic material is not active, therefore the sensor does not send utilisable signals and a special circuit in the control unit prevents loop mixture adjustment while the sensor is warming.
To ensure that the sensor quickly reaches its operating temperature, it is fitted with an electrical resistance appropriately supplied by the battery; this also makes it possible to install the sensor in cooler areas of the exhaust manifold.

REMOVAL/REFITTING

- Disconnect the battery (-) terminal.
1. Disconnect the lambda sensor electrical connection.

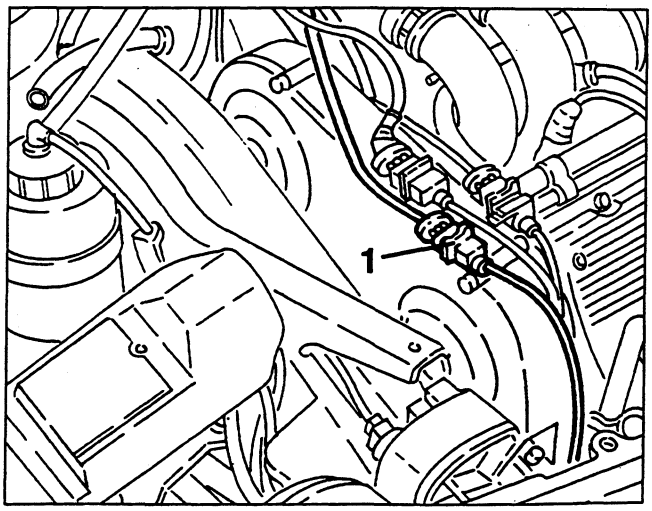

cardiagn.com

1. Raise the car, then slacken and remove the lambda sensor complete with wiring.

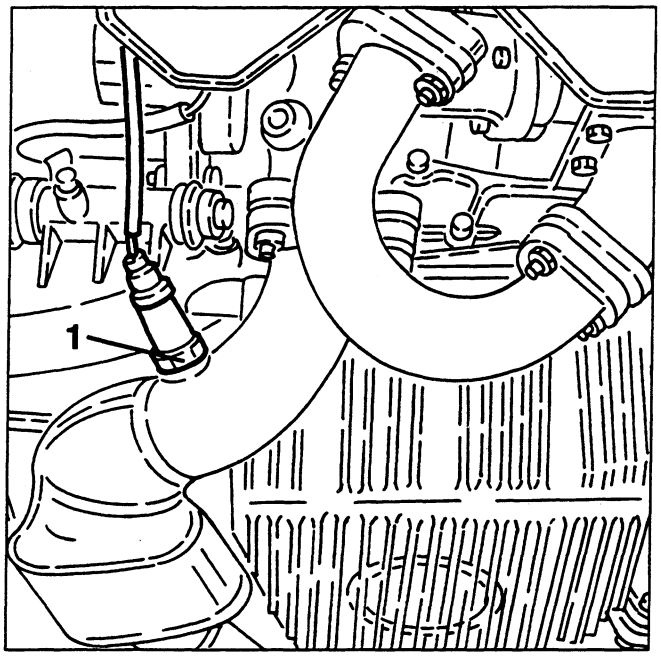

CHECKING EMISSIONS AT THE EXHAUST

WARNING:
Exhaust emissions must be checked outdoors, or at least in a suitable place equipped according to the regulations in force.

The control should be carried out with the engine at normal operating temperature (i.e. when the fan has turned on and then off) and running at idle speed.
If the idle speed is not within the specified limits, check the constant idle speed actuator.

- Check that the engine oil level is correct and that the air cleaner cartridge is clean.
- Start the engine and keep it at idle speed.

1. Insert the feller of the analyzer in the end piece of the exhaust pipe anch check that the amount of CO and HC are within the specified limits.

CO at the exhaust	**% vol.**	≤ 0.5
HC at the exhaust	**p.p.m.**	≤ 50

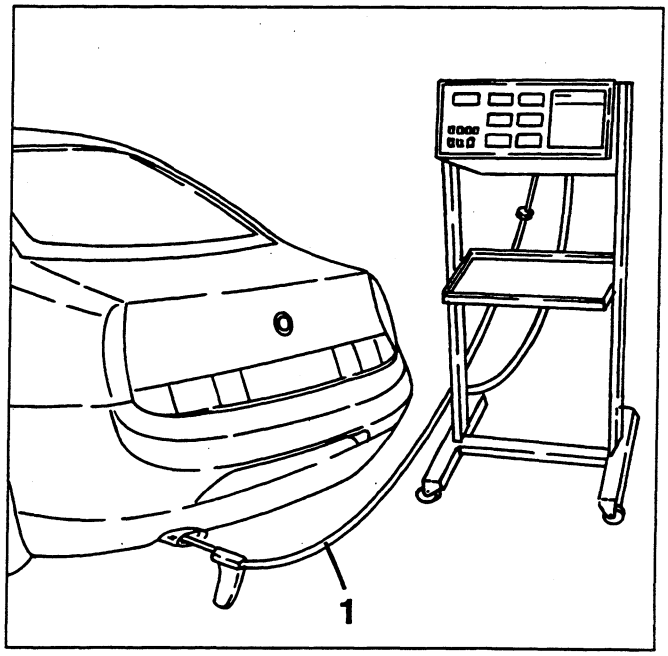

cardiagn.com

RPM SENSOR AND TIMING SENSOR

The sensor for detecting the rpm and engine timing is of the inductive type which operates through the change of a magnetic field generated by the passage of the teeth of a toothed pulley (phonic wheel) splined on the crankshaft.
The teeth which pass in front of the magnetic field generator change the gap between the pulley and the sensor; therefore, the dispersed flux, which consequently varies, induces an alternate sinusoidal voltage in the coils of the sensor, the amplitude of which depends on the peripheral speed of the phonic wheel, the gap between the tooth and the sensor, the shape of the teeth, the magnetic characteristics of the sensor and on the support system.
The output signal which varies in relation to the rpm is processed by the control unit to obtain a signal at each passage through zero and a constant rectangular oscillation of amplitude to enable the control of the digital circuits inside the control unit.
The interval between the start of one tooth and another is 6° with the exception of the reference mark which is made by eliminating two of the 60 teeth of the pulley. The hollow due to the lack of two teeth gives the control unit a reference point of the crankshaft and each subsequent tooth of the phonic wheel informs the control unit of an increase in its angular position.

1. Phonic wheel
2. Core
3. Winding
4. Permanent magnet

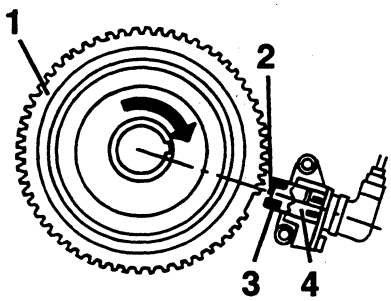

REMOVAL/REFITTING

1. Disconnect the electrical connection of the rpm and timing sensor.

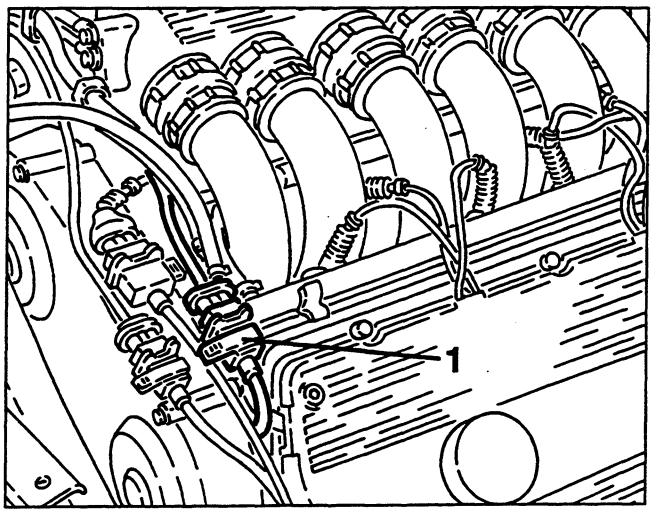

- Remove the right front wheel and mud flap.
1. Slacken the two fastening screws and remove the rpm and timing sensor complete with support.

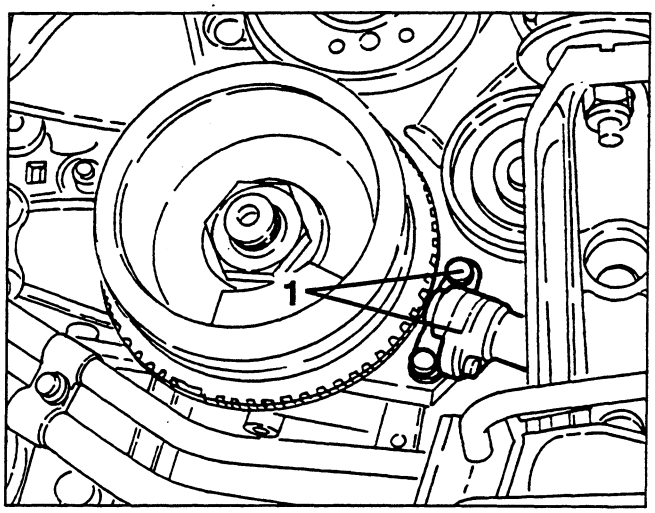

CHECKING THE GAP

- Remove the right front wheel and mud flap.
- Using a thickness gauge, check that the gap between the sensor and phonic wheel is within the specified limits.

Rpm and timing sensor gap
0.5 ÷ 1.5 mm

ENGINE COOLANT TEMPERATURE SENSOR (NTC)

This sensor detects the engine coolant temperature on the thermostatic cup through a thermistor (NTC) with a negative resistance coefficent, i.e. capable of lowering its resistance as the temperature increases. The electric signal obtained reaches the electronic control unit where it is used to correct the air-fuel mixture.

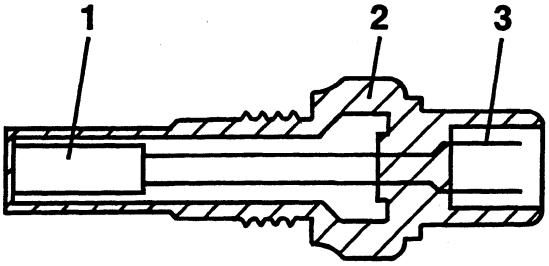

1. NTC resistance
2. Body
3. Connector

cardiagn.com

REMOVAL/REFITTING

- Disconnect the battery (-) terminal.
1. Disconnect the coolant delivery sleeve to the radiator from the thermostatic cup and recover the fluid that comes out.
2. Disconnect the electrical connection, then remove the coolant fluid temperature sensor from the thermostatic cup.

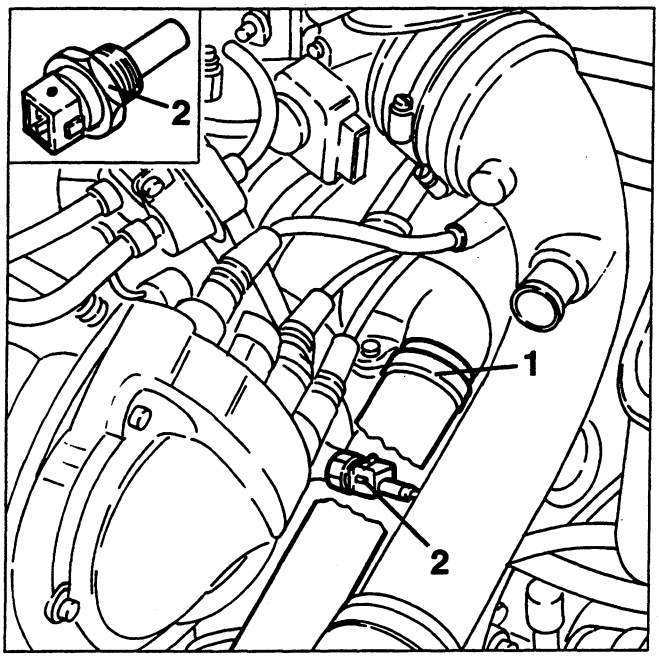

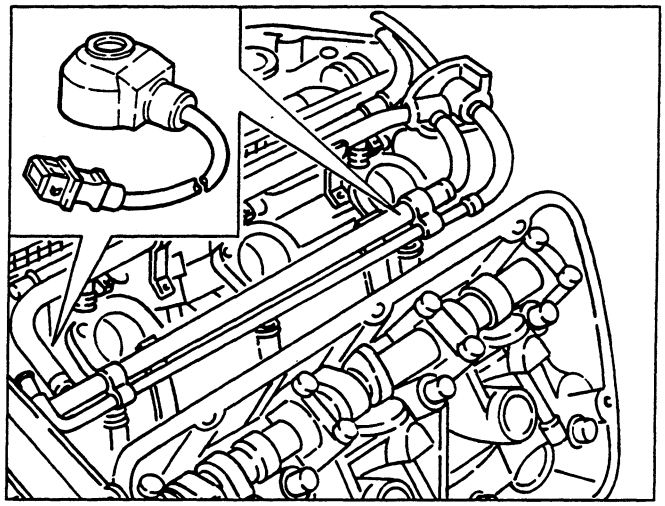

INERTIAL SWITCH

In the front side of the driver's seat there is a safety switch which is triggered in the case of an impact, cutting off the fuel pump connection to earth, thereby also the supply to the injection system.

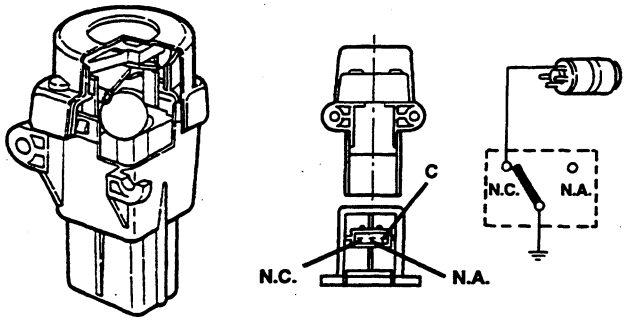

PINGING SENSORS

The pinging sensors are to be found on the crankcase, at the centre of the two cylinder heads.
They comprise a piezoelectric plate and a seismic mass buried in a plastic mould.
Their purpose is to detect the vibrations produced when the engine is running, exploiting a particular characteristic of piezoelectric materials which generate an output voltage when they are subjected to mechanical stresses.
This voltage is filtered and analyzed by the ignition control unit, which then adjusts spark angle in the "delay" direction, to command the injection control unit to enrich the fuel and reduce the boosting pressure.
As the boosting pressure falls the ignition control unit adjusts the spark angle again until the optimum rating is reached.
The detection and limiting of pinging take place for each cylinder.
As the pinging signals are allocated to the corresponding cylinder (by the 1st cylinder detection sensor), it is possible to adjust for each cylinder.

A steel ball fitted in a taper housing is normally held in place by the force of attraction of an adjacent magnet.
Under specific acceleration loads the ball releases itself from the magnetic force and gradually moves out of the taper support rising upwards following the angle of the taper.
A quick snap connection is fitted above the ball which forms the normally closed (N.C.) electric circuit.
When the mechanism is hit by the ball it changes position, from N.C. circuit to normally open circuit (N.A.), cutting off the fuel pump earth circuit.
In the event of impact in any one of the three orthogonal directions, the switch will be triggered above 12 g peak equivalent to a speed of 25 kph.
The switch can be reset pressing the pushbutton protected by a flexible cover (this also protects against foreign particles which might prevent the switch from operating or reprogramme it).

cardiagn.com

NOTE:
If after even a light crash, there is the smell of petrol or leaks are noted from the fuel supply system, do not reset the switch, but firstly seek the failure and repair it to prevent the hazard of fire.
Conversely, if there are no leaks and the car can be restarted, press the pushbutton to reactivate the fuel pump.

REMOVING/REFITTING

- Disconnect the battery (-) terminal.
1. Slacken the two fastening screws and remove the plastic cap protecting the inertial switch.

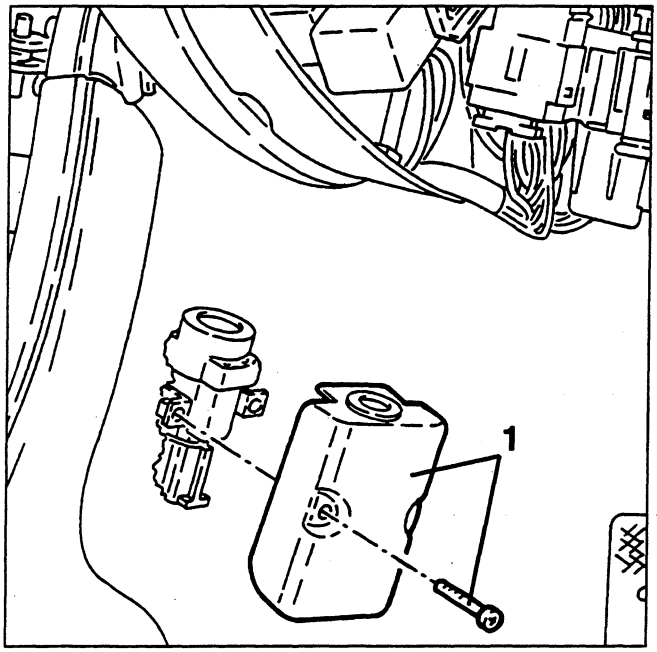

1. Slacken the two fastening screws, disconnect the electrical connection and remove the inertial switch.

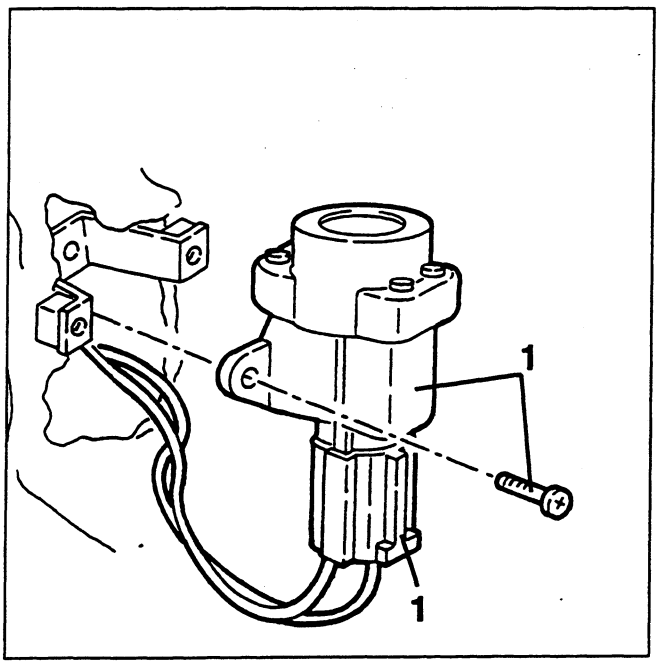

BOOST DRIVE DEVICE CONTROL SOLENOID VALVE (PIERBURG)

This is controlled directly by the control unit and operates the Waste-Gate overpressure valve via the actuator to which it is connected, allowing part of the exhaust gas to by-pass (or not to by-pass) the turbine depending on the need for torque/power of the engine.
For further information see the paragraph "DEL BOOST-DRIVE MANAGEMENT".

REMOVING/REFITTING

- Disconnect the battery (-) terminal.
1. Disconnect the electrical connection from the Pierburg solenoid valve.
2. Slacken the fastening clamp and from the Pierburg solenoid valve disconnect the connection pipe with the turbococharger inlet.
3. Slacken the fastening clamp and disconnect from the Pierburg solenoid valve the pipe connecting with the turbocompressor.
4. Slacken the fastening clampand disconnect from the Pierburg solenoid valve the pipe connecting the Waste-Gate overpressure valve actuator.
5. Slacken the two fastening bolts and remove the Pierburg solenoid valve.

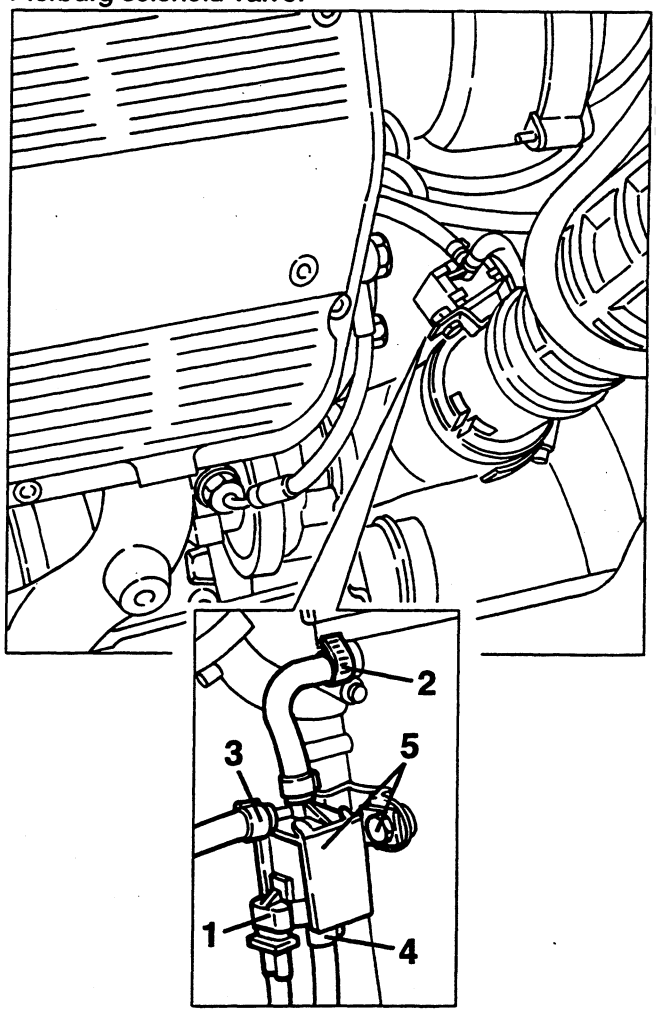

cardiagn.com

ALTITUDE SENSOR

Since at high altitudes the air is more rarefied, a lower mass of air passes through the air-flow meter at an equivalent volumetric capacity. For this reason it is necessary for a sensor which detects the pressure of the air in which the car is travelling and sends the ignition control unit a signal proportionate with the atmospheric pressure to control the boosting pressure to avoid excessive pressure. This is the reason for the altitude sensor.
It comprises a barometric capsule sensitive to the atmospheric pressure.
As the pressure changes, the capsule changes its size, thereby moving a slider with which it is integral. The movement of the slider, which forms one of the contacts of the resistance inside the sensor, causes a change in the length of the section of resistance involved by the circuit, thereby changing the output voltage rate.

REMOVING/REFITTING

- Disconnect the battery (-) terminal.
1. Disconnect the electrical connection from the altitude sensor.
2. Slacken the fastening nut and remove the altitude sensor.

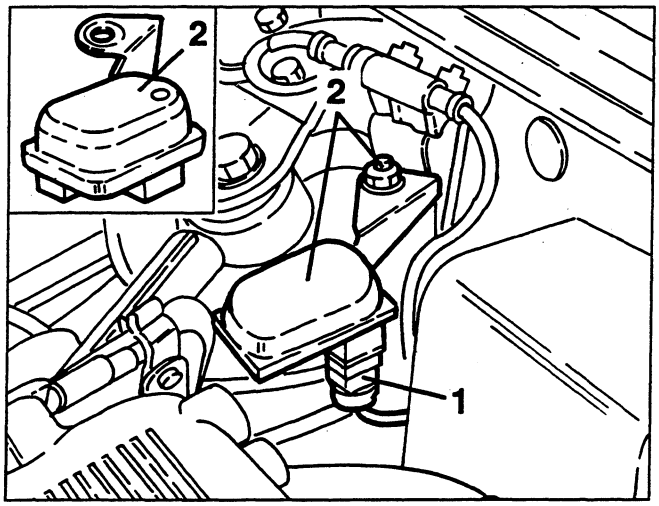

1ST CYLINDER DETECTION SENSOR

The 1st cylinder detection sensor is located on the high voltage cable of the 1st cylinder.
Its purpose is to identify any cylinder that is pinging in order to delay the spark on that cylinder only.

The sensor is formed of a coil buried in a plastic toroidal support, which generates a voltage proportionate with the change in the current that crosses the high voltage cable of the 1st cylinder.

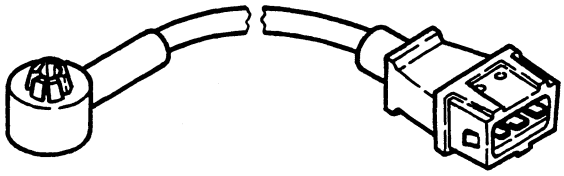

REMOVING/REFITTING

- Disconnect the battery (-) terminal.
1. Disconnect the electrical connection of the 1st cylinder detection sensor.

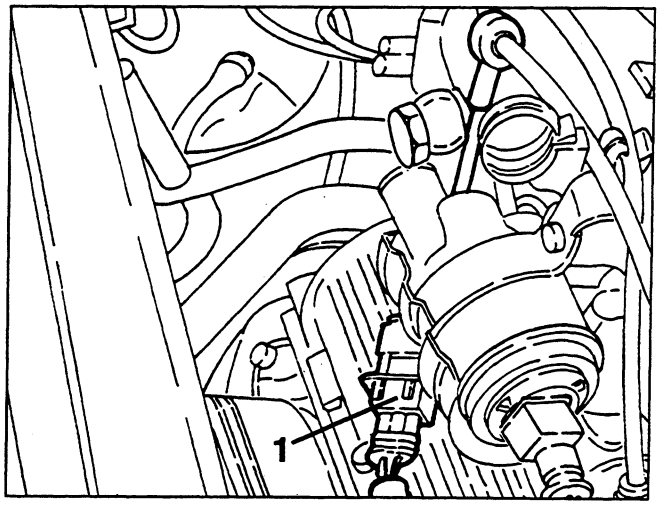

- Disconnect the high voltage cable of the 1st cylinder spark plug.
- Slacken and remove the "pipette" connecting to the spark plug from the high voltage cable.
- Run the 1st cylinder detection sensor on the high voltage cable, towards the spark plug to remove it.

cardiagn.com

ENGINE COOLING SYSTEM

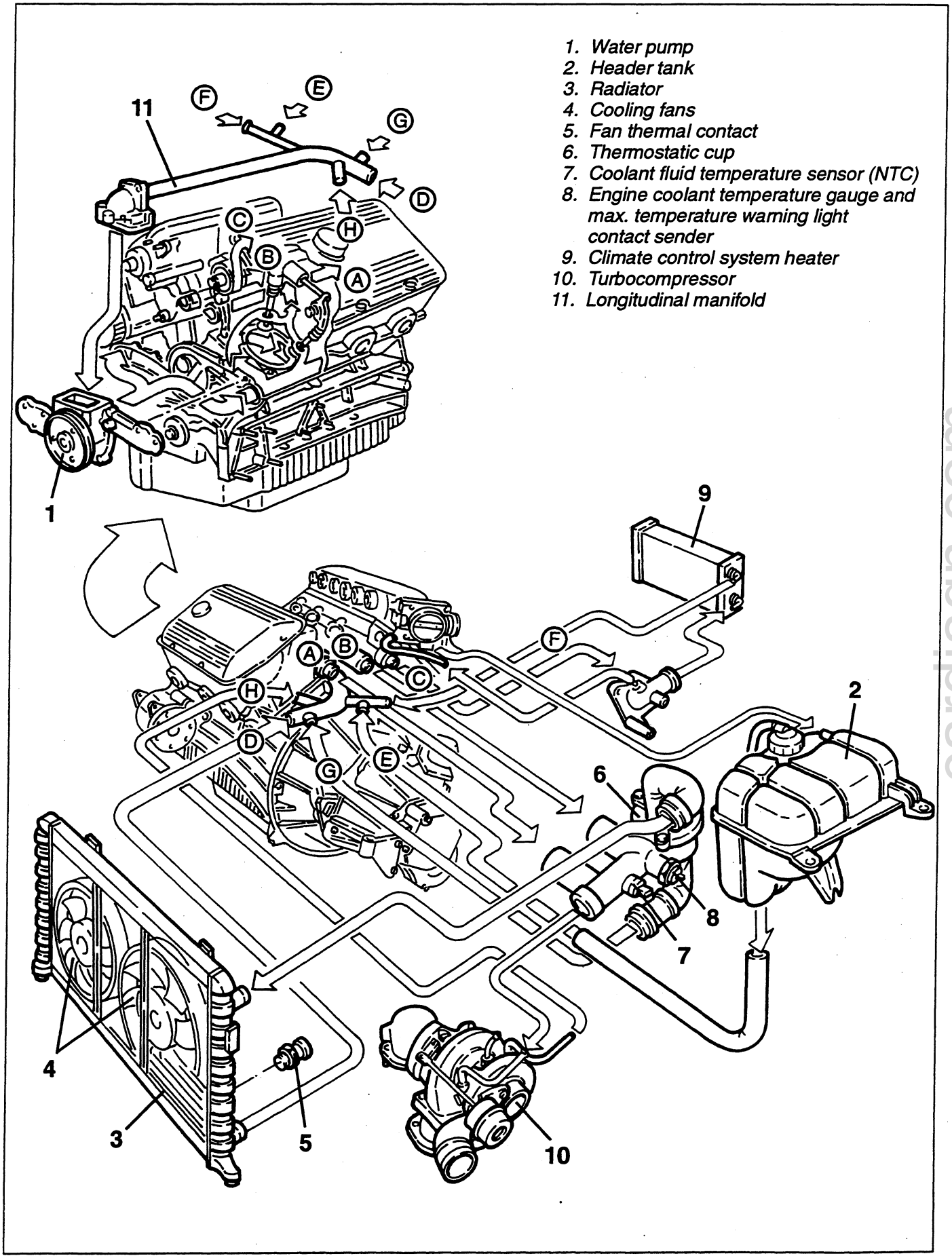

cardiagn.com

DESCRIPTION

The cooling system is of the sealed type with forced circulation by a centrifugal pump (1) operated by the crankshaft through a Poly-V belt.
A thermostatic cup (6), on the rear of the engine, keeps the engine at an optimum temperature level; it opens when the temperature of the coolant reaches 83 ± 2°C.
As well as with dynamic air the radiator (3) also cools the engine fluid by two fans with two speeds which are turned on by a thermal contact (5) on the radiator.
The purpose of the header tank (2) is to supply the circuit if the level falls and it acts as a lung absorbing the changed in volume of the fluid as the temperature changes; it also vents air from the circuit.
The circuit is fitted with a coolant temperature sender (8) for the temperature gauge and for contact of the max. temperature warning light contact which turns on when the coolant temperature exceeds 115 ± 3°C.

OPERATION OF THE CIRCUIT

After cooling the engine, the fluid flows through the cylinder heads to the thermostat unit (6).
From here, if the temperature is below 83 ± 2°C, it is withdrawn by the pump (1) through a longitudinal coolant return manifold (11) located between the cylinder heads.
Conversely, if the temperature exceeds this value, it is ducted by the opening of the thermostat towards the radiator (3).
After being cooled in the radiator, the fluid returns, still through the longitudinal manifold, to the pump which directs it to the engine again.
Regardless of the position of the thermostat, from the thermostat unit, a pipe sends the fluid to cool the turbocompressor (10) which it leaves through a special pipe to return to the longitudinal manifold leading to the pump inlet.
A special union on the right-hand cylinder head receives the coolant fluid from an additional duct of the cylinder head and sends it through two special pipes to the heater (9) of the climate control system and to the throttle body to heat it.
The latter is connected to the header tank (2) through a special pipe which, besides allowing the fluid to return also vents the air from the system.
The pump intake manifold is also connected to the system supply pipe leading from the header tank and the return pipe from the climate control heater.

cardiagn.com

GEARBOX UNIT 1996 TB

REMOVAL/REFITTING

- Set the car on a lift.
- Disconnect the battery.
- Remove the front wheels.

1. Remove the left front gravel guard.

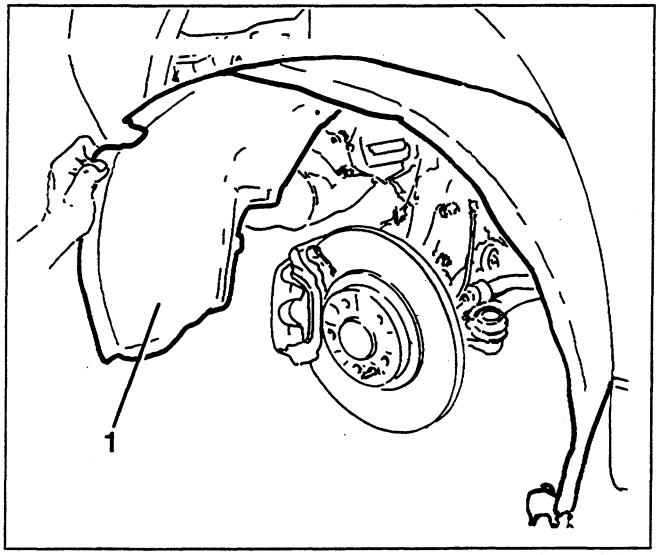

- Remove the engine compartment protection, right-hand (see GROUP 70).

1. After disconnecting the connection, remove the air-flow meter with the two corrugated pipes, the fastening bracket and the by- pass valve with corresponding pipes.

2. Remove the pipe between the throttle and the intercooler.

- Suitably plug the hole in the pipe towards the turbocharger and intercooler.

3. Disconnect the ignition coil cap.
4. Disconnect the throttle sensor connection.
5. Disconnect the by-pass pipe clamp

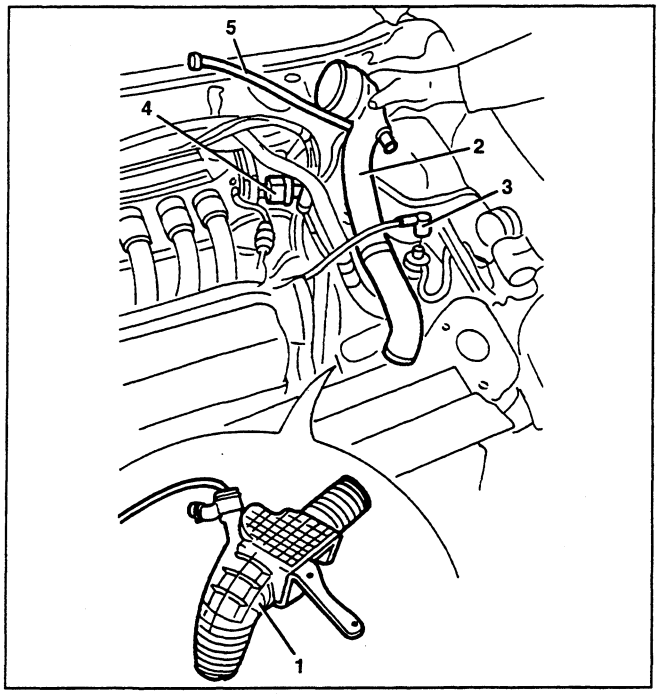

1. Disconnect the electrical connections of the engine temperature sensors

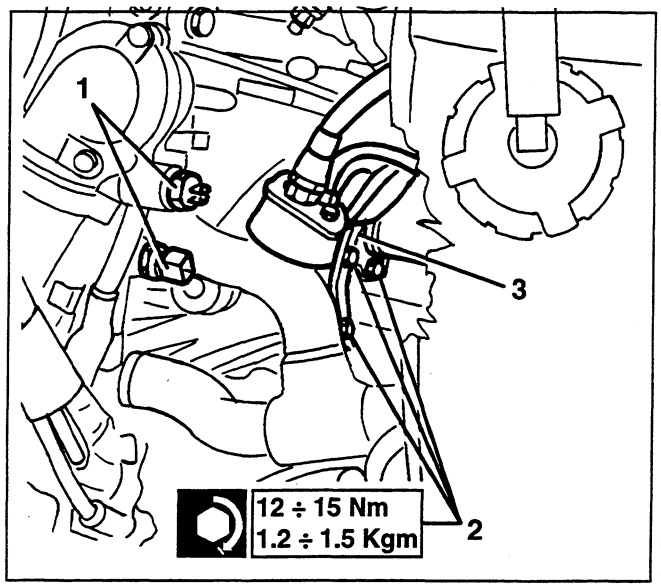

1. Disconnect the electrical connection of the mileage recorder sensor.
2. Disconnect the reversing gear release cable from the gearbox.
3. Disconnect the electrical connection of the reversing switch.

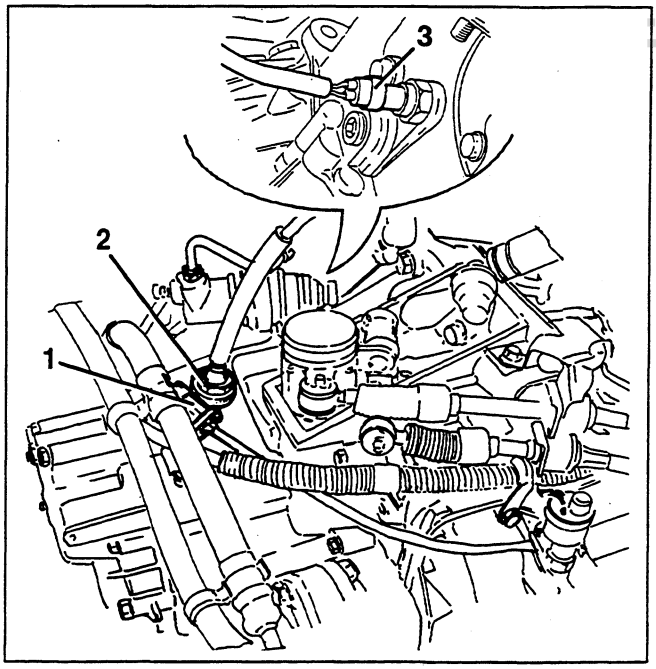

cardiagn.com

– Raise the car
1. Working from below, disconnect the fastening bracket of the clutch cylinder
– Lower the car and move the cylinder, without disconnecting the piping

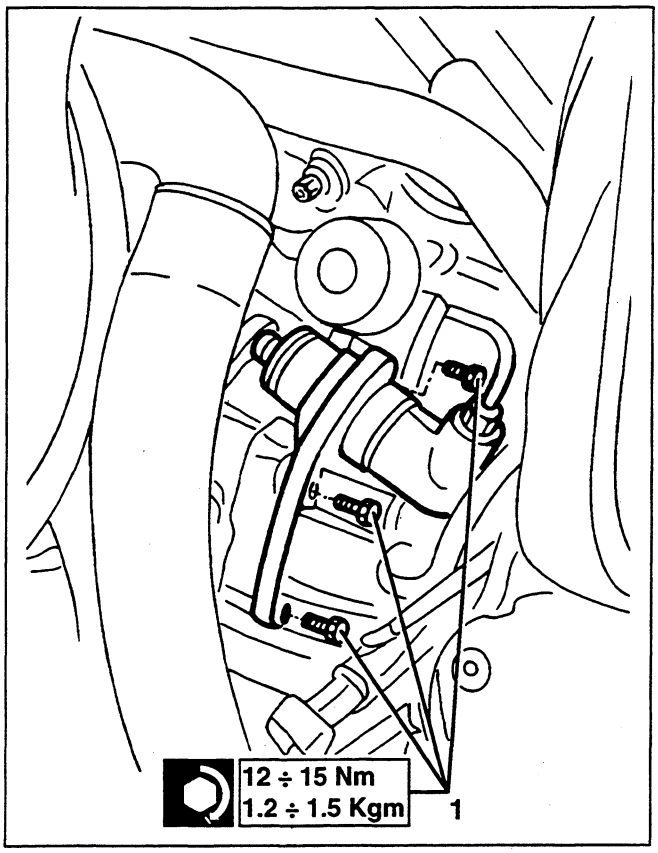

1. Remove the front crossmember above the radiator.
2. Remove the fan ducts, after disconnecting all the electrical connections.
3. Remove the bonnet opening cable

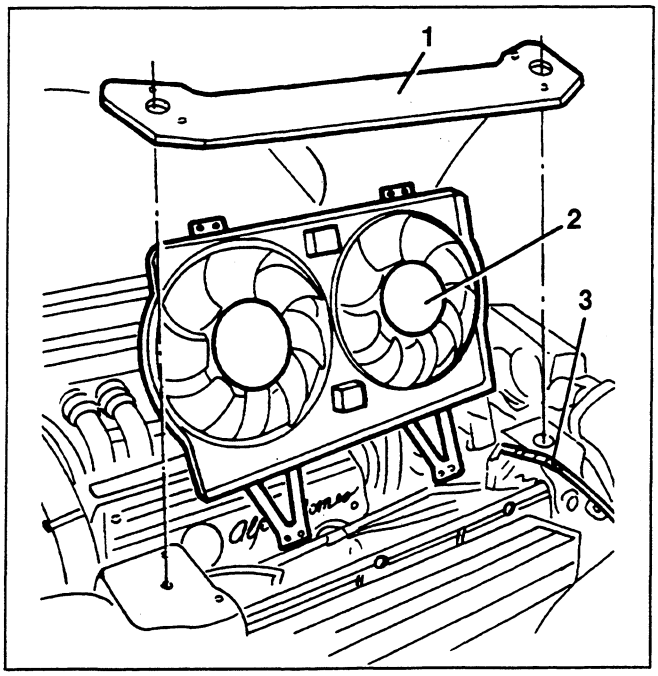

1. Using tools 1.820.239.000, 1.820.581.000 and 1.820.226.000 suitably support the engine with a chain.

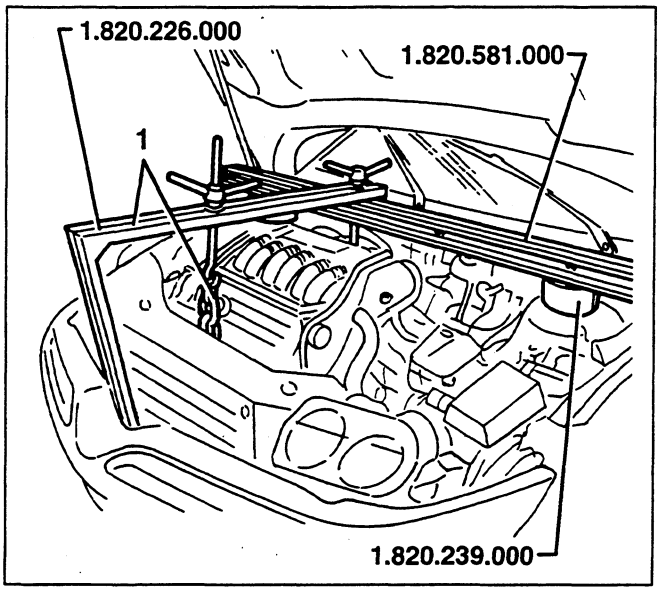

WARNING:
To avoid damaging the power steering pipes, housed at the front of the radiator, interpose a suitable thickness between the front connection of the tool and its resting surface.

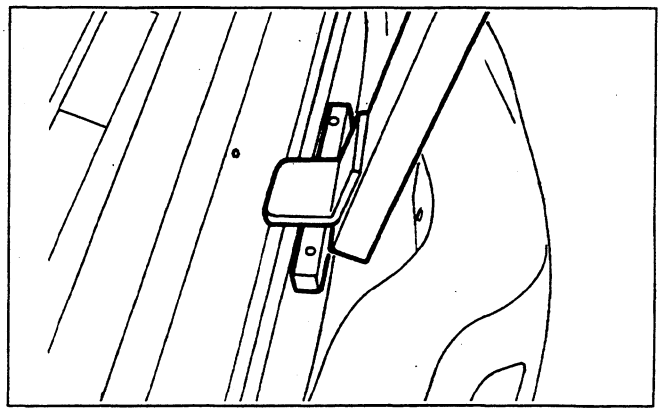

cardiagn.com

1. Slacken the three upper screws fastening the gearbox cover to the crankcase.

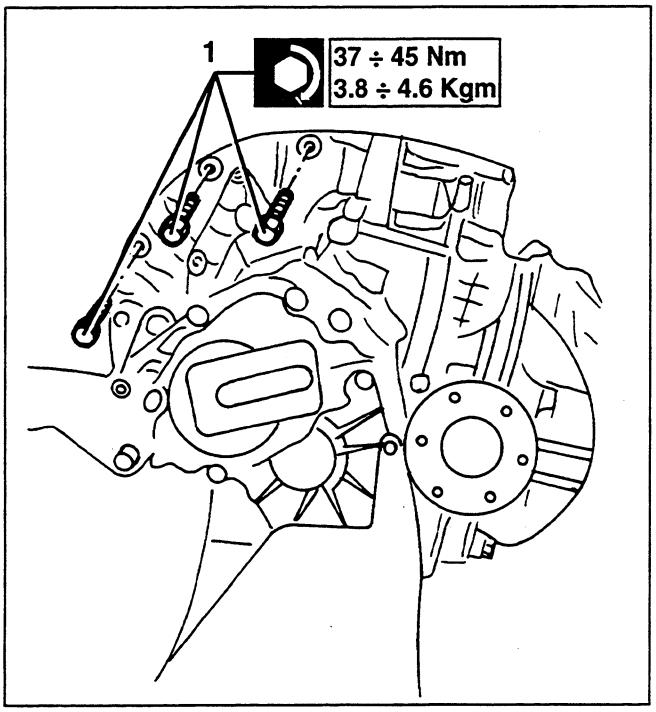

– Raise the lambda probe connection.
– Raise the car.
– Position a suitable recipient under the engine compartment
1. Slacken the plug and drain the oil from the gearbox.
2. Slacken the plug and drain the oil from the differential.

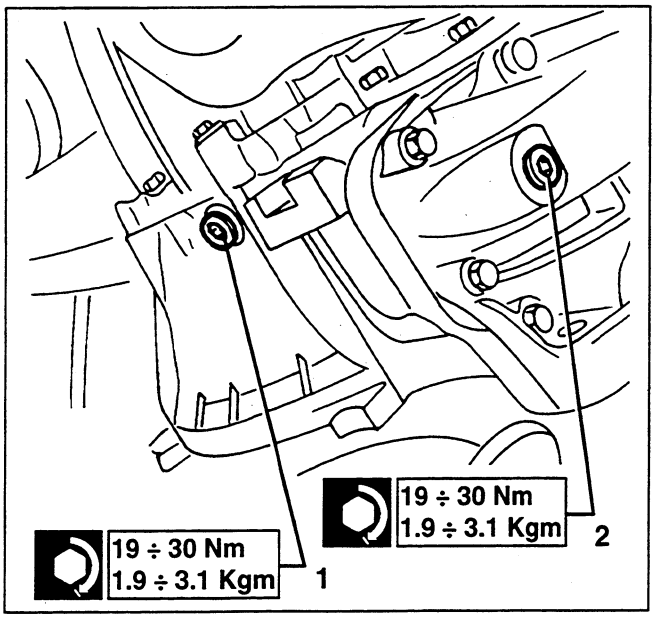

– Retrieve the lambda probe cable
1. Remove the front exhaust manifolds, up to the catalytic converter.

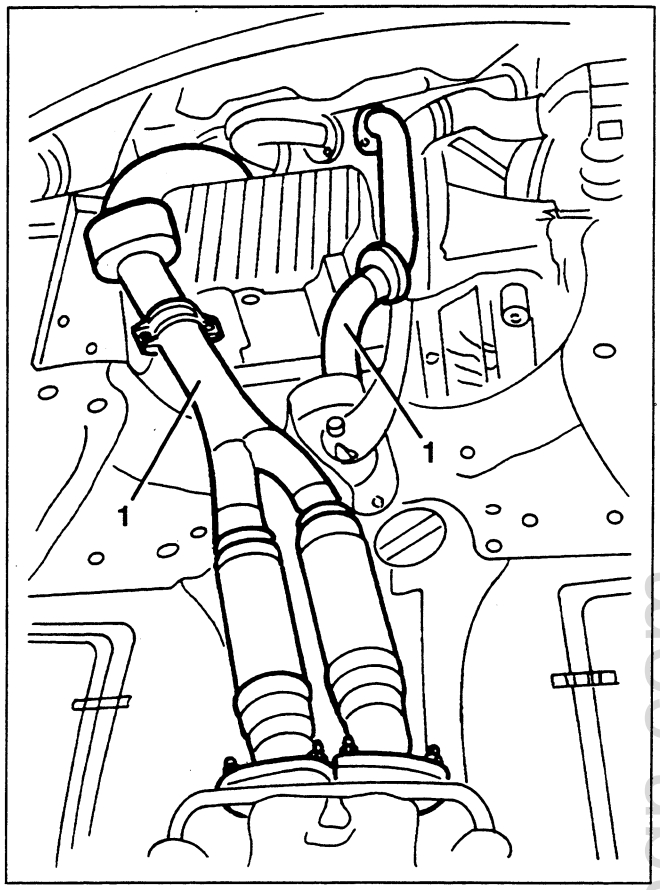

1. Working from both sides of the car, slacken the bolt fastening the suspension wishbone to the wheel hub.
2. Withdraw the suspension wishbone ball pin.

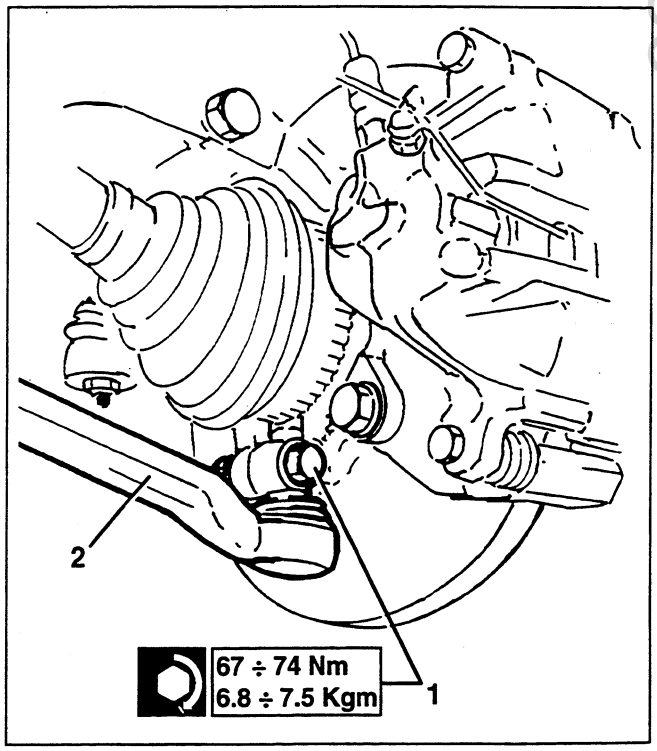

Cardiagn.com

– Working on the left-hand side of the car, disconnect the earth braid from the gearbox.

1. Slacken the six bolts and disconnect the axle shaft from the differential.
2. Retrieve the safety plates.

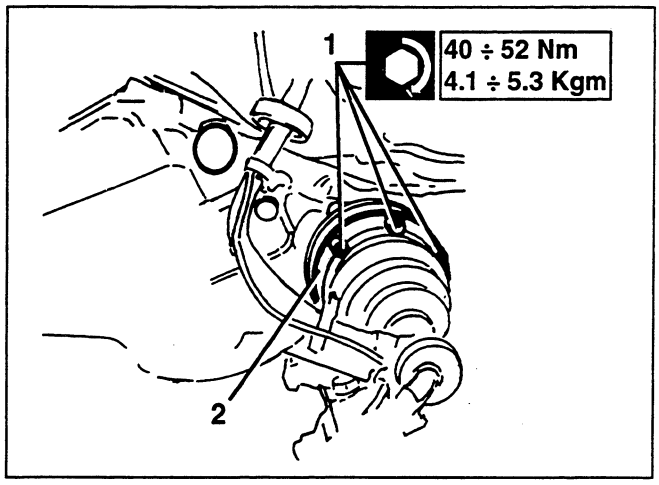

1. Working from under the car, slacken the four screws fastening each of the two front crossmember reinforcement struts.
2. Retrieve the reinforcement struts.
3. Slacken the screws fastening the steering box to the crossmember.

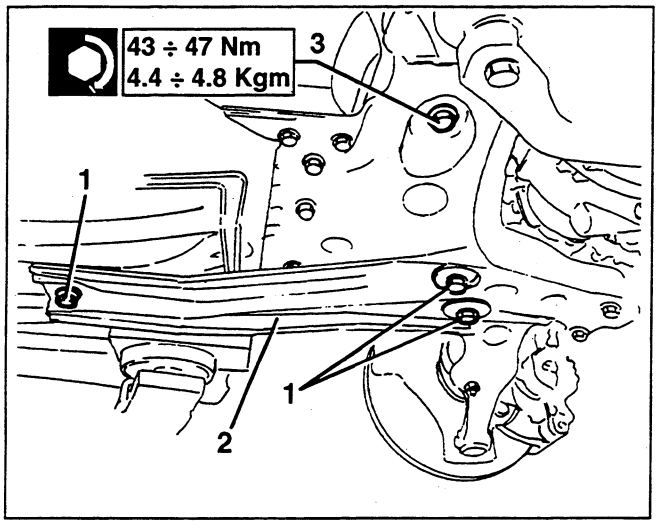

1. Slacken the three fastening screws.
2. Remove the rear engine support.

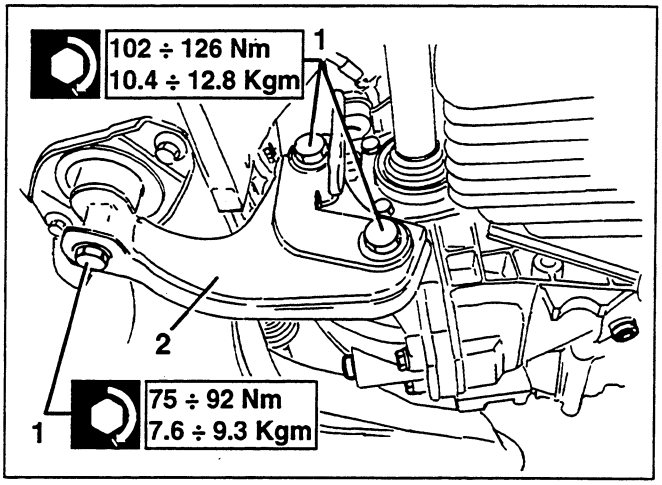

1. Remove the two heat shields

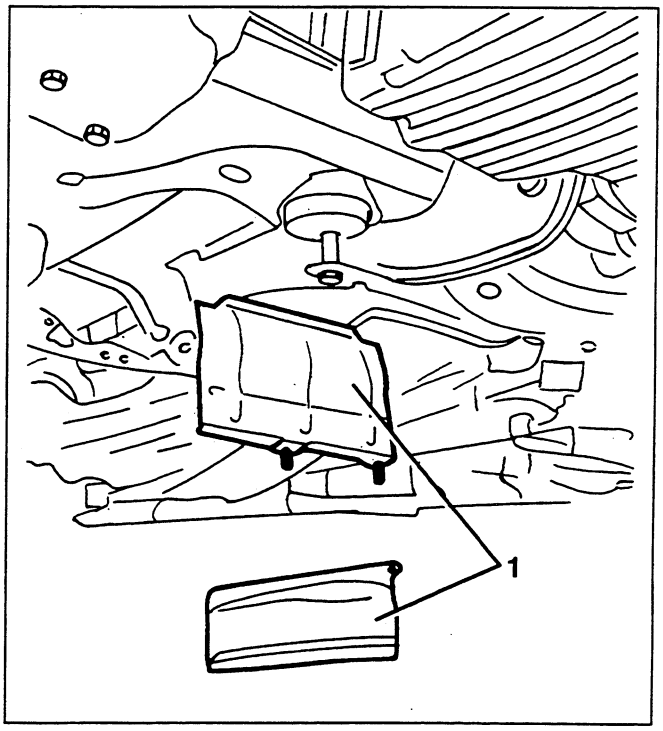

cardiagn.com

1. Position a hydraulic jack with special support under the crossmember.
2. Slacken the nuts fastening the crossmember to the gearbox controls support.
3. Slacken the screws fastening the crossmember to the body.

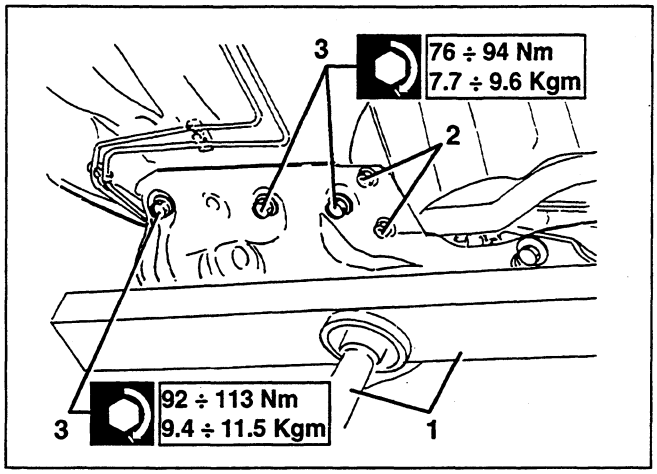

1. Slacken the upper sidemember fastening screw on each side.
2. Slowly lower the hydraulic jack and remove the crossmember complete with wishbones and stabilizer bar.

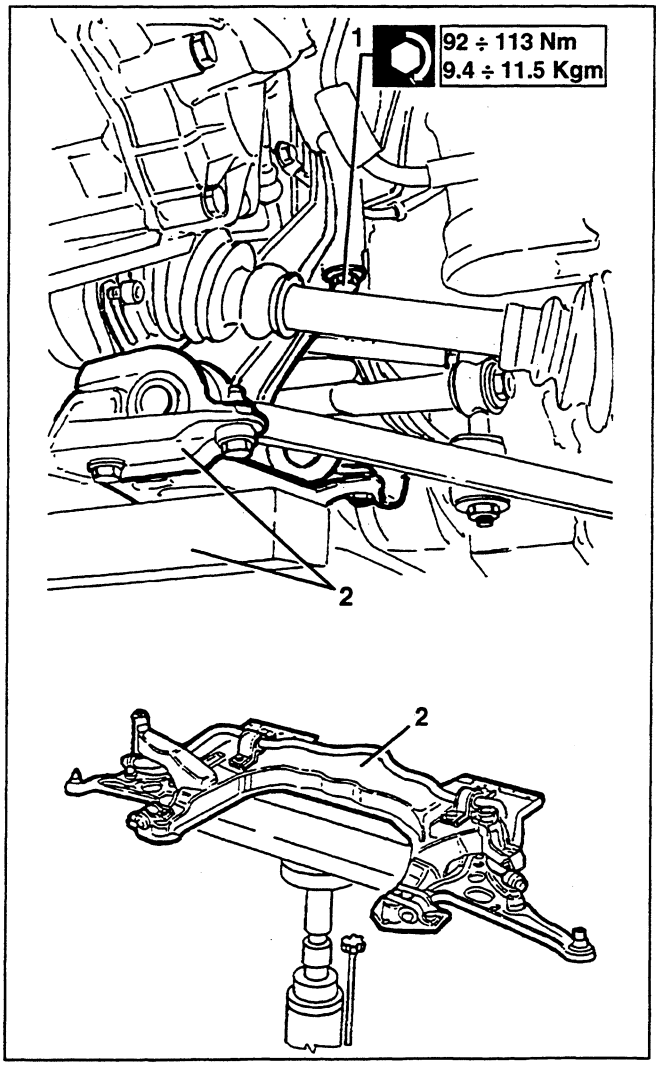

1. Slacken the screws fastening the lower flywheel cover and remove it.

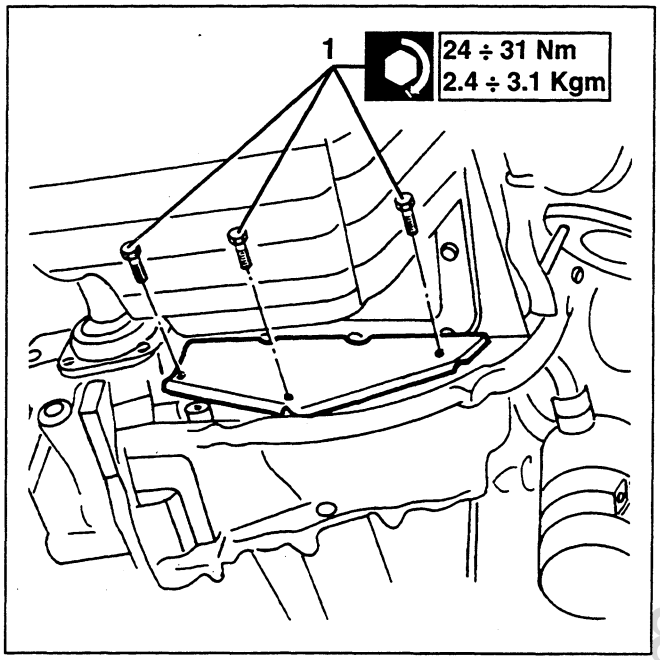

1. Remove the starter motor cover (in two sections)
2. Remove the gearbox control cables cover

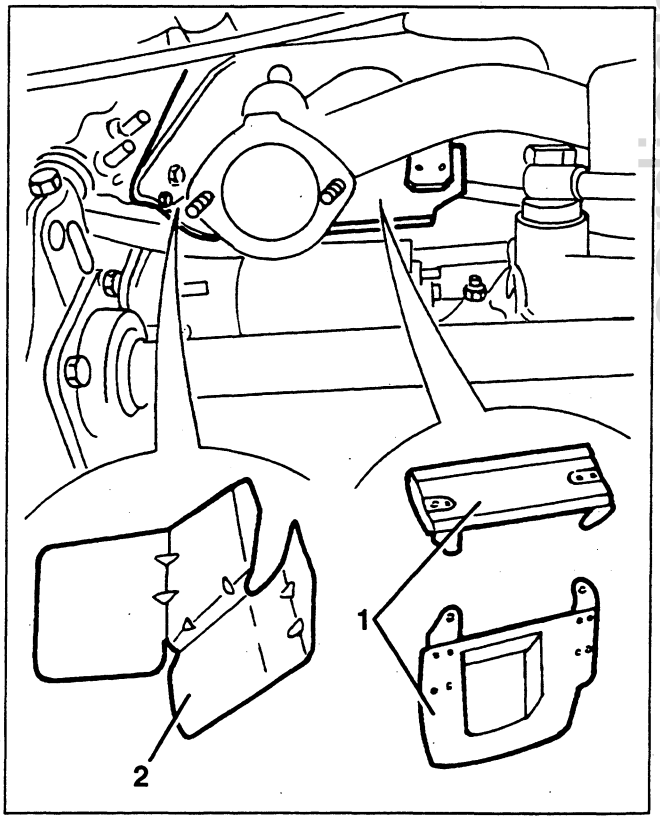

cardiagn.com

1. Slacken the starter motor fastening screws.

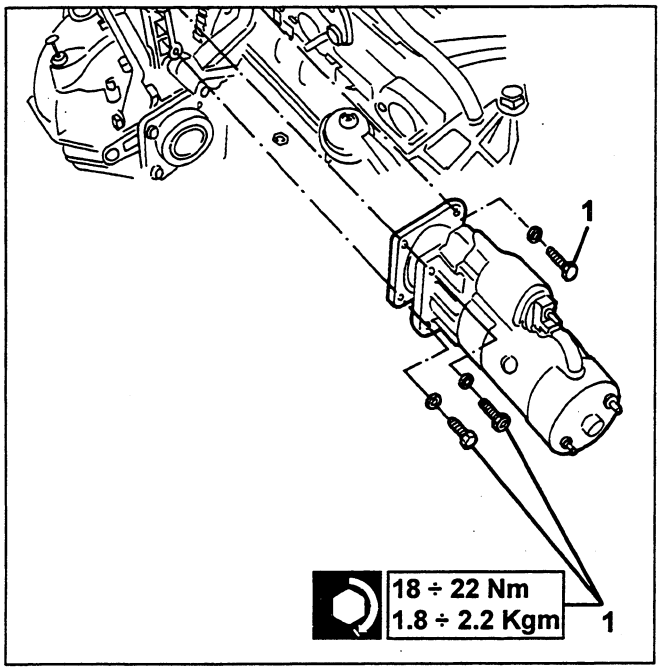

– Working from the top
1. Remove the retainer clamps and withdraw the gearbox control cables.
2. Slacken the upper screw of the gearbox control cables support bracket.

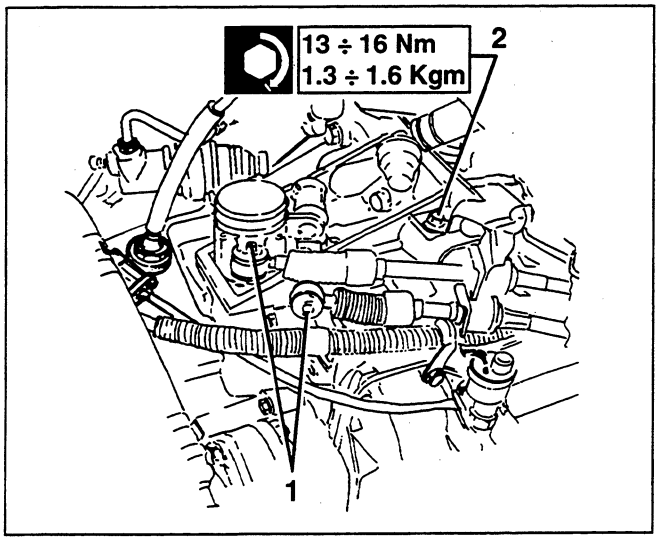

1. Slacken the screw fastening the rear gearbox support.
2. Slacken the nuts fastening the support to the gearbox.
3. Remove the support.

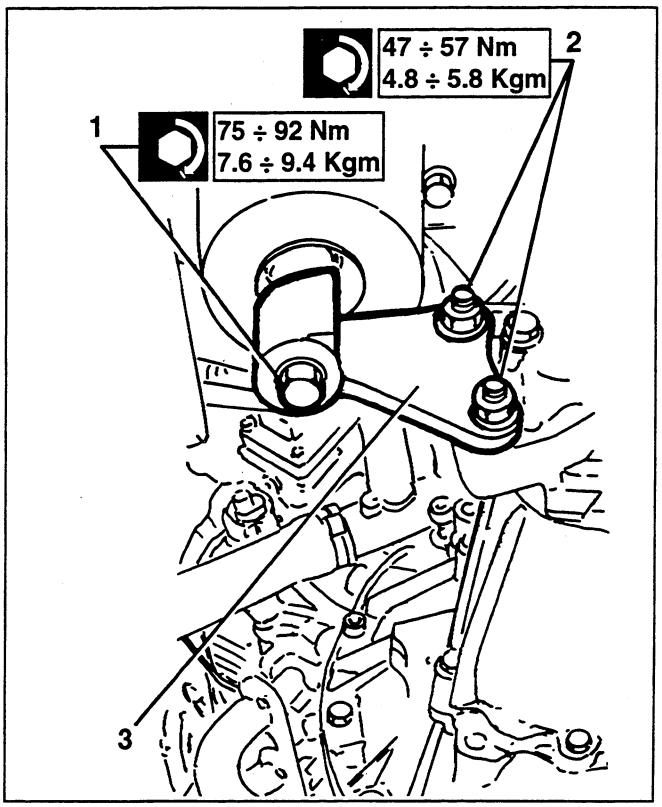

1. Slacken two of the gearbox cover fastening screws and fasten brackets no. 1.820.230.000 and support no. 1.820.208.000.
2. Using a hydraulic lift support the gearbox unit.

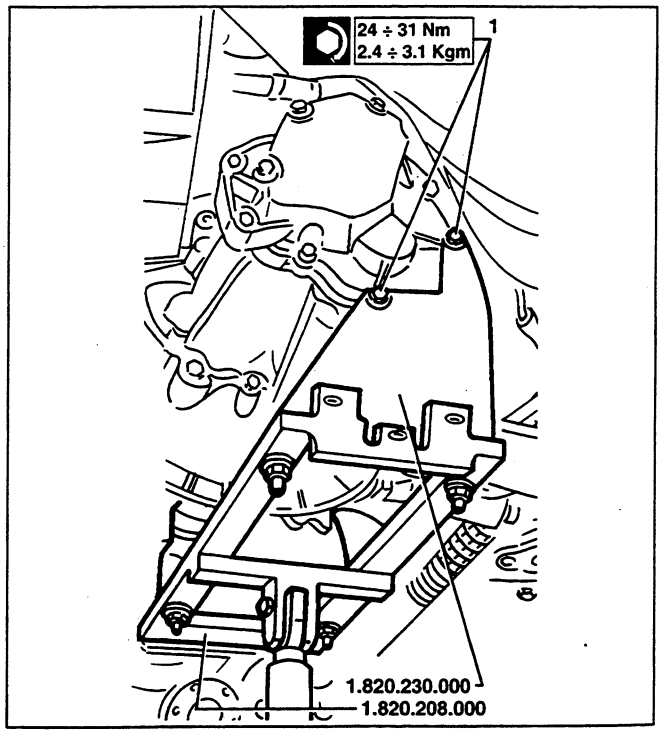

cardiagn.com

1. Slacken the rear engine-gearbox fastening screw.
2. Slacken the four screws fastening the intermediate shaft support to the differential.

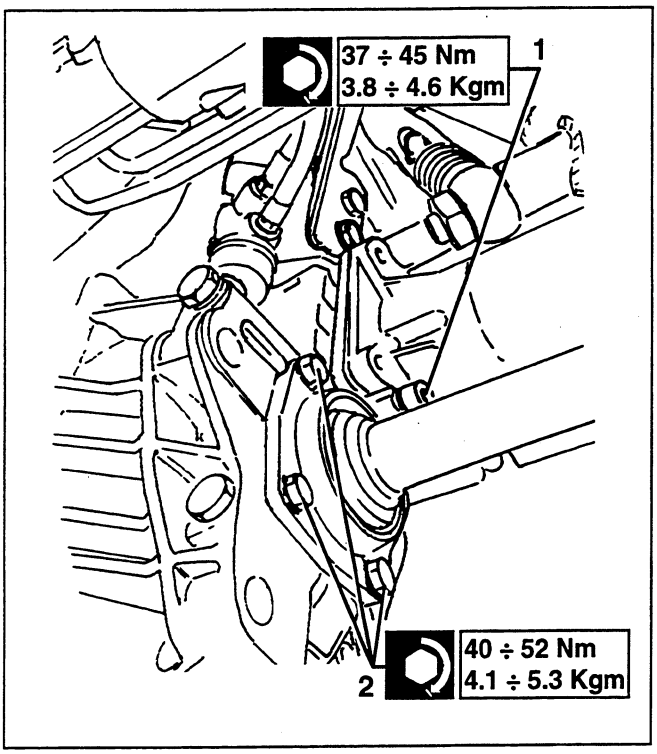

1. Slacken the remaining three screws fastening the gearbox to the engine
2. Move the gearbox away from the engine and lower it using the hydraulic hoist.

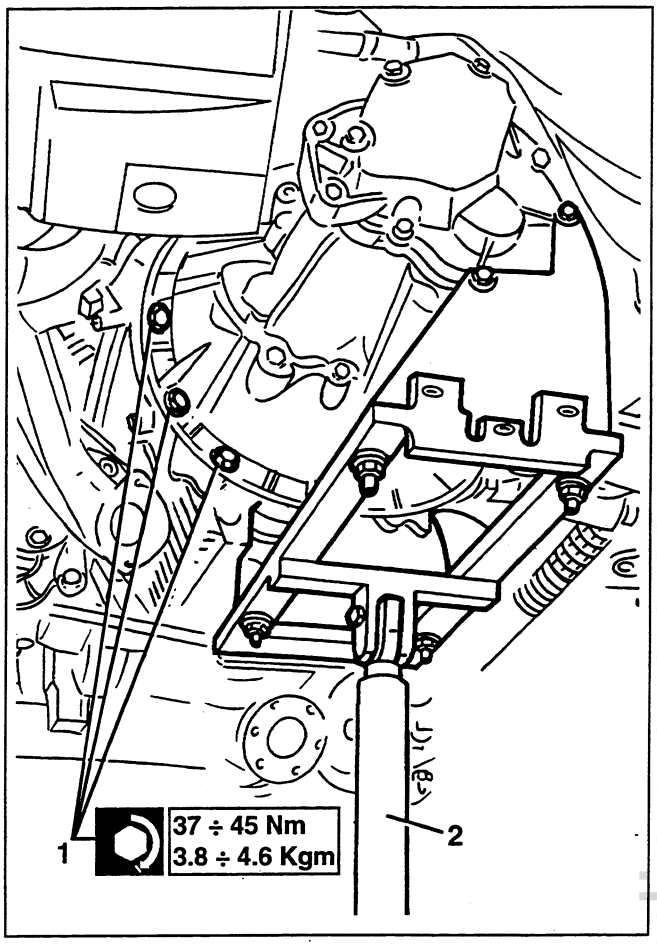

cardiagn.com

WHEEL ALIGNMENT

CHECKING THE FRONT WHEEL ALIGNMENT

- Inflate the tyres to the specified pressure.
- Fill with fuel and the specified oils and fluids.
- Set the car on a lift.
- Sway the car a few times to settle the suspensions.

1. Position the reference tool on the on the car resting surface.
2. Using a surface gauge measure the distance "**A**" between the car resting surface and the centre of the steering knuckle fastening screw.
- With the help of a millimetred rule measure the distance found.
3. Using the surface gauge measure the distance "**B**" between the car resting surface and the centre of the wishbone pin.
- With the help of the millimetred rule measure the distance found.

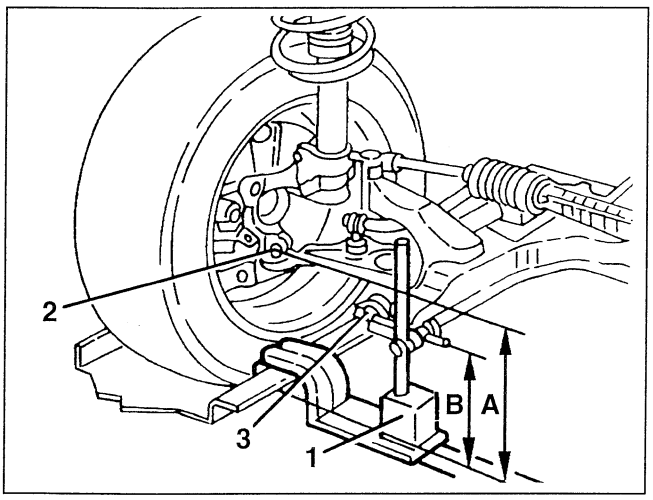

- Calculate the difference between dimension "**B**"and dimension "**A**" and check that it is with the specified limits.

Front alignment B-A
GTV V6 TB
-37 ± 5 mm* -48 ± 5 mm**

* to '97 versions
** '98 versions

NOTE: If the alignment values are not within the specified values change both suspension springs.

CHECKING THE REAR WHEEL ALIGNMENT

- Inflate the tyres to the specified pressure.
- Fill with fuel and the specified oils and fluids
- Set the car on a lift.
- Sway the car a few times to settle the suspensions.

1. Position the reference tool on the car resting surface.
2. Using a surface gauge measure the distance "**C**" between the car resting surface and the fulcrum of the spring carrier arm.
- With the help of a millimetred rule measure the distance found.
3. Using the surface gauge measure the distance "**D**" between the car resting surface and the rear wheel centre.
- With the help of the millimetred rule measure the distance found.

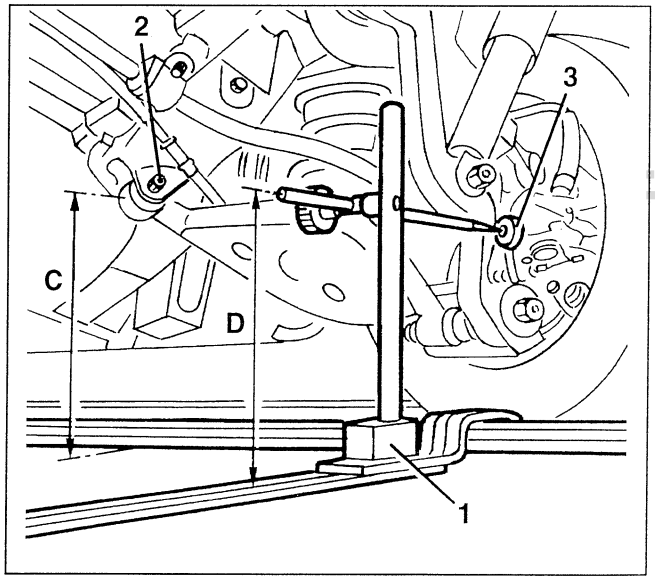

- Calculate the difference between dimension "**C**"and dimension "**D**" and check that it is with the specified limits.

Rear alignment C - D
GTV V6 TB
-77 ± 5 mm* -77 ± 3 mm**

* to '97 versions
** '98 versions

NOTE: If the alignment values are not within the specified values change both suspension springs.

cardiagn.com

CHECKING THE CHARACTERISTIC ANGLES

Preliminary operations

– Inflate the tyres to the specified pressure.
– Fill with fuel and the specified oils and fluids.
– Check that the eccentricity and orthogonality of the wheel rims does not exceed:

- 1 mm for steel rims
- 0.3 mm for alloy rims

CHECKING THE FRONT WHEEL TOE-IN

– Using suitable tools, check that the toe-in is within the specified limits.

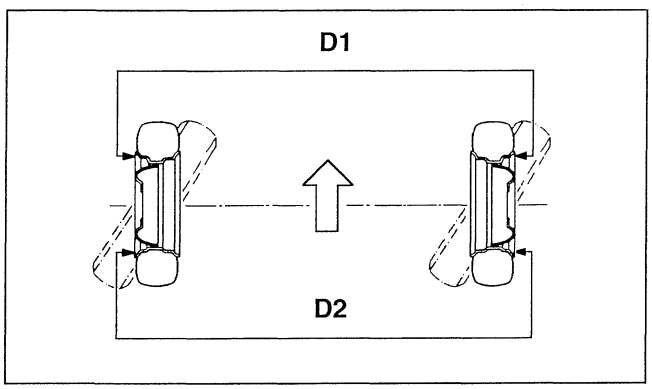

Front wheel toe-in D2 - D1
GTV V6 TB
-1.5 ± 0.5 mm* -2.0 ± 1 mm**

* to '97 versions
** '98 versions

If the toe-in is other than specified, proceed as follows:

1. Slacken the fastenings for adjusting the track rods.

WARNING:
Each time the front wheel toe-in is adjusted, it is necessary to check that the boots turn freely on the rod and if necessary remove them and lubricate with the specified grease.

2. Turn the rods, until reaching the specified value without changing the position of the steering wheel spokes

NOTE: Adjustment should be carried out on the rods of both wheels.

– Tighten the track rod adjustment fastenings to the specified torque.

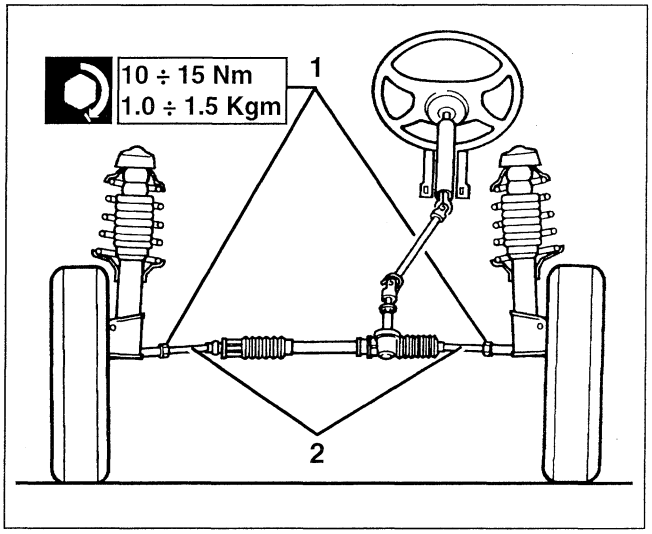

CHECKING THE FRONT WHEEL CAMBER AND CASTER

– Check that the camber and caster angles (not adjustable) are within the specified limits.

Front wheel camber "α"
GTV V6 TB
-0°40' ± 20'* -0°56' ± 20'**

* to '97 versions
** '98 versions

cardiagn.com

Caster "β"
GTV V6 TB
3°10' ± 30'* 2°54' ± 30'**

* to '97 versions
** '98 versions

NOTE: If the values are not within the specified limits, body squaring should be checked (see GROUP 70).

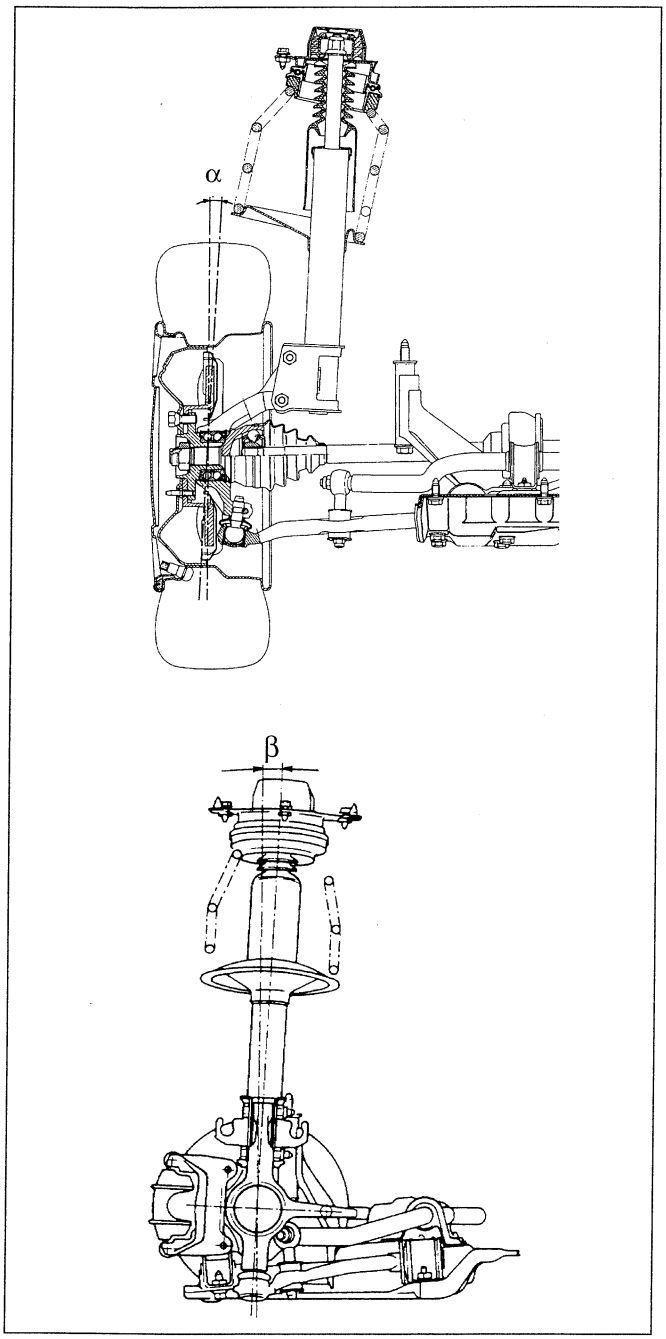

CHECKING THE REAR WHEEL TOE-IN

– Using suitable tools, check that the toe-in is within the specified limits.

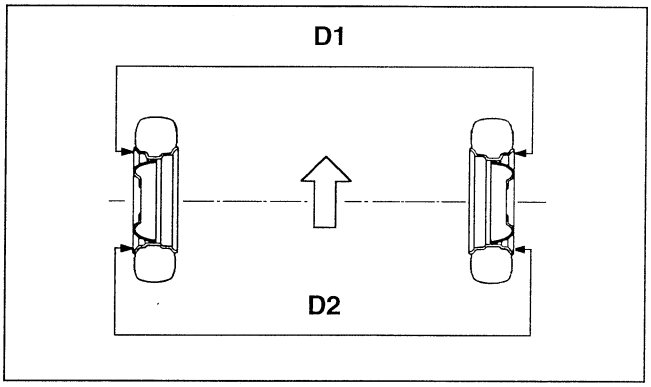

Rear wheel toe-in D2 - D1
GTV V6 TB
2.5 ± 0.5 mm* 3.0 ± 1 mm**

* to '97 versions
** '98 versions

cardiagn.com

If the toe-in is other than specified proceed as follows:

1. Slacken the fastenings of the adjustment rods.
2. Turn the rods, until reaching the specified value

NOTE: Adjustment should be carried out working on the rods of both wheels.

– Tighten the rod fastenings to the specified torque.

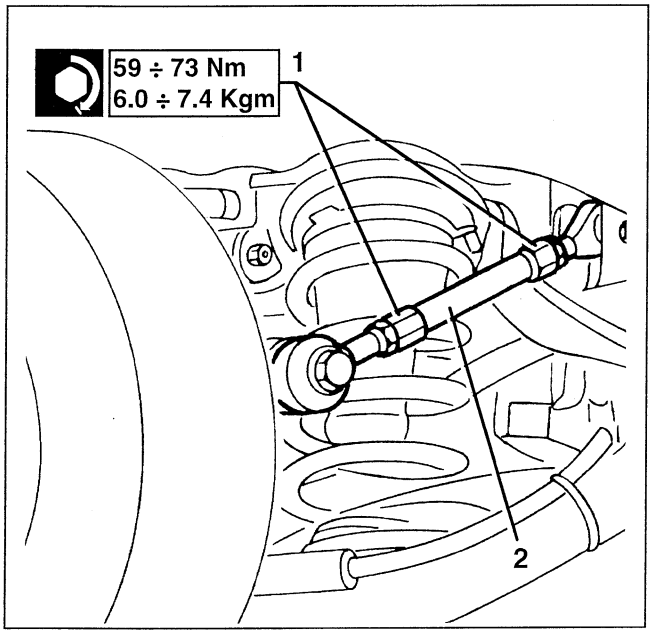

CHECKING THE REAR WHEEL CAMBER

– Check that the camber angle (not adjustable) is within the specified limit.

Rear wheel camber "γ"
GTV V6 TB
-1°8' ± 20'* -1°14' ± 20'**

* to '97 versions
** '98 versions

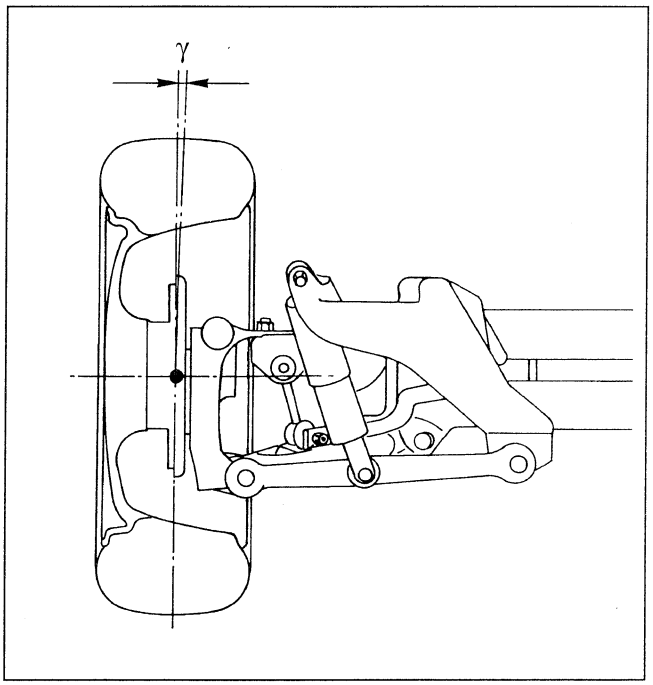

cardiagn.com

VARIANTS FOR GTV 2959 24V

INDEX

TECHNICAL DATA 00

VEHICLE
- Model identification 1
- Identification plate location 1
- Identification data plate 2
- Bodywork pain identification plate 2
- Dimensions 2
- Weights and loads 3
- Wheels and tyres 3
- Fluids and lubricates 4
- Indicative capacities 5
- Vehicle hacking points 6
- Vehicle towing points 6

ENGINE
- Technical features 7

ENGINE SUPPLY - COOLING
- Fuel feed 13
- Air feed 13
- Sensors 13
- Cooling system 14

MECHANICAL GROUPS
- Clutch 15
- Gearbox 15
- Brakes 15
- Front suspensions 16
- Rear suspensions 16
- Wheel trim and characteristic angles 16

ELECTRICAL SYSTEM
- Ignition 17
- Starting 17
- Recharging 17

TIGHTENING TORQUES 18

SPECIFIC TOOLS 20

MAINTENANCE
- Maintenance operations 23
- Engine maintenance 25
- Engine maintenance ('98 Models) 43

ENGINE 10

REMOVAL/REFITTING
- Description 1
- Removal 1
- Refitting 17

OPERATIONS IN VEHICLE
- Cylinder heads 18
- Oil pump 33
- Camshaft oil seal replacement 36
- Front crankshaft oil seal replacement 41
- Rear crankshaft oil seal replacement 41

M 3.7.1 INJECTION-IGNITION
- General description 42

FUEL SUPPLY
- System description 48
- Fuel pipe fittings (tJohn Guest) ..... ▲
- Fuel pipe fittings (Huron) ..... ▲
- Fuel tank ..... ▲
- Fuel gauge ..... ▲
- Fuel pump ..... ▲
- Fuel filter ..... ▲
- Fuel pressure regulator 49
- Injectors 50
- Fuel pressure and circuit tightness check ..... ▲
- Fuel vapour recovery system description 52
- Fuel vapour separator ..... ▲
- Fuel vapour canister ..... ▲
- Fuel vapour solenoid valve ..... ▲

(▲): See 1996 TB

cardiagn.com

INDEX

ENGINE *(Continued)*

10

AIR SUPPLY SYSTEM
- Air feed and oil vapour recovery system 53
- Air cleaner cartridge replacement 54
- Upper resonator 55
- Intermediate resonator 55
- Air cleaner unit 56
- Lower resonator 56
- Throttle casing 57
- Flow test 58
- Air flow meter 58
- Intake manifold 60

EXHAUST GAS RECIRCULATION
- Description 63

EXHAUST SYSTEM
- Description 64
- Catalytic converter ..... ▲
- Lambda sensor 65
- Exhaust emission control 65

ELECTRICAL COMPONENTS
- Rpm and phase sensor 66
- Engine coolant temperature sensor (NTC) 68
- Cam angle sensor 69

ENGINE COOLING SYSTEM
- Engine cooling system 70

'98 MODELS

REMOVAL/REFITTING
- Description 72
- Removal 72
- Refitting 86

OPERATIONS IN VEHICLE
- Cylinder head 87
- Oil pump 101
- Rear crankshaft oil seal replacement 104

ME2.1 INJECTION-IGNITION
- General description 105

FUEL SUPPLY
- Fuel feed system description 114
- Fuel tank 115
- Fuel pump and gauge 117
- Injectors 118
- Fuel vapour recovery system description 120
- Fuel vapour separator 121
- Fuel vapour canister 121
- Fuel vapour solenoid valve 121

AIR SUPPLY SYSTEM
- Air feed and oil vapour recovery system 122
- Air cleaner cartridge replacement 123
- Upper resonator 124
- Intermediate resonator 124
- Air cleaner casing 125
- Throttle casing with built-in DVL 126
- Air flow meter 127
- Intake manifold 129

EXHAUST SYSTEM
- Description 132
- Lambda sensor 133

ELECTRICAL COMPONENTS
- Rpm and phase sensor 135
- Engine coolant temperature sensor 137
- Cam angle sensor 138
- Accelerator pedal potentiometer 139

ENGINE COOLING SYSTEM
- Engine cooling system 142

(▲): See 1996 TB

cardiagn.com

INDEX

GEARBOX 21

'98 MODELS

GEARBOX ASSEMBLY
- Removal/Refitting 12
- Vehicle operations 23

EXTERNAL CONTROLS
- Description. 26
- Gearbox lever and handbrake bracket. 27
- Gear selection and engagement assembly. . . 31
- Reverse inhibitor on the gear lever bracket. . . 32

STEERING 41

STEERING CONTROL
- Steering wheel. 1

POWER STEERING
- Power steering pump. 3

SUSPENSION AND WHEELS 44

FRONT SUSPENSION
- Stabiliser bar connecting rod 0/1

WHEEL GEOMETRY
- Checking the front wheel alignment 1
- Checking the rear wheel alignment. 1
- Checking the characteristic angles 2

FOR THE INFORMATION NOT GIVEN HEREIN, REFER TO THE CORRESPONDING GROUP OF "SPIDER-GTV".
THE REFERENCE ENGINE IS THE "6 CYLINDER " (3.0 V6 ENGINE)

Cardiagn.com

MODEL IDENTIFICATION

Brand name	GTV 3.0 24V
Version	Coupé
Version (on identification plate)	916C1
Chassis (in engine Compartment, on upper right-Hand shock absorber bracket)	-
Progressive chassis number	-
Engine (code)	AR 16102
Engine symbol	2959 24V
Gearbox (code)	C.503.5 C.530.6 (▲)

(▲): **For '98 models**

IDENTIFICATION PLATE LOCATION

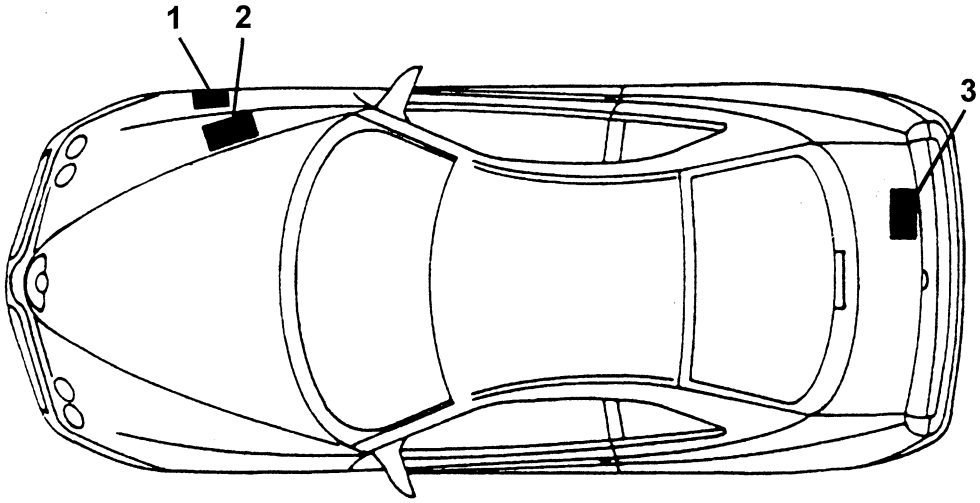

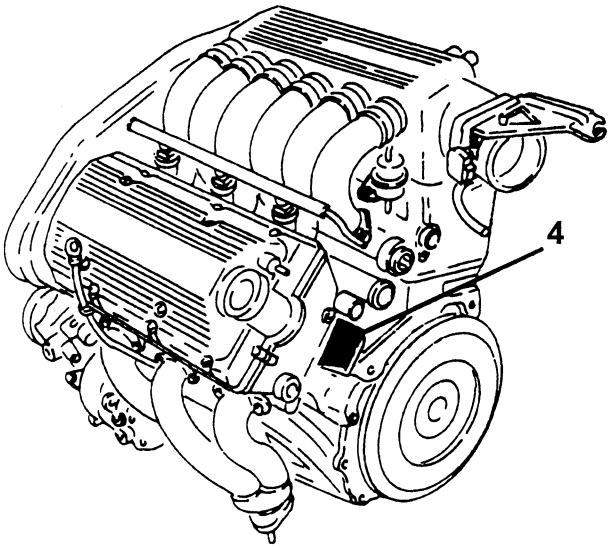

1. *Identification data plate*
2. *Chassis marking*
3. *Paintwork identification plate*
4. *Engine marking*

cardiagn.com

IDENTIFICATION DATA PLATE

The plate is applied in the engine compartment on the upper left-hand shock absorber bracket. It contains the following data:

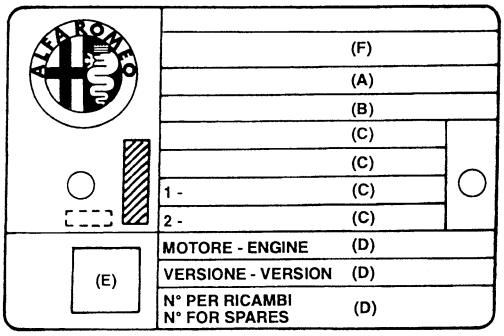

A. National homologation
B. Chassis number punch mark
C. Maximum authorised weights prescribed by national laws, where relevant
D. Version identification (e.g. 916C1) and for additional indications
E. Smokiness
F. Manufacturer's name punch marck

PAINTWORK IDENTIFICATION PLATE

This plate is applied on the inside of the boot and contains the following data:

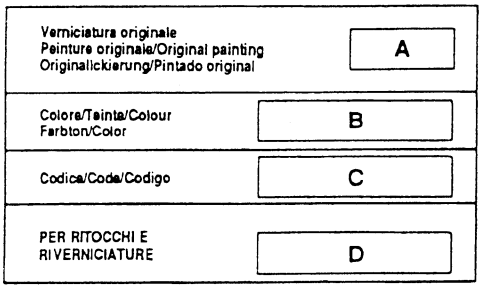

A. Paint manufacturer
B. Colour name
C. Colour code
D. Touch-up and re-spray code

DIMENSIONS

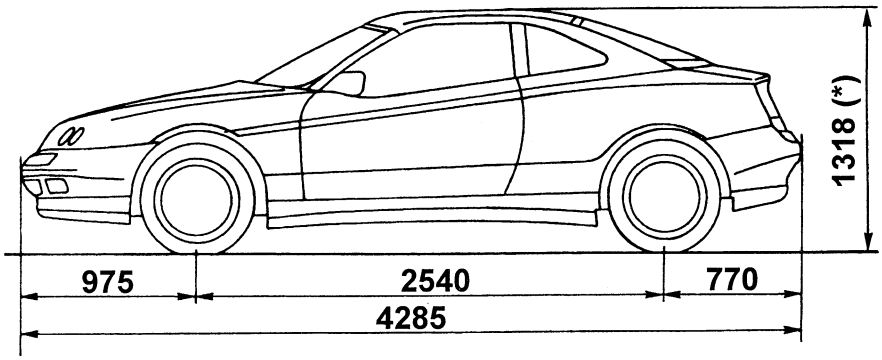

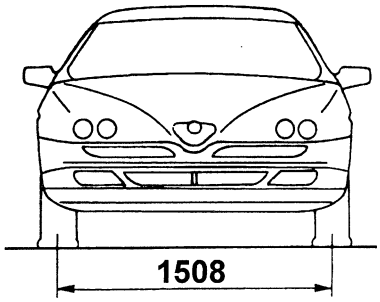

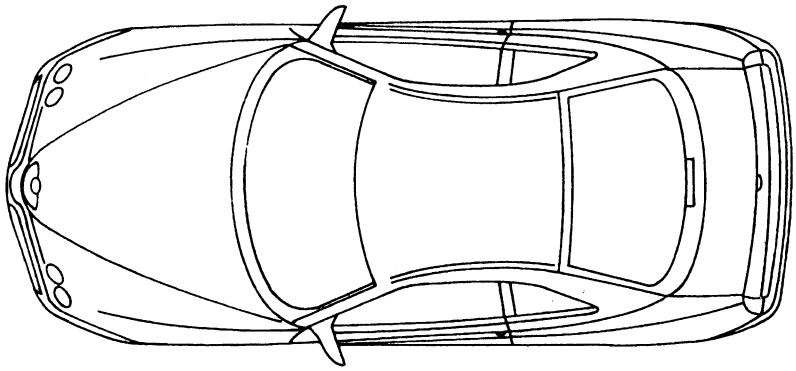

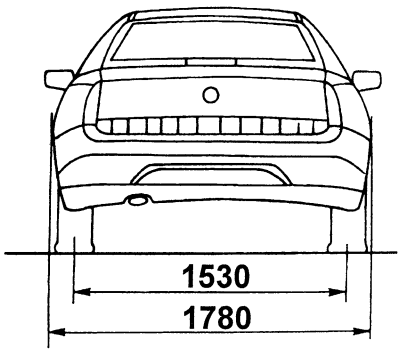

(*): Unladen vehicle

cardiagn.com

WEIGHTS AND LOADS

Features \ Version		GTV 3.0 24V
Kerb weight (without driver)		1415
Maximum admitted load		1820
Load		405
Maximum weight allowed on each axle	front	1060
	rear	870
Towable weight	trailer with brakes	1000
	trailer without brakes	500
Maximum load on tow hitch		50

WHEELS AND TYRES

Features \ Version			GTV 3.0 24V	
			To '97 models	'98 models
Rim size		Standard	6.5J x 16"	
		Optional	-	7.5J x 17"
Tyre size		Standard	205/50 R16 87W 205/50 ZR16	205/50 R16 87Y
		Optional	-	225/45 ZR17 91Y
Tyre pressure (cold)		bar (kg/cm^2)	front 2.7 rear 2.5	
Space saver spare wheel	Rim size		4J x 16" C24	
	Tyre size		T125/80 R16 97M	
	Tyre pressure	bar (kg/cm^2)	4.2	

Tyres for use with snow chains: Snow chains can only be used with 205/45 ZR16 REINFORCED or 205/45 R16 87W REINFORCED tyres.

Snow chains cannot be fitted on 225/45 ZR17 91Y tyres.

IMPORTANT:
Increase pressure by 0.3 bar in the event of constant driving at top speed.

cardiagn.com

FLUIDS AND LUBRICANTS

Type	Assembly ref.	Application	Classification	Name
OIL	10 - Engine	Engine (filling)	API SJ CCMCG5 ACEA A3-96 SAE 10W/40	SELENIA 20 K (*)
	21 - Gearbox	Gearbox-differential (filling)	API GL-5 SAE 75W 90	TUTELA ZC 75 SYNTH
	50 - Additional units	Compressor (filling)	-	SANDEN SP 10 "PAG"
FLUID	10 - Engine	Cooling circuit (filling)	-	ALFA ROMEO CLIMAFLUID SUPER PERMANENT -40°C
	18 - Clutch	Hydraulic brake-clutch circuit (filling)	DOT 4 SAE J 1703 F	ALFA ROMEO BRAKE FLUID SUPER DOT 4
	33 - Brakes			
	41 - Steering	Power steering (filling)	G.M. DEXRON II	TUTELA GI/A
	50 - Additional units	Climate control system (filling)	-	RIVOIRA: SUVA R134a HOECHST - TAZZETTI: FRIGEN R134a ICI - TAZZETTI: KLEA R134a
GREASE	18 - Clutch	Clutch thrust bearing and lever	-	TUTELA MR3
		Clutch cylinder strut		
	21 - Gearbox	Gear engage rod and ball lever bushings	-	TUTELA ZETA2 ISECO MOLYKOTE LONGTERM N. 2
	27 - Front axle	Drive shaft CV joints	-	OPTIMOL PU 035 BERUTOX GKN HTB
	33 - Brakes	Pedal board joints and bushing	-	TUTELA ZETA 2
		ABS inductive sensor seats		

(*): For sportier use, we recommend **SELENIA Racing 10W/60** fully synthetic engine oil.

cardiagn.com

FLUIDS AND LUBRICANTS (Continued)

Type	Assembly ref.	Application	Classification	Name
GREASE	41 - Steering	Roller bushing seat on steering column	-	SPCA SPAGRAPH ISECO ERGON RUBBER GREASE REINACH SFERUL B2 AR
	44 - Suspensions and wheels	Wishbone brackets	-	GREASE MOLYKOTE 7544 PG54 TUTELA MR3
		Side steering linkage	-	MOLYGUARD SYL 113

INDICATIVE CAPACITIES

Capacity \ Version		GTV 3.0 24V
Fuel tank		70 litres
Fuel reserve		~ 9 litres
Engine oil	Total capacity: sumps + filter + lines + pipes	-
	Sump + filter (for regular replacement)	6.0 litres
Gearbox-differential oil		2 litres
Power steering system oil		-
Brake and clutch circuit oil		-
Engine coolant fluid		11.7 litres
Climate control compressor oil		-
Climate control system fluid		-

cardiagn.com

JACKING POINTS

With arm hoist or shop jack.

- Position the arms or the jack in the areas shown.

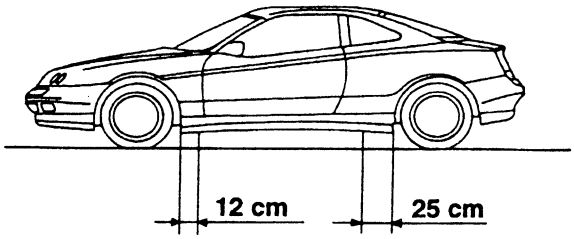

IMPORTANT:
Be very careful when positioning the arms or the jack in the front jacking points to avoid squeezing the brake and fuel lines.

TOWING POINTS

The vehicle is equipped with two threaded attachments - one at the front and the other at the back - where to screw the tow hitch which is provided in the tool bag (in the boot).

Attain scrupulously to the laws regulating towing.

IMPORTANT:
Before towing the vehicle, turn the key to MAR and back to STOP without removing it to prevent the steering wheel from locking.

Consider that while towing, the brake booster system is not running. Consequently, more effort on the brake pedal will be required.

Furthermore, when the engine is not running, the power steering system is neither working. Consequently, more effort on the steering wheel is required.

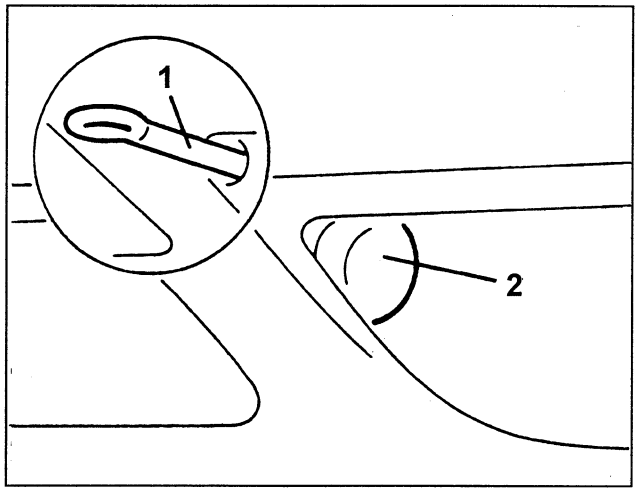

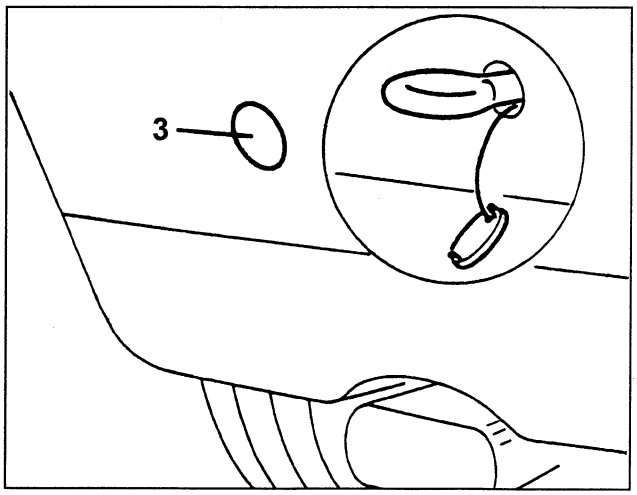

1. Tow hitch
2. Front bumper slot
3. Rear bumper cover

cardiagn.com

ENGINE TECHNICAL FEATURES

CHARACTERISTIC DATA

Engine		AR 16102	
Cycle		Otto, four stroke	
Injection / Ignition		Motronic M3.7.1	Motronic ME2.1 (▲)
Firing order		1 - 4 - 2 - 5 - 3 - 6	
Capacity	cm^3	2959	
Number of cylinders		6 at V 60°	
Bore	mm	93	
Stroke	mm	72.6	
Maximum power	CV CEE (kW CEE) rpm	225 (165) 6300	220 (162) 6300 (▲)
Maximum torque	kgm CEE (Nm CEE) rpm	27.5 (270) 5000	
Compression ratio		10.0 : 1	
Engine oil pressure (at 100°C) - Idling ratio - At 4000 rpm	bar	 > 0.8 > 4.5	
Idling ratio	rpm	700 ± 20	

(▲): For '98 models

COMPLETE CRANKCASE

Crankcase

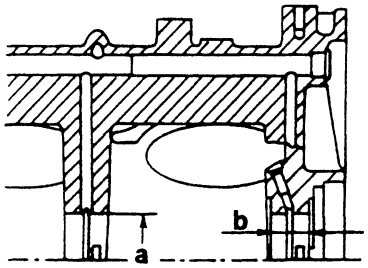

Unit: mm

Main journal diameter "a"	Class A - Red	63.657 ÷ 63.663
	Class B - Blue	63.663 ÷ 63.669
	Class C - Green	63.669 ÷ 63.675
Central main journal Shoulder length "b"		26.450 ÷ 26.500

Crankshaft

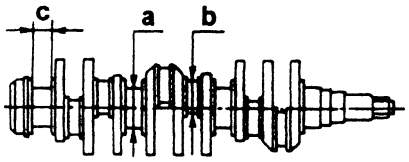

Unit: mm

Main journal diameter "a"	Class A - Red	59.973 ÷ 59.979
	Class B - Blue	59.967 ÷ 59.973
	Class C - Green	59.961 ÷ 59.967
Connecting rod journal diameter "b"	Class A - Red	51.990 ÷ 52.000
	Class B - Blue	51.980 ÷ 51.990
Rear main journal length "c"		31.300 ÷ 31.335
Maximum main journal and connecting rod journal ovality		0.004
Maximum main journal and connecting rod journal taper ratio		0.010
Maximum parallel error between main journals and connecting rod journals		0.015
Main journal maximum eccentricity		0.040

cardiagn.com

Main half-bearings

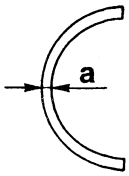

Unit: mm

Main half-bearing thickness "a"	Class A - Red	1.833 ÷ 1.839
	Class B - Blue	1.839 ÷ 1.845
	Class C - Green	1.845 ÷ 1.851
Main half-bearing and bearing Operating play		0.000 ÷ 0.024

Thrust half-rings

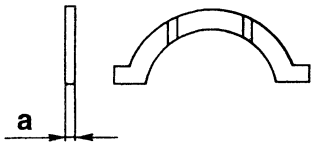

Unit: mm

Thrust half-ring thickness "a"	2.310 ÷ 2.360
Crankshaft axial play	0.080 ÷ 0.265

Flywheel

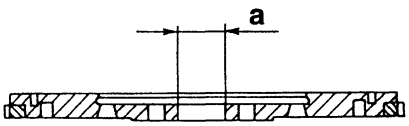

Unit: mm

Central bush internal diameter (bore) "a"	35.000 ÷ 35.025
Crown wheel heating temperature for fitting on flywheel	120° ÷ 140°C

Cylinder liner

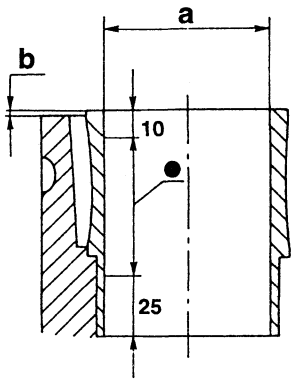

(•) Dimensional check area

Unit: mm

Cylinder liner diameter "a"	Class A - Blue	92.985 ÷ 92.994
	Class B - Pink	92.995 ÷ 93.004
	Class C - Green	93.005 ÷ 93.014
Cylinder liner projection from crankcase "b"		0.01 ÷ 0.06
Cylinder liner ovality/taper limit		0.01

Oil pump

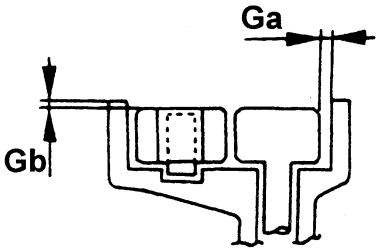

Unit: mm

Play "Ga" between gear edge and pump casing	0.025 ÷ 0.075
Play "Gb" between upper gear side and pump cover	0.013 ÷ 0.062

cardiagn.com

Engine oil pressure limiting valve spring

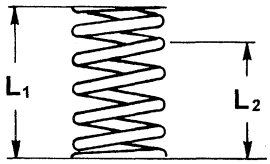

Length of spring L_1	33.35 mm
Load corresponding to L_1	15.86 ÷ 16.86 daN
Length of spring L_2	36 mm
Load corresponding to L_2	13.816 ÷ 14.816 daN

CONNECTING ROD - PISTON ASSEMBLY

Piston

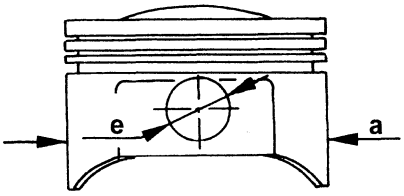

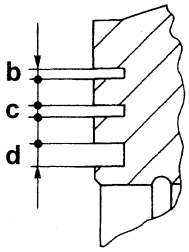

Unit: mm

Diameter of piston "a" (1)	Class A - Blue	92.925 ÷ 92.935
	Class B - Pink	92.935 ÷ 92.945
	Class C - Green	92.945 ÷ 92.955
Height of seats of first seal ring "b"		1.525 ÷ 1.545
Height of seats of second seal ring "c"		1.525 ÷ 1.545
Height of seats of oil scraper ring "d"		3.515 ÷ 3.535
Diameter of gudgeon pin holes in pistons "e"	Class A - Black	22.003 ÷ 22.006
	Class B - White	22.006 ÷ 22.009
Clearance between liners and pistons		0.059 ÷ 0.060
Difference in weight between pistons		≤ 4 g

(1): To be measured perpendicularly to the gudgeon pin hole at a distance of 17 mm from lower edge of skirt.

Seal rings

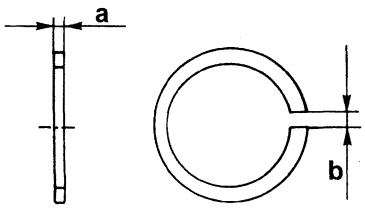

Unit: mm

Thickness of rings "a"	First ring	1.475 ÷ 1.490
	Second ring	1.475 ÷ 1.490
	Oil scraper ring	3.475 ÷ 3.490
Ring gap "b" (1)	First ring	0.40 ÷ 0.65
	Second ring	0.40 ÷ 0.65
	Oil scraper ring	0.30 ÷ 0.60
Axial play between rings and their seats	First ring	0.035 ÷ 0.070
	Second ring	0.035 ÷ 0.070
	Oil scraper ring	0.025 ÷ 0.060

(1): To be measured in the check ring nut or in the cylinder liner

Gudgeon pins

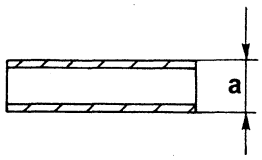

Unit: mm

Outside diameter of gudgeon pins "a"	Class A - Black	21.994 ÷ 21.997
	Class B - White	21.997 ÷ 22.000
Clearance between pins and their housings on pistons		0.006 ÷ 0.012

cardiagn.com

Connecting rods

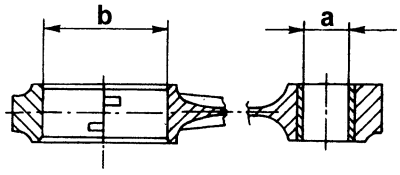

Unit: mm

Diameter of connecting rod bush hole "a"		20.005 ÷ 20.015
Inside diameter of big ends "b"		55.511 ÷ 55.524
Difference in weight between connecting rods		≤ 2 g
Big end end float		0.2 ÷ 0.3
Clearance between gudgeon pins and small end bushes	Class A - Black	0.008 ÷ 0.021
	Class B - White	0.005 ÷ 0.018

Connecting rod half bearings

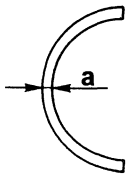

Unit: mm

Thickness of connecting rod half bearings "a"	Class A - Red	1.737 ÷ 1.745
	Class B - Blue	1.741 ÷ 1.749
Operating clearance between rod pins and their half bearings	Class A - Red	0.034 ÷ 0.060
	Class B - Blue	0.036 ÷ 0.062

CYLINDER HEADS

Heads

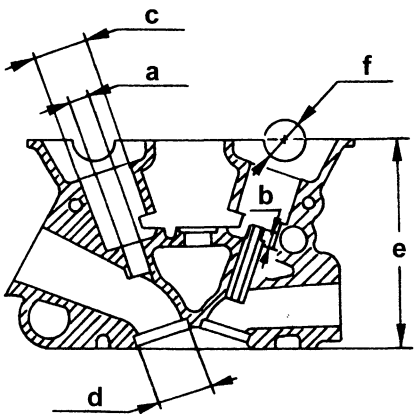

Unit: mm

Diameter of valve guide seats "a"		12.000 ÷ 12.018
Valve guide protrusion "b"		10.35 ÷ 10.65
Diameter of hydraulic tappets "c"		33.000 ÷ 33.025
Diameter of valve seat housings "d"	Intake	36.500 ÷ 36.525
	Exhaust	32.000 ÷ 32.025
Minimum permissible height of heads after refacing "e"		134.85 ÷ 135.15
Maximum error of flatness of head lower surface		0.05
Diameter of camshaft supports "f"		27.010 ÷ 27.036
Length of camshaft support shoulders		19.902 ÷ 19.935

Valve guides

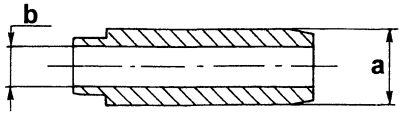

Unit: mm

Outside diameter of valve guides "a"	Intake	12.040 ÷ 12.051 (*)
	Oversize 0.2	
	Exhaust	12.050 ÷ 12.068 (**)
	Oversize 0.2	
Inside diameter of valve guides (bore) "b"		7.000 ÷ 7.015
Interference between valve guides and their seats	Intake	0.022 ÷ 0.051
	Exhaust	0.032 ÷ 0.068

(*): Spare 12.053 ÷ 12.064 (**): Spare 12.064 ÷ 12.082

cardiagn.com

Valve seats

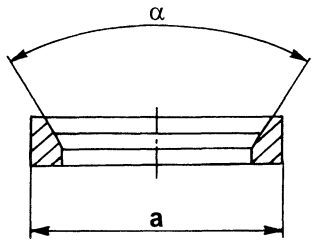

Unit: mm

Outside diameter of valve seats "a"	Intake	36.600 ÷ 36.616
	Oversize 0.3	
	Exhaust	32.100 ÷ 32.116
	Oversize 0.3	
Valve seat taper "α"		90° ± 20'
Interference between valve seats and their seats	Intake	0.075 ÷ 0.116
	Exhaust	0.075 ÷ 0.110
Heating temperature of cylinder heads for fitting valve seats		100 ÷ 120 °C

Valves

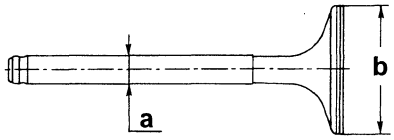

Unit: mm

Diameter of valve stems "a"		6.965 ÷ 6.980
Diameter of valve mushrooms "b"	Intake	35.5 ÷ 35.7
	Exhaust	31.0 ÷ 31.2
Radial clearance between valve stems and valve guides		0.020 ÷ 0.050

Valve springs

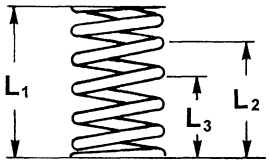

	Outer spring	Inner spring
Free length "L_1"	~ 45 mm	~ 42 mm
Length with valves closed "L_2"	32.5 mm	30.5 mm
Corresponding load at "L_2"	219.1 ÷ 230.9 N (22.4 ÷ 23.6 kg)	123.6 ÷ 131.4 N (12.6 ÷ 13.4 kg)
Length with valves open "L_3"	23 mm	21 mm
Corresponding load at "L_3"	430.7 ÷ 450.3 N (43.9 ÷ 45.9 kg)	240.2 ÷ 259.8 N (24.5 ÷ 26.5 kg)

Hydraulic tappets

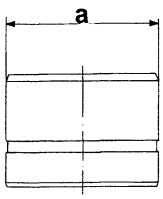

Unit: mm

Outside diameter of hydraulic tappets "a"	32.959 ÷ 32.975
Radial clearance between hydraulic tappets and their seats	0.025 ÷ 0.066

Camshafts

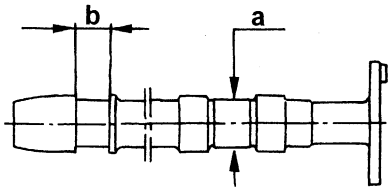

Unit: mm

Diameter of camshaft journals "a"		26.959 ÷ 26.980
Length of camshaft shoulder "b"		20.000 ÷ 20.033
Nominal cam lift	Intake	9.30
	Exhaust	9.30
Maximum eccentricity between journals		0.03
Clearance between camshaft journals and their seats		0.030 ÷ 0.077
Camshaft end float		0.065 ÷ 0.131

cardiagn.com

ANGLES OF ACTUAL TIMING DIAGRAM

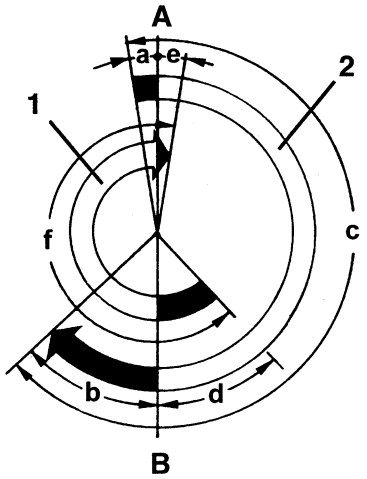

Intake	Opens (before T.D.C.)	"a"	9°
	Closes (after B.D.C.)	"b"	47°
	Intake angle	"c"	236°
Exhaust	Opens (before B.D.C.)	"d"	47°
	Closes (after T.D.C.)	"e"	9°
	Exhaust angle	"f"	236°

(1) Exhaust
(A) T.D.C.
(2) Intake
(B) B.D.C.

cardiagn.com

FUEL FEED

FUEL

Unleaded petrol	Minimum R.O.N. = 95

FUEL TANK

Total capacity	70 litres
Reserve	~ 9 litres

FUEL FEED PRESSURE

Idling fuel pressure	3 bar 3.3 ÷ 3.7 bar (▲)
Maximum fuel pressure	4 bar

(▲): '98 models

FUEL FEED

FLOW TEST (with SOLEX flow meter)

Leaks with throttle closed	280 ± 10 on scale "N"

EXHAUST EMISSIONS

CO in exhaust	% vol.	< 0.2
HC in exhaust	p.p.m.	≤ 50

SENSORS

RPM AND PHASE SENSOR GAP

0.8 ÷ 1.5 mm

CAM ANGLE SENSOR GAP

≤ 1.5 mm

cardiagn.com

COOLING SYSTEM

THERMOSTAT

Opening start temperature	85° ÷ 89°C

COOLING FAN THERMAL CONTACT

Fan on/off temperature		
1st speed	On (contacts closed)	92° ± 2°C
	Off (contacts open)	87° ± 2°C
2nd speed	On (contacts closed)	97° ± 2°C
	Off (contacts open)	92° ± 2°C

COOLANT MAXIMUM TEMPERATURE TRANSMITTER

Contact closed temperature	115° ± 3°C
Contact open temperature	≥ 102°C

cardiagn.com

CLUTCH

Clutch plate thickness	New	7.1 ÷ 7.7 mm
	Wear limit	6.3 mm
Clutch plate diameter		235 mm

GEARBOX

RATIOS (To '97 models)

Axle ratio	Gear engaged	Gear ratio	Total ratio
17/57 1 : 3.353	1st 2nd 3rd 4th 5th Reverse	1 : 3.800 1 : 2.235 1 : 1.520 1 : 1.156 1 : 0.914 1 : 3.545	1 : 12.741 1 : 7.494 1 : 5.100 1 : 3.876 1 : 3.065 1 : 11.886

RATIOS ('98 models)

Axle ratio	Gear engaged	Gear ratio	Total ratio
16/57 1 : 3.563	1st 2nd 3rd 4th 5th 6th Reverse	1 : 3.800 1 : 2.235 1 : 1.520 1 : 1.156 1 : 0.971 1 : 0.816 1 : 3.545	1 : 12.471 1 : 7.963 1 : 5.416 1 : 4.119 1 : 3.460 1 : 2.907 1 : 12.631

BRAKES

BRAKE DISCS

		FRONT	REAR
Diameter	(mm)	305	240
Use thickness limit	(mm)	26.4	9.2
Min. thickness after grinding	(mm)	-	10.1
Nominal thickness	(mm)	28	11

FRONT BRAKE CALLIPERS

Type	BREMBO
Piston diameter	42 mm and 38 mm
Brake pad area	52.3 cm^2
Pad nominal thickness	17.3 ÷ 18.0 mm

cardiagn.com

FRONT SUSPENSIONS

SHOCK ABSORBERS

Rod diameter	22 mm
Stroke	159 mm

STABILISER BAR

Bar diameter	15 mm

REAR SUSPENSIONS

HELICOID SPRINGS

Wire diameter	13.35 ÷ 13.45 mm
Free length	293 mm

SHOCK ABSORBERS

Rod diameter	39.4 mm
Stroke	91.5 mm

STABILISER BAR

Bar diameter	21 mm

WHEEL TRIM AND CHARACTERISTIC ANGLES

Features		Unladen and filled	
		To '97 models	**'98 models**
Front trim (B - A)	(mm)	-36 ± 5	-45 ± 5
Rear trim (C - D)	(mm)	-74 ± 5	-69 ± 3
Front wheel toe-in (D_2 - D_1)	(mm)	-1.5 ± 0.5	-2.0 ± 1
Rear wheel toe-in (D_2 - D_1)	(mm)	+2.5 - 0.5	+3.0 ± 1
Front wheel camber (α)		0°1' ± 20'	-0°56' ± 20'
Caster (β)		3°5' ± 30'	2°42' ± 30'
Rear wheel camber (γ)		-2°3' ± 20'	-1°47' ± 20'

cardiagn.com

IGNITION

SPARK PLUGS

Type	NGK PFR6B

STARTING

STARTER MOTOR

Nominal voltage		(V)	12
Nominal power		(kW)	1.4
Operating test (*)	Voltage	(V)	8.5
	Absorption	(A)	360
	Rpm	(rpm)	1800
	Torque	(Nm)	9.8
Loadless test (*)	Voltage	(V)	11.8 ÷ 12
	Absorption	(A)	25 ÷ 40
	Rpm	(rpm)	3000 ÷ 4000
Pickup test (*)	Voltage	(V)	4.8 ÷ 5.2
	Absorption	(A)	690 ÷ 730
	Torque	(Nm)	21.5

(*): Data measured at room temperature of 20°C.

cardiagn.com

CHARGING

BATTERY

Nominal voltage	12V
Capacity	70 Ah

ALTERNATOR

Nominal voltage	12V
Nominal curremt	120A
Max. continuous speed	18000 rpm
Indctor winding resistance (measured between collector rings at 20°C)	-

NOTE: For the tightening torques of the groups not mentioned, refer to those of the engine 2959 V6

Group 00 - Engine maintenance

Part	Nm	kgm
Oil sump drain plug	64 ÷ 79	6.5 ÷ 8.0
Camshaft cap fastening screws (1)	18 ÷ 20	1.8 ÷ 2.0
Nuts fastening auxiliary components drive pulley (1)	200 ÷ 247	20.4 ÷ 25.2
Screws fastening camshaft drive pulleys	68 ÷ 84	6.9 ÷ 8.6
Screws fastening timing gear belt tensioner	17 ÷ 21	1.7 ÷ 2.1
Filter fuel inlet fitting	30 ÷ 37	3.1 ÷ 3.8
Filter fuel outlet fitting	21 ÷ 26	2.1 ÷ 2.7
Spark plugs	27 ÷ 34	2.8 ÷ 3.5
Screw fastening auxiliary components belt tensioner	17 ÷ 21	1.7 ÷ 2.1

(1): Lubricate with engine oil

Group 10 - Engine Removing/Refitting

Part	Nm	kgm
Screw fastening coolant fluid inlet/outlet pipe flange from turbocharger	22 ÷ 24	2.2 ÷ 2.4
Bolts fastening axle shafts	40 ÷ 52	4.1 ÷ 5.3
Bolts fastening wishbones to wheel uprights	67 ÷ 74	6.8 ÷ 7.5
Screws fastening power plant rear support to gearbox	102 ÷ 126	10.4 ÷ 12.8
Nuts fastening exhaust manifolds to cylinder heads	22 ÷ 27	2.2 ÷ 2.7
Screws fastening starter motor	18 ÷ 22	1.8 ÷ 2.2
Screws fastening lay shaft	8 ÷ 10	0.8 ÷ 1.0
Nuts fastening stay rod support bracket to cylinder head	34 ÷ 42	3.5 ÷ 4.3
Cylinder head tightening		
Approach all screws to a torque of:	24 ÷ 26	2.5 ÷ 2.7
Turn the screws by an angle of:	240° ± 2°	
Screws fastening camshaft drive pulleys	68 ÷ 84	6.9 ÷ 8.6
Screws fastening camshaft belt tensioner	17 ÷ 21	1.7 ÷ 2.1
Screw fastening drive gear to oil pump	48 ÷ 58	4.8 ÷ 5.9
Screws fastening oil pump main bearing caps	48 ÷ 58	4.8 ÷ 5.9
Screws fastening oil sump to crankcase	13 ÷ 16	1.3 ÷ 1.6
Screws fastening camshaft caps (1)	18 ÷ 20	1.8 ÷ 2.0
Screws fastening flywheel	116 ÷ 129	11.8 ÷ 13.2

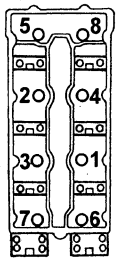

(1): Lubricate with engine oil

(CONTINUED)

cardiagn.com

(CONTINUED)

Part	Nm	kgm
Flywheel fastening screws (double)	137 ÷ 151	13.9 ÷ 15.4
Fuel distribution manifold fastening screws	19 ÷ 23	1.9 ÷ 2.4
Throttle casing fastening screws	12 ÷ 15	1.2 ÷ 1.5
Lambda sensor	50 ÷ 60	5.1 ÷ 6.1
Engine coolant temperature sensor (NTC)	30	2.9
Auxiliary unit belt take-up device fastening screw	17 ÷ 21	1.7 ÷ 2.1

Assembly 10 - Engine overhaul

Part	Nm	kgm
Engine oil dipstick guide fastening fitting to crankcase	36 ÷ 84	3.7 ÷ 8.6
Auxiliary unit drive pulley fastening nut (1)	200 ÷ 247	20.4 ÷ 25.2
Camshaft drive pulley fastening screws	68 ÷ 84	6.9 ÷ 8.6
Vibration damper connecting rod bracket fastening nuts to cylinder head	34 ÷ 42	3.5 ÷ 4.3
Coolant pump fastening screws to crankcase	7 ÷ 9	0.7 ÷ 0.9
Knock sensor fastening screws	14 ÷ 23	1.4 ÷ 2.3
Oil sump fastening screws to crankcase	13 ÷ 16	1.3 ÷ 1.6
Drive gear fastening screw to oil pump	48 ÷ 58	4.8 ÷ 5.9
Oil pump fastening screws to main bearings	48 ÷ 58	4.8 ÷ 5.9
Flywheel fastening screws	116 ÷ 129	11.8 ÷ 13.2
Flywheel fastening screws (double)	137 ÷ 151	13.9 ÷ 15.4
Connecting rod bearing fastening nuts (1)	53 ÷ 59	5.4 ÷ 6.0
Main bearing fastening nuts (1)	84 ÷ 93	8.5 ÷ 9.5
Camshaft bearing fastening nuts (1)	18 ÷ 20	1.8 ÷ 2.0
Cylinder head torque		
Fasten all screws at a torque of: 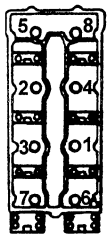	24 ÷ 26	2.5 ÷ 2.7
Turn all screws by an additional angle of:	240° ± 2°	
Timing belt take-up fastening screws	17 ÷ 21	1.7 ÷ 2.1
Engine oil minimum pressure warning light sensor	20 ÷ 25	2.1 ÷ 2.6

(1): Lubricate with engine oil

Assembly 55 - Electrical system

Part	Nm	kgm
Ignition coil fastening screws	5 ÷ 8	0.5 ÷ 0.8
Spark plugs	27 ÷ 34	2.8 ÷ 3.5
Rear engine mount fastening screws to gearbox	102 ÷ 126	10.4 ÷ 12.8
Wishbone fastening bolts to wheel hubs	67 ÷ 74	6.8 ÷ 7.5
Starter motor fastening screws	18 ÷ 22	1.8 ÷ 2.2

cardiagn.com

General

Specific tools play an important role in vehicle maintenance and are essential to ensure accurate, reliable and fast service.
It is important to note that intervention times are computed supposing the use of these tools.

This handbook lists and illustrated the specific tool expressly made by the Manufacturer for overhauling, maintenance and servicing.
The service network may provide specific tools according to the procedures in force at individual Alfa Romeo Dealerships.
Here follows the list of specific tools used.

NOTE: Refer to the tools for 2959 V6 engines for the assemblies not mentioned here.

Assembly 00 - Engine servicing

1.820.088.000	Flywheel retainer (to be used on vehicle)
1.822.146.000	Pulley wrench support
1.822.150.000	Camshaft pulley fasten screw extension wrench
1.825.013.000 (C.6.0183)	TDC check tool
1.825.040.000	Camshaft timing templates
1.860.950.000	Timing belt tension tool
1.860.954.001	Camshaft pulley/oil pump gear extractor
1.870.646.000	Crankshaft pulley torque reaction tool ('98 models)

Assembly 10 - Engine overhaul

1.820.011.000 (A.2.0192)	Valve support tool
1.820.012.000 (A.2.0195)	Cylinder head adjustable support
1.820.049.000 (A.2.0359)	Valve support tool special nut
1.820.050.000 (A.2.0360)	Cylinder head support fork
1.820.145.000 (R.4.0178)	Overhaul bench engine mount brackets
1.820.228.000	Flywheel retainer (to be used on bench)
1.820.279.000	Liner retainer
1.820.618.000	Cranlshaft revolving tool
1.821.006.001 (A.3.0139/0001)	Rear main bearing removal lever
1.821.006.002 (A.3.0139/0002)	Rear main bearing extraction fork
1.821.058.000 (A.3.0324)	Valve removal/refitting lever

(CONTINUED)

cardiagn.com

(CONTINUED)

1.821.124.000 (A.3.0522)	Valve removal/refitting support
1.821.176.000 (A.3.0641)	Valve guide extractor
1.821.205.000	Valve removal/refitting cage
1.821.206.000	Take-in for oil seal caps on guide valves
1.821.207.000	Valve guide taker-in
1.821.208.000	Extractor for oil seal caps on guide valves
1.821.250.000	Crankshaft rear oil seal taker-in
1.822.121.000	Cylinder head fastening nut wrench
1.822.146.000	Pulley wrench support
1.825.003.000 (C.6.0148)	Cylinder liner projection check tool
1.825.013.000 (C.6.0183)	TDC check tool
1.825.040.000	Camshaft timing template
1.860.942.000	Angle torque goniometer
1.860.948.000	Camshaft oil seal taker-in
1.860.949.000	Crankshaft front oil seal taker-in
1.860.950.000	Timing belt tensioning tool
1.860.952.000	Pair of studs to support cylinder head during overhaul
1.860.954.001	Camshaft pulley/oil pump gear extractor

Assembly 10 - Engine removal/refitting

1.820.088.000	Flywheel retainer (to be used on vehicle)
1.820.225.000	Engine removal/refitting support
1.820.228.000	Flywheel retainer
1.820.234.000	Engine removal/refitting bracket
1.820.239.000	Engine support crossmember brackets
1.820.279.000	Liner retainer
1.820.581.000 (R.4.0194)	Engine support crossmember
1.821.150.000	Crankshaft rear oil seal taker-in
1.822.146.000	Pulley wrench support
1.822.150.000	Camshaft drive pulley fastening screw extension wrench
1.825.013.000 (C.6.0183)	TDC check tool
1.825.040.000	Camshaft timing template
1.860.942.000	Angle torque goniometer
1.860.948.000	Camshaft oil seal taker-in

(CONTINUED)

cardiagn.com

(CONTINUED)

1.860.949.000	Crankshaft front oil seal taker-in
1.860.950.000	Timing belt tension tool
1.860.954.001	Camshaft pulley/oil pump gear extractor
1.860.978.000	Suspension crossmember removal tool
1.821.006.001	Rear main bearing removal lever
1.821.006.002	Rear main bearing removal extractor

Assembly 10 - Engine removal/refitting ('98 models)

1.820.088.000	Flywheel retainer (to be used on vehicle)
1.820.225.000	Engine removal/refitting support
1.820.226.000	Engine bracket
1.820.239.000	Engine support crossmember brackets
1.820.581.000	Engine support crossmember
1.821.150.000	Crankshaft rear oil seal taker-in
1.822.150.000	Camshaft drive pulley fastening screw extension wrench
1.860.910.001	Engine removal/refitting adapter
1.860.978.000	Suspension crossmember removal tool
1.870.644.000	Engine removal/refitting base
1.870.644.001	Engine removal/refitting bracket

Assembly 10 - Engine fuel feed

1.821.167.000	Wrench for removing fuel pump and gauge ('98 models)
1.822.135.000	Wrench for removing nut screw fastening fuel pump to tank
1.822.159.000	Wrench for removing nut screw fastening gauge to tank
1.824.011.000 (C.2.0056)	Flow test pad

Assembly 21 - Gearbox-Differential ('98 models)

1.820.028.000	Flywheel retainer
1.820.124.000	Clutch plate and frame refitting centring device
1.820.226.000	Engine bracket (use with 1.820.239.000 and 1.820.581.000)
1.820.229.000	Differential internal drive shaft extractor flange
1.820.239.000	Engine gearbox brackets (use with 1.820.581.000 and 1.820.226.000)
1.820.581.000	Engine support horizontal crossmember (use with 1.820.239.000 and 1.820.226.000)
1.821.161.000	Differential internal drive shaft extractor ram
1.821.170.000	Differential flange oil seal taker-in (left and right)
1.821.171.000	Differential flange oil seal taker-in handle (left and right)
1.821.215.000	Clutch thrust bearing extractor
1.860.978.000	Suspension crossmember support tool
1.870.644.001	Gearbox support
1.870.668.000	Gear stick knob extractor
1.870.974.000	Gear selection/engagement wire assembly shim

cardiagn.com

MAINTENANCE OPERATIONS

Maintenance operations consist in checking and restoring working conditions of car parts subject to wear and to displacement following normal conditions of use.
Here follows a list of the maintenance operations to be performed at the lieage shown in the service schedule.

IMPORTANT:
Precautions to be followd. The engine compartment contains many potentially dangerous moving, high temperature and high voltage parts.
Scrupulously observe following:
- Stop the engine and wait for it to cool down.
- Do not smoke. Do not use naked flames. The fuel could catcj fire.
Keep a fire extinghisher at hand.

Operations to be performed at the indicated km	km x 1.000								
	20	40	60	80	100	120	140	160	180
Check tyre conditions and wear	●	●	●	●	●	●	●	●	●
Check front disc brake pad wear warning light operation	●	●	●	●	●	●	●	●	●
Check rear disc brake pad wear		●		●		●		●	
Check intactness of drive shaft bellows, power steering, joint caps and tightness of fuel and brake lines	●	●	●	●	●	●	●	●	●
Inspect conditions of V-belt and/or accessory drive Poly-V belt		●		●		●		●	
Check handbrake lever travel		●		●		●		●	
Check exhaust emissions		●		●		●		●	
Check evaporation system operation				●				●	
Replace fuel filter				●				●	
Replace air cleaner cartridge		●		●		●		●	
Check fluids and top up if required (brakes, hydraulic clutch, power steering, windscreen washer, battery, engine coolant, etc.)	●	●	●	●	●	●	●	●	●
Replace timing belt						●			
Replace spark plugs					●				
Check engine control system operation (via diagnostic socket)		●		●		●		●	
Check gearbox and differential oil level (mechanical gearbox versions only)				●				●	
Change gearbox/differential oil and filter (automatic gearbox versions only)		●		●		●		●	
Change engine oil (*)	●	●	●	●	●	●	●	●	●
Replace engine oil filter	●	●	●	●	●	●	●	●	●
Change brake fluid (or every 24 months)			●			●			●
Check dust/pollen filter (or howerver every 12 months)	●	●	●	●	●	●	●	●	●
Check timing belt conditions				●					

(*): Or every 18 months for lower mileage.

cardiagn.com

SERVICE SCHEDULE ('98 models)

Operations to be performed at the indicated km	km x 1,000								
	20	40	60	80	100	120	140	160	180
Check tyre conditions and wear	●	●	●	●	●	●	●	●	●
Check front disc brake pad wear warning light operation	●	●	●	●	●	●	●	●	●
Check rear disc brake pad wear		●		●		●		●	
Check intactness of drive shaft bellows, power steering, joint caps and tightness of fuel and brake lines	●	●	●	●	●	●	●	●	●
Inspect conditions of: external bodywork and underbody protection (exhaust - fuel feed - brakes); rubber parts (boots - sleeves - bushings - etc.)	●	●	●	●	●	●	●	●	●
Inspect conditions of accessory drive Poly-V belt		●							●
Check handbrake lever travel		●		●		●		●	
Check exhaust emissions		●		●		●		●	
Check evaporation system operation				●				●	
Replace air cleaner cartridge		●		●		●		●	
Check fluids and top up if required (brakes, hydraulic clutch, power steering, windscreen washer, battery, engine coolant, etc.)	●	●	●	●	●	●	●	●	●
Replace timing belt and accessory drive Poly-V belt						●			
Replace spark plugs					●				
Check engine control system operation (via diagnostic socket)		●		●		●		●	
Check gearbox and differential oil level				●				●	
Change engine oil and filter (*)	●	●	●	●	●	●	●	●	●
Change brake fluid (or every 24 months)			●			●			●
Check dust/pollen filter	●	●	●	●	●	●	●	●	●

(*): Or every 18 months for lower mileage.

cardiagn.com

IMPORTANT:

Perfect operation and long working life of a car is strictly related to its good use and, above all, to the care with which regular service is performed.
Considering product evolution, new service schedules have been adopted.
The scheduled service coupons are planned at 20,000 km. It is, however, important to note that the car requires ordinary precautions, such as systematic fluid checks and topping up, tyre pressure checks, etc.
In any case, remember that the correct car maintenance is certainly the best way to ensure performance, safety, environmental friendliness and low running costs in time.

Additional operations

The following precautions are required in addition to the operations shown in the Service Schedule to ensure good operation of the car:
Every 1000 km or before long trips, check and top up if required:
- engine oil
- engine coolant
- brake/clutch fluid
- power steering fluid
- battery electrolyte
- tyre pressure
- windscreen washer fluid.

Engine oil

If the car is mainly used in one of the following especially demanding conditions:
- towing trailers
- dusty roads
- short, repeated trips (less than 7-8 km) with temperature below zero degrees centigrade
- engine frequently idling or long distances at slow speed (or after a long storage period)

we recommend changing the engine oil more frequently than shown in the Service Schedule.

Air cleaner

Replace the air cleaner more frequently than prescribed if the car is mainly used on dusty roads.

Brake pads

The brake pads are subject to different use and wear, according to conditions of use and to driving style.
Have the pad thickness checked at an Alfa Romeo Dealership as soon as the front brake pad warning light comes on.
As the car is equipped with front brake pad wear sensors only, check the rear pads when the front pads are replaced.
According to the car use, the rear brake pads may not need to be replaced immediately.
We recommend in this case to check them later.

Brake/clutch fluid

Brake fluid is hygroscopic, i.e. it absorbs moisture. To prevent faulty braking, change the brake fluid every two years, regardless of the mileage (see the Service Schedule).

Battery

Check the battery charge status, preferably at the beginning of winter, to prevent the electrolyte from freezing.
Perform this check more frequently if the car is mainly used for short trips or if permanent intake devices also running when the key is removed are fitted, especially those fitted after market.

Climate control system

To keep the system in perfect shape, simply turn it on once every fortnight - also in winter - and run the compressor for a few minutes.
Furthermore, we recommend having the system checked before the summer, when the system will be used.

cardiagn.com

Dust/pollen filter (cars with climate control only)

Have the filter checked once a year, preferably at the beginning of summer, by an Alfa Romeo Dealership.
If the car is frequently used in dusty or very polluted environments, we recommend you have the filtering element checked more frequently than shown in the Service Schedule.
The filter should be replaced in particular if decreased air intake into the passenger compartment is noticed.

Anti-freeze

We recommend topping up with Climafluid Super Permanent -40°C Alfa Romeo to preserve the protective features of the mixture.

Rubber hoses

The rubber hoses in the brake, power steering, fuel feed lines, etc. should be carefully checked at the frequency shown in the Service Schedule.

Wheels

Periodically and before long trips, check the pressure of each tyre, including the spare.
Check pressure on cold tyres.
Periodically check that the depth of the tread complies with the minimum legal prescriptions.
Periodically check that the tyres are not cut, swollen or present irregular wear.
If this is so, go to an Alfa Romeo Dealership.
If a tyre is punctured, stop immediately and replace it to prevent damage to the tyre, the rim, the suspension and the steering.
The factory fitted wheels (rims and tyres) are suited to the features of the car and ensure maximum safety and comfort in all normal conditions of use.
Before replacing the rims or tyre fitted on the car, check the allowed type table.
However, observe the rim-tyre coupling of the original fitting.
Always fit new tyres.
Avoid tyres from unknown sources.

cardiagn.com

ENGINE MAINTENANCE

CHANGING THE ENGINE OIL AND FILTER

WARNING:
Engine oil is harmful to the skin: minimise contact of the oil with the skin; if not wash with soap and water.

1. With the engine hot, remove the topping up cap.
2. Remove the dipstick.

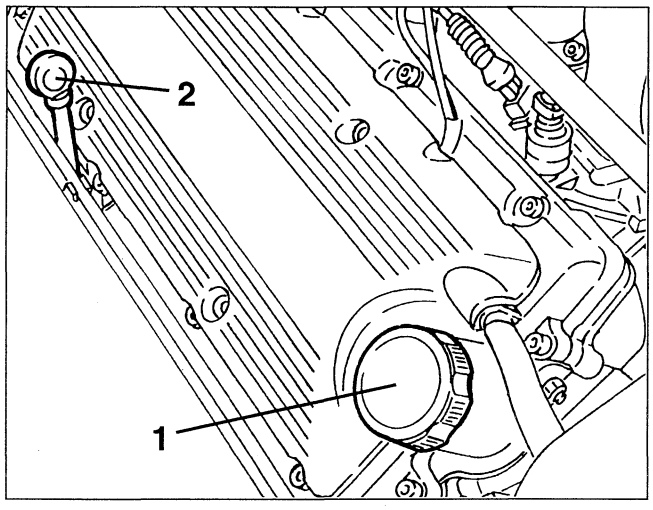

- Raise the car.
1. Slacken the drain plug and allow the oil to drain completely into a suitable container.

WARNING:
When removing the drain plug proceed with care; the oil could be very hot.

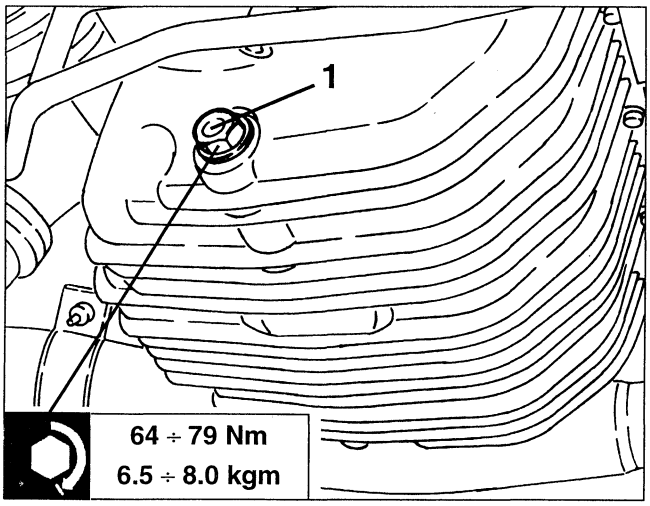

WARNING:
Do not discard the oil in the environment, as the indiscriminate dispersion of this product is a source of pollution.

1. Working under the car with the special wrench, release the oil filter and remove it.

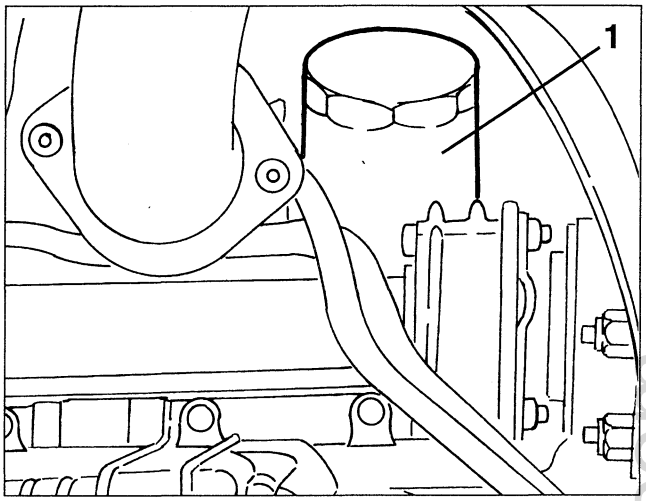

- Clean the drain plug and screw it with its seal to the specified torque
- Moisten the seal of the new filter with engine oil and screw it tightening completely by hand.
- Lower the car.
- Fill with engine oil of the type and in the quantity specified.
- Check the level of the engine oil with the dipstick.

WARNING:
The oil level should be checked with the car on level ground. Oil level above the MAX mark may cause excessive evaporation of the oil resulting in lack of pressure.

- Fit the topping up cap, run the engine at idle speed for appr. 2 minutes, then turn off the engine and wait for a few minutes.
- Check the oil level and for leaks.

WARNING:
When topping up the oil take the utmost care to avoid spilling it in the alternator ventilation slots which could cause serious damage to it and also the risk of fire.

cardiagn.com

CHANGING THE TIMING GEAR DRIVE BELT

- Set the car on a lift.
- Disconnect the battery (-) terminal.
- Remove the right front wheel.

1. Slacken the fastening screws and remove the engine compartment right-hand trim.

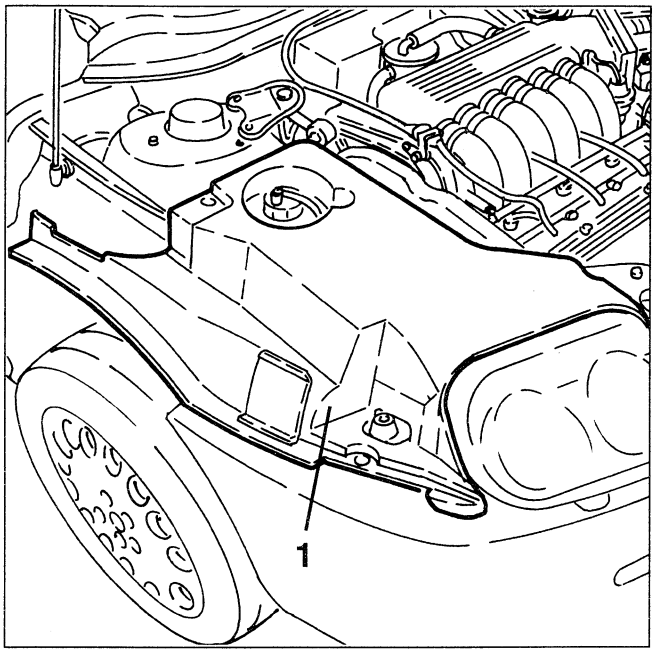

1. Slacken the fastenings and remove the right front wheel house.

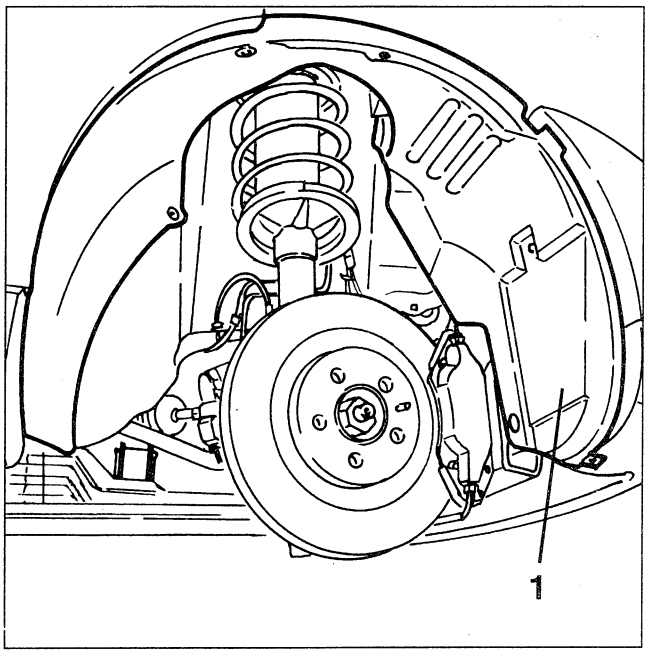

1. Slacken the two fastening screws, prise off the plastic button and remove the mud flap from the right front wheel house.

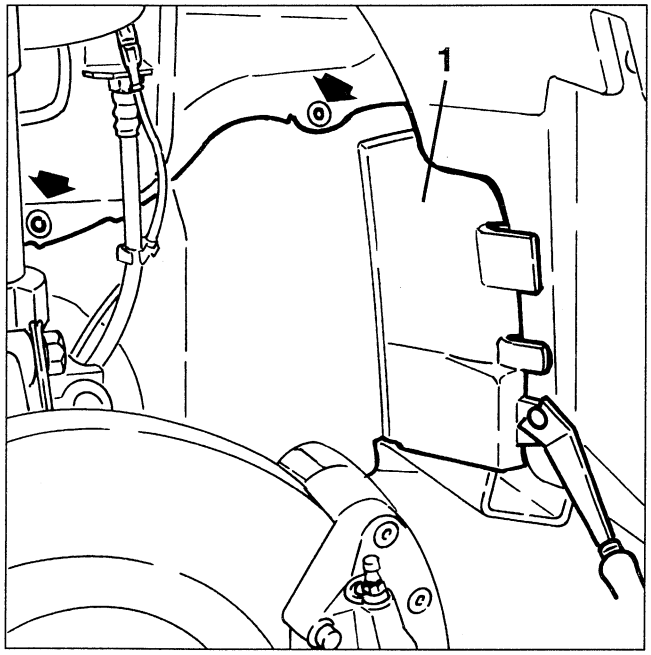

1. Using a wrench on the belt tensioner pulley fastening screw, overcome the force of the automatic tensioner and lock it in this position (belt slack) inserting the special peg as illustrated.
2. Prise and remove the auxiliary components drive belt.

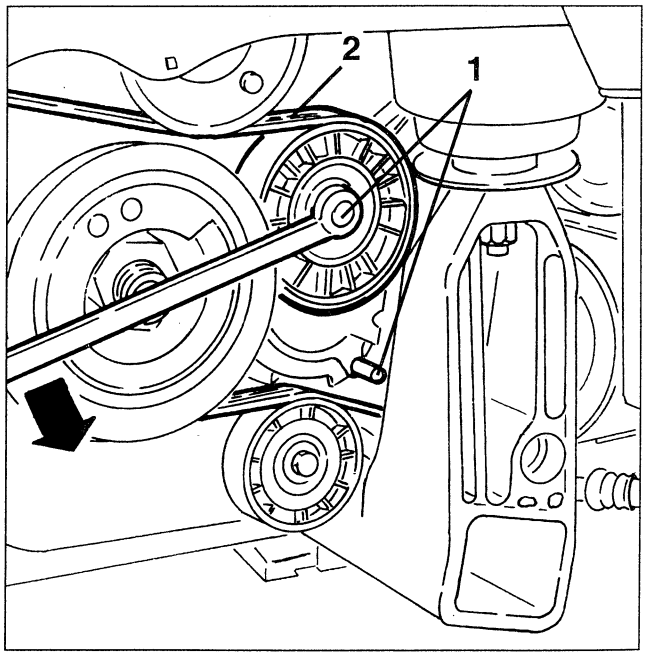

cardiagn.com

1. Slacken the fastening screw and remove the tensioner for the auxiliary components drive belt.
2. Slacken the fastening screw and remove the auxiliary components drive belt guide pulley.

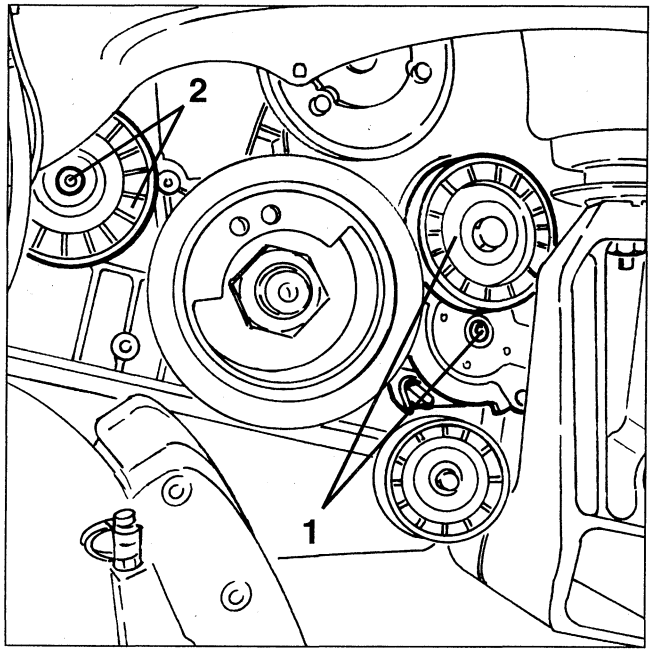

1. Slacken the fastening screws and remove the timing gear belt right lower guard.

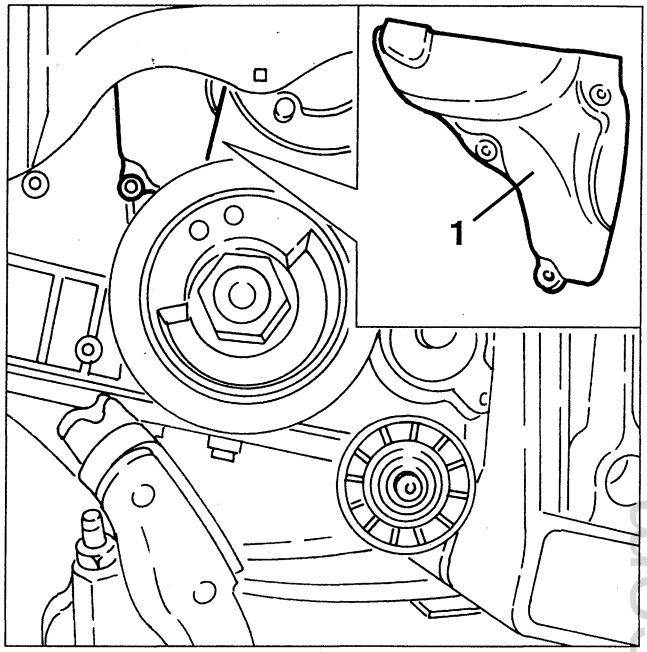

1. Slacken the fastening screws and remove the timing gear belt left lower guard.

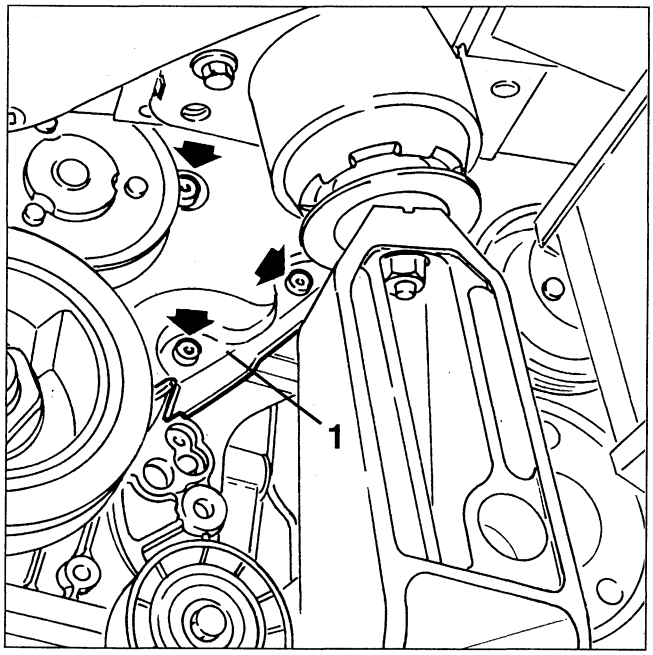

1. Slacken the fastening screws and remove the timing gear belt upper guard.

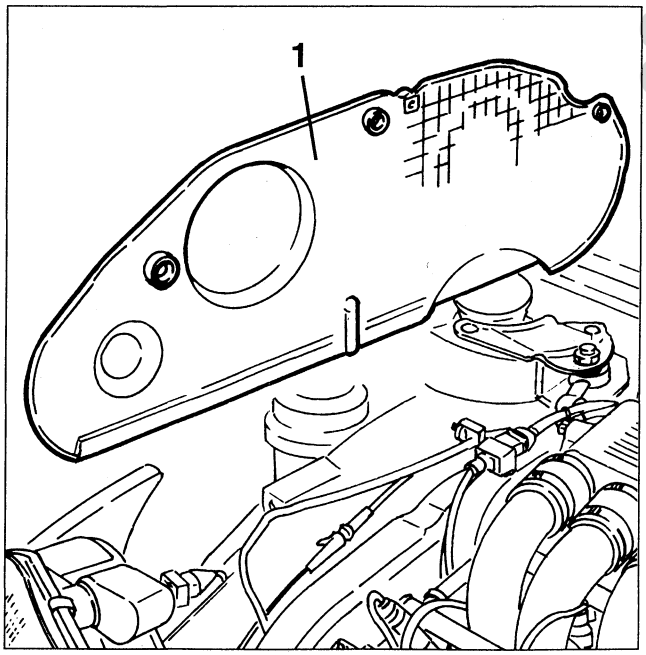

cardiagn.com

1. Disconnect the electrical connection of the front pinging sensor.
2. Disconnect the earth cable (front) from the intake box.

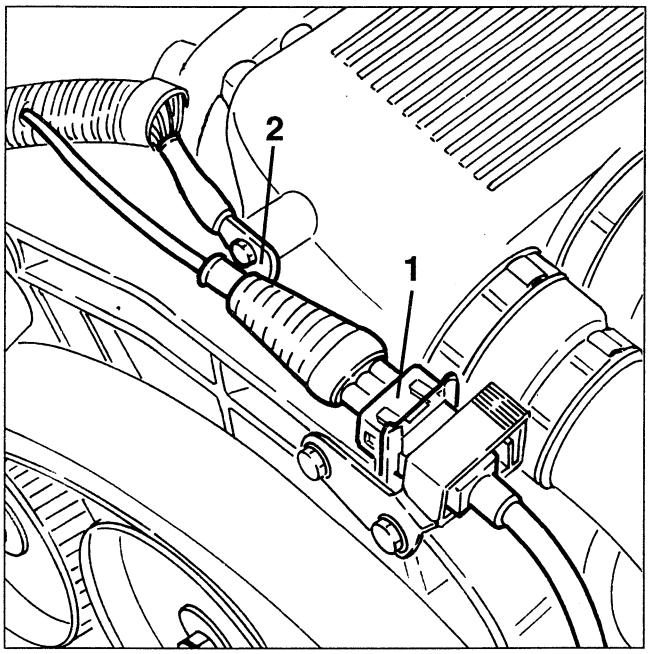

1. Remove the cover from the relays, fuses and electrical connections.

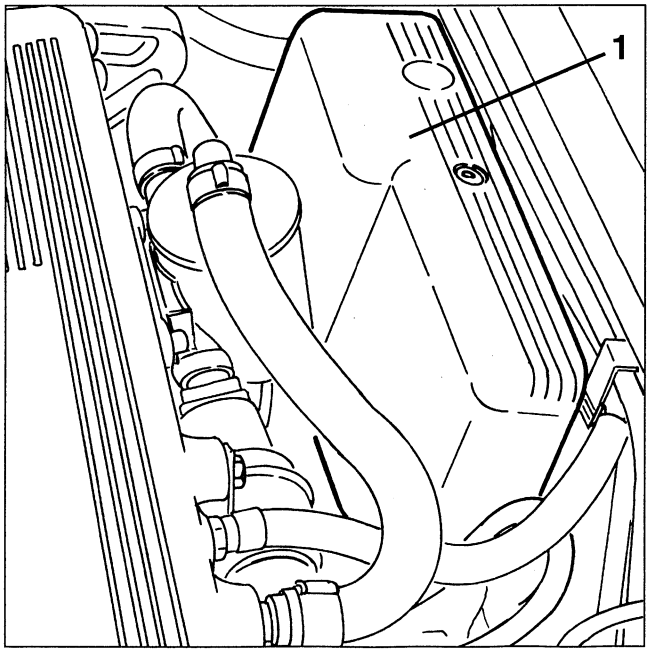

1. Disconnect the oil vapour recovery pipe from the separator
2. Disconnect the condensed oil recovery pipe from the separator.
3. Disconnect the electrical connection from the constant idle actuator.
4. Disconnect the fuel vapour recovery pipe from the intake box.
5. Disconnect the servobrake vacuum takeoff pipe from the intake box.

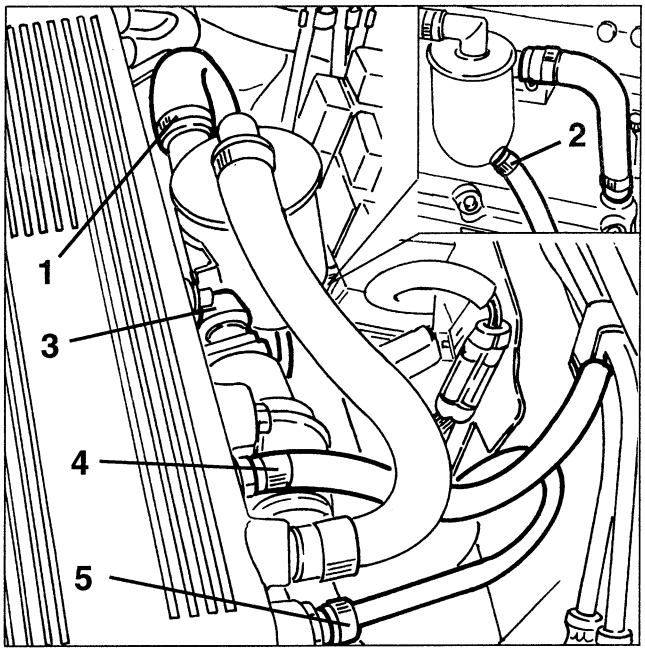

1. Disconnect the air inlet pipe for the constant idle speed actuator from the corrugated sleeve.
2. Slacken the two fastening nuts and remove the E.G.R. valve from the intake box.

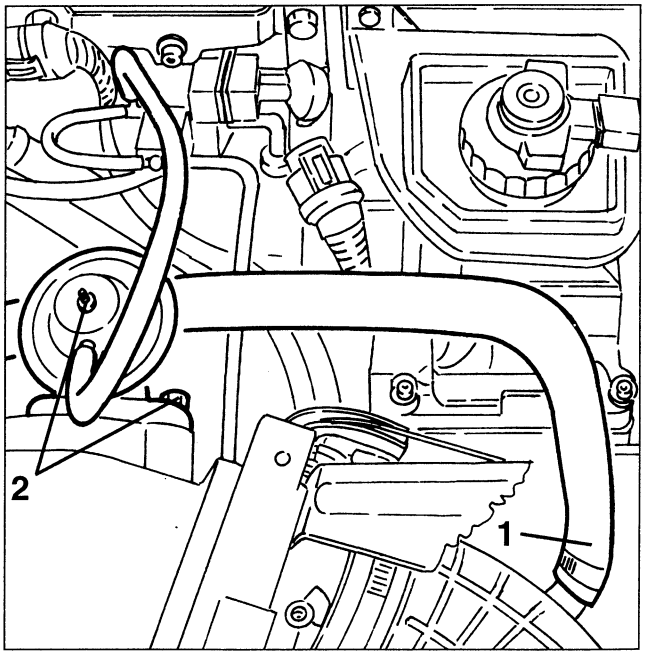

cardiagn.com

1. Disconnect the accelerator cable from the throttle cam.

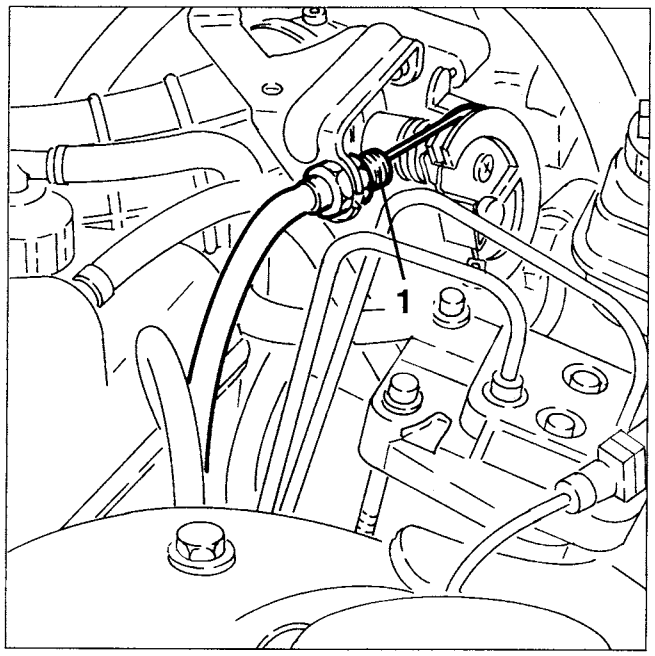

1. Disconnect the electrical connection from the throttle potentiometer.
2. Disconnect the oil vapour recovery pipe leading from the right cylinder head from the corrugated sleeve.

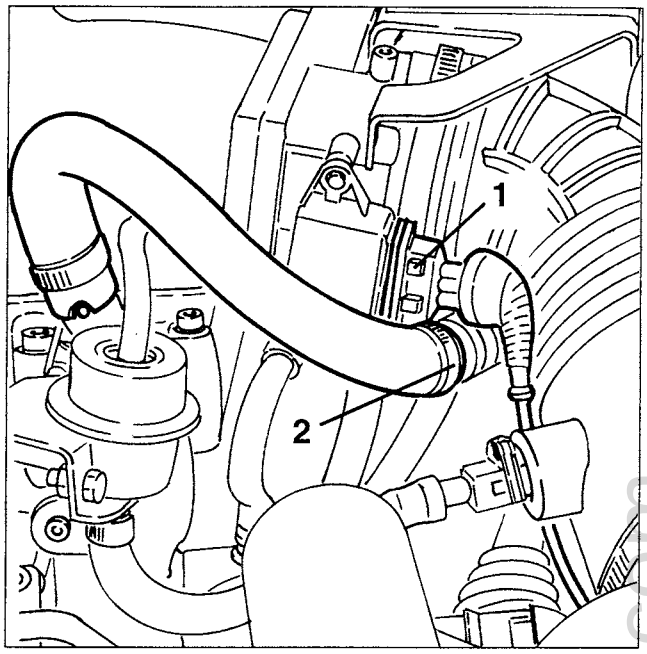

1. Disconnect the engine coolant return pipe from the throttle body from the expansion tank.

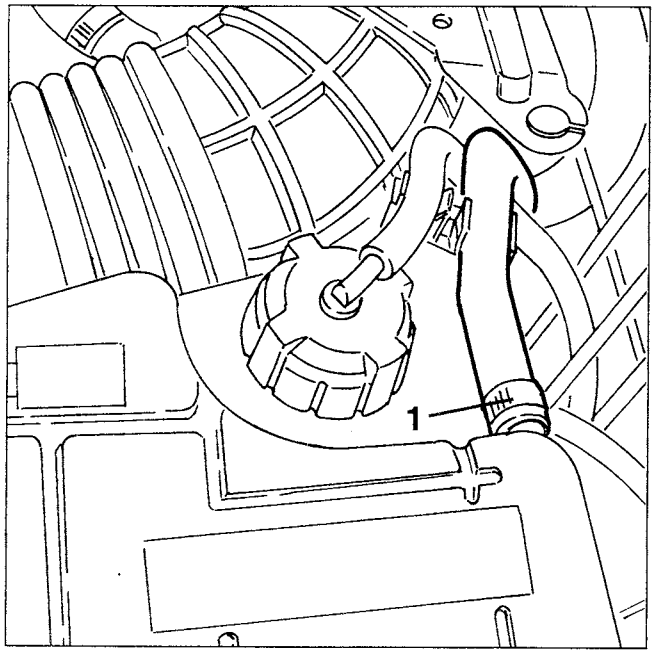

1. Slacken the fastening clamp and disconnect the corrugated sleeve from the throttle body.

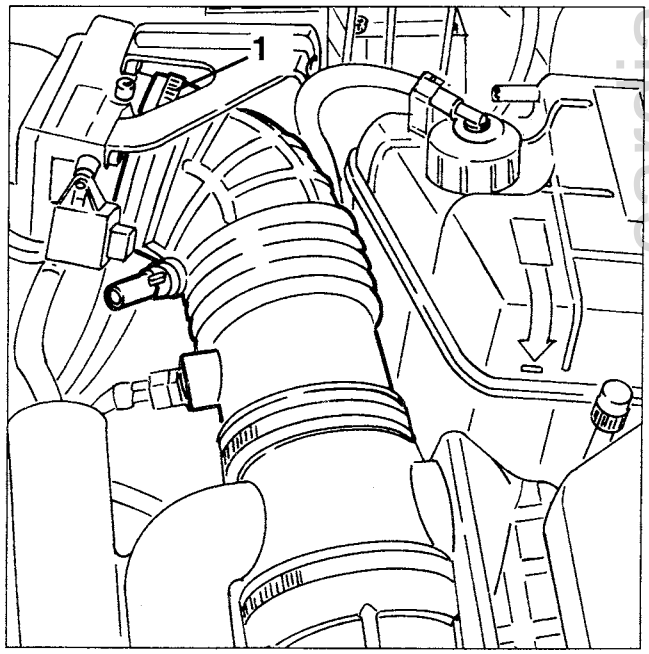

cardiagn.com

1. Disconnect the coolant fluid inlet pipe from the throttle body.
2. Disconnect the vacuum takeoff pipe for the E.G.R. modulating valve from the intake box.
3. Disconnect the vacuum takeoff pipe for the fuel pressure regulator from the intake box.

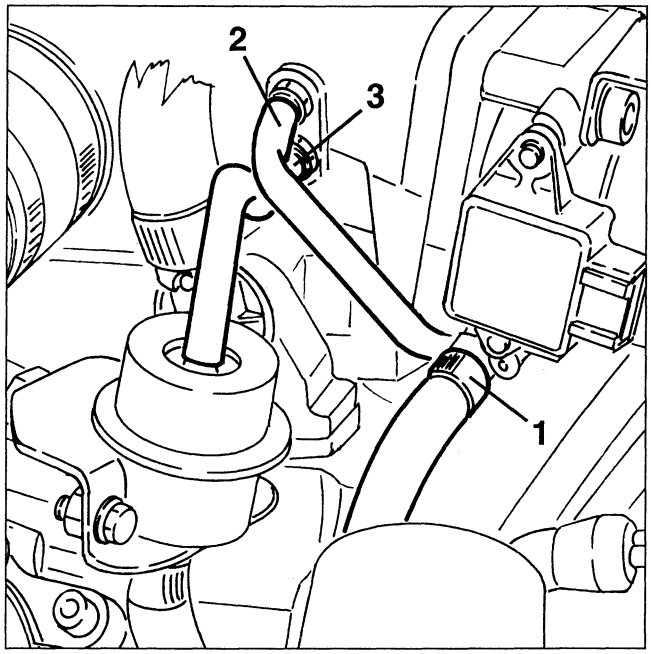

1. Slacken the clamps fastening the air supply ducts to the intake box.
2. Slacken the fastening screws of the cylinder head supply ducts.

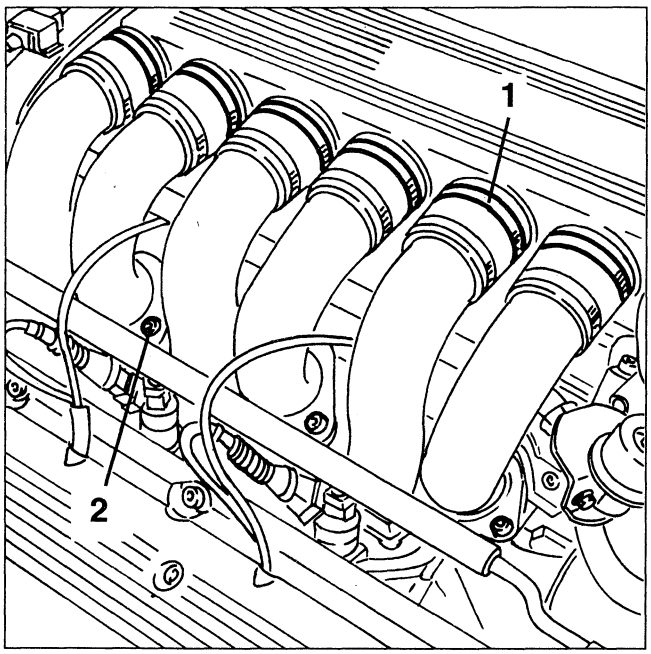

1. Disconnect the earth cable (rear) from the intake box.
2. Slacken the two fastening screws and remove the complete intake box.

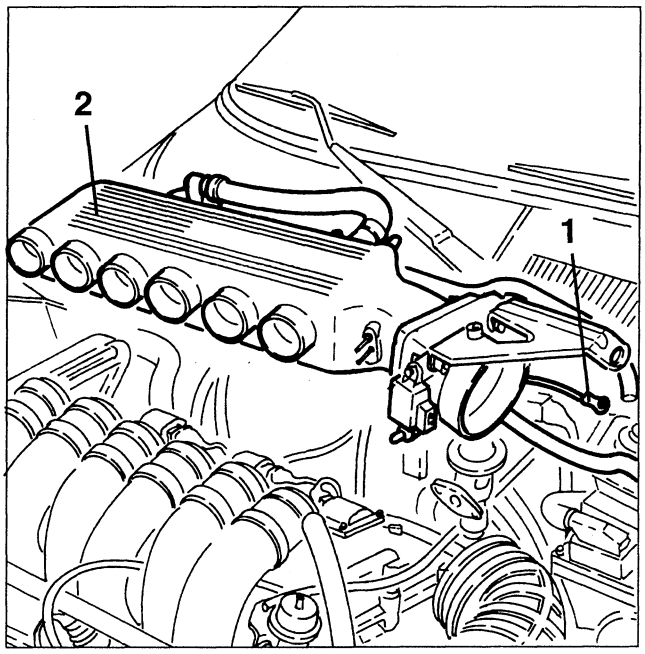

1. If necessary, on the bench separate the throttle body (1a), the oil vapour separator (1b) and the constant idle actuator (1c).

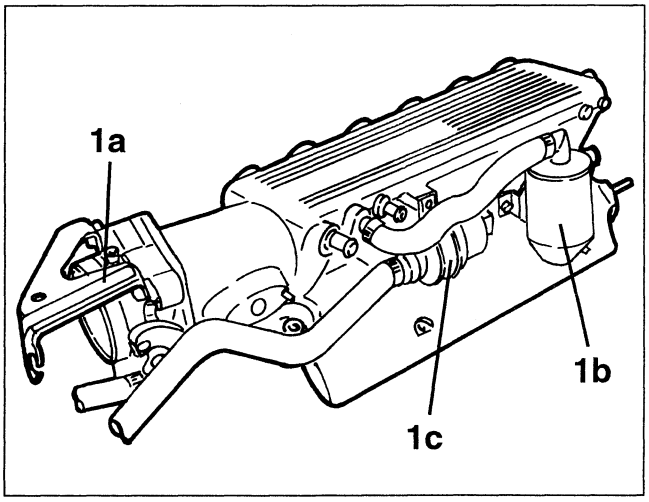

cardiagn.com

1. Disconnect the electrical connections from the ignition coils of the right cylinder head.

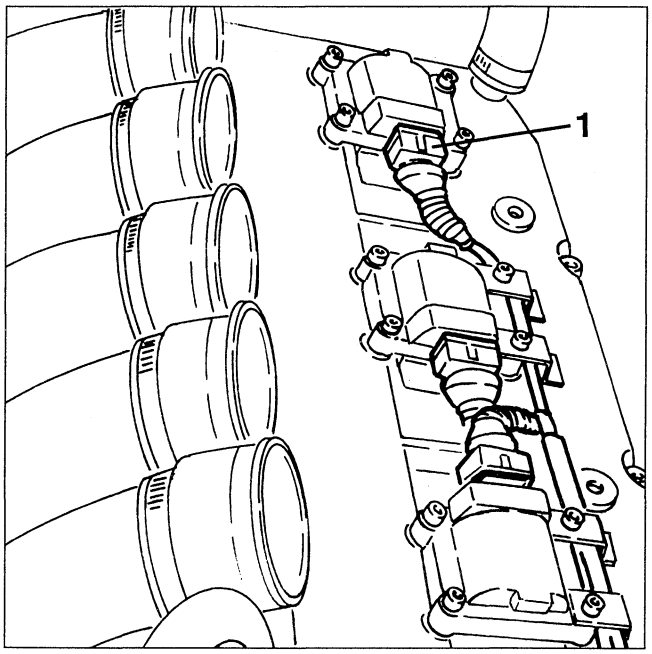

1. Slacken the fastening screws and remove the cover of the ignition coils of the left cylinder head.

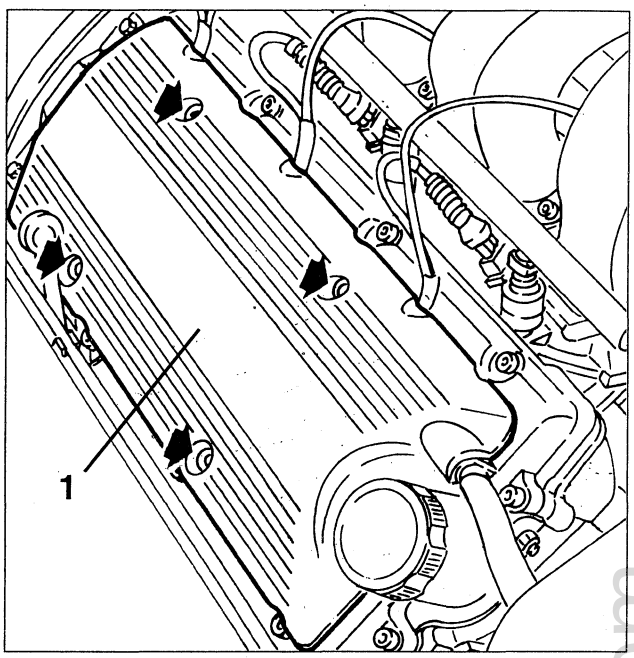

1. Slacken the fastening screws and remove the ignition coils from the right cylinder head.

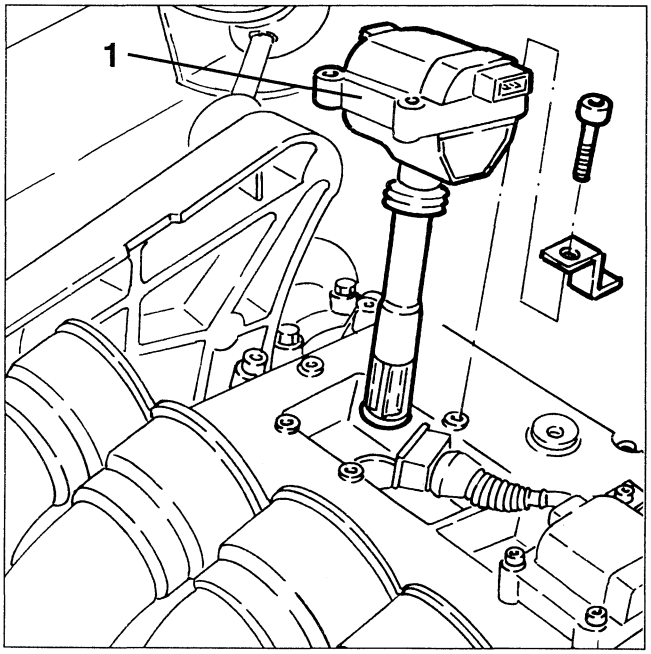

1. Disconnect the electrical connections from the ignition coils of the left cylinder head.

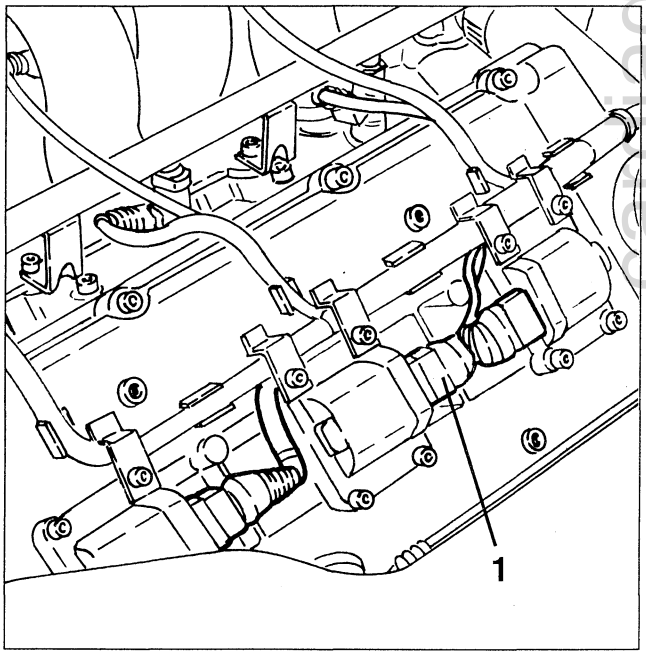

cardiagn.com

1. Slacken the fastening screws and remove the ignition coils from the left cylinder head.

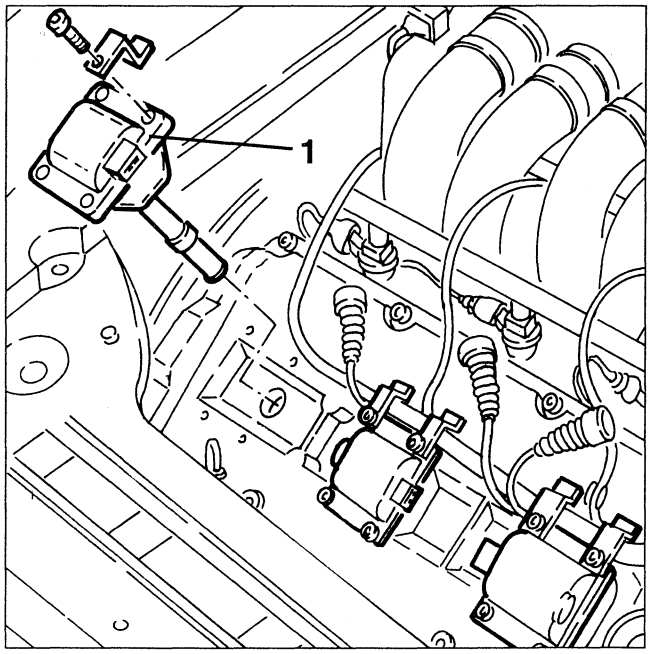

1. Disconnect the electrical connections from the injectors, then move the wiring to one side.

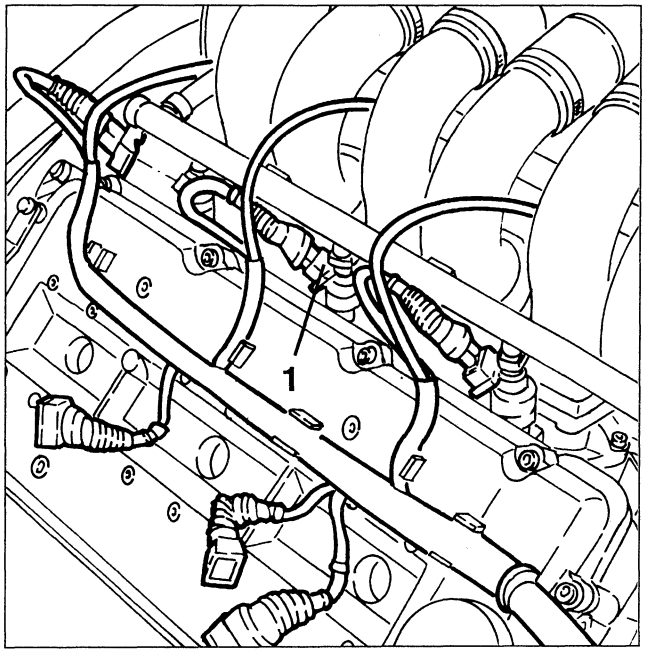

1. Disconnect the earth cable from the left cylinder head.

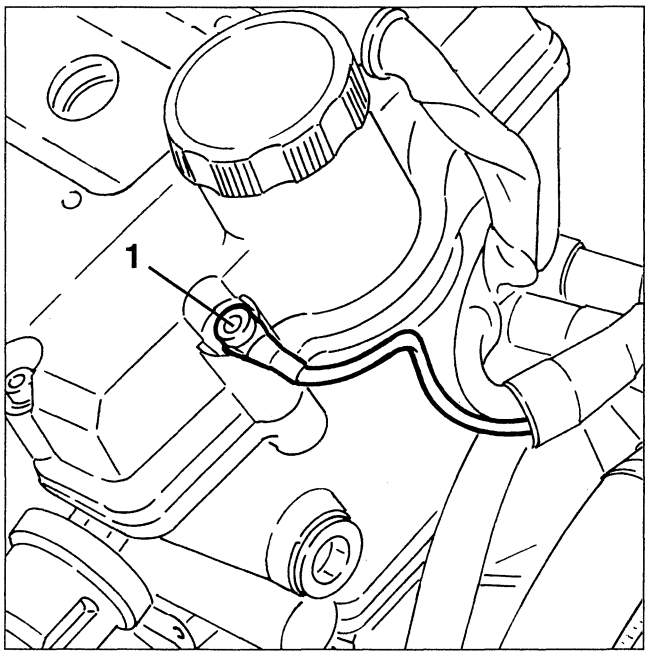

1. Slacken the fastening screws and remove the bracket complete with threaded nut for fastening the timing gear belt upper guard from the left cylinder head.

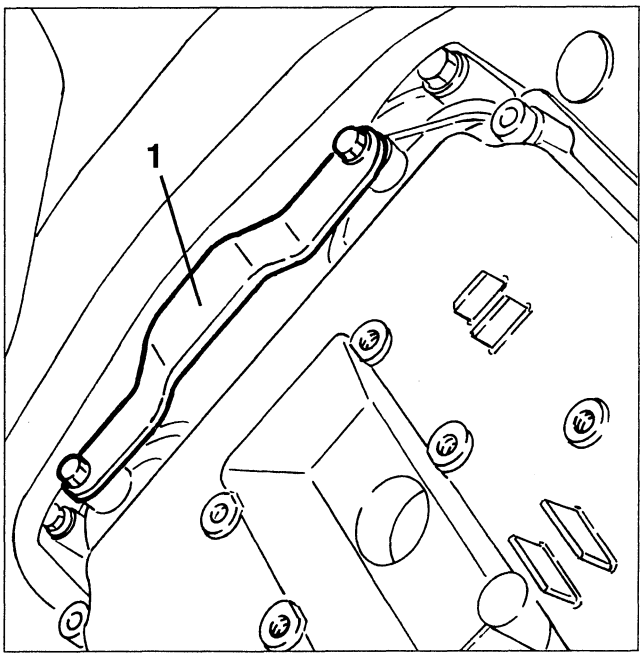

cardiagn.com

1. Slacken the fastening screws and remove the cover from the left cylinder head.

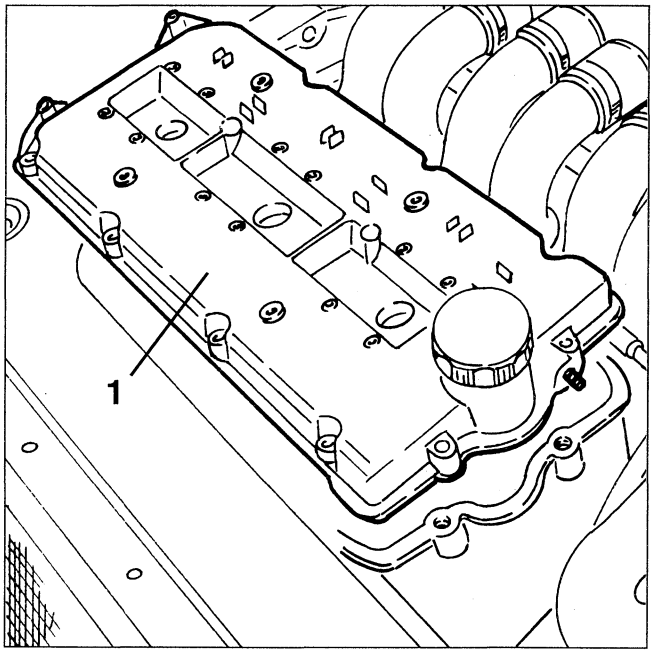

1. Slacken the fastening screws and remove the cover from the right cylinder head.

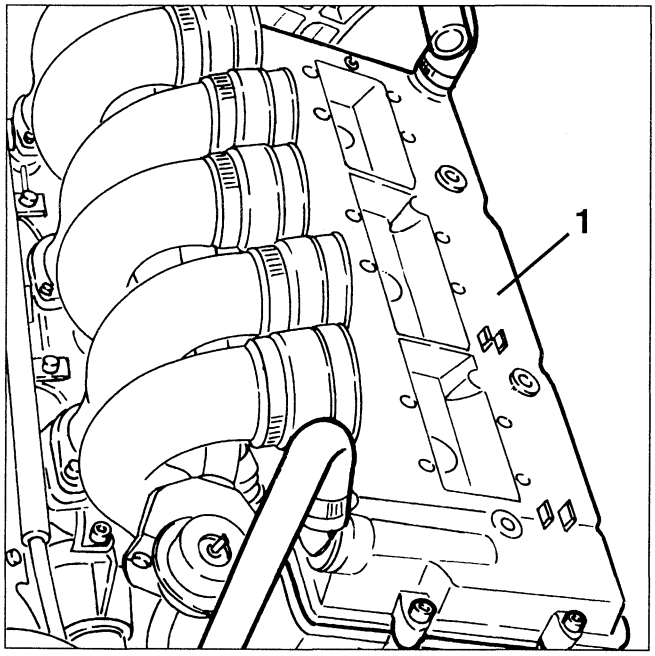

1. Install tool no. 1.825.013.000 (C.6.0183) in the housing of the first cylinder spark plug.

- Working on the fastening nut from the auxiliary components drive pulley, make the crankshaft turn a little (both ways) until the piston of the 1st cylinder reaches the T.D.C. in the bursting stroke.

NOTE: Make sure that the last turn of the crankshaft is in the operating direction.

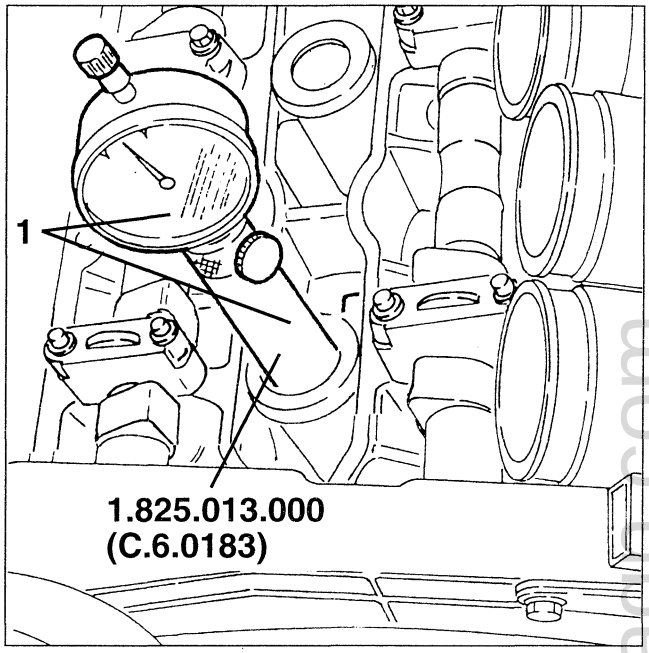

1. Slacken the two screws fastening the belt tensioner for the timing gear drive belt.

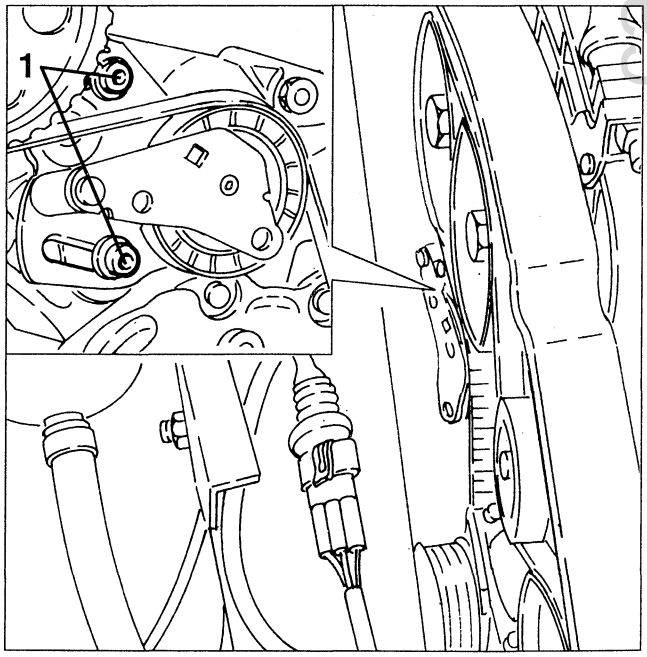

Cardiagn.com

1. Raise the car, slacken the fastenings, then remove the front section of exhaust pipe only of the left cylinder head.

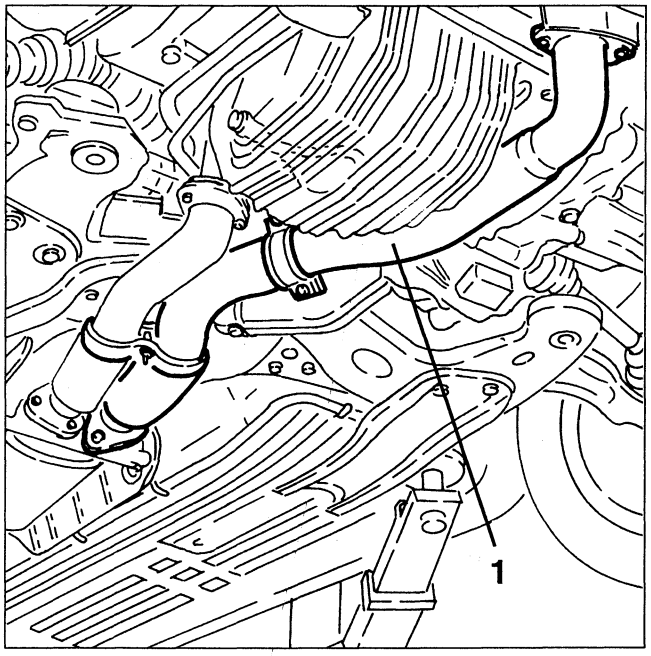

1. Install the flywheel stopper tool no. 1.820.088.000.

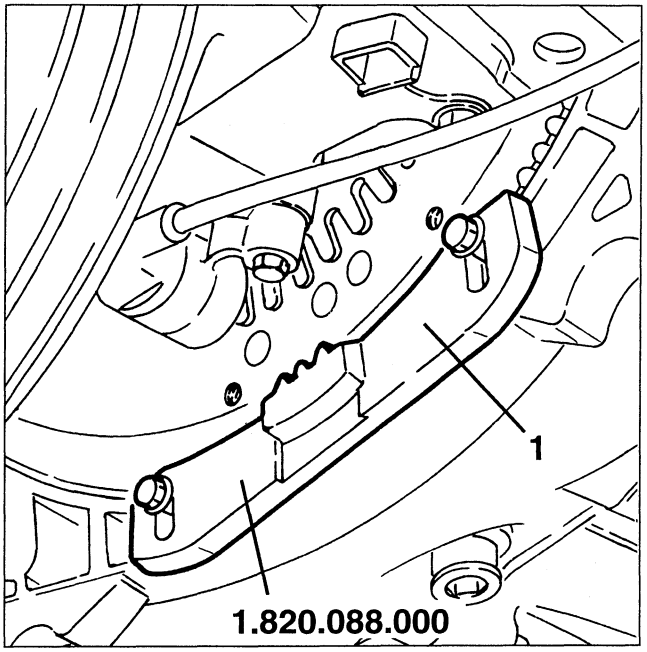

1. Slacken the fastening screws and remove the flywheel guard.

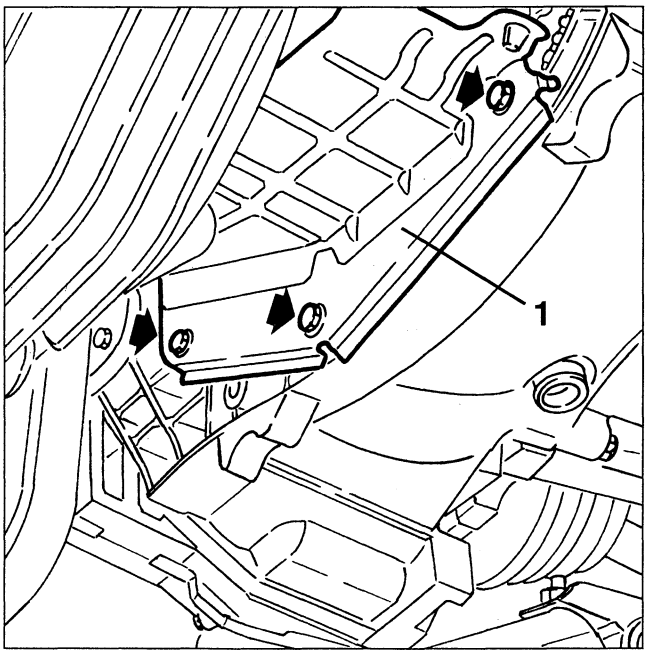

1. Remove the caulking and remove the fastening nut, then remove the auxiliary components drive pulley.
2. Prise and remove the timing gear drive belt.

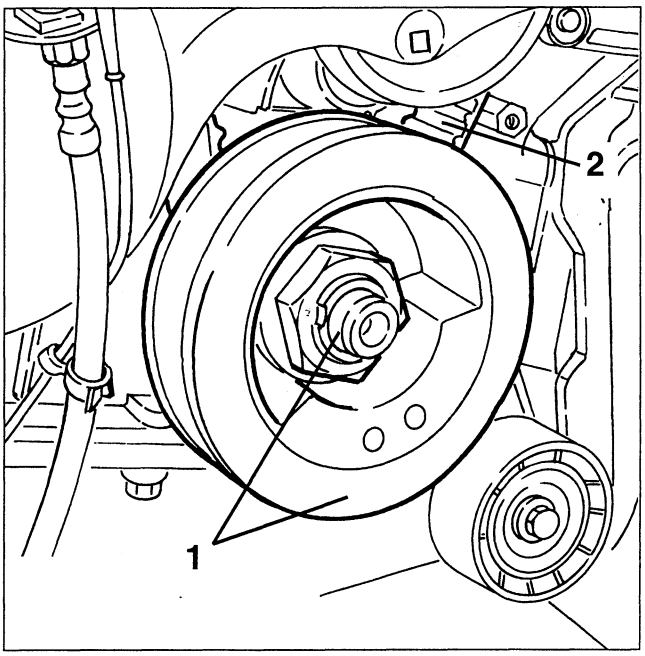

cardiagn.com

- Remove the camshaft caps **4** and **7** for the left cylinder head.

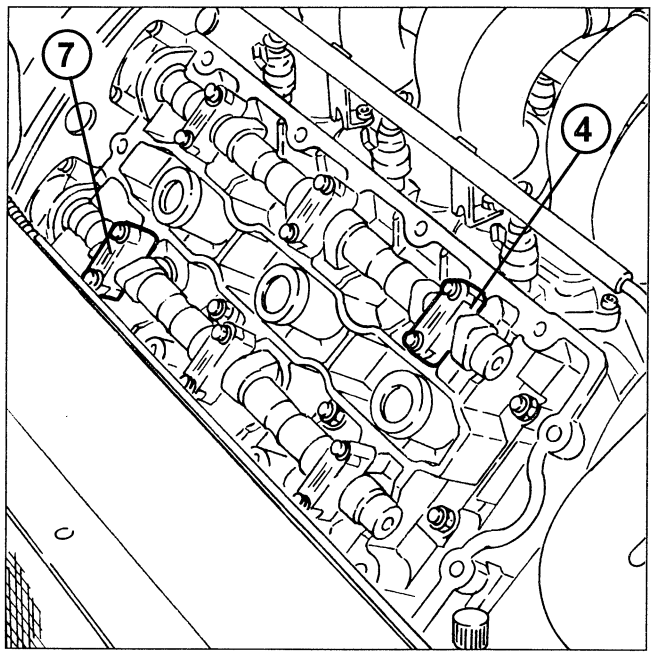

- Remove the camshaft caps **B** and **G** for the right cylinder head.

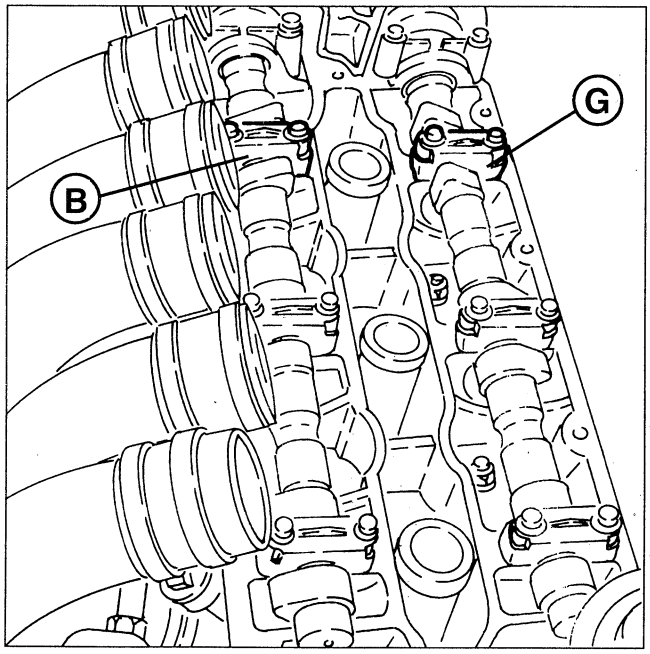

1. Using tool no. 1.822.146.000, turn each camshaft until the reference notches on them coincide with the upper surface of the cylinder head.

NOTE: The reference notches should face the centre of each head.

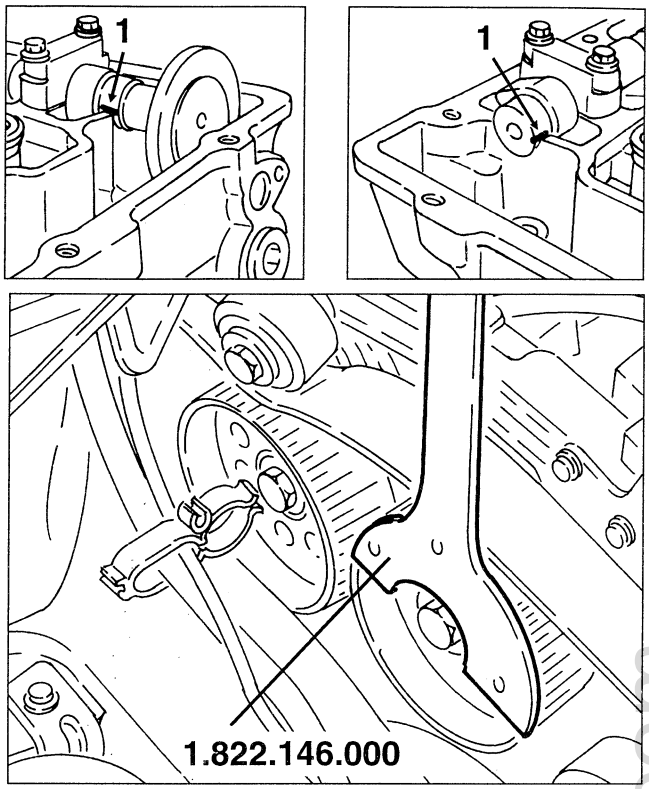

1. In place of the removed camshaft caps set templates no. 1.825.040.000 in the position shown by the stamping on the templates.

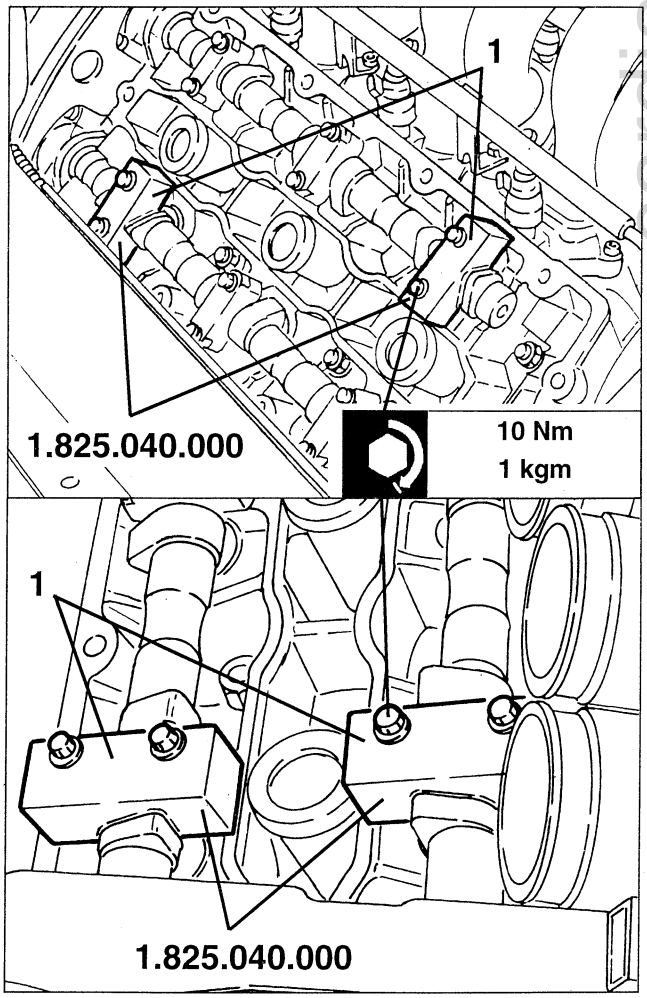

cardiagn.com

1. Raise the car and fit a new timing gear belt on the crankshaft drive pulley.
2. Fit the auxiliary components drive pulley and tighten the fastening nut to the specified torque.
- Remove the flywheel stopper tool no. 1.820.088.000 installed previously.

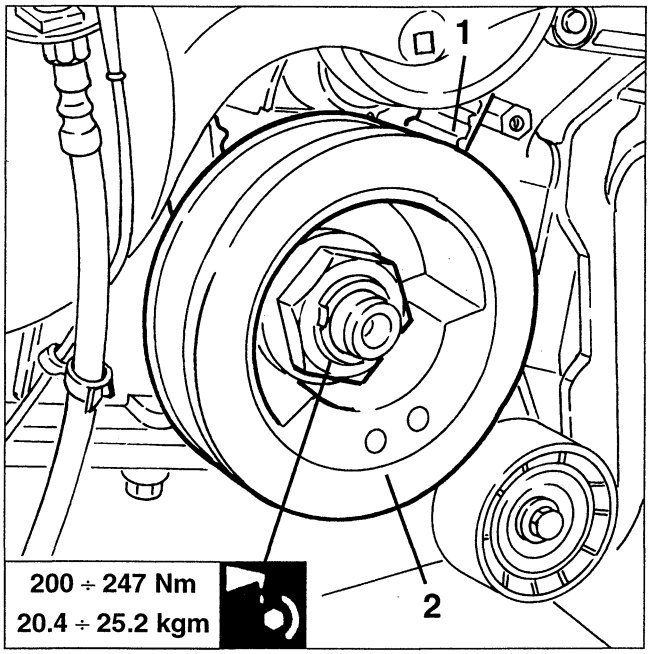

1. Lower the car and using extension no. 1.822.150.000 and tool no. 1.822.146.000 as counter torque, slacken the fastening screws of the camshaft drive pulleys.

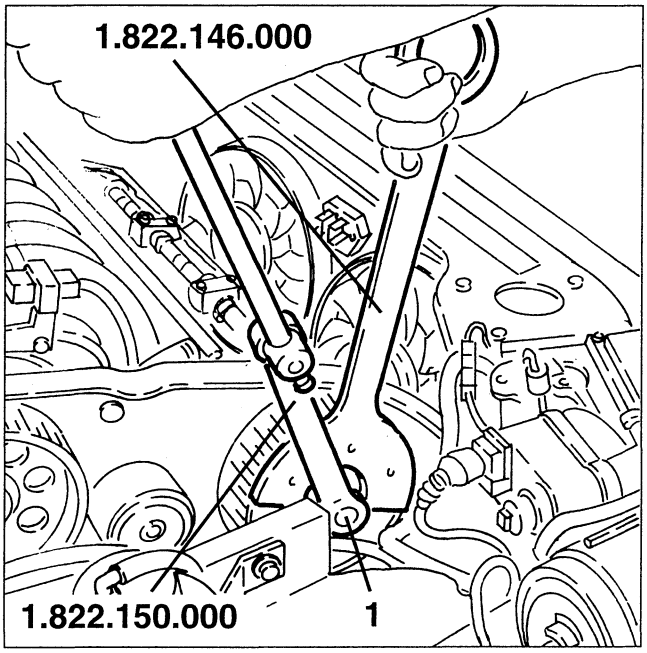

1. Slacken the fastening screws and remove the engine stay connecting rod complete with support bracket.

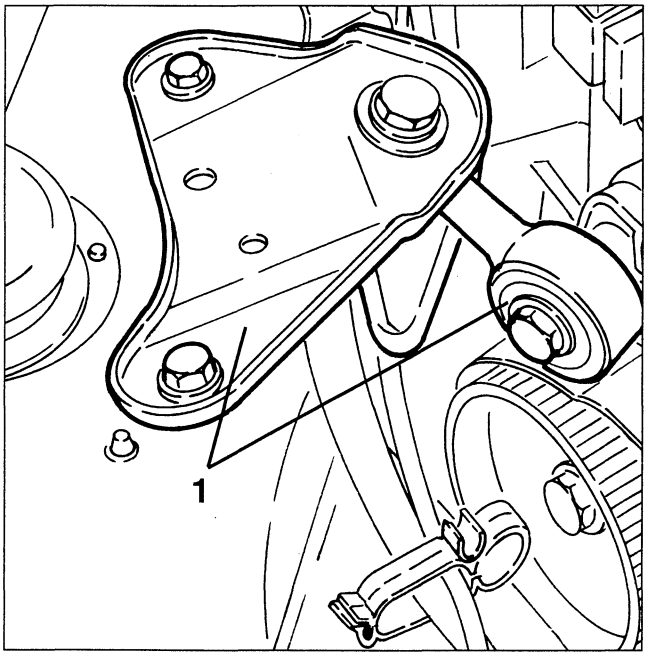

1. Using tool no. 1.860.954.001 remove the drive pulleys from the camshafts, then reposition them tightening the screws by hand.

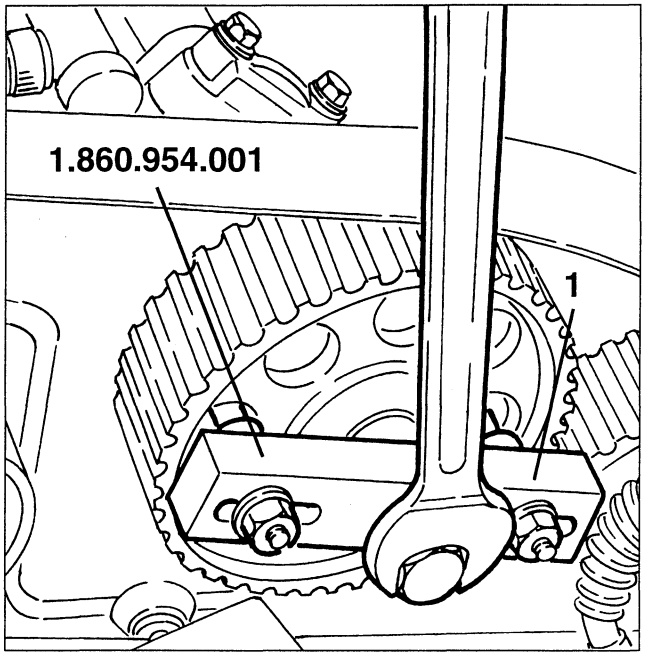

cardiagn.com

1. Working on the fastening nut from the auxiliary components drive pulley, make the crankshaft turn a little (both ways) until the piston of the 1st cylinder reaches the T.D.C. in the bursting stroke.

NOTE: Make sure that the last turn of the crankshaft is in the operating direction.

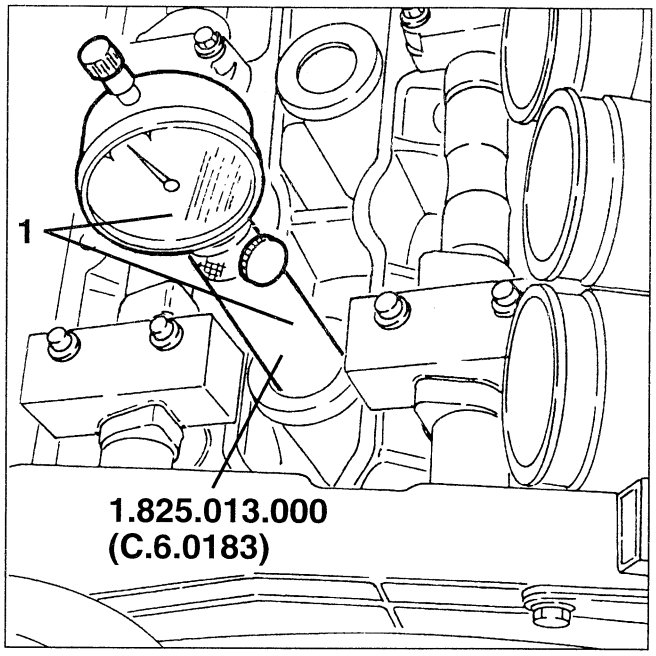

1. Install tool no. 1.860.950.000 for tensioning the timing gear drive belt fastening it with the screw removed previously (1a) to the alternator and with screw (1b) to the water pump, pin (1c) of the tool should lever on the mobile part of the belt tensioner.

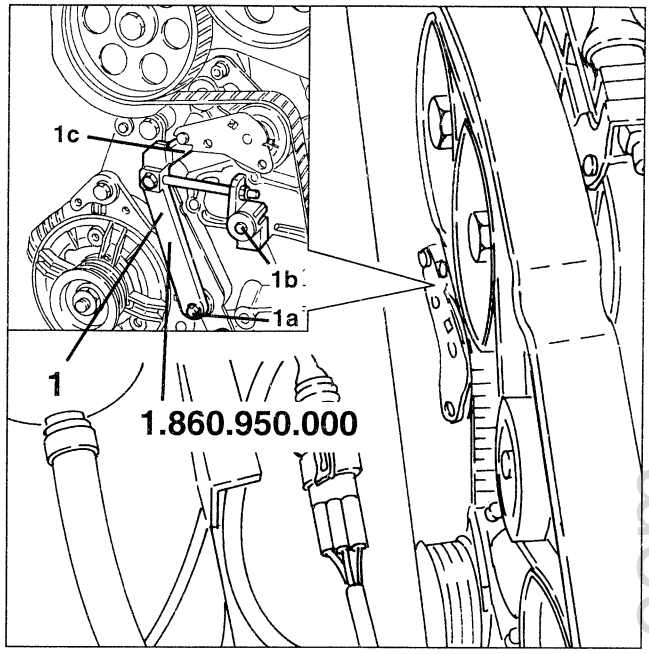

- Complete assembly of the timing gear drive belt fitting it on the camshaft drive pulleys.
1. Place a hydraulic jack under the differential as illustrated.
2. Slacken the two screws fastening the power unit rear support to the suspension cross rail.
- Remove the lower alternator fastening screw.

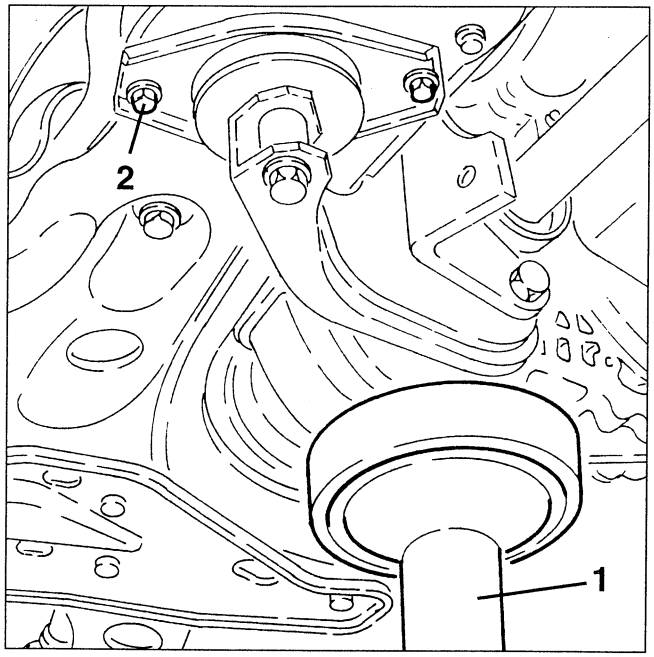

1. Working on the nut illustrated move the notch of the mobile index under the fixed notch of the tensioner.

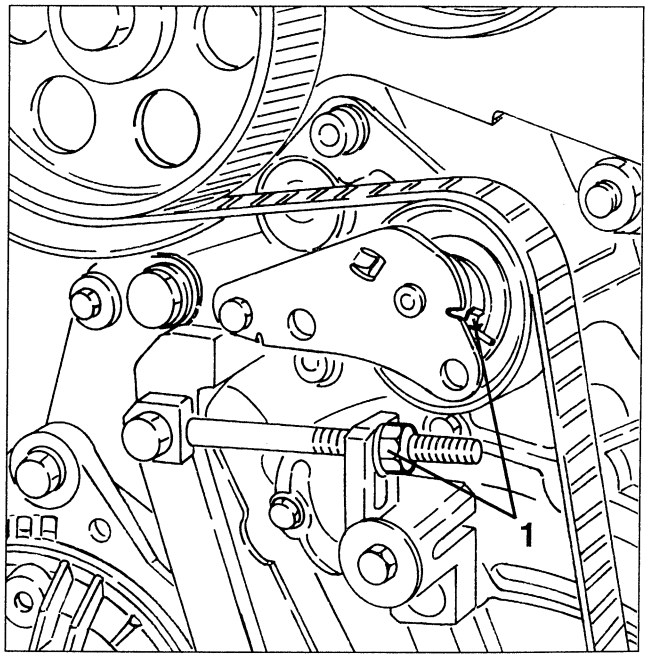

Cardiagn.com

1. Using extension no. 1.822.150.000 and tool no. 1.822.146.000 as counter torque, tighten the camshaft drive pulley fastening screws to the specified torque.

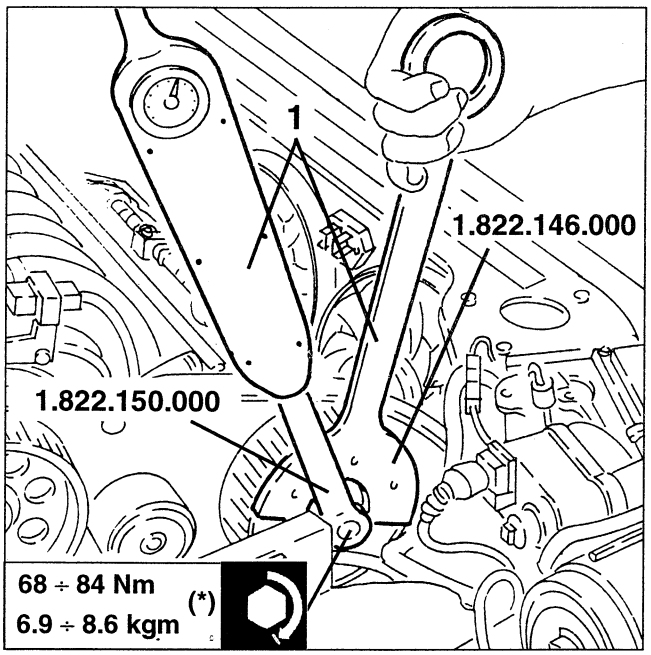

(*): Nominal value

1. Remove the templates no. 1.825.040.000 installed previously and in place of them fit the respective caps and tighten the fastening screws to the specified torque.

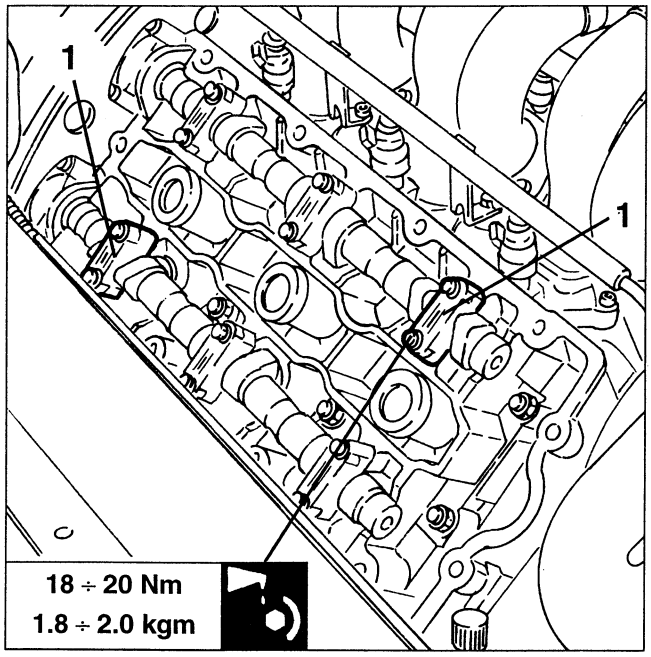

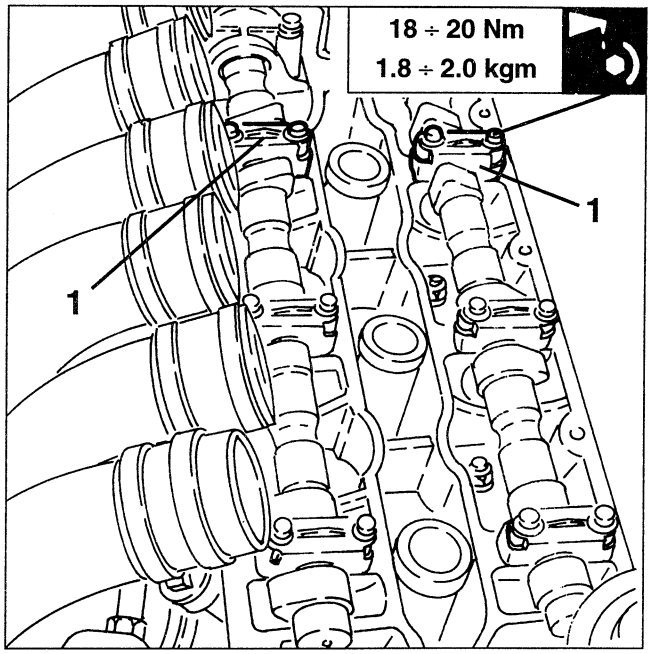

- Turn the crankshaft twice in its direction of rotation to allow the timing gear drive belt to settle.

1. Make sure that the fixed index of the tensioner coincides with the mobile index; if not slightly relieve the tension of the tensioner working on the nut (A) until the indexes coincide.
2. Tighten the belt tensioner fastening screws to the specified torque and remove tool no. 1.860.950.000 used for tensioning.

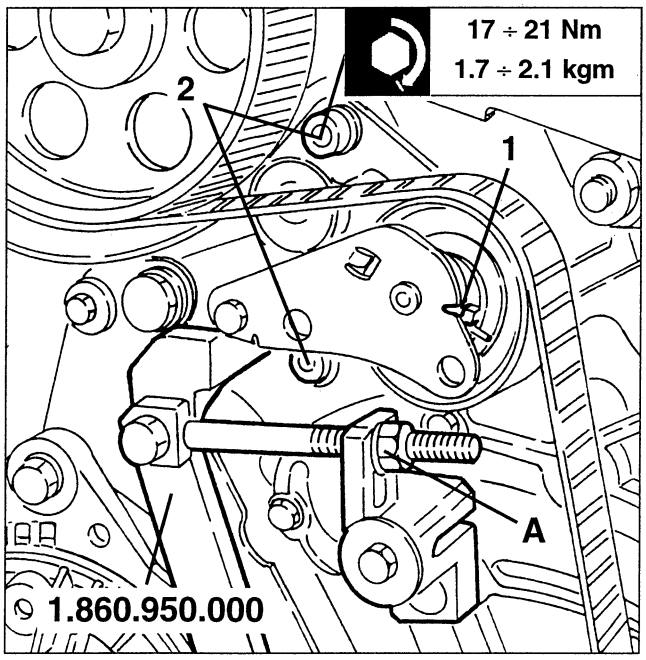

- Complete refitting reversing the sequence followed for disassembly.

cardiagn.com

AUXILIARY COMPONENTS BELT

The drive to the engine auxiliary components is transmitted through the single Poly V belt.
This belt is tensioned by an automatic tensioner: therefore it is unnecessary to check tensioning.

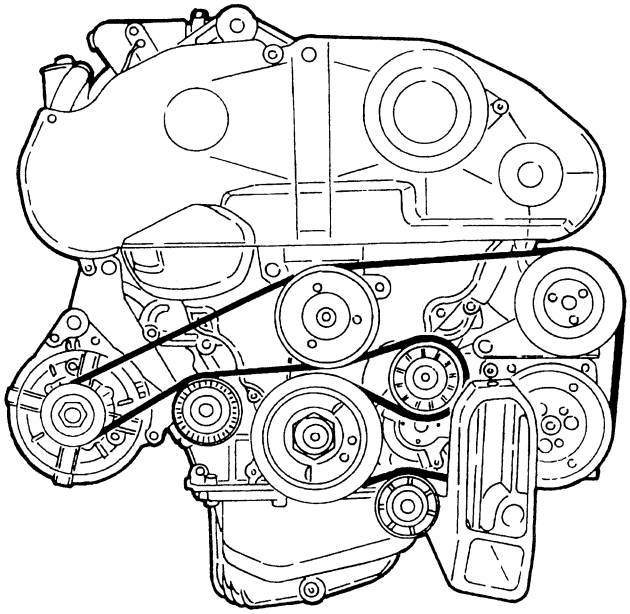

Replacement

- Set the car on a lift.
- Remove the right front wheel and mud flap.

- Visually check that the belt is intact and in particular for the absence of:
• cuts
• cracks
• surface wear of the material (which appears smooth and shiny)
• dry or stiff parts (lack of adherence).

In the presence of any one of the above defects, replace the belt.

WARNING:
Contact of the belt with oil or solvents may compromise the elasticity of the belt rubber and reduce its adherence.

1. Working with a wrench on the belt tensioner pulley fastening screw, overcome the force of the automatic tensioner and lock it in this position (belt slack) inserting the special peg as illustrated.

2. Prise and remove the auxiliary components belt.

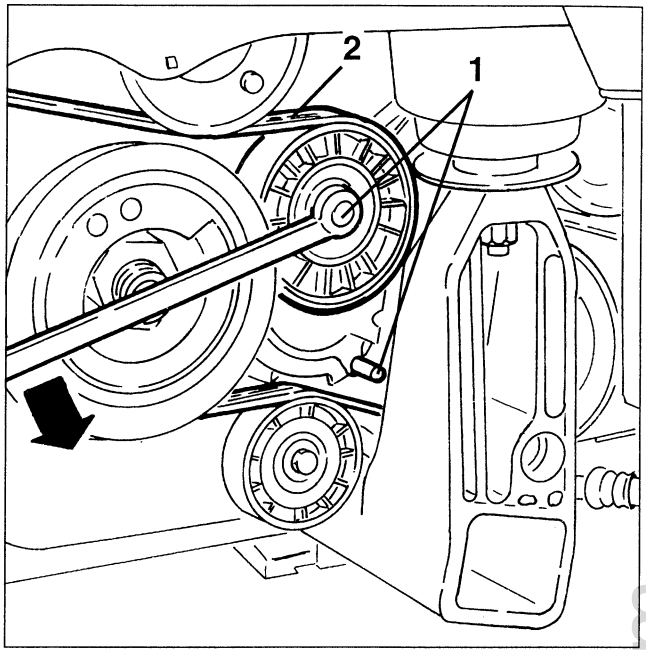

- Assemble a new belt reversing the sequence followed for removal.

CHANGING THE AIR CLEANER CARTRIDGE

- Disconnect the battery (-) terminal.
- Remove the engine compartment trim on the left hand side
1. Slacken the two clamps fastening the resounder to the corrugated sleeve.

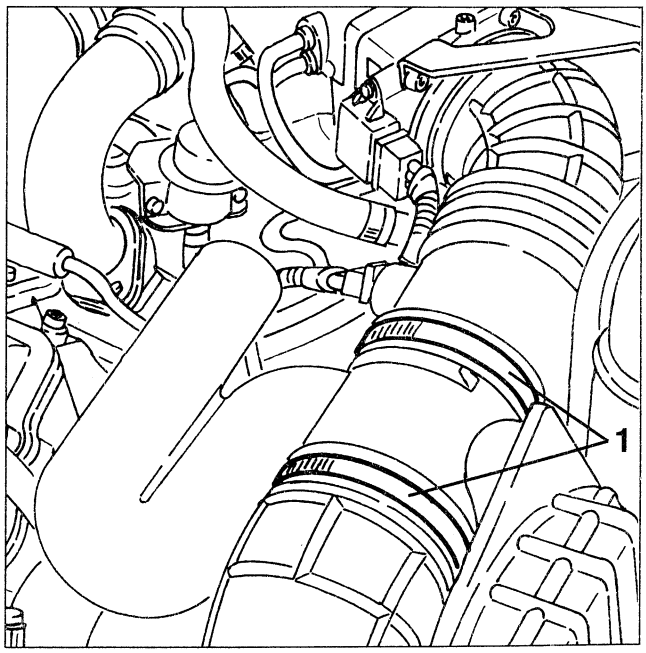

cardiagn.com

1. Withdraw and remove the upper resounder.

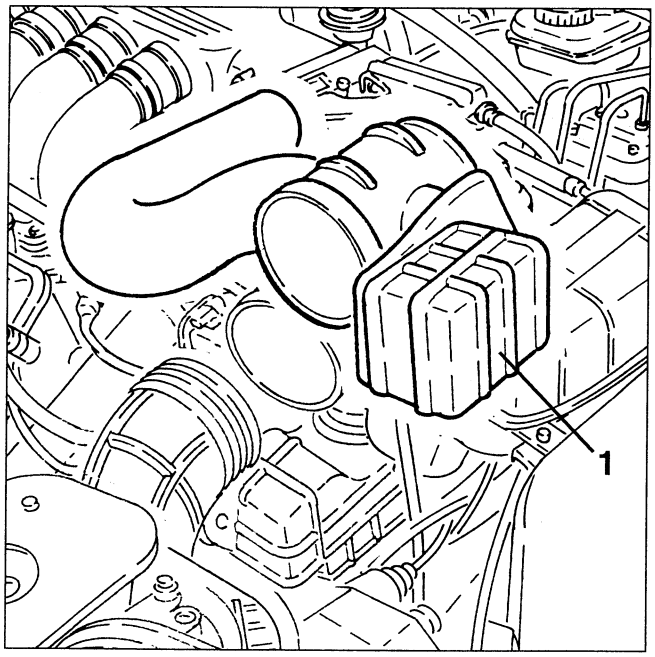

1. Disconnect the electrical connection from the hot film flow meter
2. Remove the button fastening the elbow of the corrugated sleeve to the resounder.

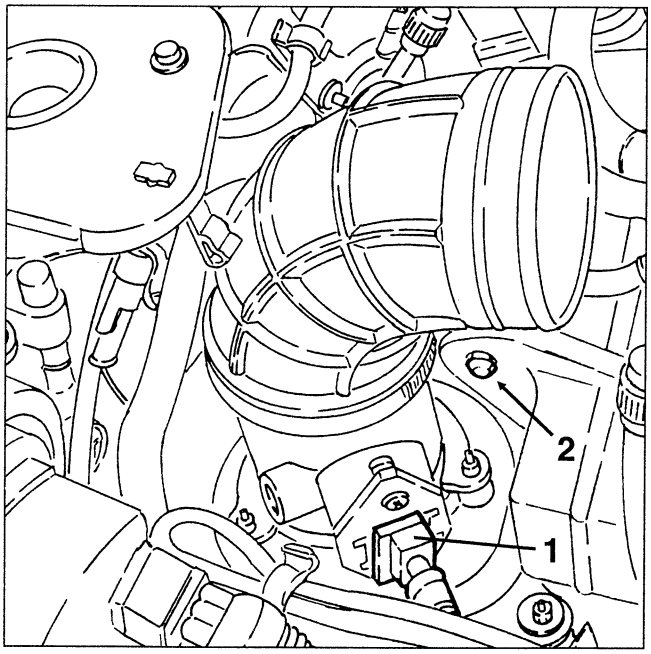

1. Slacken the three fastening nuts and remove the air cleaner cover complete with hot flm flow meter and corrugated sleeve.

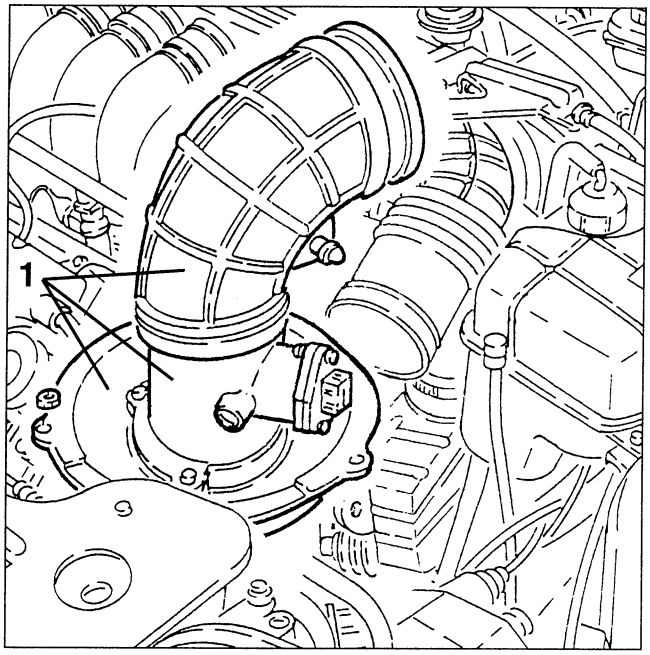

1. Remove the filtering element with its duct.

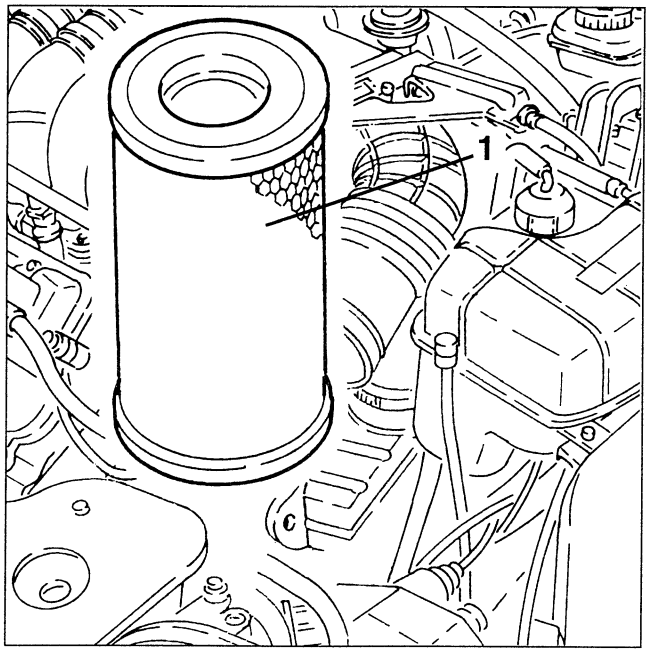

WARNING:
Any cleaning operation may damage the cleaner with the risk of compromising operation of the engine.

- Fit a new air cleaner reversing the sequence followed for removal.

cardiagn.com

CHANGING THE FUEL FILTER

- Set the car on a lift and raise it.
1. Disconnect the fuel inlet pipe fitting from the filter.
2. Disconnect the fuel outlet pipe fitting from the filter.
3. Slacken the fastening clamp and remove the fuel filter.

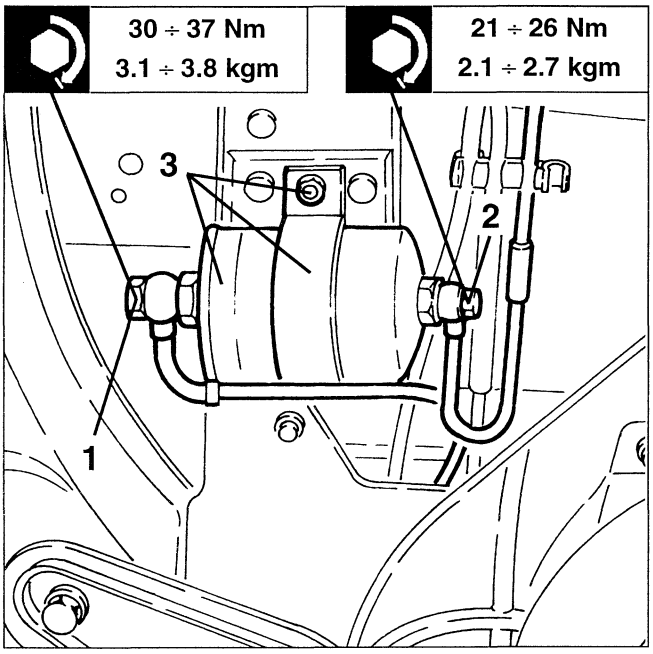

- Refit the new filter reversing the sequence followed for removal and adhering to the following instructions:
• replace the copper seals of the fittings;
• assemble the filter so that the arrow stamped on it is in the direction of the flow of fuel.

CHECKING AND CHANGING THE SPARK PLUGS

The standard fitted spark plugs are of the type with surface discharge with a peripheral point and a centre electrode.
In order to be able to work correctly, the gap between electrodes must be maintained.

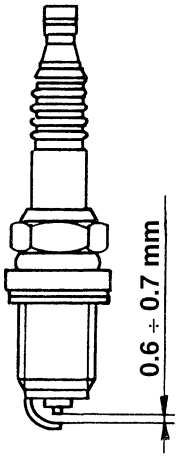

Spark plugs
NGK PFR6B

Checking and replacement

- Remove the ignition coils (see specific paragraph).
1. With the engine cold, remove the spark plugs firstly blowing in the recesses to remove any impurity and traces of dirt.

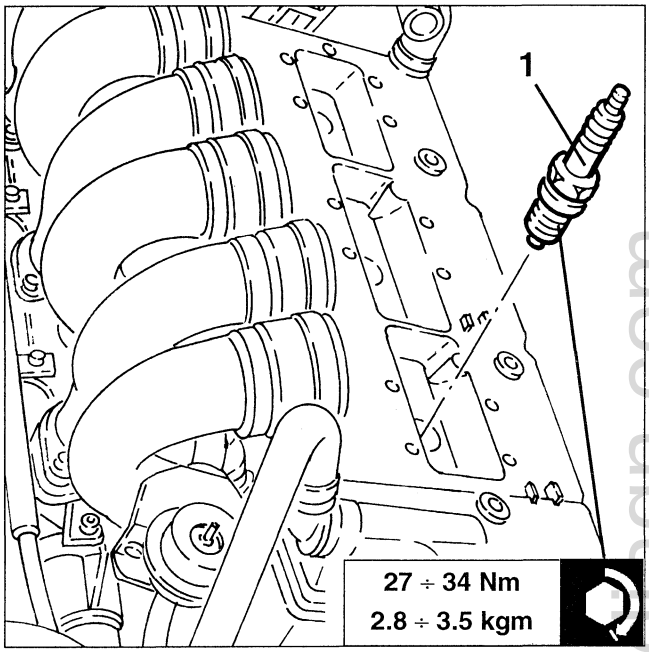

- Check cleaning and for any breaks on the ceramic insulation. In this case replace the spark plugs.

WARNING:
The use of spark plugs with characteristics or dimensions other than those specified can cause damage to the engine and alter the level of harmful emission at the exhaust.

A dirty or burnt spark plug is often a symptom of an engine fault. For example:
• traces of carbon dust: incorrect mixture, air cleaner very dirty;
• oil stains: oil leaking from the piston rings;
• formation of ash: presence of aluminium particularly in the oil;
• melted electrodes: overheating due to unsuitable fuel, defects in the valves;
• high electrode wear: harmful additives in the fuel or oil, pinging in the cylinder head, overheating.

- Install the new spark plugs tightening them to the specified torque, then complete reassembly, reversing the sequence followed for removal.

cardiagn.com

CHECKING THE LEVEL AND CHANGING THE ENGINE COOLANT FLUID

Checking

- Visually check that the level of the coolant in the expansion tank cold is between the MIN and MAX marks.

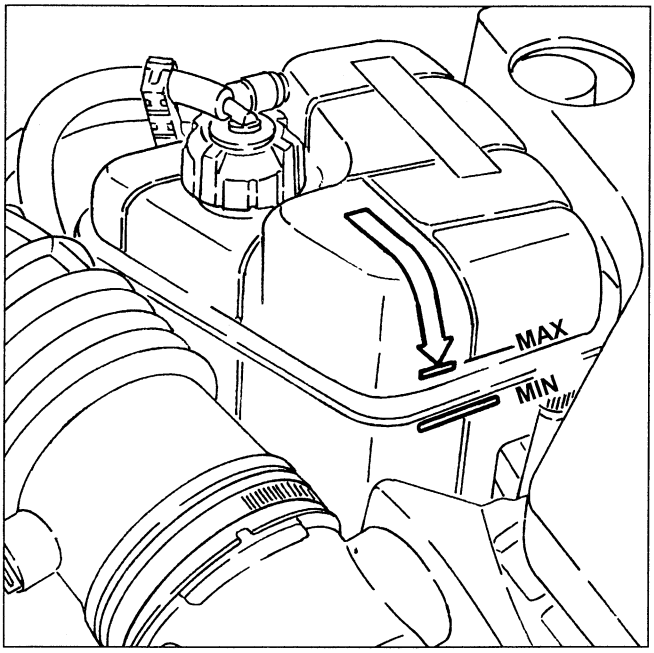

Changing

- Set the car on a lift.
- Slacken and remove the expansion tank plug.

WARNING:
Absolutely never remove the expansion tank plug when the engine is hot.

1. Raise the car and drain the engine coolant fluid, disconnecting radiator fluid outlet sleeve and retrieve it in a suitable container.

WARNING:
The antifreeze mixture used as coolant fluid is harmful for paint: therefore avoid contact with painted parts.

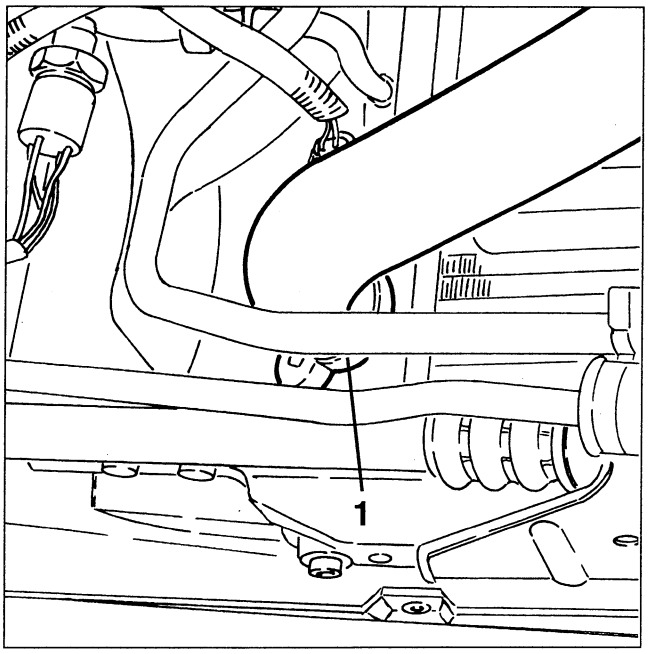

- Reconnect the sleeve to the radiator and any disconnected pipes, checking that all the clamps are tightened.
- Fill with fluid of the specified type and quantity, until reaching the MAX mark of the expansion tank.
- Start the engine and bring it to normal operating temperature so that the opening of the thermostat releases the residual air contained in the circuit.
- With the engine cold, top up to the MAX mark of the expansion tank.
- Retighten the pressurised cap of the expansion tank.

WARNING:
It is unwise to mix antifreeze fluids of different types and make.
Do not use antirust additives: they may not be compatible with the antifreeze used.

cardiagn.com

ENGINE MAINTENANCE

TIMING BELT REPLACEMENT

- Position the vehicle on a shop jack.
- Make sure the ignition key is at "STOP" and disconnect the (-) battery terminal.
- Remove the front right-hand wheel.

1. Loosen the fastening nuts and remove the engine compartment side guard.

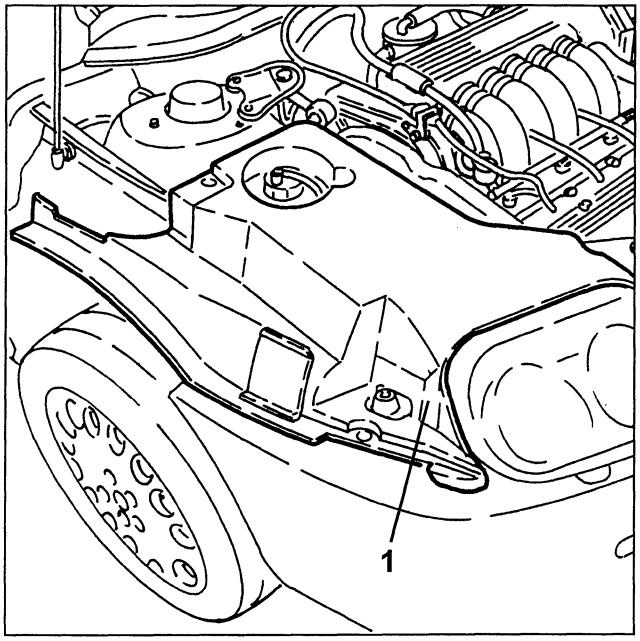

- Remove the front right-hand light cluster (see assembly 55).

1. Loosen the fastening screws, remove the plastic button and remove the mud flap from the front right-hand wheel compartment.

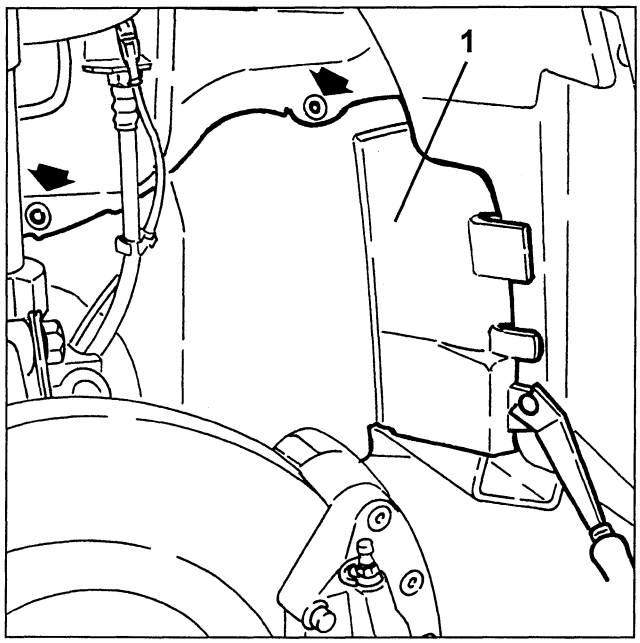

1. Loosen the fasteners and remove the front right-hand wheelhouse.

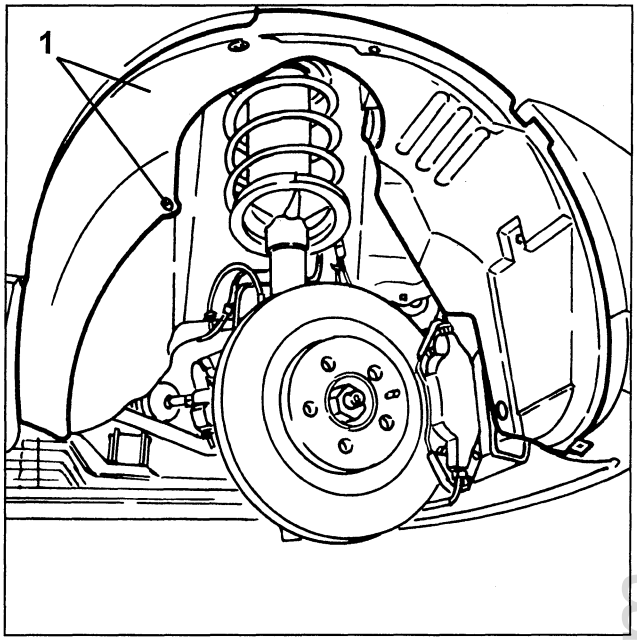

1. Loosen the belt take-up pulley fastening screw with a wrench to overcome the automatic take-up device force (belt loose) by inserting the pin as shown in the figure.
2. Remove the engine unit drive belt.

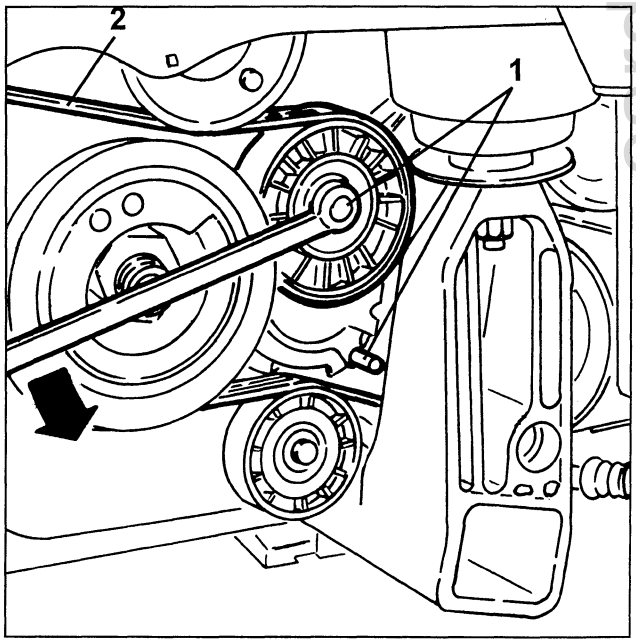

cardiagn.com

1. Loosen the fastening screw and remove the engine unit drive belt take-up device.
2. Loosen the fastening screw and remove the engine unit drive belt runner.

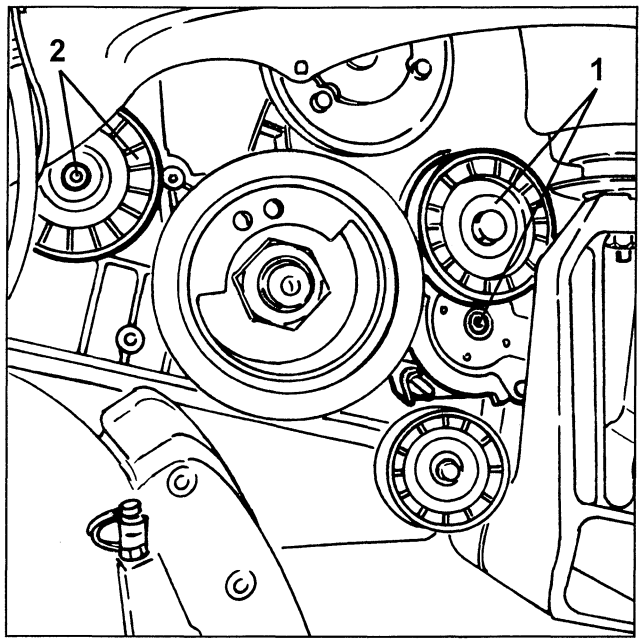

1. Loosen the fastening screws and remove the lower right-hand timing belt guard.

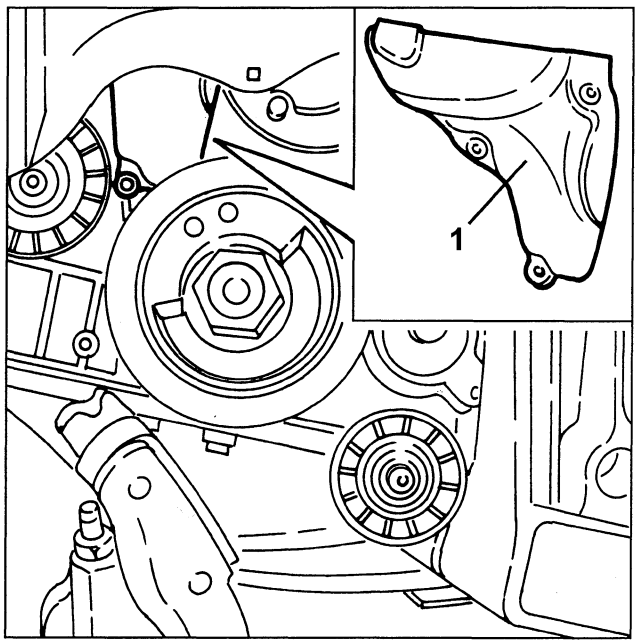

1. Loosen the fastening screws and remove the lower left-hand timing belt guard.

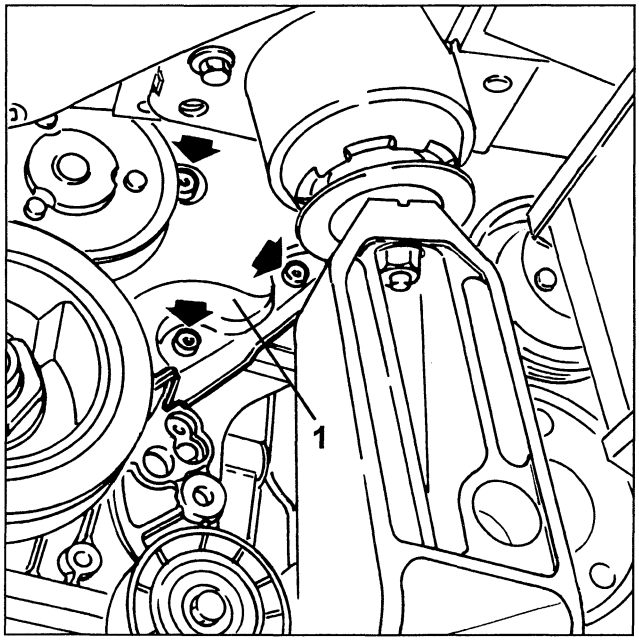

1. Loosen the fastening screws and remove the upper timing belt guard.

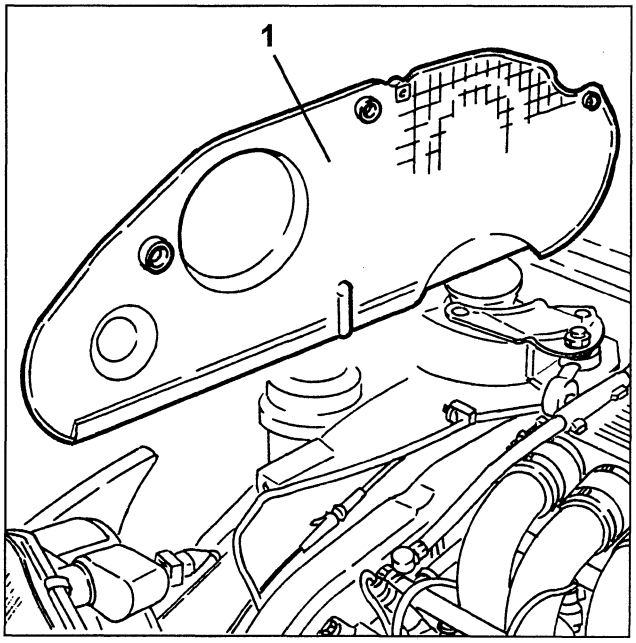

cardiagn.com

1. Disconnect the corrugated sleeve from the throttle with built-in DVL.
2. Disconnect the throttle and built-in DVL electrical connection.

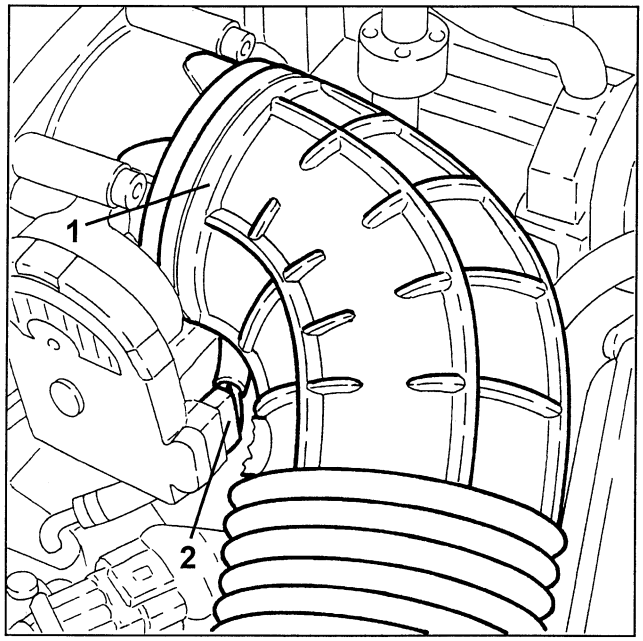

1. Disconnect the oil vapour recovery pipe from the right-hand cylinder head tappet cover.
2. Loosen the fasten screws and move the oil vapour separator from the intake manifold.

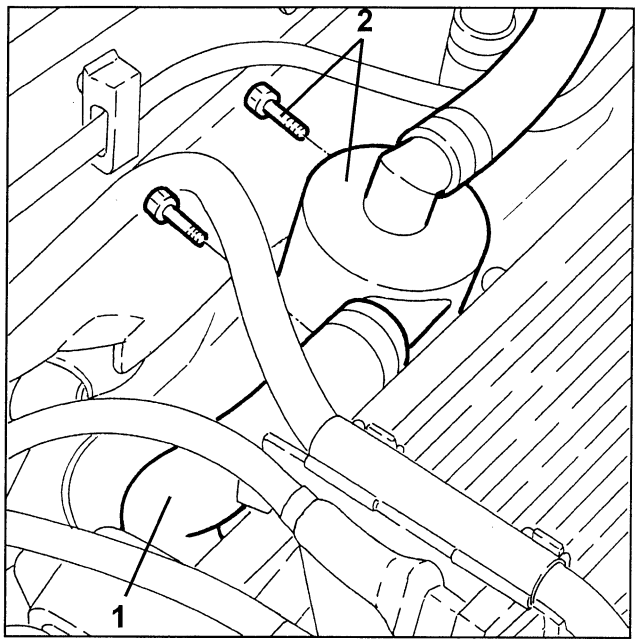

1. Disconnect the brake booster vacuum pipe from the intake manifold.
2. Disconnect the fuel vapour recovery pipe from the intake manifold.
3. Disconnect the oil vapour recirculation pipe from the intake manifold.

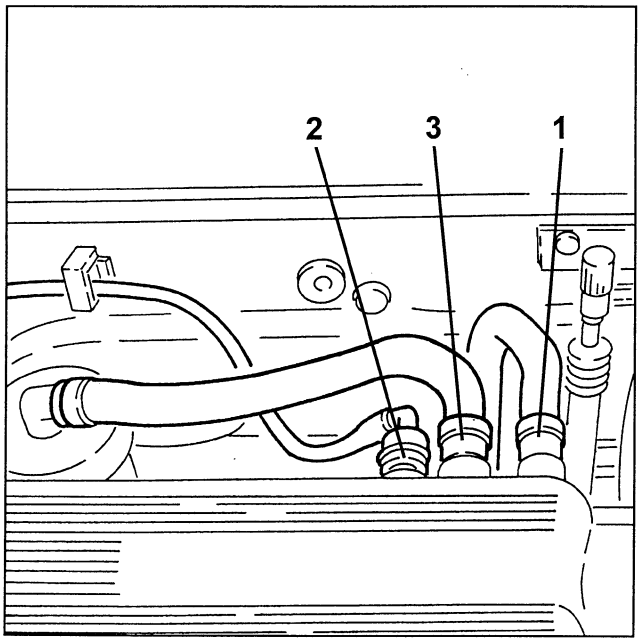

1. Loosen the screw and remove the intake manifold connection from the engine tie-rod.

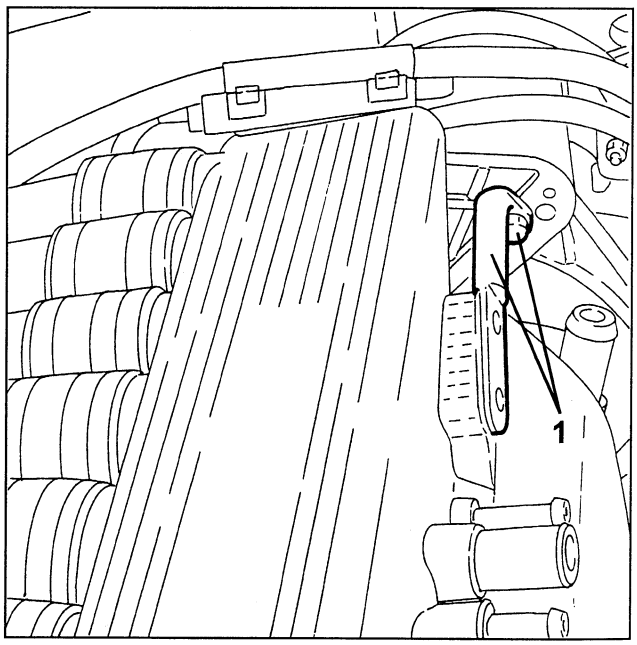

cardiagn.com

1. Release the fuel delivery pipe from the bracket.
2. Loosen the fastening screws and remove the fuel delivery pipe bracket and front knock sensor electrical connection.

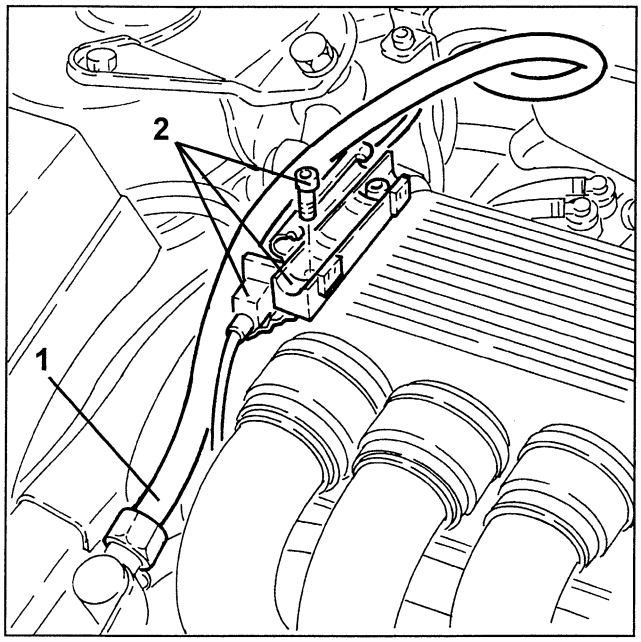

1. Loosen the fastening screws and remove the intake manifold.

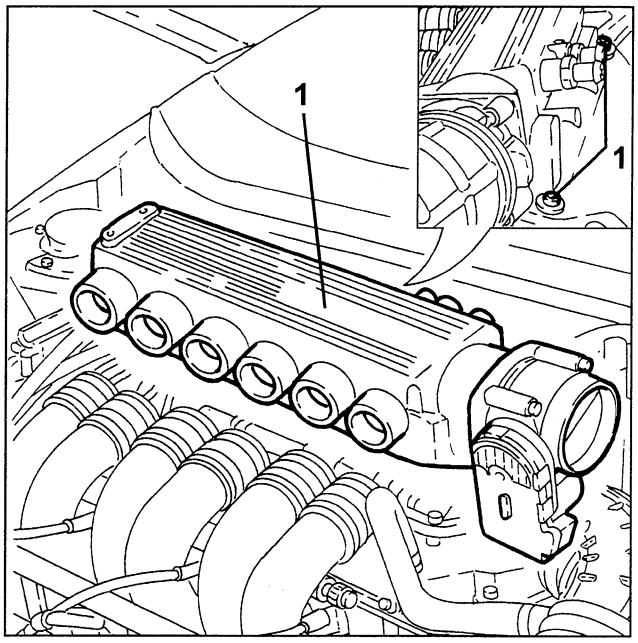

1. Loosen the intake manifold air feed duct fastening clips.
2. Loosen the cylinder head feed duct fastening screws.
- Release the air feed ducts from the intake manifold.

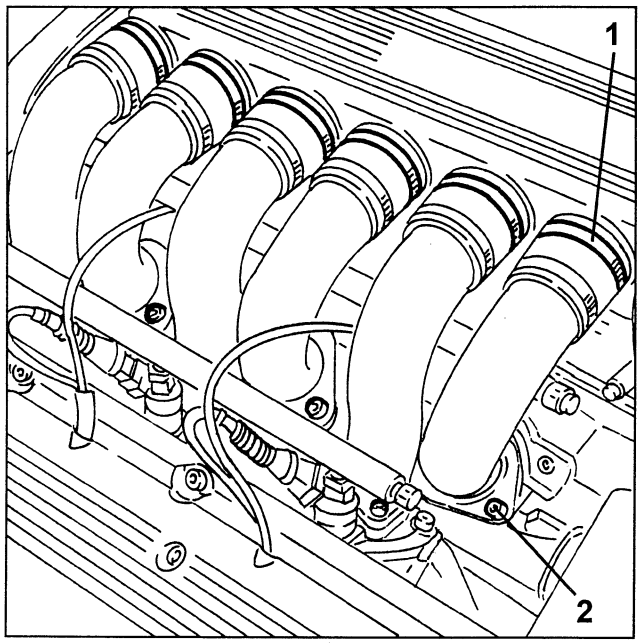

1. Disconnect the right-hand cylinder head ignition coil electrical connections.

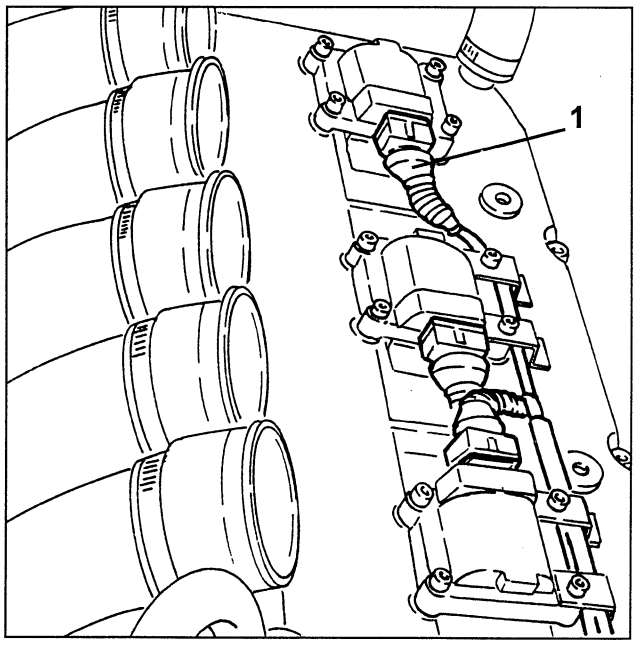

cardiagn.com

1. Loosen the fastening screws and remove the ignition coils from the right-hand cylinder head.

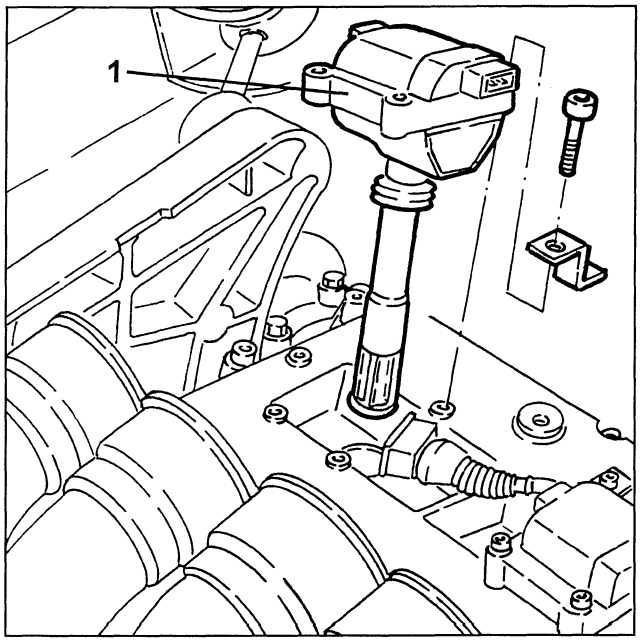

1. Disconnect the left-hand cylinder head ignition coil electrical connections.

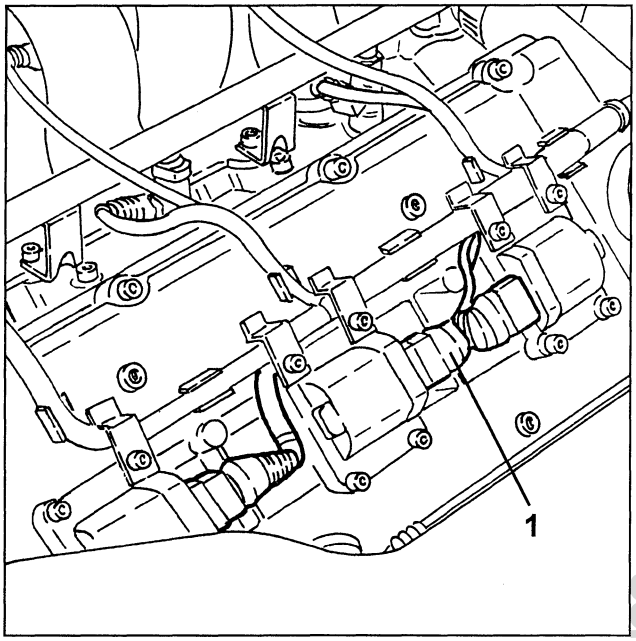

1. Loosen the fastening screws and remove the ignition coils from the left-hand cylinder head.

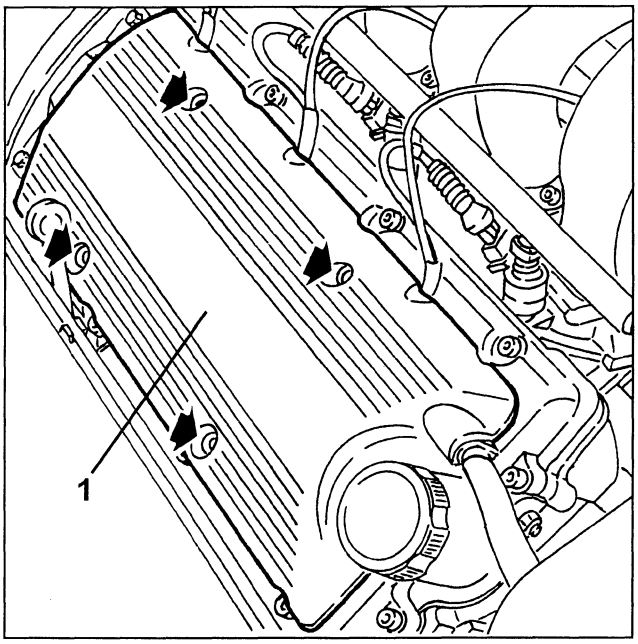

1. Loosen the fastening screws and remove the left-hand cylinder head ignition coils.

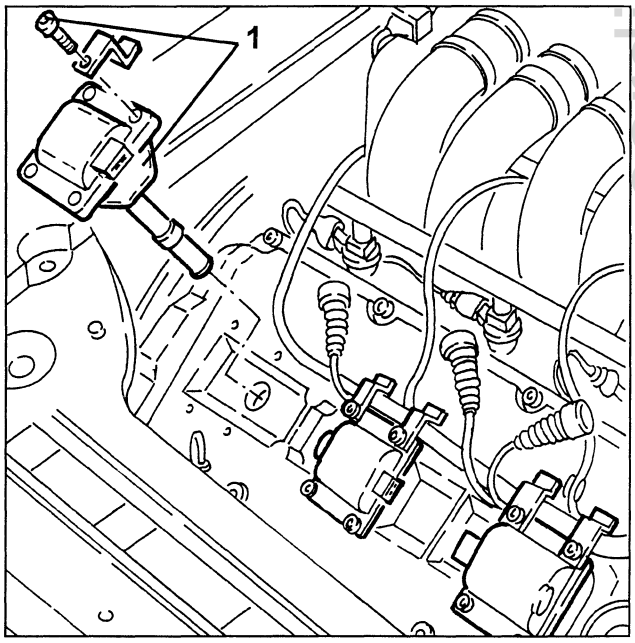

cardiagn.com

1. Disconnect the earth wire from the left-hand cylinder head tappet cover.

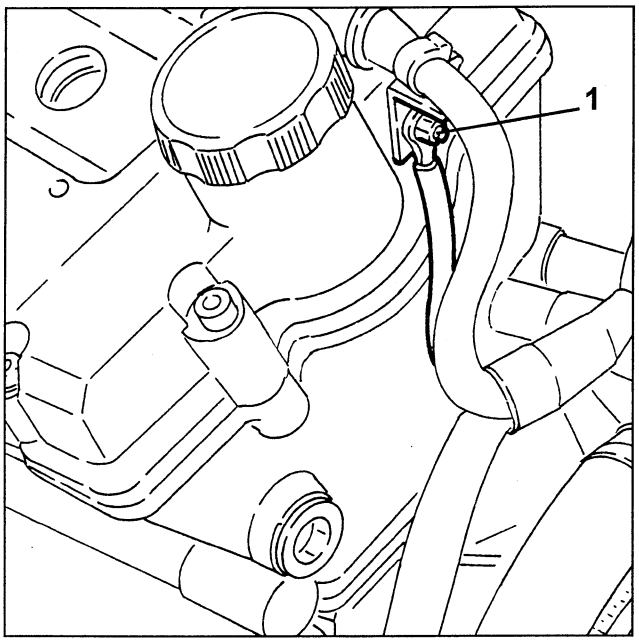

1. Loosen the fastening screws and remove the timing belt upper guard bracket nut from the left-hand cylinder head.

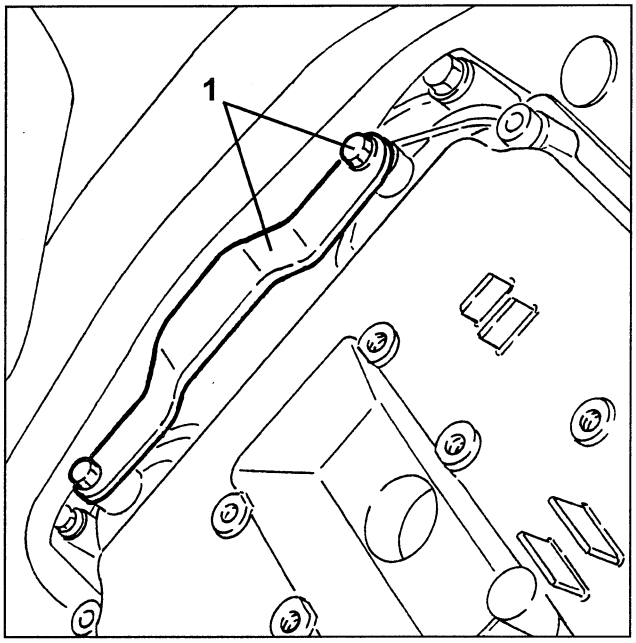

1. Disconnect the injector electrical connections and move the wiring aside.

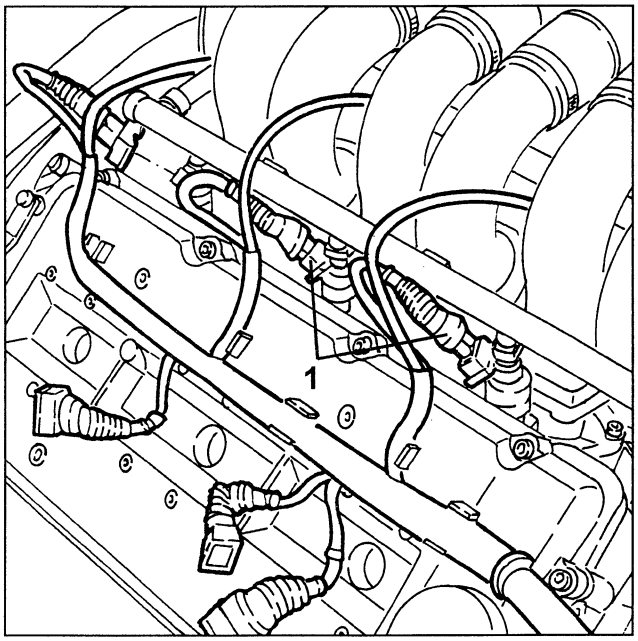

1. Loosen the fastening screws and remove the cover from the left-hand cylinder head cover.

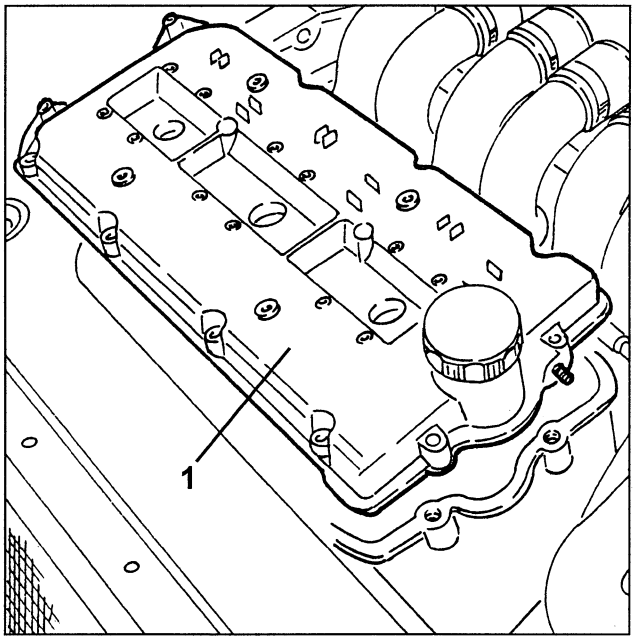

cardiagn.com

1. Loosen the fastening screws and remove the right-hand cylinder head cover.

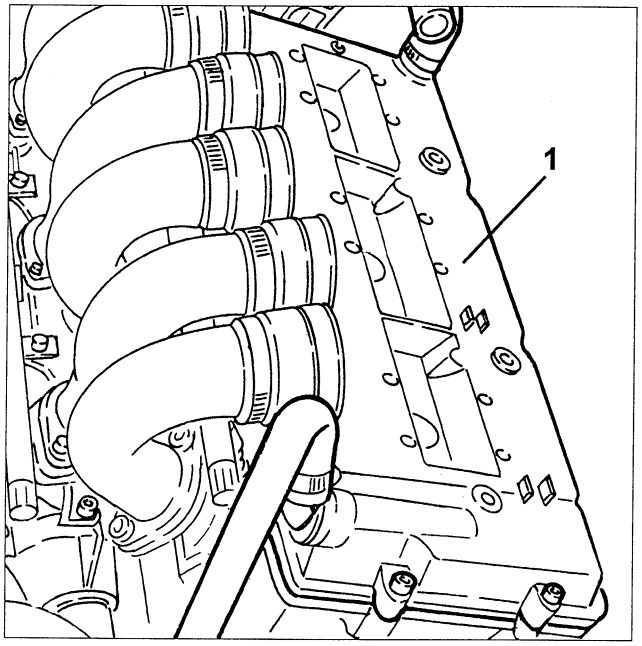

1. Loosen the timing belt take-up device fastening screws.

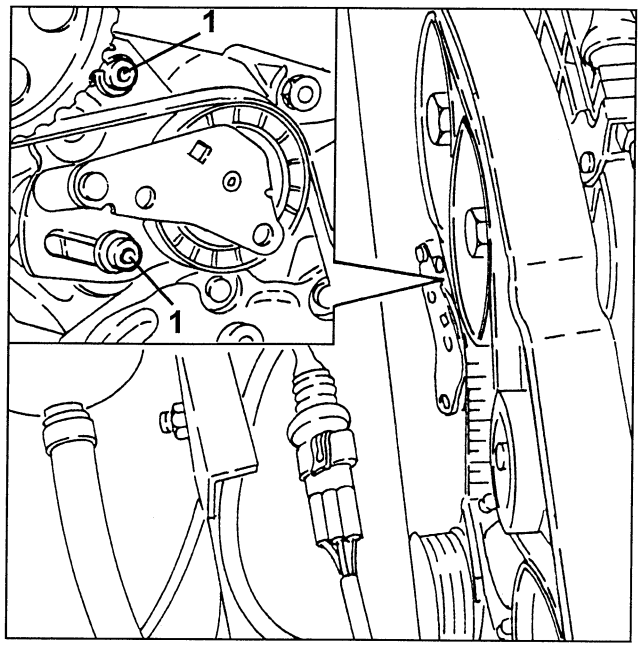

1. Fit tool no. 1.825.013.000 in the first cylinder spark plug seat.
- Take 1st cylinder piston to TDC, firing stroke, by slightly turning the crankshaft in both directions by means of the auxiliary unit drive pulley.

NOTE: Make sure the last crankshaft rotation is in the direction of operation.

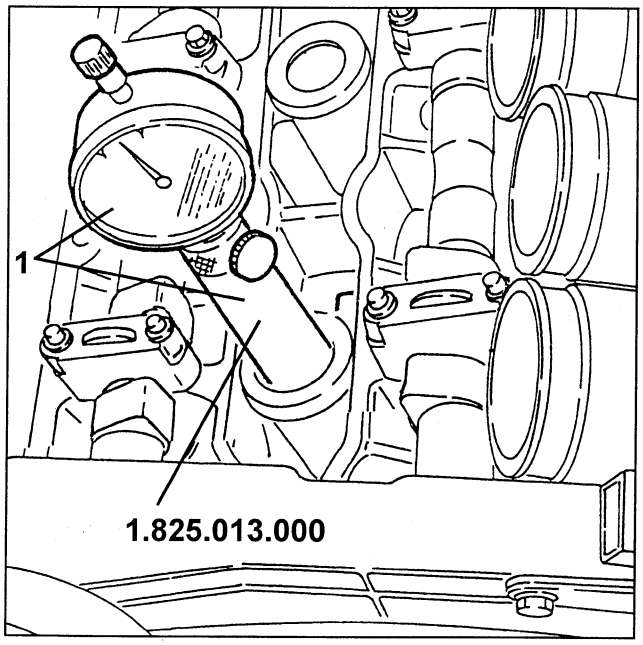

1. Loosen the engine pulley nut with tool no. 1.870.646.000 to contrast torque.

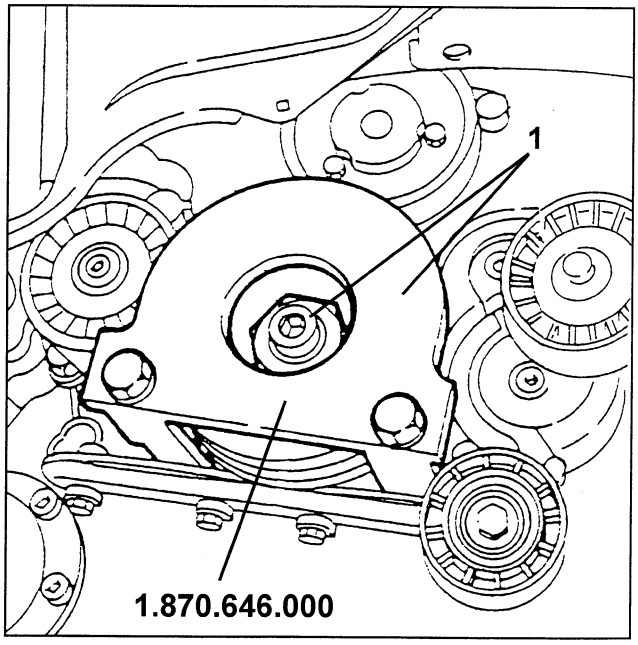

cardiagn.com

- Remove tool no. 1.870.646.000.
1. Loosen the nut and remove the engine pulley.
2. Remove the timing belt.

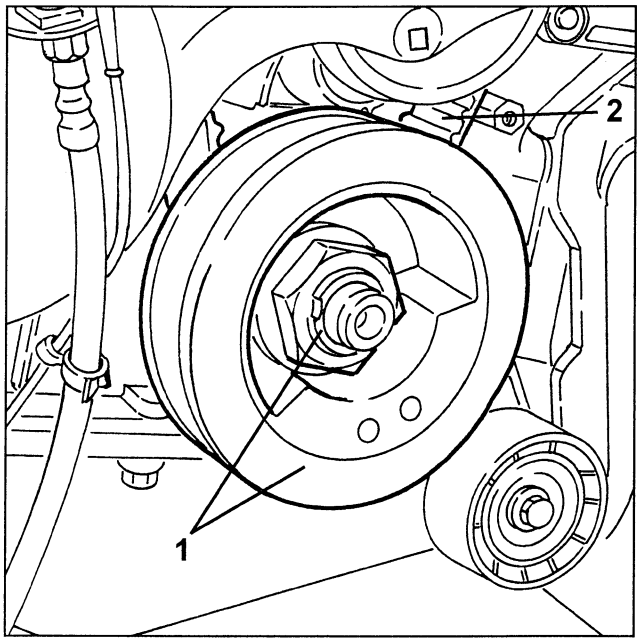

1. Remove the left-hand cylinder head camshaft bearings **4** and **7**.

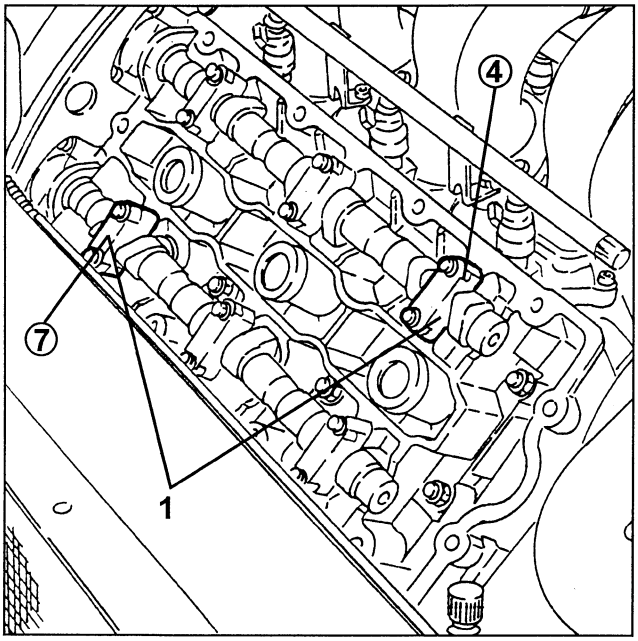

1. Remove the right-hand side camshaft bearings **B** and **G**.

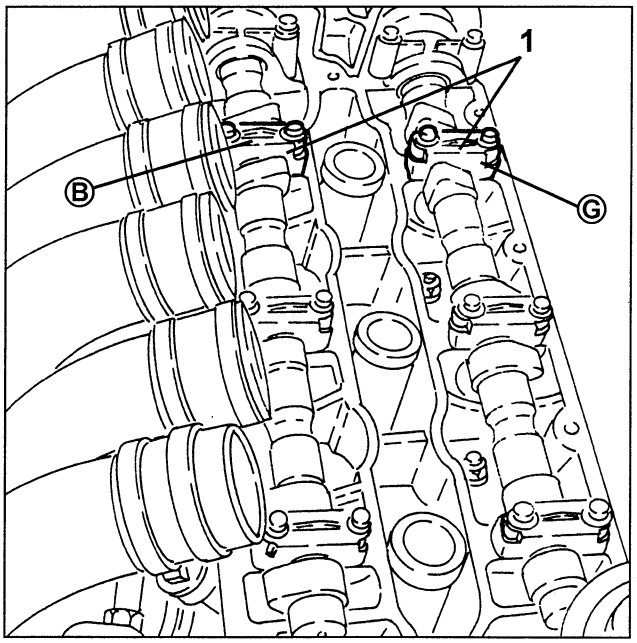

1. Use tool no. 1.822.146.000 and turn each camshaft so that the reference marks on the shafts coincide with the upper cylinder head surface.

NOTE: The reference marks must face the centre of each cylinder head.

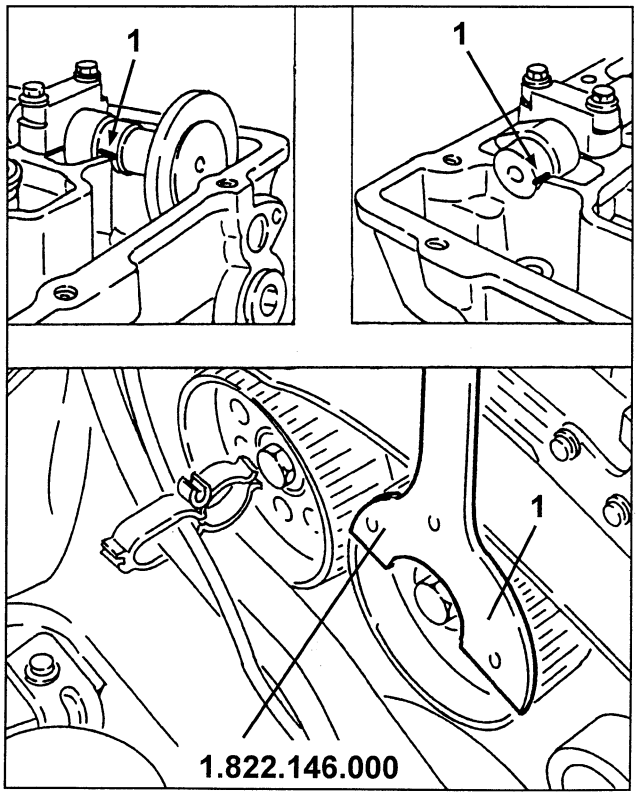

cardiagn.com

1. Fit templates no. 1.825.040.000 in the position shown on the templates in the place of the removed camshaft bearings.

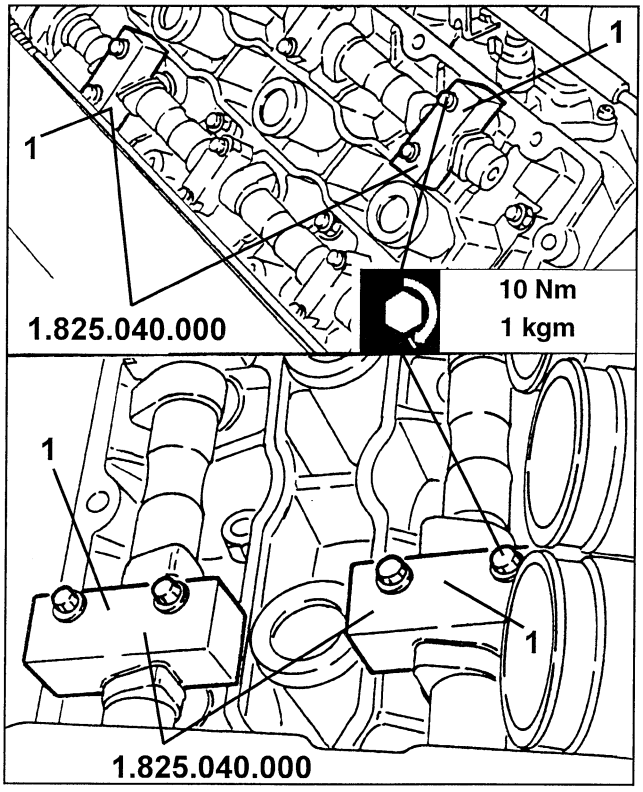

- Lift the vehicle and fit a new timing belt on the drive pulley.
1. Refit the engine pulley and fasten the respective nut without torquing.
2. Fit tool no. 1.870.646.000 and torque the engine pulley fastening nut as prescribed.
- Remove tool no. 1.870.646.000.

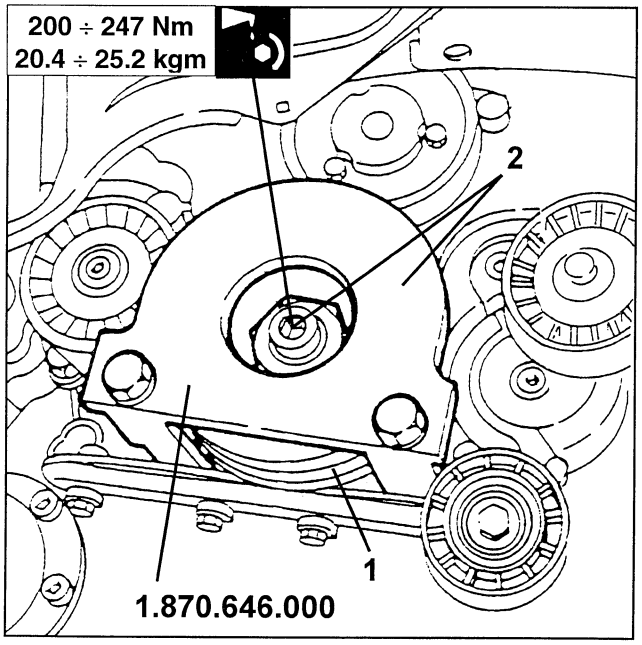

1. Loosen the fastening screws and remove the tie-rod and bracket on underbody side.

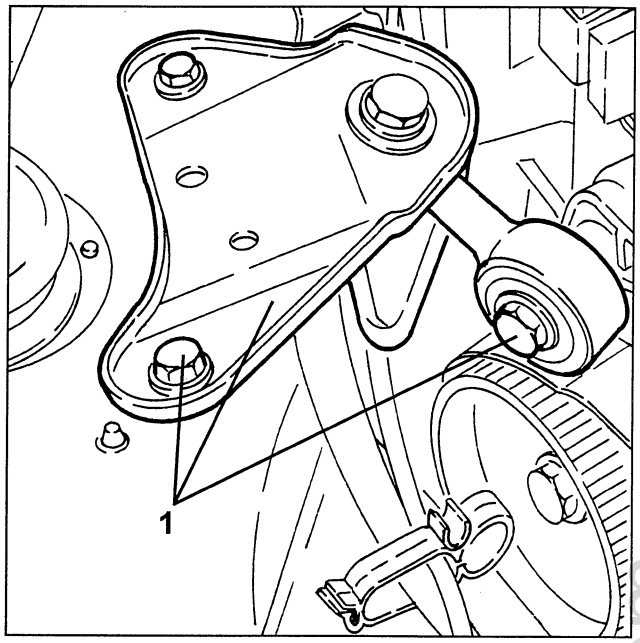

1. Lower the vehicle. Use extension no. 1.822.150.000 and tool no. 1.822.146.000 to contrast torque. Loosen the camshaft drive pulley fastening screws.

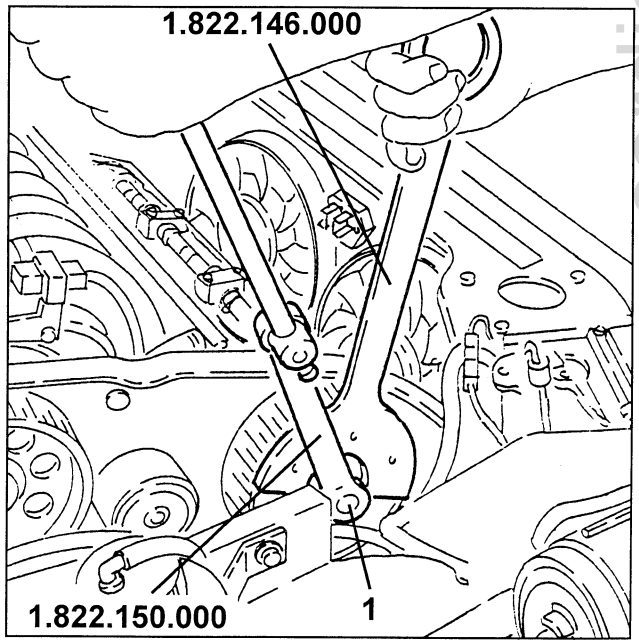

cardiagn.com

1. Use tool no. 1.860.954.001. Extract the camshaft drive pulleys and reposition in their seats fastening the screws by hand.

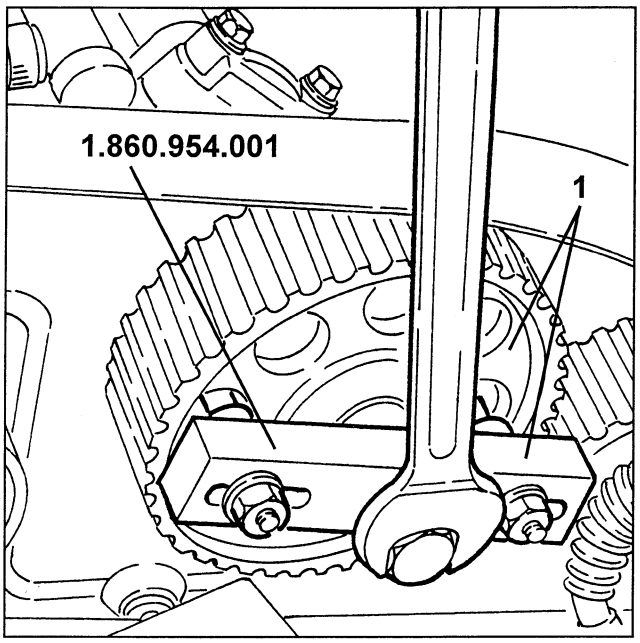

1. Turn the engine pulley fastening nut slightly in both direction to take 1st cylinder piston to TDC, firing stroke.

NOTE: Make sure the last crankshaft turn is in the direction of operation.

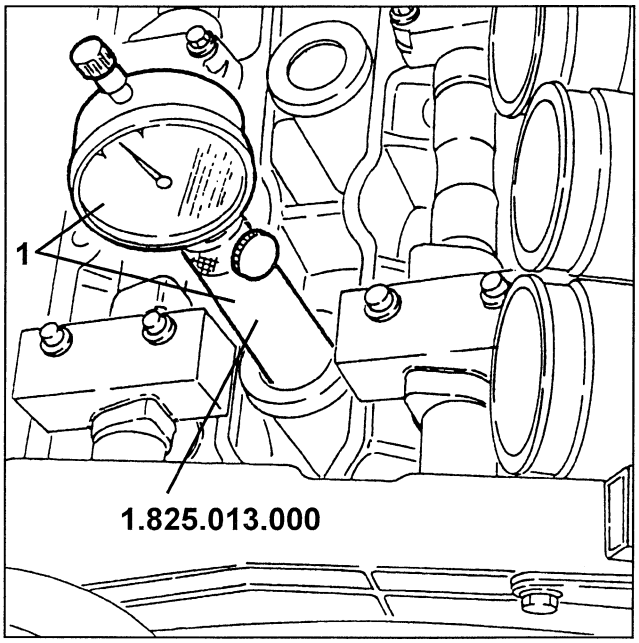

- Complete timing belt assembly by fitting it on the drive pulley.

1. Loosen the lower alternator screw to fit the timing belt tension tool.

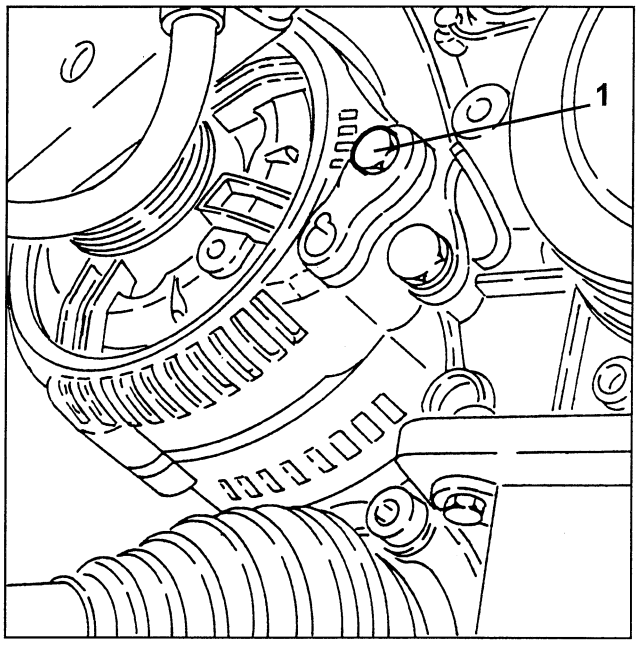

1. Fit timing belt tension tool no. 1.860.950.000 and fasten it with the previously screw (1a) to the alternator and screw (1b) to the coolant pump; tool pin (1c) should contrast the mobile part of the belt take-up.

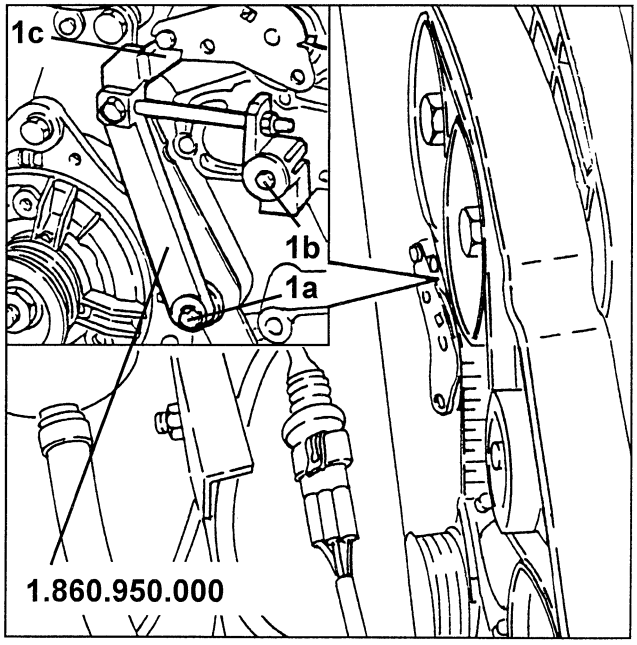

cardiagn.com

1. Take the mobile notch under the fixed notch on the belt take-up by means of the nut shown in the figure.

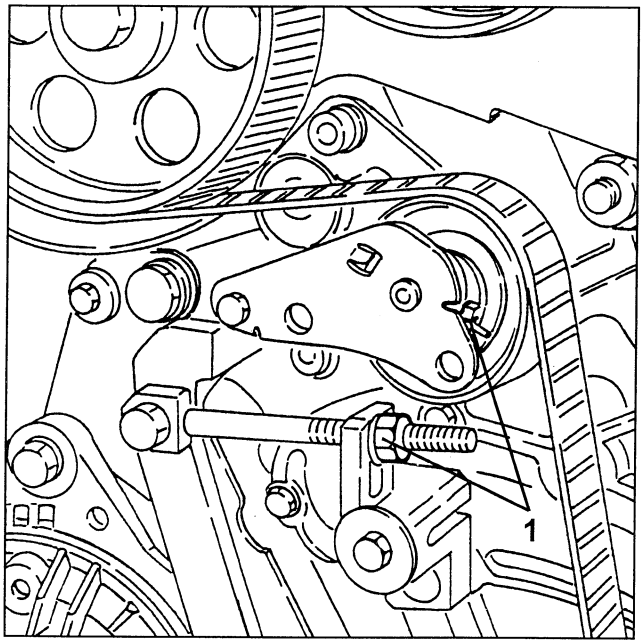

1. Use extension no. 1.822.150.000 and tool no. 1.822.146.000 to contrast torque: Torque the shaft drive pulley fastening screws as prescribed.

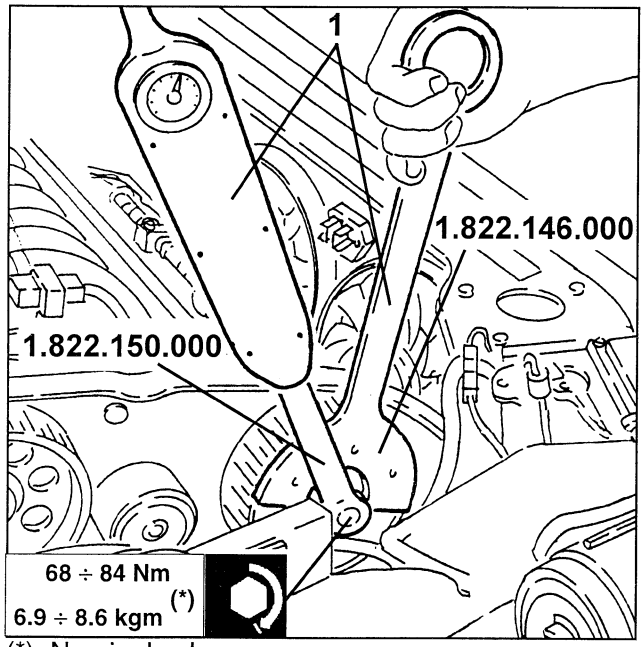

(*): Nominal value

1. Remove the previously fitted templates no. 1.825.040.000 and fit the respective bearings in their place. Torque the fastening screws as prescribed.

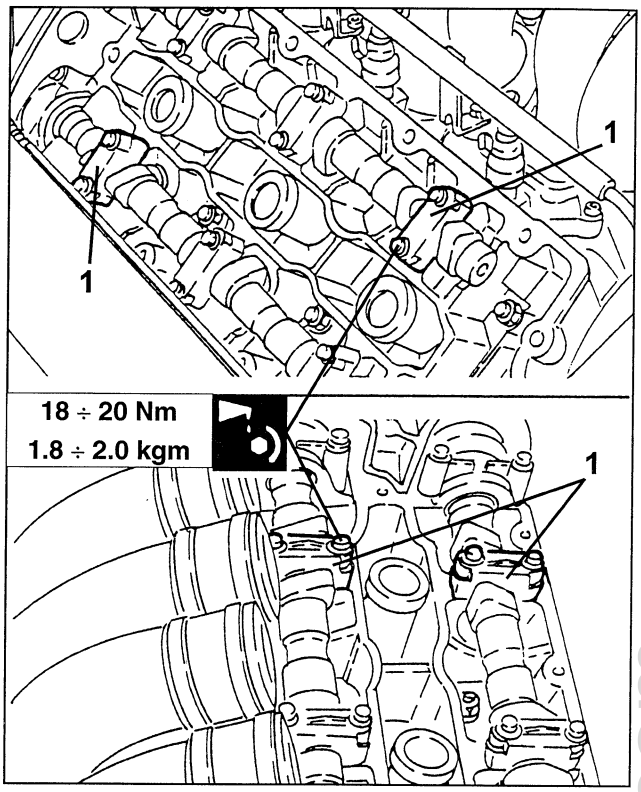

- Turn the crankshaft twice in the direction of rotation so to fit the timing belt well.
1. Check whether the fixed notch on the belt take-up coincides with the mobile notch. If this is not so, adjust take-up tension by means of nut (A) until the notches coincide.
2. Torque the belt take-up fastening screws and remove tension tool no. 1.860.950.000.

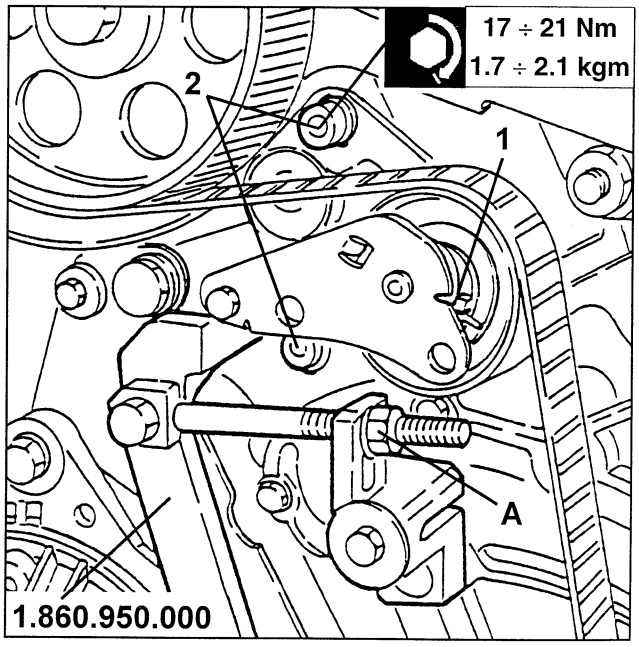

cardiagn.com

DESCRIPTION

The information and illustrations given below make it possible to quickly remove the power plant from its housing and subsequent refitting.

Disassembly of the engine on the bench is described in the volume "ENGINE OVERHAULING".
The following procedure gives the possibility to be used only in part depending on requirements. For further information and details see the chapters concerning the components concerned or specific units.

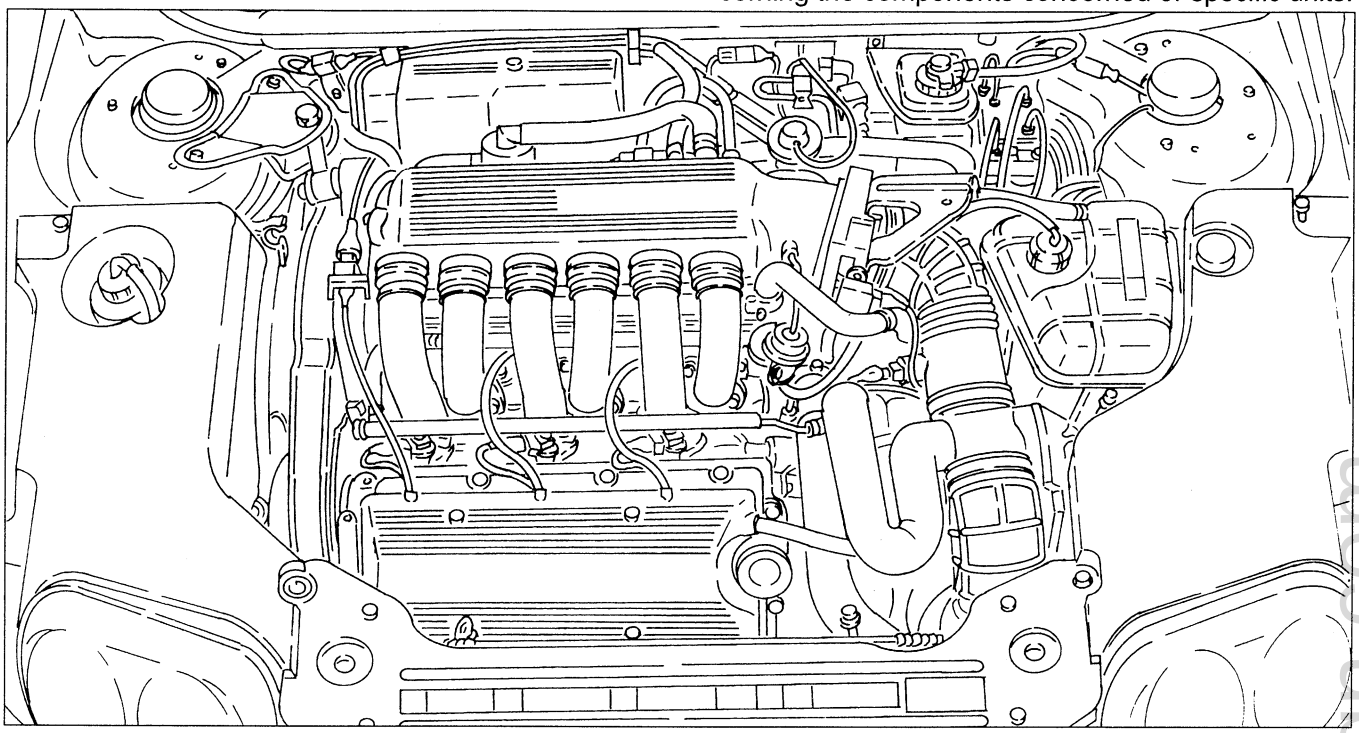

REMOVAL

- Set the car on a lift.
- Disconnect the battery (-) terminal.
- Remove the front wheels and mud flaps.
- Remove the engine compartment trim.
- Remove the right front wheel house.
- Drain the coolant fluid (R134a) of the air conditioning system (see specific paragraph).

1. Raise the car and drain the coolant fluid, disconnecting the radiator outlet sleeve and collect it in a suitable container.

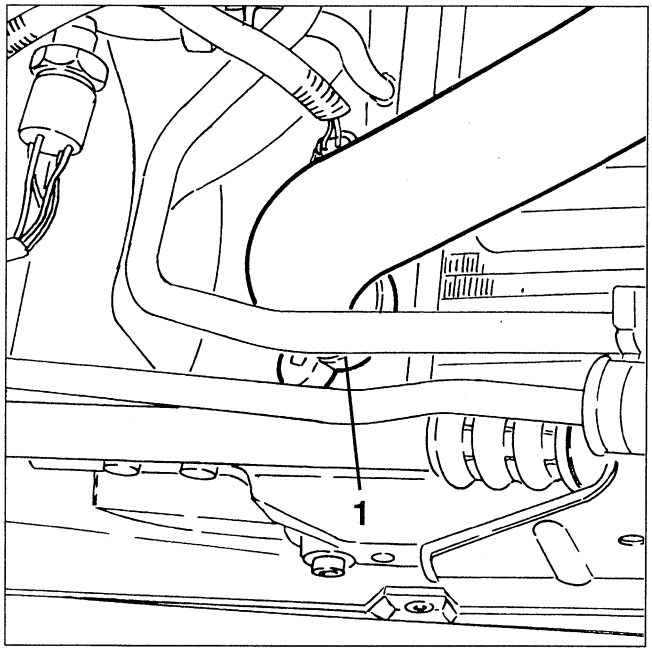

1. From the corrugated sleeve disconnect the oil vapour recovery pipe leading from the cylinder head.
2. Disconnect the electrical connection from the intake air temperature sensor.
3. From the corrugated sleeve disconnect the air intake pipe for the constant idle speed device.
4. Disconnect the electrical connection from the throttle potentiometer.

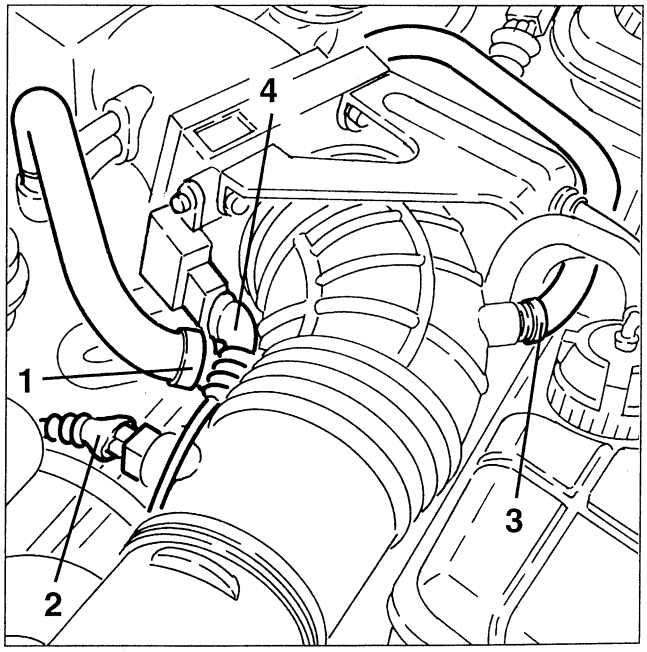

cardiagn.com

1. Remove the fastening button of the first section of corrugated sleeve to the resounder.
2. Slacken the two fastening clamps and remove the second section of the corrugated sleeve complete with resounders.

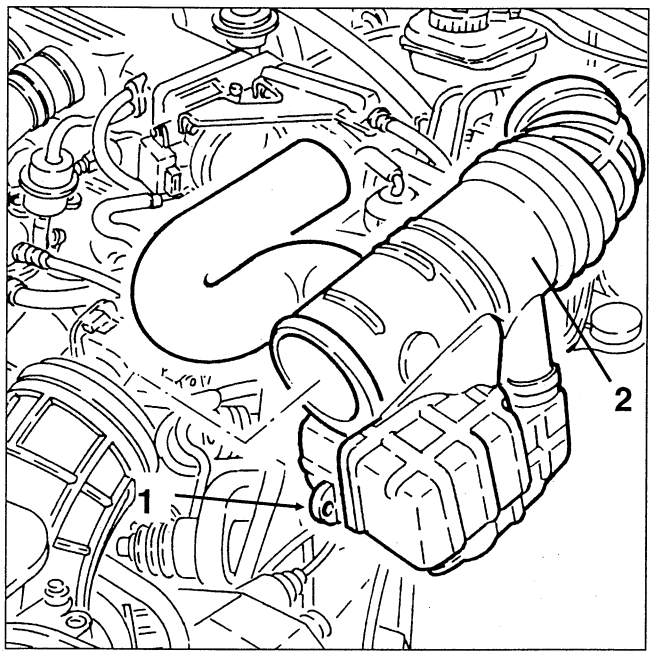

1. Slacken the three fastening nuts and remove the air cleaner cover complete with hot film air flow meter and the first section of the corrugated sleeve.

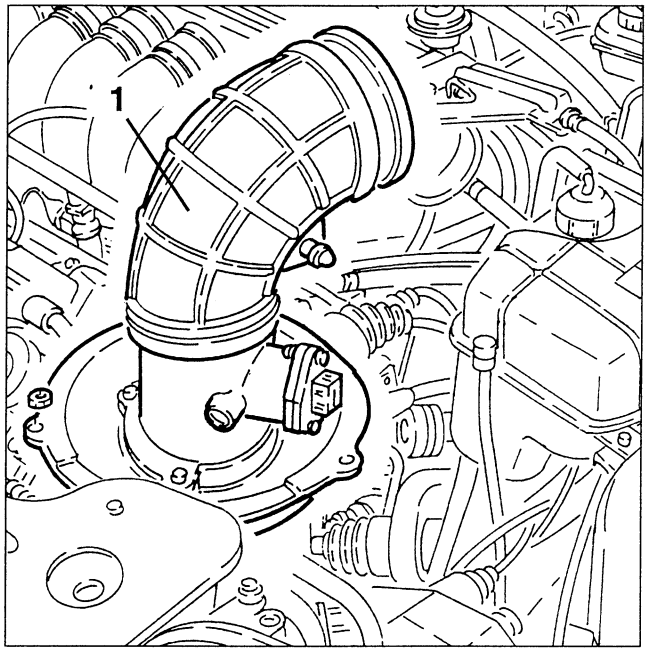

1. Disconnect the electrical connection from the hot film air flow meter.

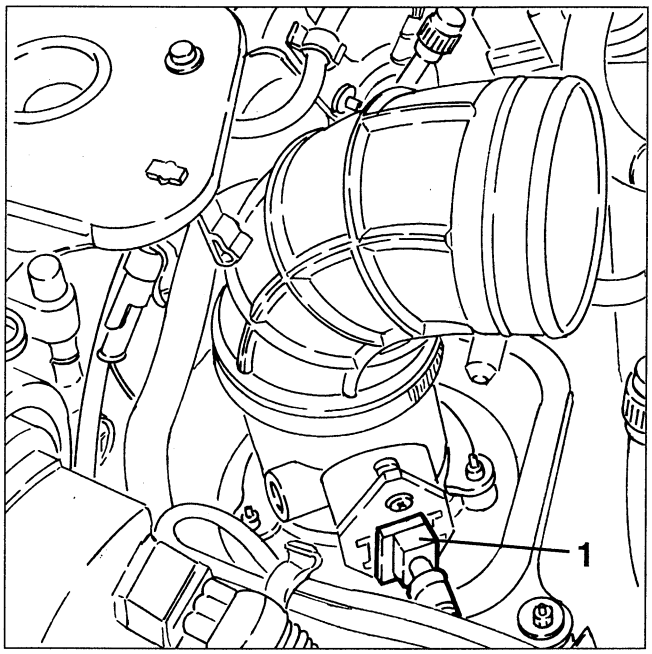

1. Remove the filtering element with its duct.

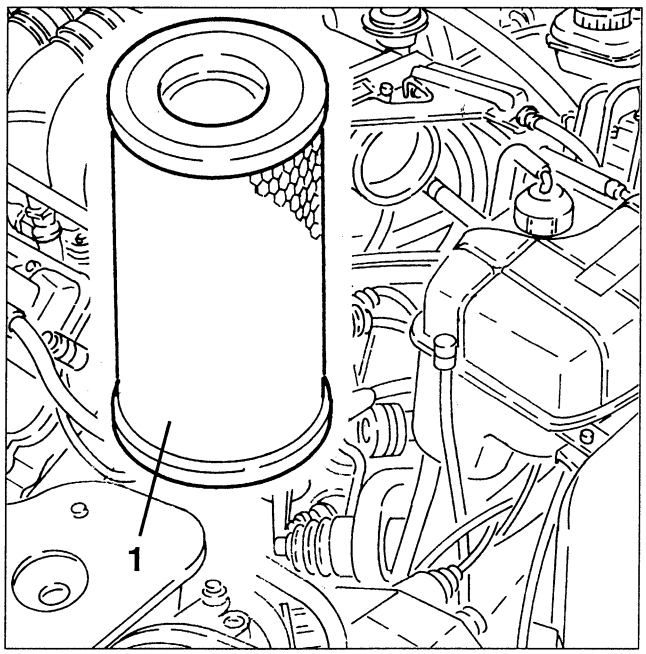

cardiagn.com

1. Slacken the fastening screws and remove the air cleaner container complete with support bracket.

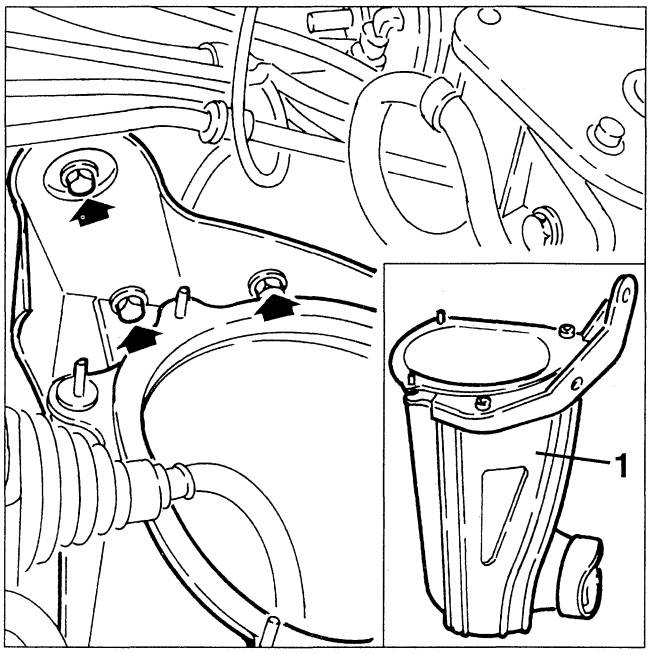

1. Disconnect the coolant return sleeve from the radiator from the thermostatic cup.

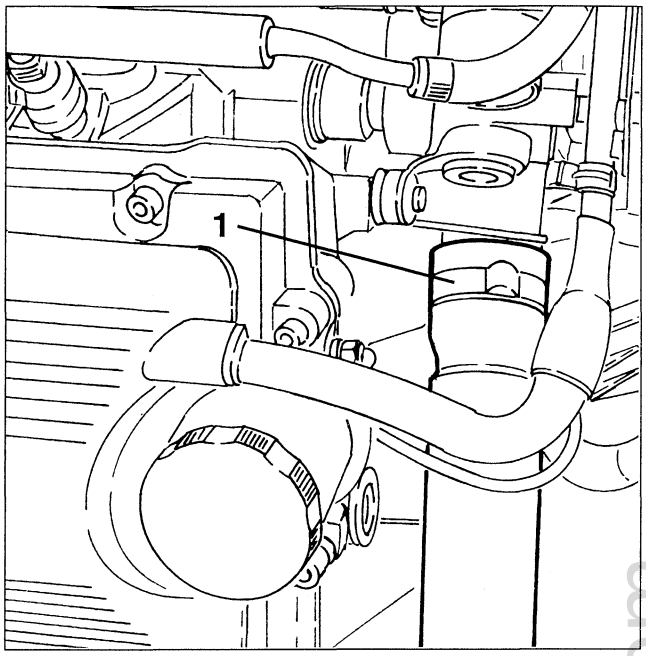

1. Disconnect the the coolant delivery sleeve to the radiator from the thermostatic cup.

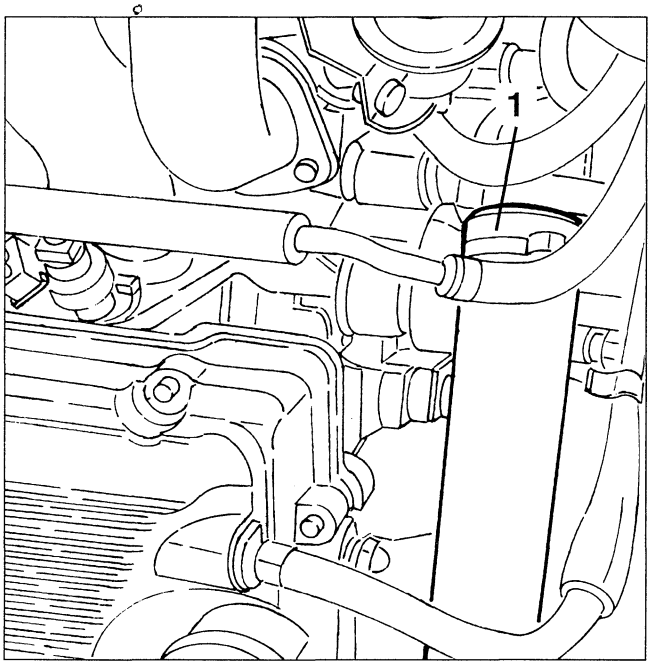

1. Disconnect the throttle barrel coolant outlet pipe from the expansion tank.
2. Slacken the fastening screws and remove the expansion tank complete with sleeve.

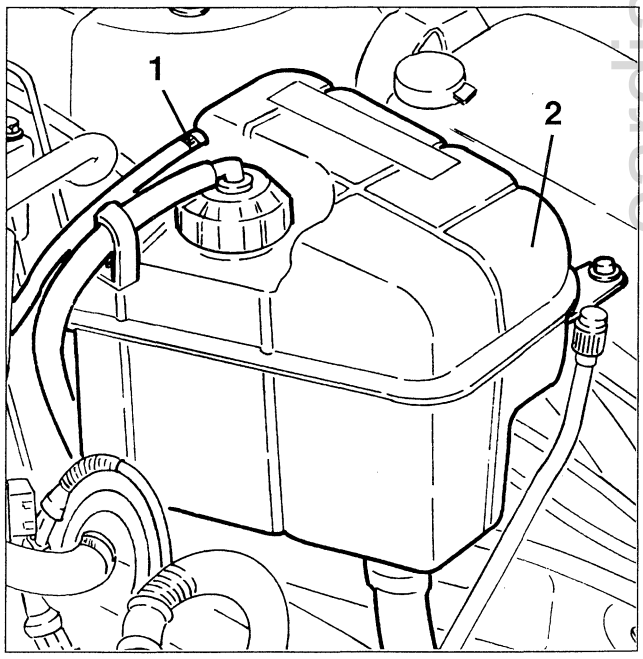

cardiagn.com

1. Disconnect the injection wiring connector.
2. Disconnect the electrical connection of the rear pinging sensor.
3. Disconnect the electrical connection of the rpm and timing sensor.
4. Disconnect the electrical connection of the cam angle sensor.

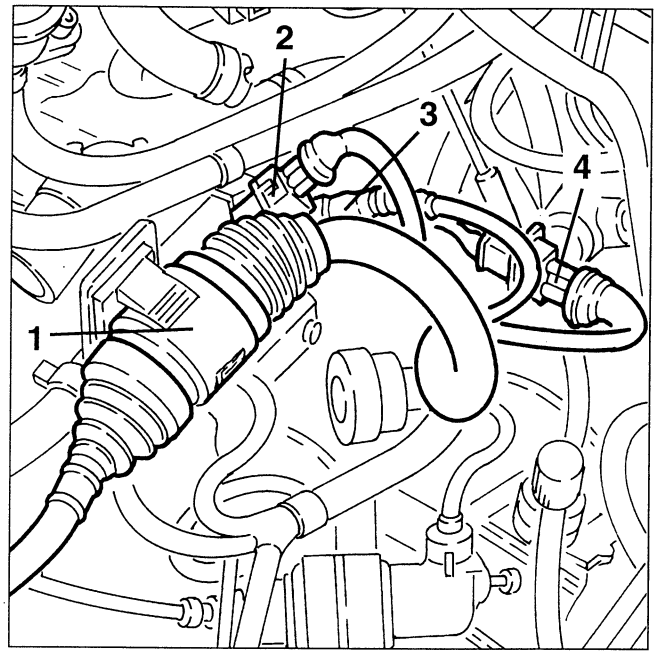

1. Disconnect the electrical connection from the engine coolant temperature sensor (NTC).
2. Disconnect the electrical connection from the coolant temperature transmitter and maximum temperature thermal contact.

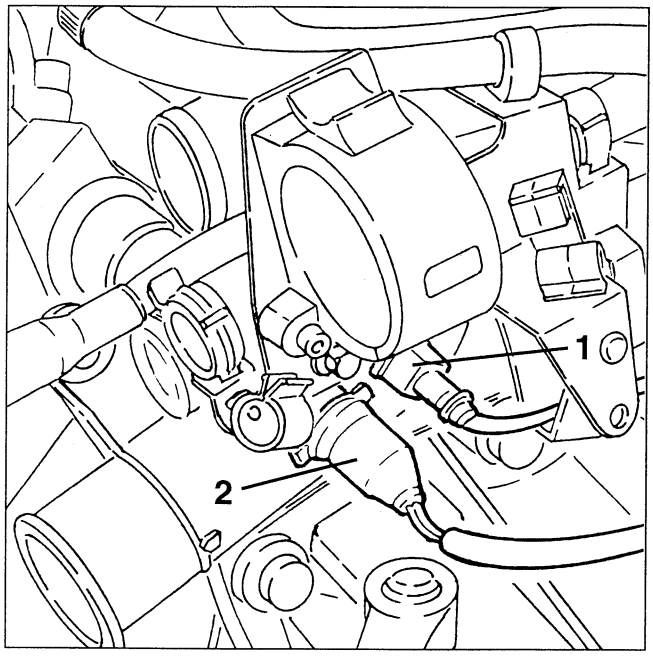

1. Disconnect the electrical connection from the reverse gear sensor.

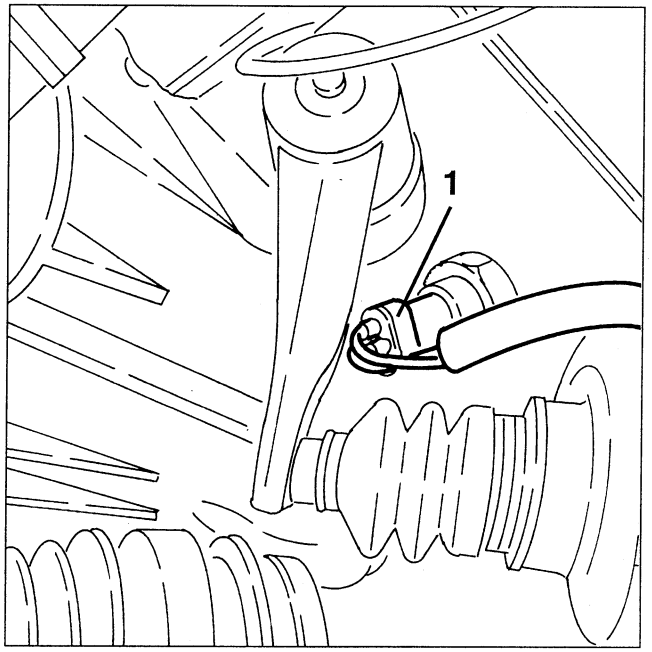

1. Disconnect the cable for synchronised reverse gear engagement.

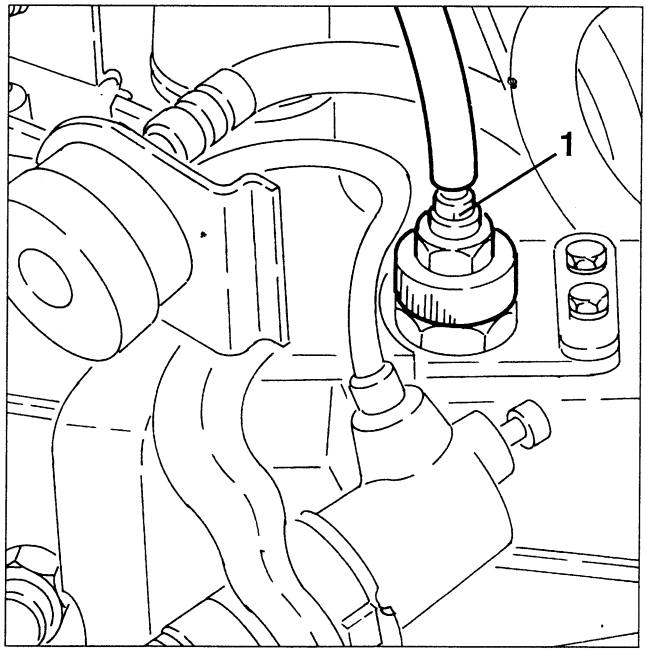

cardiagn.com

1. Slacken the fasteners and remove the injection wiring connector supports and pipe fasteners.

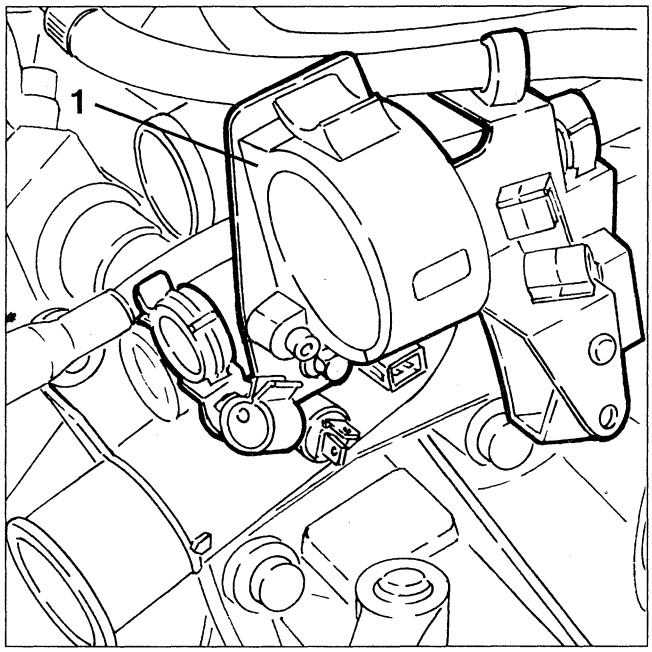

1. Disconnect the fuel delivery pipe from the distributor manifold.
2. Disconnect the excess fuel return pipe to the tank from the pressure regulator.

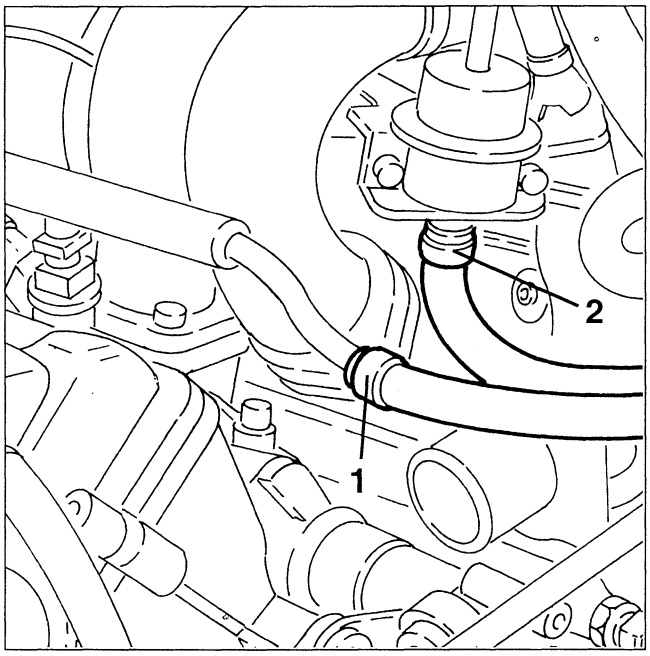

1. Disconnect from the union on the cylinder head the coolant delivery sleeve to the climate control system heater.
2. Disconnect from the thermostatic cup the coolant fluid return sleeve from the climate control system heater.

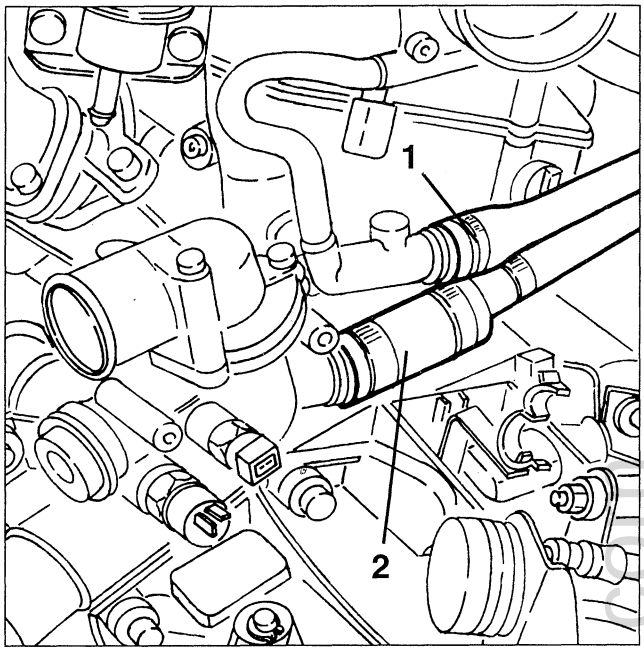

1. Working on the branch box, slacken the fastening nut and disconnect the earth terminal for the starter motor and alternator.

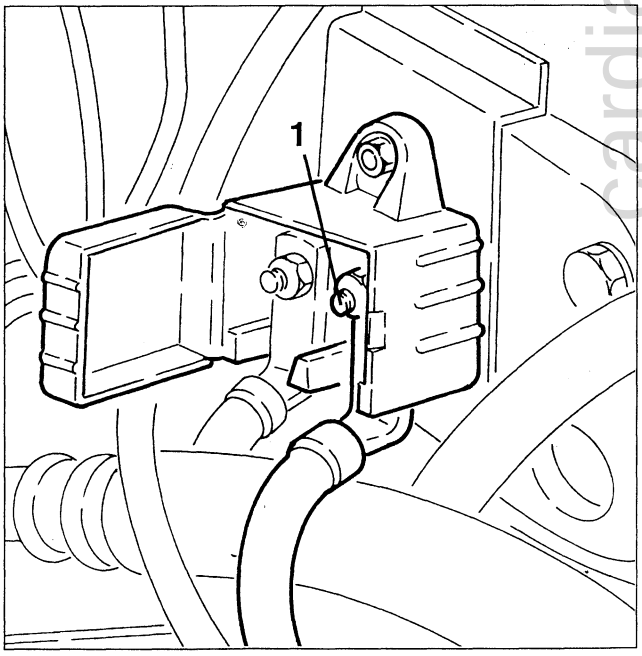

cardiagn.com

1. Disconnect the electrical connection of the tachometric sensor.

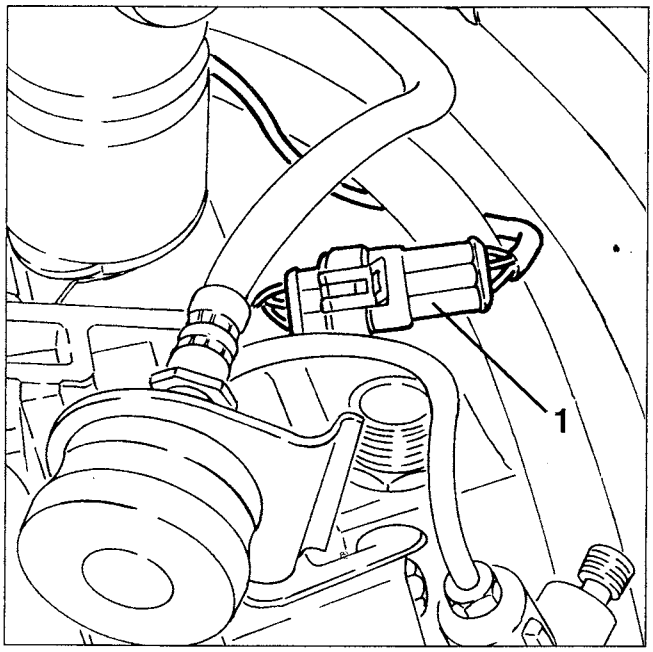

1. Slacken the screws fastening the clutch control cylinder support, then move everything aside without disconnecting the pipes.

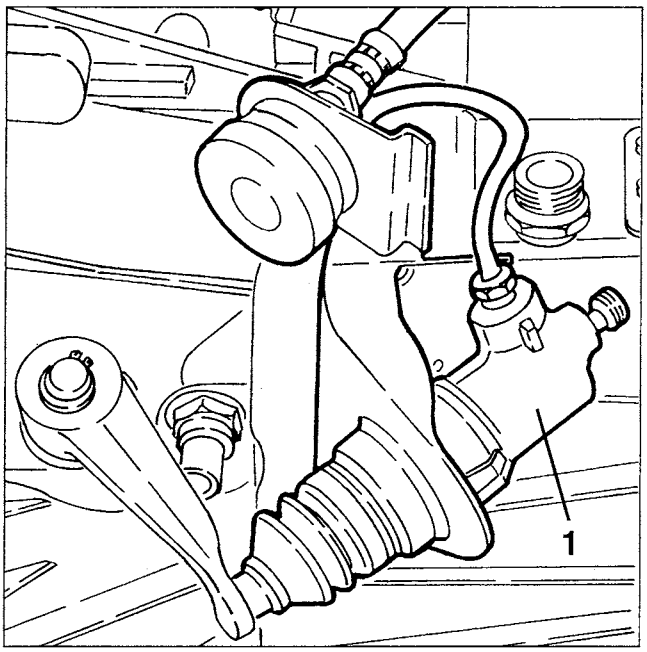

1. Disconnect the two electrical connections of the front services cable loom.

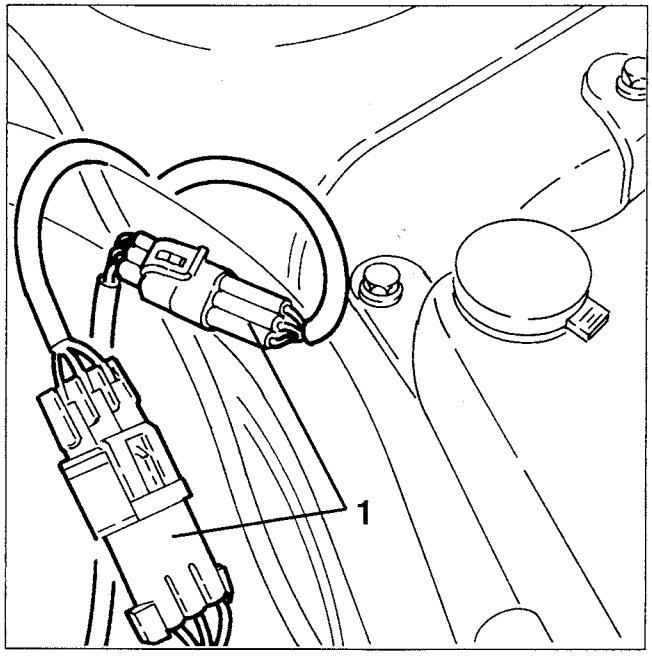

1. Slacken the fastening screws and remove the upper radiator crossmember.

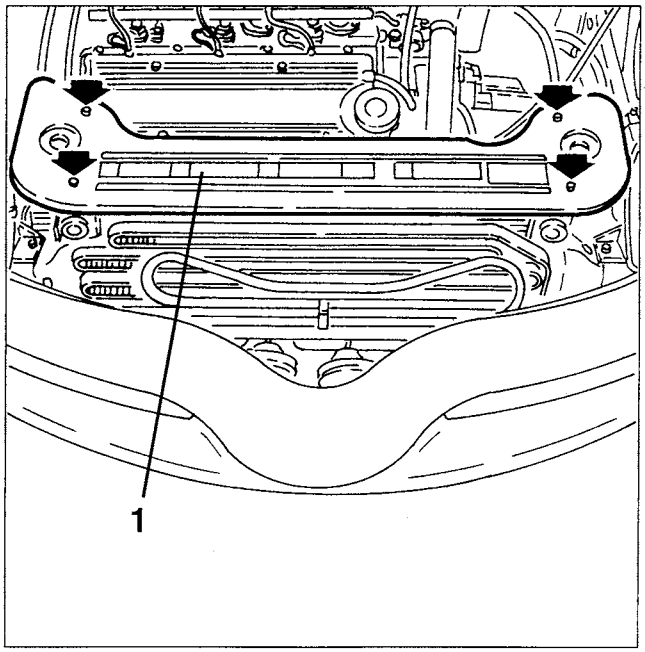

cardiagn.com

1. Disconnect the bonnet opening cables and move it aside to prevent it from hindering the following operations.
- Disconnect the electrical connection for supplying the electromagnetic joint of the conditioner compressor.
2. Disconnect the electrical connections from the fans and additional resistances, then release the cables from the clamps and groove.

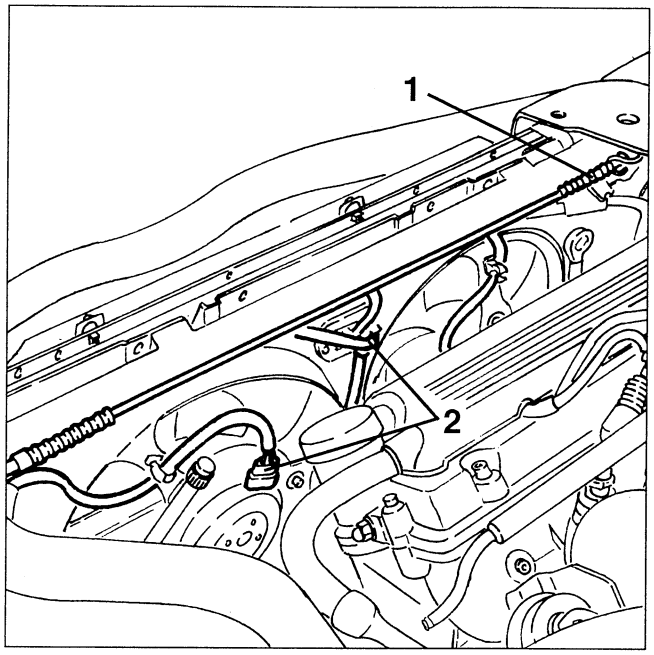

1. Slacken the fastening screws and remove the cooling fans withdrawing them upwards.

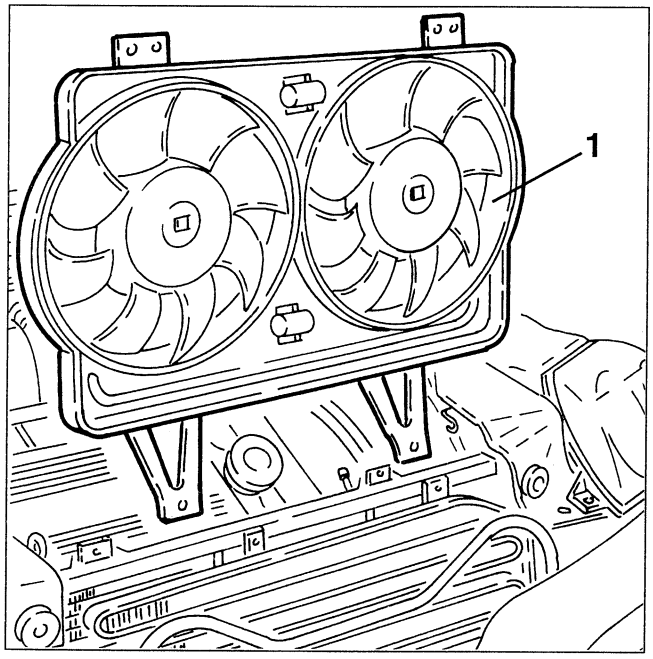

1. Slacken the fasteners and remove the heat shield from the exhaust manifold of the left cylinder head.

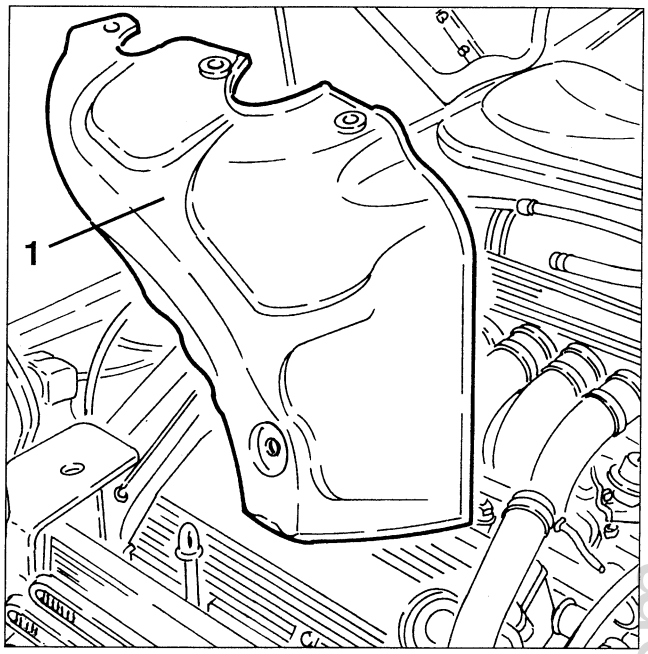

1. Slacken the fastening screw and disconnect the flange of the coolant fluid inlet and outlet pipes from the conditioner compressor (R134a).
- Using a suitable syringe drain the power steering tank oil.
2. Disconnect the unions of the oil intake and delivery pipes from the power steering pump.

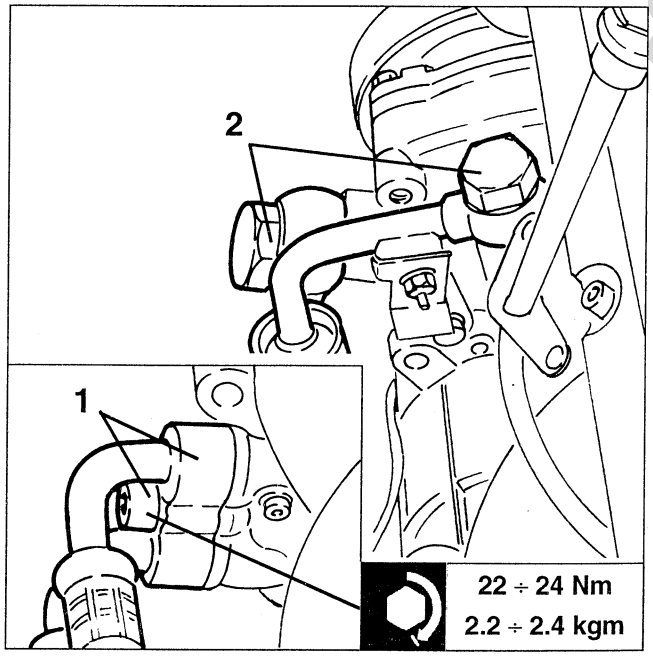

Cardiagn.com

1. Disconnect the electrical connection of the front pinging sensor.
2. Disconnect the earth cable (front) from the intake box.

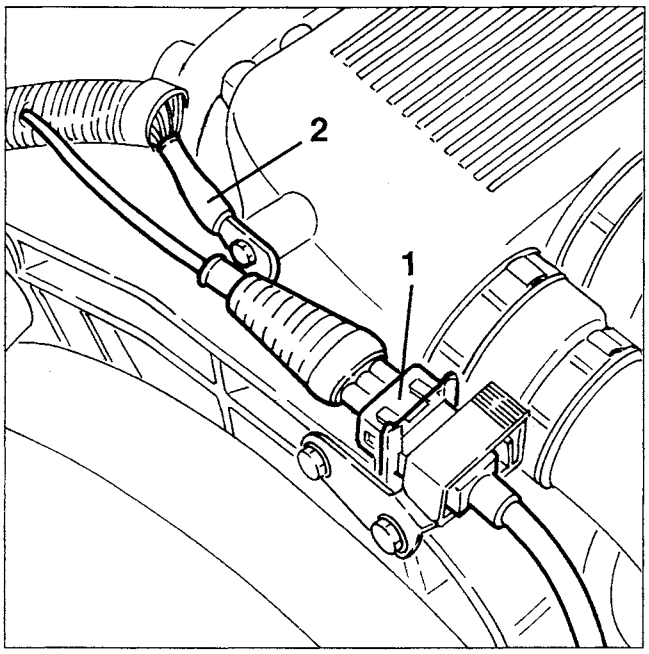

1. Disconnect the pneumatic signal inlet pipe leading from the solenoid valve from the E.G.R. valve.
2. Disconnect the accelerator cable from the throttle.

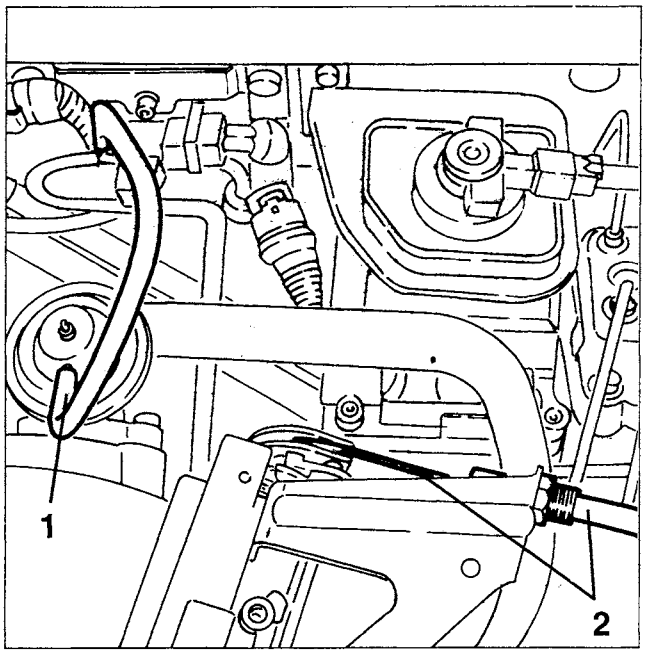

1. Disconnect the electrical connection from the constant idle device actuator.
2. Disconnect the fuel vapour recovery pipe from the intake box.
3. Disconnect the servobrake vacuum takeoff pipe from the intake box.

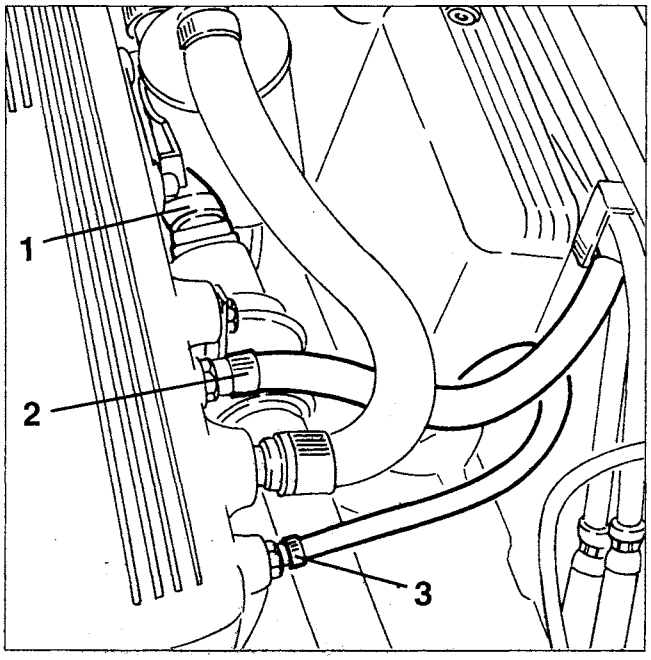

1. Disconnect the vacuum takeoff pipe for the E.G.R. modulation solenoid valve from the intake box.

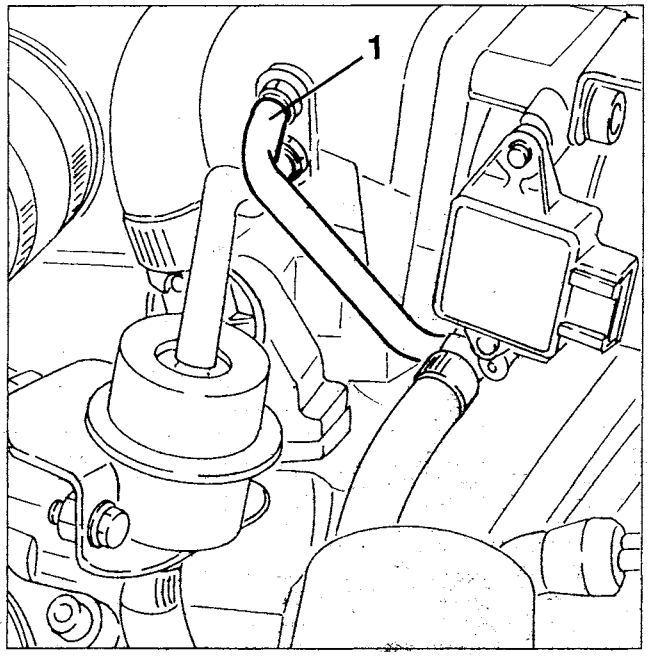

cardiagn.com

1. Remove the plastic cover of the relays, fuses and electrical connections.

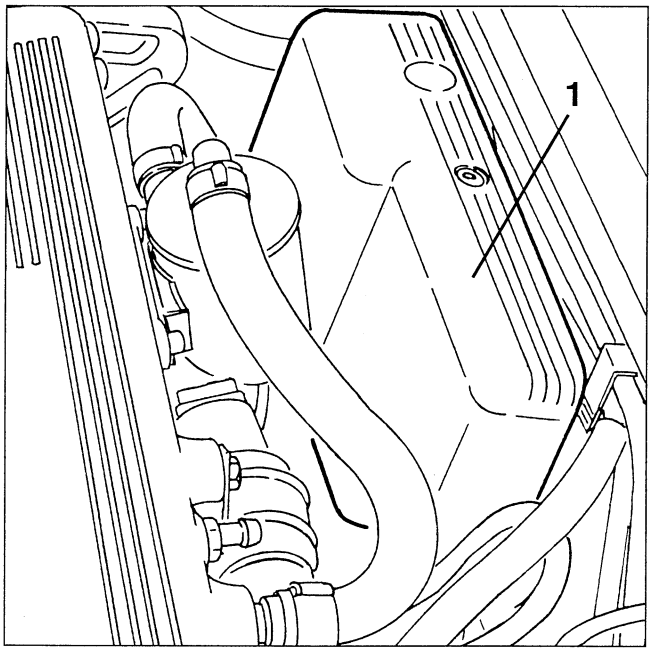

1. Slacken the fastening screws and remove the engine stay rod.

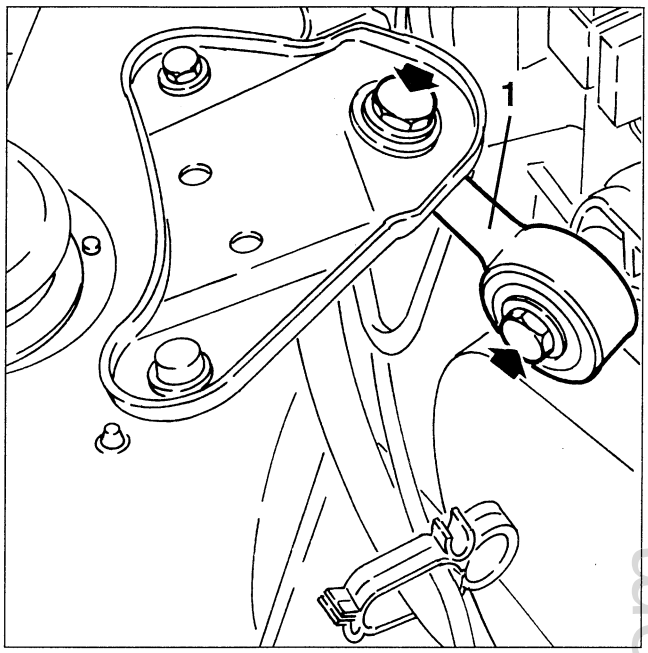

1. Slacken the fasteners and remove the heat shield.

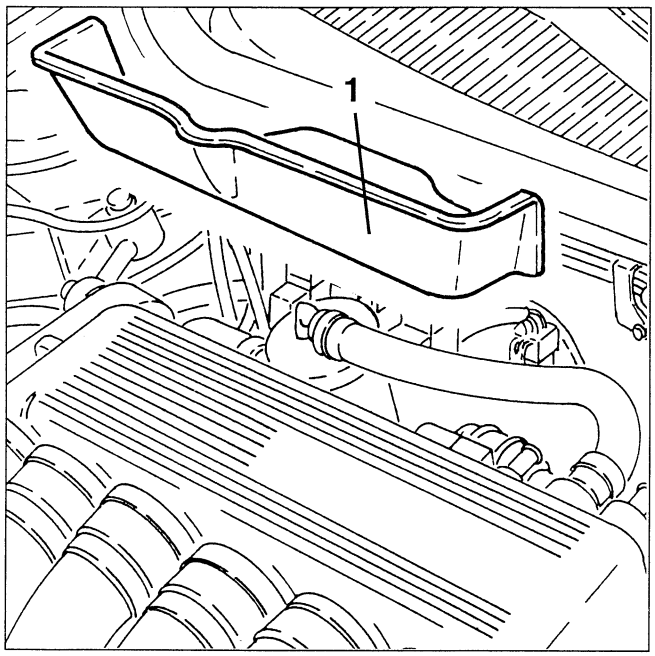

1. On the right cylinder head assemble a special engine support bracket.

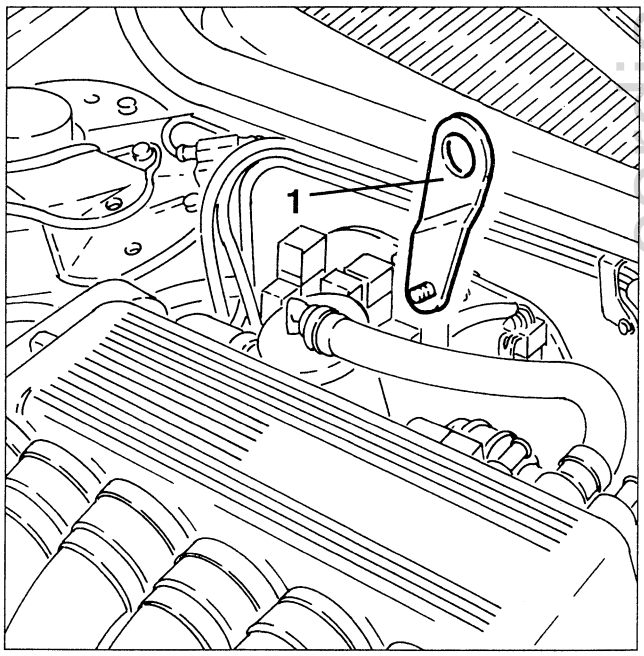

Cardiagn.com

1. Install cross rail no. 1.820.581.000 (R.4.0194) complete with supports 1.820.239.000 to support the power unit.

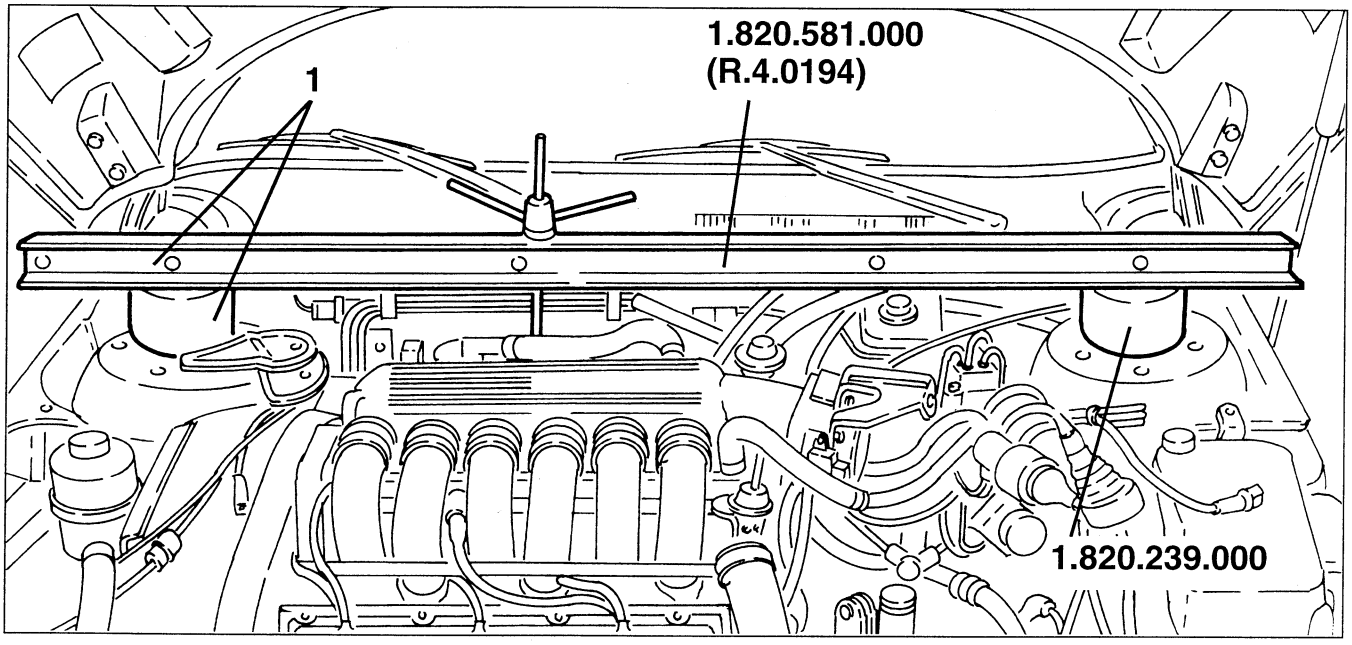

1. Raise the car and remove the front section of the exhaust pipe.

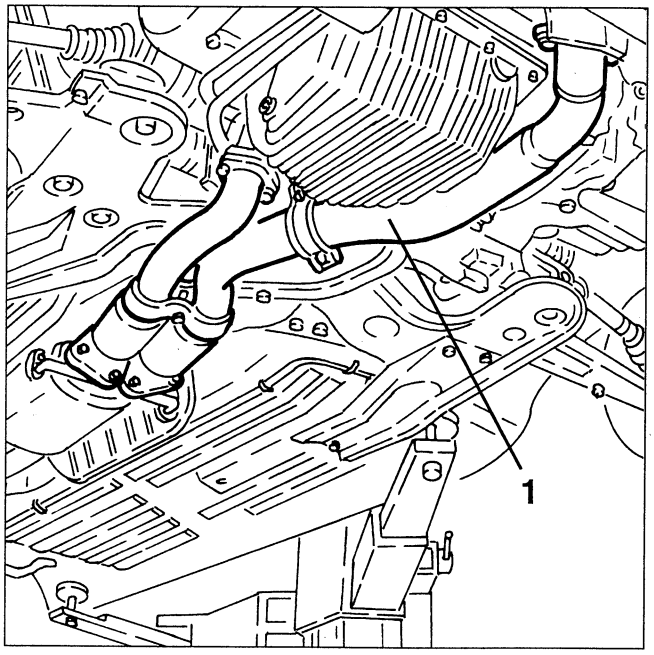

1. Slacken the fastening screws and remove the flywheel cover.
2. Slacken the fastening screws and remove the rpm and timing sensor.

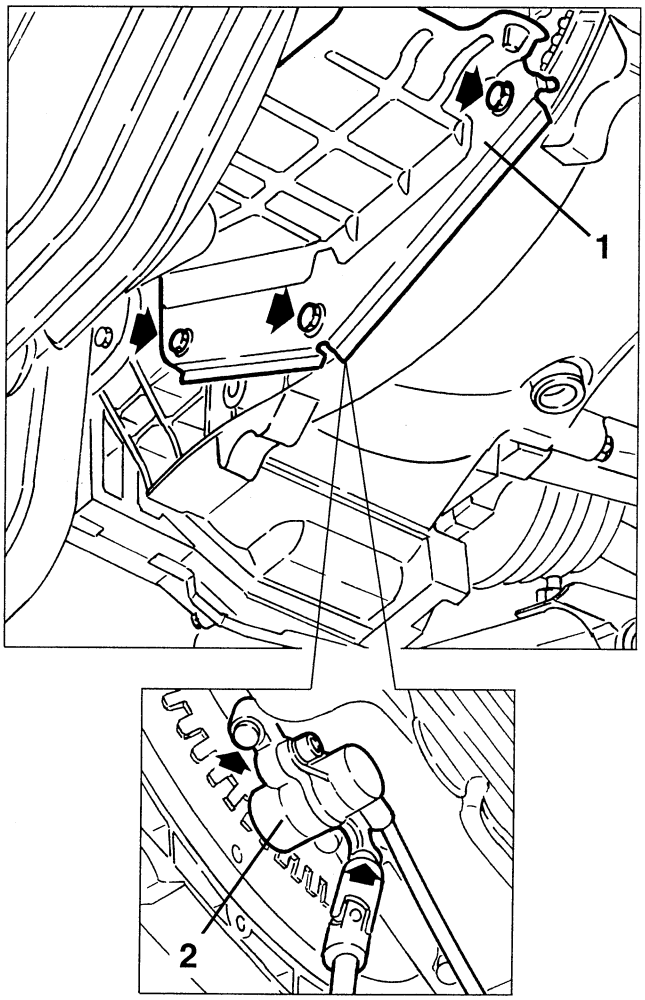

cardiagn.com

1. Disconnect the earth braid from the gearbox rear cover.
2. Slacken the fastening bolts and disconnect the axle shafts.

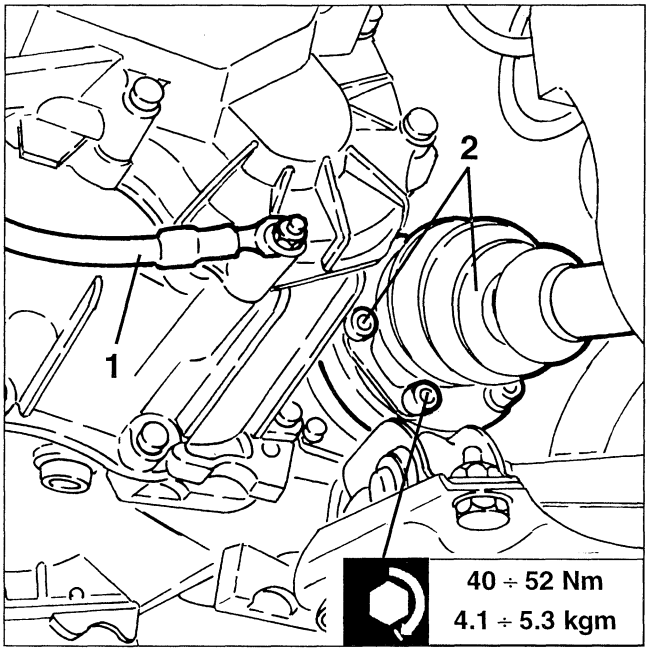

1. Position a hydraulic jack under the gearbox as illustrated.
2. Slacken the fastening screws and remove the powerplant rear support.

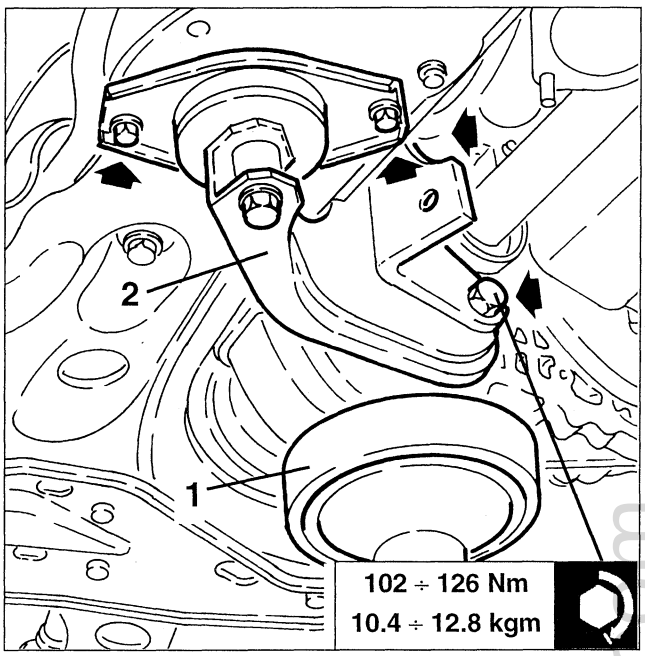

1. Slacken the bolts fastening the wishbones to the wheel uprights.

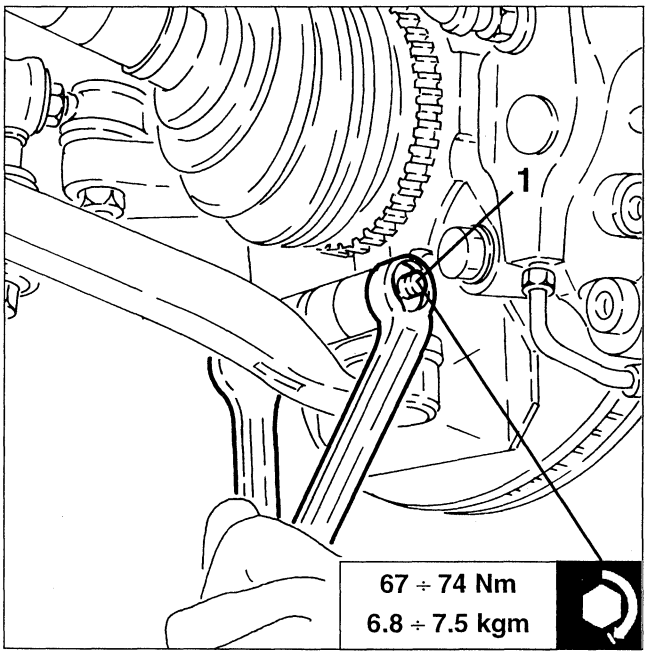

1. Slacken the fastenings and remove the heat shield from the power steering box.

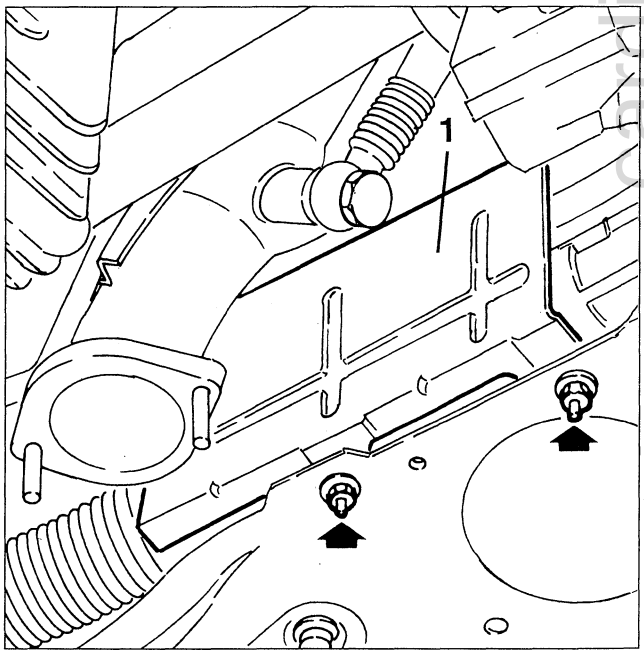

carDiagn.com

- Using a hydraulic jack support the crossmember using tool no. 1.860.978.000.
1. Slacken the screws and nuts fastening the crossmember, then remove it complete with wishbones, stabiliser bar and reinforcements.

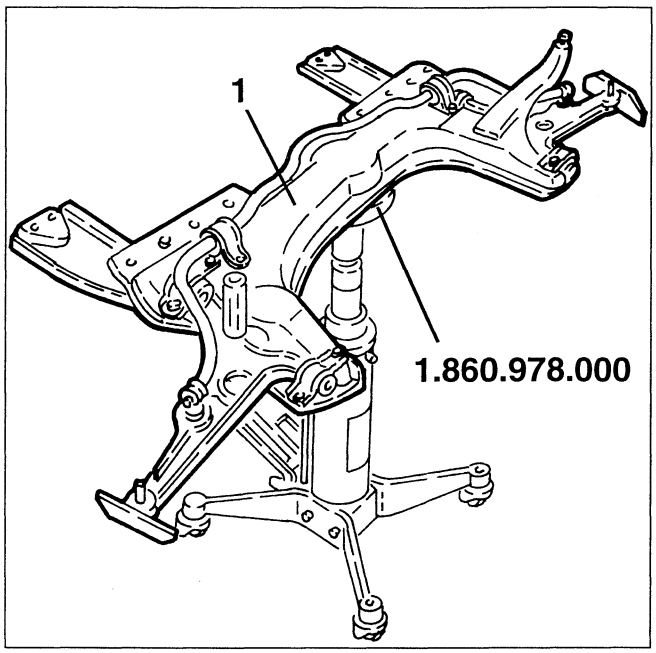

1. Slacken the fastening screws and remove the radiator lower cross rail.

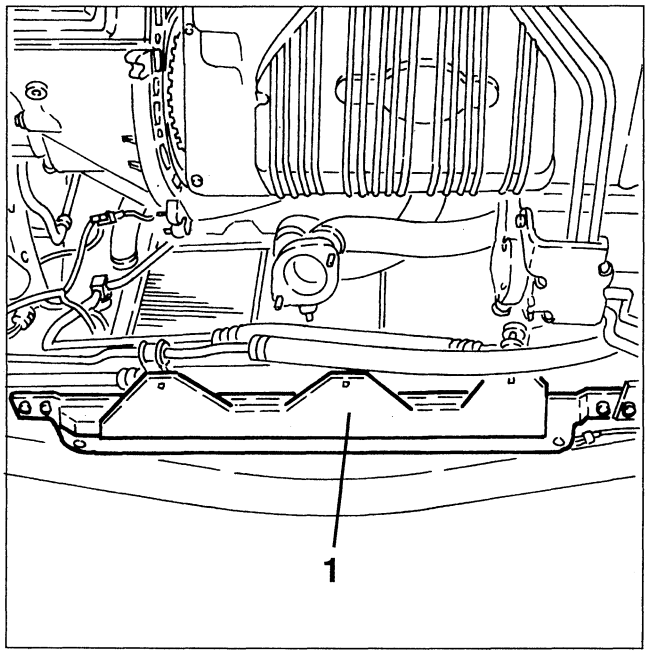

1. Slacken the fastening screws and remove the engine oil radiator from the support bracket, then without disconnecting the pipes, restrain it to the engine to prevent it from hindering the following operations.

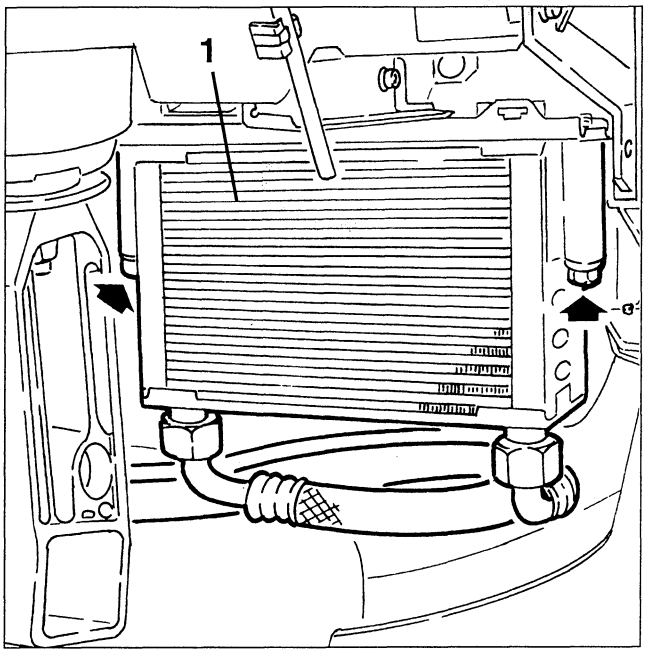

1. Position tool no. 1.820.225.000 complete with tool no. 1.820.234.000 on a hydraulic jack as illustrated.

NOTE: In order to balance the power unit on the support tool the jack should be placed in the centre hole of tool no. 1.820.225.000.

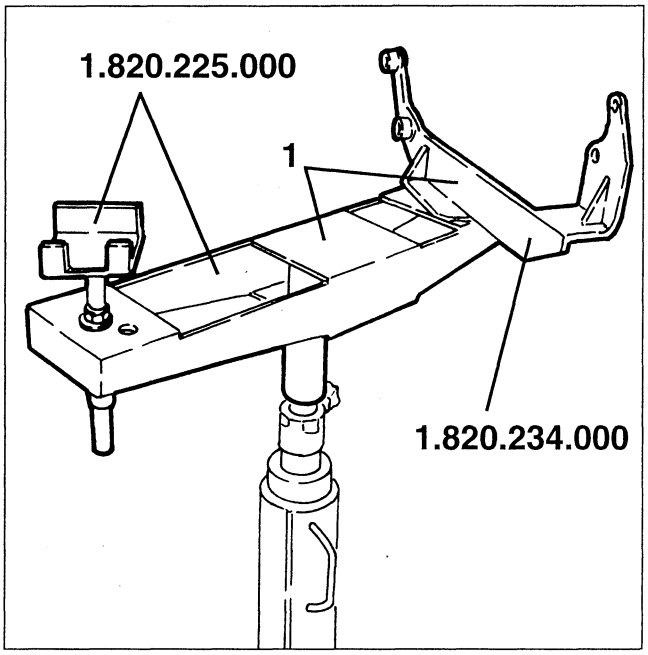

cardiagn.com

1. Remove the two screws illustrated for fastening the gearbox to the crankcase to be able to fasten the power unit support tool.

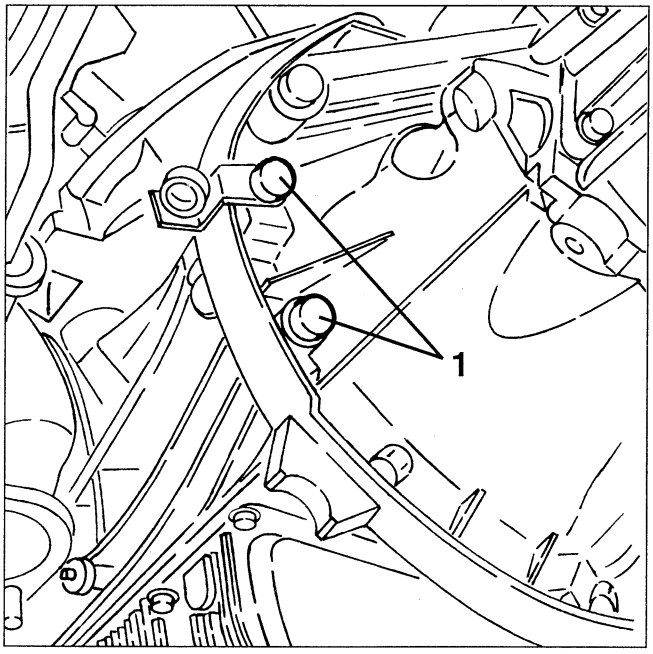

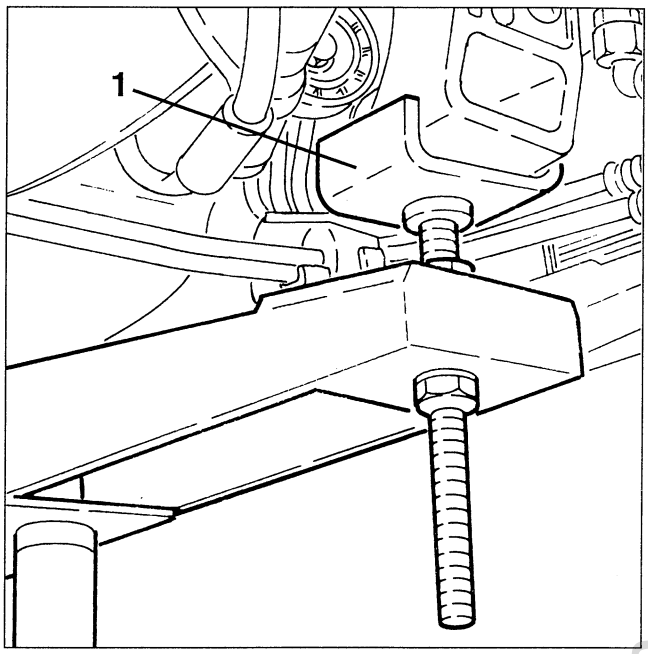

1. Position the hydraulic jack under the power unit and fasten the support tools as illustrated below.

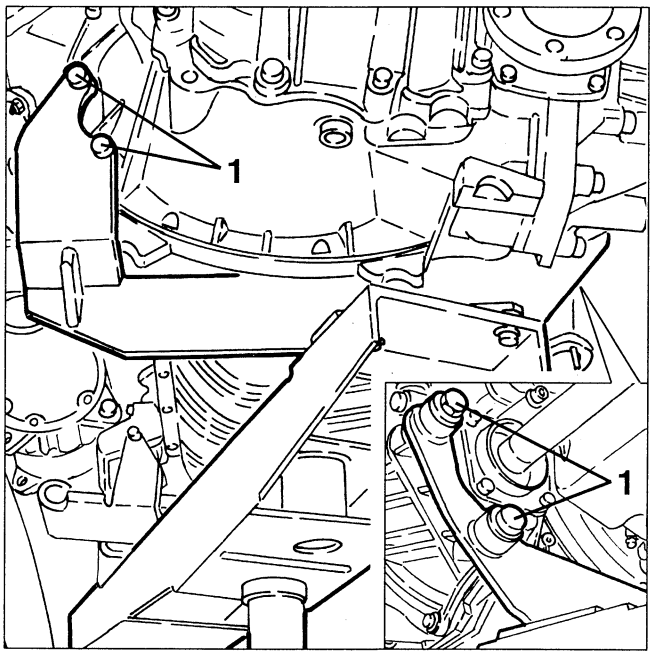

- Release the tierod of the safety cross rail of the power unit support installed previously from the support bracket.
1. Slacken the three screws fastening the power unit support on the camshaft side.

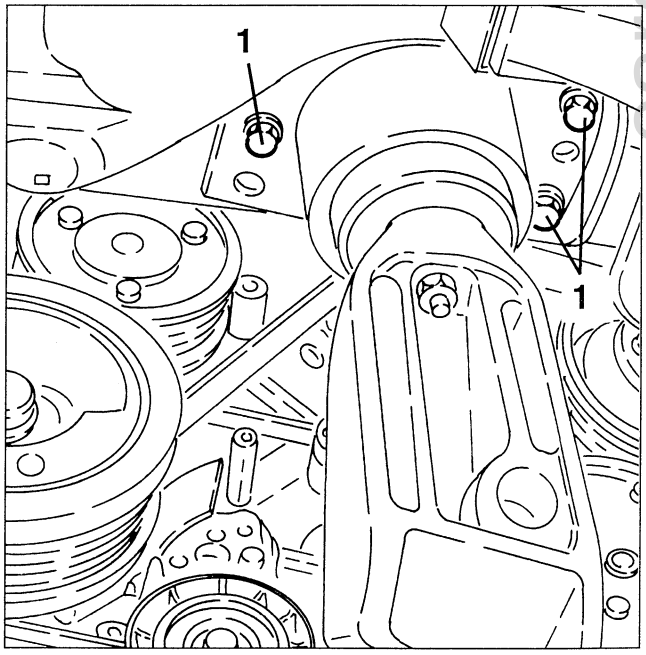

Cardiagn.com

1. Slacken the power unit support fastening screw on the gearbox side.

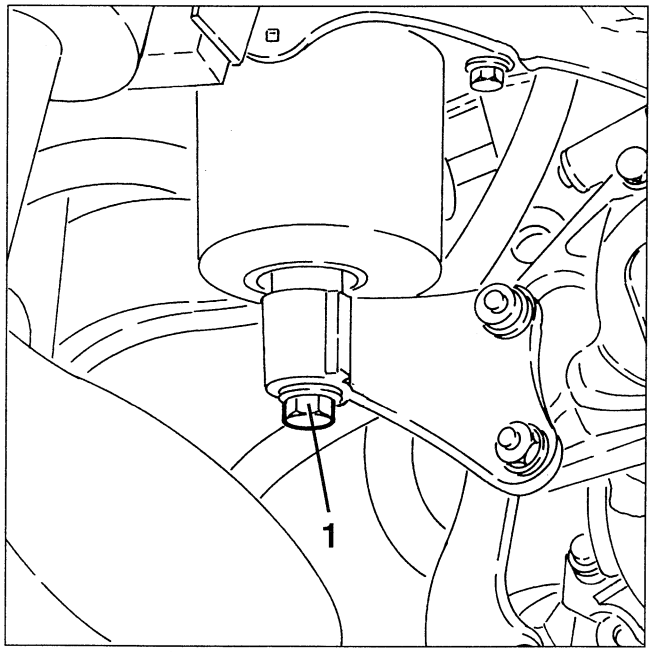

1. Lower the power unit with the hydraulic jack just enough to disconnect the gear control cable.

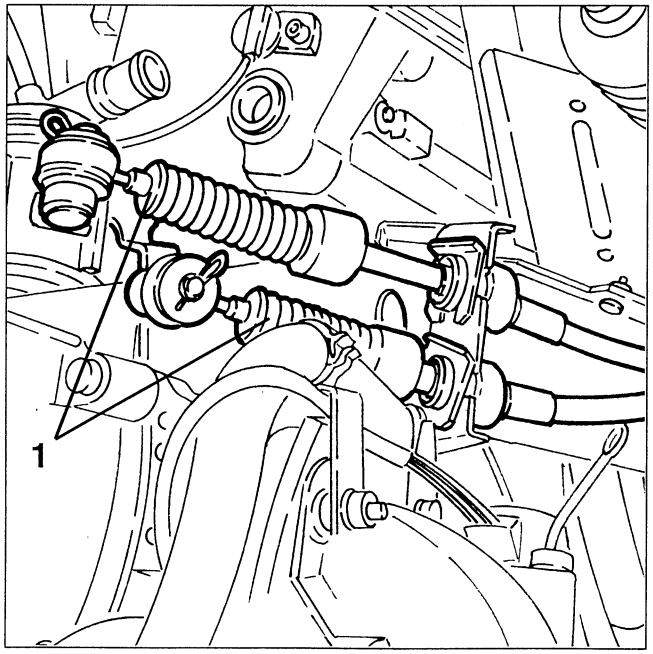

WARNING:
The hydraulic jack must have a capacity of at least 1000 kg.
Release the electric cables from any wire stays and move them away from the engine, to prevent them from getting stuck in the engine when it is removed.

1. Completely lower the hydraulic jack and remove the power unit from the engine compartment.

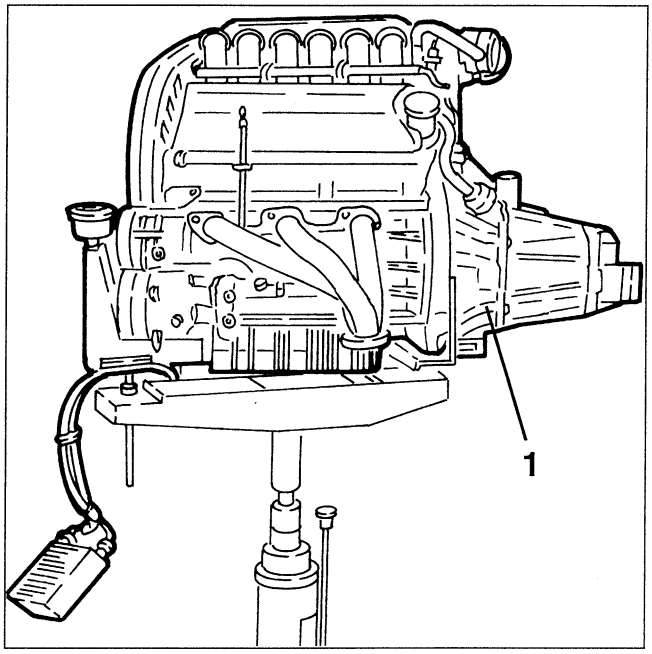

WARNING:
During the lowering operation make sure that there are no cables or pipes still connected.
Take due care not to damage any component.

1. In addition to the hydraulic jack used for removal, support the power unit with a hydraulic hoist restraining as illustrated.

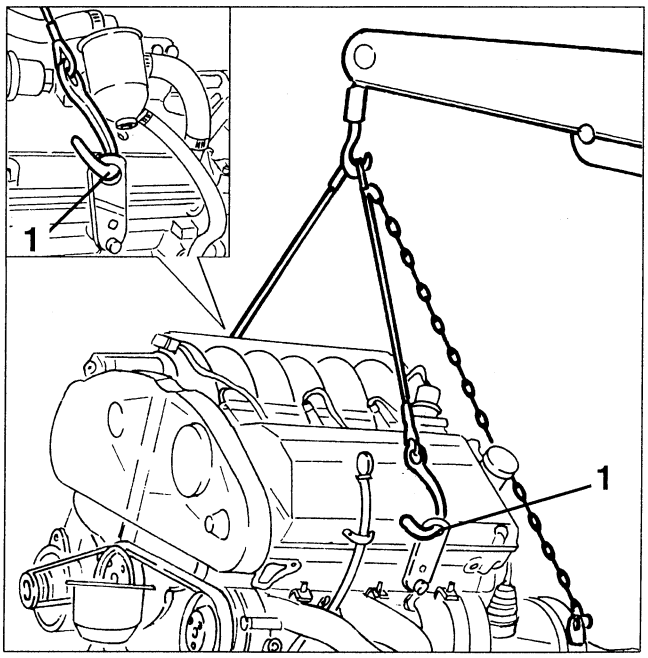

cardiagn.com

WARNING:
For handling the power unit use a hydraulic hoist after releasing it from the hydraulic jack.

- Lower the hydraulic lift and position the power unit on a special work bench.
1. Slacken the fastenings and remove the upper heat shield from the exhaust manifold.
2. Disconnect the the union of the gas takeoff pipe for the E.G.R. valve from the manifold.

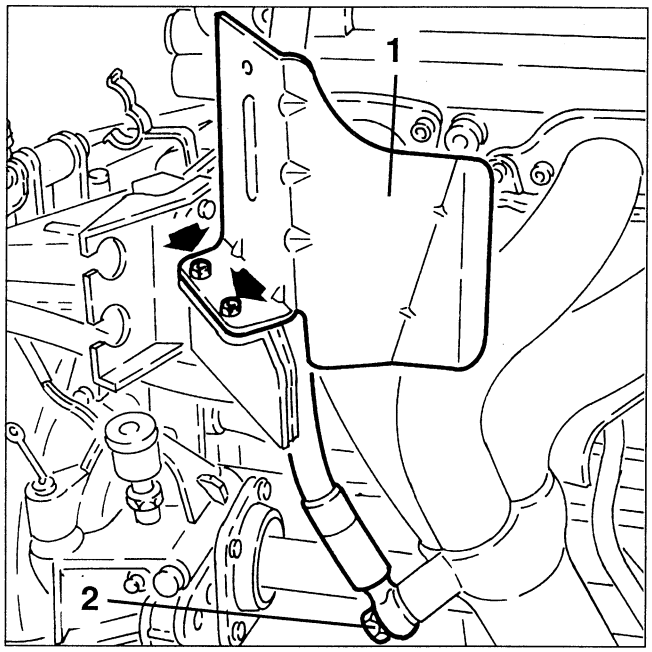

1. Slacken the fasteners and remove the exhaust manifold complete with heat shield for starter motor.
- Remove the seals.

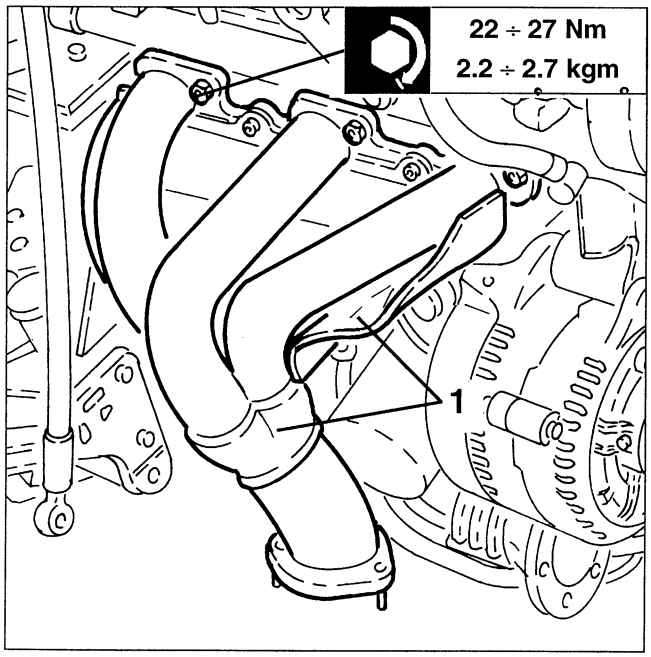

1. Slacken the two fastening screws and remove the gears control cable support bracket complete with lower heat shield.

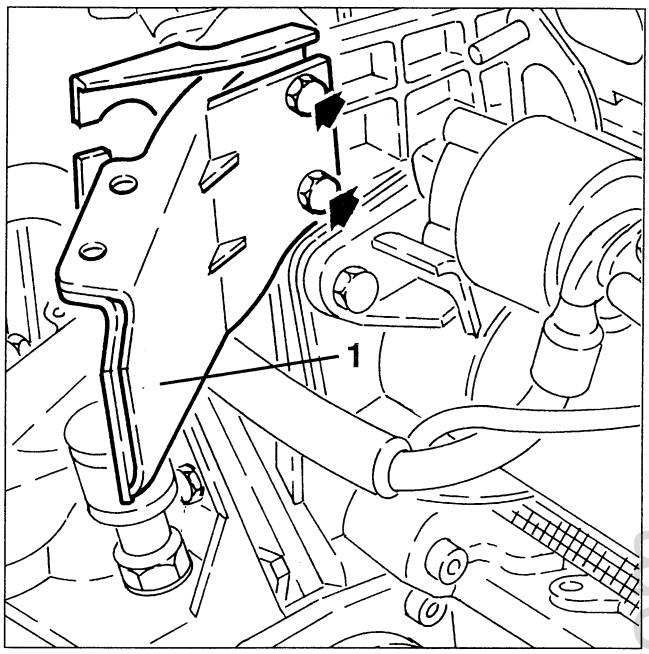

1. Disconnect the electrical connections from the starter motor.
2. Slacken the three fastening screws and remove the starter motor.

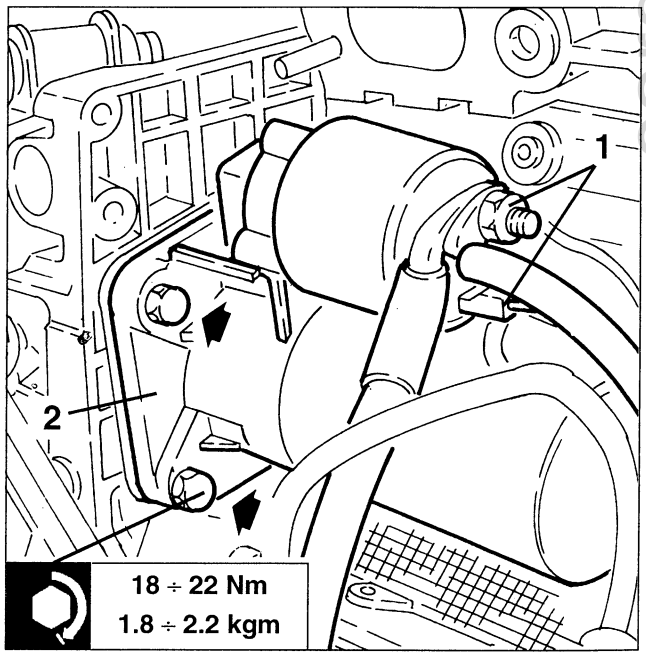

Cardiagn.com

1. Disconnect the electrical connection from the engine oil minimum pressure sensor.
2. Disconnect the electrical connections from the alternator, then remove the wiring loom after releasing it from the fasteners.

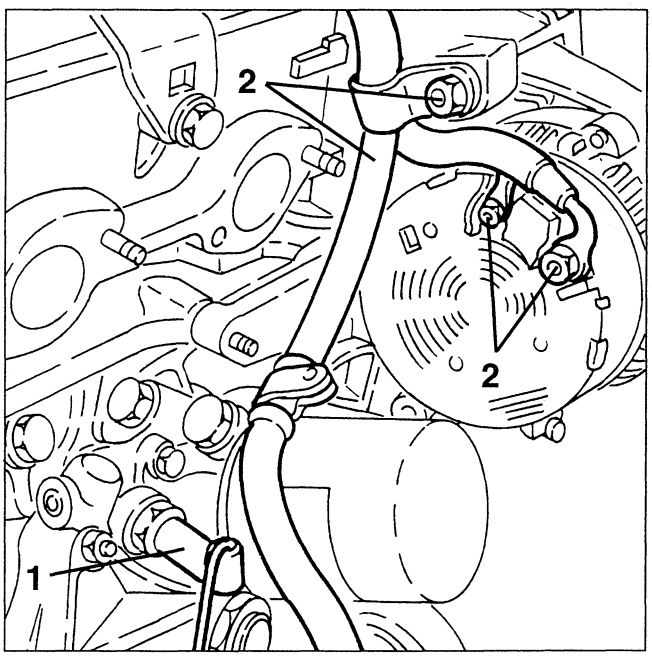

1. Slacken the fastening screws and remove the support bracket of the radiator engine oil delivery and return pipes.

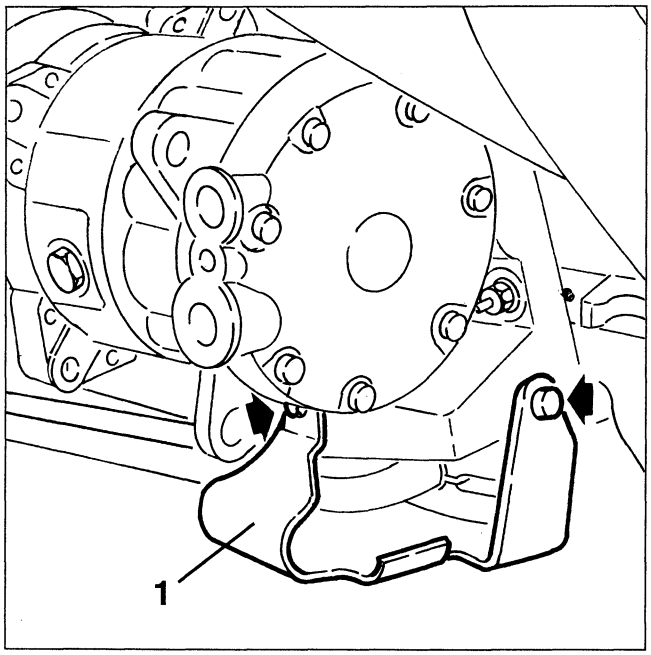

1. From the oil filter support bracket disconnect the unions of the radiator engine oil delivery and return pipes, then remove them complete with the radiator.

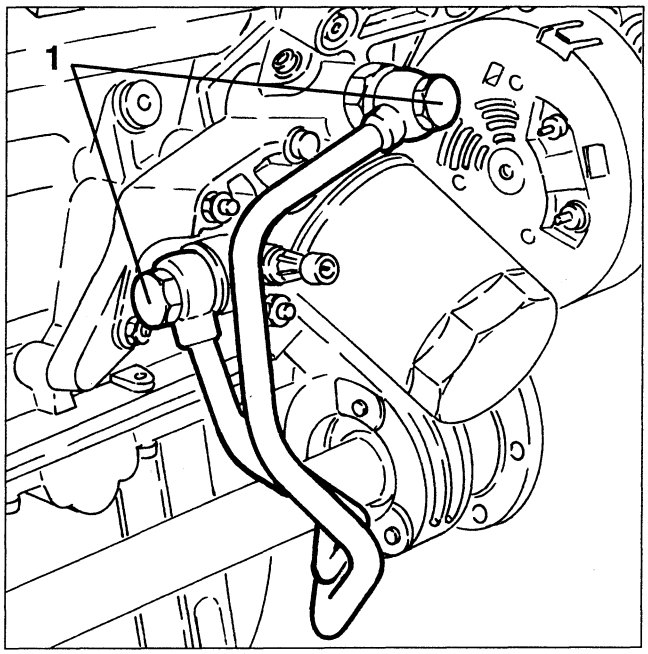

- Drain the gearbox - differential oil.
1. Slacken the fastening screws and withdraw the intermediate shaft.
- Remove the dust ring.
2. Slacken the fastening nuts and remove the oil filter support complete.

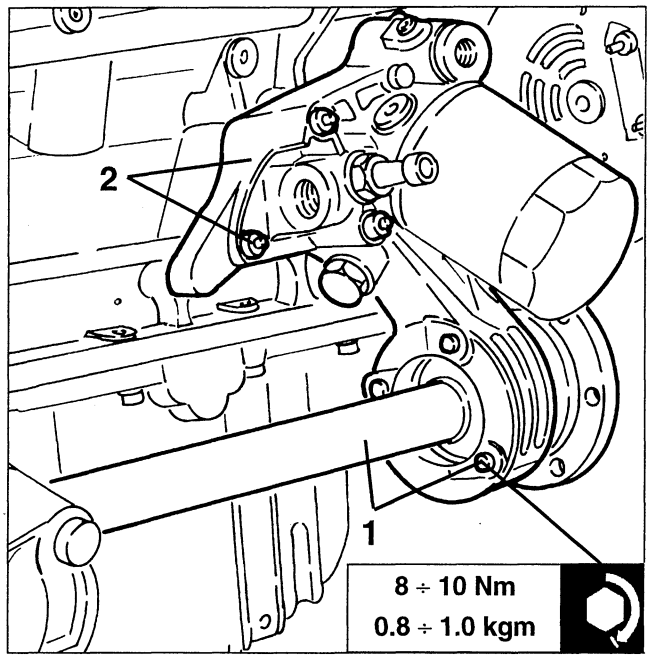

cardiagn.com

1. Slacken the fastening screws and, using a hydraulic hoist, remove the gearbox - differential unit.

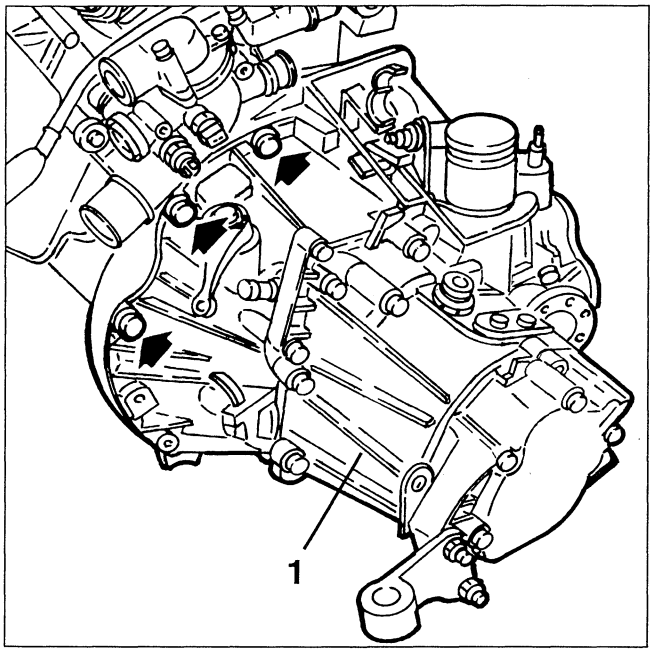

1. Slacken the fastening screws and remove the pressure plate complete with thrust bearing and clutch plate.

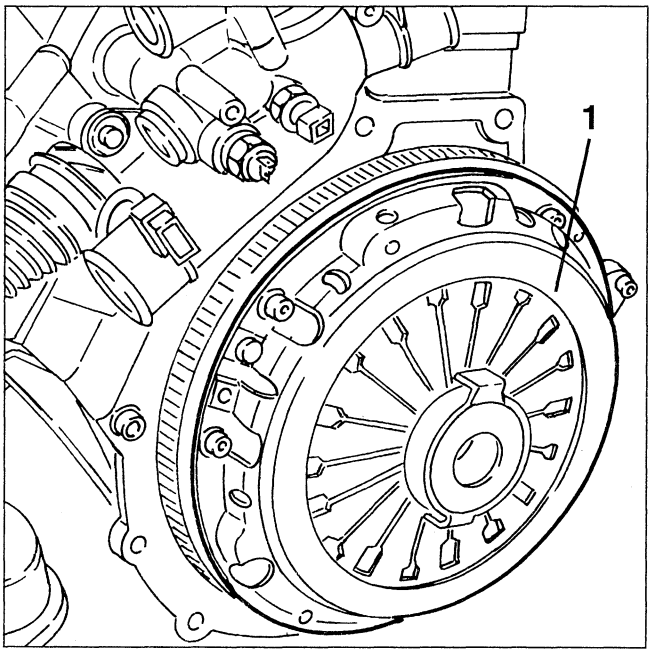

1. Slacken the fastening nuts and remove the left exhaust manifold
- Remove the seals.

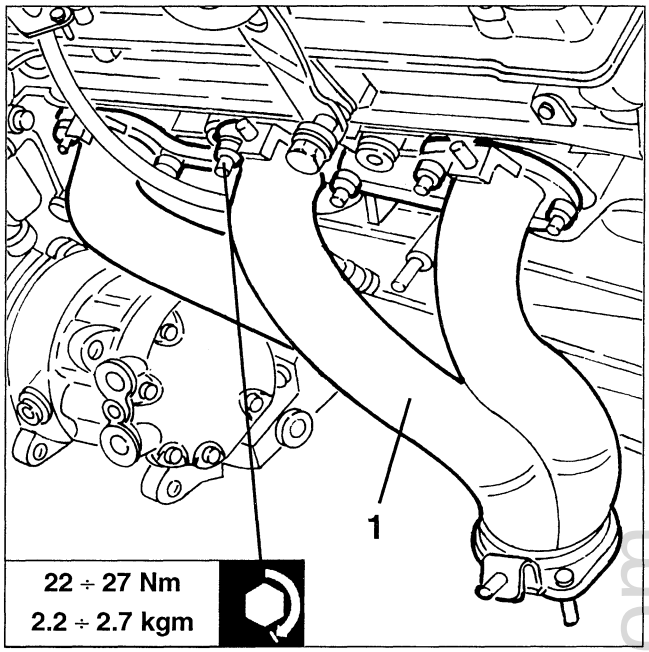

REFITTING

Reverse the sequence followed for removal, keeping to the following instructions:
- Prepare the engine compartment for inserting the power unit assembly, placing all the electric cables, pipes, etc. so that they do not interfere with reassembly operations.
- Take due care when fitting the power unit to avoid damaging the single components.

WARNING:
Make sure that the power unit support points have been fixed correctly.

- After assembly, fill the various systems as specified (see Group 00).
- Carry out all the necessary checks and operations (see Group 00).

cardiagn.com

CYLINDER HEADS

NOTE: In the car it is only possible to remove the right cylinder head proceeding as described below.
When needing to remove the left cylinder head, it is necessary to remove the power unit (see specific paragraph).

REMOVAL/REFITTING RIGHT CYLINDER HEAD

- Set the car on a lift.
- Disconnect the battery (-) terminal.

1. Remove the right front wheel.
2. Remove the engine compartment trim.

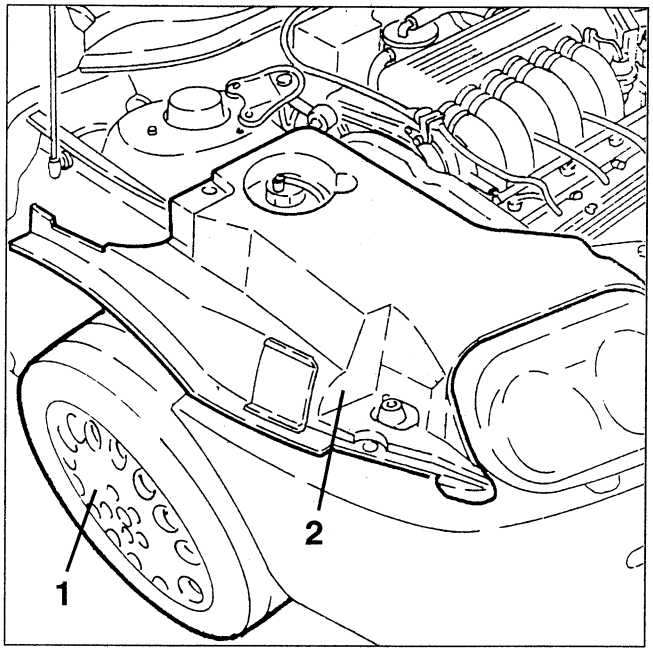

1. Slacken the two fastening screws, remove the plastic button and remove the right front wheel house mud flap.

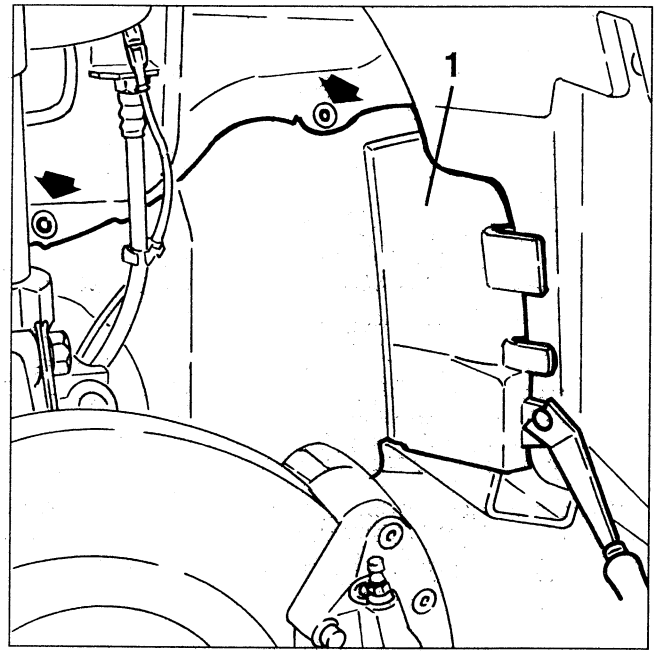

1. Slacken the fastenings and remove the right front wheel house.

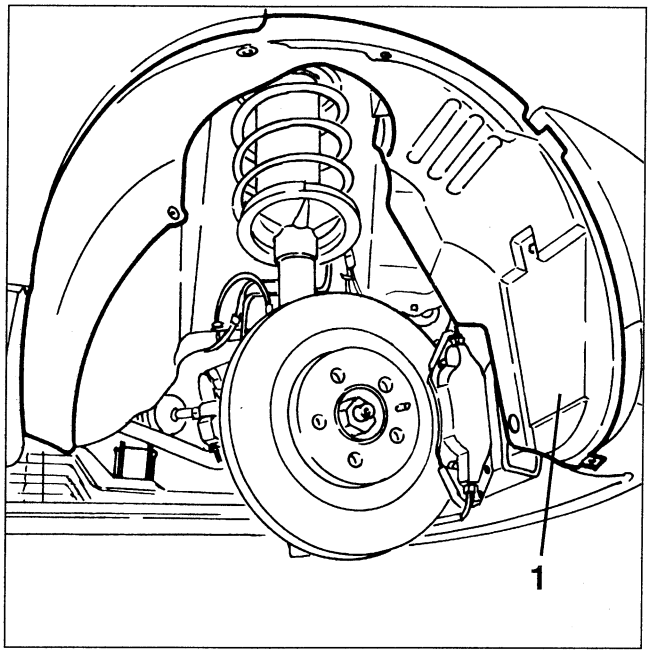

1. Raise the car and remove the engine coolant fluid, disconnecting the radiator outlet sleeve and retrieve it in a suitable container.

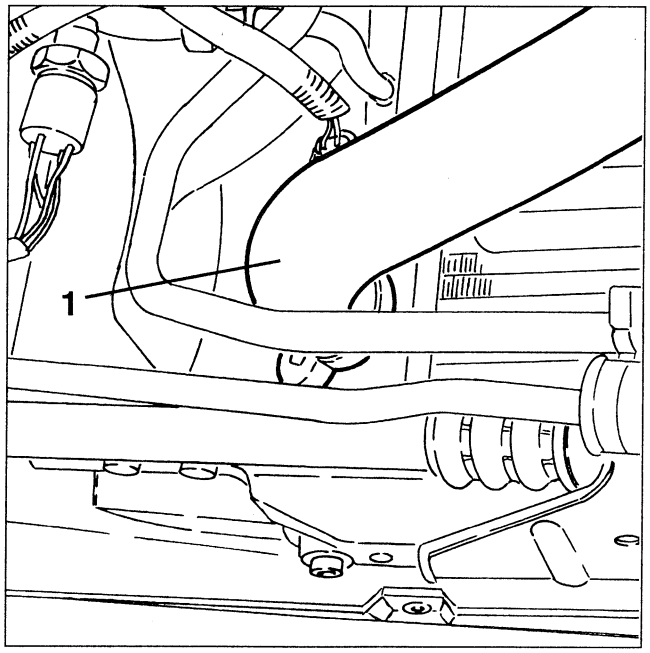

cardiagn.com

1. Using a wrench on the fastening screw of the belt tensioner pulley, overcome the force of the automatic belt tensioner and lock it in this position (belt slack) inserting the special peg as illustrated.
2. Prise and remove the auxiliary components drive belt.

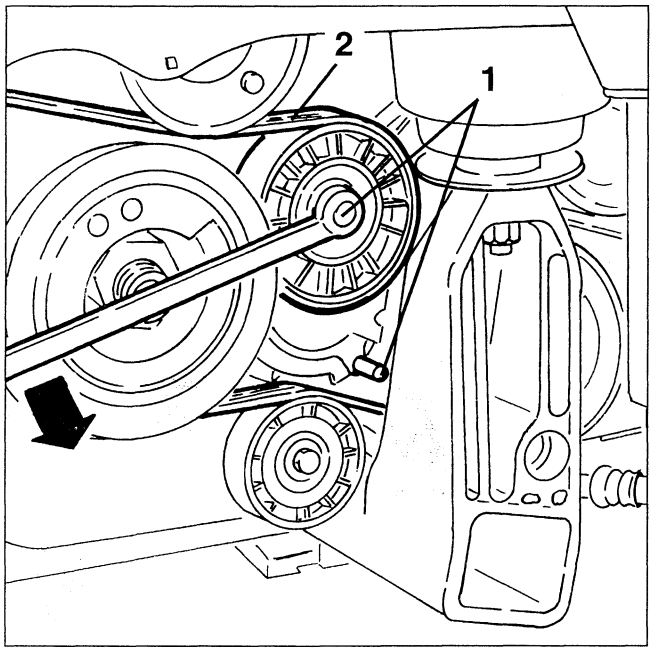

1. Remove the front section of the exhaust pipe only of the right cylinder head.
2. Disconnect the front section of the exhaust pipe from the left cylinder head and from the intermediate support clamp.

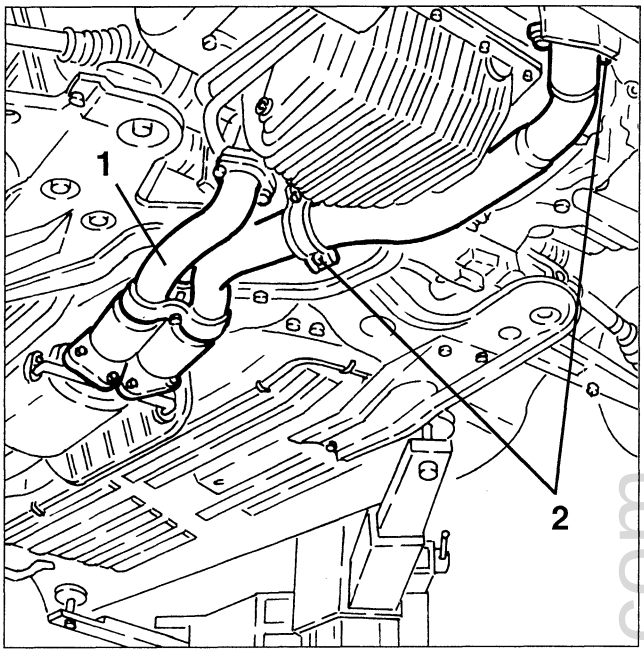

1. Slacken the fastening screw and remove the guide pulley for the auxiliary components drive belt.
2. Slacken the fastening screw and remove the auxiliary components guide pulley.

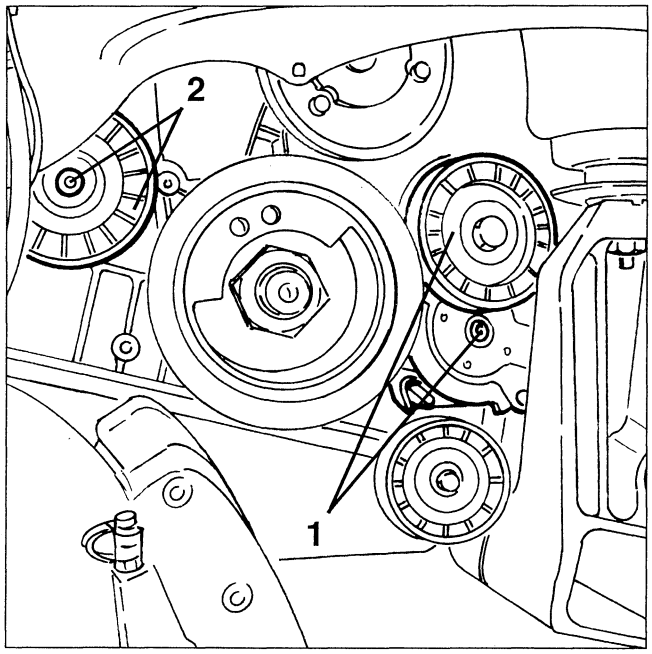

1. Slacken the fastenings and remove the heat guard of the power steering box.
2. Disconnect the fitting of the exhaust gas takeoff pipe for the E.G.R. valve from the right cylinder head exhaust manifold.

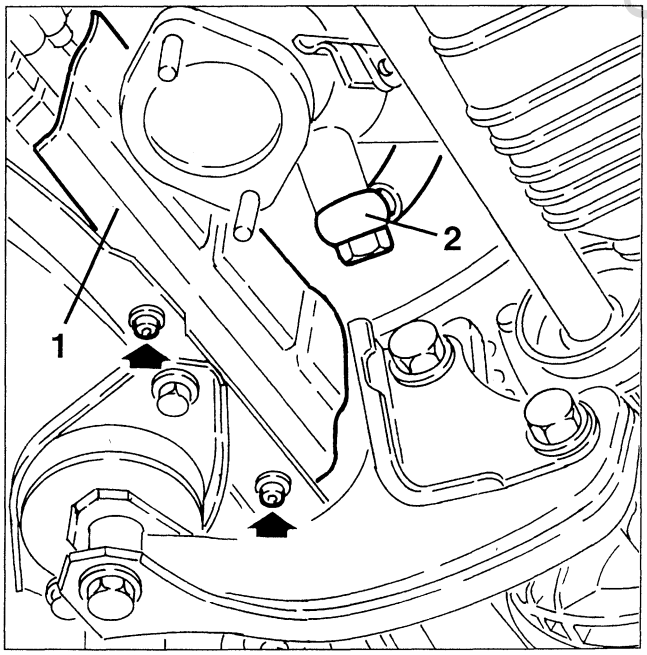

cardiagn.com

1. Slacken the fastening screws and remove the timing gear belt left lower guard.

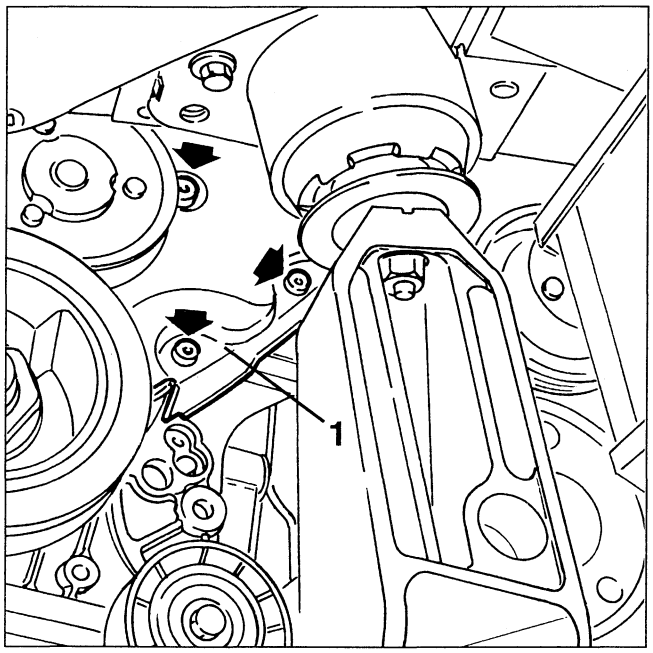

1. Slacken the fastening screws and remove the timing gear belt upper guard.

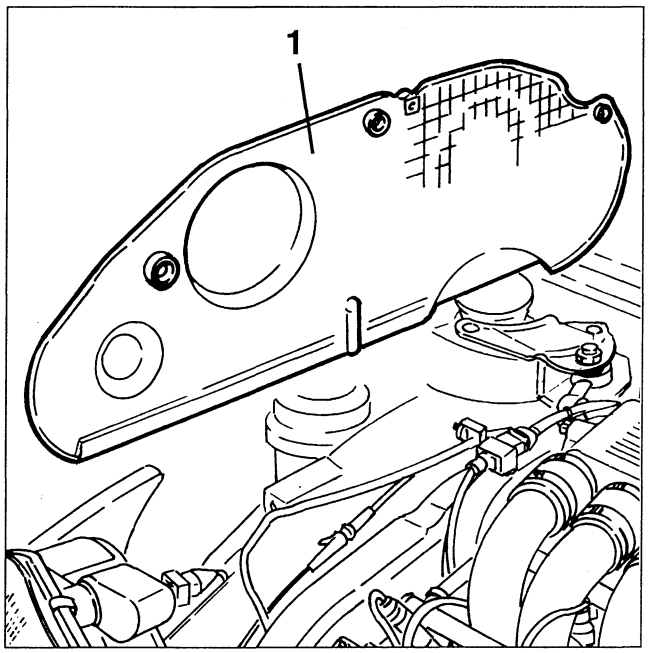

1. Slacken the fastening screws and remove the timing gear belt right lower guard.

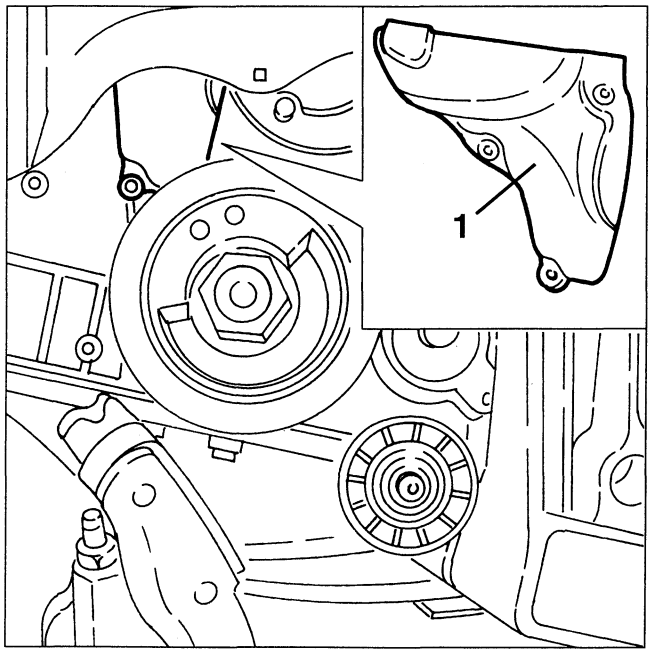

1. Disconnect the electrical connection of the front pinging sensor.
2. Disconnect the earth cable (front) from the intake box.

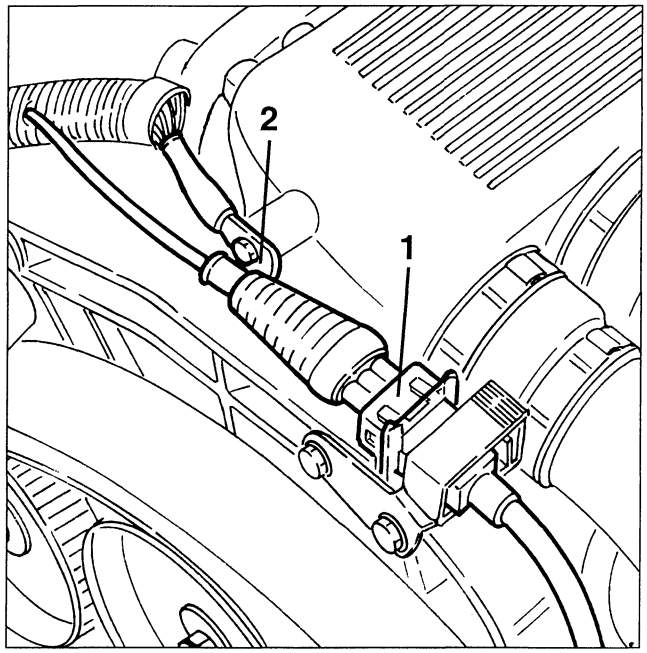

cardiagn.com

1. Disconnect the electrical connection from the throttle potentiometer.
2. Disconnect the electrical connection from the intake air temperature sensor.
3. Disconnect the oil vapour rcovery pipe leading from the right cylinder head from the corrugated sleeve.
4. Disconnect the air takeoff pipe for the constant idle speed device from the corrugated sleeve.

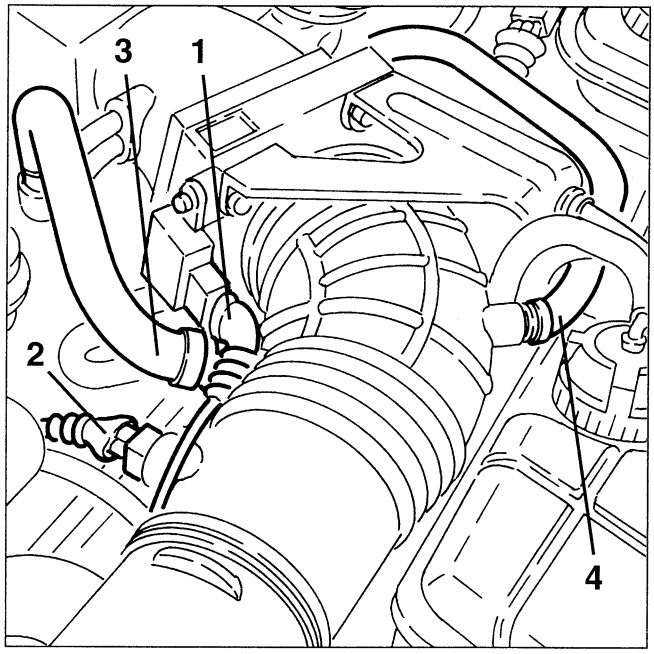

1. Remove the button fastening the first section of the corrugated sleeve to the resounder.
2. Slacken the two fastening clamps and remove the second section of the corrugated sleeve complete with resounders.

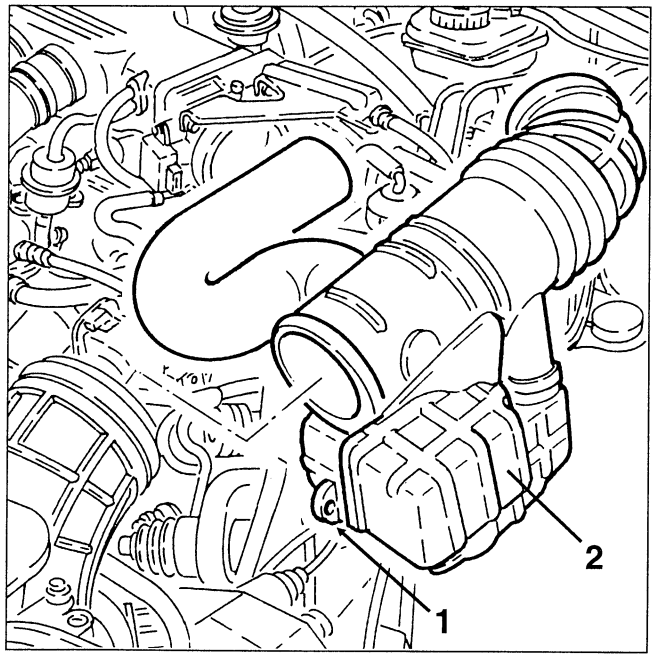

1. Disconnect the radiator coolant delivery sleeve from the thermostatic cup.

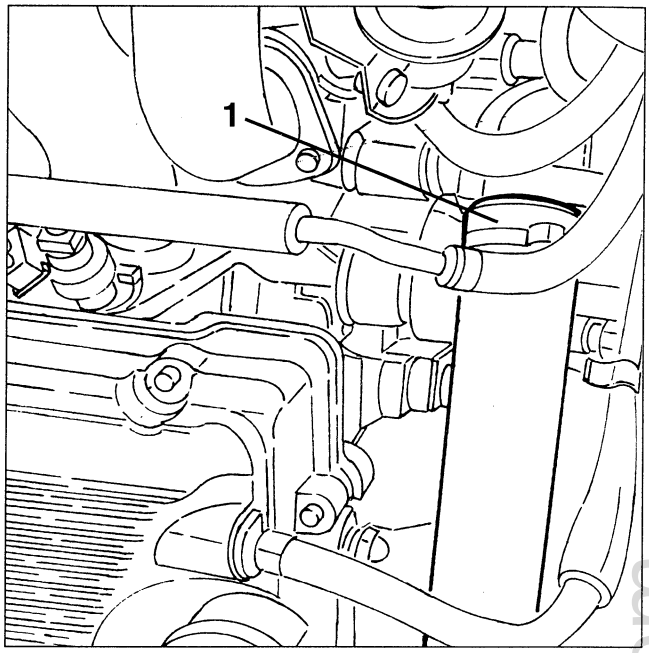

1. Disconnect the radiator coolant return sleeve from the thermostatic cup.

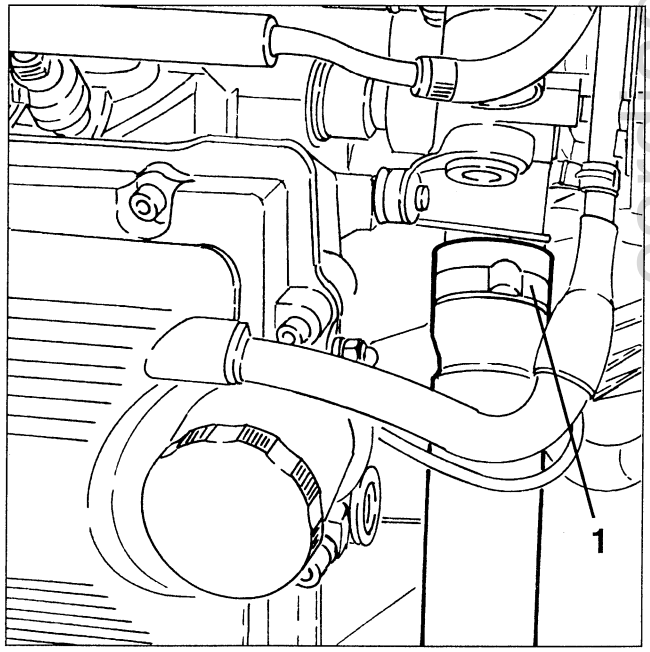

cardiagn.com

1. Disconnect the throttle body coolant outlet pipe from the expansion tank.
2. Disconnect the accelerator cable from the throttle cam.

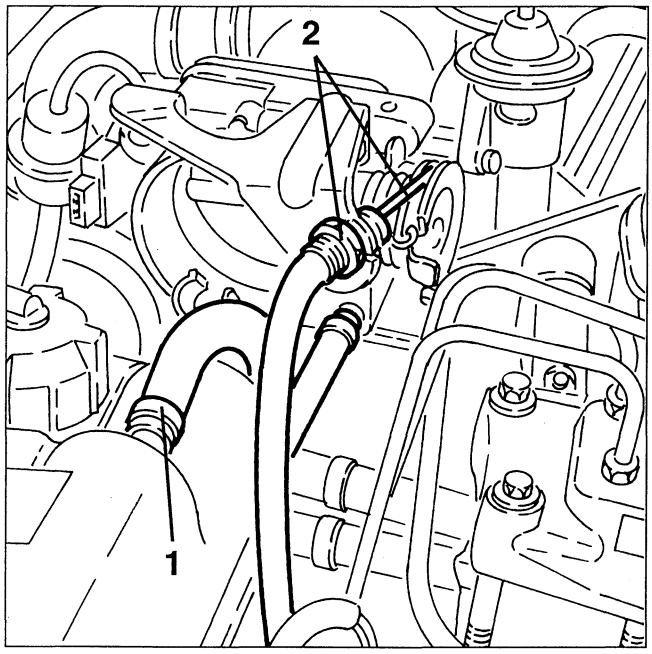

1. Disconnect the electrical connection from the engine coolant temperature transmitter (NTC).
2. Disconnect the electrical connection from the coolant temperature transmitter and max. temperature thermal contact.

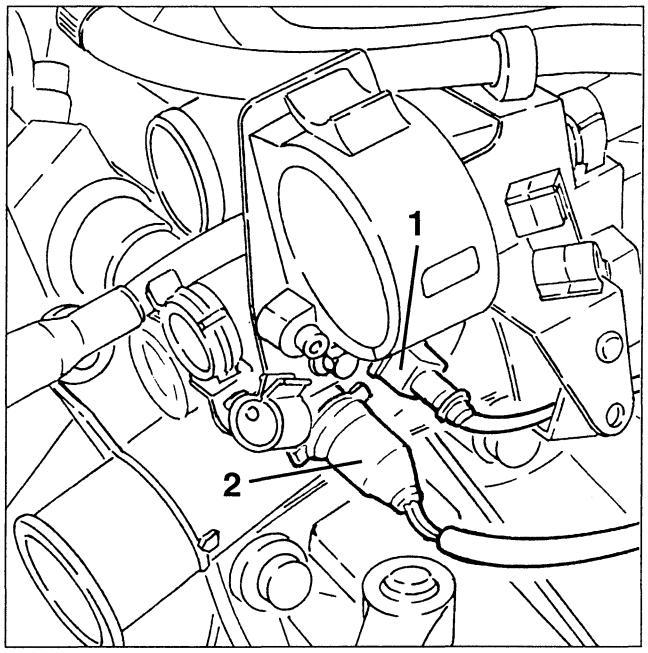

1. Release the injection wiring connector from the support bracket.
2. Disconnect the electrical connection of the cam angle sensor.

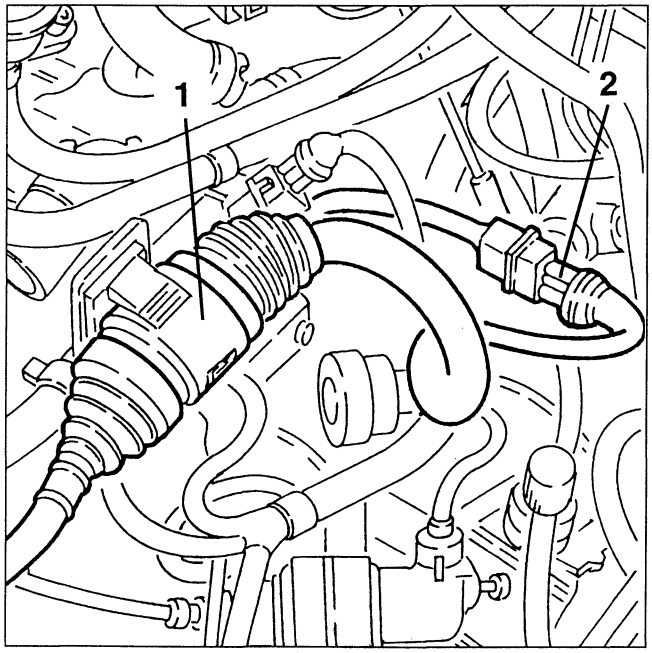

1. Slacken the fastening screws and remove the bracket supporting the injection wiring connector and fastening the pipes.

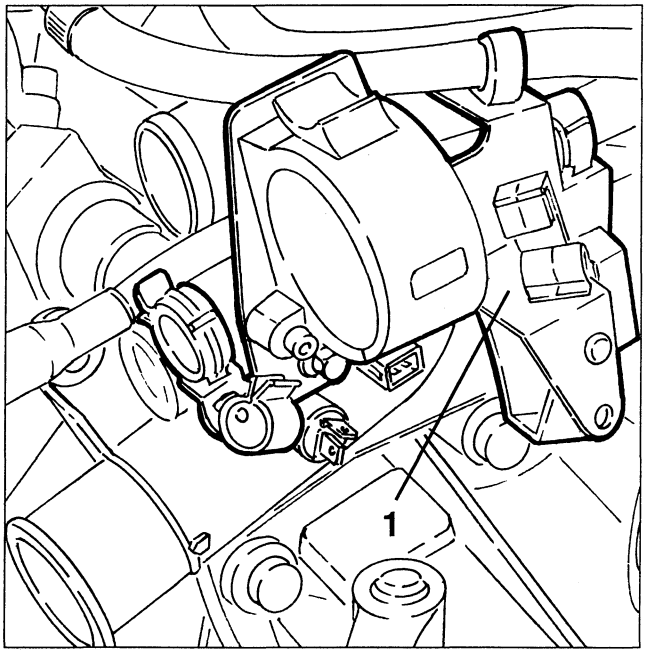

cardiagn.com

1. Disconnect the fuel delivery pipe from the distributor manifold.
2. Disconnect the excess fuel return pipe from the pressure regulator.

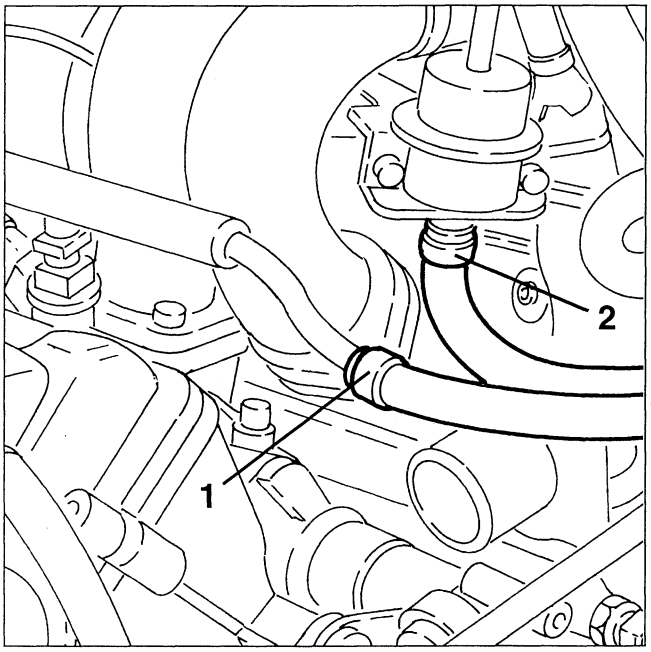

1. Disconnect the electrical connection from the constant idle speed device.
2. Disconnect the fuel vapour recovery pipe from the intake box.
3. Disconnect the servobrake vacuum takeoff pipe from the intake box.
4. Disconnect the oil vapour recovery pipe from the separator.
5. Disconnect the condensed oil recovery pipe from the separator.

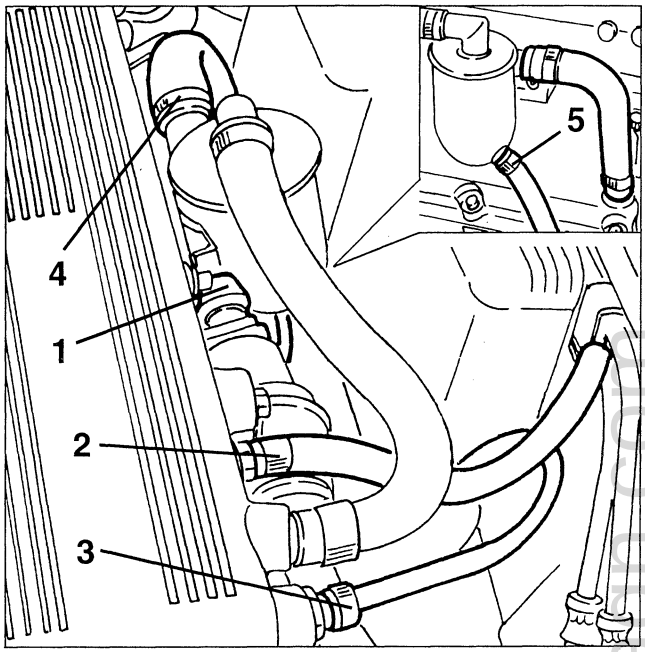

1. Disconnect the climate control system heater coolant delivery sleeve from the fitting on the cylinder head.
2. Disconnect the climate control system heater coolant return sleeve from the thermostatic cup.

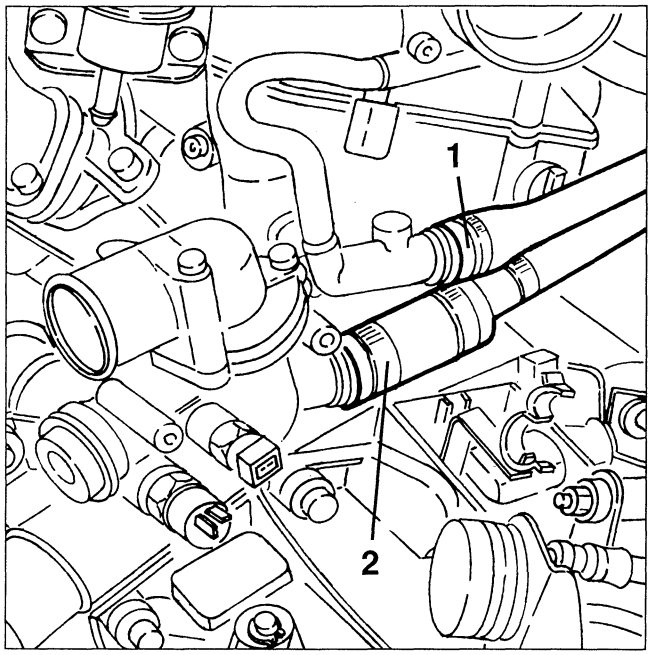

1. Disconnect the vacuum pipe leading from the modulating solenoid valve from the E.G.R. valve.
2. Slacken the two fastening screws and remove the E.G.R. valve complete with exhaust gas takeoff pipe.

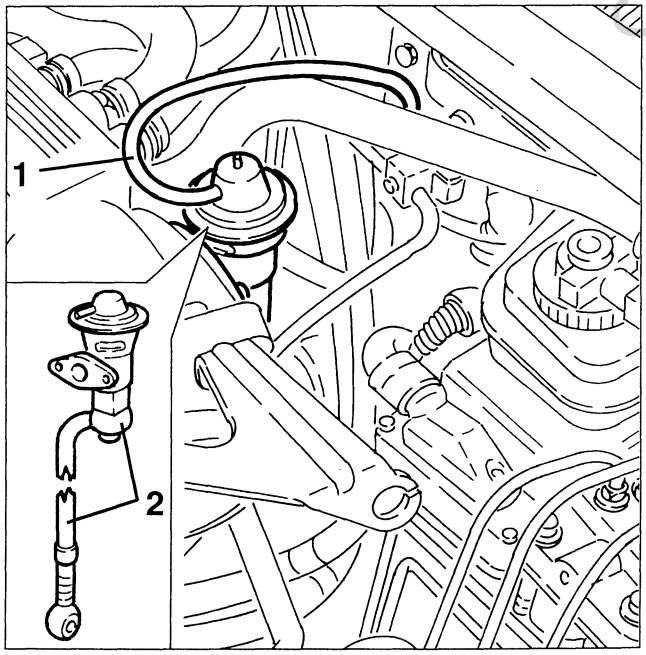

cardiagn.com

1. Disconnect the coolant fluid inlet pipe from the throttle body.
2. Disconnect the vacuum takeoff pipe for the E.G.R. modulating solenoid valve from the intake box.
3. Disconnect the fuel pressure regulator vacuum take off pipe from the intake box.

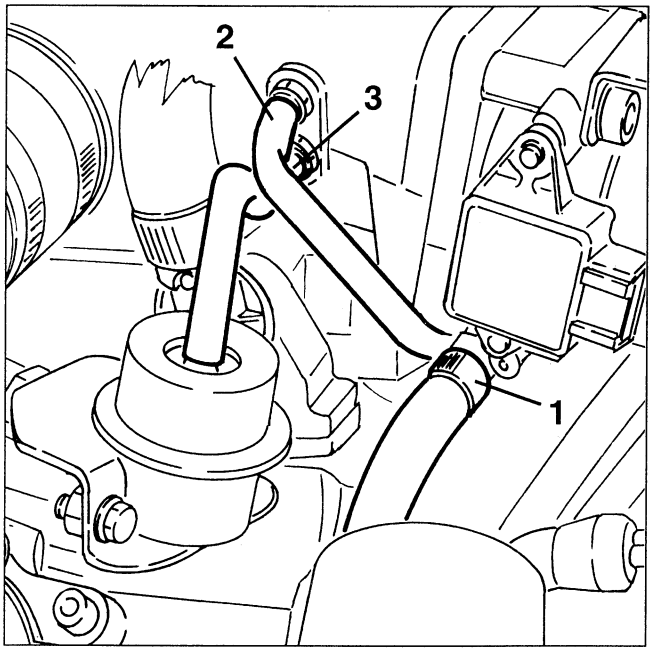

1. Remove the plastic cover protecting the relays, fuses and electrical connections.

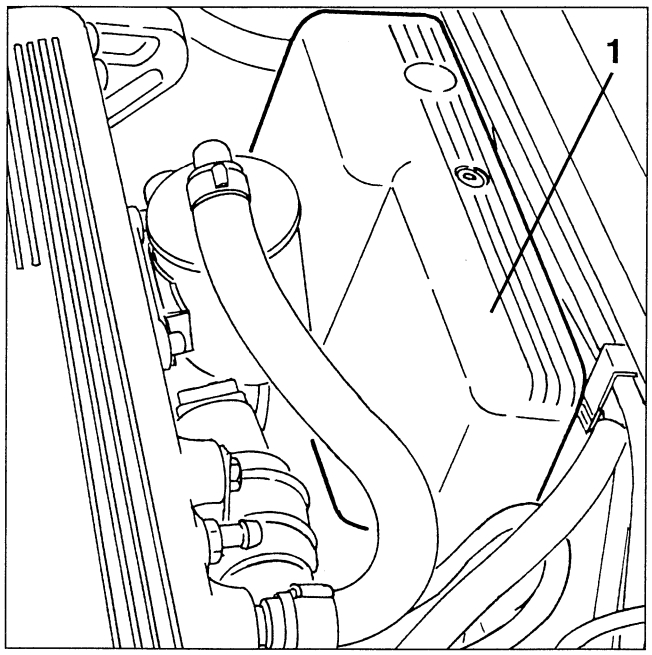

1. Slacken the fastenings and remove the heat guard.

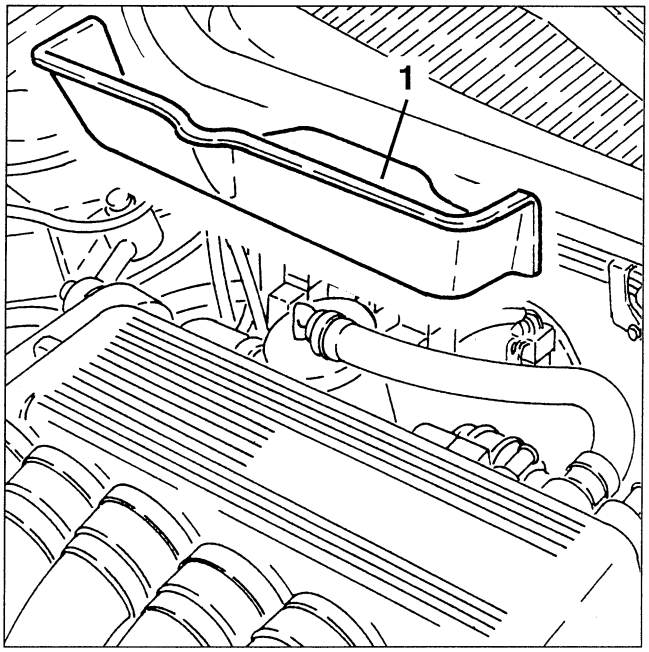

1. Slacken the fastening screws and remove the engine stay rod.

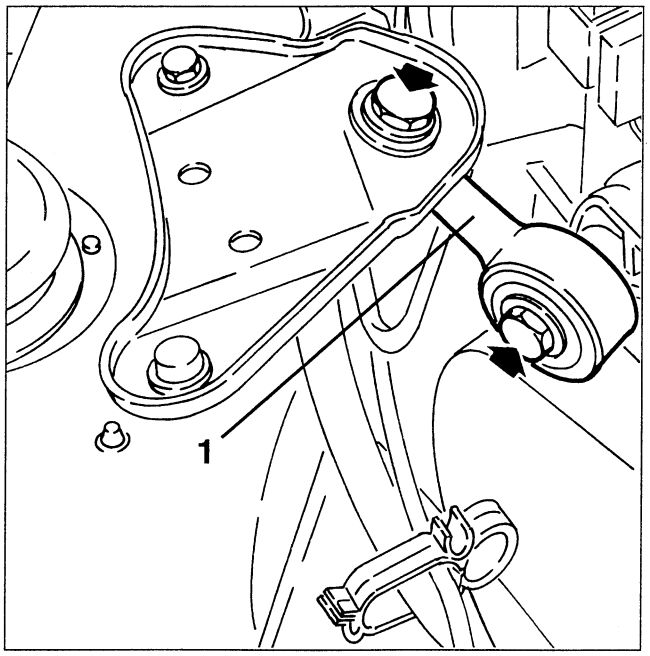

cardiagn.com

1. Slacken the clamps fastening the air ducts to the intake box.
2. Slacken the screws fastening cylinder head supply ducts.

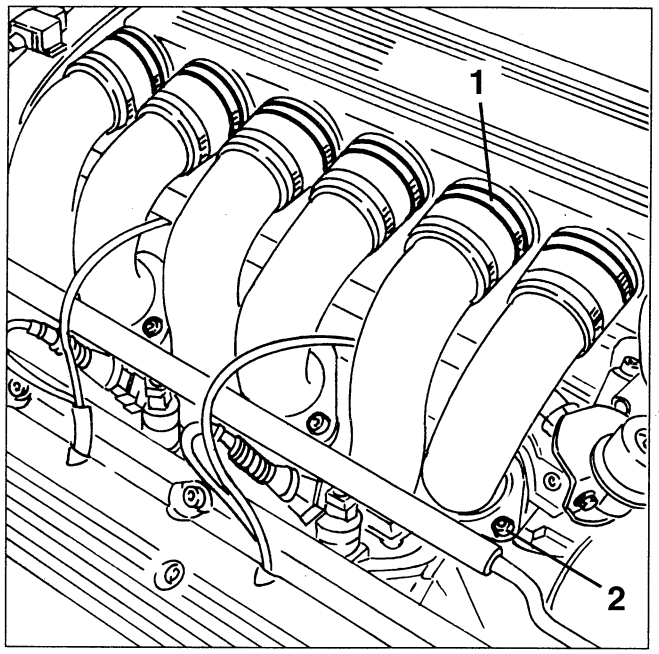

1. Completely slacken the fastening screws loosened previously and remove the intake ducts.
- Remove the corresponding seals.

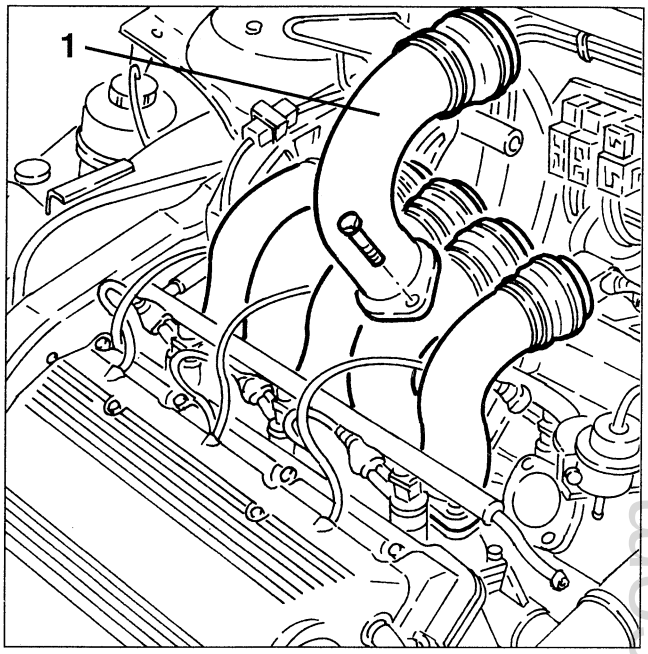

1. Disconnect the earth cable (rear) from the intake box.
2. Slacken the two fastening screws and remove the intake box complete.

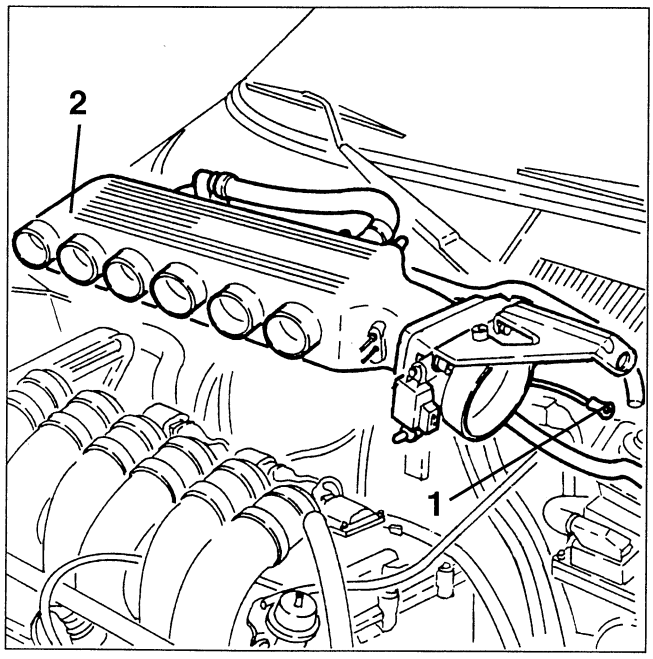

1. Disconnect the injector electrical connections.
2. Slacken the fastening screws and remove the fuel distributor manifold complete.

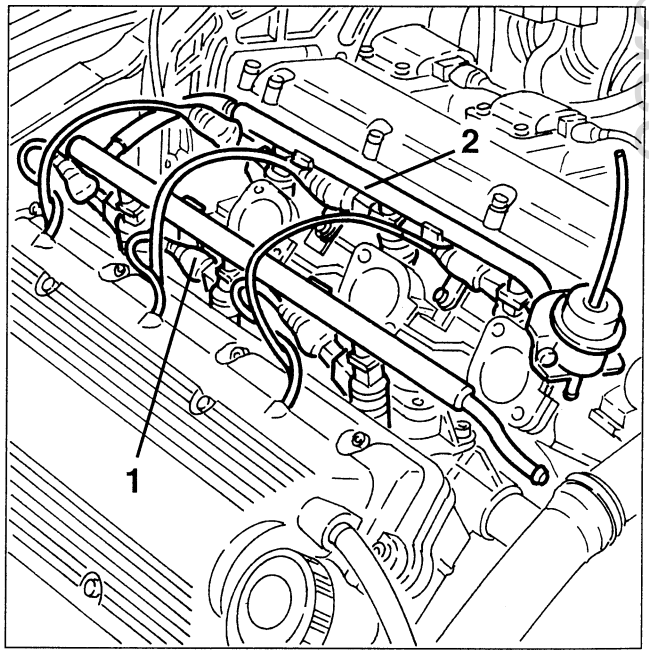

cardiagn.com

1. Slacken the fastening screws and remove the thermostatic cup.

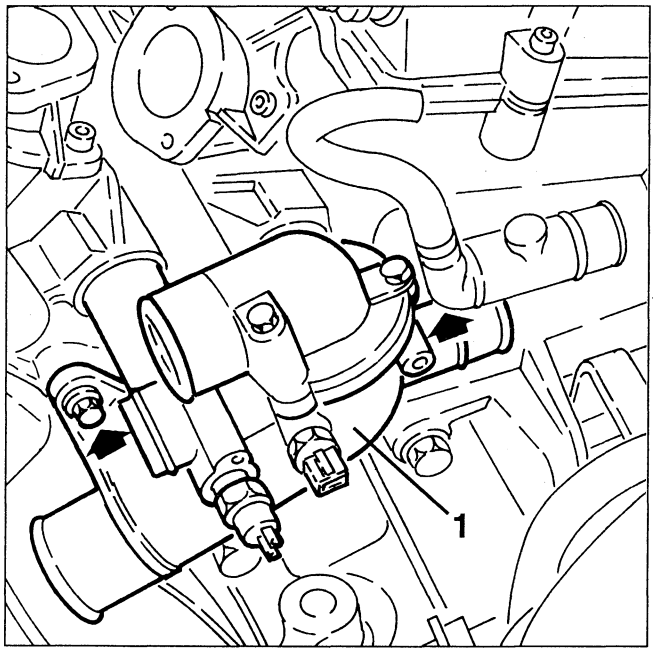

1. Withdraw and remove the fitting for the coolant fluid delivery pipe to the climate control system heater.

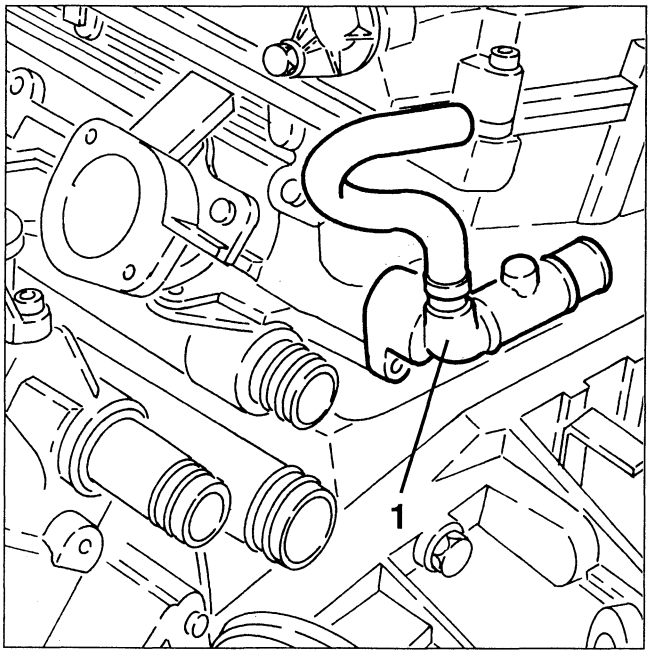

1. Disconnect the electrical connections from the ignition coils of the right cylinder head, then move the wiring aside.
2. Slacken the fastening screws and remove the right cylinder head ignition coils.

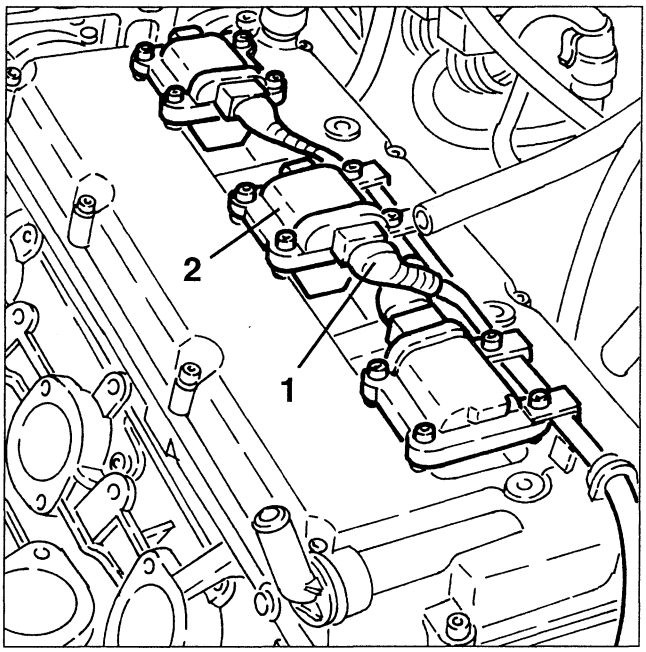

1. Slacken the fastening screws and remove the upper radiator crossmember.
2. Slacken the fastening screws and remove the left cylinder head ignition coil cover.

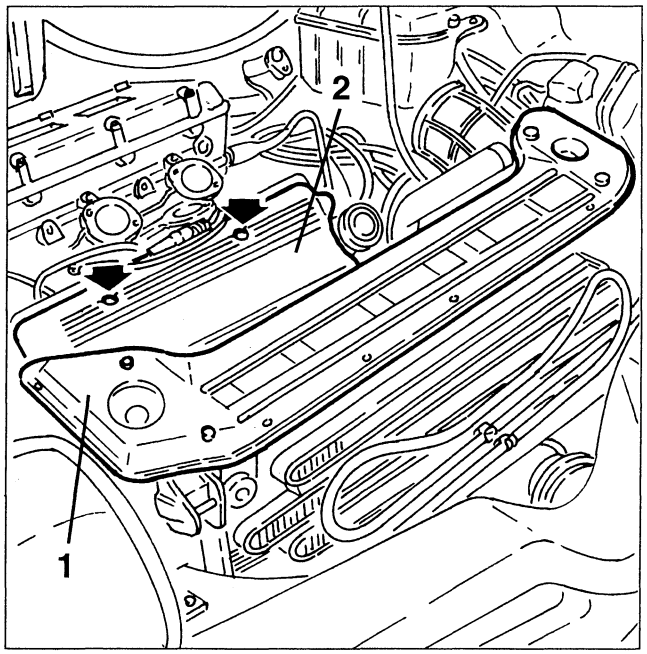

cardiagn.com

1. Disconnect the electrical connections from the left cylinder head ignition coils.
2. Slacken the fastening screws and remove the left cylinder head ignition coils.

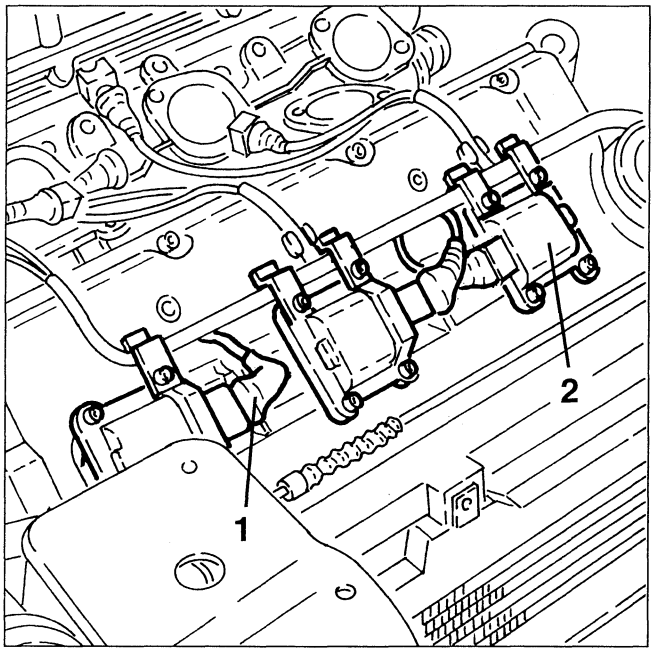

1. Slacken the fastening screws and remove the, bracket complete with threaded nut for fastening the timing gear belt upper guard from the left cylinder head.

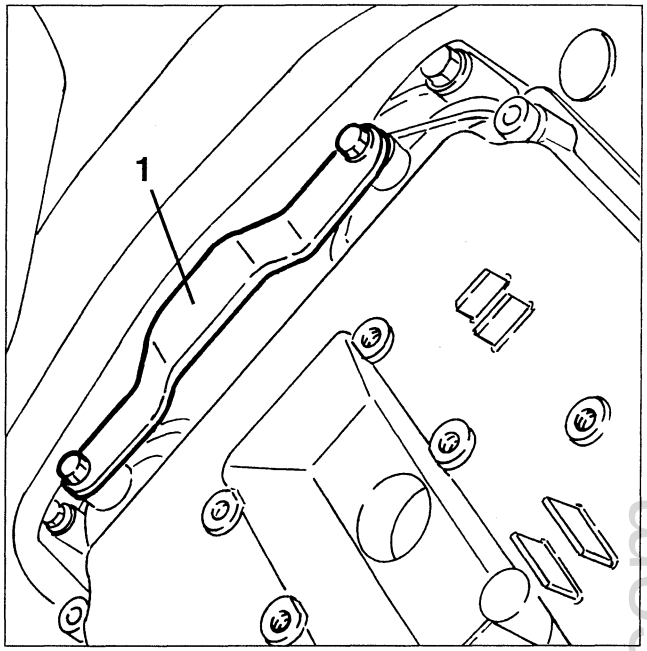

1. Disconnect the earth cable from the left cylinder head, then move aside the wiring.

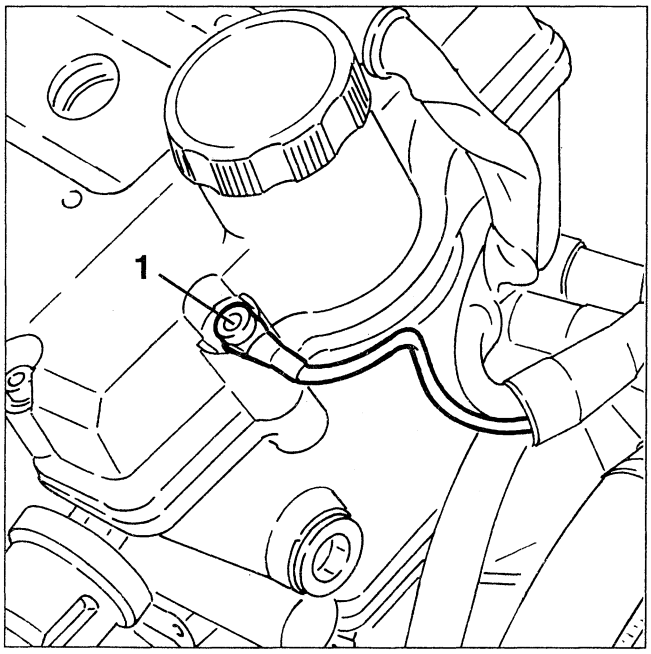

1. Slacken the fastening screws and remove the cylinder head covers with their seals.

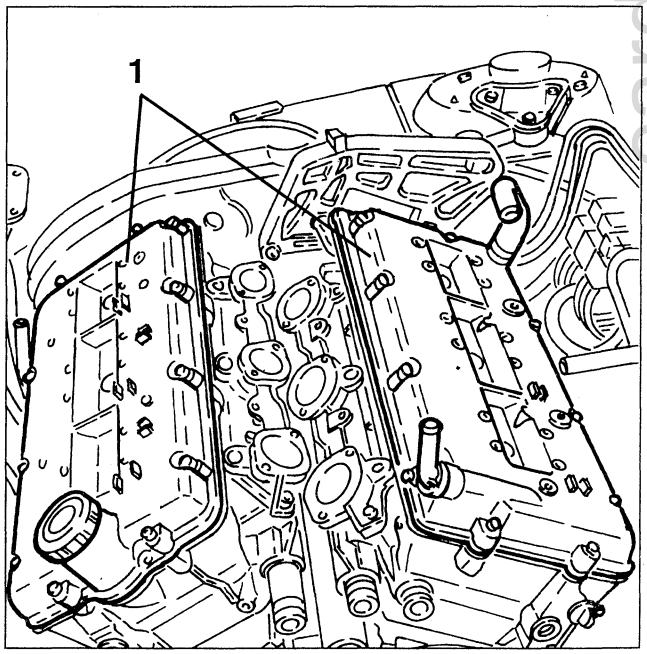

Cardiagn.com

- Slacken the fastening nuts of the exhaust manifold of the right cylinder head, complete with heat guard and leave it rested against the power steering box.
1. Install tool no. 1.825.013.000 (C.6.0183) in the seat of the first cylinder spark plug.
- Working on the fastening nut of the auxiliary components drive pulley turn the crankshaft slightly (both ways) until the piston of the 1st cylnder reaches T.D.C. in the bursting stroke.

NOTE: Make sure that the last turn of the crankshaft is in the operating direction.

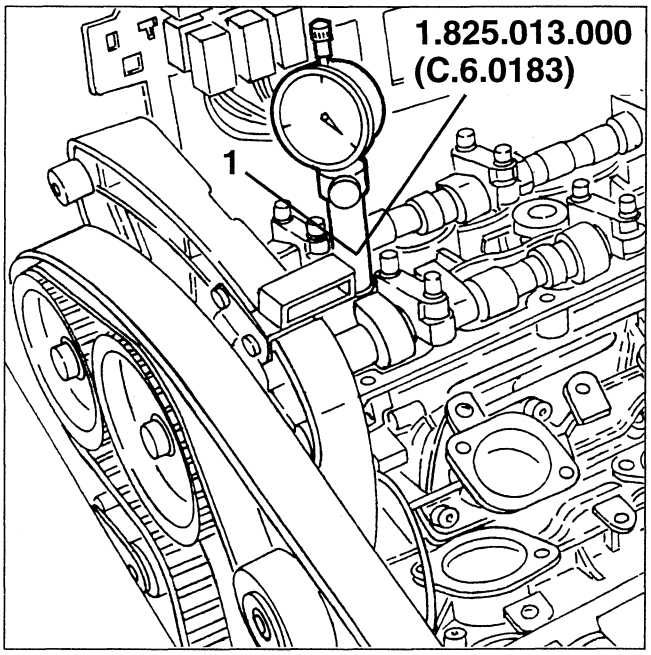

1. Slacken the two screws fastening the belt tensioner for the timing gear drive belt and prise the belt off the camshaft drive pulleys.
2. Slacken the fastening screw and remove the timing gear drive belt pulley guide.

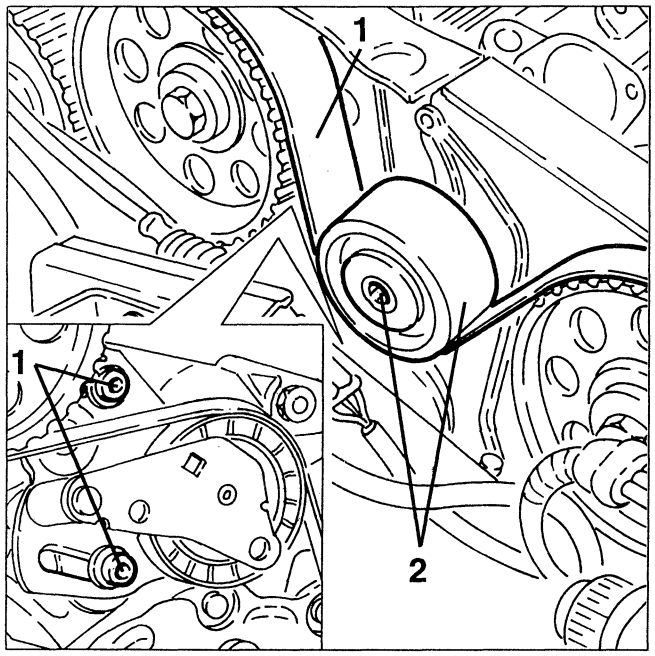

1. Using extension no. 1.822.150.000 and tool no. 1.822.146.000 as counter torque, slacken the screws fastening the timing gear drive pulleys of the right cylinder head.

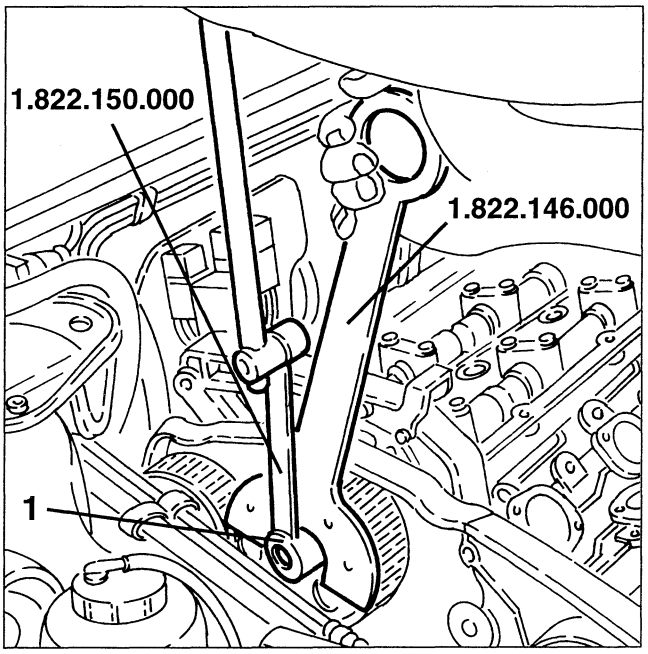

1. Using tool no. 1.860.954.001 withdraw and remove the drive pulleys from the camshafts of the right cylinder head.

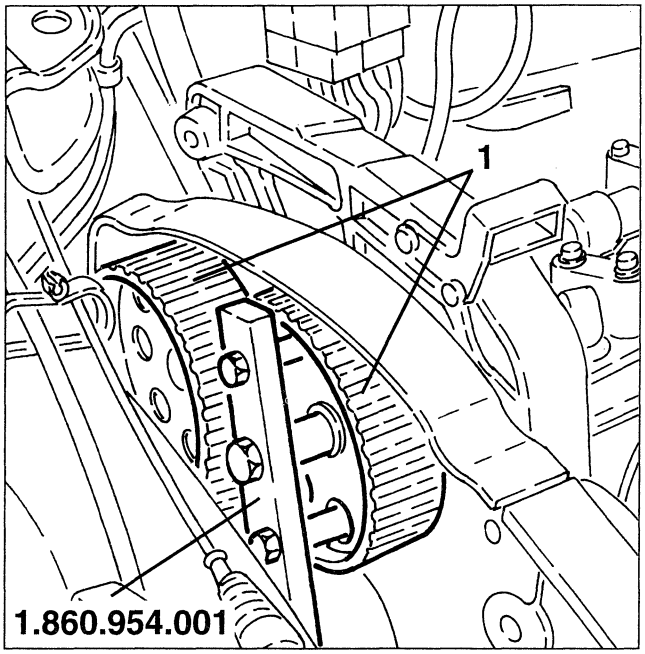

cardiagn.com

1. Loosen the fastening screws and remove the right-hand cylinder head from the timing belt internal guard.

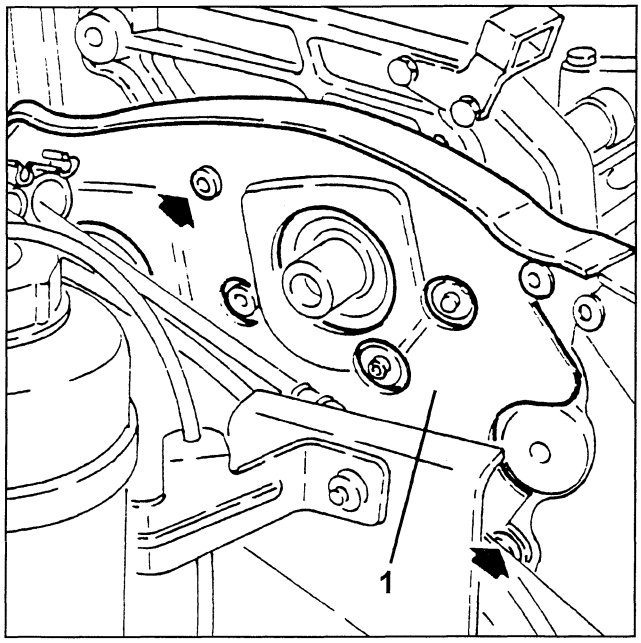

1. Loosen the upper alternator fastening bracket screw.

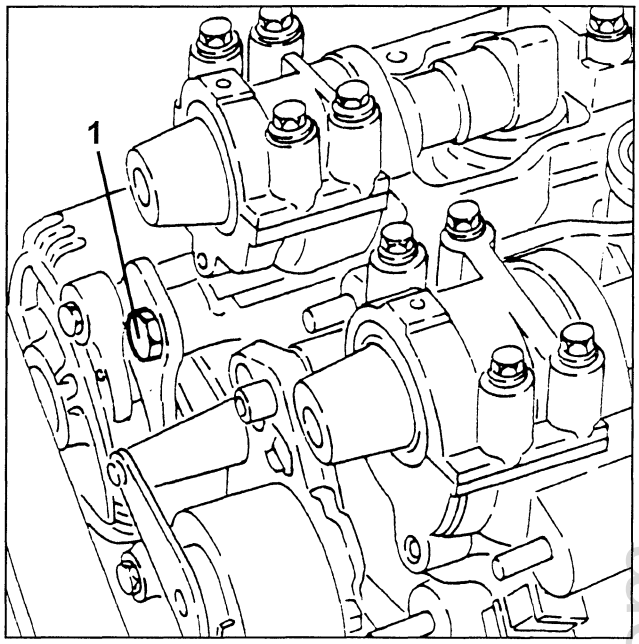

1. Loosen the fastening nuts and remove the engine shock-proof connecting rod bracket.

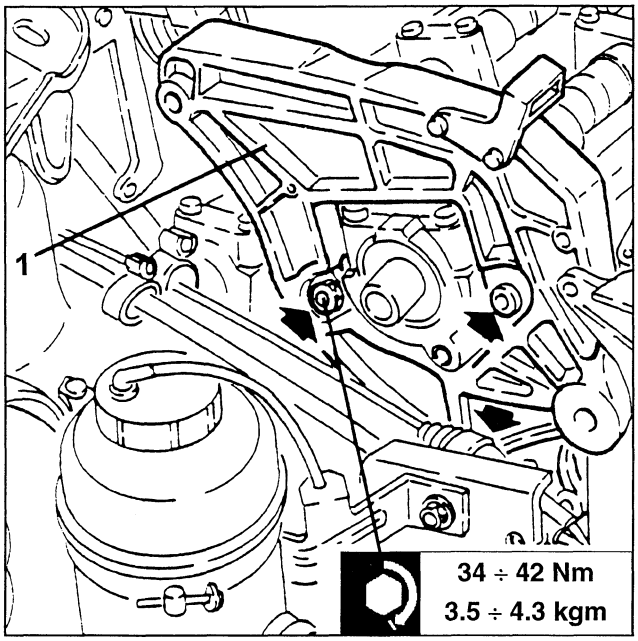

1. Loosen the fastening nuts and remove the right-hand cylinder head.
- Remove the respective seal.

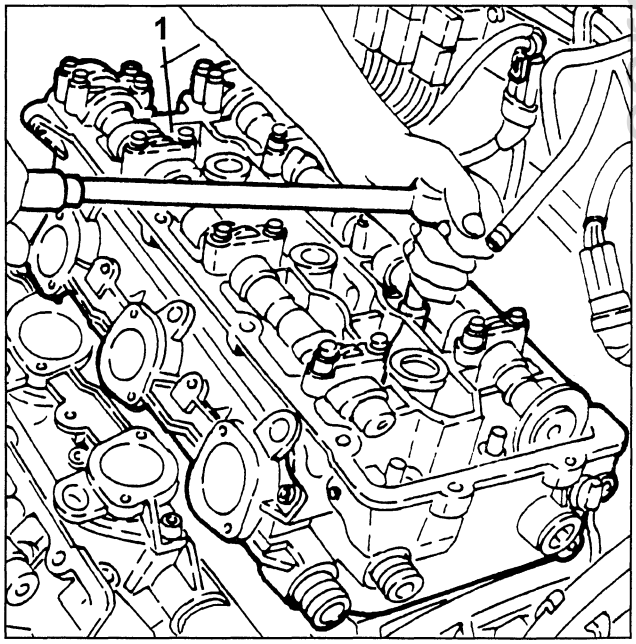

cardiagn.com

1. Fit cylinder liner retainer no. 1.820.279.000 as shown in the figure.

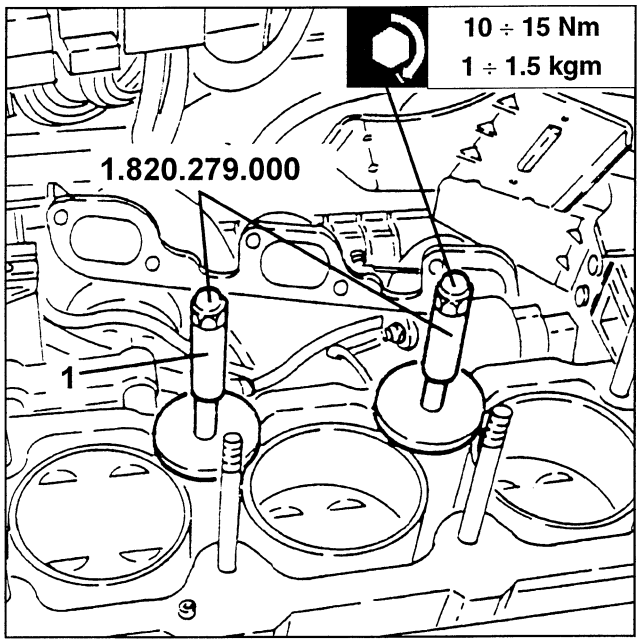

REFITTING PRECAUTIONS

Reverse the removal sequence and attain to the following precautions.
1. Fit templates no. 1.825.040.000 in the position printed on the templates in the place of camshaft bearings **B** and **G** after overhauling the removed cylinder head and before refitting it on the engine.

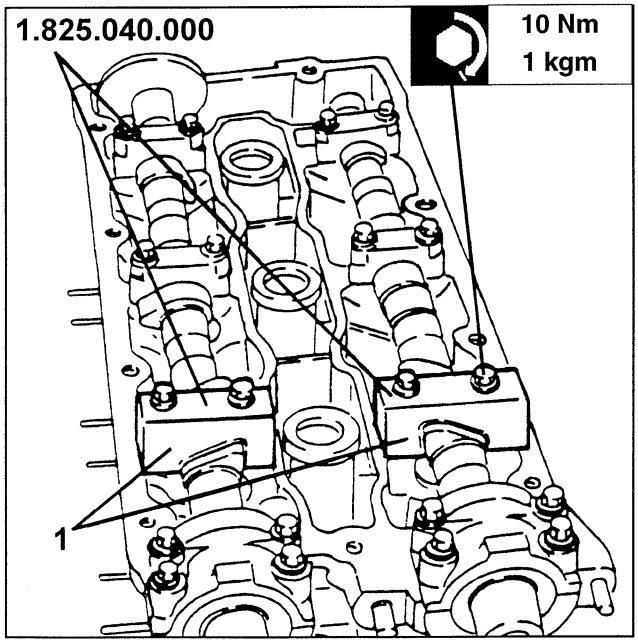

1. Fit templates no. 1.825.040.000 in the position printed on the templates in the place of camshaft bearings **7** and **4**.

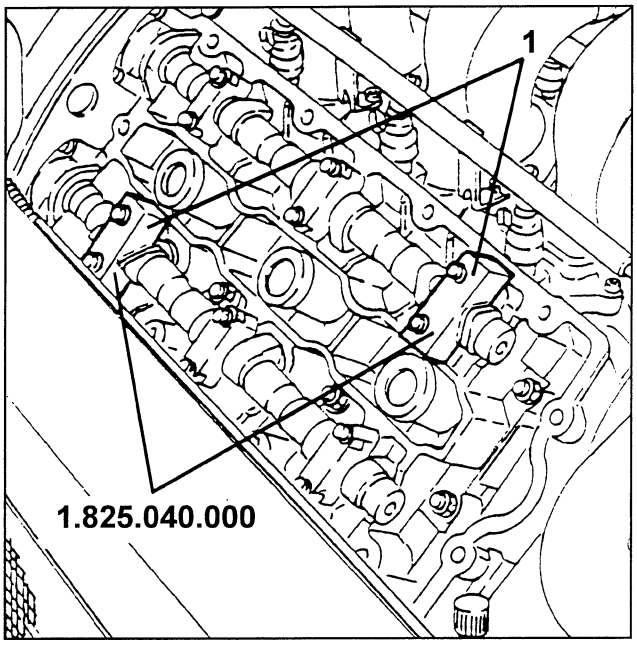

- Remove the previously fitted cylinder liner retainers no. 1.820.279.000.
- Refit the right-hand cylinder head to the crankcase.
- Lubricate threading, nuts and washers with engine oil and torque as shown below in the order shown in the figure.

NOTE: Use the tool and gauge no. 1.860.942.000 for angle torque.

Tightening procedure	
Tighten all nuts at:	24 ÷ 26 Nm 2.5 ÷ 2.7 kgm
Complete torque with additional:	240° ± 2°

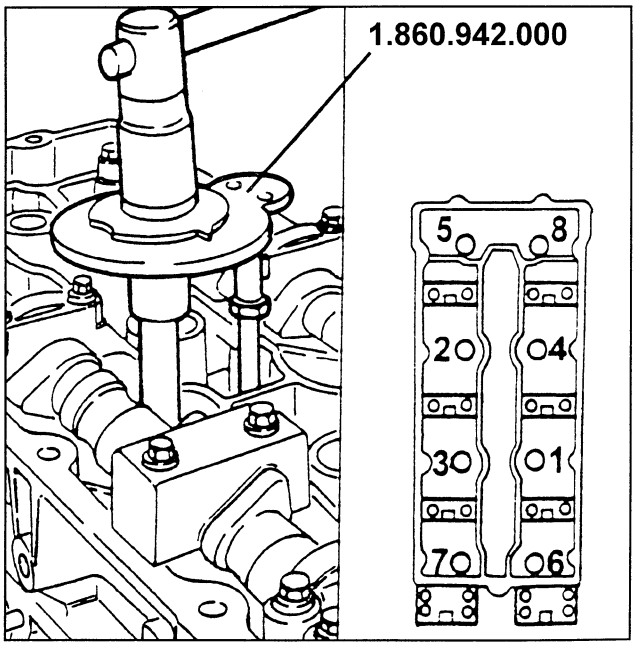

cardiagn.com

NOTE: ASTADUR cylinder head seals are used. The special material the seals are made of polymerises during engine operation and consequently becomes very hard.
The following precautions are required to ensure cylinder head seal polymerisation:
- keep the seals closed in their nylon bags;
- take them out of the packaging just before fitting;
- do not lubricate or soil the seals with oil. Make sure the cylinder head and crankcase surface are clean.

1. Reverse the removal sequence and refit the right-hand cylinder head camshaft drive pulleys, fastening the screws by hand.
- Use extension no. 1.822.150.000 and tool no. 1.822.146.000 to contrast torque. Loosen the left-hand cylinder head camshaft drive pulley fastening screws.
- Use tool no. 1.860.954.001. Extract the left-hand cylinder head camshaft drive pulleys are reposition them fastening the screws by hand.
2. Check whether the 1st cylinder piston is at TDC, firing stroke. If not, move it to this position by slightly turning in both directions the auxiliary unit drive pulley fastening nut.

NOTE: Make sure the last revolution of the crankshaft is in the direction of operation.

3. Fit the camshaft drive pulley drive belt.

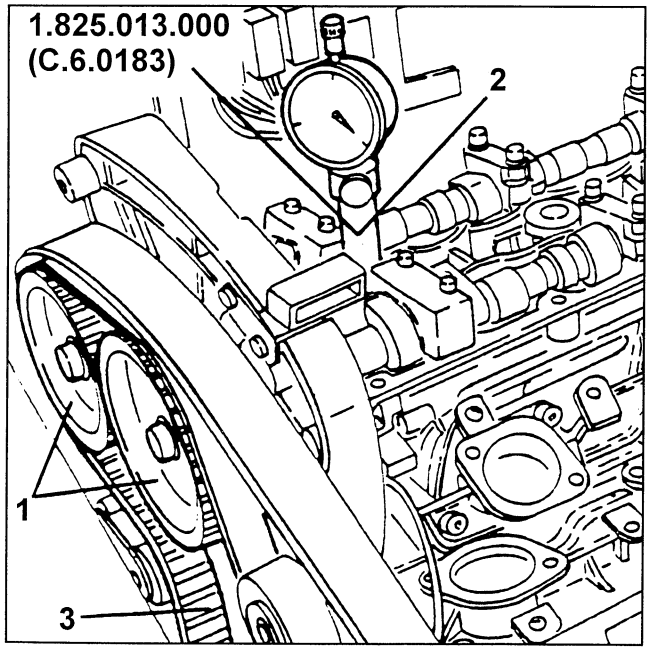

- Remove the cylinder head alternator bracket upper screw.

1. Loosen the lower alternator fastening screw to fit the timing belt tension tool.

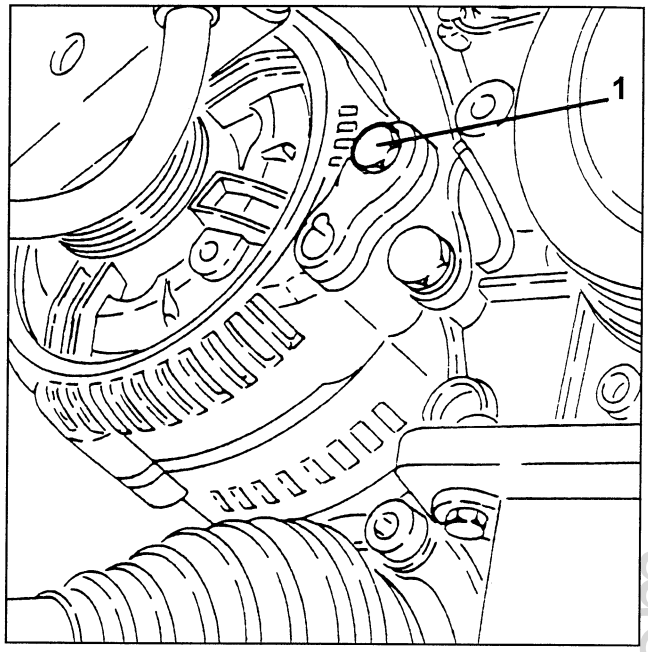

1. Fit timing belt tension tool no. 1.860.950.000 and fasten the previously loosened screw (1b) to the coolant pump; tool pin (1c) should contrast the belt take-up device mobile part.

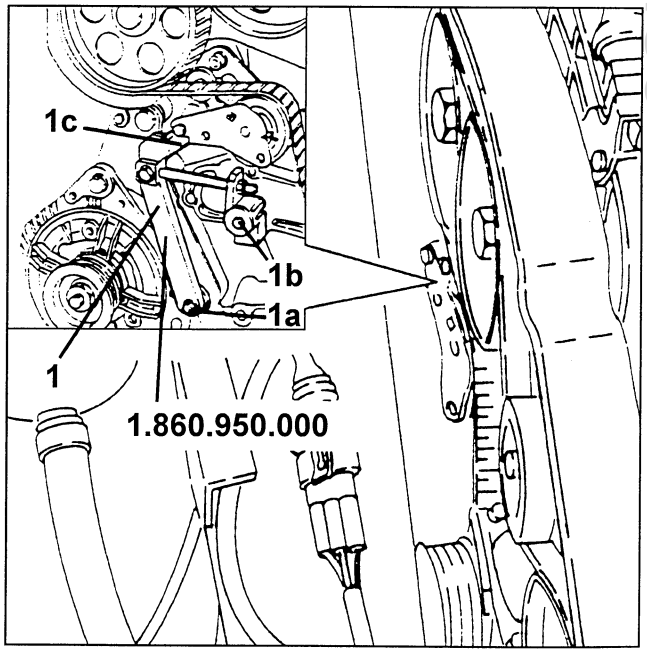

cardiagn.com

1. Take the mobile notch under the belt take-up fixed notch as shown in the figure.

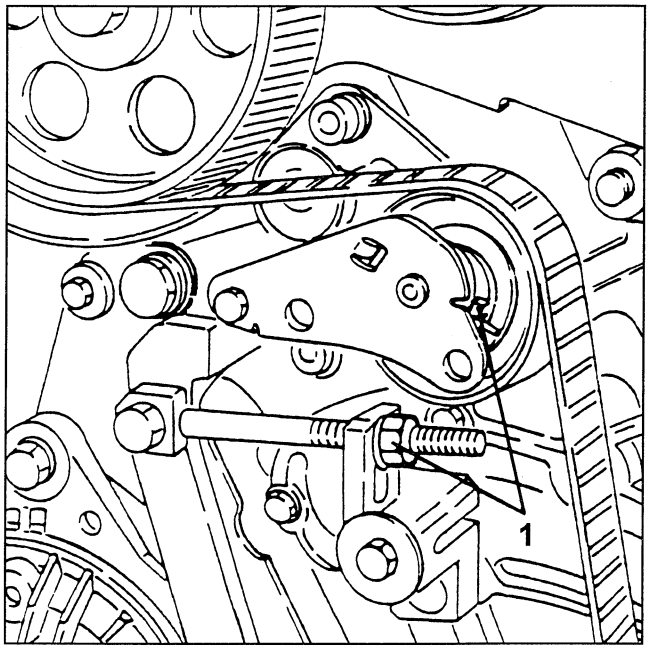

1. Use extension no. 1.822.150.000 and tool no. 1.822.146.000 to contrast torque. Fasten the camshaft drive pulley screws at the prescribed torque.

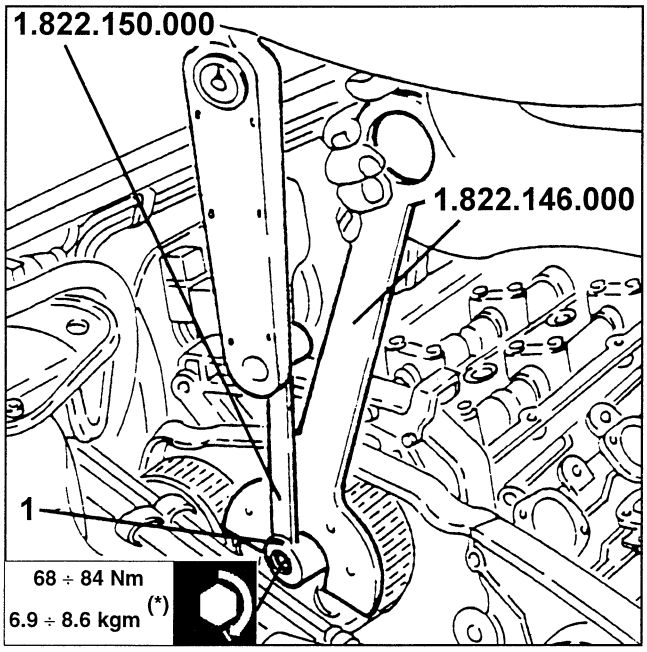

(*): Nominal value

- Remove the previously fitted templates no. 1.825.040.000. Fit the previously fitted bearings in their place and fasten the screws at the prescribed torque.
- Turn the crankshaft twice in the direction of revolution to fit the timing belt well.

1. Check whether the fixed notch on the belt take-up coincides with the mobile notch. If not, loosen the belt take-up tension by turning nut (A) until the notches meet.
2. Torque the belt take-up fastening nuts as prescribed and remove belt tension tool no. 1.860.950.000.

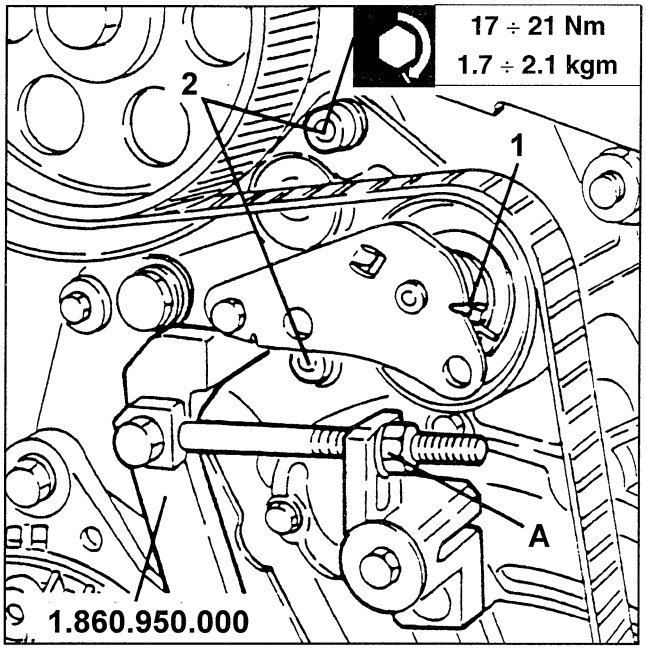

- Complete refitting by reversing the removal sequence.

cardiagn.com

OIL PUMP

REMOVING/REFITTING

- Set the car on a lift.
- Disconnect the battery(-) terminal.
- Remove the right front wheel and mud flap.
- Drain the engine oil (see Group 00).

1. Slacken the fastenings, then remove the front section of the exhaust pipe only from the left cylinder head.

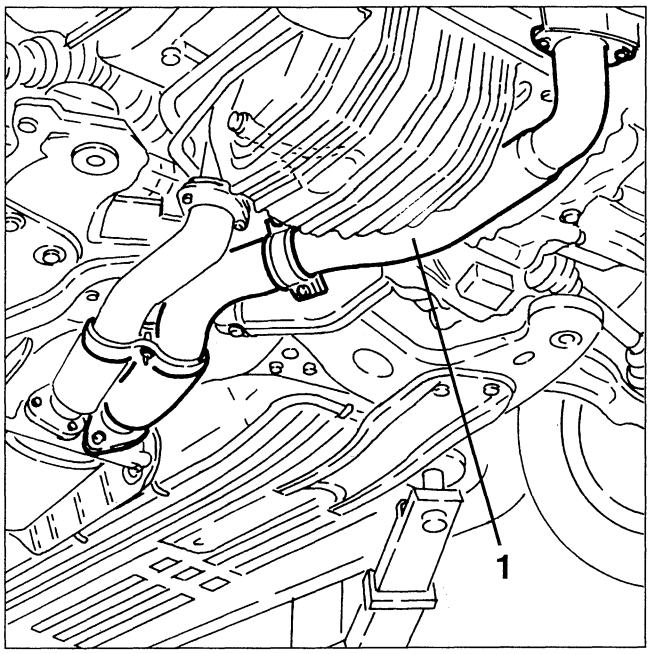

1. Using a wrench on the screw fastening the belt tensioner pulley, overcome the force of the tensioner and lock it in this position (belt slack) inserting the special peg as illustrated.
2. Slacken the fastening screw and remove the lower guide pulley of the auxiliary components drive belt.

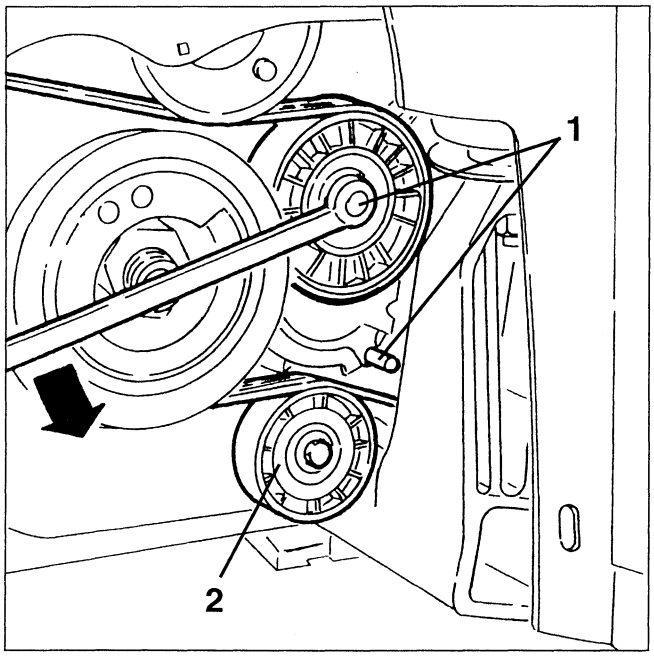

1. Slacken the fastening screws and remove the flywheel guard.

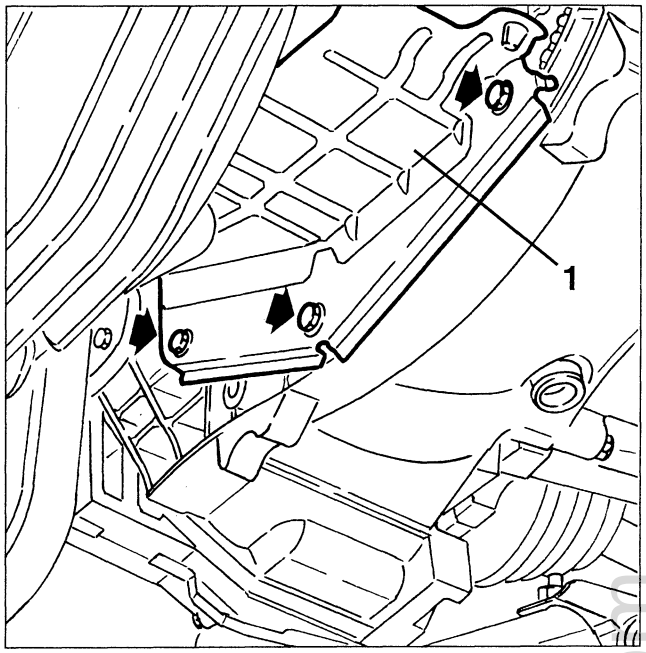

1. Slacken the fastening screws and remove the rpm and timing sensor.

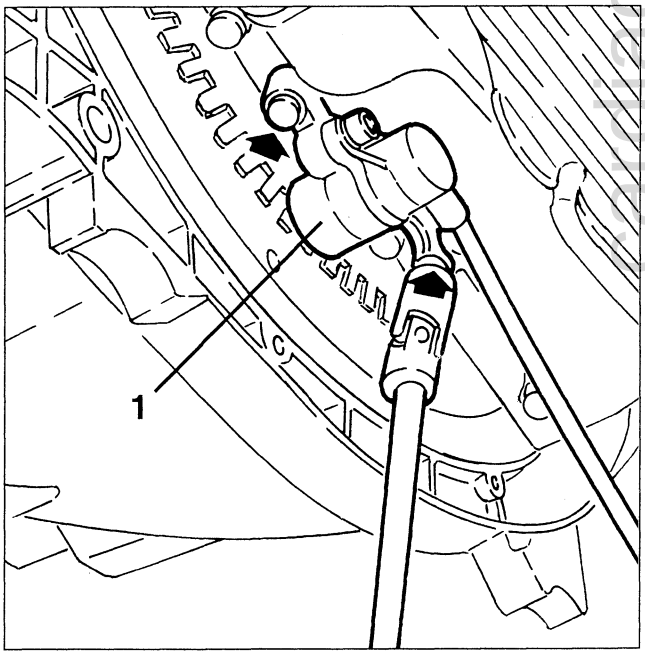

carmanuals.com

1. Using a suitable wrench, slacken and remove the oil filter.
2. From the oil filter support disconnect the fittings of the radiator oil delivery and return pipes.

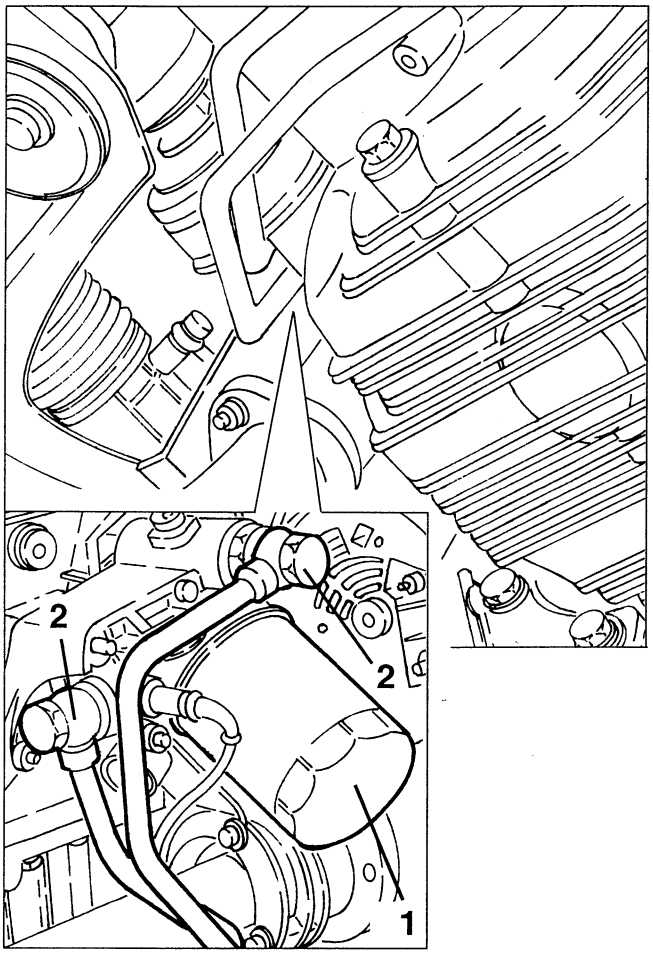

1. Slacken the fastening screws and remove the engine oil delivery and return pipe support bracket to the radiator, then without disconnecting the latter restrain them temporarily so that they do not hinder the following operations.

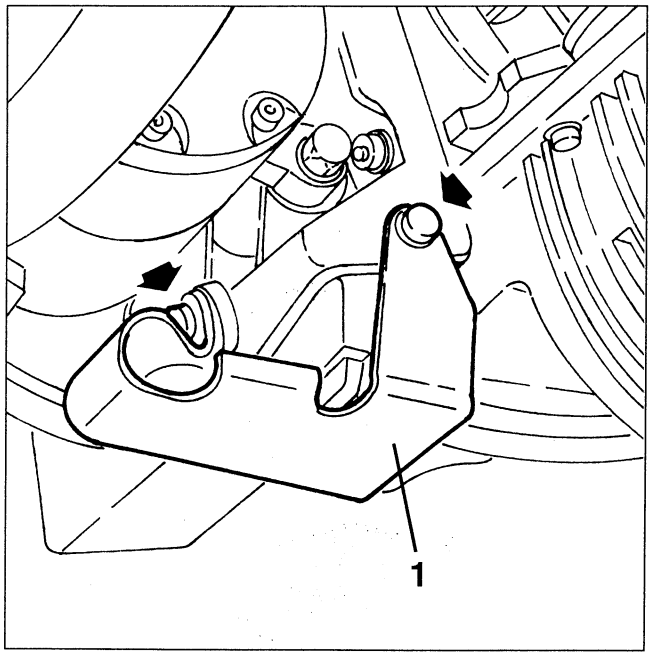

1. Slacken the fastening screws and remove the oil sump.

WARNING:
Sealant is applied between the oil sump and crankcase to ensure tightness; when the sump is removed it is necessary to cut the sealant taking care not to damage that in the two holes of the rear main bearing cap.
If not, restore the sealant inside the holes.

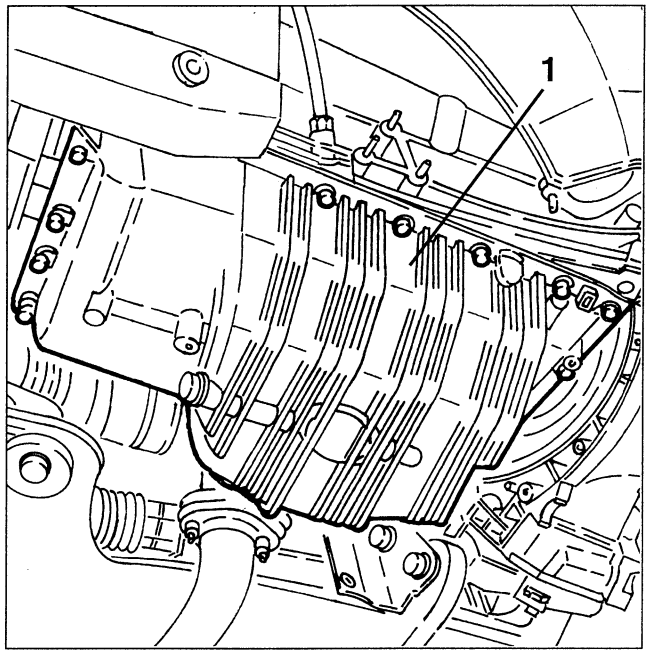

1. Install flywheel stopper tool no. 1.820.088.000.

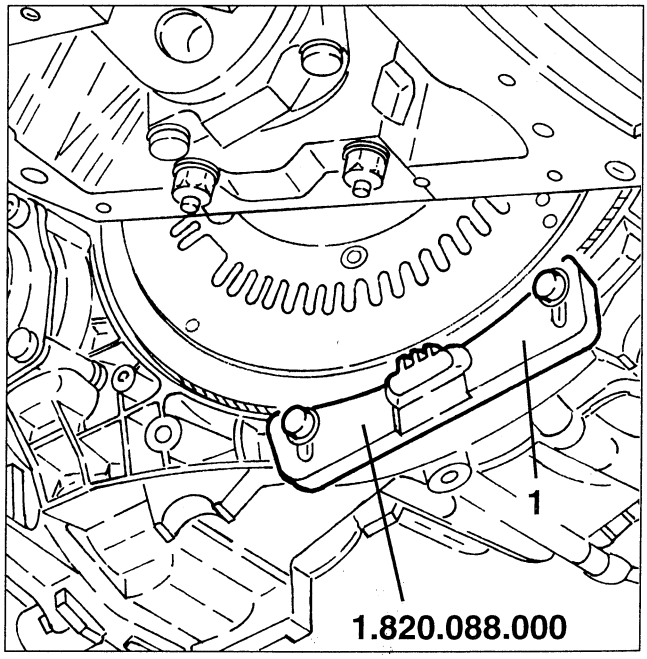

cardiagn.com

1. Slacken the fastening screw of the oil pump drive gear.

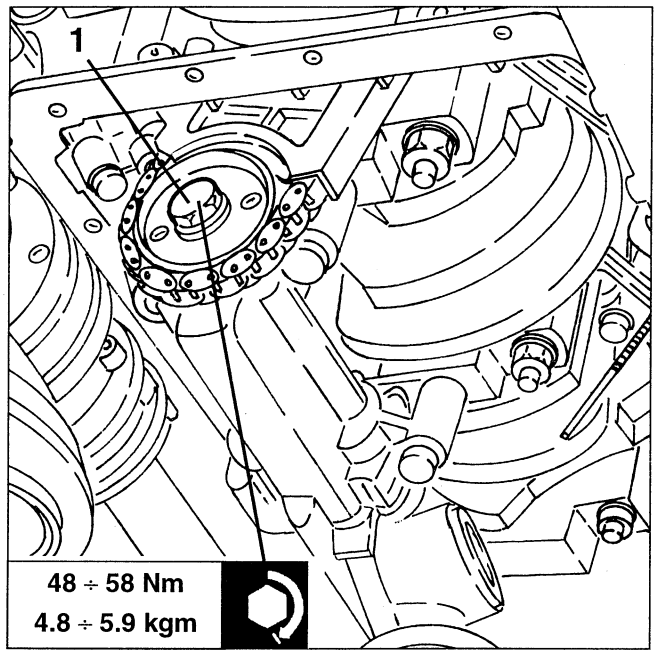

1. Using tool no. 1.860.954.001, remove the drive gear from the oil pump spindle.

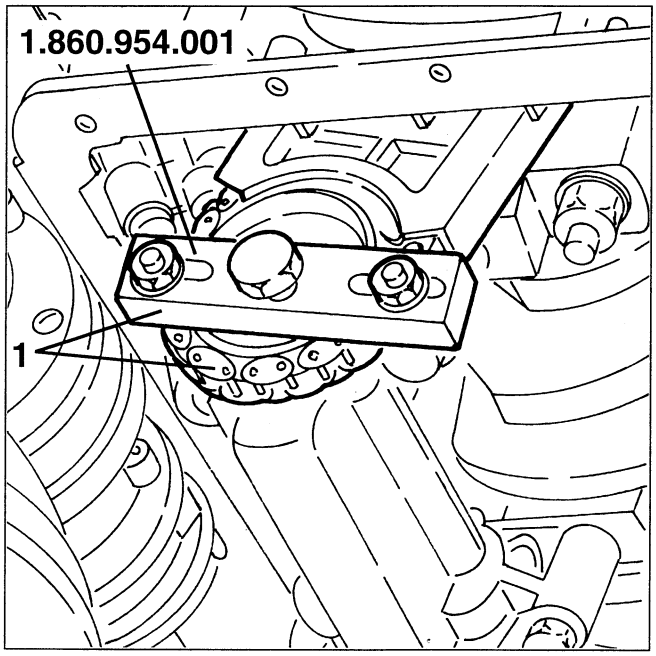

1. Slacken the fastening screws and remove the oil pump complete.

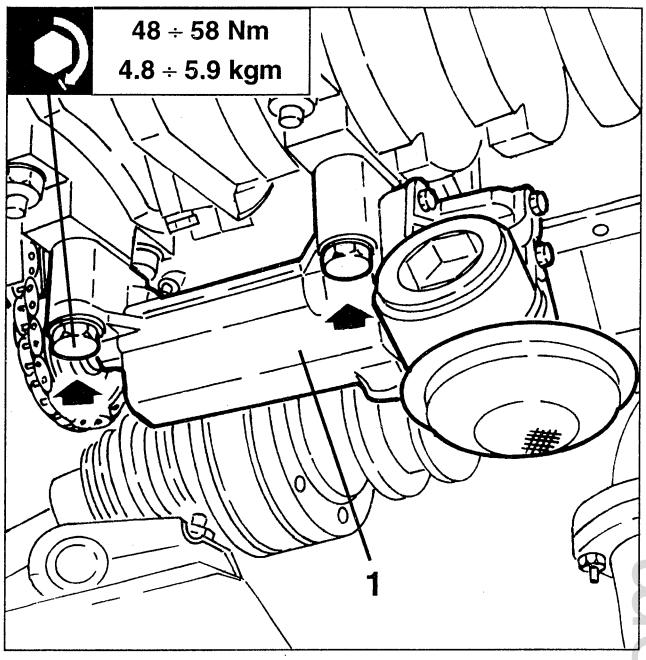

Refit reversing the sequence followed for removal and adhering to the following instructions.
- Remove any traces of sealant on the mating surfaces of the oil sump - crankcase.
- Use a dry cloth to eliminate traces of oil to avoid compromising the sealing.
- Continuously apply (without interruptions) a seam of silicone sealant taking care to join the end with the beginning well.

1. Position the oil sump avoiding horizontal movements which could remove the silicone sealant, then tighten the oil sump fastening screws to the specified torque.

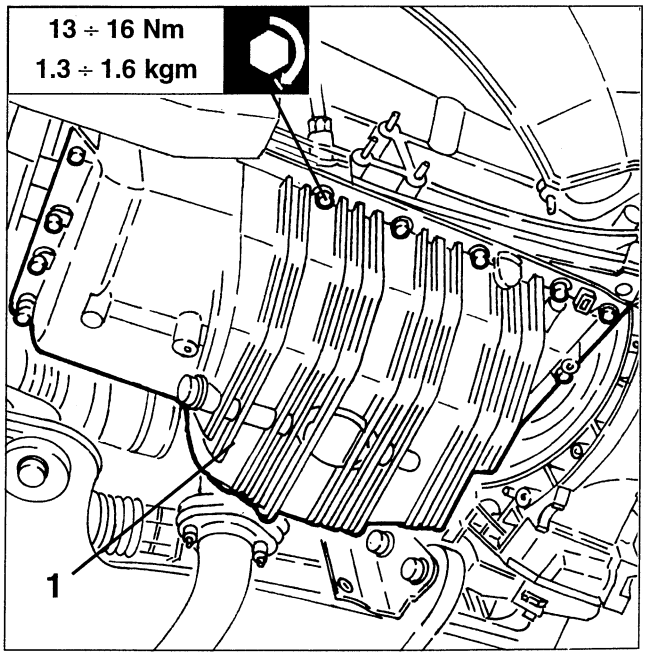

carpiagn.com

CHANGING THE CAMSHAFT OIL SEALS

Proceed as described in Group 00 in the procedure "Changing the timing gear belt" up to removing the cylinder head covers.

1. Slacken the fastening screws and remove the engine stay rod.

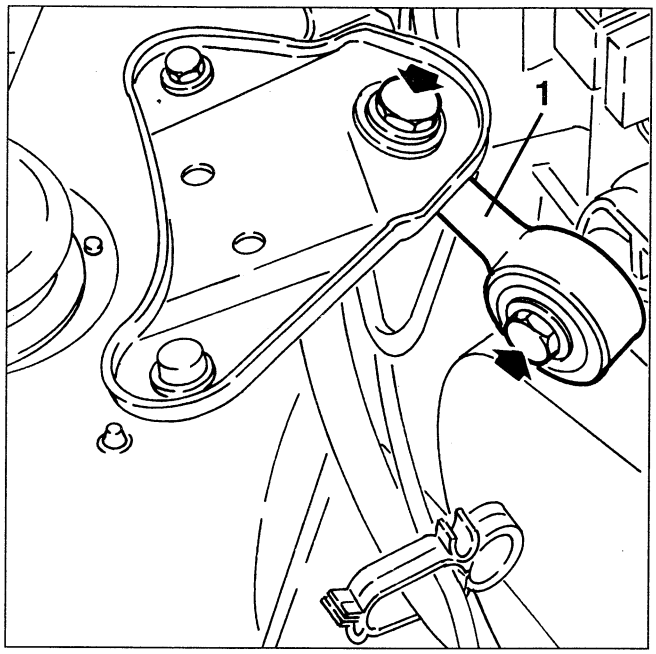

1. Install tool no. 1.825.013.000 (C.6.0183) complete with dial gauge in the seat of the 1st cylinder spark plug.
- Working on the fastening nut of the auxiliary components drive pulley turn the crankshaft slightly (both ways) until the piston of the 1st cylinder reaches T.D.C. in the bursting stroke.

NOTE: Make sure that the last turn of the crankshaft is in the operating direction.

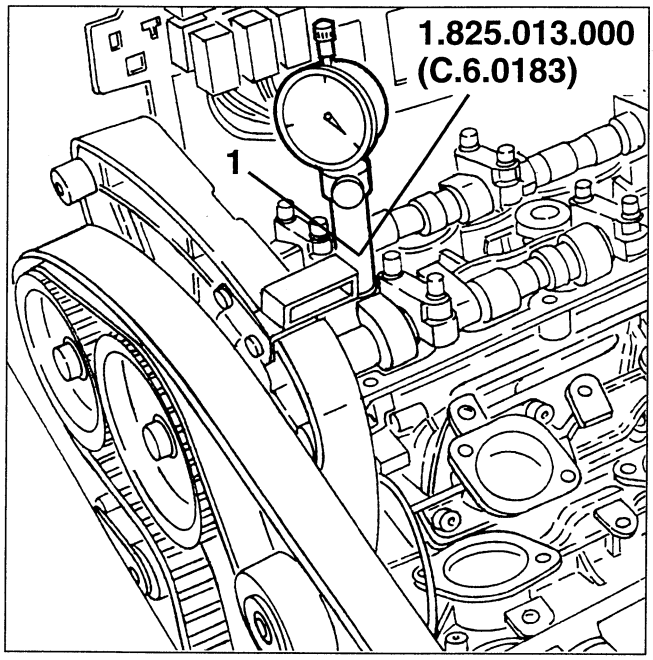

1. Slacken the two screws fastening the timing gear drive belt tensioner and remove the belt from the camshaft drive pulleys.
2. Slacken the fastening screw and remove the timing gear drive belt guide pulley.

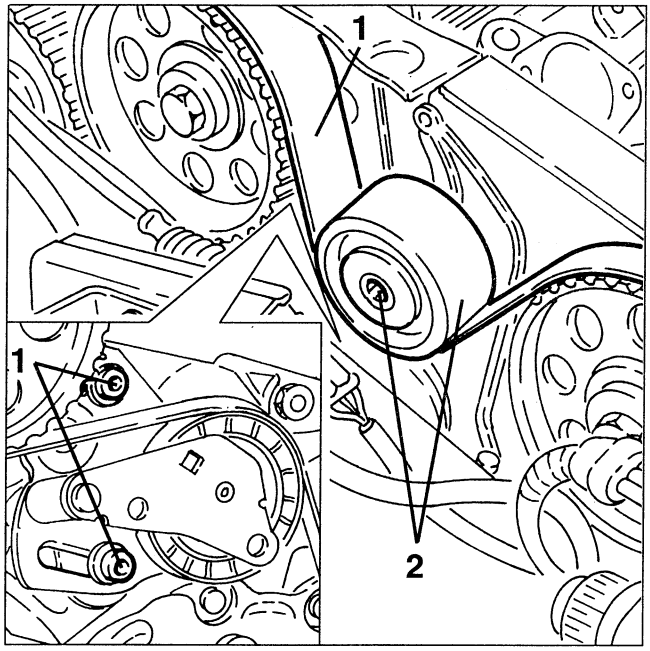

1. Using extension no. 1.822.150.000 and tool no. 1.822.146.000 as counter torque, slacken the screws fastening the camshaft drive pulleys.

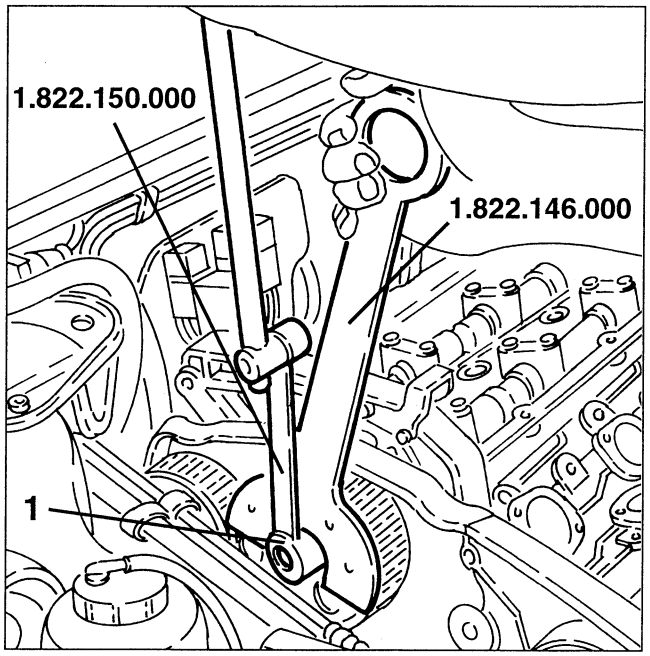

cardiagn.com

1. Using tool no. 1.860.954.001 pull remove the drive pulleys from the camshafts.

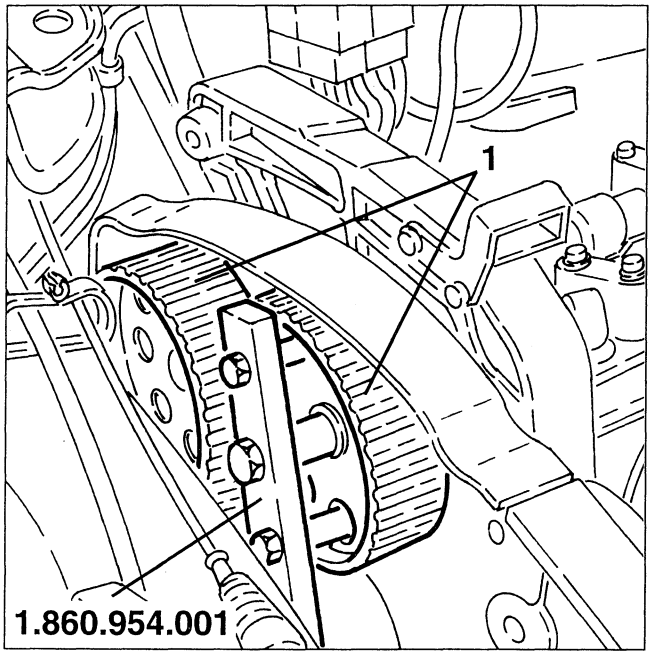

1. Slacken the fastening nuts and remove the engine stay rod support bracket.

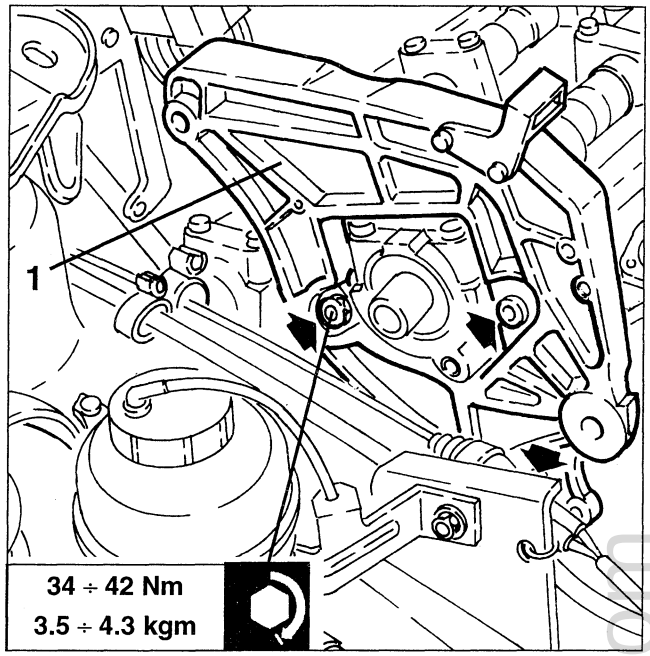

1. Slacken the fastening screws and remove the inner timing gear belt guard.

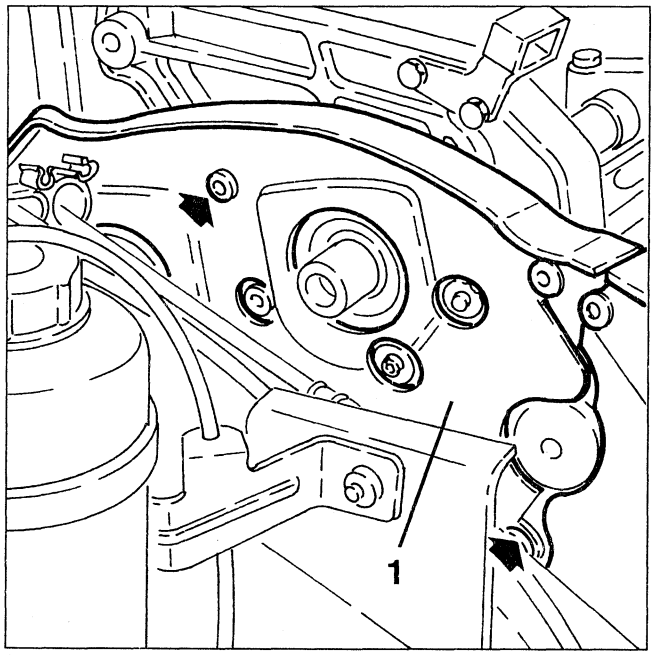

1. Slacken the fastening screws and remove the camshaft front caps.
2. Remove the oil seal rings.

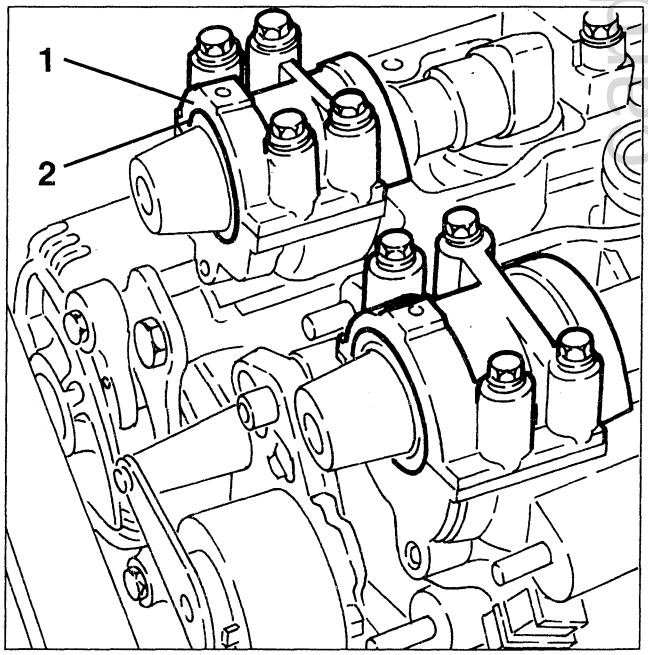

cardiagn.com

1. Refit the camshaft front caps and tighten the fastening screws to the specified torque.
2. Using tool no. 1.860.948.000, insert new camshaft oil seals.

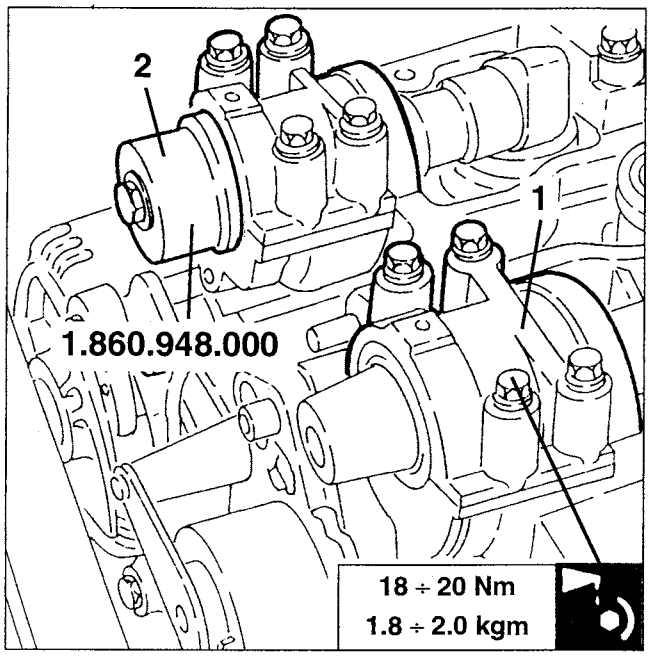

- Refit the engine stay rod support bracket and the timing gear belt inner guard.
- Remove camshaft caps **4** and **7** for the left cylinder head.

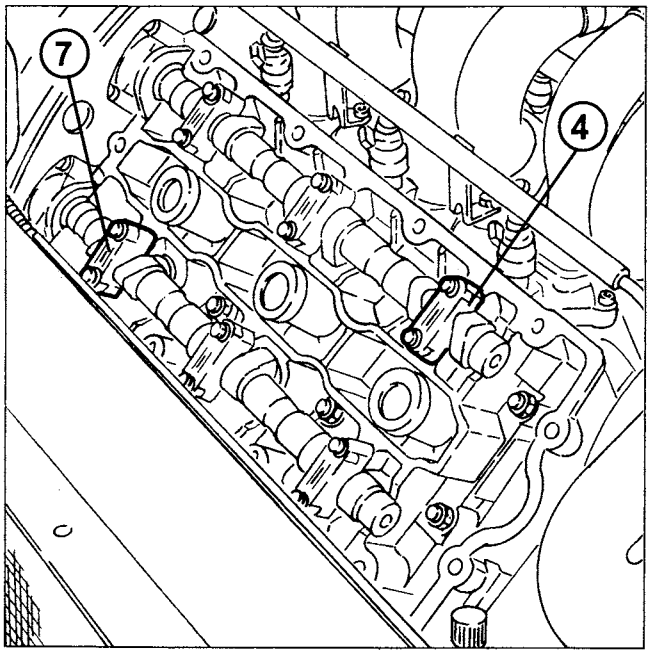

- Remove camshaft caps **B** and **G** for the right cylinder head.

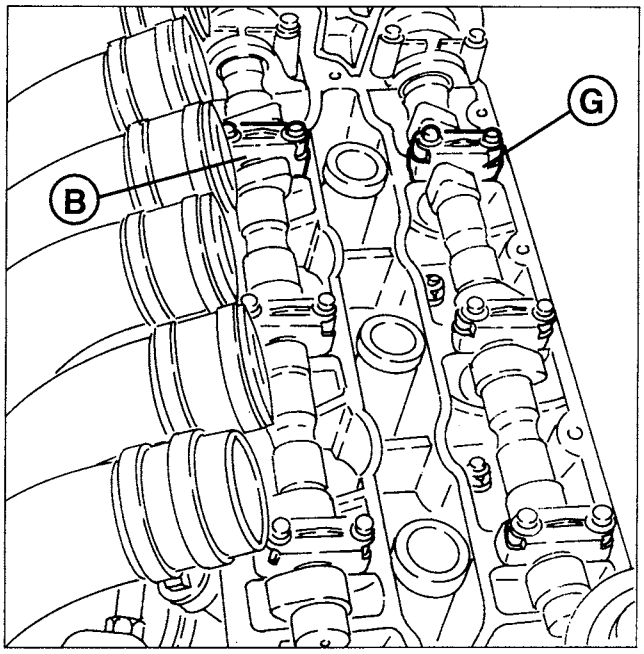

- Refit the camshaft drive pulleys tightening the fastening screws by hand.
1. Using tool no. 1.822.146.000, turn each camshaft until the reference notches on the shafts coincide with the upper surface of the cylinder head.

NOTE: The reference marks should face towards the centre of each head.

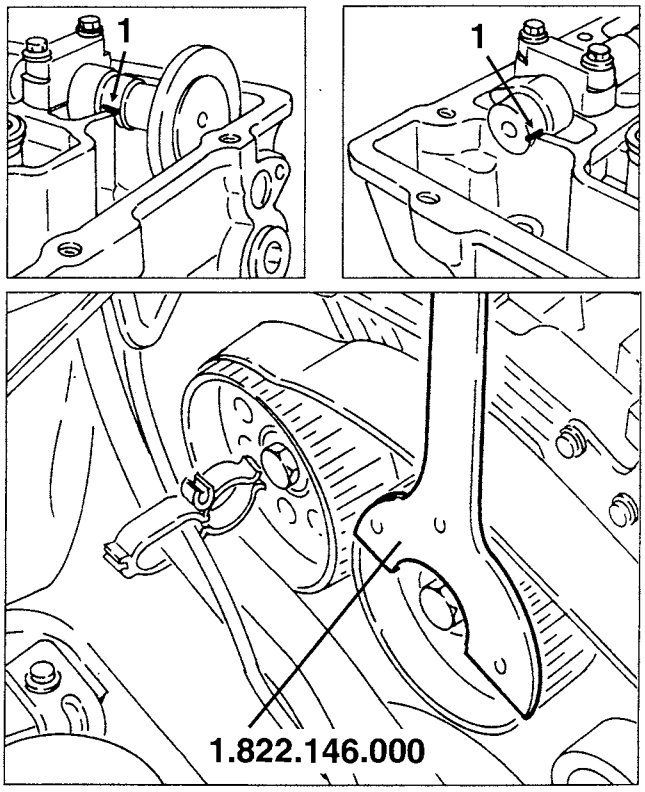

cardiagn.com

1. Fit templates no. 1.825.040.000 in the position printed on the templates in the place of camshaft bearings **4** and **7**.

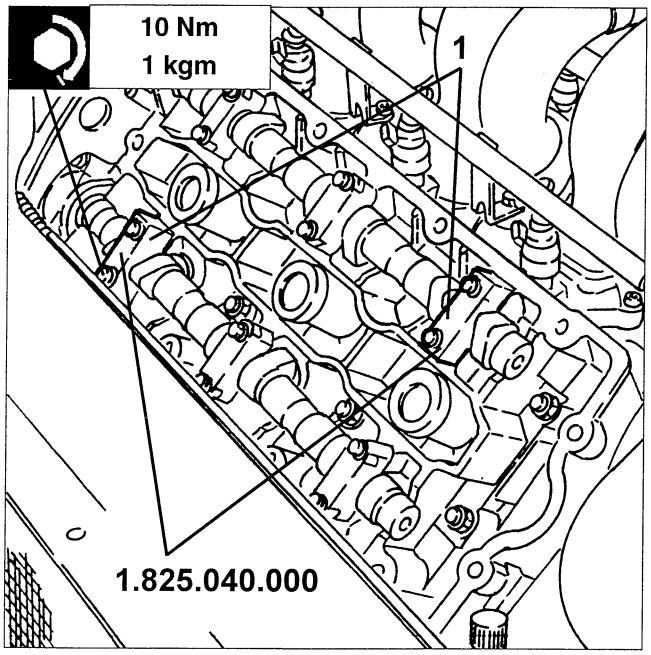

1. Check whether the 1st cylinder piston is at TDC, firing stroke. If not, move it to this position by slightly turning in both directions the auxiliary unit drive pulley fastening nut.
NOTE: Make sure the last revolution of the crankshaft is in the direction of operation.

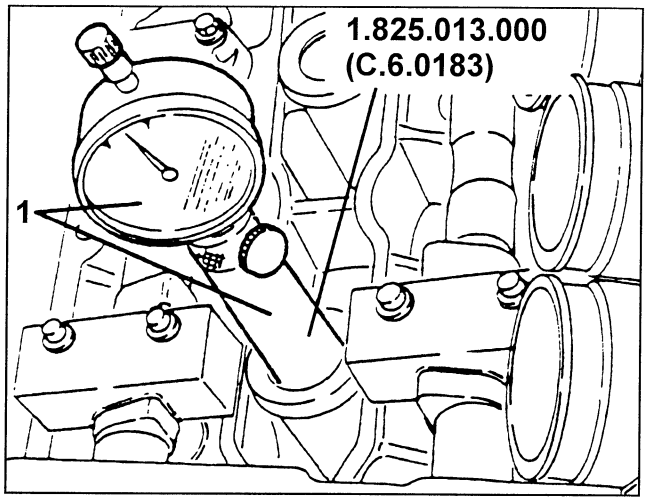

1. Fit templates no. 1.825.040.000 in the position printed on the templates in the place of camshaft bearings **B** and **G**.

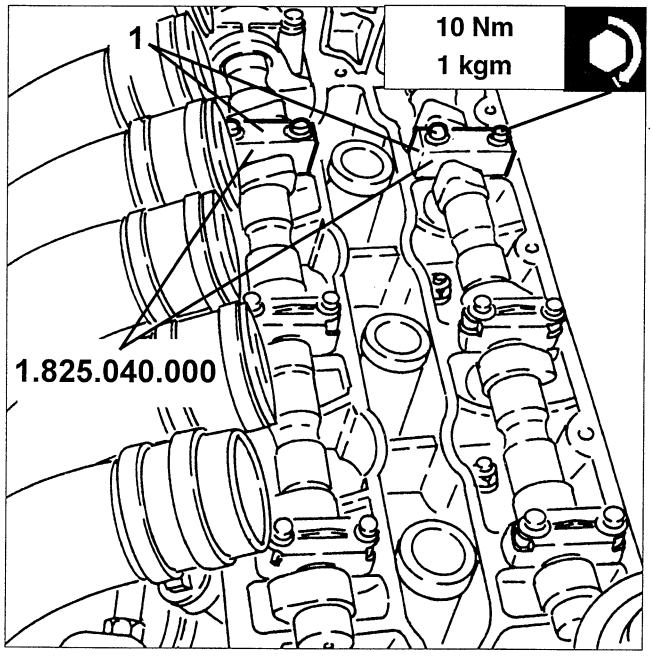

1. Loosen the lower alternator fastening screw to fit the timing belt tension tool.

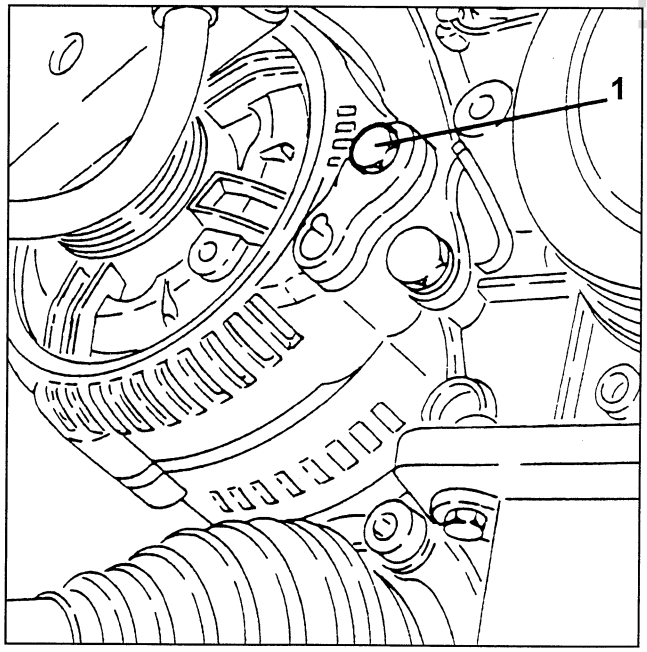

cardiagn.com

1. Fit timing belt tension tool no. 1.860.950.000 and fasten the previously loosened screw (1a) to the alternator and screw (1b) to the coolant pump; tool pin (1c) should contrast the belt take-up device mobile part.

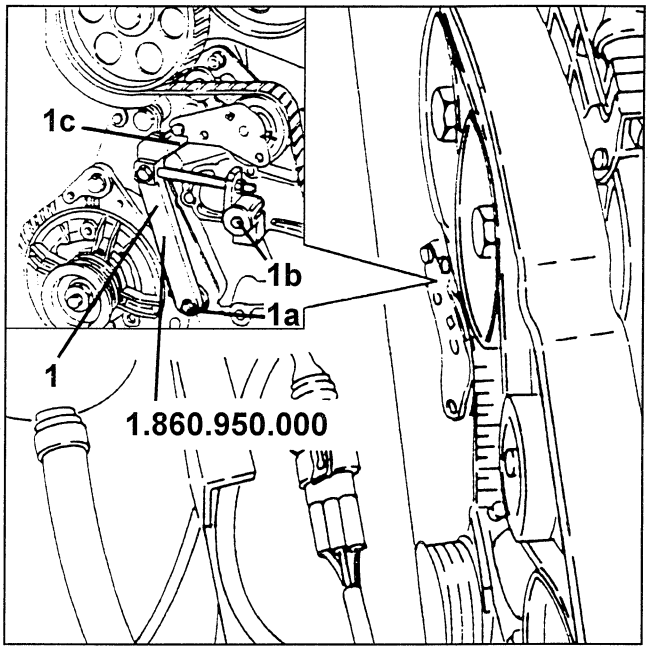

1. Take the mobile notch under the belt take-up fixed notch as shown in the figure.

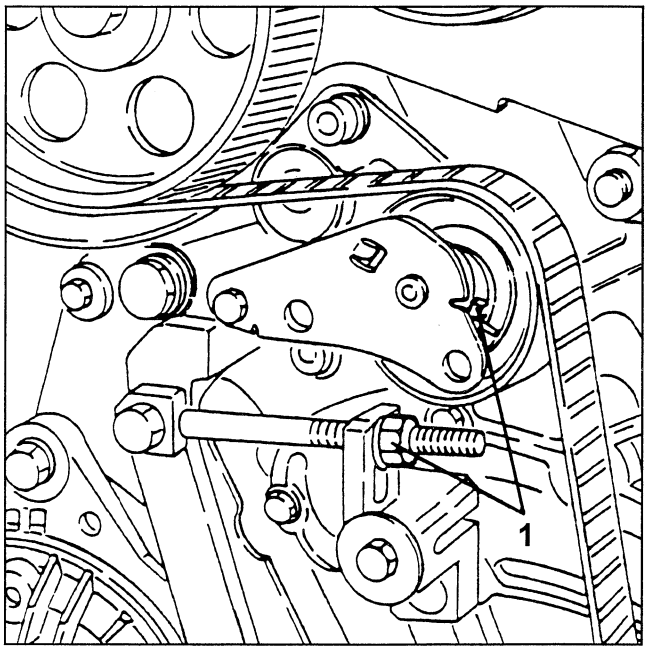

1. Use extension no. 1.822.150.000 and tool no. 1.822.146.000 to contrast torque. Fasten the camshaft drive pulley screws at the prescribed torque.

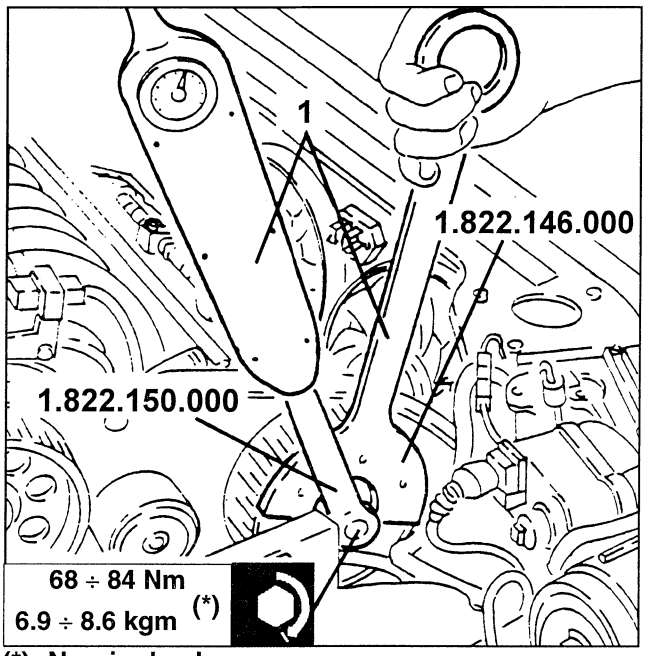

(*): Nominal value

- Remove the previously fitted templates no. 1.825.040.000. Fit the previously fitted bearings in their place and fasten the screws at the prescribed torque.
- Turn the crankshaft twice in the direction of revolution to fit the timing belt well.

1. Check whether the fixed notch on the belt take-up coincides with the mobile notch. If not, loosen the belt take-up tension by turning nut (A) until the notches meet.
2. Torque the belt take-up fastening nuts as prescribed and remove belt tension tool no. 1.860.950.000.

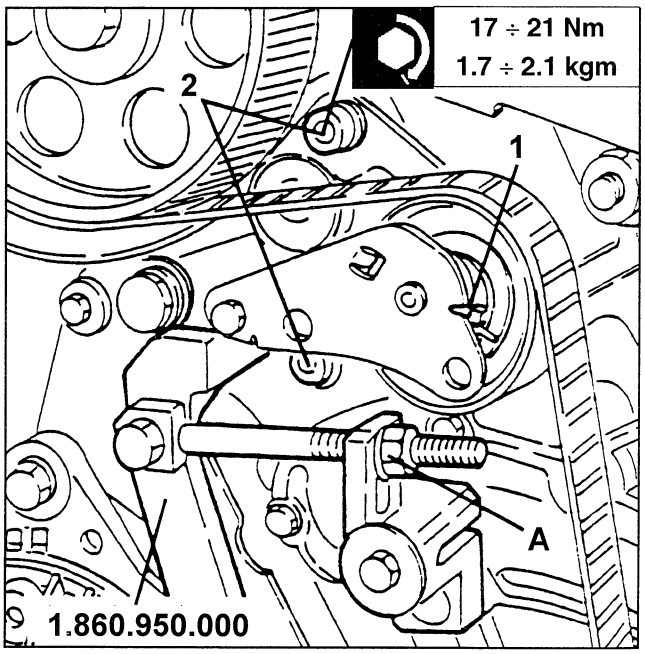

- Complete refitting by reversing the removal sequence.

cardiagn.com

FRONT CRANKSHAFT OIL SEAL REPLACEMENT

Proceed as shown in Assembly 00, procedure "Replacing the timing belt" to remove the timing belt.

1. Remove the timing belt and thrust ring.

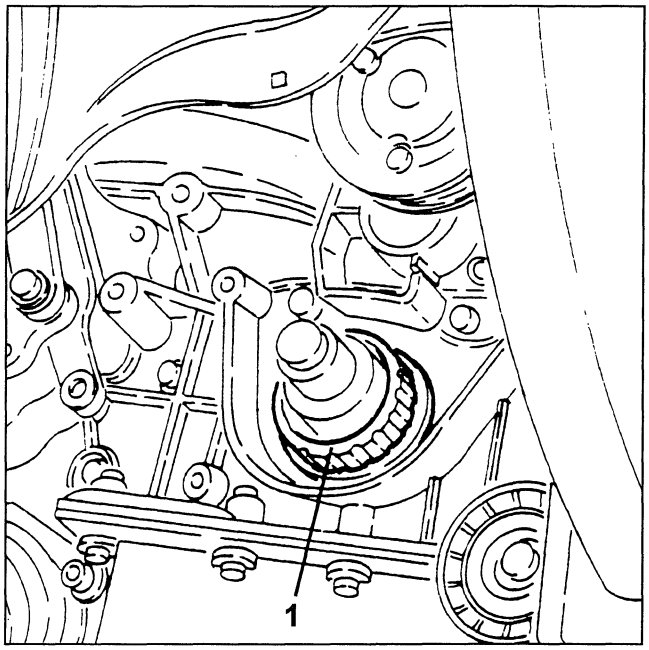

- Remove the crankshaft front oil seal.
1. Use tool no. 1.860.949.000 to introduce a new oil seal on the crankcase front cover.

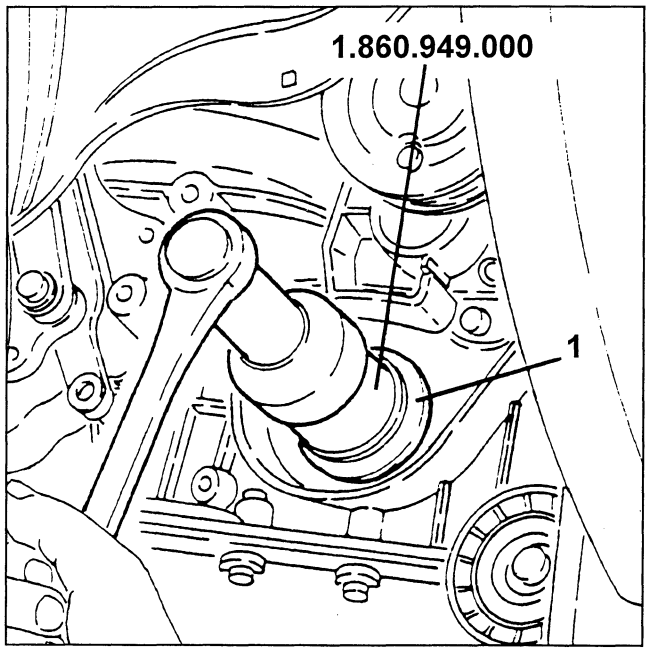

- Reposition the thrust ring. Make sure the convex surface is facing the front crankcase cover. Then refit the timing belt pulley.
Complete the refitting operation as described in the "Timing belt replacement" procedure from where it was interrupted.

REAR CRANKSHAFT OIL SEAL REPLACEMENT

- Remove the gearbox (see ASSEMBLY 21).
- Remove the clutch (see ASSEMBLY 18).
1. Fit the flywheel retainer no. 1.820.228.000.
2. Loosen the fastening screws and remove the flywheel.

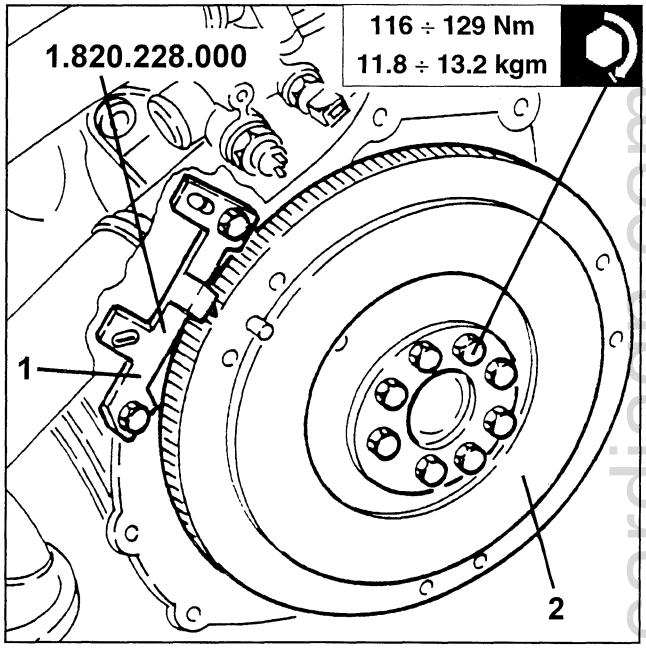

- Remove the rear crankshaft oil seal.
1. Use tool no. 1.821.150.000 to introduce a new rear crankshaft oil seal.

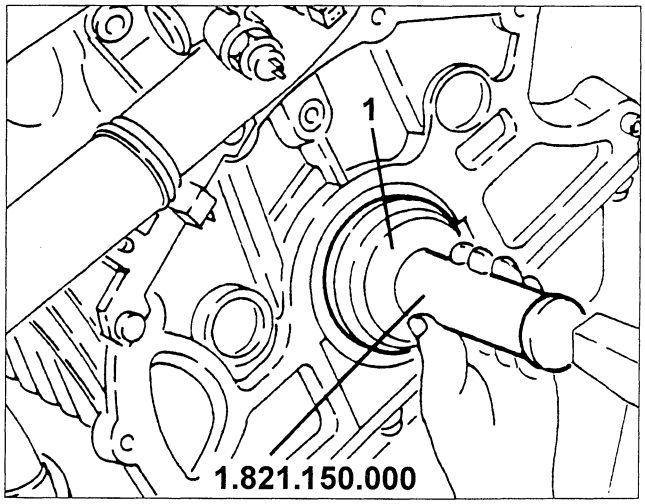

cardiagn.com

REAR CRANKSHAFT JOURNAL SILICON SEAL RESTORING

- Remove the gearbox (see assembly 21).
- Remove the clutch (see assembly 18).
- Remove the oil sump (see "Oil pump - Removal/Refitting").

1. Fit the flywheel retainer no. 1.820.228.000.
2. Loosen the fastening screws and remove the flywheel.

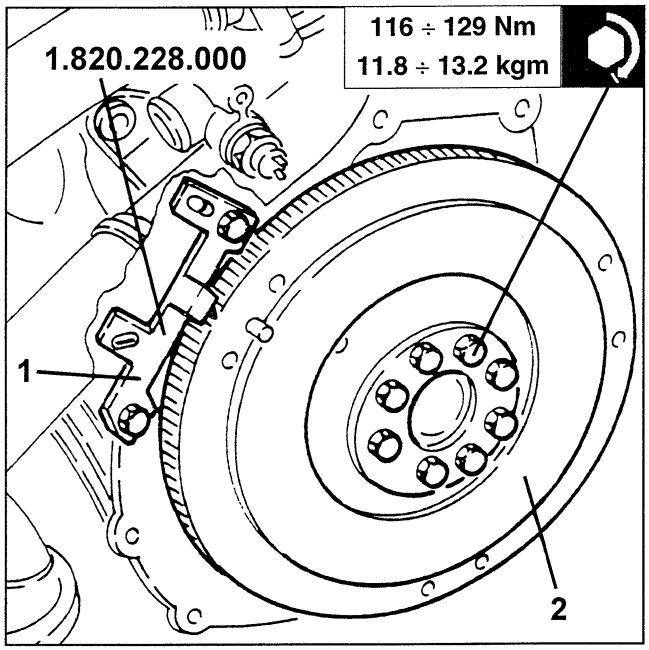

1. Loosen the rear main bearing fastening nuts.
2. Remove the rear main bearing with tools no. 1.821.006.001 and no. 1.821.006.002.

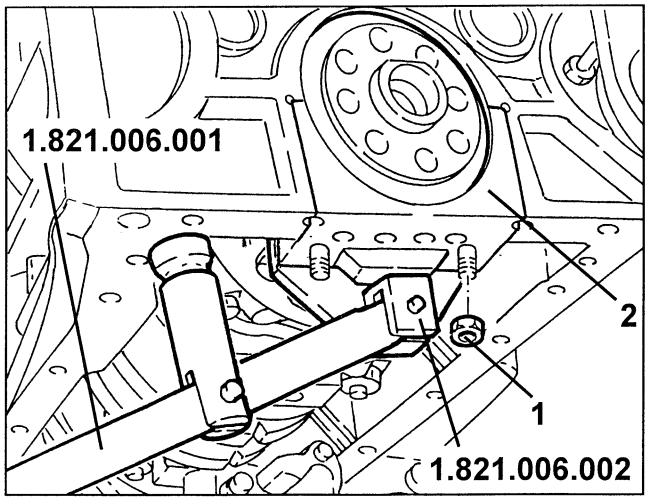

- Remove the main half-bearings.
- Remove the rubber seals (for vehicles up to engine no. 00708 only).
- Remove the engine rear crankshaft seal.
- Carefully remove sealant residues from the rear bearing seats, oil sump coupling surfaces and sealant drain holes (for vehicles from engine no. 00709 only).
- Carefully remove all traces of engine oil with heptane or similar solvent.
- Refit the rear main bearing with main half-bearing (after lubricating with engine oil) and torque the nuts at **25 Nm + 79°**.

NOTE: Use tool no. 1.860.942.000 for angle torque.

1. Refit crankshaft rear oil seal with tool no. 1.821.150.000.

NOTE: Fit the oil seal so that it covers holes (a).

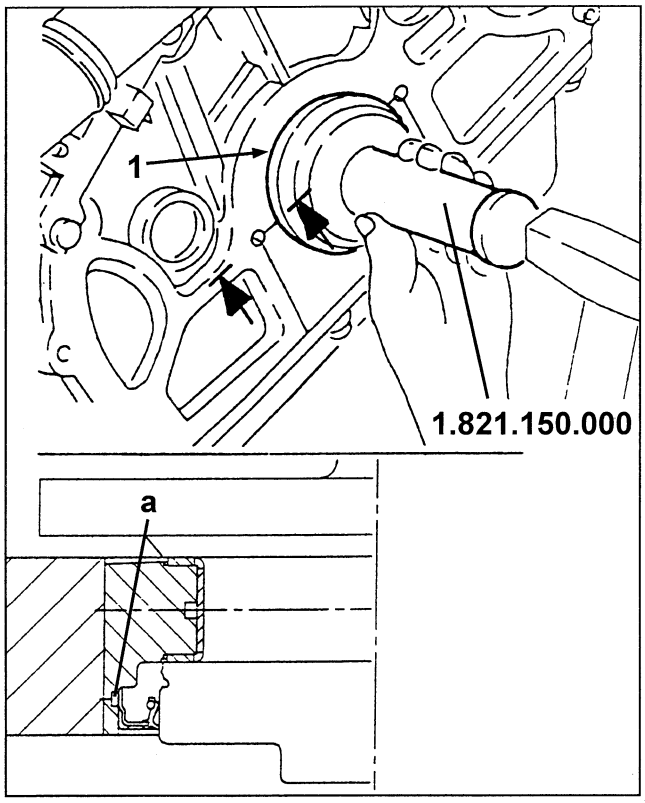

cardiagn.com

1. Apply "**DOW CORNING 7091**" silicon sealant with a mechanical gun through the holes shown in the figure.

NOTE: Check that the sealant seeps out from the rear crankcase-main bearing coupling along the entire length from holes (a) (for vehicles from engine no. 00708 only).

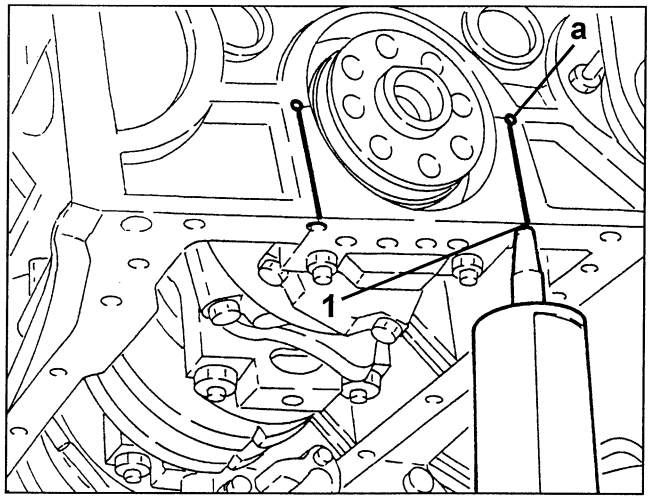

Refit by reversing the removal sequence attaining to the following precautions.

- Apply sealant to the oil sump. Make sure the strip of sealant (not wider than approximately 1.5 mm in diameter) is within the oil sump fastening holes (between reservoir and hole).

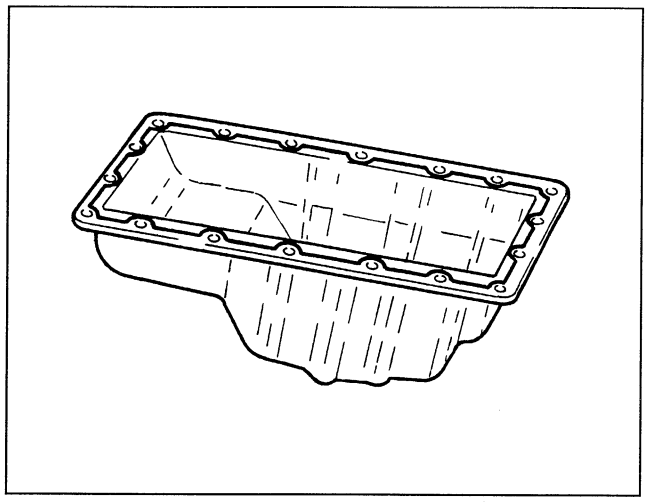

IMPORTANT: Fit the oil sump within 15 minutes from applying the sealant in the crankshaft rear seal holes.

cardiagn.com

GENERAL DESCRIPTION

Engines are governed by an electronic control system which manages and adjusts parameters, optimising performance and consumption by real time response to the various operating conditions.
This last generation, sophisticated system consists of a tested and reliable BOSCH MOTRONIC M 3.7.1 ECU which controls both ignition and injection.

SYSTEM OPERATION

Sequential, phased injection (S.E.F.I.)

Fuel injection governed by this ECU is sequential and phased for each cylinder.
The injection instant (when fuel is conveyed in the intake manifolds by opening the injectors) is not simultaneous in all cylinders but corresponds to the optimal injection point computed by the ECU according to specific maps on the basis of engine load, ratio and temperature.

Static ignition

An electronic "static distribution" ignition system is adopted (with semiconductors and without distributor). This solution eliminates rotating components.
Furthermore, the risk of interference is reduced.
Finally, high voltage wires and connections are reduced, as the power modules controlling the coil primary windings are inside the ECU.
The static ignition is ensured by six coils located on the cylinder heads.
Each coil directly powers a spark plug without intermediate wires.

Air intake flow meter

A modern "hot film" system is used to measure the intake air flow.
The flow meter is a duct located between the intake manifold and the air cleaner.
An electronic circuit and film are contained in the flow meter and are crossed by the air flowing in the duct.
The film is maintained at constant temperature (approximately 120°C warmer than the intake air temperature) by a resistance in contact with it.
The air flow in the duct tends to take heat from the film.
Consequently, a certain current is required by the resistance to keep the temperature.
This current is measured and is proportional to the air flow.
N.B. This air flow meter directly measures the air mass (and not volume, as in the previous "floating flap" meters) thus eliminating problems related to temperature, altitude, pressure, etc. and ensuring optimal air and petrol mixture ratio.

Cylinder acknowledgement

A phase sensor has been introduced with the sequential, phase injection system (cam sensor angle).
This allows the system to acknowledge which cylinder is in firing stroke to start the correct injection sequence.
This sensor is a Hall effect device: the voltage signal sent to the ECU goes down suddenly when the pin on the right-hand cylinder head exhaust shaft crosses the sensor.
Consequently, the signal is sent each two crankshaft revolutions.
The rpm sensor, on the other hand, sends a reference signal at each engine revolution.
Each tooth step on the phonic wheel informs the ECU of the increased crankshaft angular position so to send injection to the suitable cylinder and to ignite the respective pair of cylinders.

cardiagn.com

Fuel pump

The control logic of the fuel pump carried out by the control unit which is mainly based on the rpm signal immediately cuts off the supply to the pump as soon as the engine stops.
Moreover, the pump will not operate with the key engaged and the engine not running.
In this car, this logic is integrated - in order to further higher the standards of safety - by the **inertial switch** device: this is an electromechanical switch which, in the event of heavy shocks, opens to cut off the circuit that takes the earth to the fuel pump, which stops instantaneously. This device is particularly important as an integration of the safety guaranteed by the logic of the control unit, especially if the car is hit from behind or in the case of other accidents in which the engine does not stop immediately.

Percentage of exhaust gas recirculation

Nox (nitric oxide) is developed at high temperatures in the bursting chambers.
To reduce these emissions an E.G.R. (Exhaust Gas Recirculation) system is adopted which by recirculating part of the exhaust gases, lowers the temperature, thus the Nox produced, in the combustion chambers.
In fact, part of the exhaust gas is withdrawn through the special EGR Valve and re-admitted to the intake box where it is mixed with the intaken air and burnt again in the engine. The EGR valve is modulated by a solenoid valve controlled by the injection control unit and, as a result of the type of control, in addition to reducing the amount of Nox, consumption levels are also optimised.
The percentage of exhaust gas to be returned to the engine is established by the control unit taking account of a specific characteristic curve which depends on the load, speed and temperature of the engine.

OPERATING LOGIC

– **Identification of the "operating point":**
the "point of operation of the engine" is located mainly through two sensors: the rpm sensor informs the control unit of the speed of rotation of the engine; the air flow meter supplies the value of the mass of air actually entering the cylinders, defining the instantaneous volumetric yield of the engine.

– **Adjustment of injection times (quantity of fuel):** the control unit controls the injectors very quickly and precisely, calculating the opening time on the basis of engine load (rpm and air flow), also taking into account the battery voltage and the temperature of the engine. Injection is "sequential", i.e. the injectors are opened in correspondence of the exhaust stroke of the corresponding cylinder.

– **Ignition adjustment (calculation of advances)**:
the control unit calculates the advance on the basis of the engine load (rpm and air flow); the value is also corrected according to the temperature of the intaken air and that of the engine.

– **Cold starting control:**
during cold starts the control unit uses special advance values and injection times.
When a determinate temperature/rpm ratio is reached, the control unit resumes normal operating conditions.

– **Control of enrichment during acceleration:**
upon the need for acceleration, the control unit increases injection in order to reach the required load as quickly as possible.
This function takes place through the potentiometer located on the throttle which instantaneously informs the control unit of the need to accelerate.

– **Fuel cut-off during deceleration:**
with the throttle closed and an engine speed above a certain threshold, the control unit de-activates fuel injection; this way the rpms decrease rapidly towards idle speed reducing the speed and fuel consumption. The cutoff threshold value varies according to the temperature of the engine and the speed of the car.

cardiagn.com

– **Control of idle speed:**
the adjustment of the engine idle speed is carried out through the special actuator which acts on the throttle by-pass.
This device acts as a regulator for cutting in the various services (e.g. conditioner compressor): in fact, when the throttle is closed, this valve adjusts the by-pass gap compensating the load required by the services in order to ensure that idle speed is as constant as possible.

– **Maximum Rpm limiting:**
above a certain threshold the control unit automatically stops the injection of fuel preventing the engine from "over-revving".

– **Combustion control -lambda probe-:**
the oxygen sensor (or "lambda" probe) informs the control unit of the amount of oxygen at the exhaust, and therefore the correct air-fuel metering.
The optimum mixture is obtained when the lambda coefficient = 1 (optimum stoichiometric mixture). The electric signal sent by the probe to the control unit changes abruptly when the composition of the mixture departs from lambda = 1. When the mixture is "lean" the control unit increases the amount of fuel, reducing it when the mixture is "rich" so that in this way the engine operates as far as possible around the ideal lambda rating.
The signal from the lambda probe is processed inside the control unit by a special integrator which prevents sudden "oscillations".
The probe is heated by an electrical resistance so that it quickly reaches the correct operating temperature (appr. 300 °C).
Through this probe it is therefore possible to adjust engine carburetion precisely. Among other items, this makes it possible to meet emission limit regulations.

– **Knocking control:**
Through knocking sensors the control unit is informed if any pinging or "knocking" occurs and it corrects the spark advance "delaying" it accordingly; a further correction also takes account of the air temperature, in fact when the temperature of the intake air is high, pinging is more accentuated.
The intaken air temperature, to be found just downstream of the air-flow meter, is not used to calculate the engine load but to control the knocking parameters and spark advances.

– **Fuel vapour recovery:**
the fuel vapours collected from the various points of the supply circuit in a special active carbon canister are ducted to the engine where they are burnt: this takes place through a solenoid valve which is opened by the control unit only when the engine is in a condition that allows correct combustion without adversely affecting the operation of the engine: in fact the control unit compensates this amount of incoming fuel by reducing delivery to the injectors.

– **E.G.R. valve control**
The percentage of exhaust gas to be returned to the engine is determined by the control unit taking account of a specific characteristic curve which depends on the engine load and speed: recirculation is only activated when the engine speed is between 2500 and 4000 rpm., also in relation to the temperature of the engine (higher recirculation percentage with high temperatures).

– **Connection with the air conditioner compressor:**
the control unit is connected with the air conditioner compressor and it cuts in the compressor in relation to operation of the engine. As this service absorbs a considerable amount of power, the control unit:
- adapts the engine idle speed each time the compressor cuts in; if the engine speed falls below 700 rpm, the compressor is turned off;
- when there is the need for power (high throttle opening speed starting from below 3500 rpm, or full load, or high engine temperature - over 117°C), it momentaneously cuts out the compressor
- when the engine is being started the compressor is disabled until normal operating conditions have been reached.

– **Connection with the Alfa Romeo CODE system**
as soon as the Motronic control unit receives the signal that the key has been turned to MARCIA, it "asks" the above-mentioned system for consent to start the engine: this consent is given only if the Alfa Romeo CODE control unit recognizes the code of the key engaged in the ignition switch as correct. This dialogue between the control units takes place on diagnosis line K already used for the Alfa Romeo Tester (see specific paragraph).
N.B. Before doing any work on the system it is advisable to read the corresponding chapter.

cardiagn.com

– **Self-diagnosis:**
the control unit possesses a **self-diagnosis system**, which continuously monitors the plausibility of the signals from the various sensors and compares them with the limits allowed: if these limits are exceeded, the system detects a fault and turns on the corresponding warning light on the instrument cluster.
The warning light turns on when the engine is started to indicate the initial test of the entire system (appr. 4 seconds), it then turns off if no errors have been memorised: otherwise it stays on.
For certain parameters, the control unit replaces the abnormal values with suitable mean ones so that the car can "limp" to a point of the Service Network.
These "recovery" values depend on the other correct signals and they are defined individually by the control unit operating logic.
The self-diagnosis system also enables quick and effective location of faults connecting with the ALFA ROMEO Tester (see "Fault-finding), through which all the errors memorised can be displayed. It is also possible to check the operating parameters recorded by the control unit and operate the single actuators to check whether they are working properly.

cardiagn.com

COMPONENTS OF THE MOTRONIC M 3.7.1 INJECTION-IGNITION SYSTEM

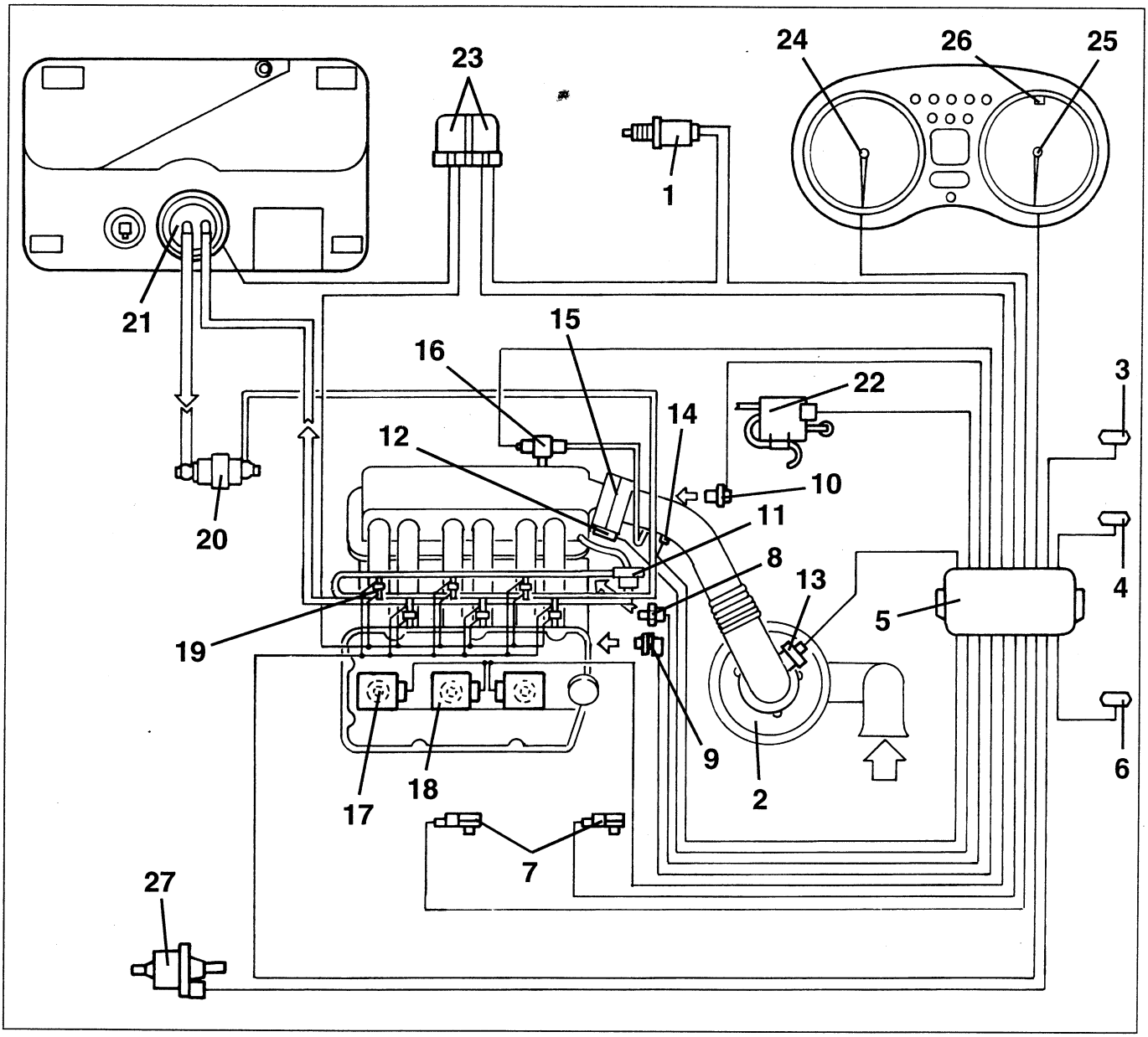

1. *Lambda sensor*
2. *Air cleaner*
3. *Climate control unit connector*
4. *Diagnosis socket (Alfa Romeo Tester)*
5. *Injection-ignition control unit*
6. *Alfa Romeo CODE control unit connector*
7. *Pinging sensors*
8. *Coolant fluid temperature sensor (NTC)*
9. *Rpm and timing sensor*
10. *Timing sensor*
11. *Fuel pressure regulator*
12. *Throttle potentiometer*
13. *Air flow meter*
14. *Intake air temperature sensor (NTC)*
15. *Throttle body*
16. *Constant idle speed device*
17. *Spark plugs*
18. *Ignition coils*
19. *Injectors*
20. *Fuel filter*
21. *Electric fuel pump*
22. *E.G.R. modulation solenoid valve*
23. *Relay unit*
24. *Rev counter*
25. *Tachometer*
26. *"check engine" warning light*
27. *Fuel vapour solenoid valve*

cardiagn.com

OPERATING LAYOUT OF MOTRONIC M 3.7.1 INJECTION-IGNITION SYSTEM

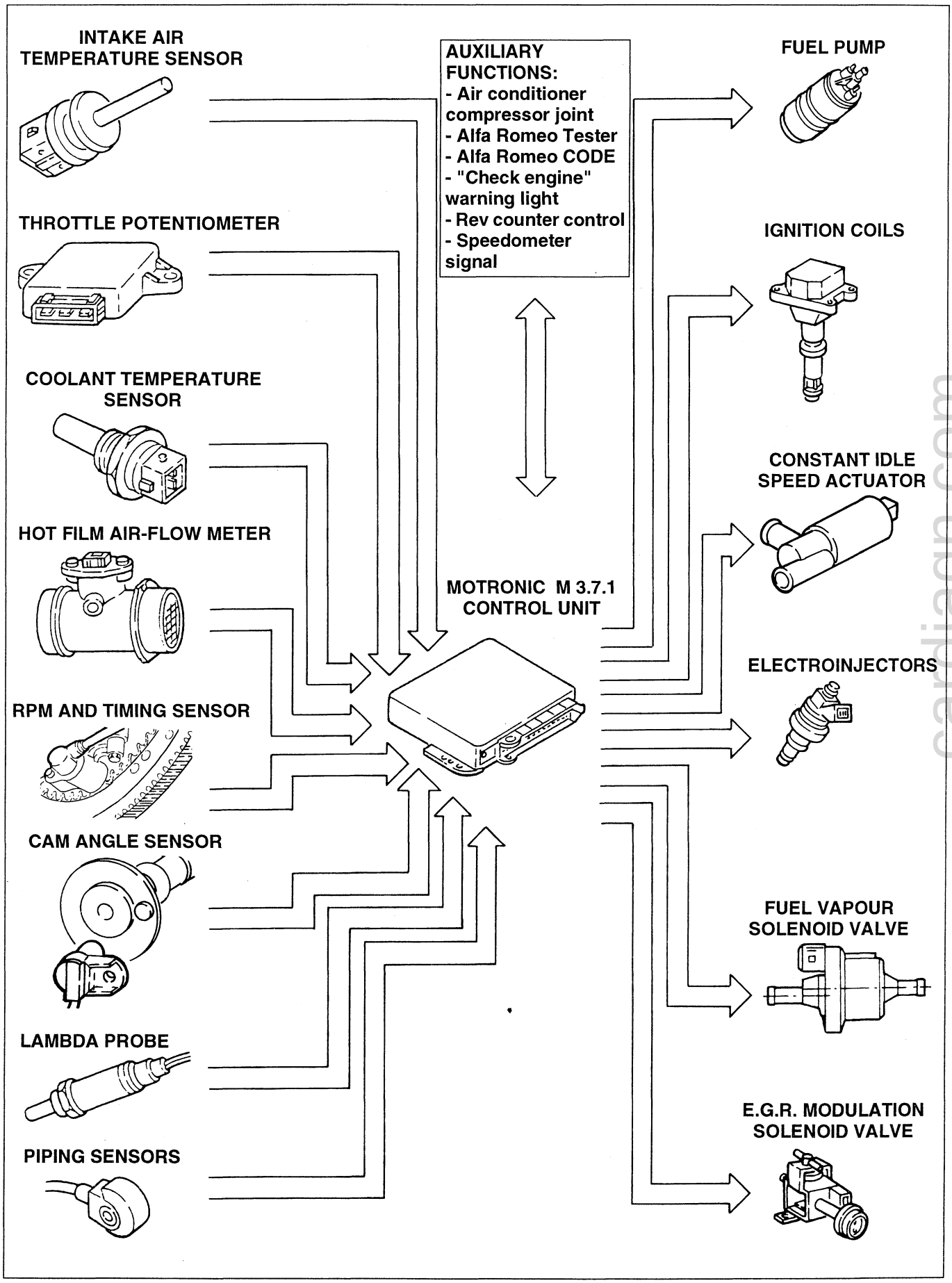

cardiagn.com

DESCRIPTION OF THE FUEL SUPPLY SYSTEM

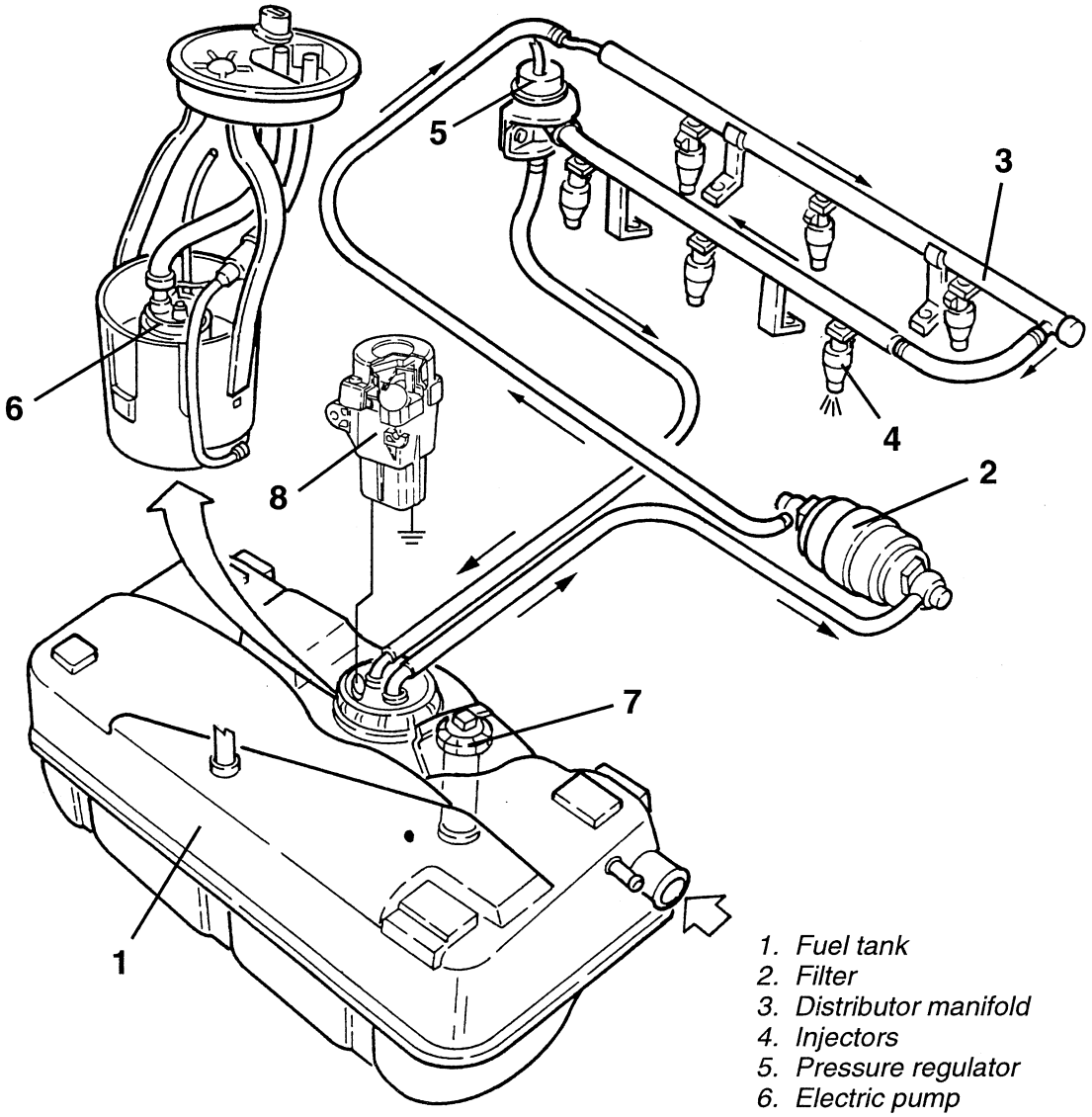

1. *Fuel tank*
2. *Filter*
3. *Distributor manifold*
4. *Injectors*
5. *Pressure regulator*
6. *Electric pump*
7. *Fuel level meter*
8. *Inertial switch*

The fuel supply circuit comprises an electric pump (6) located in the fuel tank (1) which sends the fuel under pressure to the filter (2) through a special pipe.
From here the fuel is sent to the distributor manifold (3) which distributes it to the injectors (4).
Through the pressure regulator (5) controlled by the vacuum withdrawn from the intake box, the excess fuel returns to the tank via a special pipe.
The amount of fuel injected depends solely on the injection time which is controlled by the control unit.
The various sections of fuel pipe are connected by special joints.

The fuel supply system is fitted with an inertial switch which is triggered in the event of a crash, cutting off the fuel pump connection to earth and thereby the supply to the injection system.

Notes on utilisable fuels:
in order to work properly, the engine requires the use of unleaded petrol (95 R.O.N.) as the presence of lead would quickly wear out the catalytic converter of the exhaust system.

cardiagn.com

WARNINGS

Before working on components of the fuel supply system, to prevent dangerous fuel spilling, proceed as follows:
- Disconnect the fuel pump supply relay (1).

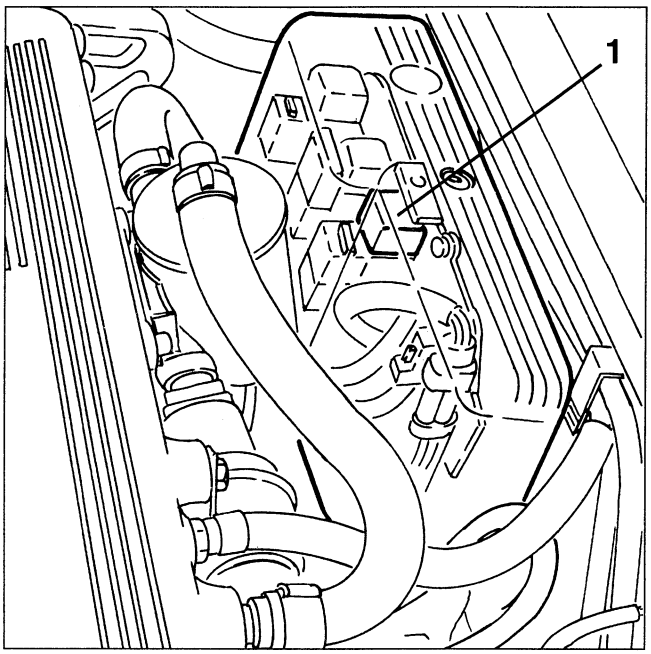

- Run the engine until it stops.

FUEL PRESSURE REGULATOR

The task of the fuel pressure regulator is to keep a constant difference between the pressure of the fuel and the pressure in the intake manifold.
This way it is possible to meter the quantity of fuel solely on the basis of the injector opening time.
The pressure regulator is fitted downstream of the fuel distributor manifold.
It is a regulating-limiting device controlled by a diaphragm which adjusts the fuel pressure at 3 bar.
When the fuel pressure exceeds the maximum rating, the diaphragm operates a valve which opens the return pipe, through which the excess fuel retruns to the tank.

A tube connects the regulator spring chamber with the intake box.
Through this connection an interdependence is created between the pressure of the fuel circuit and pressure in the intake box, so that the pressure between the injector inlet and outlet is always the same when they are open.

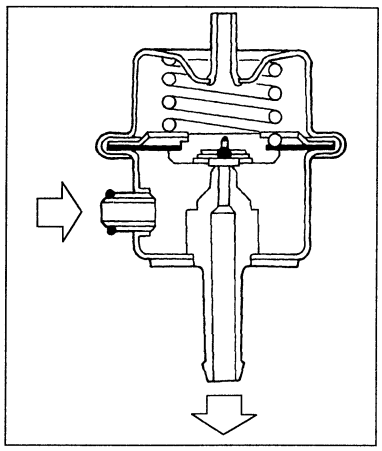

REMOVING/REFITTING

1. Disconnect the vacuum takeoff pipe from the fuel pressure regulator.
2. Disconnect the excess fuel return pipe from the fuel pressure regulator.
3. Slacken the fastening screws and withdraw the fuel pressure regulator from the fuel distributor manifold and retrieve the O-Ring.

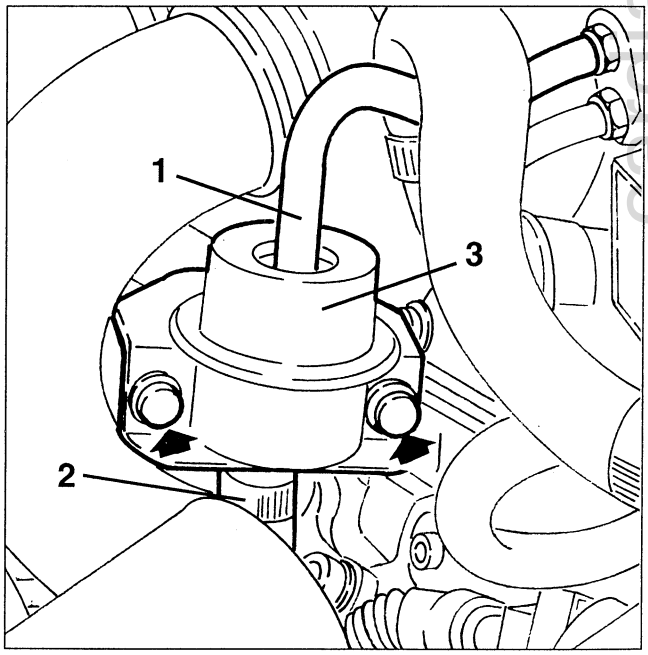

cardiagn.com

INJECTORS

REMOVING/REFITTING

- Set the car on a lift.
- Disconnect the battery (-) terminal.

1. Remove the left hand engine compartment trim.

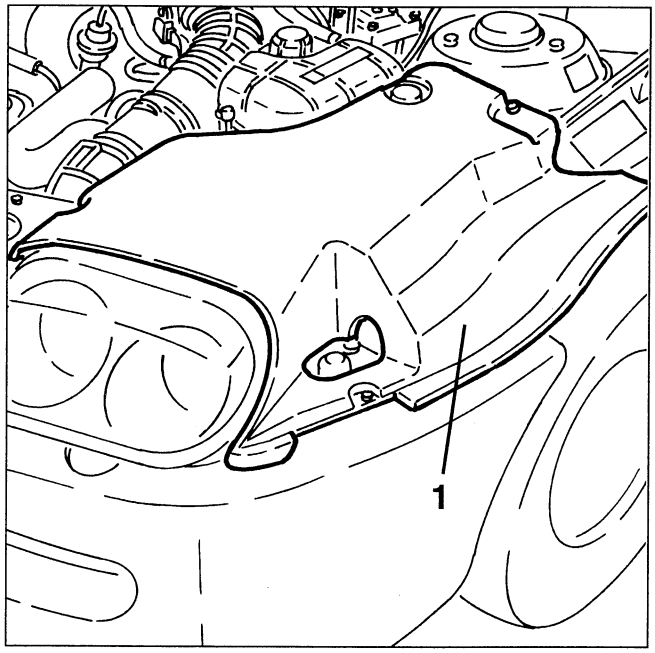

1. Remove the button fastening the first section of the corrugated sleeve to the resounder.
2. Slacken the two fastening clamps and remove the second section of the corrugated sleeve complete with resounders.

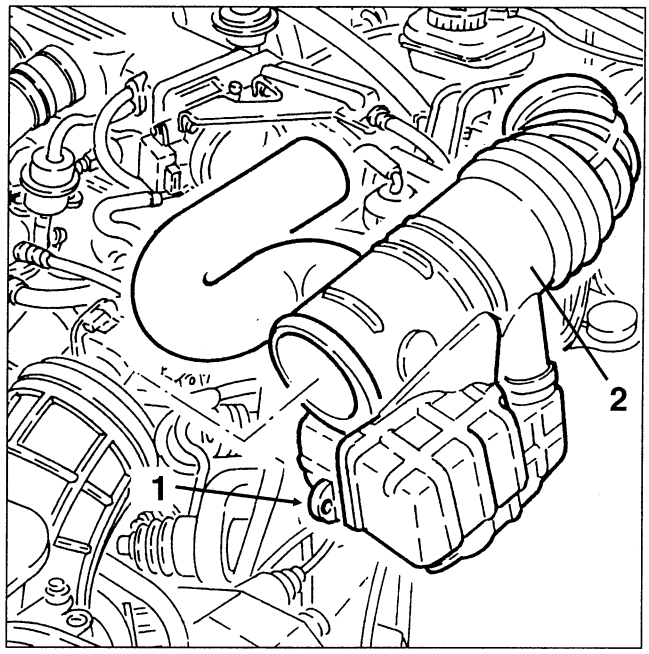

1. Disconnect the fuel vapour recovery pipe leading from the right cylinder head from the corrugated sleeve.
2. Disconnect the electrical connection from the intake air temperature sensor.
3. Disconnect the air takeoff pipe for the constant idle speed device from the corrugated sleeve.
4. Disconnect the electrical connection from the throttle potentiometer.

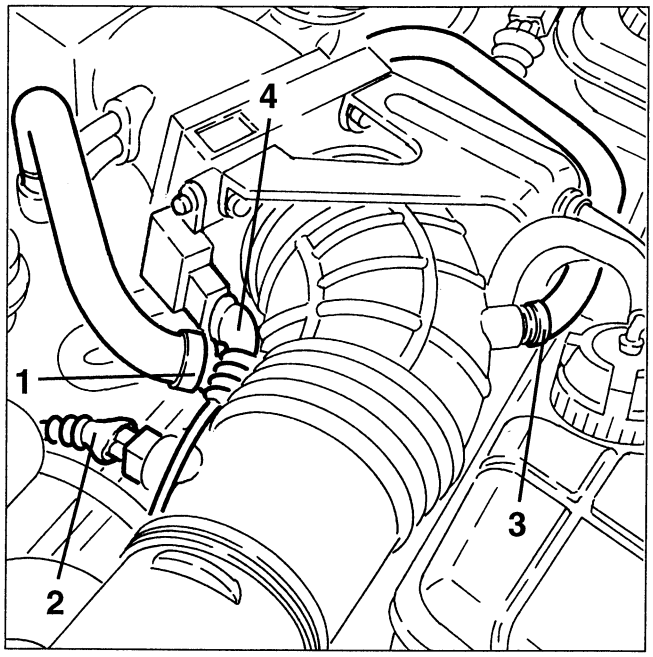

1. Disconnect the electrical connections from the injectors
2. Disconnect the fuel delivery pipe from the distributor manifold.
3. Disconnect the excess fuel return pipe from the pressure regulator.
4. Disconnect the vacuum takeoff pipe from the pressure regulator.

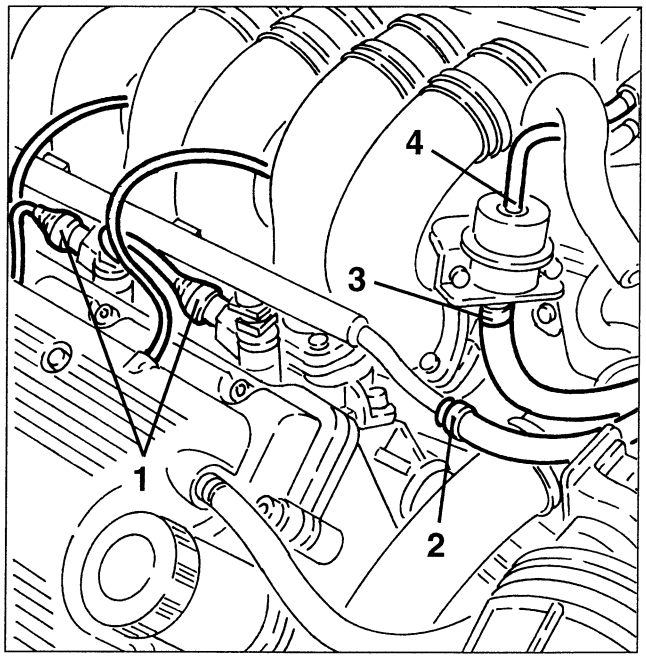

cardiagn.com

1. Slacken the clamps fastening the supply ducts to the intake box.
2. Slacken the fastening screws and remove the supply ducts.

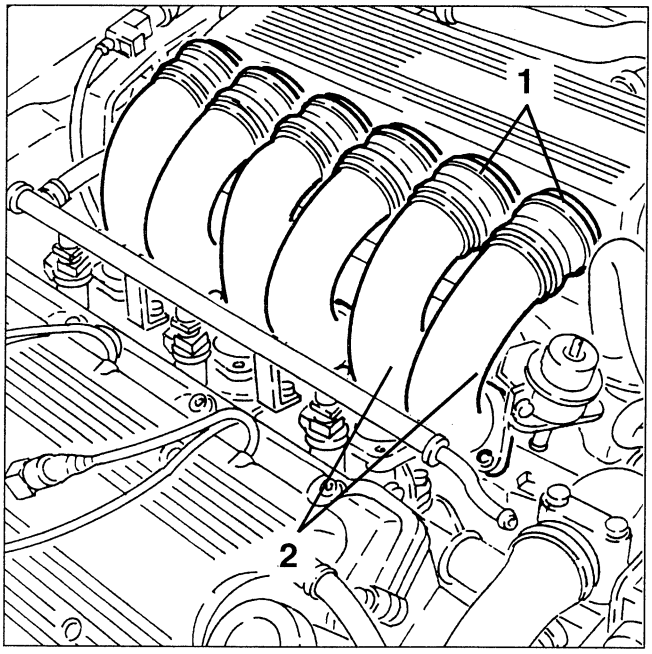

1. Slacken the fastening screws and remove the distributor manifold complete with pressure regulator and injectors.

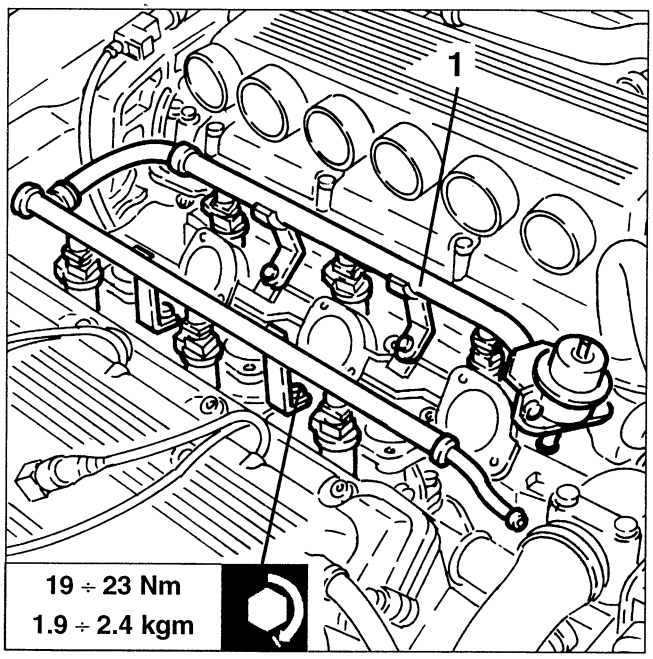

1. Working on the bench, remove the safety catches and remove the injectors from the distributor manifold.

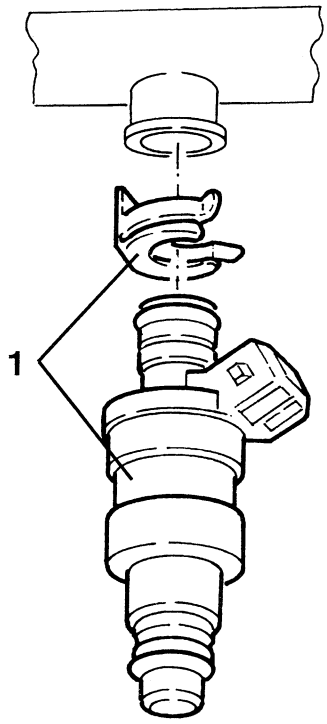

cardiagn.com

DESCRIPTION OF THE FUEL VAPOUR RECOVERY SYSTEM

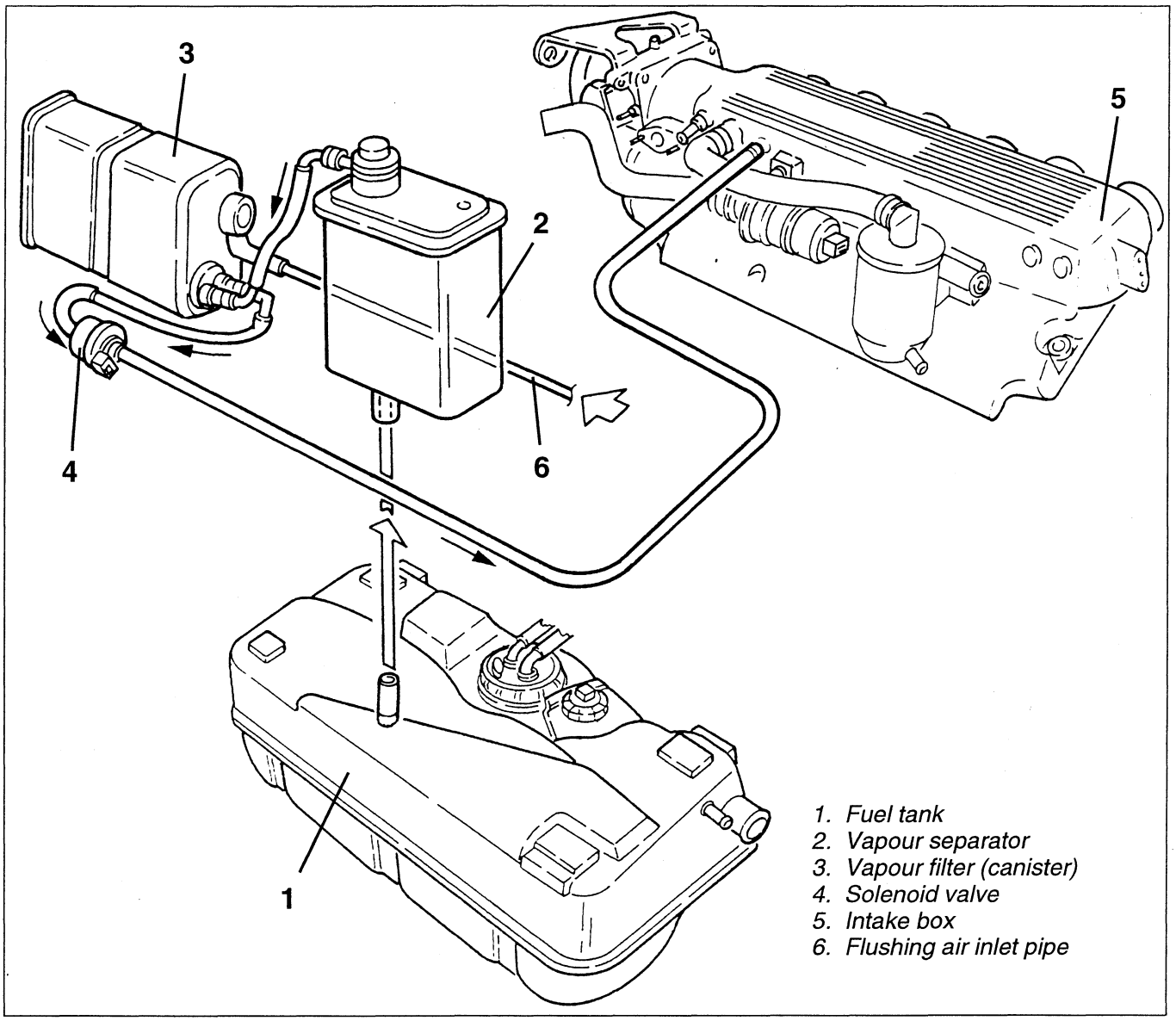

The fuel contained in the fuel tank produces a considerable amount of vapours which would pollute if released to the environment.
The system for controlling and recovering these vapours makes it possible to recover them and burn them in the engine.
The vapours leading from the fuel tank (1) through a special tube reach the vapour separator (2) which, due to its shape, allows the condensed fuel to return to the tank in droplet form.
The remaining vapours are then sent to the fuel vapour filter "canister" (3) where they are absorbed and stored by the activated carbon it contains.
There is a solenoid valve (4) between the fuel vapour filter and the engine intake; when the solenoid valve is not activated, the connection with the intake box is closed and the vapours are gathered inside the canister by the activated carbon.
Under certain load conditions, the control unit opens the solenoid valve allowing any vapours in the canister to be taken in.
This condition remains even if the lambda sensor detects a lowering of the oxygen at the exhaust which, due to excess presence of fuel in the combustion chamber, is signalled to the control unit which lowers the delivery rate of the injectors so that the engine is always supplied under optimum conditions.
In the event of a lack of fuel vapours in the canister, resulting in only air being withdrawn, the lambda sensor detects this and signals an increase of oxygen to the control unit.
In this case, the control unit shuts the solenoid valve, preventing connection of the canister with the intake box, thereby eliminating the excess air.

cardiagn.com

DESCRIPTION OF THE AIR SUPPLY AND OIL VAPOUR RECOVERY SYSTEM

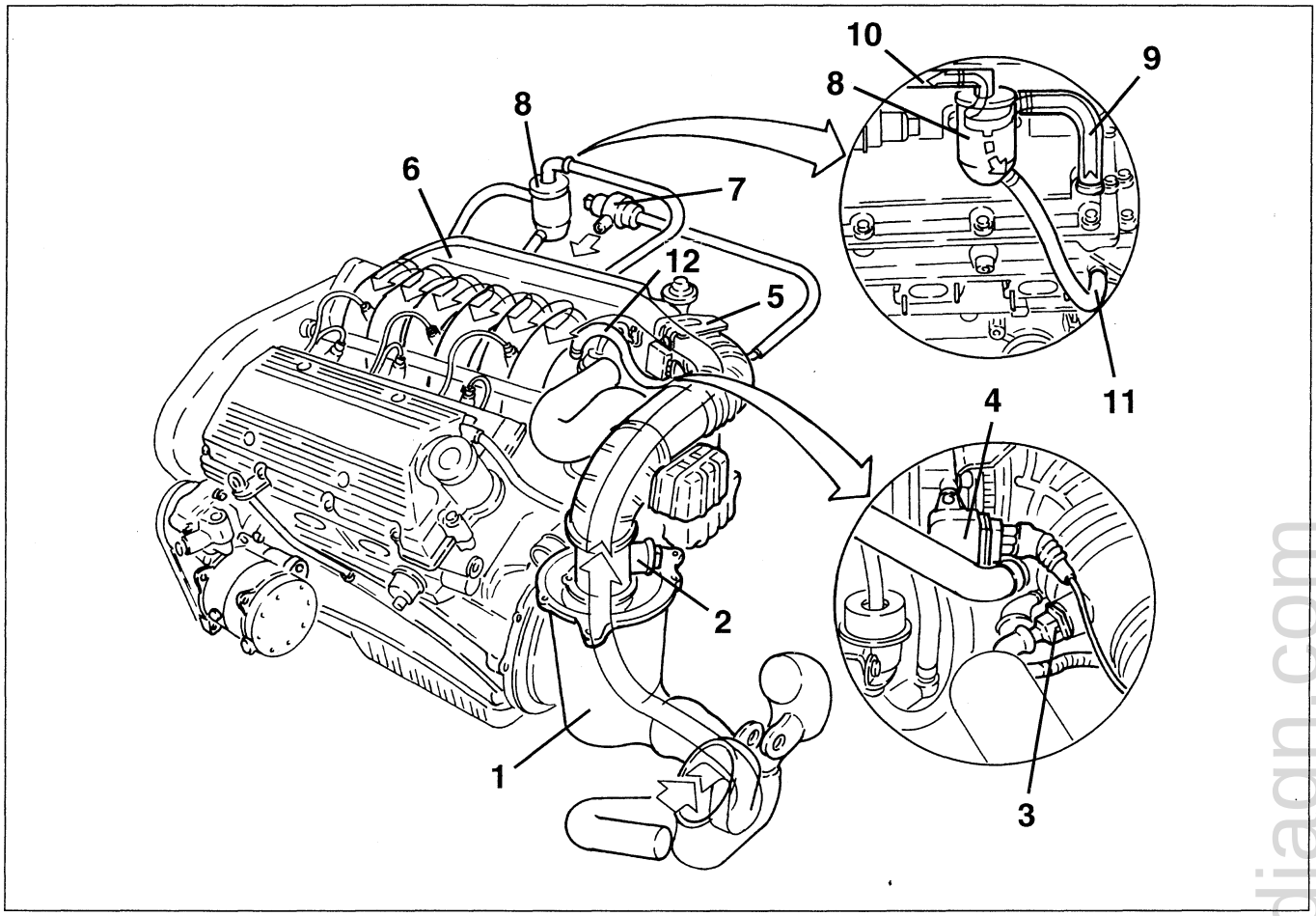

1. *Air cleaner*
2. *Air flow meter*
3. *Intake air temperature sensor*
4. *Throttle potentiometer*
5. *Throttle body*
6. *Intake box*
7. *Constant idle speed actuator*
8. *Oil vapour separator*
9. *Oil vapour recovery pipe*
10. *Oil vapour recirculation pipe*
11. *Condensed oil recovery pipe*
12. *Oil vapour recovery pipe*

The air, taken in through a dynamic inlet and filtered by a cartridge element (1), flows through the hot film flow meter (2) and from here, through the corrugated sleeve, on which the intake air temperature sensor (3) is fitted, it reaches the throttle body (5). Along the intake duct, "resounders" are installed, some of which are machined directly on the pipes and others are separable.
The throttle body, controlled by the accelerator cable, adjusts the quantity of air taken in by the box (6).
On one side of the throttle body there is the potentiometer (4) fastened to the throttle rotation spindle which informs the control unit of the position of the throttle. On the intake box there is an additional electromagnetic valve (7) which, through a special tube, by-passes the throttle body making it possible to keep idle speed constant under particular engine operating conditions.

The fuel vapours and oil vapours converge at the air supply system.
The latter are developed while the engine is running and are collected in the special separator via a pipe (9) leading from the right cylinder head; as the separator temperature is lower, the oil vapours are partially condensed.
The condensed oil returns to the engine via a special pipe (11), while the remaining vapours are sent directly to the intake box through a pipe (10) and then burnt in the engine.
An additional pipe (12) collects the oil vapours from the right cylinder head and sends them to the intake corrugated sleeve.

cardiagn.com

1. Disconnect the electrical connection from the intake air temperature sensor.
2. Disconnect the electrical connection from the throttle potentiometer.
3. Disconnect the oil vapour recovery pipe leading from the right cylinder head from the corrugated sleeve.
4. Disconnect the air takeoff pipe for the constant idle speed device from the corrugated sleeve.
5. Slacken the clamp fastening to the throttle body, then remove the intermediate resounder complete with corrugated sleeve and separate them on the bench.

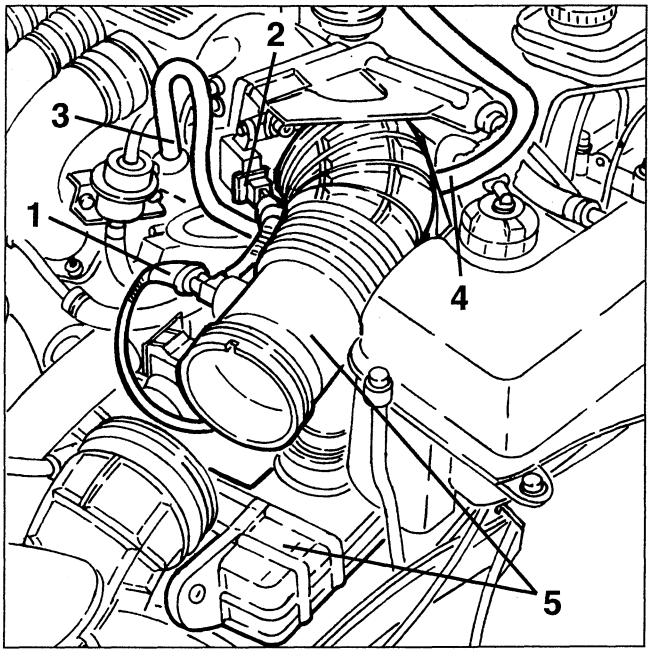

AIR CLEANER BOX

REMOVING/REFITTING

- Remove the air cleaner cartridge (see specific paragraph).
1. Slacken the two nuts fastening the air cleaner box.

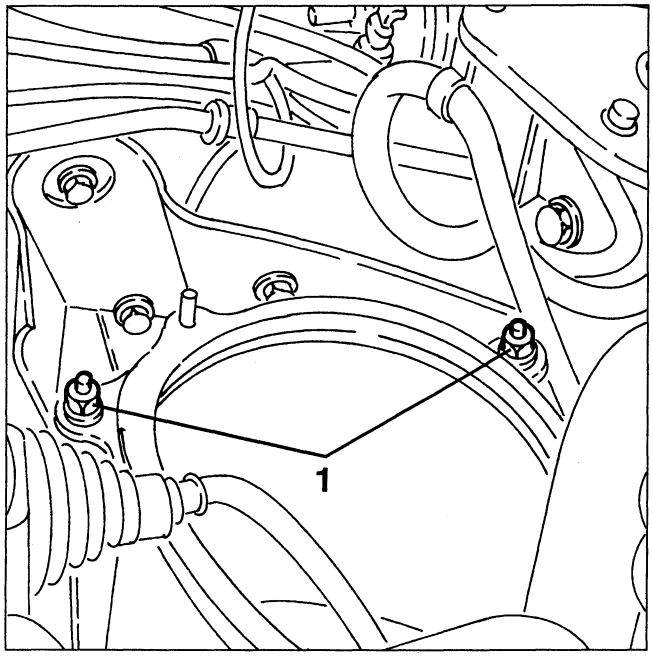

1. Remove the the air cleaner box releasing it from the lower resounder.

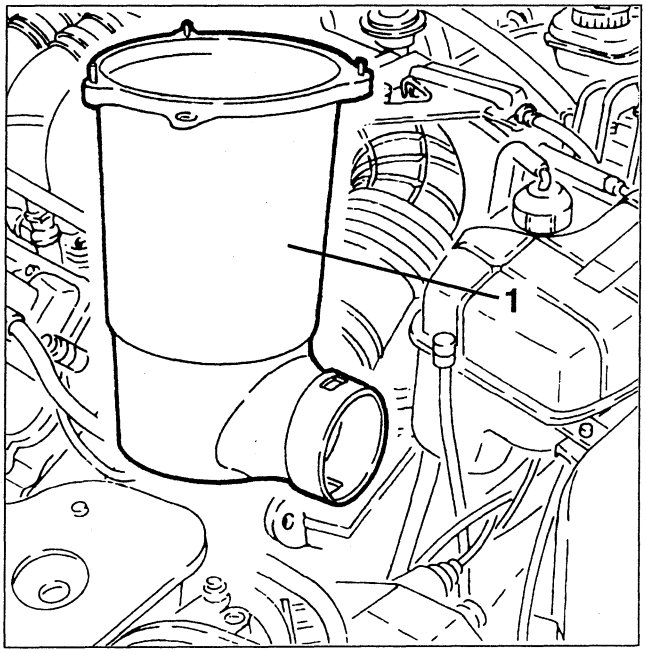

LOWER RESOUNDER

REMOVING/REFITTING

- Remove the front bumper (see GROUP 70).
1. Slacken the two screws fastening the lower resounder.
2. Remove the lower resounder releasing it from the air cleaner box.

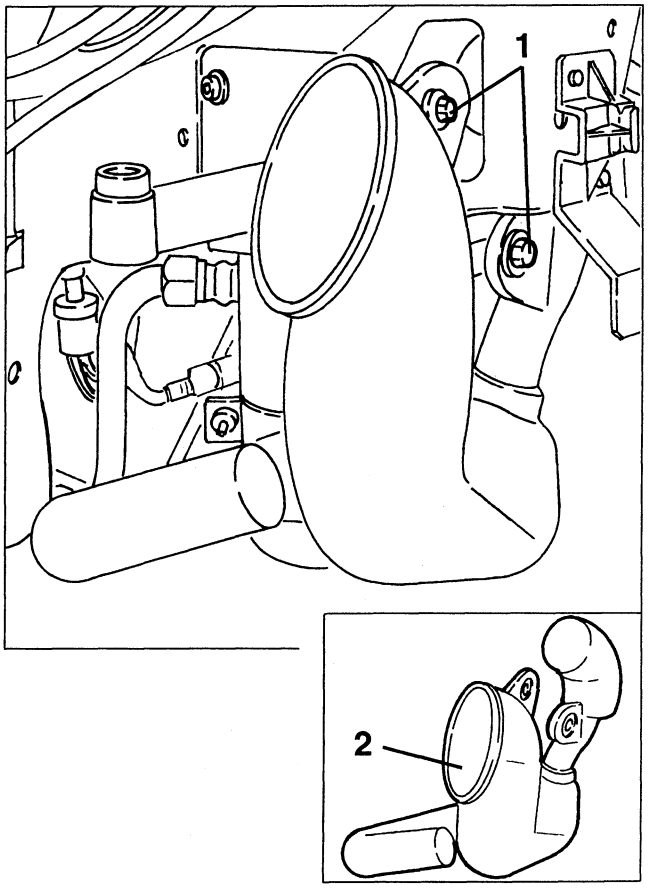

cardiagn.com

THROTTLE BODY

The throttle body adjusts the amount of air sent to the intake box depending on the accelerator pedal position.
The accelerator cable acts on a special sector of pulley locked on the throttle valve pivot pin. A coil spring allows the throttle to return to the closed position.
To prevent the formation of ice on the throttle valve which would prevent it from returning to the closed position, the throttle body is heated by the engine coolant fluid.

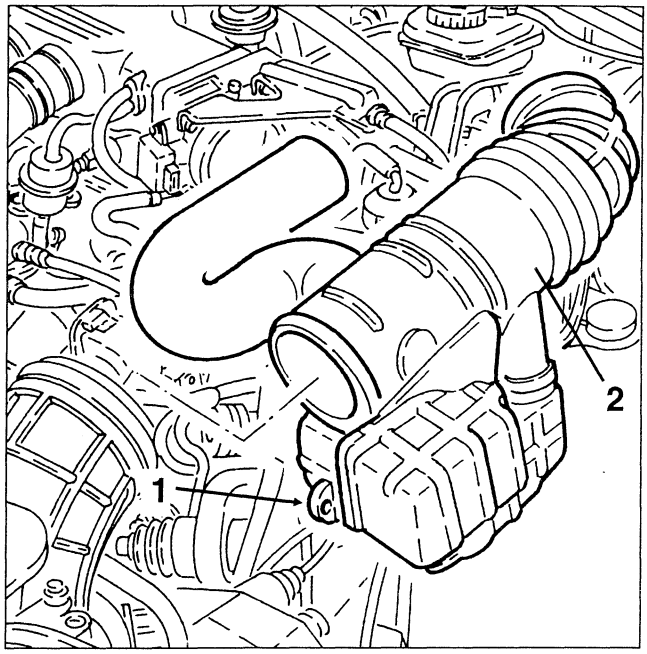

REMOVING/REFITTING

- Disconnect the battery (-) terminal.
1. Disconnect the electrical connection from the intake air temperature sensor.
2. Disconnect the electrical connection from the throttle potentiometer.
3. Disconnect the oil vapour recovery pipe leading from the right cylinder head from the corrugated sleeve.
4. Disconnect the air takeoff tube for the constant idle device from the corrugated sleeve.

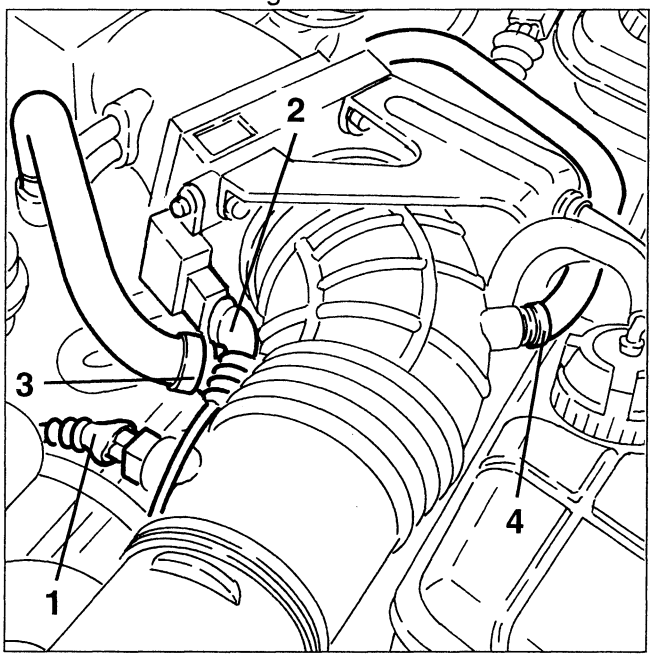

1. Prise of the button fastening the first section of the corrugated sleeve to the intermediate resounder.
2. Slacken the two fastening clamps and remove the second section of the corrugated sleeve complete with resounders.

1. Disconnect the accelerator cable from the throttle.
2. Disconnect the engine coolant inlet and outlet pipes from the throttle body.
3. Slacken the fastening screws and remove the throttle body complete with potentiometer, and, if necessary separate them on the bench.
- Retrieve the accelerator cable support bracket and the throttle body seal.

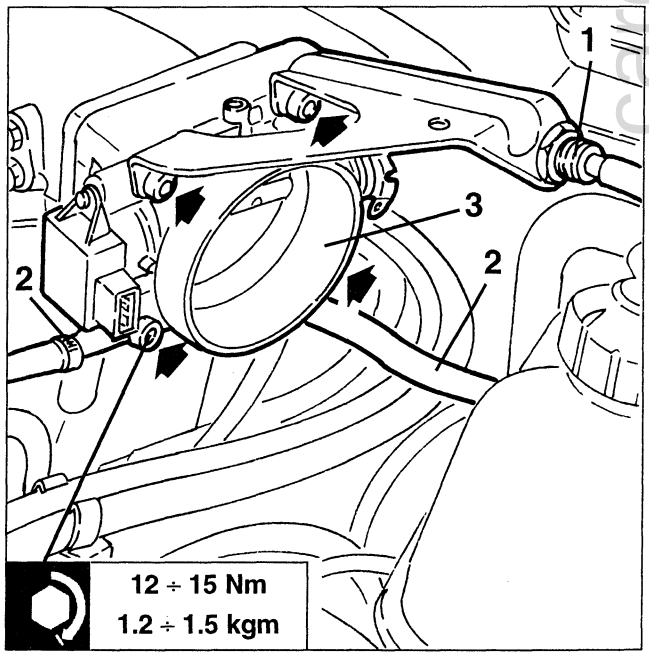

cardiagn.com

FLUX TEST

Proceed as described for the first steps of the procedure "Throttle body - Removing/Refitting".
1. Make sure that the throttle is in the closed position, then using tool no. 1.824.011.000 (C.2.0056) connected to the flux meter, check that leakage is within the specified limits.

Air leakage with throttle in the closed position
280 ± 10 Scale N

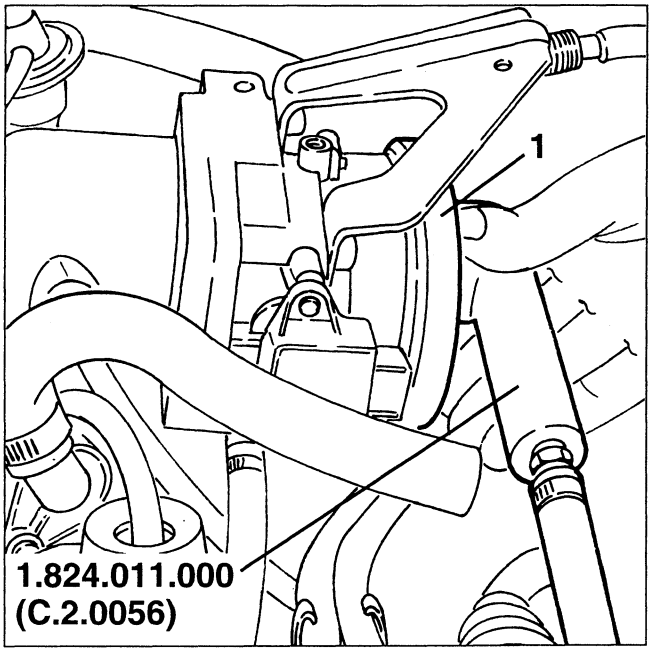

AIR FLOW METER

The air flow meter is of the "heated film" type.
Its operating principle is based on a heated diaphragm in a measurement channel through which the intake air admitted to the engine flows.
The hot film diaphragm is kept at a constant temperature (~ 120°C above the temperature of the incoming air) by the heating resistance placed in contact with it.
The air crossing the measurement channel tends to withdraw heat from the diaphragm, therefore in order to keep it at a constant temperature, a certain amount of current must flow to the resistance.
This current is measured by an appropriate Wheatstone bridge.
Therefore the current is proportionate with the flow of air.

NOTE: This air flow meter measures directly the mass of air (and not the volume) thereby eliminating problems of temperature, altitude, pressure, etc.
Correct operation of the flow meter depends on the condition of the air cleaner, which must therefore be checked often.

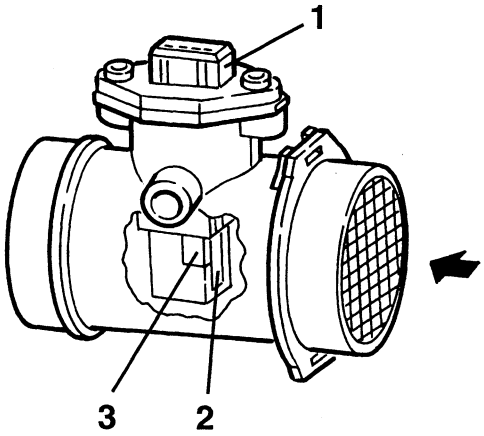

1. Connector
2. Measurement channel
3. Hot film sensor

REMOVING/REFITTING

- Disconnect the battery (-) terminal.
- Remove the left hand engine compartment trim.

1. Slacken the two clamps fastening the upper resounder to the corrugated sleeve.

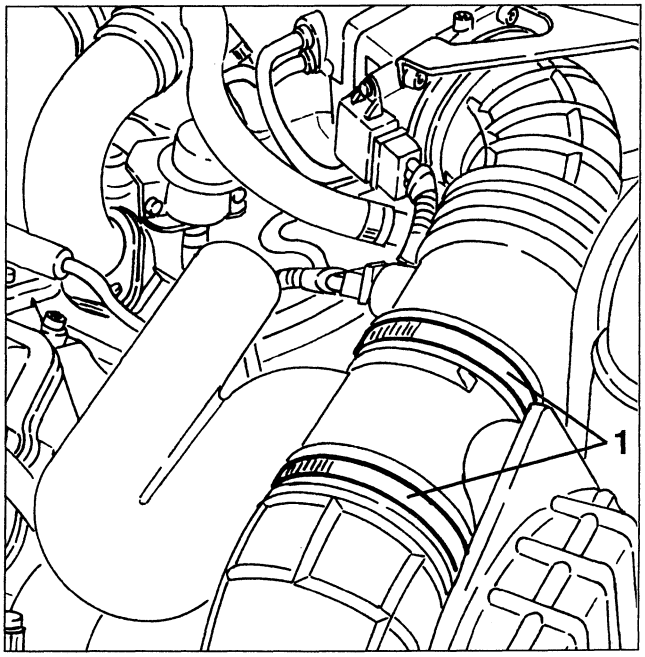

cardiagn.com

1. Remove the upper resonator.

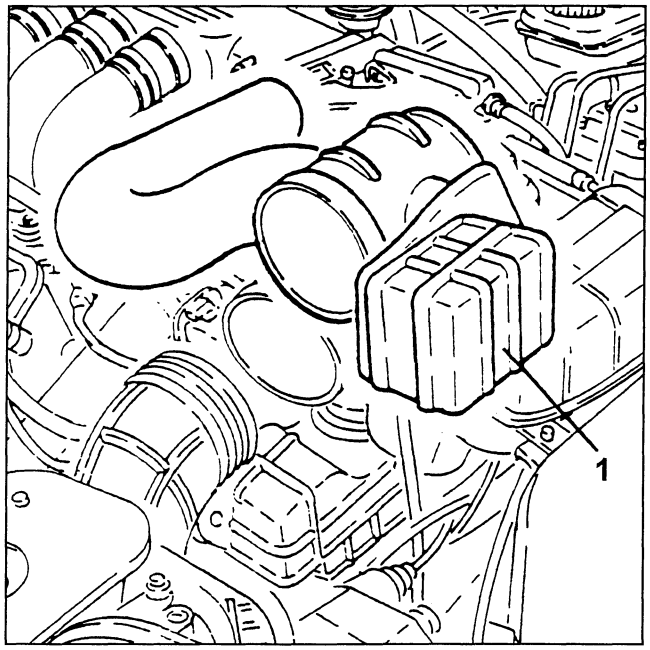

1. Loosen the three fastening screws and remove the air cleaner with hot film flow meter and corrugated sleeve elbow. Separate at the bench.

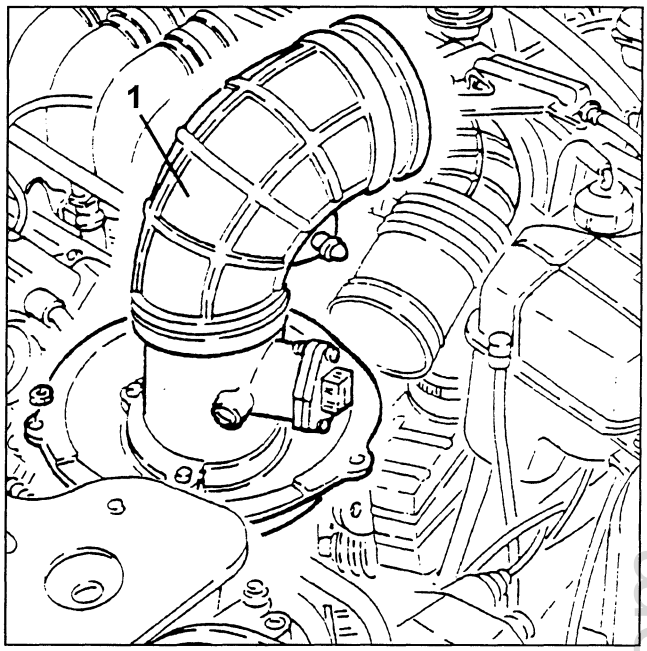

1. Disconnect the hot film flow meter electrical connection.
2. Remove the corrugated sleeve elbow fastening button from the intermediate resonator.

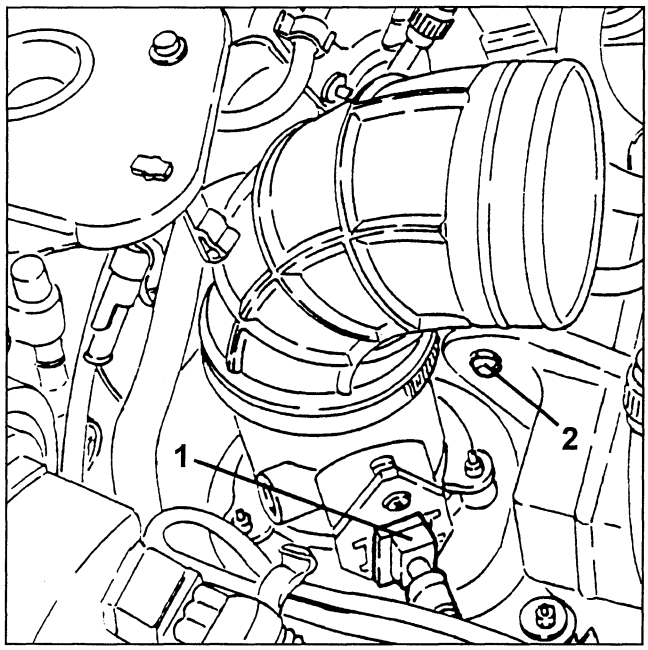

cardiagn.com

INTAKE MANIFOLD

REMOVAL/REFITTING

- Disconnect the (-) battery terminal.
1. Disconnect the front knock sensor electrical connection.
2. Disconnect the intake manifold earth wire (front).

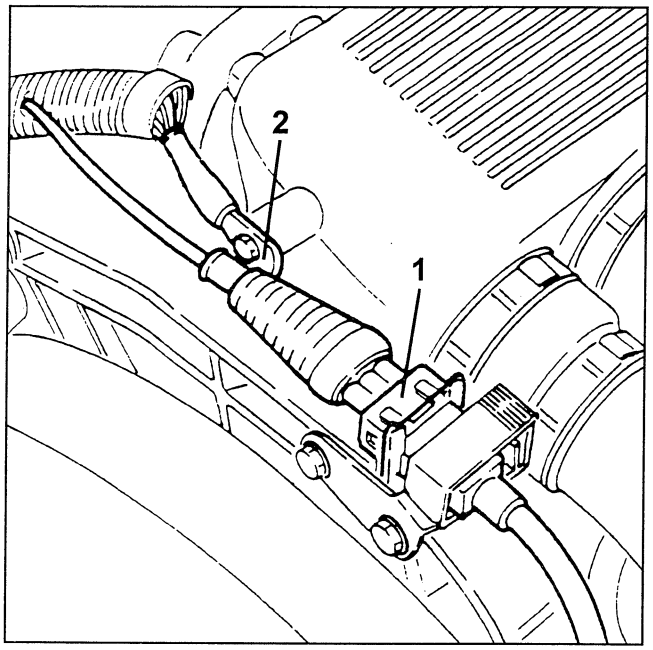

1. Remove the plastic relay, fuse and electrical connection guard.

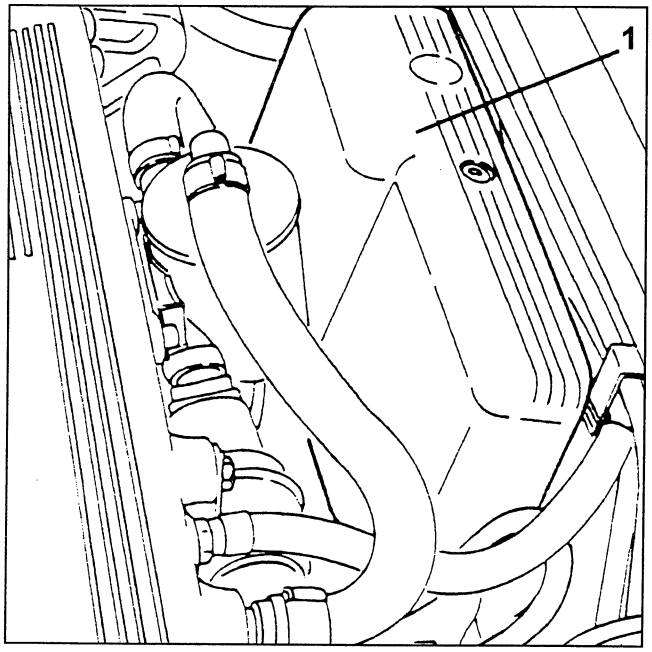

1. Disconnect the oil vapour recovery pipe from the separator.
2. Disconnect the condensed oil recovery pipe from the separator.
3. Disconnect the constant idling actuator electrical connection.
4. Disconnect the fuel vapour recovery pipe from the intake manifold.
5. Disconnect the brake booster vacuum pipe from the intake manifold.

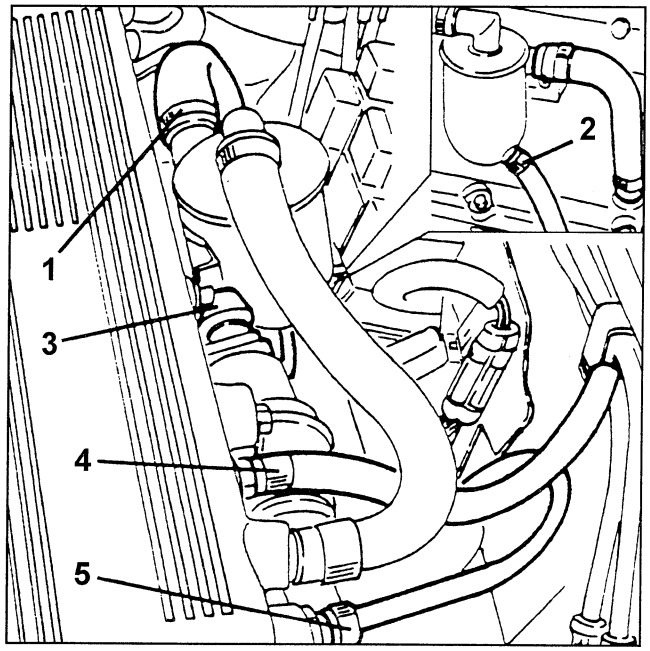

1. Disconnect the constant idling actuator air intake pipe from the corrugated sleeve.
2. Loosen the two fastening nuts and remove the EGR valve from the intake manifold.

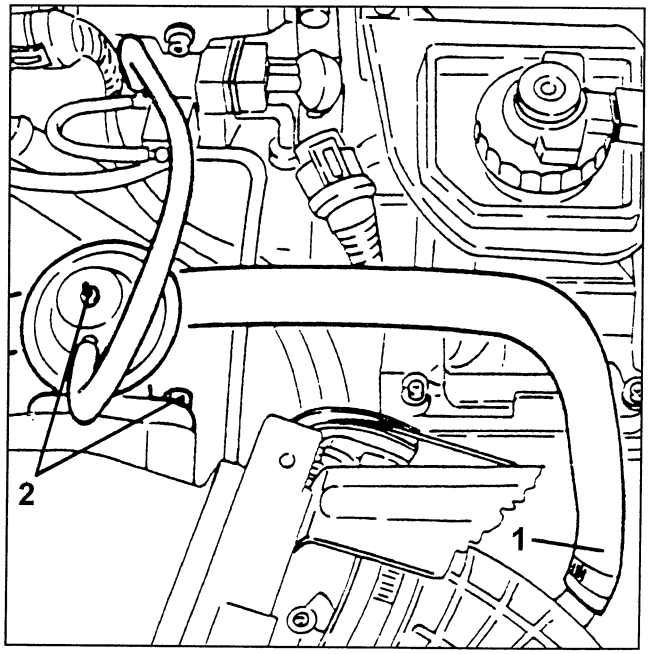

cardiagn.com

1. Disconnect the accelerator cable from the throttle cam.

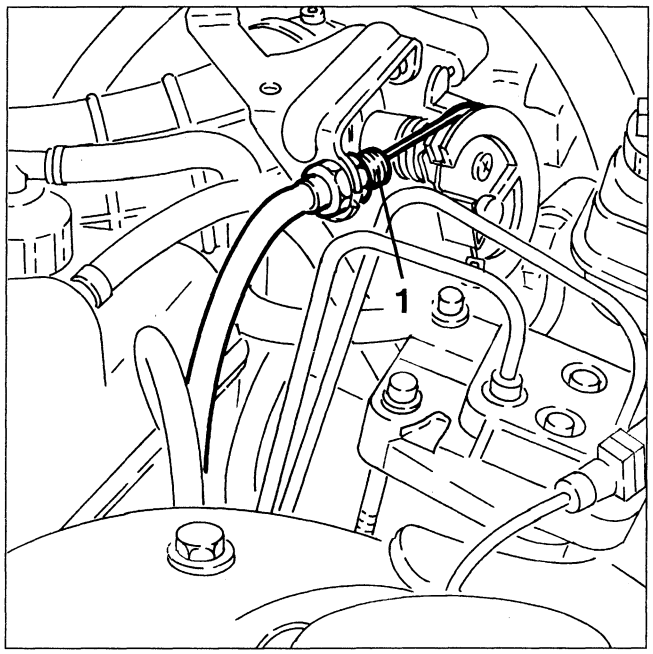

1. Disconnect the electrical connection from the throttle potentiometer.
2. Disconnect the oil vapour recovery pipe leading from the right cylinder head from the corrugated sleeve.

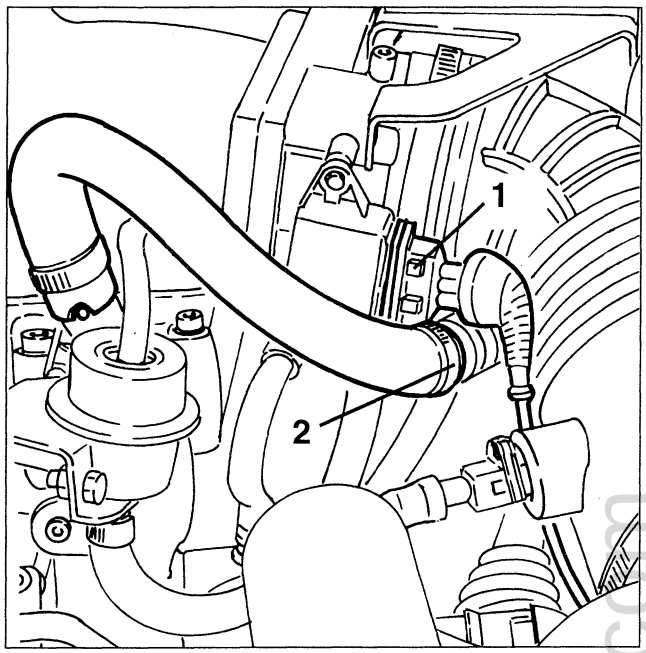

1. Disconnect the throttle body coolant return pipe from the expansion tank.

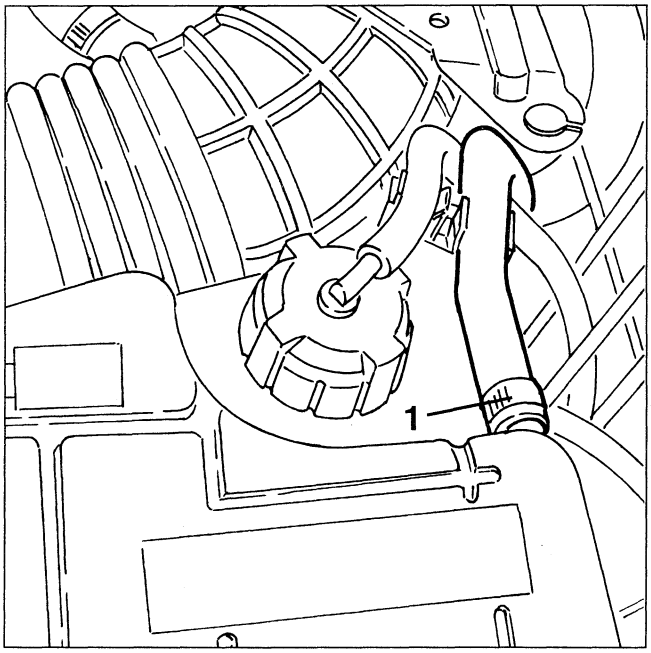

1. Slacken the fastening clamp and disconnect the corrugated sleeve from the throttle body.

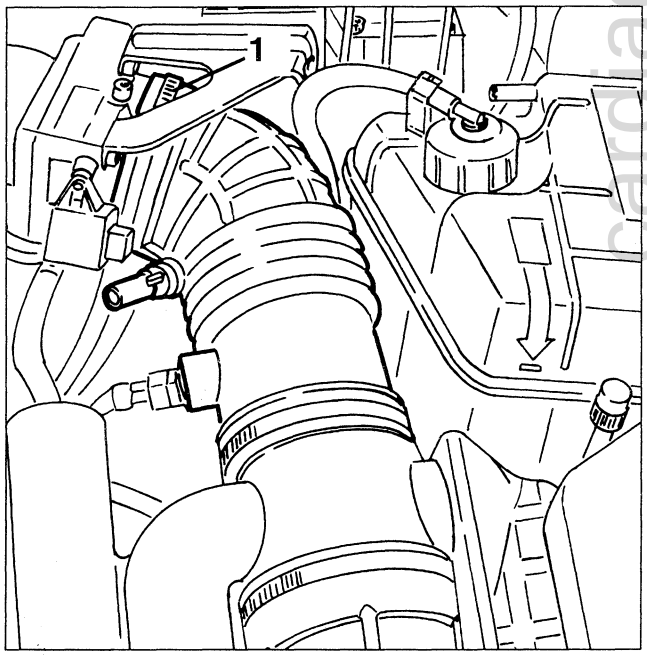

cardiagn.com

1. Disconnect the coolant inlet pipe from the throttle body.
2. Disconnect the vacuum takeoff pipe for the E.G.R. modulation solenoid valve from the intake box.
3. Disconnect the fuel pressure regulator vacuum takeoff pipe from the intake box.

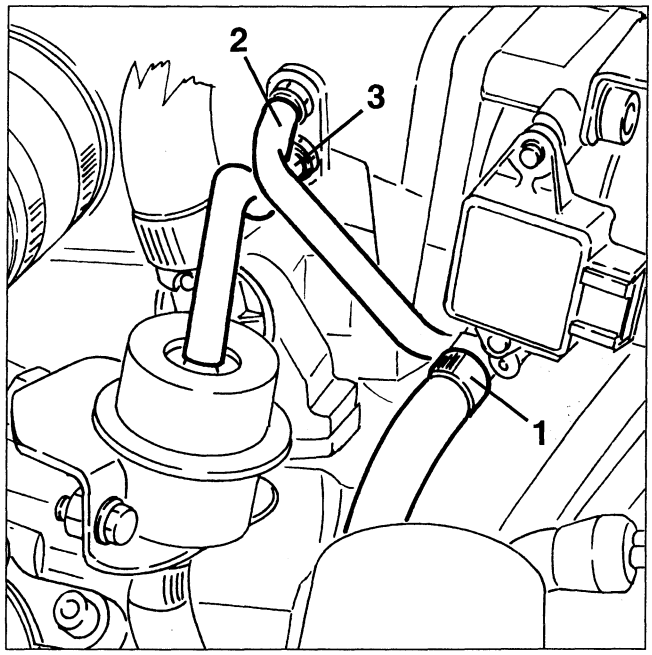

1. Slacken the clamps fastening the air supply ducts to the intake box.
2. Slacken the screws fastening the supply ducts to the cylinder heads.

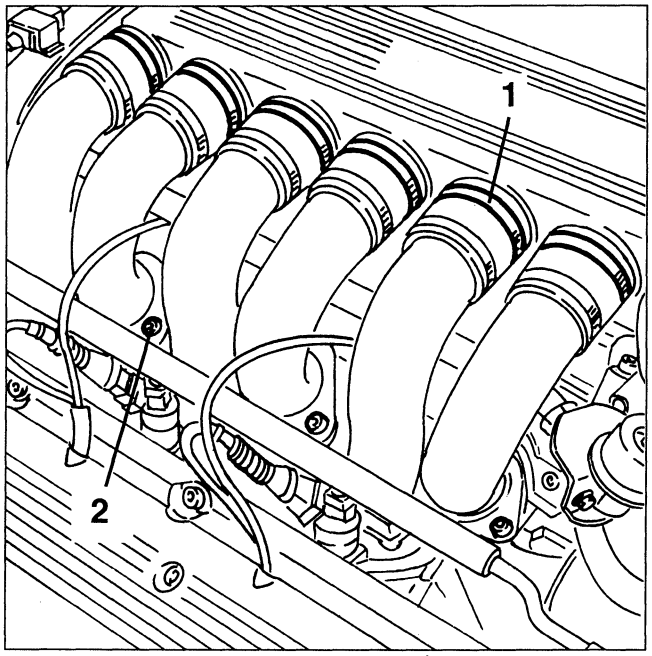

1. Disconnect the earth cable (rear) from the intake box.
2. Slacken the two fastening screws and remove the intake box complete.

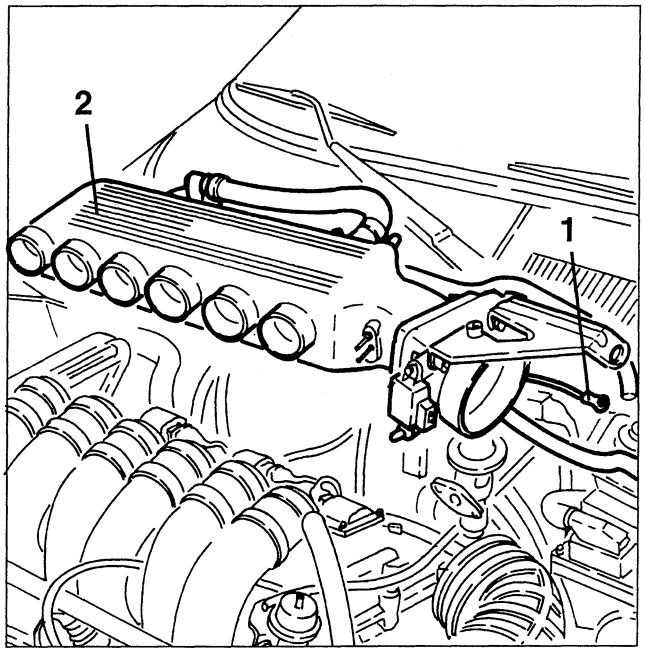

1. If necessary on the bench separate the throttle body (1a), oil vapour separator (1b) and the constant idle speed device (1c) from the intake box.

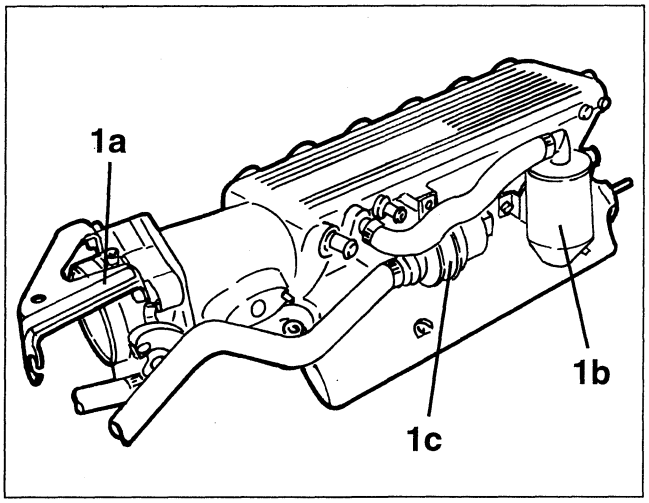

cardiagn.com

DESCRIPTION

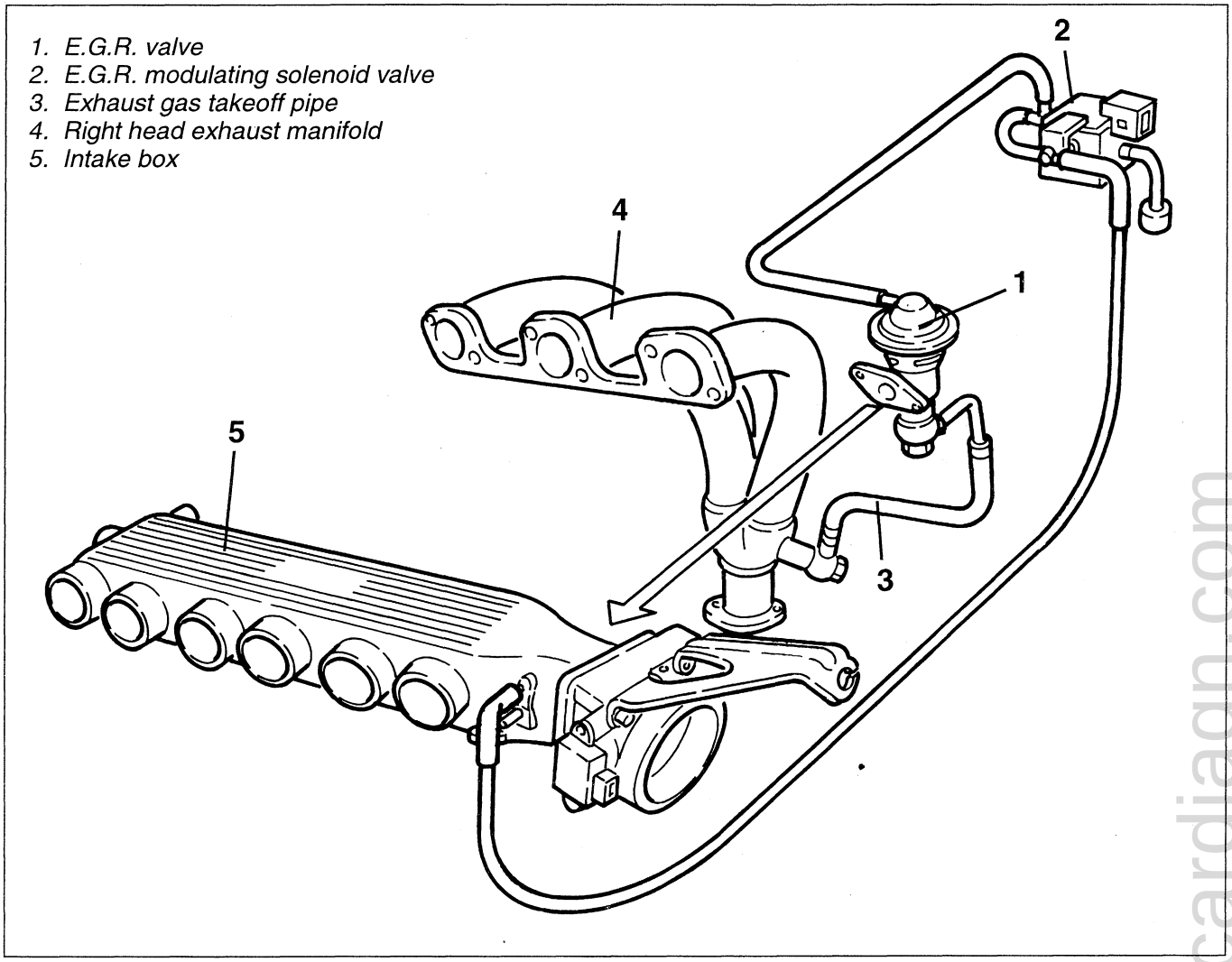

In order to further reduce NOx (nitric oxide) emissions, the supply system is fitted with an E.G.R. valve (1).
The E.G.R valve (Exhaust Gas Recirculation) withdraws part of the exhaust gas and sends it back into the intake box (5), where it is mixed with the intake air and burnt in the engine.
The E.G.R. valve is operated by the modulated vacuum of the electromagnetic valve (2) controlled by the MOTRONIC control unit.
The amount of exhaust gas sent to the engine is defined by the MOTRONIC control unit, taking account of the characteristic curve of the E.G.R. command depending on the engine load and speed and on the coolant fluid temperature.
Through the MOTRONIC control unit, the electromagnetic valve modulates the vacuum to be sent to the E.G.R. valve for opening.
The stainless steel exhaust gas takeoff pipe (3) is fitted with an expansion compensation bellows and covered with thermal insulation.

cardiagn.com

DESCRIPTION

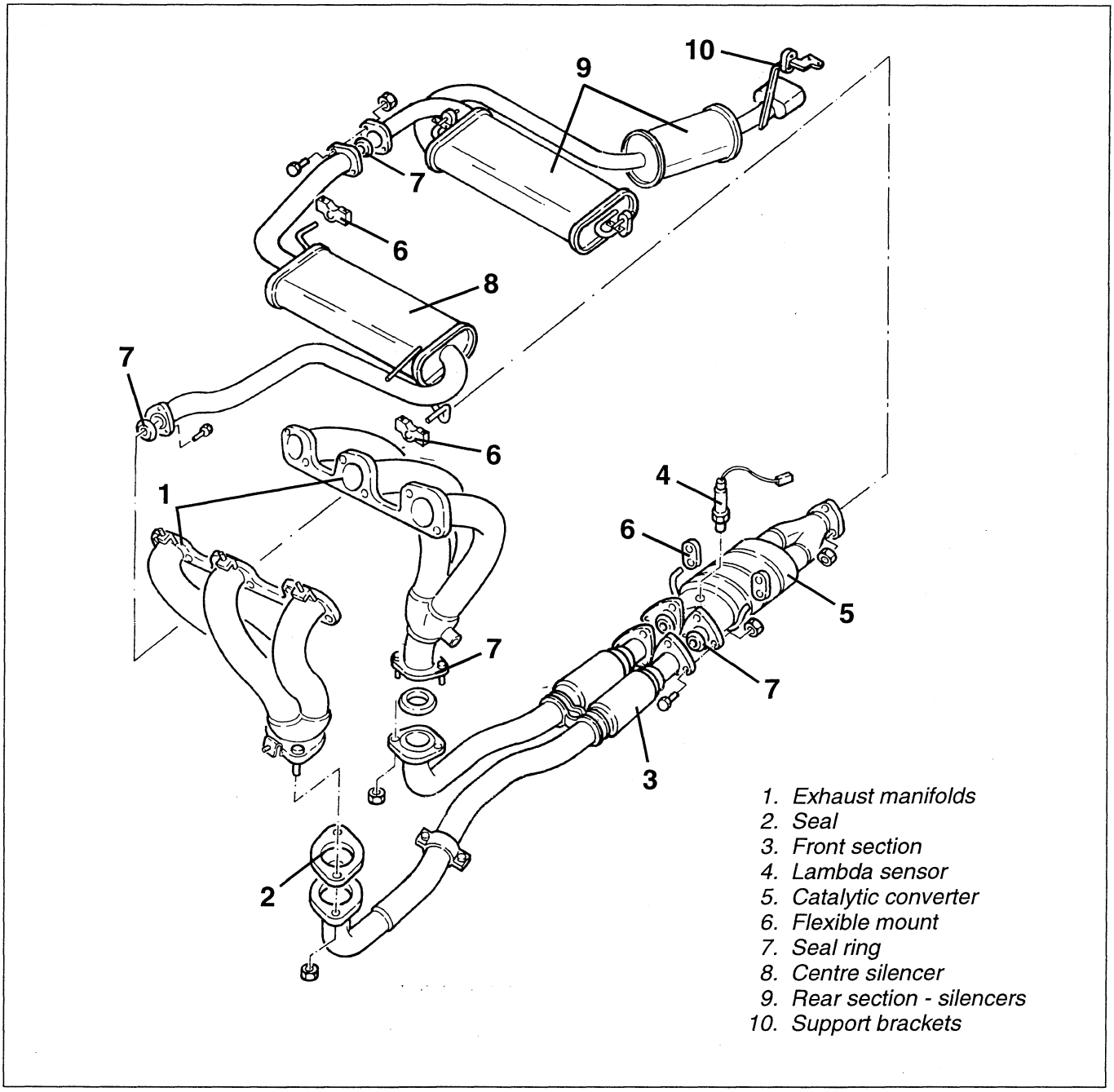

The exhaust gas leading from the cylinder heads converges through the manifolds (1) in the first section of the exhaust piping (3) on which there are two flexible pieces which restrict the transmission of vibration. From the front section, the exhaust gas reaches the three-way catalytic converter (5) where most of the polluting substances are transformed.
At the beginning of the catalytic converter there is the lambda sensor (4) which informs the control unit of the amount of oxygen contained in the exhaust gas so that injection time can be adjusted to keep the stoichiometric ratio (air-fuel) at an optimum level.

The exhaust gas leaves the catalytic converter and crosses three special silencers (8 - 9).
The connection between the various sections of exhaust pipe is by flanges with seals in between and connection to the body is by brackets with flexible mounts.
The very high amount of heat radiated towards the body owing to the presence of the catalytic converter is limited by a series of heat guards between the exhaust pipe and the body.

cardiagn.com

LAMBDA SENSOR

REMOVING/REFITTING

- Disconnect the battery (-) terminal.
1. Disconnect the electrical connection of the lambda sensor.

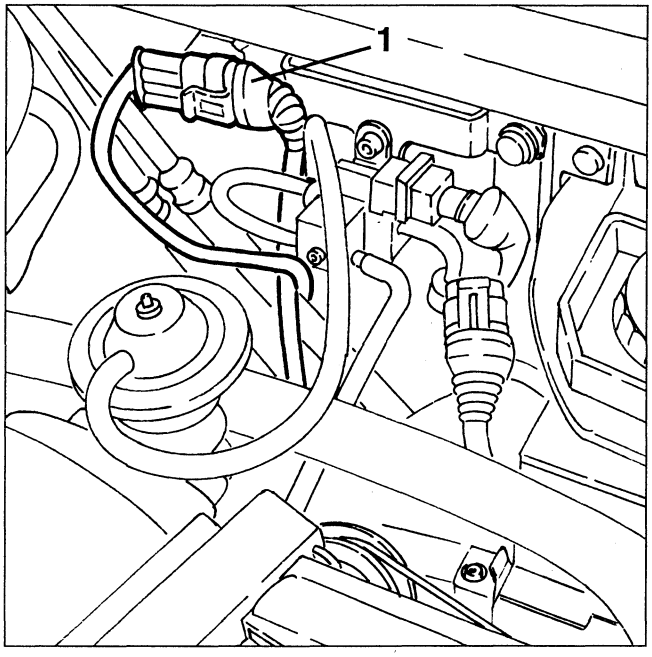

1. Slacken the bolts fastening the catalytic converter to the front section of the exhaust pipe, then lower it enough to gain access to the lambda sensor.
2. Slacken and remove the lambda sensor complete with wiring.

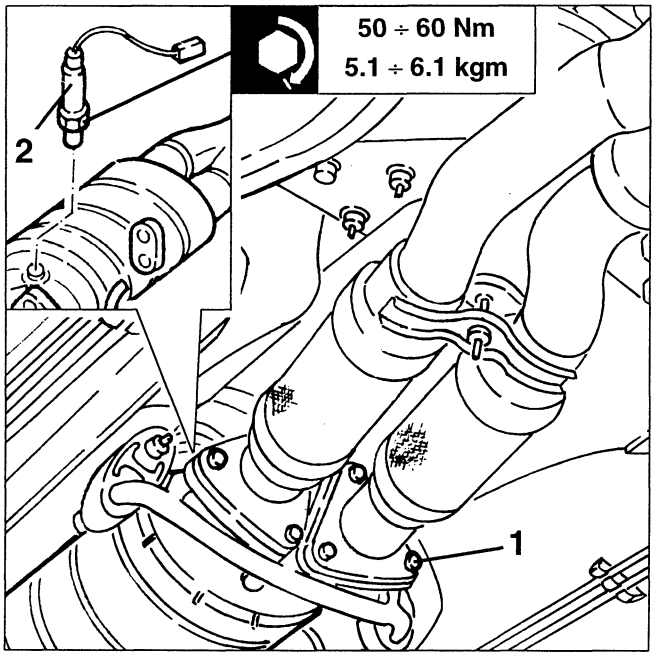

CHECKING EXHAUST EMISSION

WARNING:
Emission levels at the exhaust should be checked outdoors, or at least in a suitably equipped place according to current laws.

The test should be carried out with the engine at normal operating temperature (i.e. when the fan has come on and then turned off) and at idle speed.
If idle speed is not within the specified limits, check that the constant idle speeddevice is working properly.

- Check that the engine oil level is correct and that the air cleaner cartridge is clean.
- Start the engine and run it at idle speed.
1. Insert the analyser feeler in the end of the exhaust pipe and check that the quantity of CO and HC is within the specified limits.

CO at the exhaust	**% vol.**	< 0.2
HC at the exhaust	**p.p.m.**	≤ 50

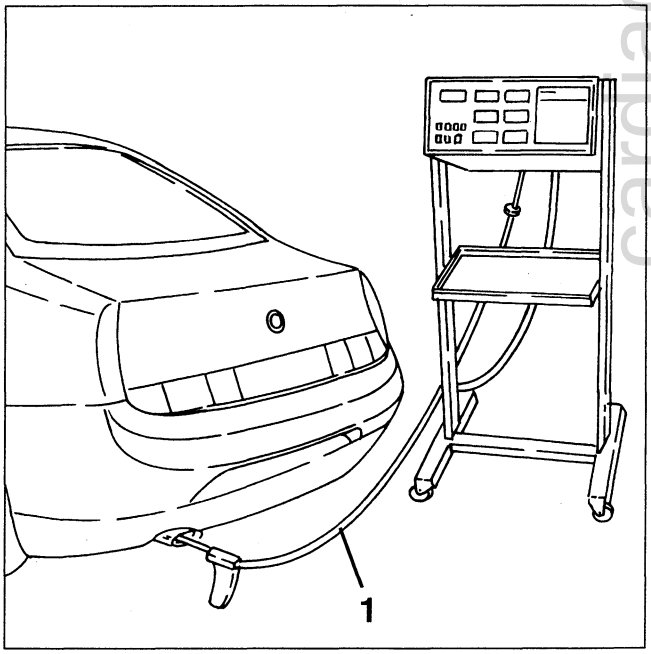

carpiagh.com

RPM AND TIMING SENSOR

The rpm and timing sensor used on this car do not differ from the previous versions; but it faces a phonic wheel on the flywheel instead of on the auxiliary components drive pulley.
This is to eliminate the effect of torsional oscillation improving angular speed sensitivity thus better location of any misfiring.

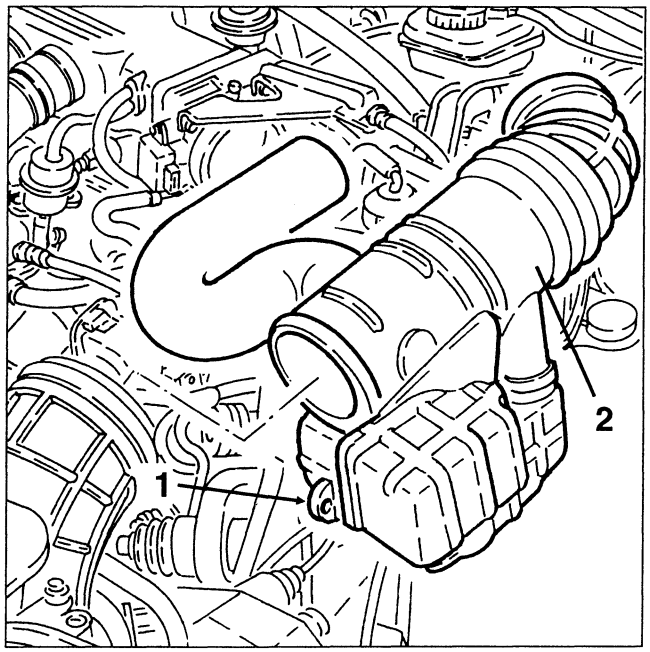

REMOVING/REFITTING

- Set the car on a lift.
- Disconnect the battery (-) terminal.

1. Disconnect the electrical connection from the intake air temperature sensor.
2. Disconnect the electrical connection from the throttle potentiometer.
3. Disconnect the oil vapour recovery pipe leading from the right cylinder head from the corrugated sleeve.
4. Disconnect the air takeoff pipe for the constant idle device from the corrugated sleeve.

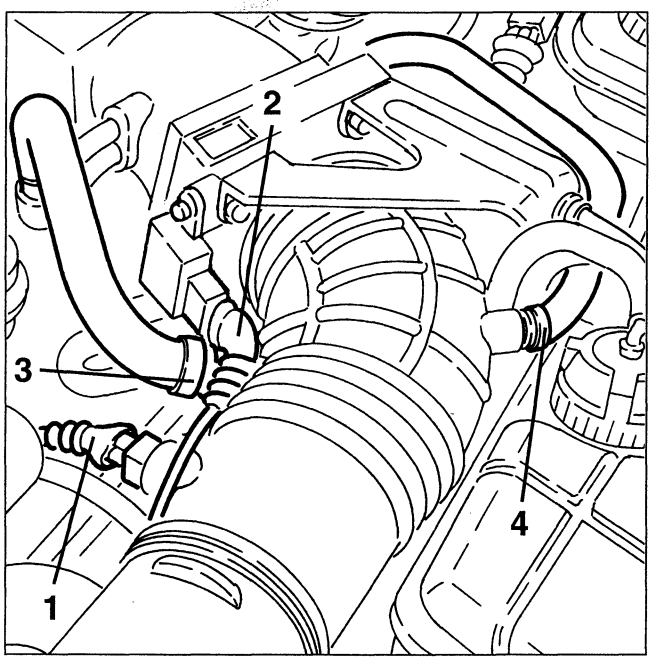

1. Prise off the fastening button of the first section of the corrugated sleeve to the intermediate resounder.
2. Slacken the two fastening clamps and remove the second section of corrugated sleeve complete with resounder.

1. Disconnect the electrical connection of the rpm and timing sensor and release the wiring of any fastening clamps.

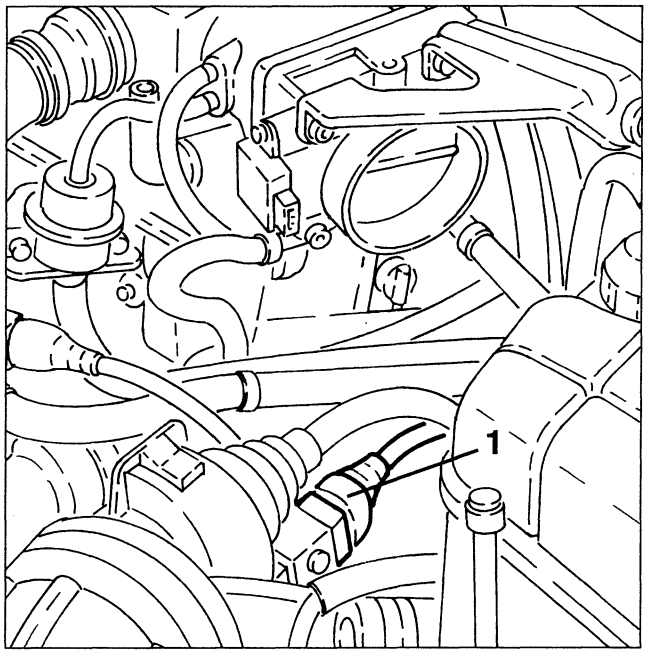

cardiagn.com

1. Raise the car, then slacken the fastenings and disconnect the front section of the exhaust pipe from the left cylinder head.

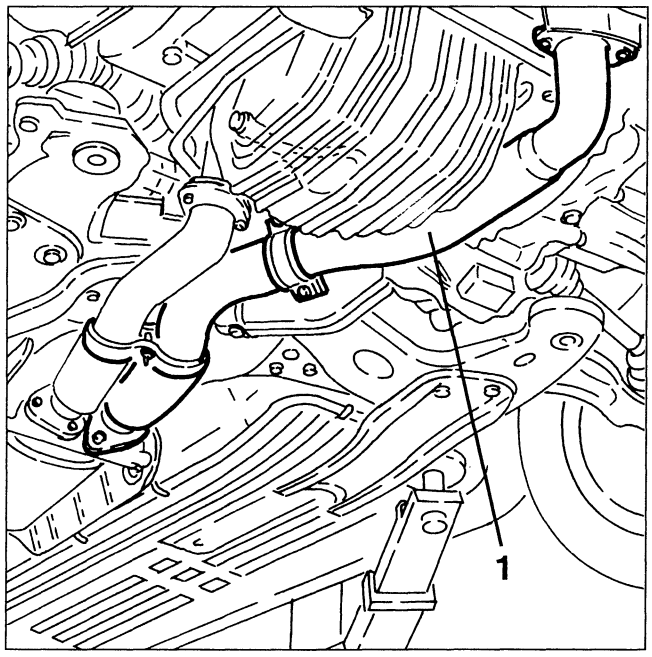

1. Slacken the fastening screws and remove the flywheel cover.

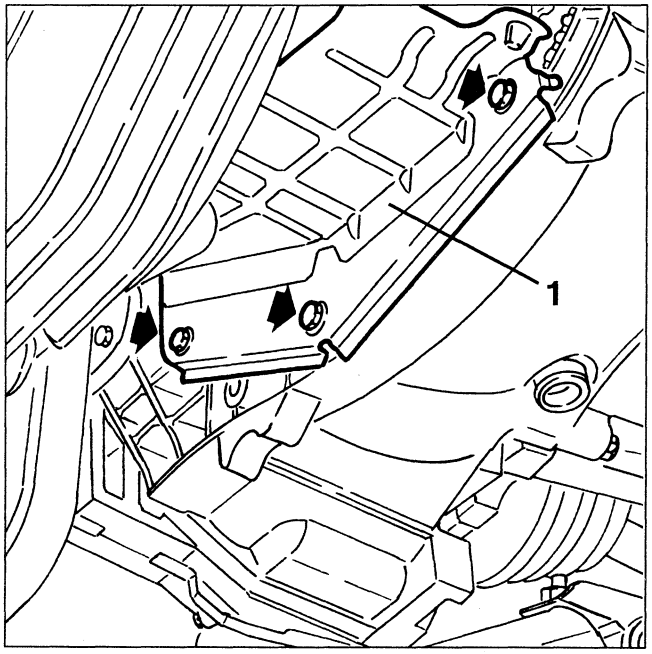

1. Slacken the fastening screw and remove the rpm and timing sensor.
- If necessary, slacken the two fastening screws and remove the support of the rpm and timing sensor.

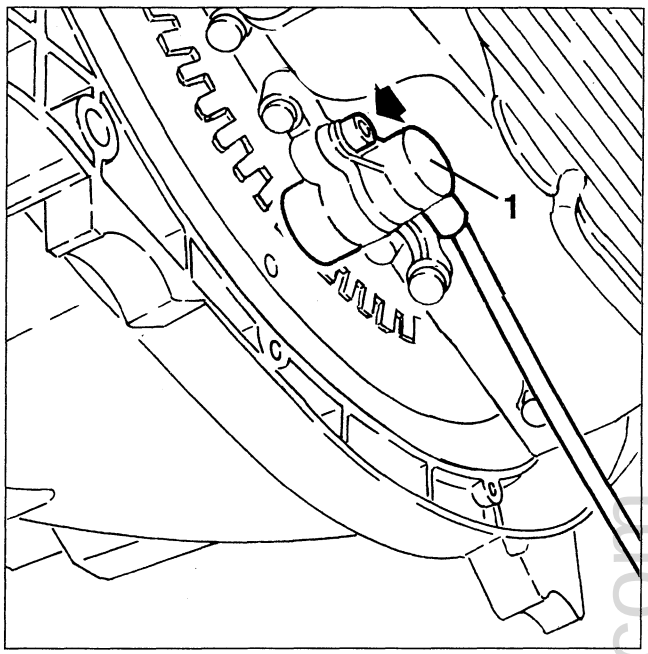

CHECKING THE GAP

- Proceed as described in removing/refitting to gain access to the rpm and timing sensor.
1. Using a thickness gauge, check that the gap between the sensor and phonic wheel is within the specified limits.

Rpm and timing sensor gap
0.8 ÷ 1.5 mm

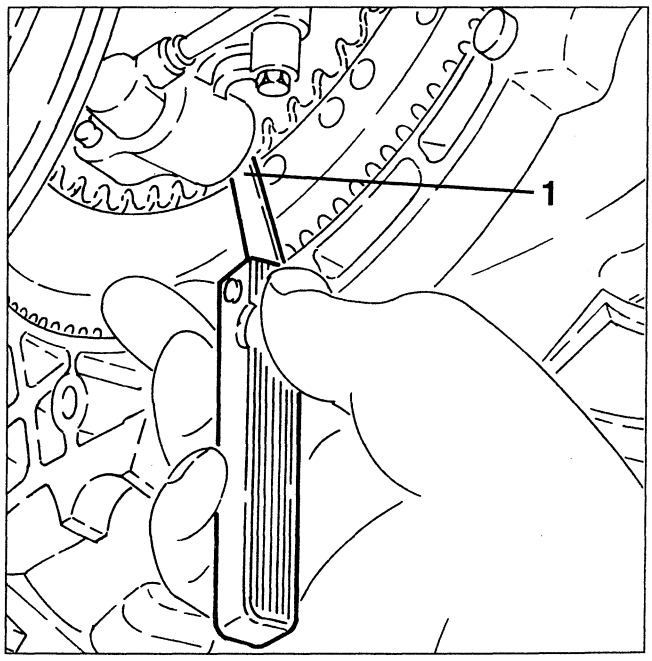

carlagn.com

ENGINE COOLANT TEMPERATURE SENSOR (NTC)

This sensor detects the temperature of the engine coolant on the thermostatic cup by a thermistor (NTC) with negative resistance coefficient, i.e. capable of lowering its resistance as the temperature increases. The electrical signal obtained reaches the electronic control unit and is used to correct the titration of the air - fuel mixture.

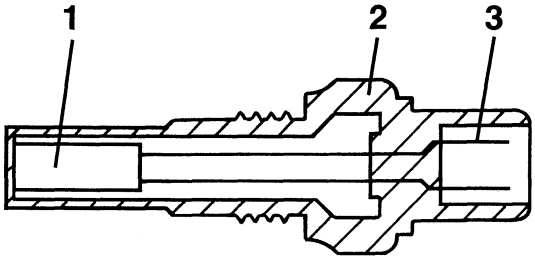

1. NTC resistance
2. Body
3. Connector

REMOVING/REFITTING

- Disconnect the battery (-) terminal.
1. Disconnect the electrical connection from the intake air temperature sensor.
2. Disconnect the electrical connection from the throttle potentiometer.
3. Disconnect the oil vapour recovery pipe leading from the right cylinder head from the corrugated sleeve.
4. Disconnect the air takeoff pipe for the constant idle device from the corrugated sleeve.

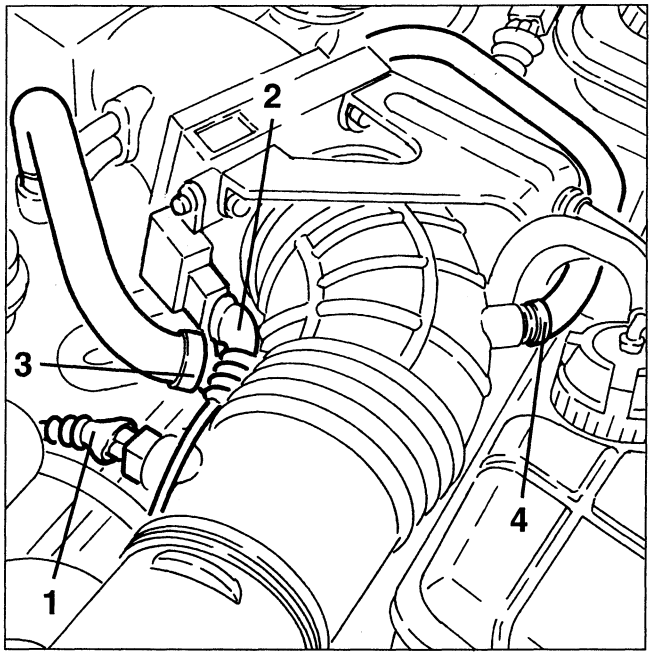

1. Prise off the fastening button of the first section of corrugated sleeve to the intermediate resounder.
2. Slacken the two fastening clamps and remove the second section of corrugated sleeve complete with resounders.

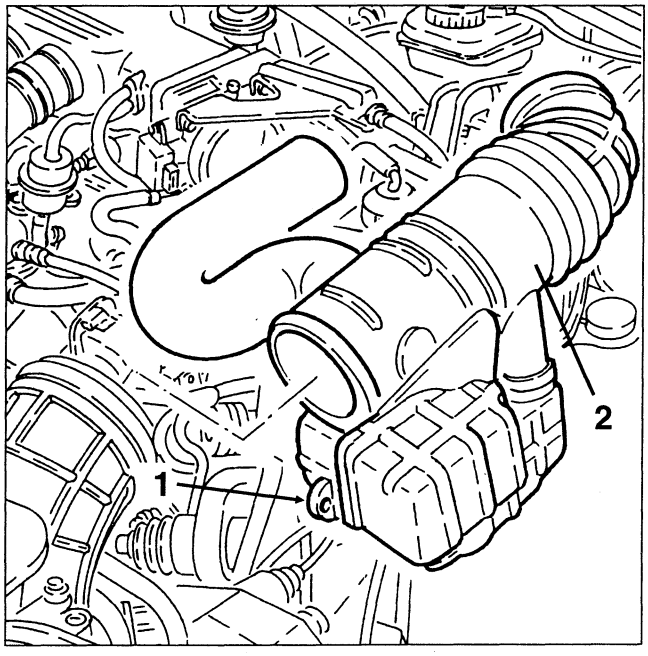

1. Release the injection wiring connector from the support bracket.

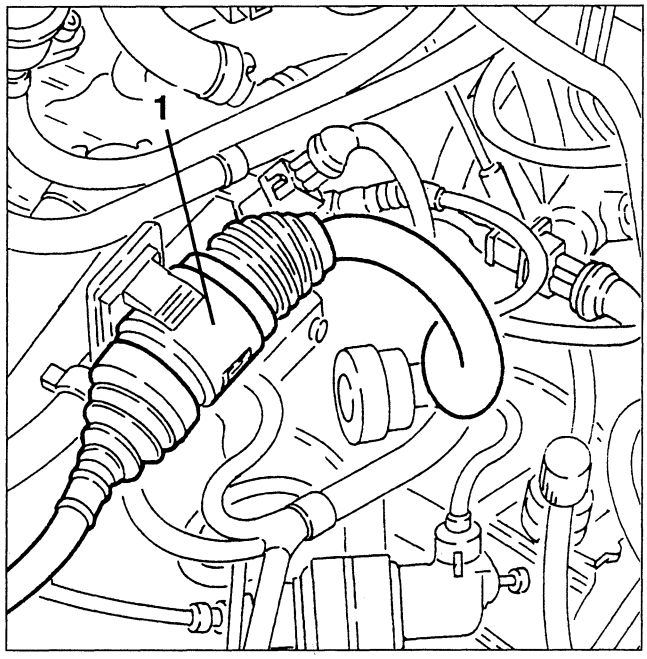

cardiagn.com

1. Disconnect the electrical connection from the engine coolant temperature sensor (NTC).
2. Slacken and remove the engine coolant temperature sensor (NTC) from the thermostatic cup.

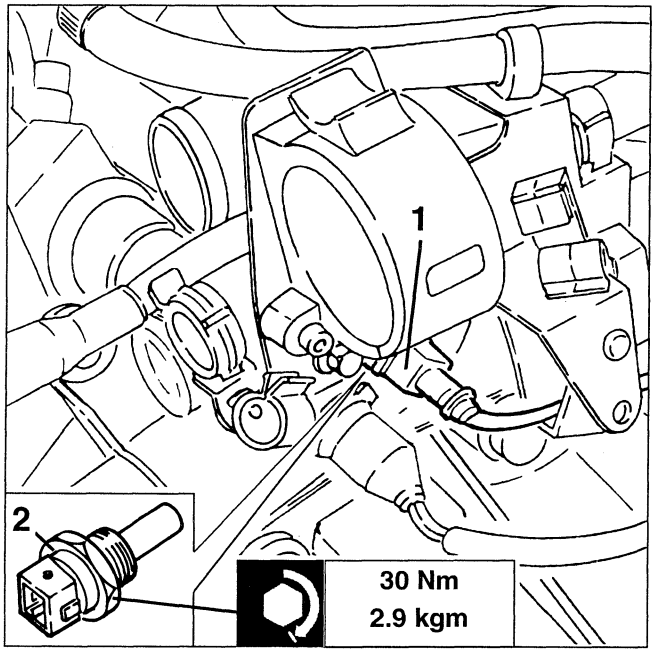

CAM ANGLE SENSOR

The cam angle sensor comprises a Hall effect device. The voltage signal "lowers" sharply" when the peg machined on the exhaust camshaft of the right cylinder head facing the sensor passes in front of the sensor itself.

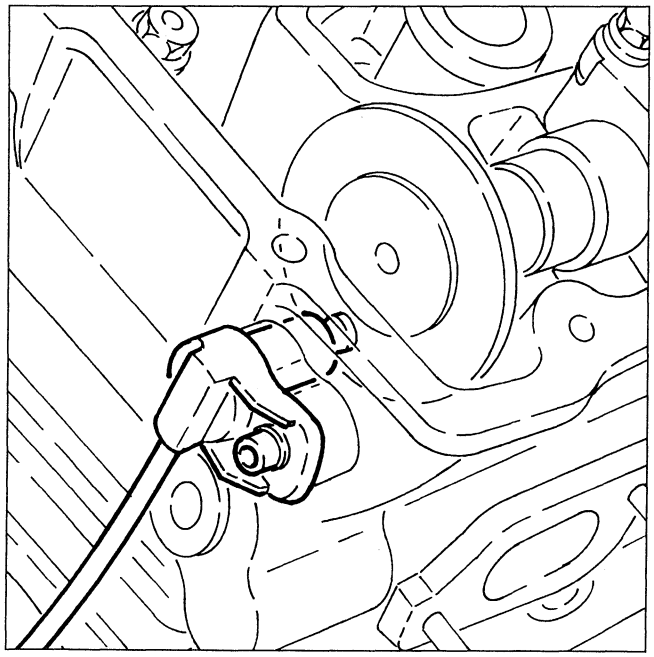

REMOVING/REFITTING

- Proceed as described in the first seven steps of the procedure "Engine coolant temperature sensor (NTC) - REmoving/Refitting".

1. Disconnect the electrical connection of the cam angle sensor.
2. Slacken the fastening screw and remove the cam angle sensor complete with wiring from the right cylinder head.

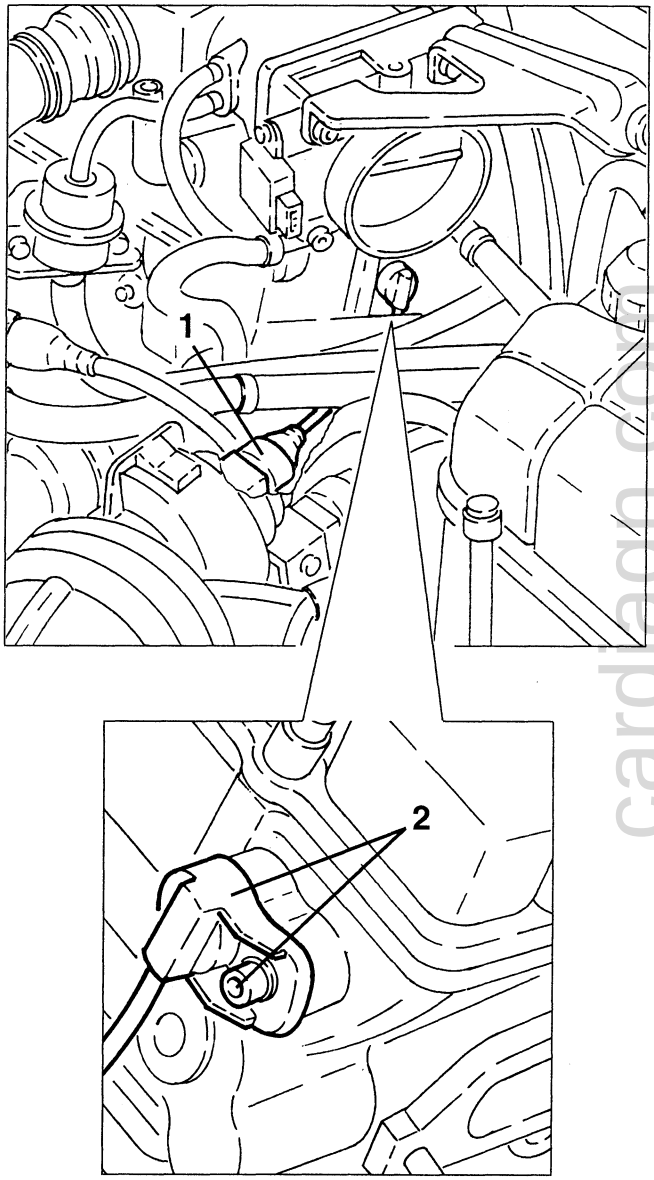

cardiagn.com

ENGINE COOLING SYSTEM

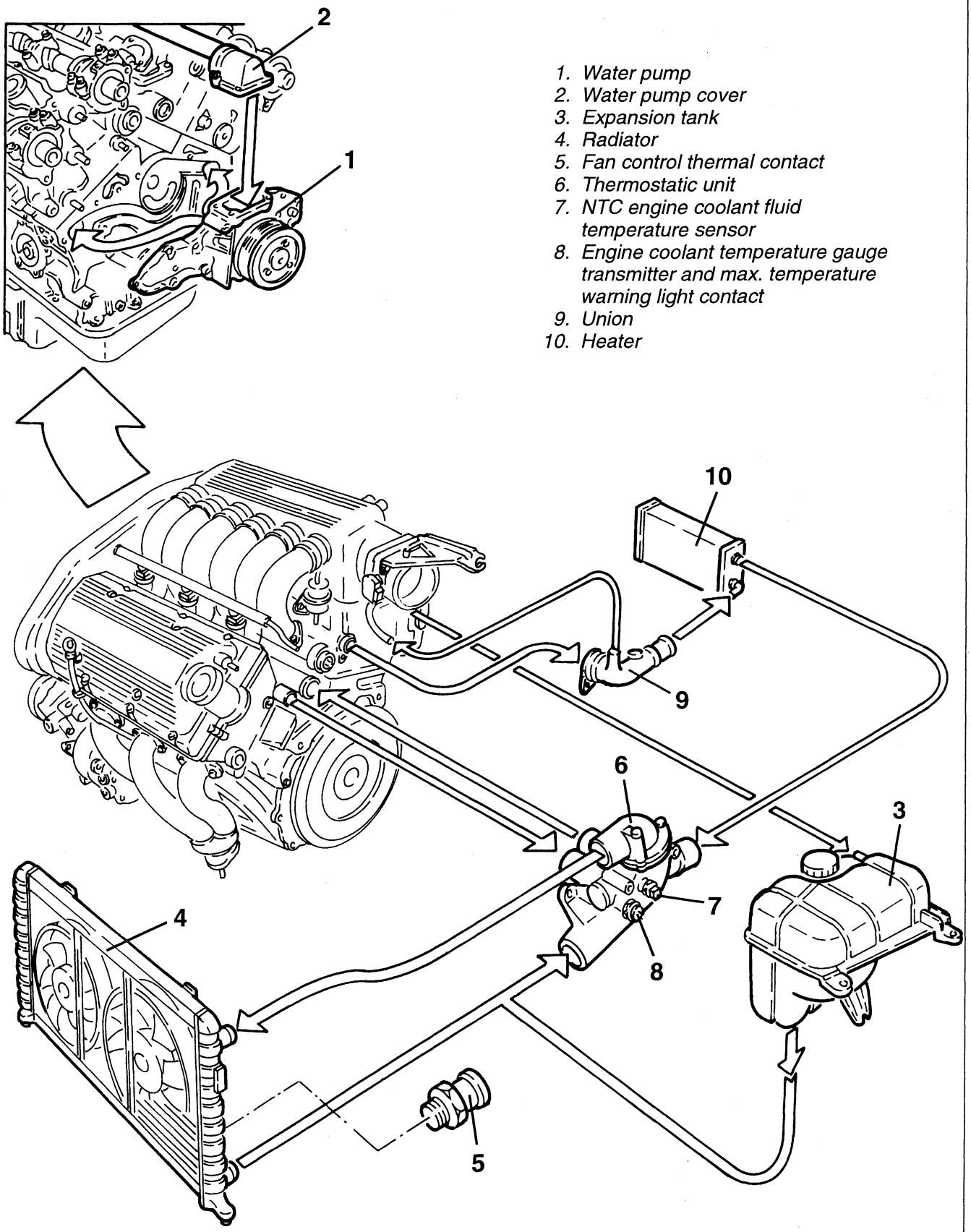

1. *Water pump*
2. *Water pump cover*
3. *Expansion tank*
4. *Radiator*
5. *Fan control thermal contact*
6. *Thermostatic unit*
7. *NTC engine coolant fluid temperature sensor*
8. *Engine coolant temperature gauge transmitter and max. temperature warning light contact*
9. *Union*
10. *Heater*

cardiagn.com

DESCRIPTION

The cooling system is sealed and of the forced circulatio type. It features a centrifuge pump (1) operated by the crankshaft by means of a Poly-V belt.
A thermostat valve (6) located on the rear of the engine ensures optimal engine temperature. It opens when the coolant reaches a temperature of 87 ± 2°C.
The radiator (4) cools the fluid by means of dynamic air and a two double speed fans. The fans are controlled by a thermal contact (5) located on the radiator. An additional resistance and a relay operate the fans at higher speed when the temperature is high.
The expansion reservoir (3) feeds the circuit if the level decreases and absorbs the fluid variations in volume according to the temperature. Furthermore, it acts as a circuit air bleeder.
The circuit is equipped with an engine coolant temperature sensor (8) for the gauge and a maximum temperature thermal contact for the warning light up when the coolant temperature exceeds 115°C.

CIRCUIT OPERATION

The fluid cools the engine and reaches the thermostat (5) via the cylinder head. If its temperature is lower than 87°C the coolant is sucked by the pump (1) via a longitudinal return manifold located between the two cylinder heads.
If the temperature is higher than this values, the coolant is conveyed to the radiator (4) via the thermostat opening.
After being cooled in the radiator, the coolant returned to the thermostat from where it is conveyed to the pump via the longitudinal manifold.
A specific fitting (9) on the right-hand cylinder head receives the coolant from a suppelementary duct on the head and sends it via two specific pipes to the climate control system heater (10) and to the throttle casing for heating it.
The throttle is connected to the expansion reservoir (3) by means of a specific pipe which ensures fluid return and also bleeds the system.

cardiagn.com

DESCRIPTION

The following information and illustrations allow quick engine removal and refitting.

Bench disassembly instructions for single components are contained in the "ENGINE OVERHAUL" volume.
The following procedures may be used only in part, according to requirements.
For additional information and details, refer to the specific component and assembly chapters.

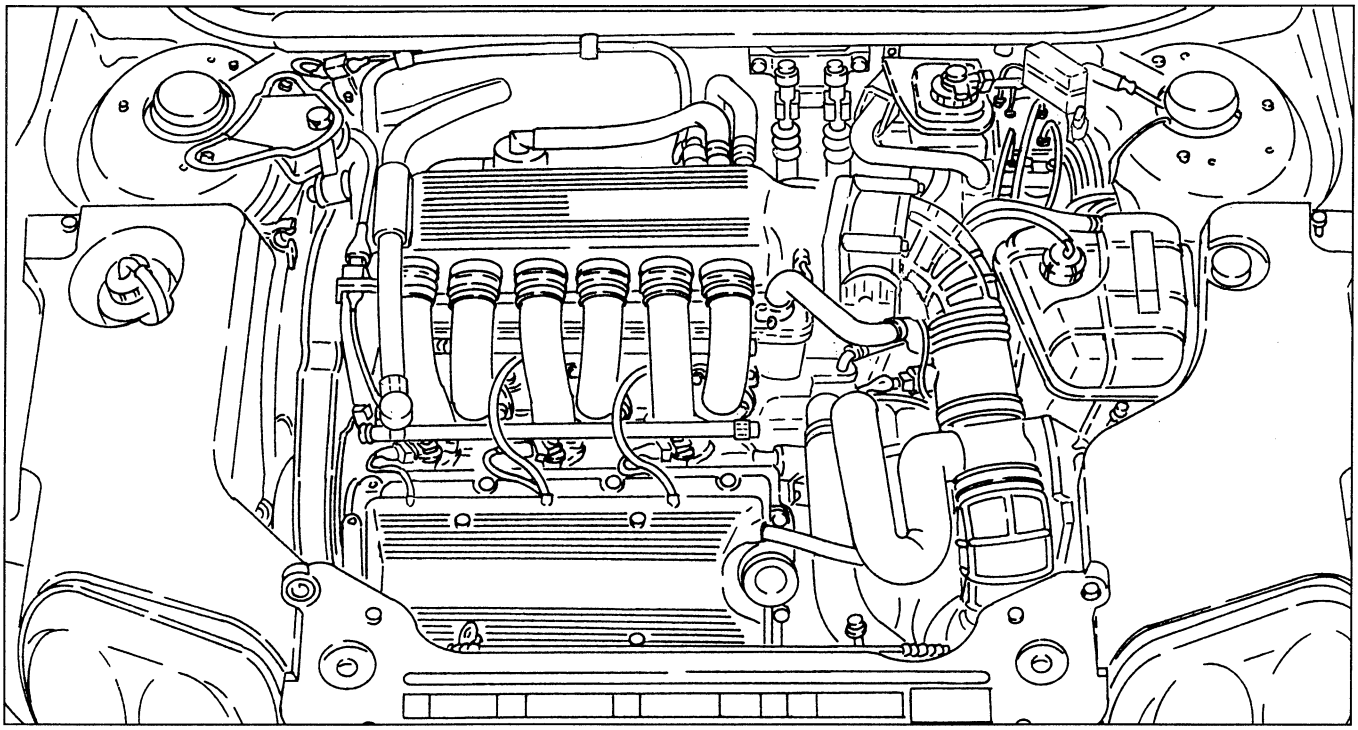

REMOVAL

- Position the vehicle on a shop jack.
- Make sure the ignition key is at "STOP" and disconnect the (-) battery terminal.
- Remove the front wheels.

1. Loosen the screws and remove the two side engine guards.

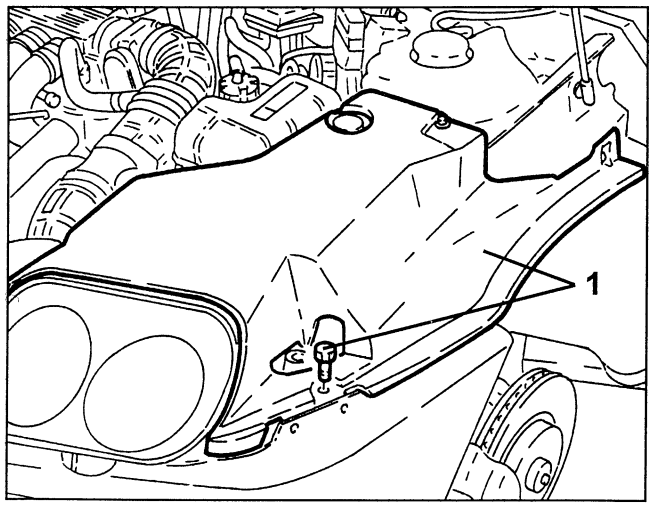

1. Release the buttons, loosen the screws and remove the front wheel compartment dust guards.

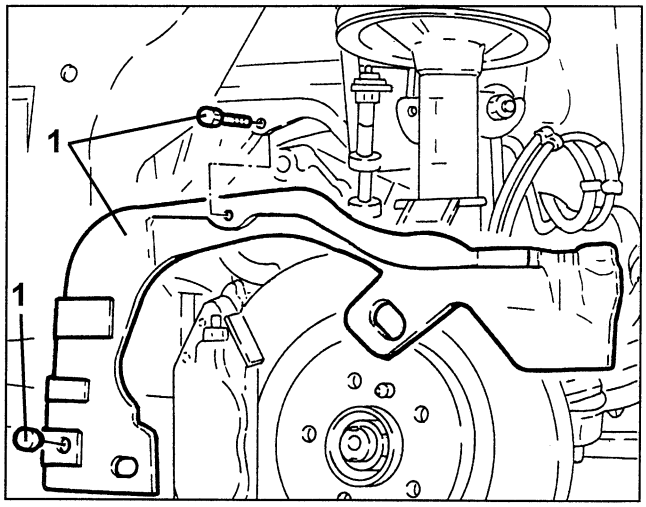

cardiagn.com

1. Loosen the fasteners and remove the right-hand front wheelhouse.

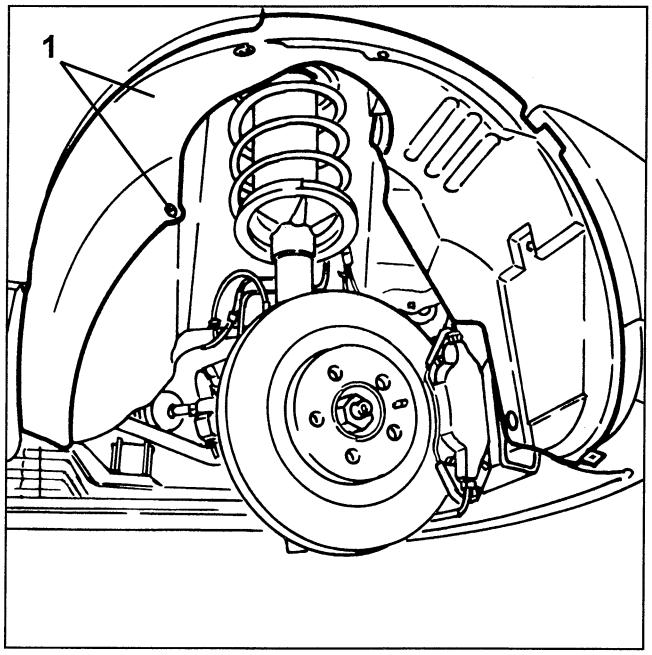

- Lift the vehicle.
1. Loosen the nut and the screws and remove the lower air cleaner guard.

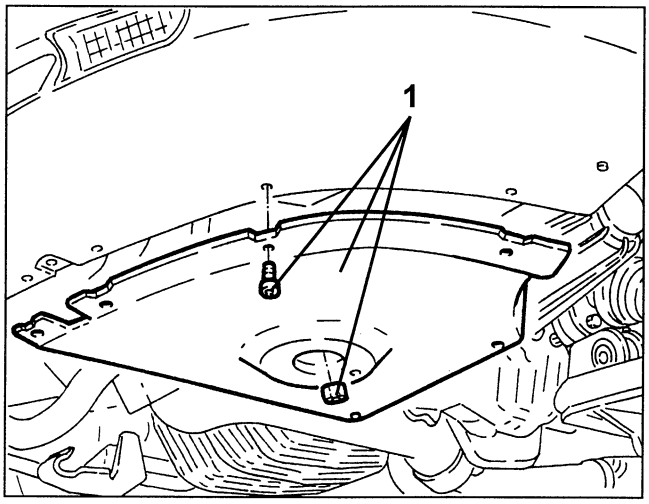

1. Drain the engine coolant by disconnecting the radiator fluid output sleeve and collect the coolant in a suitable container.

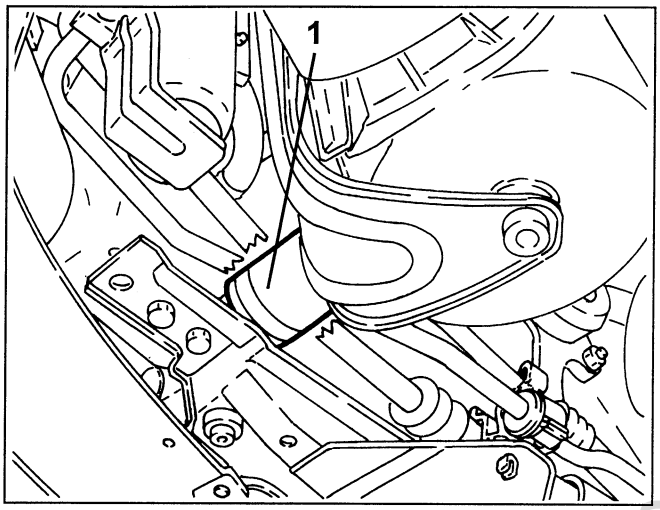

- Lower the vehicle.
1. Loosen the clips and remove the corrugated sleeve and resonators after releasing the intermediate resonator from the fastening pin.

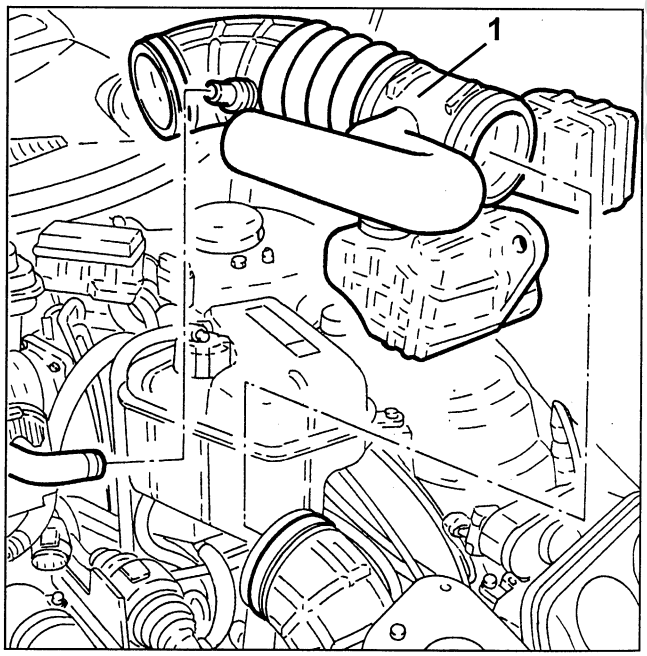

cardiagn.com

1. Disconnect the hot film air flow meter electrical connection.
2. Loosen the air cleaner fastening nuts.

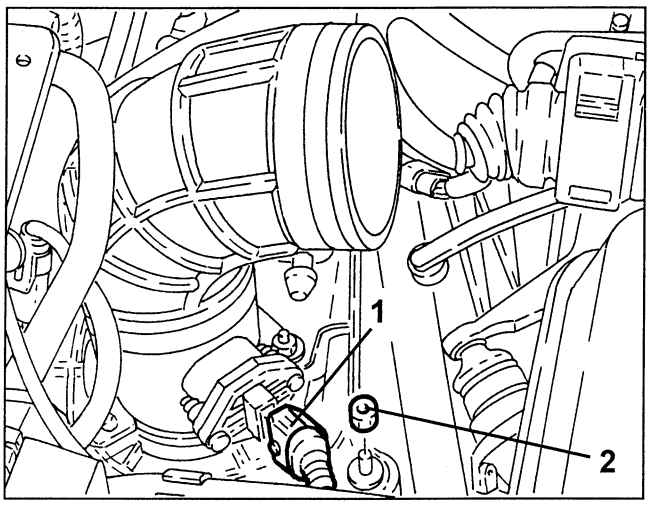

- Release the air cleaner from the lower resonator sleeve.
1. Remove the air cleaner and hot film air flow meter.

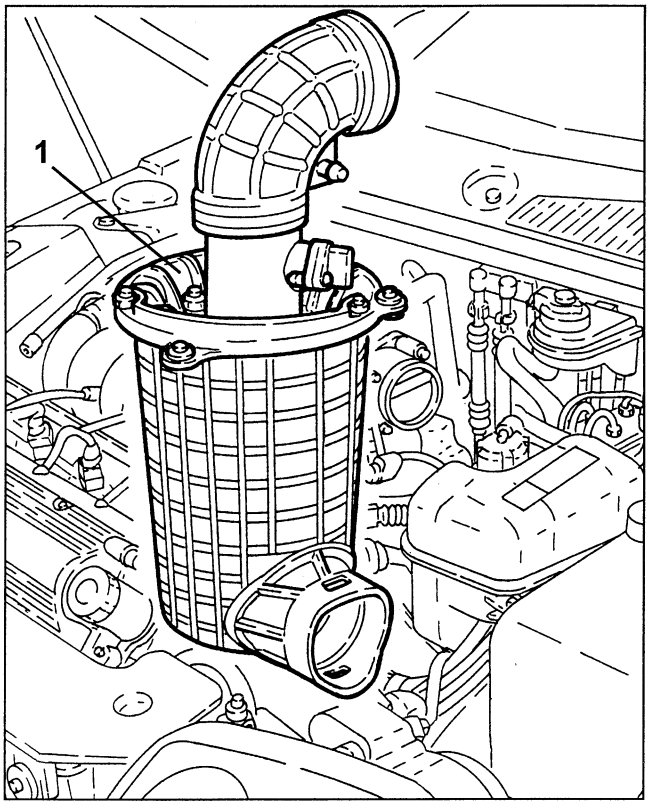

1. Loosen the screws and remove the air cleaner bracket.

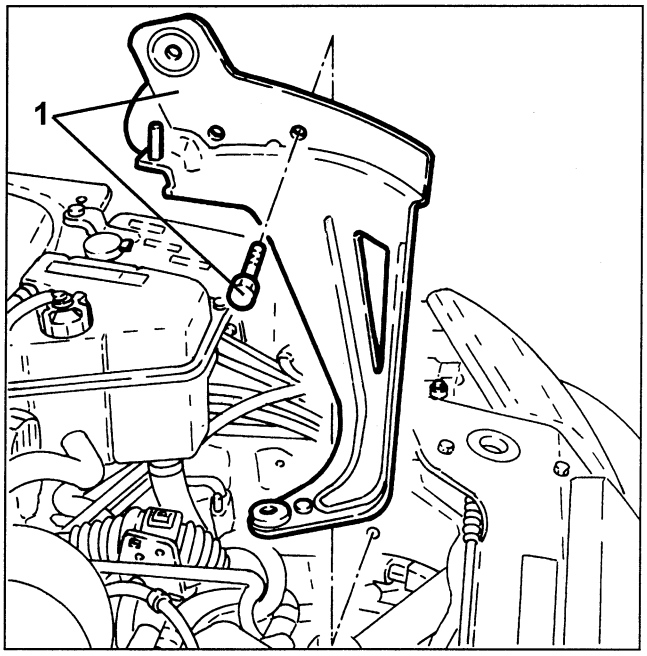

1. Disconnect the radiator coolant delivery sleeve from the thermostat.
2. Disconnect the radiator return coolant sleeve from the thermostat and move it aside.
3. Disconnect the expansion reservoir coolant return pipe from the right-hand cylinder head fitting.
4. Disconnect the lambda sensor electrical connections and release the respective wiring from the fastening clips.

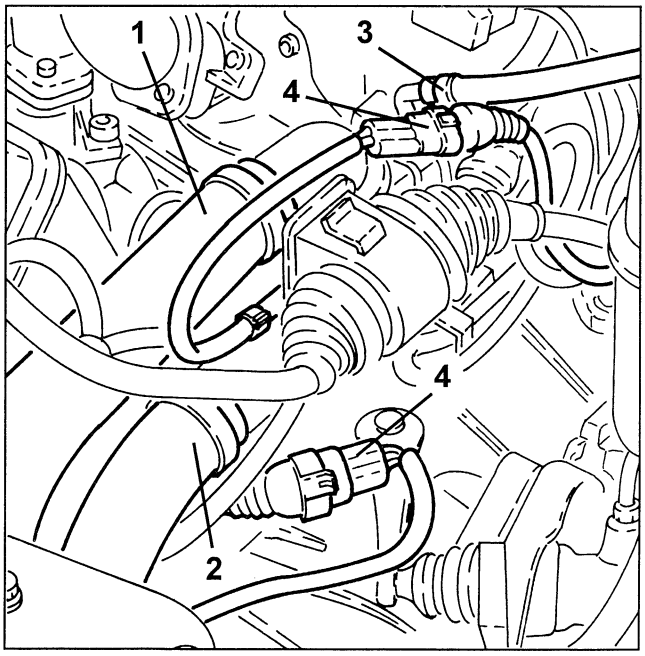

cardiagn.com

1. Release the injection wiring from the fastening clips.
2. Disconnect the injection wiring joint.

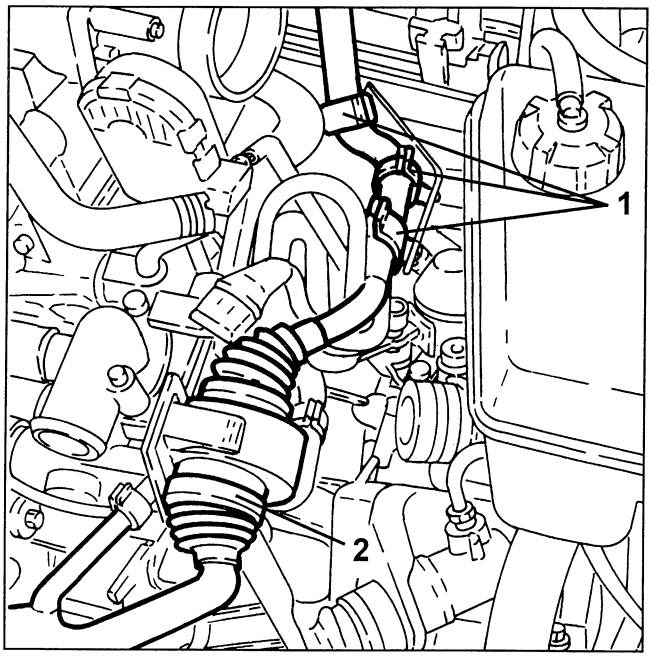

1. Disconnect the rpm and phase sensor electrical connection.
2. Disconnect the rear knock sensor electrical connection.
3. Disconnect the cam angle sensor electrical connection.
4. Disconnect the engine coolant temperature sensor electrical connection.
5. Disconnect the throttle casing with built-in DVL electrical connection.

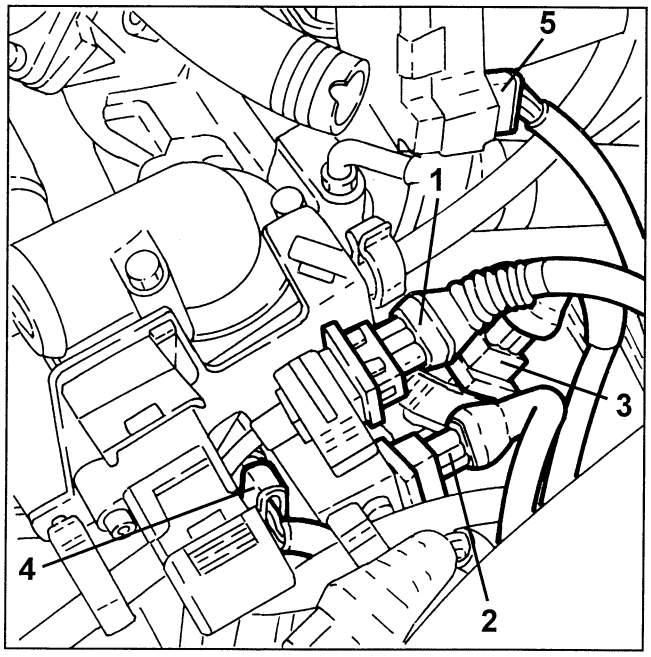

1. Disconnect the climate control system heater coolant delivery pipe from the right-hand cylinder head fitting.
2. Disconnect the climate control system coolant return sleeve from the thermostat.

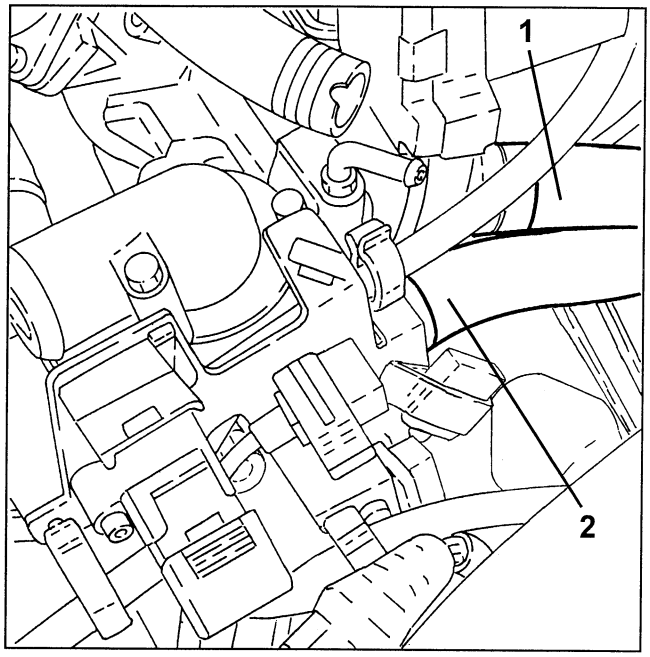

1. Release the lambda sensor wiring from the injection wiring bracket.
2. Loosen the nut and remove the injection wiring bracket.

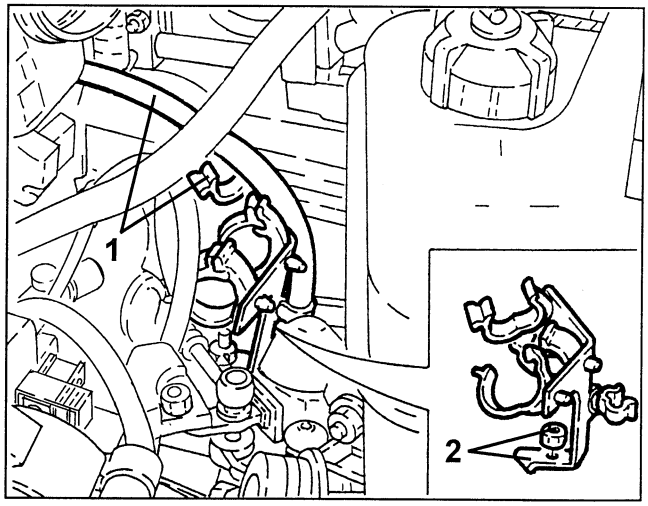

cardiagn.com

1. Disconnect the gear engagement and selection wires.
2. Loosen the nuts and move the brackets and gear engagement and selection wires aside.

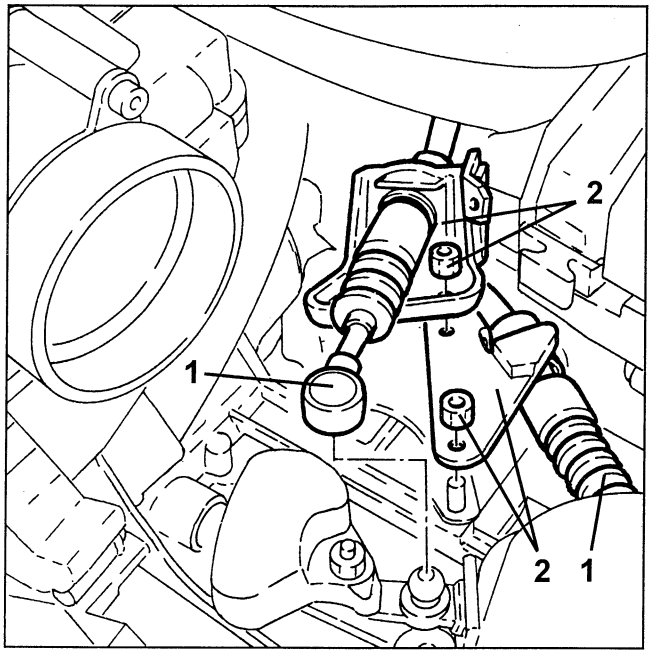

1. Disconnect the starter motor wiring electrical connection.

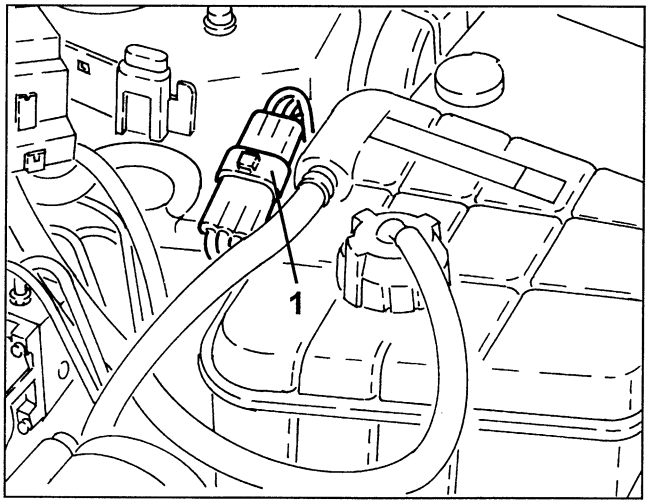

1. Disconnect the reversing light switch electrical connection.
2. Open the junction unit and disconnect the starter motor and alternator power wire.
3. Loosen the fastening screws and move the bracket with clutch cylinder and vibration damper aside without disconnecting the respective pipes.

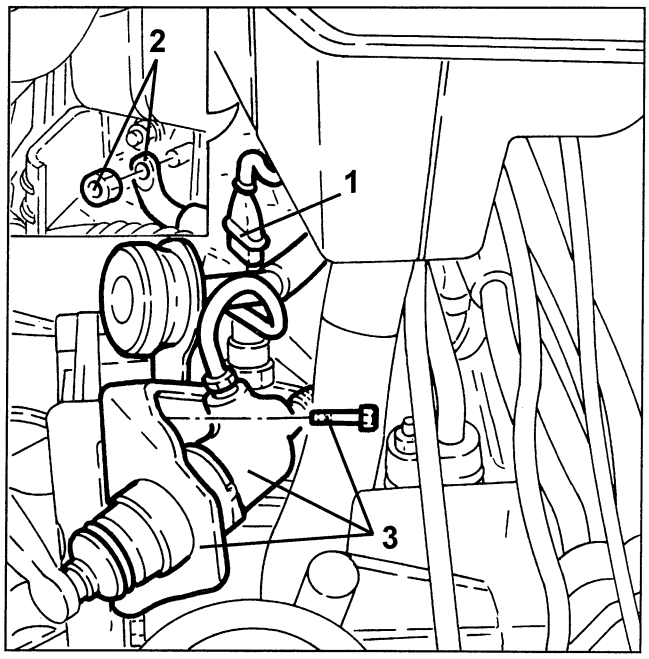

1. Disconnect the brake booster vacuum pipe from the intake manifold.
2. Disconnect the fuel vapour pipe quick coupling from the intake manifold.

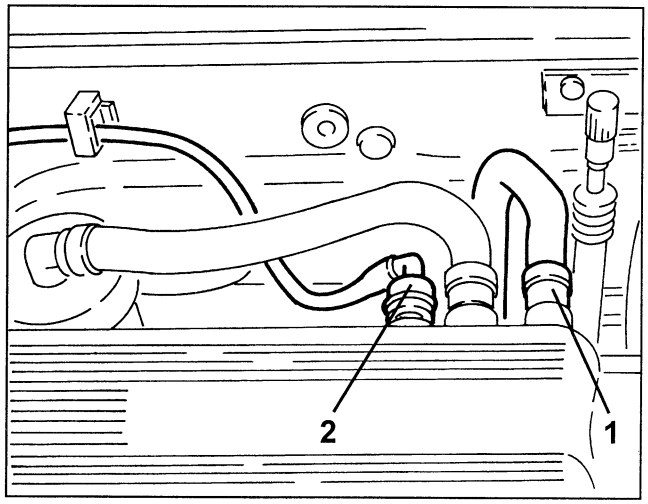

- Drain the fuel pressure by removing the specific caps on the distribution manifold and operating the valves underneath.

NOTE: Collect the fuel in a suitable container.

cardiagn.com

1. Disconnect the fuel delivery pipe from the distribution manifold and release it from the fastening bracket.
2. Disconnect the front knock sensor electrical connection.
3. Disconnect the earth wire from the engine tie-rod.
4. Loosen the screws and remove the engine tie-rod.

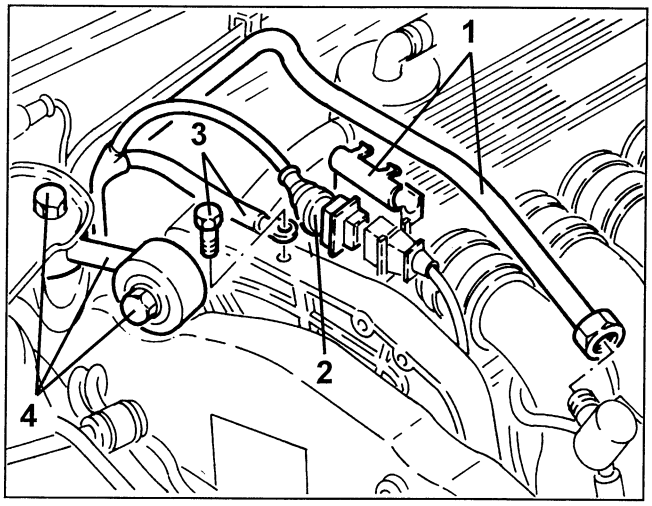

1. Loosen the screws and remove the upper radiator crossmember.

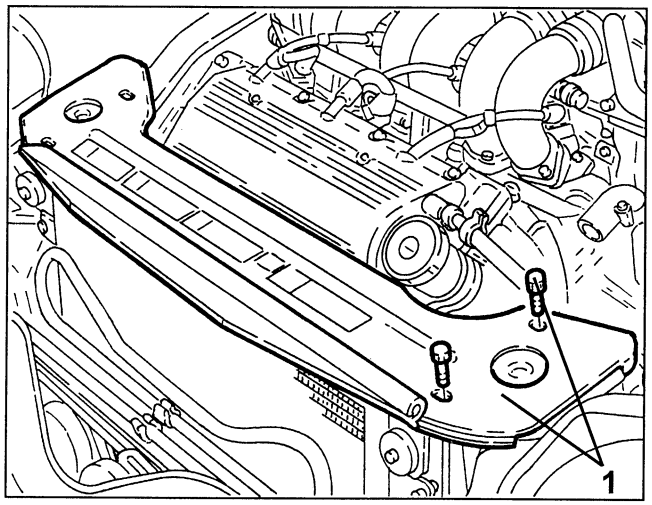

1. Disconnect the bonnet lock wire and move it aside.
2. Release the electrical wiring from the fastening clips and the duct.
3. Disconnect the electrical connection.
4. Disconnect the engine cooling fan electrical connection.

5. Disconnect the engine cooling fan resistor electrical connection and move the electrical wiring aside.

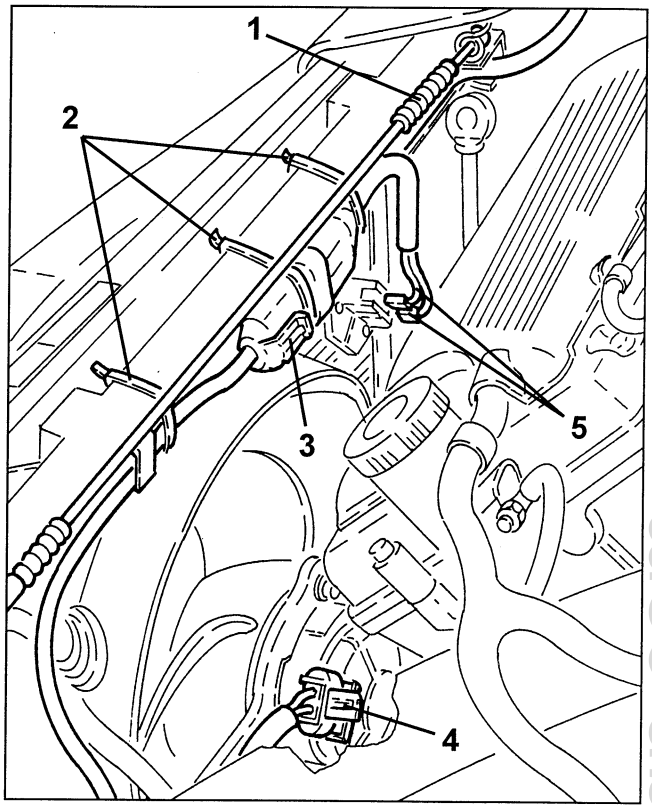

1. Loosen the screws and remove the electrical wiring duct.
2. Loosen the upper radiator fastening screws and take the respective shims.

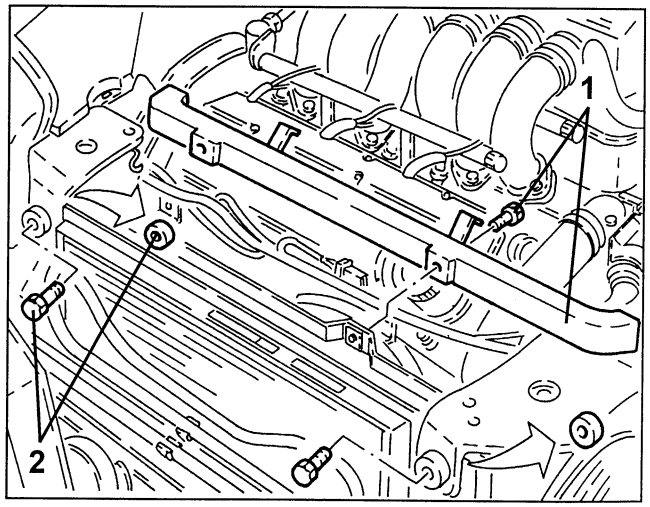

cardiagn.com

1. Move the radiator aside just enough to remove the engine cooling fan.
- Provisionally refit the engine cooling radiator upper screws.

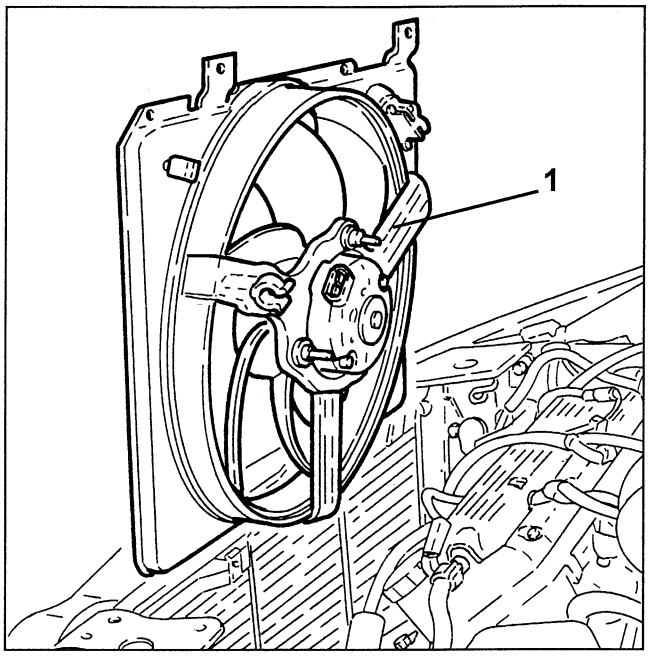

- Empty the power steering oil reservoir with a suitable syringe.
1. Loosen the screw and the fitting. Then disconnect the power steering pump oil delivery pipe.
2. Loosen the fitting and disconnect the power steering pump oil intake pipe.

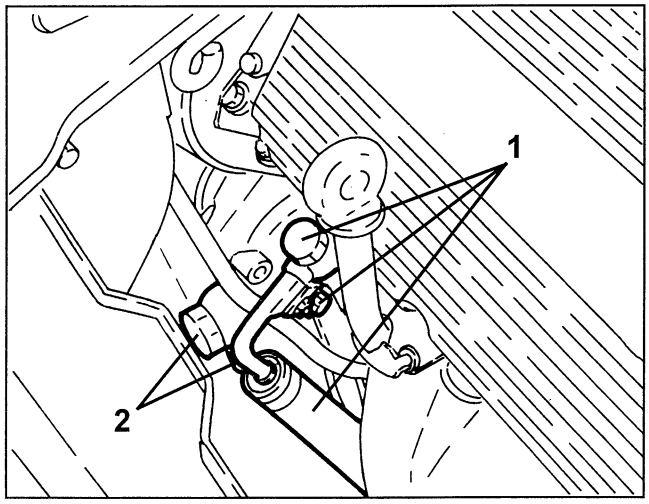

1. Loosen the nuts and remove the firewall from the left-hand exhaust manifold.

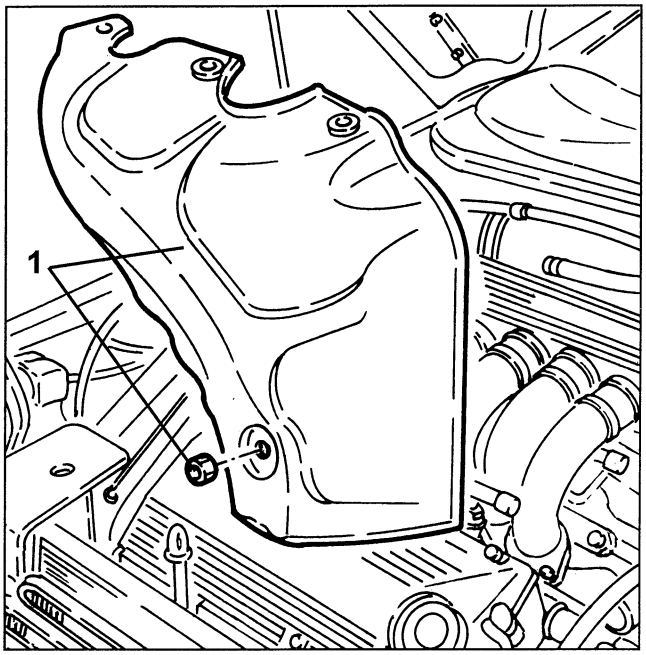

1. Loosen the power steering cooling serpentine from the retainers on the front underbody crossmember.
2. Loosen the fastening screw and move the right-hand horn aside.

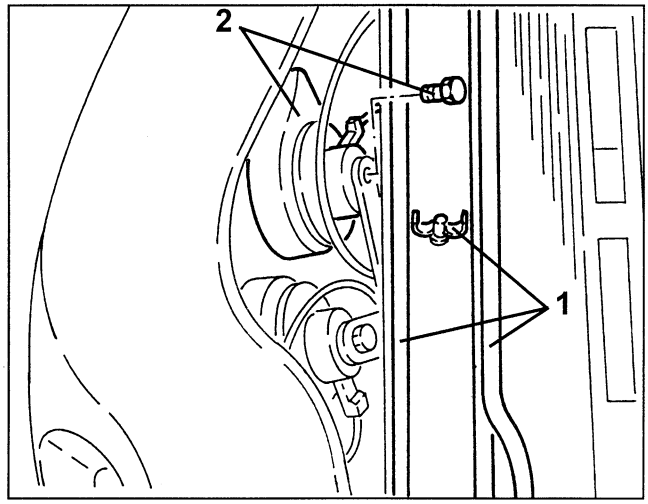

cardiagn.com

1. Fit the two engine mount rods on the cylinder heads.
2. Fit the crossmember no. 1.820.581.000 with mounts no. 1.820.239.000.
3. Fit mount no. 1.820.226.000 and connect the respective tie-rods on the brackets previously fitted on the cylinder heads.

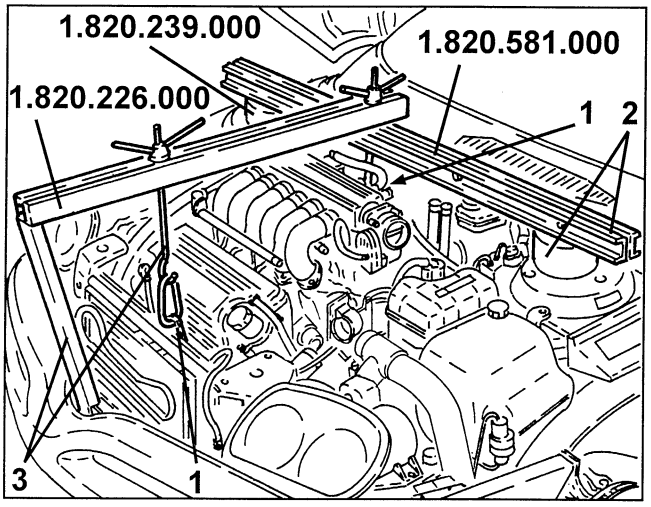

- Lift the vehicle.
1. With a wrench on the belt take-up pulley fastening screw, overcome the automatic take-up force and lock it in this position (belt loose) with a pin as shown in the figure.
2. Remove the engine unit drive belt.

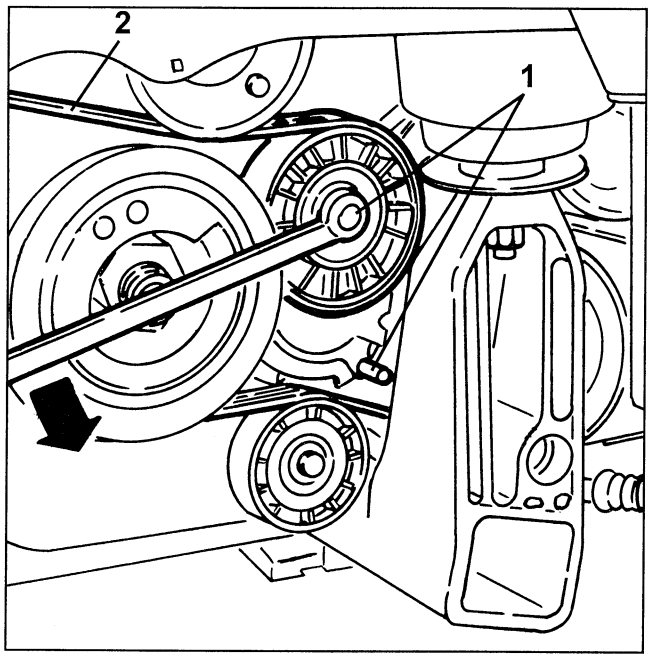

1. Release the power steering and climate control pipes from the clips on the lower radiator crossmember.
2. Loosen the screws and remove the lower engine cooling crossmember.

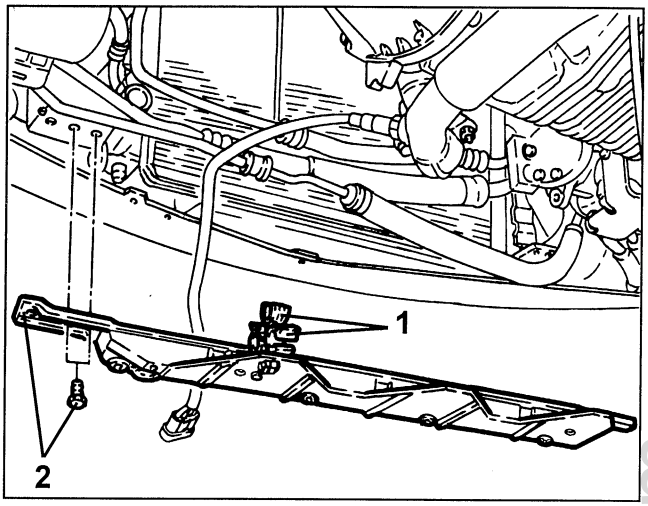

1. Loosen the conditioner compressor fastening screws. Move it aside and fasten it to the underbody.

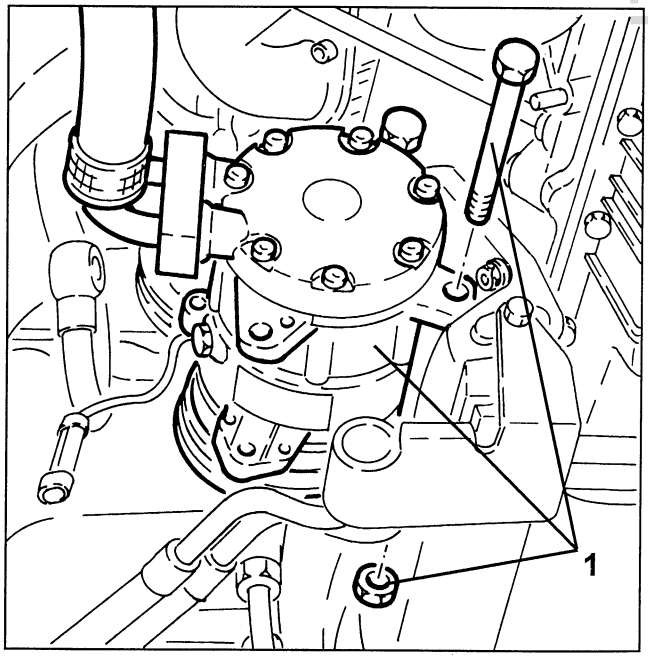

cardiagn.com

1. Loosen the fasteners and remove the front exhaust pipe section.

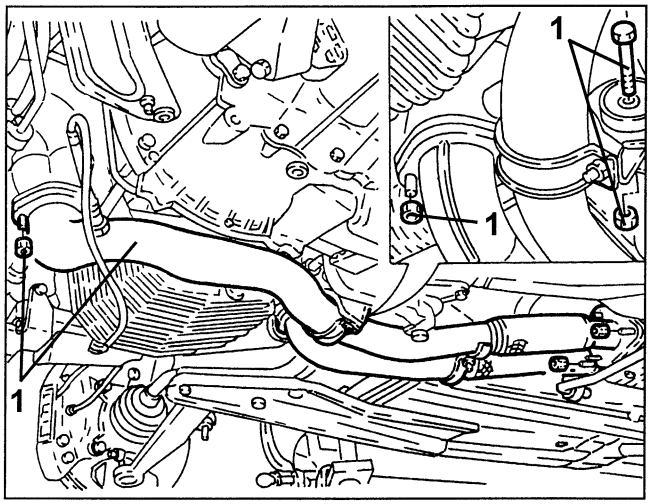

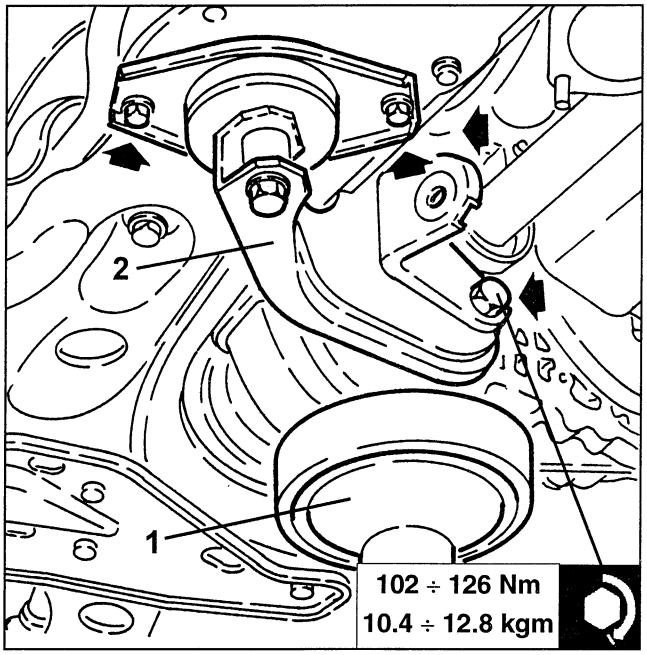

1. Loosen the fastening bolts and disconnect the drive shafts.

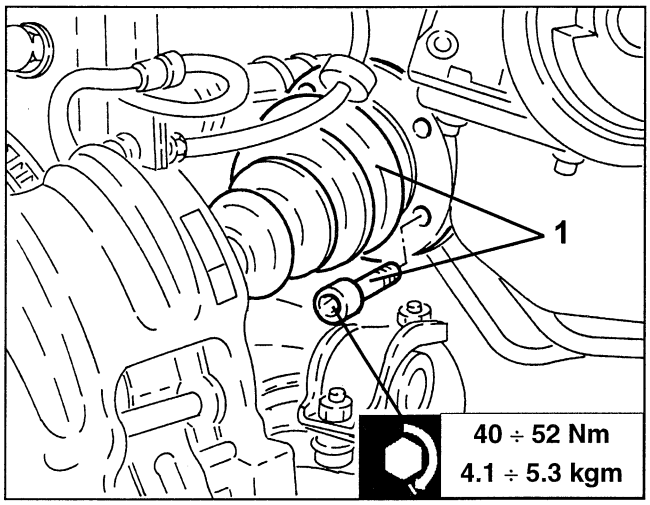

1. Loosen the nuts and remove the power steering unit firewall.

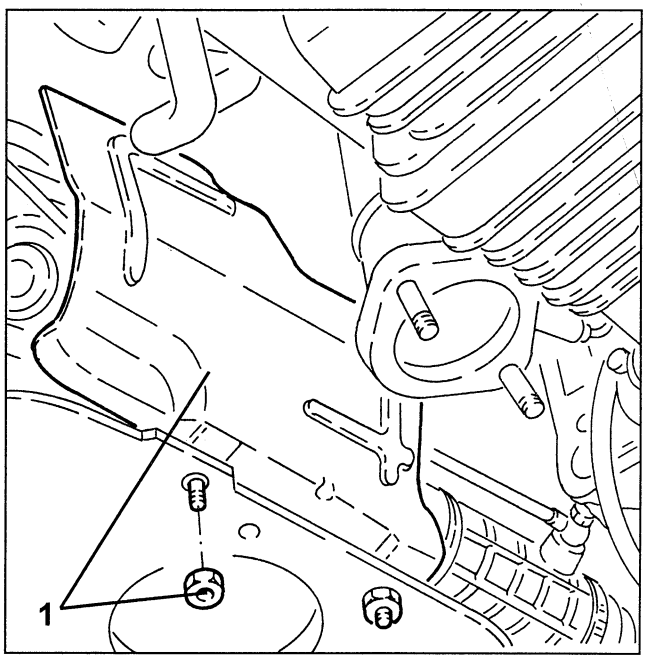

1. Position a hydraulic jack under the differential.
2. Loosen the fastening screws and remove the rear engine mount.
- Remove the hydraulic jack from under the differential.

cardiagn.com

1. Use a hydraulic jack to support the crossmember by means of tool no. 1.860.978.000.
2. Loosen the gear lever bracket front fastening nuts.
3. Loosen the gear lever bracket rear screws and the remaining screws.

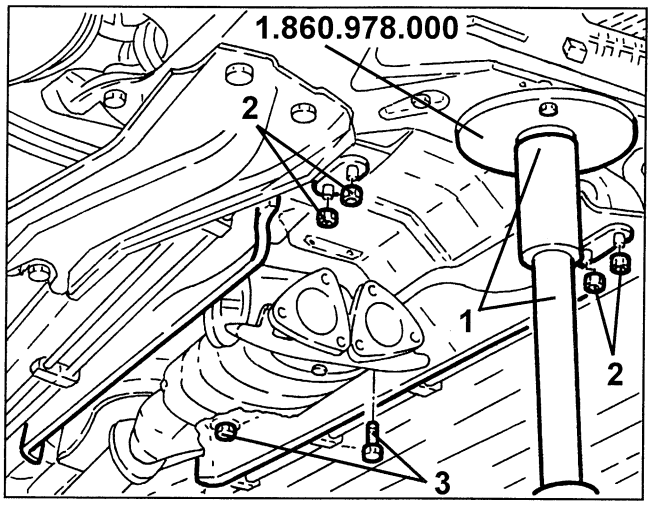

1. Loosen the bolts fastening the wishbones to the wheel risers.

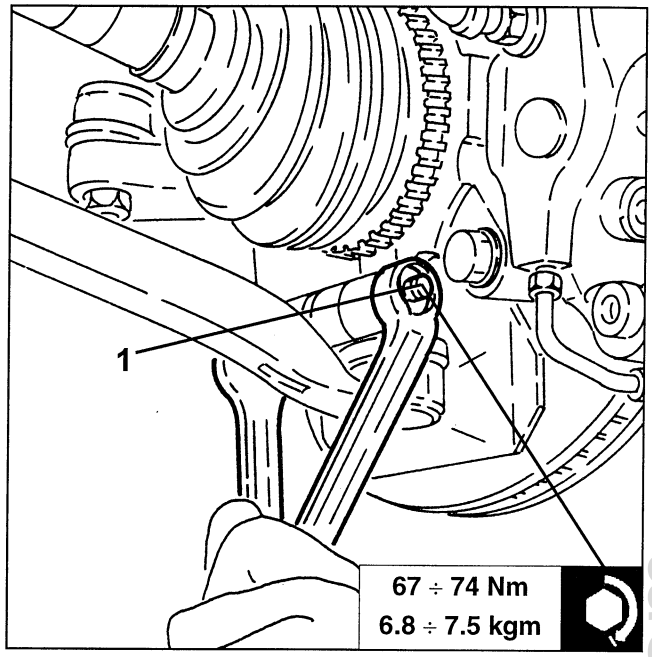

1. Loosen the nuts and disconnect the stabiliser bar tie-rods.

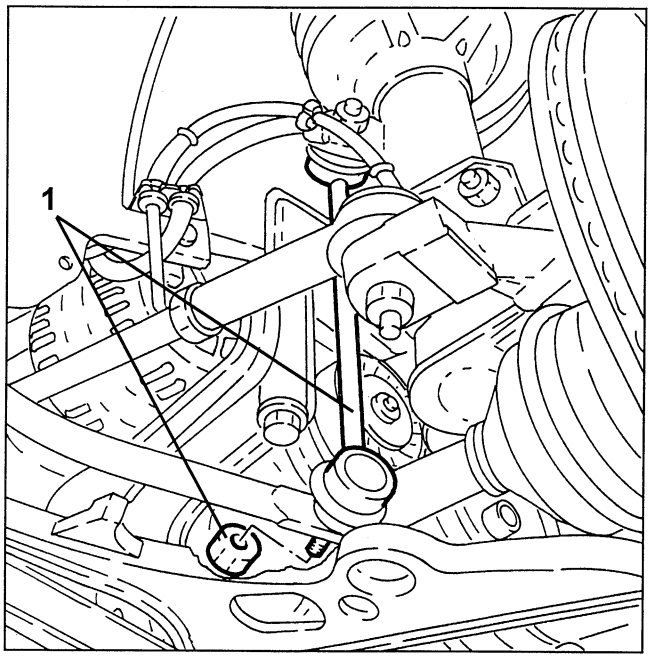

1. Loosen the screws fastening the power steering unit to the crossmember.
2. Loosen the rear screws fastening the crossmember reinforcement to the underbody.
3. Loosen the central screws fastening the crossmember to the underbody.

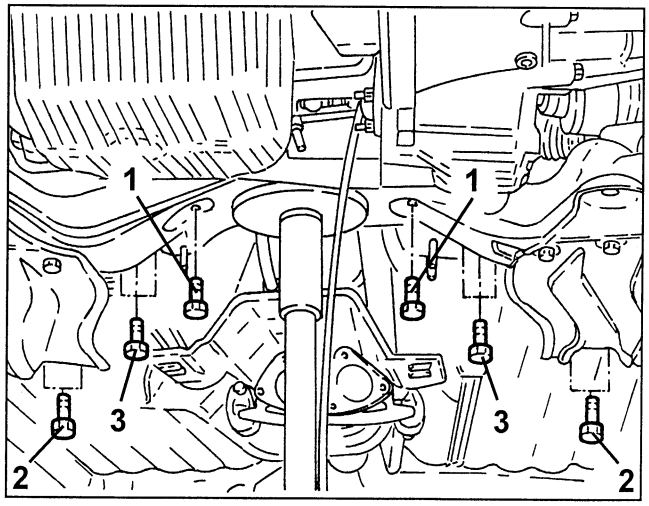

cardiagn.com

1. Loosen the side screws fastening the crossmember to the underbody.

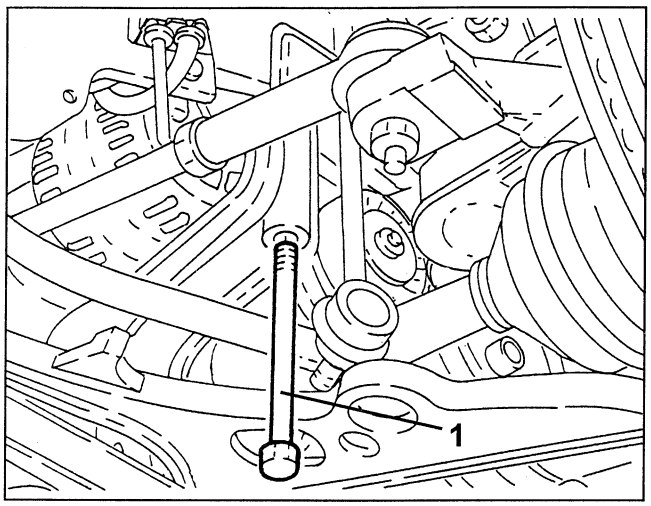

1. Loosen the fastening screws and remove the flywheel guard.

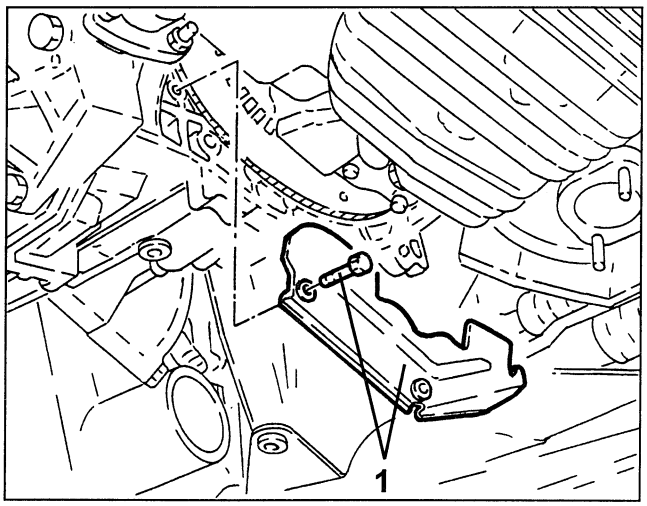

1. Lower the hydraulic jack and remove the crossmember with wishbones, stabiliser and reinforcements.

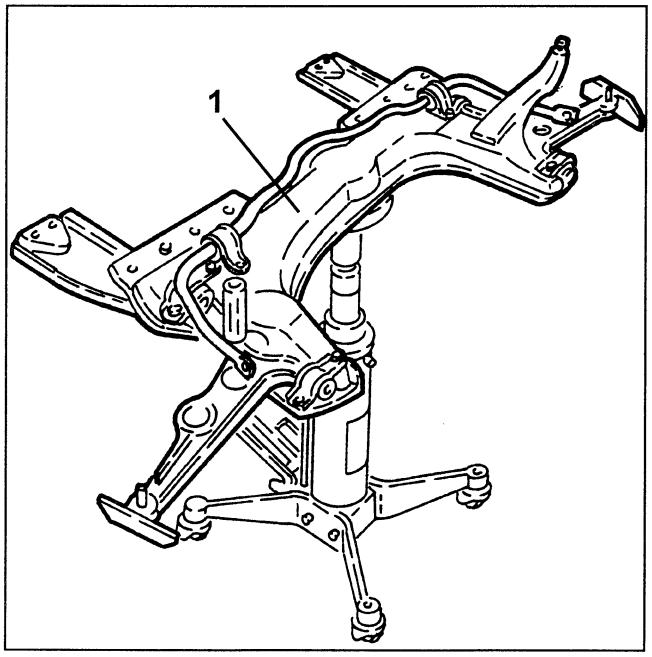

1. Loosen the fastening screws and remove the cooling radiator engine oil delivery and return pipe bracket.

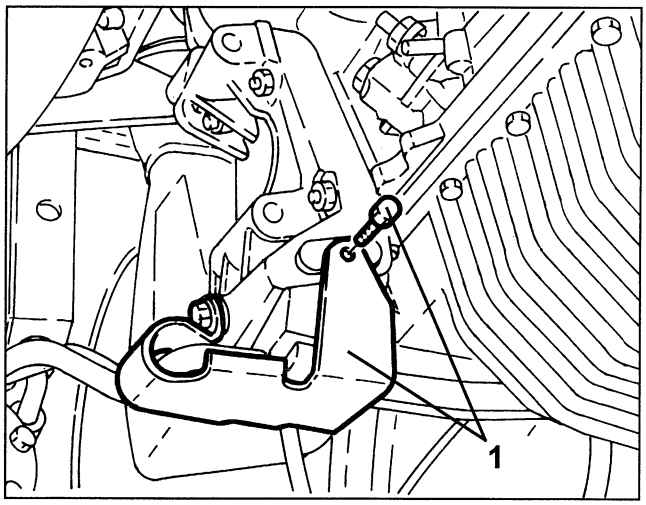

cardiagn.com

1. Loosen the fastening screws and remove the engine oil radiator from the bracket. Then fasten it to the engine as not to obstruct the following operations without disconnecting it.

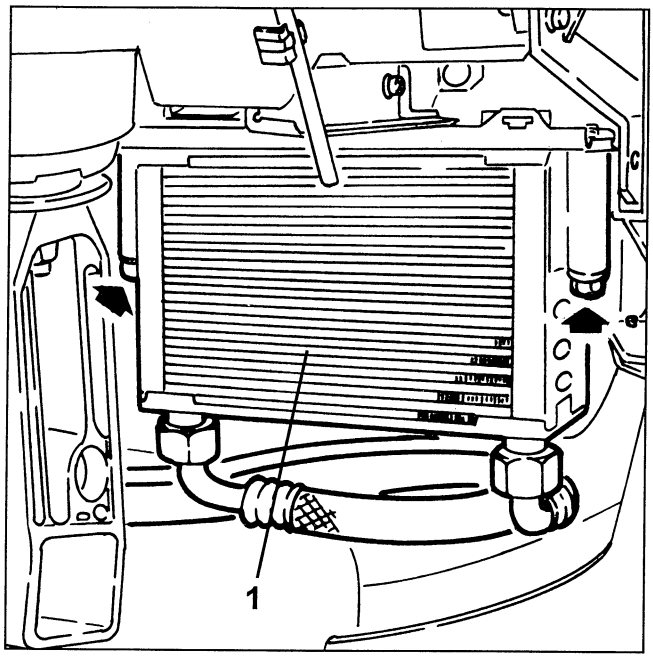

1. Disconnect the gearbox earth braid.
2. Position a hydraulic jack under the differential.
3. Loosen the screws and remove the gearbox bracket on engine side.
- Remove the hydraulic jack from under the differential.

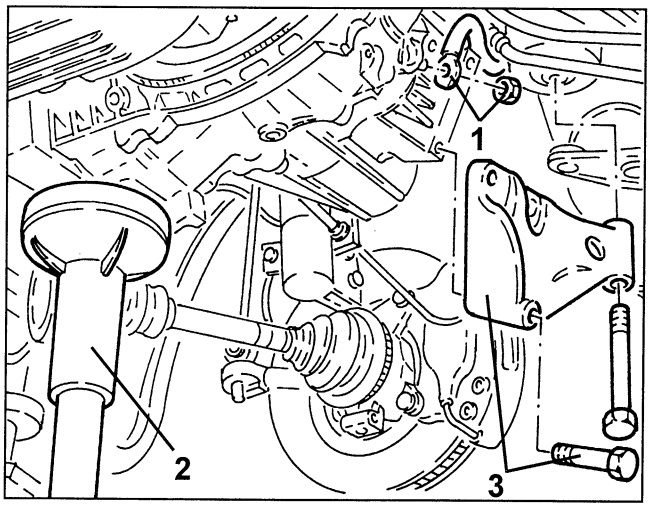

1. Position tool no. 1.820.225.000 with tools no. 1.870.644.000, no. 1.870.644.001 and no. 1.860.910.001 on the hydraulic jack.

NOTE: Position the hydraulic jack in the central hole in tool 1.820.225.000 to ensure the engine is balanced correctly on the fixture.

2. Fasten the fixture to the engine.

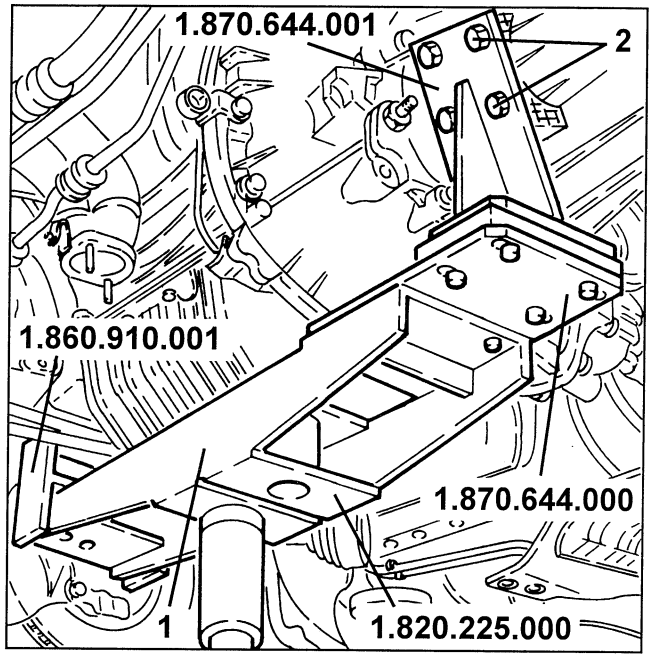

- Release the engine safety fixture tie-rods from the cylinder head brackets.
1. Loosen the engine stiff rubber mount fastening screws, timing side.

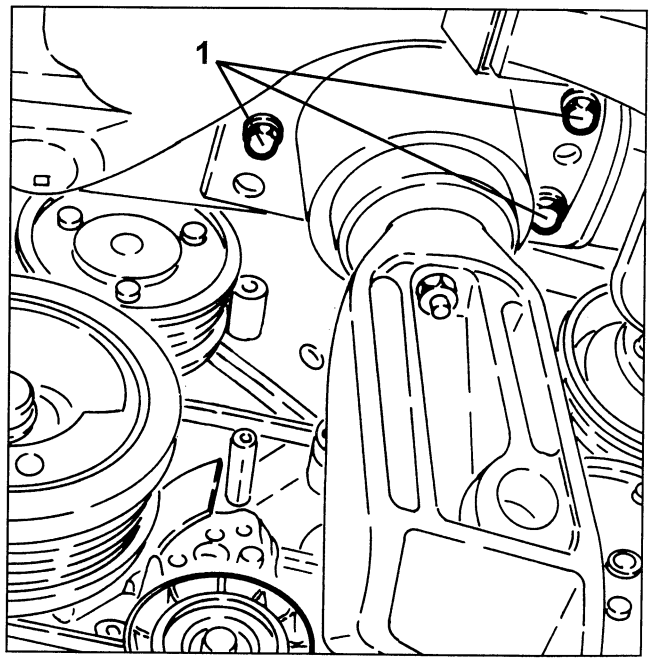

cardiagn.com

- Release the electrical wires from any clips and move them away from the engine so that they will not get caught when the engine is removed.
- Lower the hydraulic jack completely and remove the engine from the engine compartment.

IMPORTANT: The hydraulic jack must have a payload of at least 1000 kg.
When lowering the engine, make sure no wires or pipes are still connected.
Be careful not to damage any components.

1. Support the engine with the hydraulic jack used for removal and with a hydraulic crane as shown in the figure.

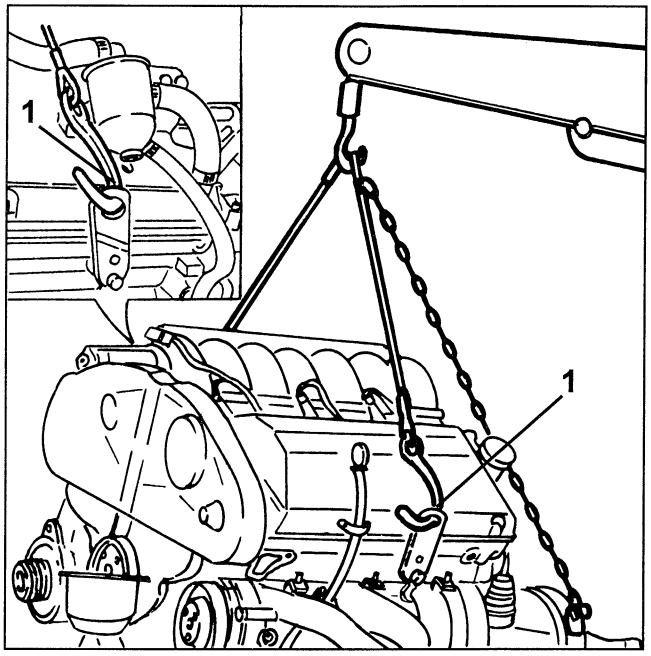

IMPORTANT: Use a hydraulic crane to move the engine after releasing it from the hydraulic jack.

- Lower the hydraulic crane and position the engine on a specific engine stand.
1. Loosen the fastening nut and remove the upper firewall from the right-hand exhaust manifold.

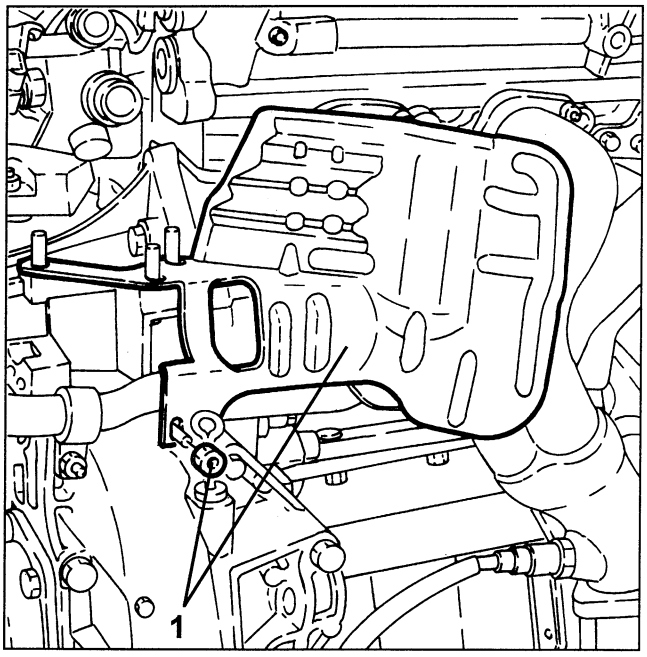

1. Loosen the fasteners and remove the right-hand exhaust manifold and starter motor firewall.
- Remove the respective seals.

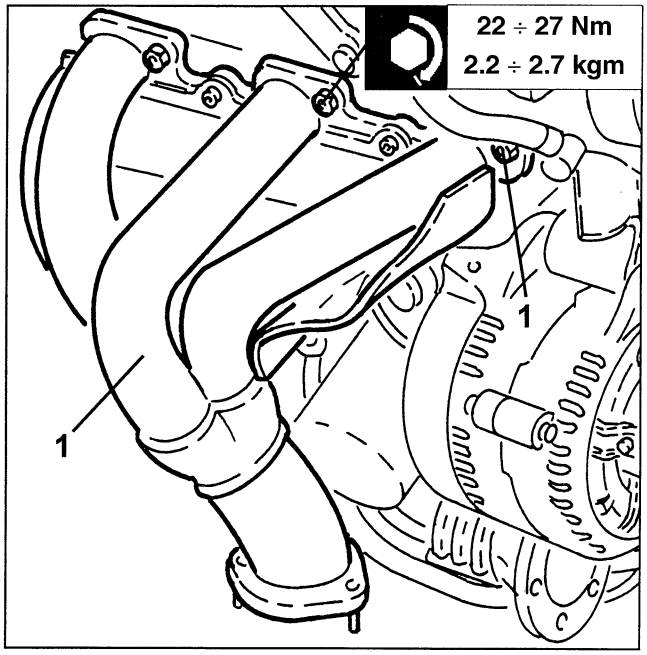

cardiagn.com

1. Disconnect the starter motor electrical connections.
2. Loosen the three fastening screws and remove the starter motor.

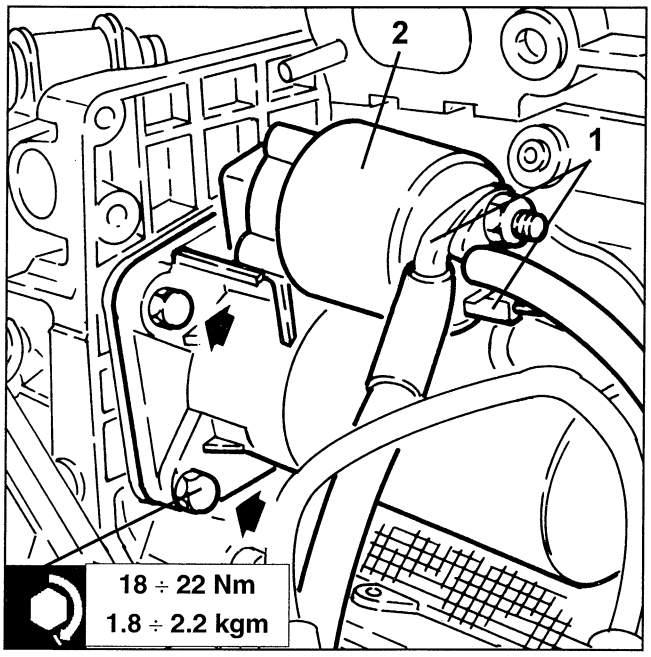

1. Disconnect the engine oil minimum pressure sensor electrical connection.
2. Disconnect the alternator electrical connections. Then remove the electrical wiring by releasing it from the fasteners.
3. Disconnect the radiator engine oil delivery and return pipe fittings from the oil filter bracket. Then remove them with the bracket.

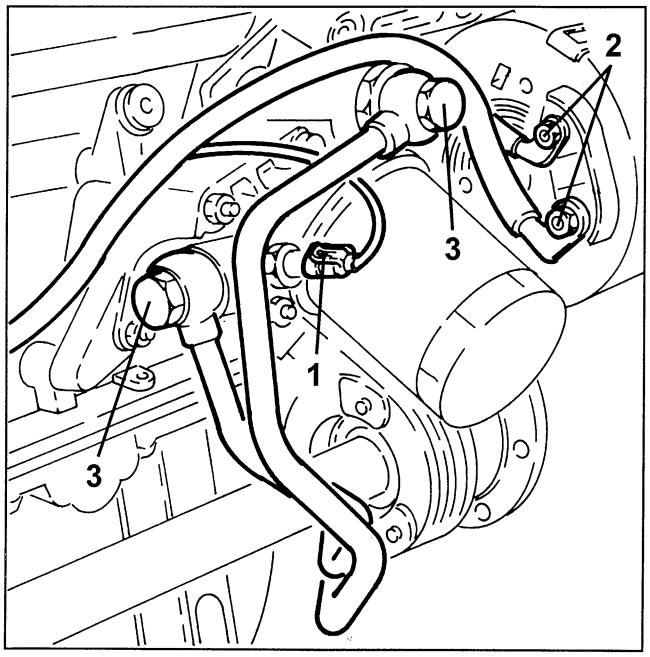

- Drain the gearbox-differential oil.
1. Loosen the fastening screws and release the intermediate shaft.
- Remove the dust guard ring.
2. Loosen the fastening nuts and remove the oil filter bracket.

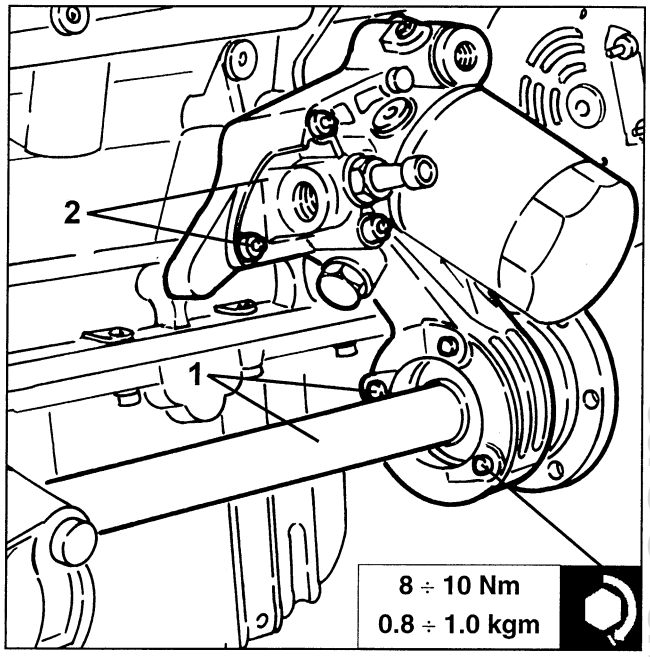

1. Loosen the fastening screws and remove the gearbox-differential with a hydraulic crane.

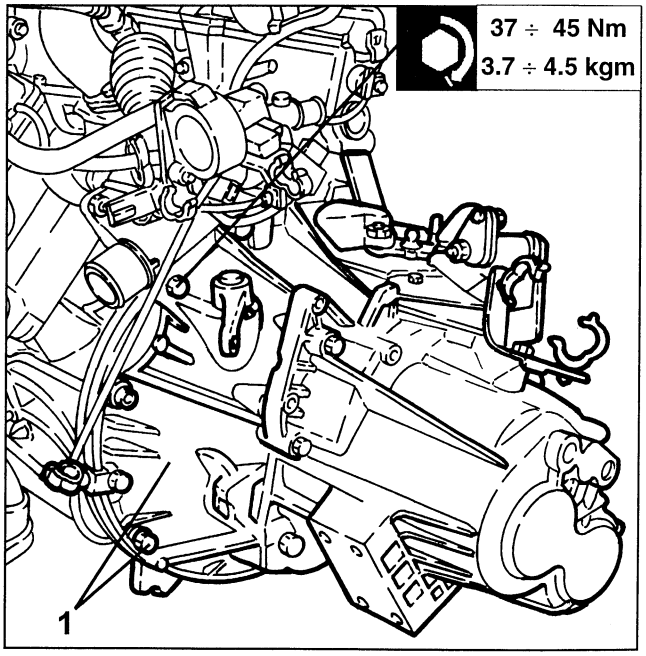

cardiagn.com

1. Loosen the fastening screws and remove the thrust plate with thrust bearing and clutch plate.

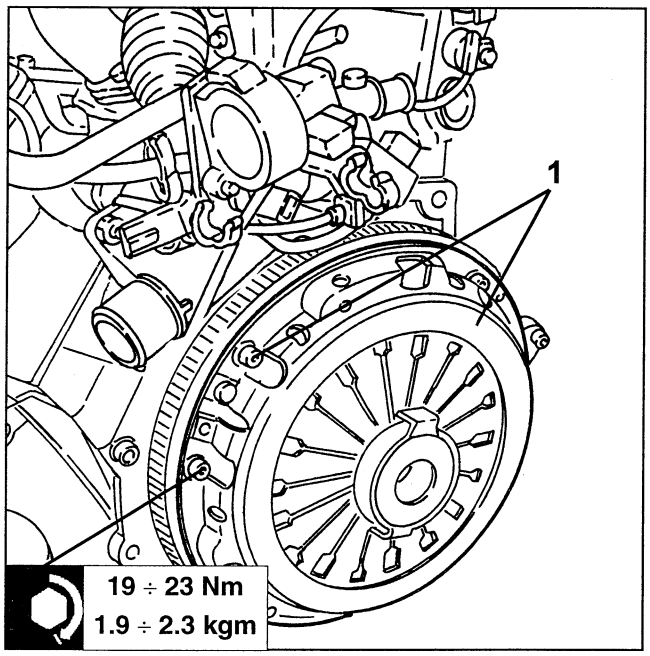

1. Loosen the fastening nuts and remove the exhaust manifold, left-hand side.
- Remove the respective seals.

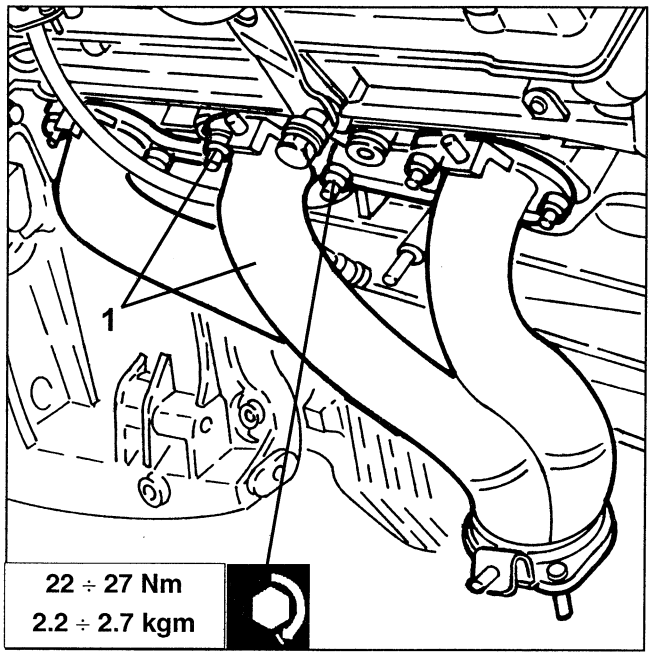

REFITTING

Reverse the removal sequence and observe the following warnings:
- Prepare the engine compartment to insert the engine assembly by positioning all the electrical wires, pipes, etc. so that they do not interfere with the refitting operations.
- Be careful not to damage the single components when refitting the engine.

IMPORTANT: Make sure the engine assembly mounts are correctly fastened.

- After refitting, top the various systems up as required (see Assembly 00).
- Perform all the checks and interventions required (see Assembly 00).

cardiagn.com

CYLINDER HEAD

NOTE: Only the right-hand cylinder head can be removed in the vehicle as shown below. Remove the engine assembly to remove the left-hand cylinder head (see specific paragraph).

REMOVAL/REFITTING RIGHT-HAND CYLINDER HEAD

- Position the vehicle on a shop jack.
- Make sure the ignition key is at "STOP" and disconnect the (-) battery terminal.

1. Remove the front right-hand wheel.
2. Loosen the screws and remove the two engine compartment side guards.

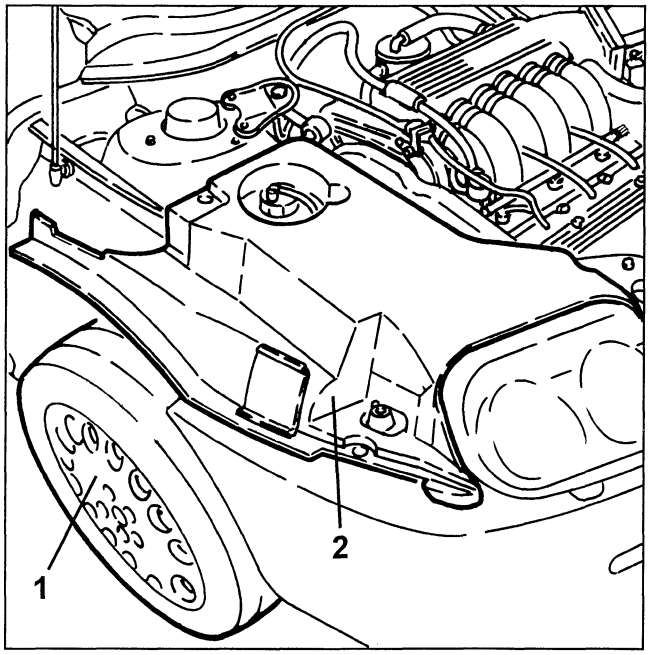

1. Loosen the two fastening screws, remove the plastic button and remove the dust guard from the front right-hand wheel compartment.

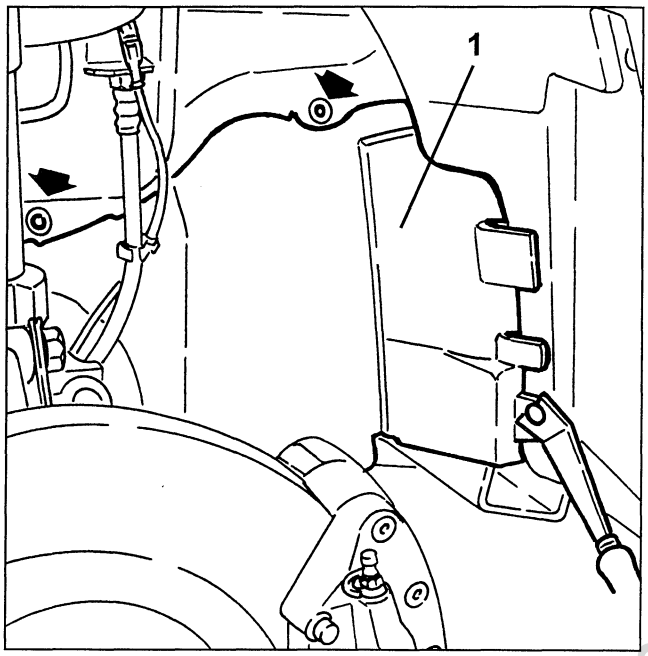

1. Loosen the fasteners and remove the front right-hand wheelhouse.

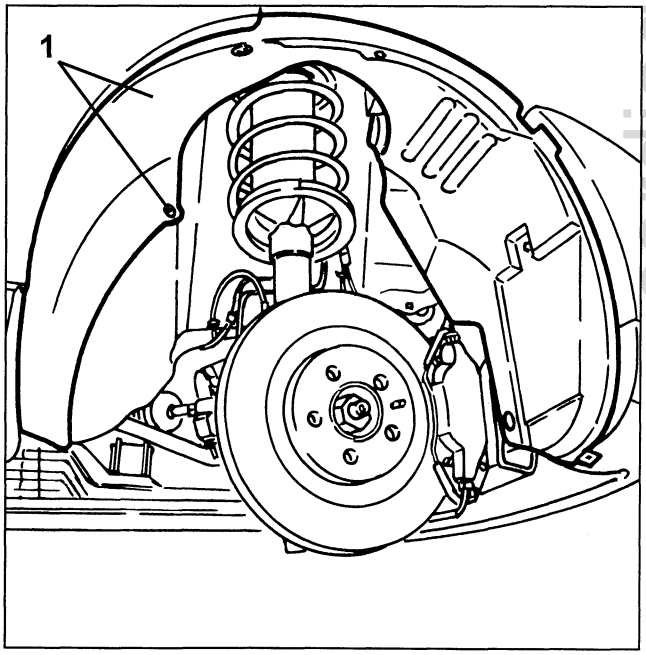

- Lift the vehicle.

cardiagn.com

1. Loosen the nut and the screws. Then remove the lower air cleaner guard.

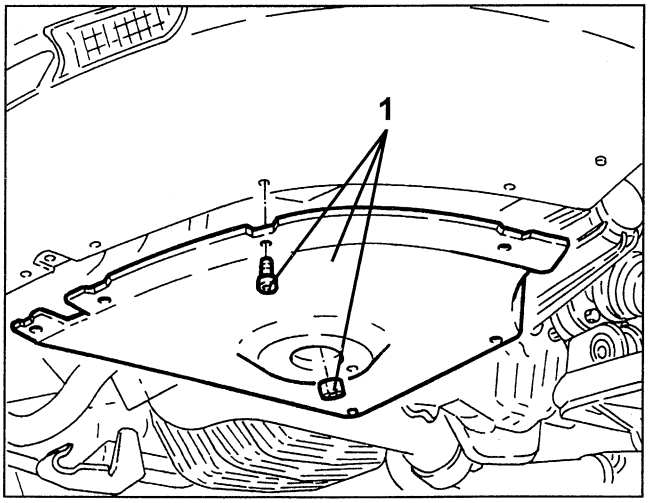

1. Drain the engine coolant by disconnecting the radiator outlet sleeve and collect the coolant in a suitable container.

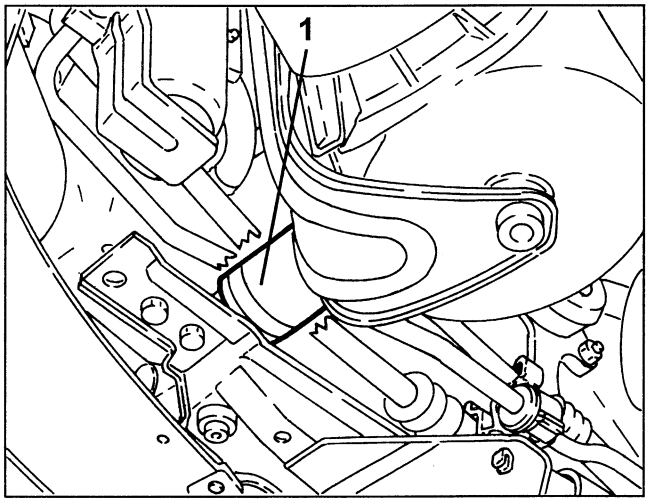

1. With a wrench on the belt take-up pulley fastening screw, overcome the automatic take-up force and lock it in this position (belt loose) with a pin as shown in the figure.
2. Remove the auxiliary unit drive belt.

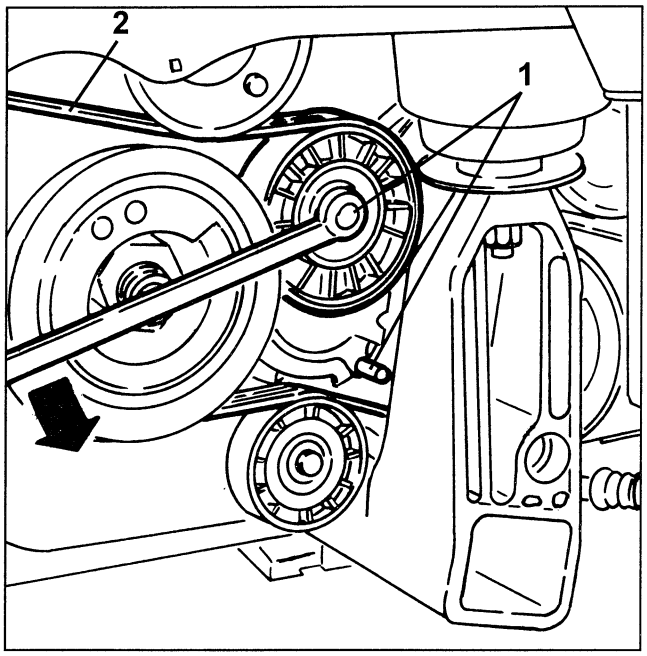

1. Loosen the fastening screw and remove the engine unit drive belt take-up.
2. Loosen the fastening screw and remove the auxiliary unit drive belt runner.

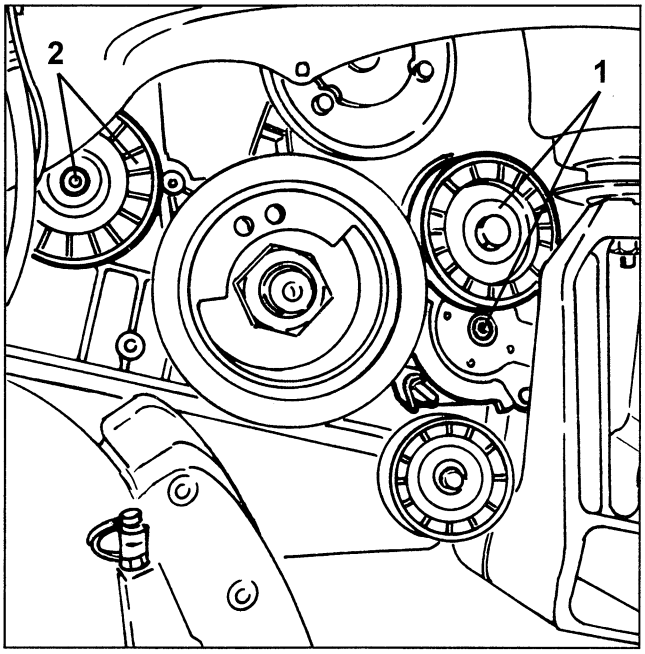

cardiagn.com

- Lower the vehicle.
1. Disconnect the lambda sensor electrical connections.

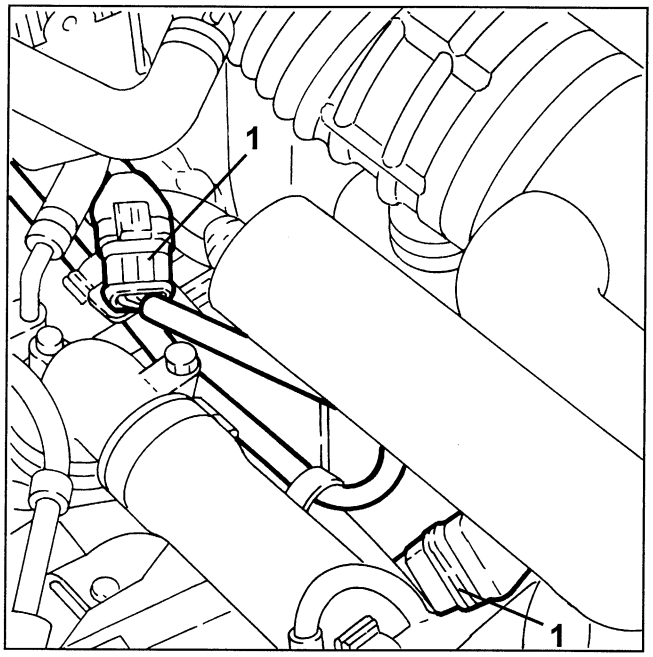

- Lift the vehicle.
1. Loosen the fasteners and remove the front exhaust pipe section.

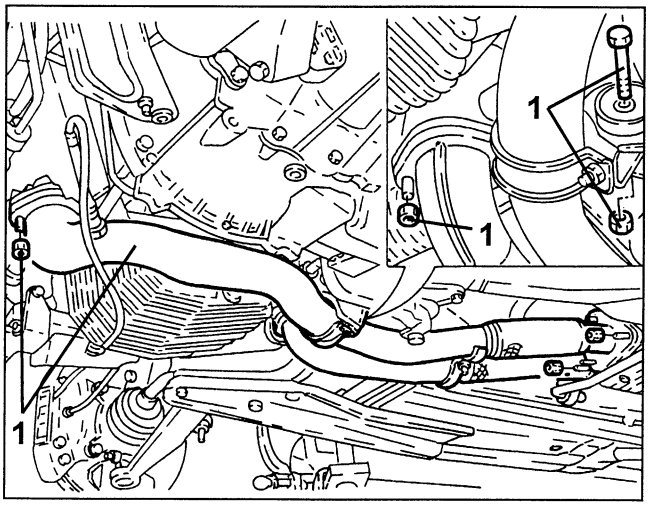

1. Loosen the nuts and remove the power steering unit firewall.

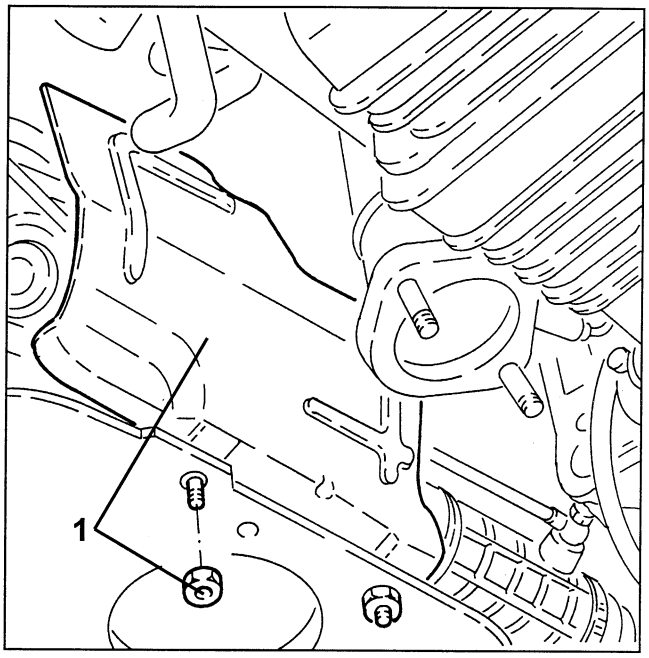

1. Loosen the fastening screws and remove the lower left-hand timing belt guard.

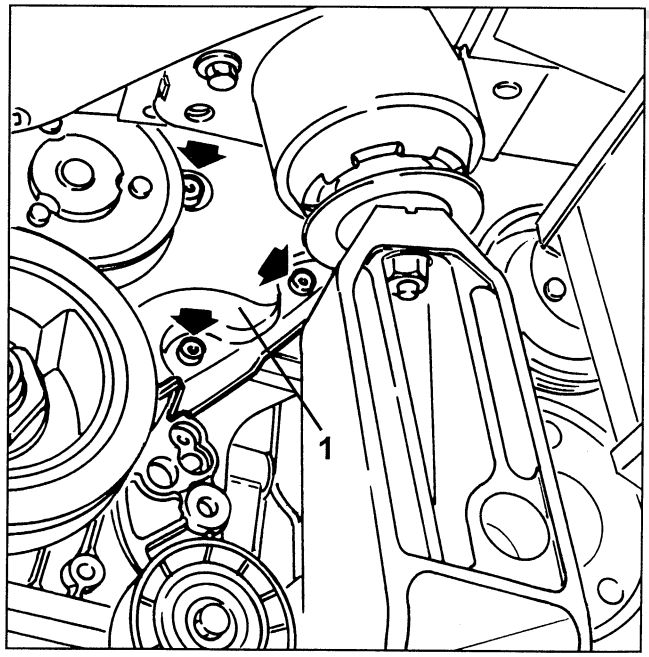

cardiagn.com

1. Loosen the fastening screws and remove the lower right-hand timing belt guard.

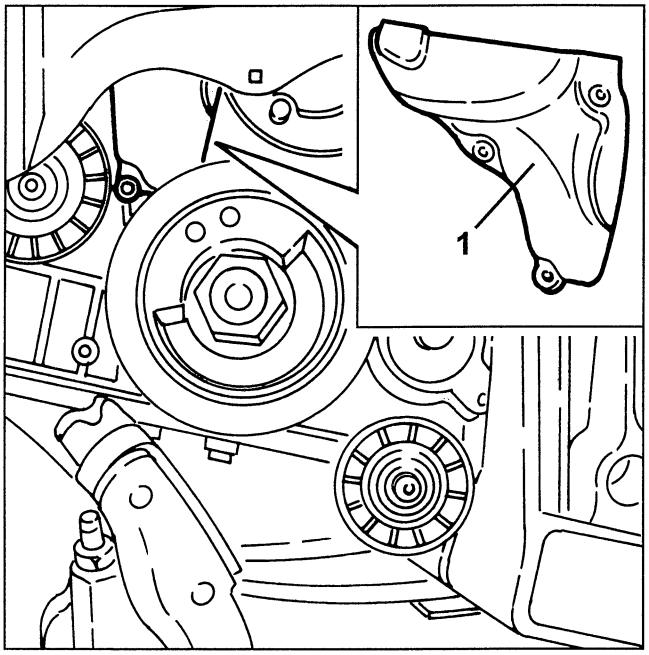

- Lower the vehicle.

1. Loosen the fastening screws and remove the upper timing belt guard.

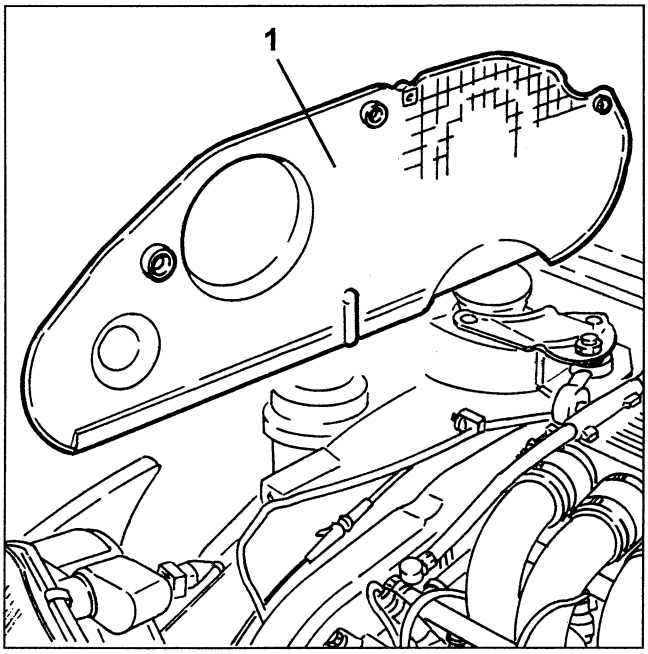

1. Loosen the clips and remove the corrugated sleeve with resonators after releasing the intermediate resonator from the fastening pin.

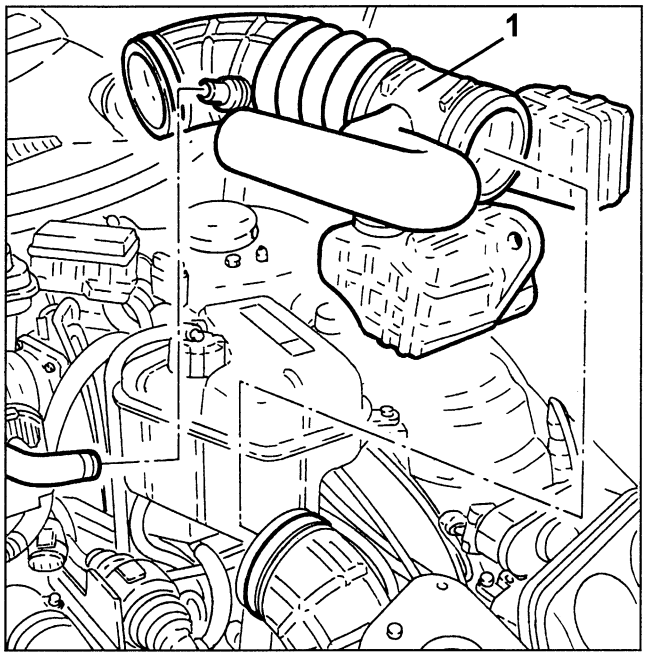

1. Disconnect the electrical connection from the throttle casing with built-in DVL.
2. Disconnect the radiator coolant delivery sleeve from the thermostat.
3. Disconnect the radiator coolant return sleeve from the thermostat.

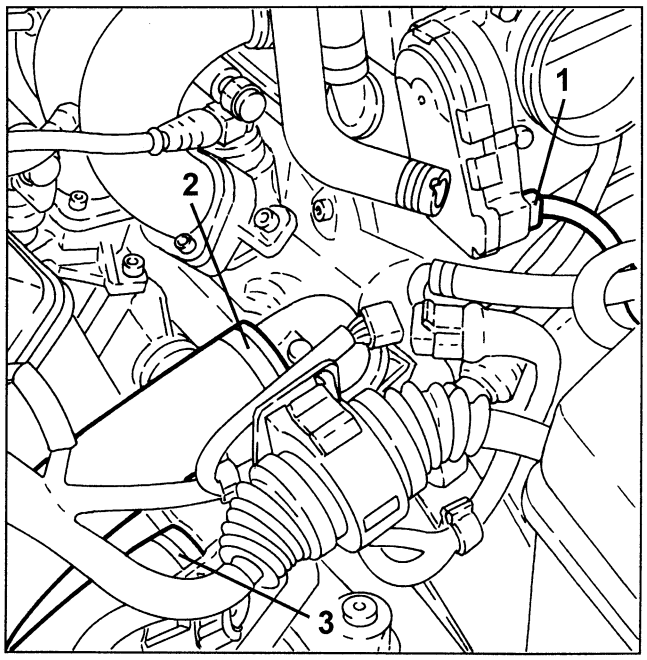

cardiagn.com

1. Disconnect the injection wiring joint from the bracket.
2. Disconnect the rpm and phase sensor electrical connection.
3. Disconnect the rear knock sensor electrical connection.
4. Disconnect the cam angle sensor electrical connection.

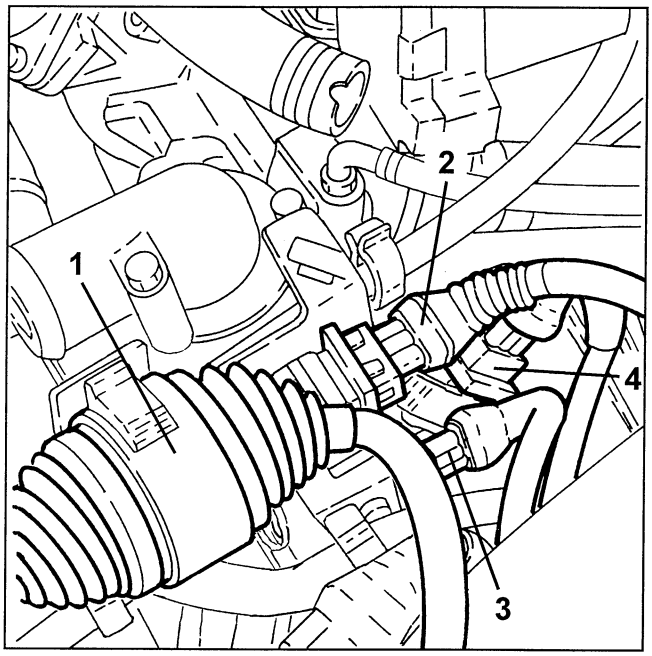

1. Disconnect the engine coolant temperature sensor electrical connection.
2. Loosen the fastening screws and remove the electrical connection bracket and pipes.

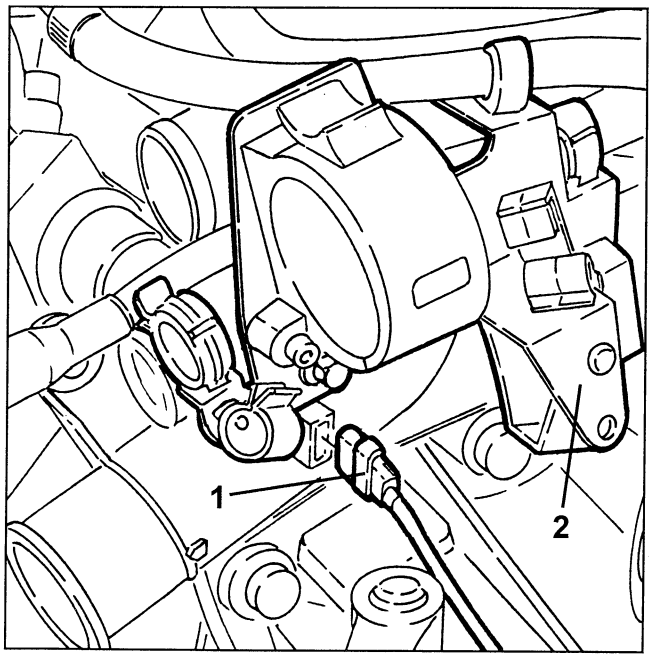

1. Disconnect the coolant return pipe to the expansion reservoir from the right-hand cylinder head.
2. Disconnect the coolant delivery pipe to the climate control system from the right-hand cylinder head fitting.
3. Disconnect the climate control system coolant return sleeve from the thermostat.

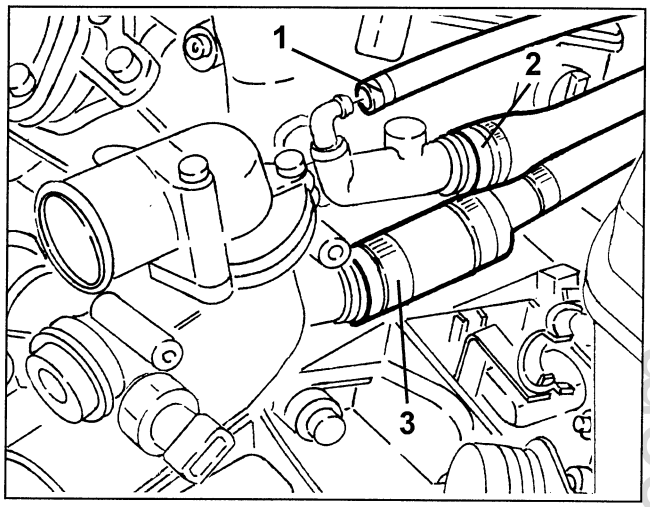

1. Disconnect the brake booster vacuum pipe from the intake manifold.
2. Disconnect the fuel vapour pipe quick coupling fitting from the intake manifold.
3. Disconnect the oil vapour recirculation pipe from the intake manifold.

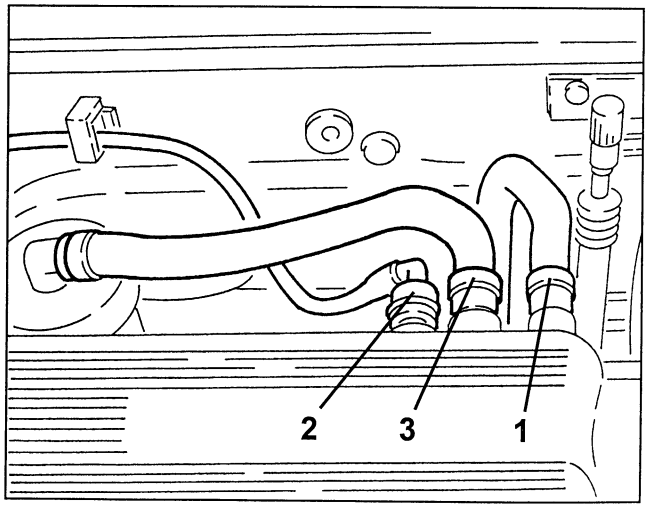

cardiagn.com

1. Disconnect the oil vapour recovery pipe from the right-hand cylinder head tappet cover.
2. Loosen the fastening screws and move the oil vapour separator from the intake manifold.

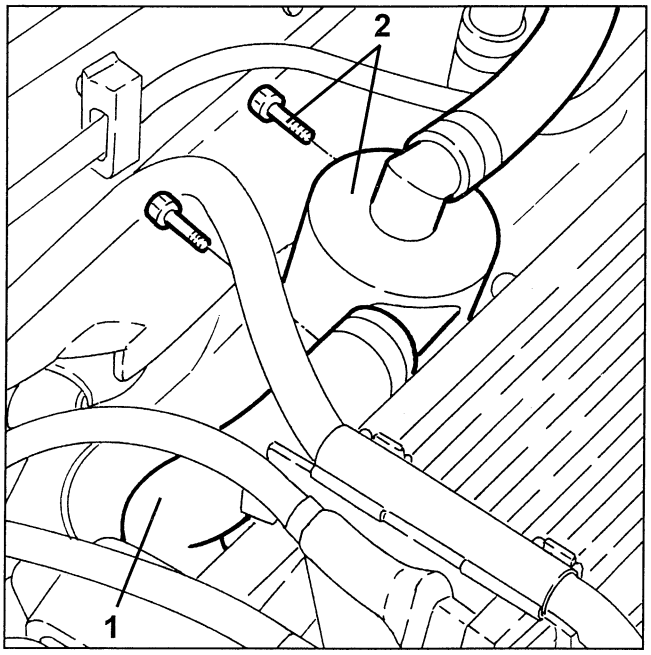

1. Release the fuel delivery pipe from the bracket.
2. Loosen the screws and remove the fuel delivery pipe bracket.
3. Disconnect the engine tie-rod earth wire.

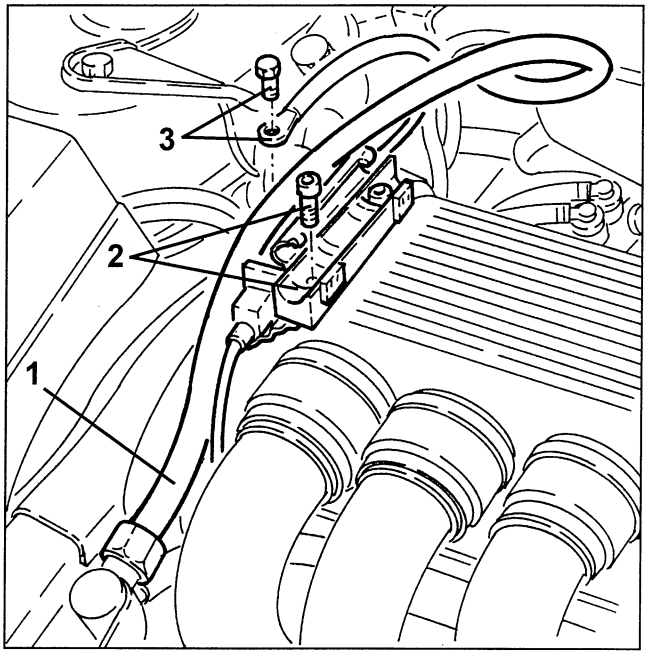

1. Loosen the screw and remove the intake manifold connection to engine tie-rod bracket.

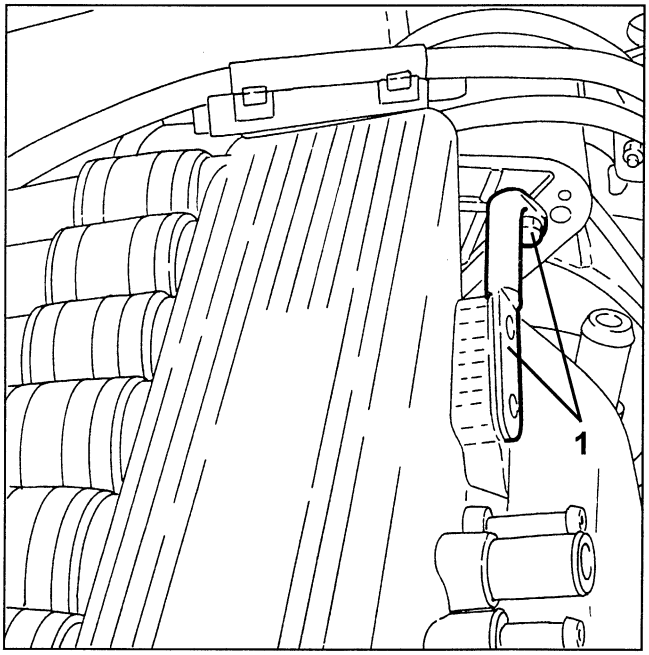

1. Loosen the intake manifold duct clips.
2. Loosen the air intake duct fastening screws on the cylinder head.

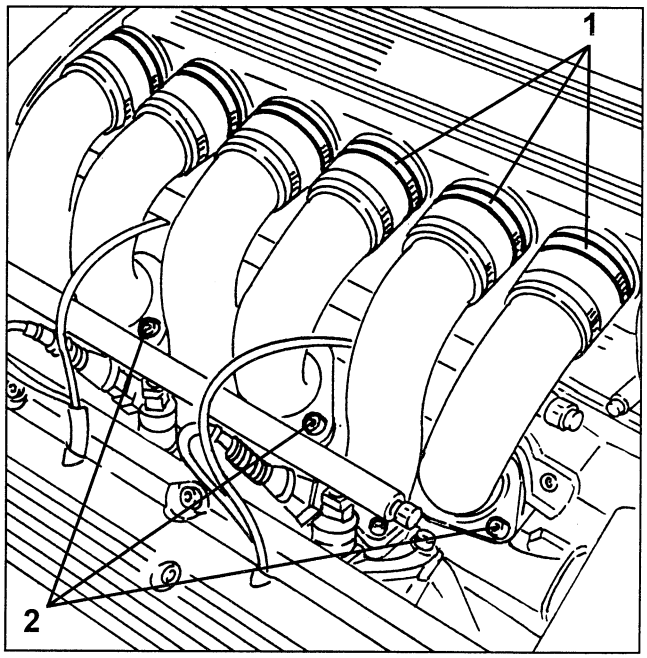

cardiagn.com

1. Loosen the fastening screws and remove the intake manifold.

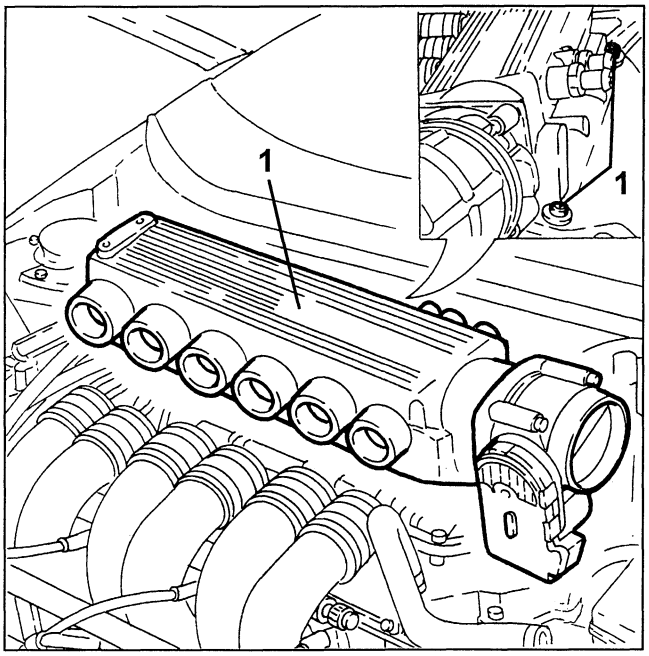

1. Disconnect the injector electrical connections.
2. Loosen the fastening screws and move the fuel distribution manifold with injectors aside.

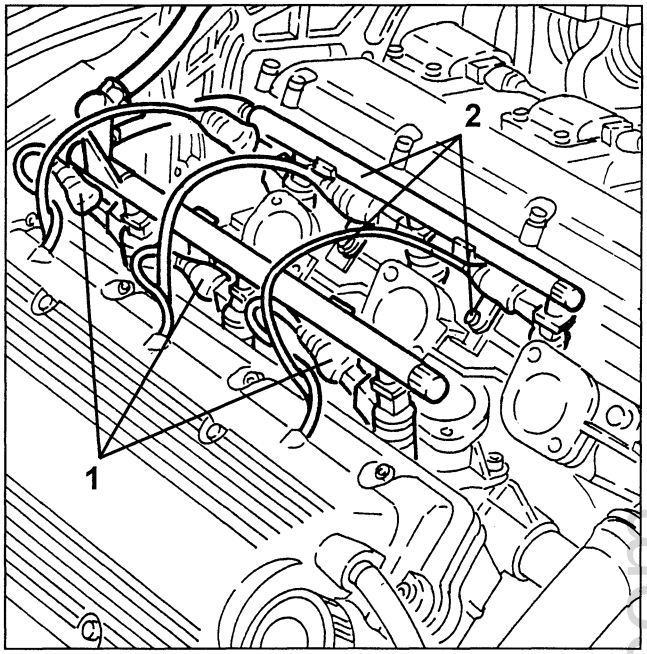

1. Remove the previously loosen screws and remove the intake ducts.
- Refit the respective seals.

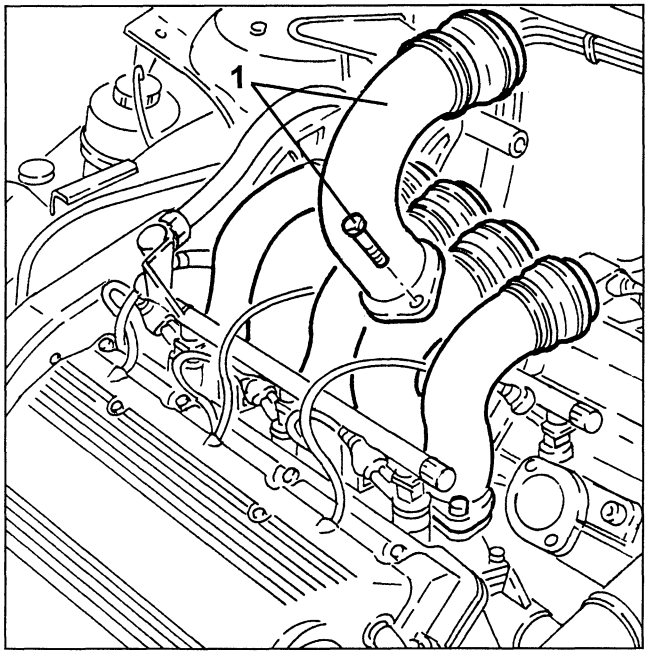

1. Loosen the fastening screws and remove the engine assembly tie-rod.

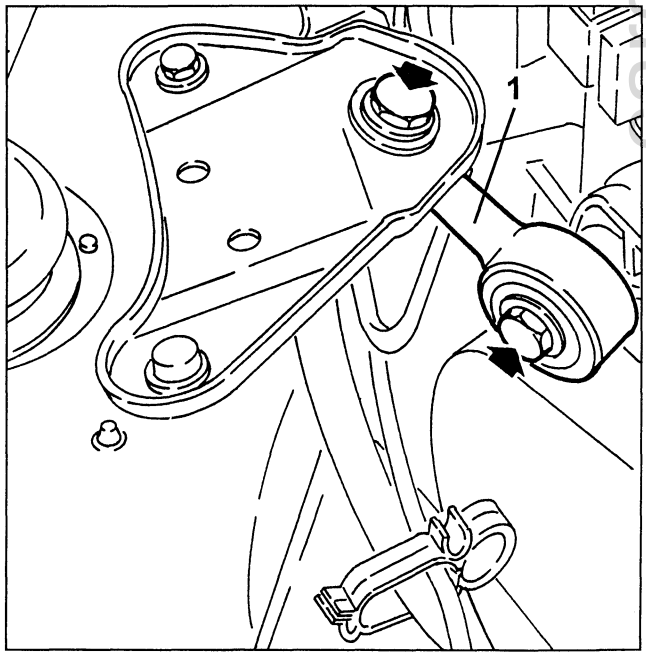

cardiagn.com

1. Loosen the fastening screws and remove the thermostat.

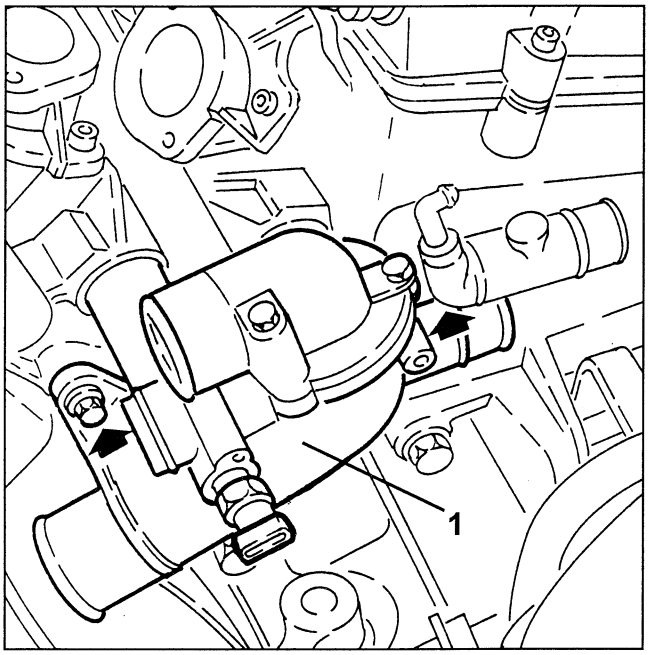

1. Loosen and remove the right-hand cylinder head coolant outlet fitting.

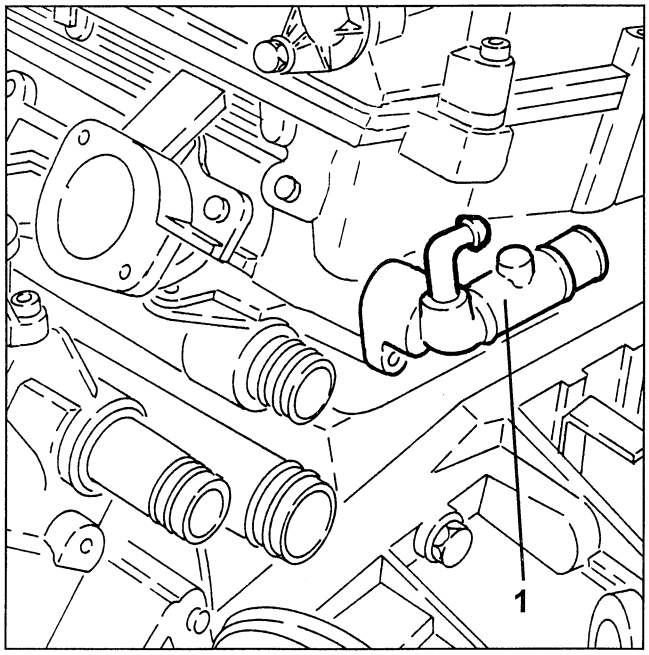

1. Disconnect the electrical connections from the right-hand side cylinder head ignition coils and move the respective wiring aside.
2. Loosen the fastening screws and remove the right-hand cylinder head ignition coils.

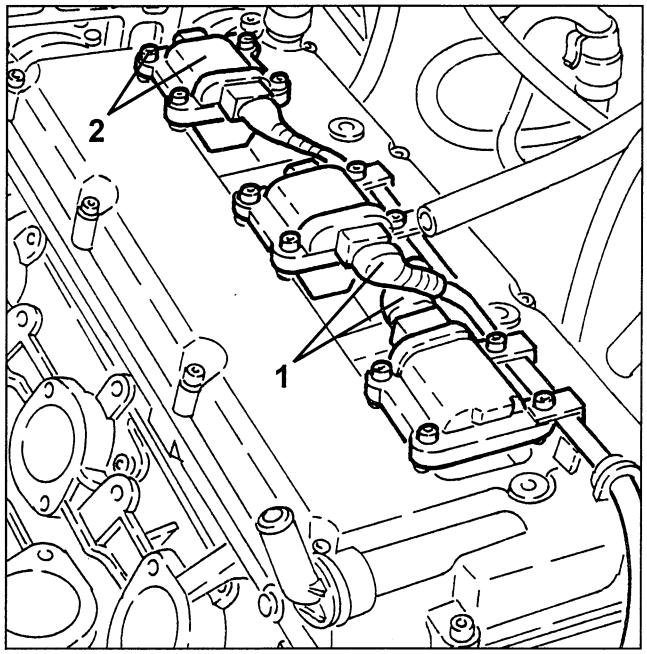

- Release the engine cooling fan wiring from the fasteners on the front crossmember.
1. Loosen the fastening screws and remove the upper radiator crossmember.
2. Loosen the fastening screws and remove the left-hand cylinder head ignition coils.

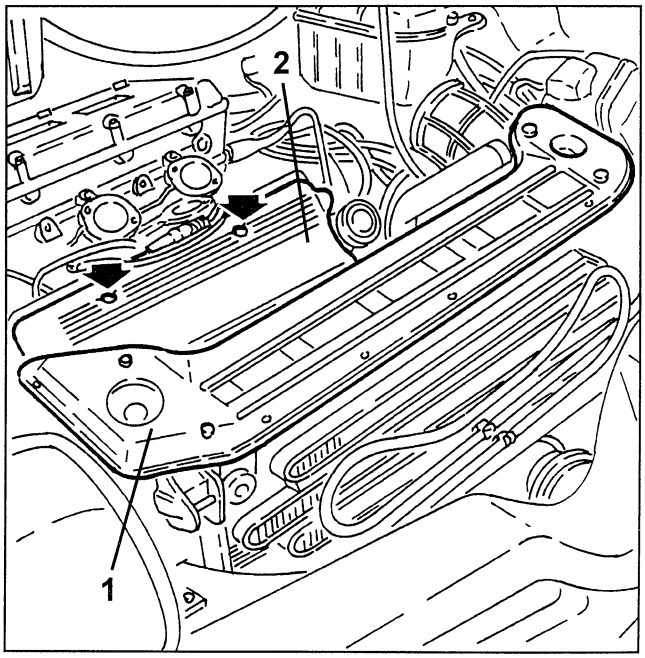

cardiagn.com

1. Disconnect the electrical connections from the left-hand cylinder head ignition coils.
2. Loosen the fastening screws and remove the left-hand cylinder head ignition coils.

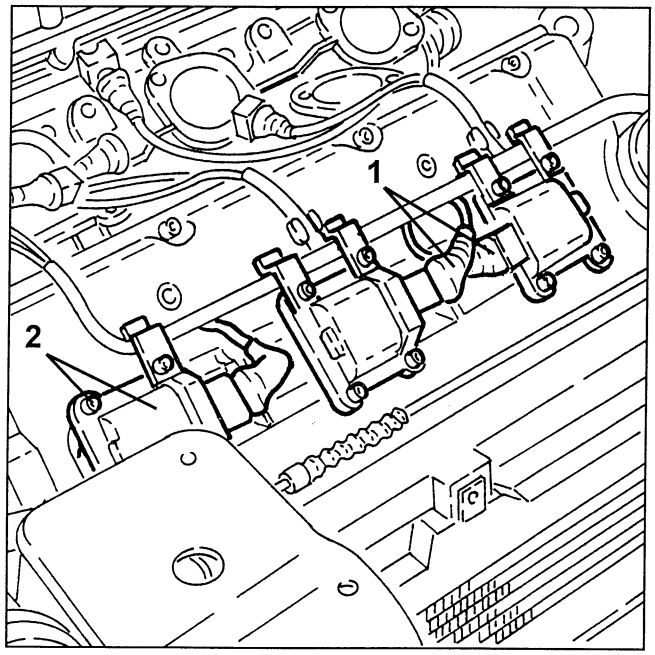

1. Loosen the fastening screws and remove the bracket and threaded nut fastening the upper timing belt guard from the left-hand cylinder head.

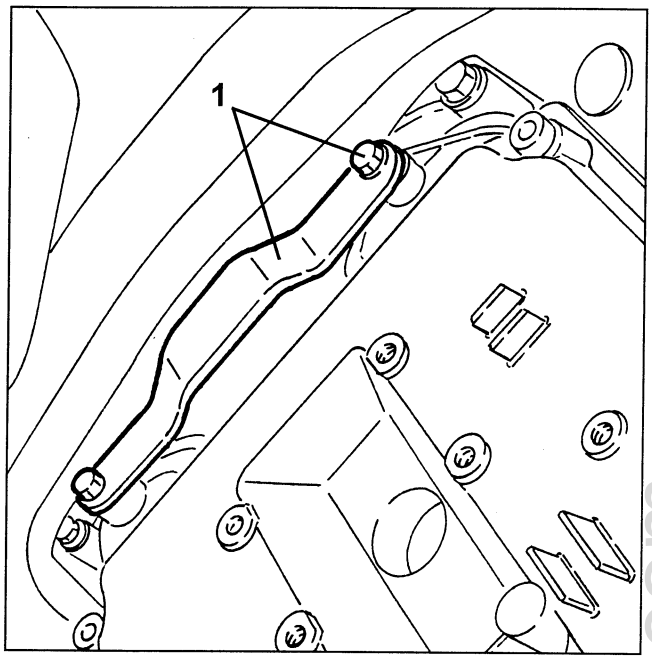

1. Disconnect the earth wire from the left-hand cylinder head and move the respective wiring aside.

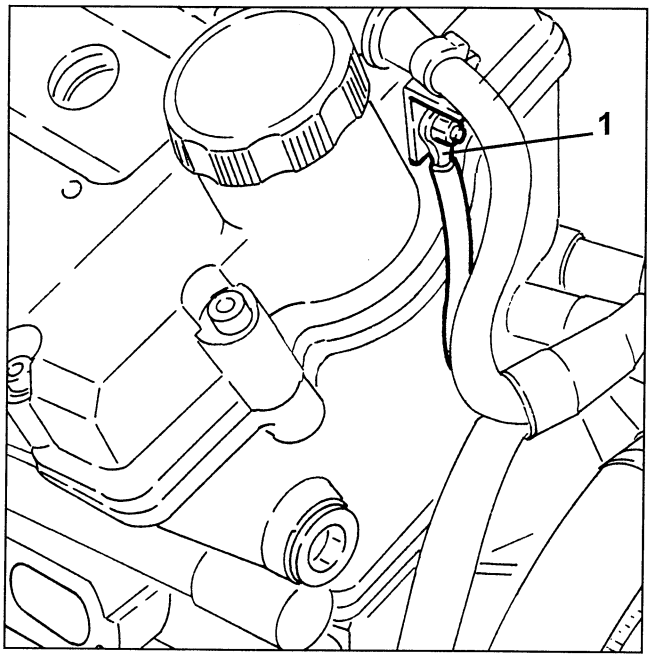

1. Loosen the fastening screws and remove the cylinder head covers and respective seals.

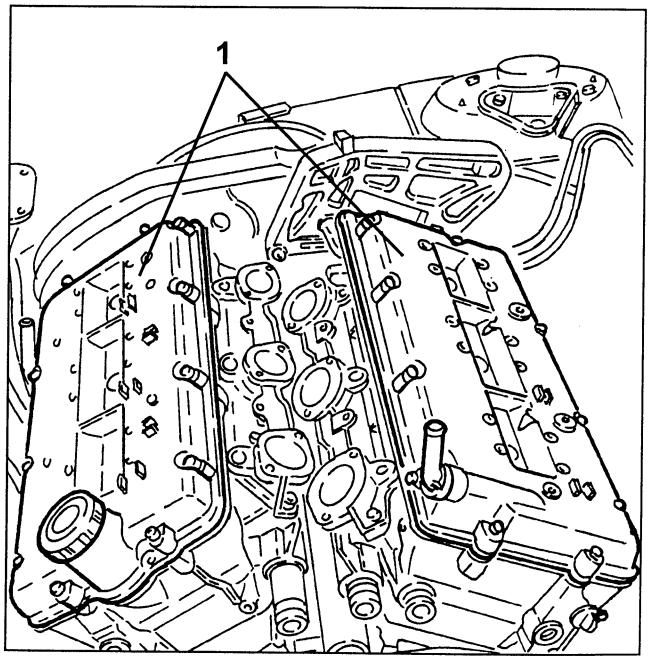

cardiagn.com

- Loosen the exhaust manifold fastening nuts from the right-hand cylinder head and leave it on the power steering unit.
1. Fit tool no. 1.825.013.000 in cylinder 1 spark plug seat.
- Move the auxiliary unit drive pulley nut and slightly turn the crankshaft in both directions to take cylinder 1 piston to TDC, firing stroke.

NOTE: Make sure the last rotation of the crankshaft is in the direction of operation.

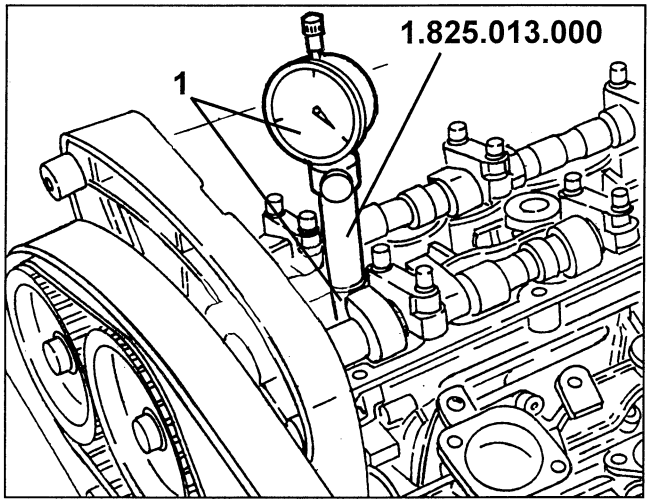

1. Loosen the two timing belt take-up fastening screws and remove the belt from the camshaft pulleys.
2. Loosen the fastening screw and remove the timing belt runner.

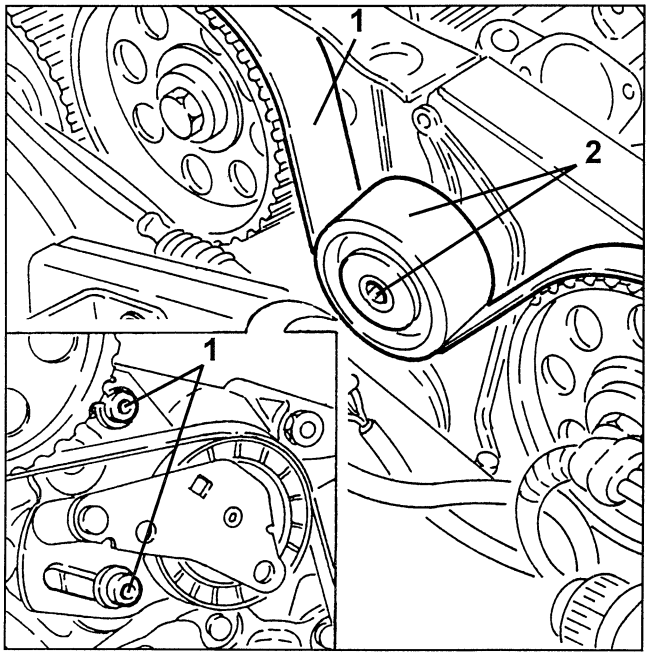

1. Use extension no. 1.822.150.000 and tools no. 1.822.146.000 to contrast torque. Loosen the camshaft drive pulley fastening screws from the right-hand cylinder head.

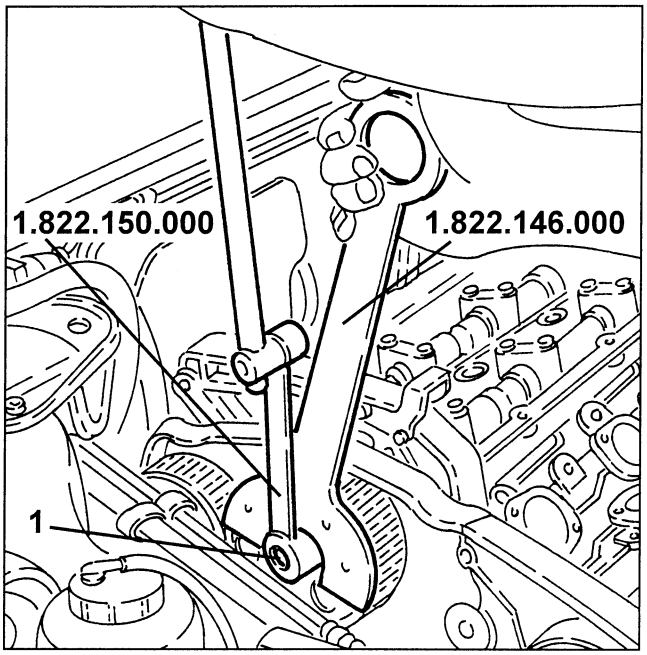

1. Use tool no. 1.860.954.001 and remove the camshaft drive pulleys from the right-hand cylinder head.

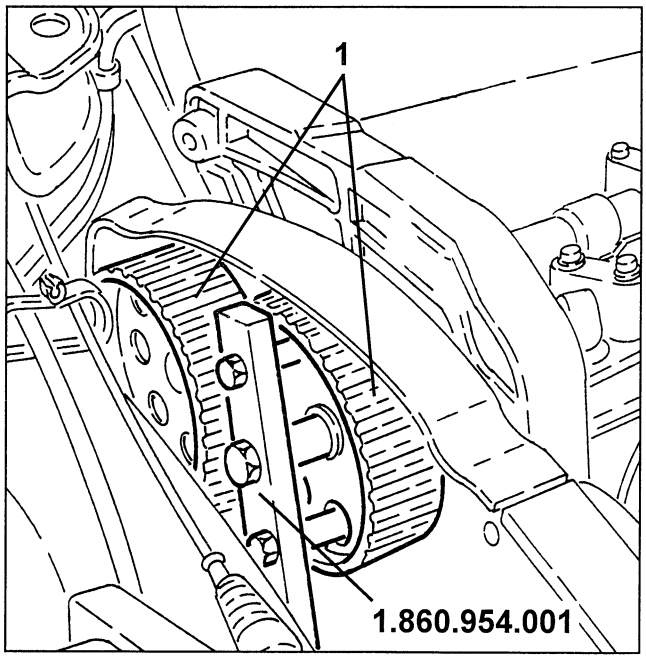

cardiagn.com

1. Loosen the fastening screws and remove the rear timing belt guard from the right-hand cylinder head.

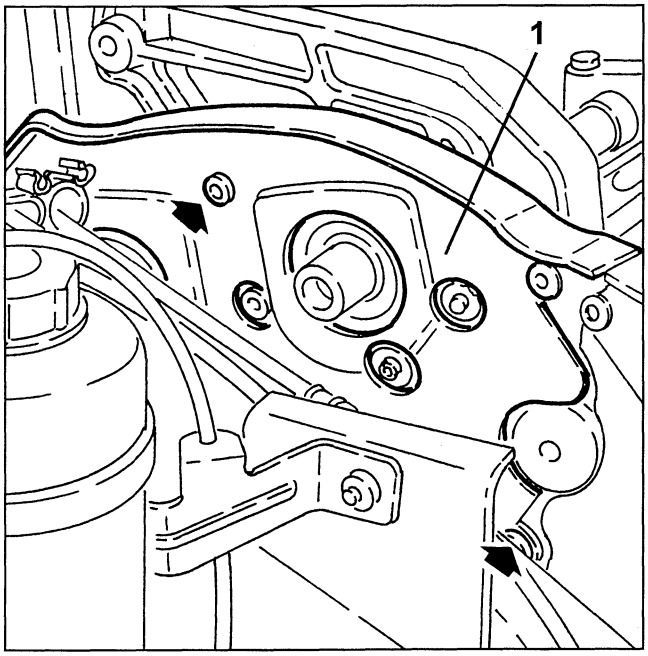

1. Loosen the upper alternator bracket fastening nut.

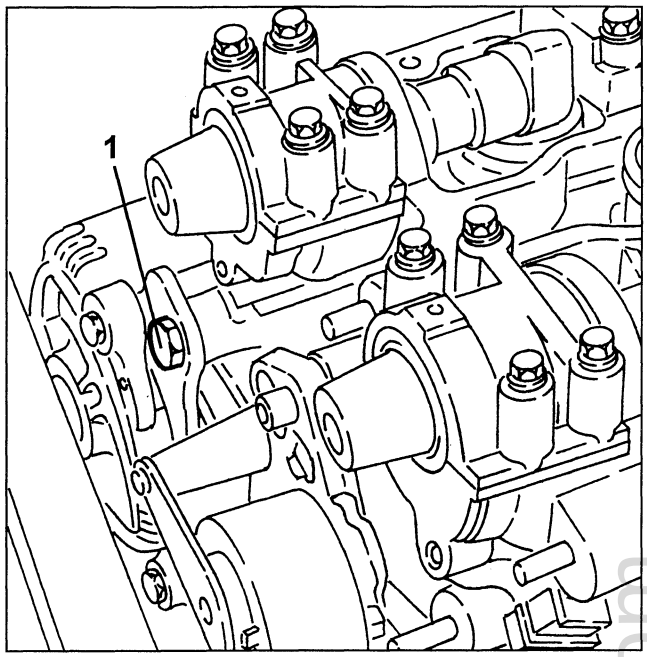

1. Loosen the fastening nuts and remove the engine tie-rod bracket.

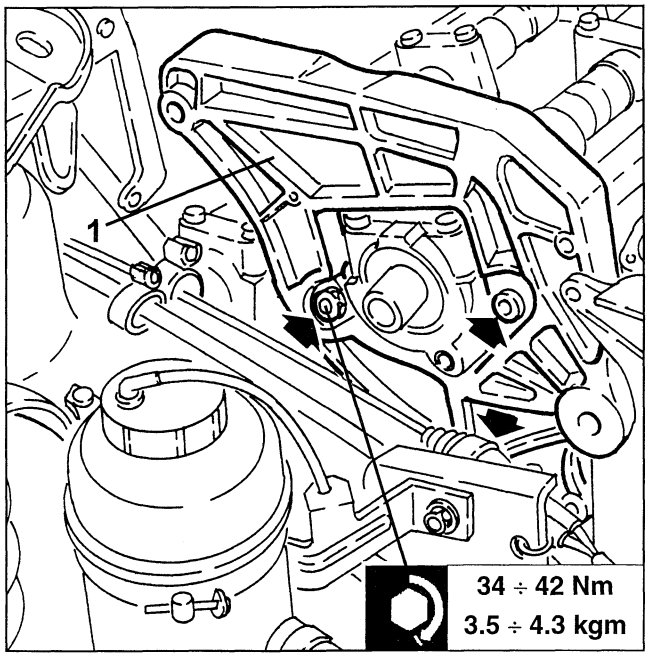

1. Loosen the fastening nuts and remove the right-hand cylinder head.
- Remove the respective seal.

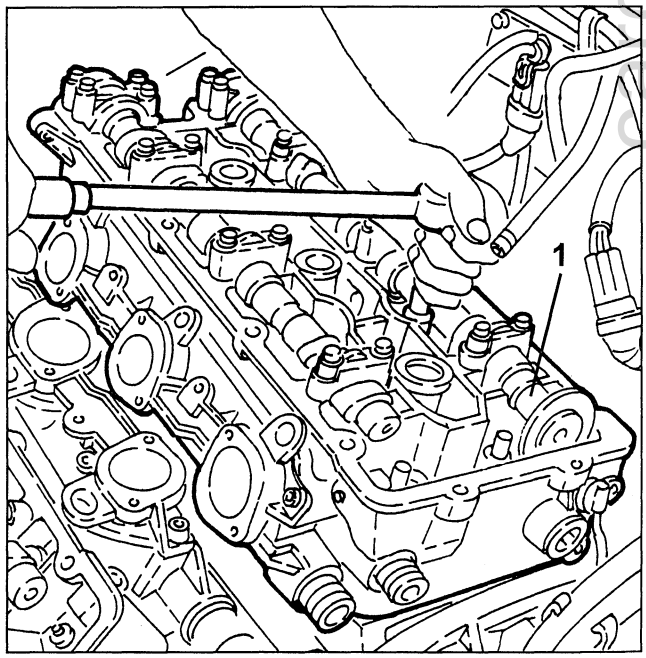

cardiagn.com

1. Fit cylinder liner retainer tools no. 1.820.279.000 as shown in the figure.

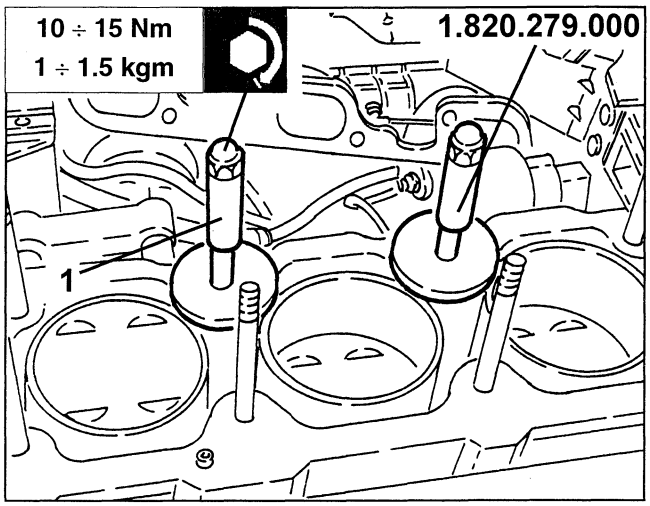

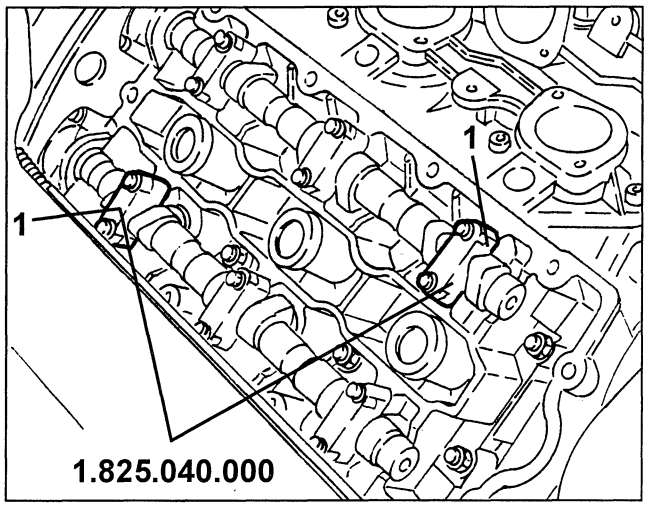

REFITTING PRECAUTIONS

Reverse the removal sequence and attain to the following precautions.
1. Fit templates no. 1.825.040.000 in the position printed on the templates in the place of camshaft bearings **B** and **G** after overhauling the right-hand cylinder head and before refitting it on the engine.

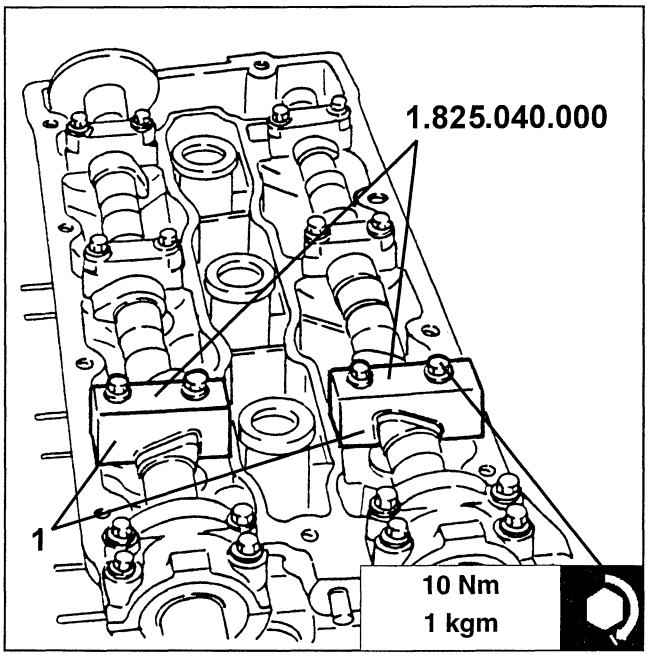

1. Fit templates no. 1.825.040.000 in the position printed on the templates in the place of left-hand cylinder head camshaft bearings **7** and **4**.

- Remove the previously fitted cylinder liner retainers no. 1.820.279.000.
- Refit the right-hand cylinder head with a new seal.
- Lubricate threading, nuts and washers with engine oil and torque as shown below in the order shown in the figure.

NOTE: Use the tool and gauge no. 1.860.942.000 for angle torque.

Tightening procedure	
Tighten all nuts at:	24 ÷ 26 Nm 2.5 ÷ 2.7 kgm
Complete torque with additional:	240° ± 2°

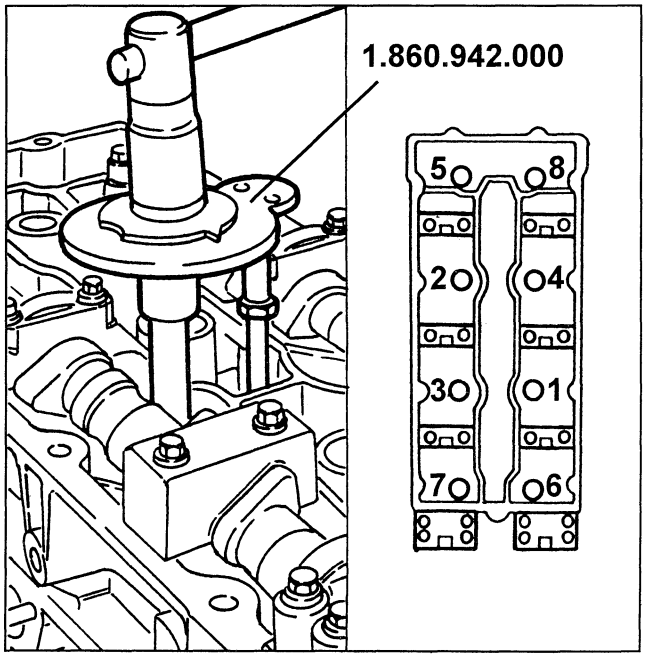

cardiagn.com

NOTE: ASTADUR cylinder head seals are used. The special material the seals are made of polymerises during engine operation and consequently becomes very hard.
The following precautions are required to ensure cylinder head seal polymerisation:
- keep the seals closed in their nylon bags;
- take them out of the packaging just before fitting;
- do not lubricate or soil the seals with oil. Make sure the cylinder head and crankcase surface are clean.

1. Reverse the removal sequence and refit the right-hand cylinder head camshaft drive pulleys, fastening the screws by hand.
- Use extension no. 1.822.150.000 and tool no. 1.822.146.000 to contrast torque. Loosen the left-hand cylinder head camshaft drive pulley fastening screws.
- Use tool no. 1.860.954.001. Extract the left-hand cylinder head camshaft drive pulleys are reposition them fastening the screws by hand.
2. Check whether the 1st cylinder piston is at TDC, firing stroke. If not, move it to this position by slightly turning in both directions the auxiliary unit drive pulley fastening nut.
NOTE: Make sure the last revolution of the crankshaft is in the direction of operation.
3. Fit the camshaft drive pulley drive belt.

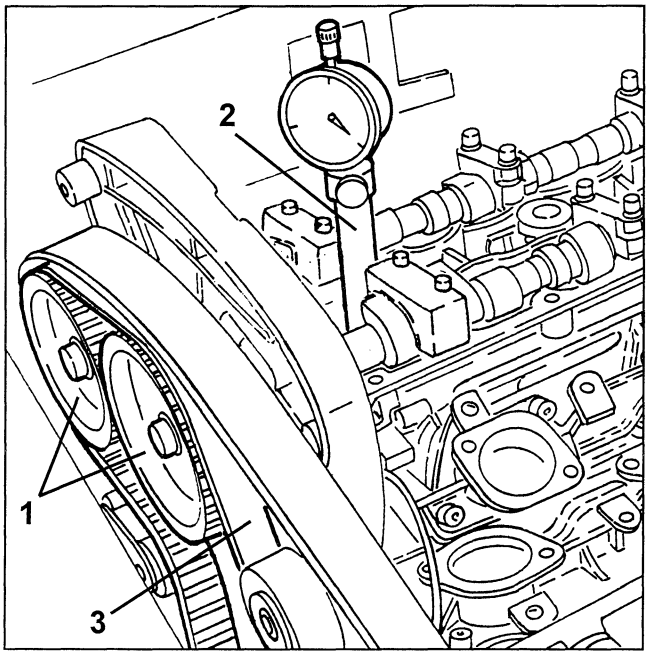

- Remove the cylinder head alternator bracket upper screw.
1. Loosen the lower alternator fastening screw to fit the timing belt tension tool.

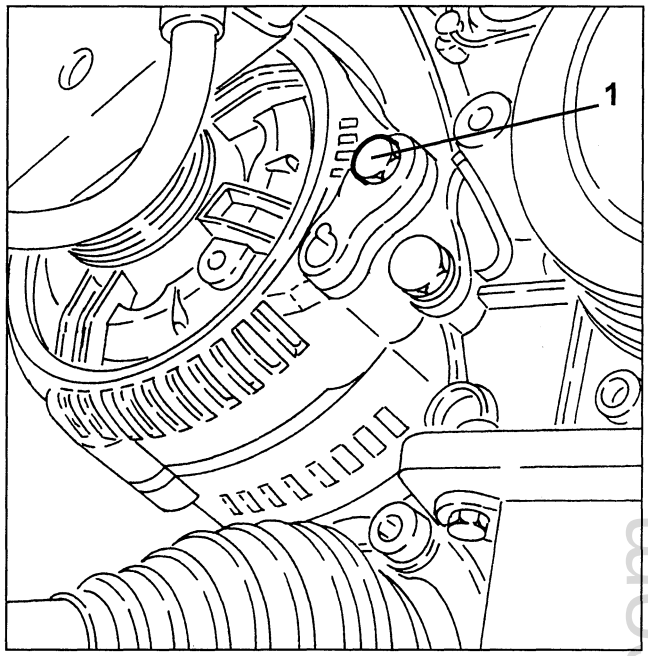

1. Fit timing belt tension tool no. 1.860.950.000 and fasten the previously loosened screw to the alternator (1a) and screw (1b) to the coolant pump; tool pin (1c) should contrast the belt take-up device mobile part.

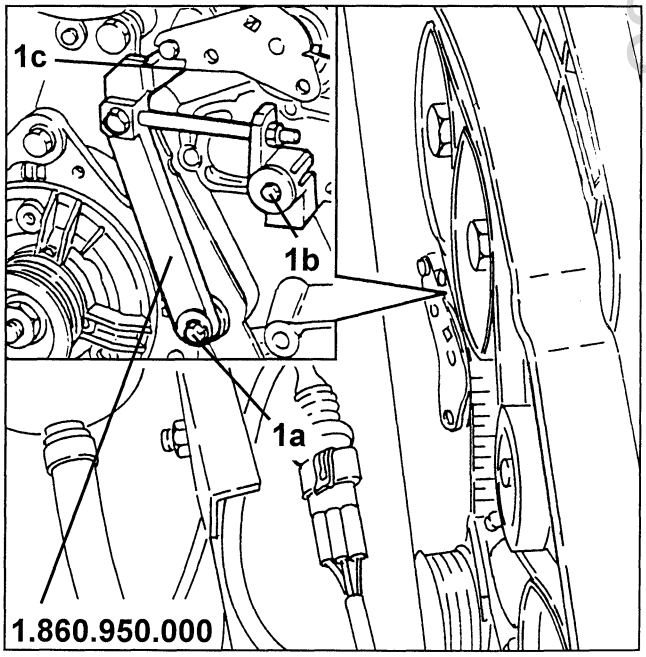

cardiagn.com

1. Take the mobile notch under the belt take-up fixed notch as shown in the figure.

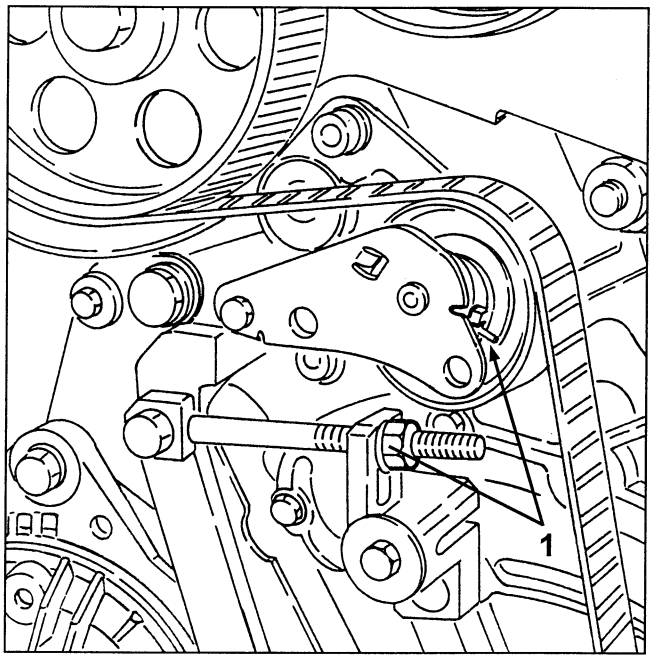

1. Use extension no. 1.822.150.000 and tool no. 1.822.146.000 to contrast torque. Fasten the camshaft drive pulley screws at the prescribed torque.

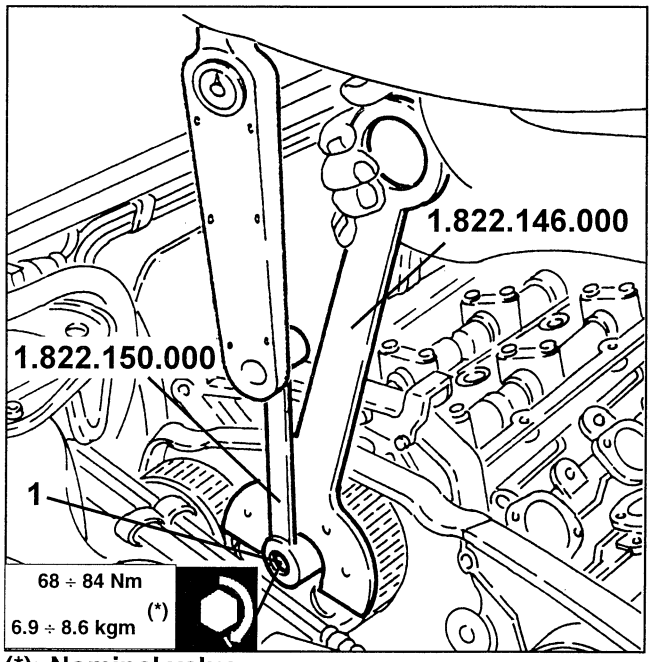

(*): Nominal value

- Remove the previously fitted templates no. 1.825.040.000. Fit the previously fitted bearings in their place and fasten the screws at the prescribed torque.
- Turn the crankshaft twice in the direction of revolution to fit the timing belt well.

1. Check whether the fixed notch on the belt take-up coincides with the mobile notch. If not, loosen the belt take-up tension by turning nut (A) until the notches meet.
2. Torque the belt take-up fastening nuts as prescribed and remove belt tension tool no. 1.860.950.000.

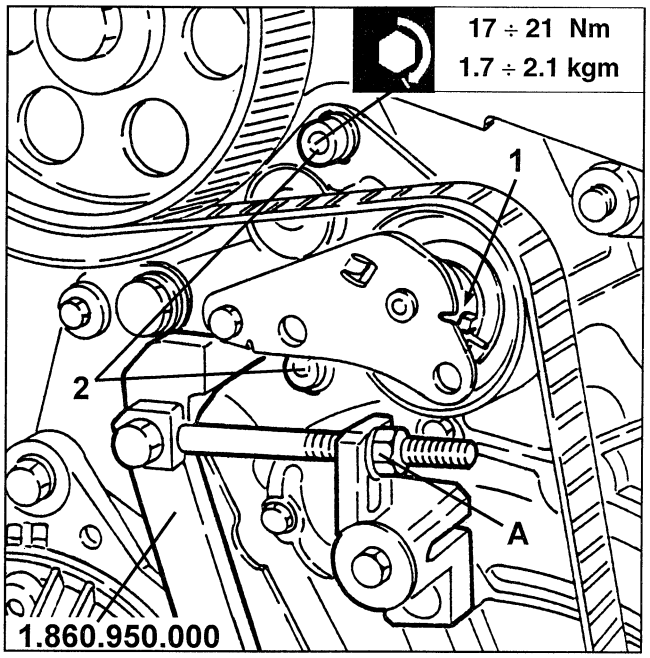

- Complete refitting by reversing the removal sequence.

cardiagn.com

OIL PUMP

REMOVAL/REFITTING

- Position the vehicle on a shop jack.
- Make sure the ignition key is at "STOP" and disconnect the (-) battery terminal.

1. Disconnect the lambda sensor electrical connection from the left-hand exhaust manifold and release the respective wiring from the fastening clips.

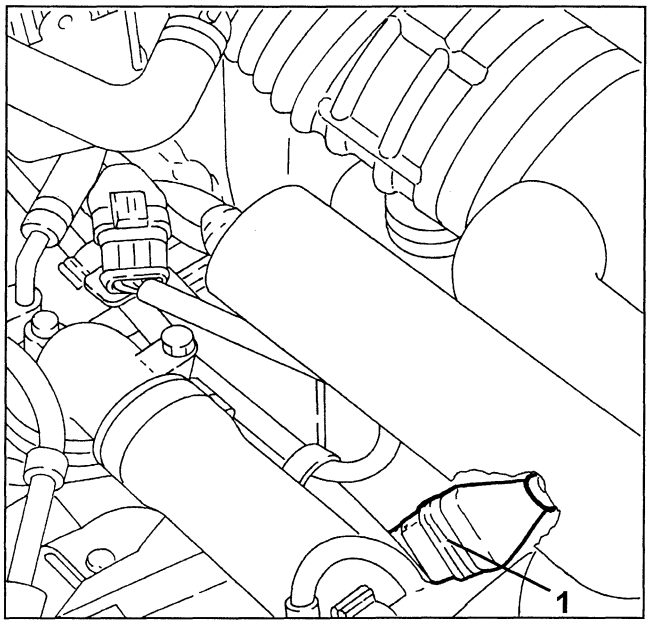

- Remove the front right-hand wheel and the respective dust guard.
- Drain engine oil (see assembly 00).

1. Loosen the fasteners and remove the front left-hand exhaust pipe section and lambda sensor.

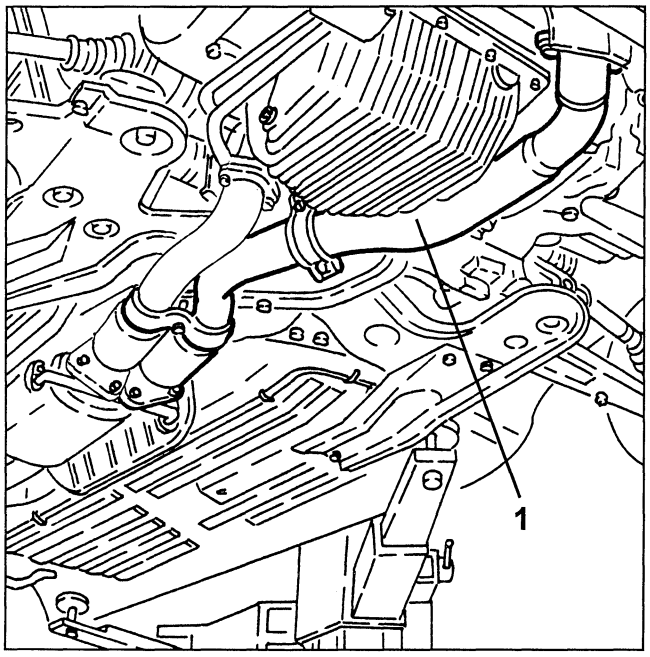

1. With a wrench on the belt take-up pulley fastening screw, overcome the automatic take-up force and lock it in this position (belt loose) with a pin as shown in the figure.
2. Loosen the fastening screw and remove the lower engine drive belt runner.

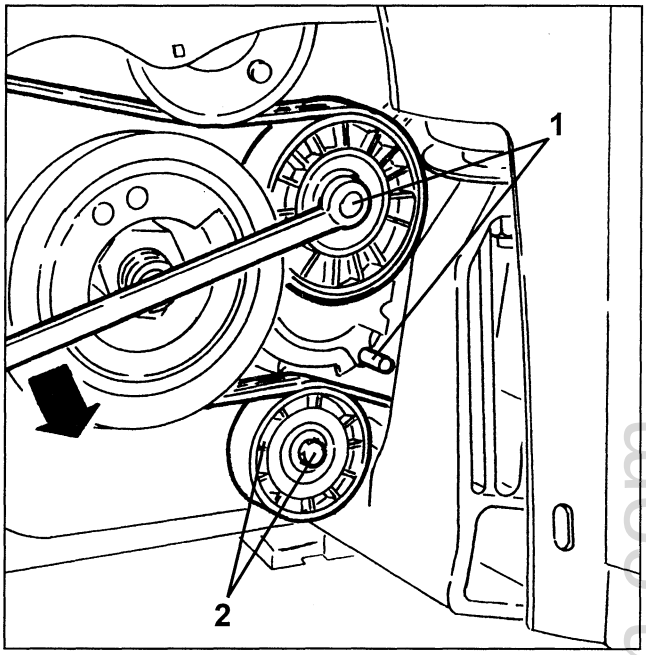

1. Loosen the fasteners and remove the lower flywheel and rpm and phase sensor guards.

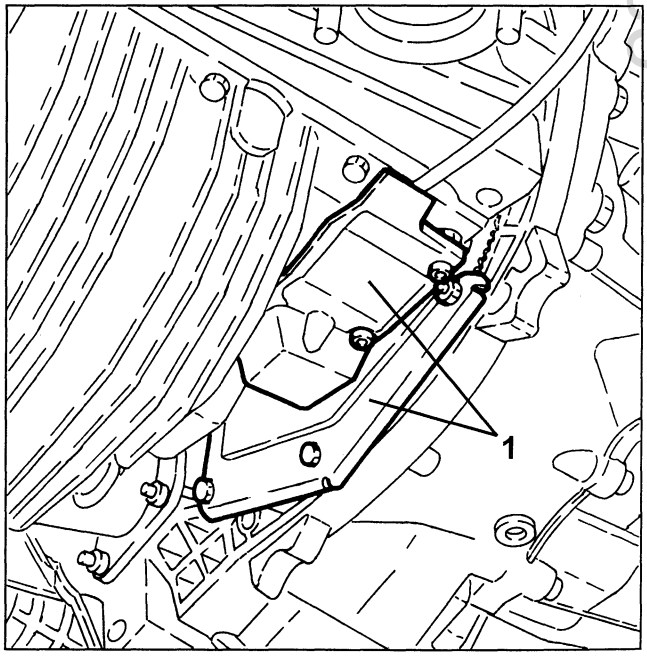

Cardiagn.com

1. Loosen the fastening screws and move the rpm and phase sensor aside.

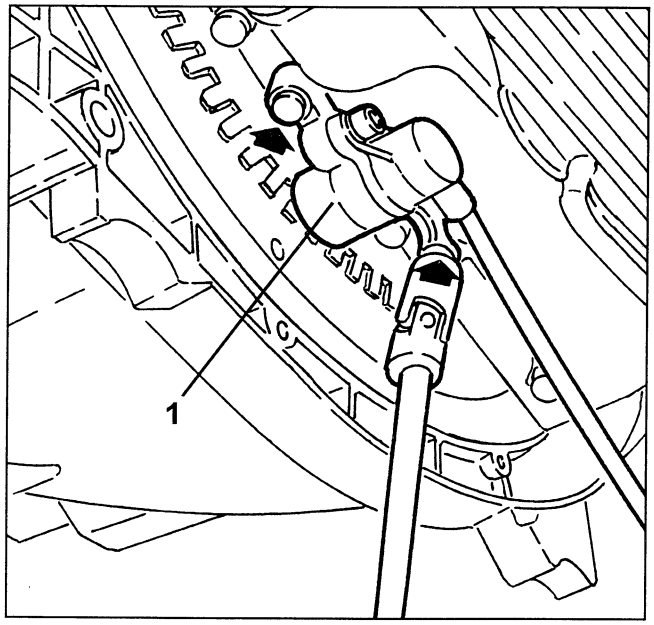

1. Remove the engine oil filter with a suitable wrench.
2. Loosen the fittings and disconnect the coolant radiator delivery and return pipes from the oil filter bracket.

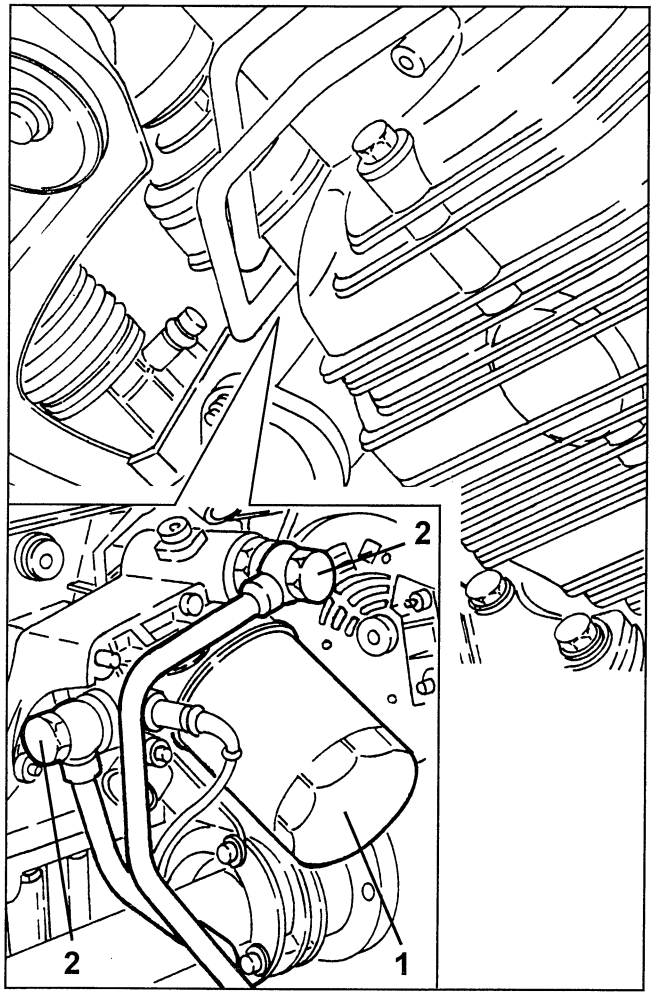

1. Loosen the fastening screws and remove the coolant radiator engine oil delivery and return pipe bracket.
- Move the coolant radiator engine oil delivery and return pipes aside provisionally as not to interfere with the following operations.

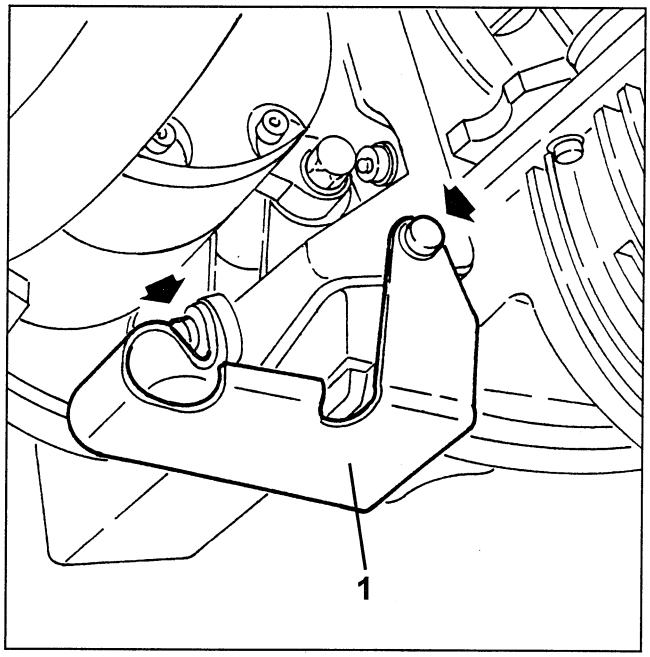

1. Loosen the screws fastening the sump to the crankcase.
- Heat the crankcase sump coupling area and cut the sealant.
2. Remove the sump from the crankcase.

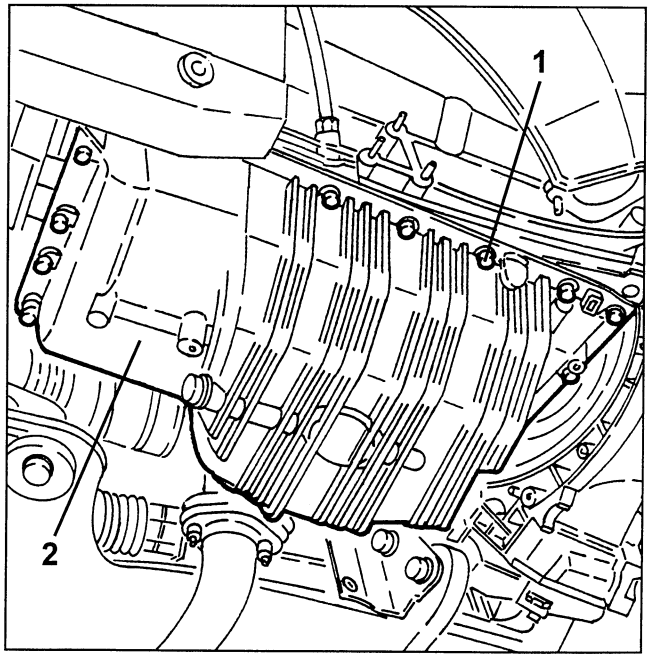

cardiagn.com

1. Fit flywheel retainer tool no. 1.820.088.000.

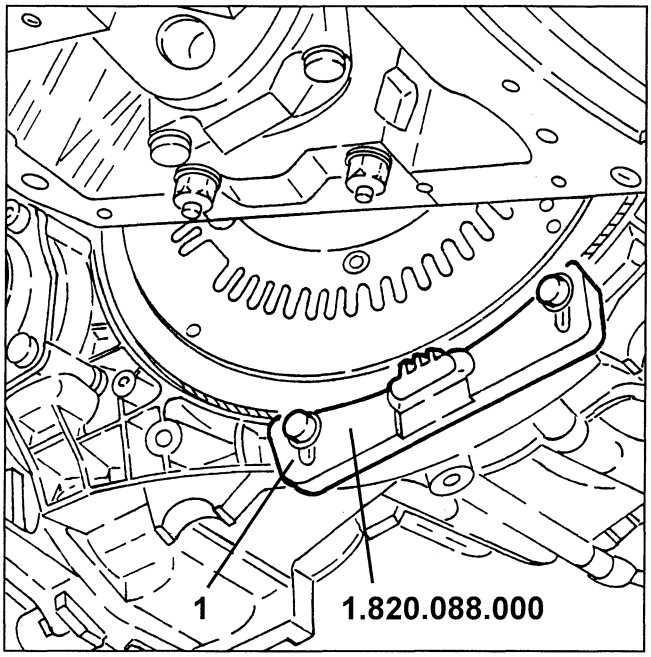

1. Use tool no. 1.860.954.001 to remove the drive gear from the oil pump shaft.

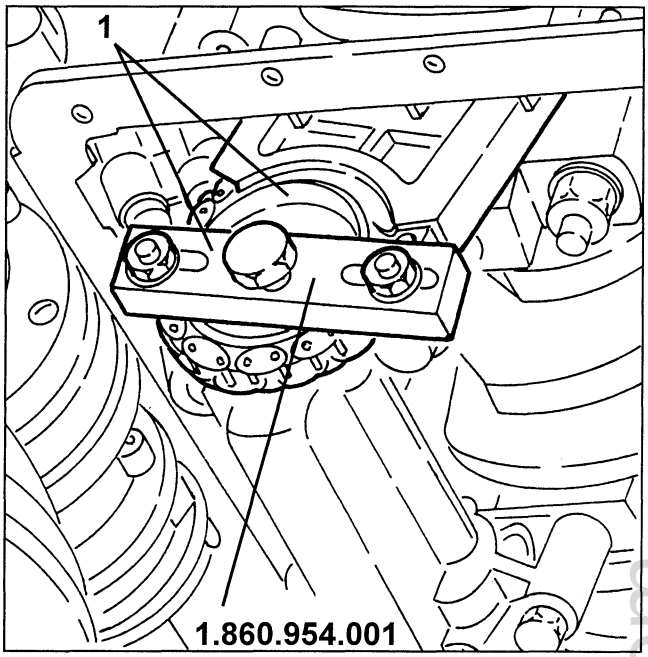

1. Loosen the oil pump drive gear fastening screw.

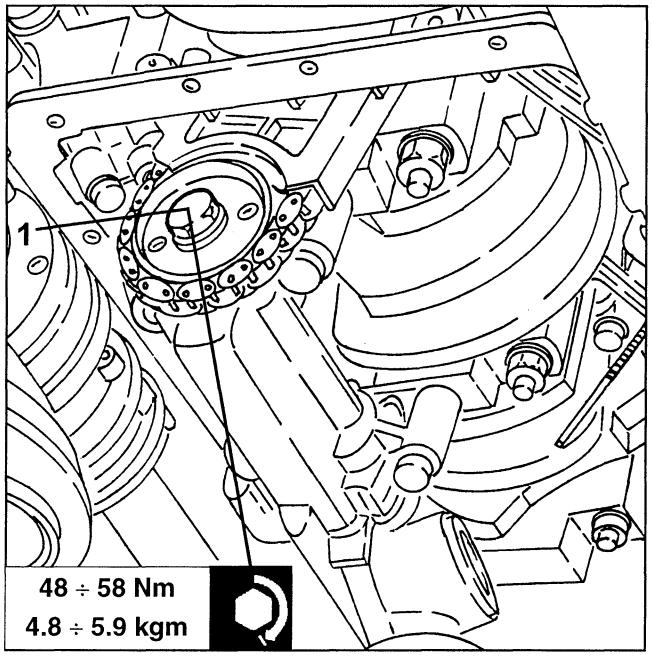

1. Loosen the fastening screws and remove the complete oil pump.

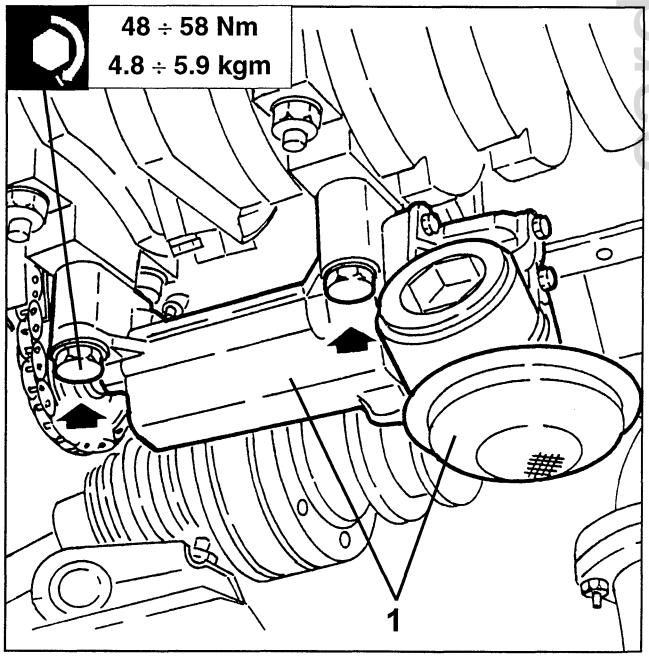

cardiagn.com

Refit by reversing the removal operation sequence. Attain to the following precautions.
- Clean the oil sump and engine crankcase coupling surfaces.

IMPORTANT: Check intactness of rear main bearing seal; if this is not so, restore it.

- Apply "Dow Corning 7091" silicon sealant on the entire oil sump perimeter.
1. Position the oil sump avoiding movements which could remove the sealant. Then torque the fastening screws as prescribed.

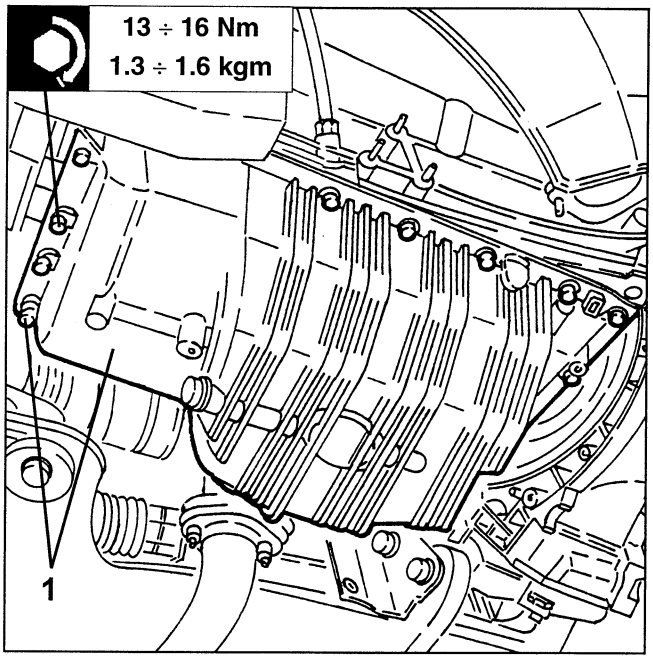

REAR CRANKSHAFT OIL SEAL REPLACEMENT

- Remove the gearbox (see Assembly 21).
- Remove the clutch (see Assembly18).
1. Fit flywheel retainer tool no. 1.820.228.000
2. Loosen the fastening screws and remove the flywheel.

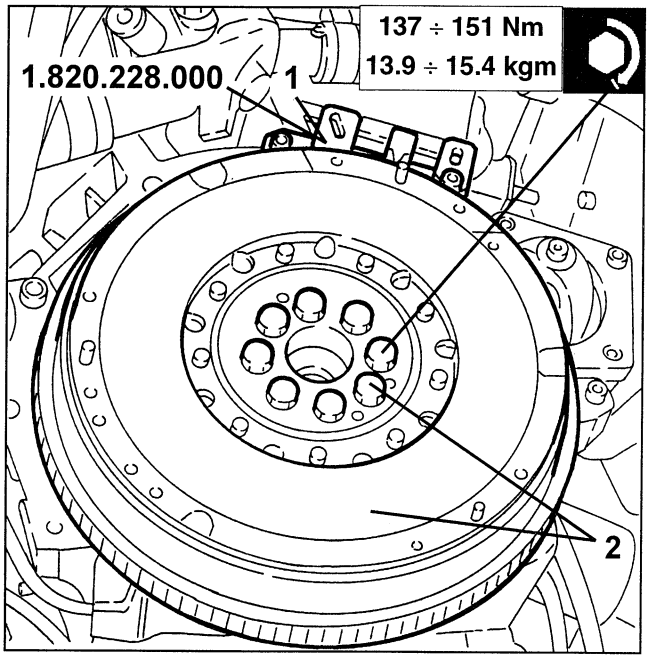

- Remove the crankshaft rear oil seal.
1. Introduce a new crankshaft rear oil seal with tool no. 1.821.150.000.

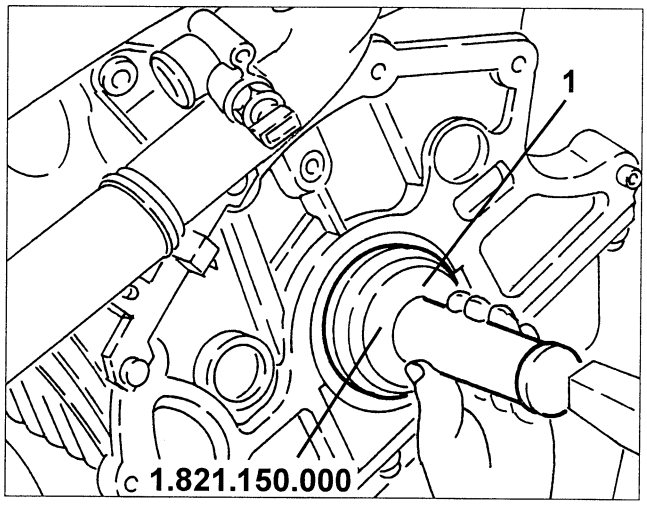

- Complete refitting by reversing the removal sequence.

cardiagn.com

GENERAL DESCRIPTION

The Bosch Motronic ME2.1 driven throttle system a belongs to the category of integrated electronic sequential, phased ignition and injection systems.
The ECU controls the idling ratio air intake by means of the electronic throttle.
The ECU controls spark advance to adjust the engine to changes in environmental parameters and applied loads.
The ECU controls and manages injection so that the stoichiometric ratio (air-to-fuel ratio) is constantly optimal.
Essentially, the main functions of the system are:
- self-learning;
- system self-adapting;
- self-test;
- Alfa Romeo CODE (Immobilizer) ECU acknowledgement;
- cold start control;
- fuel-lambda sensor control;
- knock control;
- acceleration enrichment control;
- fuel cut-off upon accelerator pedal release;
- fuel vapour recovery;
- engine rpm limitation;
- fuel pump control;
- connection to climate control system;
- cylinder position acknowledgement;
- optional cylinder injection time control;
- spark advance;
- idling ratio management (also according to battery voltage);
- fan control;
- connection to instrument panel.

INJECTION SYSTEM

The essential conditions which should always be fulfilled in preparing the air-to-fuel mixture for the good operation of controlled ignition engines are mainly:
- "metering": the air-to-fuel ratio should be kept as close as possible to the stoichiometric value to ensure maximum catalytic converter efficiency.
- the mixture should be homogenous, i.e. consist of petrol diffused as finely and uniformly as possible.

The information processed by the ECU for controlling optimal metering is received in the form of electrical signals emitted by the:
- air flow meter and temperature sensor, for the exact quantity of intake air
- rpm sensor which produces an alternating single phase signal indicating the engine rpm
- throttle potentiometer, to acknowledge the required accelerator conditions
- coolant temperature sensor on the thermostat
- lambda sensor to determine the oxygen content in exhaust gases.

IGNITION SYSTEM

The ignition system is the static advance induced discharge type (i.e. without high voltage distributor) with power modules inside the injection ECU.
The system has a single coil for each spark plug (MONOCOIL).
The advantages of this solution are:
- less electrical overload;
- guarantee of constant discharge at each spark plug.
A map containing the entire set of optimal spark advance values (for each cylinder at power stroke) which the engine can adopt according to the ratio and the engine load is stored in the ECU.
The ECU corrects spark advance mainly according to:
- air coolant temperature
- air intake temperature
- knock.
The information that the ECU processes to pilot the monocoils is received in the form of electrical signals emitted by:
- air flow meter and temperature sensor, for the exact quantity of intake air
- rpm sensor which produces an alternating single phase signal indicating the engine rpm
- knock sensors (on the upper part of the crankcase between the two heads) to acknowledge the cylinder where detonation is occurring and to correct spark advance
- throttle potentiometer to acknowledge load conditions (idling, partial and full)
- phase sensor.

cardiagn.com

Knock control

The ECU can delay ignition selectively on each cylinder as required according to the combination of values received from the knock and phase sensors. It:
- reduces spark advance by 3° steps to reach a maximum of 9°
- updates the threshold considering:
  - basic noise
  - engine ageing.

During acceleration, the ECU employs a higher threshold to adapt to increased engine noise. When knock disappears, the ECU decreases spark advance in 0.75° steps to complete recovery.
The self-adapting feature of the ECU:
- stores the continuous, repeated spark advance reductions
- updates the map to the various conditions in which the engine is working.

Recovery:
- in the event of failures to either the phase sensor, the knock sensor or the injection ECU, a spark delay - which is variable according to the rpm and the engine temperature - is implemented. Maximum spark delay is always lower than 9° engine.

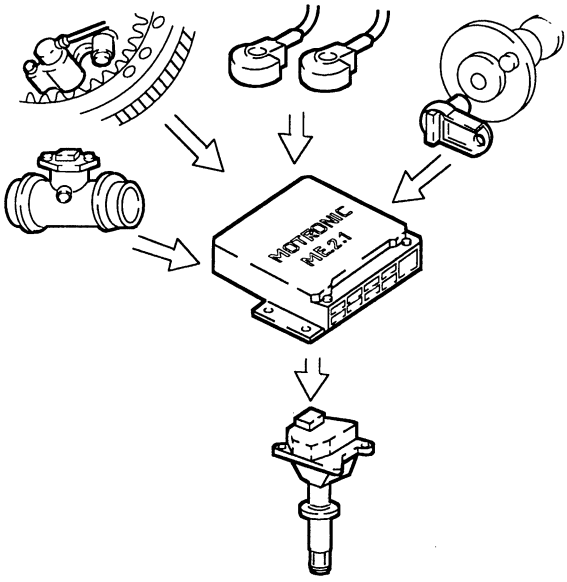

Acceleration enrichment control

Upon considerable demand for acceleration, the ECU adjusts the injection time and the throttle position.
Recovery
- the ECU replaces the signal from the faulty air flow meter with the signal from the potentiometer built-into the throttle and DVL.

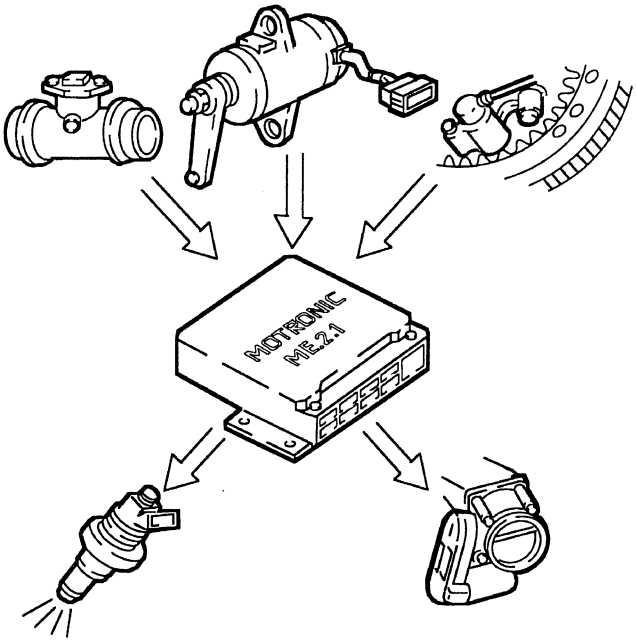

Fuel cut-off upon accelerator pedal release

In the following conditions:
- acknowledge idling ratio
- rpm exceeding a certain threshold

the ECU deactivates injection according to:
- rpm
- engine temperature
- vehicle speed.

Before reaching idling speed, the rpm decrease dynamics is checked.
If this is higher than a certain value, fuel injection is partially reactivated according to a logic to take the engine to idling speed smoothly. Once idling conditions are reached, the normal functions are reactivated.
Fuel cut off is active only 20 seconds after engine start-up.

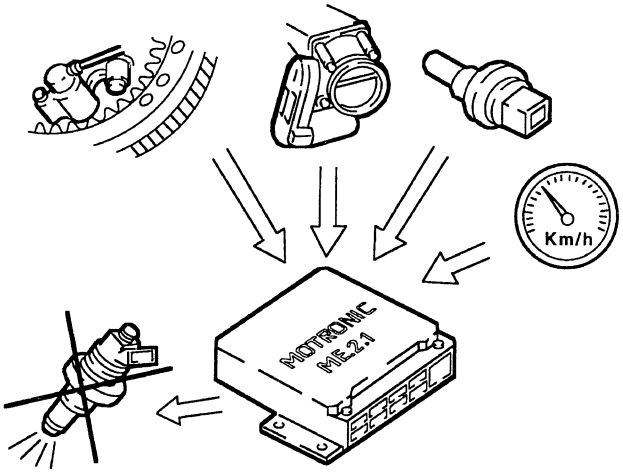

cardiagn.com

Fuel vapour recovery

Fuel vapours (pollutants) are collected in an active carbon canister and are conveyed to the intake ducts to be burnt.
This is ensured by means of a solenoid valve controlled by the ECU.
The valve is closed for 60 seconds after start-up and opened for 90 seconds.
During this time (90 seconds) the lambda sensors meter carburation and the values are compared against the basic ECU maps.
If there are no variations, the ECU closes the solenoid valve, otherwise it is kept open for other 90 seconds to allow canister wash-out.
The canister wash-out is nominally limited to a small percentage of intake air detected by the flow meter to ensure balance and disrupt driveability as little as possible.

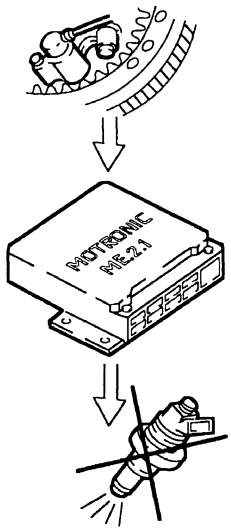

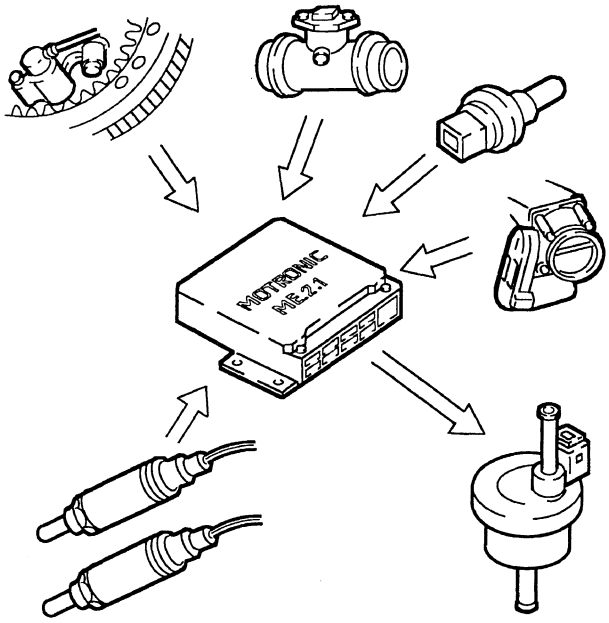

Fuel pump control

The ECU:
- powers the fuel pump in the following conditions:
  - key at MAR (for 5 sec.)
  - key at AVV and rpm > 25.
- cuts off fuel pump power in the following conditions:
  - key at STOP
  - rpm < 25.

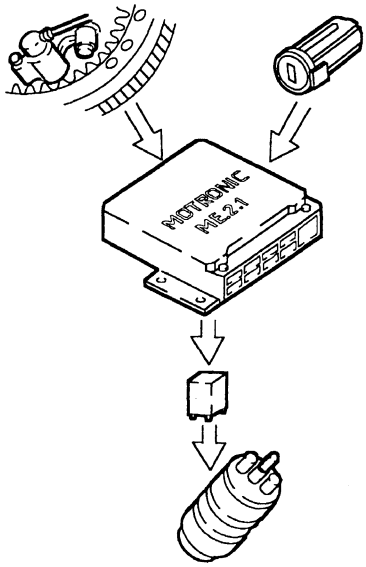

Engine rpm limitation

According to the engine rpm, the ECU:
- stops feed to the injectors over 6800 rpm (a maximum of 7000 rpm is allowed for less than 5 sec.).
- start piloting the injectors again under 6600 rpm.

cardiagn.com

Connection to climate control system

The climate control system compressor intakes engine power. When idling, the ECU suits the new air intake requirement to the required power to ensure optimal driveability.
The ECU excludes the compressor in the following conditions:
- over 6500 rpm;
- over a certain engine coolant temperature threshold (117°C);
- at start up.

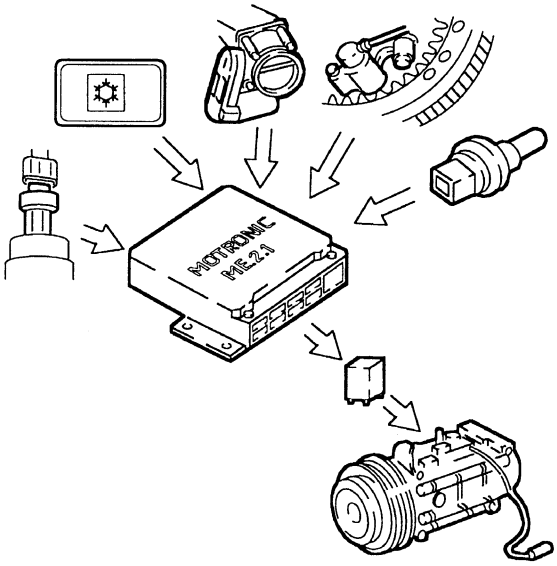

Cylinder position acknowledgement

At each engine revolution the ECU acknowledges which cylinder is firing and:
- controls the injection and ignition sequence to the suitable cylinder.
If the phase sensor is faulty, the ECU cannot acknowledge whether cylinder 1 or 5 is at firing stroke; consequently it adopts the following strategies:
- engine running: the engine runs normally on the basis of the stored cylinder firing sequence
- engine stopped and re-started: coil pair ignition is started and a fixed delay is applied to all cylinders.

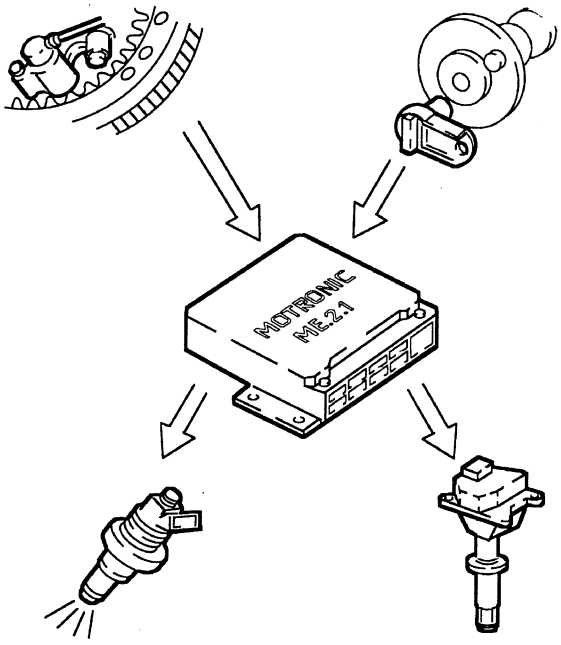

Optimal cylinder injection time

The ECU compute optimal injection time for each cylinder according to specific maps:
- it changes the injector opening instant
- it keeps the injector closing instant planned in the maps according to engine rpm
- the fuel injection is sequential and phased in each cylinder (S.E.F.I.).

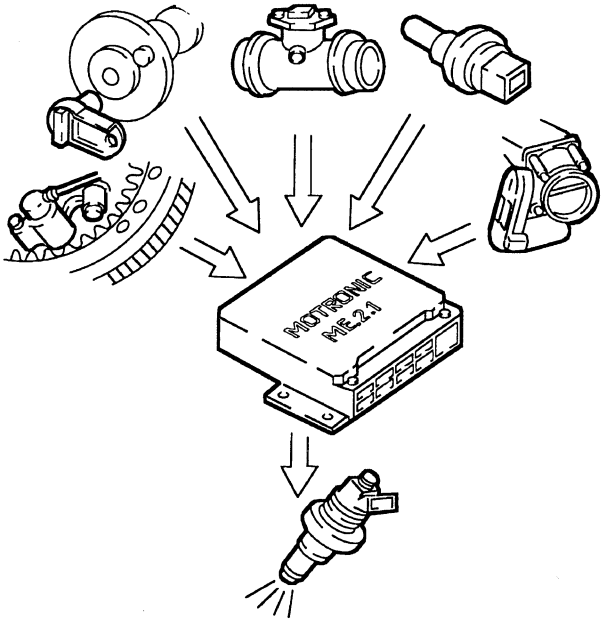

cardiagn.com

Spark advance

The ECU processes the signals from the sensors and defines:
- spark advance for each cylinder
- spark delay for the required cylinder (according to knock).

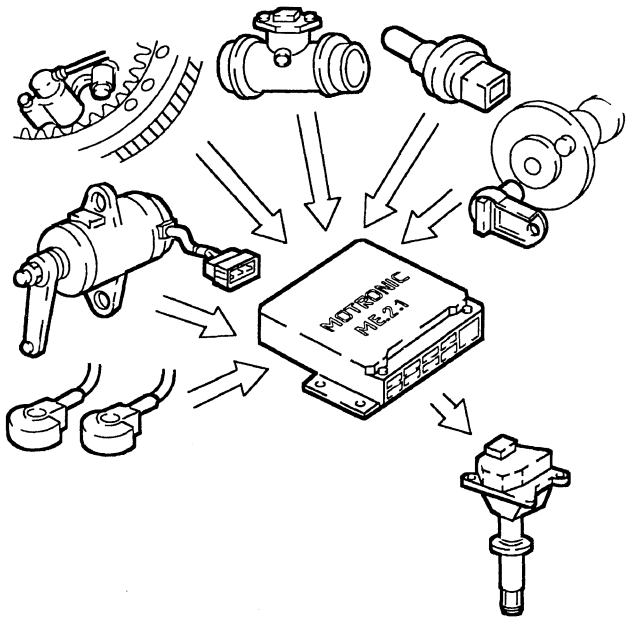

Idling ratio management

The ECU acknowledges idling condition when the accelerator pedal is released. The ECU controls idling speed by piloting the driven throttle according to the devices which are on and the signals from the brake-clutch pedals. When the fans are running at second speed, idling ratio goes from 700 to 750 rpm.

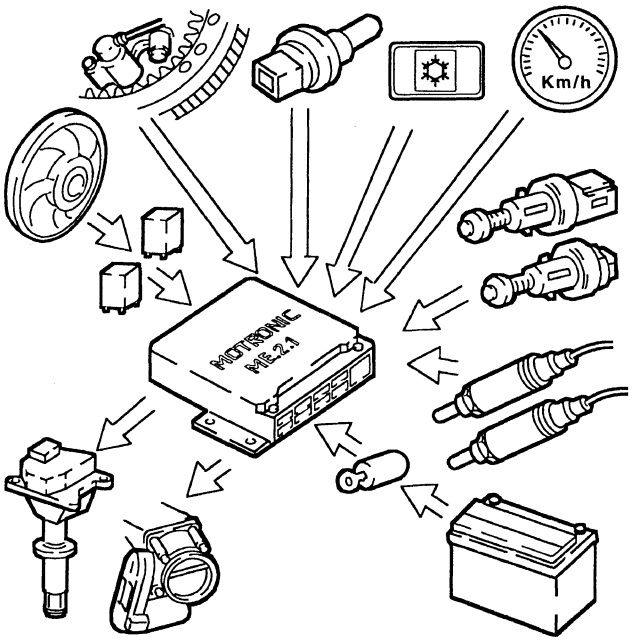

Fan control

According to the coolant temperature, the ECU controls fan operation as follows:
- 1st speed at 95°C
- 2nd speed at 102°C.

If the climate control system is on, the ECU controls the fan at 1st speed.
Without the coolant temperature signal the ECU implements a recovery function by controlling the fan at 2nd speed until the error is removed.
Before starting the fans, the idling ratio is adapted by increasing the air delivery according to the fan to be started.

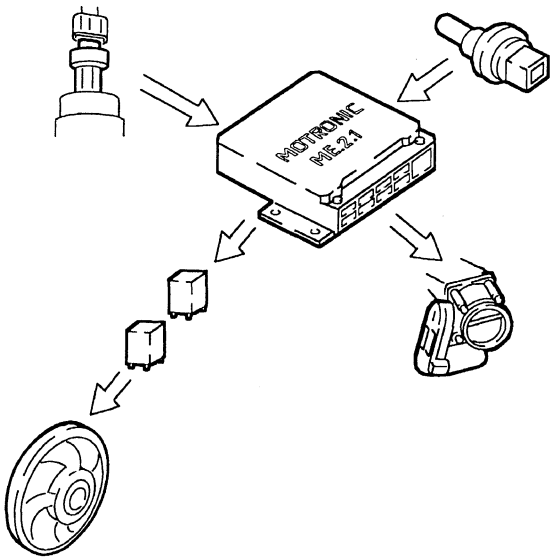

cardiagn.com

ME2.1 INJECTION-IGNITION SYSTEM COMPONENTS

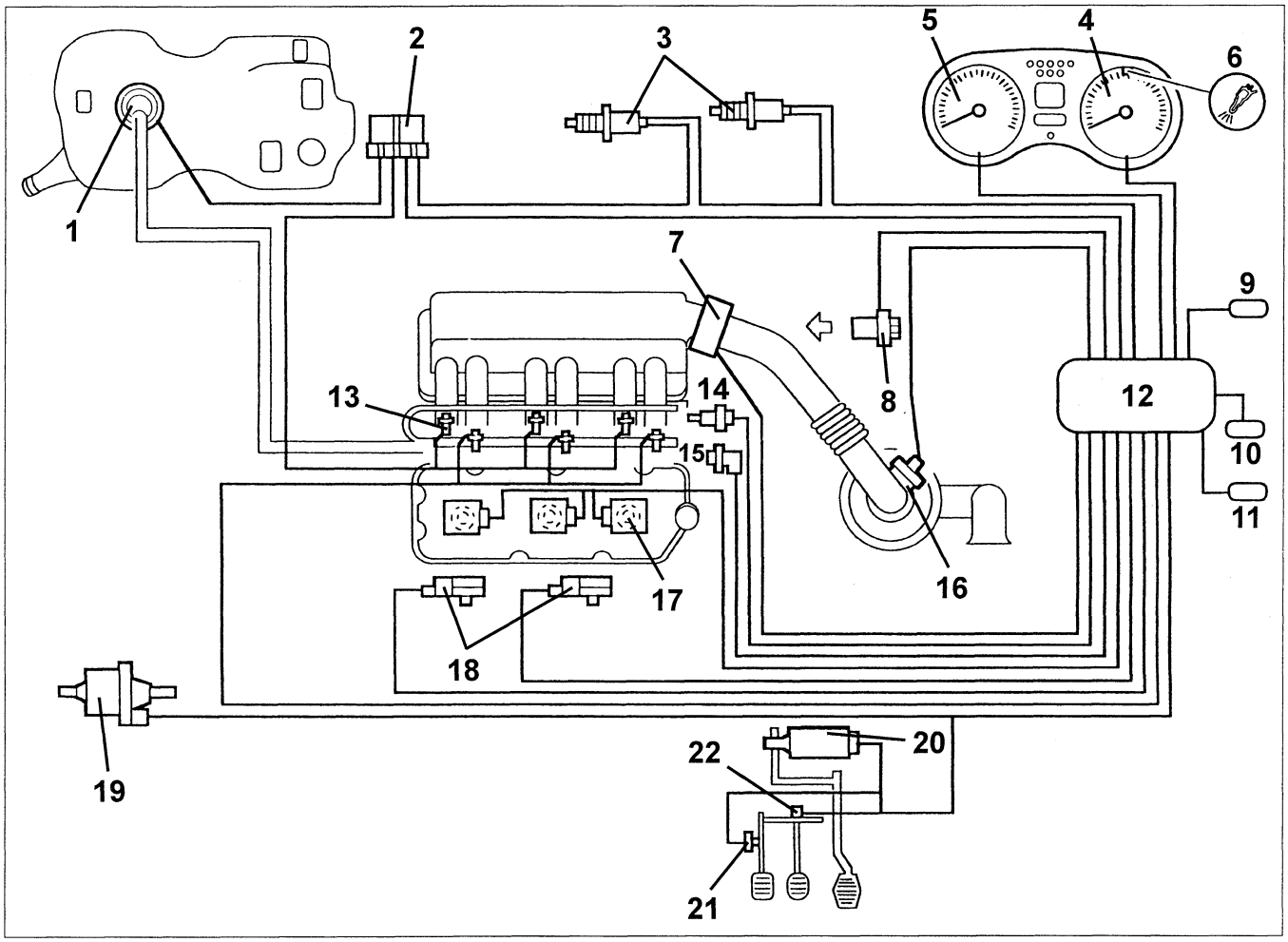

1. *Fuel pump*
2. *Relays*
3. *Lambda sensors*
4. *Tachometer*
5. *Rpm counter*
6. *Injection warning light*
7. *Throttle casing actuator with built-in DVL*
8. *Phase sensor*
9. *Climate control system connector*
10. *Diagnostic connector*
11. *Alfa Romeo CODE connector*
12. *Injection-ignition ECU*
13. *Injectors*
14. *Coolant temperature sensor*
15. *Rpm sensor*
16. *Air flow meter with temperature sensor*
17. *Ignition coils*
18. *Knock sensors*
19. *Fuel valve recirculation solenoid valve*
20. *Accelerator pedal potentiometer*
21. *Clutch pedal switch*
22. *Brake pedal switch*

cardiagn.com

ME2.1 INJECTION-IGNITION SYSTEM FUNCTION DIAGRAM

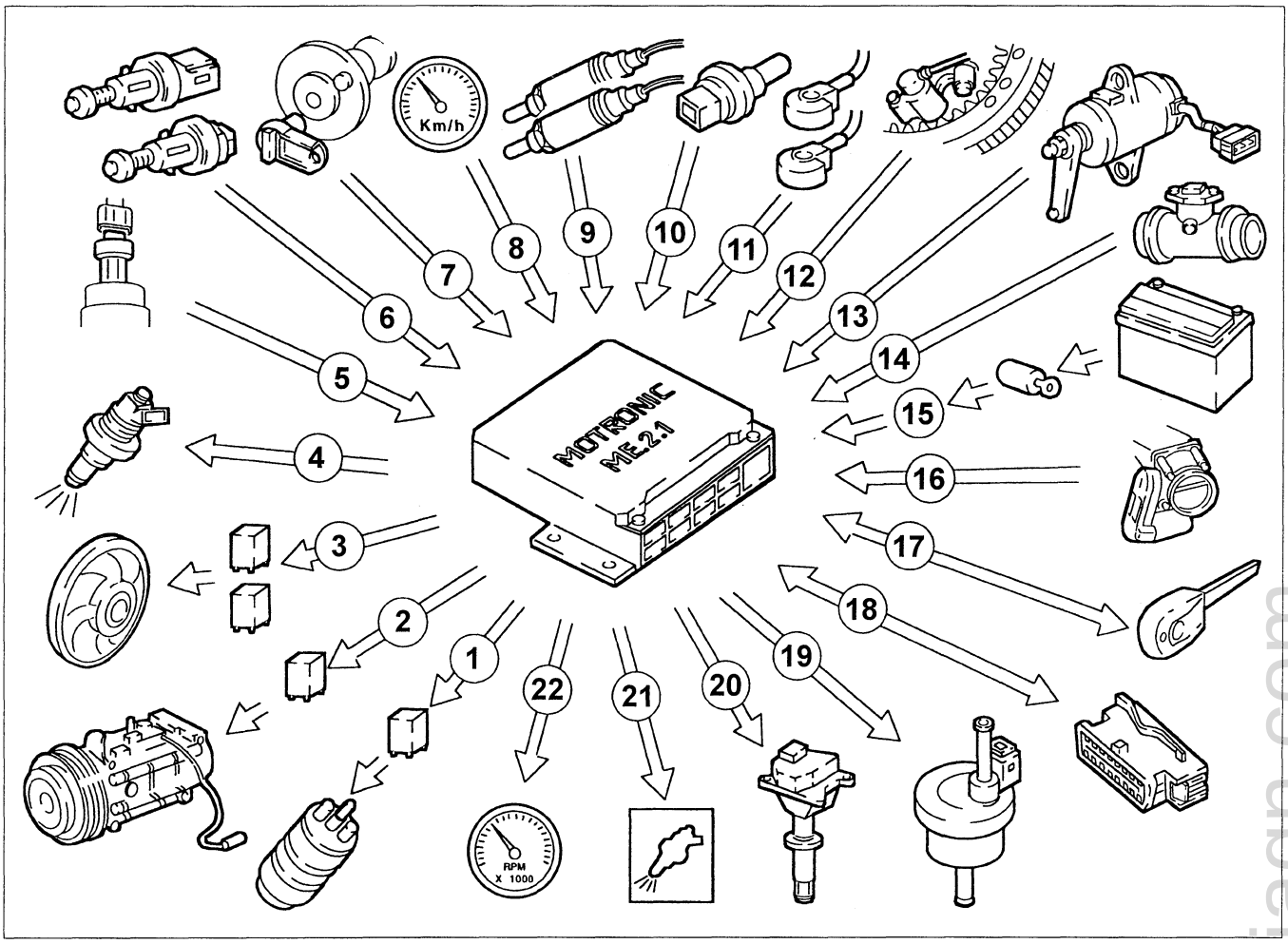

1. *Fuel pump*
2. *Climate control compressor*
3. *Fan*
4. *Injector*
5. *Four level pressure switch*
6. *Brake-clutch pedal switch*
7. *Phase sensor*
8. *Tachometer*
9. *Lambda sensor*
10. *Coolant temperature sensor*
11. *Knock sensors*
12. *Rev sensor*
13. *Accelerator pedal potentiometer*
14. *Air flow meter and temperature sensor*
15. *Battery*
16. *Throttle casing with built-in DVL*
17. *Alfa Romeo CODE*
18. *Diagnostic socket*
19. *Fuel vapour recirculation solenoid valve*
20. *Ignition coils*
21. *Injection warning light*
22. *Rpm counter*

cardiagn.com

FUEL FEED SYSTEM DESCRIPTION

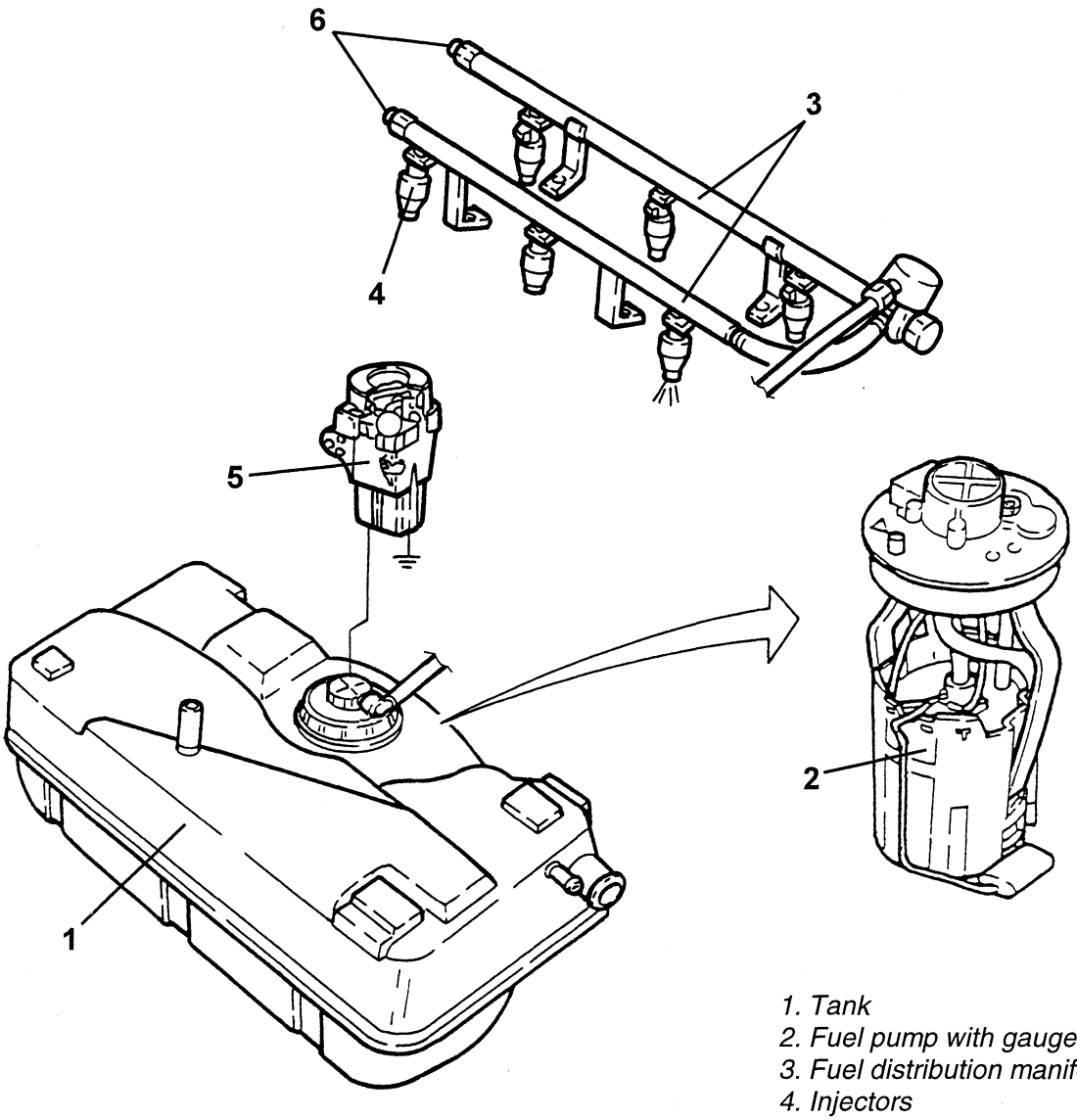

1. Tank
2. Fuel pump with gauge
3. Fuel distribution manifold
4. Injectors
5. Inertia switch
6. Fuel pressure drain valves

The fuel feed system is returnless, i.e. a single pipe connects the fuel pump and the engine. Advantages are:
- reduced possibility of the car catching fire after an accident
- reduced fuel vapour emission in the atmosphere.

The filler cap is fitted on the steel fuel tank main casing.

The electrical fuel pump is contained in a frame which also houses the following components:
- fuel pressure regulator
- fuel gauge
- fuel filter.

The system is equipped with an inertia switch which cuts fuel pump power in the event of an impact.

cardiagn.com

FUEL TANK

The tank is made of steel and has a capacity of 70 litres, including a reserve of approximately 9 litres. The filler is on the main casing and a specific compartment so that it can be removed from the tank. This allows removing the tank.

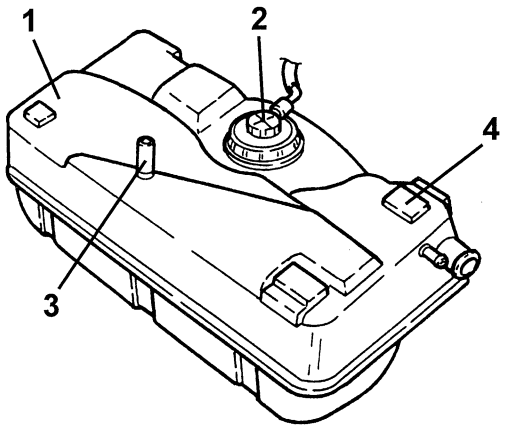

1. Tank
2. Fuel pump and gauge
3. Vapour recovery pipe
4. Dampers

The filler cap presents a system which ensures it can only be closed at the prescribed torque. Excessive torque (exceeding prescriptions) will cause the notches to turn without locking.
The tank is fitted under the rear seat and is fastened by means of two belts to the underbody. it is protected by a specific steel partition.
The fuel filler pipe doubles as a breather.
The fuel pump and gauge is housed above the tank.
A specific pipe allows the fuel vapours to reach the separator from the tank.

REMOVAL/REFITTING

- Position the vehicle on a shop jack.
- Make sure the ignition key is at "STOP" and disconnect the (-) battery terminal.
- Empty the tank by sucking fuel from the filler with a suitable tool.
- Remove the rear seat cushion and back (see specific paragraph).

1. Loosen the fastening screw and remove the rear seat belt retainers.

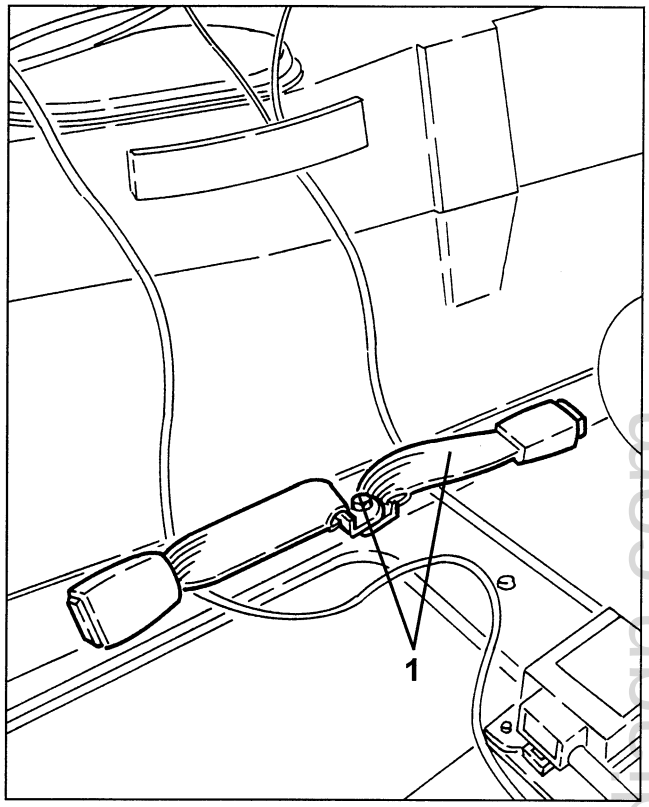

1. Loosen the fastening nuts and remove the fuel tank filler cover.

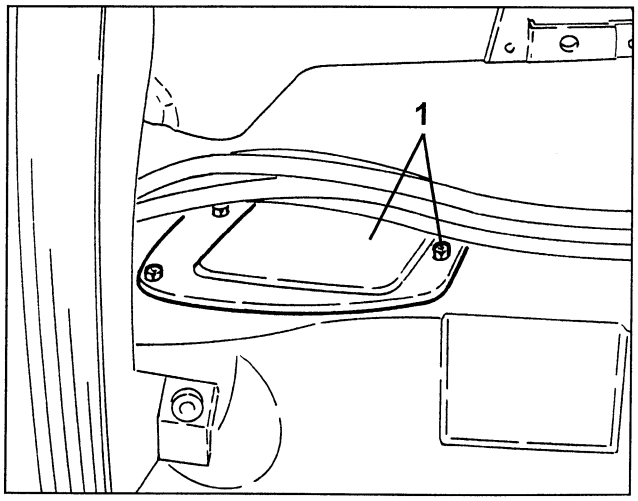

cardiagn.com

1. Loosen the fastening clip and disconnect the fuel filler from the tank.
2. Loosen the fastening clip and disconnect the breather pipe from the fuel tank.

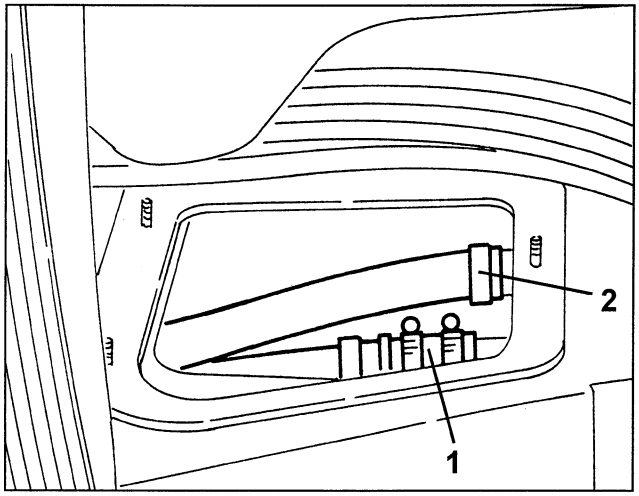

1. From inside the boot, lift the upholstery and disconnect the tank vapour inlet pipe from the fuel vapour separator.

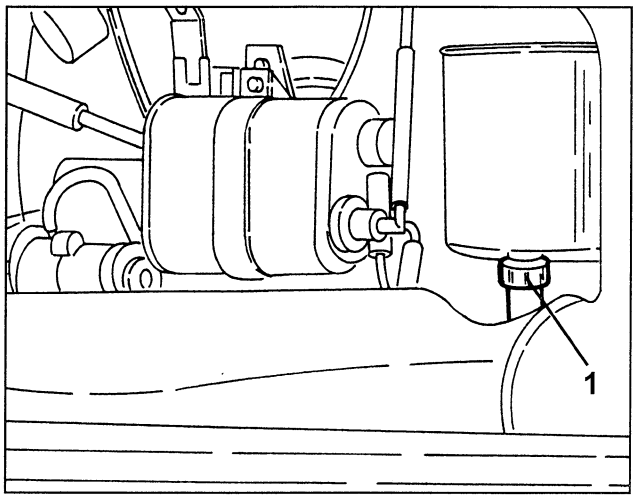

1. Loosen the fastening nuts and remove the fuel pump and gauge guard.
2. Disconnect the fuel pump and gauge electrical connection.
3. Disconnect the fuel delivery pipe from the fuel pump and gauge.

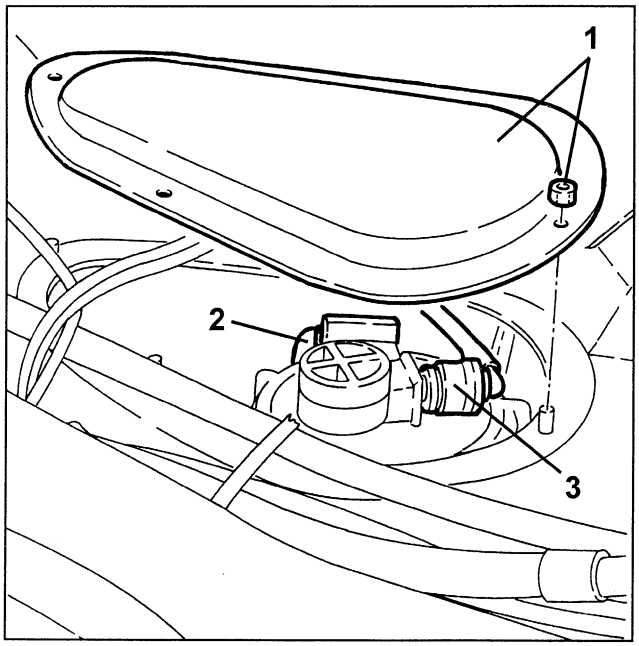

- Lift the vehicle and remove the rear suspension (see specific paragraph).
1. Loosen the fastening screws and remove the tank protection sheet and reinforcement bar.

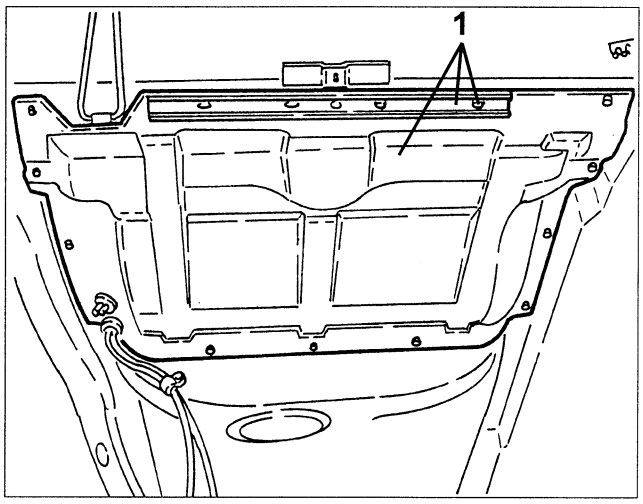

cardiagn.com

1. Position a hydraulic jack under the fuel tank.
2. Loosen the fuel tank metal belts and remove the tank by lowering the hydraulic jack.

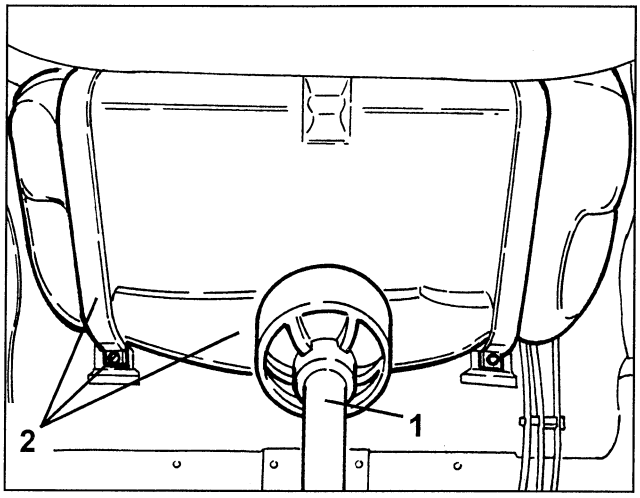

FUEL PUMP AND GAUGE

The main parts are:
- electrical fuel pump (1)
- fuel filter (2)
- float gauge (3)
- membrane pressure regulator (4)
- mesh pre-filter (5).

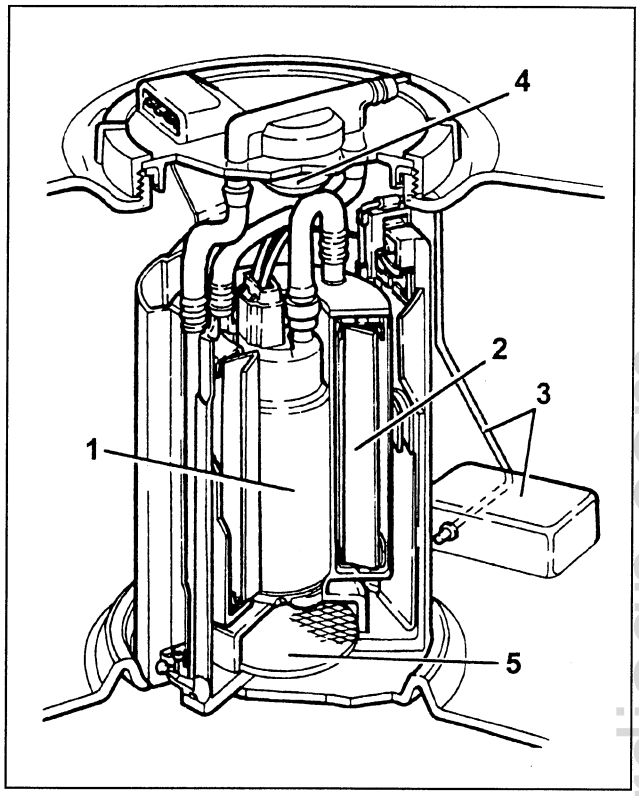

The fuel pump features a permanent magnet electrical motor (1) which controls the pump impeller (2) and a terminal guard (3) which contains the electrical and hydraulic connections.

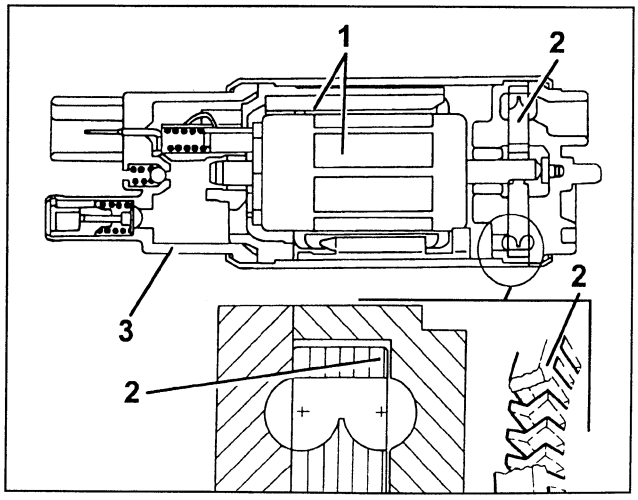

cardiagn.com

The pump is a single stage, peripheral flow device which ensures high performance at low voltage and temperature. The advantages with respect to volumetric pumps are:
- lower weight
- smaller size.

REMOVAL/REFITTING

- Make sure the ignition key is at "STOP" and disconnect the (-) battery terminal.
- Remove the rear seat cushion and back (see specific paragraph).
1. Loosen the fastening nuts and remove the fuel pump and gauge guard.
2. Disconnect the fuel pump and gauge electrical connection.
3. Disconnect the fuel delivery pipe from the fuel pump and gauge.

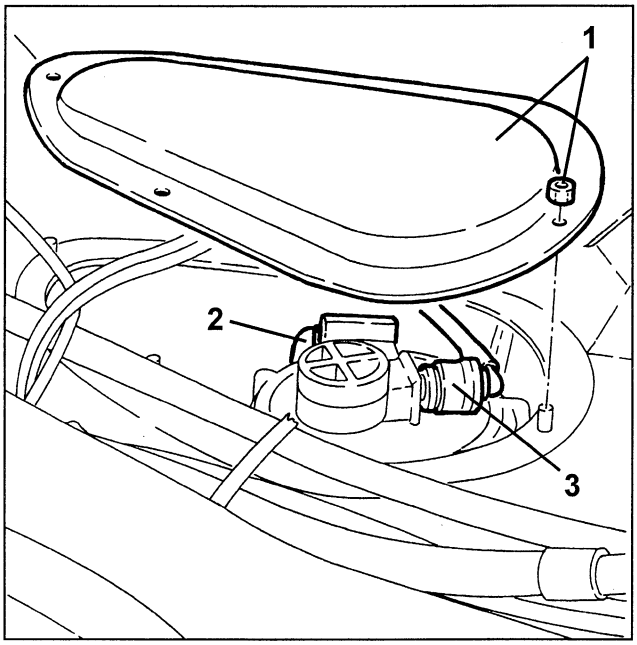

1. Use tool no. 1.821.167.000 to remove the fuel pump and gauge fastening nut screw.
2. Remove the fuel pump and gauge.

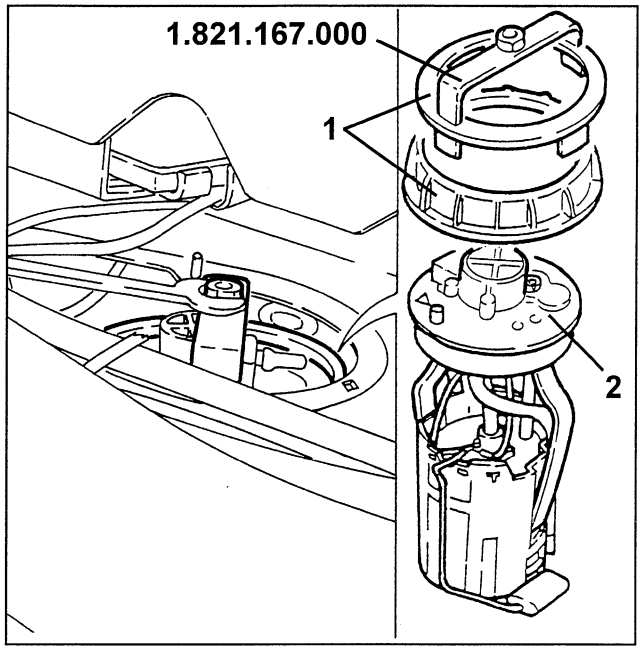

- Refit the fuel pump so that the arrow printed on the fuel pump guard is aligned with the reference mark on the tank.

INJECTORS

REMOVAL/REFITTING

- Make sure the ignition key is at "STOP" and disconnect the (-) battery terminal.
1. Disconnect the injector electrical connections.
2. Drain fuel pressure by loosening the caps on the distribution manifold and operating the underlying valves.
NOTE: Collect the fuel which is let out in a suitable container.

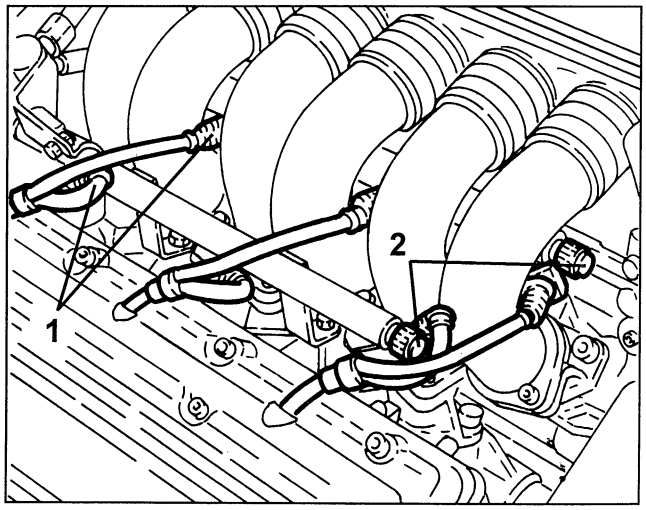

cardiagn.com

1. Loosen the clips and the screws. Then remove the intake air ducts.

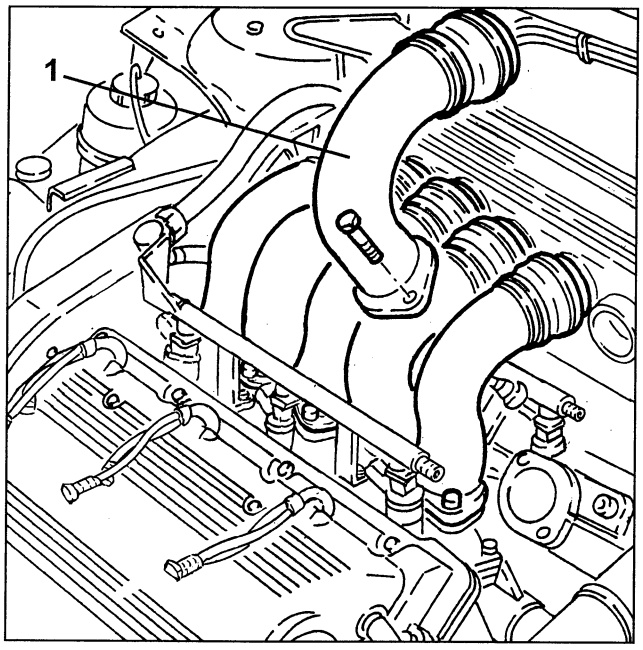

1. Disconnect the fuel delivery pipe from the distribution manifold.
2. Loosen the screws and remove the distribution manifold and injectors.

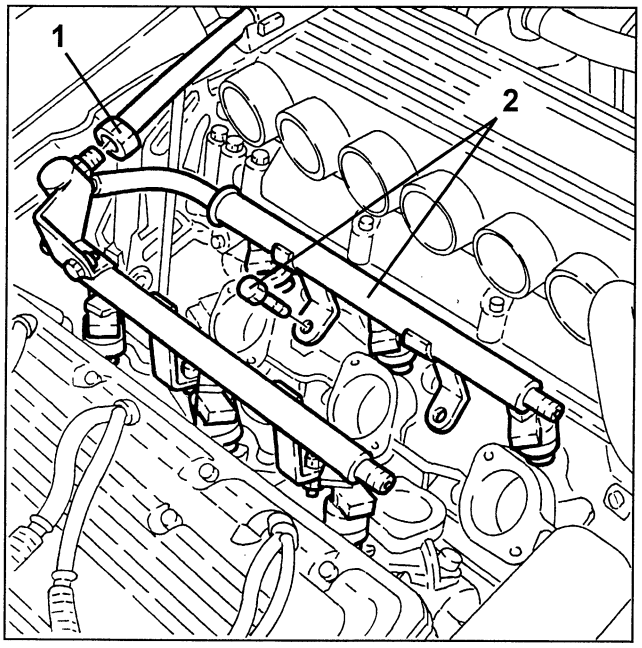

1. At the bench, remove the retainers and remove the injectors from the distribution manifold.

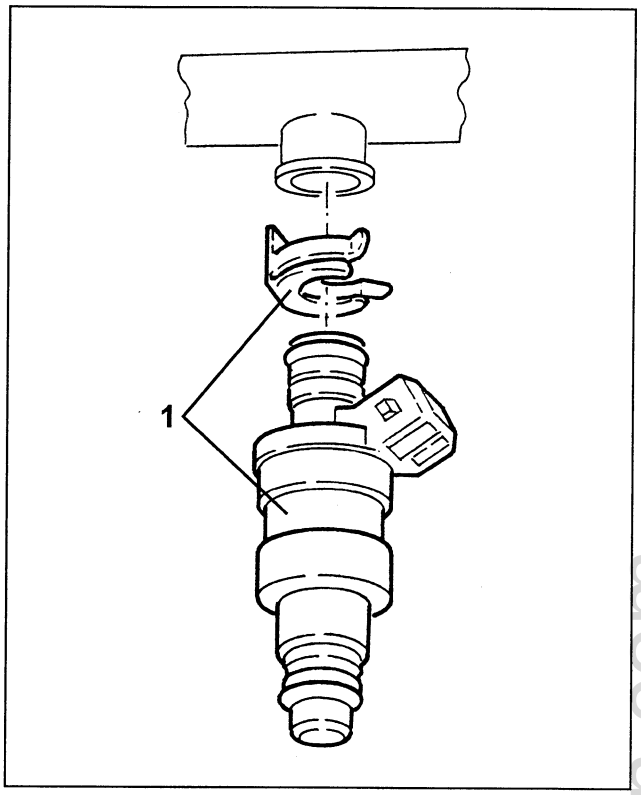

cardiagn.com

FUEL VAPOUR RECOVERY SYSTEM DESCRIPTION

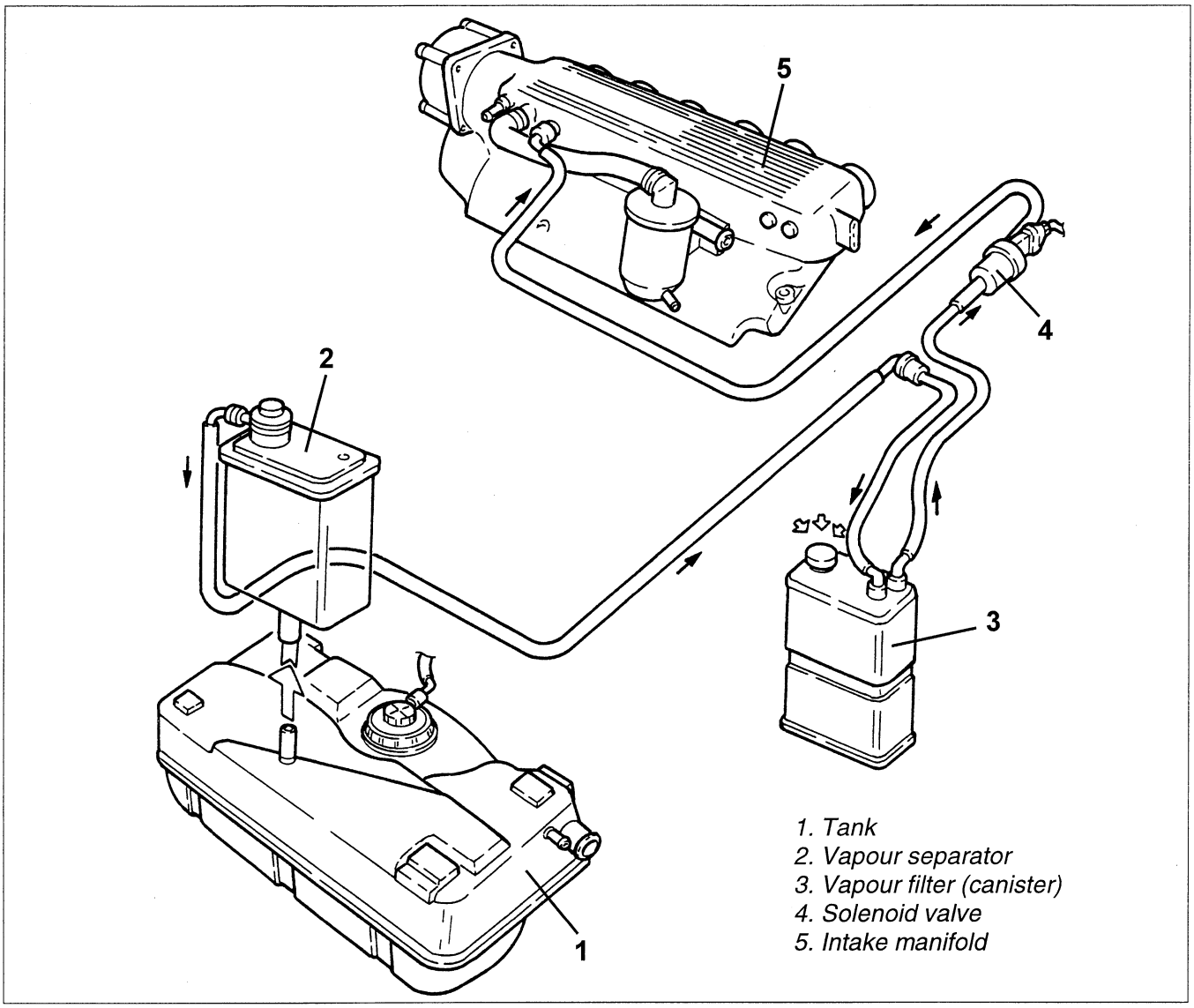

The fuel in the tank produces a considerable amount of potentially polluting vapours if released into the atmosphere.
The purpose of the vapour control and recovery system is to recover the vapours and burn them in the engine.
The vapours from the tank (1) reach the separator (2) via a specific pipe which is shaped as to allow the condensed fuel to drip back into the tank.
The remaining fuel vapours are sent to the canister (3) where they are absorbed and stored by the active carbon filter.
A solenoid valve (4) is located between the canister and the engine intake.
When the solenoid is not activated, the connection is closed and the fuel vapours remain inside the canister thanks to the active carbon filter.

In certain conditions of load, the ECU opens the solenoid valve allowing any vapours in the canister to be taken in.
This condition persists even when the lambda sensors detect decreased oxygen in exhaust due to excessive presence of fuel in the firing chamber.
If there are no fuel vapours in the canister, and consequently only air is taken in, the lambda sensors detect and inform the ECU of an increase in oxygen. In this case, the ECU closes the solenoid valve and the connection with the canister thus eliminating the excessive air intake.

cardiagn.com

FUEL VAPOUR SEPARATOR

Located in the boot, the separator has the purpose of limiting the amount of fuel vapours which reach the canister by condensing a part of them, thanks to its shape.
It consists of a plastic container with two connections: one lower vapour inlet and condensed fuel outlet and one upper outlet to the canister.

REMOVAL/REFITTING

- Remove the space saver spare wheel.
- Remove the boot upholstery.
1. Disconnect the tank fuel vapour inlet pipe from the separator.
2. Disconnect the canister fuel outlet pipe from the separator.
3. Loosen the fastening screws and remove the fuel vapour separator.

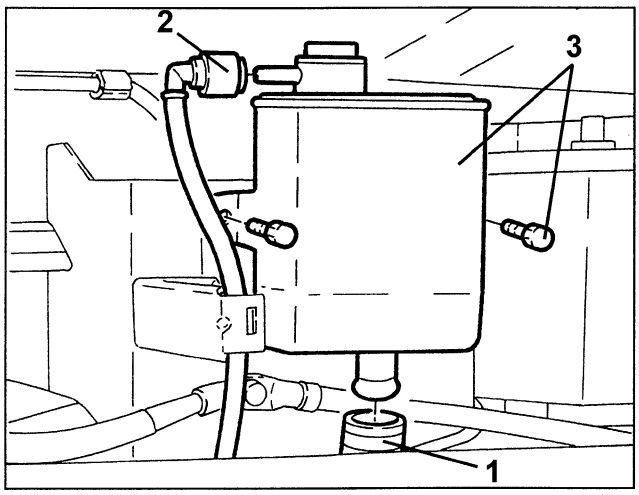

FUEL VAPOUR CANISTER

This device consists of an active carbon filtering element in a plastic casing which absorbs the fuel vapours from the separator. A one-way valve, to which it is connected via a specific pipe, allows to take in external air during vapour intake to wash the active carbon filter.

REMOVAL/REFITTING

- Position the vehicle on a shop jack.
- Remove the right-hand front wheel.
- Loosen the screws and remove the right side engine compartment guard.
- Remove the right front wheelhouse.
1. Loosen the canister fastening screw.
2. Disconnect the two canister pipes and remove the canister.

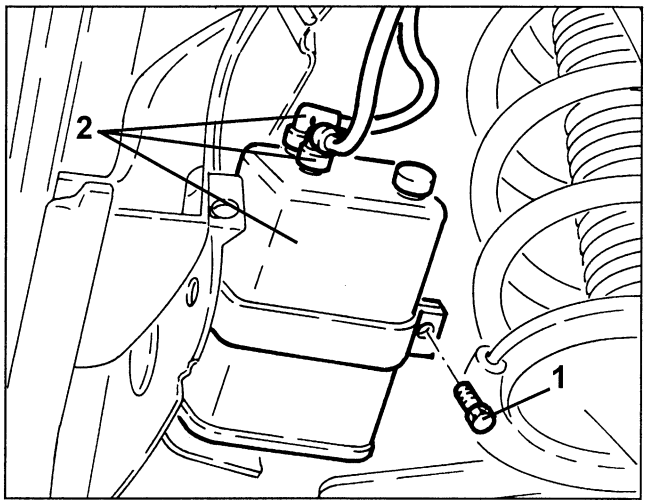

FUEL VAPOUR SOLENOID VALVE

This valve is controlled by the injection ECU and lets the fuel vapours stored in the canister into the intake manifold.

REMOVAL/REFITTING

- Make sure the ignition key is at "STOP" and disconnect the (-) battery terminal.
- Loosen the screws and remove the right engine compartment guard.
1. Disconnect the fuel vapour solenoid valve electrical connection.
2. Disconnect the fuel vapour solenoid valve inlet and outlet pipes.
3. Remove the fuel vapour solenoid valve by removing it from its bracket.

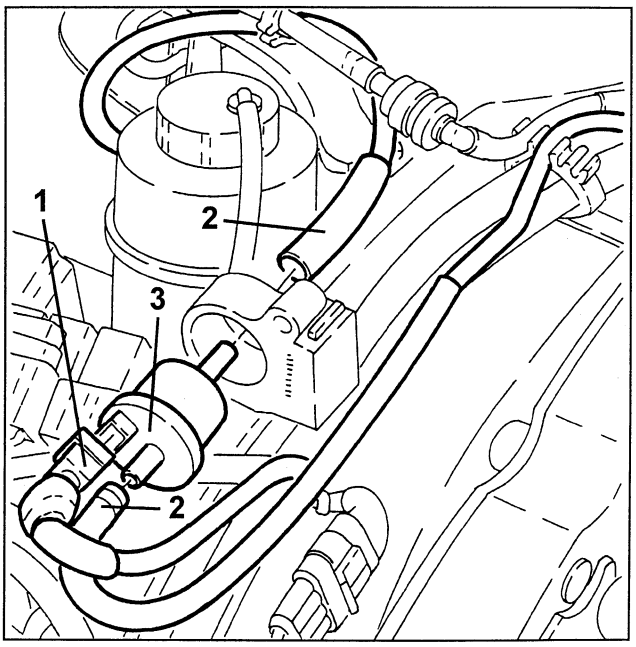

cardiagn.com

AIR FEED AND OIL VAPOUR RECOVERY SYSTEM DESCRIPTION

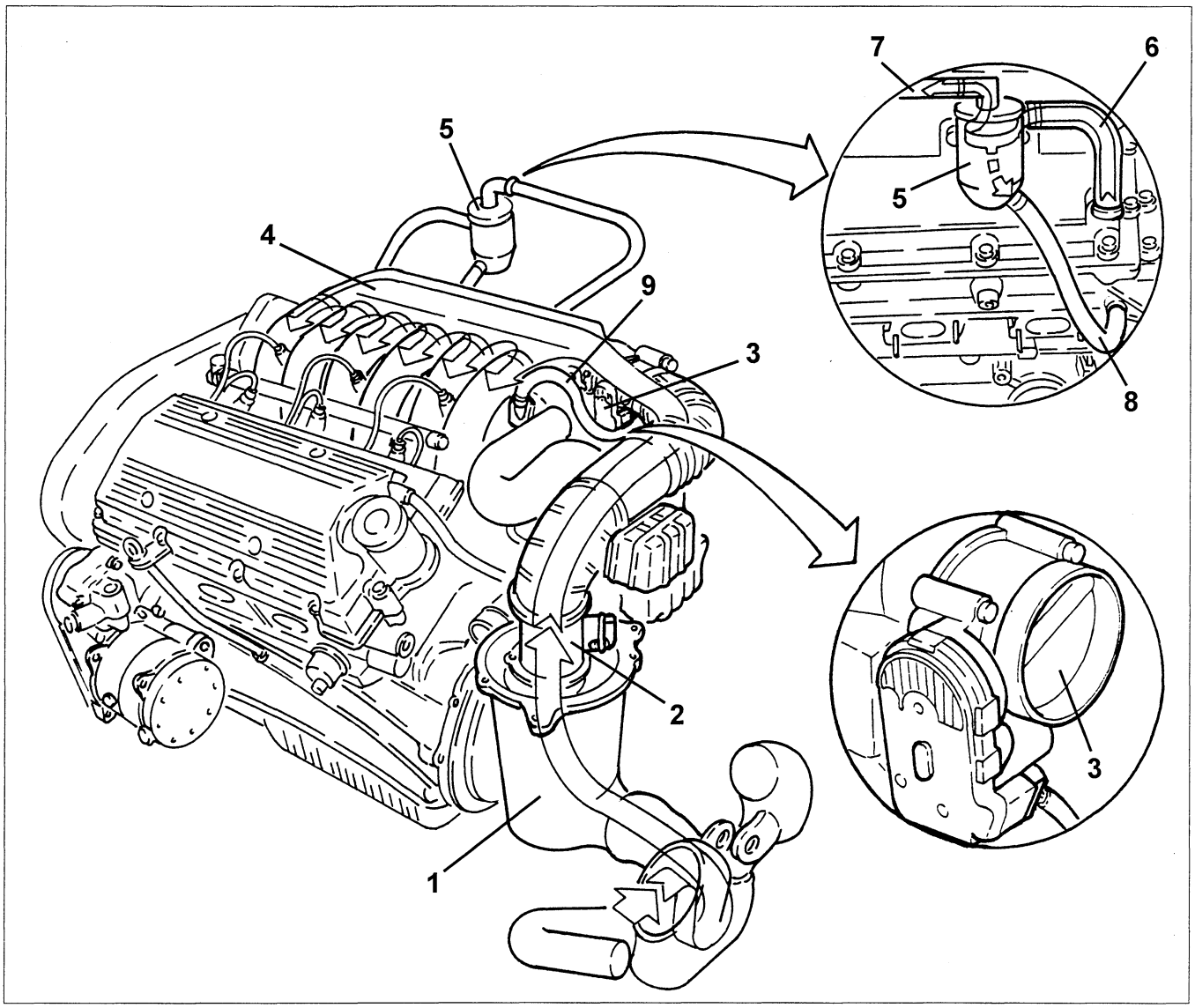

1. Air cleaner
2. Hot film flow meter
3. Throttle casing with built-in DVL.
4. Intake manifold
5. Oil vapour separator
6. Oil vapour recovery pipe
7. Oil vapour recirculation pipe
8. Condensed oil recovery pipe
9. Oil vapour recovery pipe

The air is taken in via a dynamic inlet and filtered by a cartridge element (1).
It crosses the hot film flow meter (2) and reaches the throttle casing with built-in DVL (3) via the corrugated sleeve.
"Resonators" are fitted along the intake duct.
The throttle casing with built-in DVL is controlled by the injection ECU according to the accelerator pedal potentiometer and regulates the amount of air taken in by the engine.

The fuel vapours (see specific paragraph) and the oil vapours reach the feed system. Oil vapour emission is controlled by means of a separator (5) which collects the vapours in the cylinder head via pipe (6). The temperature difference between the separator and oil vapours causes partial condensation. The condensed vapours are conveyed to the cylinder head via pipe (8). When idling, the oil vapours are conveyed via pipe (7) and at high loads, via pipe (9).

cardiagn.com

AIR CLEANER CARTRIDGE REPLACEMENT

- Make sure the ignition key is at "STOP" and disconnect the (-) battery terminal.

1. Loosen the screws and remove the engine compartment side guard.

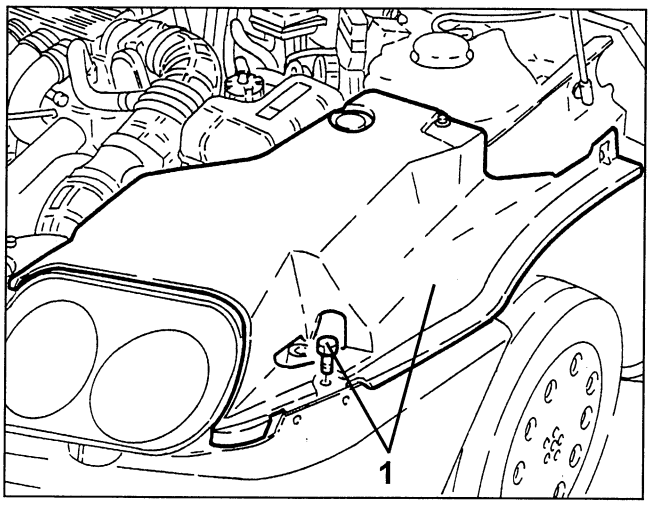

1. Disconnect the hot film flow meter electrical connection.
2. Release the corrugated sleeve elbow fastening button from the resonator.

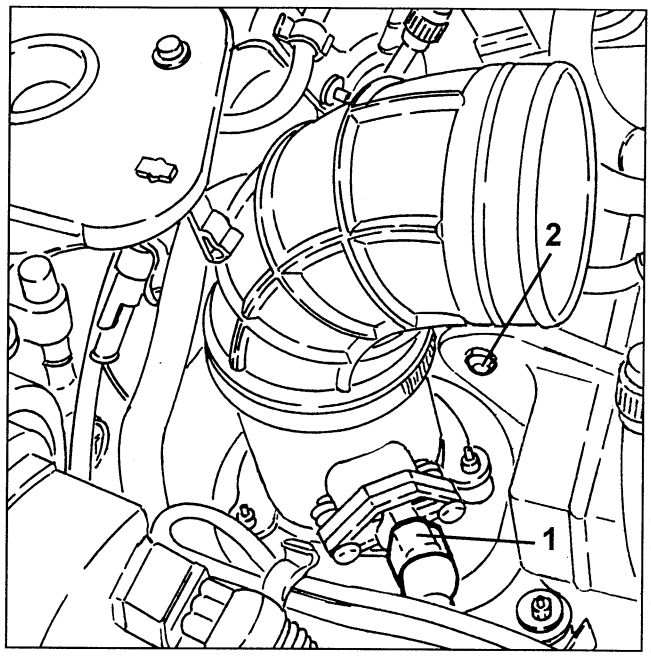

1. Loosen the fastening clips and remove the upper resonator.

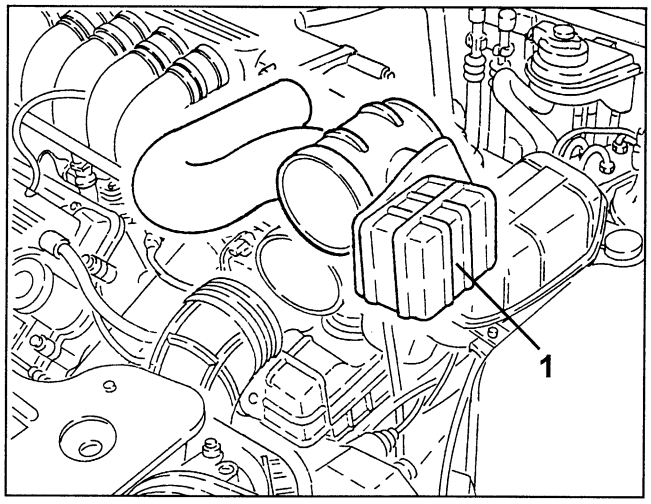

1. Loosen the fasten nuts and remove the air cleaner cover with hot film flow meter and corrugated sleeve.

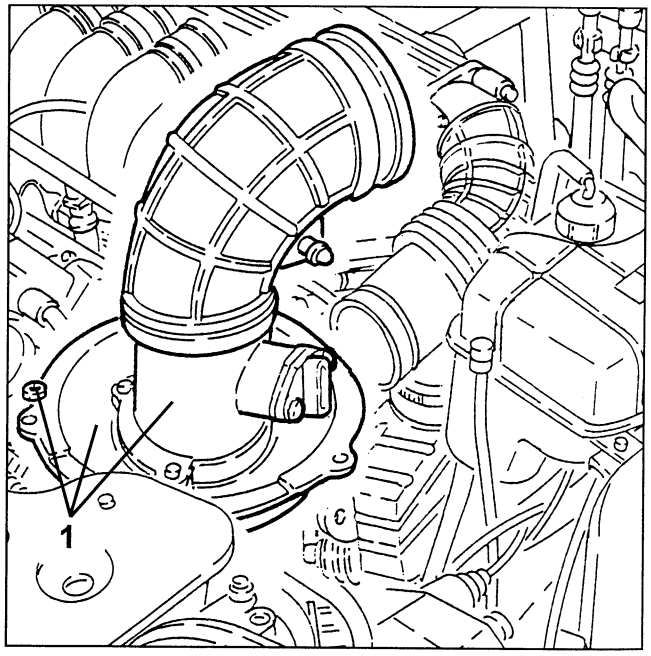

cardiagn.com

1. Remove the filtering element and manifold.

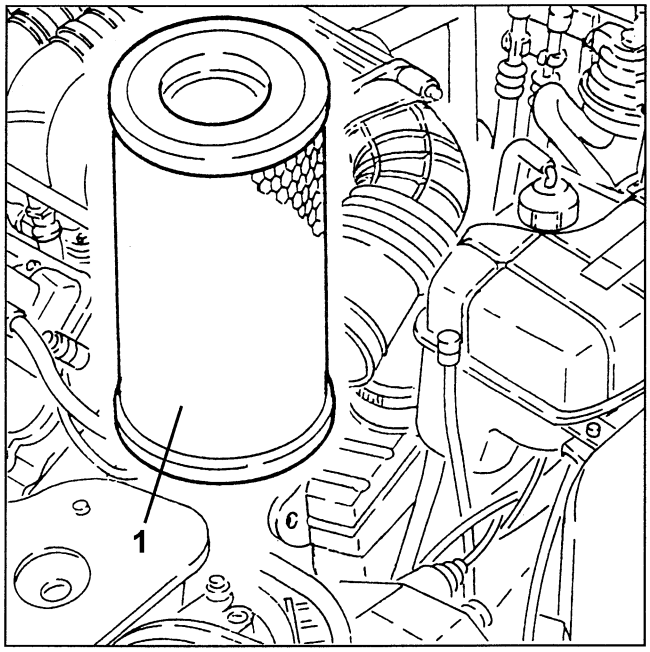

IMPORTANT: Cleaning operations can damage the filter and compromise correct engine operation.

- Refit a new air cleaner by reversing the removal sequence.

UPPER RESONATOR

REMOVAL/REFITTING

1. Loosen the screws and remove the engine compartment side guard.

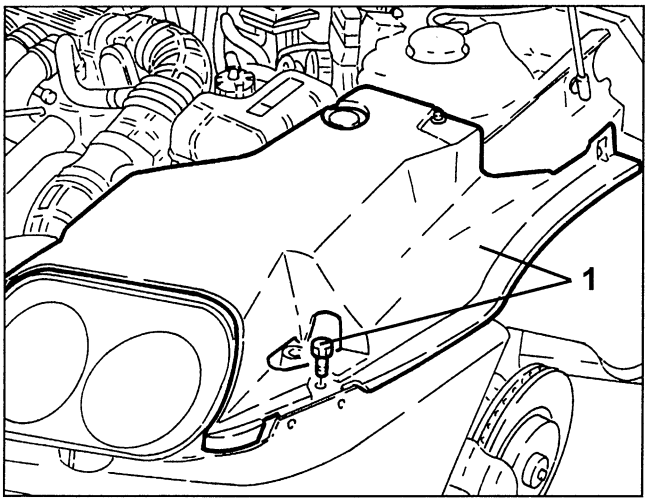

1. Loosen the fastening clips and remove the upper resonator.

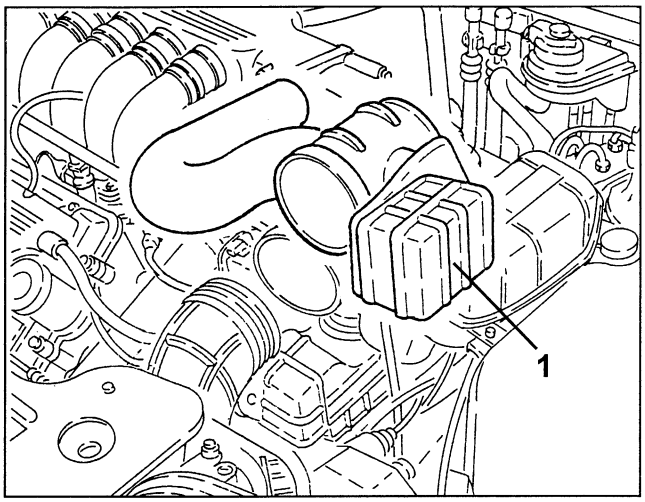

INTERMEDIATE RESONATOR

REMOVAL/REFITTING

1. Loosen the screws and remove the engine compartment side guard.

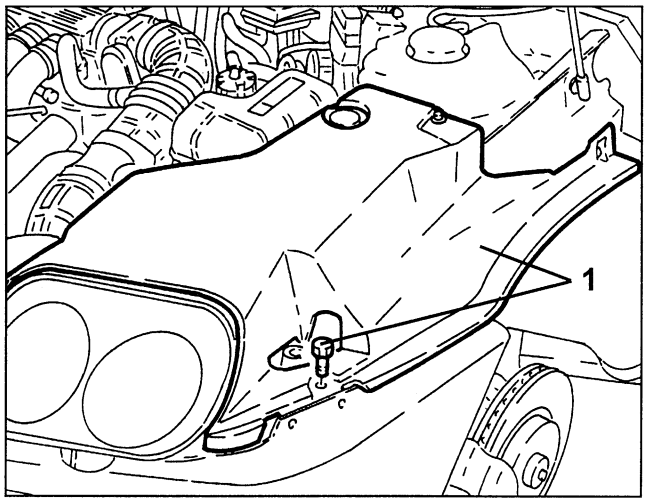

cardiagn.com

1. Loosen the clip fastening the upper resonator to the corrugated sleeve elbow.
2. Loosen the clip fastening the corrugated sleeve to the throttle casing with built-in DVL.
3. Loosen the clip and disconnect the oil vapour recirculation pipe from the corrugated sleeve.
- Release the button fastening the corrugated sleeve elbow to the resonator.
4. Remove the intermediate resonator with upper resonator and corrugated sleeve. Separate at the bench, if required.

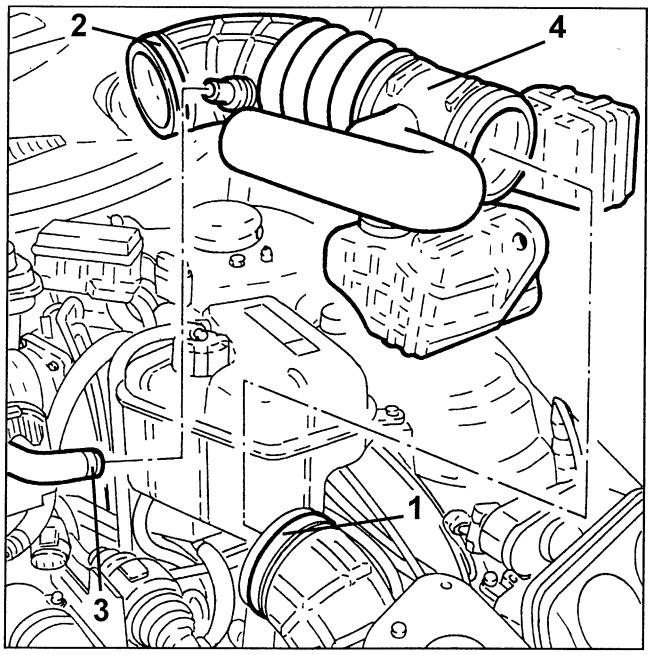

AIR CLEANER CASING

REMOVAL/REFITTING

- Position the vehicle on a shop jack.
- Remove the air cleaner cartridge (see specific paragraph).
1. Loosen the air cleaner fastening nuts.

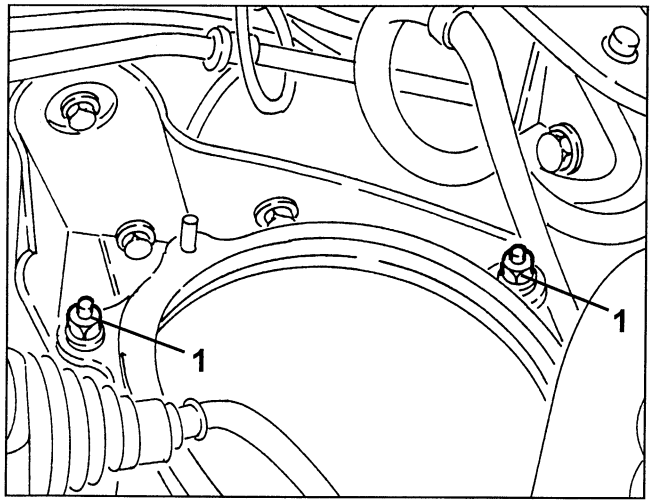

- Lift the vehicle.
1. Loosen the screws and nut and then remove the air filter lower guard.

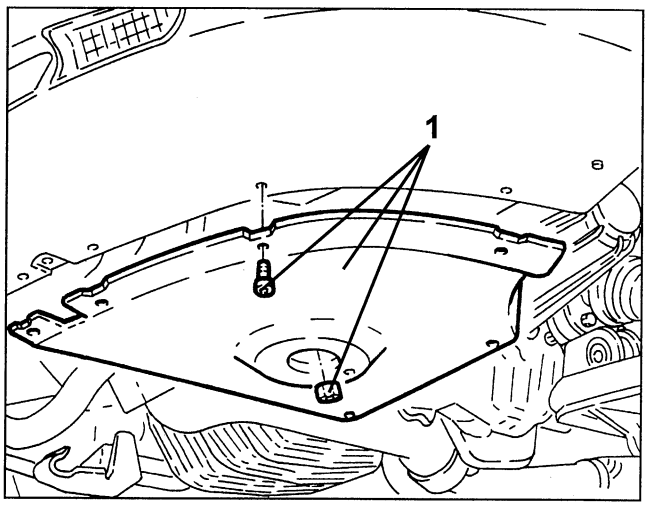

- Release the air cleaner casing from the lower resonator sleeve.
1. Lower the vehicle and remove the air cleaner casing.

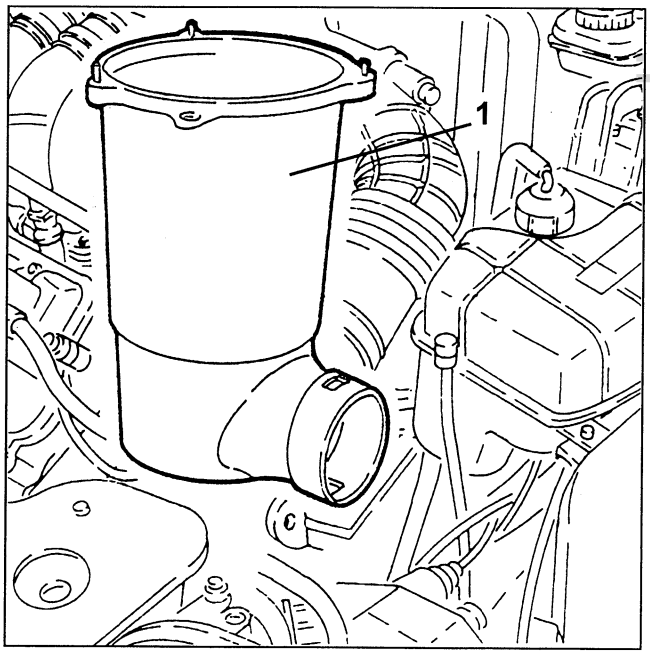

cardiagn.com

THROTTLE CASING WITH BUILT-IN DVL

The device is fitted on the intake manifold and controls the amount of engine intake air. The ECU controls the throttle opening by means of a direct current motor built into the throttle casing according to the signal from the accelerator potentiometer. The throttle can be opened from 0° to 80°, including idling ratio.
The throttle casing with built in DVL is equipped with two potentiometers which back each other up. If the potentiometers fail or if power is cut, the ECU reduces engine torque as follows:
- if the accelerator pedal is fully depressed, the ECU cuts off feed to one or more cylinders to reach a maximum engine ratio of 2500 rpm
- if the accelerator pedal is in an intermediate position, the ECU cuts feed to one or more cylinders to reach an engine ratio lower than 2500 rpm.
After replacing either the throttle casing with built-in DVL or the injection ECU, a self-learning procedure is required (see specific paragraph).

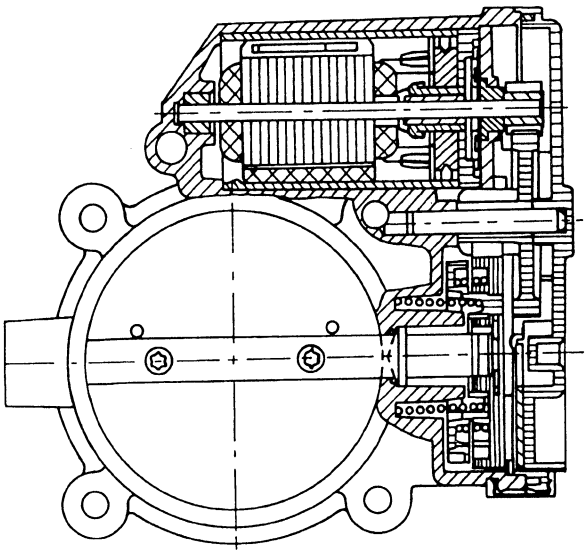

REMOVAL/REFITTING

- Make sure the ignition key is at "STOP" and disconnect the (-) battery terminal.
1. Disconnect the oil vapour recirculation pipe from the corrugated sleeve.
2. Loosen the clips and remove the corrugated sleeve.

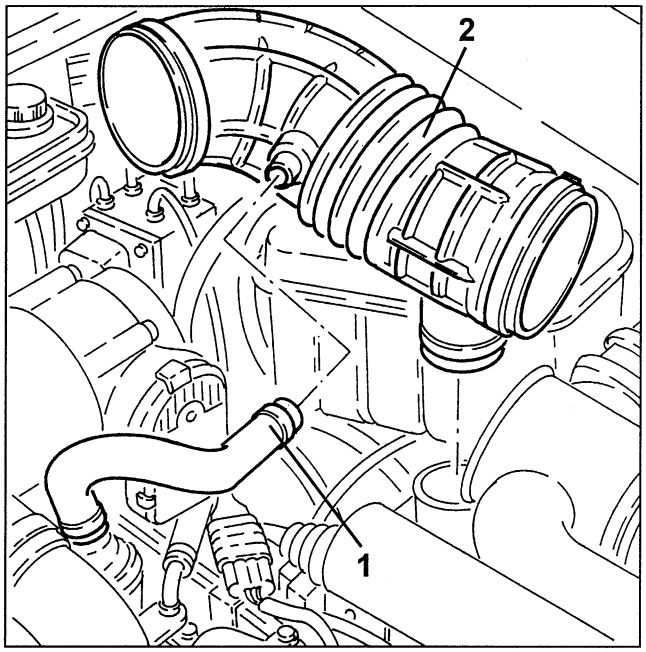

1. Disconnect the electrical connection from the throttle casing with built-in DVL.

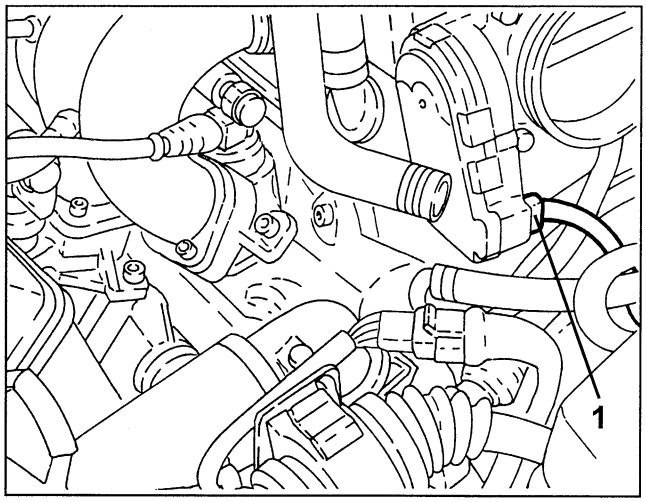

cardiagn.com

1. Loosen the fastening screws and remove the throttle casing with built-in DVL and seal.

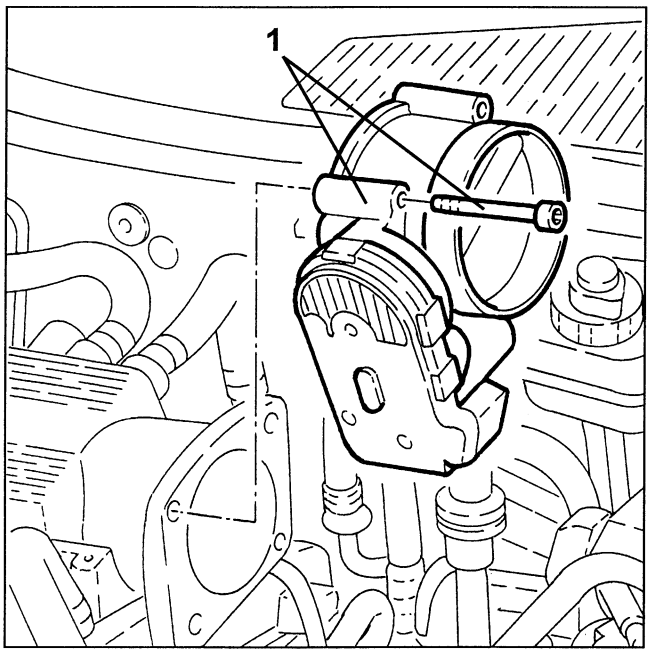

IMPORTANT: After refitting, repeat the throttle casing with built-in DVL self-learning procedure described below.

IMPORTANT: During this procedure (from when the instrument panel is powered to the end of the self-learning procedure), do not press either the accelerator pedal, the brake pedal or the clutch pedal.

- Make sure the ignition key is at STOP.
- Connect tool no. 1.806.365.000 to the diagnostic socket and turn the knob to 3.
- Connect Examiner.
- Turn the ignition key to MAR.
- Wait for 60 seconds for the ECU to check the throttle internal spring and the maximum/minimum angular positions.
- Turn the ignition key to STOP.
- Wait for 15 seconds for the ECU to record the learnt values in the EPROM.
- With Examiner, check whether the idling self-learning procedure was ended correctly (SELF-LEARNING OUTCOME - OK; SELF-LEARNING STORAGE - Done).

NOTE: If the self-learning procedure is not correct, take the key to STOP and repeat the procedure. If the incorrect outcome persists, check the connection to the diagnostic socket and tool operation.

AIR FLOW METER

The "hot film" flow meter is located on the intake air sleeve.

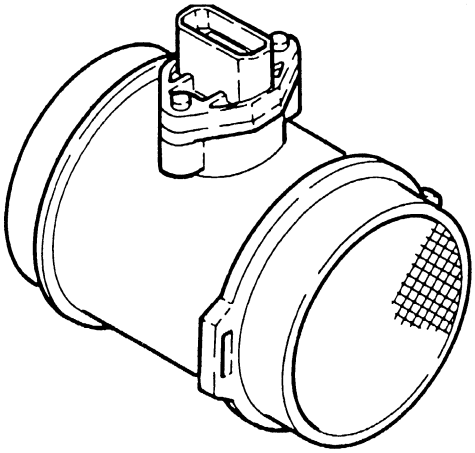

An intake air temperature sensor is built into the flow meter.

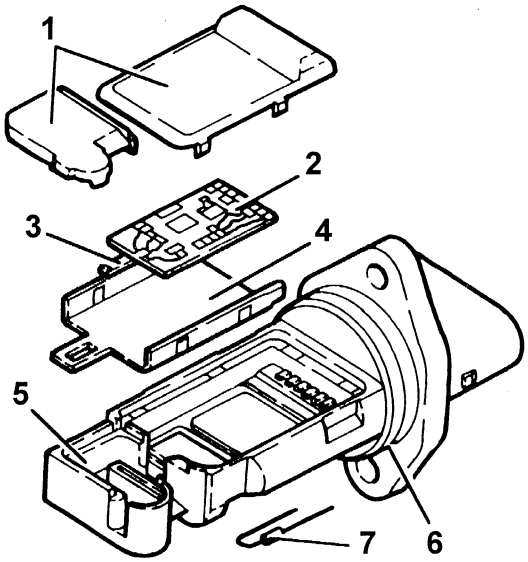

1. Covers
2. Electronic board
3. Sensor
4. Support plate
5. Bracket
6. O-Ring
7. Temperature sensor

cardiagn.com

IMPORTANT: The air flow meter cannot be disassembled.

The operating principle consists of a heated membrane film in a measuring duct through which the engine intake air flows.
The film is maintained at constant temperature (approximately 120°C warmer than the intake air temperature) by a resistance.
The air flow in the duct tends to take heat from the film.
Consequently, a certain current is required by the resistance to keep the temperature.
This current is measured by means of a Wheatstone jumper and is proportional to the air flow.
This air flow meter directly measures the air mass (and not volume) thus eliminating problems related to temperature, altitude, pressure, etc.

REMOVAL/REFITTING

- Make sure the ignition key is at "STOP" and disconnect the (-) battery terminal.
1. Loosen the screws and remove the engine compartment side guard.

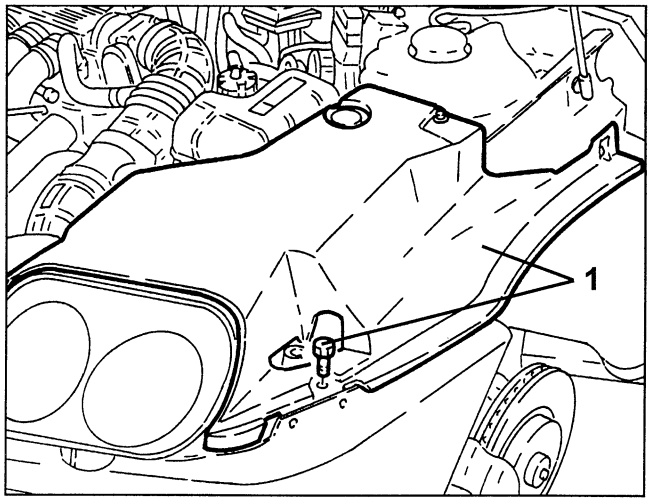

1. Loosen the fastening clips and remove the upper resonator.

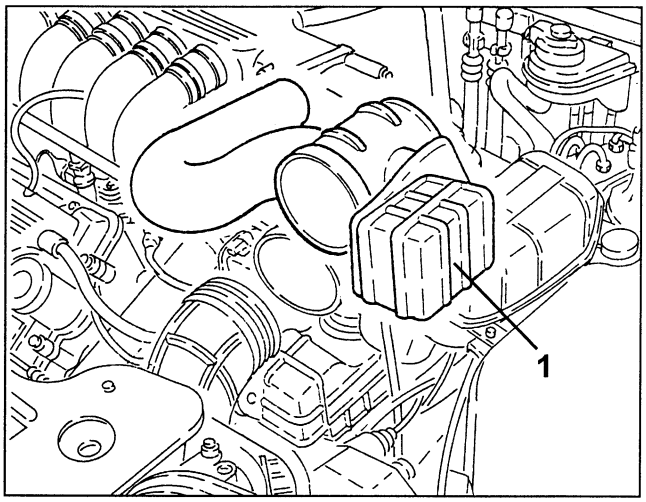

1. Disconnect the hot film flow meter electrical connection.
2. Release the corrugated sleeve elbow fastening button from the resonator.

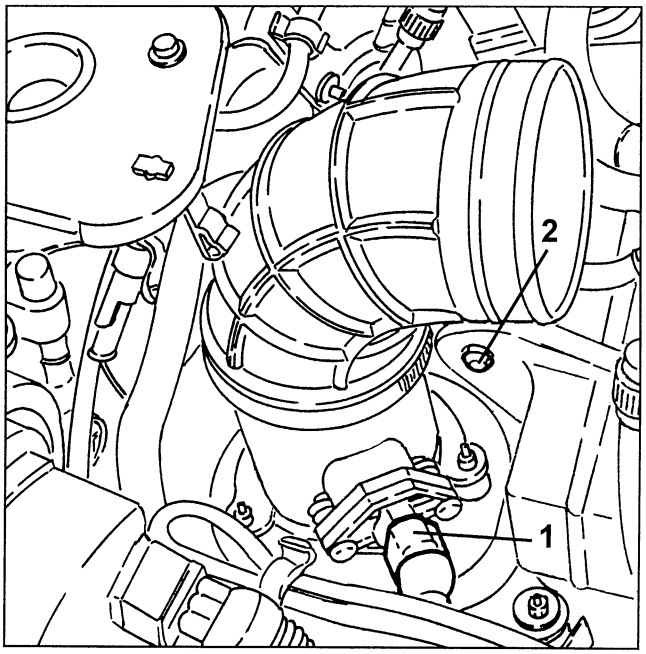

cardiagn.com

1. Loosen the fasten nuts and remove the air cleaner cover with hot film flow meter and corrugated sleeve.

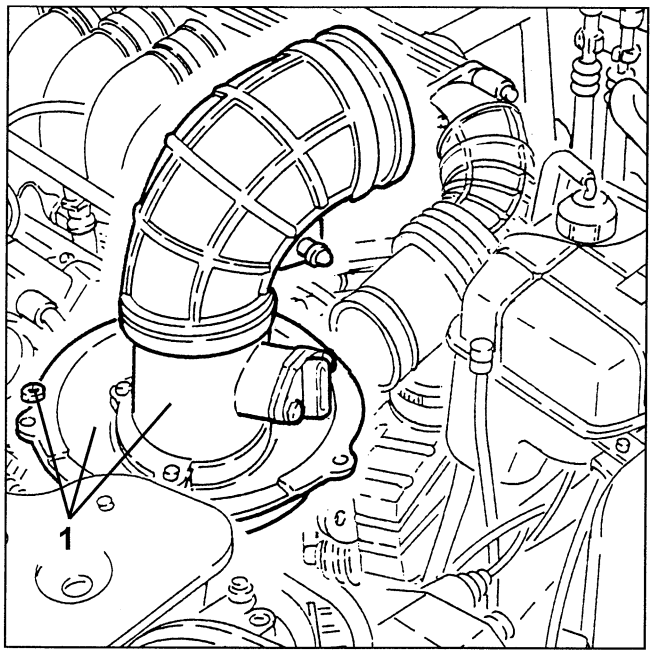

- At the bench, separate the hot film flow meter from the air filter cover and from the corrugated sleeve elbow.

INTAKE MANIFOLD

REMOVAL/REFITTING

- Make sure the ignition key is at "STOP" and disconnect the (-) battery terminal.
1. Disconnect the corrugated sleeve from the throttle casing with built-in DVL.
2. Disconnect the electrical connection from the throttle casing with built-in DVL.

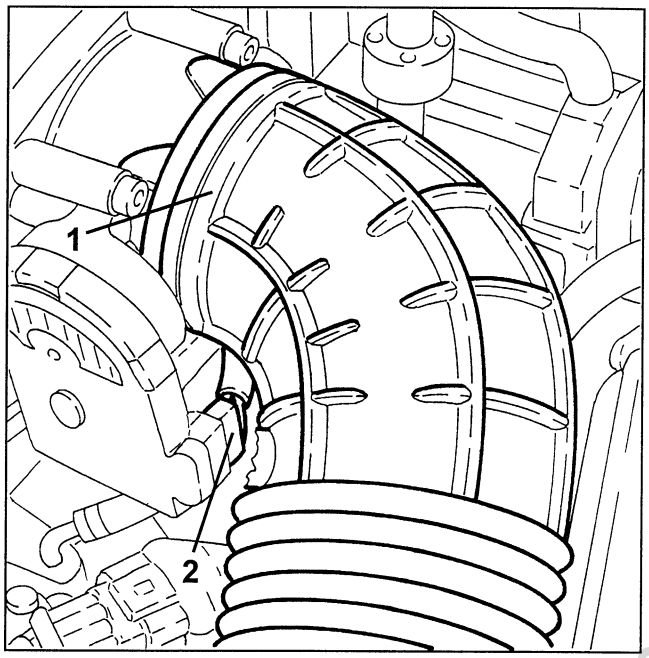

1. Disconnect the brake booster vacuum pipe from the intake manifold.
2. Disconnect the fuel vapour recovery pipe from the intake manifold.
3. Disconnect the oil vapour recirculation pipe from the intake manifold.

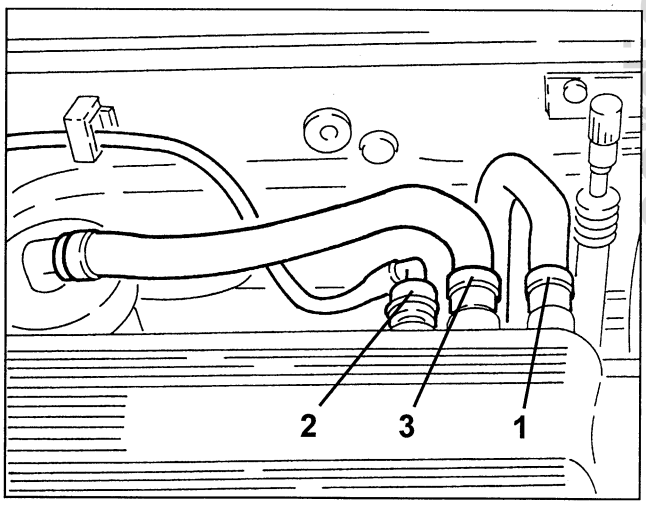

cardiagn.com

1. Disconnect the oil vapour recovery pipe from the right-hand cylinder head tappet cover.
2. Loosen the fastening screws and move the oil vapour separator from the intake manifold.

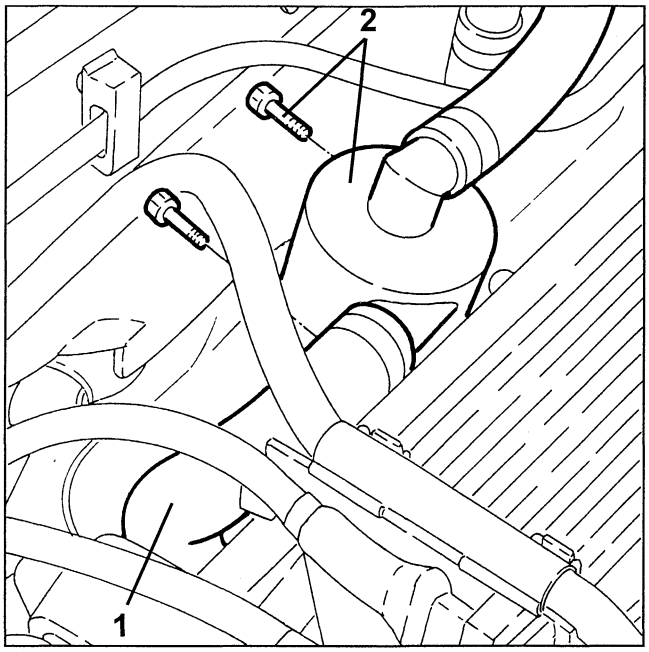

1. Release the fuel delivery pipe from the bracket.
2. Loosen the fastening screws and move the fuel feed delivery pipe bracket with front knock sensor electrical connection aside.

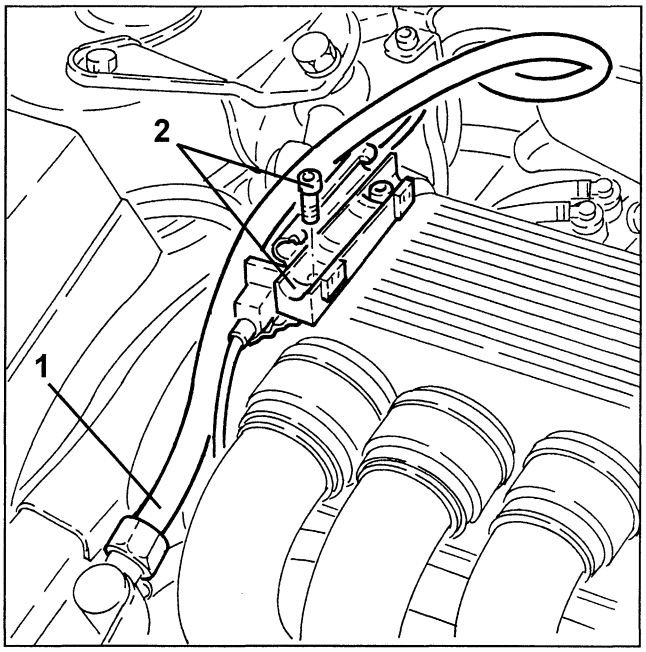

1. Loosen the screw and remove the intake manifold connection from the engine tie-rod bracket.

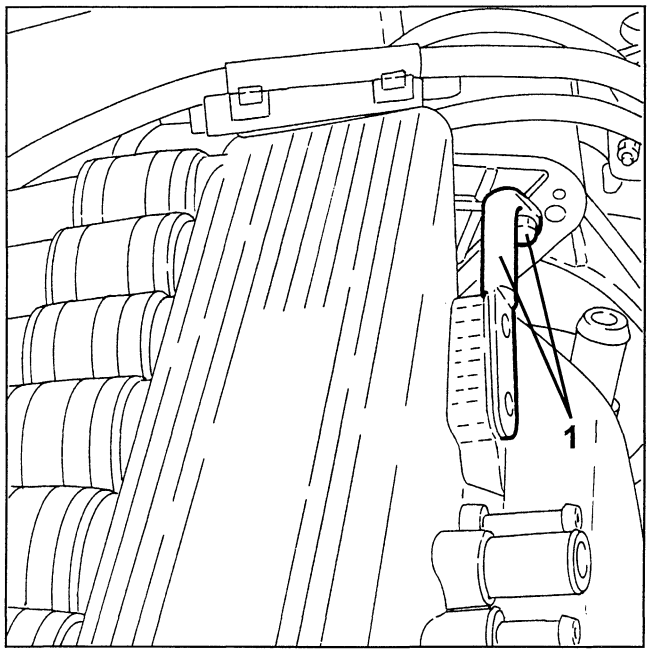

1. Loosen the intake manifold duct clips.
2. Loosen the intake manifold duct fastening screws.
- Release the ducts from the intake manifold.

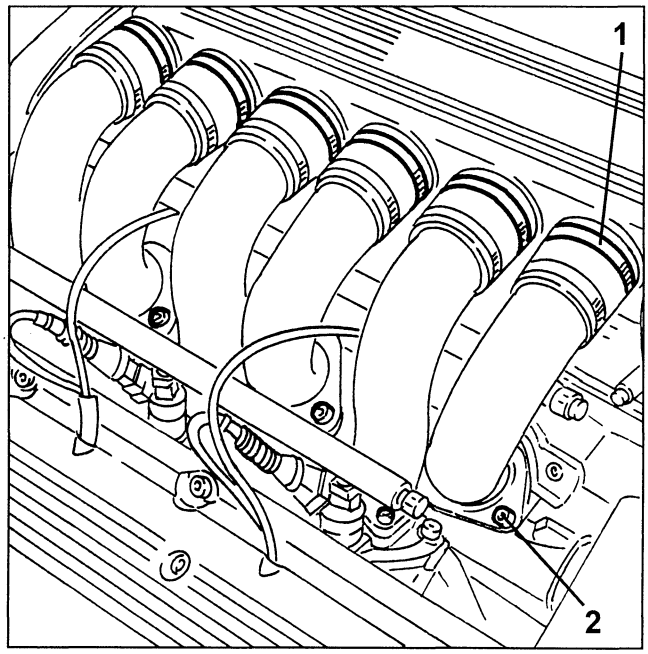

cardiagn.com

1. Loosen the fastening screws and remove the intake manifold.

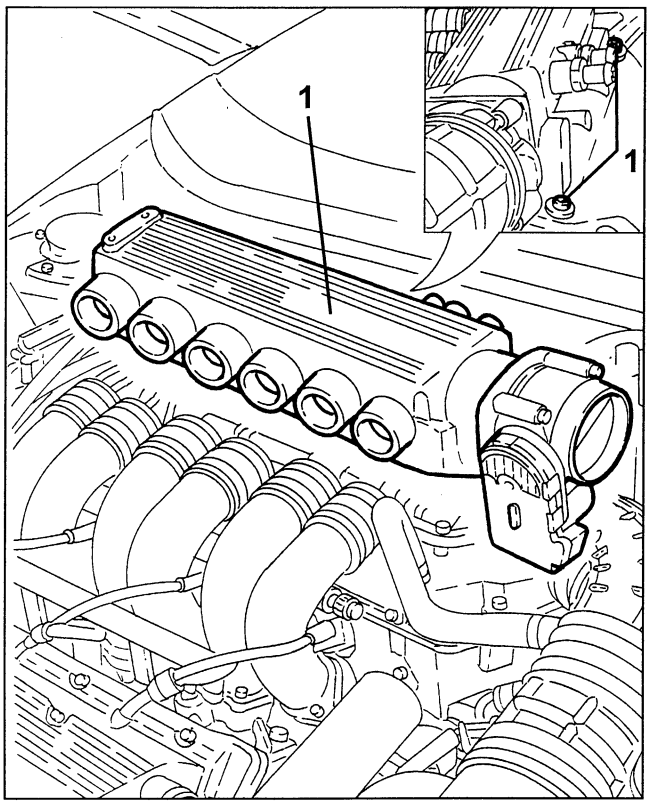

cardiagn.com

DESCRIPTION

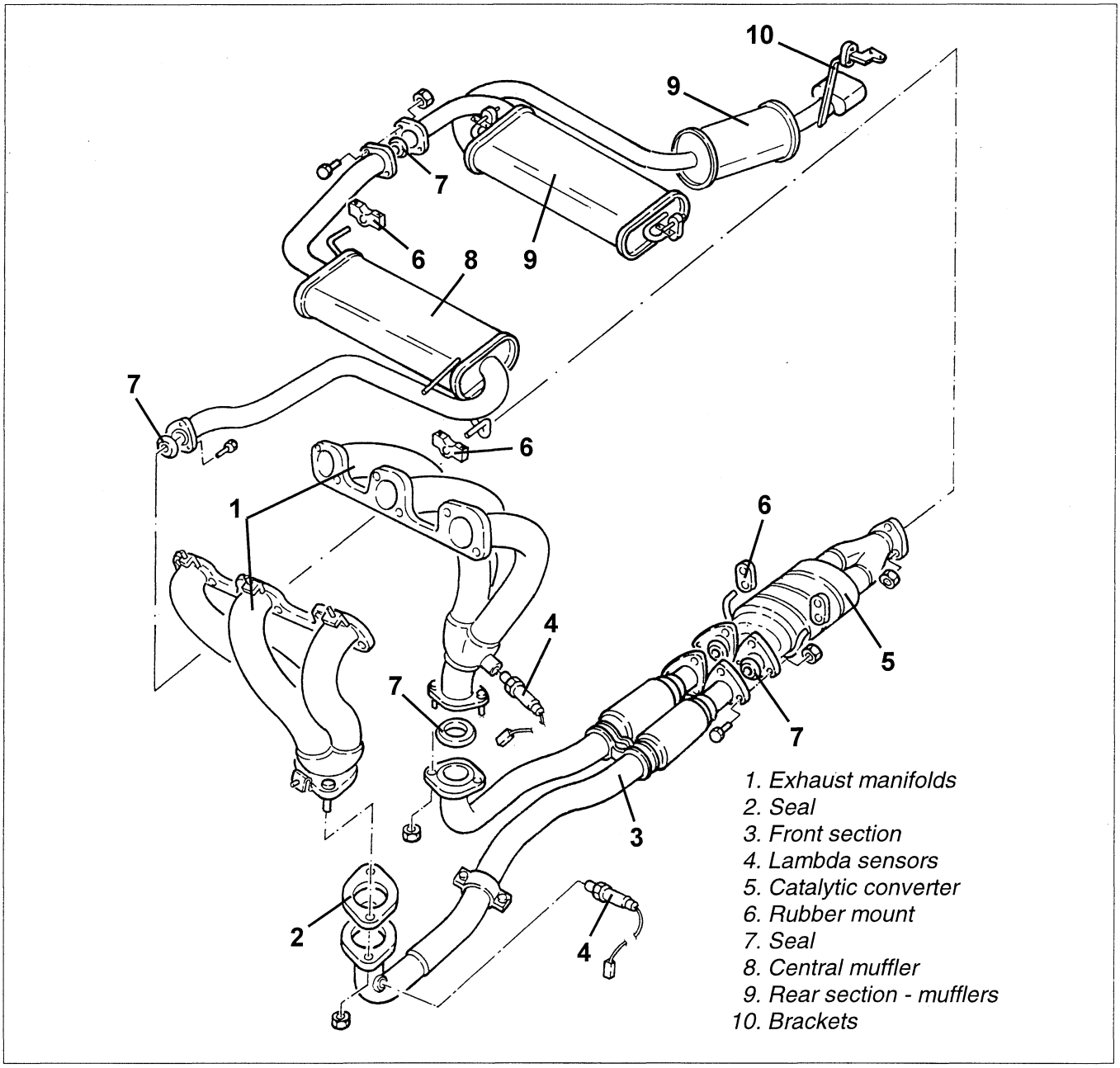

The gas from the cylinder heads are conveyed via the manifolds (1) to the front exhaust pipe section (3) where to rubber parts limiting the transmission of vibrations.
From the front section the exhaust gases are sent to the three way catalytic converter (5) where most of the polluting substances are transformed.
The exhaust gasses go from the catalytic converter and cross three specific mufflers (8) and (9).

The connections between the various sections of the pipe are ensured by flanges and seals. The system is linked to the underbody by means of rubber mounts. Heat radiation towards the underbody - which is considerable due to the catalytic converter - is limited by a set of firewalls located between the exhaust pipe and the underbody. The system is equipped with two lambda sensors (see "Lambda sensor" description).

cardiagn.com

LAMBDA SENSOR

The exhaust system is equipped with two "planar" lambda sensors fitted on the front section of the exhaust pipe.
One lambda sensors controls the right-hand combustion (cylinders 1 - 2 - 3) while the other controls the left-hand side combustion (cylinders 4 - 5 - 6).
The injection ECU identifies the mixture compositions (lean or rich) according to the lambda sensor output voltage.
The ECU adjusts the amount of injected fuel to ensure optimal composition of the mixture ($\lambda = 1$), to create ideal conditions for the treatment of exhaust fumes in the catalytic converter.
If the mixture is too rich ($\lambda < 1$) the amount of fuel is reduced and if the mixture is too lean ($\lambda > 1$) the amount of fuel is increased.

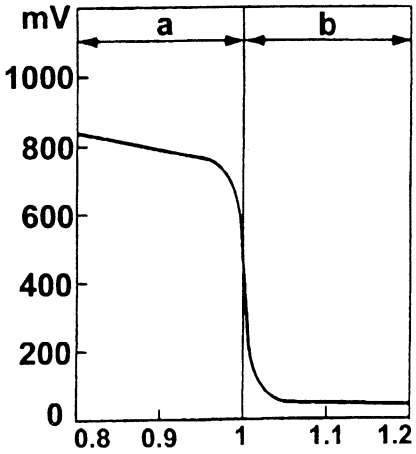

a. Rich mixture (no air)
b. Lean mixture (excessive air)

The lambda sensor, in contact with the exhaust fumes, generates an electrical signal with a voltage which varies according to the concentration of oxygen in the fumes.
The voltage is characterised by a sudden variation with the composition of the mixture differs from $\lambda = 1$.
The lambda sensor heating is governed by the injection ECU proportionally according to exhaust fume temperature.
This avoids thermal shocks to the ceramic casing due to the contact with condensed water in the exhaust fumes when the engine is cold.

The measuring cell and the heater and built-into the "planar" ceramic element (layered) with the advantage of rapid cell heating to allow a "closed loop" control ($\lambda = 1$) within 10 seconds from when the engine is started.

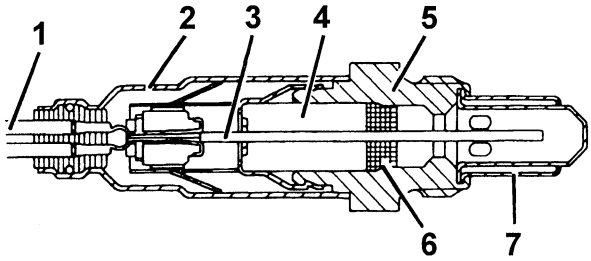

1. Connection wire
2. Protective sleeve
3. Planar sensor element
4. Ceramic supporting tube
5. Sensor seat
6. Ceramic seal
7. Protection pipe

The lambda sensor operation is based on the principle of a oxygen concentration cell and solid electrolyte. The surfaces of the measuring cells are covered with noble material micro-pore layers.

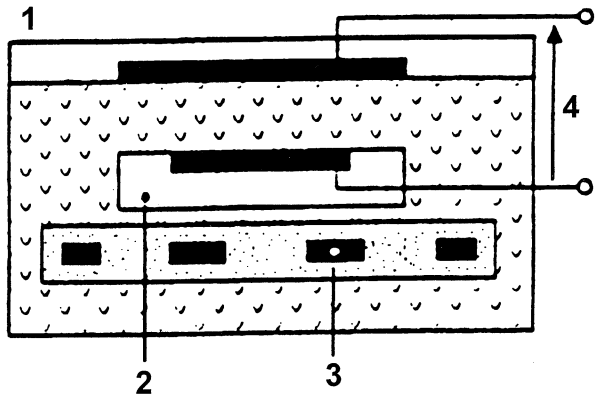

1. Exhaust fumes
2. Reference air passage
3. Heater
4. Lambda sensor voltage

cardiagn.com

RIGHT-HAND LAMBDA SENSOR REMOVAL/REFITTING

- Position the vehicle on a shop jack.
- Make sure the ignition key is at "STOP" and disconnect the (-) battery terminal.

1. Disconnect the right-hand lambda sensor electrical connection and release the respective wiring from the fastening clips.

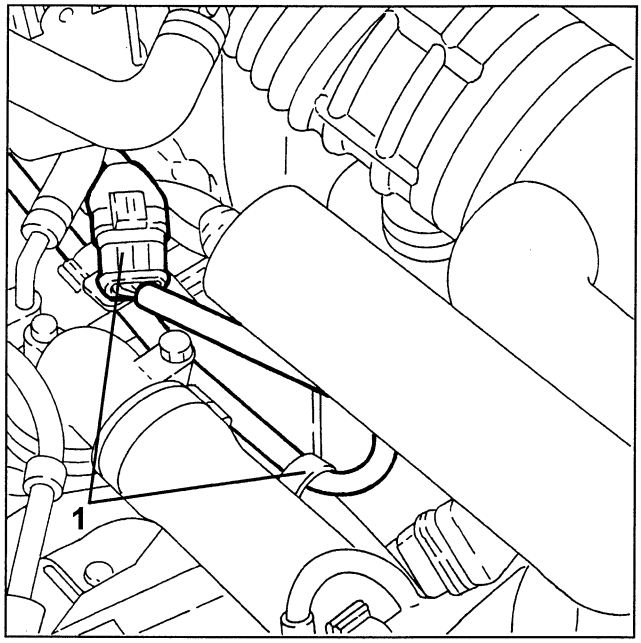

- Lift the vehicle.

1. Loosen the nuts and the screw. Then remove the exhaust pipe fastening collar from the rubber mount.
2. Loosen and remove the right-hand lambda sensor with electrical wiring.

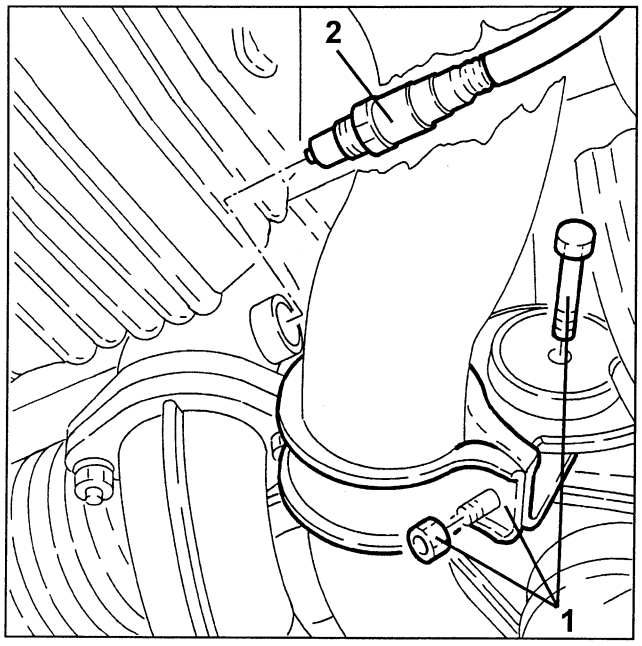

LEFT-HAND LAMBDA SENSOR REMOVAL/REFITTING

- Position the vehicle on a shop jack.
- Make sure the ignition key is at "STOP" and disconnect the (-) battery terminal.

1. Disconnect the left-hand lambda sensor electrical connection.

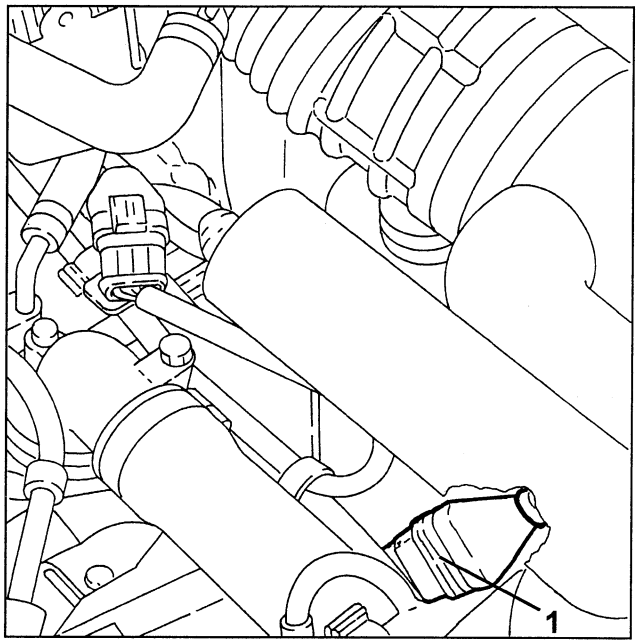

1. Release the left-hand lambda sensor wiring from the fastening clips.
2. Loosen and remove the left-hand lambda sensor with electrical wiring.

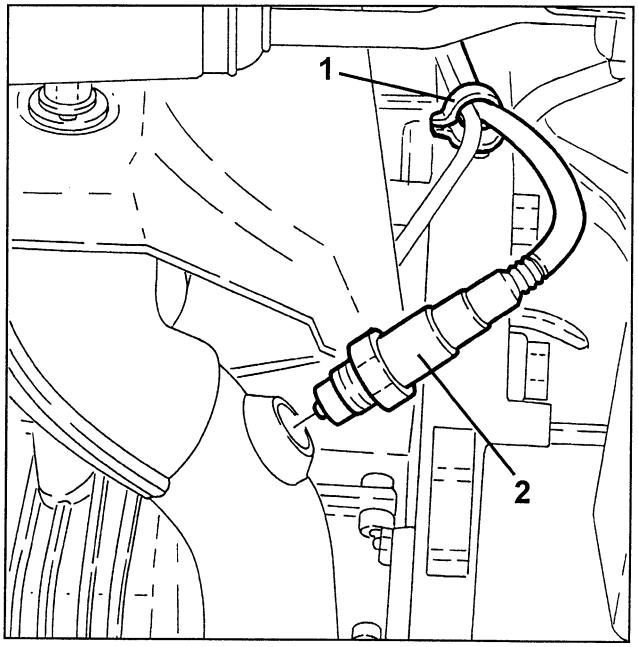

cardiagn.com

RPM AND PHASE SENSOR

This sensor is fitted on the crankcase and faces the phonic wheel on the flywheel.
It is inductive, i.e. it works by means of the variations in the magnetic field generated by the passage of the phonic wheel teeth (60 - 2 teeth).
The injection ECU uses the rpm sensor signal to:
- define revolution speed
- define crankshaft angular position.

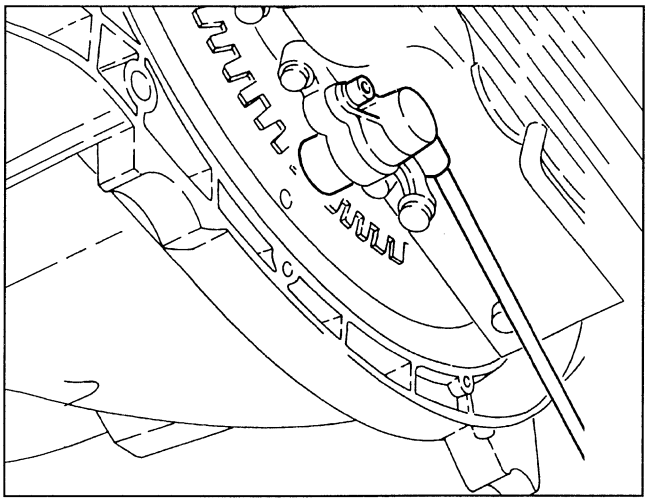

Operation
The switchover from full to none, due to the presence or the absence of a tooth, causes magnetic flow variations which generate an induced alternated voltage by counting the teeth on the phonic wheel.
The frequency and the width of the voltage sent to the ECU provides the engine angular speed measurement.

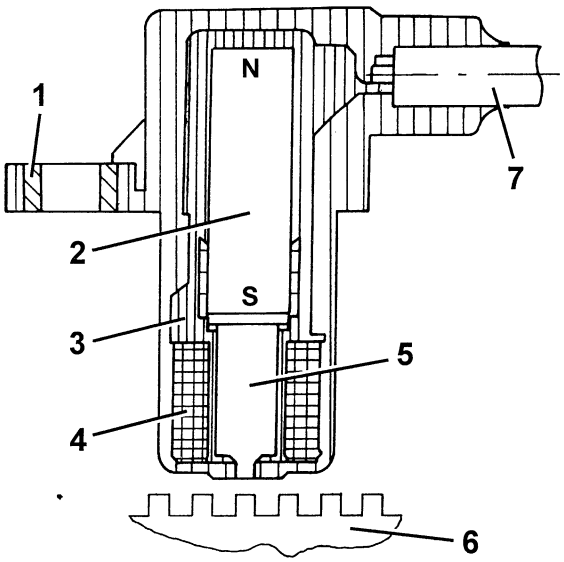

1. Brass bushing
2. Permanent magnet
3. Plastic sensor casing
4. Coil winding
5. Pole core
6. Crown or phonic wheel
7. Co-axial double wire or electrical connection

The prescribed gap between the sensor tip and the phonic wheel for correct signals must be between **0.8** and **1.5 mm**.
The gap cannot be adjusted. If the gap is out of tolerance, check intactness of sensor and phonic wheel.

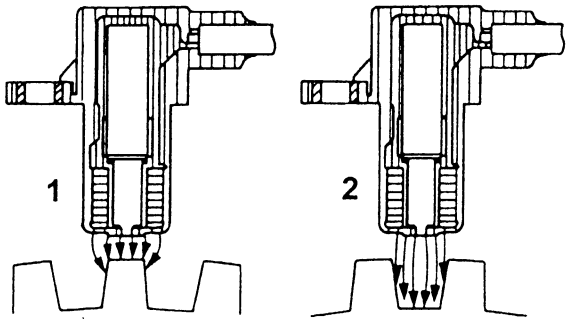

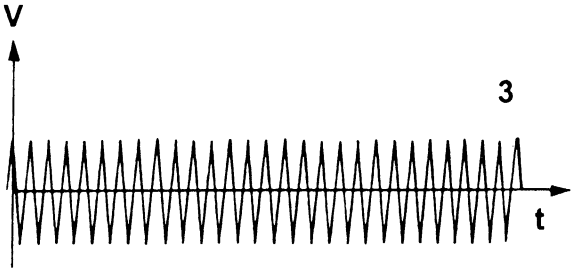

1. Maximum magnetic flow
2. Minimum magnetic flow
3. Induced alternating voltage trend.

REMOVAL/REFITTING

- Position the vehicle on a shop jack.
- Make sure the ignition key is at "STOP" and disconnect the (-) battery terminal.

cardiagn.com

1. Disconnect the left-hand lambda sensor electrical connection.

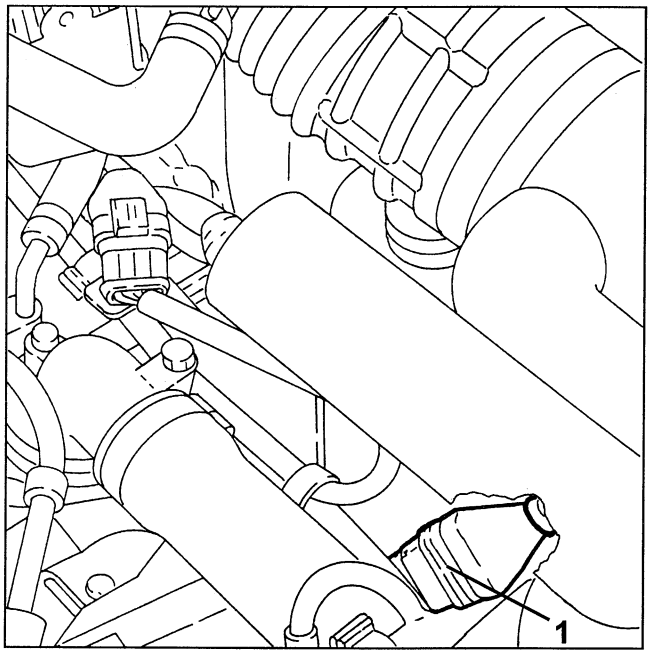

1. Disconnect the rpm and phase sensor electrical connection and release the respective electrical wiring from the fastening clips (where relevant).

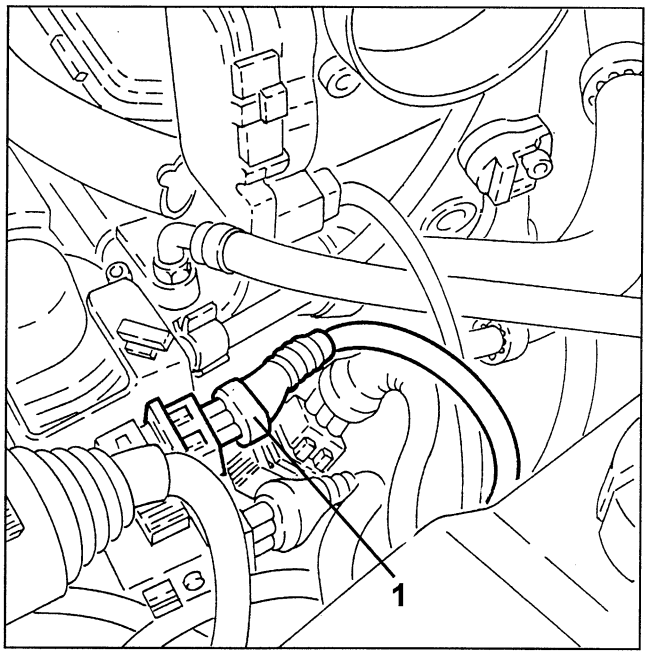

1. Loosen the clips and remove the corrugated sleeve with resonators after releasing the intermediate resonator from the fastening pin.

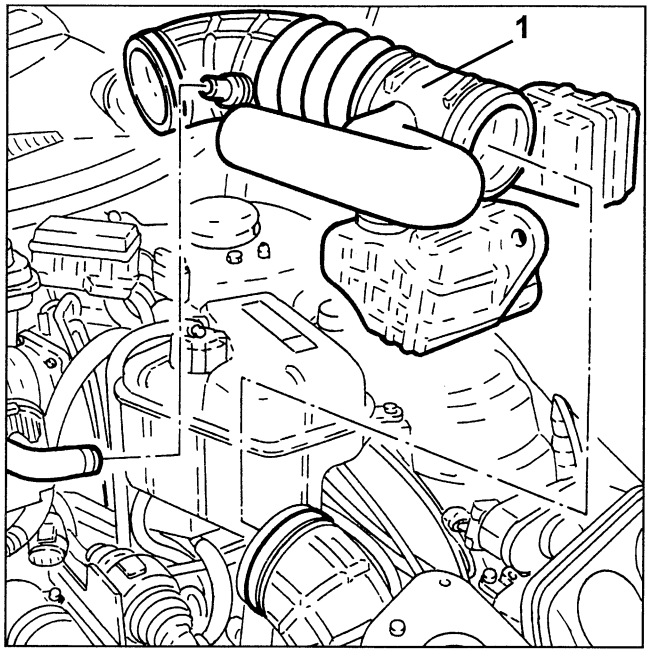

- Lift the vehicle.
1. Loosen the exhaust pipe fastening collar from the rubber mount.
2. Release the left-hand lambda sensor electrical wiring from the fastening clip.
3. Loosen the exhaust manifold fastening nuts and lower the front exhaust pipe section as required.

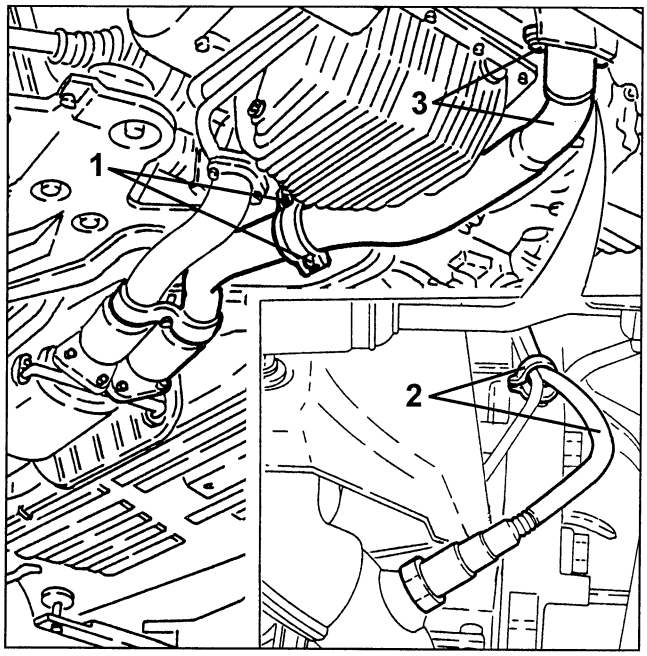

cardiagn.com

1. Loosen the fastening screws and remove the rpm and phase sensor guard.

1. Loosen the fastening screw and remove the rpm and phase sensor.
- If required, loosen the fastening screws and remove the rpm and phase sensor from its bracket.

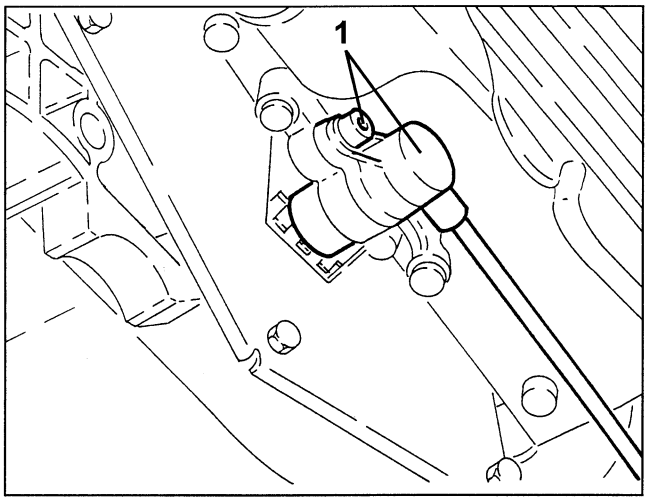

ENGINE COOLANT TEMPERATURE SENSOR

This sensor is fitted on the thermostat cap and measures the coolant temperature by means of a double NTC thermistor with negative resistance coefficient. One NTC thermistor sends a signal to the injection ECU while the other sends a signal to the instrument panel temperature gauge and warning light.

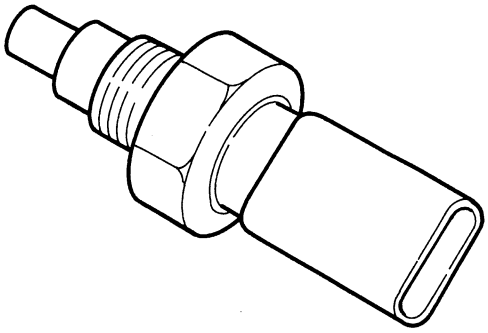

The sensor applies semiconductor technology. Consequently, the resistive value decreases as the sensor temperature increases with the coolant temperature.
The resistance variation is not linear: consequently, it is higher at low temperatures with respect to higher temperatures.

REMOVAL/REFITTING

- Make sure the ignition key is at "STOP" and remove the (-) battery terminal.
- Loosen the screws and remove the left engine compartment guard.
1. Loosen the clips and remove the corrugated sleeve with resonators after releasing the intermediate resonator from the fastening pin.

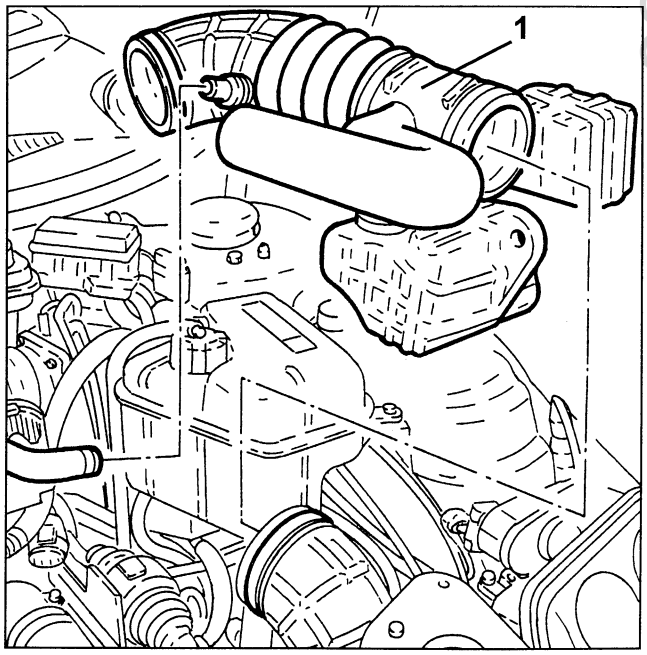

Cardiagn.com

1. Disconnect the injection wiring and move it aside.

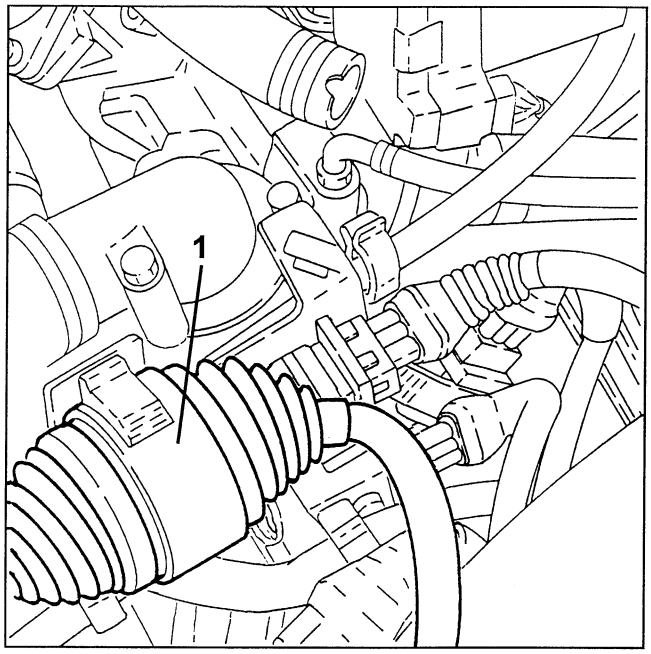

1. Disconnect the engine coolant sensor electrical connection.
2. Loosen and remove the engine coolant sensor from the thermostat cup.

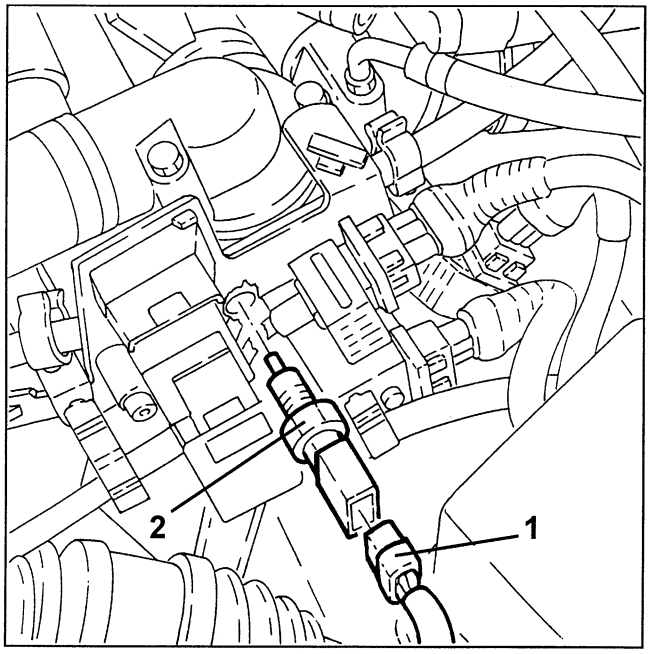

CAM ANGLE SENSOR

This Hall effect sensor is fitted on the right-hand cylinder head and faces the disc on the right-hand cylinder head rear exhaust side.

The disc is fitted with a pin which allows the sensor to signal the engine stroke position.
The injection ECU uses the signal to acknowledge TDCs at the end of compression stroke.

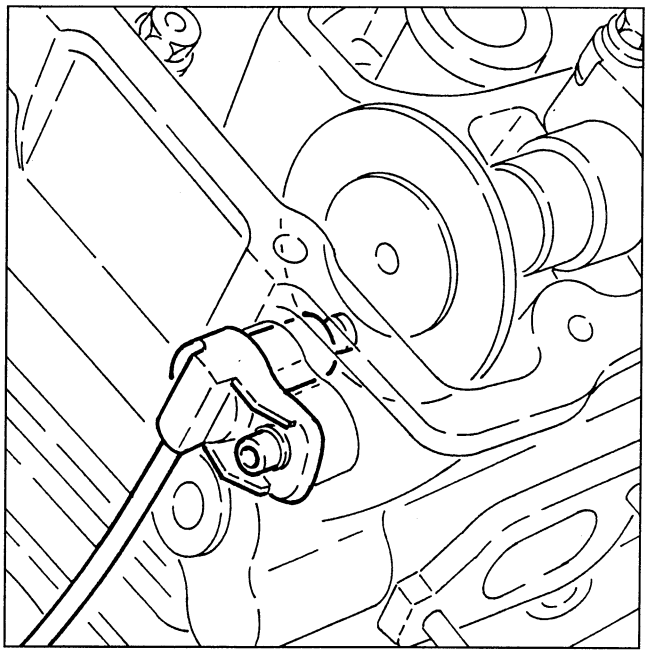

Operation
A semiconductor layer is crossed by current and submerged in a normal magnetic field (perpendicular force lines with respect to the current) generates a potential difference at the poles called "Hall" voltage.
When disc (1) revolves, pin (3) crosses sensor (2) and blocks the magnetic field.
This generates a low output signal. On the other hand, when sensor (2) reads the pin (3), the output signal is up.
Consequently, the up signal alternates with the down signal once every two engine revolutions, precisely when cylinder 1 is 58° before TDC.

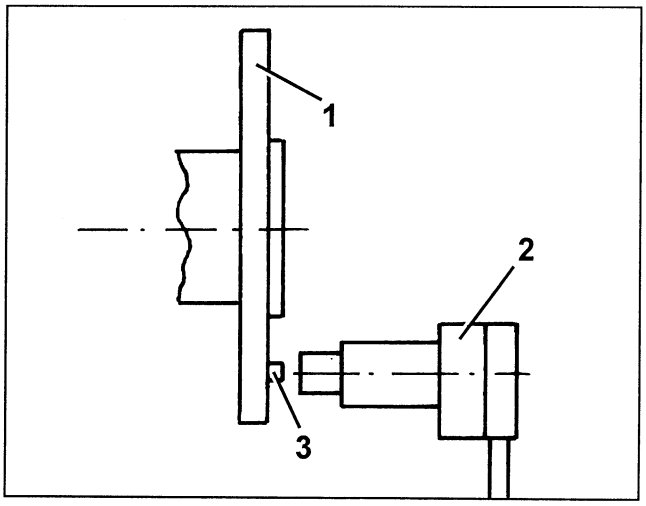

cardiagn.com

REMOVAL/REFITTING

- Make sure the ignition key is at "STOP" and disconnect the (-) battery terminal.
- Loosen the screws and remove the left engine compartment guard.

1. Loosen the clips and remove the corrugated sleeve with resonators after releasing the intermediate resonator from the fastening pin.

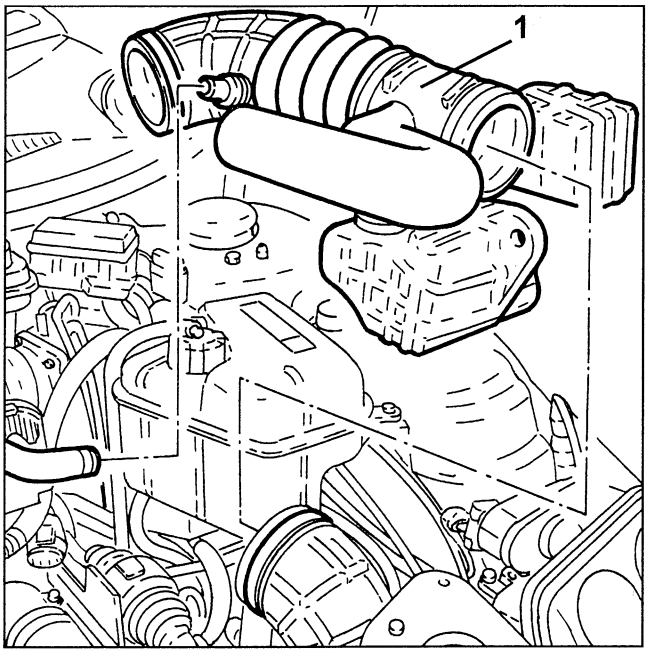

1. Disconnect the cam angle sensor electrical connection.
2. Loosen the fastening screw and remove the cam angle sensor with electrical wiring.

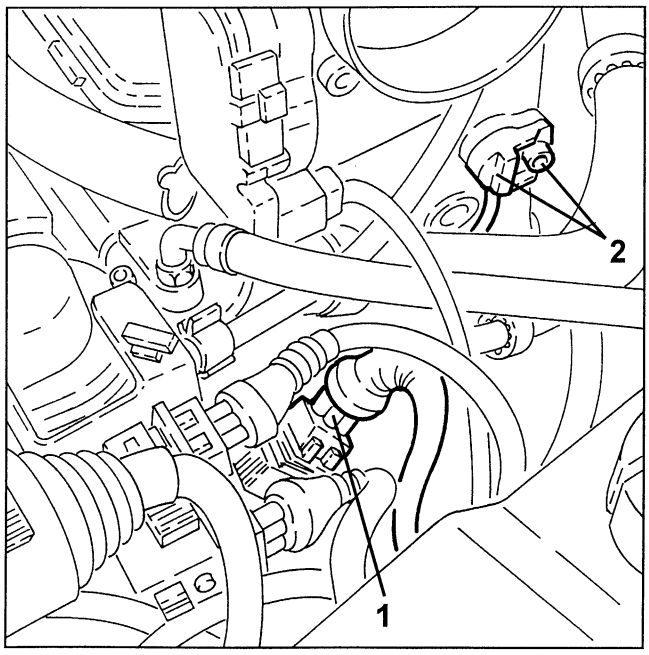

ACCELERATOR PEDAL POTENTIOMETER

The accelerator pedal is fitted with two built-in potentiometers:
- one main potentiometer
- one back up potentiometer.

The injection ECU performs the following recovery strategies:
- if one of the two potentiometers fails, the throttle is opened to a maximum of 40° over a long time
- if both potentiometers fail completely the throttle is closed.

The accelerator pedal is adjusted by excluding the respective stop (which should not exceed the notch).

Operation

The sensor consists of a casing (1) fastened to the pedal board by means of a flange inside which a shaft (2) is axially connected to the double track potentiometer (3). A helicoid spring on the shaft ensures the correct pressure resistance while a second spring ensures return when released. Operative field from 0° to 70°; mechanical stop at 88°.

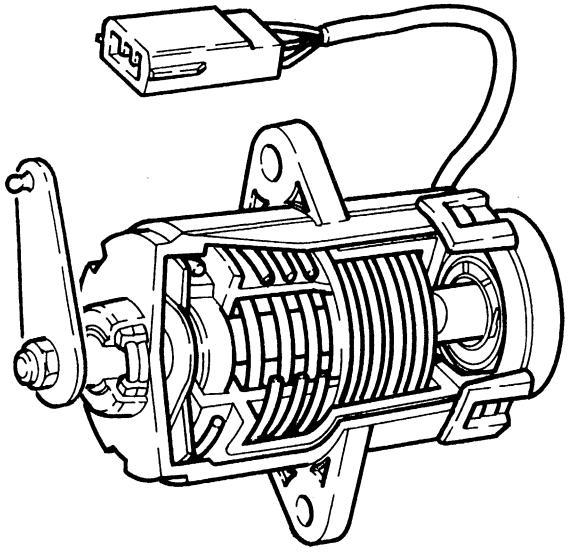

REMOVAL/REFITTING

- Make sure the ignition key is at "STOP" and disconnect the (-) battery terminal.
- Remove the valve guard (see Assembly 70).

cardiagn.com

1. Remove the fastening screws and remove the guard under the dashboard.

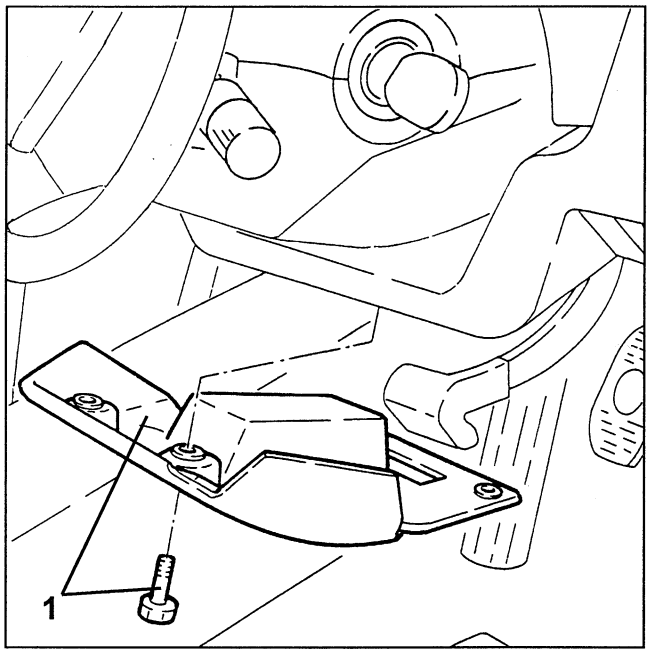

1. Disconnect the two relays.
2. Disconnect the valve electrical connections.

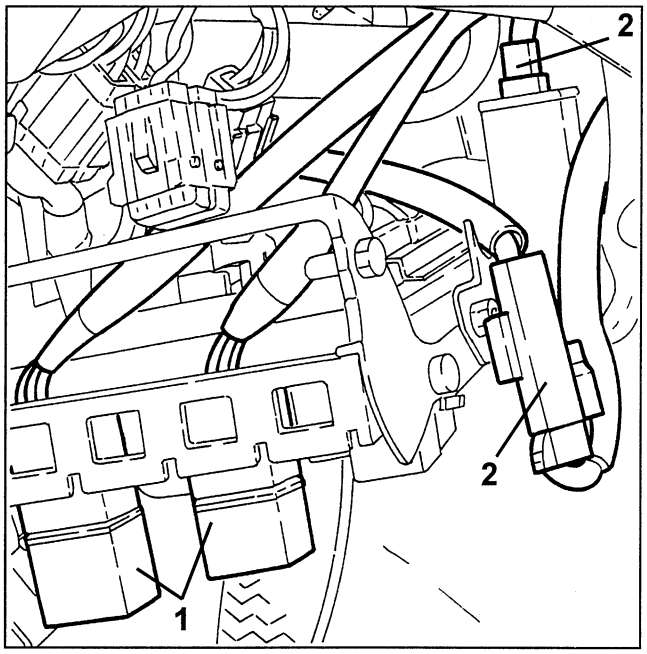

1. Disconnect the Alfa Romeo CODE ECU electrical connections.
2. Loosen the bolts fastening the valve bracket to the brake booster bracket.
3. Remove the indicated relays to reach the nut fastening the valve bracket to the dashboard.
4. Loosen the nut fastening the valve bracket to the dashboard.

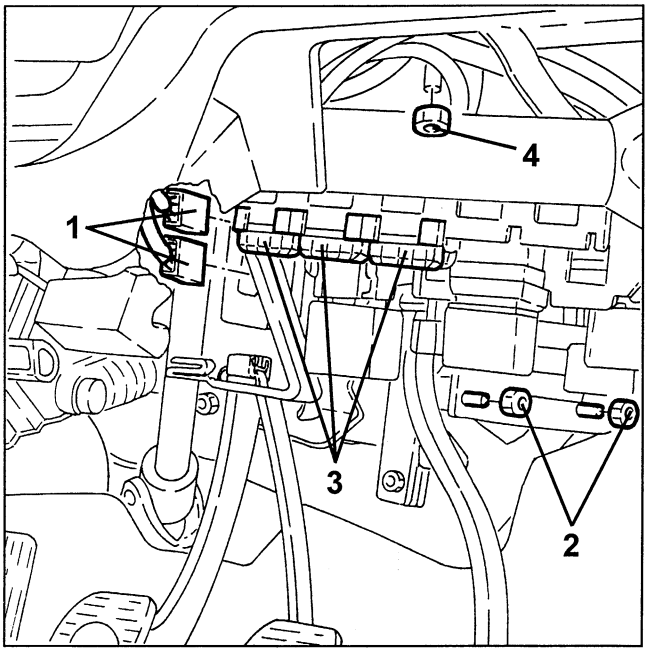

1. Loosen the bolts fastening the valves to the bracket.
2. Remove the clips.
3. Remove the valve bracket.

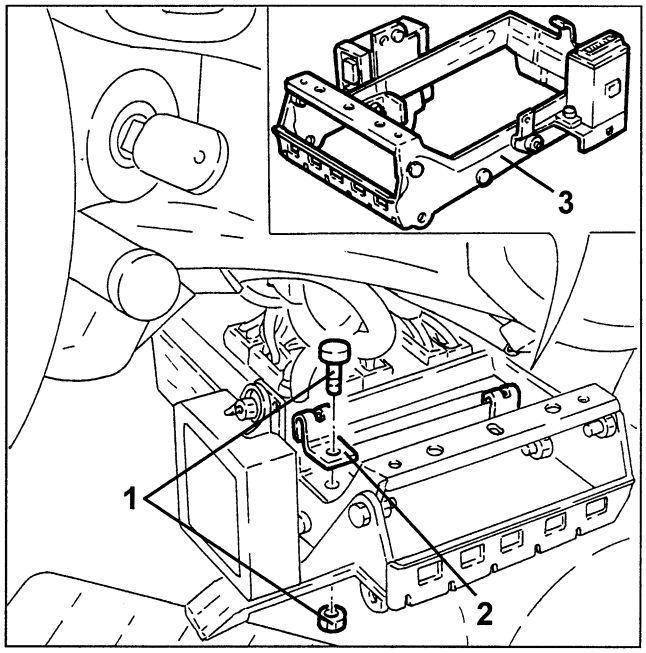

cardiagn.com

1. Disconnect the brake pedal switch electrical connection.
2. Remove the brake pedal switch.

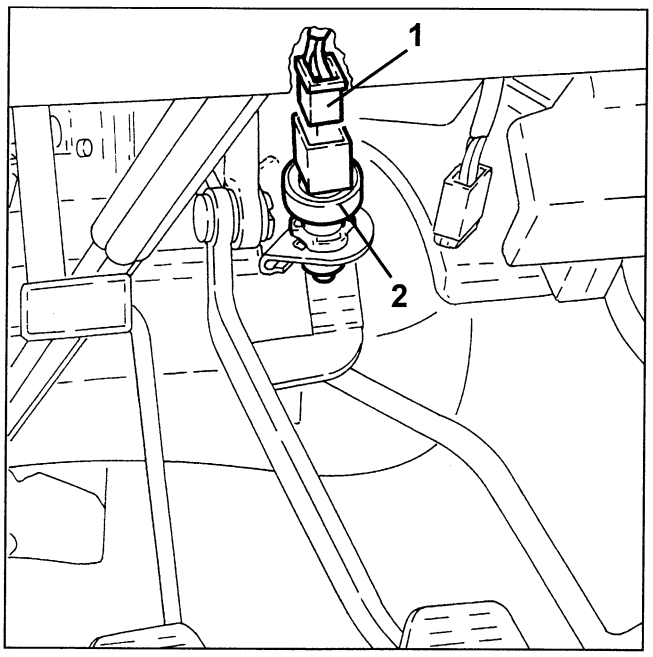

1. Disconnect the accelerator pedal potentiometer electrical connection.
- Fasten the valves suitably to the side.
- Disconnect the accelerator pedal potentiometer from the tie-rod.
2. Loosen the fastening screws and remove the accelerator pedal.

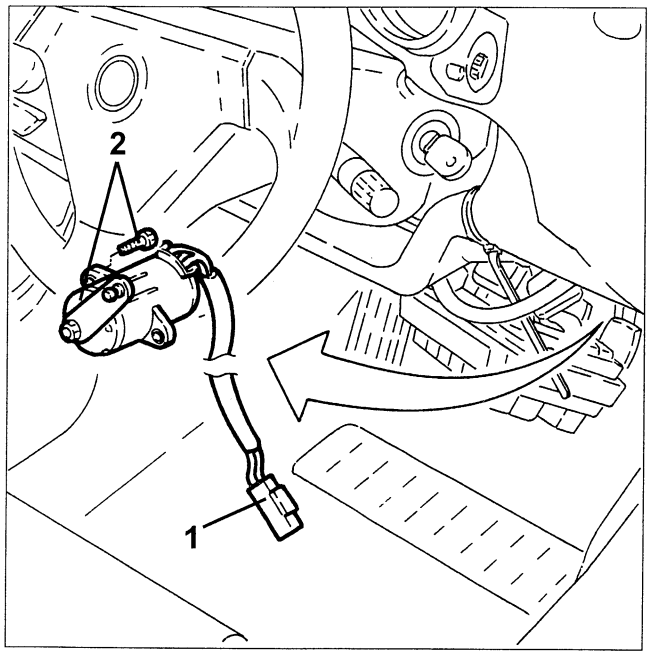

NOTE: After refitting the accelerator pedal potentiometer, calibrate as shown below.

- Make sure the ignition key is at STOP.
- Connect tool no. 1.806.365.000 to the diagnostic socket and turn the knob to 3.
- Connect Examiner.
- Turn the ignition key to MAR.
- With Examiner, go to "Parameters".
- Press "Select" and select the parameter "Accelerator position track 1".
- Check whether the potentiometer calibration values correspond to prescriptions:
idling (accelerator pedal released), 8% ± 1%
- maximum opening (accelerator pedal fully pressed), 64,3% ± 1%.
- Remove the diagnostic tool.

cardiagn.com

ENGINE COOLING SYSTEM

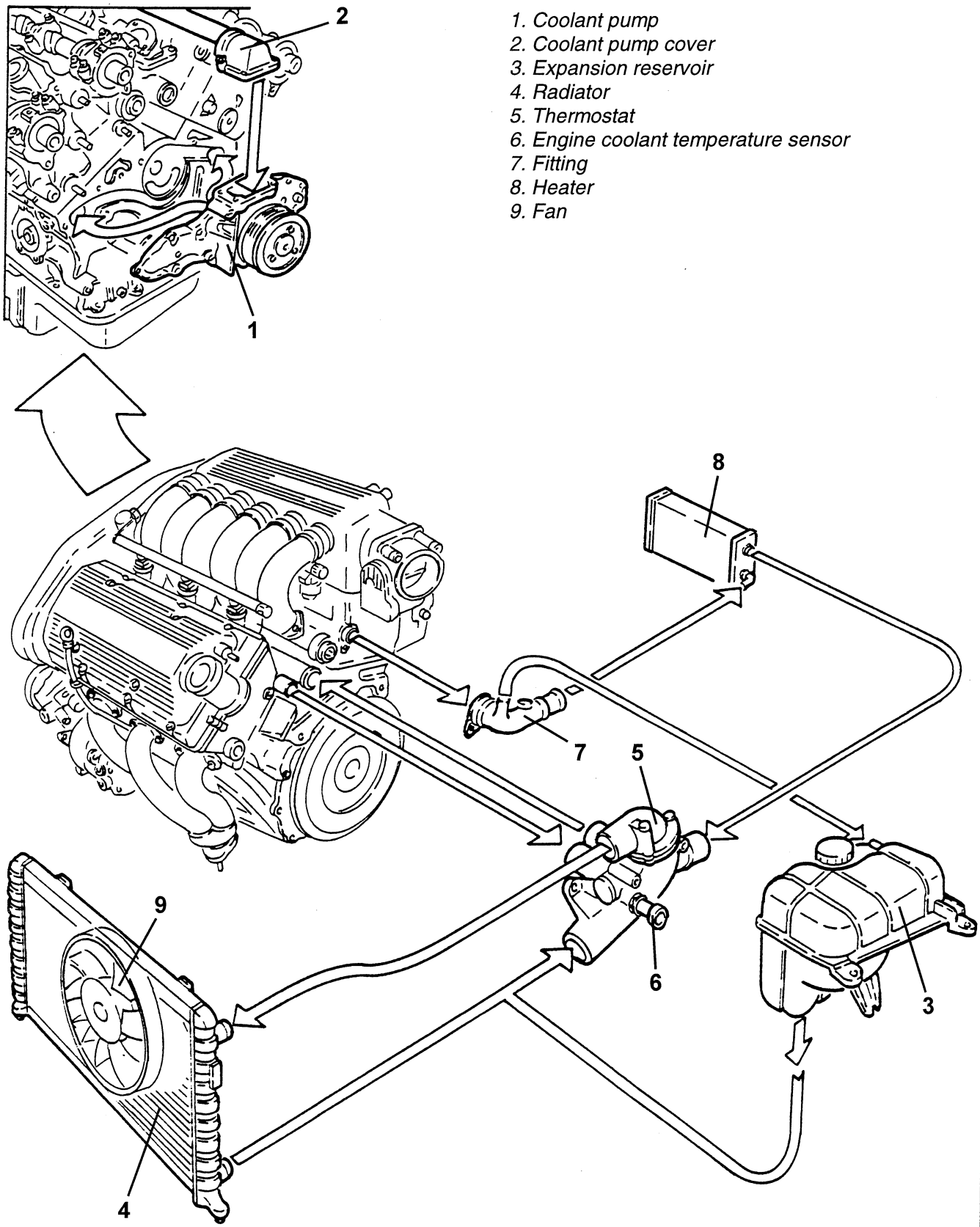

cardiagn.com

DESCRIPTION

The cooling system is sealed and of the forced circulation type. It features a centrifuge pump (1) operated by the crankshaft by means of a Poly-V belt.
A thermostat valve (5) located on the rear of the engine ensures optimal engine temperature. It opens when the coolant reaches a temperature of 87 ± 2 °C.
The radiator (4) cools the fluid by means of dynamic air and a two speed fan. The fan is controlled by the injection-ignition ECU according to a specific logic.
The expansion reservoir (3) feeds the circuit if the level decreases and absorbs the fluid variations in volume according to the temperature. Furthermore, it acts as a circuit air bleeder.
The circuit is equipped with a single engine coolant temperature sensor which measures coolant temperature by means of a double NTC thermistor with negative resistance value. One NTC thermistor sends a signal to the injection ECU while the other sends a signal to the instrument panel temperature gauge and warning light.

CIRCUIT OPERATION

The fluid cools the engine and reaches the thermostat (5) via the cylinder head. If its temperature is lower than 87 °C, the coolant is sucked by the pump (1) via a longitudinal return manifold located between the two cylinder heads. If the temperature is higher than this value, the coolant is conveyed to the radiator via the thermostat opening. After being cooled in the radiator, the coolant returned to the thermostat from where it is conveyed to the pump via the longitudinal manifold. A specific fitting (7) on the right-hand cylinder head receives the coolant from a supplementary duct on the head and sends it via two specific pipes to the climate control system heater (8) and to the expansion reservoir (3).

cardiagn.com

CLUTCH SYSTEM

DESCRIPTION

The clutch adopted is a dry single-plate type with diaphragm pressure plate springs and operated by hydraulic control.

The conventional single-plate dry solution is fitted with hydraulic control with pul disengagement in order to reduce the effort exerted on the clutch pedal to operate it.

This type of control is characterised by the fact that pressing the pedal the clutch is pulled by the coupled thrust bearing rather than pushed in the conventional manner. This solution has been adopted because, owing to the need to transmit a high torque, it would be necessary to increase the dimensions of the clutch assembly to leave the effort on the pedal unchanged during disengagement.

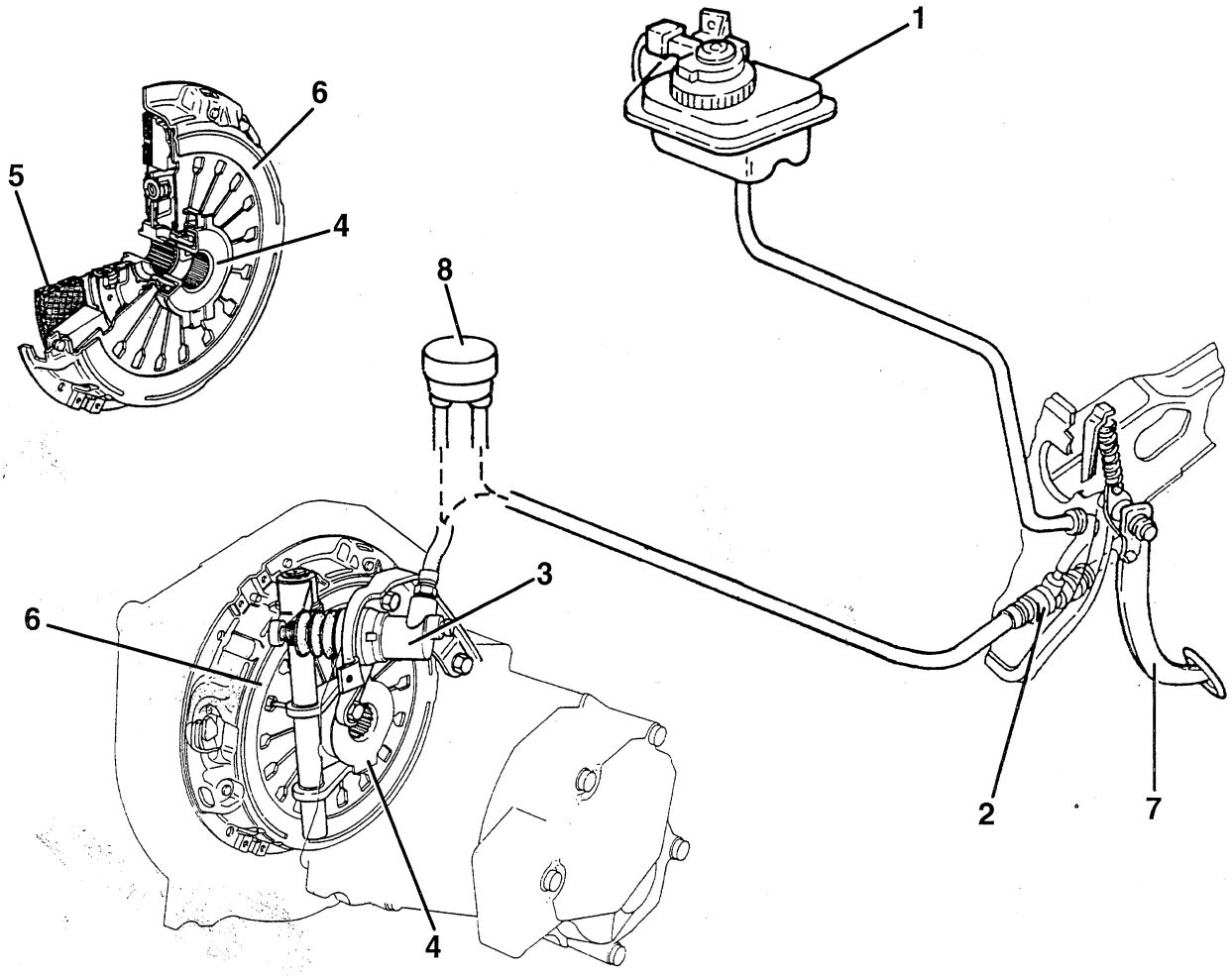

1. *Brake-clutch system reservoir*
2. *Clutch pump*
3. *Clutch control cylinder*
4. *Thrust bearing*
5. *Clutch plate*
6. *Pressure plate*
7. Clutch control pedal
8. *Damper*

cardiagn.com

CLUTCH PLATE AND PRESSURE PLATE

REMOVING/REFITTING

– Remove the gearbox-differential unit (see GROUP 21).
– When changing only the clutch plate, mark the position between the pressure plate and flywheel to facilitate refitting operations.

1. Slacken the screws fastening the pressure plate to the flywheel.
2. Remove the pressure plate.
3. Remove the clutch plate.

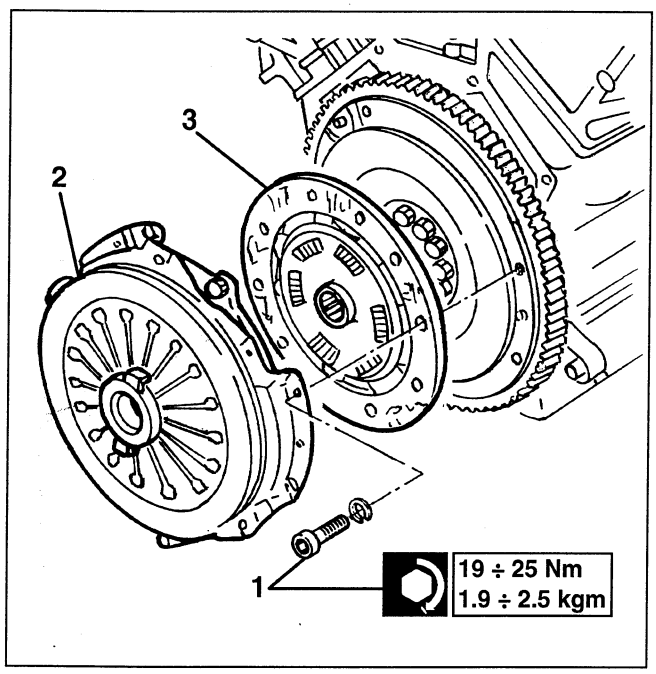

1. Using tool 1.821.215.000 rremove the thrust bearing from the diaphragm spring.

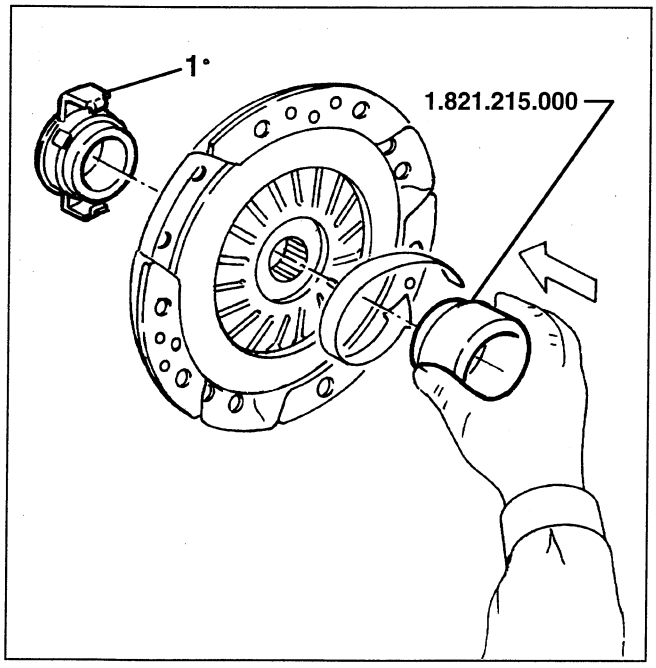

When refitting use tool 1.820.124.000 to centre the clutch plate correctly.

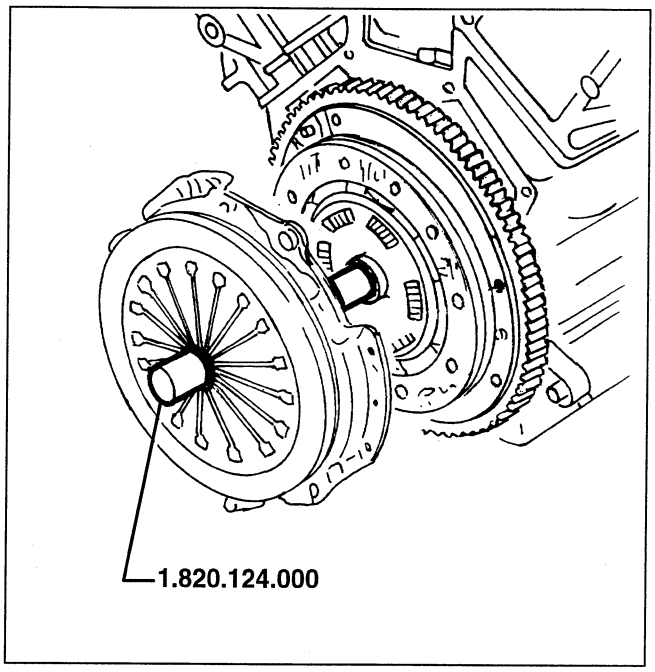

After refitting the gearbox to the crankcase, move the control lever in the direction of the arrow to position the thrust bearing in its housing.

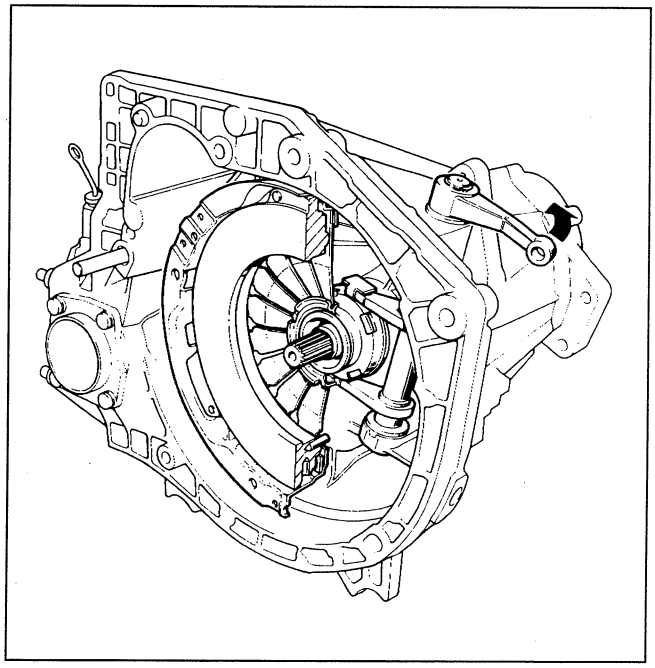

cardiagn.com

CHECKS AND INSPECTIONS

1. Check the gaskets for even wear and that the thickness of the clutch plate is no lower than the minimum specified.

Thickness "S" of clutch plate (mm)	
New	At wear limit
7.1 ÷ 7.7	6.3

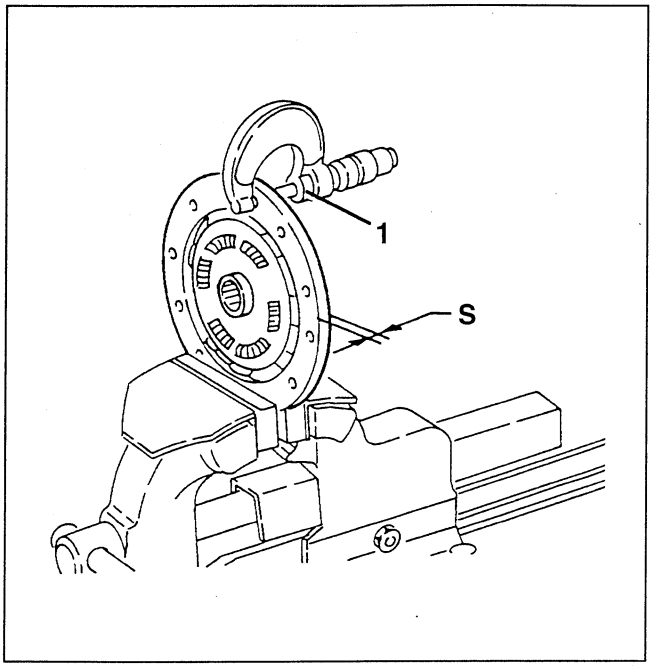

– Check that there are no signs of burning or vitrification, that fastening is correct and that the springs are intact.
– Check that the clutch plate hub is intact, runs smoothly and that there is no excessive play on the drive shaft.
– Check the working surfaces of the flywheel and pressure plate for signs of overheating, uneven wear, nicks or missing parts.
– Check the thrust bearing for noise, excessive play and that it runs smoothly on the sleeve.
– Check the fork for cracks, distortion, freedom of movement and excessive wear of the working surfaces.

cardiagn.com

CLUTCH CONTROL

CLUTCH CONTROL CYLINDER

REMOVING/REFITTING

– Disconnect the battery
– Working from the engine compartment, remove the air cleaner cover and intake manifold (see Group 10).
– Drain the clutch-brake fluid reservoir using a suitable syringe.
1. Slacken the screws fastening the cylinder support bracket to the gearbox.
2. Slacken the hydraulic union of the stiff pipe from the control cylinder.

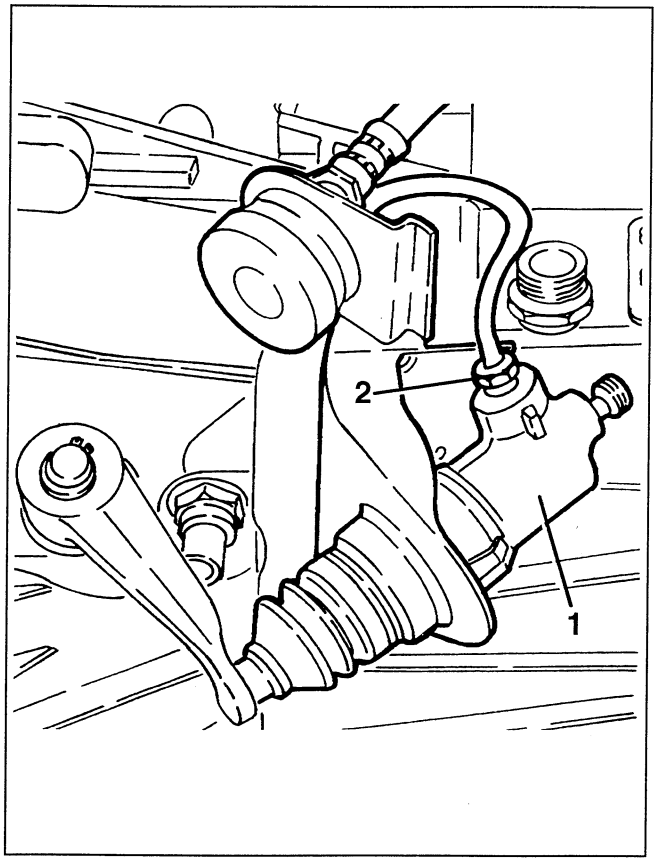

1. Remove the retainer ring.
2. Withdraw the clutch cylinder.

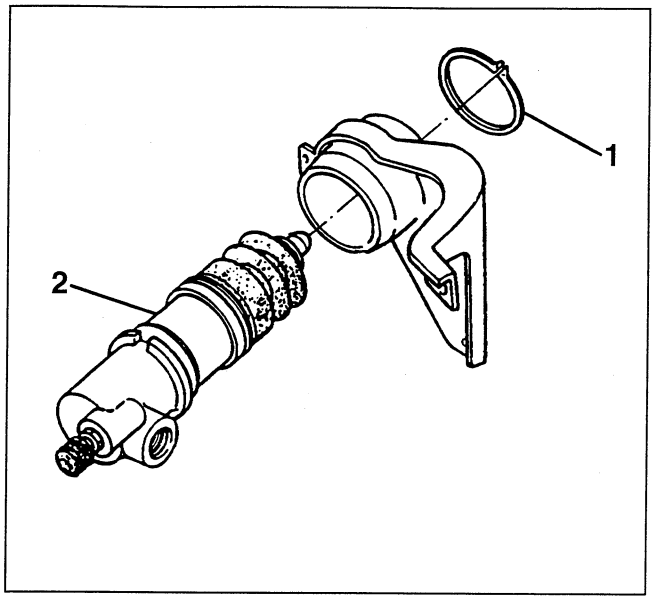

cardiagn.com

GEARBOX UNIT

REMOVING/REFITTING

– Set the car on a lift.
– Disconnect the battery.
– Remove the front wheels.
1. Remove the left front gravel guard.

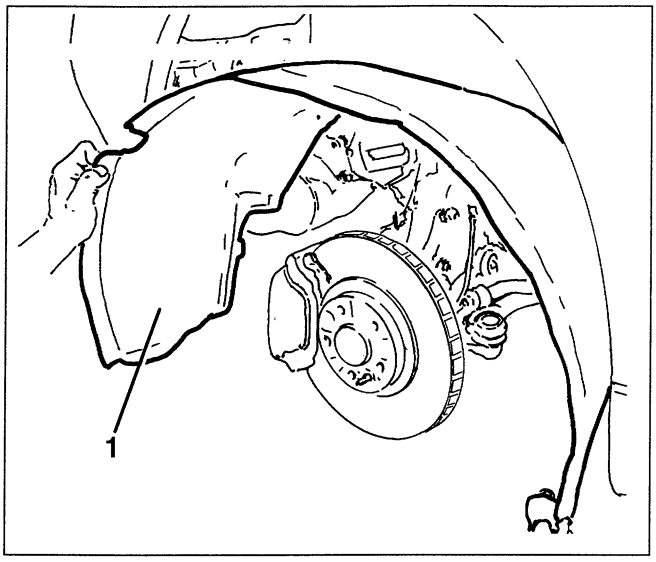

– Remove the engine compartment guard on the lefthand side (see GROUP 70).
1. Disconnect the oil vapour recovery pipe leading from the right cylinder head from the corrugated sleeve.
2. Disconnect the electrical connection from the intake air temperature sensor.
3. Disconnect the air takeoff pipe for the constant idle device from the corrugated sleeve.
4. Disconnect the electrical connection from the throttle potentiometer.

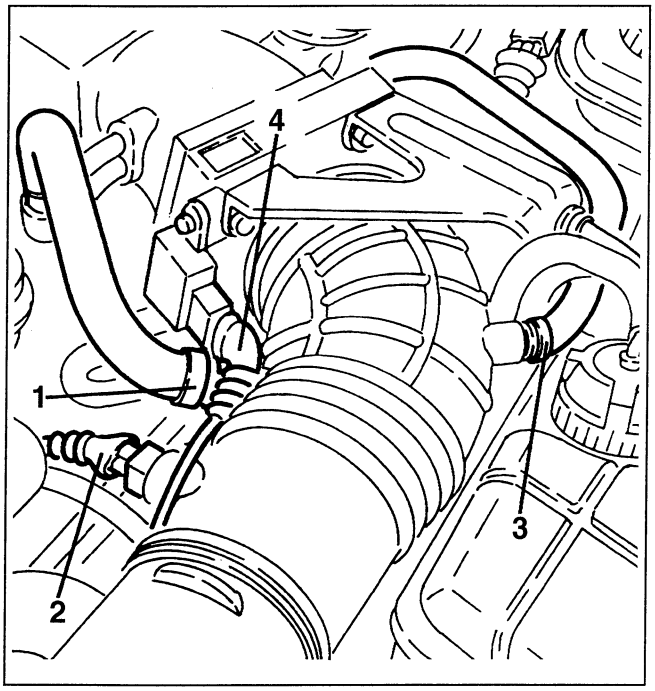

1. Prise off the button fastening the first section of corrugated sleeve to the resounder.
2. Slacken the two fastening clamps.
3. Remove the second section of corrugated sleeve complete with resounders.

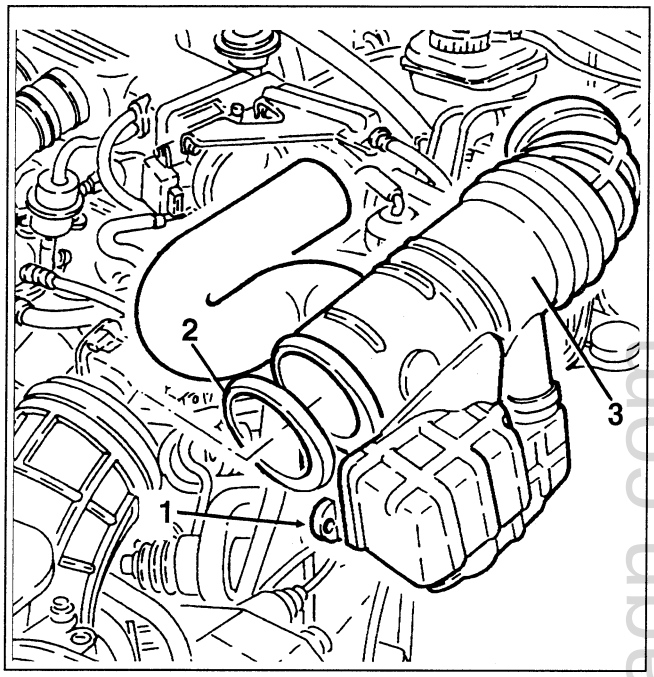

1. Disconnect the electrical connection from the hot film air flow meter.

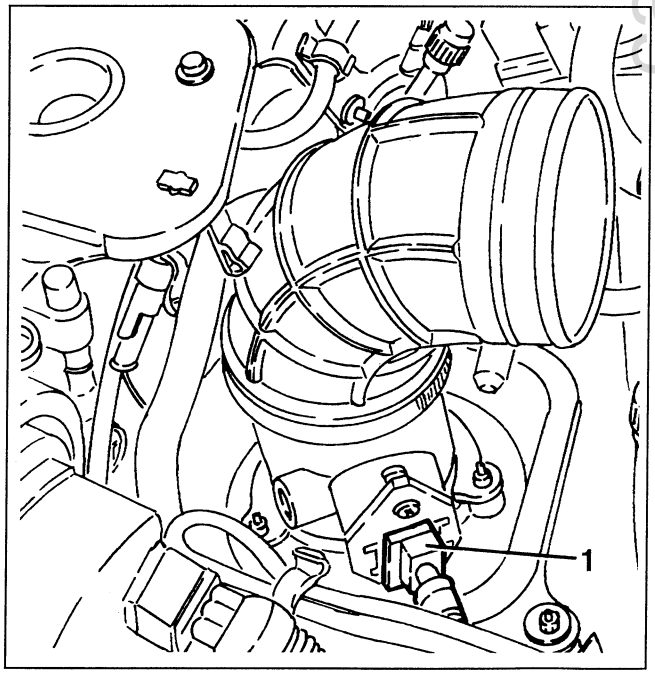

Cardiagn.com

1. Slacken the three fastening nuts and remove the air cleaner cover complete with hot film air flow meter and the first section of corrugated sleeve.

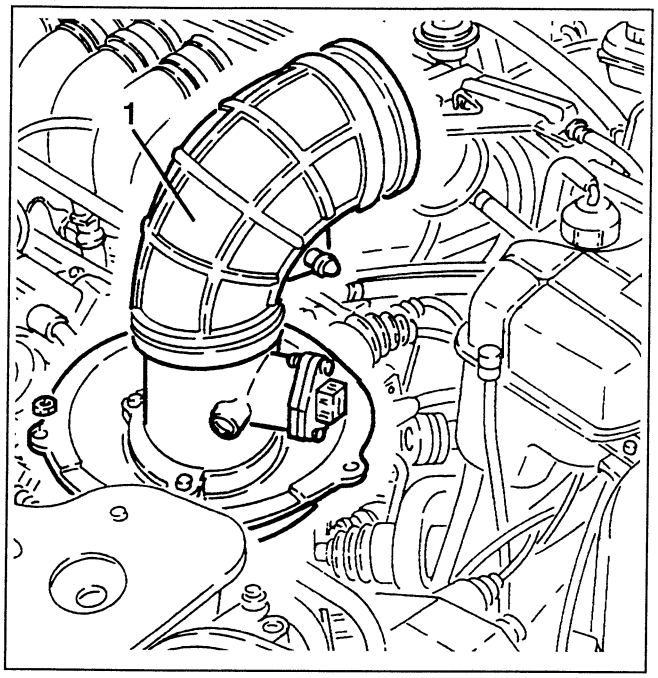

1. Slacken the three fastening screws and release the air cleaner container support bracket.

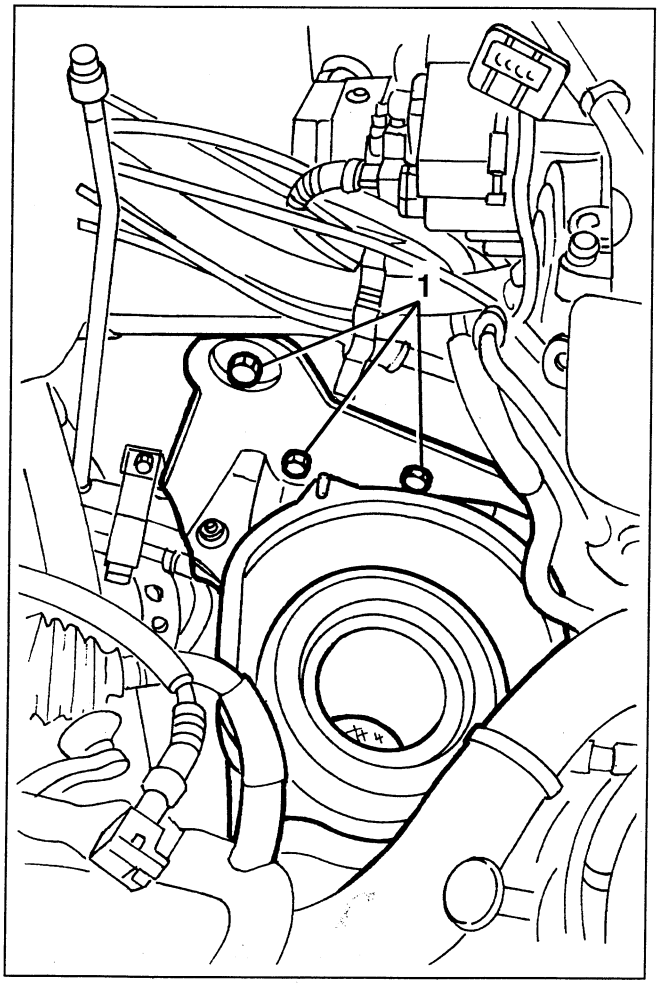

– Raise the car.

1. Release the air takeoff pipe from the cleaner container.

2. Retrieve the container complete with bracket from below.

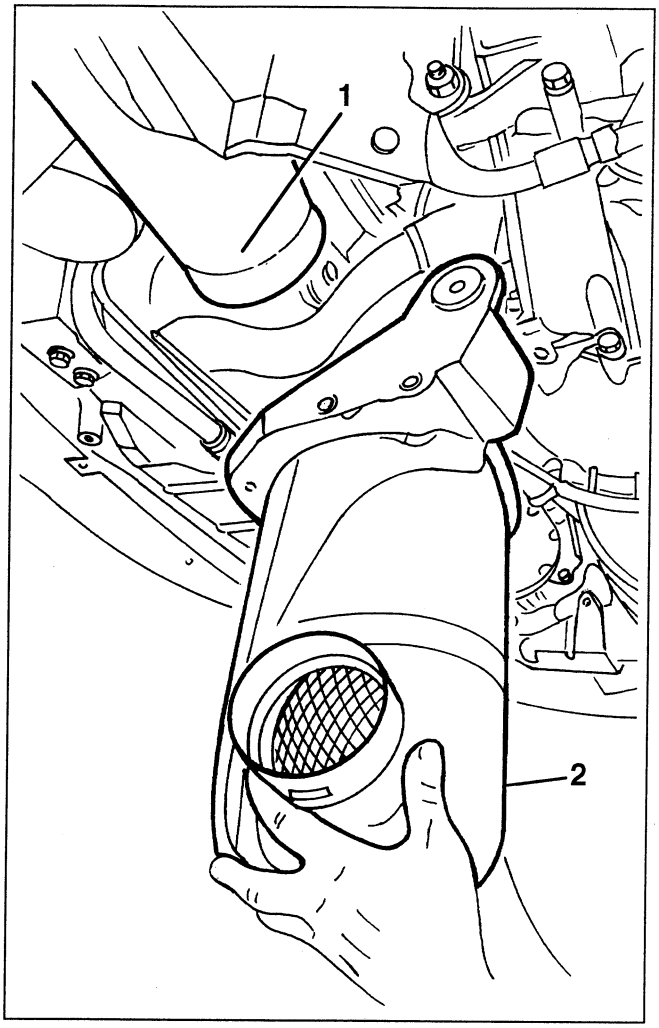

cardiagn.com

1. Slacken the nuts fastening the front exhaust pipes to the exhaust manifolds.
2. Slacken the bolts fastening the pipes to the catalytic converter.
3. Slacken the bolt and disconnect the collar.
4. Slacken the nut and remove the collar.
5. Retrieve the front exhaust pipes.
6. Disconnect the EGR valve pipe fitting from the exhaust manifold.

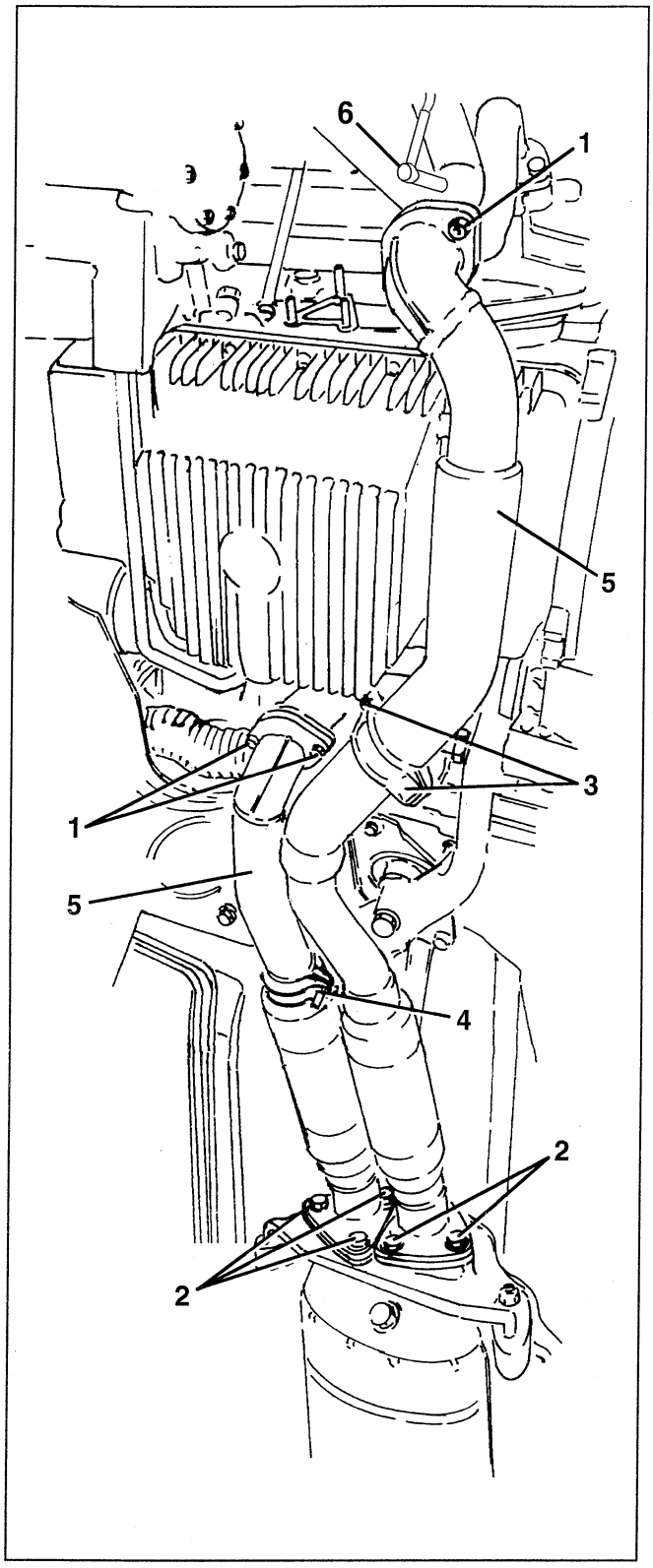

– Lower the car.
1. Slacken the screw fastening the right engine compartment guard.
2. Slacken the fastening screws and remove the upper radiator crossmember.

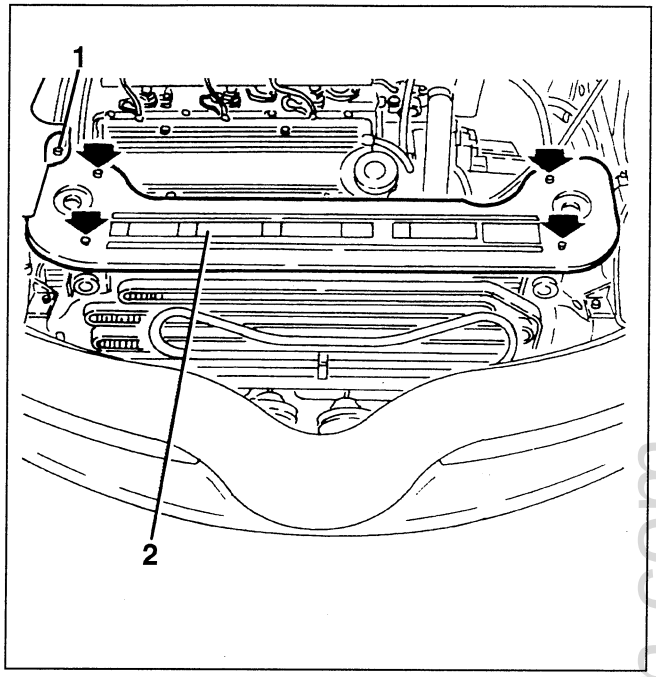

1. Disconnect the bonnet opening cable and move it aside so that it does not hinder the following operations.
2. Disconnect the electrical connections from the fans and additional resistances, then release the cables from the fastening clamps and groove.

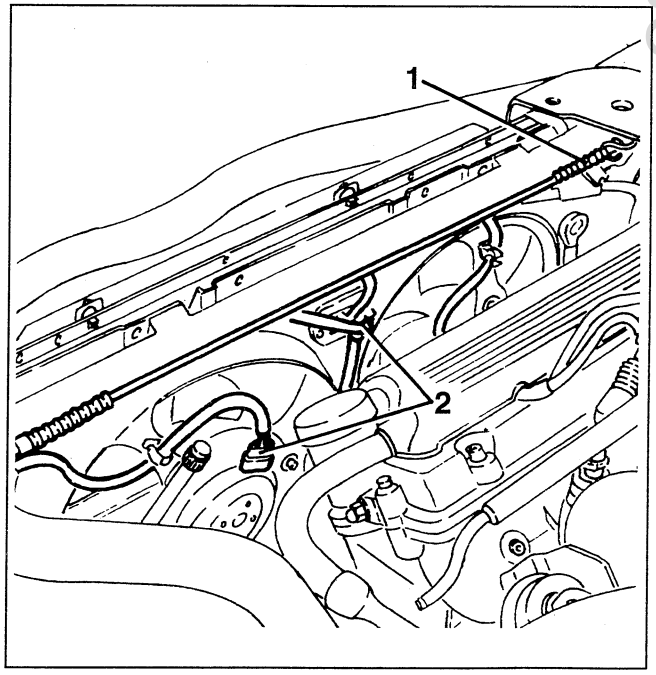

Cardiagn.com

1. Slacken the fastening screws and remove the cooling fans withdrawing them upwards.

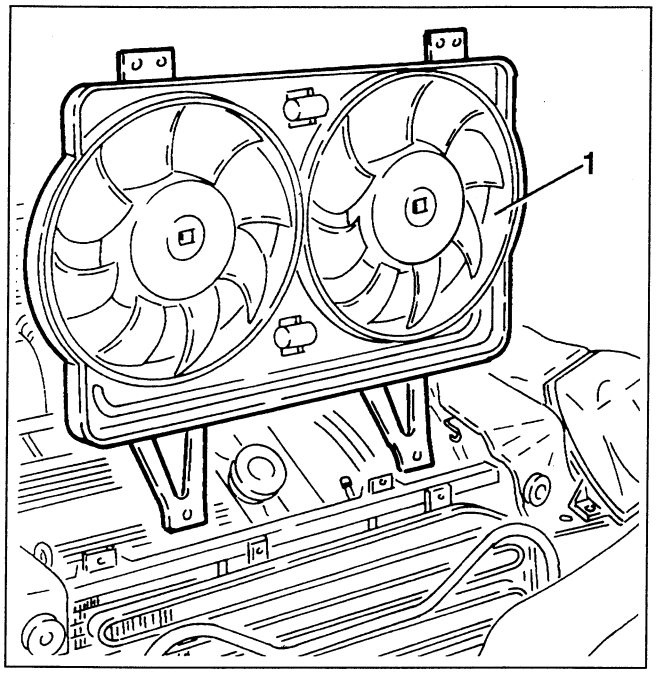

1. Release the injection wiring connector.
2. Disconnect the electrical connection of the rear pinging sensor.
3. Disconnect the electrical connection of the rpm and timing sensor.
4. Disconnect the electrical connection of the cam angle sensor.

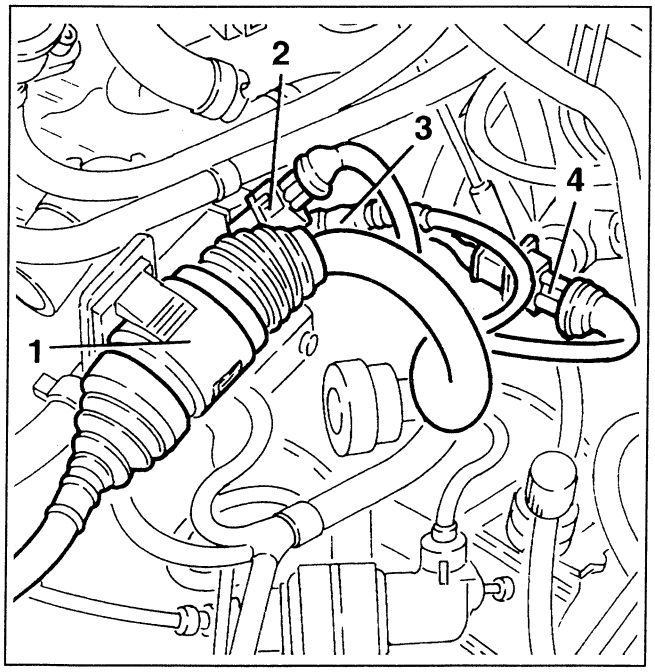

1. Disconnect the electrical connection from the engine coolant temperature sensor (NTC).
2. Disconnect the electrical connection from the coolant temperature transmitter and maximum temperature thermal contact.

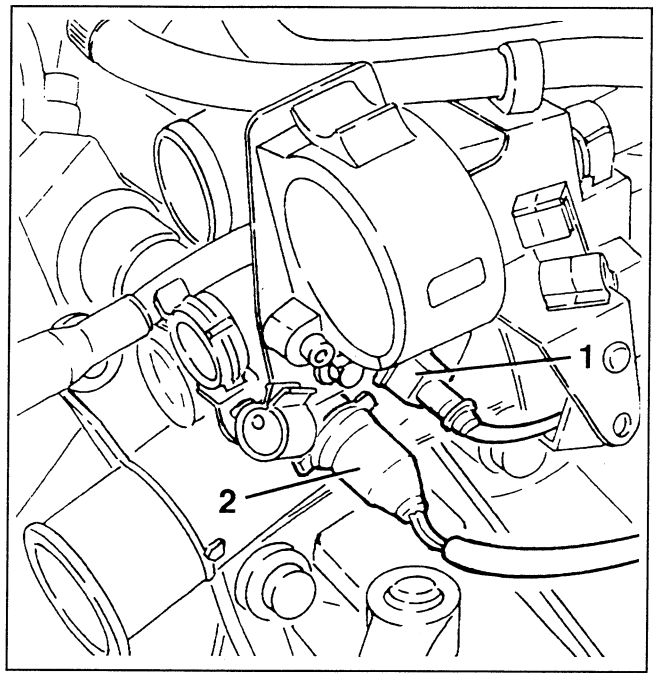

1. Disconnect the electrical connection from the reverse gear sensor.

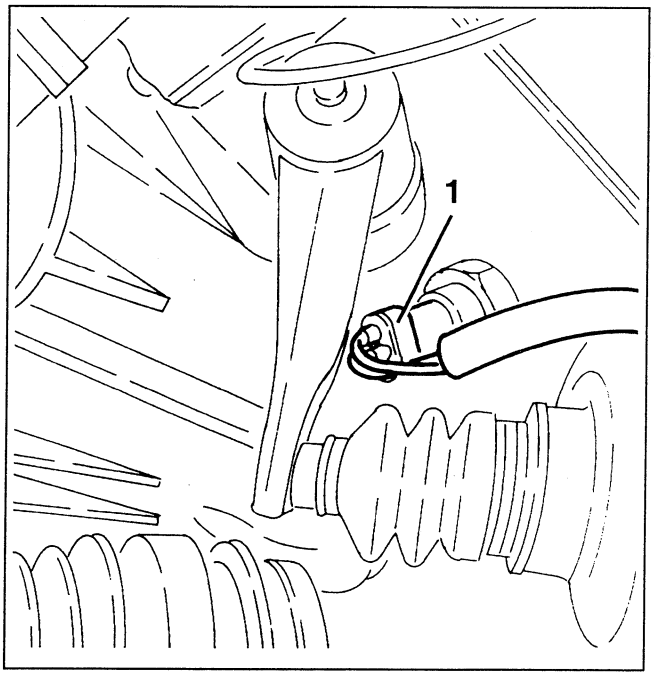

cardiagn.com

1. Disconnect the cable for synchronised reverse gear engagement.

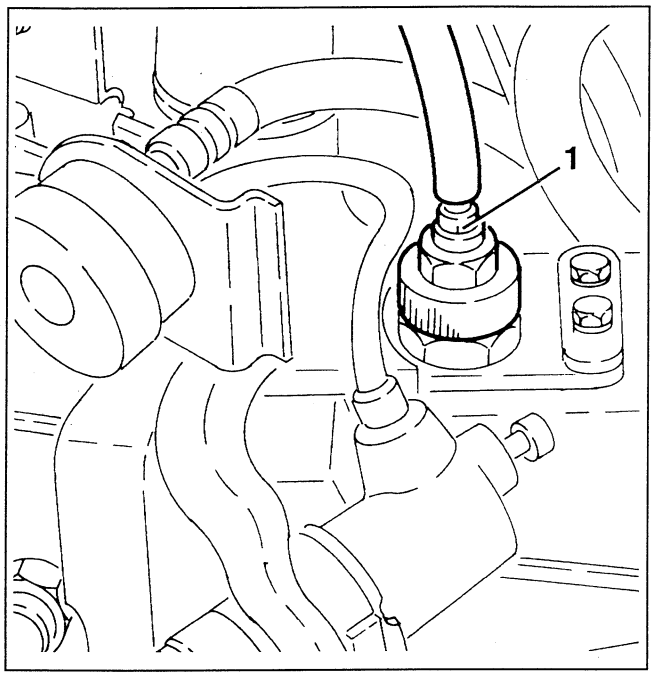

1. Release the fuel pipes.
2. Slacken the fastenings and remove the injection wiring support bracket and pipe fasteners.

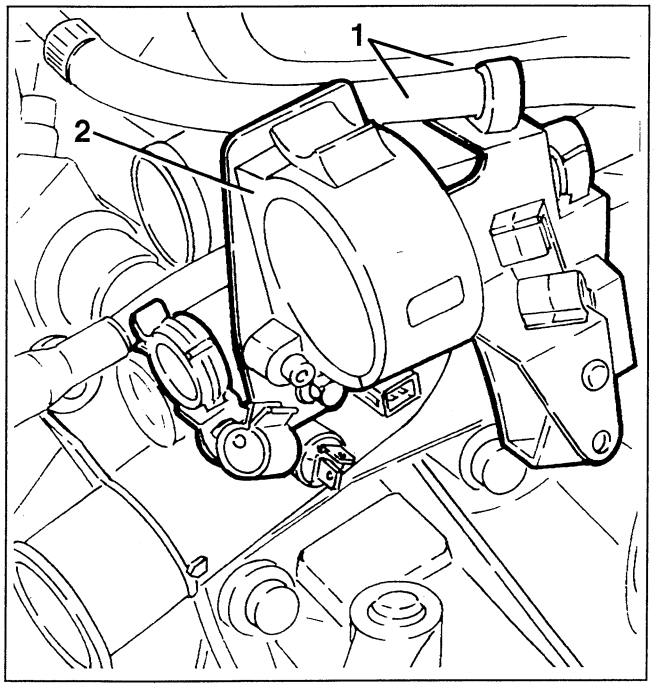

1. Disconnect the electrical connection of the tachometric sensor.

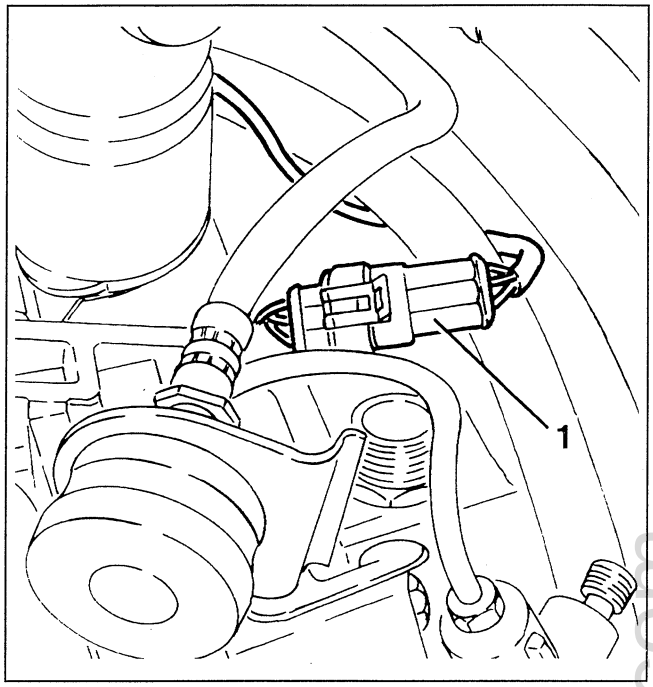

1. Slacken the fastening screws of the clutch control cylinder support bracket, then move the pipe aside without disconnecting the pipes.

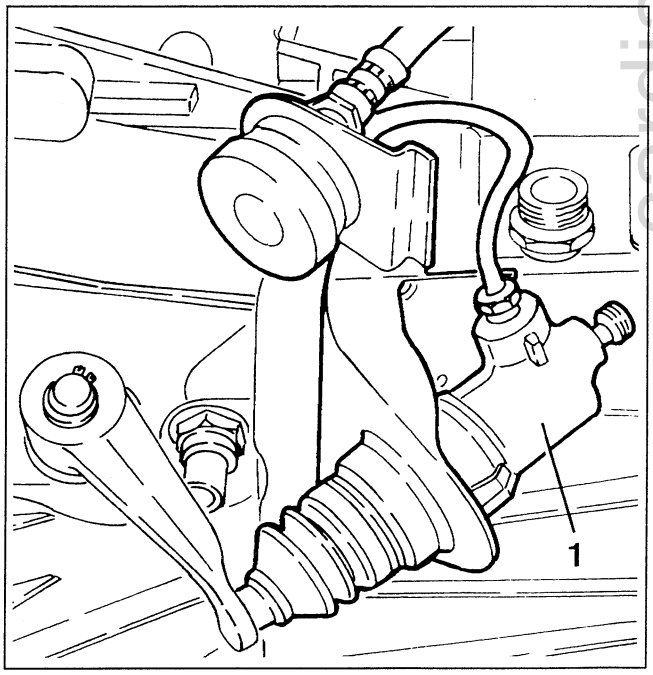

cardiagn.com

1. Disconnect the modulated vacuum pipe leading from the solenoid valve from the E.G.R. valve.

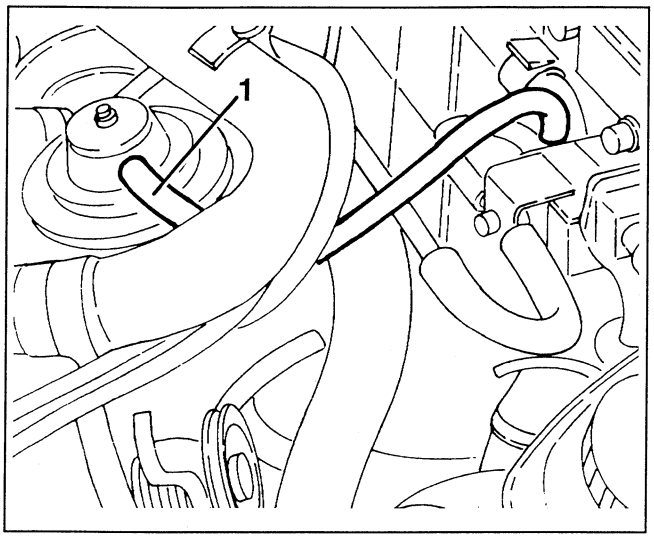

1. Slacken the two fastening nuts and remove the E.G.R. valve complete with exhaust gas takeoff pipe from the intake box.
– Retrieve the seal.

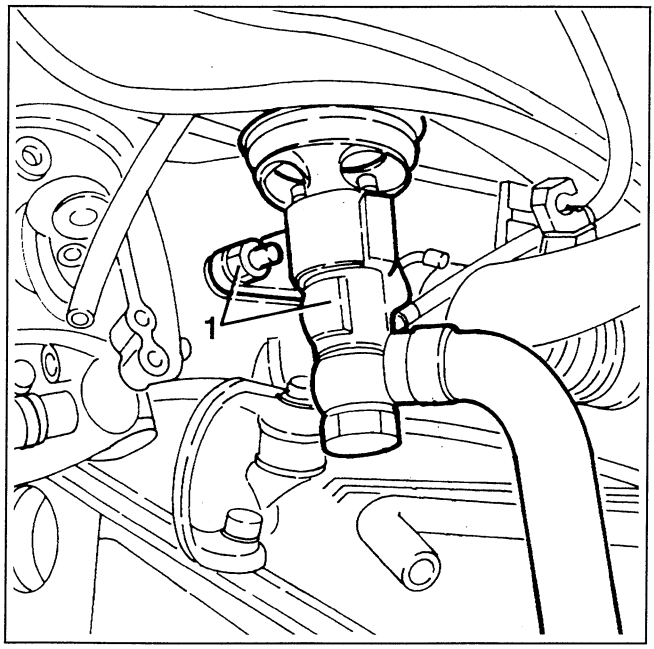

1. Slacken the screws and remove the relay unit cover.
2. Retrieve the cover.

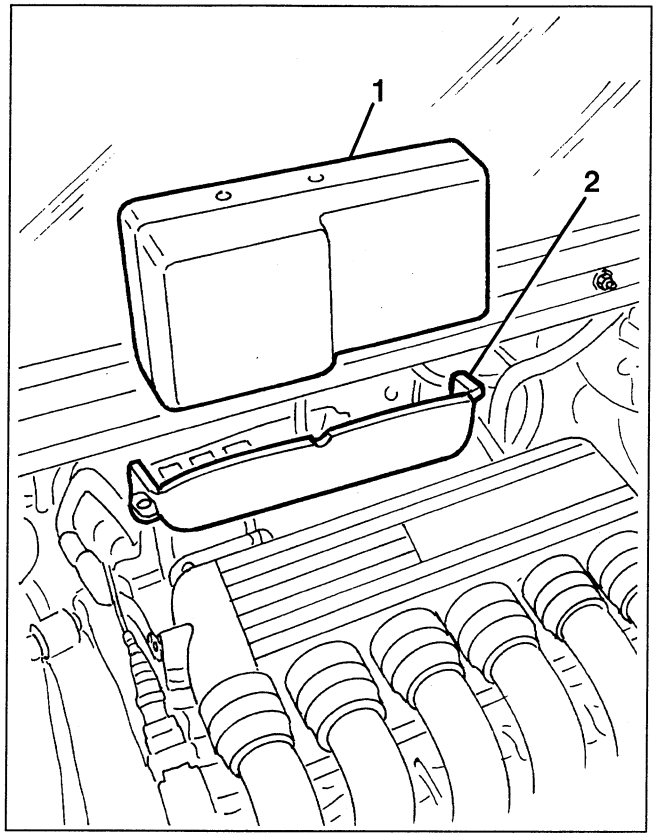

1. Slacken the six nuts fastening the rear exhaust manifold, complete with heat shield, to the cylinder head.

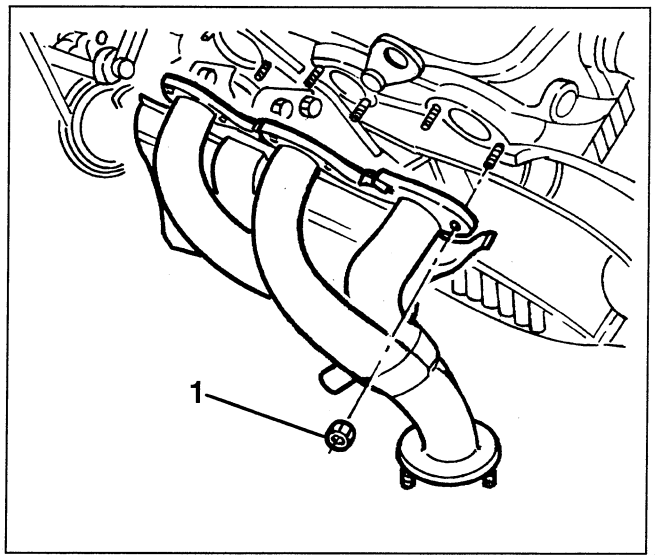

1. Using tools 1.820.239.000, 1.850.581.000 and 1.820.226.000 support the engine appropriately with a chain.

cardiagn.com

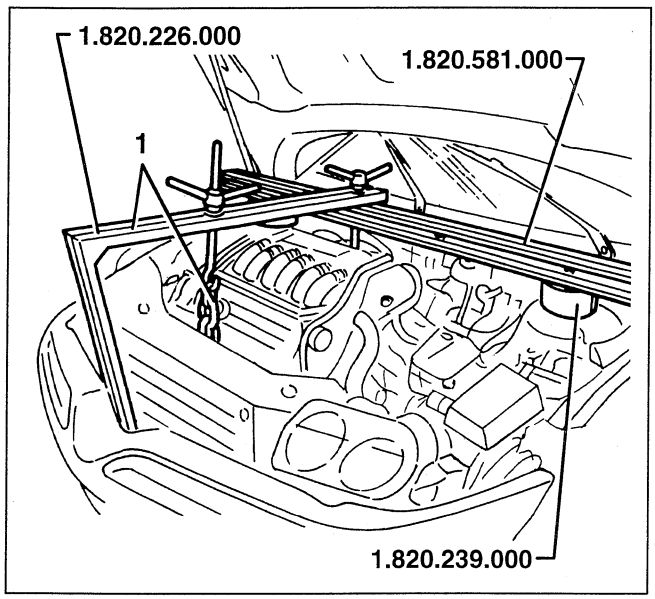

WARNING:
To avoid damaging the power steering piping housed at the front of the radiator, place a suitable thickness between the front connection of the tool and its resting surface.

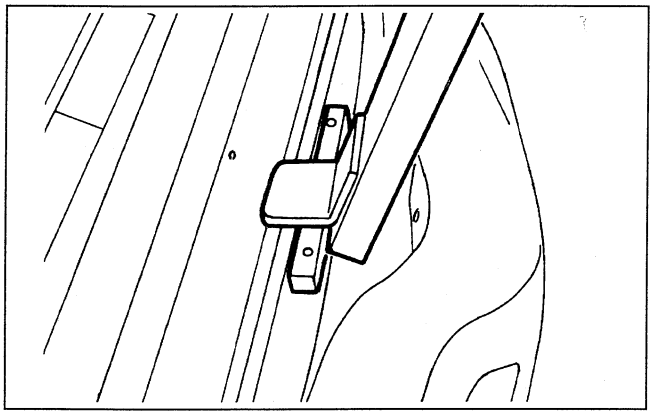

1. Slacken the three upper screws fastening the gearbox cover to the crankcase.
– Raise the gearbox oil dipstick.

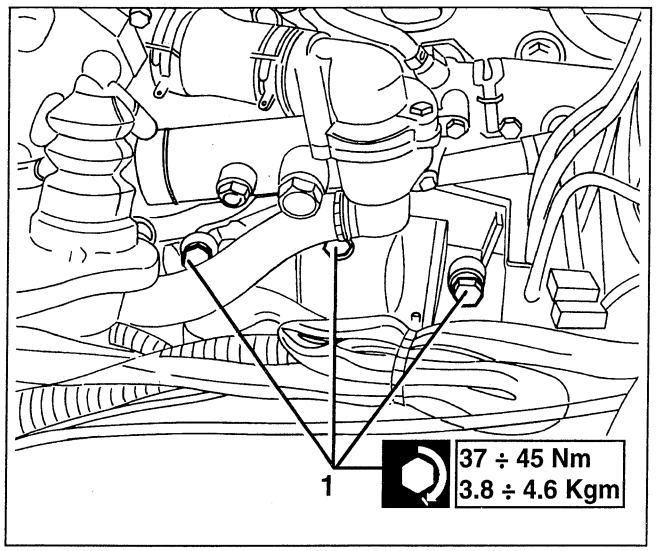

– Raise the car.
– Place a suitable container under the engine compartment.
1. Slacken the plug and drain the gearbox oil.
2. Slacken the plug and drain the differential oil.

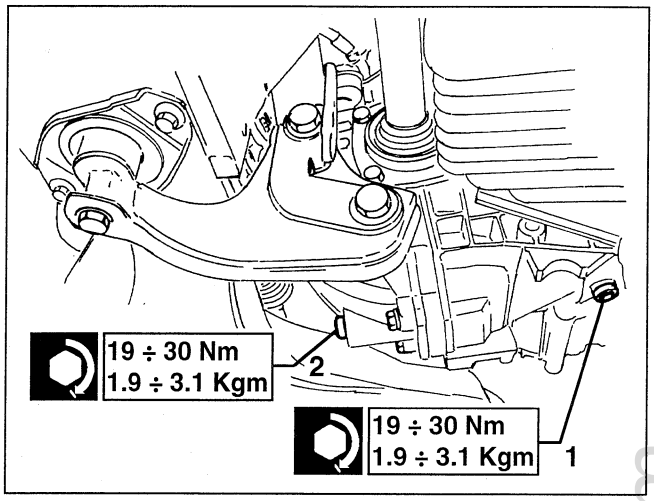

1. Working from both sides of the car, slacken the bolt fastening the wishbone to the wheel hub.
2. Withdraw the wishbone ball pin.

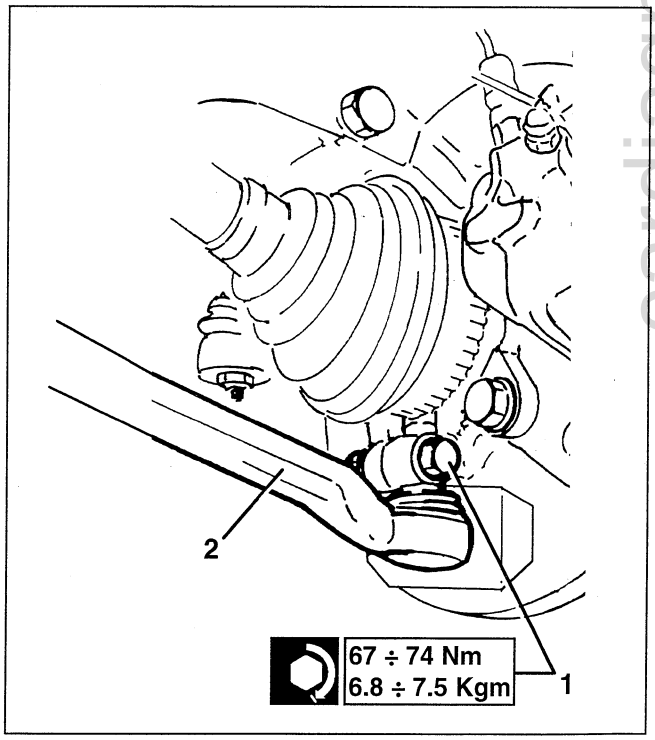

cardiagn.com

1. Working on the left side of the car, slacken the nut and disconnect the earth braid from the gearbox.
2. Slacken the six bolts and disconnect the axle shaft from the differential.
3. Retrieve the safety plates.

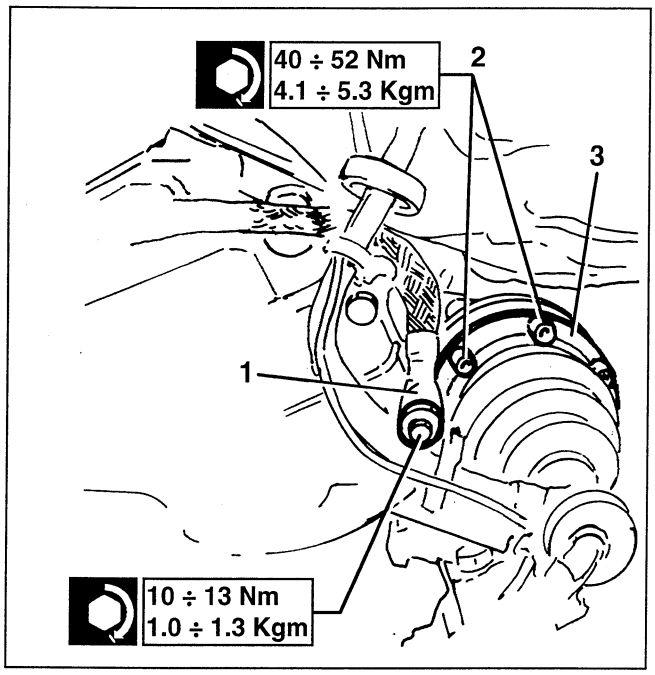

1. Working from under the car, slacken the two screws fastening the rear of each of the two front crossmember reinforcement struts.

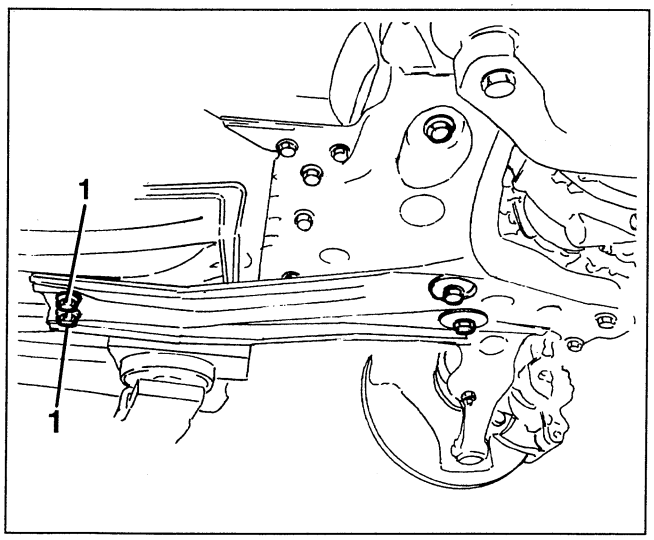

1. Slacken the three fastening screws.
2. Remove the rear engine support.

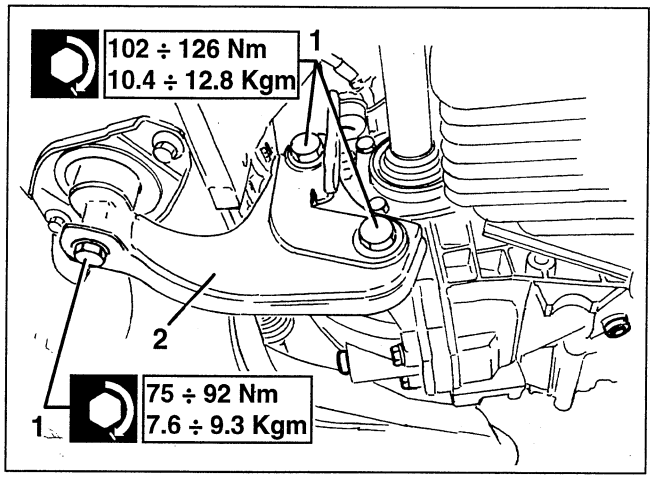

1. Remove the heat shield from the crossmember.

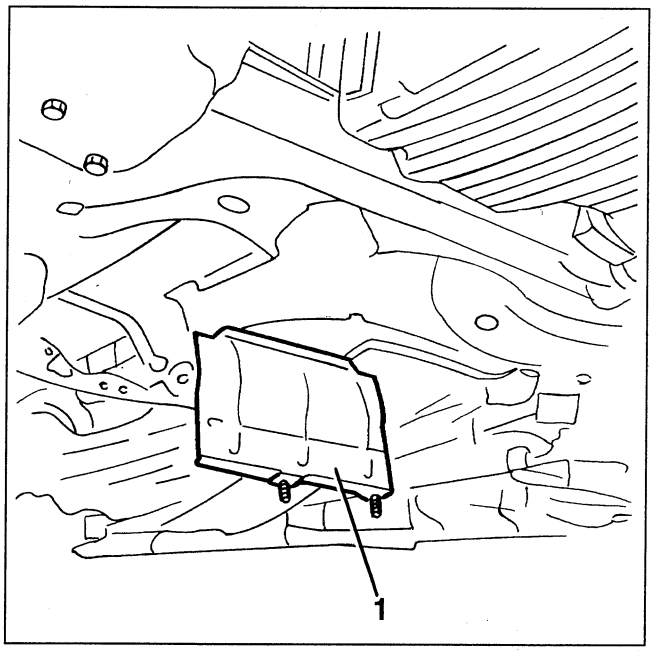

– Install tool no. 1.860.978.000 on a hydraulic jack.
1. Fasten the tool to the centre of the crossmember.
2. Slacken the screws fastening the steering box to the crossmember.
3. Slacken the nuts fastening the crossmember to the gearbox controls support.
4. Slacken the screws fastening the crossmember to the body.

cardiagn.com

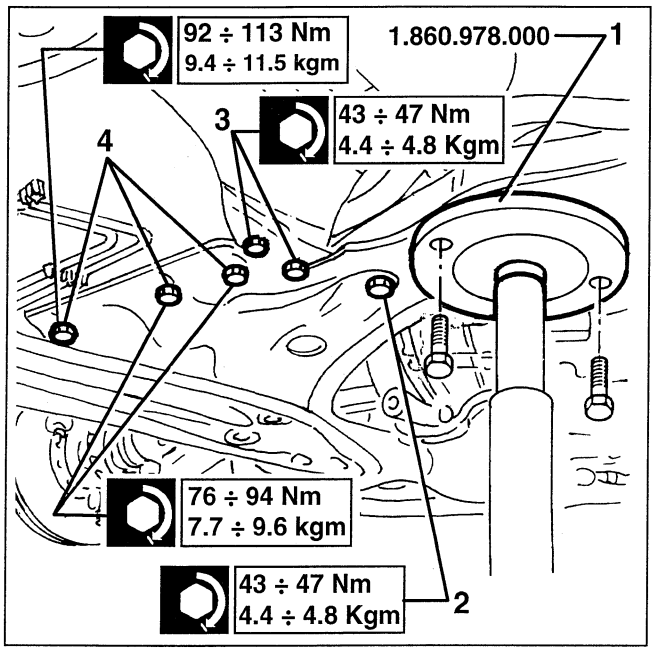

1. Slacken the upper crossmember fastening screw on each side.
2. Slowly lower the hydraulic jack and remove the crossmember complete with wishbones and stabiliser bar.

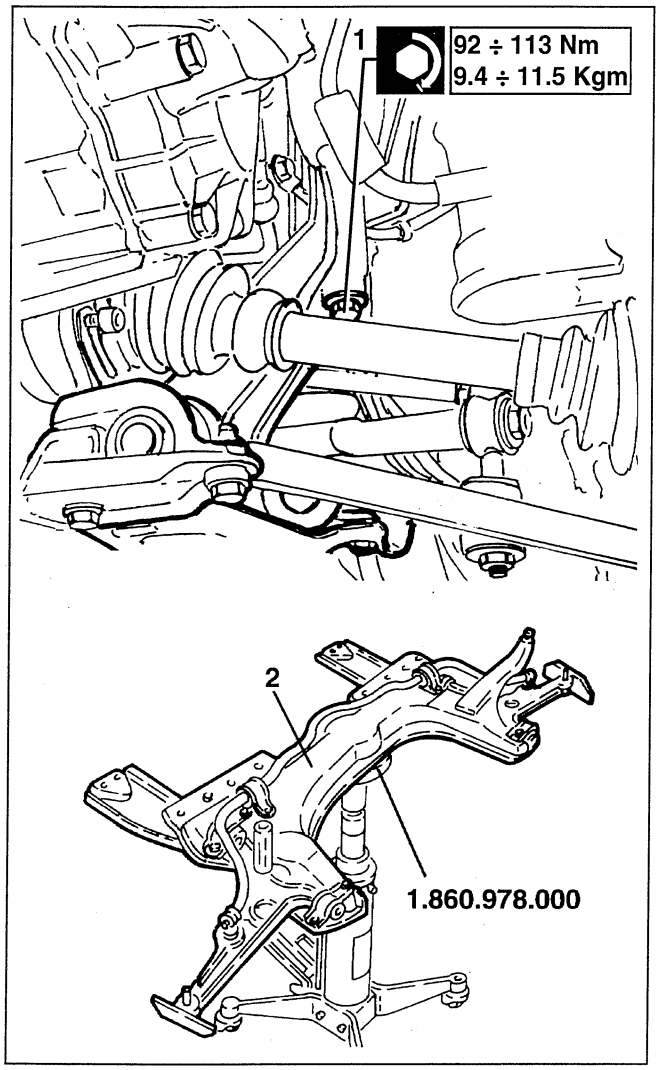

1. Retrieve the exhaust manifold complete with heat shield.

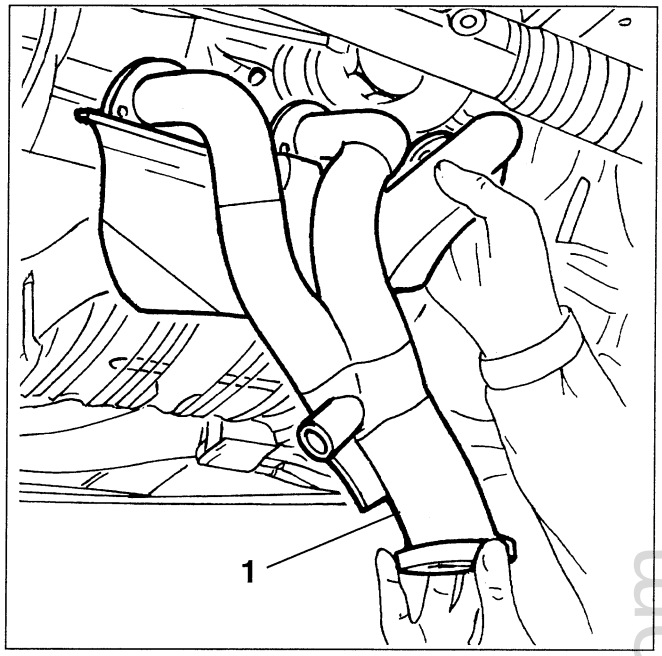

1. Slacken the fastening screws and remove the fly-wheel cover.
2. Slacken the fastening screws and remove the rpm and timing sensor.

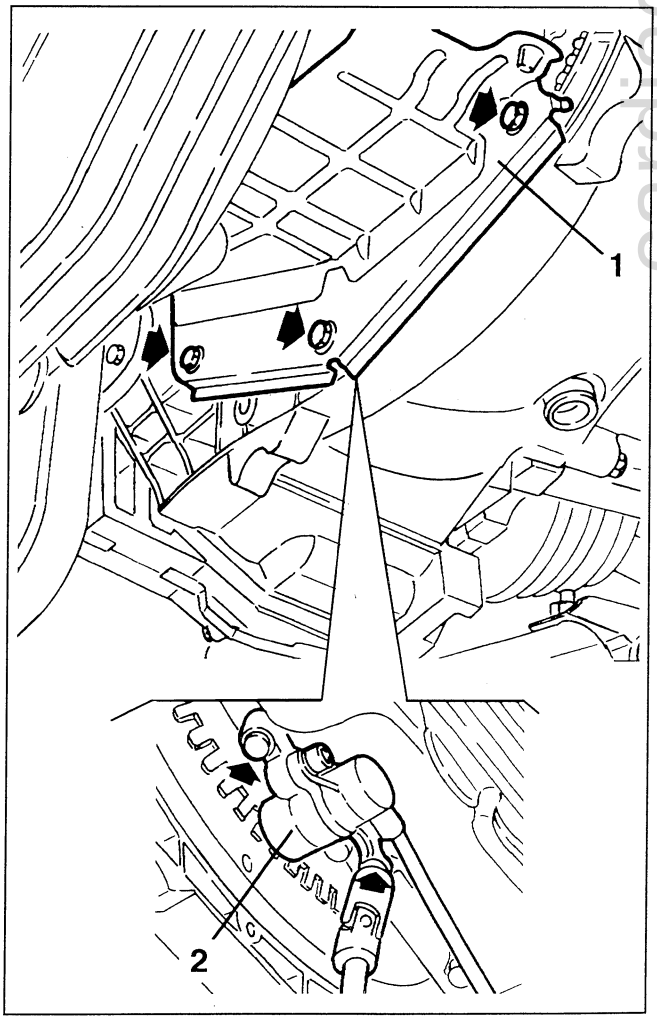

cardiagn.com

1. Slacken the two nuts fastening the upper gearbox control cable cover.
2. Slacken the two screws fastening the lower gearbox control cable cover.
3. Retrieve the two covers.

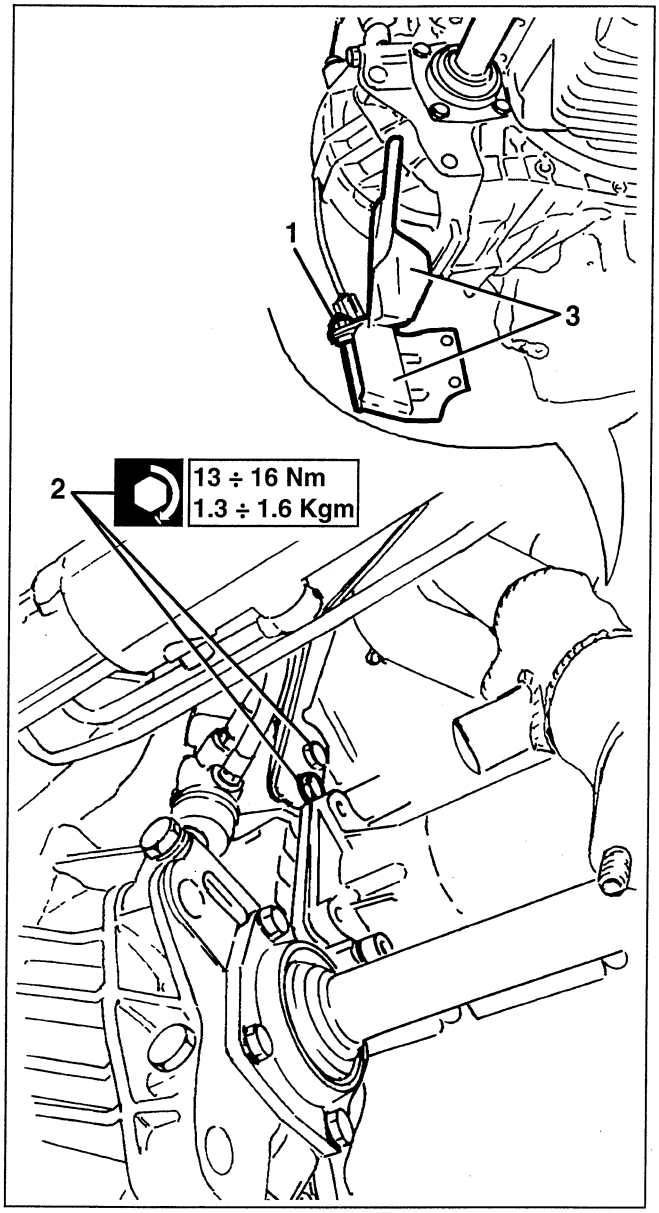

1. Slacken the two nuts fastening the rear starter motor.
2. Slacken the nut fastening the square.
3. Slacken the starter motor fastening screws.
4. Retrieve the starter motor complete with square.

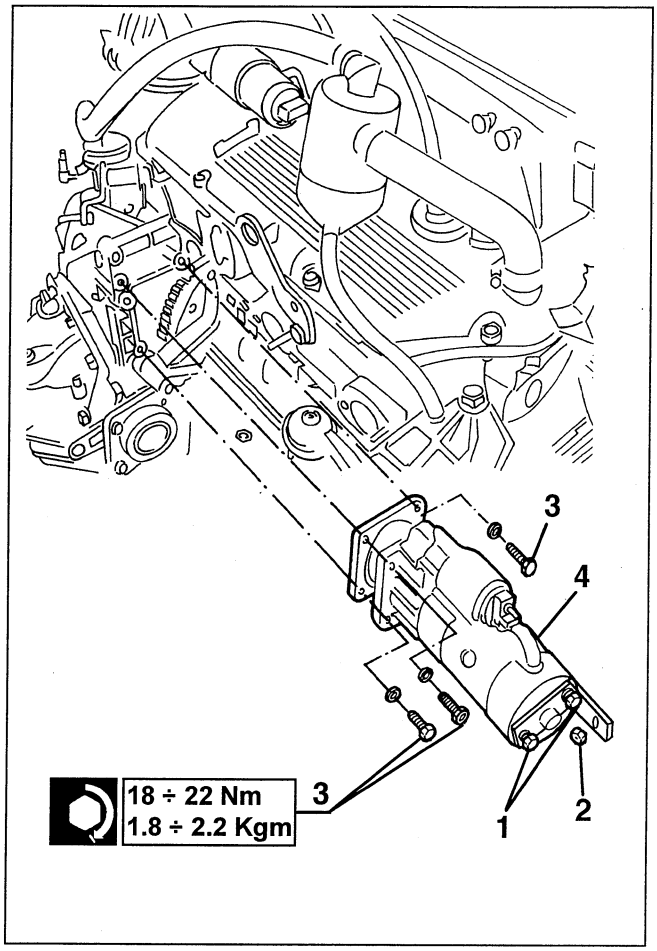

– Work from above.
1. Remove the retainer clips and withdraw the gear control cables from the pin.
2. Slacken the upper screw of the gearbox control cable support bracket.

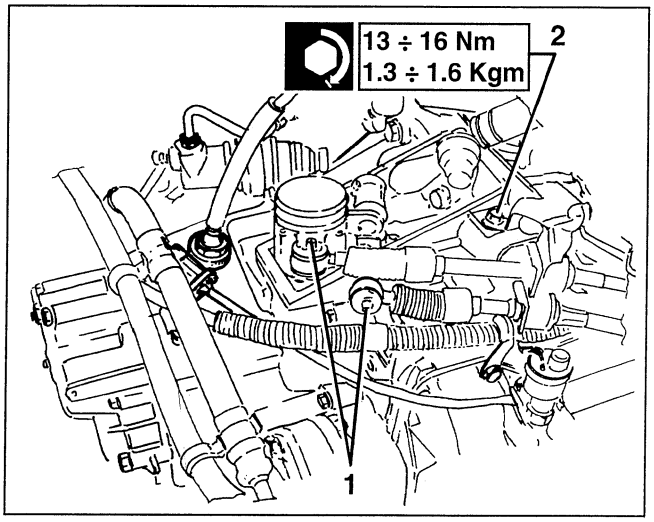

1. Slacken the screw fastening the gearbox rear support.
2. Slacken the nuts fastening the support to the gearbox.
3. Remove the support.

cardiagn.com

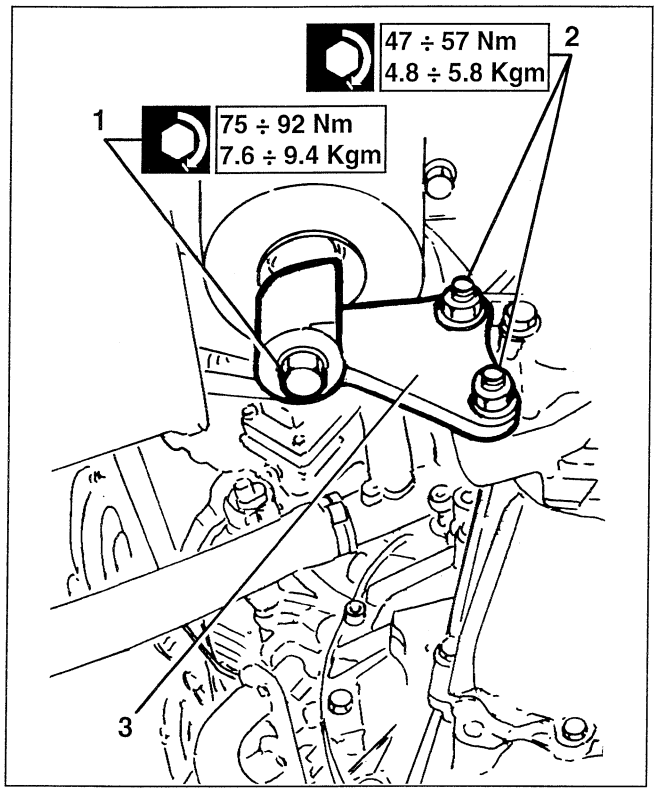

1. Slacken two of the gearbox cover fastening screws and fasten brackets no. 1.820.230.000 and no. 1.820.208.000.
2. Use a hydraulic lift to support the gearbox unit.

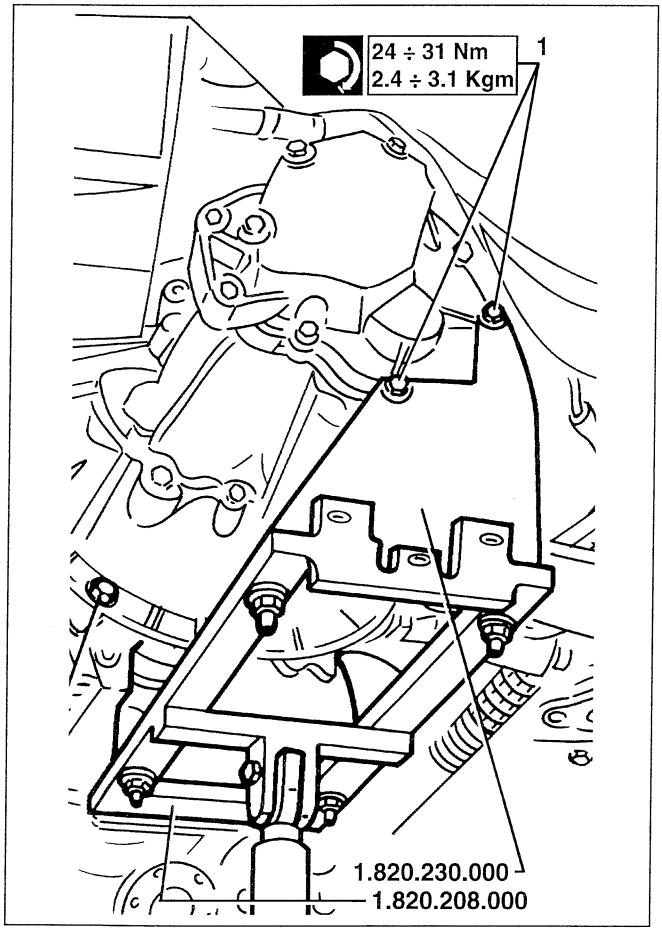

1. Slacken the rear Allen screw fastening the engine-gearbox.
2. Slacken the four screws fastening the layshaft support to the differential.

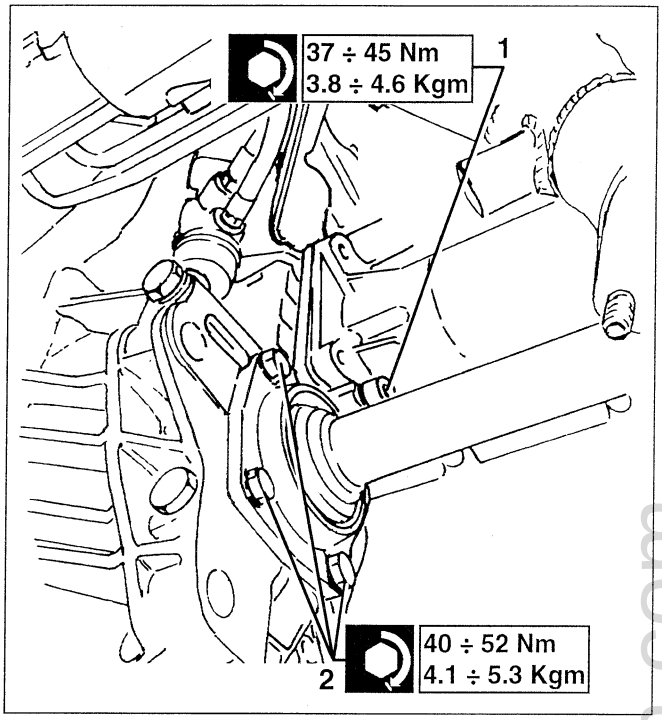

1. Slacken the three remaining screws fastening the gearbox to the engine.
2. Move away the gearbox from the engine and lower it using the hydraulic jack.

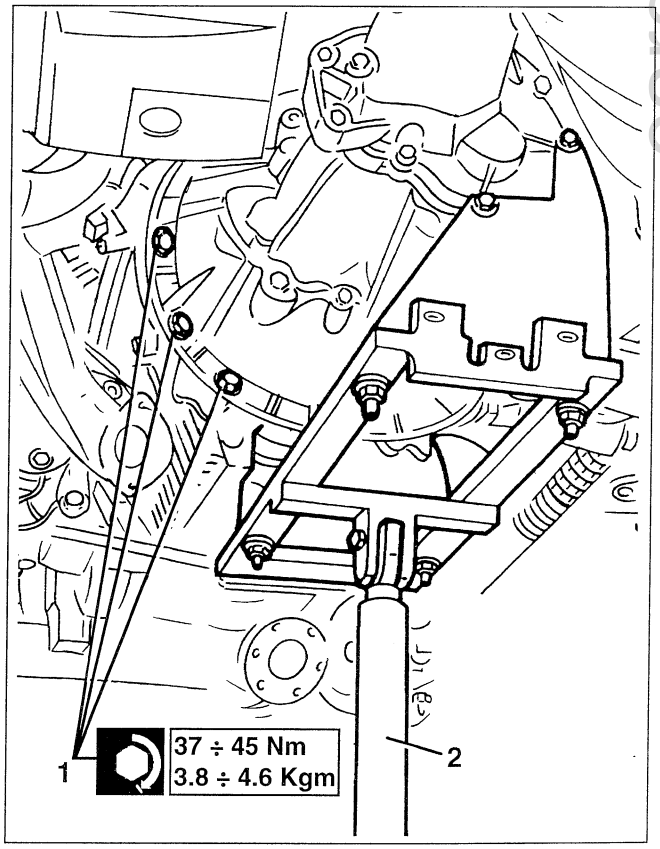

cardiagn.com

GEARBOX ASSEMBLY

REMOVAL/REFITTING

- Position the vehicle on a shop jack.
- Make sure the ignition key is at "STOP" and disconnect the (-) battery terminal.
- Remove the front wheels.

1. Remove the button, loosen the screws and remove the front left-hand wheel compartment dust guard.

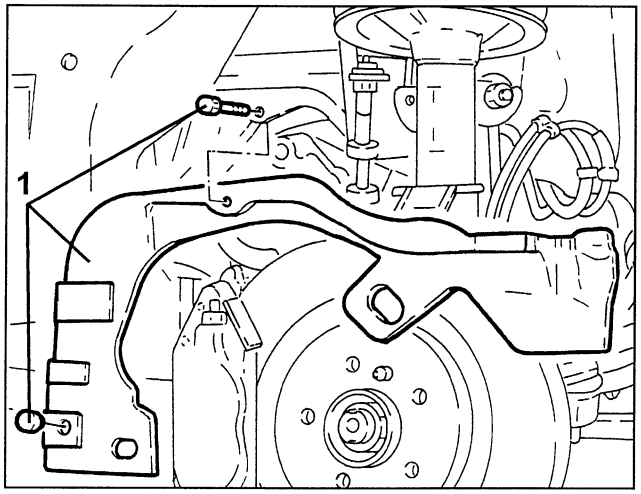

1. Loosen the screws and the nut and remove the lower air cleaner guard.

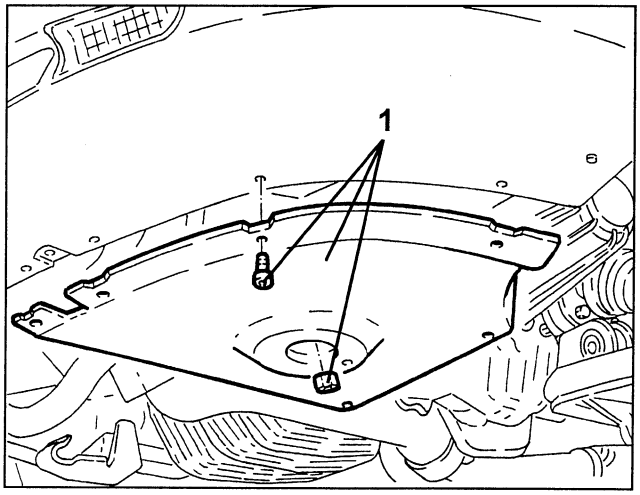

1. Loosen the screws and remove the left-hand side engine compartment guard.

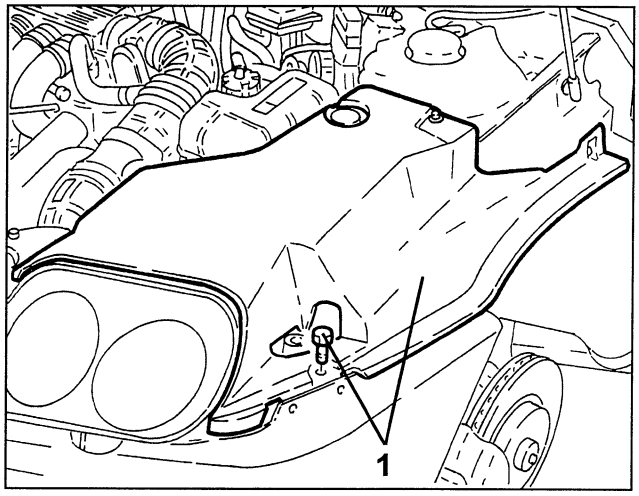

1. Loosen the clips and remove the corrugated sleeve and resonators after releasing the intermediate resonator from the fastening pin.

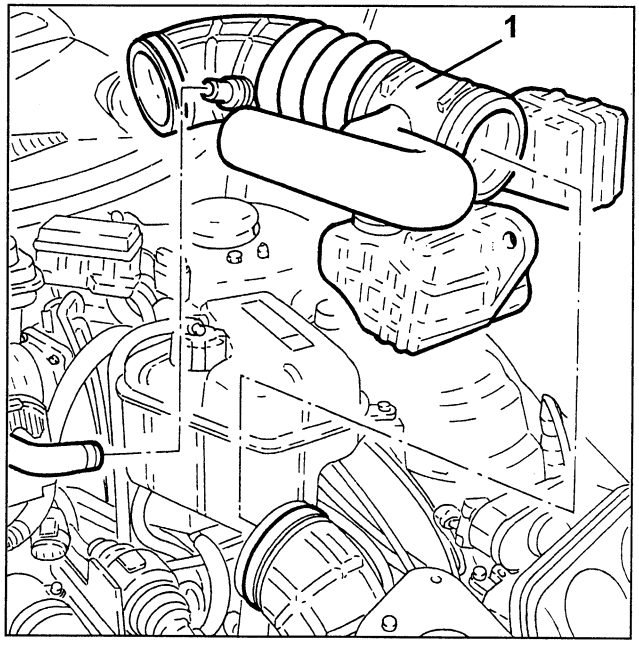

cardiagn.com

- Release the engine cooling fan from the fastenings on the upper radiator crossmember.
1. Loosen the screw fastening the right-hand side engine compartment guard to the upper radiator crossmember.
2. Loosen the fastening screws and remove the upper radiator crossmember.

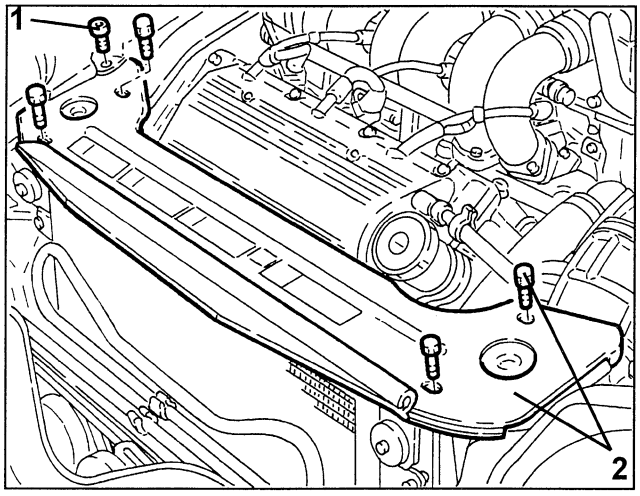

1. Disconnect the air flow meter electrical connection.
2. Loosen the air cleaner fastening nuts.

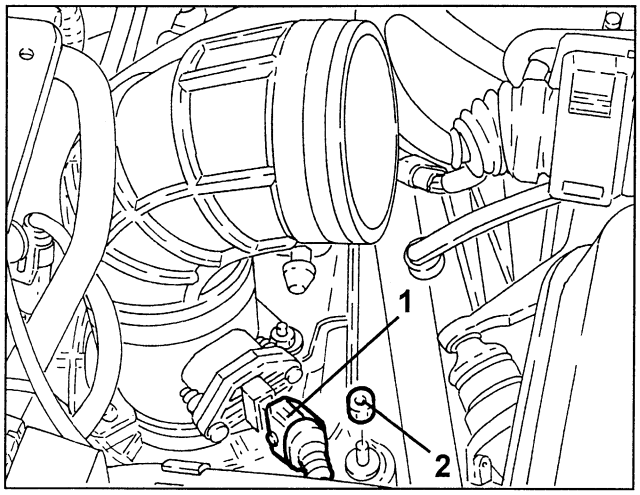

- Release the air cleaner from the lower resonator sleeve.
1. Remove the complete air cleaner.

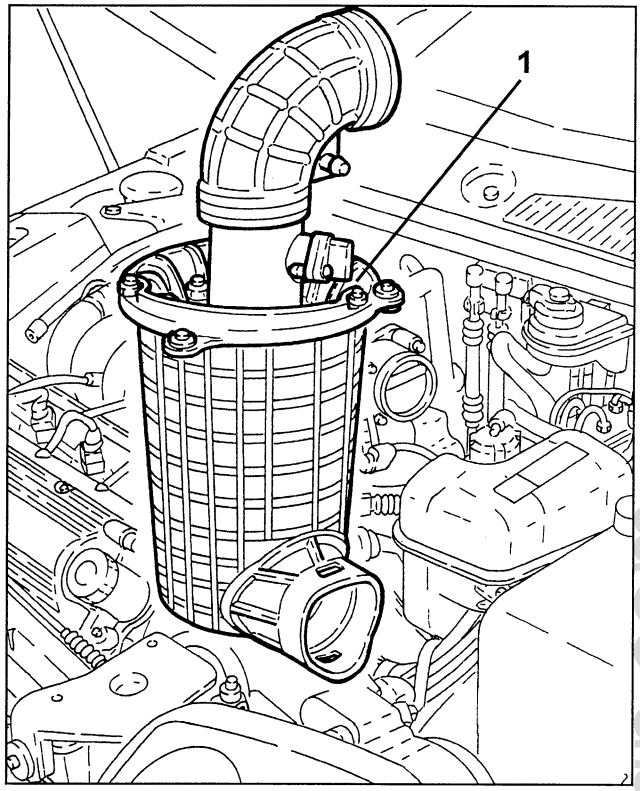

1. Release the electrical wiring from the fastening clips on the bracket.
2. Loosen the fastening nut and remove the electrical wiring bracket.

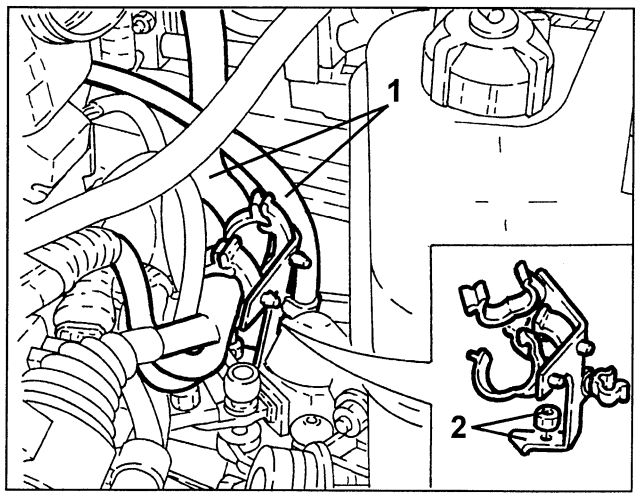

cardiagn.com

1. Disconnect the gear selection and engagement wires.
2. Loosen the nuts and move the brackets and selection/engagement wires aside.

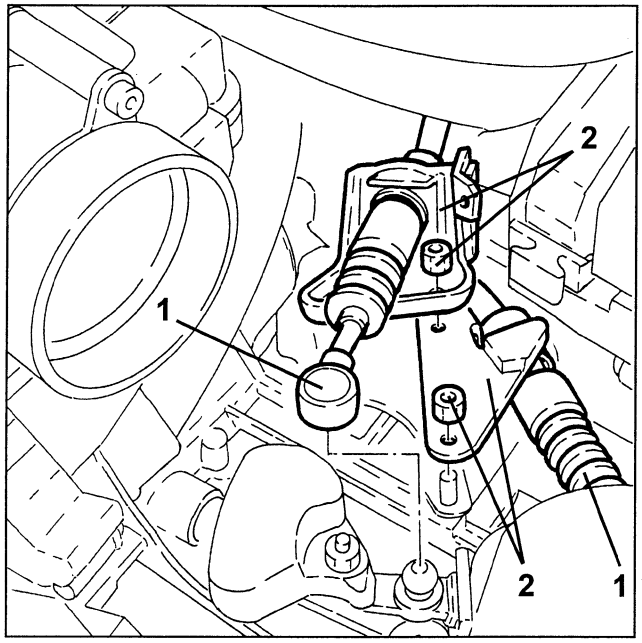

1. Loosen the screws and remove the gear selection and engagement assembly.
2. Disconnect the reversing light switch electrical connection.
3. Disconnect the starter motor power electrical connection.

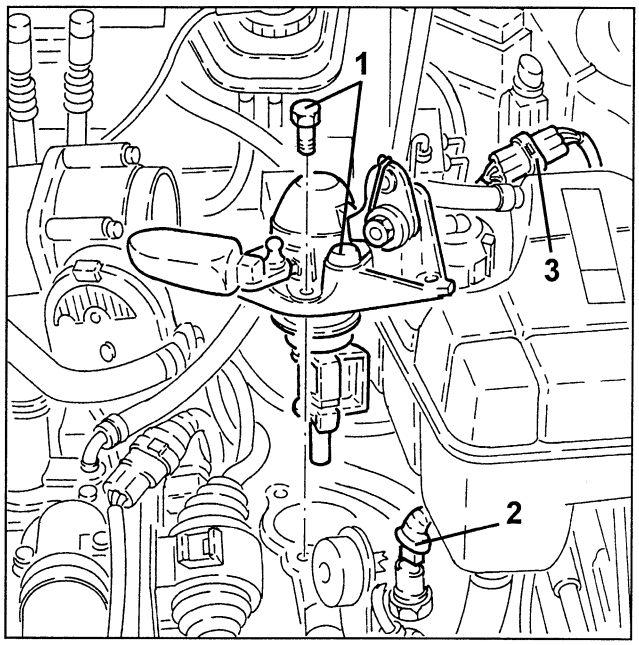

1. Loosen the nut and remove the upper firewall from the right-hand exhaust manifold.

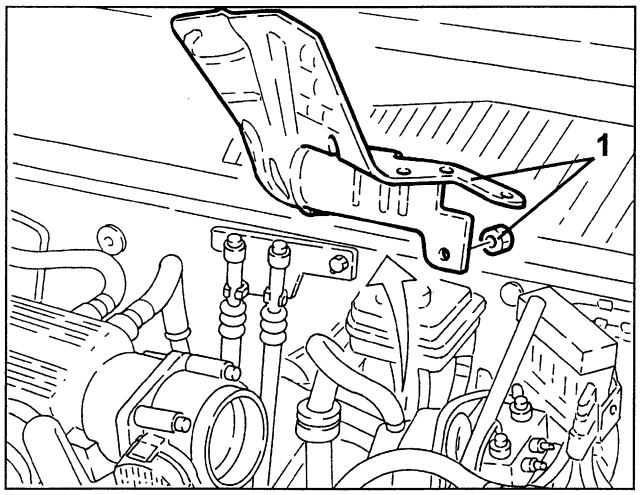

1. Open the junction unit and disconnect the starter motor power wire.

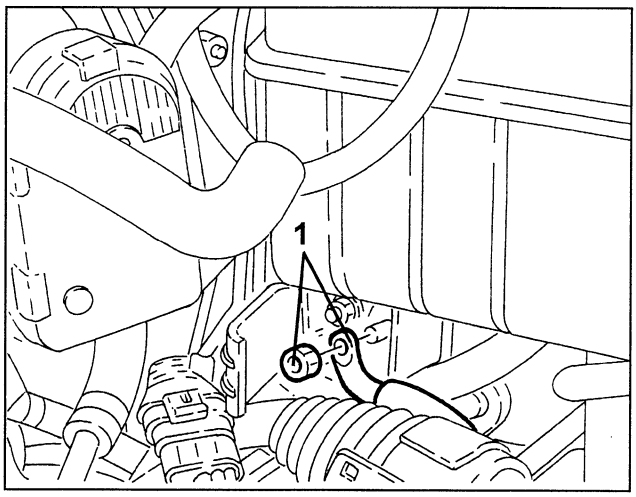

cardiagn.com

- Release the starter motor power wiring from the fastening clips and move it aside.
1. Loosen the fastening nut and remove the starter motor wiring bracket.

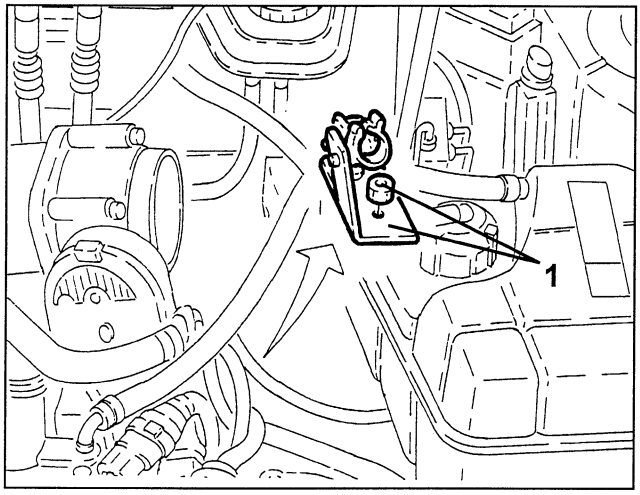

1. Loosen the fastening screws and move the bracket with clutch cylinder and vibration damper aside without disconnecting the respective pipes.
2. Disconnect the lambda sensor electrical connections and release the electrical wiring from the fastening clips.

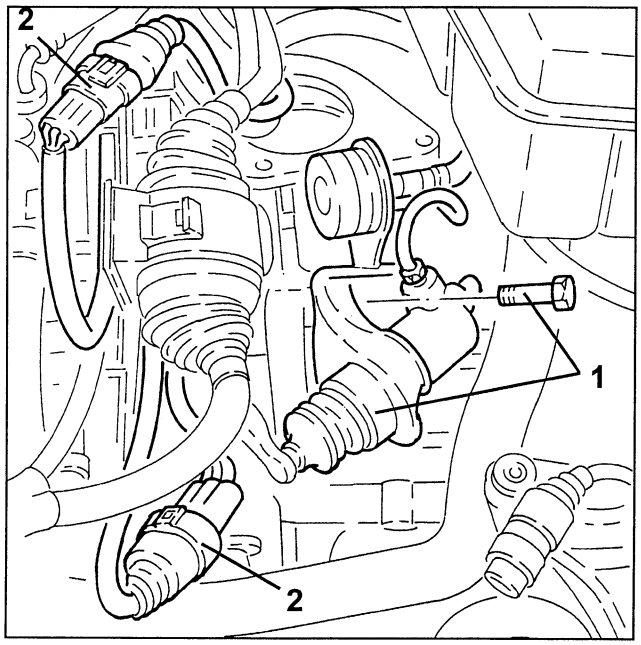

1. Loosen the fasteners and remove the exhaust pipe front section.

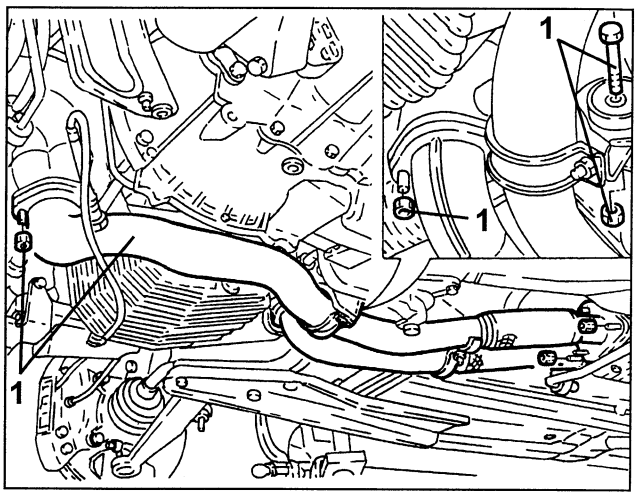

1. Loosen the cap and drain the gearbox-differential oil.

NOTE: Collect the oil in a suitable container.

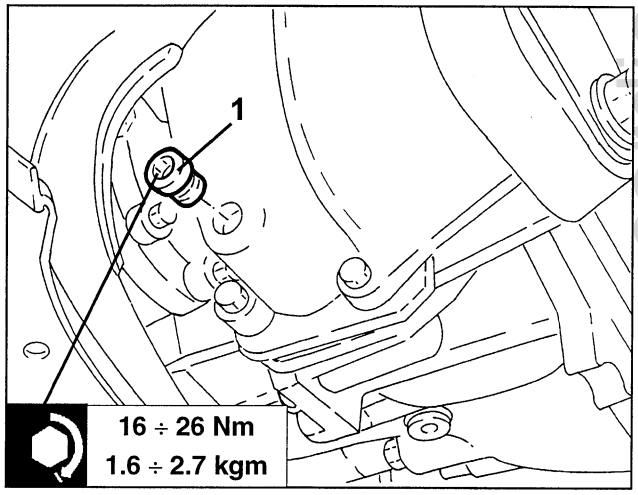

- Loosen the nuts fastening the right-hand exhaust manifold to the cylinder heads.

cardiagn.com

1. Disconnect the bonnet lock wire and move it aside.
2. Release the electrical wiring from the fastening clips and the duct.
3. Disconnect the electrical connection.
4. Disconnect the engine cooling fan electrical connection.
5. Disconnect the engine cooling fan resistor electrical connection and move the electrical wiring aside.

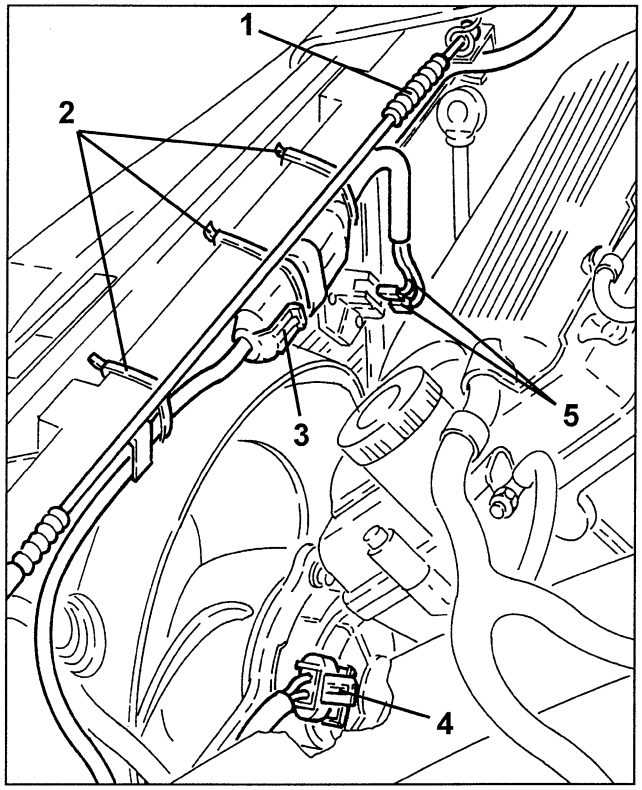

1. Loosen the screws and remove the electrical wiring duct.
2. Loosen the two upper engine cooling radiator fastening screws and take the respective shims.

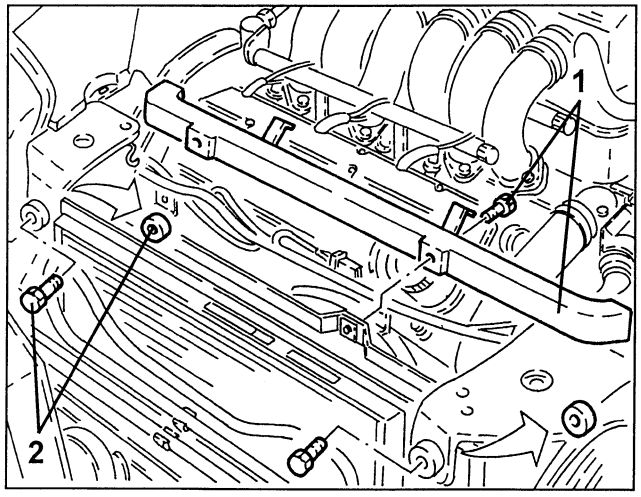

1. Move the radiator from the engine just enough to remove the engine cooling fan.

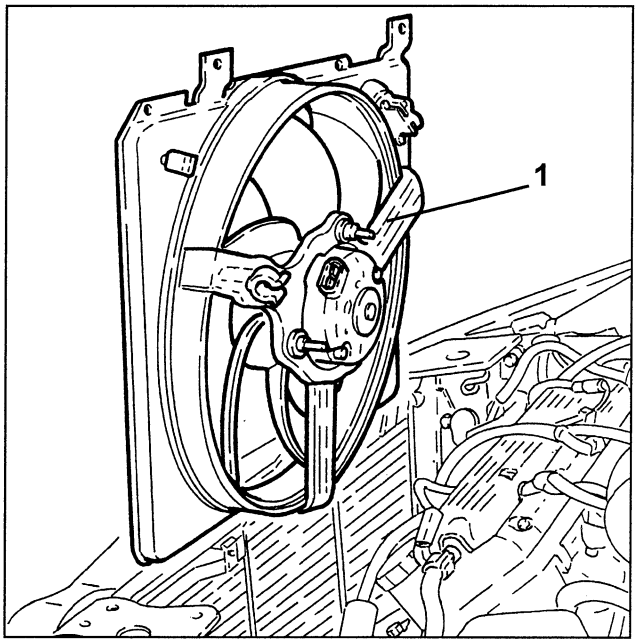

1. Release the power steering cooling serpentine from the fasteners on the underbody front crossmember.
2. Loosen the fastening screw and move the right-hand horn aside.

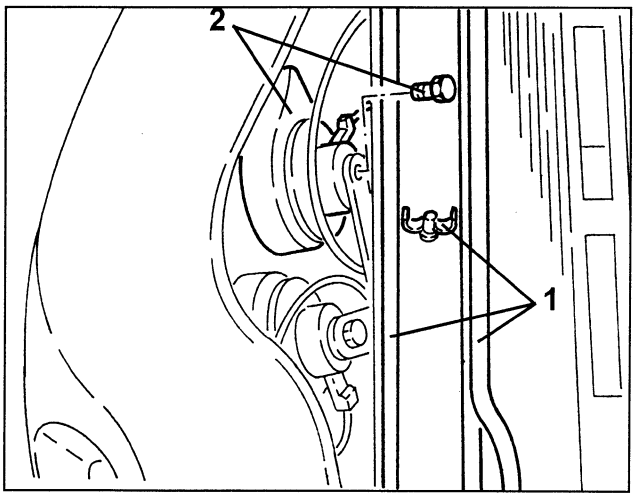

cardiagn.com

1. Fit the two specific engine brackets on the cylinder heads.
2. Fit crossmember no. 1.820.581.000 with brackets no. 1.820.239.000.
3. Fit bracket no. 1.820.226.000 and connect the respective tie-rods to the brackets previously fitted on the cylinder heads.

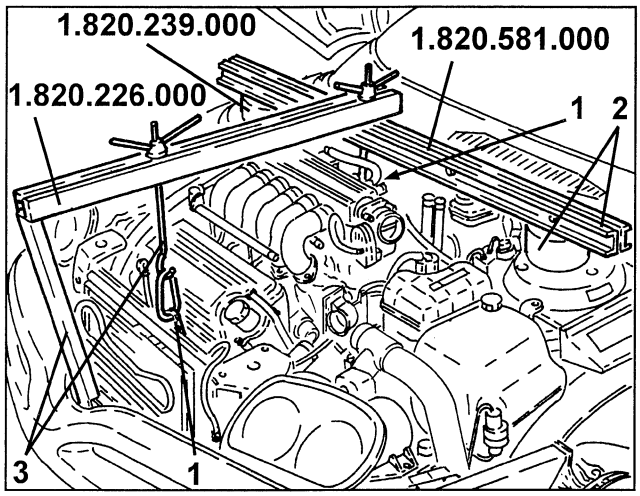

1. Remove the button, loosen the screws and remove the dust guard from the right-hand front wheel compartment.

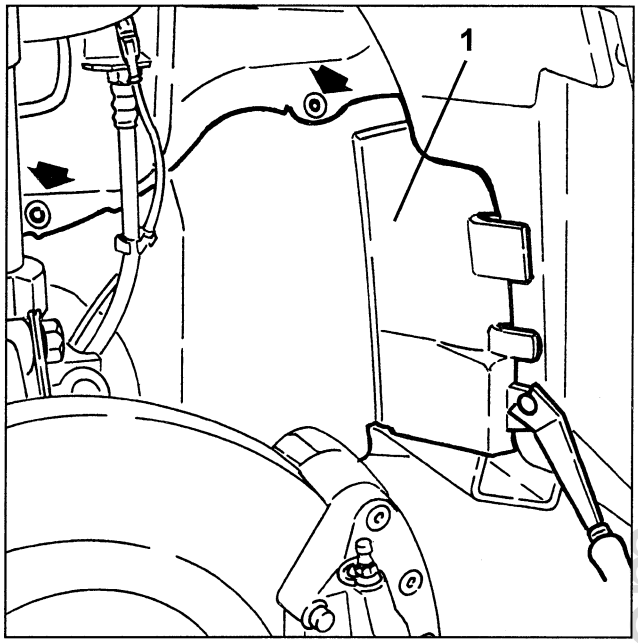

1. Loosen the upper screws fastening the gearbox-differential to the engine.

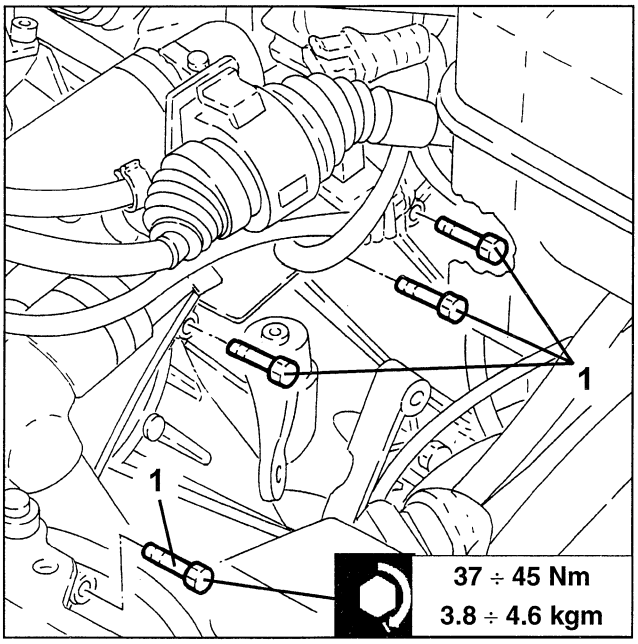

1. Loosen the fastening bolts and disconnect the drive shafts.

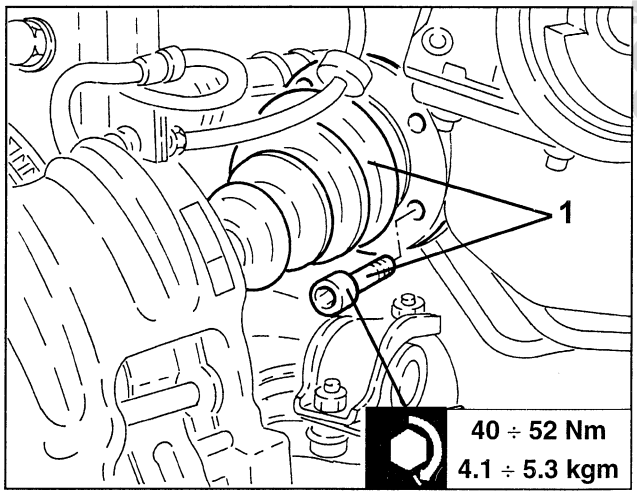

cardiagn.com

1. Position a hydraulic jack under the differential.
2. Loosen the fastening screws and remove the complete engine rear mount.
- Remove the hydraulic jack from under the differential.

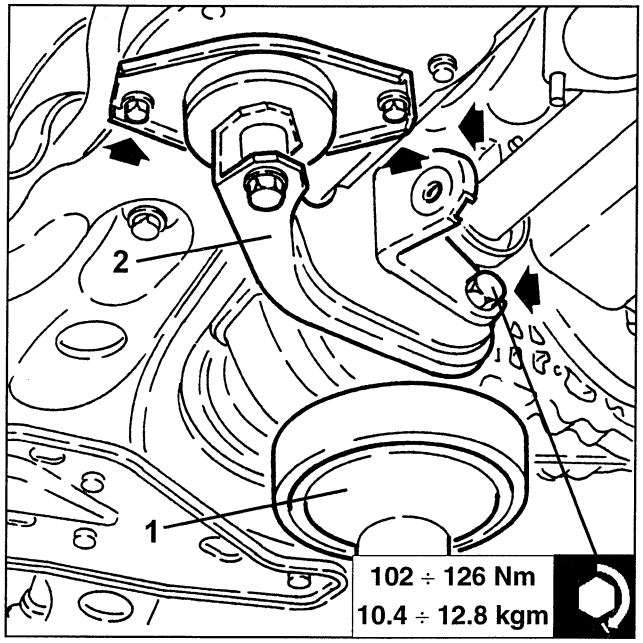

1. Use a hydraulic jack to support the crossmember by means of tool no. 1.860.978.000.
2. Loosen the gear lever bracket front fastening nuts.
3. Loosen the rear screws and loosen the remaining gear lever screws.

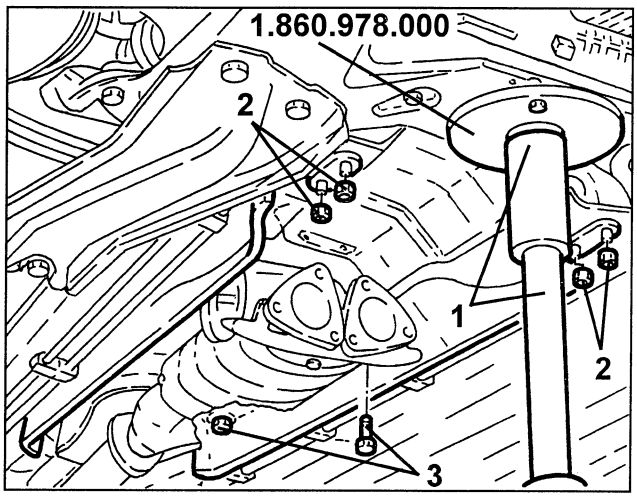

1. Loosen the fastening nuts and remove the power steering unit firewall.

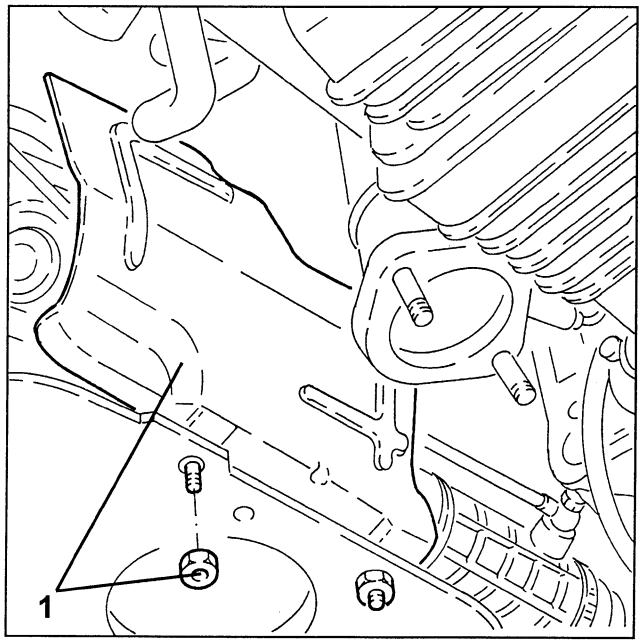

1. Loosen the nuts and disconnect the stabiliser bar tie-rods.

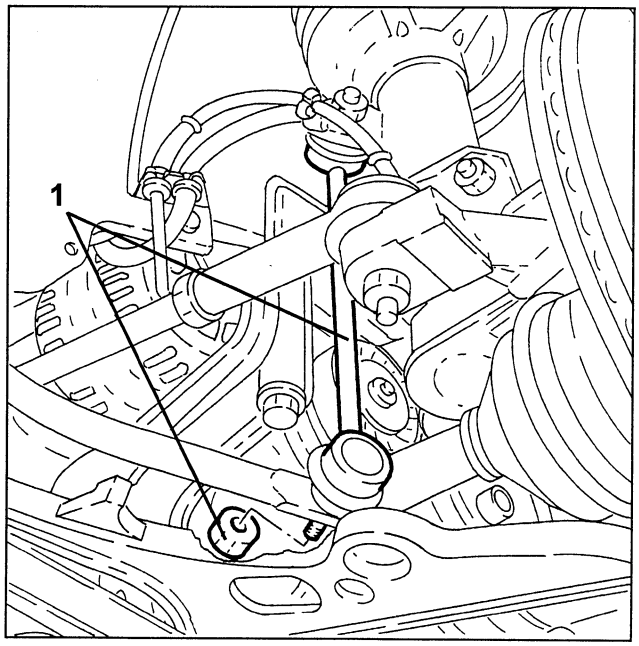

cardiagn.com

1. Loosen the bolts fastening the wishbones to the wheel risers.

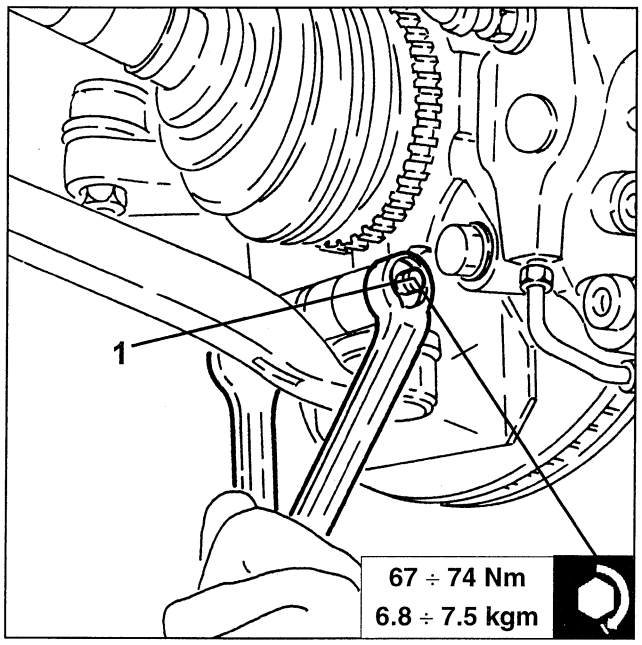

1. Loosen the side screws fastening the crossmember to the underbody.

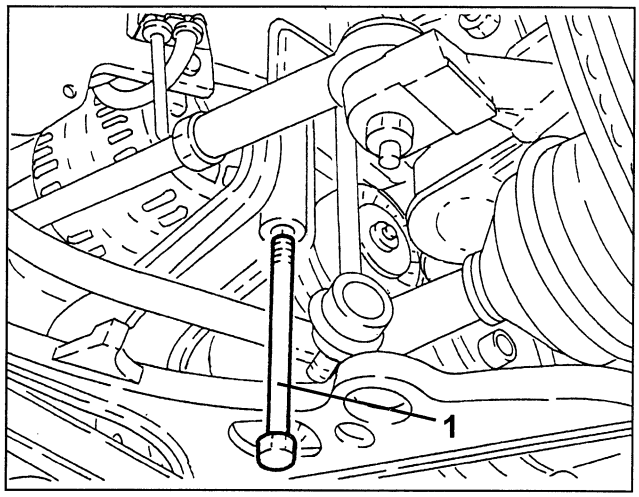

1. Loosen the screws fastening the power steering unit to the crossmember.
2. Loosen the rear screws fastening the crossmember to the underbody.
3. Loosen the central screws fastening the crossmember to the underbody.

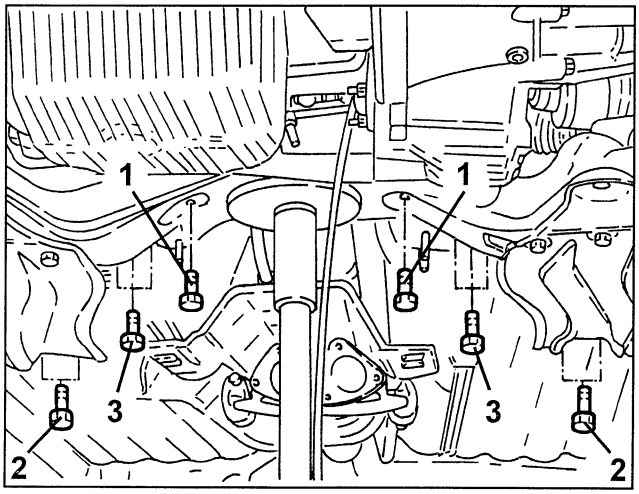

1. Lower the hydraulic jack and remove the crossmember with wishbone, stabiliser bar and reinforcements.

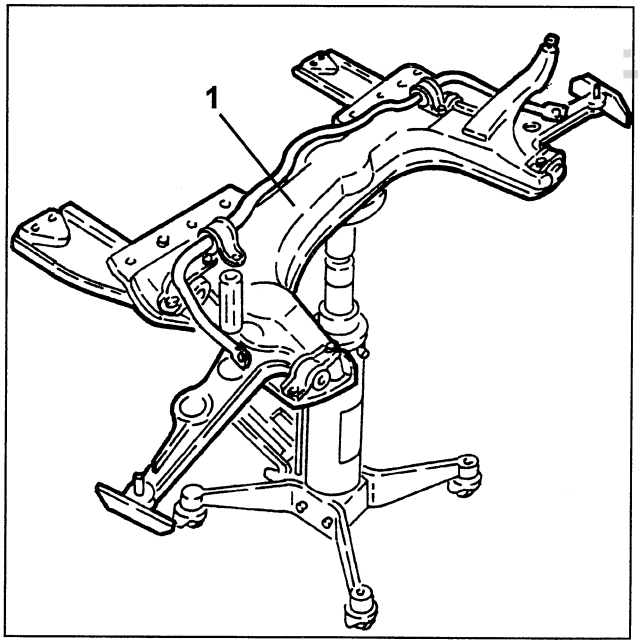

cardiagn.com

1. Remove the right-hand exhaust manifold.

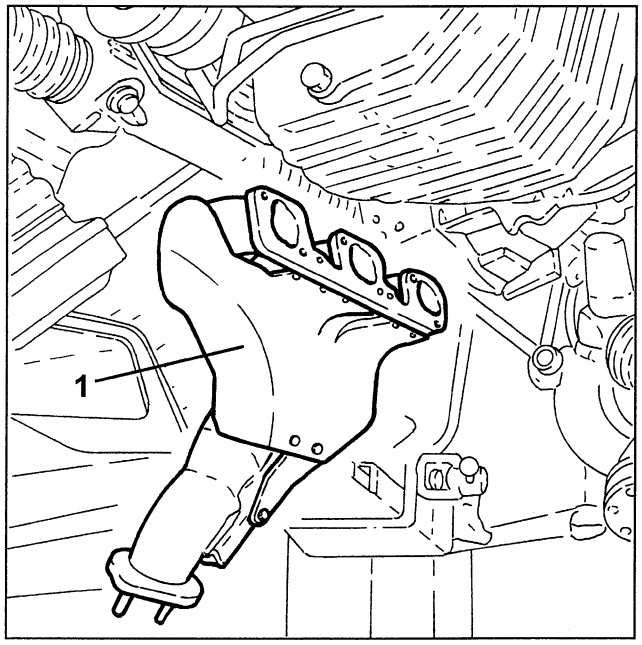

1. Loosen the fastening screws and release the starter motor from the gearbox.

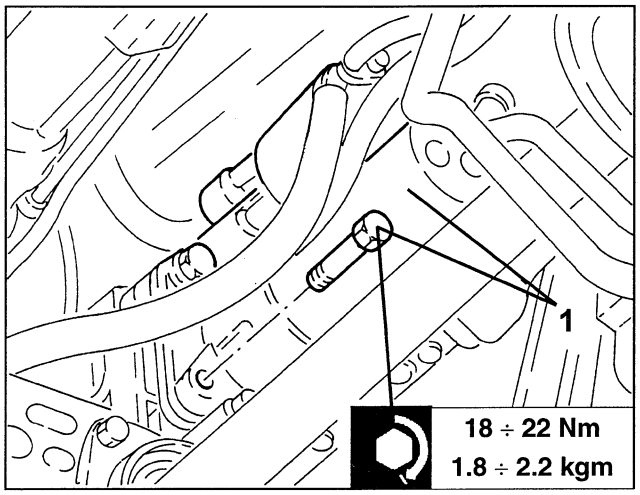

1. Loosen the fastening screws and remove the intermediate drive shaft.

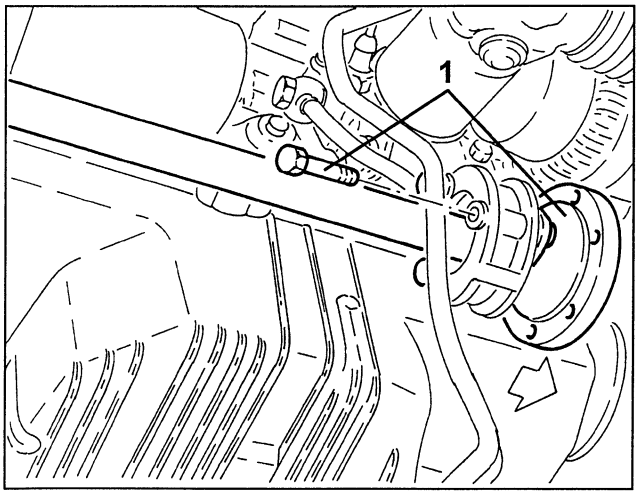

1. Loosen the fastening screws and remove the flywheel guard.

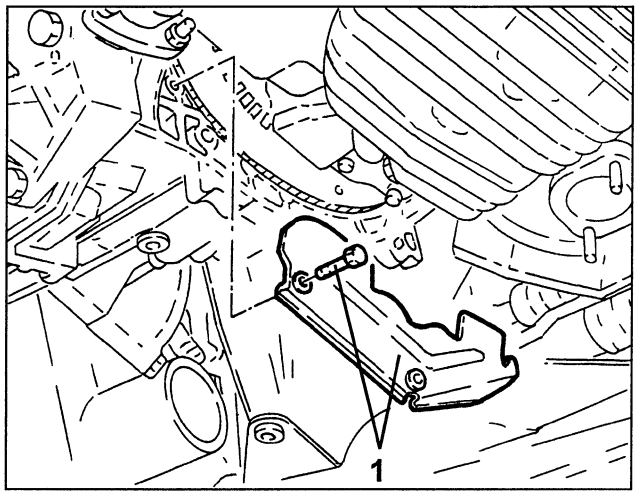

1. Disconnect the gearbox earth braid.
2. Position a hydraulic jack under the differential.
3. Loosen the screws and remove the gearbox bracket, engine side.
- Remove the hydraulic jack from under the differential.

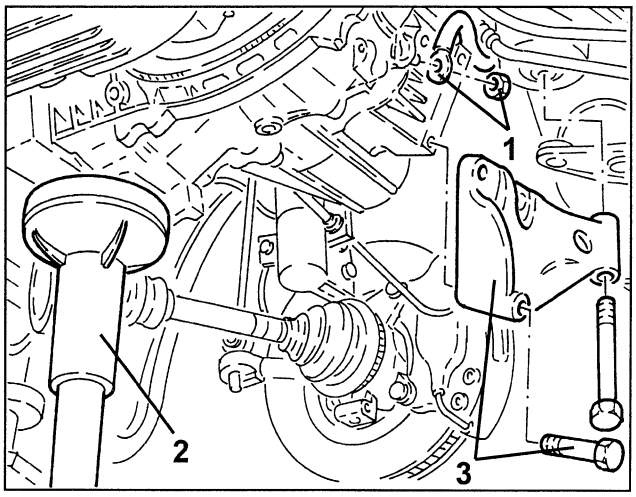

cardiagn.com

1. Support the gearbox-differential with a hydraulic jack and tool no. 1.870.644.001.
2. Loosen the remaining lower gearbox-differential fastening screws.

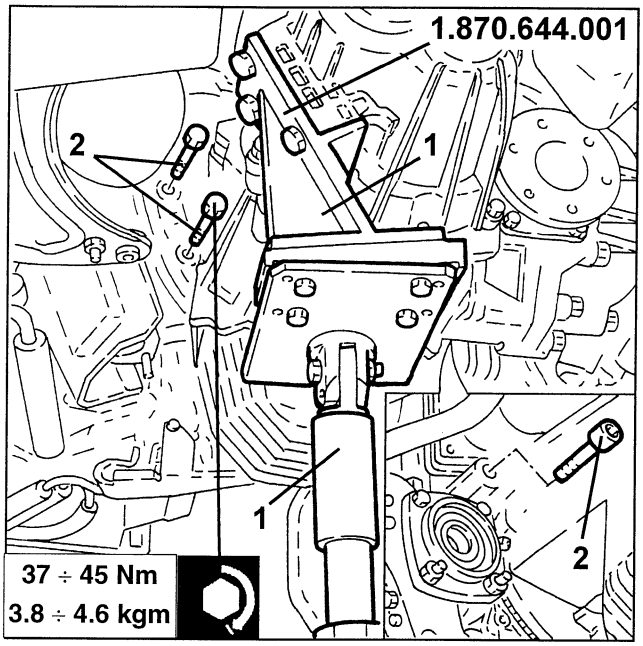

1. Lower the hydraulic jack and remove the gearbox-differential assembly.

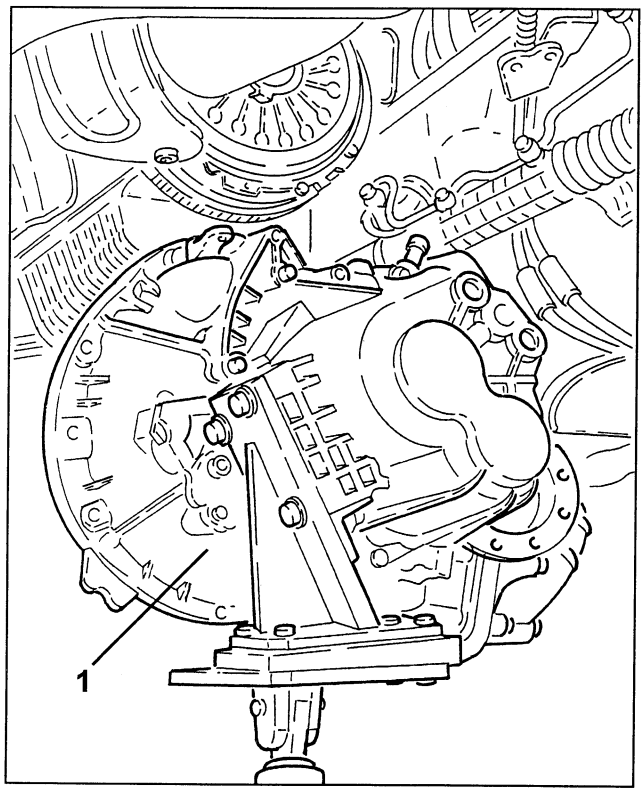

1. Fit flywheel retainer tool no. 1.820.028.000.
2. Loosen the screws and remove the clutch frame with thrust bearing and clutch plate.

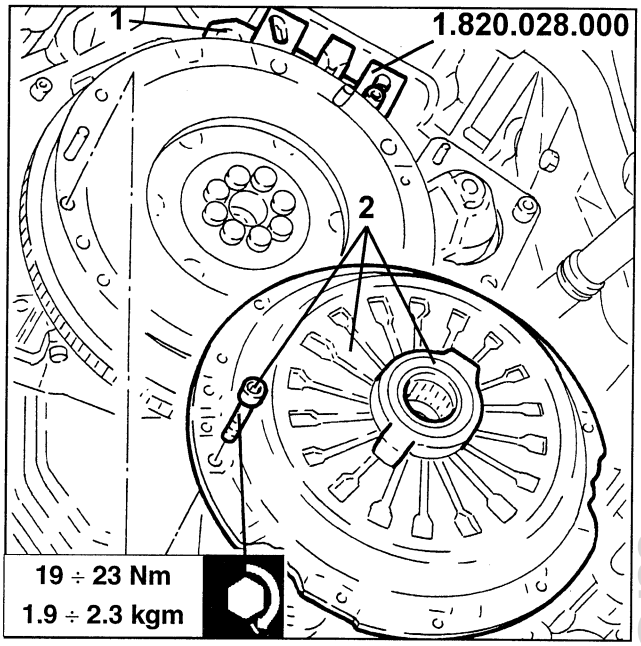

Attain to the following precautions when refitting.
1. Remove the thrust bearing from the clutch frame with tool no. 1.821.215.000.

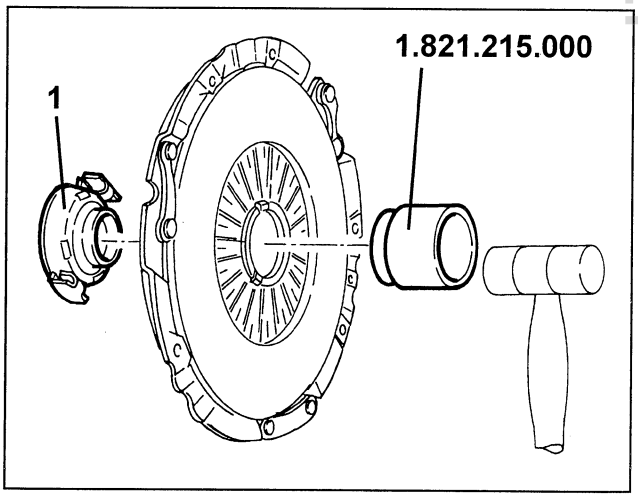

cardiagn.com

1. Lift the thrust bearing taper ring (1a) to cover spring (1b).
2. Fit the thrust bearing on the primary shaft and couple it with the fork pin.

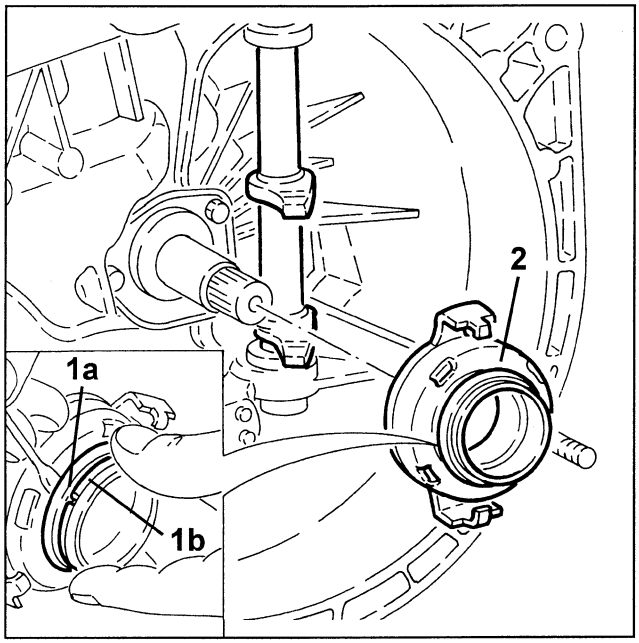

1. Fit the clutch plate and clutch frame centring them with tool no. 1.820.124.000.

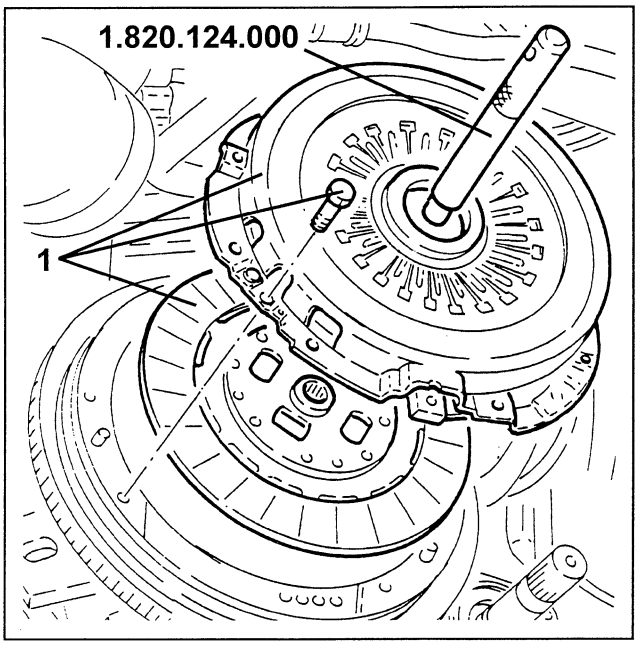

- After fitting the gearbox and fastening it with the respective screws, operate the clutch lever to engage the thrust bearing on the clutch.

- Complete refitting by reversing the removal sequence until the gear selection/engagement assembly step. Then adjust the gear selection/engagement wires as follows.
1. Position the bracket and gear selection/engagement wires. Fasten the respective nuts.

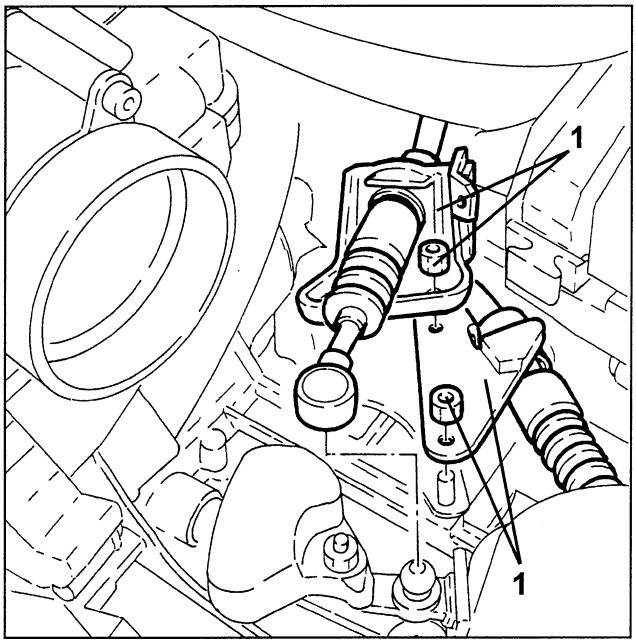

1. Fit tool no. 1.870.974.000 under the gear engagement wire ball coupling.
2. Connect the gear selection wire.
3. Loosen the gear selection/engagement assembly adjustment nut.
- Torque the gear selection/engagement assembly adjustment nut after positioning the gear lever in neutral and shifting it all to the right.
4. Connect the gear engagement wire.
- Position the gear lever in reverse and remove tool no. 1.870.974.000.

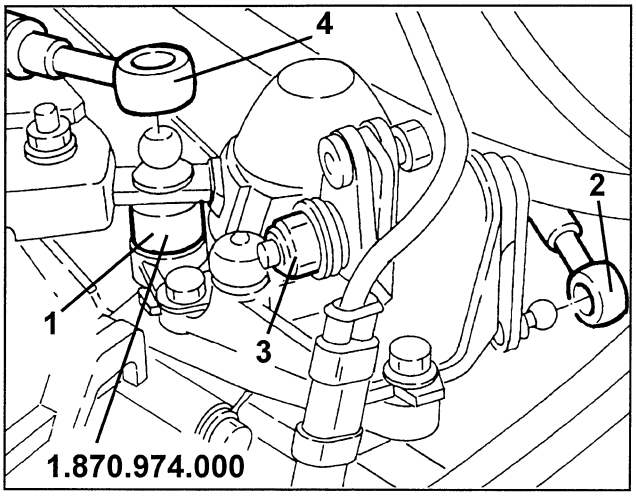

- Complete refitting by reversing the removal sequence.

cardiagn.com

VEHICLE OPERATIONS

DIFFERENTIAL CASING OIL SEAL, GEARBOX SIDE

- Position the vehicle on a shop jack.
- Make sure the ignition key is at "STOP" and disconnect the (-) battery terminal.
- Remove the front left-hand wheel.

1. Remove the button, loosen the screws and remove the front left-hand wheel compartment dust guard.

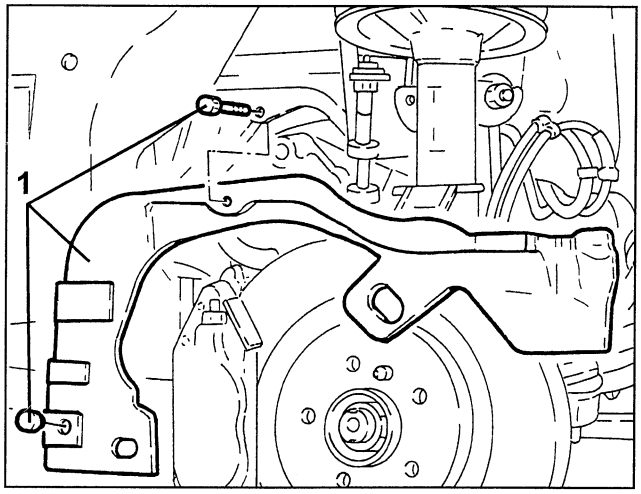

- From the left-hand wheelhouse, disconnect the brake pad wear sensor electrical connection.
- Release the ABS inductive sensor wire from the bracket.

1. Loosen the bolts fastening the left-hand drive shaft to the internal differential shaft.

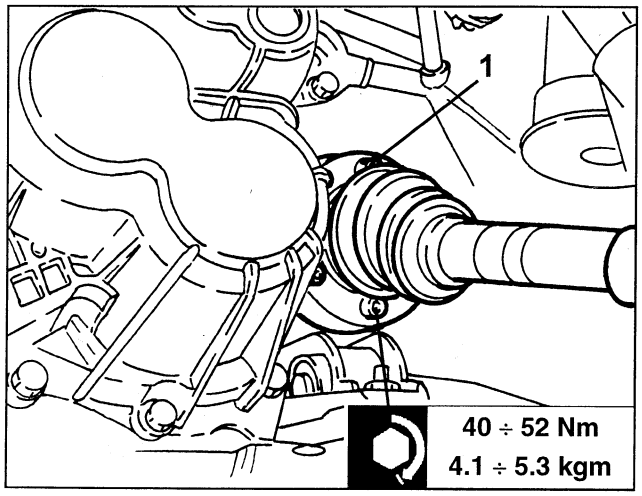

1. Loosen the two bolts fastening the left-hand riser to the shock absorber, and remove only the upper bolt.

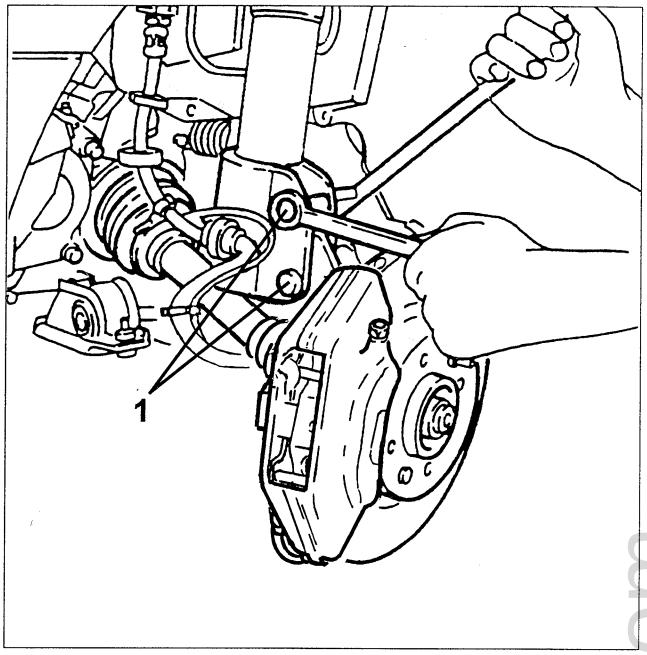

1. Use tools no. 1.820.229.000 and no. 1.821.161.000 to remove the differential internal drive shaft.

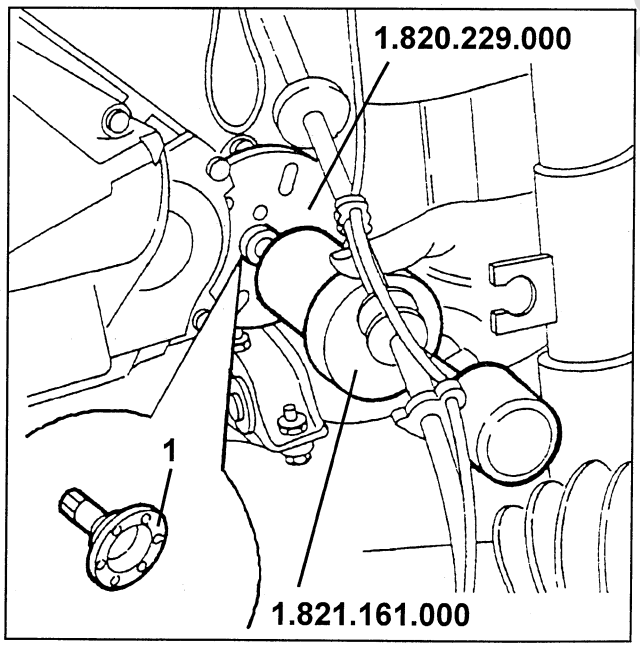

cardiagn.com

1. Loosen the fastening screws and remove the differential left-hand flange and oil seal.

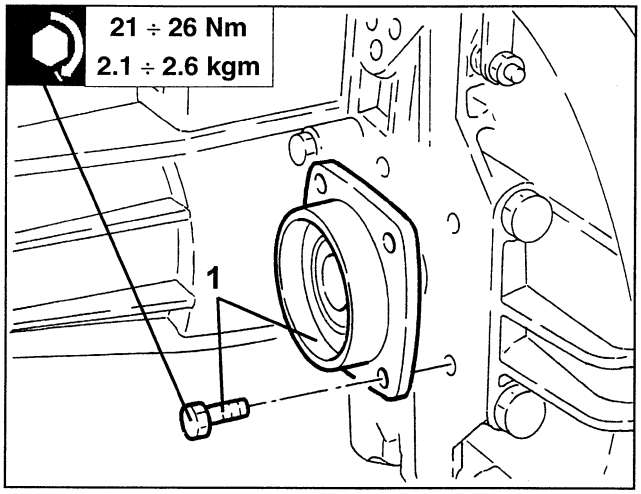

- At the bench, remove the oil seal from the differential left-hand flange.
1. Fit a new oil seal on the left-hand differential flange with tools no. 1.821.170.000 and no. 1.821.171.000.

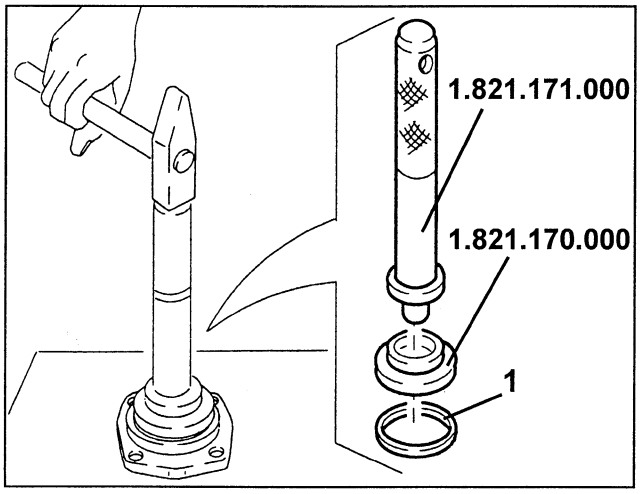

- Complete refitting by reversing the removal sequence.

DIFFERENTIAL CASING OIL SEAL, ENGINE SIDE

- Position the vehicle on a shop jack.
- Make sure the ignition key is at "STOP" and disconnect the (-) battery terminal.
- Remove the front right-hand wheel.
1. Remove the button, loosen the screws and remove the front right-hand wheel compartment dust guard.

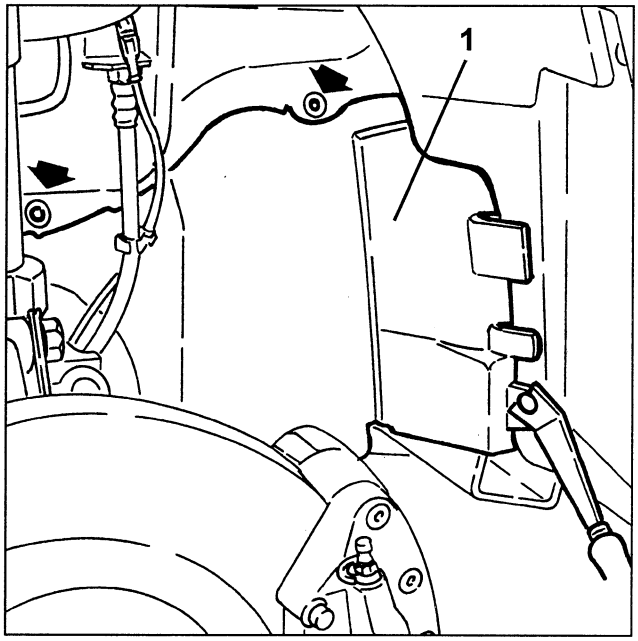

- From the right-hand wheelhouse, disconnect the brake pad wear sensor electrical connection.
- Release the ABS inductive sensor wire from the bracket.
1. Loosen the two bolts fastening the right-hand drive shaft to the intermediate drive shaft.
2. Loosen the two bolts fastening the right-hand riser to the shock absorber, and remove only the upper bolt.
- Push the right-hand drive shaft just enough to disconnect it from the intermediate drive shaft.

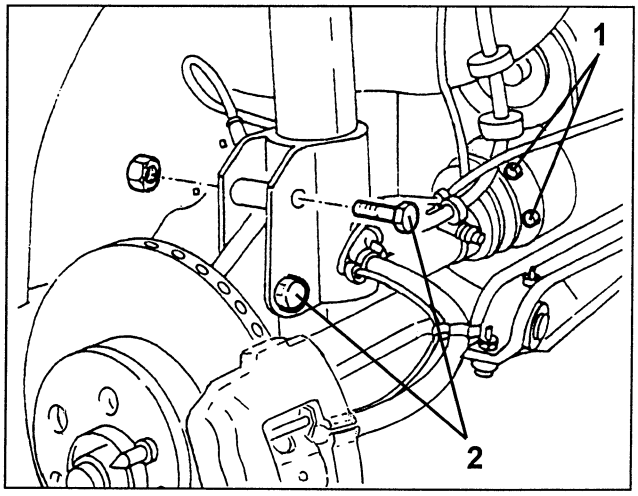

cardiagn.com

1. Loosen the intermediate shaft fastening screws.

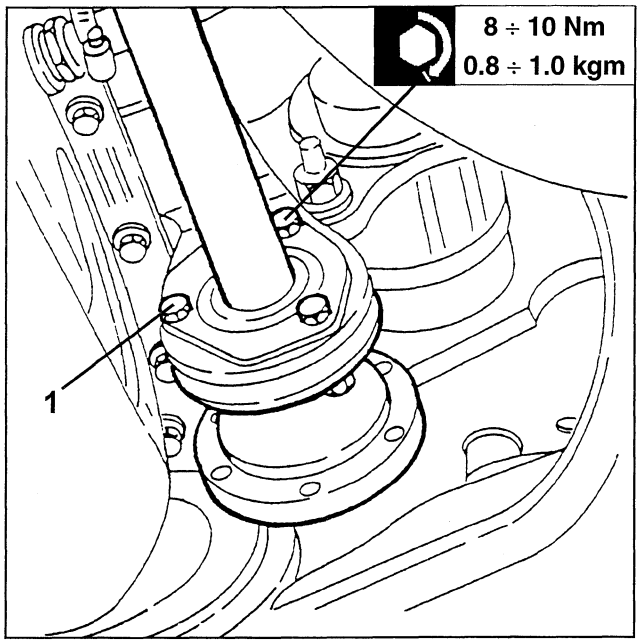

1. Remove the intermediate shaft from the differential.
2. Loosen the fastening screws and remove the differential right-hand flange and oil seal.

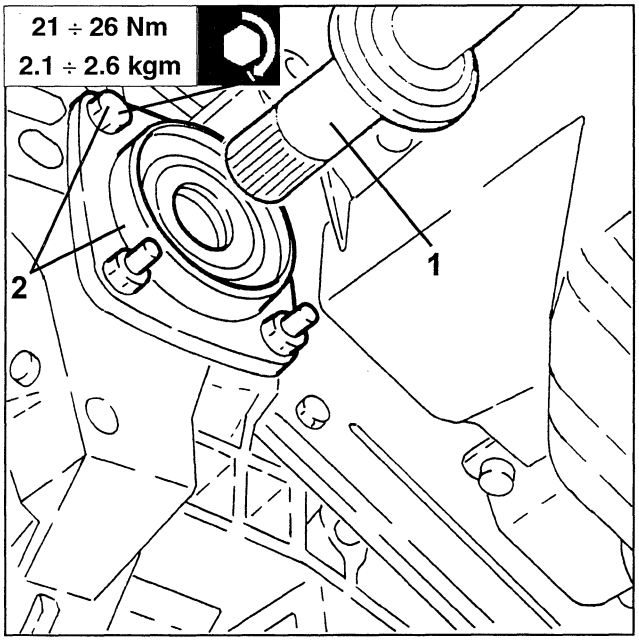

- At the bench, remove the oil seal from the differential right-hand flange.
1. Fit a new oil seal on the right-hand differential flange with tools no. 1.821.170.000 and no. 1.821.171.000.

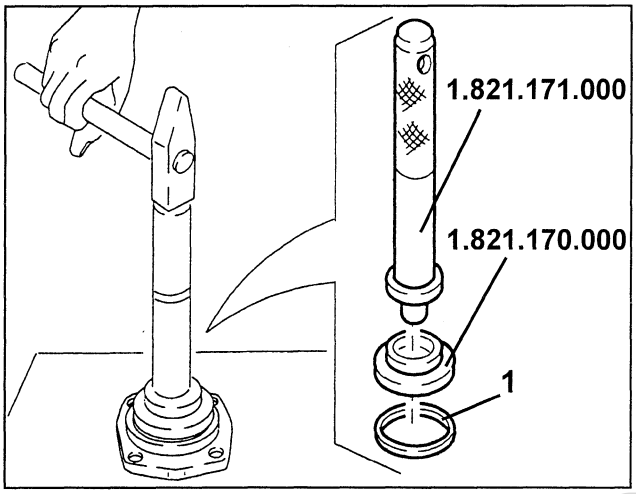

- Complete refitting by reversing the removal sequence.

cardiagn.com

GEARBOX EXTERNAL CONTROLS

DESCRIPTION

The double wire external control is made with high-feature plastic material (fatigue resistant, self-lubricating, low-weight). This type of control, combined with inertia distribution towards the gearbox, ensures:

- high comfort, thanks to the vibration filtering action and light-weight external components
- accurate manoeuvres and reduced coupling play.

The external control is equipped with a reverse engagement stroke inhibiting device which ensures additional safety in preventing involuntary manoeuvres.

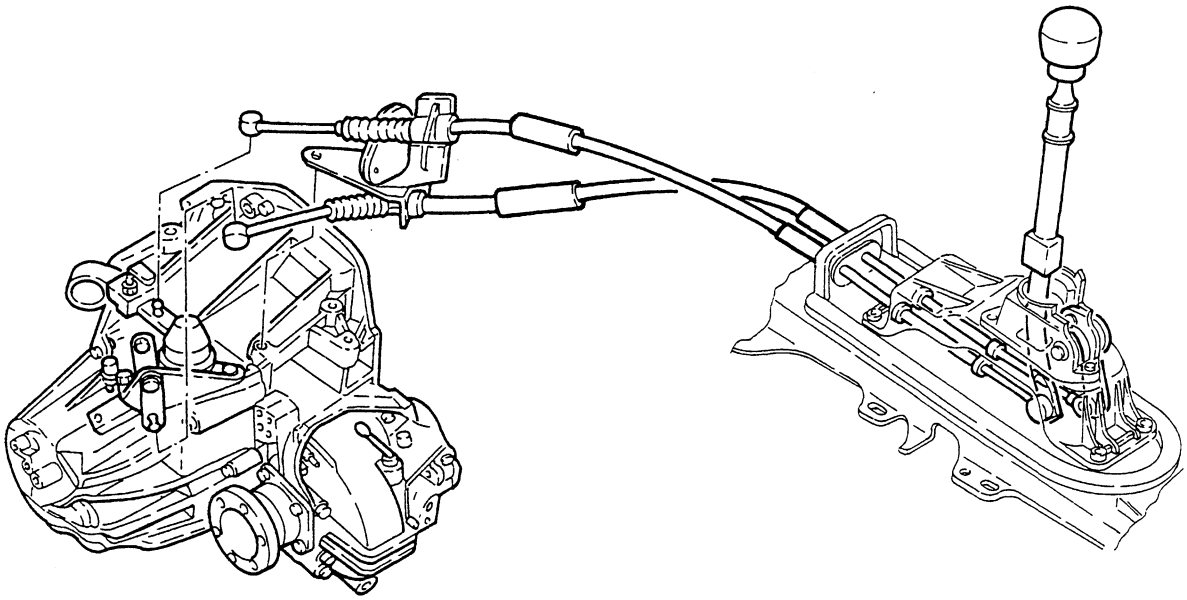

cardiagn.com

GEARBOX LEVER AND HANDBRAKE BRACKET

REMOVAL

- Position the vehicle on a shop jack.
- Make sure the ignition key is at "STOP" and disconnect the (-) battery terminal.

1. Loosen the fastening clips and remove the corrugated sleeve.

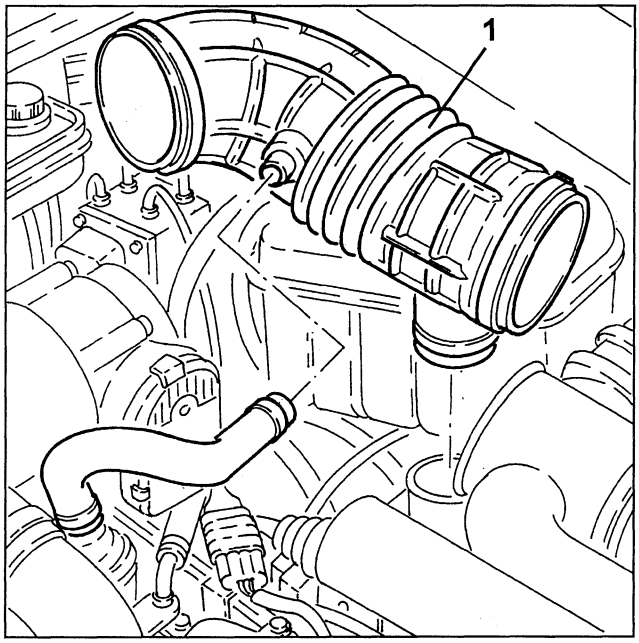

1. Release the electrical wiring from the bracket fastening clips.
2. Loosen the nut and remove the electrical wiring bracket.

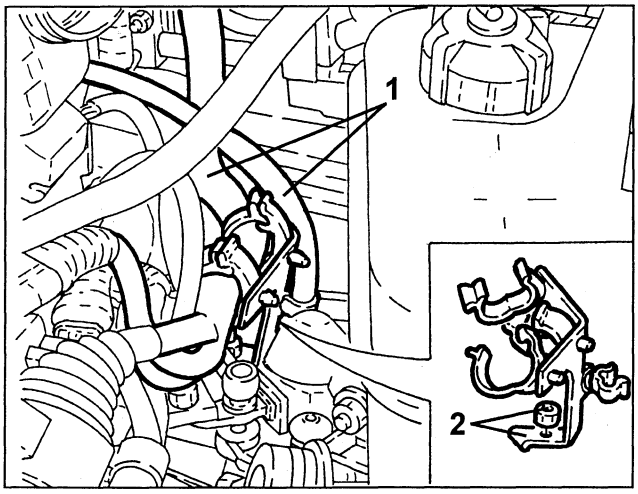

1. Disconnect the gear selection and engagement wires.
2. Loosen the nuts and release the bracket and gear selection and engagement wires.

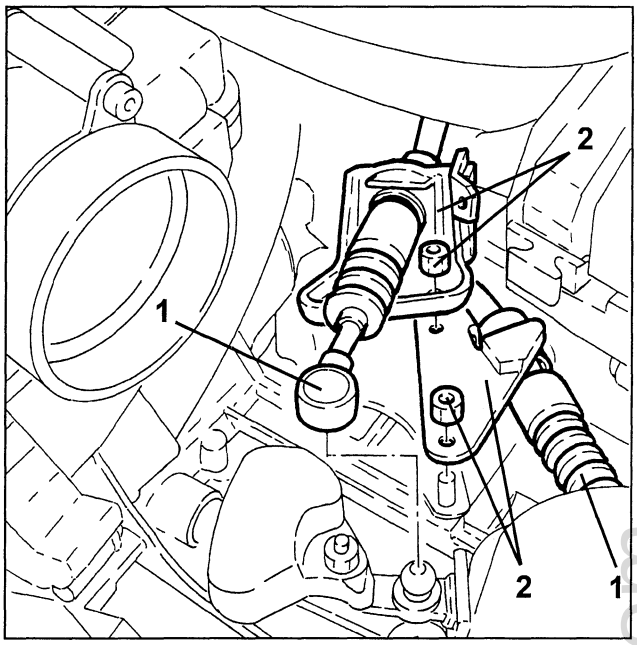

1. Disconnect the left-hand lambda sensor electrical connection.

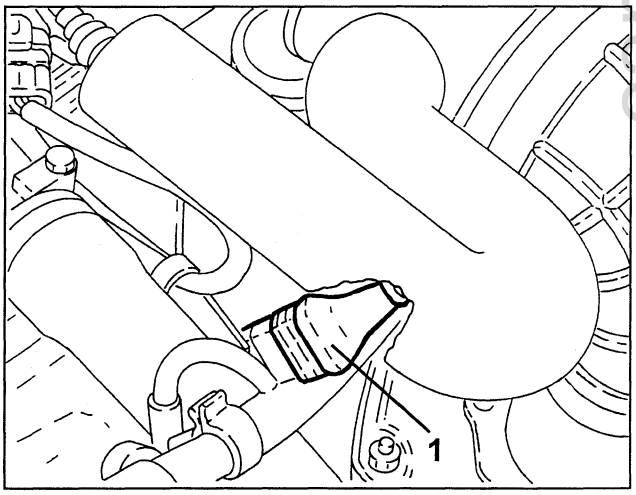

cardiagn.com

- Remove the tunnel unit (see Assembly 70).
1. Lift the handbrake lever and loosen the handbrake wire tension nut.
2. Disconnect the handbrake warning light switch electrical connection.

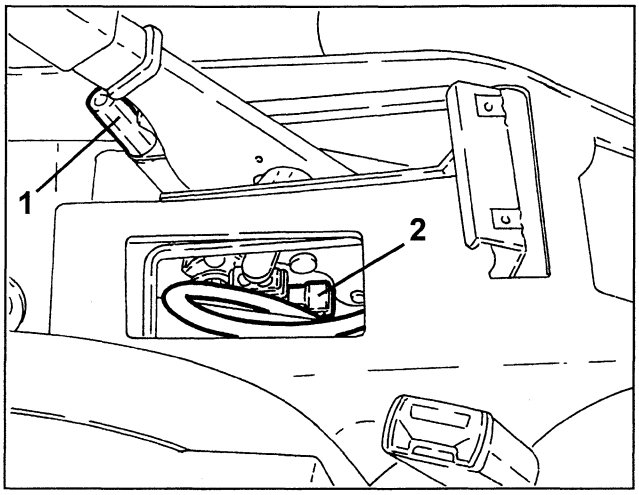

1. Loosen the catalytic converter bracket fastening screws.
2. Loosen the bolts fastening the catalytic converter to the mufflers.
3. Remove the exhaust pipe front section and catalytic converter with the hydraulic jack.
- Remove the respective seals.

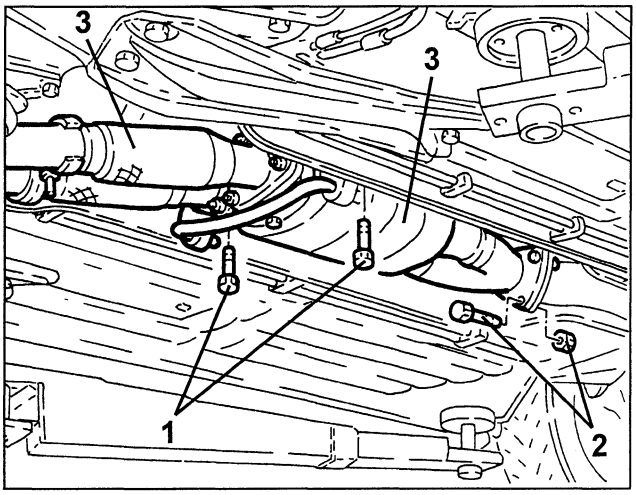

- Position a hydraulic jack to support the exhaust pipe.
1. Loosen the exhaust manifold exhaust pipe front section fastening nuts.
2. Loosen the bolt fastening the exhaust pipe front section to the respective rubber mount.

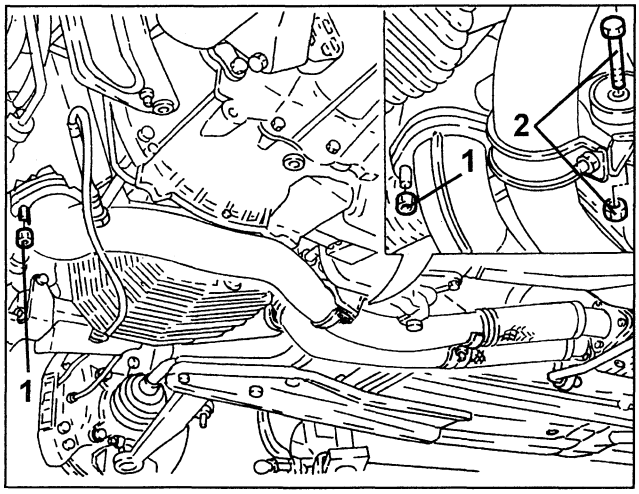

1. Loosen the fastening nuts and remove the exhaust pipe firewall.
2. Disconnect the handbrake wires.

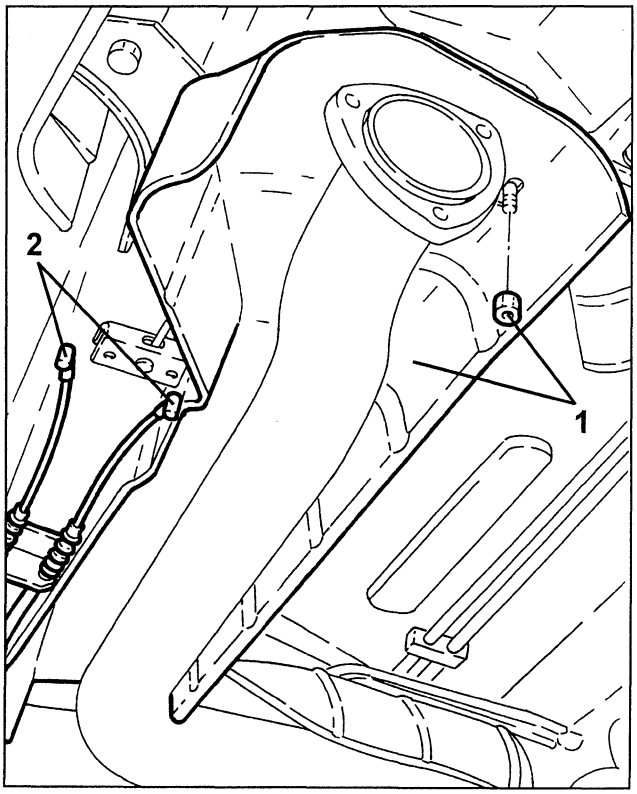

cardiagn.com

1. Loosen the intermediate exhaust bracket fastening screws.

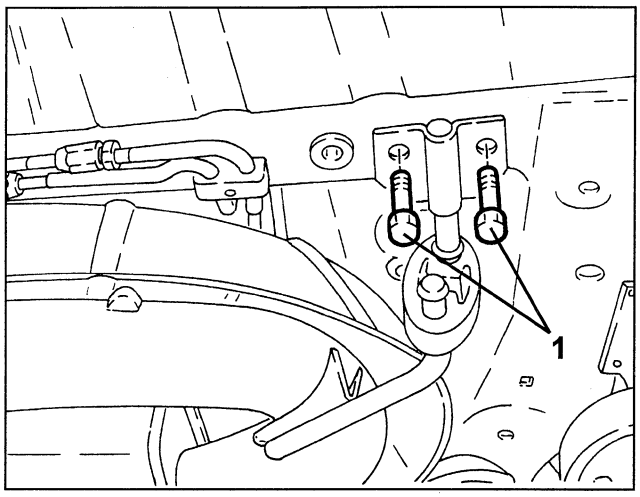

1. Position a hydraulic jack under the handbrake lever bracket.
2. Loosen the gearbox and handbrake levers fastening screws and nuts from the underbody.

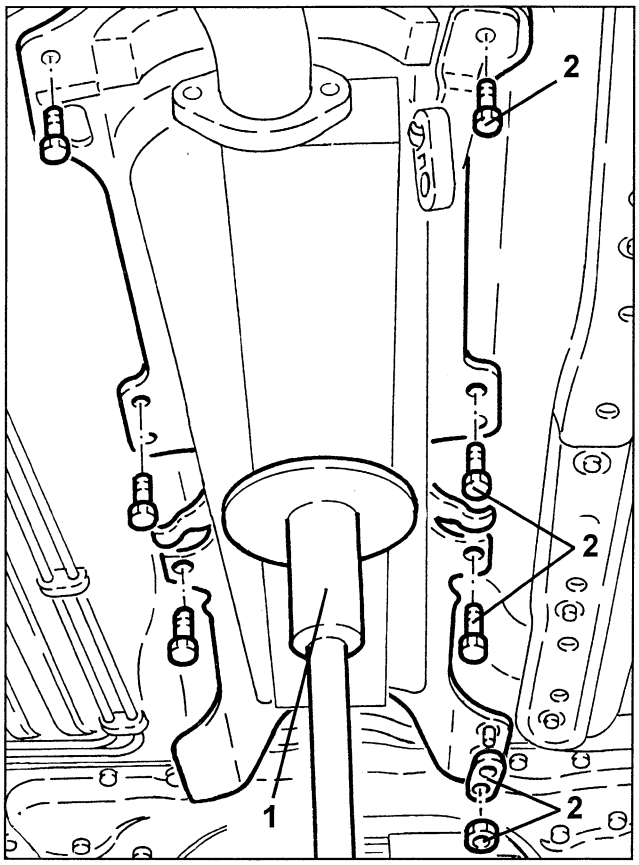

1. Lower the hydraulic jack and remove the gearbox and handbrake lever assembly.

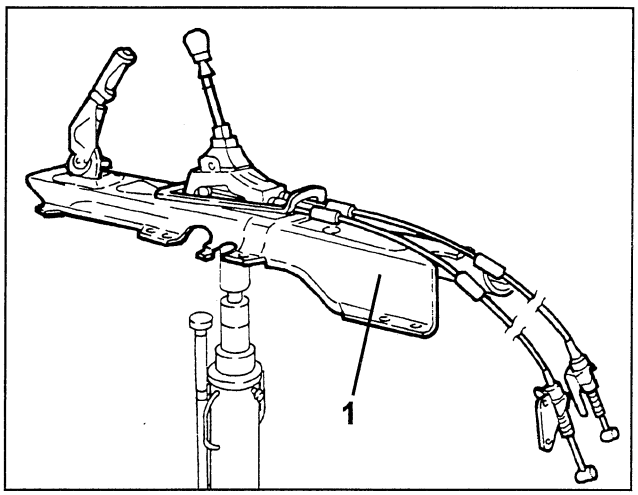

DISASSEMBLY/RE-ASSEMBLY

1. Loosen the retainer plates and remove the gear selection/engagement brackets.

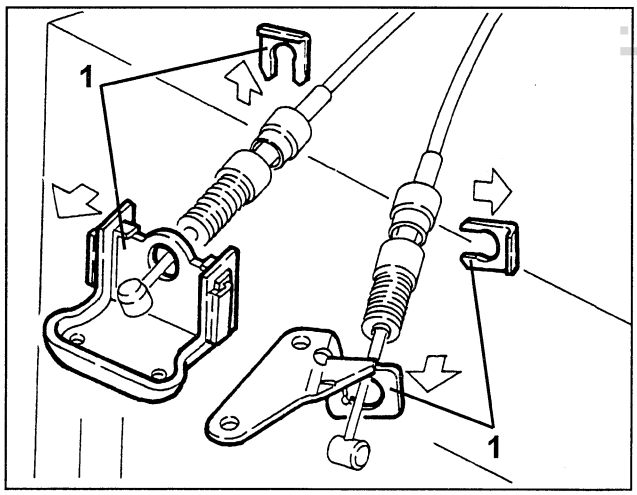

cardiagn.com

1. Loosen the fastening nuts and remove the gearbox lever bracket with gear selection/engagement wires.

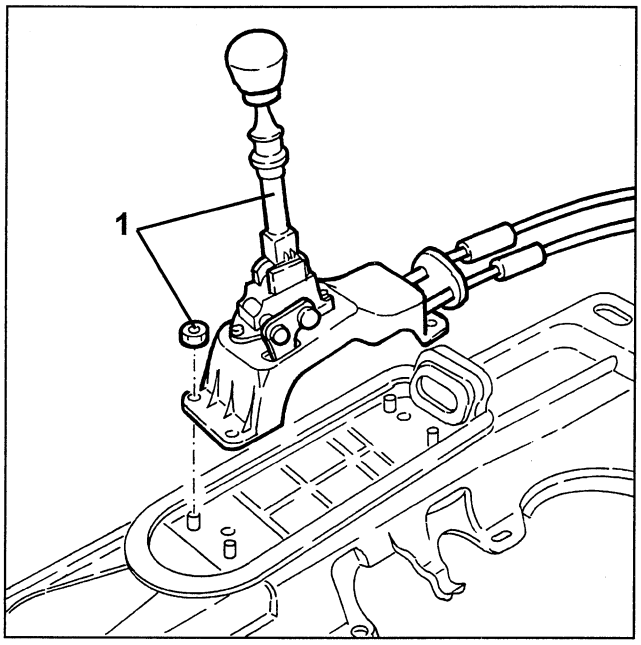

1. Remove the retainer plates (1a), washer (1b). Then disconnect and remove the gear selection/engagement wires (1c).

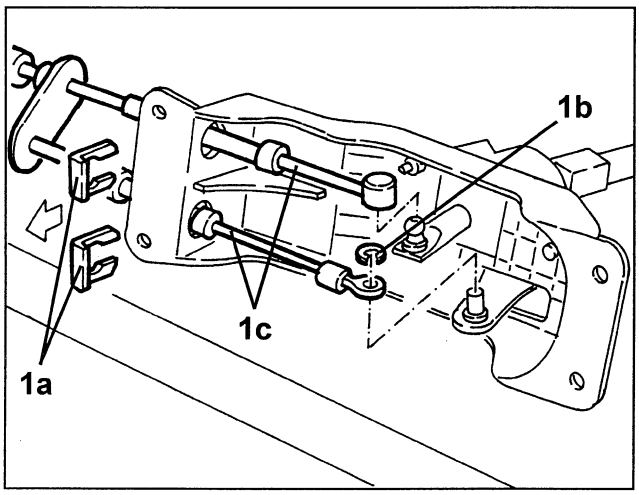

1. Remove the gear lever knob with tool no. 1.870.668.000.
2. Remove the spring.
3. Remove the reverse inhibitor.
4. Remove the washer and remove the lever.
5. Loosen the bolts and disassemble the gear rod from the respective brackets.

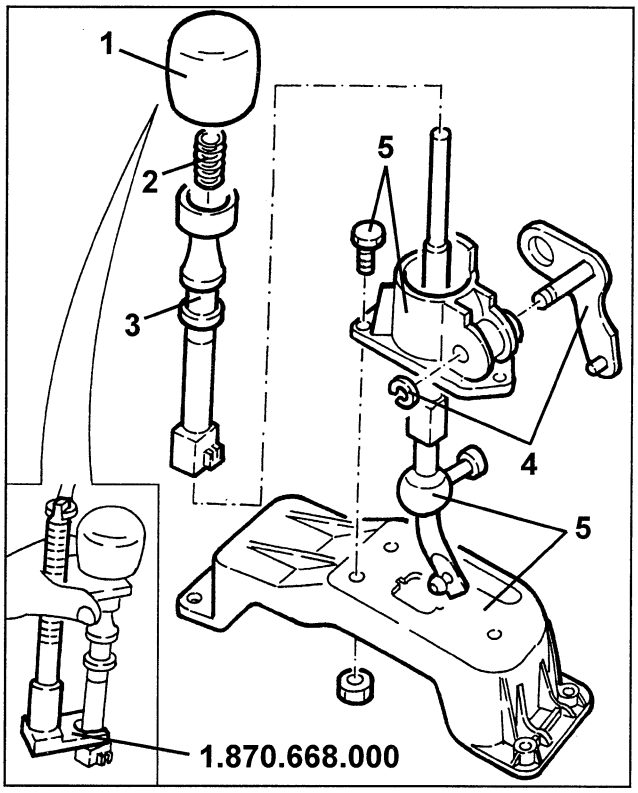

REFITTING

- Refit by reversing the removal sequence to the brackets and gear selection/engagement wires and fasten with the respective nuts refitting step.
1. Fit tool no. 1.870.974.000 under the gear engagement wire ball coupling.
2. Connect the gear selection wire.
3. Loosen the gear selection/engagement assembly adjustment nut.
- Torque the gear selection/engagement assembly adjustment nut after positioning the gear lever in neutral and shifting it all to the right.
4. Connect the gear engagement wire.
- Position the gear lever in reverse and remove tool no. 1.870.974.000.

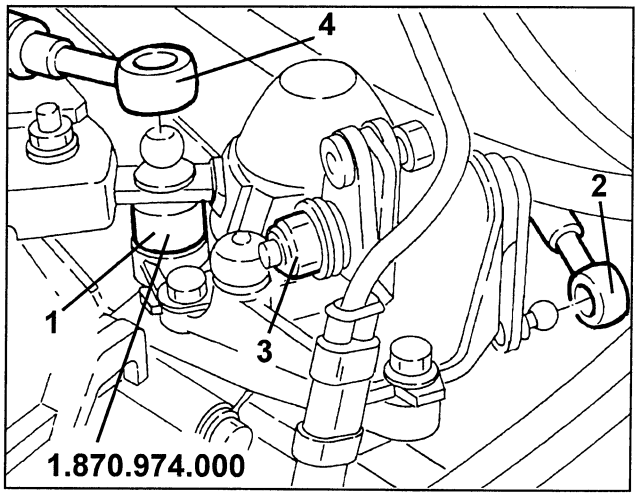

cardiagn.com

- Complete refitting by reversing the removal sequence.

GEAR SELECTION AND ENGAGEMENT ASSEMBLY

REMOVAL/REFITTING

1. Loosen the fastening clips and remove the corrugate sleeve.

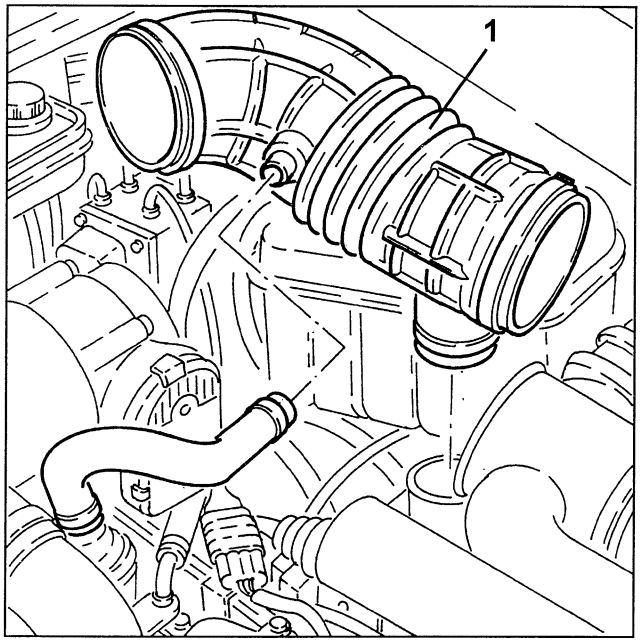

1. Release the electrical wiring from the bracket fastening clips.
2. Loosen the nut and remove the electrical wiring bracket.
3. Disconnect the gear selection and engagement wires.

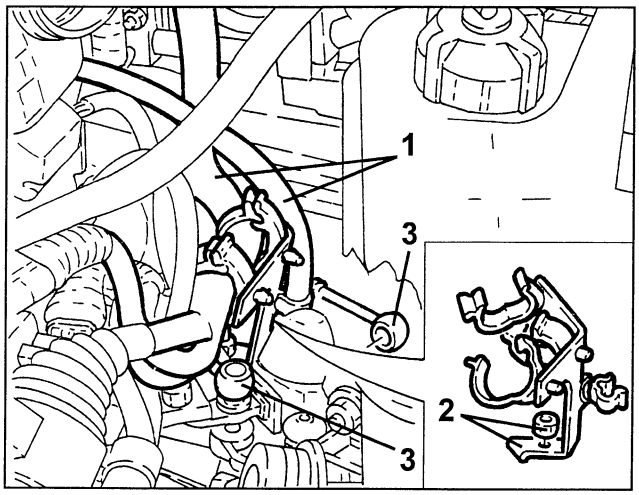

1. Loosen the screws and remove the gear selection and engagement assembly.

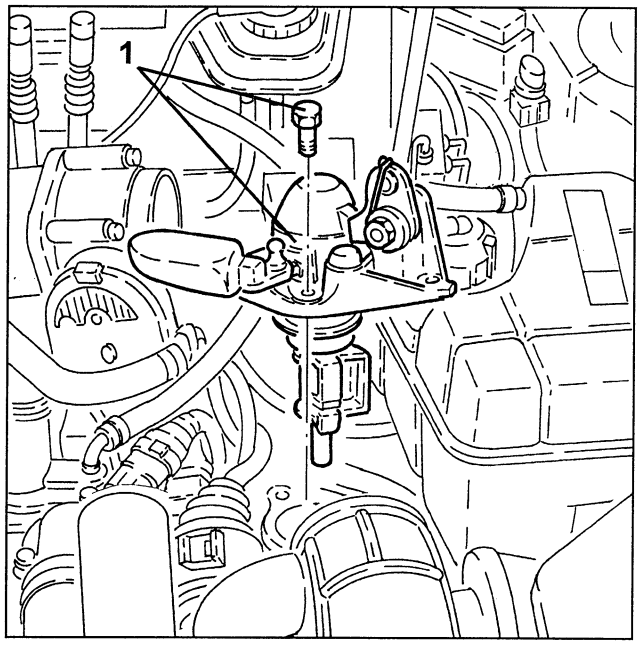

- Refit by reversing the removal sequence to the gear selection and engagement assembly fitting in its seat step.
1. Fit tool no. 1.870.974.000 under the gear engagement wire ball coupling.
2. Connect the gear selection wire.
3. Loosen the gear selection/engagement assembly adjustment nut.
- Torque the gear selection/engagement assembly adjustment nut after positioning the gear lever in neutral and shifting it all to the right.
4. Connect the gear engagement wire.
- Position the gear lever in reverse and remove tool no. 1.870.974.000.

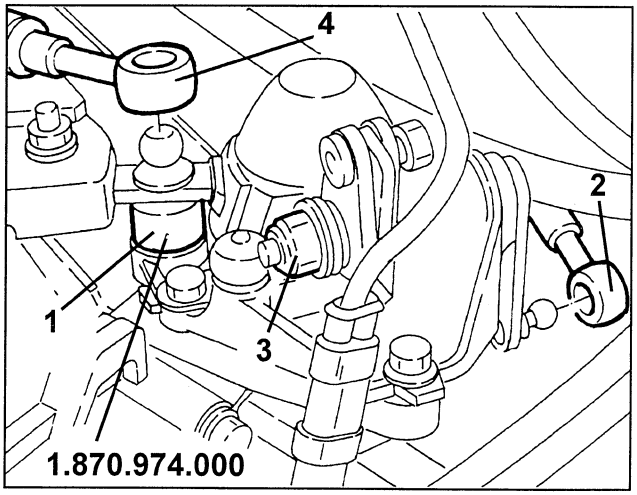

- Complete refitting by reversing the removal sequence.

cardiagn.com

REVERSE INHIBITOR ON THE GEAR LEVER BRACKET

REMOVAL/REFITTING

- Lift and remove the gear lever cap.
1. Remove the gear lever knob with tool no. 1.870.668.000.
2. Remove the spring.
3. Remove the reverse inhibitor.

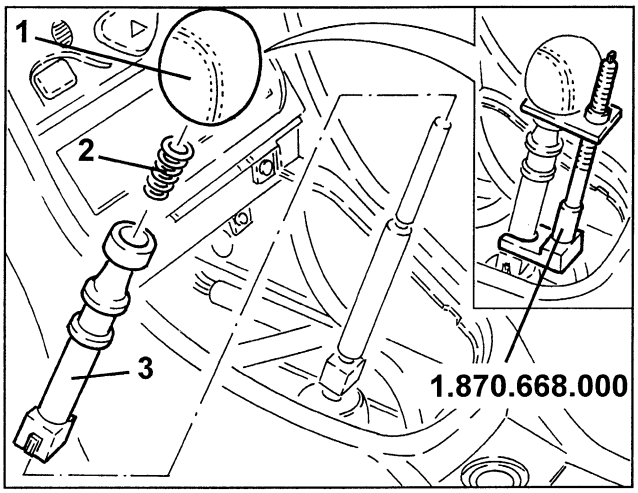

cardiagn.com

BRAKE HYDRAULIC SYSTEM

RELIEVING THE AIR FROM THE SYSTEM

When filling the hydraulic system or doing any work on it, it is necessary to proceed as described below.

1. Using the special device applied to the brake fluid reservoir, releieve the air in the following sequence:
1. LH front wheel
2. RH front wheel
3. LH rear wheel
4. RH rear wheel

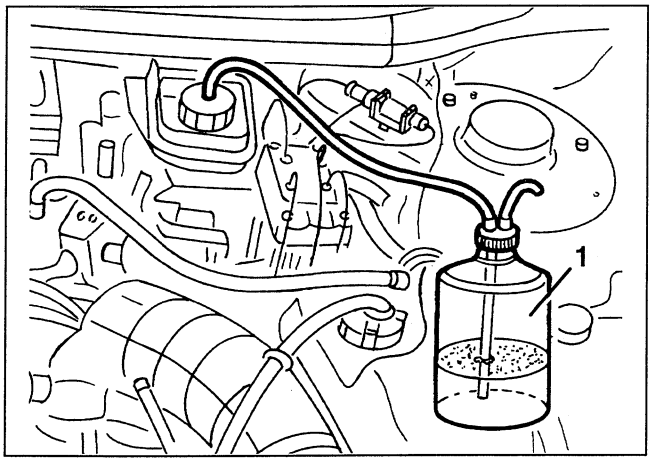

For each wheel proceed as follows:

– Fill the brake-clutch fluid reservoir to the"max" level with the specified fluid.

– If necessary, remove the wheel on which you are working.

1. Fit a tube on the relief screw. Put the other end of the tube in a container of the specified fluid.

2. Slacken the relief screw and pump the brake pedal (wait for a few seconds between one press and the next). When the fluid comes out with no bubbles, fully depress the brake pedal and lock the relief screw to the specified torque.

WARNING
The front brake calipers have a relief screw for heaf caliper half body.
Relieve the air on both half bodies.

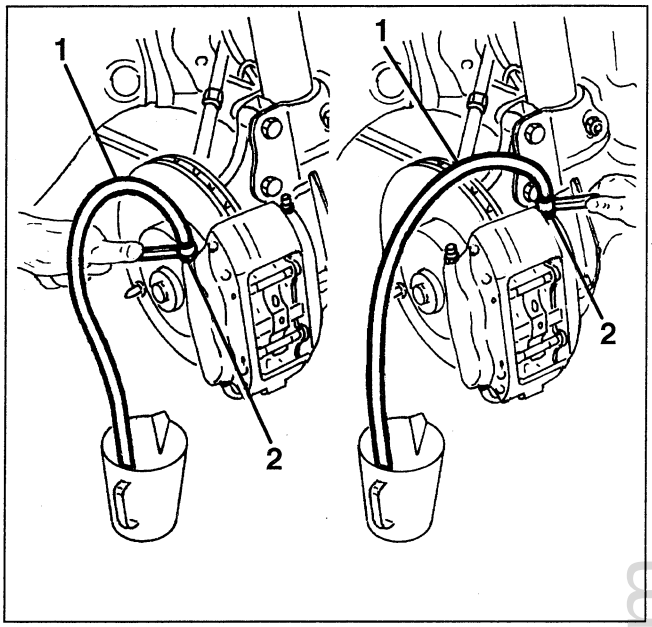

NOTE: The above operation is carried out on each wheel separately.

WARNING:
When relieving the air make sure that the fluid level never falls below the minimum level.
Do not re-use the fluid drained off during this operation.
Prevent the fluid from contacting painted parts and damaging them.

NOTE: If the above procedure is not carried out correctly, air is likely to get into the piston resulting in longer brake pedal travel, in which case proceed as described.
Air could also get into the ABS hydraulic unit resulting in the impossibility of carrying out any type of air relieving operation.

cardiagn.com

FRONT BRAKE UNIT

BRAKE PADS

REPLACEMENT

- Set the car on a lift.
- Remove the wheel on the side concerned.

1. Using a punch, withdraw the two brake pad fastening pins.
2. Remove the cross spring.

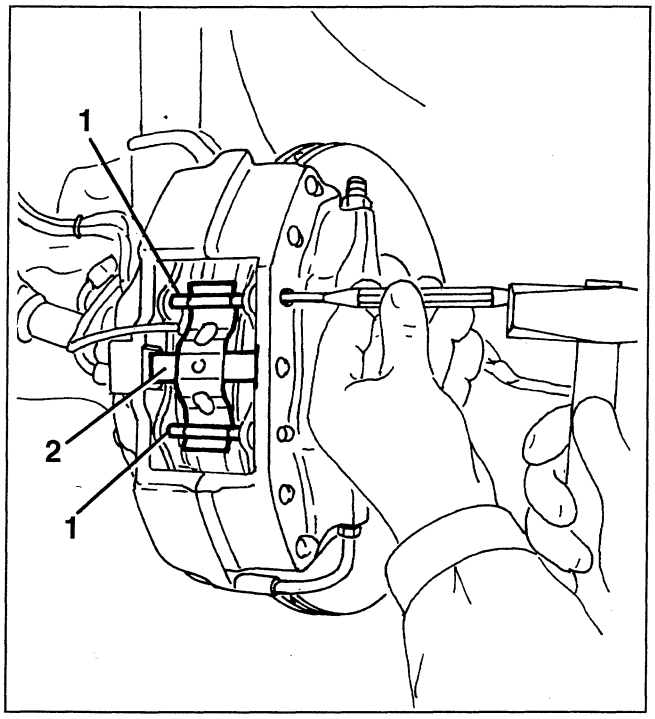

1. Disconnect the brake pad wear sensor electrical connection.
2. Release the cable from the retainer on the caliper.
3. Remove the brake pads.

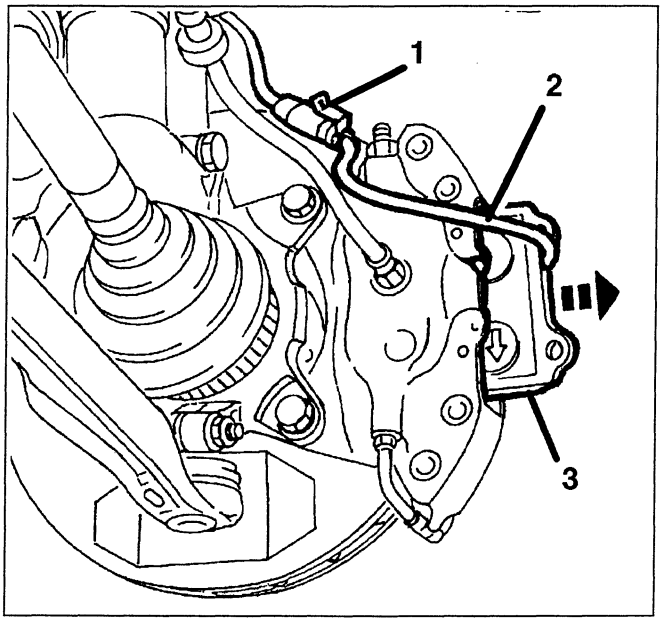

WARNING
Take the utmost care not to damage the control piston boots. Push the pistons into their housings using a stick as lever, make sure that the brake fluid does not spill out of the reservoir during this operation.

WARNING
When refitting, the brake linings are to be assembled with the arrows downwards, as illustrated.
The wear sensor should be installed on the inner side of the disk with the cable on the upper side.

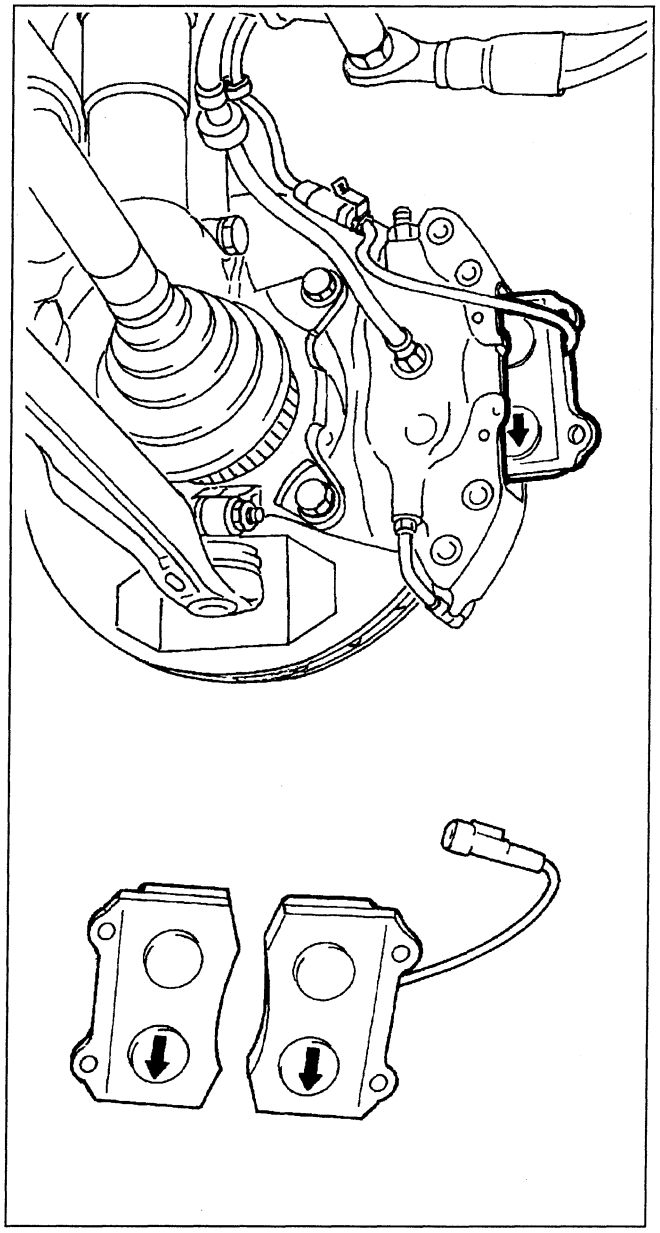

cardiagn.com

BRAKE CALIPER

REMOVING/REFITTING

- Set the car on a lift.
- Remove the wheel on the side concerned.
- Remove the brake pads (see specific paragraph).

1. Slacken the fitting and disconnect the brake fluid pipe from the caliper.

Suitably plug the pipe to avoid spilling the brake fluid.

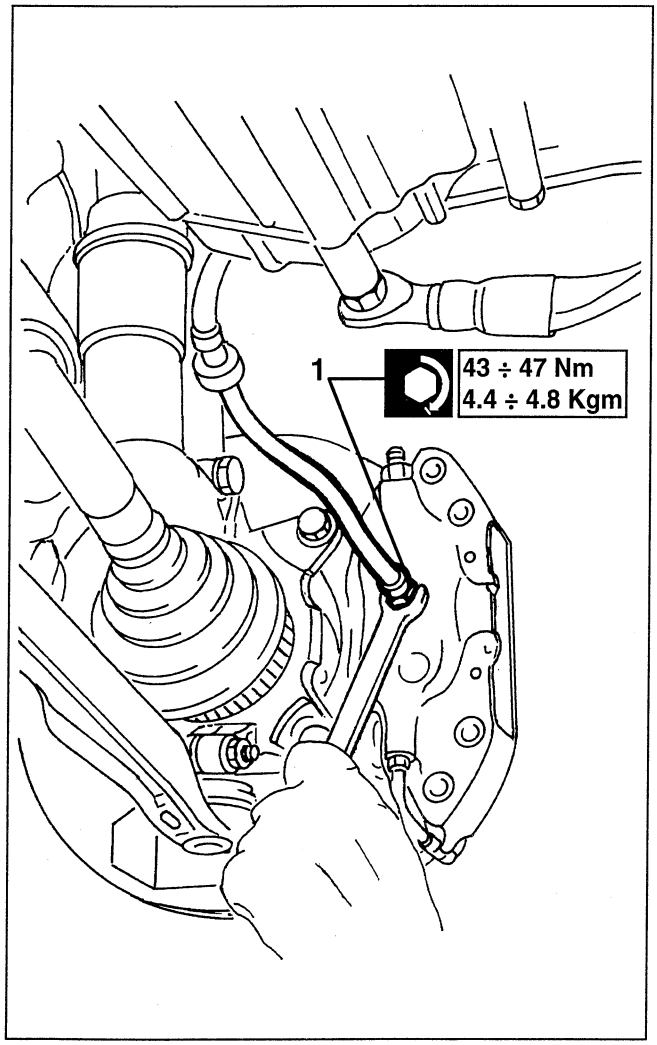

1. Remove the two brake caliper fastening screws.
2. Remove the brake caliper complete.

The brake caliper cannot be disassembled.
Avoid disassembling the brake caliper, it must be changed entirely.

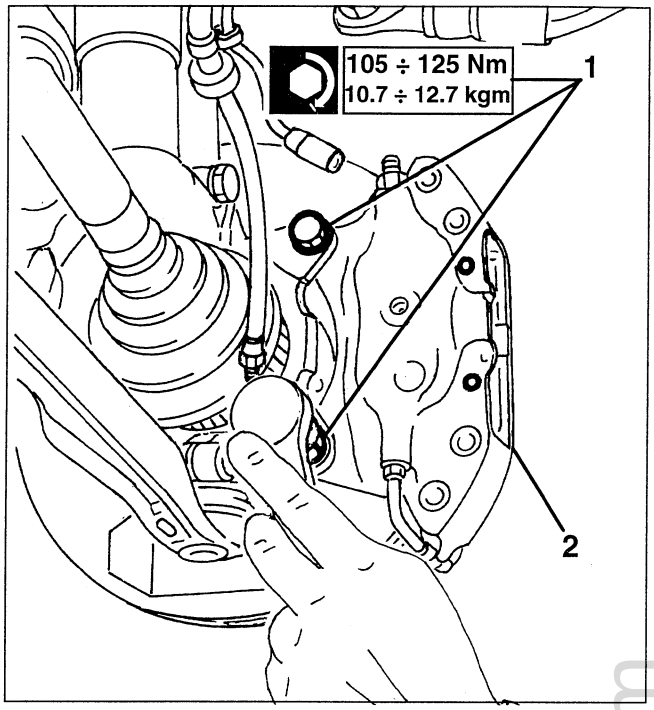

After refitting. relieve the air from the braking system (see specific paragraph).

BRAKE DISK

REMOVING/REFITTING

- Set the car on a lift.
- Remove the wheel on the side concerned.
- Remove the brake pads (see specific paragraph).

1. Remove the two brake caliper fastening screws.
2. Remove and move aside the brake caliper complete, without disconnecting the piping.

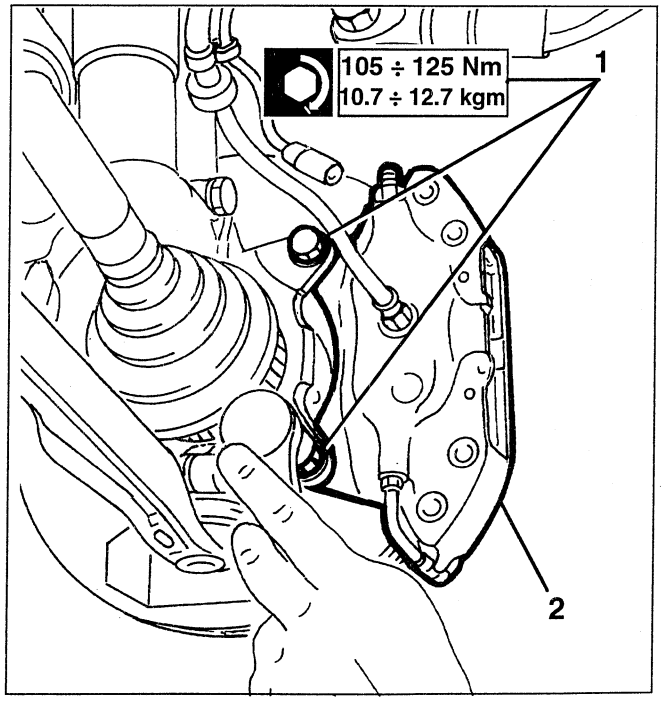

cardiagn.com

1. Slacken the fastening pin and remove the brake disk.

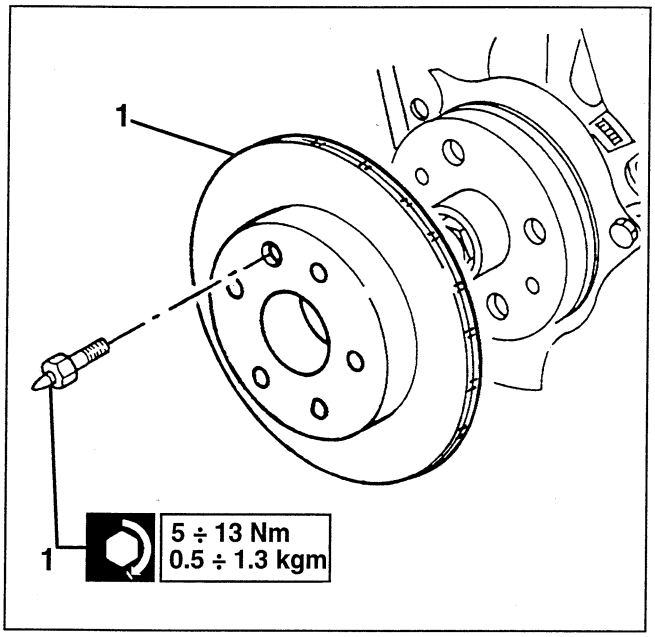

CHECKS AND INSPECTIONS

1. Check the thickness of the disks and that the working surfaces have no deep scores or porosity.

Thickness of disk	At wear limit
	26.4 mm

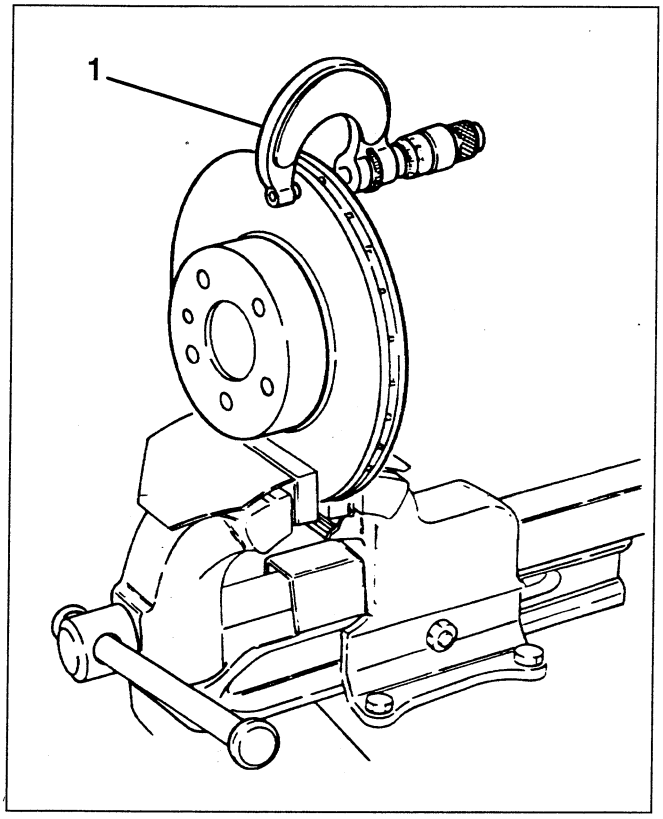

1. When replacing only the brake pads, check that disk oscillation in relation to the axis of rotation is within the specified limits (0.15 mm max).

NOTE: the value must be measured 2 mm from the disk outside diameter.

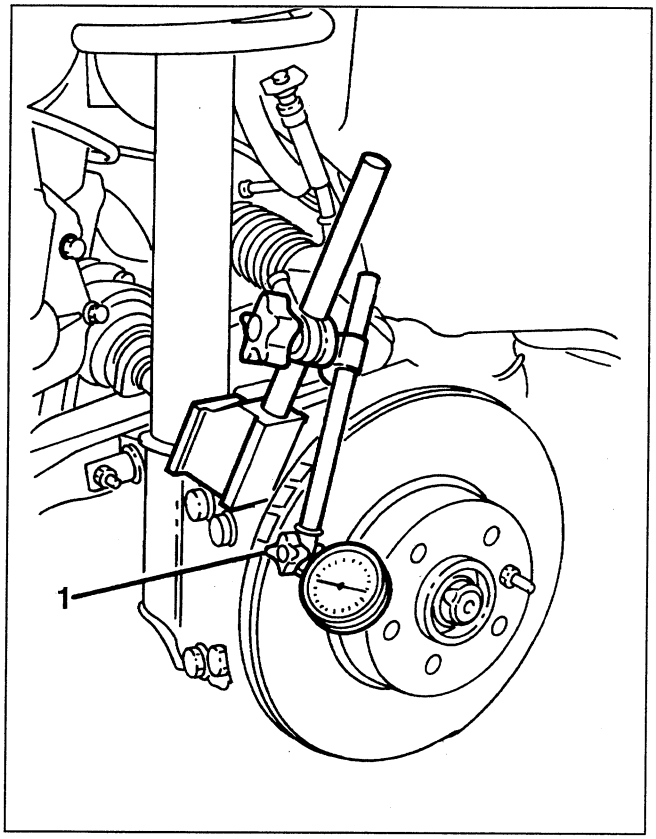

cardiagn.com

STEERING CONTROL

STEERING WHEEL

REMOVING / REFITTING

– Remove the Air Bag module (see GROUP 55).

WARNING:
Before doing any work on the system carefully follow the SAFETY RULES concerning the Air Bag system given in Group "55 - ELECTRIC SYSTEM DIAGNOSIS", Section "Air Bag and Pretensioners".
Disconnect both battery terminals, isolate them accurately and wait for 10 minutes before proceeding.

1. Remove the steering wheel fastening nut.

CAUTION:
Before doing this check that the wheels are perfectly straight.

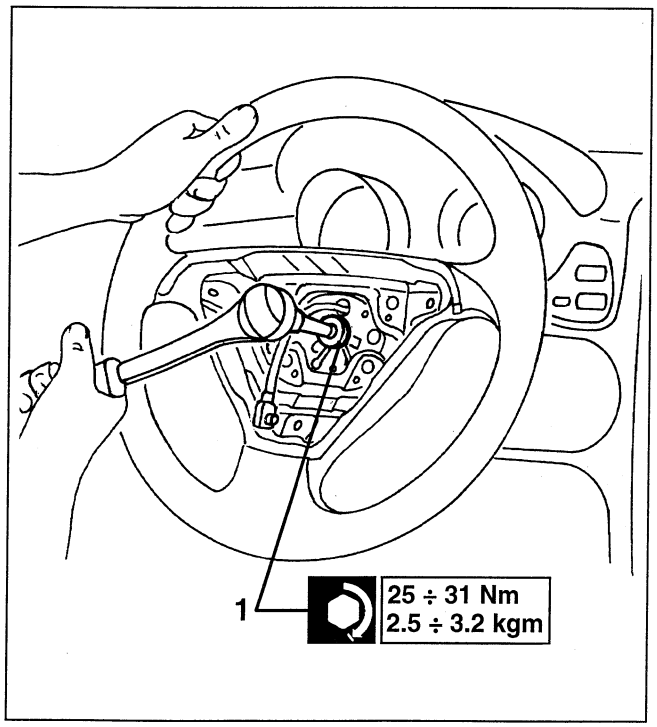

1. Using tool no. 1.821.105.000 remove the steering wheel from the steering column.
2. Disconnect the connection of the clock spring

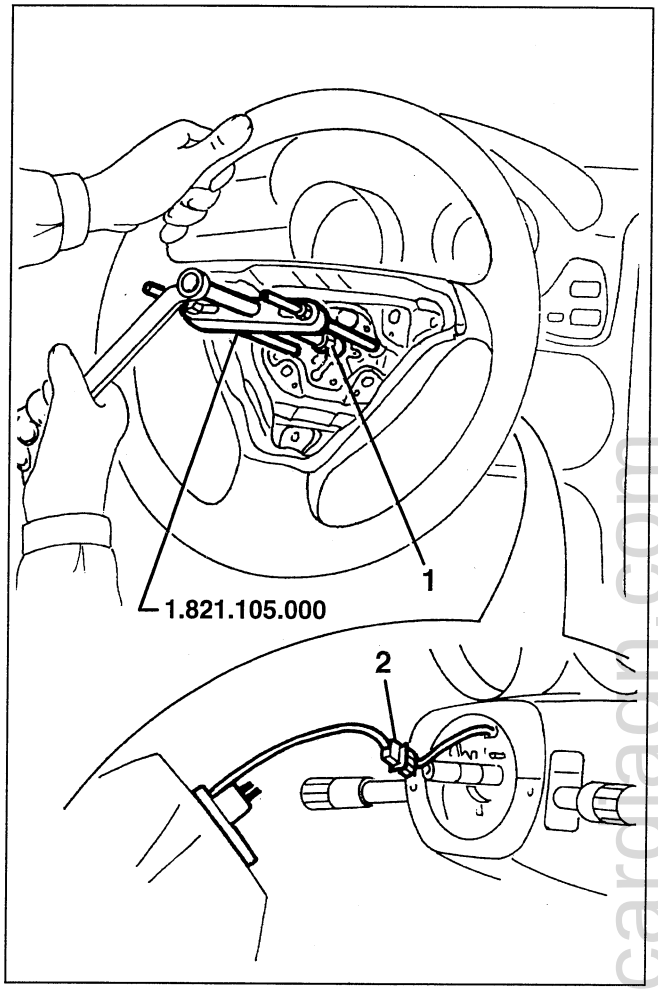

CAUTION:
Take <u>the utmost care</u> not to turn the clock spring in relation to the steering wheel, as the device is locked only when it is separated from the steering wheel (see next step). Therefore, it is advisable to restrain it to the steering wheel with adhesive tape for example.

cardiagn.com

1. Disconnect the connections of the horns.
2. Slacken the two screws and remove the safety clip.
3. Slacken the three screws and separate the clock spring from the steering wheel.

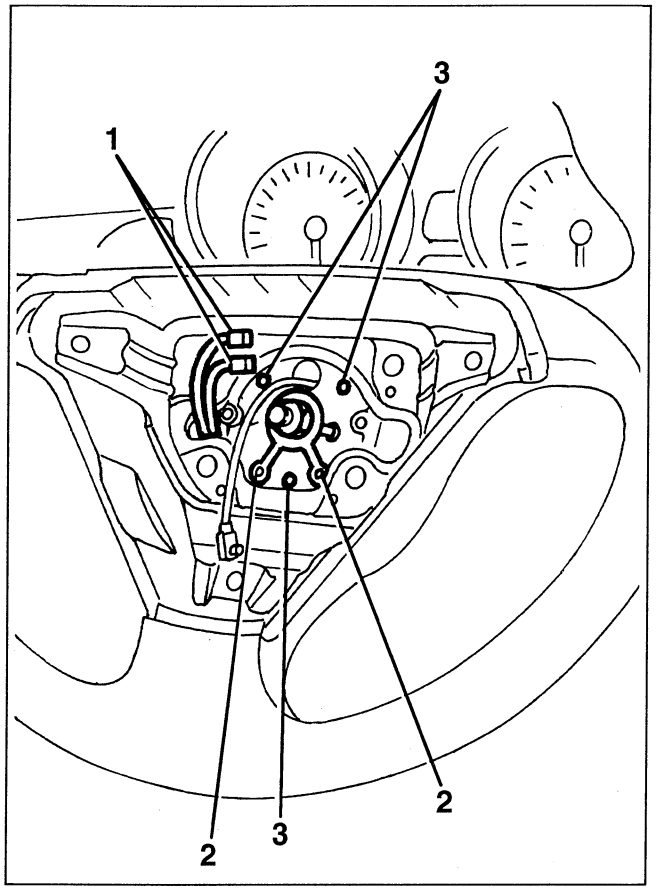

1. Slacken the four screws and separate the horn control from the steering wheel.

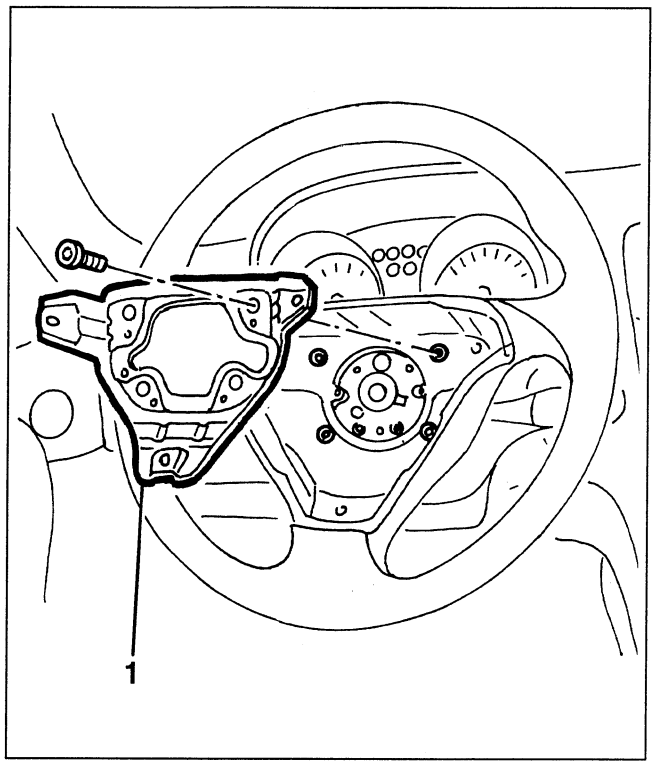

cardiagn.com

POWER STEERING

POWER STEERING PUMP

REMOVING/REFITTING

– Set the car on a lift.
– Remove the right front wheel and gravel guard (see GROUP 70).
1. Remove the engine compartment bulkhead.

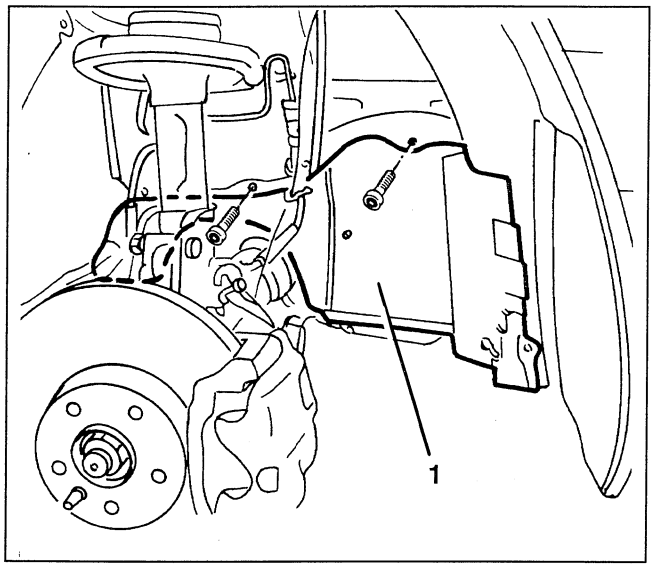

1. Using a wrench on the belt tensioner pulley fastening screw, del tendicinghia, overcome the force of the automatic tensioner and lock it in this position (belt slack) inserting the special pin as illustrated.
2. Prise and remove the auxiliary components drive belt.

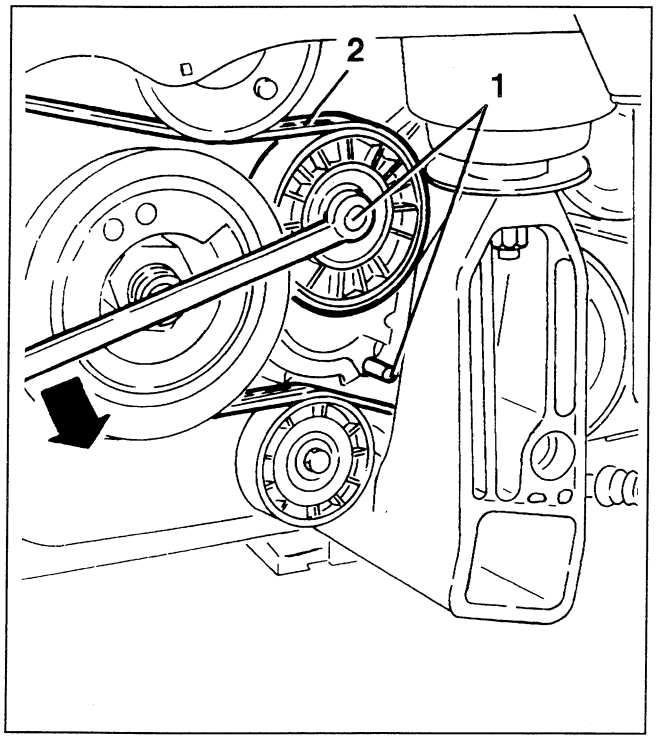

– Remove the right hand engine compartment cover.
– Using a syringe, siphon the oil from the power steering system reservoir.
– Remove the upper radiator crossmember and the engine cooling fans (see GROUP 10).
1. Slacken the fastenings and remove the heat shield from the exhaust manifold of the left cylinder head.

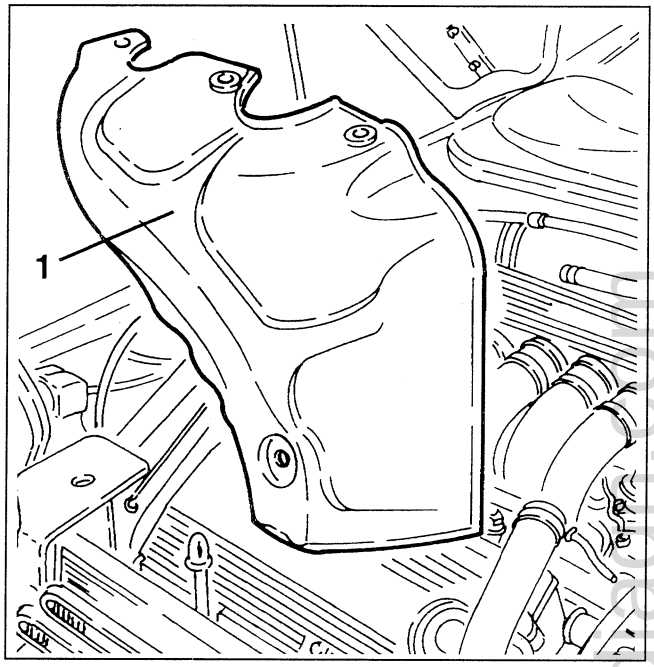

1. Disconnect the oil inlet and delivery pipe fittings from the power steering pump.

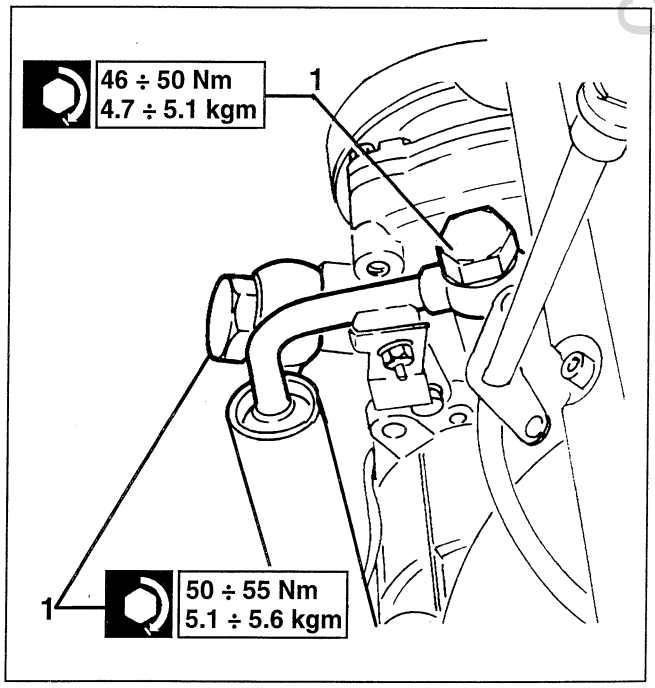

carmanuals.info

1. Slacken the screw fastening the power steering pump plate.

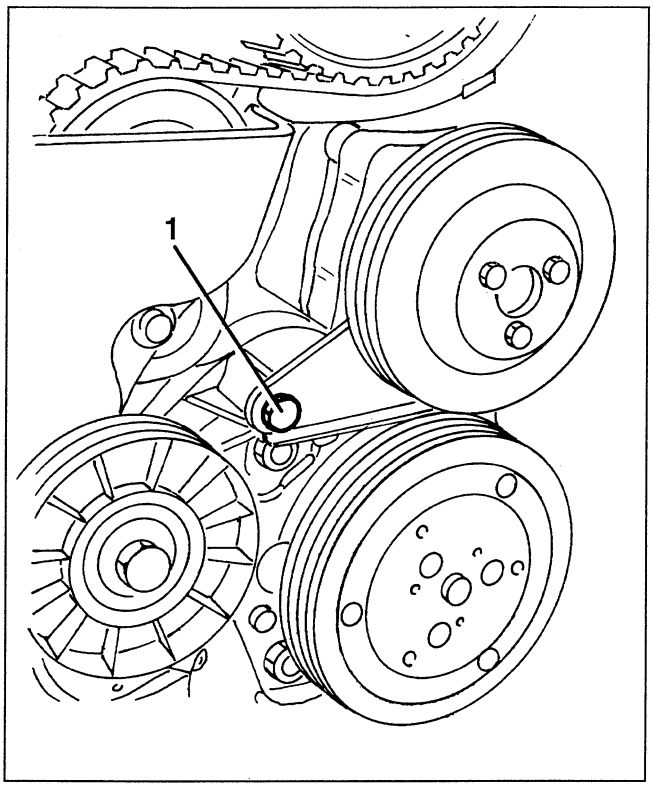

1. Slacken the two screws fastening the rear power steering pump.
2. Remove the power steering pump.

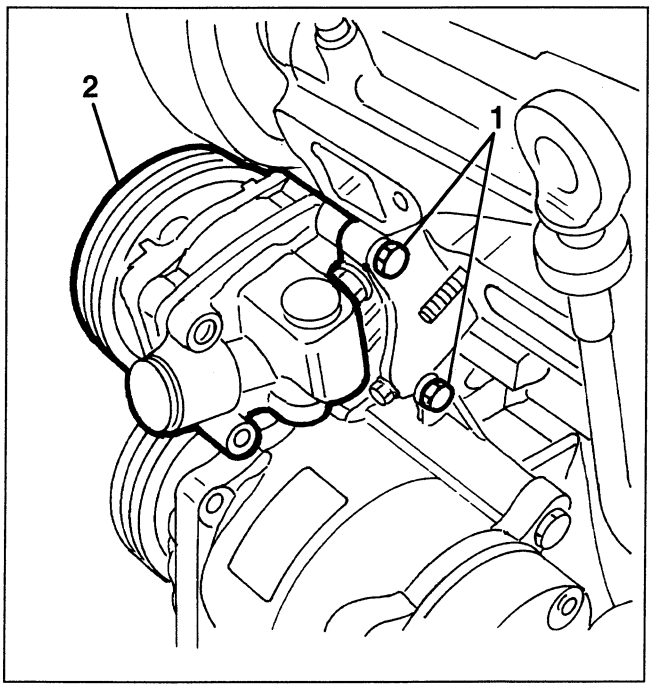

1. If necessary, slacken the three screws and separate the pulley.

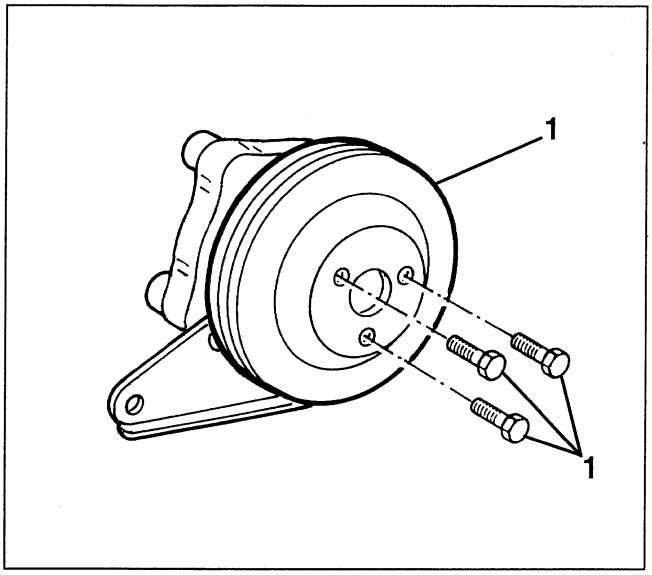

CHECKS AND INSPECTIONS

CAUTION:
The power steering pump, like the steering box must not be disassembled for any reason whatsoever. They are to be sent to the Manufacturer for overhauling.

Check the steering wheel rolling torque with the car stationary and the engine running. The torque must be between 0.6 daN with the engine at idle speed and 0.75 daN with the engine at top rpm: if these values are exceeded check the pressure of the system with the wheels steered completely. To do this insert a pressure gauge using an appropriate Tee union on the pressurised oil delivery pipe to the power steering leading from the pump, and steer completely to one side. Forcing the steering wheel to turn further, the pressure reading should rise to appr. 85 bar. If this fails to occur there is an operating fault in the pump or in the distributor valve of the power steering box.

cardiagn.com

FRONT SUSPENSION

STABILISER BAR CONNECTING ROD

REMOVAL/REFITTING

– Position the vehicle on a shop jack.
– Remove the front right-hand wheel.

1. Loosen the shock-absorber connecting rod fastening nut.

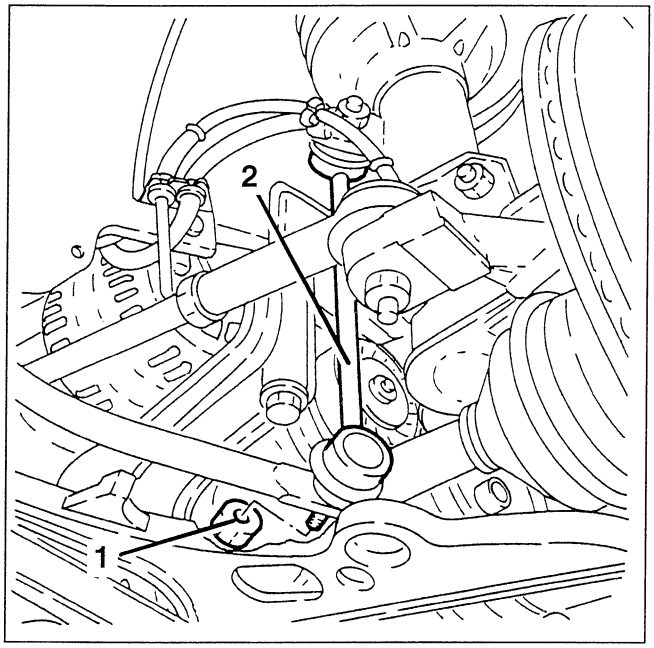

1. Loosen the nut fastening the connecting rod to the stabiliser bar.
2. Remove the connecting rod.

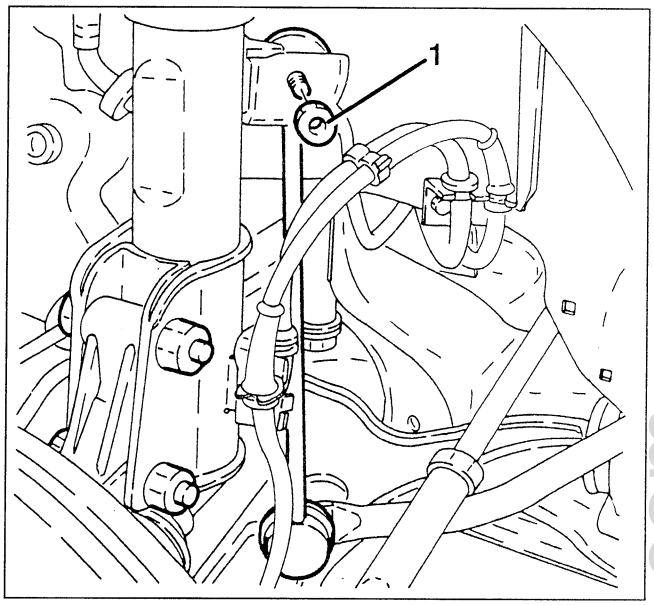

Refit the connecting rod by reversing the removal sequence.

cardiagn.com

cardiagn.com

WHEEL ALIGNMENT

CHECKING THE FRONT WHEEL ALIGNMENT

- Inflate the tyres to the specified pressure.
- Fill with fuel and the specified oils and fluids.
- Set the car on a lift.
- Sway the car a few times to settle the suspensions.

1. Position the reference tool on the on the car resting surface.
2. Using a surface gauge measure the distance "**A**" between the car resting surface and the centre of the steering knuckle fastening screw.
- With the help of a millimetred rule measure the distance found.
3. Using the surface gauge measure the distance "**B**" between the car resting surface and the centre of the wishbone pin.
- With the help of the millimetred rule measure the distance found.

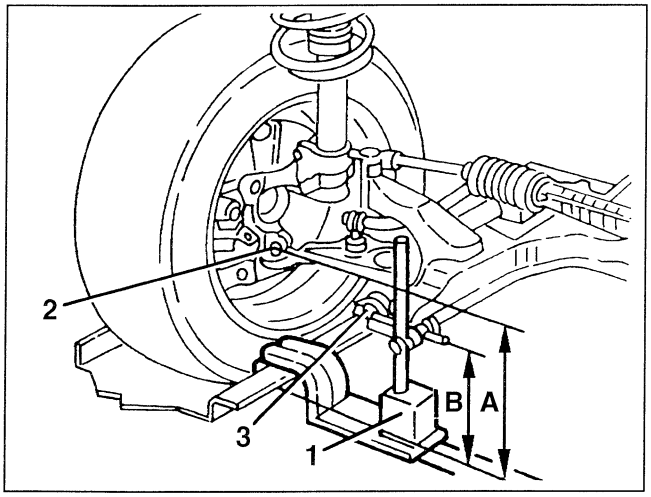

- Calculate the difference between dimension "**B**"and dimension "**A**" and check that it is with the specified limits.

Front alignment B-A
GTV 3.0 24V
-36 ± 5 mm* -45 ± 5 mm**

* to '97 versions
** '98 versions

NOTE: If the alignment values are not within the specified values change both suspension springs.

CHECKING THE REAR WHEEL ALIGNMENT

- Inflate the tyres to the specified pressure.
- Fill with fuel and the specified oils and fluids
- Set the car on a lift.
- Sway the car a few times to settle the suspensions.

1. Position the reference tool on the car resting surface.
2. Using a surface gauge measure the distance "**C**" between the car resting surface and the fulcrum of the spring carrier arm.
- With the help of a millimetred rule measure the distance found.
3. Using the surface gauge measure the distance "**D**" between the car resting surface and the rear wheel centre.
- With the help of the millimetred rule measure the distance found.

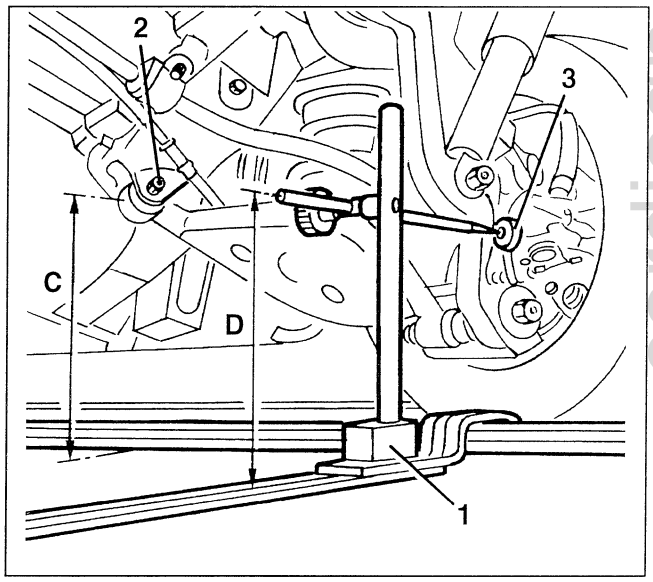

- Calculate the difference between dimension "**C**"and dimension "**D**" and check that it is with the specified limits.

Rear alignment C - D
GTV 3.0 24V
-74 ± 5 mm* -69 ± 3 mm**

* to '97 versions
** '98 versions

NOTE: If the alignment values are not within the specified values change both suspension springs.

cardiagn.com

CHECKING THE CHARACTERISTIC ANGLES

Preliminary operations

– Inflate the tyres to the specified pressure.
– Fill with fuel and the specified oils and fluids.
– Check that the eccentricity and orthogonality of the wheel rims does not exceed:

- 1 mm for steel rims
- 0.3 mm for alloy rims

CHECKING THE FRONT WHEEL TOE-IN

– Using suitable tools, check that the toe-in is within the specified limits.

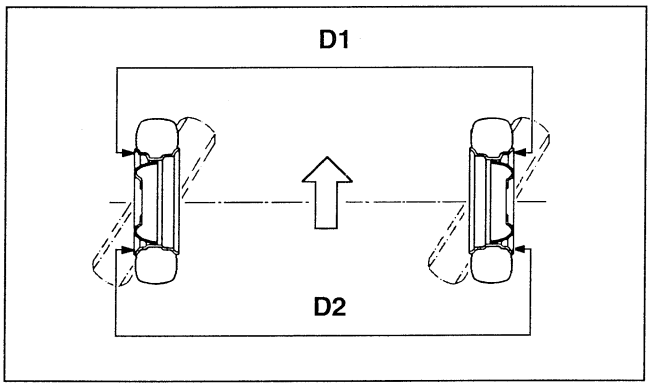

Front wheel toe-in D2 - D1
GTV 3.0 24V
-1.5 ± 0.5 mm* -2.0 ± 1 mm**

* to '97 versions
** '98 versions

If the toe-in is other than specified, proceed as follows:

1. Slacken the fastenings for adjusting the track rods.

WARNING:
Each time the front wheel toe-in is adjusted, it is necessary to check that the boots turn freely on the rod and if necessary remove them and lubricate with the specified grease.

2. Turn the rods, until reaching the specified value without changing the position of the steering wheel spokes

NOTE: Adjustment should be carried out on the rods of both wheels.

– Tighten the track rod adjustment fastenings to the specified torque.

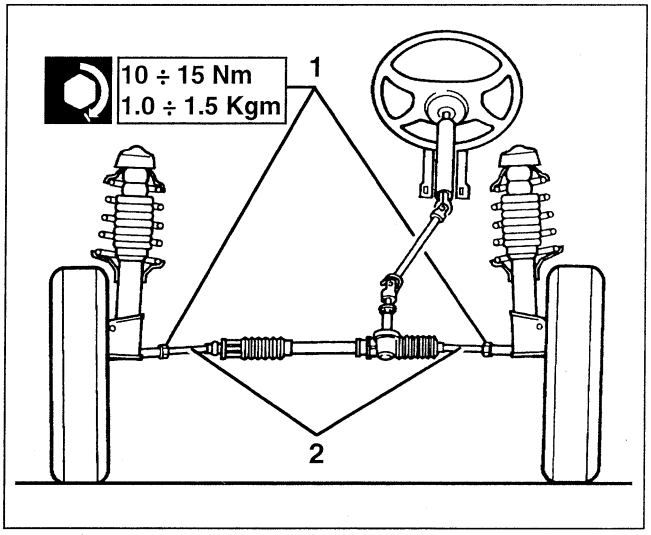

CHECKING THE FRONT WHEEL CAMBER AND CASTER

– Check that the camber and caster angles (not adjustable) are within the specified limits.

Front wheel camber "α"
GTV 3.0 24V
-0°1' ± 20'* -0°56' ± 20'**

* to '97 versions
** '98 versions

cardiagn.com

Caster "β"
GTV 3.0 24V
3°5' ± 30'* 2°42' ± 30'**

* to '97 versions
** '98 versions

NOTE: If the values are not within the specified limits, body squaring should be checked (see GROUP 70).

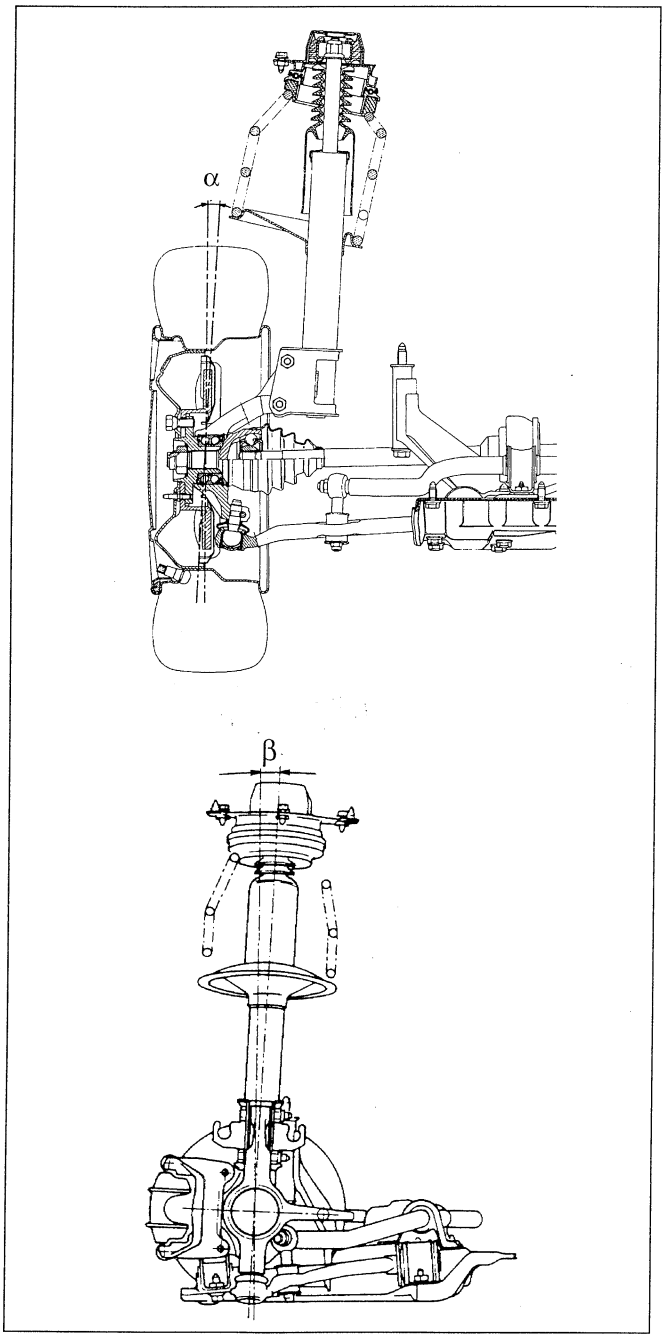

CHECKING THE REAR WHEEL TOE-IN

– Using suitable tools, check that the toe-in is within the specified limits.

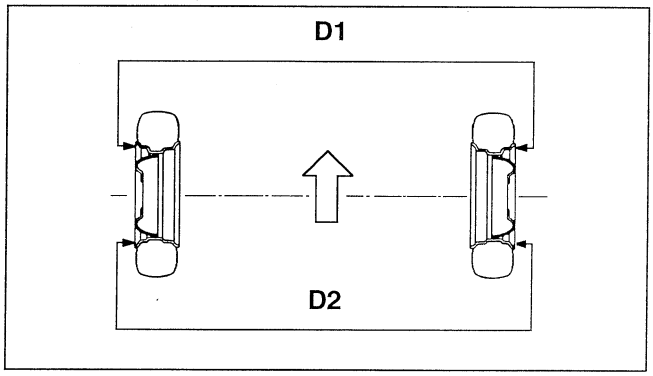

Rear wheel toe-in D2 - D1
GTV 3.0 24V
2.5 ± 0.5 mm* 3.0 ± 1 mm**

* to '97 versions
** '98 versions

cardiagn.com

If the toe-in is other than specified proceed as follows:

1. Slacken the fastenings of the adjustment rods.
2. Turn the rods, until reaching the specified value

NOTE: Adjustment should be carried out working on the rods of both wheels.

– Tighten the rod fastenings to the specified torque.

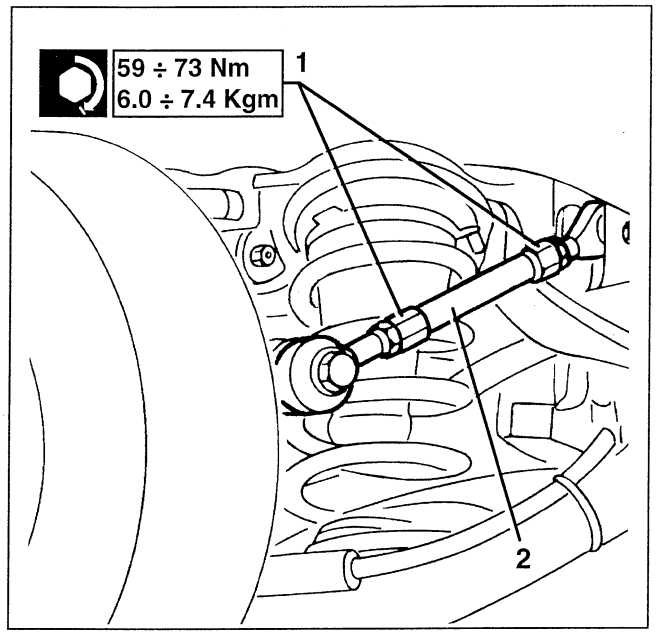

CHECKING THE REAR WHEEL CAMBER

– Check that the camber angle (not adjustable) is within the specified limit.

Rear wheel camber "γ"
GTV 3.0 24V
-2°3' ± 20'* -1°47' ± 20'**

* to '97 versions
** '98 versions

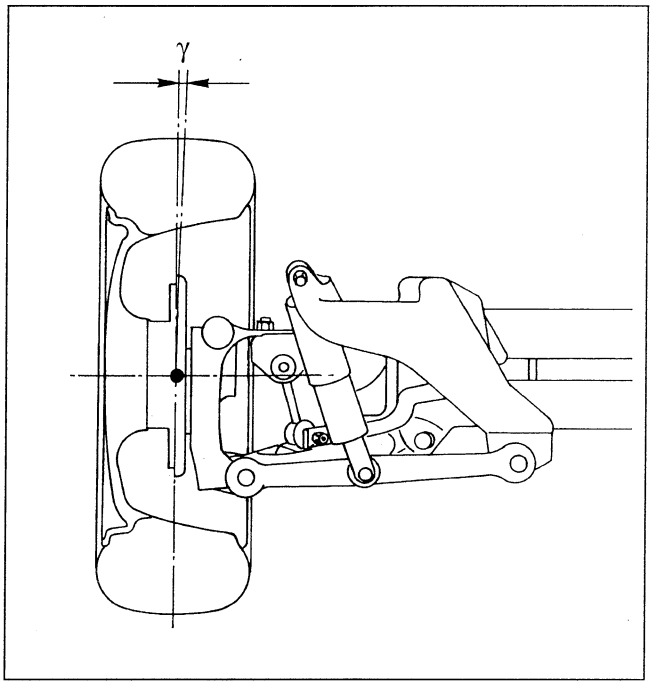

cardiagn.com

VARIANTS FOR Spider 1996 TB

INDEX

TECHNICAL DATA 00

VEHICLE
- Model identification 1
- Identification plate location 1
- Identification data plate ..... (*)
- Paintwork identification plate ..... (*)
- Dimensions 2
- Weights and loads 2
- Wheels and tyres 3
- Fluids and lubricants ..... (*)
- Jacking points 3
- Indicative capacities 4
- Towing points ..... (*)

ENGINE
- Technical engine features 5

ENGINE SUPPLY - COOLING
- Fuel feed ..... (*)
- Air feed ..... (*)
- Sensors ..... (*)
- Cooling system ..... (*)

MECHANICAL GROUPS
- Clutch ..... (*)
- Gearbox ..... (*)
- Brakes ..... (*)
- Front suspensions ..... (*)
- Rear suspensions ..... (*)
- Wheel geometry and characteristic angles ..... (*)
- Steering ..... (*)

ELECTRICAL SYSTEM
- Ignition ..... (*)
- Start-up ..... (*)
- Recharging ..... (*)

HEATING - VENTILATION
- Three-level pressure switch calibration (Trinary) ..... (*)
- Compressor ..... (*)

TIGHTENING TORQUES ..... (*)

SPECIFIC TOOLS ..... (*)

MAINTENANCE
- Service operations 6
- Engine maintenance ..... (*)
- Mechanical assembly maintenance ..... (•)

(*): See **GTV** 1996 **TB** (•): See **Spider** 2959 **V6**

ENGINE 10

REMOVAL/REFITTING
- Description ..... (*)
- Removal ..... (*)
- Refitting ..... (*)

OPERATIONS IN VEHICLE
- Cylinder head ..... (*)
- Oil sump ..... (•)

ML4.1/EZ212K INJECTION-IGNITION
- General description ..... (*)
- System operation ..... (*)
- ML4.1/EZ212K injection-ignition functional diagram ..... (*)
- ML4.1/EZ212K injection-ignition system components ..... (*)

FUEL SUPPLY
- System description ..... (*)
- Fuel pipe fittings ..... (*)
- Fuel tank ..... (•)
- Fuel level gauge ..... (•)
- Fuel pump ..... (•)
- Fuel filter ..... (•)
- Fuel pressure regulator ..... (*)
- Vibration damper ..... (*)
- Injectors ..... (*)
- Fuel circuit pressure and tightness test ..... (*)
- Fuel vapour recovery system description ..... (*)
- Fuel vapour separator ..... (*)
- Fuel vapour canister ..... (*)
- Fuel vapour solenoid valve ..... (*)

(*): See **GTV** 1996 **TB** (•): See **Spider** 2959 **V6**

cardiagn.com

INDEX

ENGINE *(Continued)* 10

AIR SUPPLY SYSTEM
- Air feed and oil vapour recovery system ..... (*)
- Boost-Drive management ..... (*)
- Air cleaner cartridge replacement ..... (*)
- Throttle casing ..... (*)
- Flow test ..... (*)
- Air flow meter ..... (*)
- Throttle position sensor ..... (*)
- Intake manifold ..... (*)
- Constant idling actuator ..... (*)
- Oil vapour separator ..... (*)
- Turbo compressor ..... (*)
- Waste-Gate overpressure valve calibration check ..... (*)
- Intercooler ..... (*)
- Stall valve ..... (*)

EXHAUST SYSTEM
- Exhaust system description ..... (*)
- Catalytic converter ..... (*)
- Lambda sensor ..... (*)
- Exhaust emission check ..... (*)

ELECTRICAL COMPONENTS
- Rpm and phase sensor ..... (*)
- Engine coolant temperature sensor (NTC) ..... (*)
- Knock sensors ..... (*)
- Inertia switch ..... (*)
- Boost-Drive (Pierburg) solenoid valve control device ..... (*)
- Altitude sensor ..... (*)
- Cylinder 1 acknowledgement sensor ..... (*)

ENGINE COOLING SYSTEM
- Engine coolant system ..... (*)

(*): See **GTV** 1996 **TB**

SUSPENSION AND WHEELS 44

WHEEL GEOMETRY
- Checking the front wheel alignment ..... (*)
- Checking the rear wheel alignment ..... (*)
- Checking the characteristic angles ..... (*)

(*) See **GTV** 1996 TB

cardiagn.com

MODEL IDENTIFICATION

Brand name	Spider 2.0 V6 TB
Version	Spider
Version (on identification plate)	916 S2A
Chassis (in engine compartment, on upper right-hand shock absorber bracket)	-
Progressive chassis number	6000001
Engine (code)	AR 16202
Engine symbol	1996 TB
Gearbox (code)	C.503.5.29.21

IDENTIFICATION PLATE LOCATION

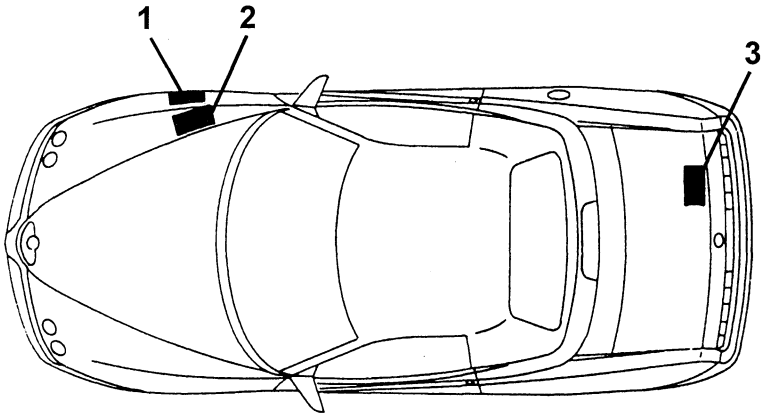

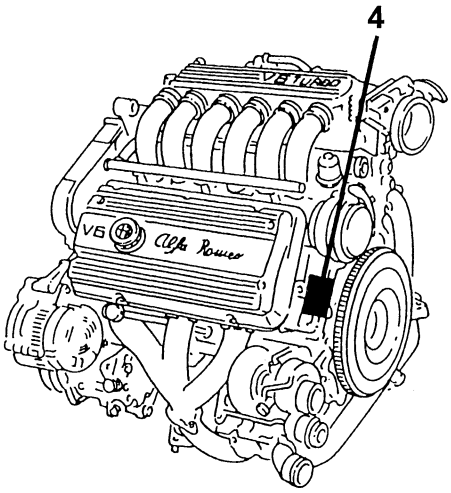

1. *Identification data plate*
2. *Chassis marking*
3. *Paintwork identification plate*
4. *Engine marking*

cardiagn.com

DIMENSIONS

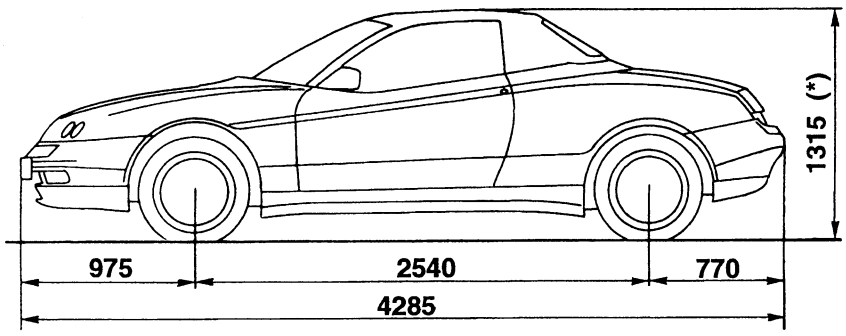

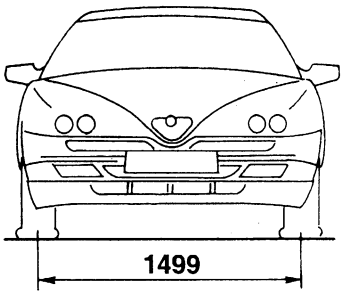

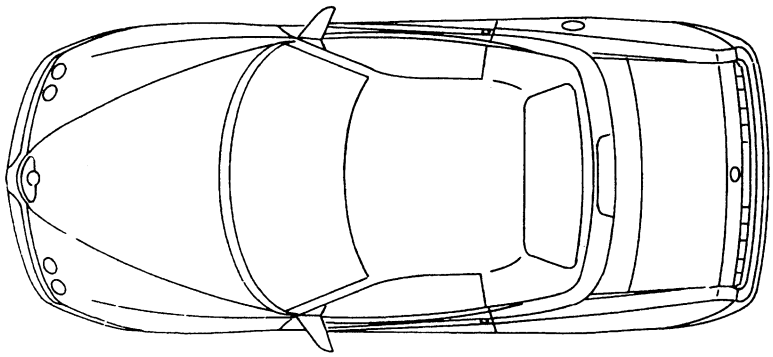

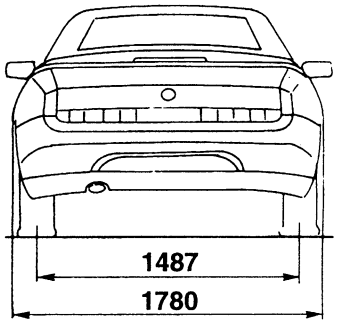

(*): Unladen vehicle

WEIGHTS AND LOADS

Unit: kg

Features \ Version		916S2A
Kerb weight (without driver)		1430
Maximum admitted load		1680
Load		260
Maximum weight allowed on each axle	front	1060
	rear	870
Towable weight	trailer with brakes	1000
	trailer without brakes	500
Maximum load on tow hitch		50

cardiagn.com

WHEELS AND TYRES

Features / Version		916S2A
Rim size		6.5J x 16"
Tyre size		205/50 R16 87Y
Tyre pressure (cold)	bar (kg/cm^2)	front 2.7 rear 2.5
Space saver spare wheel	Rim size	4J x 15" C26
	Tyre size	T125/80 R15 96M
	Tyre pressure bar (kg/cm^2)	4.2

IMPORTANT: Increase pressure by 0.3 bar in the event of constant driving at top speed.

JACKING POINTS

With arm hoist or shop jack.

- Position the arms or the jack in the areas shown.

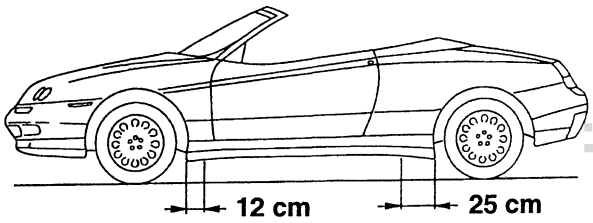

IMPORTANT:
Be very careful when positioning the arms or the jack in the front jacking points to avoid squeezing the brake and fuel lines.

cardiagn.com

INDICATIVE CAPACITIES

Capacity / Version		916S2A
Fuel tank		70 litres
Fuel reserve		~ 9 litres
Engine oil	Sump + filter (for regular replacement)	6.5 litres
Gearbox-differential oil		2 litres
Power steering system oil		1.3 kg
Brake and clutch circuit oil		0.4 kg
Engine coolant		11.7 litres
Climate control compressor oil		240 ± 15 cm^3
Climate control system fluid		0.700 kg + 0.05 kg (1)

(1): Additional amount to be computed considering the fluid which remains the recharge device lines.

cardiagn.com

ENGINE TECHNICAL FEATURES

FEATURES

Engine		AR 16202
Cycle		Otto, four-stroke
Fuel feed/Ignition		Motronic ML4.1 / EZ212K
Firing order		1 - 4 - 2 - 5 - 3 - 6
Capacity	cm^3	1996
Number of cylinders		6 at V 60°
Bore	mm	80
Stroke	mm	66.2
Maximum power	CV CEE (kW CEE) rpm	200 (147) 6000
Maximum torque	kgm CEE Nm CEE rpm	27.6 (28.5 *) 271 (280 *) 2400
Compression ratio		8 : 1
Engine oil pressure (oil at 100°C) - Idling - 4000 rpm	bar	 0.7 3.8
Idling ratio	rpm	800 ± 20

(*): With overboost.

NOTE: For other "Engine technical features", see GTV 1996 TB

cardiagn.com

SERVICE SCHEDULE

Operations to be performed at the indicated km	Km x 1,000								
	20	40	60	80	100	120	140	160	180
Check tyre conditions and wear	●	●	●	●	●	●	●	●	●
Check front disc brake pad wear warning light operation	●	●	●	●	●	●	●	●	●
Check rear disc brake pad wear		●		●		●		●	
Check intactness of drive shaft bellows, power steering, joint caps and tightness of fuel and brake lines	●	●	●	●	●	●	●	●	●
Inspect conditions of: external bodywork and underbody protection (exhaust - fuel feed - brakes); rubber parts (boots - sleeves - bushings - etc.)	●	●	●	●	●	●	●	●	●
Inspect conditions of accessory drive Poly-V belt		●							●
Check tension of accessory drive belt and adjust, if required	●						●		
Check handbrake lever travel		●		●		●		●	
Check/adjust tappet clearance	●	●	●	●	●	●	●	●	●
Check exhaust emissions		●		●		●		●	
Check evaporation system operation				●				●	
Replace air cleaner cartridge		●		●		●		●	
Check fluids and top up if required (brakes, hydraulic clutch, power steering, windscreen washer, battery, engine coolant, etc.)	●	●	●	●	●	●	●	●	●
Replace timing belt and accessory drive Poly-V belt						●			
Replace spark plugs	●	●	●	●	●	●	●	●	●
Check engine control system operation (via diagnostic socket)		●		●		●		●	
Check gearbox and differential oil level				●				●	
Change engine oil and filter (*)	●	●	●	●	●	●	●	●	●
Change brake fluid (or every 24 months)			●			●			●
Check dust/pollen filter	●	●	●	●	●	●	●	●	●
Operations on hood: - open/close functional check, oil seal inspection, check adherence of windows to hood seal and adjust if required (or every 18 months)	●	●	●	●	●	●	●	●	●
- for version with automatic hood, check oil pump level and top up, if required (or every 12 months)	●	●	●	●	●	●	●	●	●

(*): Or every 18 months for lower mileage.

cardiagn.com

IMPORTANT:
Perfect operation and long working life of a car is strictly related to its good use and, above all, to the care with which regular service is performed. Considering product evolution, new service schedules have been adopted. The scheduled service coupons are planned at 20,000 km.
It is, however, important to note that the car requires ordinary precautions, such as systematic fluid checks and topping up, tyre pressure checks, etc.
In any case, remember that the correct car maintenance is certainly the best way to ensure performance, safety, environmental friendliness and low running costs in time.

Additional operations
The following precautions are required in addition to the operations shown in the Service Schedule to ensure good operation of the car:
Every 1000 km or before long trips, check and top up if required:
- engine oil
- engine coolant
- brake/clutch fluid
- power steering fluid
- battery electrolyte
- tyre pressure
- windscreen washer fluid.

Engine oil
If the car is mainly used in one of the following especially demanding conditions:
- towing trailers
- dusty roads
- short, repeated trips (less than 7-8 km) with temperature below zero degrees centigrade
- engine frequently idling or long distances at slow speed (or after a long storage period)

we recommend changing the engine oil more frequently than shown in the Service Schedule.

Air cleaner
Replace the air cleaner more frequently than prescribed if the car is mainly used on dusty roads.

Brake pads
The brake pads are subject to different use and wear, according to conditions of use and to driving style. Have the pad thickness checked at an Alfa Romeo Dealership as soon as the front brake pad warning light comes on.
As the car is equipped with front brake pad wear sensors only, check the rear pads when the front pads are replaced. According to the car use, the rear brake pads may not need to be replaced immediately. We recommend in this case to check them later.

Brake/clutch fluid
Brake fluid is hygroscopic, i.e. it absorbs moisture. To prevent faulty braking, change the brake fluid every two years, regardless of the mileage (see the Service Schedule).

Battery
Check the battery charge status, preferably at the beginning of winter, to prevent the electrolyte from freezing. Perform this check more frequently if the car is mainly used for short trips or if permanent intake devices also running when the key is removed are fitted, especially those fitted after market.

Climate control system
To keep the system in perfect shape, simply turn it on once every fortnight - also in winter - and run the compressor for a few minutes. Furthermore, we recommend having the system checked before the summer, when the system will be used.

Dust/pollen filter (cars with climate control only)
Have the filter checked once a year, preferably at the beginning of summer, by an Alfa Romeo Dealership. If the car is frequently used in dusty or very polluted environments, we recommend you have the filtering element checked more frequently than shown in the Service Schedule. The filter should be replaced in particular if decreased air intake into the passenger compartment is noticed.

Anti-freeze
We recommend topping up with Climafluid Super Permanent -40°C Alfa Romeo to preserve the protective features of the mixture.

Rubber hoses
The rubber hoses in the brake, power steering, fuel feed lines, etc. should be carefully checked at the frequency shown in the Service Schedule.

Wheels
Periodically and before long trips, check the pressure of each tyre, including the spare. Check pressure on cold tyres.
Periodically check that the depth of the tread complies with the minimum legal prescriptions. Periodically check that the tyres are not cut, swollen or present irregular wear. If this is so, go to an Alfa Romeo Dealership.
If a tyre is punctured, stop immediately and replace it to prevent damage to the tyre, the rim, the suspension and the steering.
The factory fitted wheels (rims and tyres) are suited to the features of the car and ensure maximum safety and comfort in all normal conditions of use. Before replacing the rims or tyre fitted on the car, check the allowed type table. However, observe the rim-tyre coupling of the original fitting. Always fit new tyres. Avoid tyres from unknown sources.

cardiagn.com

VARIANTS FOR EURO 3 MODELS

INDEX

TECHNICAL DATA 00

- Model identification 1
- Engine technical features 1
- Actual timing angle value diagram..... 2

FOR INFORMATION NOT GIVEN HERE, REFER TO THE CORRESPONDING SPIDER - GTV ASSEMBLY

FOR THE DESCRIPTION OF THE NEW ME7.3.1 INJECTION/IGNITION SYSTEM, REFER TO PRINT NO. 507137 "EMISSION CONTROL SYSTEMS EOBD ON BOARD DIAGNOSTIC MANUAL"

cardiagn.com

MODEL IDENTIFICATION - *EURO 3*

Brand name	Spider 2.0 T. Spark	GTV 2.0 T. Spark
Version	Spider	Coupé
Version (on identification plate)	916S2C00 34	916C200 35
Chassis (in engine compartment, on upper right-hand shock absorber bracket)	-	-
Progressive chassis number	6000001	6000001
Engine (code)	AR 32310	AR 32310
Engine symbol	1970 T. SPARK 16V	1970 T. SPARK 16V
Gearbox (code)	C.510.5	C.510.5

ENGINE TECHNICAL FEATURES - *EURO 3*

CHARACTERISTIC DATA

Engine		AR 32310
Cycle		Otto, four stroke
Injection / Ignition		Multi-Point BOSCH ME7.3.1 EOBD
Firing order		1 - 3 - 4 - 2
Capacity	cm^3	1970
Number of cylinders		4 in line
Bore	mm	83
Stroke	mm	91
Maximum power	kW CEE rpm	110 6300
Maximum torque	Nm CEE rpm	181 3800
Compression ratio		10 : 1
Engine oil pressure - Idling ratio - At 4000 rpm	bar	≥ 1.5 ≥ 4.5
Idling ratio	rpm	840 ± 50

cardiagn.com

ACTUAL TIMING ANGLE VALUE DIAGRAM - *EURO 3*

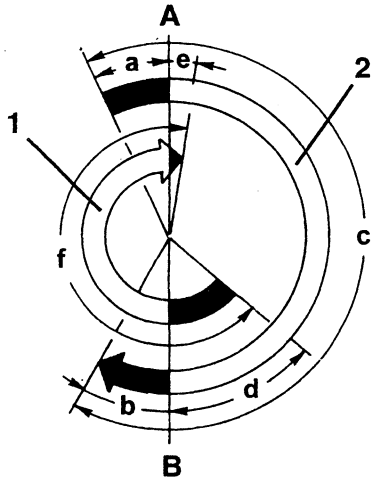

(1) Exhaust (2) Intake
(A) TDC (B) BDC

Intake	Opens (before TDC)	"a"	3°
	Closes (after BDC)	"b"	51°
	Intake angle value	"c"	228°
Exhaust	Opens (before BDC)	"d"	47°
	Closes (after TDC)	"e"	0°
	Exhaust angle value	"f"	231°

cardiagn.com

VARIANTS FOR EURO 3 MODELS

INDEX

TECHNICAL DATA 00

- Model identification 1
- Weights and loads 1
- Wheels and tyres 2
- Engine technical features 2
- Gear ratios..... 3
- Spark plugs 3

FOR INFORMATION NOT GIVEN HERE, REFER TO THE CORRESPONDING GTV 3.0 24V ASSEMBLY

FOR THE DESCRIPTION OF THE NEW ME3.1 INJECTION/IGNITION SYSTEM, REFER TO PRINT NO. 507137 "EMISSION CONTROL SYSTEMS EOBD ON BOARD DIAGNOSTIC MANUAL"

cardiagn.com

MODEL IDENTIFICATION - *EURO 3*

Brand name	SPIDER 3.0 24V	GTV 3.0 24V
Version	Spider	Coupé
Version (on identification plate)	916S1B00 32	916C1B00 33
Chassis (in engine compartment, on upper right-hand shock absorber bracket)	-	-
Progressive chassis number	-	-
Engine (code)	AR 16105	AR 16105
Engine symbol	2959 24V	2959 24V
Gearbox (code)	C.530.6	C.530.6

WEIGHTS AND LOADS - *EURO 3*

Unit: kg

Features \ Version		SPIDER 3.0 24V	GTV 3.0 24V
Kerb weight (without driver) (*)		1415	
Maximum admitted load (*)		1680	1820
Load		260	405
Maximum weight allowed on each axle	front	1000	1060
	rear	800	870
Towable weight	trailer with brakes	1000	
	trailer without brakes	500	
Maximum load on tow hitch		50	

(*): Without optional equipment

cardiagn.com

WHEELS AND TYRES - *EURO 3*

Features \ Version		SPIDER 3.0 24V	GTV 3.0 24V
Rim size	standard	6.5J x 16"	
	optional	7J x 17" 7.5J x 17"	
Tyre size	standard	205/50 R16 87Y	
	optional	225/45 ZR17 91Y	
Tyre pressure (cold)	bar (kg/cm^2)	front 2.7 rear 2.5	
Space saver spare wheel	Rim size	4J x 16" C24	
	Tyre size	T125/80 R16 97M	
	Tyre pressure bar (kg/cm^2)	4.2	

Snow chain tyres: snow chains can only be used with 205/45 ZR16 REINFORCED tyres or 205/45 R16 87W REINFORCED tyres.

Snow chains cannot be fitted on 225/45 ZR17 91Y tyres

IMPORTANT:
Increase pressure by 0.3 bar in the event of constant driving at top speed.

ENGINE TECHNICAL FEATURES - *EURO 3*

CHARACTERISTIC DATA

Engine		AR 16105
Cycle		Otto, four stroke
Injection / Ignition		Multi Point BOSCH ME3.1 EOBD
Firing order		1 - 4 - 2 - 5 - 3 - 6
Capacity	cm^3	2959
Number of cylinders		6 at V 60°
Bore	mm	93
Stroke	mm	72.6
Maximum power	kW CEE rpm	160 6300
Maximum torque	Nm CEE rpm	265 5000
Compression ratio		10.0 : 1
Engine oil pressure (at 100°C) - Idling ratio - At 4000 rpm	bar	 > 0.8 > 4.5
Idling ratio	rpm	700 ± 20

cardiagn.com

GEAR RATIOS - *EURO 3*

Axle ratio	Gear engaged	Gear ratio	Total ratio
16/57 1 : 3.563	1st	1 : 3.500	1 : 12.470
	2nd	1 : 2.235	1 : 7.963
	3rd	1 : 1.520	1 : 5.416
	4th	1 : 1.161	1 : 4.136
	5th	1 : 0.971	1 : 3.460
	6th	1 : 0.811	1 : 2.889
	Reverse	1 : 3.545	1 : 12.631

SPARK PLUGS - *EURO 3*

Type	NGK RPFR6B

cardiagn.com

VARIANTS FOR EURO 3 MODELS

INDEX

ENGINE 10

ELECTRICAL - ELECTRONIC COMPONENTS
- Injection - ignition control unit 1

AIR INTAKE SYSTEM
- Air capacity chamber 2

EXHAUST SYSTEM
- Left catalytic converter with built-in catalytic preconverter 4
- Right exhaust manifold with built-in catalytic converter 5
- Front exhaust pipe sections 8
- Catalytic converters 9
- Right-hand cylinder head exhaust manifold bulkhead 10
- Left cylinder head exhaust manifold bulkhead 11
- Right-hand lambda sensor upstream of the catalytic converter 11
- Left-hand lambda sensor upstream of the catalytic converter 13
- Lambda sensor downstream of catalytic converter 14

FOR INFORMATION NOT GIVEN HERE, REFER TO THE CORRESPONDING GTV 3.0 24V ASSEMBLY

FOR THE DESCRIPTION OF THE NEW ME3.1 INJECTION/IGNITION SYSTEM, REFER TO PRINT NO. 507137 "EMISSION CONTROL SYSTEMS EOBD ON BOARD DIAGNOSTIC MANUAL"

cardiagn.com

INJECTION - IGNITION CONTROL UNIT

REMOVING/REFITTING

- Ensure the ignition key is turned OFF, then disconnect the battery negative terminal (-).
1. Disconnect the injection-ignition control unit electrical connections.

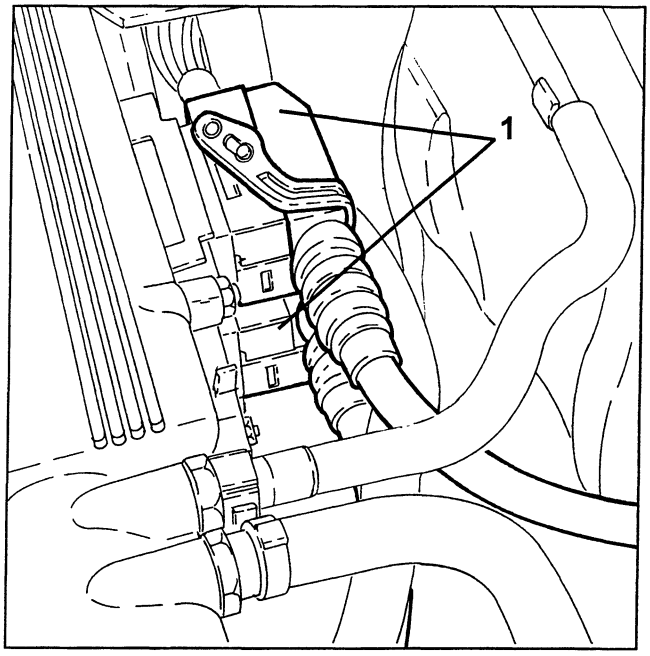

1. Unscrew the nuts and remove the injection - ignition control unit.

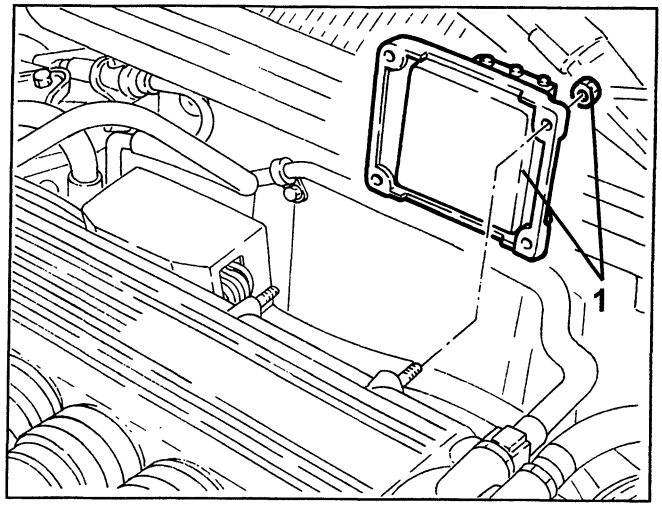

cardiagn.com

AIR CAPACITY CHAMBER

REMOVING/REFITTING

- Ensure the ignition key is turned OFF, then disconnect the battery terminal (-).
1. Disconnect the fuel vapour recovery pipe from the air capacity chamber and move to one side.

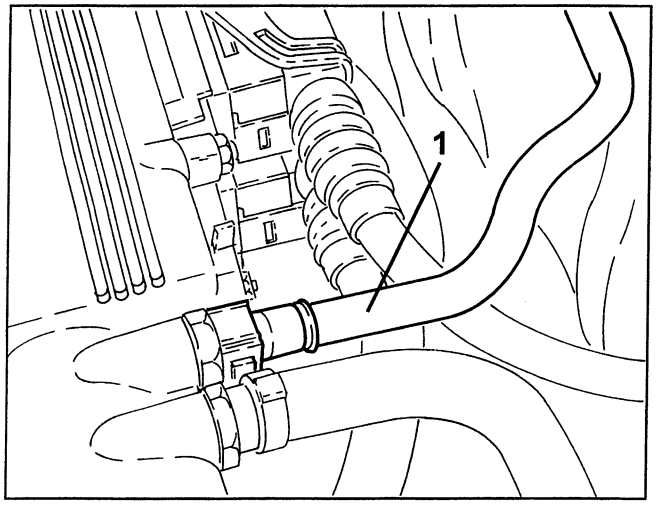

- Remove the injection-ignition control unit (see specific paragraph).
1. Open the connection carrier box.
2. Disconnect the engine electrical wiring junction.
3. Disconnect the electrical connection of the left lambda sensor downstream of the catalytic converter (black).
4. Disconnect the electrical connection of the right lambda sensor downstream of the catalytic converter (grey).
5. Disconnect the electrical connection of the front knock sensor (black).

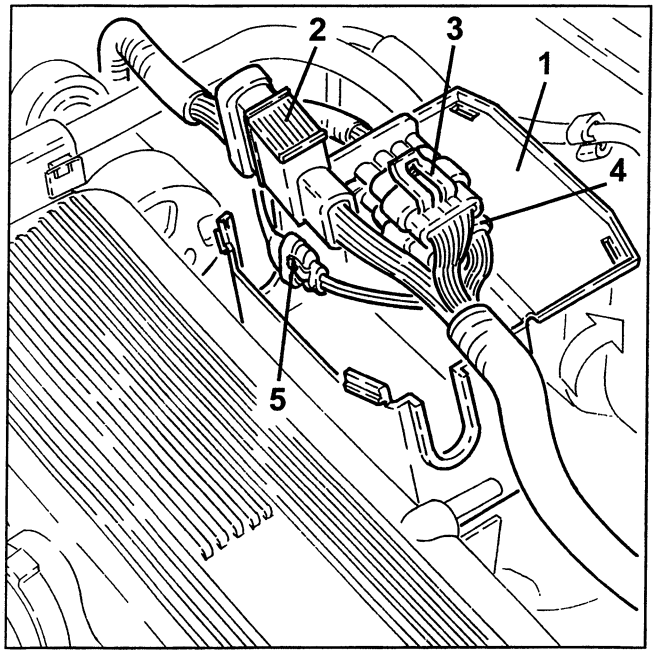

1. Remove the connection carrier box.

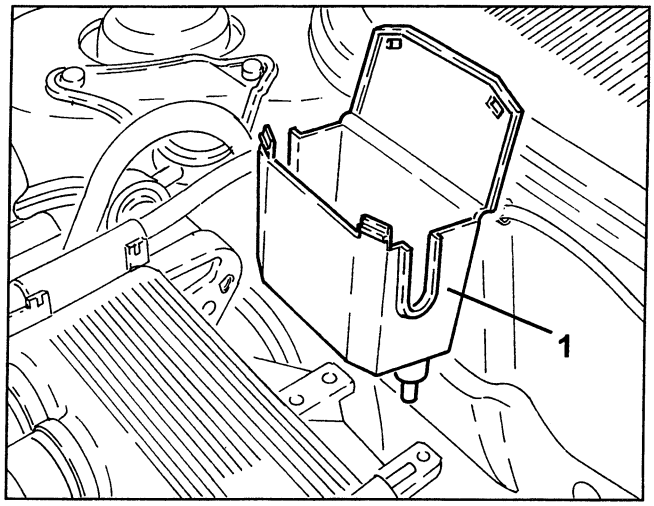

1. Loosen the collar and disconnect the engine oil vapour recirculation pipe from the corrugated sleeve.
2. Loosen the collars and remove the corrugated sleeve complete with resonator.

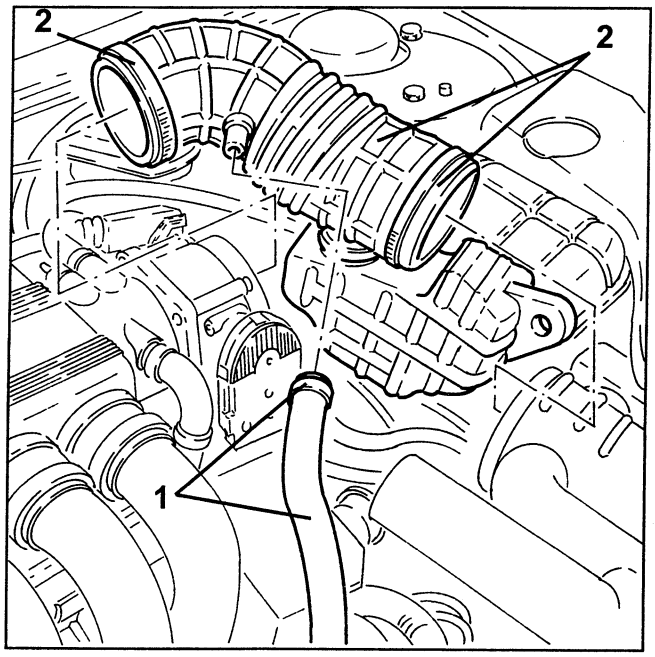

1. Disconnect the electrical connection from the motorised throttle body.
2. Disconnect the brake servo vacuum intake pipe from the air capacity chamber.

cardiagn.com

3. Loosen the collar and disconnect the oil vapour recovery pipe from the air capacity chamber.

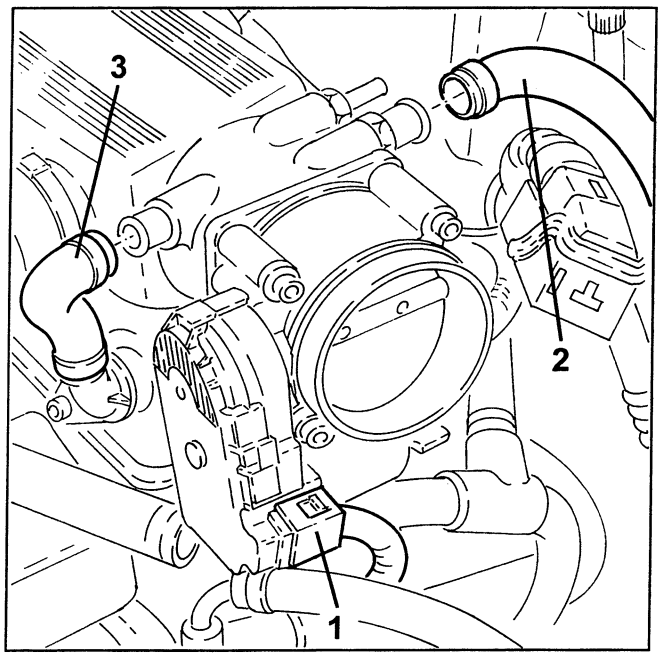

1. Unscrew the bolt and disconnect the earth lead from the air capacity chamber.

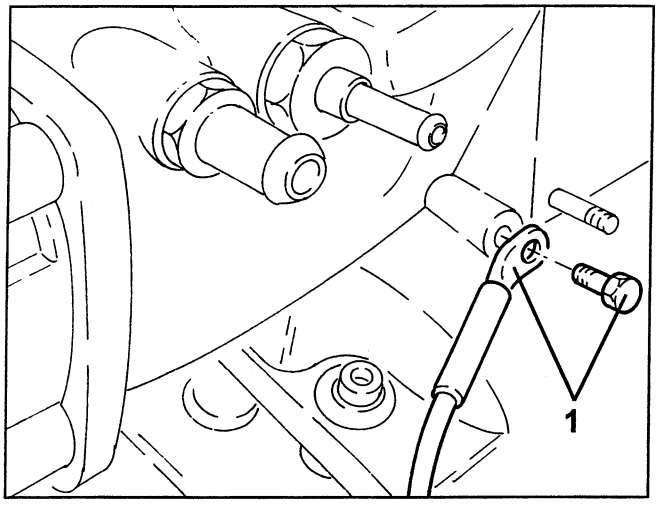

1. Loosen the bolts securing the intake ducts to the manifolds.

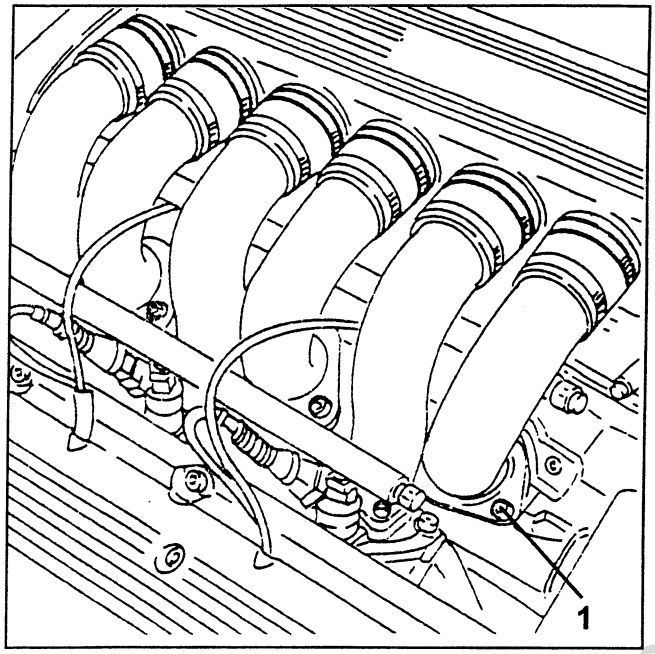

1. Unscrew the fastenings and remove the reinforcement between the air capacity chamber and the engine vibration-proof bar mount.

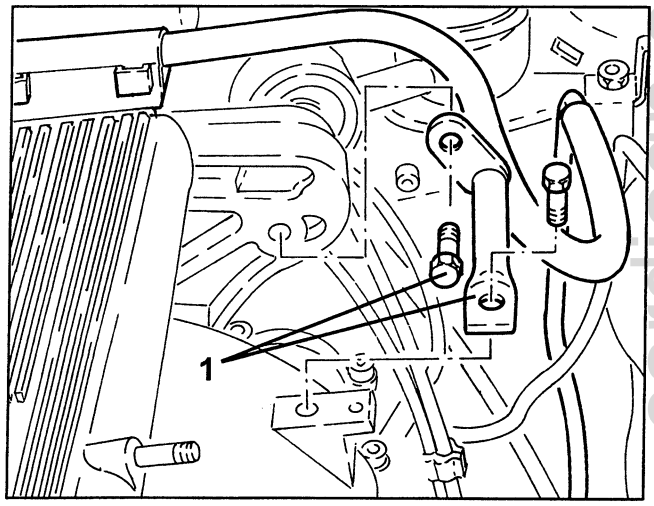

1. Loosen the collar securing the air intake duct retaining collars to the air capacity chamber.
2. Unscrew the bolts and remove the air capacity chamber.

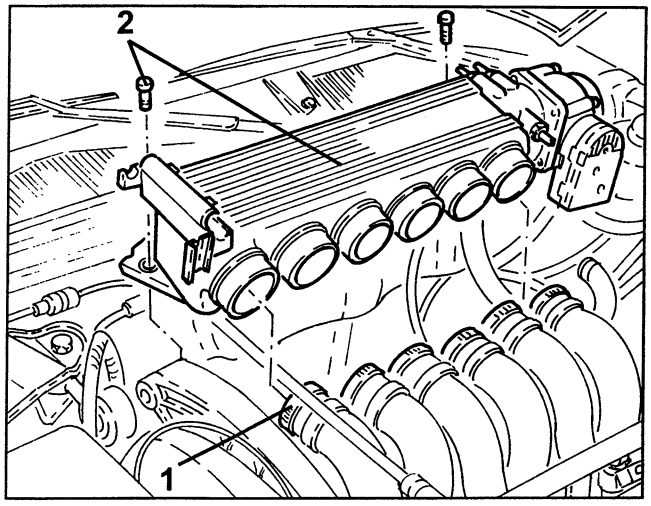

cardiagn.com

ATTENTION:
During engine operation, all exhaust pipes and particularly the catalytic converter become very hot.
Before beginning work, therefore, leave the engine off for long enough for it to cool down Never touch the catalytic converter unless you are wearing proper protection such as gloves etc. Never bring easily inflammable material close to the catalytic converter.

LEFT CATALYTIC CONVERTER WITH BUILT-IN CATALYTIC PRECONVERTER

REMOVING/REFITTING

- Remove the left lambda sensor upstream of the catalytic converter (see specific paragraph).
1. Unscrew the bolts and remove the upper radiator bream.

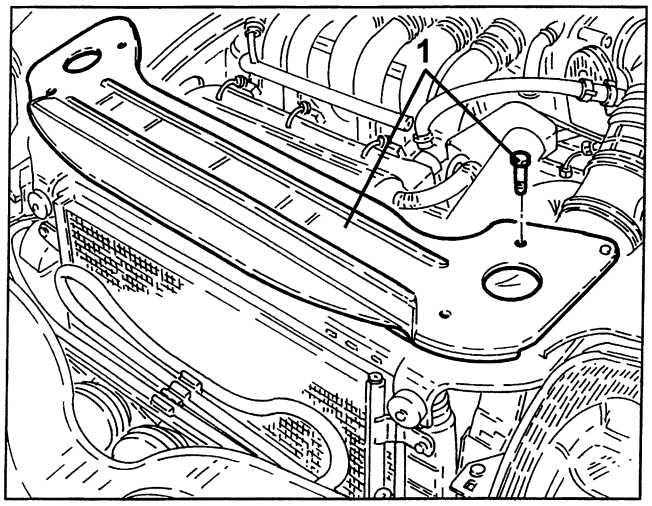

- Undo the upper bolts securing the left cylinder head exhaust manifold bulkhead.
- Withdraw the engine oil dipstick.
1. Unscrew the lower bolt and remove the left cylinder head manifold bulkhead.

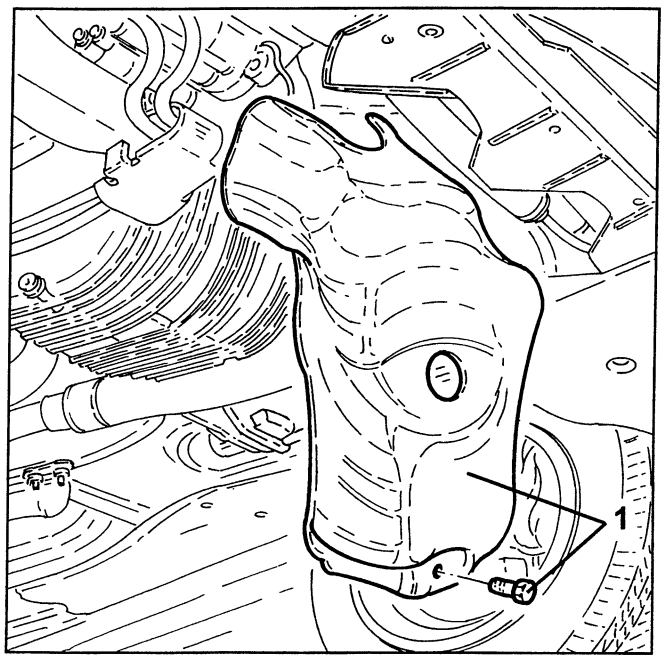

1. Remove the engine oil dipstick guide tube.

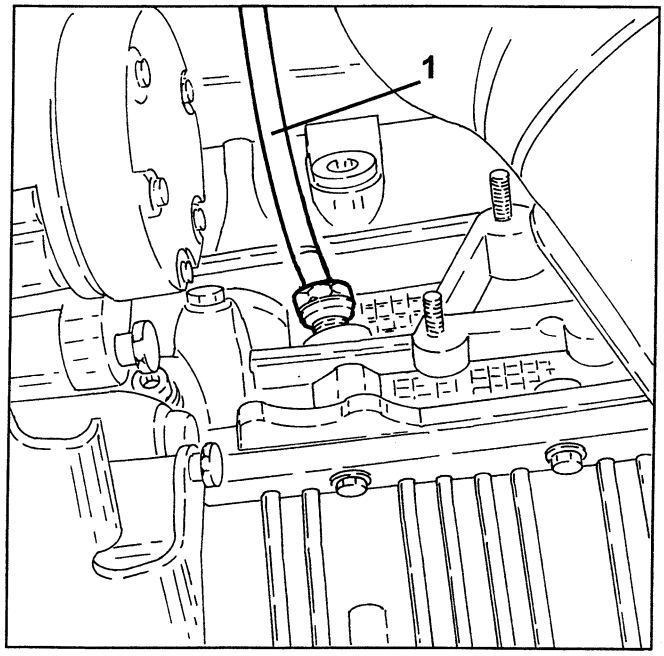

cardiagn.com

1. Undo the bolt and remove the bracket joining front sections of the exhaust pipe.

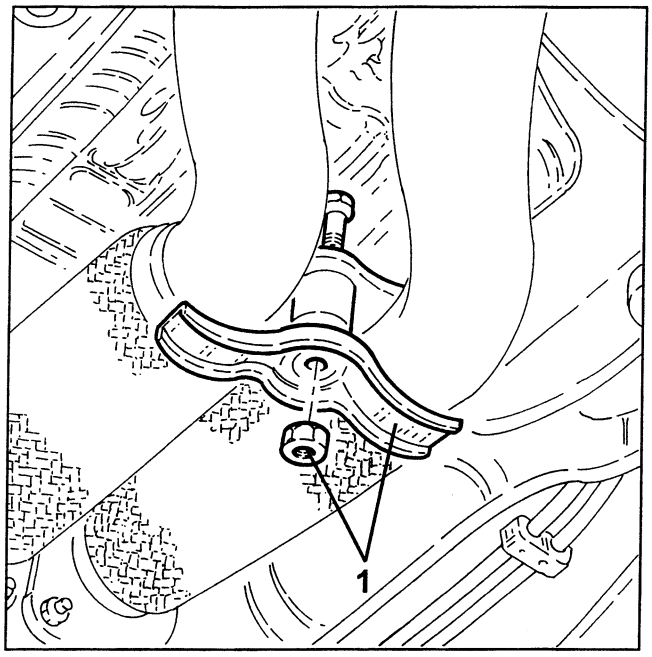

1. Undscrew the nuts and remove the left exhaust manifold with built-in catalytic converter.
- Remove the gasket.

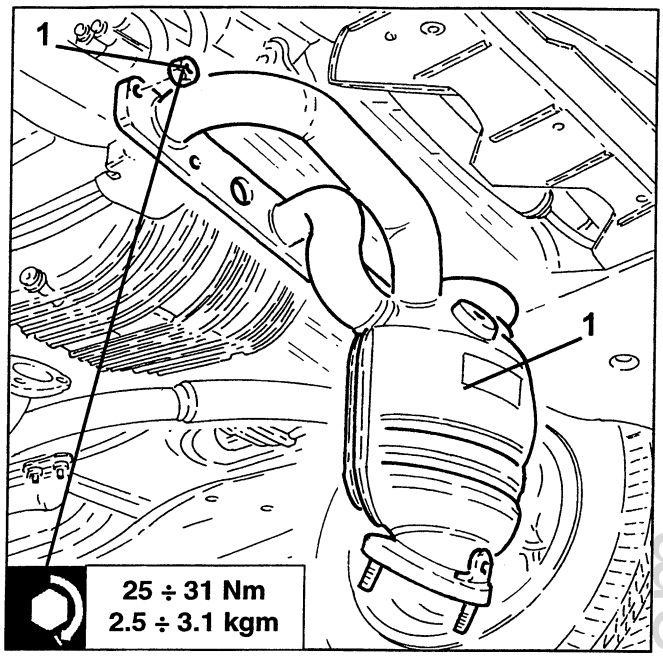

1. Undo the bolts securing front sections of the exhaust pipe to the exhaust manifolds with built-in catalytic preconverters.

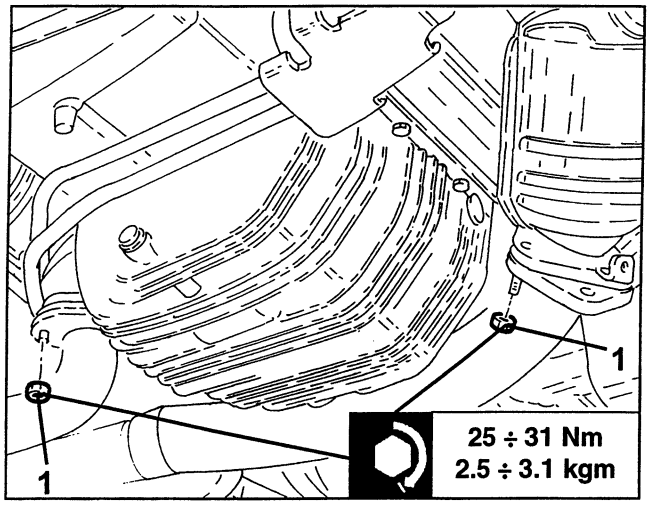

- Release the front exhaust pipe section from the studs on the left exhaust manifold with built-in catalytic preconverter and set aside.
- Remove the gasket.

RIGHT EXHAUST MANIFOLD WITH BUILT-IN CATALYTIC CONVERTER

REMOVING/REFITTING

- Place the vehicle on a lift.
1. Undo the bolt and remove the bracket joining front sections of the exhaust pipe.

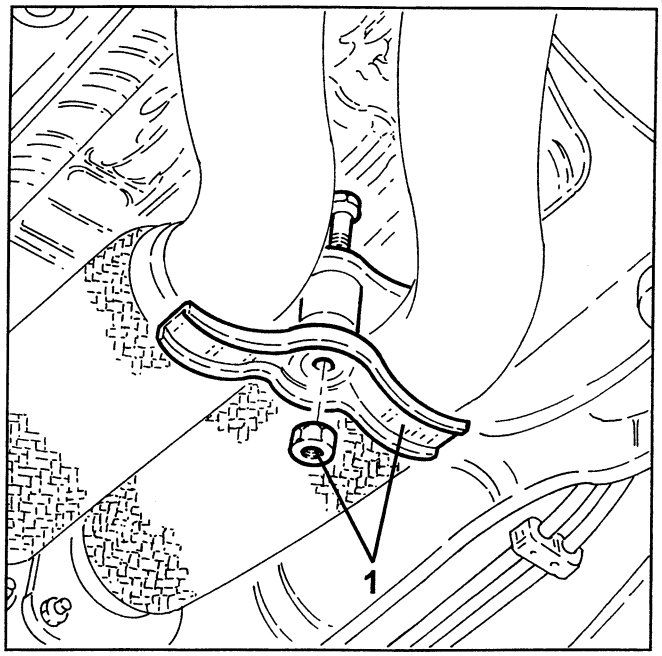

cardiagn.com

1. Undo the bolts securing front sections of the exhaust pipe to the exhaust manifolds with built-in catalytic preconverters.
- Remove the gaskets.

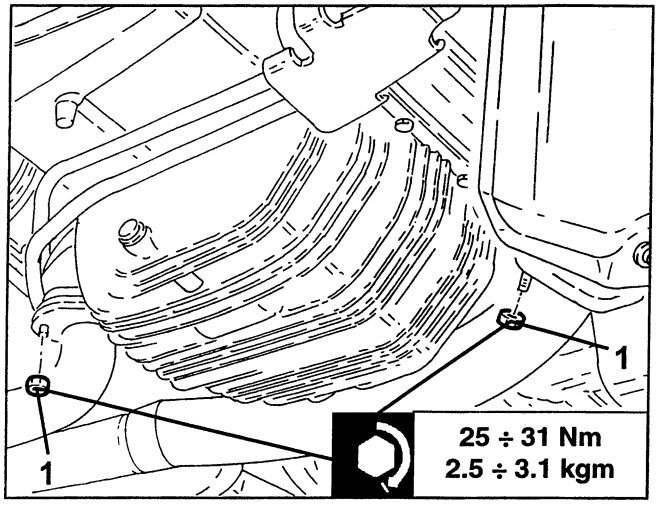

- Remove the right cylinder head exhaust manifold bulkhead (see specific paragraph).
1. Disconnect the fuel vapour recovery pipe from the air capacity chamber and move side.

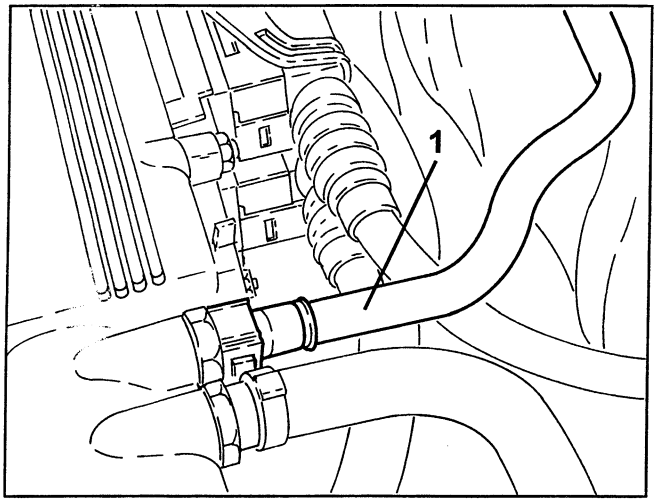

- Remove the injection-ignition control unit (see specific paragraph).
1. Open the connection carrier box.
2. Disconnect the engine electrical wiring junction.

3. Disconnect the electrical connection of the left lambda sensor downstream of the catalytic converter (black).
4. Disconnect the electrical connection of the right lambda sensor downstream of the catalytic converter (grey).
5. Disconnect the electrical connection of the front knock sensor (black).

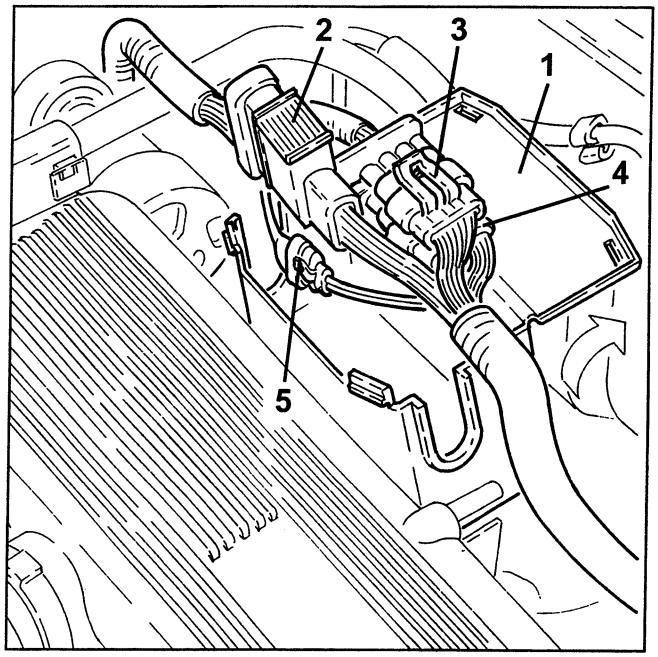

1. Remove the connection carrier box.

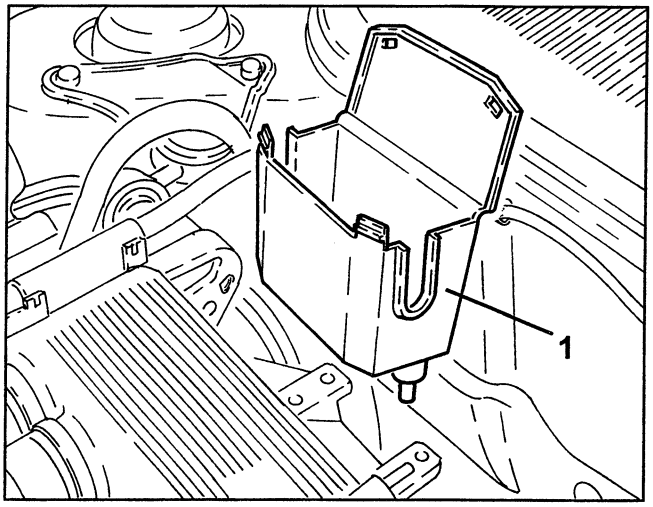

cardiagn.com

1. Loosen the collar and disconnect the engine oil vapour recirculation pipe from the corrugated sleeve.
2. Loosen the sleeve and remove the corrugated sleeve complete with resonator.

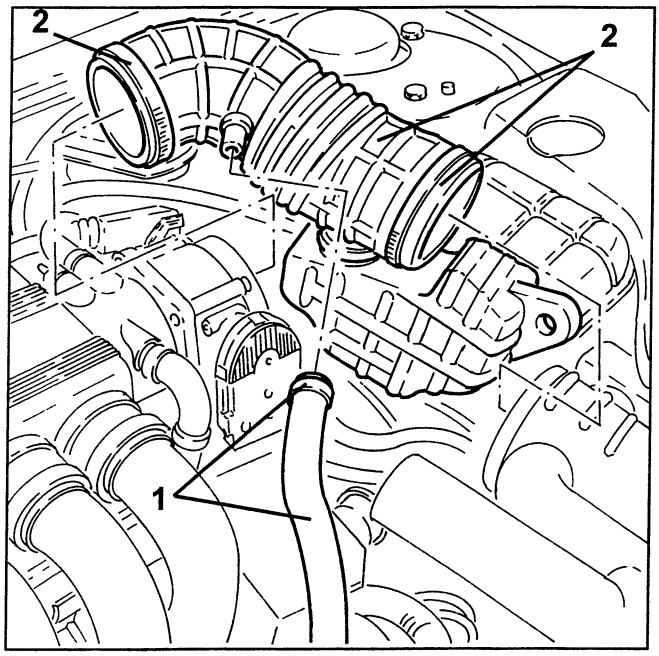

1. Disconnect the electrical connection from the motorised throttle body.
2. Disconnect the brake servo vacuum intake pipe from the air capacity chamber.
3. Loosen the collar and disconnect the oil vapour recovery pipe frm the air capacity chamber.

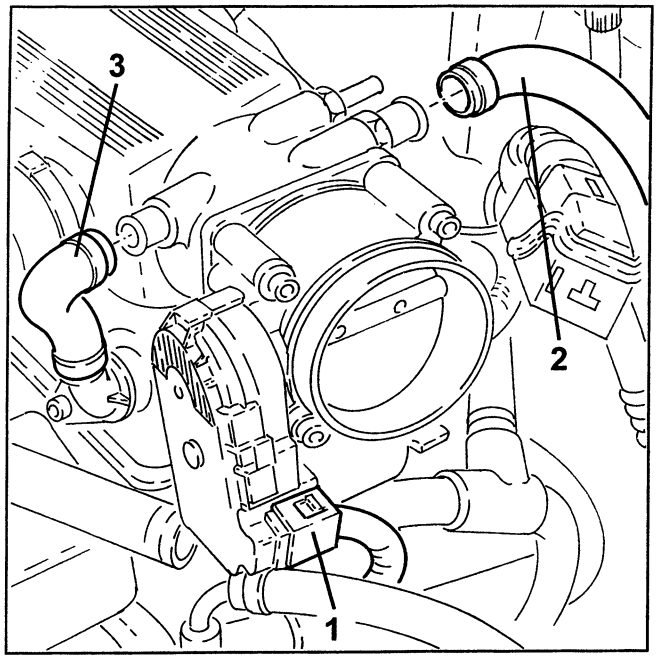

1. Unscrew the bolt and disconnect the earth lead from the air capacity chamber.

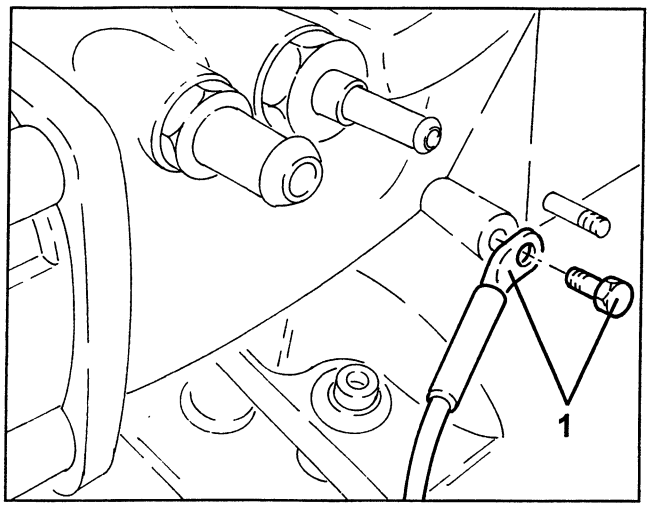

1. Loosen the bolts securing the air intake ducts to the manifolds.

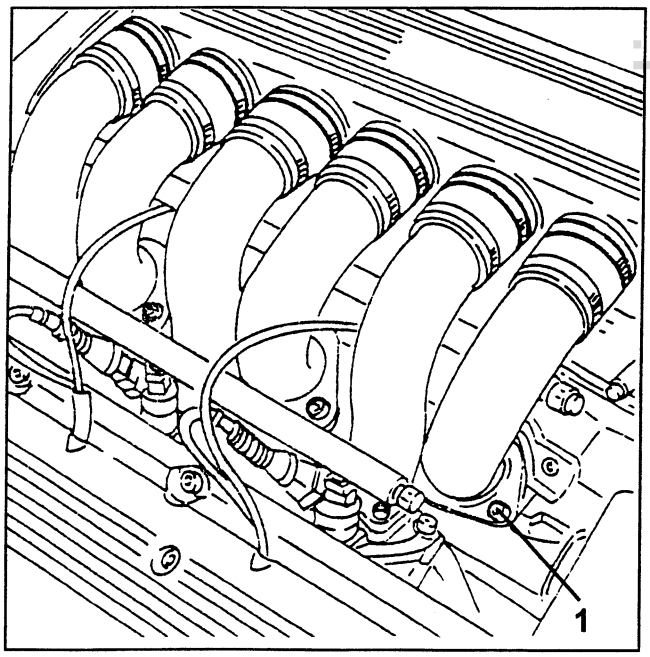

cardiagn.com

1. Undo the bolts and remove the reinforcement between air capacity chamber and engine vibration-proof bar mount.

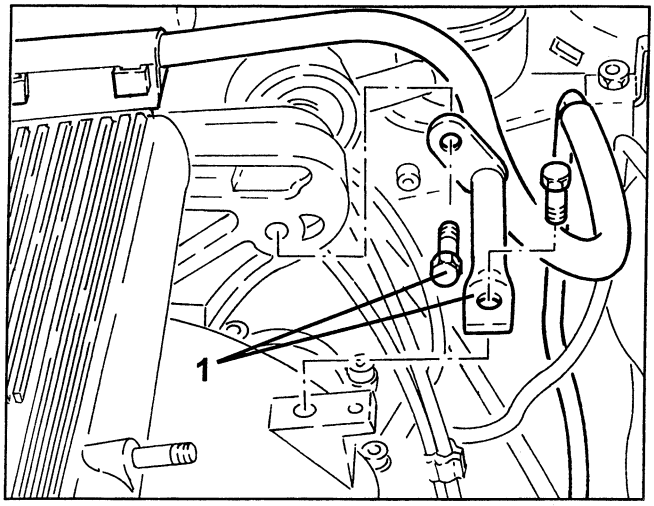

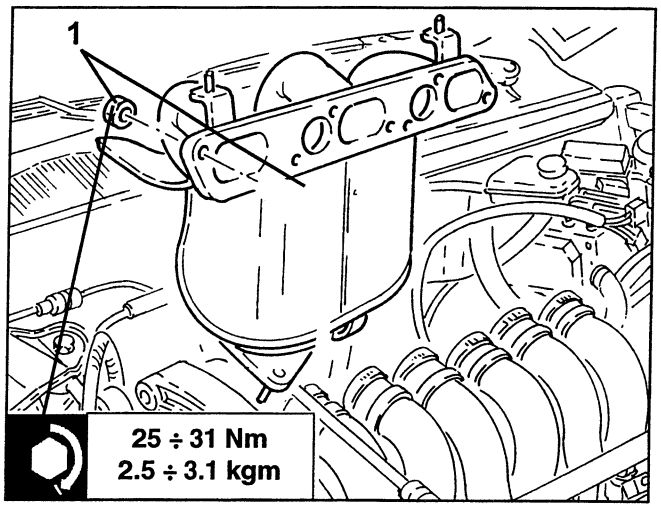

1. Loosen the collars securing the air intake ducts to the air capacity chamber.
2. Undo the bolts and remove the air capacity chamber.

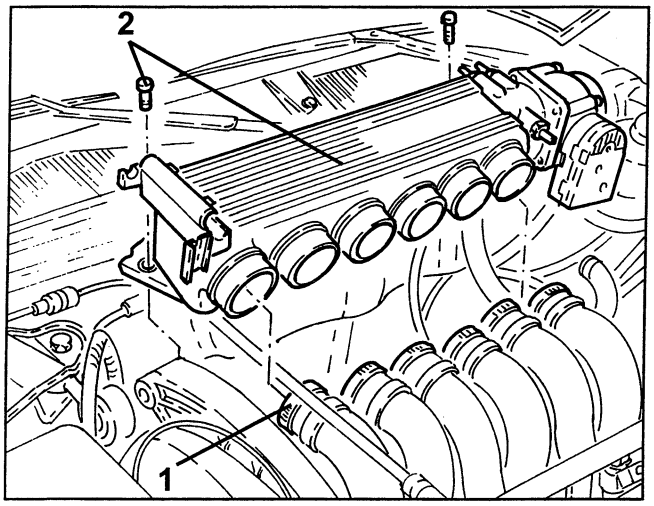

1. Undo the nuts and remove the right exhaust manifold with built-in catalytic preconverter.
- Remove the gasket.

FRONT EXHAUST PIPE SECTIONS

REMOVING/REFITTING

- Position the vehicle on a lift.
1. Undo the bolt and remove the bracket joining front sections of the exhaust pipe.

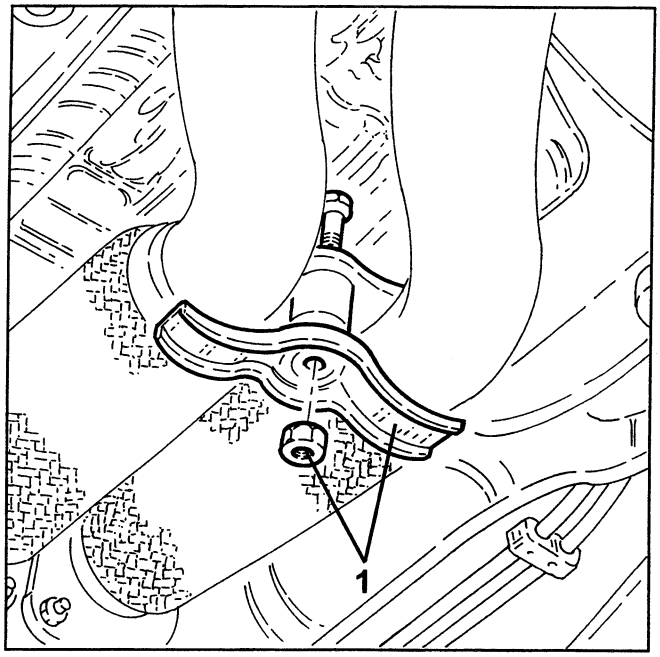

cardiagn.com

1. Undo the bolts securing the front section of the exhaust pipe to the right exhaust manifold with built-in catalytic preconverter.

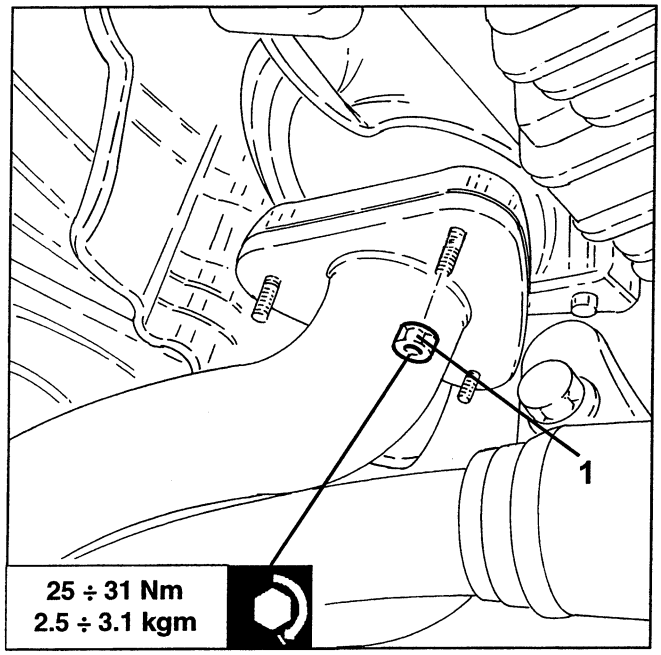

1. Undo the nuts securing the front exhaust pipe section to the left exhaust manifold with built-in catalytic preconverter.

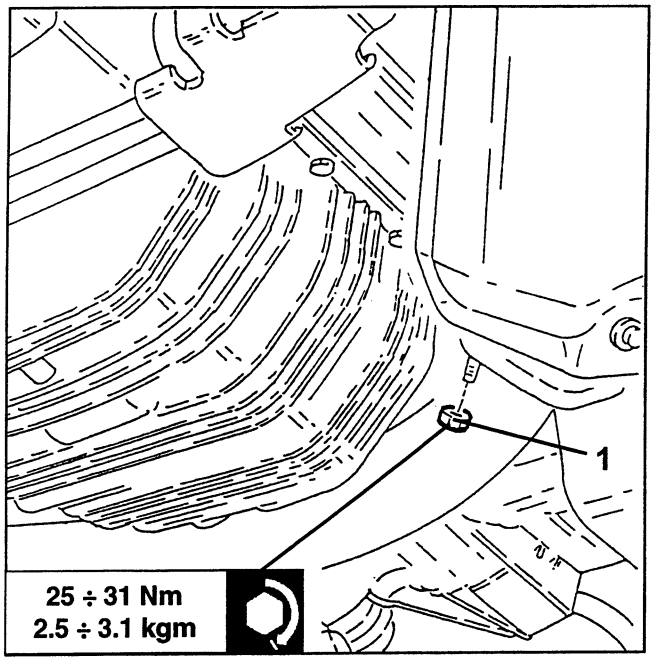

1. Undo the nuts securing the front exhaust pipe sections to the catalytic converters, then remove.
- Remove the gaskets.

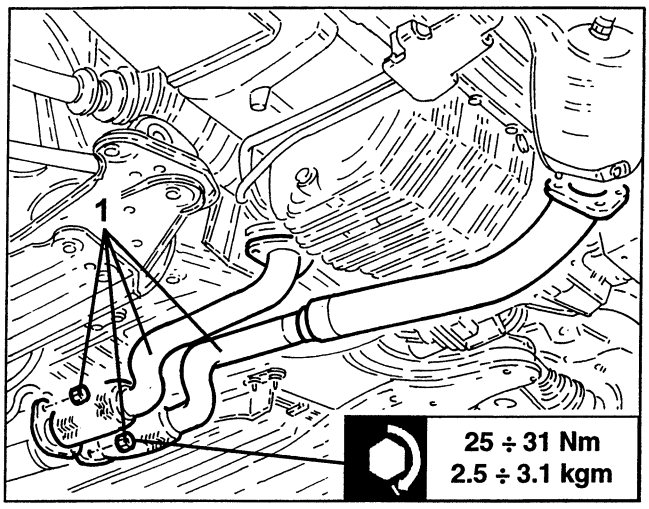

CATALYTIC CONVERTERS

REMOVING/REFITTING

- Place the vehicle on a lift.
1. Releaes the electrical wiring of lambda sensors downstream of the catalytic converters from their underbody clips.

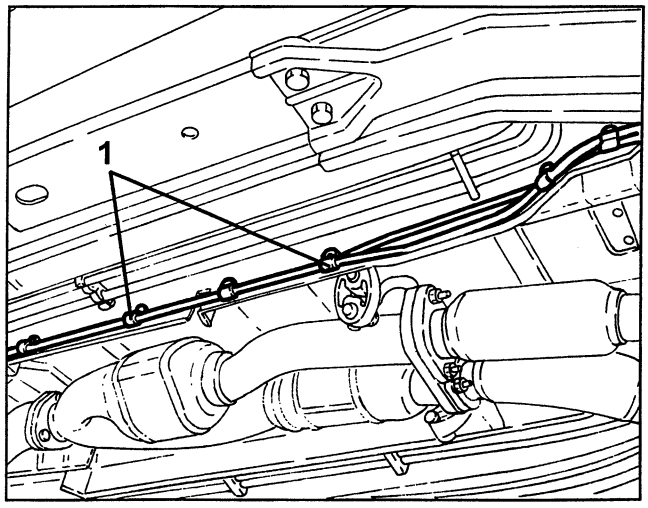

cardiagn.com

1. Unscrew the lambda sensors downstream of the catalytic converters and place them to one side.

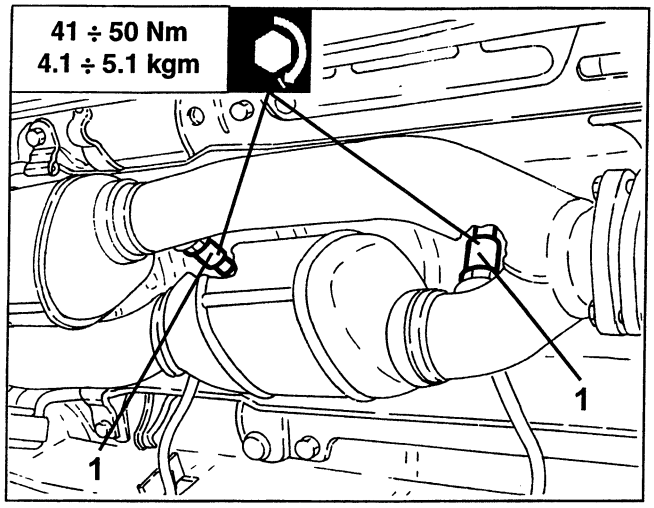

1. Loosen the bolt of the bracket joining the front exhaust pipe sections.

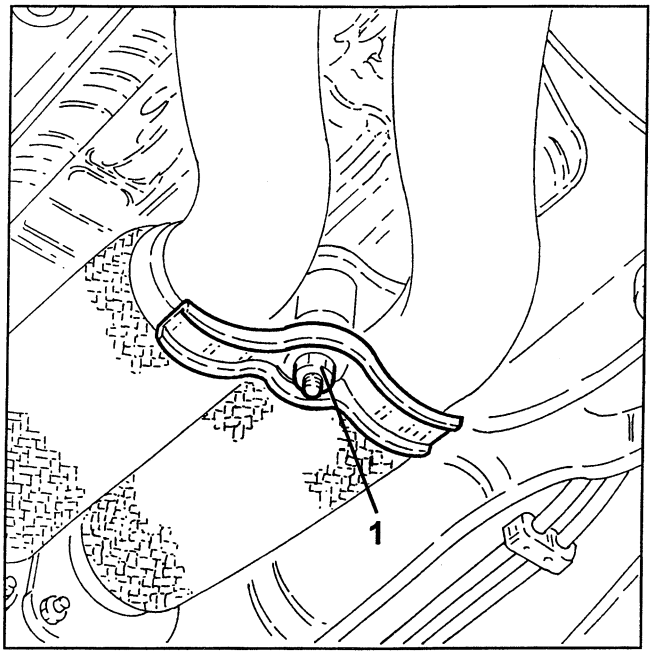

1. Position a hydraulic jack beneath the catalytic converters.
2. Release the catalytic converters from their flexible mounts.
3. Unscrew the nuts securing front exhaust pipe sections to the catalytic converters.
4. Undo the bolts securing the catalytic converters to the intermediate exhaust silencer.

5. Move the catalytic converters back sufficiently to release the front studs from the front exhaust pipe sections and remove.
- Remove the gaskets.

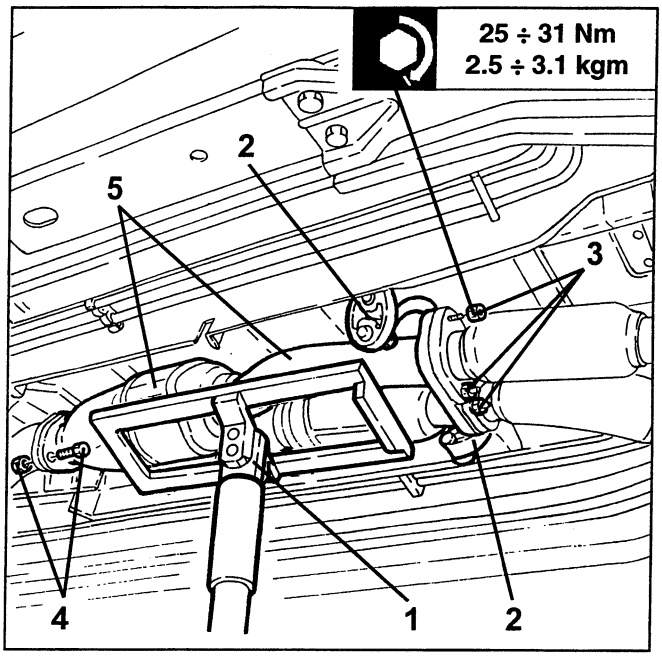

RIGHT-HAND CYLINDER HEAD EXHAUST MANIFOLD BULKHEAD

REMOVING/REFITTING

- Remove the right lambda sensor upstream of the catalytic converter (see specific paragraph).
1. Disconnect the gear engagement cable.
2. Unscrew the nuts and move the bracket with gear engagement cable to one side.

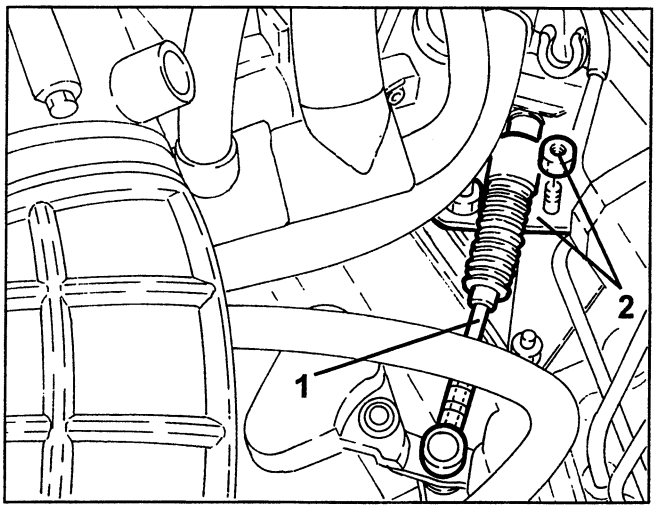

cardiagn.com

1. Undo the nuts and remove the right cylinder head exhaust manifold bulkhead.

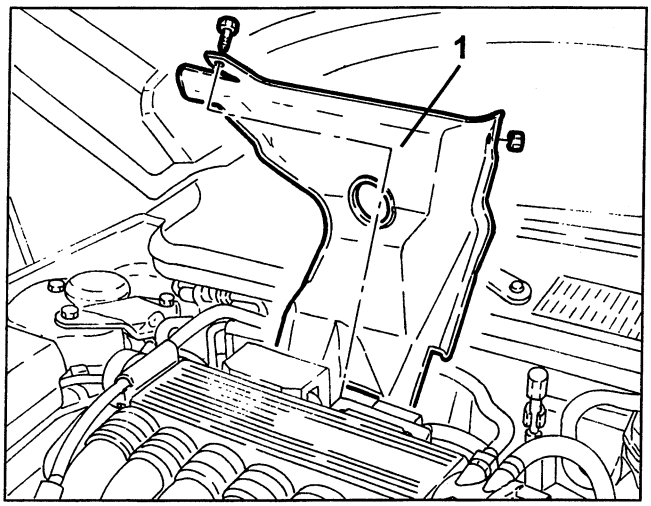

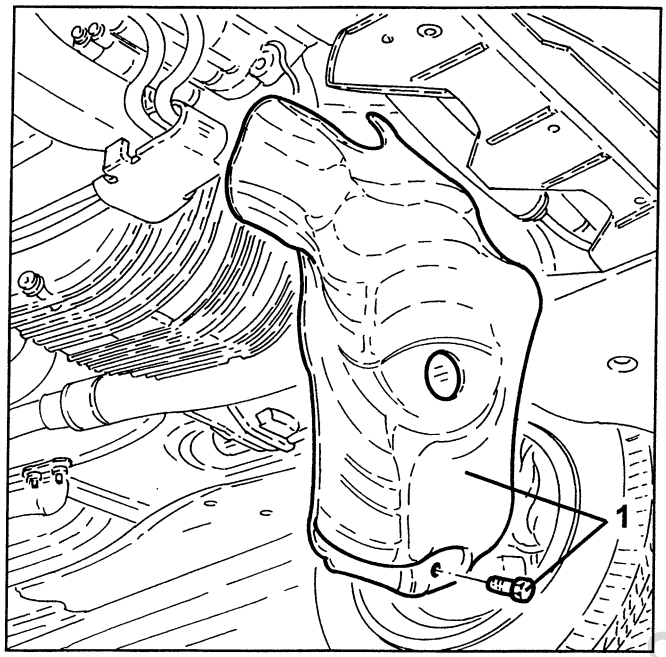

LEFT CYLINDER HEAD EXHAUST MANIFOLD BULKHEAD

REMOVING/REFITTING

- Remove the left lambda sensor upstream of the catalytic converter (see specific paragraph).
1. Unscrew the bolts and remove the upper radiator beam.

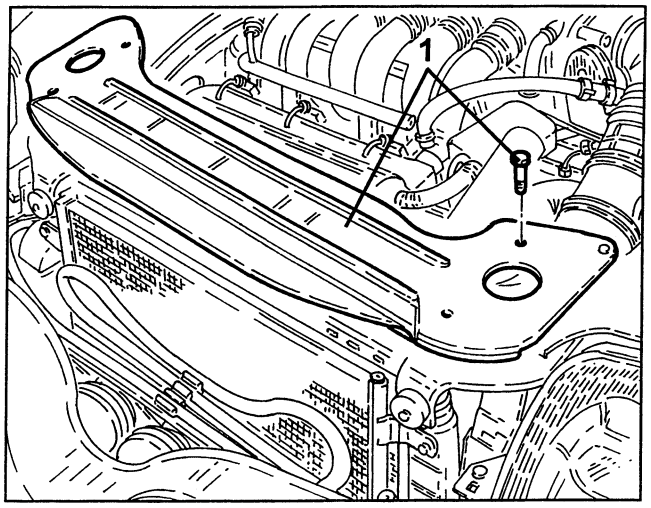

- Undo the upper nuts securing the left cylinder head exhaust manifold bulkhead.
- Withdraw the engine oil dipstick.
1. Unscrew the lower bolt and remove the left cylinder head exhaust manifold bulkhead.

RIGHT-HAND LAMBDA SENSOR UPSTREAM OF THE CATALYTIC CONVERTER

REMOVING/REFITTING

- Place the vehicle on a lift.
- Ensure the ignition key is turned OFF, then disconnect the battery terminal (-).
1. Open the connection carrier box.
2. Disconnect the electrical connection of the right-hand lambda sensor upstream of the catalytic converter (grey).

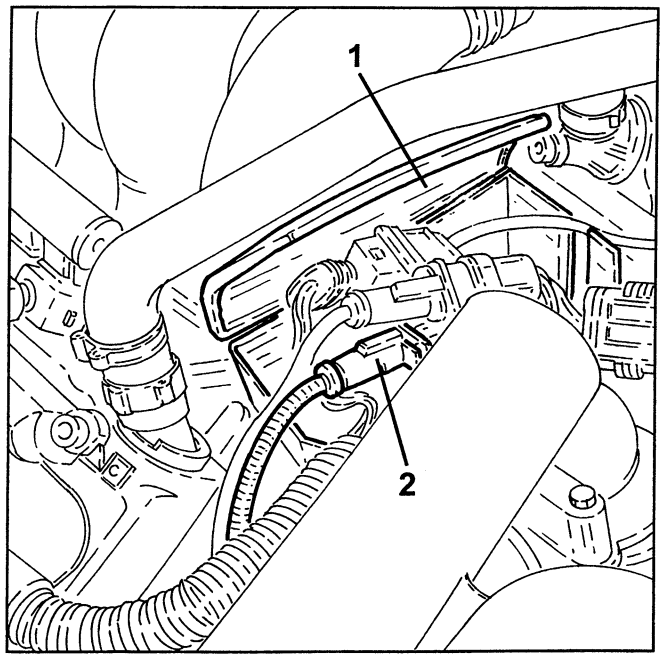

cardiagn.com

1. Release the electrical wiring of the right-hand lambda sensor upstream of the catalytic converter from the retaining clips.

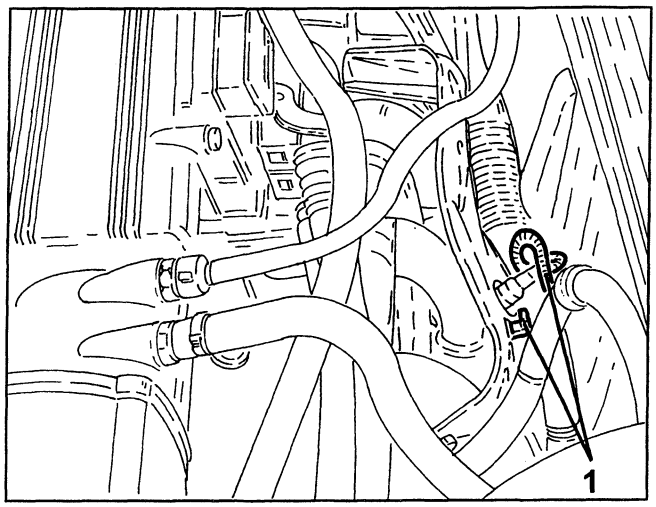

1. Unscrew the bolts and remove the engine vibration-proof bar.

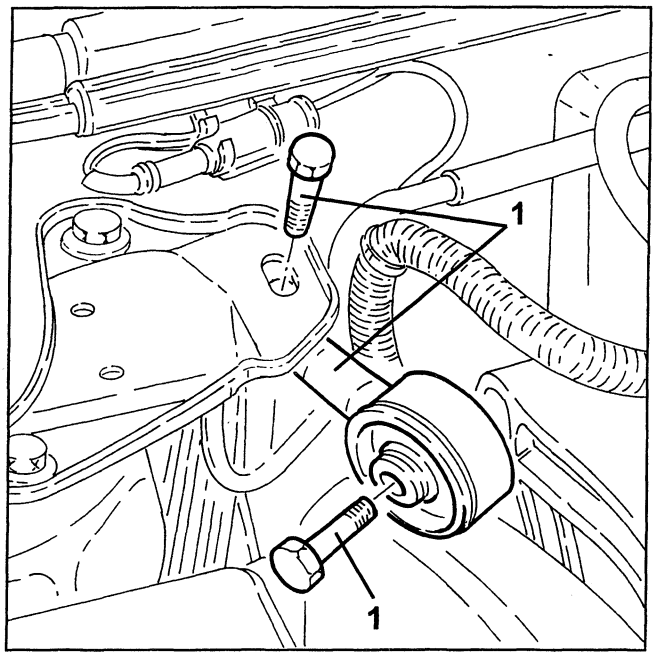

1. Disconnect the upper electrical connection from the injection - ignition control unit.

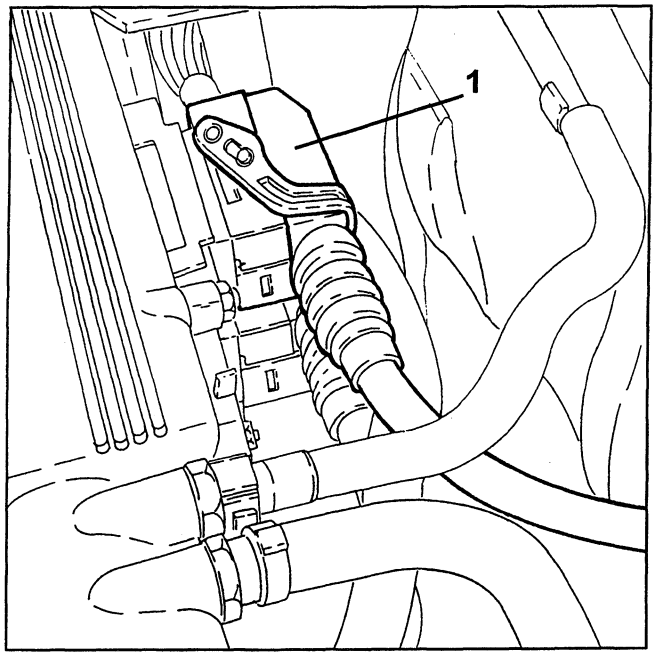

1. Loosen the bolt joining the front exhaust pipe sections.

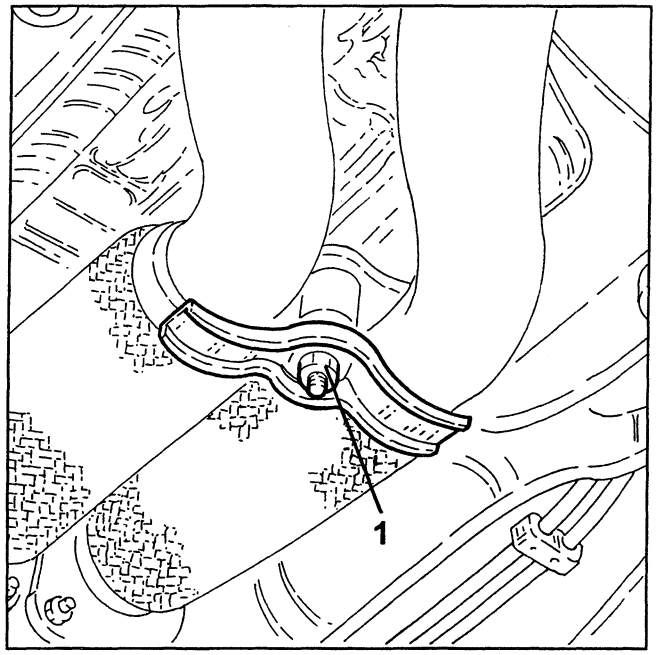

cardiagn.com

1. Unscrew the nuts securing the front exhaust pipe sections to their exhaust manifolds with built-in catalytic preconverters.

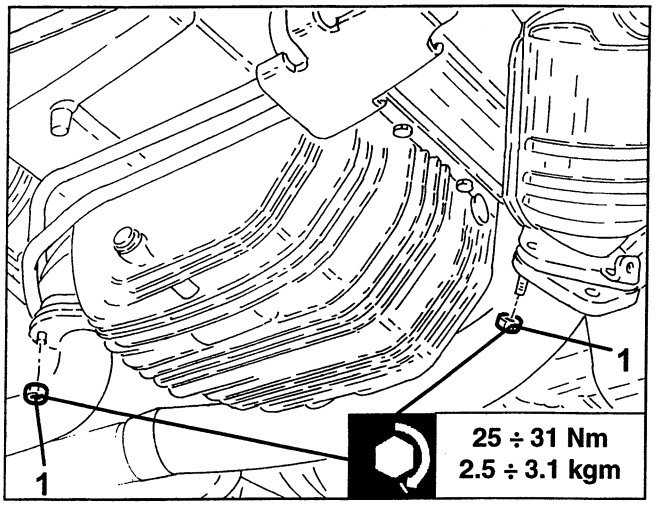

1. Unscrew the nut and screws, then remove the lower air cleaner protection.

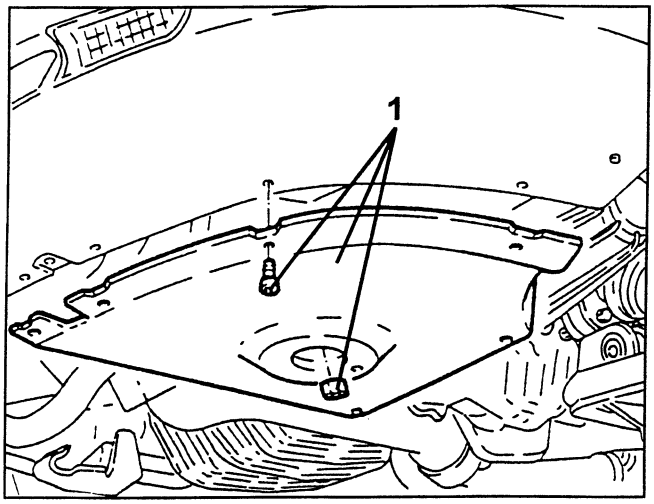

1. Position a hydraulic jack beneath the gearbox.
2. Unscrew the bolt securing the power unit gearbox side rigid mount to its flexible block.
- Lower the hydraulic jack slowly and remove.

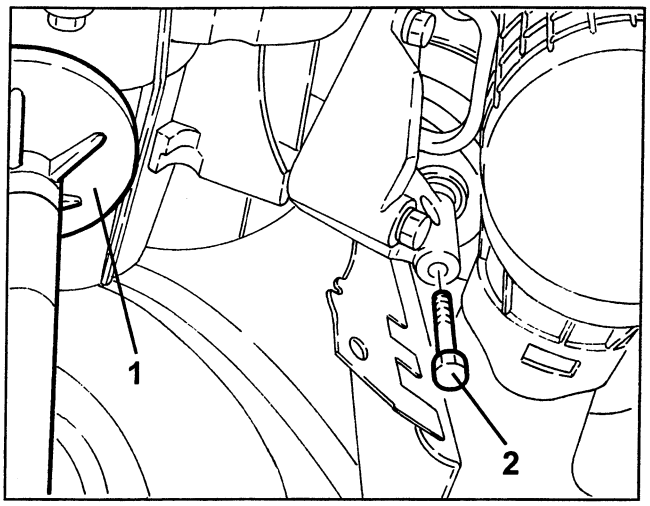

1. Unscrew and remove the right-hand lambda sensor upstream of the catalytic converter.

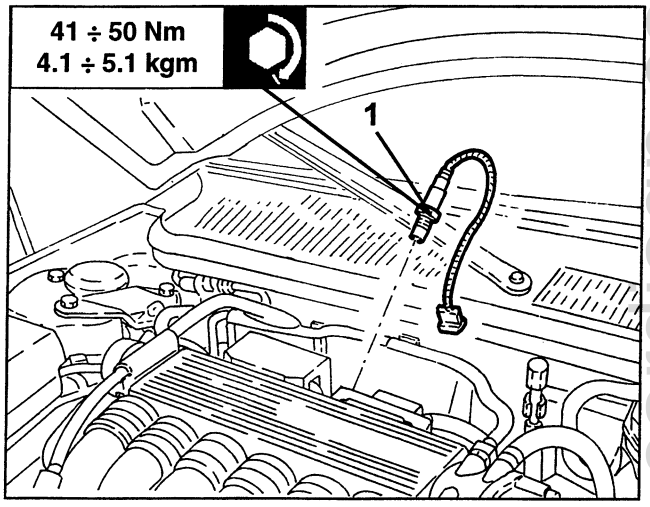

LEFT-HAND LAMBDA SENSOR UPSTREAM OF THE CATALYTIC CONVERTER

REMOVING/REFITTING

- Position the vehicle on a lift
- Ensure the ignition key is turned OFF, then disconnect the battery terminal (-).
1. Disconnect the electrical connection of the left-hand lambda sensor upstream of the catalytic converter.

cardiagn.com

2. Unscrew and remove the left-hand lambda sensor upstream of the catalytic converter.

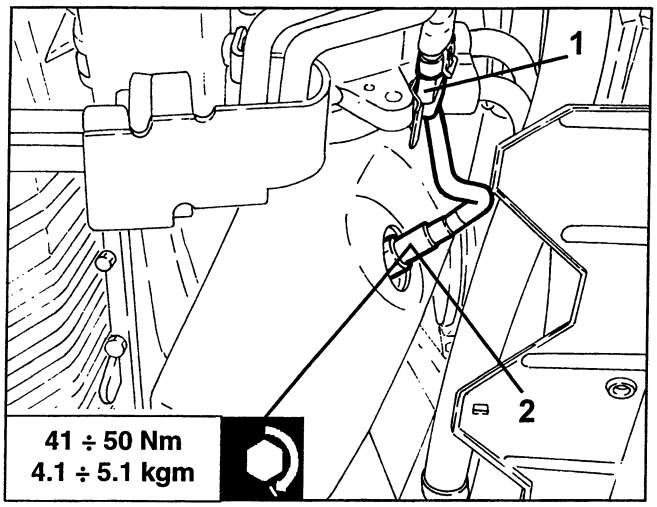

1. Undo the nuts securing the front exhaust pipe sections to the exhaust manifolds with built-in catalytic preconverters.
- Remove the gaskets.

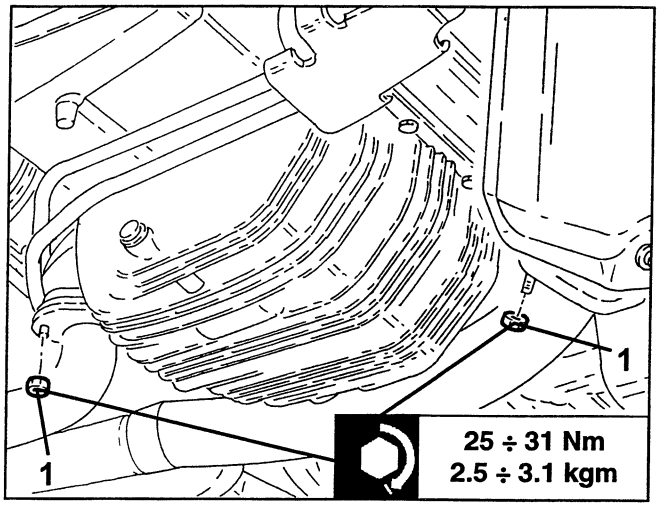

LAMBDA SENSOR DOWNSTREAM OF CATALYTIC CONVERTER

REMOVING/REFITTING

NOTE: removal of the left-hand lambda sensor is shown below; proceed in the same way to remove/refit the right-hand lambda sensor.

- Position the vehicle on a lift.
- Ensure the ignition key is turned OFF, then disconnect the battery terminal (-).
1. Open the connection carrier box.
2. Disconnect the electrical connection of the left-hand lambda sensor upstream of the catalytic converter (black) .

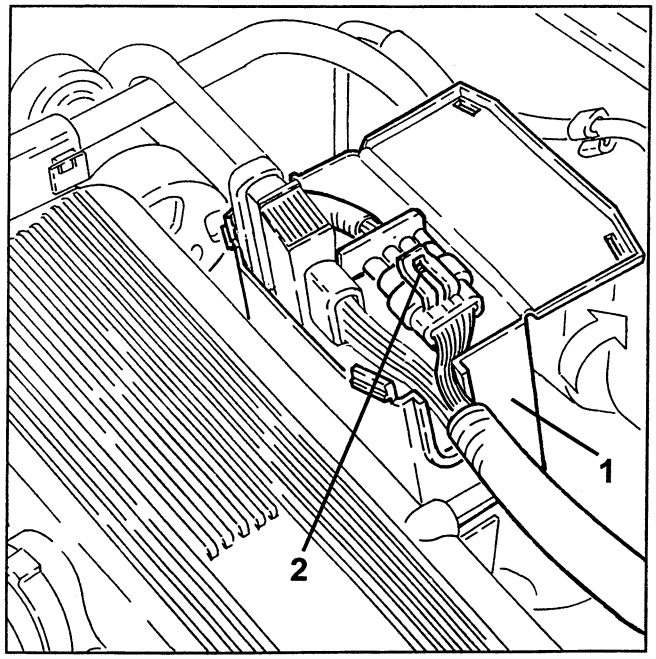

1. Release the catalytic converters from their flexible mounts.
2. Release the electrical wiring of the left lambda sensor downstream of the catalytic converter from its fastenings.
3. Unscrew the remove the left lambda sensor downstream of the catalytic converter.

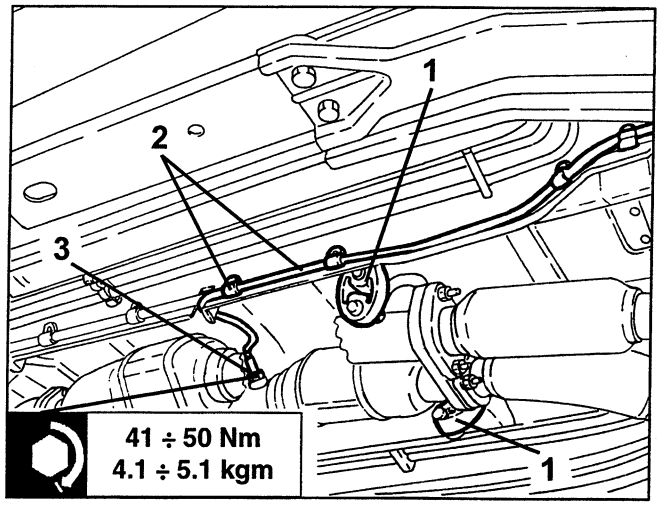

cardiagn.com

SERVICE

DIREZIONE POST-VENDITA
SERVIZI ASSISTENZIALI
Viale Alfa Romeo 20020 Arese (MI)
Fiat Auto S.p.A.

Publication PA497200000000 - 4./95
Printed in Italy
no. 60494410

All rights reserved.
Reproduction, even partial, without the express permission in writing from Fiat Auto S.p.A. is prohibited

cardiagn.com