Workshop Manual

Audi A3 2004 ➤

4-cylinder direct petrol injection engine (2.0 ltr. 4-valve turbo), mechanics									
Engine ID	AXX	BPY	BWA	BHZ	BZC	CDL A	CDL C		

Edition 03.2017

Protected by copyright. Copying for private or commercial purposes, in part or in whole, is not permitted unless authorised by AUDI AG. AUDI AG does not guarantee or accept any liability with respect to the correctness of information in this document. Copyright by AUDI AG.

List of Workshop Manual Repair Groups

Repair Group

00 - Technical data
10 - Removing and installing engine
13 - Crankshaft group
15 - Cylinder head, valve gear
17 - Lubrication
19 - Cooling
21 - Turbocharging/supercharging
26 - Exhaust system

Protected by copyright. Copying for private or commercial purposes, in part or in whole, is not permitted unless authorised by AUDI AG. AUDI AG does not guarantee or accept any liability with respect to the correctness of information in this document. Copyright by AUDI AG.

Technical information should always be available to the foremen and mechanics, because their careful and constant adherence to the instructions is essential to ensure vehicle road-worthiness and safety. In addition, the normal basic safety precautions for working on motor vehicles must, as a matter of course, be observed.

All rights reserved.
No reproduction without prior agreement from publisher.

Copyright © 2017 Audi AG, Ingolstadt

Contents

00 - Technical data . . . 1
1 Engine number . . . 1
2 Engine data . . . 2
3 Safety precautions . . . 3
3.1 Working on the fuel system . . . 3
3.2 Procedure before opening high-pressure section of injection system . . . 3
3.3 Working on the cooling system . . . 4
3.4 Using testers and measuring instruments during a road test . . . 4
3.5 Working on the exhaust system . . . 4
4 General repair instructions . . . 5
4.1 Rules for cleanliness when working on fuel supply system, injection system and turbocharger . . . 5
4.2 Checking fuel system for leaks . . . 5
4.3 Foreign particles in engine . . . 5
4.4 Contact corrosion . . . 5
4.5 Routing and attachment of pipes, hoses and wiring . . . 6
4.6 Checking vacuum system . . . 6
4.7 Installing radiators, condensers and charge air coolers . . . 7

10 - Removing and installing engine . . . 8
1 Removing and installing engine, detaching from gearbox . . . 8
1.1 Removing engine . . . 8
1.2 Separating engine and gearbox . . . 21
1.3 Securing engine to assembly stand . . . 21
1.4 Installing engine . . . 23
2 Assembly mountings . . . 26
2.1 Exploded view - assembly mountings . . . 26
2.2 Checking adjustment of assembly mountings (engine/gearbox mountings) . . . 27
2.3 Adjusting assembly mountings . . . 28

13 - Crankshaft group . . . 31
1 Cylinder block (pulley end) . . . 31
1.1 Exploded view - poly V-belt, bracket for ancillaries . . . 31
1.2 Removing and installing poly V-belt . . . 32
1.3 Removing and installing bracket for ancillaries . . . 34
1.4 Removing and installing vibration damper . . . 37
1.5 Front sealing flange - exploded view . . . 38
1.6 Renewing crankshaft oil seal - pulley end . . . 40
1.7 Removing and installing sealing flange (front) . . . 42
2 Cylinder block (gearbox end) . . . 47
2.1 Rear sealing flange and dual-mass flywheel - exploded view . . . 47
2.2 Removing and installing dual-mass flywheel . . . 48
2.3 Removing and installing sealing flange (rear) . . . 49
3 Crankshaft . . . 52
3.1 Exploded view - crankshaft . . . 52
3.2 Crankshaft dimensions . . . 54
3.3 Measuring axial clearance of crankshaft . . . 54
3.4 Measuring radial clearance of crankshaft . . . 54
3.5 Extracting and driving in needle bearing for crankshaft . . . 55
3.6 Removing and installing chain sprocket . . . 56
4 Exploded view - pistons and conrods . . . 58
4.1 Piston and cylinder dimensions . . . 60

Protected by copyright. Copying for private or commercial purposes, in part or in whole, is not permitted unless authorised by AUDI AG. AUDI AG does not guarantee or accept any liability with respect to the correctness of information in this document. Copyright by AUDI AG.

15 - Cylinder head, valve gear 61
1 Toothed belt drive 61
1.1 Toothed belt drive - exploded view (vehicles without separate toothed belt covers) 61
1.2 Removing and installing toothed belt (vehicles without separate toothed belt covers) 64
1.3 Toothed belt drive - exploded view (vehicles with separate toothed belt covers) 72
1.4 Removing and installing toothed belt (vehicles with separate toothed belt covers) 75
2 Cylinder head 84
2.1 Cylinder head - exploded view 84
2.2 Removing and installing camshaft control valve 1 N205 86
2.3 Removing and installing cylinder head cover 88
2.4 Removing and installing cylinder head 90
2.5 Checking compression 100
3 Valve gear 103
3.1 Exploded view - valve gear 103
3.2 Removing and installing camshaft adjuster 105
3.3 Removing and installing camshafts 108
3.4 Checking axial clearance of camshafts 112
3.5 Renewing valve stem oil seals with cylinder head installed 113
3.6 Renewing valve stem oil seals with cylinder head removed 118
3.7 Checking valve guides 121
3.8 Renewing exhaust camshaft oil seal 121

17 - Lubrication 126
1 Oil pump and sump 126
1.1 Sump - exploded view 126
1.2 Removing and installing oil level and oil temperature sender G266 127
1.3 Removing and installing sump 128
1.4 Balance shaft assembly with oil pump - exploded view 131
1.5 Removing and installing balance shaft assembly with oil pump 133
2 Oil filter bracket and oil cooler 138
2.1 Exploded view - oil filter bracket 138
2.2 Draining oil filter housing 139
2.3 Removing and installing oil cooler 140
2.4 Removing and installing oil filter bracket 142
2.5 Checking oil pressure and oil pressure switch 145
2.6 Removing and installing oil pressure switch F1 147
2.7 Checking oil pressure and oil pressure switch (1-pin oil pressure switch) 148
2.8 Checking oil pressure and oil pressure switch (2-pin oil pressure switch) 150
2.9 Checking oil pressure 151

19 - Cooling 153
1 Parts of cooling system (on engine) 153
1.1 Cooling system components (on engine) - exploded view 153
1.2 Exploded view - continued coolant circulation pump V51 155
1.3 Connection diagram - coolant hoses 156
1.4 Draining and filling cooling system 157
1.5 Checking cooling system for leaks 160
1.6 Removing and installing coolant pipes 162
1.7 Removing and installing coolant distributor housing with map-controlled engine cooling thermostat F265 164
1.8 Removing and installing coolant pump 165
2 Parts of cooling system (on body) 167
2.1 Exploded view - radiator and radiator fans 167
2.2 Removing and installing radiator 168

Protected by copyright. Copying for private or commercial purposes, in part or in whole, is not permitted unless authorised by AUDI AG. AUDI AG does not guarantee or assume any liability with respect to the correctness of information in this document. Copyright by AUDI AG.

2.3 Removing and installing radiator cowl . . . 171
2.4 Removing and installing radiator fan V7 and radiator fan 2 V177 . . . 172

21 - Turbocharging/supercharging . . . 173

1 Turbocharger with charge air system, engine codes AXX, BPY, BWA . . . 173
1.1 Fitting hose connections with plug-in connectors - vehicles with engine codes AXX, BPY, BWA . . . 173
1.2 Turbocharger - exploded view, vehicles with engine codes AXX, BPY, BWA . . . 174
1.3 Removing and installing turbocharger, vehicles with engine codes AXX, BPY, BWA . . . 178
1.4 Checking vacuum unit for turbocharger, engines with code letters AXX, BPY, BWA . . . 185
1.5 Removing and installing vacuum unit for turbocharger . . . 186
1.6 Adjusting vacuum unit for turbocharger, engines with code letters AXX, BPY, BWA . . . 187
1.7 Charge air cooler - exploded view, engine codes AXX, BPY, BWA . . . 192
1.8 Diagram of turbocharger system, engines with code letters AXX, BPY, BWA . . . 193
1.9 Removing and installing charge air cooler - vehicles with engine codes AXX, BPY and BWA . . . 193
1.10 Checking charge air system for leaks, vehicles with engine codes AXX, BPY, BWA . . . 195

2 Turbocharger with charge air system, engines with code letters BHZ, BZC, CDLA, CDLC . . . 198
2.1 Turbocharger - exploded view, engines with code letters BHZ, BZC, CDLA, CDLC . . . 198
2.2 Removing and installing turbocharger, engines with code letters BHZ, BZC, CDLA, CDLC . . . 202
2.3 Charge air system - exploded view, engines with code letters BHZ, BZC, CDLA, CDLC . . . 208
2.4 Diagram of turbocharger system, engines with code letters BHZ, BZC, CDLA, CDLC . . . 211
2.5 Removing and installing charge air cooler, engines with code letters BHZ, BZC, CDLA, CDLC . . . 211
2.6 Checking charge air system for leaks, engines with code letters BHZ, BZC, CDLA, CDLC . . . 213

26 - Exhaust system . . . 216

1 Exhaust system, engines with code letters AXX, BPY, BWA . . . 216
1.1 Exhaust system - exploded view, engines with code letters AXX, BPY, BWA . . . 216
1.2 Removing and installing front exhaust pipe with catalytic converters and front silencer, engines with code letters AXX, BPY, BWA . . . 218
1.3 Separating centre and rear silencers, engines with code letters AXX, BPY, BWA . . . 221
1.4 Stress-free alignment of exhaust system, vehicles with engine codes AXX, BPY, BWA . . . 221
1.5 Checking exhaust system for leaks, vehicles with engine codes AXX, BPY, BWA . . . 222

2 Exhaust system, engines with code letters BHZ, BZC, CDLA, CDLC . . . 223
2.1 Exhaust system - exploded view, engines with code letters BHZ, BZC, CDLA, CDLC . . . 223
2.2 Removing and installing front exhaust pipe with catalytic converter and front silencer, engines with code letters BHZ, BZC, CDLA, CDLC . . . 225
2.3 Stress-free alignment of exhaust system, engines with code letters BHZ, BZC, CDLA, CDLC . . . 227
2.4 Checking exhaust system for leaks, engines with code letters BHZ, BZC, CDLA, CDLC . . . 228

3 Exhaust manifold . . . 229

Protected by copyright. Copying for private or commercial purposes, in part or in whole, is not permitted unless authorised by AUDI AG. AUDI AG does not guarantee or assume any liability with respect to the correctness of information in this document. Copyright by AUDI AG.

Protected by copyright. Copying for private or commercial purposes, in part or in whole, is not permitted unless authorised by AUDI AG. AUDI AG does not guarantee or accept any liability with respect to the correctness of information in this document. Copyright by AUDI AG.

00 – Technical data

1 Engine number

(ARL005179; Edition 03.2017)

The engine number (“engine code” and “serial number”) can be found at the front of the joint between engine and gearbox.

There is also a sticker with “engine code” and “serial number” attached to the toothed belt cover.

In addition, the engine code is listed on the vehicle data stickers.

Protected by copyright. Copying for private or commercial purposes, in part or in whole, is not permitted unless authorised by AUDI AG. AUDI AG does not guarantee or accept any liability with respect to the correctness of information in this document. Copyright by AUDI AG.

2 Engine data

Code letters	AXX	BPY	BWA	BHZ	BZC	CDLA	CDLC
Capacity ltr.	1.984	1.984	1.984	1.984	1.984	1.984	1.984
Power output kW at rpm	147/5700	147/5700	147/5100	195/6000	188/6000	195/6000	188/6000
Torque Nm at rpm	280/2000	280/2000	280/1800	350/2500	330/2400	350/2500	330/2400
Bore ∅ mm	82.5	82.5	82.5	82.5	82.5	82.5	82.5
Stroke mm	92.8	92.8	92.8	92.8	92.8	92.8	92.8
Compression ratio	10.5	10.5	10.3	9.8	9.8	9.8	9.8
RON	98 1)	98 1)	98 1)	98 1)	98 1)	98 1)	98 1)
Injection/ ignition system	FSI	FSI	FSI	FSI	FSI	FSI	FSI
Firing order	1-3-4-2	1-3-4-2	1-3-4-2	1-3-4-2	1-3-4-2	1-3-4-2	1-3-4-2
Knock control	yes	yes	yes	yes	yes	yes	yes
Turbocharging/ supercharging	yes	yes	yes	yes	yes	yes	yes
Exhaust gas recirculation	no	no	no	no	no	no	no
Intake manifold changeover	no	no	no	no	no	no	no
Variable valve timing	yes	yes	yes	yes	yes	yes	yes
Secondary air system	no	no	no	no	no	no	no

- 1) Unleaded petrol RON 95 can also be used, but results in reduced power

Reproduced by copyright. Copying for private or commercial purposes, in part or in whole, is not permitted unless authorised by AUDI AG. AUDI AG does not guarantee or accept any liability with respect to the correctness of information in this document. Copyright by AUDI AG.

3 Safety precautions

3.1 Working on the fuel system

When working on the fuel system note the following warnings:

> ⚠ WARNING
>
> *The fuel system operates at extremely high pressure. This can cause injury.*
>
> - *The fuel pressure in the high-pressure section of the injection system must be reduced to a residual pressure prior to opening the system.*
> - *Wrap a clean cloth around the connection and carefully loosen the connection to allow the residual pressure to dissipate.*

– Procedure before opening high-pressure section of injection system ⇒ Rep. gr. 24

Observe the following to prevent injuries to persons and damage to the injection and ignition system:

- Always switch off the ignition before connecting or disconnecting electrical wiring for the injection or ignition system or tester cables.
- Always switch off ignition before washing engine.
- Faults are stored in engine control units if electrical connectors were unplugged and engine was started: “Generate readiness code” in “Guided Functions” ⇒ Vehicle diagnostic tester .

> ⚠ Caution
>
> *To prevent irreparable damage to the electronic components when disconnecting the battery:*
>
> - *Observe notes on procedure for disconnecting the battery.*
> - *Always switch off the ignition before disconnecting the battery.*

Protected by copyright. Copying for private or commercial purposes, in part or in whole, is not permitted unless authorised by AUDI AG. AUDI AG does not guarantee or assume any liability with respect to the correctness of information in this document. Copyright by AUDI AG.

– Disconnect battery ⇒ Rep. gr. 27 .

3.2 Procedure before opening high-pressure section of injection system

> ⚠ WARNING
>
> - *The injection system consists of a high-pressure section (maximum approx. 120 bar) and a low-pressure section (approx. 6 bar).*
> - *The fuel pressure in the high-pressure section must be reduced to a residual pressure of approx. 6 bar prior to opening the system. For details of procedure, refer to ⇒ Rep. gr. 24 .*

3.3 Working on the cooling system

When working on the cooling system note the following warnings:

WARNING

Hot steam/hot coolant can escape - risk of scalding.

- *The cooling system is under pressure when the engine is hot.*
- *To allow pressure to dissipate, cover filler cap on coolant expansion tank with cloth and open carefully.*

Caution

Overheating can occur if the filler cap is not fitted properly.

- *The filler cap must engage positively and audibly when it is closed.*

3.4 Using testers and measuring instruments during a road test

Note the following if testers and measuring instruments have to be used during a road test:

Protected by copyright. Copying for private or commercial purposes, in part or in whole, is not permitted unless authorised by AUDI AG. AUDI AG does not guarantee or accept any liability with respect to the correctness of information in this document. Copyright by AUDI AG.

WARNING

Accidents can be caused if the driver is distracted by test equipment while road-testing, or if test equipment is not properly secured.

Persons sitting in the front passenger's seat could be injured if the airbag is triggered in an accident.

- *The use of test equipment while driving causes distraction.*
- *There is an increased risk of injury if test equipment is not secured.*
- *Test equipment must always be secured on the rear seat with a strap and operated from the rear seat by a second person.*

3.5 Working on the exhaust system

When working on the exhaust system please note the following:

Caution

Risk of damage to flexible joint.

- *Do not bend flexible joint more than 10°.*
- *Install flexible joint so that it is not under tension.*
- *Take care not to damage wire mesh on flexible joint.*

4 General repair instructions

4.1 Rules for cleanliness when working on fuel supply system, injection system and turbocharger

Even small quantities of dirt can lead to defects. For this reason, please observe the following rules when working on the fuel supply system, injection system and turbocharger:

- Carefully clean connection points and the surrounding area with engine cleaner or brake cleaner and dry thoroughly before opening.
- Seal off open pipes/lines and connections immediately with clean plugs, e.g. from engine bung set - VAS 6122-
- Place removed parts on a clean surface and cover them. Use only lint-free cloths.
- Carefully cover or seal open components if repairs cannot be carried out immediately.
- Only install clean components; replacement parts should only be unpacked immediately prior to installation. Do not use parts that have not been stored in their packing (e.g. in tool boxes etc.).
- When the system is open, do not work with compressed air and do not move the vehicle.
- Make sure that no fuel runs onto the fuel hoses. Should this occur, the fuel hoses must be cleaned again immediately.
- Protect unplugged electrical connectors against dirt and moisture and make sure connections are dry when attaching.

Protected by copyright. Copying for private or commercial purposes, in part or in whole, is not permitted unless authorised by AUDI AG. AUDI AG does not guarantee or accept any liability with respect to the correctness of information in this document. Copyright by AUDI AG.

4.2 Checking fuel system for leaks

- Allow engine to run for several minutes at moderate rpm.
- Switch off ignition.
- Check complete fuel system for leaks.
- If leaks are found although the connections have been tightened to the correct torque, the relevant component must be renewed.
- Road-test vehicle and accelerate with full throttle at least once.
- Then inspect high-pressure section of fuel system again for leaks.

4.3 Foreign particles in engine

- When working on the engine, all open inlet and exhaust ports must be sealed with suitable plugs (e.g. from engine bung set - VAS 6122-) to prevent foreign particles from entering the engine.

4.4 Contact corrosion

Contact corrosion can occur if unsuitable fasteners are used (e.g. bolts, nuts, washers, etc.).

For this reason, only fasteners with a special surface coating are fitted.

Additionally, all rubber and plastic parts and all adhesives are made of non-conductive materials.

Always install new parts if you are not sure whether used parts can be re-fitted ⇒ Electronic parts catalogue .

Please note:

- We recommend using only genuine replacement parts; these have been tested and are compatible with aluminium.
- We recommend the use of Audi accessories.
- Damage caused by contact corrosion is not covered by warranty.

4.5 Routing and attachment of pipes, hoses and wiring

- Mark fuel lines, hydraulic lines, vacuum lines, lines for activated charcoal filter and electrical wiring etc. before removal so they can be re-installed in the original positions and correctly connected. Make sketches or take photographs if necessary.
- To avoid damaging pipes, hoses and wiring, ensure sufficient clearance from all moving or hot components in engine compartment (limited space in engine compartment).

4.6 Checking vacuum system

Special tools and workshop equipment required

- Hand vacuum pump - VAS 6213-

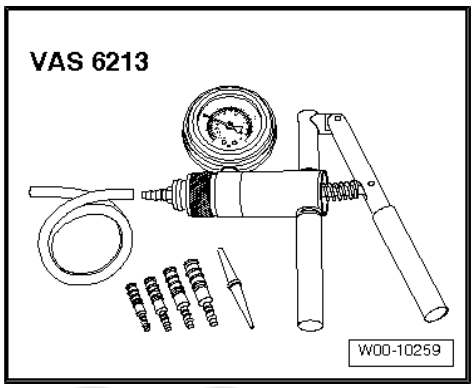

Procedure

– Check all vacuum lines in the complete vacuum system for:

- Cracks
- Traces of animal bites
- Kinked or crushed lines
- Porous or leaking lines

– Check vacuum line to solenoid valve and from solenoid valve to corresponding component.

– If a fault is stored in the memory, check the vacuum lines leading to the corresponding component and also check the remaining vacuum lines in the system.

– If it is not possible to build up pressure with the hand vacuum pump - VAS 6213- or if the pressure drops again immediately, check the hand vacuum pump and connecting hoses for leaks.

Protected by copyright. Copying for private or commercial purposes, in part or in whole, is not permitted unless authorised by AUDI AG. AUDI AG does not guarantee or accept any liability with respect to the correctness of information in this document. Copyright by AUDI AG.

4.7 Installing radiators, condensers and charge air coolers

Even when the radiator, condenser and charge air cooler are correctly installed, slight impressions may be visible on the fins of these components. This does not mean that the components are damaged. If the fins are only very slightly distorted, this does not justify renewal of the radiator, condenser or charge air cooler.

Protected by copyright. Copying for private or commercial purposes, in part or in whole, is not permitted unless authorised by AUDI AG. AUDI AG does not guarantee or accept any liability with respect to the correctness of information in this document. Copyright by AUDI AG.

10 – Removing and installing engine

1 Removing and installing engine, detaching from gearbox

1.1 Removing engine

Special tools and workshop equipment required

- Drip tray for workshop hoist - VAS 6208-
- Engine and gearbox jack - V.A.G 1383 A-
- Spring type clip pliers - VAS 5024A-
- Stepladder - VAS 5085-
- Engine bracket - T10012-
- Socket (8 mm) - 3247-

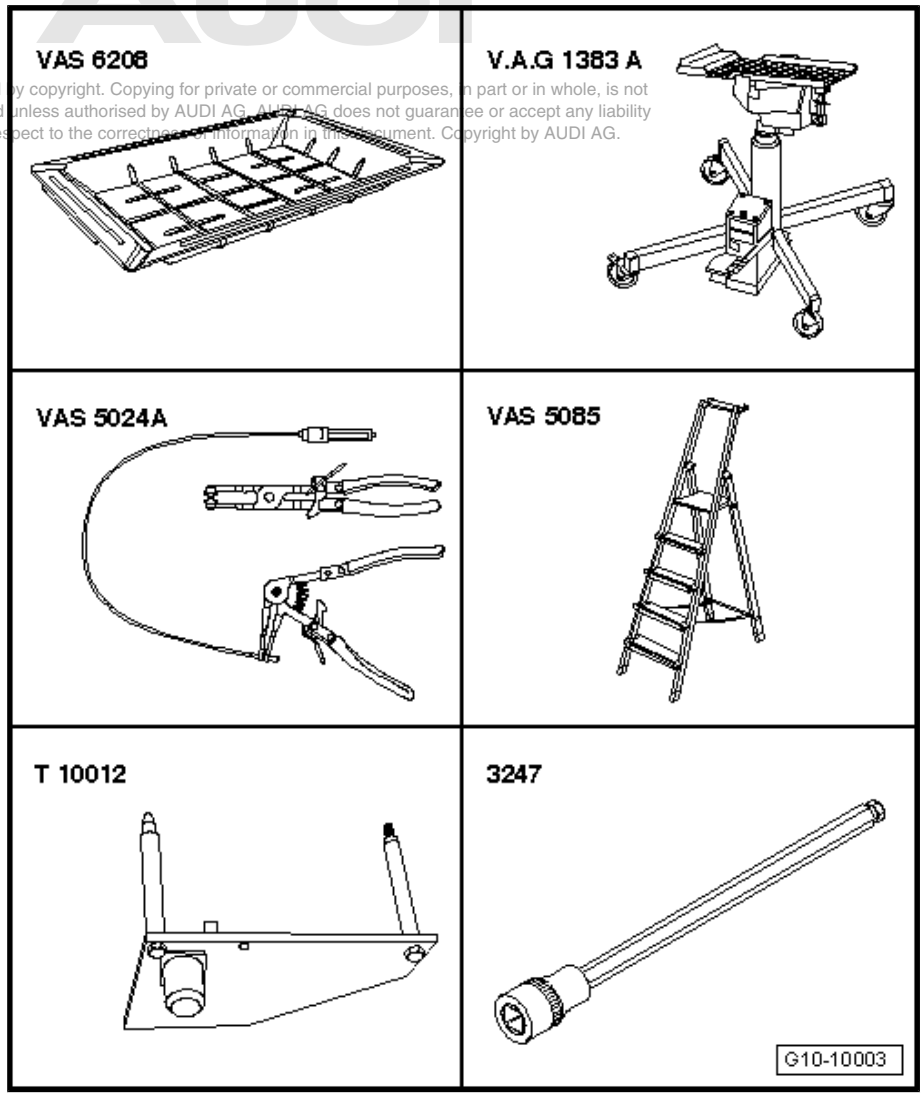

Protected by copyright. Copying for private or commercial purposes, in part or in whole, is not permitted unless authorised by AUDI AG. AUDI AG does not guarantee or accept any liability with respect to the correctness of information in this document. Copyright by AUDI AG.

Engine bung set - VAS 6122-

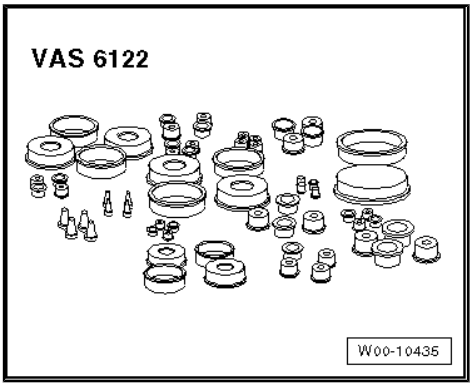

Note

- *The engine is removed from underneath together with the gearbox.*
- *Renew all cable ties which are released or cut open when removing the engine. Refit in the same position when installing the engine.*
- *Collect drained coolant in a clean container for re-use or disposal.*

– Detach engine cover panel with air cleaner ⇒ Rep. gr. 24 .

– Remove electrical connector -arrow- for Lambda probe (before catalytic converter) from bracket, unplug and move clear.

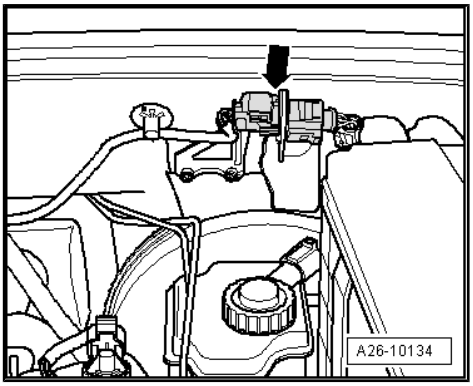

WARNING

Hot steam/hot coolant can escape - risk of scalding.

- *The cooling system is under pressure when the engine is hot.*
- *To allow pressure to dissipate, cover filler cap on coolant expansion tank with cloth and open carefully.*

– Open filler cap on coolant expansion tank.

– Remove cover -1- over battery. To do so, press release tab -arrow-.

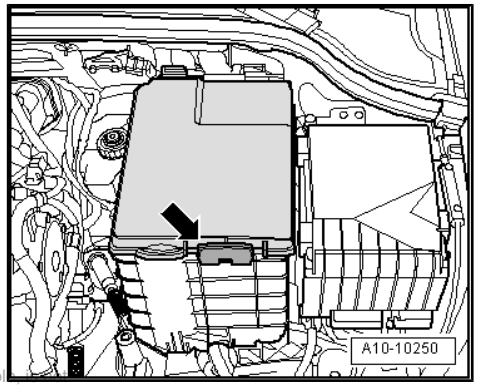

Caution

To prevent irreparable damage to the electronic components when disconnecting the battery:

- *Observe notes on procedure for disconnecting the battery.*

Protected by copyright. Copying for private or commercial purposes, in part or in whole, is not permitted unless authorised by AUDI AG. AUDI AG does not guarantee or accept any liability with respect to the correctness of information. Copyright by AUDI AG.

– With ignition switched off, disconnect battery earth cable -arrow-.

– Remove battery. ⇒ Electrical system; Rep. gr. 27 .

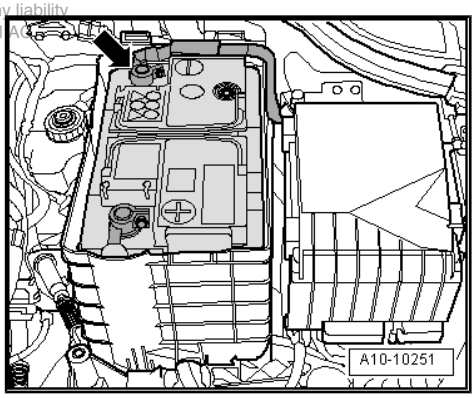

– Remove battery tray -arrows-.
– Use screwdriver to pry off cover caps on wiper arms and unscrew hexagon nuts.
– Pull wiper arms off wiper shafts and remove.

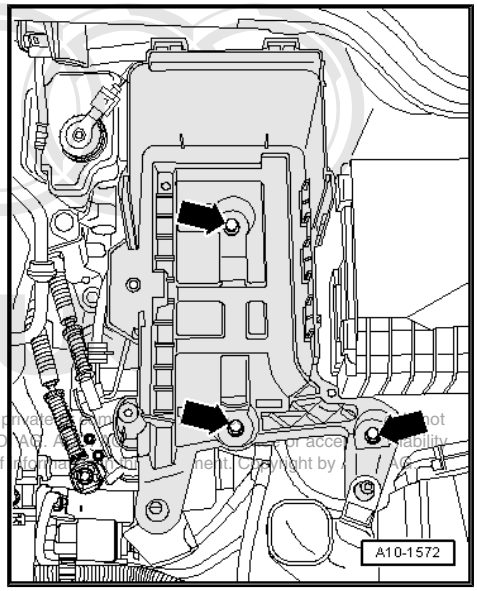

Protected by copyright. Copying for private or commercial purposes, in part or in whole, is not permitted unless authorised by AUDI AG. AUDI AG does not make any representation or warranty with respect to the correctness of information in this document. Copyright by AUDI AG.

– Unclip washer jets -arrow-.
– Push washer jets through assembly opening back into plenum chamber, leaving hoses connected.

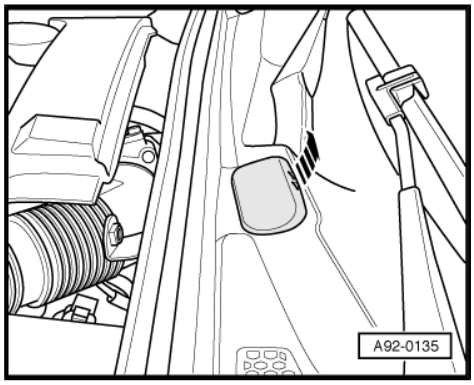

– Detach rubber seal -1- from plenum chamber cover.
– Detach plenum chamber cover -2-.
– Detach engine wiring harness at rear plenum chamber panel.

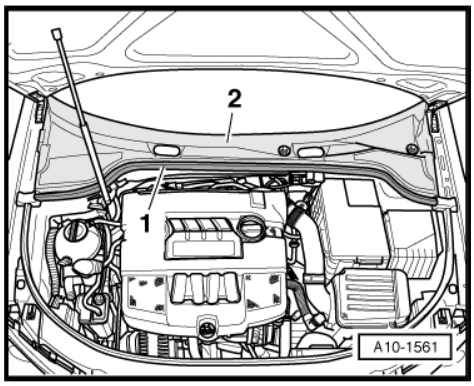

– Remove plenum chamber intermediate plate -arrows-.
– Remove engine control unit ⇒ Rep. gr. 24 .

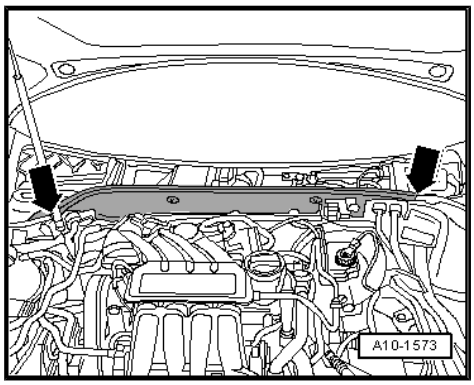

– Unplug engine wiring harness connector -1-.

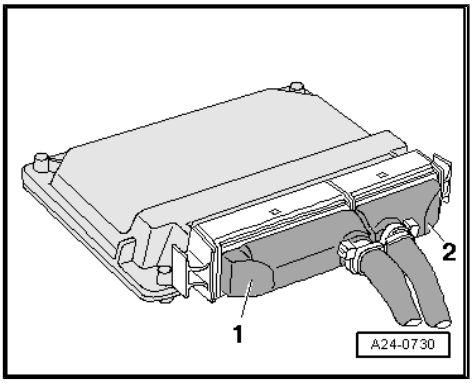

– Release wiring protector for engine wiring harness -arrow- and lift off.

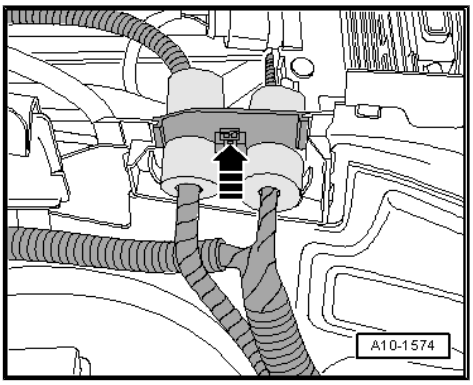

– Open wiring duct brackets -arrows-.

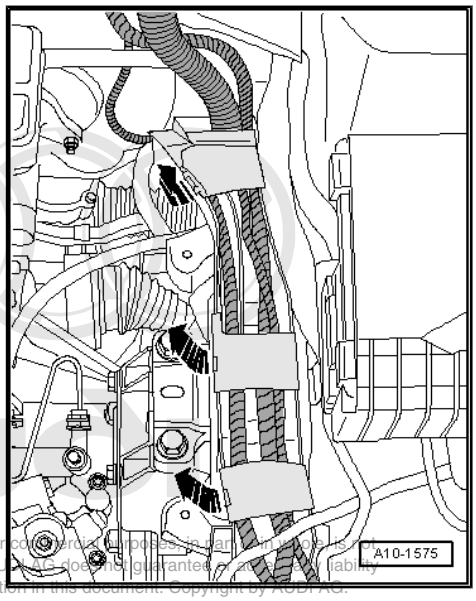

Protected by copyright. Copying for private or commercial purposes, in part or in whole, is not permitted unless authorised by AUDI AG. AUDI AG does not guarantee or assume any liability with respect to the correctness of information in this document. Copyright by AUDI AG.

– Move electrical connector -1- clear and unplug connector.
– Open wiring duct bracket located below -2-.
– Open wiring duct bracket -3-.
– Remove engine control unit wiring harness from wiring duct.

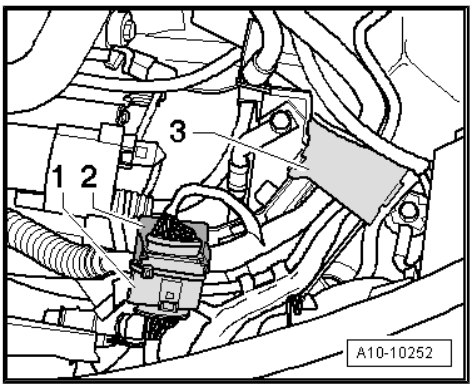

– Unplug electrical connector -1- for reversing light switch.
– Disconnect earth cable -2-.
– Slide cover -3- to rear.

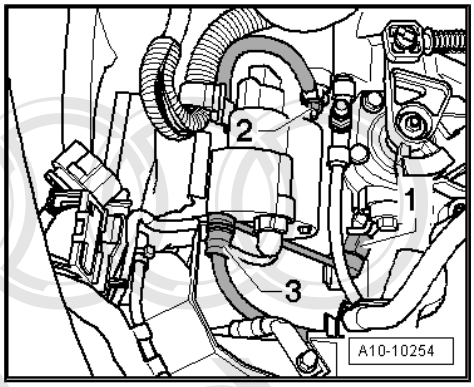

– Detach wires -1 and 2- at starter and move clear.

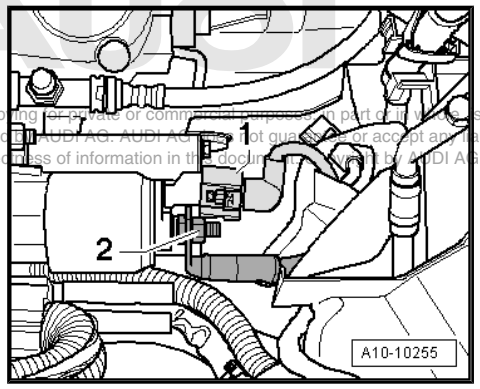

Protected by copyright. Copying for private or commercial purposes, in part or in whole, is not permitted unless authorised by AUDI AG. AUDI AG does not guarantee or accept any liability with respect to the correctness of information in this document copied from AUDI AG.

– Remove the cover above the fuse box (press release tabs -arrows-).

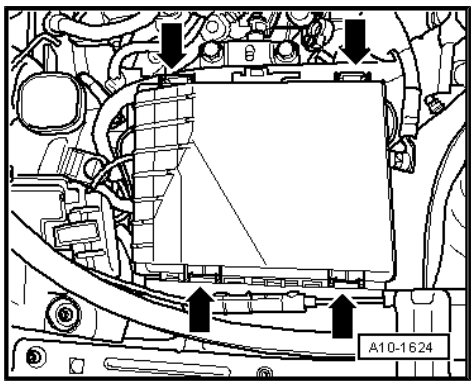

– Unscrew the electrical wire -arrow- and move clear up to alternator.
– Remove both front wheels.
– Remove noise insulation ⇒ Rep. gr. 50 .

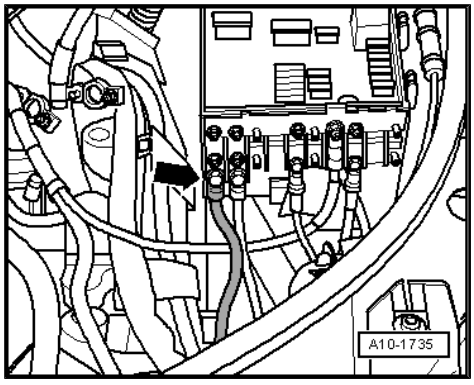

– Remove noise insulation (left and right) - fasteners -1 ... 3-.
– Place drip tray for workshop hoist - VAS 6208- beneath engine.

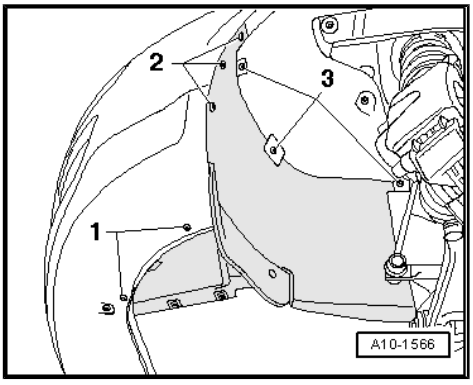

– To drain off coolant, detach bottom coolant hose -arrow-.

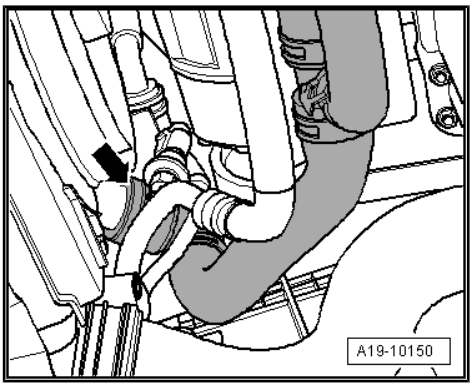

– Detach top coolant hose from radiator -2-.

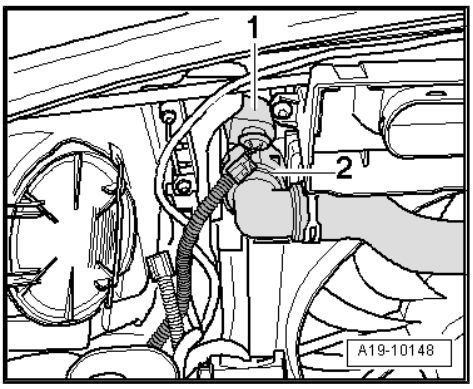

– Detach coolant hoses going to heat exchanger -arrows-.

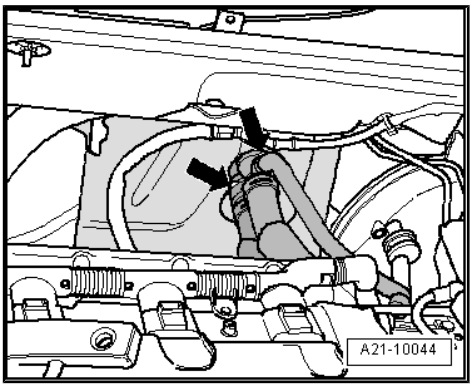

Note

Shown in illustration from rear with engine removed.

Protected by copyright. Copying for private or commercial purposes, in part or in whole, is not permitted unless authorised by AUDI AG. AUDI AG does not guarantee or accept any liability with respect to the correctness of information in this document. Copyright by AUDI AG.

– Unscrew securing bolts -arrows- for front exhaust pipe/turbo-charger accessible from above.

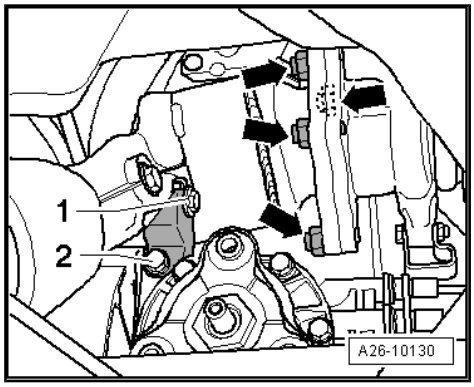

– Disconnect vacuum hose -arrow- leading to brake servo.

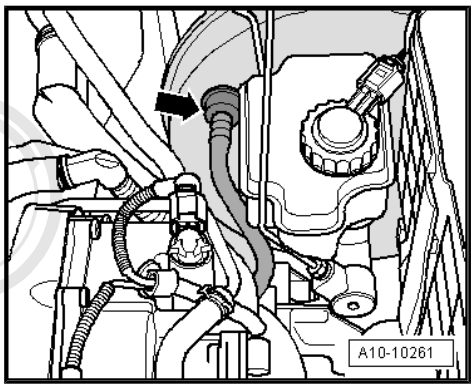

– Unclip securing clips -1- and -2- on both selector cables.
– Pull off selector cable end-pieces from gearbox selector lever and relay lever.
– Detach cable support bracket from gearbox -arrows- and place to one side.

Protected by copyright. Copying for private or commercial purposes, in part or in whole, is not permitted unless authorised by AUDI AG. AUDI AG does not guarantee or accept any liability with respect to the correctness of information in this document. Copyright by AUDI AG.

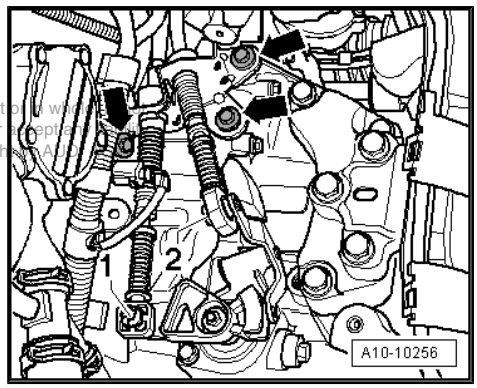

> ⚠ **WARNING**
>
> *Do not press clutch pedal after disconnecting hose leading to slave cylinder.*

– Pull out clip -2- as far a stop in -direction of arrow- and detach hose -1-.

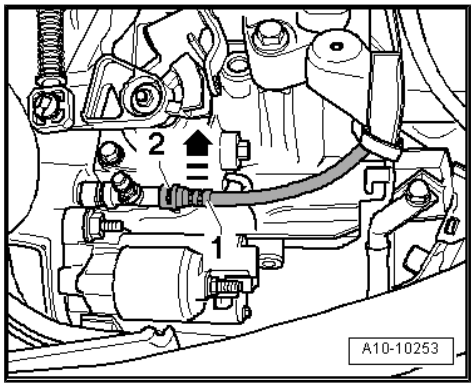

> ⚠ **WARNING**
>
> *Fuel supply line is pressurised. Wear safety goggles and protective clothing to avoid possible injury and skin contact. Before opening hose connections wrap a cloth around the connection. Then release pressure by carefully pulling hose off connection.*

– Mark fuel line -2- and line going to ACF -1-.
– Disconnect fuel line -2- and move clear.
– Disconnect ACF line -1- and move clear.
– Disconnect vacuum line -3- going to activated charcoal filter (press release tabs).
– Lift out ACF.

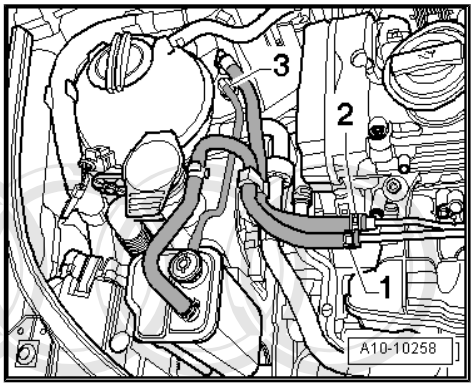

– Detach coolant hoses -1 and 2-.
– Discharge air conditioner ⇒ Rep. gr. 87 ; Air conditioner with refrigerant R134a .

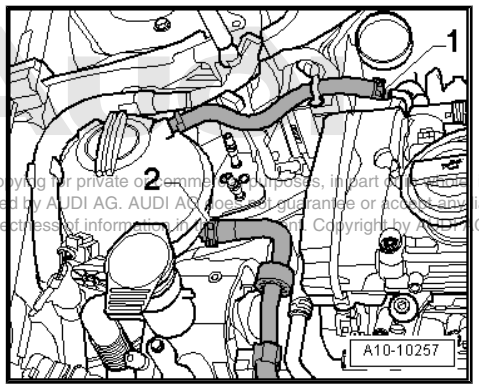

Protected by copyright. Copying for private or commercial purposes, in part or in whole, is not permitted unless authorised by AUDI AG. AUDI AG does not guarantee or accept any liability with respect to the correctness of information. Copyright by AUDI AG.

– Disconnect air conditioner pipe -arrow- from compressor.

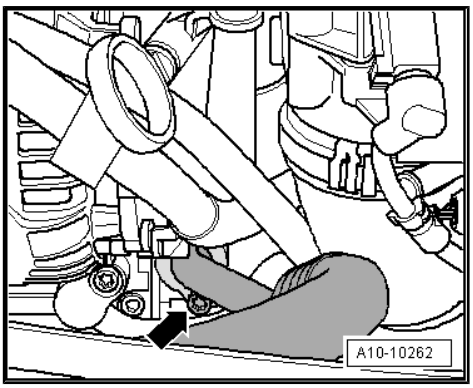

– Loosen bolts -arrows- of assembly mounting for engine approx. 2 turns.

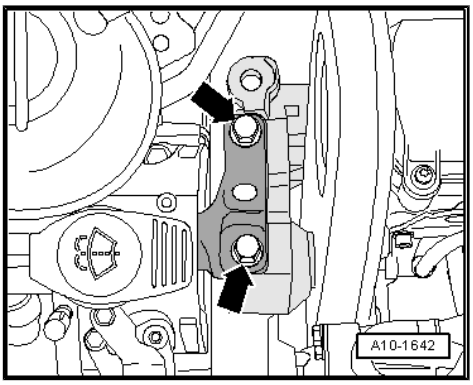

– Loosen bolts -arrows- of assembly mounting for gearbox approx. 2 turns.

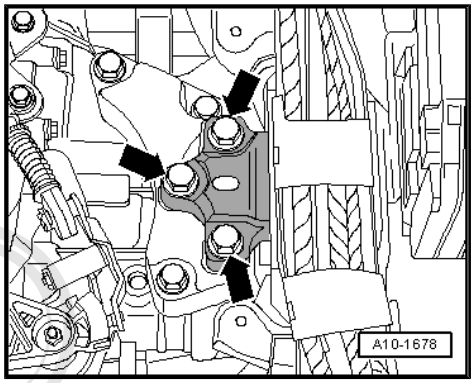

– Unplug electrical connector -1-.
– Release cable retainers -2 and 3- and move electrical wiring clear.

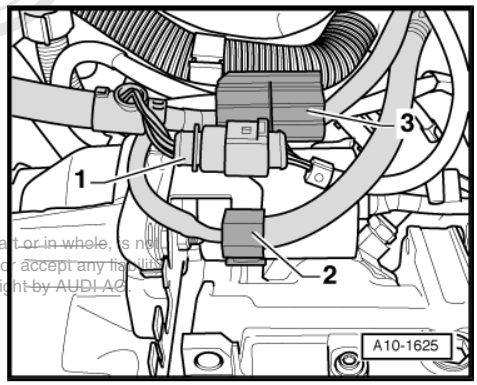

Protected by copyright. Copying for private or commercial purposes, in part or in whole, is not permitted unless authorised by AUDI AG. AUDI AG does not guarantee or accept any liability with respect to the correctness of information in this document. Copyright by AUDI AG

– Unscrew bolts -1- from above.

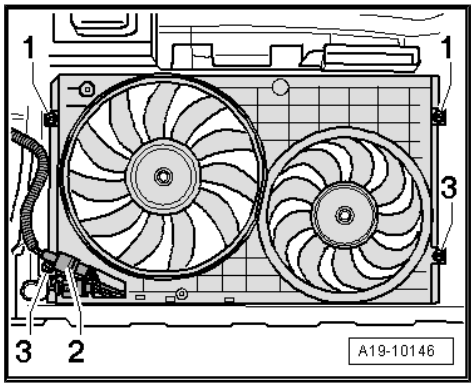

– Remove air pipe -1 and 2- for charge air cooler.

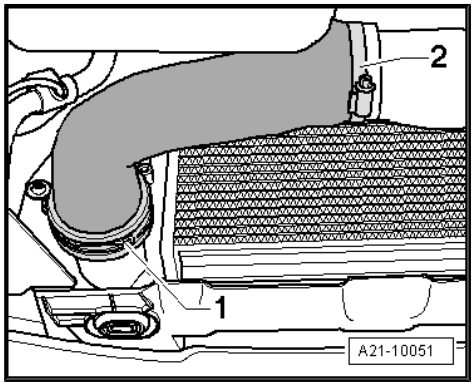

– Unplug electrical connector -2-.
– Unscrew the bolts -3- and remove radiator cowl from below.

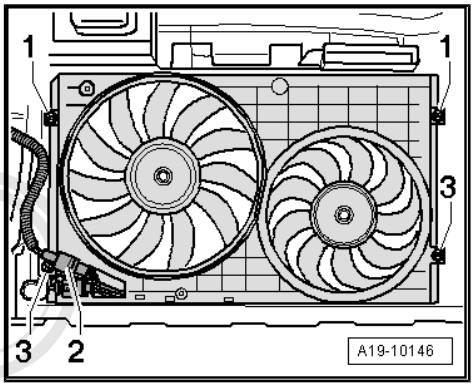

– Detach electrical connector -1- from longitudinal member (left-side) and move wire clear.

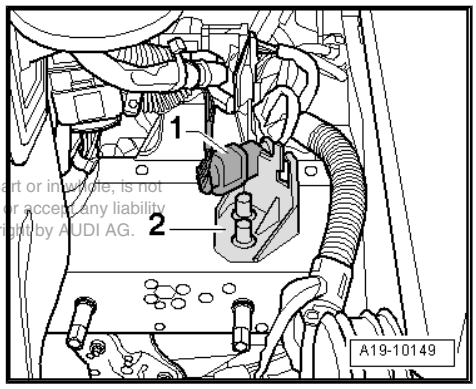

Protected by copyright. Copying for private or commercial purposes, in part or in whole, is not permitted unless authorised by AUDI AG. AUDI AG does not guarantee or accept any liability with respect to the correctness of information in this document. Copyright by AUDI AG.

– Detach air pipe -arrow- from charge air cooler.

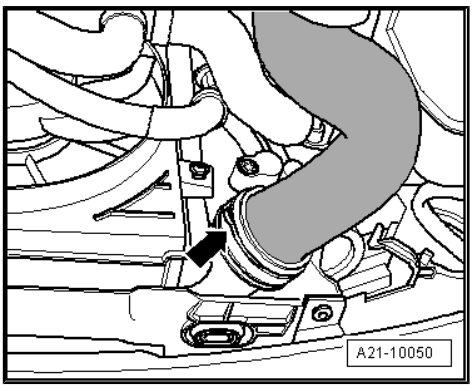

– Detach air conditioner pipe from condenser -arrow-.
– Unplug connector from charge pressure sender - G31- ⇒ Rep. gr. 24 ; Overview of fitting locations .

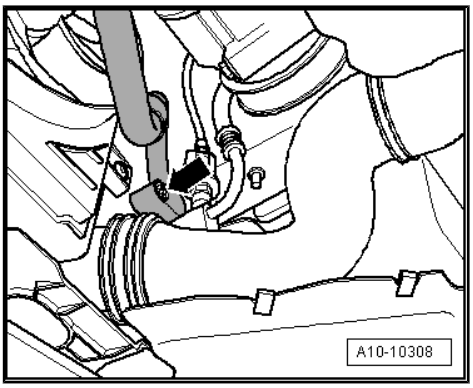

– Unplug electrical connector at oil level sender -1-.
– Unclip bracket -2-.
– Unplug electrical connector at continued coolant circulation pump -3- and move wiring clear.
– Remove propshaft (front) ⇒ Rep. gr. 39 .

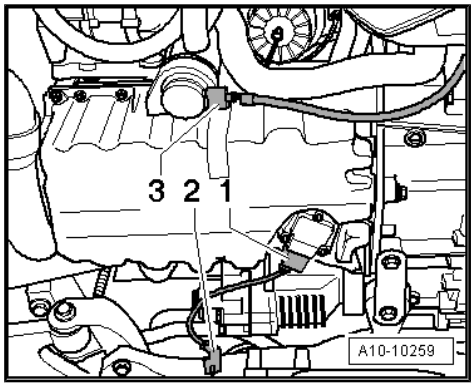

– Remove heat shield above drive shaft using hexagon key extension, 8 mm - 3247- .
– Remove drive shafts (left and right) ⇒ Rep. gr. 40 .

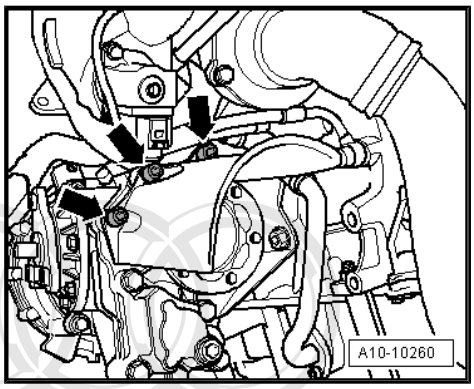

– Remove underbody cover (right-side) -arrows-.

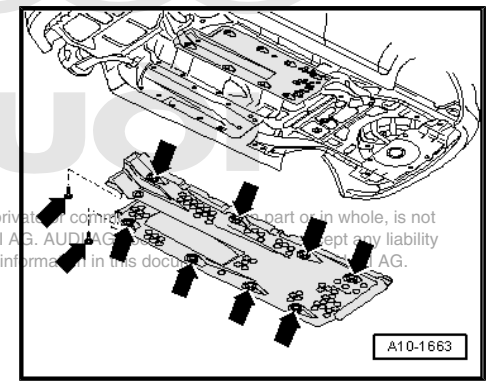

Protected by copyright. Copying for private or commercial purposes, part or in whole, is not permitted unless authorised by AUDI AG. AUDI AG does not accept any liability with respect to the correctness of information in this document. © AUDI AG.

– Unplug electrical connector -arrow- for Lambda probe after catalytic converter and move wiring clear.

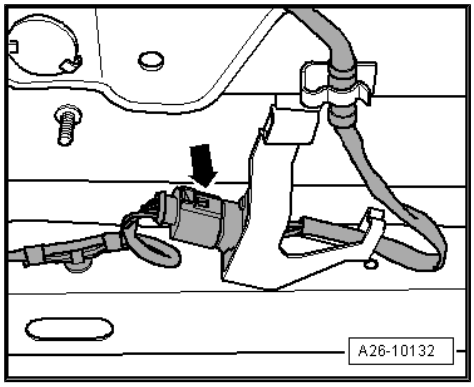

– Unscrew remaining securing nuts -arrows- for front exhaust pipe/turbocharger from below.
– Remove support for front exhaust pipe with catalytic converter (unscrew bolts -1 and 2-).

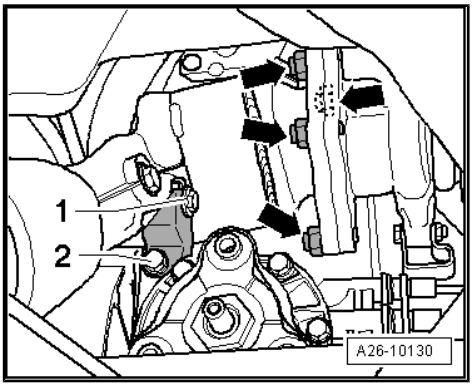

Note

To avoid damage, the flexible joints in the front exhaust pipe must not be bent more than 10 °.

– Separate exhaust system at clamp -arrows-.

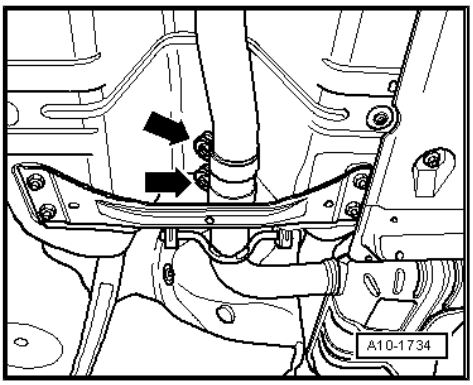

– Remove front cross-piece for underbody -arrows-.

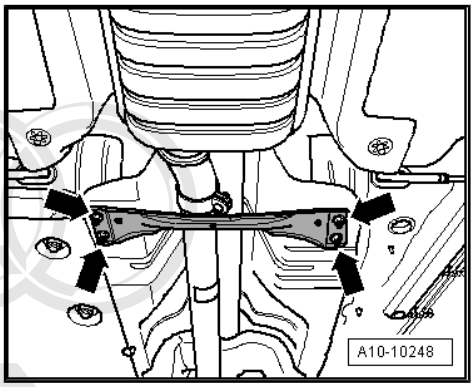

– Unbolt bracket for exhaust system -arrows-.
– Detach catalytic converter with front exhaust pipe.

Protected by copyright. Copying for private or commercial purposes, in part or in whole, is not permitted unless authorised by AUDI AG. AUDI AG does not guarantee or accept any liability with respect to the correctness of information in this document. Copyright by AUDI AG.

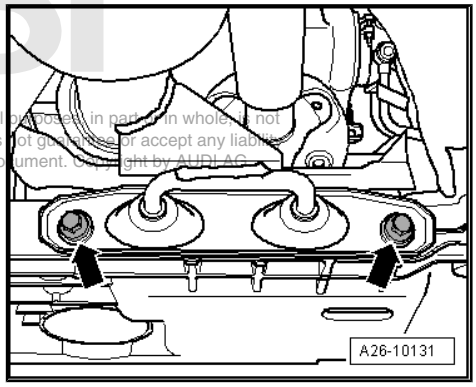

– Unscrew bolts -1 ... 3- and remove pendulum support.

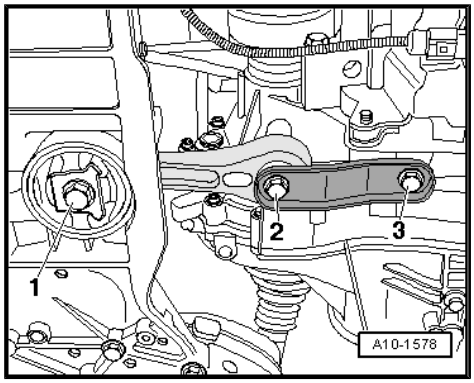

– Remove additional coolant pump -arrows-.

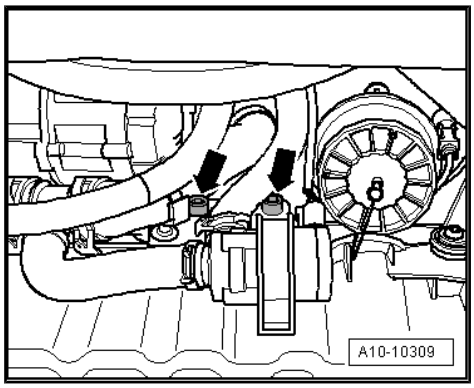

Protected by copyright. Copying for private or commercial purposes, in part or in whole, is not permitted unless authorised by AUDI AG. AUDI AG does not guarantee or accept any liability with respect to the correctness of information in this document. Copyright by AUDI AG.

– Bolt engine bracket - T10012- with securing bolt -1- and nut -2- to cylinder block (tightening torque: approx. 20 Nm).

– Insert engine and gearbox jack - V.A.G 1383 A- in engine bracket - T10012- and raise engine slightly.

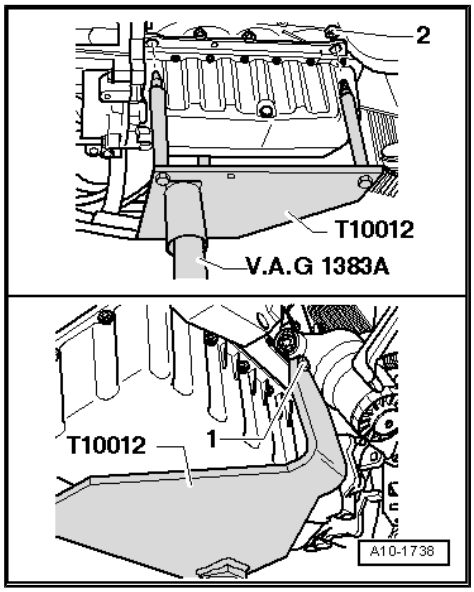

Note

To unscrew bolts for assembly mounting use stepladder - VAS 5085- .

– Remove bolts -arrows- of assembly mounting on engine.

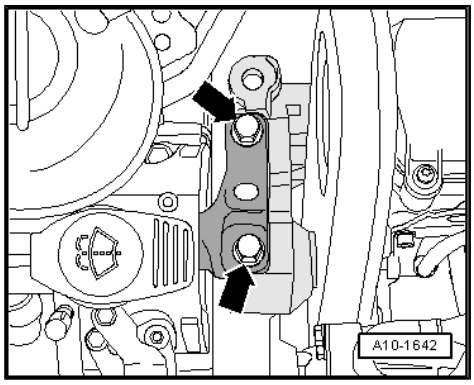

– Remove bolts -arrows- of assembly mounting for gearbox.

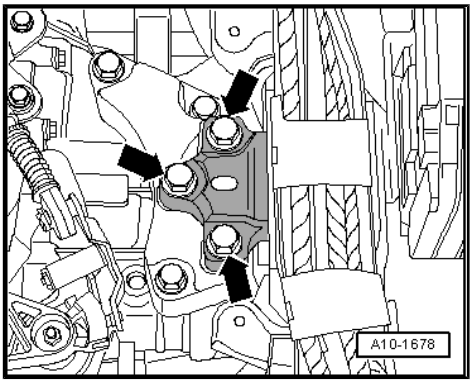

Note

- *Check that all hoses, pipes and wiring connections between engine, gearbox and body have been detached.*
- *Carefully guide engine/gearbox assembly when lowering to avoid damage.*

– Pull engine/gearbox assembly as far forward as possible, and lower gradually.

1.2 Separating engine and gearbox

- Engine/gearbox assembly removed and attached to engine bracket - T10012- .

– Unscrew bolt -1- with gearbox installed.

– Pull up cover plate -2- and remove.

Protected by copyright. Copying for private or commercial purposes, in part or in whole, is not permitted unless authorised by AUDI AG. AUDI AG does not guarantee or accept any liability with respect to the correctness of information in this document. Copyright by AUDI AG.

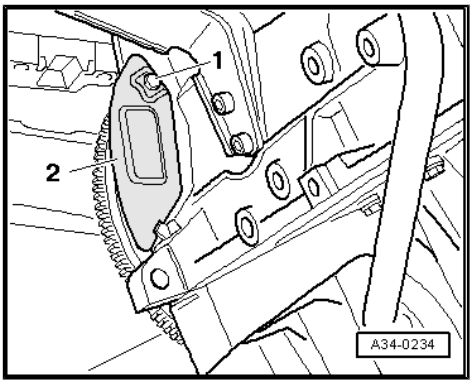

Note

Shown in illustration with gearbox removed.

– Remove bolts -1 ... 8- on engine/gearbox flange.

– Detach starter.

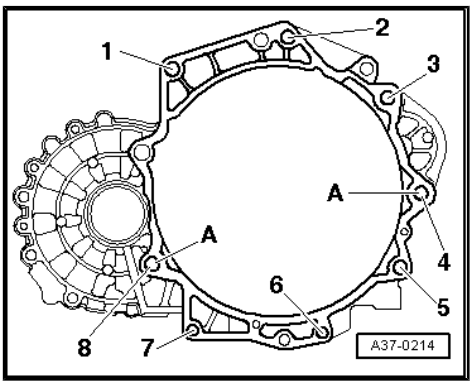

Note

The manual gearbox can be detached from the engine without a workshop hoist, a 2nd mechanic is required for this purpose.

– Separate gearbox from engine.

1.3 Securing engine to assembly stand

Special tools and workshop equipment required

- Lifting tackle - 2024 A-
- Workshop hoist - VAS 6100-
- Engine and gearbox support - VAS 6095-

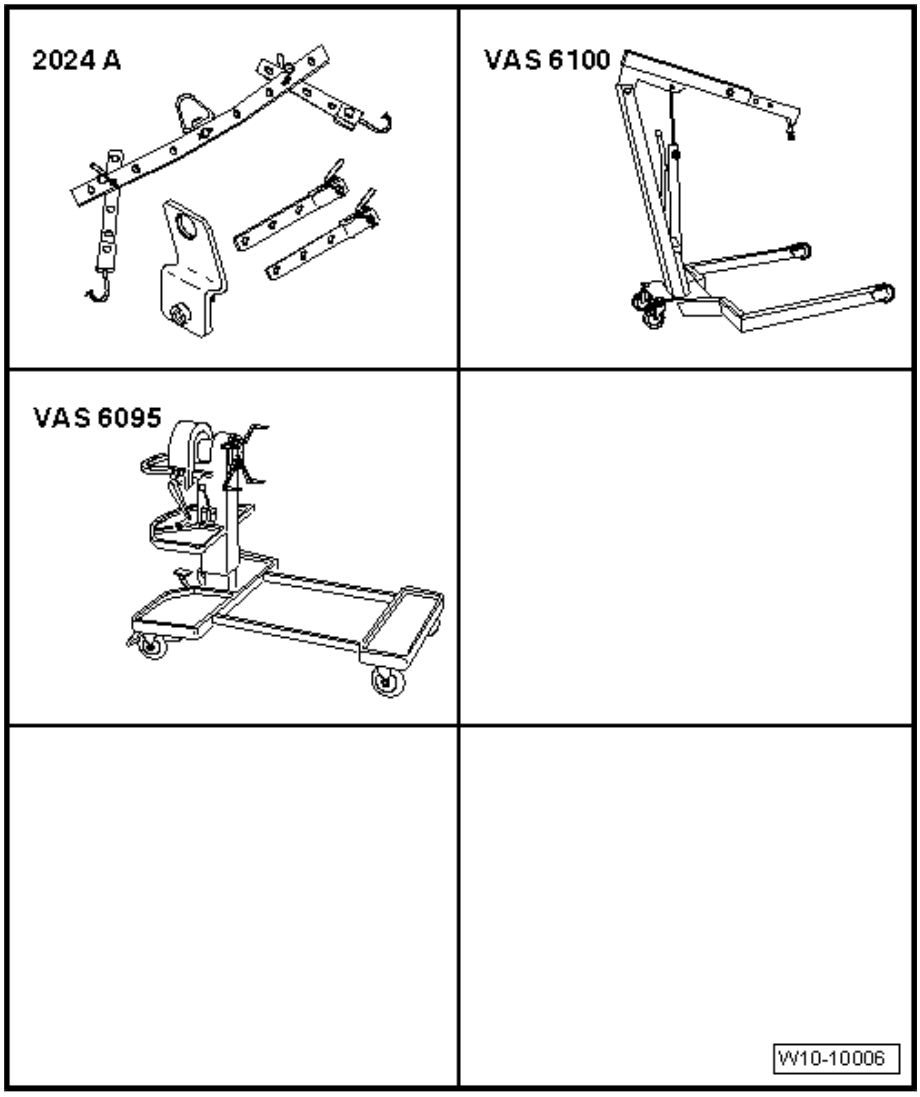

- Gearbox detached from engine.

– Engage lifting tackle - 2024 A- on engine and workshop hoist - VAS 6100- .

Note

To adjust to the centre of gravity of the assembly, the perforated rails of the support hooks must be positioned as shown.

WARNING

The support hooks and locating pins on the lifting tackle must be secured with locking pins (arrows in illustration).

Protected by copyright. Copying for private or commercial purposes, in part or in whole, is not permitted unless authorised by AUDI AG. AUDI AG does not guarantee or accept any liability with respect to the correctness of information in this document. Copyright by AUDI AG.

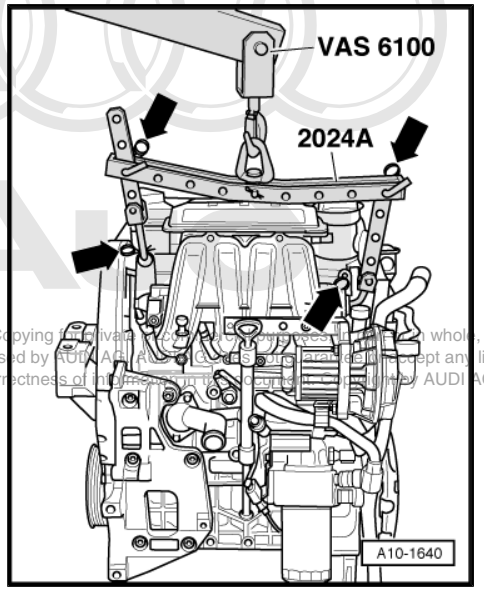

– Lift engine off engine bracket - T10012- using workshop hoist - VAS 6100- .

Secure engine to engine and gearbox support - VAS 6095- when dismantling/assembling engine.

1.4 Installing engine

- Engine attached to engine bracket - T10012-

Installation is carried out in the reverse order; note the following:

Note

- *Reinstall all cable ties in the same locations when assembling.*
- *Secure all hose connections with the correct type of hose clips (same as original equipment) ⇒ Parts catalogue .*
- *Renew self-locking nuts and bolts when performing assembly work.*
- *Renew bolts which are tightened to a specified angle as well as oil seals and gaskets.*
- *Clean input shaft splines and (in the case of used clutch plates) the hub splines. Remove corrosion and apply only a very thin coating of grease (⇒ Parts catalogue) to the splines. Then move clutch plate back and forth on input shaft until the hub moves smoothly on the shaft. Remove any excess grease.*

– Check whether dowel sleeves for centring the engine/gearbox assembly are fitted in the cylinder block; install dowel sleeves if necessary.

– Ensure that the intermediate plate is engaged on the sealing flange and pushed onto the dowel sleeves -arrows-.

– Check clutch release bearing for wear; renew if necessary.

– Bolt gearbox to engine.

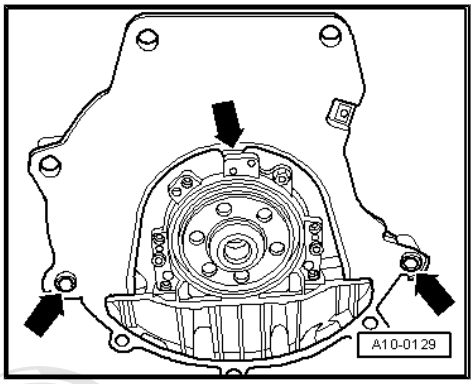

Note

- *Tightening torques apply only to lightly greased, oiled, phosphated or black-finished nuts and bolts.*
- *Additional lubricant such as engine oil or gearbox oil may be used, but do not use lubricant containing graphite.*
- *Do not use degreased parts.*
- *Tolerance for tightening torques: 15%.*

Engine/gearbox securing bolts

Item	Bolt	Nm
1, 2	M12×65	80
3 [1], 4 [1]	M12×135	80
5 … 7	M10×60	40
8	M12×90	65
• [1] Bolt with M8 threaded pin		

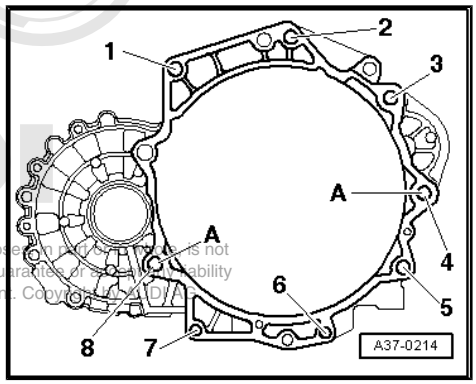

A: Centring sleeves

Protected by copyright. Copying for private or commercial purposes, in part or in whole, is not permitted unless authorised by AUDI AG. AUDI AG does not guarantee or assume liability with respect to the correctness of information in this document. Copyright by AUDI AG.

– Push in deflector plate -2- in such a way that the lower lug engages into the cylinder block and secure on top with bolt -1-.

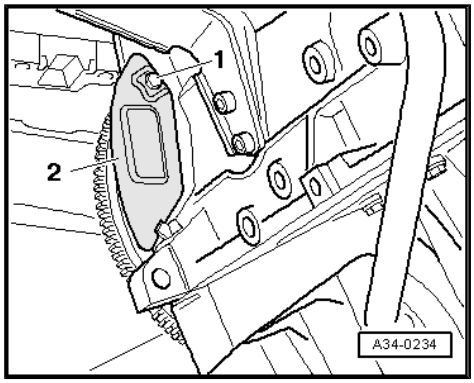

Note

Shown in illustration with gearbox removed.

– Guide engine/gearbox assembly into the body.

– Tighten bolts -arrows- of assembly mounting for engine initially hand-tight.

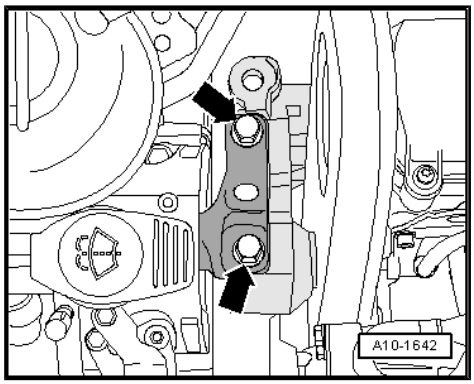

– Tighten bolts of assembly mounting for gearbox -arrows- initially hand-tight.

– Use new securing bolts.

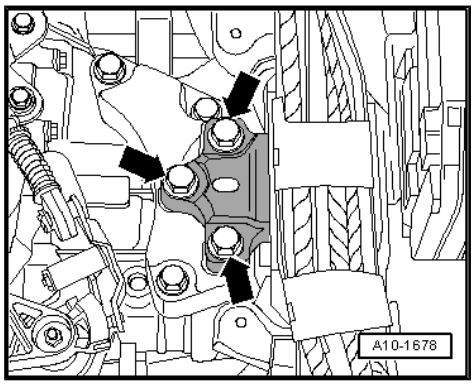

Protected by copyright. Copying for private or commercial purposes, in part or in whole, is not permitted unless authorised by AUDI AG. AUDI AG does not guarantee or accept any liability with respect to the correctness of information in this document. Copyright by AUDI AG.

Note

The bolts are tightened to final torque only after adjusting the engine mountings ⇒ page 26 *.*

– Remove engine bracket - T10012- from engine.

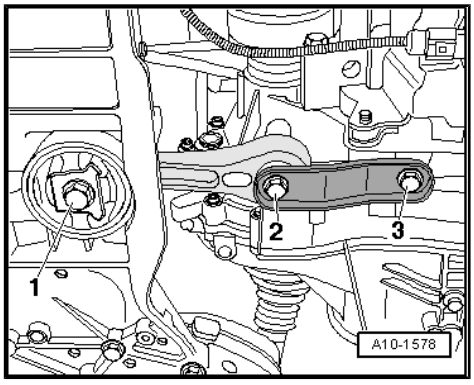

- Secure pendulum support to gearbox and subframe -1 ... 3-.
- Install drive shafts ⇒ Running gear, front-wheel drive and four-wheel drive; Rep. gr. 40 .
- Install exhaust system and align it free of stress ⇒ page 221 .
- Charge air conditioner refrigerant circuit ⇒ Air conditioner; Rep. Gr. 87 .
- Attach and adjust selector mechanism at gearbox ⇒ Rep. gr. 34 .
- Install engine control unit ⇒ Rep. gr. 24 .
- Adjust engine mountings ⇒ page 26 .
- Electrical connections and routing ⇒ Current flow diagrams, Electrical fault finding and Fitting locations.
- Install air pipes with plug-in connectors ⇒ page 173 .
- Install wiper arms ⇒ Electrical system; Rep. Gr. 92 .
- Install battery ⇒ Electrical system; Rep. gr. 27 .
- Bleed fuel system ⇒ Motronic direct injection and ignition system (4-cylinder); Rep. Gr. 24; Servicing fuel injection system .
- Check oil level.
- Fill up with coolant ⇒ page 157 .

Note

- *Drained-off coolant may only be used again if the original cylinder head and cylinder block are re-installed.*
- *Contaminated or dirty coolant must not be used again.*

WARNING

Never use battery charging equipment for boost starting. There is danger of damaging the vehicle's control units.

Tightening torque

Component		Nm
Bolts/nuts	M6	10
	M8	20
	M10	45
	M12	65
Except for the following:		
Pendulum support to gearbox		40 + 90° 1)2)
Pendulum support to subframe		100 + 90° 1)2)
Terminal B+ to starter		16
Earth wire to gearbox		23

- 1) Renew bolt.
- 2) 90° = one quarter turn.

Protected by copyright. Copying for private or commercial purposes, in part or in whole, is not permitted unless authorised by AUDI AG. AUDI AG does not guarantee or accept any liability with respect to the correctness of information in this document. Copyright by AUDI AG.

2 Assembly mountings

2.1 Exploded view - assembly mountings

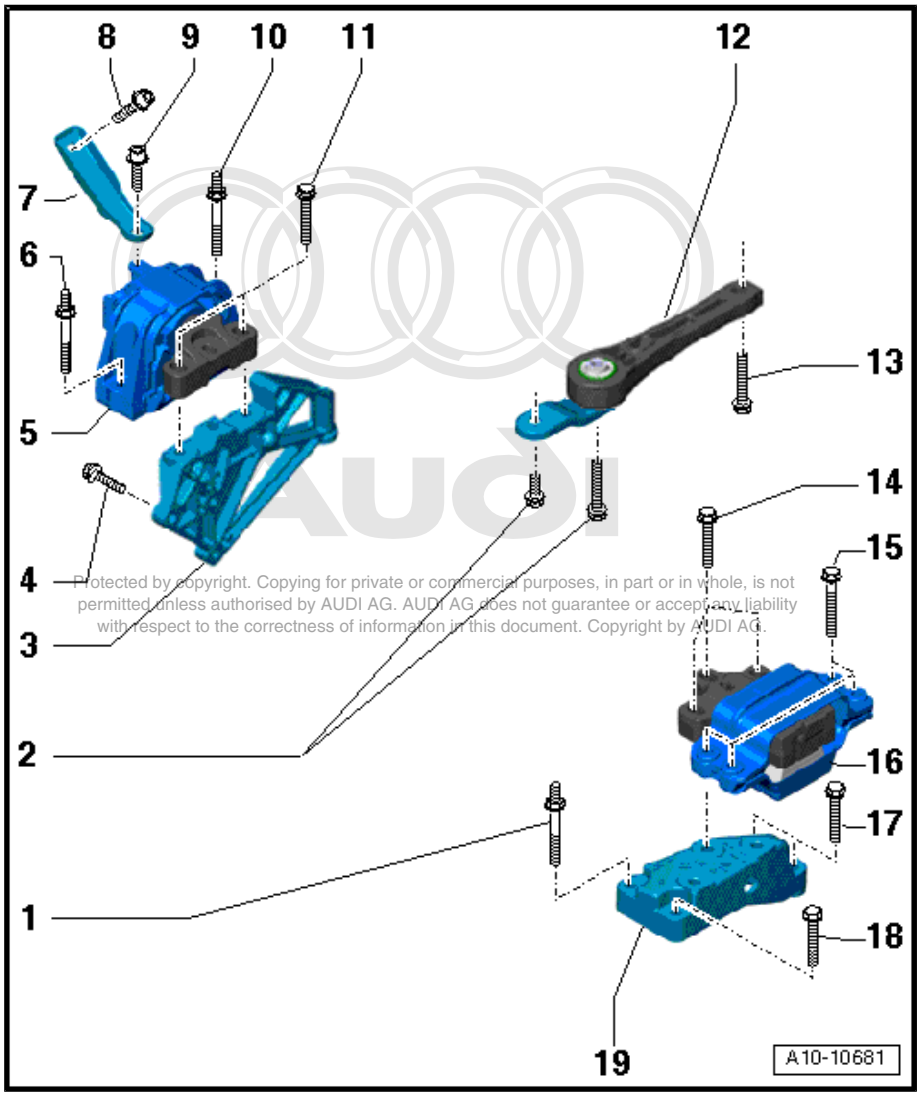

Protected by copyright. Copying for private or commercial purposes, in part or in whole, is not permitted unless authorised by AUDI AG. AUDI AG does not guarantee or accept any liability with respect to the correctness of information in this document. Copyright by AUDI AG.

1 - Bolt

- ❑ Gearbox support to gearbox
- ❑ Tightening torque (manual gearbox) ⇒ Rep. gr. 34
- ❑ Tightening torque (automatic gearbox) ⇒ Rep. gr. 37

2 - Bolts

- ❑ Pendulum support to gearbox
- ❑ Tightening torque (manual gearbox) ⇒ Rep. gr. 34
- ❑ Tightening torque (automatic gearbox) ⇒ Rep. gr. 37

3 - Engine support

- ❑ With support arm

4 - Bolt

- ❑ Engine support to engine
- ❑ 45 Nm

5 - Engine mounting

6 - Bolt

- ❑ Engine mounting to body
- ❑ Renew
- ❑ 40 Nm + 90° ($^1/_4$ turn further)

7 - Connecting bracket

8 - Bolt

- ❑ Connecting bracket to engine mounting
- ❑ Renew
- ❑ 20 Nm + 90° ($^1/_4$ turn further)

9 - Bolt

- ❑ Connecting bracket to body
- ❑ Renew
- ❑ 20 Nm + 90° ($^1/_4$ turn further)

10 - Bolt

- ❑ Engine mounting to body
- ❑ Renew
- ❑ 40 Nm + 90° ($^1/_4$ turn further)

11 - Bolts

- ❑ Engine mounting to engine support
- ❑ Renew
- ❑ 60 Nm + 90° ($^1/_4$ turn further)

12 - Pendulum support

13 - Bolt

- ❑ Pendulum support to subframe
- ❑ Tightening torque (manual gearbox) ⇒ Rep. gr. 34
- ❑ Tightening torque (automatic gearbox) ⇒ Rep. gr. 37

14 - Bolt

- ❑ Gearbox mounting to gearbox support
- ❑ Tightening torque (manual gearbox) ⇒ Rep. gr. 34
- ❑ Tightening torque (automatic gearbox) ⇒ Rep. gr. 37

15 - Bolt

- ❑ Gearbox mounting to body
- ❑ Tightening torque (manual gearbox) ⇒ Rep. gr. 34
- ❑ Tightening torque (automatic gearbox) ⇒ Rep. gr. 37

16 - Gearbox mounting

- ❑ With support arm

17 - Bolt

- ❑ Gearbox support to gearbox
- ❑ Tightening torque (manual gearbox) ⇒ Rep. gr. 34
- ❑ Tightening torque (automatic gearbox) ⇒ Rep. gr. 37

18 - Bolt

- ❑ Gearbox support to gearbox
- ❑ Tightening torque (manual gearbox) ⇒ Rep. gr. 34
- ❑ Tightening torque (automatic gearbox) ⇒ Rep. gr. 37

19 - Gearbox support

2.2 Checking adjustment of assembly mountings (engine/gearbox mountings)

– Detach engine cover panel with air cleaner ⇒ Rep. gr. 24 .

– Lift out activated charcoal filter from retainer
-in direction of arrow- with pipes connected and lay aside.

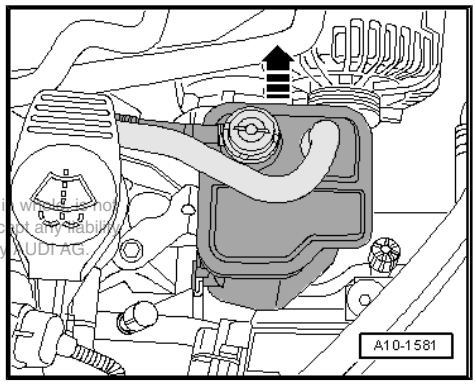

Protected by copyright. Copying for private or commercial purposes, in part or in whole, is not permitted unless authorised by AUDI AG. AUDI AG does not guarantee or accept any liability with respect to the correctness of information in this document. Copyright by AUDI AG.

The following specifications must be obtained:

- There must be a distance of -a- = 16 mm between engine support -2- and longitudinal member (right-side).
- The side surface of the engine support casting -2- must be aligned parallel to the support arm -1- (dimension x = dimension x).

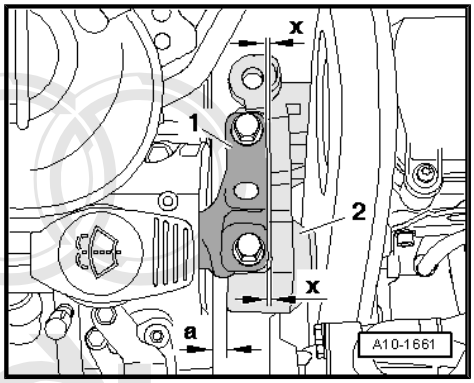

Note

Distance a = 16 mm can also be checked with e.g. a suitable cylindrical bar.

If the distance measured is too small or too great, proceed as follows:

Protected by copyright. Copying for private or commercial purposes, in part or in whole, is not permitted unless authorised by AUDI AG. AUDI AG does not guarantee or accept any liability with respect to the correctness of information in this document. Copyright by AUDI AG.

2.3 Adjusting assembly mountings

Special tools and workshop equipment required

- Support bracket - 10 - 222 A-

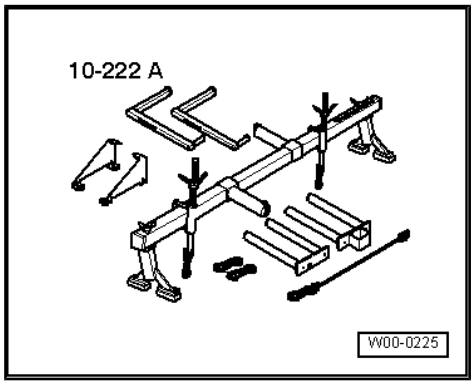

- Tightening torques ⇒ page 26
- Detach engine cover panel with air cleaner ⇒ Rep. gr. 24 .

– Remove battery ⇒ Electrical system; Rep. gr. 27 .
– Remove battery tray -arrows-.

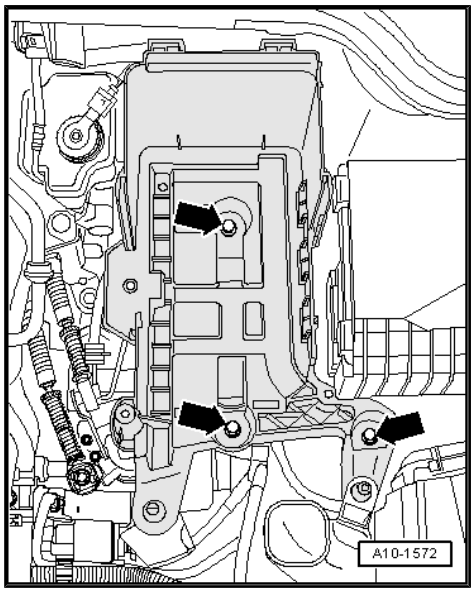

– Pull activated charcoal filter with hoses attached upwards out of the retainer -arrow- and place to side.
– Remove bracket for activated charcoal filter.
– Detach battery tray from front of air duct.

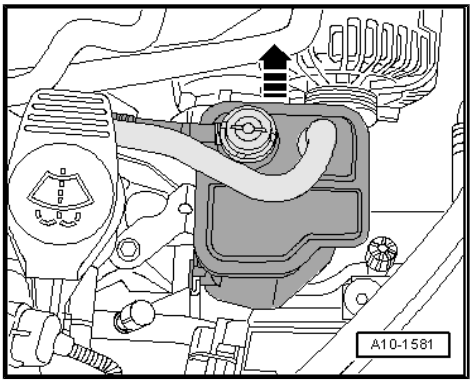

– Position support bracket - 10 - 222 A- on bolted flanges of wing panels. The spindles face forwards.
– Attach hooks of spindles to engine lifting eyes with shackles - 10 - 222 A /12- .
– Take up weight of engine evenly with both spindles (but do not raise engine).

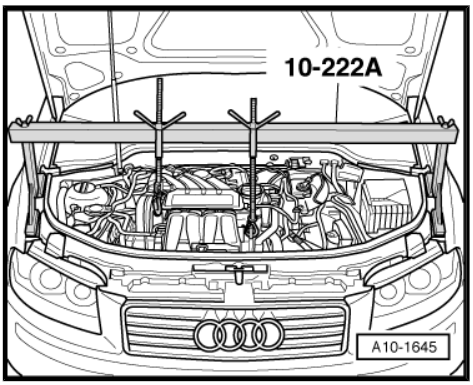

– Unscrew bolts -arrows- on engine assembly mounting one after the other, renew them (if not already renewed when engine was installed) and screw in loosely.

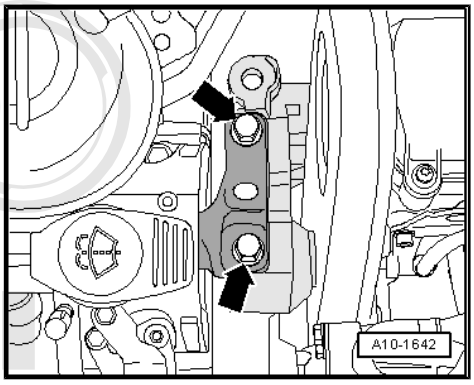

– Unscrew bolts -arrows- on gearbox assembly mounting one after the other, renew them (if not already renewed when engine was installed) and screw in loosely.
– Slacken bolts on left and right-hand support arms by about two turns each.

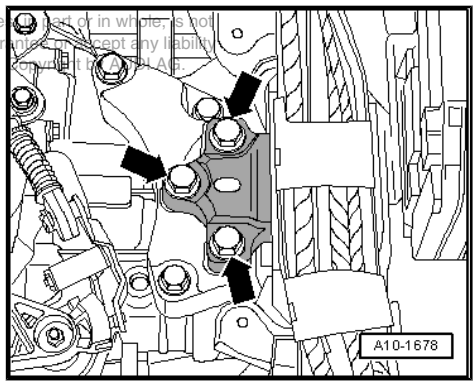

Protected by copyright. Copyright by AUDI AG. All rights reserved. Unauthorised use or disclosure of this document in whole or in part or in whole, is not permitted unless authorised by AUDI AG. AUDI AG does not guarantee or accept any liability with respect to the correctness of information in this document. Copyright by AUDI AG.

– Using a tyre iron, adjust engine/gearbox assembly between engine mounting -1- and engine support -4- until the specifications listed below are obtained:

• The two bolt heads -2- must be parallel with the edge of the support arm -3-.

• There must be a distance of -x- = 16 mm between engine mounting -1- and engine support -4-.

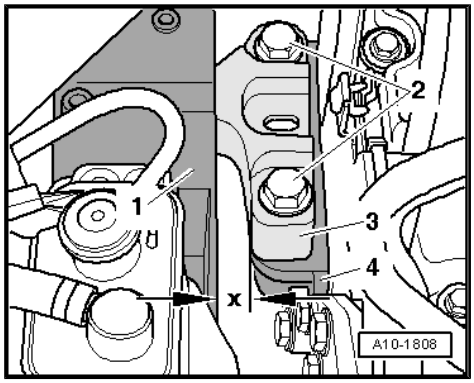

Note

Distance -x- = 16 mm can also be checked with a metal rod of suitable size, or similar.

– Tighten bolts for assembly mounting at gearbox.

– Ensure that edges of support arm (on gearbox side) -1- and gearbox mounting -2- are parallel.

• Dimension -x- must be identical on both sides of mounting.

– Tighten bolts for assembly mounting.

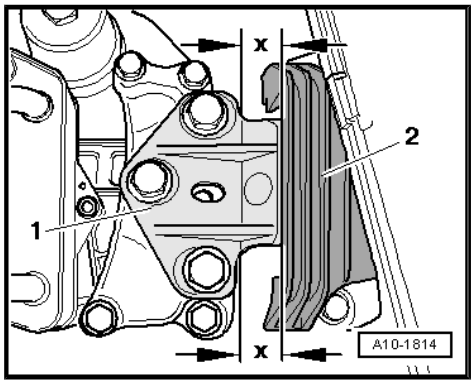

Remaining installation steps are carried out in reverse sequence; note the following:

– Tighten bolts for front section of longitudinal member ⇒ Rep. gr. 50 .

– Install battery ⇒ Electrical system; Rep. gr. 27 .

Protected by copyright. Copying for private or commercial purposes, in part or in whole, is not permitted unless authorised by AUDI AG. AUDI AG does not guarantee or accept any liability with respect to the correctness of information in this document. Copyright by AUDI AG.

13 – Crankshaft group

1 Cylinder block (pulley end)

1.1 Exploded view - poly V-belt, bracket for ancillaries

Note

Before removing, mark direction of rotation of poly V-belt with chalk or felt-tip pen. If the belt runs in the opposite direction when it is refitted, this can cause breakage. Ensure that the belt is properly seated in the pulleys when installing.

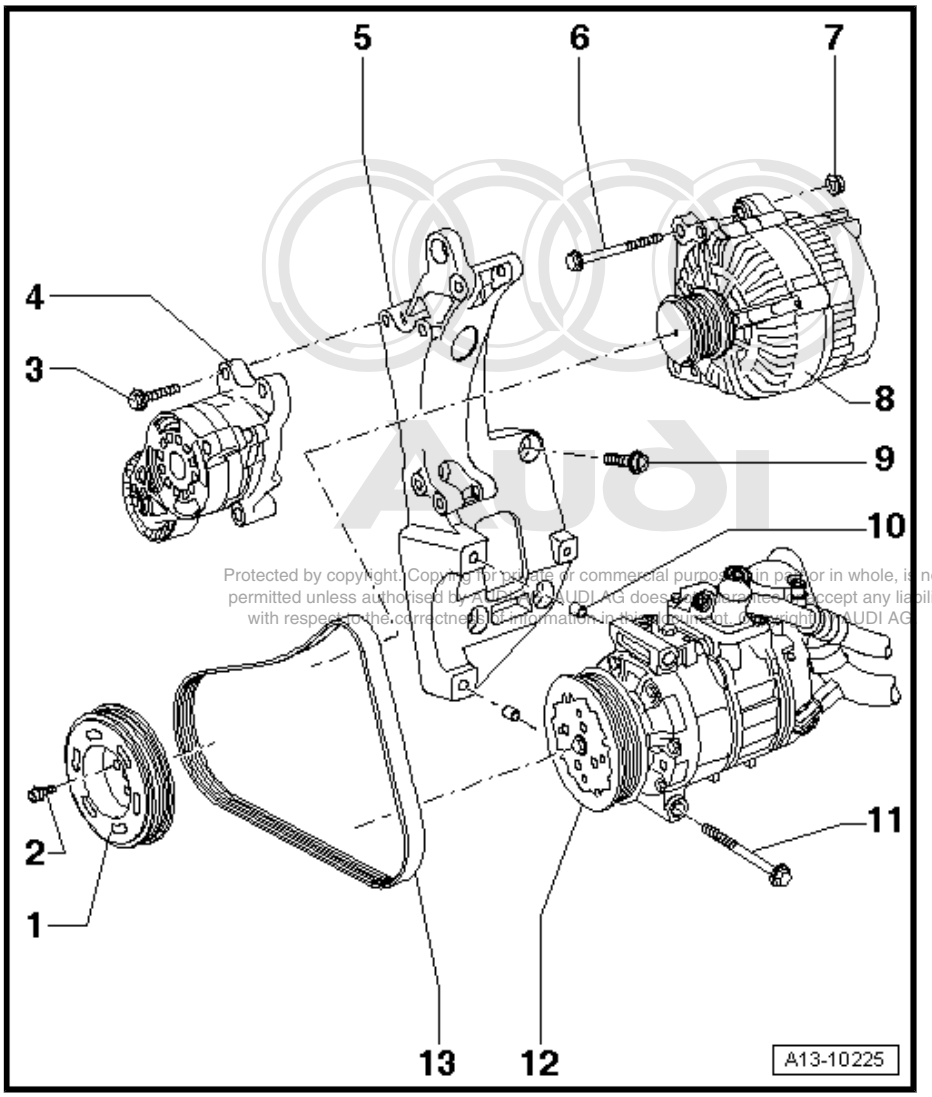

Protected by copyright. Copying for private or commercial purposes, in part or in whole, is not permitted unless authorised by AUDI AG. AUDI AG does not guarantee or accept any liability with respect to the correctness of information in this document. Copyright by AUDI AG.

1 - Pulley
- ❑ For poly V-belt
- ❑ Removing and installing ⇒ page 37

2 - Special bolt
- ❑ 20 Nm + 90°

Renew ⇒ Parts catalogue

3 - 23 Nm

4 - Tensioner for poly V-belt
- ❑ Pivot with open-end spanner to slacken poly V-belt
- ❑ Secure tensioner in position using locking pin - T10060A-

5 - Bracket for ancillaries
- ❑ Removing and installing ⇒ page 34

6 - 23 Nm

7 - 23 Nm

8 - Alternator
- ❑ Removing and installing ⇒ Electrical system; Repair group 27
- ❑ To facilitate attachment of alternator, knock back threaded bushes for alternator securing bolts slightly

9 - Bolt
- ❑ Apply locking fluid when fitting
- ❑ Locking fluid ⇒ Parts catalogue
- ❑ Observe correct tightening sequence ⇒ page 34

10 - Bush

- ❑ 2x

11 - 25 Nm

12 - Air conditioner compressor

- ❑ Removing and installing ⇒ Air conditioning; Repair group 87

13 - Poly V-belt

- ❑ Routing of poly V-belt ⇒ page 32
- ❑ Check for wear
- ❑ Do not kink
- ❑ Removing and installing ⇒ page 32

Routing of poly V-belt

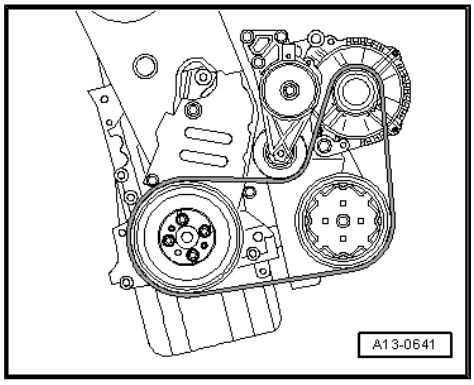

Tightening sequence on bracket for ancillaries

1. Screw in bolts -1 ... 6- hand-tight.
2. Tighten bolts -1 ... 6- to 40 Nm.

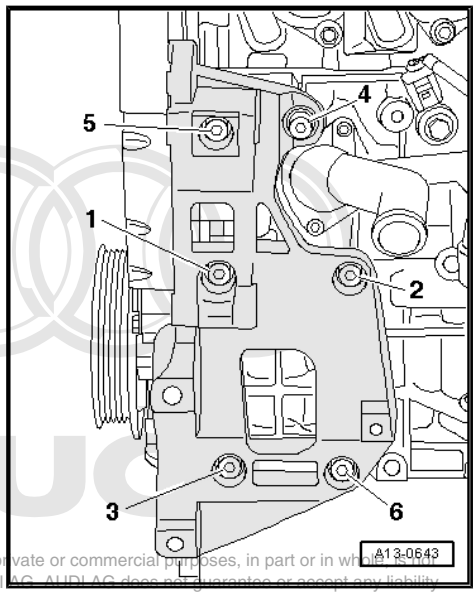

Protected by copyright. Copying for private or commercial purposes, in part or in whole is not permitted unless authorised by AUDI AG. AUDI AG does not guarantee or accept any liability with respect to the correctness of information in this document. Copyright by AUDI AG.

1.2 Removing and installing poly V-belt

Special tools and workshop equipment required

♦ Locking pin - T10060A-

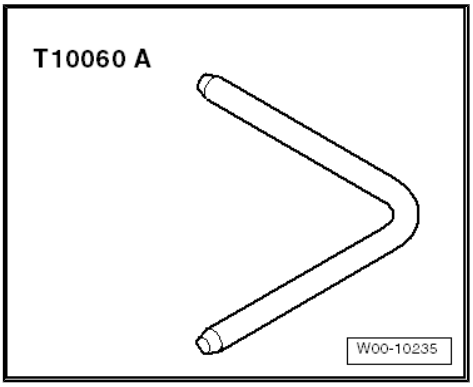

♦ Spring type clip pliers - VAS 5024 A-

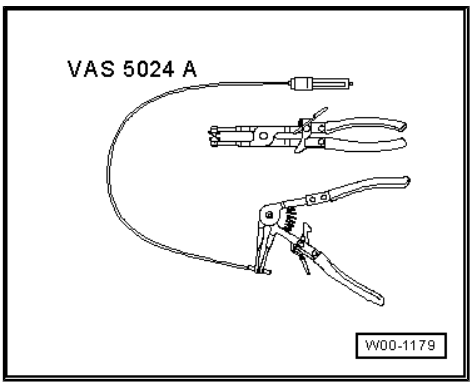

Removing

– Detach engine cover panel with air cleaner ⇒ Rep. gr. 24 .

– Lift out activated charcoal filter from retainer with pipes connected -arrow- and lay aside.

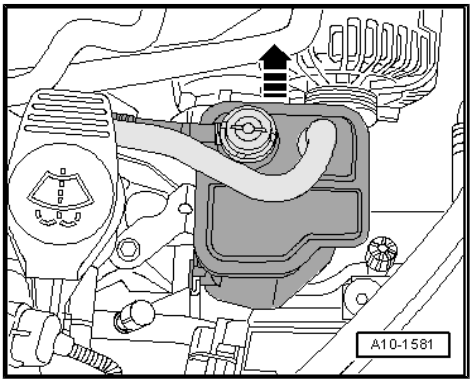

Note

Protected by copyright. Copying for private or commercial purposes, in part or in whole, is not permitted unless authorised by AUDI AG. AUDI AG does not guarantee or accept any liability with respect to the correctness of information in this document. Copyright by AUDI AG.

Before removing, mark direction of rotation of poly V-belt with chalk or felt-tip pen. If the belt runs in the opposite direction when it is refitted, this can cause breakage.

– Mark direction of rotation of poly V-belt.

– To slacken poly V-belt, turn tensioner in -direction of arrow-.

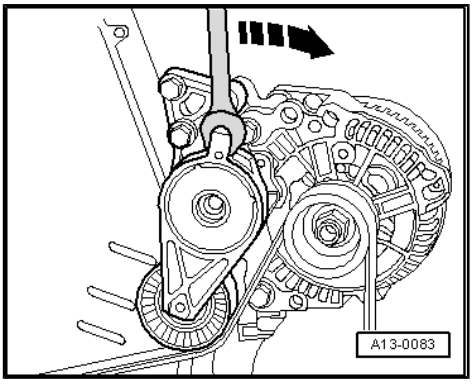

– Lock tensioner in position with locking pin - T10060A- .

– Remove poly V-belt.

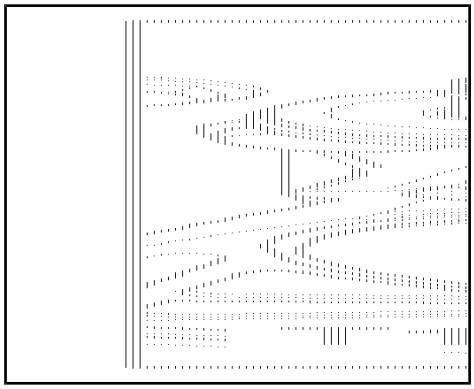

Installing

Installation is carried out in the reverse order; note the following:

Note

Before fitting poly V-belt, make sure all ancillary units (alternator and air-conditioner compressor) are firmly secured.

– Fit the poly V-belt onto the crankshaft and air conditioner compressor pulleys.

– Then position poly V-belt on alternator pulley and release tensioner.

– Check that poly V-belt is in correct position.

– Start engine and check that belt runs properly.

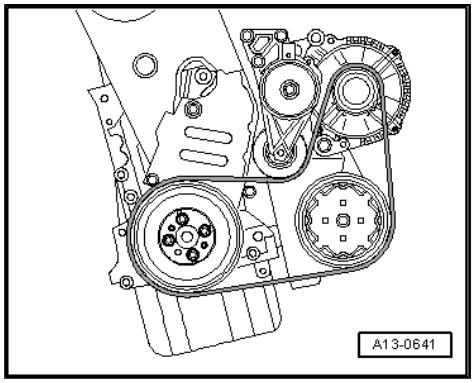

1.3 Removing and installing bracket for ancillaries

Special tools and workshop equipment required

Reproduction of this document or parts thereof for commercial purposes, in part or in whole, is not permitted unless authorised by AUDI AG. AUDI AG does not guarantee or accept any liability with respect to the correctness of information in this document. Copyright by AUDI AG.

♦ Locking pin - T10060A-

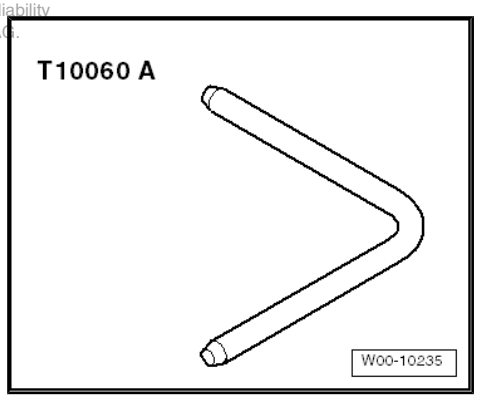

♦ Spring type clip pliers - VAS 5024 A-

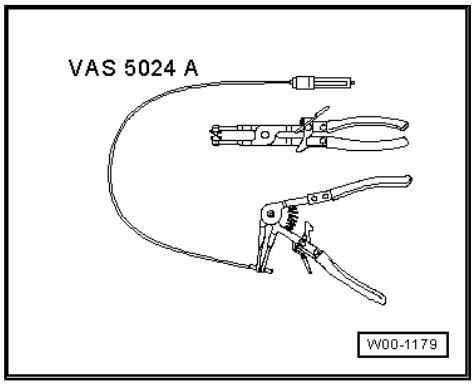

Removing

– Detach engine cover panel with air cleaner ⇒ Rep. gr. 24 .

– Remove the cover above the fuse box (press release tabs -arrows-).

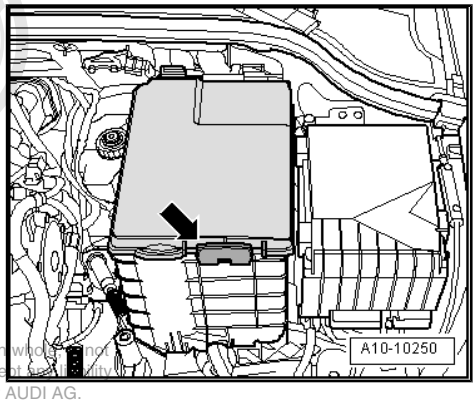

WARNING

Observe notes on procedure for disconnecting battery ⇒ Electrical system; Repair group 27 .

Protected by copyright. Copying for private or commercial purposes, in part or in whole, is not permitted unless authorised by AUDI AG. AUDI AG does not guarantee or accept any liability with respect to the correctness of information in this document. Copyright by AUDI AG.

– With ignition switched off, disconnect battery earth cable -arrow-.

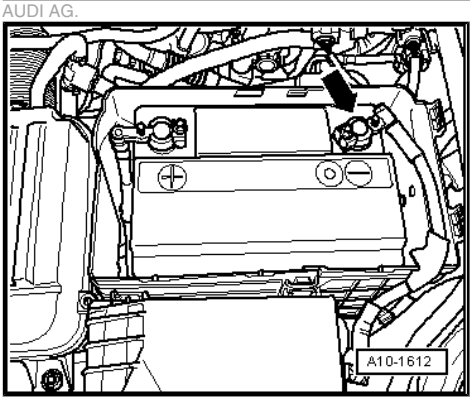

– Lift out activated charcoal filter from retainer with pipes connected -arrow- and lay aside.

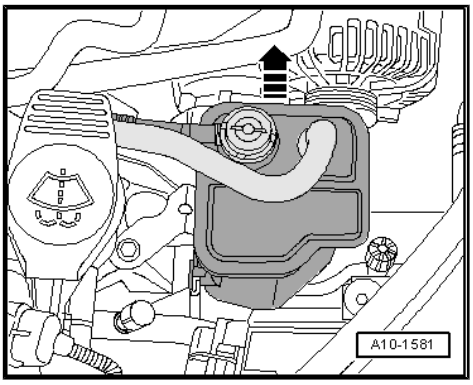

Note

Before removing, mark direction of rotation of poly V-belt with chalk or felt-tip pen. If the belt runs in the opposite direction when it is refitted, this can cause breakage.

– To slacken poly V-belt, turn tensioner in -direction of arrow-.

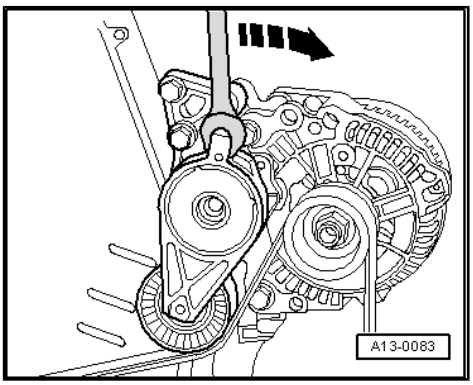

– Lock tensioner in position with locking pin - T10060A- .
– Take off poly V-belt.

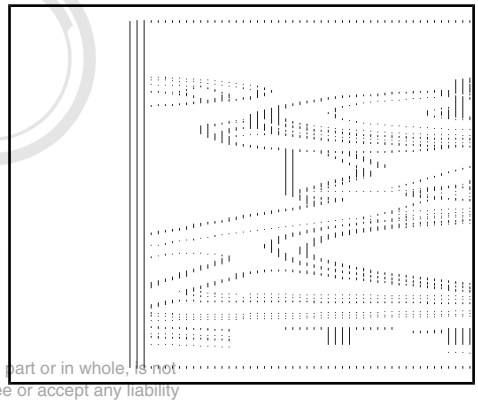

Protected by copyright. Copying for private or commercial purposes, in part or in whole, is not permitted unless authorised by AUDI AG. AUDI AG does not guarantee or accept any liability with respect to the correctness of information in this document. Copyright by AUDI AG.

– Remove tensioner for poly V-belt -arrows-.
– Discharge refrigerant system ⇒ Rep. gr. 87 ; Air conditioner with refrigerant R134a .
– Remove alternator ⇒ Electrical system; Repair group 27 .
– Remove noise insulation ⇒ Rep. gr. 50 .

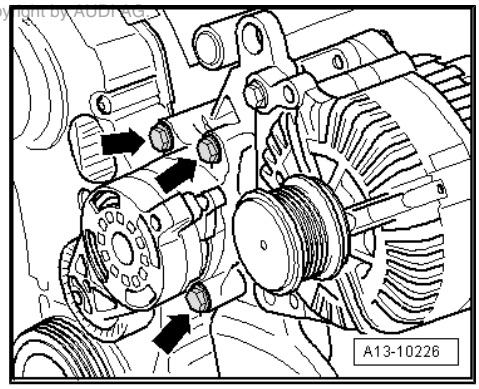

– Remove noise insulation (right-side) -fasteners 1 ... 3-.
– Remove air conditioner compressor ⇒ Rep. gr. 87 ; Heating and air conditioning .

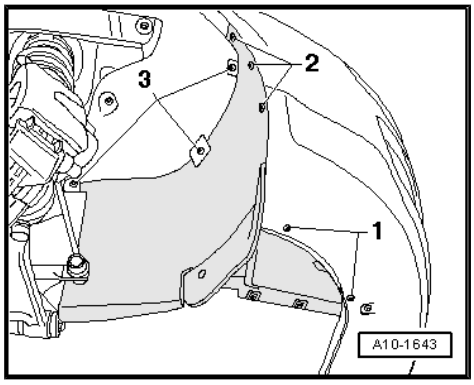

– Detach bracket for ancillaries: bolts -1 … 6-.

Installing

Installation is performed in reverse sequence; note the following:

- Tightening torques ⇒ page 31

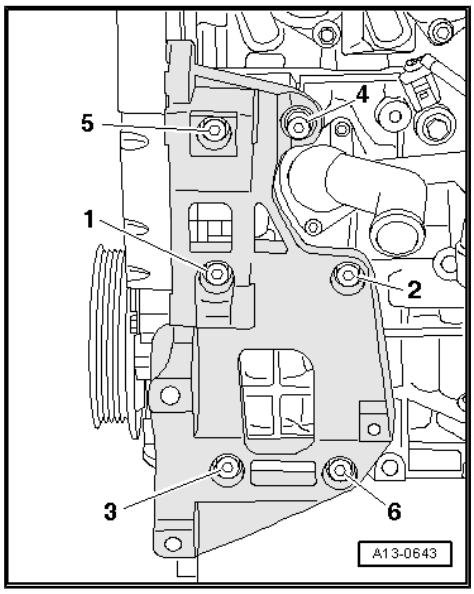

– Tighten bolts in the sequence -1 ... 6-.
– Install alternator ⇒ Electrical system; Repair group 27 .
– Install air conditioner compressor ⇒ Rep. gr. 87 ; Heating and air conditioning .
– Install poly V-belt ⇒ page 32 .
– Connect battery. Procedures required ⇒ Electrical system; Repair group 27 .

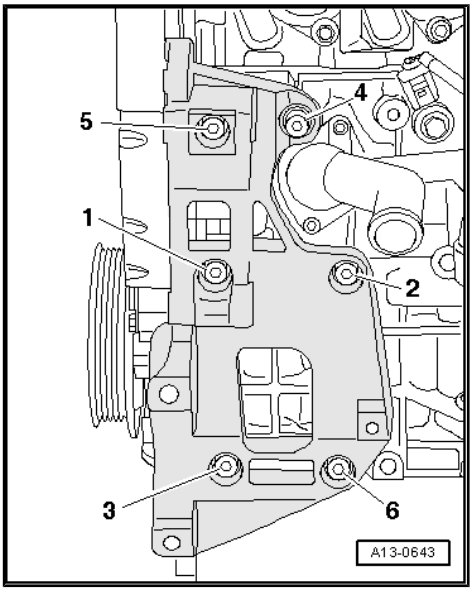

1.4 Removing and installing vibration damper

Removing

• Poly V-belt must be removed ⇒ page 32 .

– Remove centre noise insulation -1 ... 3-.

Protected by copyright. Copying for private or commercial purposes, in part or in whole, is not permitted unless authorised by AUDI AG. AUDI AG does not guarantee or accept any liability with respect to the correctness of information in this document. Copyright by AUDI AG.

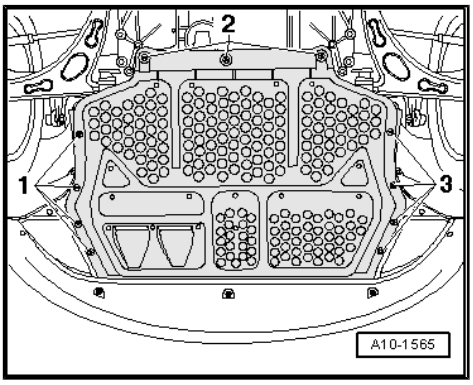

– Remove noise insulation (right-side) -fasteners 1 ... 3-.

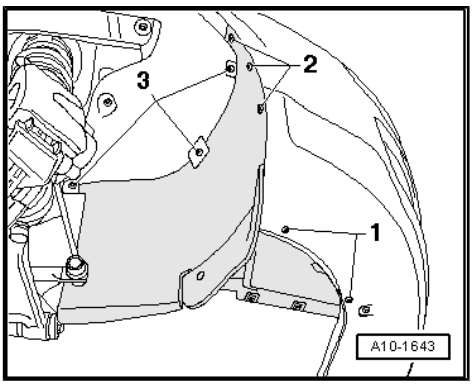

– Remove vibration damper / pulley.

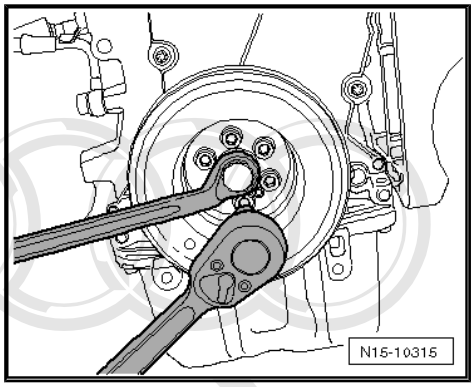

Note

To loosen and tighten the crankshaft pulley, counterhold central bolt with a ring spanner.

Installing

Installation is carried out in the reverse order; note the following:

- Tightening torques ⇒ page 31

– Install the crankshaft pulley with genuine bolts only: ⇒ Parts catalogue .

♦ Assembly is only possible in one position: The hole -arrow- in the crankshaft pulley must fit over the projection on the toothed belt sprocket.

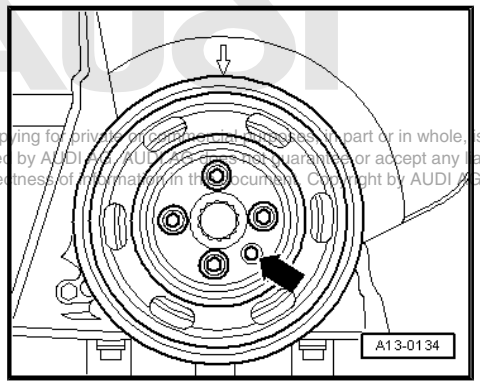

Protected by copyright. Copying for private or commercial purposes, in part or in whole, is not permitted unless authorised by AUDI AG. AUDI AG does not guarantee or accept any liability with respect to the correctness of the information in this document. Copyright by AUDI AG.

1.5 Front sealing flange - exploded view

1 - Bolt

- ❑ 90 Nm + 90° (1/4 turn) further
- ❑ Renew
- ❑ Do not lubricate with oil
- ❑ Attaching counterhold tool -3415- ⇒ page 64

2 - Crankshaft sprocket

- ❑ Contact surface between sprocket and crankshaft must be free of oil
- ❑ Can only be installed in one position

3 - Bolt

- ❑ Tightening sequence ⇒ page 39

4 - Oil seal

- ❑ Renewing ⇒ page 40
- ❑ Do not lubricate with oil

5 - Sealing flange (front)

- ❑ Must be positioned on dowel pins
- ❑ Removing and installing ⇒ page 42

6 - Dowel pins

7 - Diamond-coated washer for toothed belt sprocket

- ❑ Renew washer if toothed belt sprocket is removed

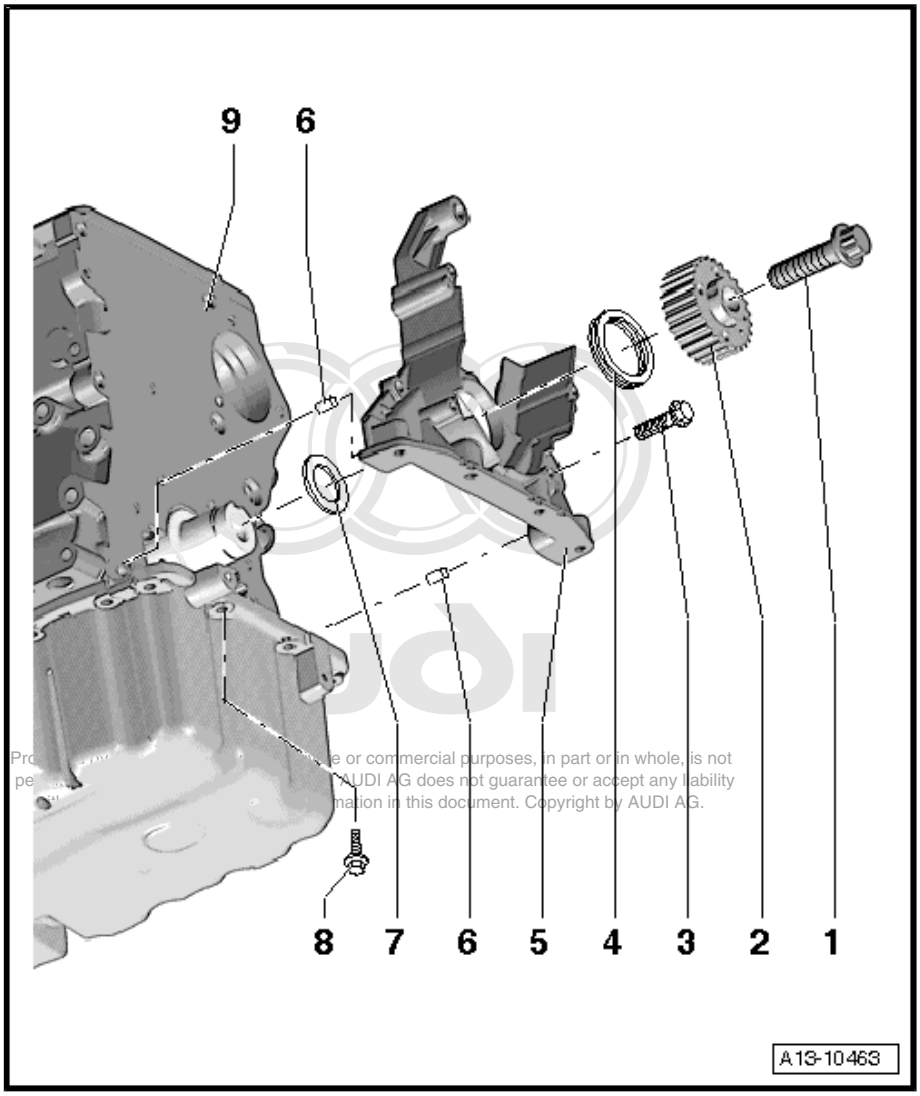

8 - Bolt

- ❑ Tightening sequence ⇒ page 39

9 - Cylinder block

- ❑ Removing and installing crankshaft ⇒ page 52
- ❑ Dismantling and assembling pistons and conrods ⇒ page 58

Tightening sequence for front sealing flange

1. Screw in bolts -1 ... 10- hand-tight.
2. Tighten bolts -1 ... 6- in diagonal sequence and in stages to 15 Nm.
3. Tighten bolts -7 ... 10- to 15 Nm.

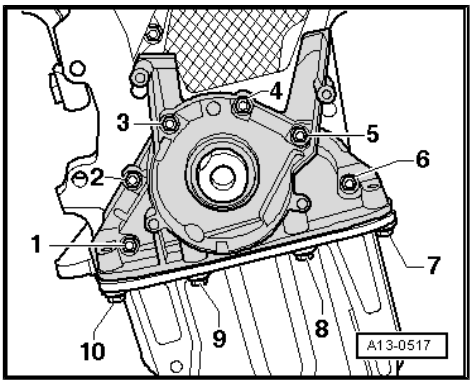

1.6 Renewing crankshaft oil seal - pulley end

Special tools and workshop equipment required

- Oil seal extractor - 3203-
- Counterhold tool - 3415-
- Assembly tool - T10053-
- Torque wrench - V.A.G 1331-
- Torque wrench - V.A.G 1332-

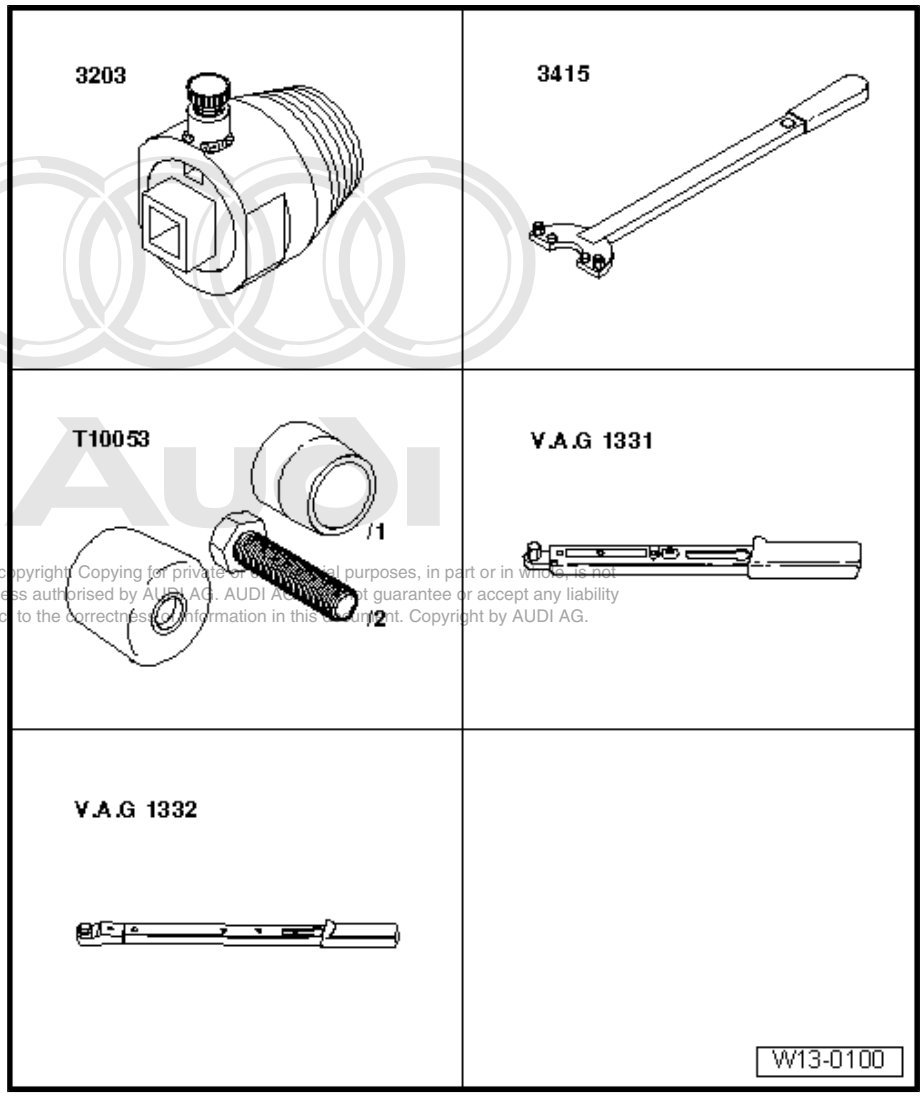

Protected by copyright. Copying for private or commercial purposes, in part or in whole, is not permitted unless authorised by AUDI AG. AUDI AG does not guarantee or accept any liability with respect to the correctness of information in this document. Copyright by AUDI AG.

Removing

– Remove poly V-belt ⇒ page 32 .

– Remove toothed belt ⇒ page 61 .

– Remove crankshaft toothed belt sprocket. To do this, counterhold sprocket with special tool - 3415- .

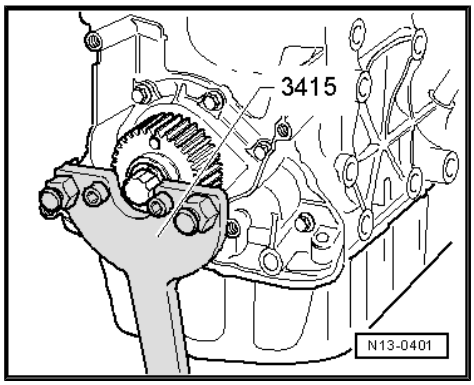

– Unscrew central bolt -1- for crankshaft toothed belt sprocket -2- and remove sprocket.
– Remove diamond-coated washer -3- from toothed belt sprocket.
– To guide oil seal extractor, screw central bolt into crankshaft onto stop by hand.
– Unscrew inner part of oil seal extractor - 3203- nine turns (approx. 20 mm) from the outer part and lock in position with the knurled screw.

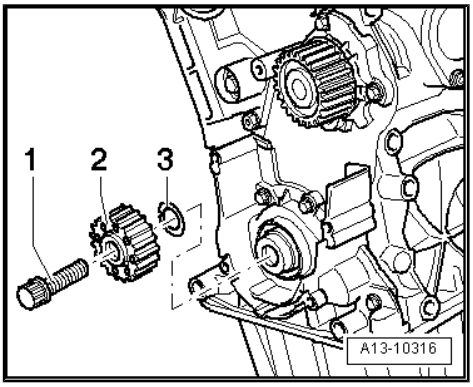

– Lubricate threaded head of oil seal extractor - 3203- , place it in position and, exerting firm pressure, screw it into oil seal as far as possible.
– Loosen knurled screw and turn inner part against crankshaft until oil seal is pulled out.
– Clamp flats of oil seal extractor in vice. Remove oil seal with pliers.

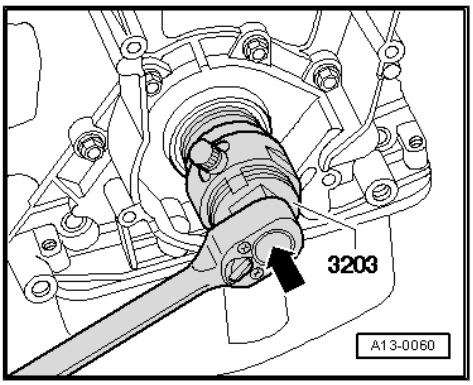

Installing

• Tightening torques ⇒ page 38
– Clean contact surface and sealing surface.
– Remove oil residue from crankshaft journal with a clean cloth.

– Position guide sleeve T10053/1 from assembly tool - T10053- on crankshaft journal.
– Push oil seal over guide sleeve onto crankshaft journal.

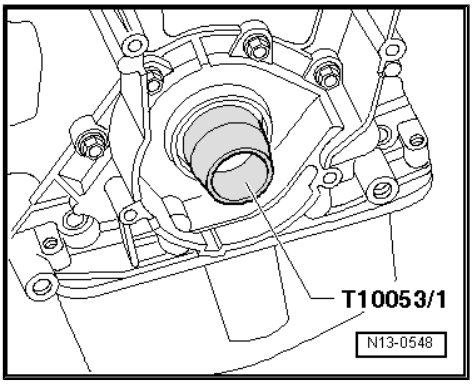

– Press in oil seal with central bolt of toothed belt sprocket and thrust sleeve of assembly tool - T10053- until flush.

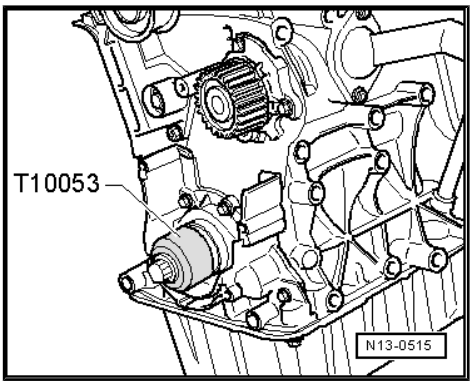

Protected by copyright. Copying for private or commercial purposes, in part or in whole, is not permitted unless authorised by AUDI AG. AUDI AG does not guarantee or accept any liability with respect to the correctness of information in this document. Copyright by AUDI AG.

– Install crankshaft toothed belt sprocket -2- with new diamond-coated washer -3- and new central bolt -1-.

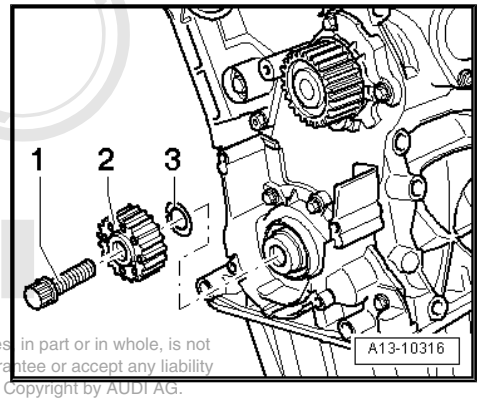

Note

- *Contact surfaces between toothed belt sprocket, diamond-coated washer and crankshaft must be free of oil.*
- *Do not lubricate bolt for crankshaft sprocket.*

Protected by copyright. Copying for private or commercial purposes, in part or in whole, is not permitted unless authorised by AUDI AG. AUDI AG does not guarantee or accept any liability with respect to the correctness of information in this document. Copyright by AUDI AG.

– Use counterhold tool - 3415- to tighten crankshaft toothed belt sprocket.

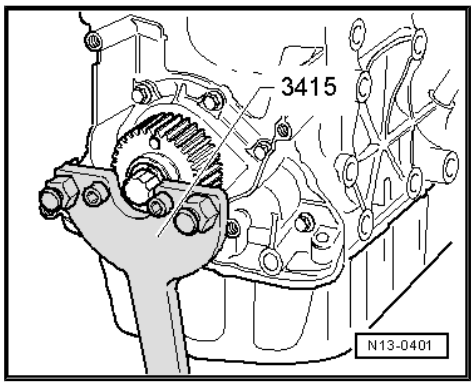

– Install toothed belt ⇒ page 61 .

– Install poly V-belt ⇒ page 32 .

1.7 Removing and installing sealing flange (front)

Special tools and workshop equipment required

- Counterhold tool - 3415-
- Assembly tool - T10053-
- Torque wrench - V.A.G 1331-
- Torque wrench - V.A.G 1332-
- Electric drill with plastic brush attachment
- Safety goggles
- Sealant ⇒ Parts catalogue

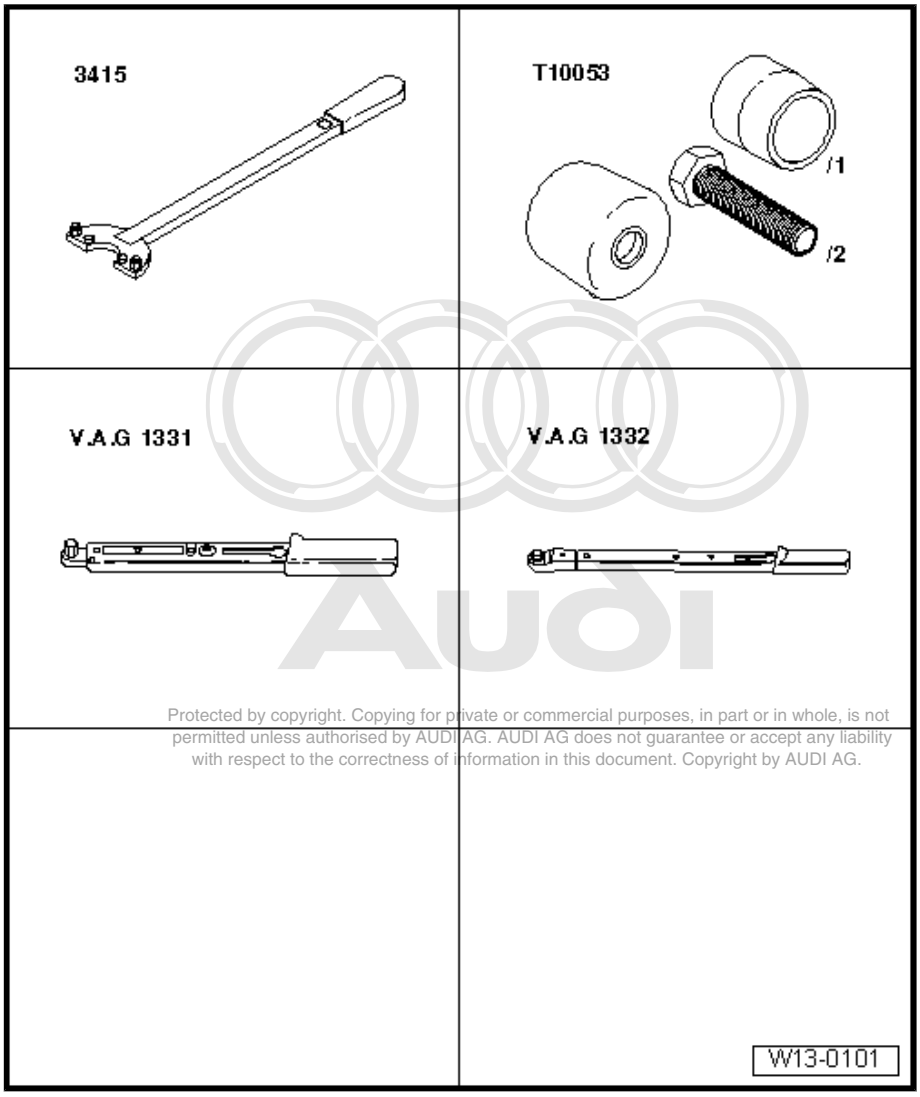

Protected by copyright. Copying for private or commercial purposes, in part or in whole, is not permitted unless authorised by AUDI AG. AUDI AG does not guarantee or accept any liability with respect to the correctness of information in this document. Copyright by AUDI AG.

Removing

– Remove poly V-belt ⇒ page 32 .

– Remove toothed belt ⇒ page 61 .

– Remove crankshaft toothed belt sprocket. To do this, counterhold sprocket with special tool - 3415- .

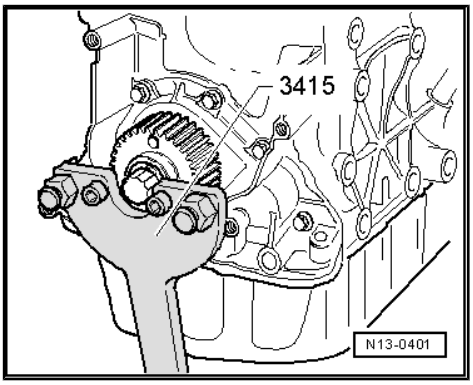

– Unscrew central bolt -1- for crankshaft toothed belt sprocket -2- and remove sprocket.

– Remove diamond-coated washer -3- from toothed belt sprocket.

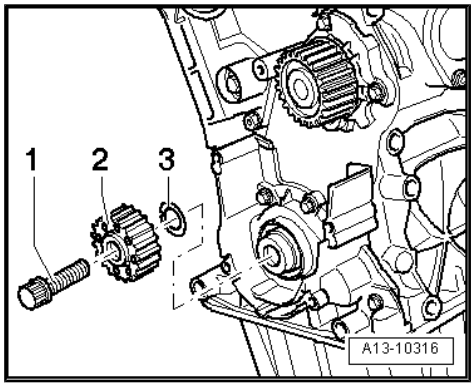

– Remove bolts -1 ... 10-.

– Lever off front sealing flange and remove.

– Drive out oil seal with flange removed.

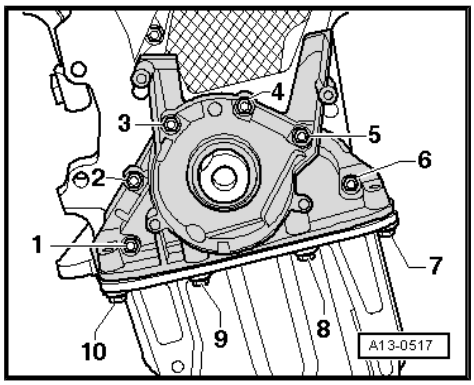

Installing

- Tightening torque ⇒ page 38

Note

Place a cloth over the exposed section of the sump.

– Carefully remove any sealant residue on the cylinder block and sump.

WARNING

Put on safety goggles.

– Remove sealant residue from sealing flange with rotating plastic brush or similar.

– Clean sealing surfaces; they must be free of oil and grease.

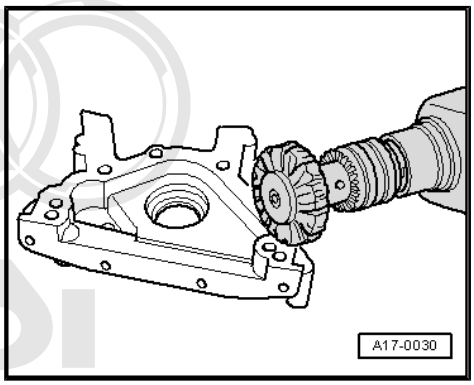

– Cut off tube nozzle at front marking (nozzle approx. 2 mm ∅).

Copyright by AUDI AG. Copies for private or commercial purposes, in part or in whole, is not permitted unless authorised by AUDI AG. AUDI AG does not guarantee or accept any liability with respect to the correctness of information in this document. Copyright by AUDI AG.

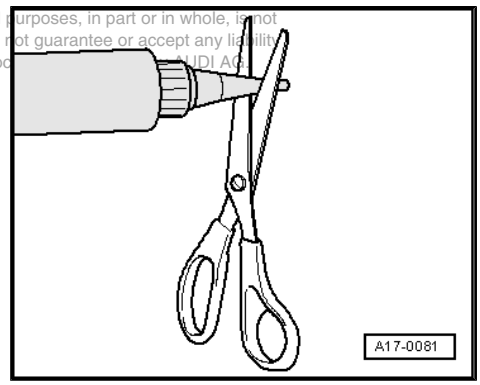

– Apply a thin bead of sealant at the edge of the joint between the cylinder block and the sump -arrows-.

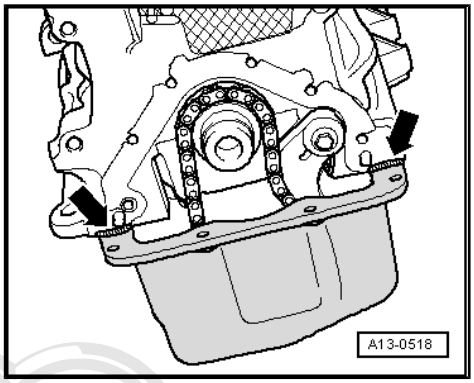

– Apply the bead of sealant onto the clean sealing surface of the sealing flange as illustrated -arrow-.

• Thickness of sealant bead: 2 ... 3 mm

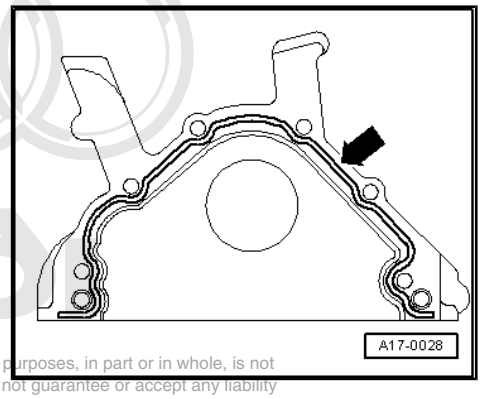

Caution

Make sure oil strainer is not clogged by excess sealant.

- *The sealant bead must not be thicker than specified.*

Protected by copyright. Copying for private or commercial purposes, in part or in whole, is not permitted unless authorised by AUDI AG. AUDI AG does not guarantee or accept any liability with respect to the correctness of information in this document. Copyright by AUDI AG.

Note

Sealant bead must not be wider than 3 mm, otherwise excess sealant could ingress into sump and clog strainer in oil intake pipe.

– Coat the lower sealing surface on the sealing flange lightly with sealant -hatched area-.

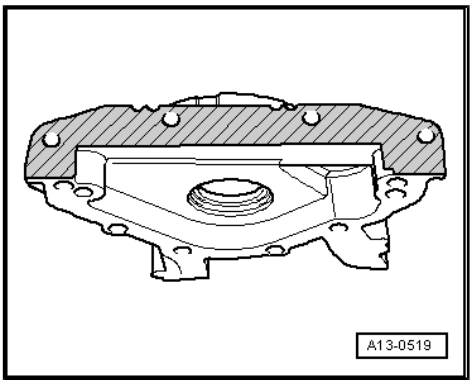

Note

The sealing flange must be installed within 5 minutes after applying sealant.

– Push the sealing flange carefully onto the dowel pins on the cylinder block.

Note

Use guide sleeve - T10053/1- to attach sealing flange with oil seal fitted.

– Tighten sealing flange bolts in three stages as follows:

1. Screw in bolts -1 ... 10- hand-tight.
2. Tighten bolts -1 ... 6- in diagonal sequence and in stages.
3. Then tighten bolts -7 ... 10-.

– Install crankshaft oil seal (pulley end) ⇒ page 41 .

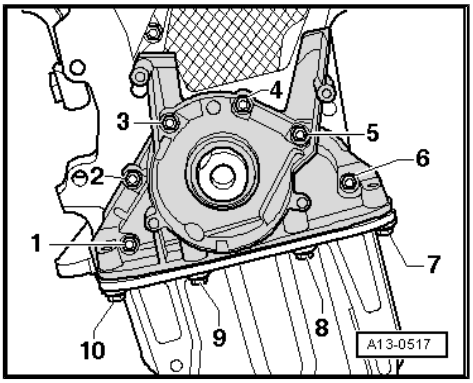

– Install crankshaft toothed belt sprocket -2- with new diamond-coated washer -3- and new central bolt -1-.

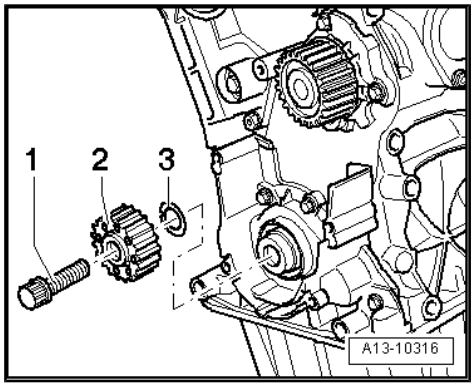

Note

- *Contact surfaces between toothed belt sprocket, diamond-coated washer and crankshaft must be free of oil.*
- *Do not lubricate bolt for crankshaft sprocket.*

– Use counterhold tool - 3415- to tighten crankshaft toothed belt sprocket.

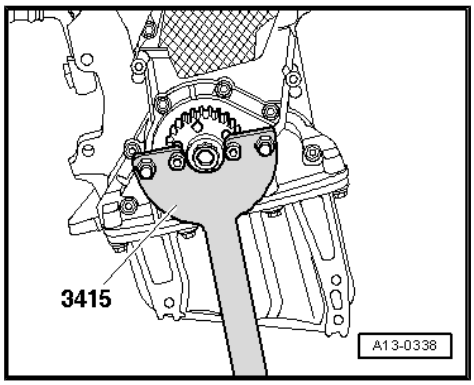

Remaining installation steps are carried out in reverse sequence; note the following:

– Install toothed belt ⇒ page 61 .

– Install crankshaft pulley ⇒ page 37 .

– Install poly V-belt ⇒ page 32 .

Note

Thread and shoulder must be free of oil and grease.

Protected by copyright. Copying for private or commercial purposes, in part or in whole, is not permitted unless authorised by AUDI AG. AUDI AG does not guarantee or accept any liability with respect to the correctness of information in this document. Copyright by AUDI AG.

2 Cylinder block (gearbox end)

2.1 Rear sealing flange and dual-mass flywheel - exploded view

Note

Servicing clutch ⇒ Rep. gr. 30

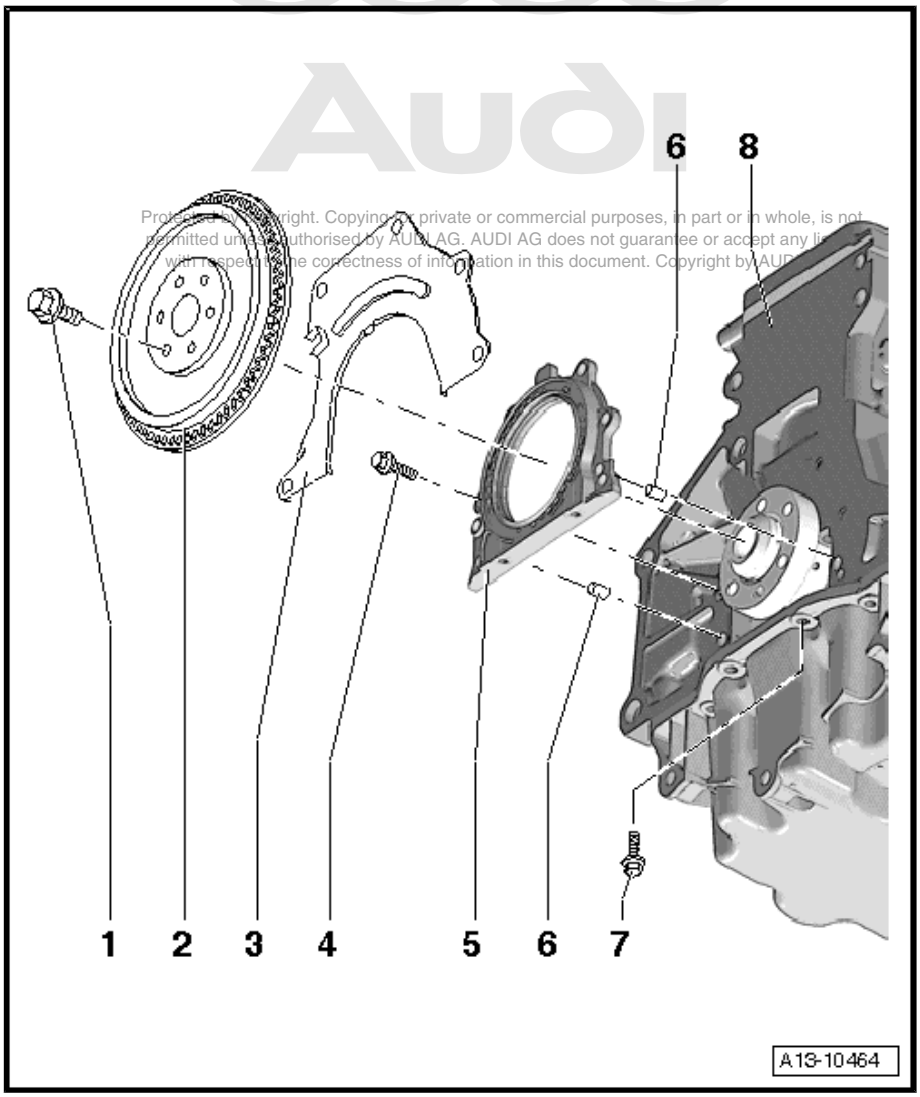

1 - Bolt

- ❑ For dual-mass flywheel/ drive plate
- ❑ 60 Nm + 90° (1/4 turn) further
- ❑ Renew

2 - Dual-mass flywheel

- ❑ Removing and installing dual-mass flywheel ⇒ page 48
- ❑ Can only be installed in one position. Holes are off-set

3 - Intermediate plate

- ❑ Must be positioned on dowel sleeves
- ❑ Do not damage/bend when assembling
- ❑ Is fitted onto sealing flange ⇒ page 48

4 - Bolt

- ❑ Tightening sequence ⇒ page 48

5 - Sealing flange with oil seal (rear)

- ❑ Renew only as complete unit
- ❑ Use guide sleeve provided when fitting
- ❑ Removing and installing ⇒ page 49
- ❑ Do not lubricate/grease sealing lip of oil seal
- ❑ Before installing, remove oil residue from crankshaft journal with a clean cloth.
- ❑ Guide sleeve is not to be removed until sealing flange has been slipped onto crankshaft journal

6 - Dowel pin

7 - Bolt

- ❑ Tightening sequence ⇒ page 48

8 - Cylinder block

- ❑ Removing and installing crankshaft ⇒ page 52
- ❑ Dismantling and assembling pistons and conrods ⇒ page 58

Tightening sequence (rear)

1. Screw in bolts -1 ... 8- hand-tight.
2. Tighten bolts -1 ... 6- in diagonal sequence and in stages to 15 Nm.
3. Tighten bolts -7 ... 8- to 15 Nm.

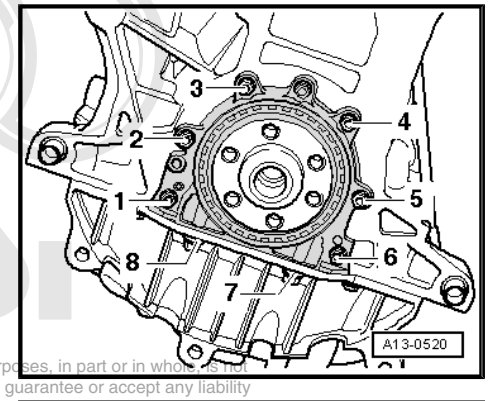

Protected by copyright. Copying for private or commercial purposes, in part or in whole is not permitted unless authorised by AUDI AG. AUDI AG does not guarantee or accept any liability with respect to the correctness of information in this document. Copyright by AUDI AG.

Installing intermediate plate

– Fit intermediate plate on sealing flange and push onto dowel sleeves -arrows-.

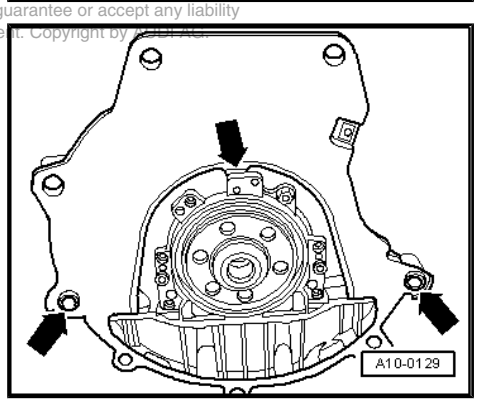

2.2 Removing and installing dual-mass flywheel

Special tools and workshop equipment required

♦ Counterhold tool - 3067-

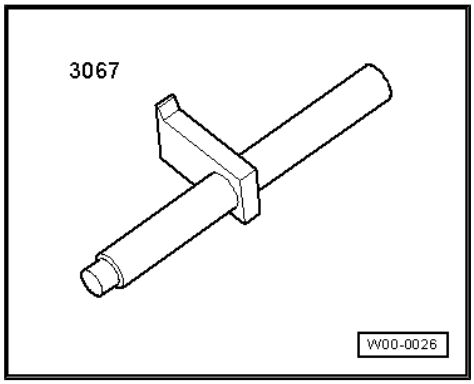

Removing

• Gearbox and clutch removed

> ⚠ **Caution**
>
> *To prevent damage to the dual-mass flywheel when removing, the bolts -B- must not be removed with an impact wrench or similar. The bolts may only be removed by hand using conventional tools.*

– Mark position of dual-mass flywheel in relation to engine.

– Rotate the dual-mass flywheel -A- so that the bolts -B- align centrally with the holes -arrows-.
– When unscrewing bolts -B-, ensure that none of the bolt heads come into contact with the dual-mass flywheel -arrows-. The flywheel will otherwise be damaged as the bolts are screwed out further.

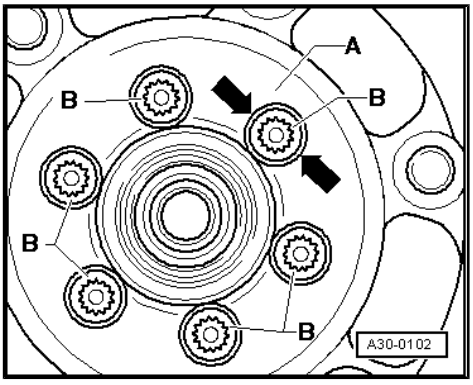

– Insert counterhold tool - 3067- in hole on cylinder block -B-.
– Unbolt dual-mass flywheel.

Installing

Installation is carried out in the reverse order; note the following:

• Tightening torque ⇒ page 47
– Use new securing bolts.

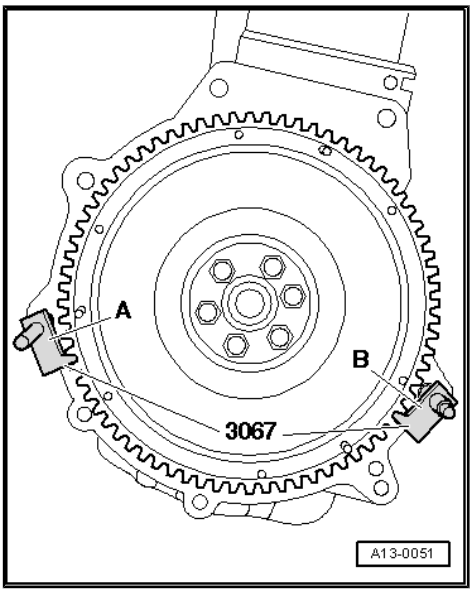

– Insert counterhold - 3067- in hole on cylinder block -A-.

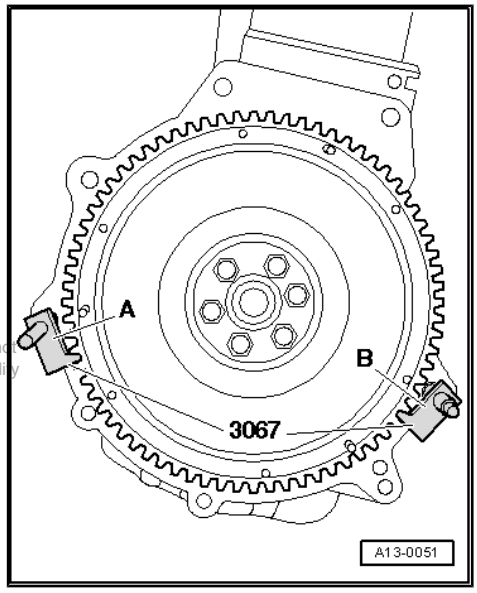

Protected by copyright. Copying for private or commercial purposes, in part or in whole, is not permitted unless authorised by AUDI AG. AUDI AG does not guarantee or accept any liability with respect to the correctness of information in this document. Copyright by AUDI AG.

2.3 Removing and installing sealing flange (rear)

Special tools and workshop equipment required

♦ Electric drill with plastic brush attachment
♦ Safety goggles

♦ Sealant ⇒ Parts catalogue

Removing

- Gearbox removed

– Remove dual-mass flywheel ⇒ page 48 .

– Detach intermediate plate at sealing flange and dowel sleeves -arrows-.

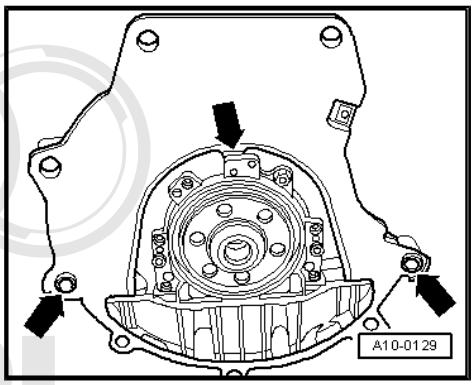

– Remove bolts -1 ... 8-.

– Pull off sealing flange (rear).

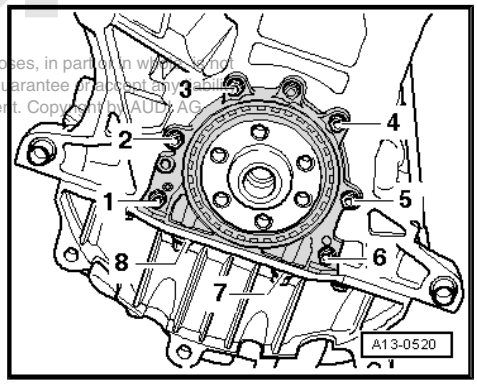

Protected by copyright. Copying for private or commercial purposes, in part or in whole, is not permitted unless authorised by AUDI AG. AUDI AG does not guarantee or accept any liability with respect to the correctness of information in this document. Copyright by AUDI AG.

Installing

- Tightening torques ⇒ page 47

Note

Place a cloth over the exposed section of the sump.

– Carefully remove any sealant residue on the cylinder block and sump.

– Clean sealing surfaces; they must be free of oil and grease.

– Cut off tube nozzle at front marking (nozzle approx. 2 mm ∅).

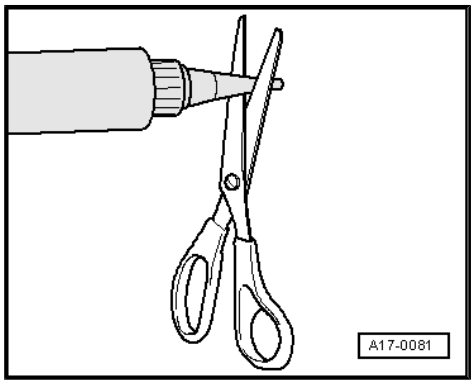

– Apply a thin bead of sealant at the edge of the joint between the cylinder block and the sump -arrows-.

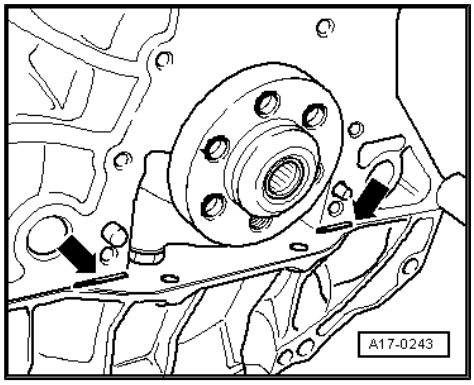

– Coat the lower sealing surface on the sealing flange lightly with sealant -hatched area-.

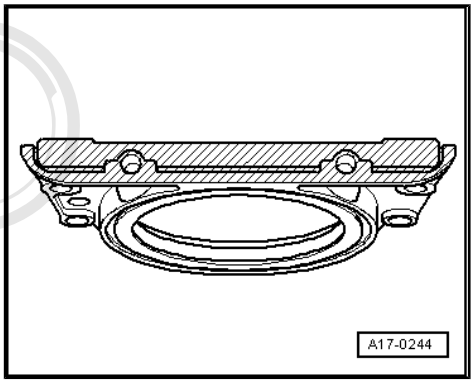

Caution

Make sure oil strainer is not clogged by excess sealant.

- *The sealant bead must not be thicker than specified.*

Note

The sealing flange must be installed within 5 minutes after applying sealant.

Protected by copyright. Copying for private or commercial purposes, in part or in whole, is not permitted unless authorised by AUDI AG. AUDI AG does not guarantee or accept any liability with respect to the correctness of information in this document. Copyright by AUDI AG.

– Carefully push sealing flange -2- together with guide sleeve -1- (fitted on replacement part) onto crankshaft when installing.

– Push the sealing flange carefully onto the dowel sleeves on the cylinder block.

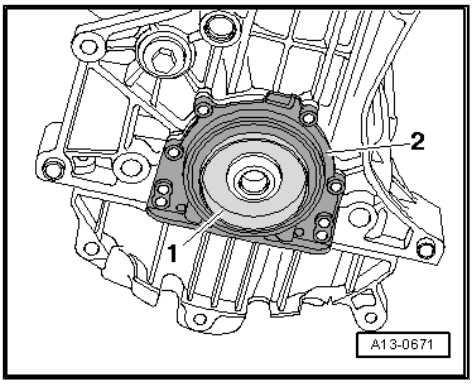

– Tighten bolts in the specified sequence:

1. Screw in bolts -1 ... 8- hand-tight.
2. Tighten bolts -1 ... 6- in diagonal sequence and in stages.
3. Tighten bolts -7 ... 8-.

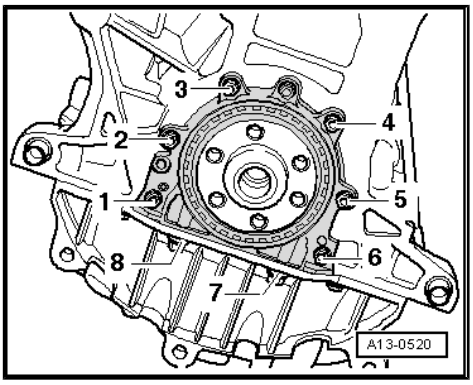

Remaining installation steps are carried out in reverse sequence; note the following:

– Fit intermediate plate on sealing flange and push onto dowel sleeves -arrows-.

– Install dual-mass flywheel ⇒ page 48 .

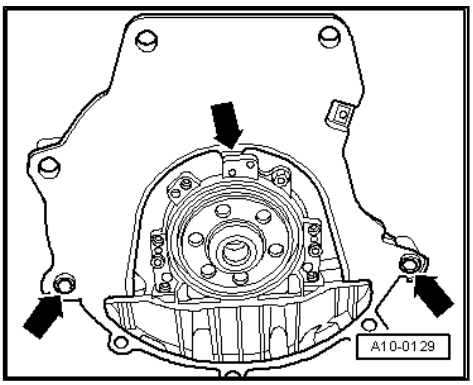

3 Crankshaft

3.1 Exploded view - crankshaft

Note

Secure engine to repair stand using engine and gearbox support - VAS 6095- when dismantling/assembling engine ⇒ page 21 *.*

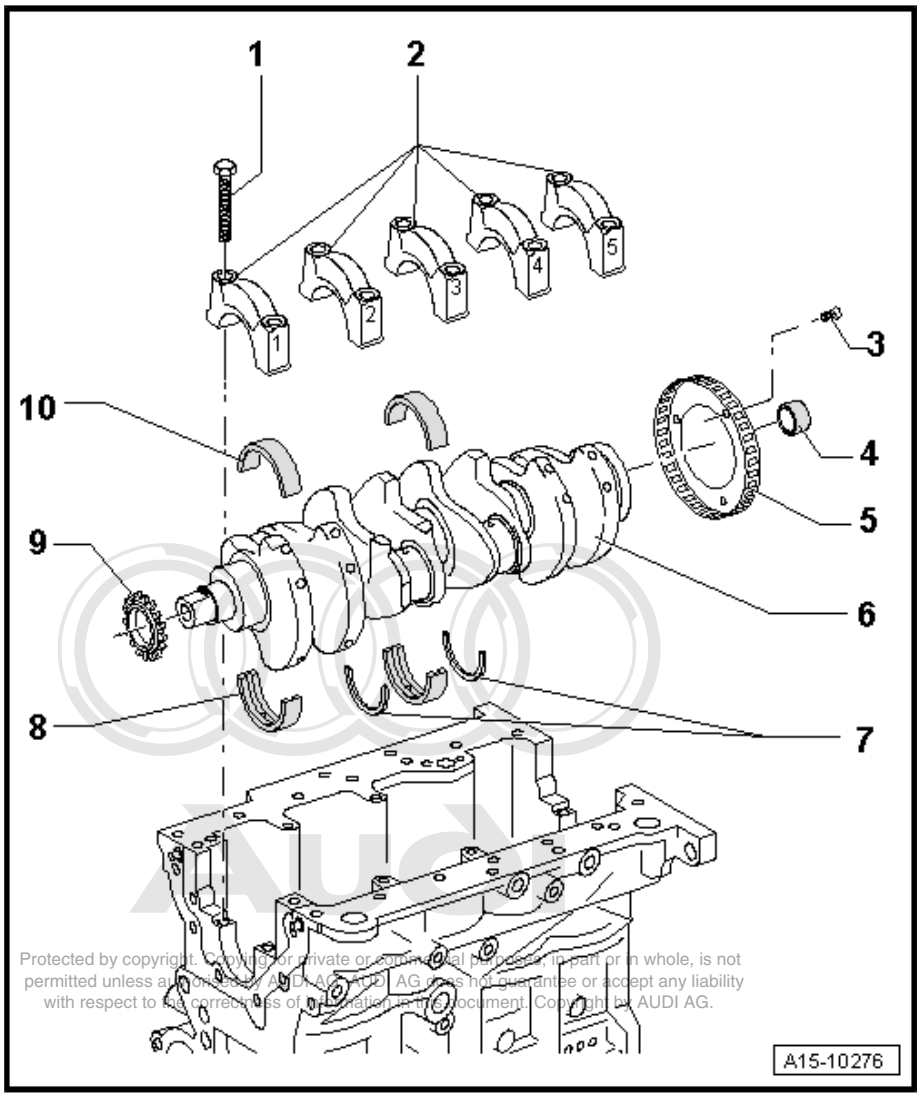

Protected by copyright. Copying for private or commercial purposes, in part or in whole, is not permitted unless authorised by AUDI AG. AUDI AG does not guarantee or accept any liability with respect to the correctness of information in this document. Copyright by AUDI AG.

1 - 65 Nm + 1/4 turn (90 °) further

2 - Bearing caps

- ❑ Bearing cap 1: Pulley end
- ❑ Bearing shell retaining lugs (cylinder block/ bearing cap) must be on the same side

3 - 10 Nm + 1/4 turn (90 °) further

- ❑ Renew
- ❑ Sender wheel must be renewed if bolts are loosened ⇒ page 53

4 - Needle bearing

- ❑ For vehicles with manual gearbox
- ❑ Extracting and driving in ⇒ page 55

5 - Sender wheel

- ❑ For engine speed sender - G28-
- ❑ Can only be installed in one position. Holes are off-set
- ❑ Sender wheel must be renewed if bolts are loosened
- ❑ Removing and installing ⇒ page 53

6 - Crankshaft

- ❑ Axial clearance when new: 0.07...0.23 mm; wear limit: 0.30 mm
- ❑ Check radial clearance with Plastigauge: New: 0.017...0.037 mm; wear limit: 0.15 mm
- ❑ Do not rotate the crankshaft when checking the radial clearance
- ❑ Crankshaft dimensions ⇒ page 54

7 - Thrust washers

- ❑ For bearing No. 3

8 - Bearing shell for cylinder block

- ❑ With oil groove
- ❑ Do not interchange used bearing shells (mark positions)

- ❑ Classification for replacement parts ⇒ page 53

9 - Chain sprocket

- ❑ For oil pump chain
- ❑ Renewing ⇒ page 56

10 - Bearing shell

- ❑ Without oil groove
- ❑ Do not interchange used bearing shells (mark positions)
- ❑ The crankshaft bearing shells in the bearing caps are only supplied as spare parts with “yellow” colour-coding.

Protected by copyright. Copying for private or commercial purposes, in part or in whole, is not permitted unless authorised by AUDI AG. AUDI AG does not guarantee or accept any liability with respect to the correctness of information in this document. Copyright by AUDI AG.

Removing and installing sender wheel

– Sender wheel -2- must always be renewed after slackening off bolts -1-.

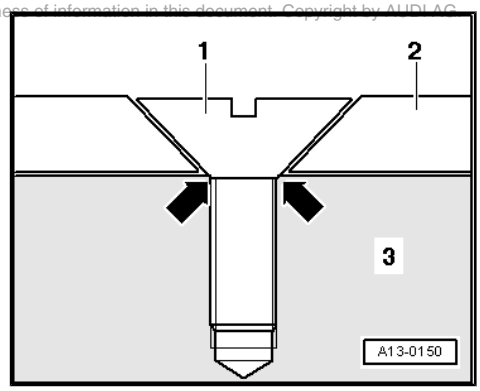

Note

- ♦ *If the countersunk bolts are tightened a second time, the seats for the bolt heads in the sender wheel will be deformed to such an extent that the bolt heads make contact with the crankshaft -3- -arrows- and the sender wheel beneath the bolts will be loose.*
- ♦ *Sender wheel can only be fitted in one position because holes are offset.*

- Tightening torque ⇒ page 52

Identification of top crankshaft bearings

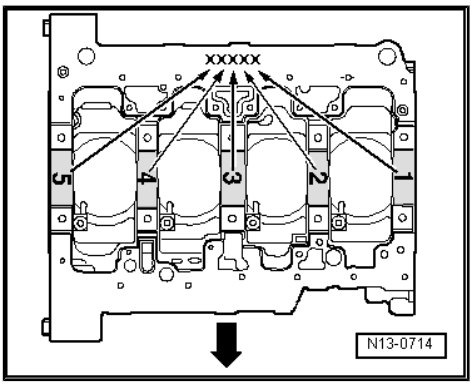

Note

Arrow points in direction of travel.

Top bearing shells of the correct thickness are allocated to the cylinder block at the factory. Coloured dots are used to identify the thickness of the bearing shells.

Letter codes on the lower sealing surface of the cylinder block indicate the thickness of the bearing shell to be fitted at each location.

B	=	Blue
R	=	Red
G	=	Yellow
S	=	Black
W	=	White

Note

- ♦ *Use blue bearing shells if the identification is no longer visible.*
- ♦ *The bottom crankshaft bearing shells are only supplied as replacement parts with “yellow” marking.*

3.2 Crankshaft dimensions

(in mm)

Honing dimension	Crankshaft main bearing journal ∅	Conrod journal ∅
Basic dimension	54.00 -0.017 -0.037	47.80 -0.022 -0.042

3.3 Measuring axial clearance of crankshaft

Special tools and workshop equipment required

- Universal dial gauge bracket - VW 387-

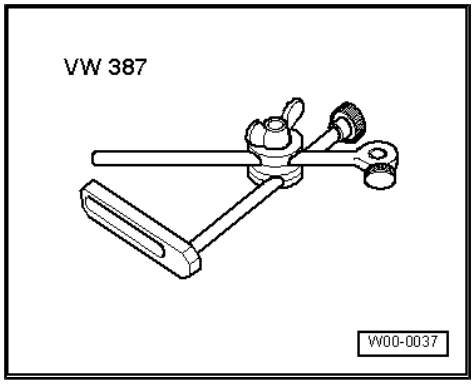

- Dial gauge - VAS 6079-

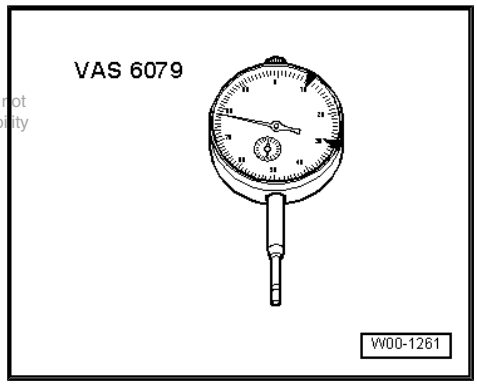

Protected by copyright. Copying for private or commercial purposes, in part or in whole, is not permitted unless authorised by AUDI AG. AUDI AG does not guarantee or accept any liability with respect to the correctness of information in this document. Copyright by AUDI AG.

Procedure

– Bolt dial gauge - VAS 6079- with dial gauge bracket - VW 387- onto cylinder block and set it against crank web.

– Push crankshaft against dial gauge by hand and set gauge to “0”.

– Push crankshaft away from dial gauge and read off value.

Axial clearance:

- New: 0.07 ... 0.23 mm.
- Wear limit: 0.30 mm.

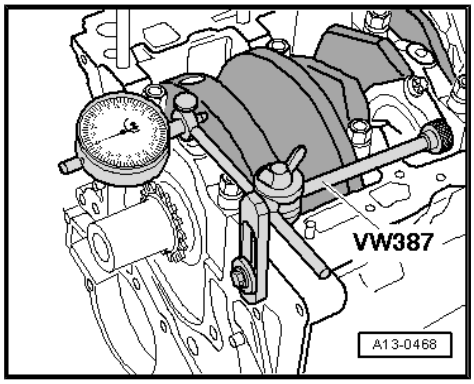

3.4 Measuring radial clearance of crankshaft

Special tools and workshop equipment required

- Plastigauge

Procedure

Note

- *Do not interchange used bearings.*
- *Bearing shells worn down to nickel layer must be renewed.*

– Remove main bearing caps and clean bearing caps and journals.

– Place Plastigauge onto bearing journal or into bearing shells (length of Plastigauge should correspond to width of bearing).

• The Plastigauge must be positioned in the centre of the bearing shell.

– Fit main bearing caps and tighten to 65 Nm without rotating crankshaft.

– Remove main bearing caps once more.

– Compare width of Plastigauge with measurement scale:

Radial clearance:

• New: 0.017 ... 0.037 mm.

• Wear limit: 0.15 mm.

Protected by copyright. Copying for private or commercial purposes, in part or in whole, is not permitted unless authorised by AUDI AG. AUDI AG does not guarantee or accept any liability with respect to the correctness of information in this document. Copyright by AUDI AG.

3.5 Extracting and driving in needle bearing for crankshaft

Special tools and workshop equipment required

- Puller - T10055-

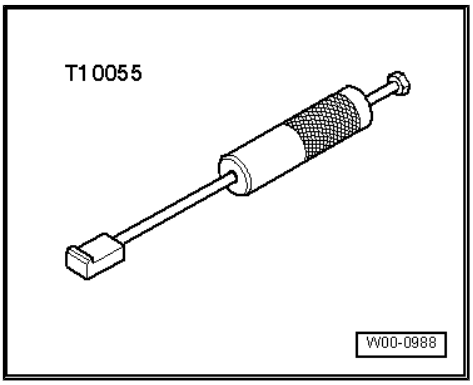

- With adapter - T10055/3-
- Centring mandrel - 3176-

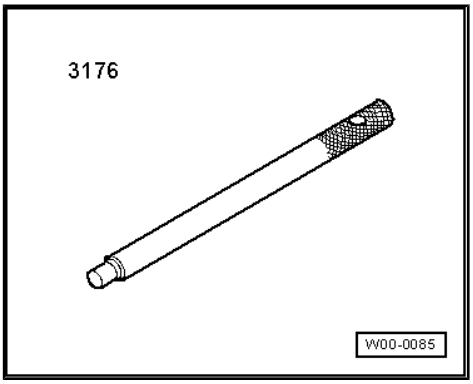

- Or drift - VW 207 C-
- Puller e.g. Kukko - 21/2-

Removing

– Extract with commercially available puller e.g. Kukko - 21/2- -arrow-, adapter - T10055/3- and puller - T10055- .

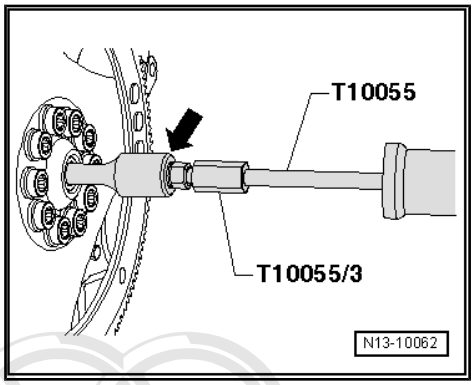

Installing

Note

The lettering on the needle bearing must be visible when installed.

– Drive in with drift - VW 207 C- or centring mandrel - 3176- .

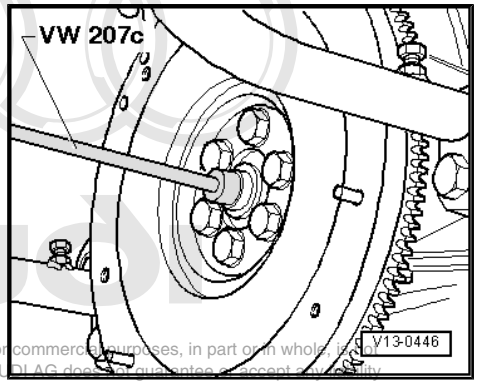

Protected by copyright. Copying for private or commercial purposes, in part or in whole, is not permitted unless authorised by AUDI AG. AUDI AG does not guarantee or accept any liability with respect to the correctness of information in this document. Copyright by AUDI AG.

Installation depth of -a- = 2 mm

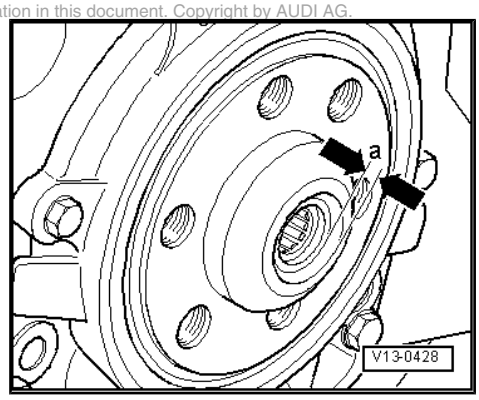

3.6 Removing and installing chain sprocket

Special tools and workshop equipment required

♦ Drift sleeve - 30 - 100-

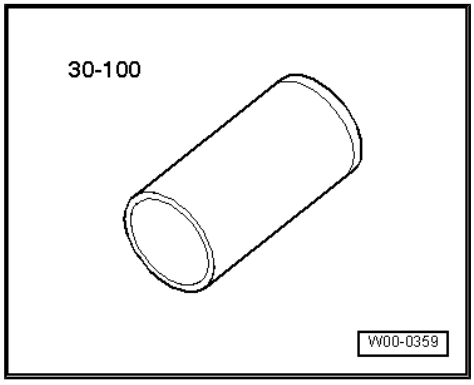

- Thrust plate - 40 - 105-

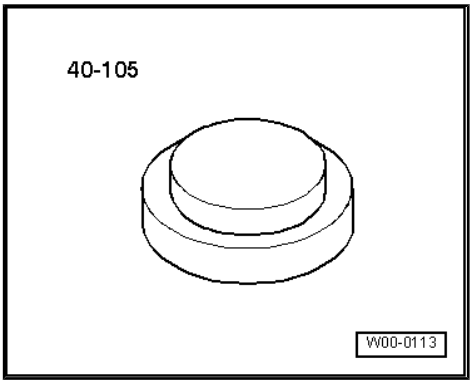

- Two-arm puller, commercially available
- Protective gloves

Removing

– Remove sump with oil pump ⇒ page 128 .

– Remove front sealing flange ⇒ page 42 .

– Pull chain sprocket off crankshaft with puller -2- (Kukko 44-1 or similar). Use special tool 40-105 to protect end of crankshaft.

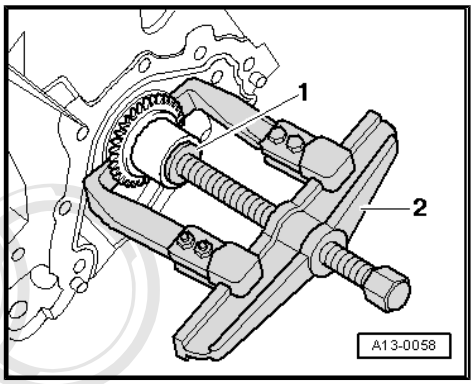

Installing

Installation is carried out in the reverse order; note the following:

> **WARNING**
>
> *Wear protective gloves.*

– Heat chain sprocket in oven for approx. 15 minutes to 220 °C.

Note

Installation position: wide collar on sprocket facing towards engine,

Protected by copyright. Copying for private or commercial purposes, in part or in whole, is not permitted unless authorised by AUDI AG. AUDI AG does not guarantee or accept any liability with respect to the correctness of information in this document. Copyright by AUDI AG.

– Fit chain sprocket on end of crankshaft using pliers, and press onto crankshaft as far as the stop using drift sleeve - 30 - 100- .

– Install sump with oil pump ⇒ page 128 .

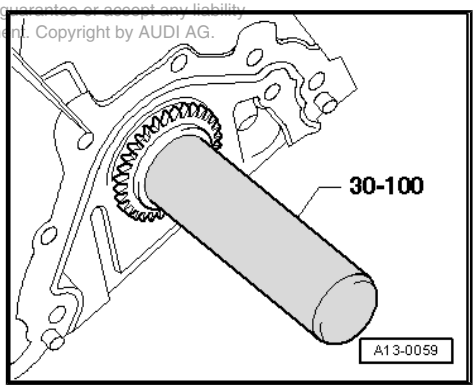

4 Exploded view - pistons and conrods

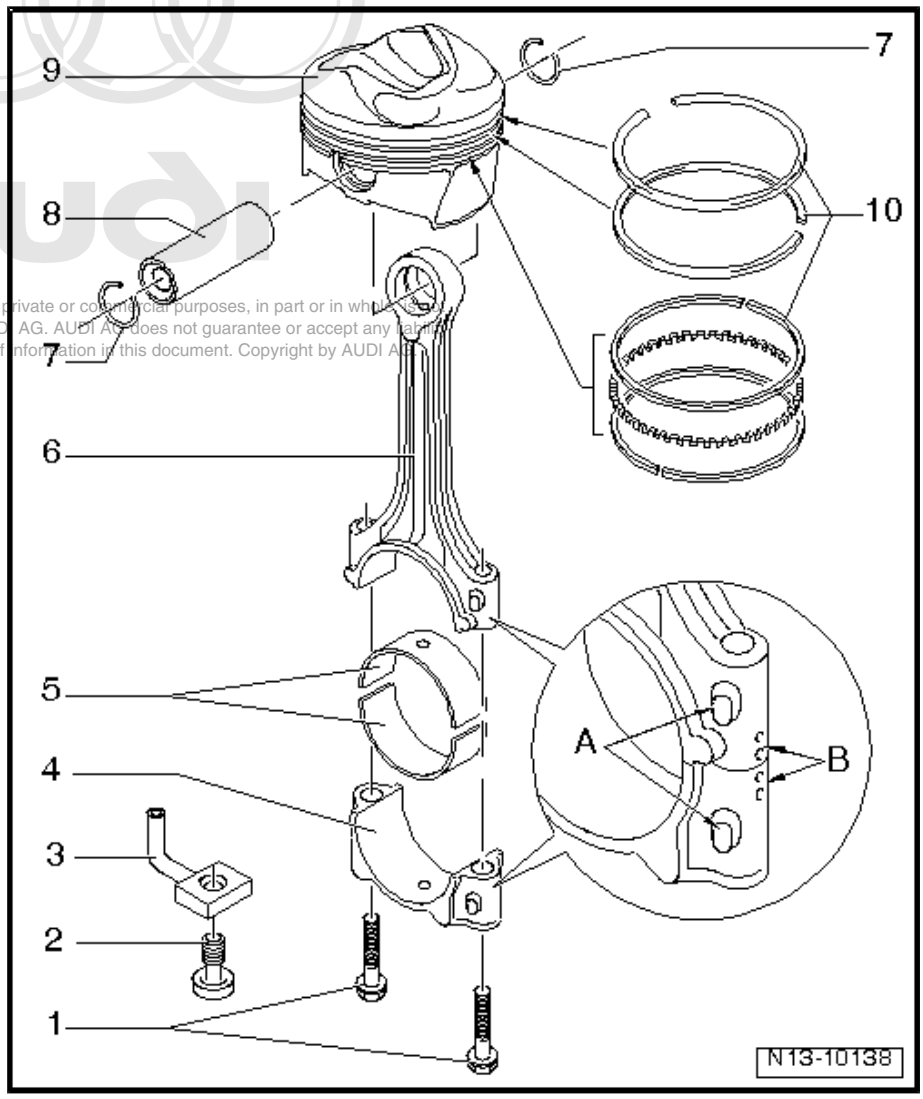

This document is intended for private or commercial purposes, in part or in whole, only with prior authorised by AUDI AG. AUDI AG does not guarantee or accept any liability with respect to the correctness of information in this document. Copyright by AUDI AG.

1 - Conrod bolt

- ❑ Vehicles with engine codes AXX, BPY, BWA: 30 Nm + turn 90° further
- ❑ Engines with code letters BHZ, BZC, CDLA, CDLC: 45 Nm + turn 90° further
- ❑ Renew
- ❑ Lubricate threads and contact surface
- ❑ Use old bolts when measuring radial clearance
- ❑ To measure radial clearance, tighten to 30 Nm but do not turn further

2 - Pressure relief valve

27 Nm

- ❑ Opening pressure: 1.6 ... 1.9 bar

3 - Oil spray jet

- ❑ For piston cooling

4 - Conrod bearing cap

- ❑ Note installation position
- ❑ Due to the cracking method used to separate the bearing cap from the conrod in manufacture, the caps only fit in one position and only on the appropriate conrod.
- ❑ Mark cylinder number -B-
- ❑ Installation position: Markings -A- face towards pulley end

5 - Bearing shells

- ❑ Upper bearing shell with oil hole for piston pin lubrication
- ❑ Installation position ⇒ page 60
- ❑ Do not interchange used bearing shells (mark positions)
- ❑ Axial clearance when new: 0.10...0.30 mm; wear limit: 0.40 mm
- ❑ Check radial clearance with Plastigauge - (new): 0.02 ... 0.06 mm; wear limit: 0.09 mm. Do not turn crankshaft when measuring radial clearance

6 - Conrod

- ❑ Only renew as a complete set
- ❑ Mark cylinder number -B-
- ❑ Installation position: Markings -A- face towards pulley end
- ❑ With oil drilling for piston pin lubrication

7 - Circlip

8 - Piston pin

- ❑ If difficult to move, heat piston to approx. 60 °C
- ❑ Remove and install using drift - VW 222 A-

9 - Piston

- ❑ Checking ⇒ page 60
- ❑ Mark installation position and cylinder number
- ❑ Arrow on piston crown points to pulley end
- ❑ Install using piston ring clamp
- ❑ Piston and cylinder dimensions ⇒ page 60
- ❑ Checking cylinder bore ⇒ page 60

10 - Piston rings

- ❑ Offset gaps by 120 °
- ❑ Use piston ring pliers to remove and install
- ❑ “TOP” must face towards piston crown
- ❑ Checking ring gap ⇒ page 59
- ❑ Checking ring-to-groove clearance ⇒ page 59

Copyright by AUDI AG. Copying for private or commercial purposes, in part or in whole, is not permitted unless authorised by AUDI AG. AUDI AG does not guarantee or accept any liability with respect to the accuracy of the information. Copyright by AUDI AG.

Checking piston ring gap

– Insert ring at right angle to cylinder wall from above and push down into lower cylinder opening approx. 15 mm from bottom of cylinder. Use a piston without rings to push ring into bore.

Piston ring (in mm)	New	Wear limit
Compression ring	0.20 … 0.40	0.8
Oil scraper ring	0.25 … 0.55	0.8

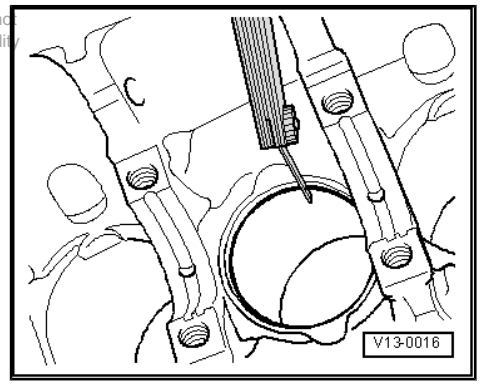

Checking ring-to-groove clearance

– Clean groove in piston before checking clearance.

Piston ring (in mm)	New	Wear limit
Compression ring	0.035 … 0.075	0.15
Oil scraper ring	0.03 … 0.065	0.15

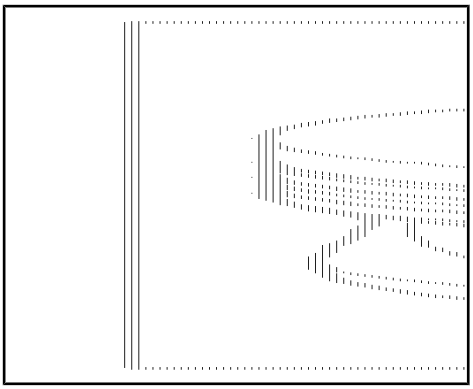

Checking piston

– Measure approx. 10 mm from the bottom edge, perpendicular to the piston pin axis.

♦ Difference between actual and nominal diameter: not more than 0.04 mm.

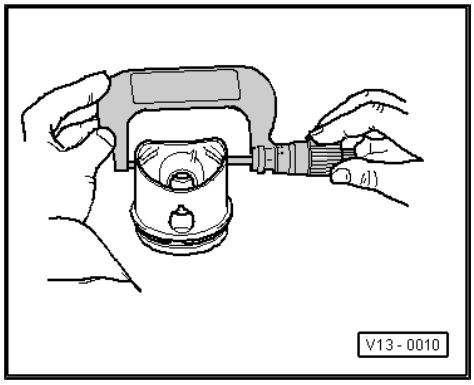

Checking cylinder bore

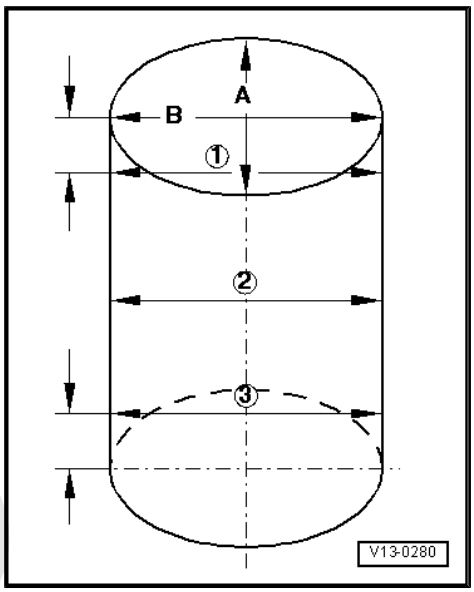

Special tools and workshop equipment required

♦ Cylinder dial gauge 50...100 mm

– Take measurements at 3 positions in both lateral direction -A- and longitudinal direction -B-.

♦ Difference between actual and nominal diameter: not more than 0.08 mm.

Protected by copyright. Copying for private or commercial purposes, in part or in whole, is not permitted unless authorised by AUDI AG. AUDI AG does not guarantee or accept any liability with respect to the correctness of information in this document. Copyright by AUDI AG.

Installation position of bearing shell

Bearing shell -1- with oil drilling -arrow- for conrod.

Bearing shell -2- without oil drilling for conrod bearing cap.

– Position bearing shells in centre of conrod and conrod bearing cap when fitting.

Dimension -a- must be identical on both sides.

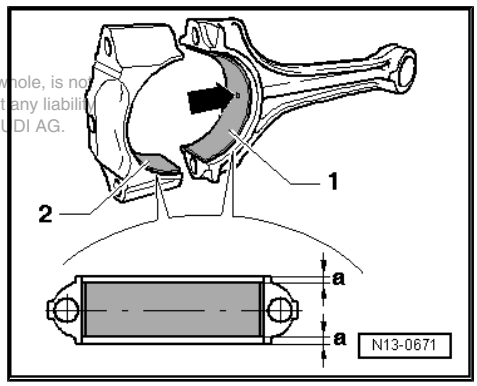

4.1 Piston and cylinder dimensions

Honing dimension	Piston ∅	Cylinder bore ∅
Basic dimension mm	82.465 1)	82.51

• 1) Dimensions not including graphite coating (thickness 0.02 mm). The graphite coating will wear down in service.

15 – Cylinder head, valve gear

1 Toothed belt drive

Toothed belt drive, vehicles without separate toothed belt covers

Exploded view ⇒ page 61

Removing and installing ⇒ page 64

Toothed belt drive, vehicles with separate toothed belt covers

Exploded view ⇒ page 72

Removing and installing ⇒ page 75

1.1 Toothed belt drive - exploded view (vehicles without separate toothed belt covers)

Protected by copyright. Copying for private or commercial purposes, in part or in whole, is not permitted unless authorised by AUDI AG. AUDI AG does not guarantee or accept any liability with respect to the correctness of information in this document. Copyright by AUDI AG.

Note

Vehicles from 01/2006 onwards are fitted with a new type of toothed belt cover. Identification: the top section of the toothed belt cover has no cap ⇒ Item 25 (page 63) and the toothed belt cover is divided near the engine support. Vehicles with separate toothed belt covers - exploded view ⇒ page 75 .

Mark the rotation direction of the toothed belt with chalk or felt-tip pen before removing. If the belt runs in the opposite direction when it is refitted, this can cause breakage.

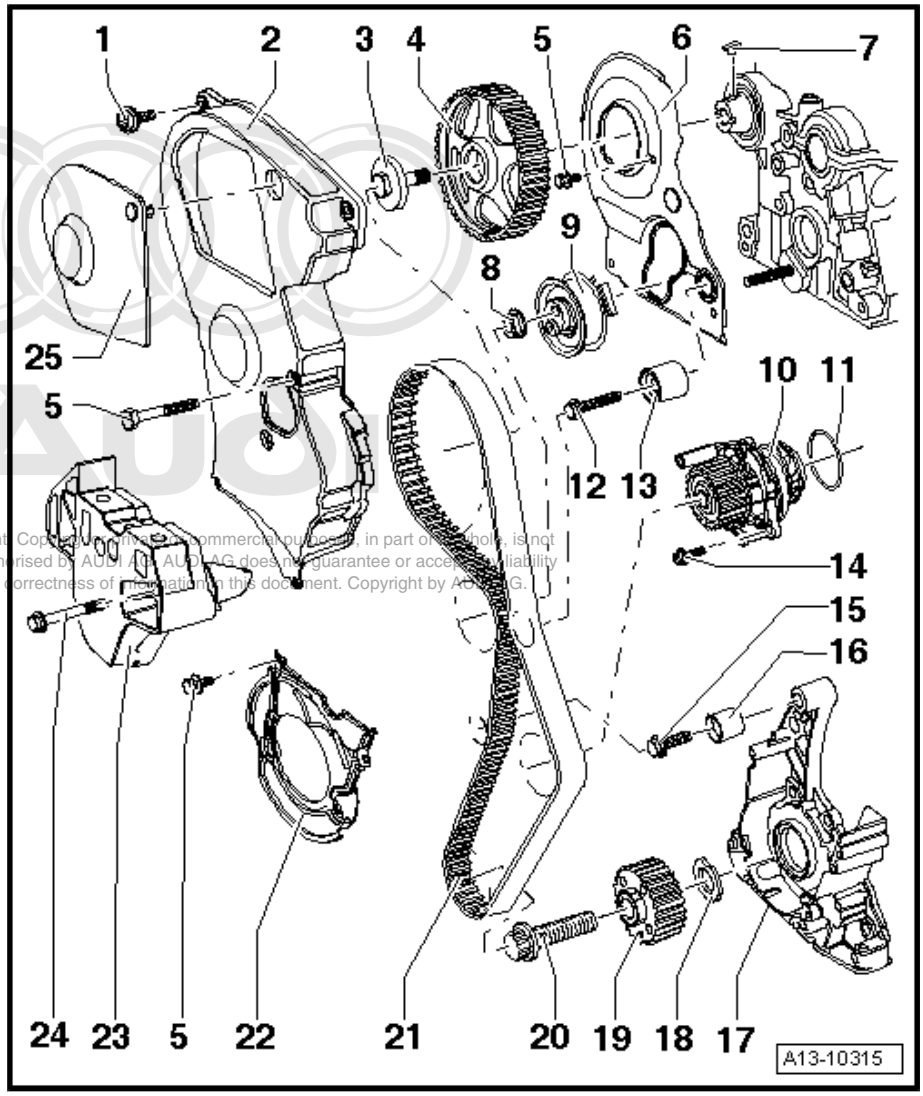

1 - Bolt

- ❑ 10 Nm
- ❑ Apply locking fluid when fitting
- ❑ Locking fluid ⇒ Parts catalogue

2 - Toothed belt cover (top)

3 - Bolt

- ❑ 50 Nm + turn 180° further
- ❑ Renew
- ❑ Use counterhold tool -3036- when loosening and tightening ⇒ page 63

4 - Camshaft sprocket

- ❑ Before removing and installing component, remove toothed belt ⇒ page 64
- ❑ Installation position fixed by Woodruff key ⇒ Item 7 (page 62)
- ❑ Detaching camshaft sprocket ⇒ page 63

5 - Bolt

- ❑ 10 Nm
- ❑ Apply locking fluid when fitting
- ❑ Locking fluid ⇒ Parts catalogue

6 - Toothed belt cover (rear)

7 - Woodruff key

- ❑ Check for firm attachment

8 - Nut

- ❑ 25 Nm

9 - Semi-automatic tensioning roller

10 - Coolant pump

- ❑ Removing and installing ⇒ page 165

11 - O-ring

- ❑ Renew
- ❑ Lubricate with coolant

12 - Bolt

- ❑ 25 Nm

13 - Damper wheel

14 - Bolt

- ❑ 15 Nm

15 - Bolt

- ❑ 35 Nm

Protected by copyright. Copying for private or commercial purposes, in part or in whole, is not permitted unless authorised by AUDI AG. AUDI AG does not guarantee or accept any liability with respect to the correctness of information in this document. Copyright by AUDI AG.

16 - Damper wheel

17 - Sealing flange

- ❑ Removing and installing ⇒ page 42

18 - Diamond-coated washer for toothed belt sprocket

- ❑ Renew washer if toothed belt sprocket is removed

19 - Crankshaft sprocket

- ❑ Contact surface between sprocket and crankshaft must be free of oil
- ❑ Can only be installed in one position

20 - Bolt

- ❑ 90 Nm + 90° ($^1/_4$ turn) further
- ❑ Renew
- ❑ Do not lubricate with oil
- ❑ Attaching counterhold tool -3415- ⇒ page 64

21 - Toothed belt

- ❑ Before removing, mark direction of rotation with chalk or felt-tip pen
- ❑ Check for wear
- ❑ Removing ⇒ page 64
- ❑ Installing (adjusting valve timing) ⇒ page 64

22 - Toothed belt cover (bottom)

23 - Engine support

- ❑ Removing ⇒ Removing and installing toothed belt ⇒ page 64

24 - Bolt

- ❑ 40 Nm
- ❑ Observe correct tightening sequence ⇒ page 71

permitted unless authorised by AUDI AG. AUDI AG does not guarantee or accept any liability
information in this document. Copyright by AUDI AG.

25 - Cap for toothed belt cover

Loosening camshaft sprocket

– Use counterhold - 3036- when loosening and tightening central bolt.

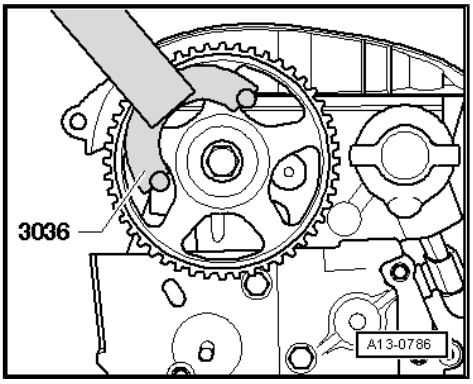

Detaching camshaft sprocket

– Use two-arm puller - T40001- with claws T40001/6 and T40001/7 to detach camshaft sprocket.

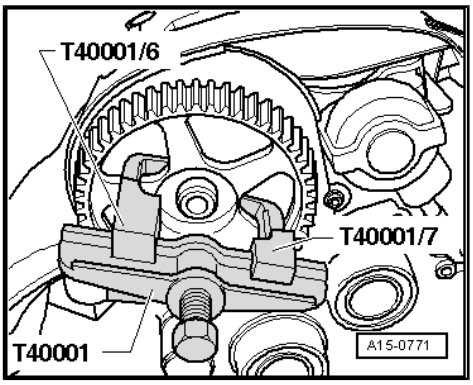

Removing and installing crankshaft sprocket

– Use counterhold - 3415- when loosening and tightening central bolt.

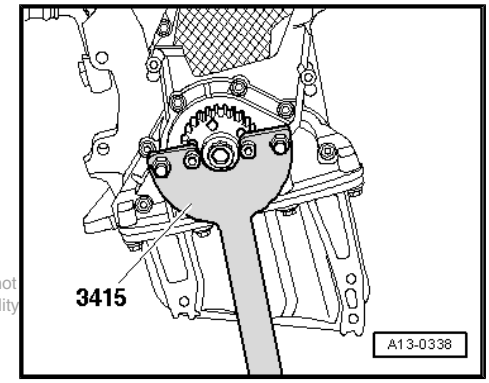

Protected by copyright. Copying for private or commercial purposes, in part or in whole, is not permitted unless authorised by AUDI AG. AUDI AG does not guarantee or accept any liability with respect to the correctness of information in this document. Copyright by AUDI AG.

1.2 Removing and installing toothed belt (vehicles without separate toothed belt covers)

Note

Vehicles from 01/2006 onwards are fitted with a new type of toothed belt cover. Identification: the top section of the toothed belt cover has no cap ⇒ Item 25 (page 63) and the toothed belt cover is divided near the engine support. Removing and installing toothed belt (vehicles with separate toothed belt covers) ⇒ page 75 .

Special tools and workshop equipment required

♦ Support bracket - 10 - 222 A-

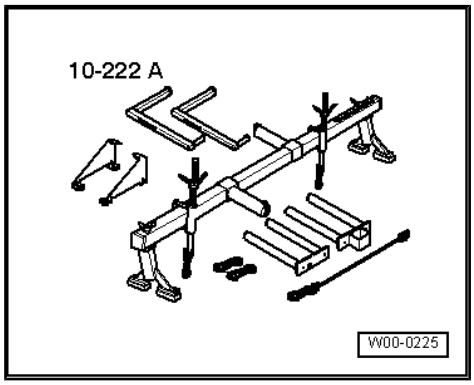

♦ Shackle - 10 - 222 A /12-

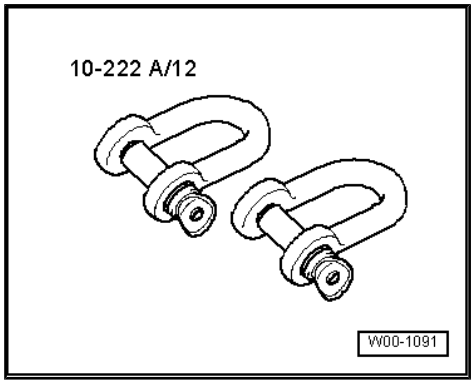

♦ Pin wrench - T10020-

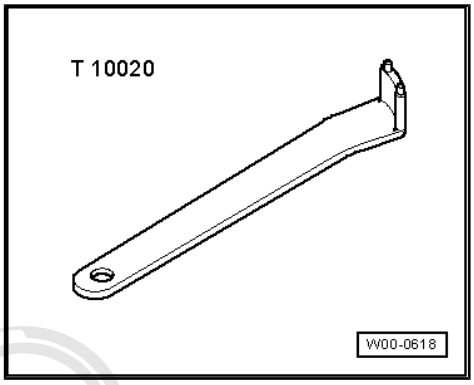

♦ Locking pin - T10060A-

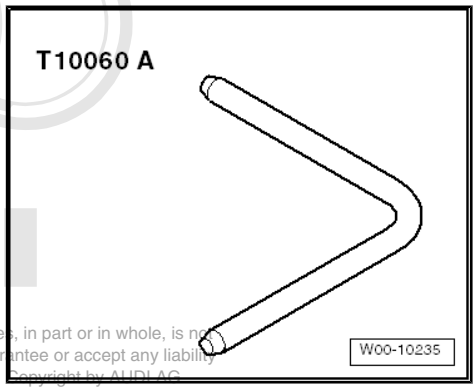

Protected by copyright. Copying for private or commercial purposes, in part or in whole, is not permitted unless authorised by AUDI AG. AUDI AG does not guarantee or accept any liability with respect to the correctness of information in this document. Copyright by AUDI AG.

Removing

– Detach engine cover panel with air cleaner ⇒ Rep. gr. 24 .

> ⚠ WARNING
>
> *Hot steam/hot coolant may escape when opening expansion tank. Cover filler cap with cloth and open carefully.*

– Open filler cap on coolant expansion tank.
– Remove noise insulation ⇒ Rep. gr. 50 .
– Remove noise insulation (right-side) -fasteners 1 ... 3-.

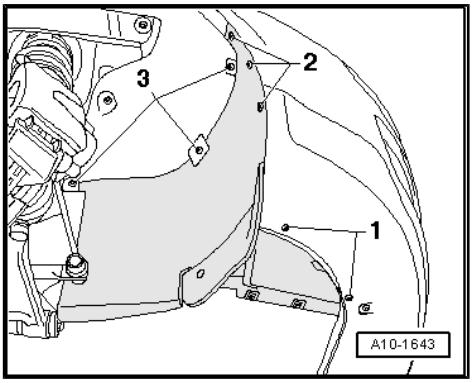

– Unscrew bolts -1 ... 3- and remove pendulum support.

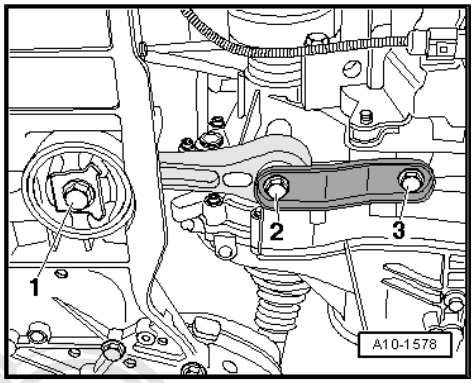

– Unscrew bolts -arrows- and remove charge air pipe together with hoses.

– Drain off coolant ⇒ page 157

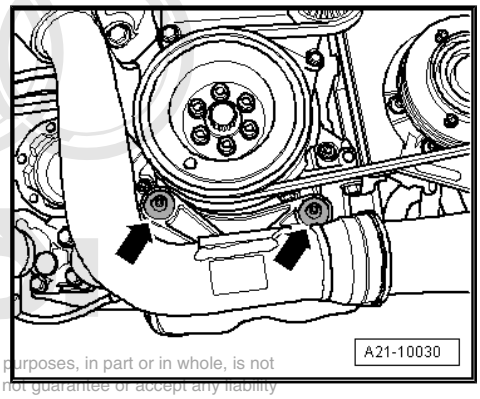

> ⚠ **WARNING**
>
> ***Fuel supply line is pressurised. Wear safety goggles and protective clothing to avoid possible injury and skin contact. Before opening hose connections wrap a cloth around the connection. Then release pressure by carefully pulling hose off connection.***

Protected by copyright. Copying for private or commercial purposes, in part or in whole, is not permitted unless authorised by AUDI AG. AUDI AG does not guarantee or accept any liability with respect to the correctness of information in this document. Copyright by AUDI AG.

– Mark fuel line -1- and line going to ACF -2-.

– Disconnect fuel line -1-.

– Disconnect ACF line -2-.

– Disconnect ACF line going to tank -3-.

– Lift out ACF in -direction of arrow-.

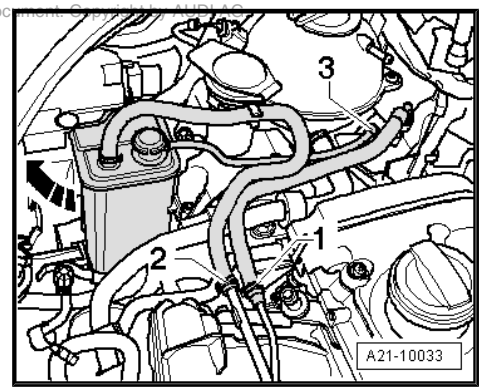

– Detach the coolant hose at the bracket -1-.

– Remove bracket for activated charcoal filter -arrows-.

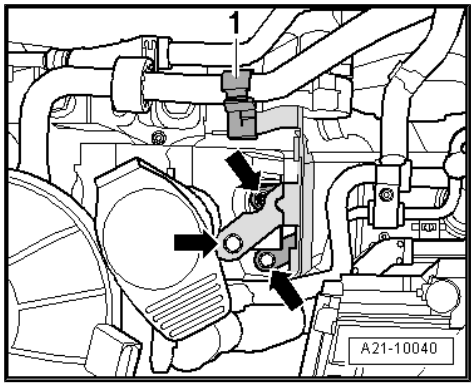

– Unbolt filler neck for windscreen washer reservoir -1-.
– Remove retaining clip; to do so, unscrew bolts -2 and 3-.

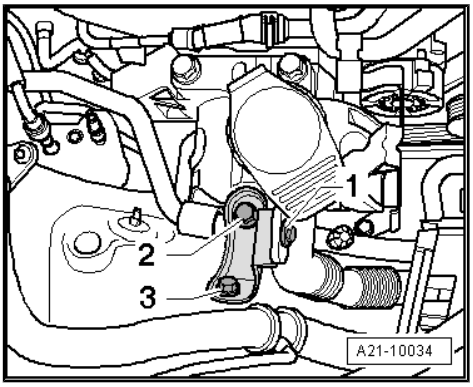

– Unplug electrical connector -1- from coolant level indicator.
– Detach coolant expansion tank -arrows-.

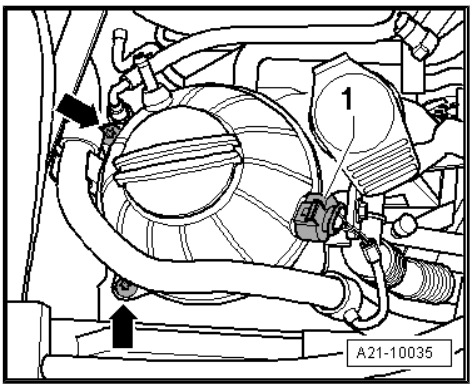

– Disconnect coolant pipe -arrow-.
– Remove poly-V belt and remove locking pin - T10060A- ⇒ page 32 .

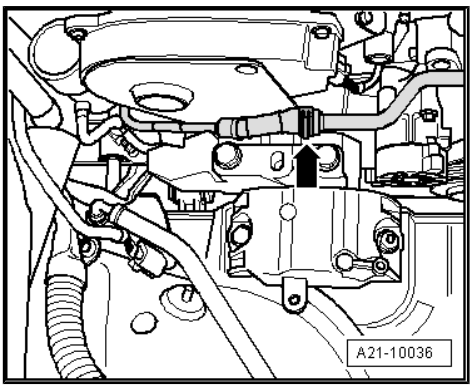

– Position support bracket - 10 - 222 A- on bolted flanges of wing panels. The spindles face forwards.
– Attach hooks of spindles with shackles - 10 - 222 A /12- to the lifting eyes.

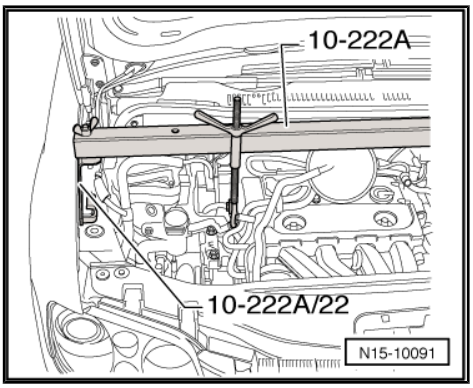

Protected by copyright. Copying for private or commercial purposes, in part or in whole, is not permitted unless authorised by AUDI AG. AUDI AG does not guarantee or accept any liability with respect to the correctness of information in this document. Copyright by AUDI AG.

– Remove securing bolts from assembly mounting/engine support -arrows- and remove complete assembly mounting.

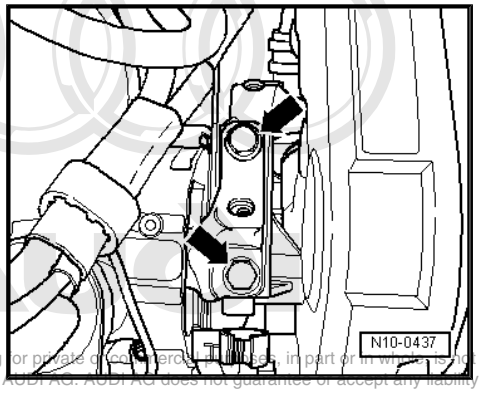

Caution

When raising engine with support bracket - 10-222A- , ensure that components/hoses are not damaged, stretched or torn off.

Protected by copyright. Copying for private or commercial purposes, in part or in whole, is not permitted unless authorised by AUDI AG. AUDI AG does not guarantee or accept any liability with respect to the correctness of information in this document. Copyright by AUDI AG.

– Raise engine with support bracket - 10-222A- until it is possible to loosen and remove the two top bolts -1 and 2- securing the engine support.

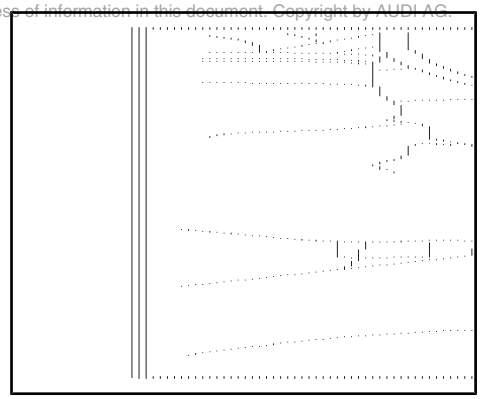

– Set camshaft sprocket to TDC marking by turning crankshaft. Marking on camshaft sprocket must align with arrow on toothed belt cover.

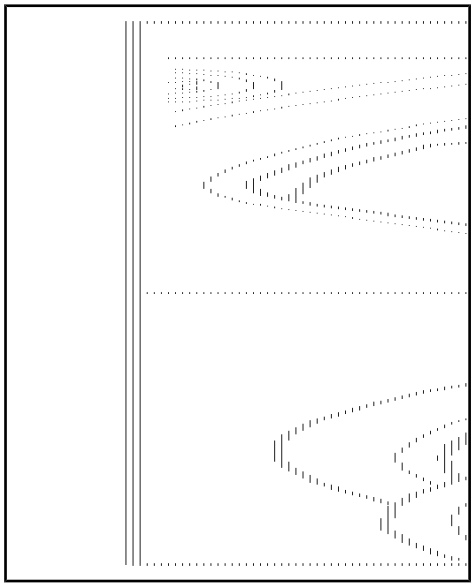

– Remove vibration damper / pulley.

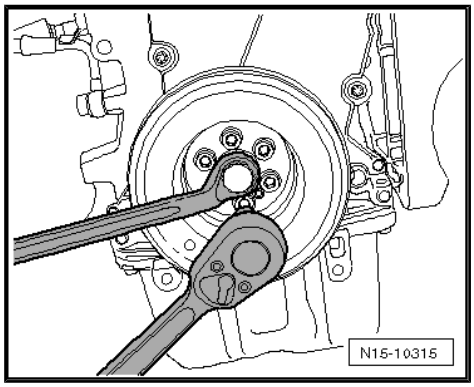

– Unscrew bolts from toothed belt cover (bottom) -arrows-.

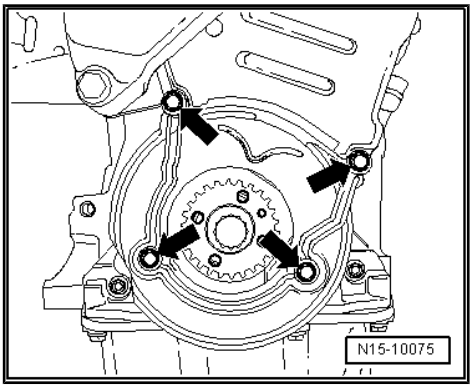

– Loosen bottom bolt -3- and remove engine support from below.

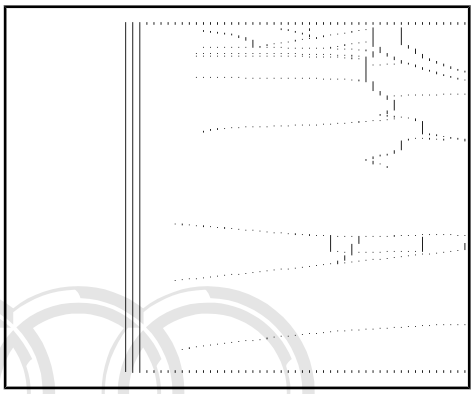

– Unscrew remaining toothed belt cover bolts -arrows- and remove toothed belt cover from engine.
– Mark direction of rotation of toothed belt.
– Loosen tensioning roller and remove toothed belt.
– Turn crankshaft back slightly.

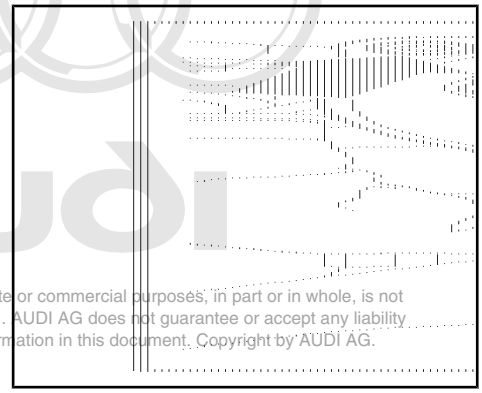

Installing

• Tightening torques ⇒ page 61

Protected by copyright. Copying for private or commercial purposes, in part or in whole, is not permitted unless authorised by AUDI AG. AUDI AG does not guarantee or accept any liability with respect to the correctness of information in this document. Copyright by AUDI AG.

Note

♦ *When turning the camshaft, the crankshaft must not be at TDC. Otherwise, there is a risk of damage to valves and piston crowns.*

♦ *The engine must be no more than warm to touch.*

– Fit toothed belt on crankshaft sprocket (note rotation direction).
– Secure toothed belt cover (bottom section) with the two bolts at the bottom.
– Install vibration damper / pulley with new bolts.

– Turn crankshaft and camshaft to TDC No. 1 cylinder -arrows-.

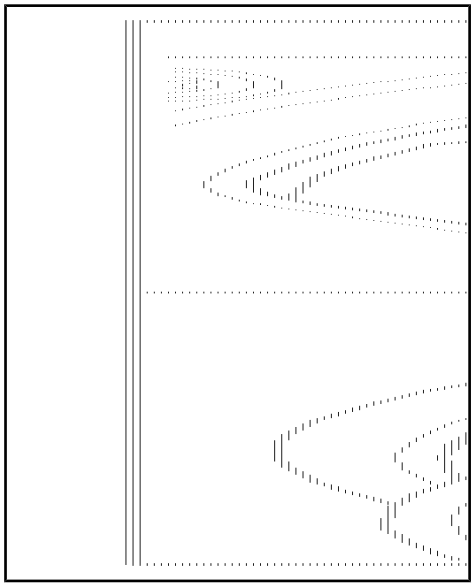

– Fit toothed belt in the sequence: tensioning roller, camshaft sprocket, coolant pump and last onto idler roller -arrow-.

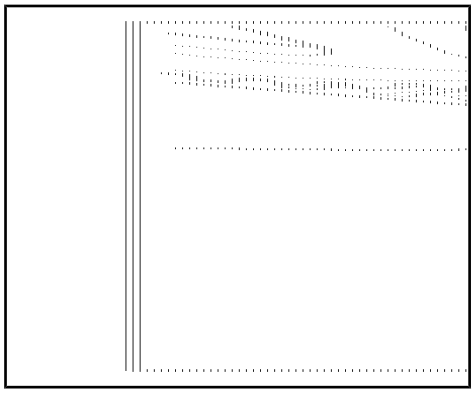

Note

Check tensioning roller is seated correctly in cylinder head.

Protected by copyright. Copying for private or commercial purposes, in part or in whole, is not permitted without the consent of AUDI AG. AUDI AG does not guarantee or assume any liability with respect to the correctness of information in this document. Copyright by AUDI AG.

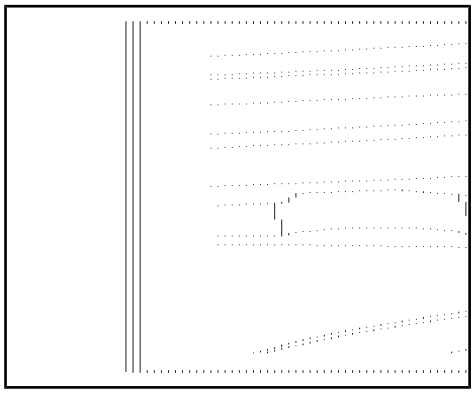

– Tension toothed belt. To do so, turn hexagon key at the eccentric adjuster clockwise (direction of arrow) until the notch is above the indicator.

– Then release tension on toothed belt.

– Now tension toothed belt until the notch and the indicator are aligned.

– Tighten securing nut

– Turn crankshaft two turns in direction of engine rotation and set again to TDC. Make sure that the engine is rotated without stopping during the final 45° ($^1/_8$ turn).

– Check tension of toothed belt again. Specification: indicator and notch must align.

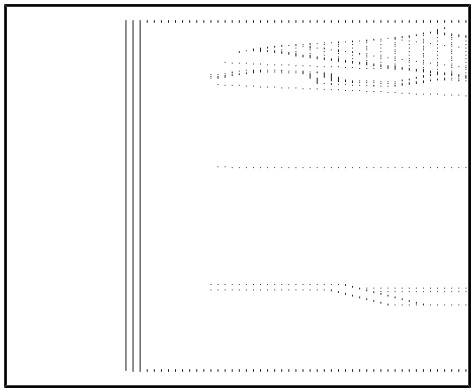

– Check valve timing again.

If the markings do not align:

– Repeat adjustment of valve timing.

If the markings align:

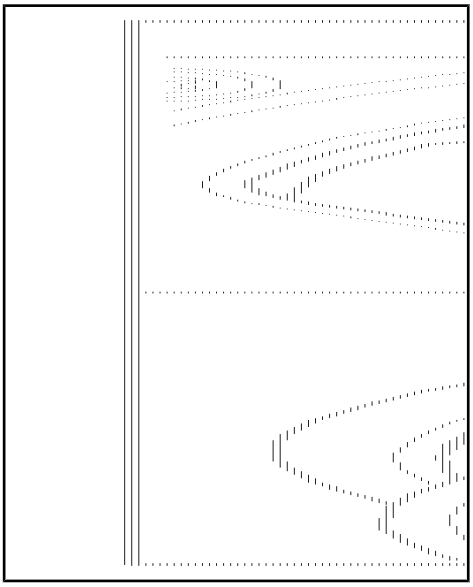

– Install toothed belt cover -arrows-.

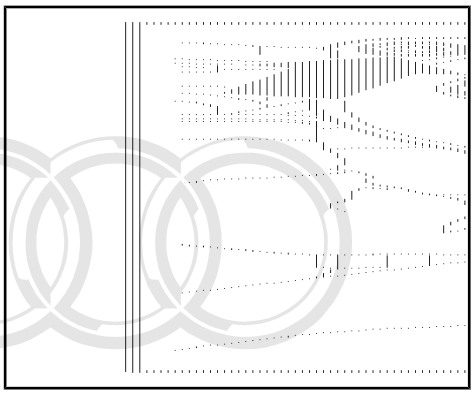

Note

Note different bolt lengths. Bolt -3- is approx. 25 mm shorter than bolts -1 and 2-.

Protected by copyright. Copying for private or commercial purposes, in part or in whole, is not permitted unless authorised by AUDI AG. AUDI AG does not guarantee or accept any liability with respect to the correctness of information in this document. Copyright by AUDI AG.

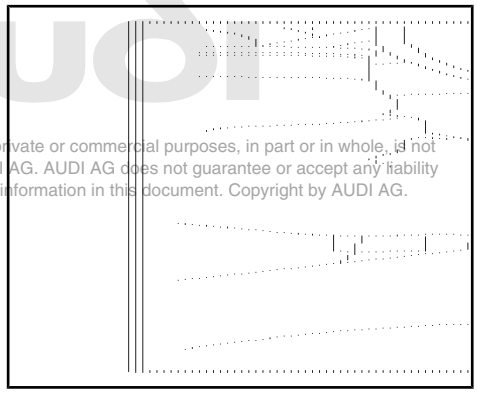

– Insert bottom securing bolt -3- in engine support.
– Install engine support on cylinder block from below and tighten bolt finger-tight.
– Raise engine with support bracket - 10-222A- until it is possible to screw in the two top bolts -1 and 2-.
– Tighten all bolts.
– Lower the engine down to installation position.

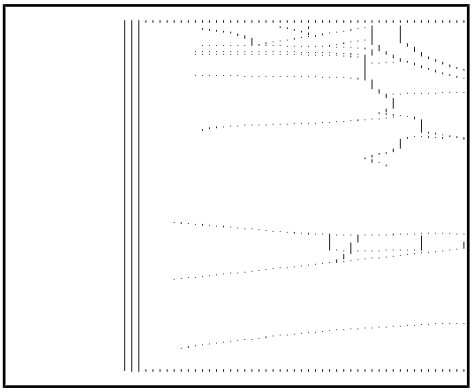

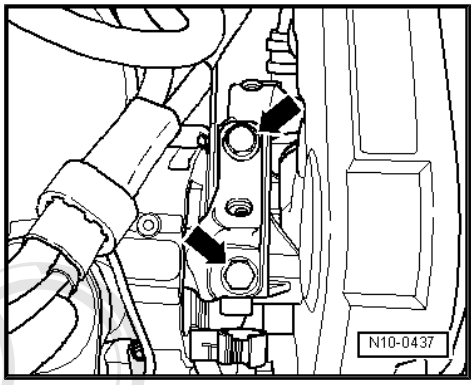

- Secure assembly mounting for engine to engine support -arrows-; to do so, bring surfaces into contact using support bracket - 10-222A- .
- Remove support bracket - 10-222A- .
- Attach fuel hoses onto connections. Make sure plug-in connectors are properly secured.
- Install coolant expansion tank.
- Connect battery ⇒ Electrical system; Rep. gr. 27 ; Connecting and disconnecting battery .
- Install engine cover panel.
- Install crankshaft pulley ⇒ page 37 .
- Adjust engine mountings ⇒ page 26 .
- Install poly V-belt ⇒ page 32 .
- Install air pipes with plug-in connectors ⇒ page 173 .
- Bleed fuel system ⇒ Motronic direct injection and ignition system (4-cylinder); Rep. Gr. 24; Servicing fuel injection system .
- Install insulation tray.

Protected by copyright. Copying for private or commercial purposes, in part or in whole, is not permitted unless authorised by AUDI AG. AUDI AG does not guarantee or accept any liability with respect to the correctness of information in this document. Copyright by AUDI AG.

1.3 Toothed belt drive - exploded view (vehicles with separate toothed belt covers)

Note

Vehicles from 01/2006 onwards are fitted with a new type of toothed belt cover. Identification: the top section of the toothed belt cover has no cap ⇒ Item 25 (page 63) and the toothed belt cover is divided near the engine support. Vehicles without separate toothed belt covers - exploded view ⇒ page 61 .

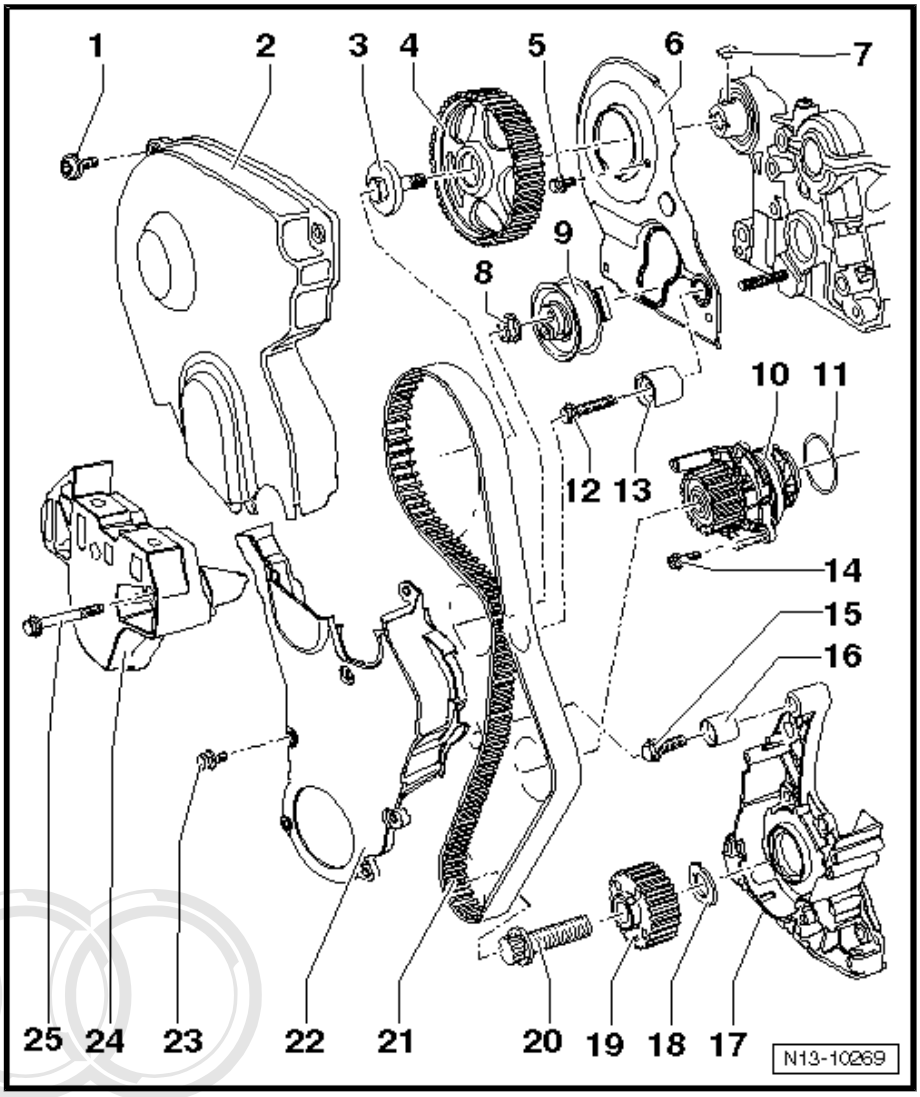

1 - 10 Nm

2 - Toothed belt cover (top)

3 - 50 Nm + 180° (1/2 turn) further

- ❑ Use counterhold tool - 3036- when loosening and tightening ⇒ page 74

4 - Camshaft sprocket

- ❑ Installation position fixed by Woodruff key ⇒ Item 7 (page 73)
- ❑ Detaching camshaft sprocket ⇒ page 74

5 - 10 Nm

- ❑ Apply locking fluid when fitting

6 - Toothed belt cover (rear)

7 - Woodruff key

- ❑ Check for firm attachment

8 - 25 Nm

9 - Semi-automatic tensioning roller

10 - Coolant pump

- ❑ Removing and installing ⇒ page 165

11 - O-ring

- ❑ Renew

12 - 25 Nm

13 - Damper wheel

14 - 15 Nm

15 - 35 Nm

16 - Damper wheel

17 - Sealing flange

- ❑ Removing and installing ⇒ page 42

Protected by copyright. Copying for private or commercial purposes, in part or in whole, is not permitted unless authorised by AUDI AG. AUDI AG does not guarantee or accept any liability with respect to the correctness of information in this document. Copyright by AUDI AG.

18 - Diamond-coated washer

- ❑ Renew

19 - Crankshaft sprocket

- ❑ Contact surfaces between toothed belt sprocket, diamond-coated washer and crankshaft must be free of oil
- ❑ Can only be installed in one position

20 - 90 Nm + 90° (1/4 turn) further

- ❑ Renew
- ❑ Do not lubricate with oil
- ❑ Use counterhold tool - 3415- when loosening and tightening ⇒ page 74

21 - Toothed belt

- ❑ Before removing, mark direction of rotation with chalk or felt-tip pen

- ❑ Check for wear
- ❑ Removing and installing ⇒ page 75

22 - Toothed belt cover (bottom)

23 - Securing bolts

- ❑ For toothed belt cover (bottom)
- ❑ 7x
- ❑ 8 Nm

24 - Engine bracket

25 - 45 Nm

Protected by copyright. Copying for private or commercial purposes, in part or in whole, is not permitted unless authorised by AUDI AG. AUDI AG does not guarantee or accept any liability with respect to the correctness of information in this document. Copyright by AUDI AG.

Loosening camshaft sprocket

– Use counterhold - 3036- when loosening and tightening central bolt.

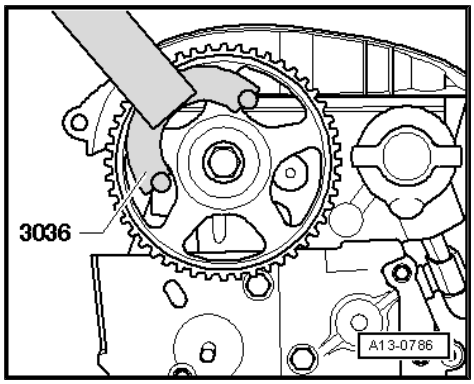

Detaching camshaft sprocket

– Use two-arm puller - T40001- with claws T40001/6 and T40001/7 to detach camshaft sprocket.

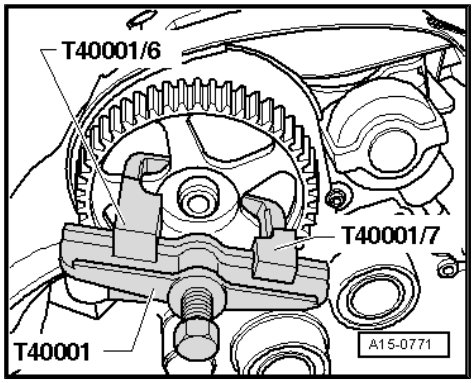

Removing and installing crankshaft sprocket

– Use counterhold - 3415- when loosening and tightening central bolt.

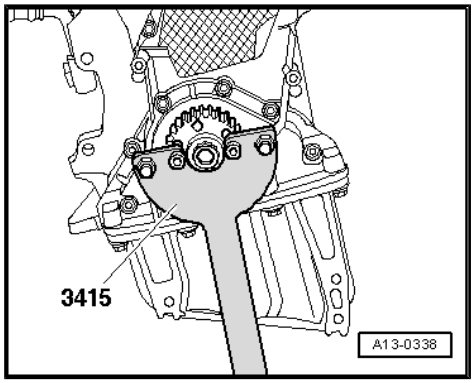

1.4 Removing and installing toothed belt (vehicles with separate toothed belt covers)

Note

Vehicles from 01/2006 onwards are fitted with a new type of toothed belt cover. Identification: the top section of the toothed belt cover has no cap ⇒ Item 25 (page 63) and the toothed belt cover is divided near the engine support. Removing and installing toothed belt (vehicles without separate toothed belt covers) ⇒ page 64 .

Special tools and workshop equipment required

- Support bracket - 10 - 222 A-

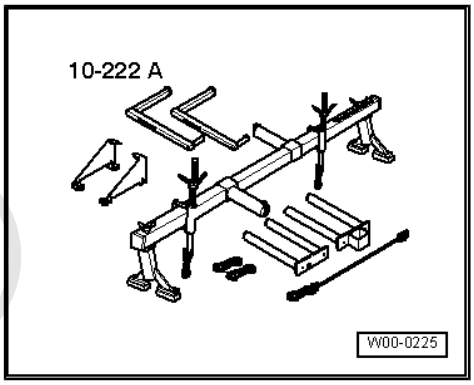

- Shackle - 10 - 222 A /12-

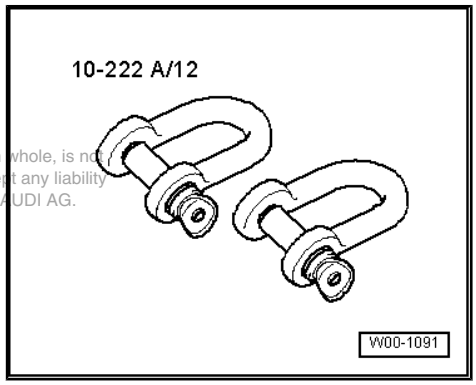

- Pin wrench - T10020-

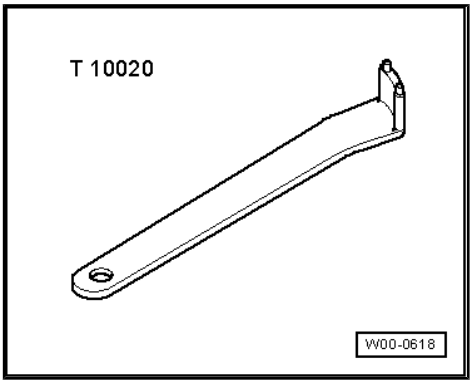

Protected by copyright. Copying for private or commercial purposes, in part or in whole, is not permitted unless authorised by AUDI AG. AUDI AG does not guarantee or accept any liability with respect to the correctness of information in this document. Copyright by AUDI AG.

♦ Locking pin - T10060A-

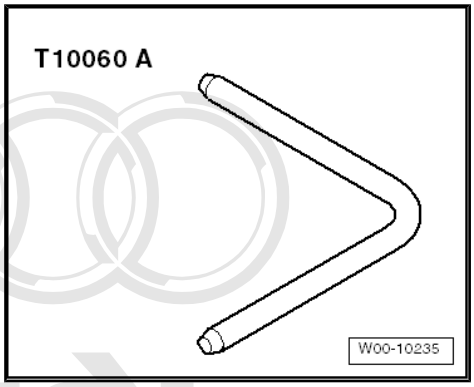

Protected by copyright. Copying for private or commercial purposes, in part or in whole, is not permitted unless authorised by AUDI AG. AUDI AG does not guarantee or accept any liability with respect to the correctness of information in this document. Copyright by AUDI AG.

Removing

– Detach engine cover panel with air cleaner ⇒ Rep. gr. 24 .

> ⚠ **WARNING**
>
> *Hot steam/hot coolant may escape when opening expansion tank. Cover cap with cloth and open carefully.*

– Open filler cap on coolant expansion tank.

– Remove noise insulation ⇒ Rep. gr. 50 .

– Remove noise insulation (right-side) -fasteners 1 ... 3-.

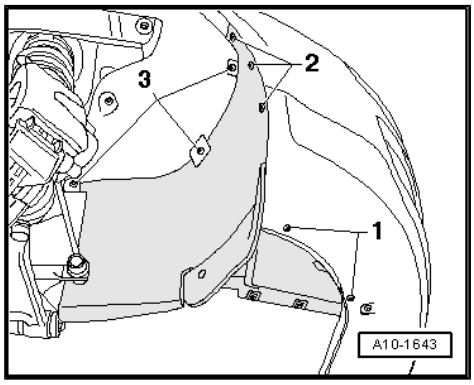

– Unscrew bolts -1 ... 3- and remove pendulum support.

– Drain off coolant ⇒ page 157 .

> ⚠ **WARNING**
>
> *Fuel supply line is pressurised. Wear safety goggles and protective clothing to avoid possible injury and skin contact. Before opening hose connections wrap a cloth around the connection. Then release pressure by carefully pulling hose off connection.*

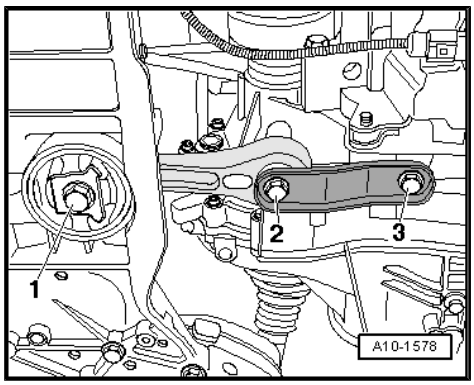

– Mark fuel line -1- and line going to ACF -2-.
– Disconnect fuel line -1-.
– Disconnect ACF line -2-.
– Disconnect ACF line going to tank -3-.
– Lift out ACF in -direction of arrow-.

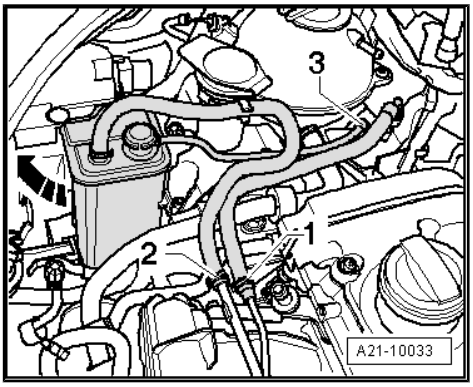

– Detach the coolant hose at the bracket -1-.
– Remove bracket for activated charcoal filter -arrows-.

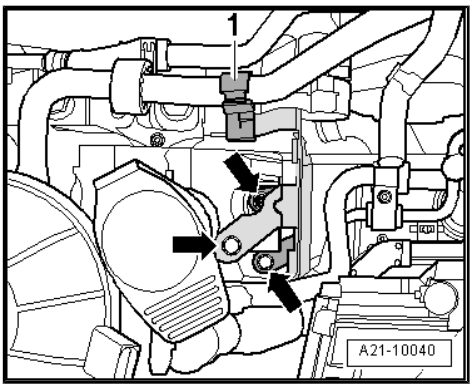

– Unbolt filler neck for windscreen washer reservoir -1-.
– Remove retaining clip; to do so, unscrew bolts -2 and 3-.

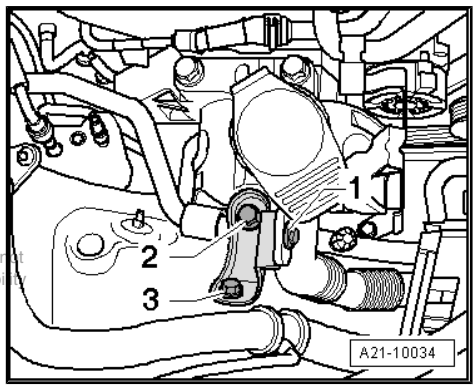

Protected by copyright. Copying for private or commercial purposes, in part or in whole, is not permitted unless authorised by AUDI AG. AUDI AG does not guarantee or accept any liability with respect to the correctness of information in this document. Copyright by AUDI AG.

– Unplug electrical connector -1- from coolant level indicator.
– Detach coolant expansion tank -arrows-.

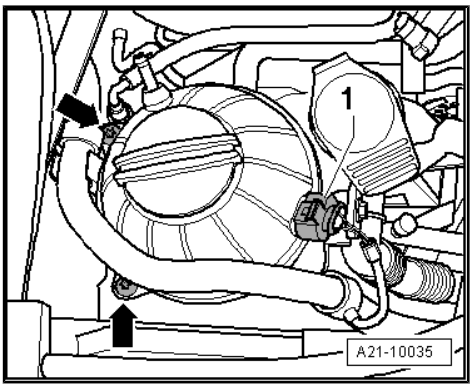

– Disconnect coolant pipe -arrow-.
– Remove poly V-belt ⇒ page 32 .

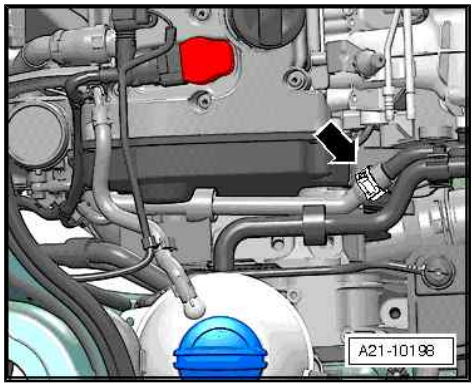

– Remove tensioner for poly V-belt -arrows-.

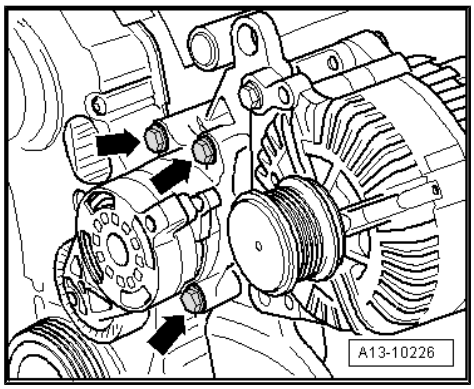

– Detach coolant pipe -arrows-.

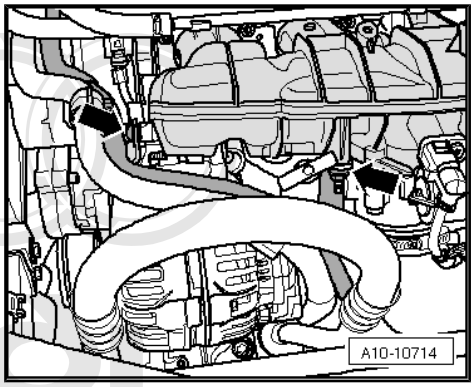

– Remove bolts -arrows- and detach toothed belt cover.

Protected by copyright. Copying for private or commercial purpo
permitted unless authorised by AUDI AG. AUDI AG
with respect to the correctness of information in th

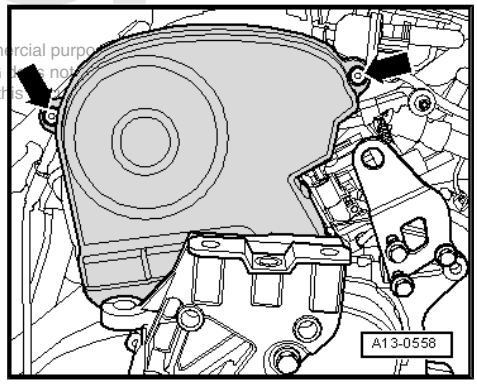

– Position support bracket - 10 - 222 A- on bolted flanges of wing panels. The spindles face forwards.
– Attach hooks of spindles with shackles - 10 - 222 A /12- to the lifting eyes.

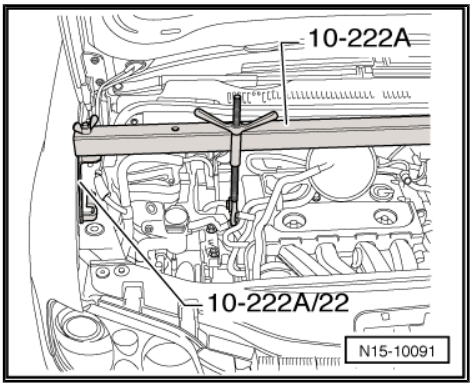

– Remove securing bolts from assembly mounting/engine support -arrows- and remove complete assembly mounting.

> **Caution**
>
> *When raising engine with support bracket - 10-222A- , ensure that components/hoses are not damaged, stretched or torn off.*

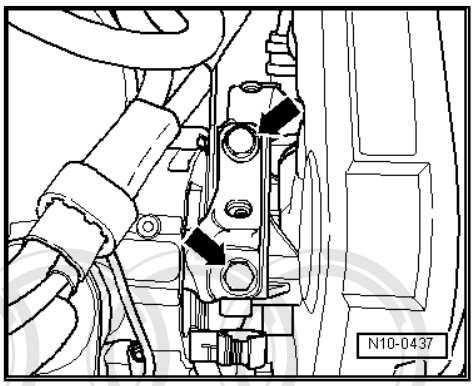

– Raise engine with support bracket - 10-222A- until it is possible to loosen and remove the two top bolts -1 and 2- securing the engine support.

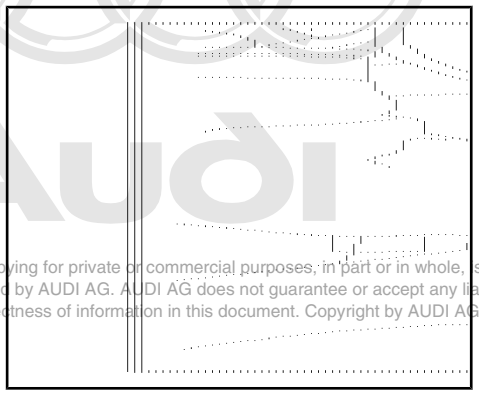

Protected by copyright. Copying for private or commercial purposes, in part or in whole, is not permitted unless authorised by AUDI AG. AUDI AG does not guarantee or accept any liability with respect to the correctness of information in this document. Copyright by AUDI AG.

– Unscrew bolts -arrows- and remove charge air pipe together with hoses.

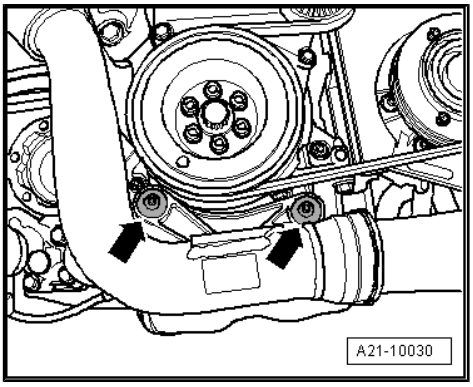

– Unscrew the bottom bolt -3- and remove engine support from below.

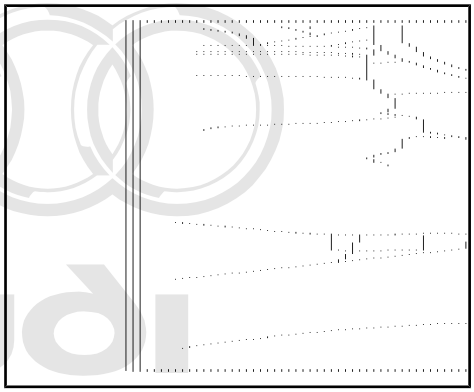

– Set camshaft sprocket to TDC marking by turning crankshaft. Marking on camshaft sprocket must align with arrow on toothed belt cover.

Protected by copyright. Copying for private or commercial purposes, in part or in whole, is not permitted unless authorised by AUDI AG. AUDI AG does not guarantee or accept any liability with respect to the correctness of information in this document. Copyright by AUDI AG.

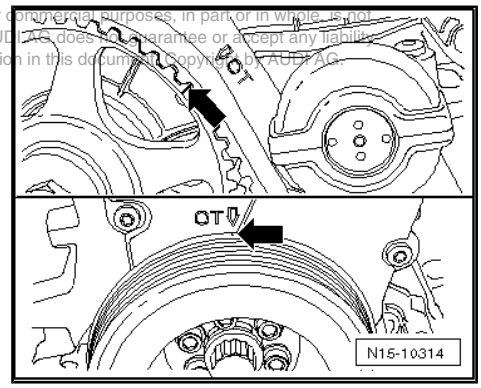

– Remove vibration damper / pulley.

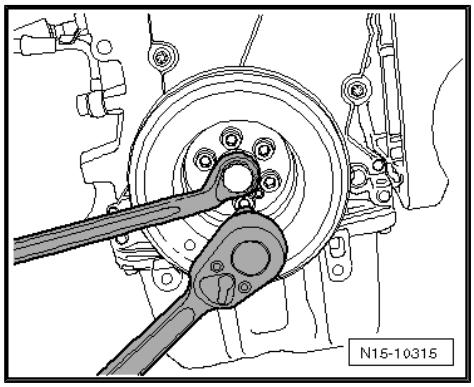

Note

- *The TDC markings must align before the vibration damper is detached.*
- *Do not rotate the crankshaft unless the TDC position is marked by an additional marking.*

– Unscrew bottom bolts from toothed belt cover (bottom) -arrows-.

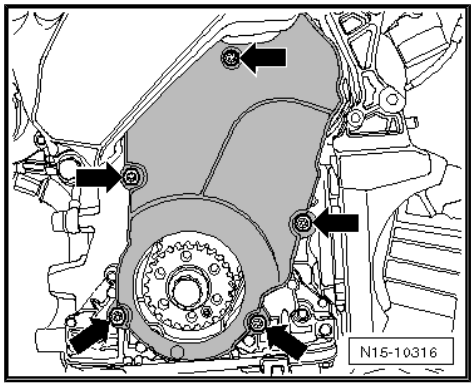

– Mark TDC position -arrow-.

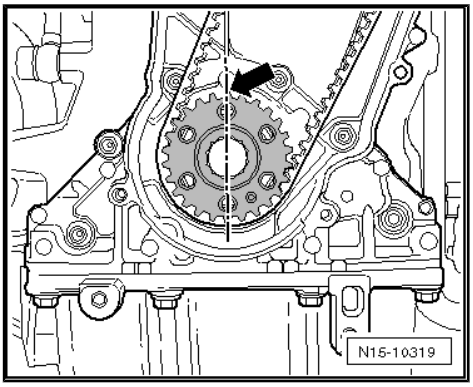

– Unscrew both top bolts from toothed belt cover -arrows- and remove toothed belt cover from engine downwards.
– Remove engine support from engine upwards.
– Mark direction of rotation of toothed belt.
– Loosen tensioning roller and remove toothed belt.
– Turn crankshaft back slightly.

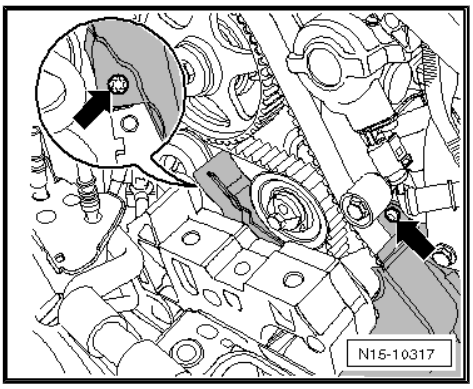

Installing

• Tightening torques ⇒ page 72

Note

♦ *When turning the camshaft, the crankshaft must not be at TDC. Otherwise, there is a risk of damage to valves and piston crowns.*

♦ *The engine must be no more than warm to touch.*

– Turn camshaft and crankshaft to TDC markings.
– Fit toothed belt on crankshaft sprocket (note rotation direction).

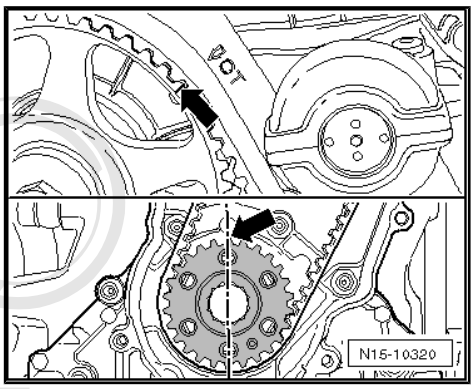

– Fit toothed belt in the sequence: tensioning roller, camshaft sprocket, coolant pump and last onto idler roller -arrow-.

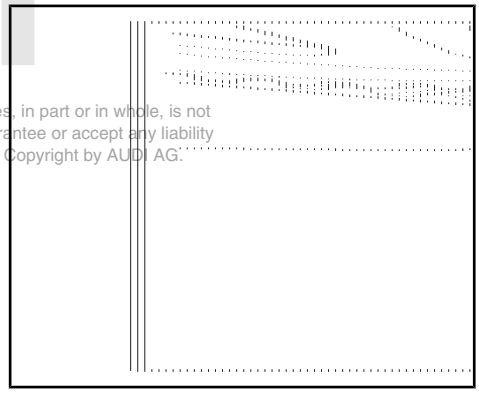

Protected by copyright. Copying for private or commercial purposes, in part or in whole, is not permitted unless authorised by AUDI AG. AUDI AG does not guarantee or accept any liability with respect to the correctness of information in this document. Copyright by AUDI AG.

Note

Check tensioning roller is seated correctly in cylinder head.

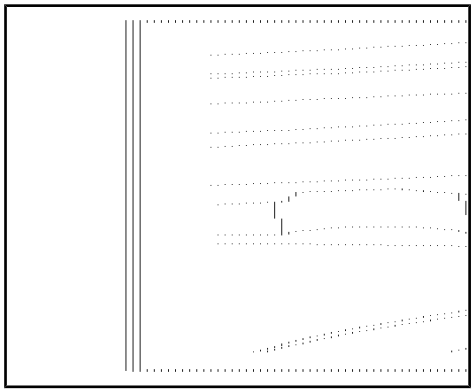

- Tension toothed belt. To do so, turn hexagon key at the eccentric adjuster clockwise (direction of arrow) until the notch is above the indicator (toothed belt over-tensioned).
- Then release tension on toothed belt.
- Now tension toothed belt until the notch and the indicator are aligned.
- Tighten securing nut
- Turn crankshaft two turns in direction of engine rotation and set again to TDC. Make sure that the engine is rotated without stopping during the final 45° ($^1/_8$ turn).
- Check toothed belt tension. Specification: indicator and notch must align.

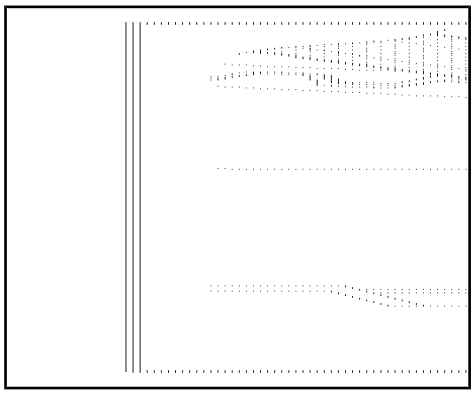

- Check valve timing. The markings must align -arrows-.

If the markings do not align:

- Repeat adjustment of valve timing.

If the markings align:

- Install engine support on cylinder block and tighten bolts hand-tight.

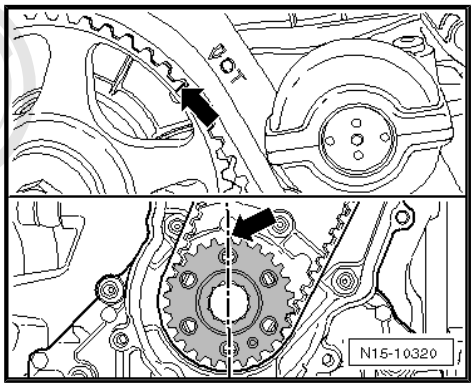

Protected by copyright. Copying for private or commercial purposes, in part or in whole, is not permitted unless authorised by AUDI AG. AUDI AG does not guarantee or accept any liability with respect to the correctness of information in this document. Copyright by AUDI AG.

Note

Note different bolt lengths. Bolt -3- is approx. 25 mm shorter than bolts -1 and 2-.

- Lower engine with support bracket - 10-222A- until it is possible to tighten the bolt at the bottom -3-.
- Tighten all bolts.
- Install assembly mounting for engine.

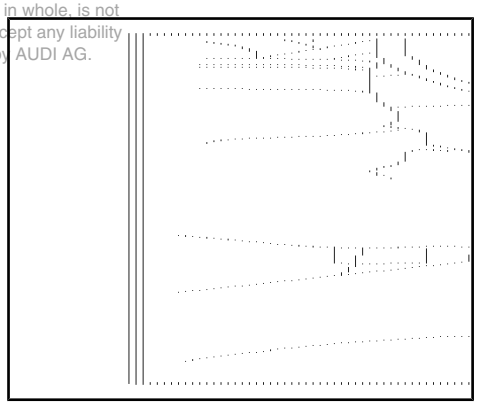

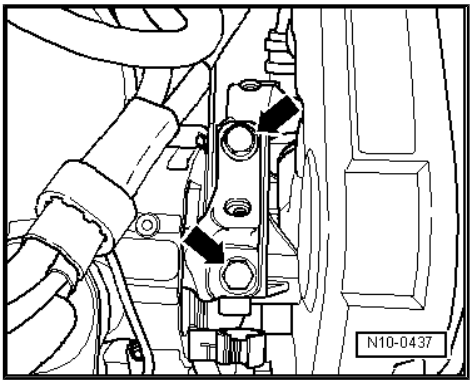

- Tighten bolts on assembly mounting for engine and engine support hand-tight -arrows-; to do so, bring surfaces into contact using support bracket - 10 - 222 A- .
- Detach support bracket - 10 - 222 A- .
- Reconnect fuel and breather pipes. Make sure plug-in connectors are properly secured.
- Install coolant expansion tank.
- Install crankshaft pulley ⇒ page 37 .
- Adjust engine mountings ⇒ page 26 .
- Install poly V-belt ⇒ page 32 .
- Install air pipes with plug-in connectors ⇒ page 173 .
- Bleed fuel system ⇒ Motronic direct injection and ignition system (4-cylinder); Rep. Gr. 24; Servicing fuel injection system .
- Install noise insulation ⇒ General body repairs, exterior; Rep. gr. 50 ; Body front, noise insulation .
- Install engine cover panel/air cleaner.

Protected by copyright. Copying for private or commercial purposes, in part or in whole, is not permitted unless authorised by AUDI AG. AUDI AG does not guarantee or accept any liability with respect to the correctness of information in this document. Copyright by AUDI AG.

2 Cylinder head

2.1 Cylinder head - exploded view

Note

- *Renew the cylinder head bolts.*
- *On assembly, renew oil seals and gaskets as well as self-locking nuts and bolts that are tightened by turning through to a specified angle.*
- *When installing an exchange cylinder head with fitted camshafts, oil the contact surfaces between the roller rocker fingers and cams.*
- *The plastic protectors fitted to protect the open valves must only be removed immediately before fitting the cylinder head.*
- *When fitting a new cylinder head or cylinder head gasket, drain off all the old coolant and refill with new coolant.*

Protected by copyright. Copying for private or commercial purposes, in part or in whole, is not permitted unless authorised by AUDI AG. AUDI AG does not guarantee or assume liability with respect to the correctness of information in this document. Copyright by AUDI AG.

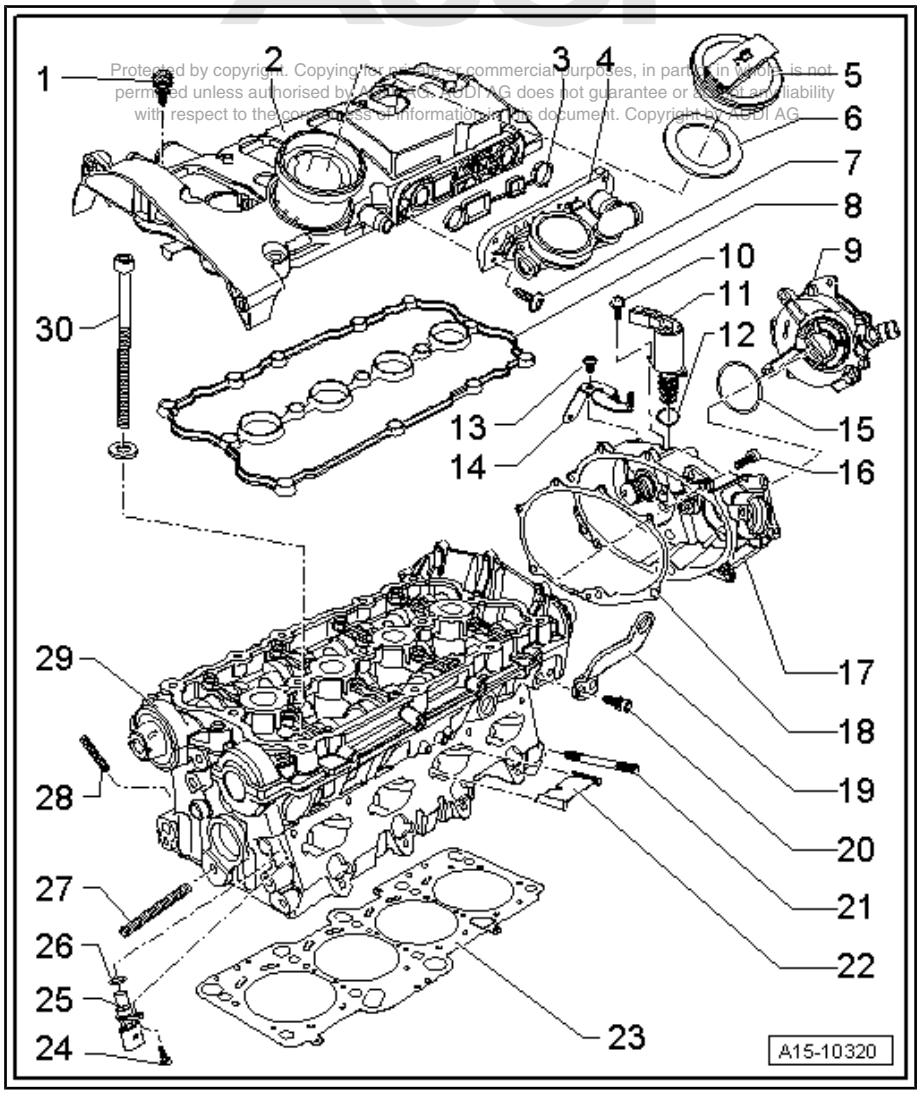

1 - Bolt
- ❑ Tightening sequence ⇒ page 85

2 - Cylinder head cover

3 - Gasket
- ❑ Renew if damaged or leaking

4 - Valve housing

5 - Oil filler cap

6 - Seal
- ❑ Renew if damaged or leaking

7 - Bolt
- ❑ 4 Nm

8 - Gasket for cylinder head cover
- ❑ Renew if damaged or leaking

9 - Vacuum pump

10 - Bolt
- ❑ 4 Nm

11 - Camshaft control valve 1 - N205-
- ❑ Removing ⇒ page 86

12 - Seal
- ❑ Renew

13 - Bolt
- ❑ 10 Nm

14 - Cable retainer

15 - Seal

- ❑ Renew if damaged or leaking

16 - Bolt

- ❑ 10 Nm

17 - Housing

18 - Gasket

- ❑ Renew

19 - Transport plate

20 - Bolt

- ❑ 25 Nm

21 - Stud for intake manifold

- ❑ 10 Nm

Protected by copyright. Copying for private or commercial purposes, in part or in whole, is not permitted unless authorised by AUDI AG. AUDI AG does not guarantee or accept any liability with respect to the correctness of information in this document. Copyright by AUDI AG.

22 - Separating plate

23 - Cylinder head gasket

- ❑ Renew
- ❑ Check installation position: Part No. towards cylinder head

24 - Bolt

- ❑ 10 Nm

25 - Hall sender - G40-

26 - Seal

27 - Stud for tensioning roller

- ❑ 10 Nm

28 - Stud for exhaust manifold

- ❑ 20 Nm

29 - Cylinder head

- ❑ Checking for distortion ⇒ page 86

30 - Cylinder head bolt

- ❑ Renew
- ❑ Note correct sequence when loosening ⇒ page 86
- ❑ Note correct sequence when tightening ⇒ page 86
- ❑ Tightening torque: 40 Nm + $^{1}/_{2}$ turn (180°) further

Tightening sequence for cylinder head cover

1. Screw in bolts -1 ... 14- hand-tight.
2. Tighten bolts -1 ... 14- to 10 Nm in diagonal sequence.

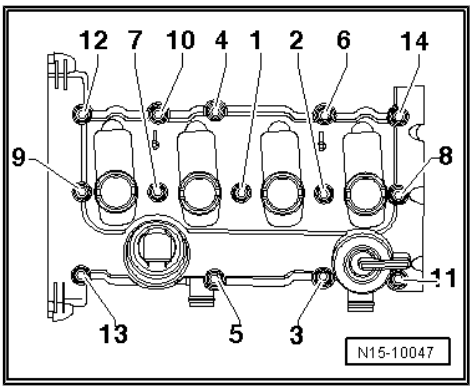

Slackening cylinder head bolts

– Loosen cylinder head bolts in the sequence indicated and remove.

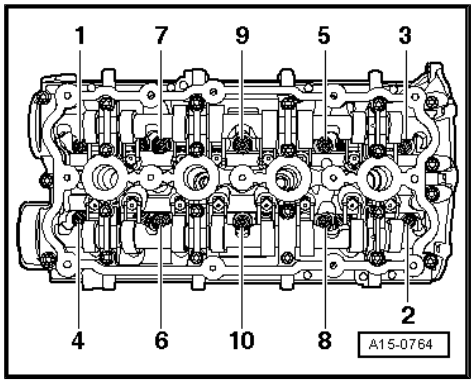

Tightening sequence for cylinder head

– Tighten cylinder head bolts in the sequence -1 ... 10- as follows:

– 1. Tighten with torque wrench initially to 40 Nm.

– 2. Use rigid wrench to turn 90° further

– 3. Use rigid wrench to turn 90° further

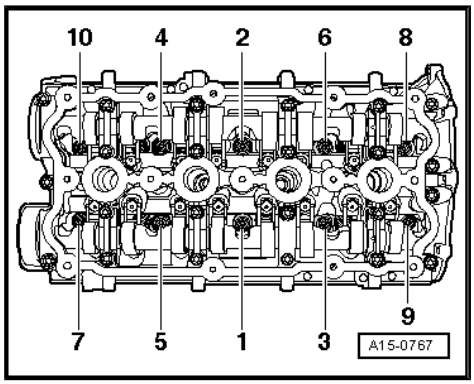

Checking cylinder head for distortion

– Use straight edge and feeler gauge to measure for distortion at several points.

♦ Max. permissible distortion: 0.05 mm

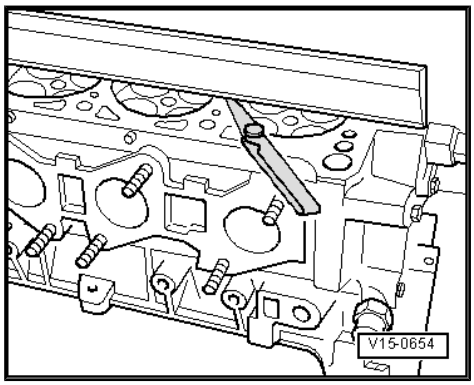

2.2 Removing and installing camshaft control valve 1 - N205-

Protected by copyright. Copying for private or commercial purposes, in part or in whole, is not permitted unless authorised by AUDI AG. AUDI AG does not guarantee or accept any liability with respect to the correctness of information in this document. Copyright by AUDI AG.

Special tools and workshop equipment required

- Torque wrench - V.A.G 1783-
- Torx bit set - V.A.G 1766-
- Ratchet insert 1/4" - VAS 6234-
- Spring type clip pliers - VAS 5024 A-

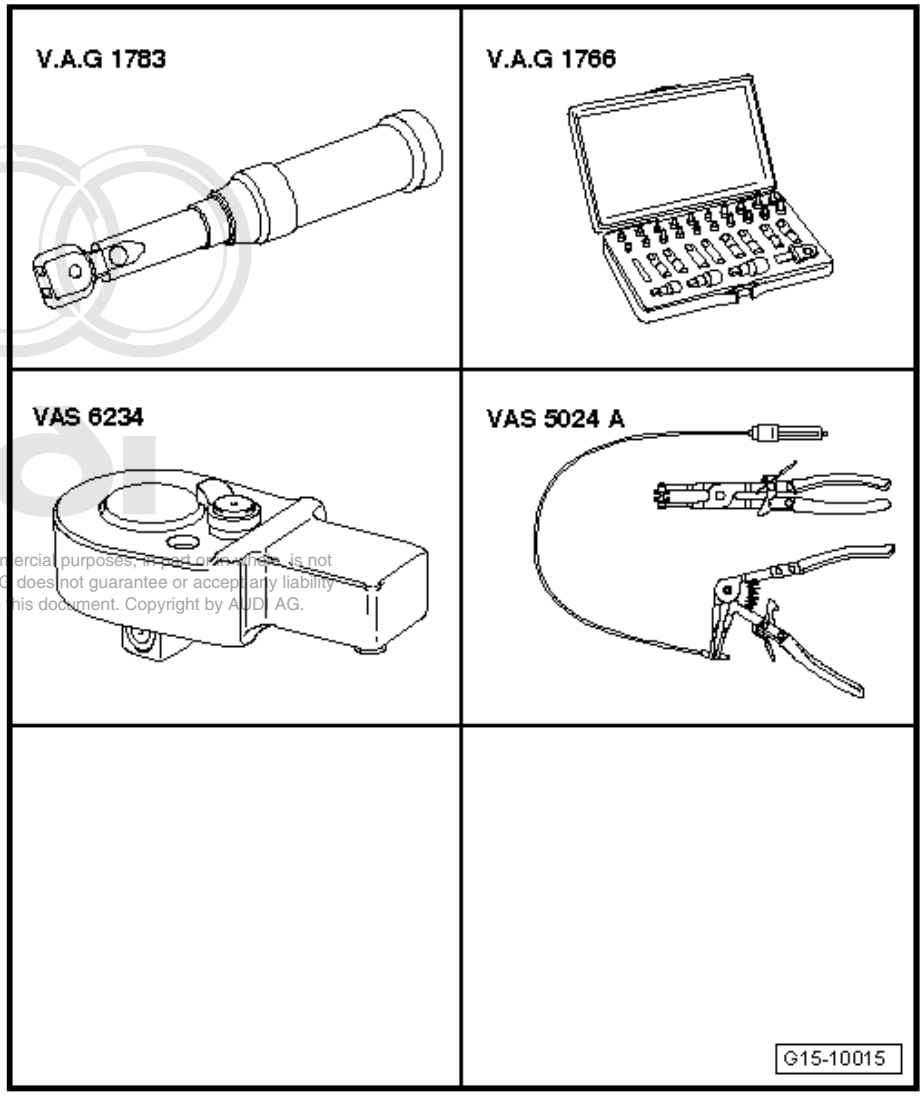

Protected by copyright. Copying for private or commercial purposes, in part or in whole, is not permitted unless authorised by AUDI AG. AUDI AG does not guarantee or accept any liability with respect to the correctness of information in this document. Copyright by AUDI AG.

Removing

Note

Always renew seals and gaskets.

– Detach engine cover panel with air cleaner ⇒ Rep. gr. 24 .
– Unplug electrical connector -1-.
– Detach wiring harness -2- from bracket.
– Remove bolt -3-.

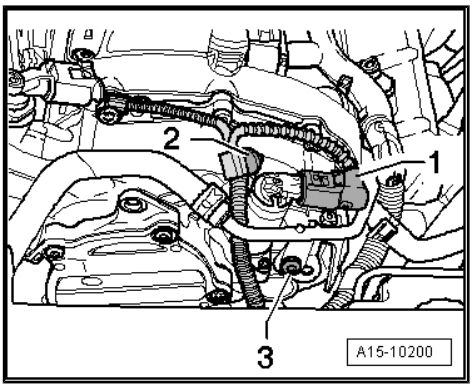

Note

Do not pull on electrical connector when removing camshaft control valve 1 - N205- .

– Remove bolts -arrows- and take camshaft control valve 1 - N205- out of housing.

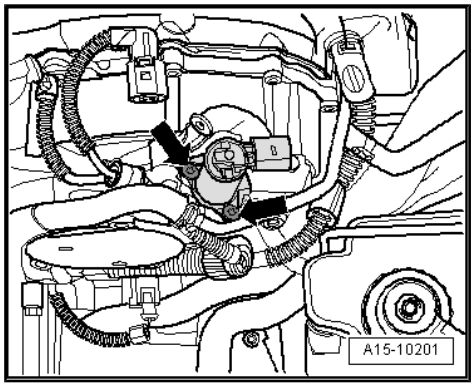

Installing

- Tightening torque ⇒ page 84

Note

- *Make sure the camshaft control valve 1 - N205- and the housing are free from any kind of dirt.*
- *Do not remove camshaft control valve 1 - N205- from packaging until you are ready to install it.*

Caution

- ***Do not expose the camshaft control valve 1 - N205- to shock impacts.***

– Lubricate the seal with engine oil.

– Carefully fit camshaft control valve 1 - N205- into housing and press in by hand as far as the stop (exert pressure in line with axis of valve).

– Screw in and tighten bolts using torque wrench - V.A.G 1783- and ratchet insert 1/4" - VAS 6234- , as well as Torx bit T20 and bit holder from Torx bit set .

Further assembly is basically carried out in reverse order of dismantling.

2.3 Removing and installing cylinder head cover

Protected by copyright. Copying for private or commercial purposes, in part or in whole, is not permitted unless authorised by AUDI AG. AUDI AG does not guarantee or accept any liability with respect to the correctness of information in this document. Copyright by AUDI AG.

Removing

Special tools and workshop equipment required

- Spring type clip pliers - VAS 5024 A-

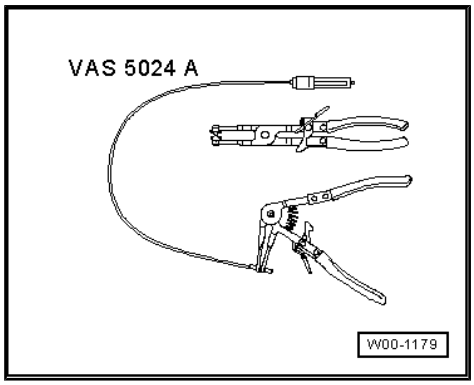

♦ Puller - T40039-

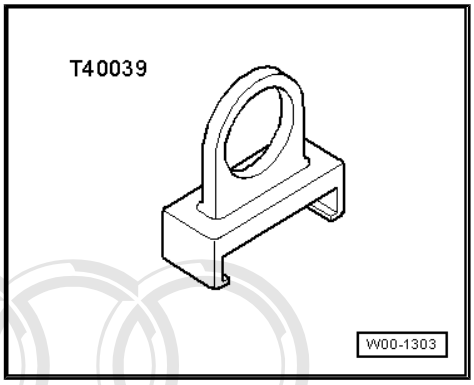

– Detach engine cover panel with air cleaner ⇒ Rep. gr. 24 .
– Unscrew bolts -arrows-.
– Remove ignition coils with output stages ⇒ Rep. gr. 28 .

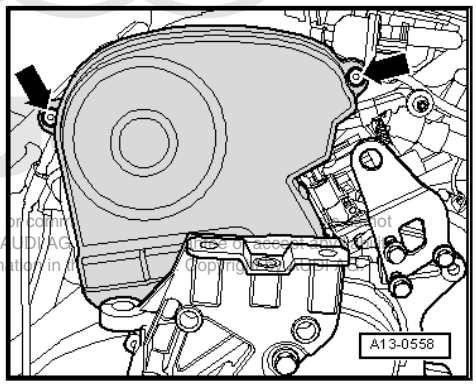

Protected by copyright. Copying for private or commercial purposes, in part or in whole, is not permitted unless authorised by AUDI AG. AUDI AG does not guarantee or assume any liability with respect to the correctness of information in this document. Copyright by AUDI AG.

– Disconnect ACF pipe from cylinder head cover -1-.
– Detach valve housing from cylinder head cover -arrows-.

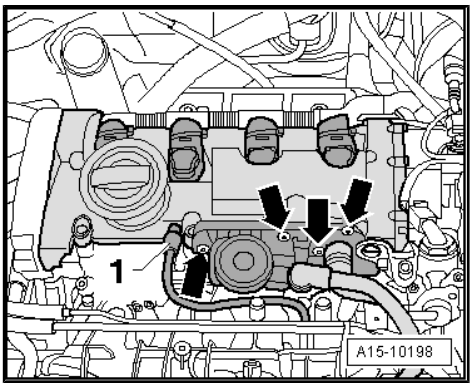

– Unscrew crankcase breather line with heat shield from turbocharger -1-.
– Disconnect ACF line going to turbocharger from cylinder head cover -2-.
– Loosen cylinder head cover working from outside to inside.
– Remove cylinder head cover.

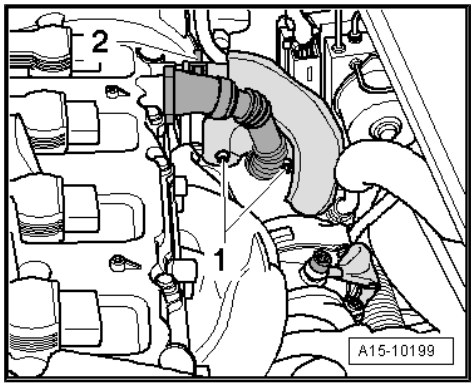

Installing

Installation is carried out in the reverse order; note the following:

- Tightening torque ⇒ page 84

Note

Renew cylinder head cover gaskets if damaged.

– Tighten cylinder head cover working from inside outwards.
– Make sure toothed belt cover (top) is correctly fitted.
– Install ignition coils with output stages ⇒ Rep. gr. 28 .

2.4 Removing and installing cylinder head

Special tools and workshop equipment required

Protected by copyright. Copying for private or commercial purposes, in part or in whole, is not permitted unless authorised by AUDI AG. AUDI AG does not guarantee or accept any liability with respect to the correctness of information in this document. Copyright by AUDI AG.

- Drip tray for workshop hoist - VAS 6208-
- Counterhold tool - 3036-
- Two-arm puller - T40001-
- Puller - T40039-
- Hose clip pliers - V.A.G

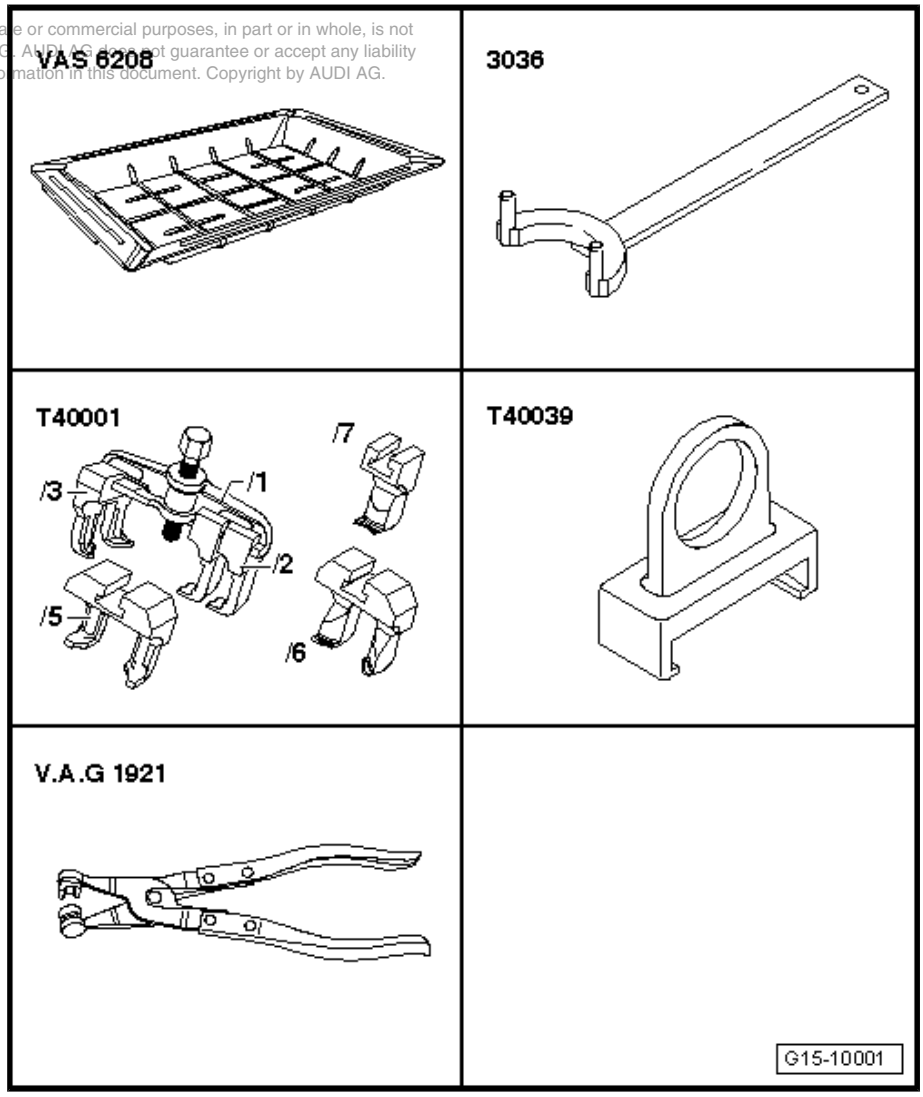

1921-

- Support bracket - 10 - 222 A-
- Shackle - 10 - 222 A /12-
- Locking pin - T10060A-
- Pin wrench - T10020-
- Socket - T10070-

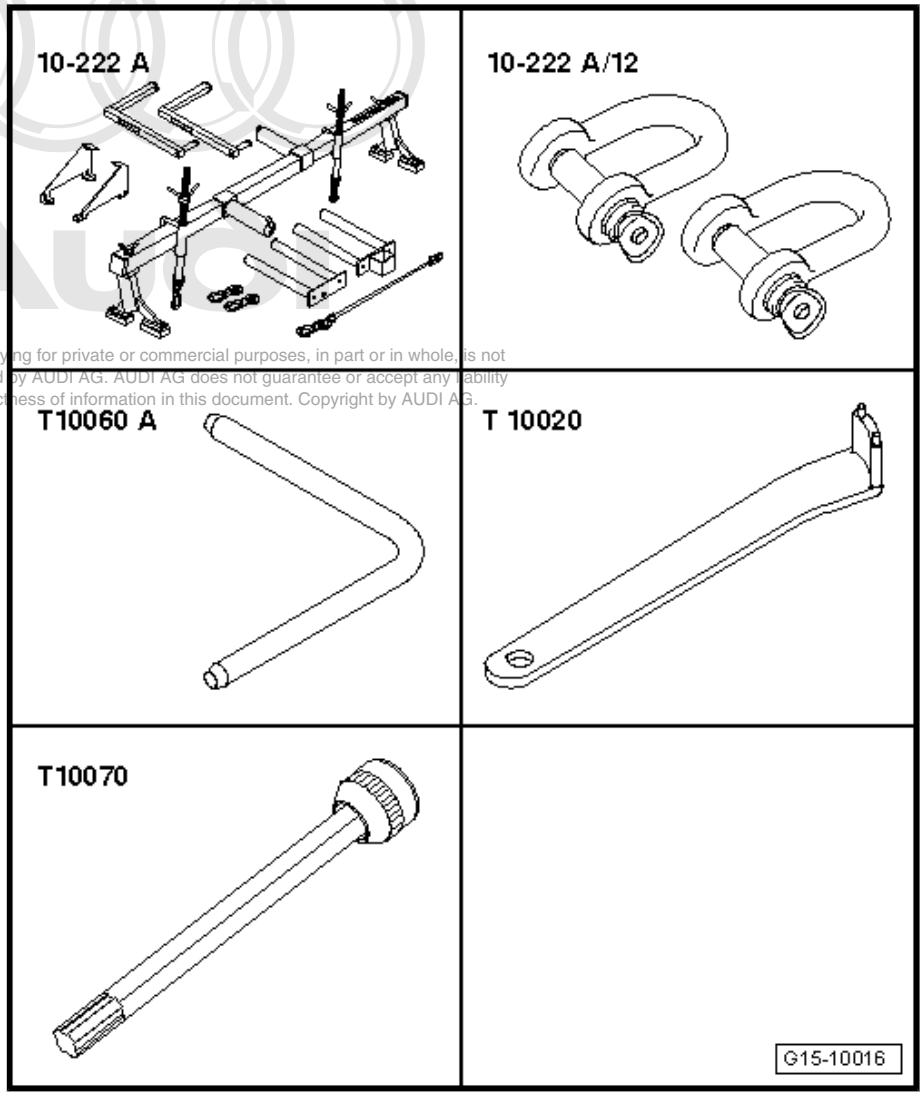

Protected by copyright. Copying for private or commercial purposes, in part or in whole, is not permitted unless authorised by AUDI AG. AUDI AG does not guarantee or accept any liability with respect to the correctness of information in this document. Copyright by AUDI AG.

Engine bung set - VAS 6122-

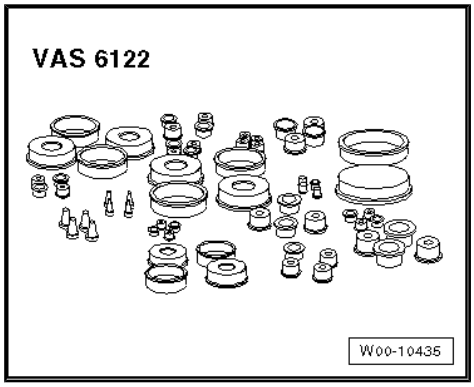

Removing

- Engine in vehicle.

Note

- *All cable ties which are released or cut open when removing must be refitted in the same position when installing.*
- *If engine oil is contaminated, perform oil change ⇒ Maintenance ; Booklet 808 .*
- *Before applying sealant, check information: ⇒ Parts catalogue .*

– Obtain code on vehicles with coded radio / radio and navigation system (RNS).

– Detach engine cover panel with air cleaner ⇒ Rep. gr. 24 .

WARNING

Hot steam/hot coolant may escape when opening expansion tank. Cover cap with cloth and open carefully.

– Open filler cap on coolant expansion tank.

– Remove noise insulation ⇒ Rep. gr. 50 .

Protected by copyright. Copying for private or commercial purposes, in part or in whole, is not permitted unless authorised by AUDI AG. AUDI AG does not guarantee or accept any liability with respect to the correctness of information in this document. Copyright by AUDI AG.

– Remove noise insulation (right-side) - fasteners -1 - 3-.

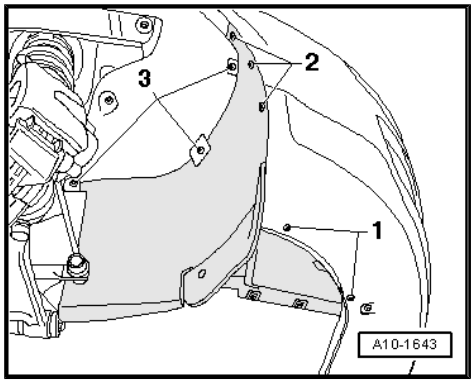

– Drain off coolant ⇒ page 157

– Use screwdriver to pry off cover caps on wiper arms and unscrew hexagon nuts.

– Pull wiper arms off wiper shafts and remove.

– Unclip washer jets -arrow-.

– Push washer jets through assembly opening back into plenum chamber, leaving hoses connected.

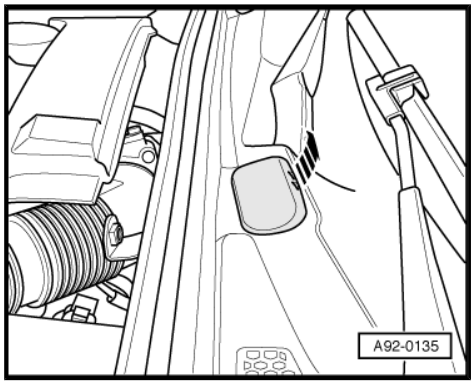

– Detach rubber seal -1- from plenum chamber cover.
– Detach plenum chamber cover -2-.
– Detach engine wiring harness at rear plenum chamber panel.

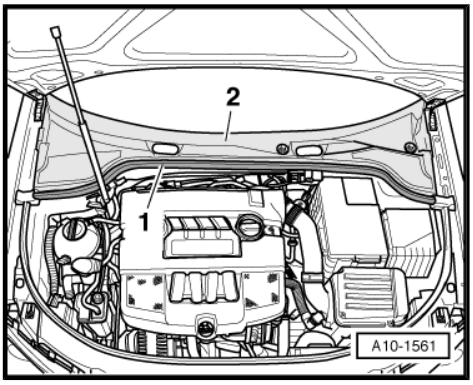

– Remove electrical connector -arrow- for Lambda probe (before catalytic converter) from bracket, unplug and move clear.

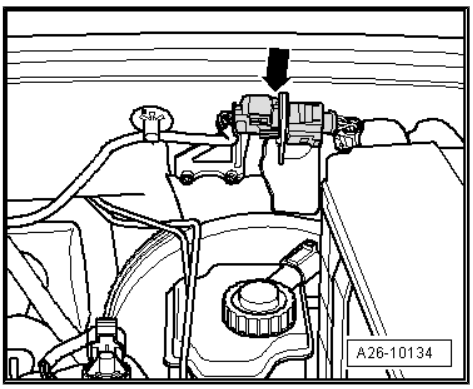

– Remove plenum chamber intermediate plate -arrows-.

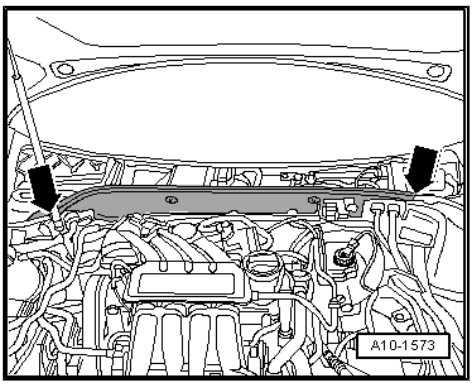

– Disconnect coolant pipe going to coolant expansion tank -arrow-.

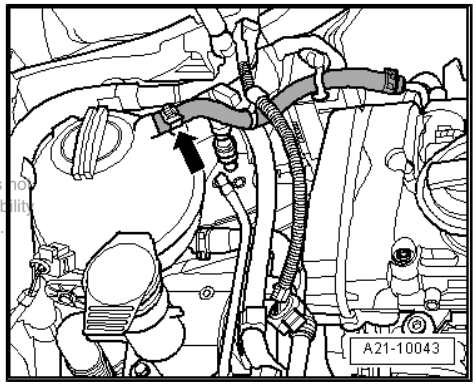

Protected by copyright. Copying for private or commercial purposes, in part or in whole, is not permitted unless authorised by AUDI AG. AUDI AG does not guarantee or accept any liability with respect to the correctness of information in this document. Copyright by AUDI AG.

– Disconnect coolant hose -1-.
– Disconnect coolant hose -2-.

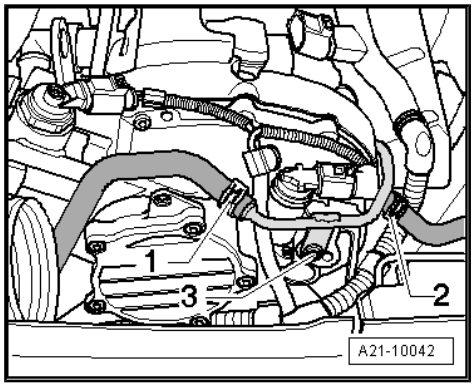

– Disconnect earth cable -1-.
– Unplug electrical connector -2-.
– Disconnect water hoses -arrows-.
– Remove intake manifold ⇒ Motronic direct injection and ignition system (4-cylinder); Rep. Gr. 24; Servicing injection system .
– Remove catalytic converter together with front exhaust pipe.

Engines with code letters AXX, BPY, BWA ⇒ page 218 .

Engines with code letters BHZ, BZC, CDLA, CDLC ⇒ page 225

– Remove drive shaft (right-side) ⇒ Rep. gr. 40 .

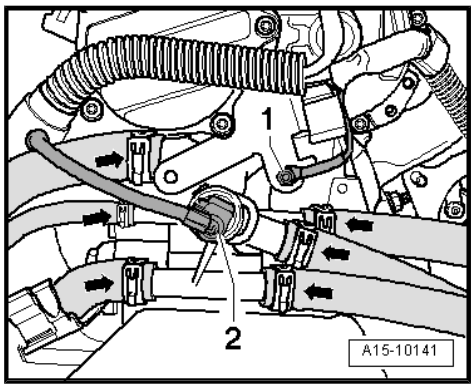

Vehicles with four-wheel drive

– Remove heat shield above drive shaft using hexagon key extension, 8 mm - 3247- .

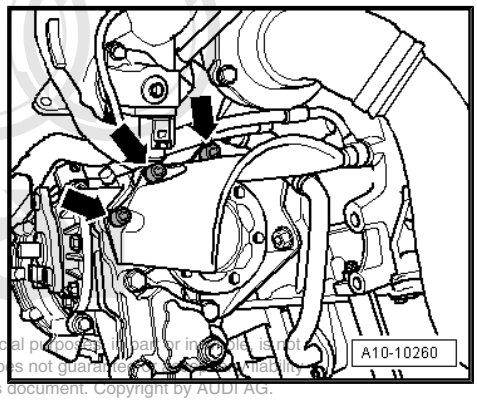

Vehicles with front-wheel drive

Protected by copyright. Copying for private or commercial purposes, in part or in whole, is not permitted unless authorised by AUDI AG. AUDI AG does not guarantee or assume liability with respect to the correctness of information in this document. Copyright by AUDI AG.

– Unbolt heat shield for drive shaft (right-side) -arrows-.

All vehicles:

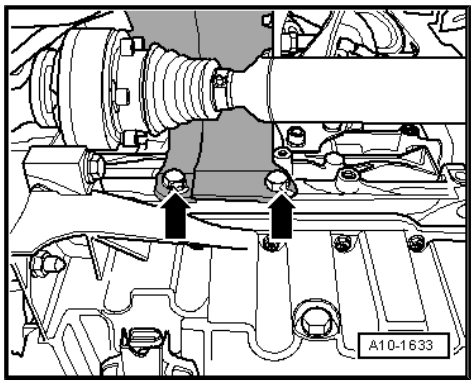

– Detach air pipe -arrow- from charge air cooler.

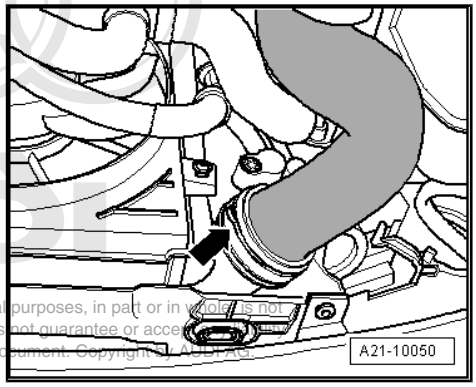

Protected by copyright. Copying for private or commercial purposes, in part or in whole, is not permitted unless authorised by AUDI AG. AUDI AG does not guarantee or accept any liability with respect to the correctness of information in this document. Copyright by AUDI AG.

– Unbolt air pipe from turbocharger -arrows-.
– Detach electrical connectors -1 and 2- and move wire clear.

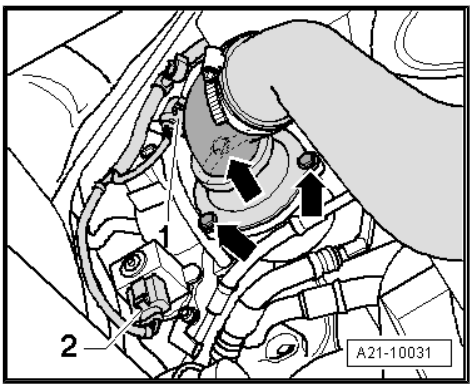

– Unscrew bolts -arrows- and remove air pipe.

Note

Shown in illustration from rear with engine removed.

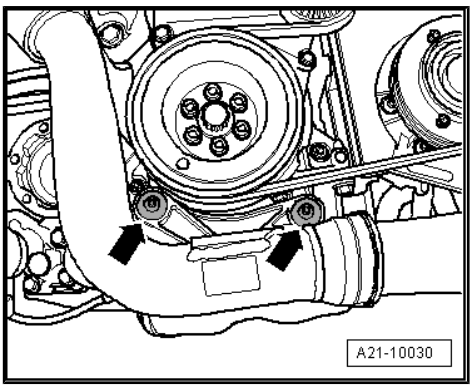

– Unscrew oil supply line for turbocharger at cylinder block -1-.
– Remove oil supply line for turbocharger -2-.

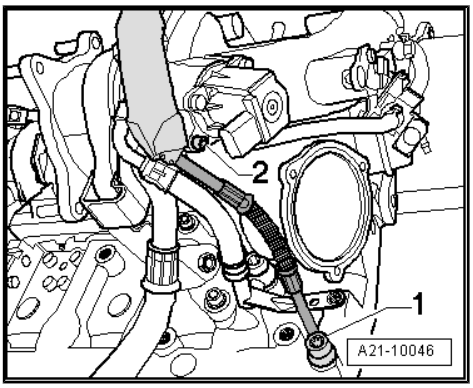

– Unscrew coolant supply line for turbocharger at cylinder block -1-.
– Unscrew coolant supply line at turbocharger -2-.
– Detach coolant supply line for turbocharger -3- from cylinder block.

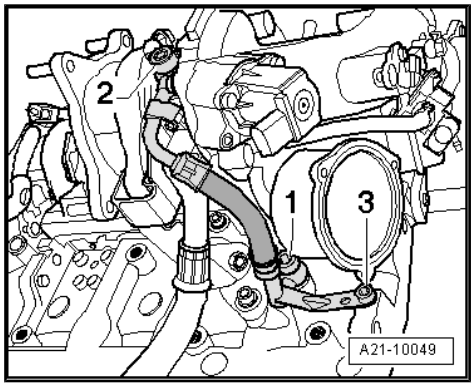

– Detach oil return line at turbocharger -arrows-.

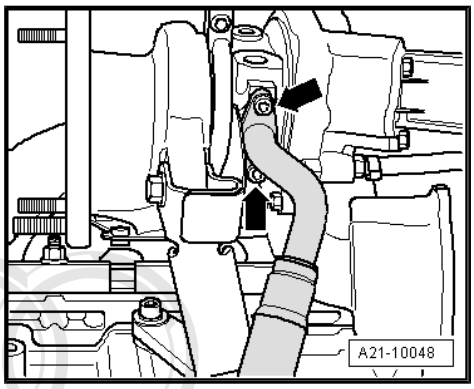

– Remove bolts -1- and -2- and remove support for turbocharger.
– Remove toothed belt ⇒ page 61 .

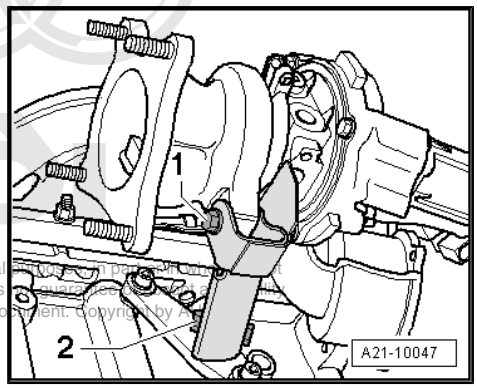

Protected by copyright. Copying for private or commercial purposes, in part or in whole, is not permitted unless authorised by AUDI AG. AUDI AG does not guarantee or assume any liability with respect to the correctness of information in this document. Copyright by AUDI AG.

– Loosen camshaft sprocket bolt using counterhold tool - 3036- .

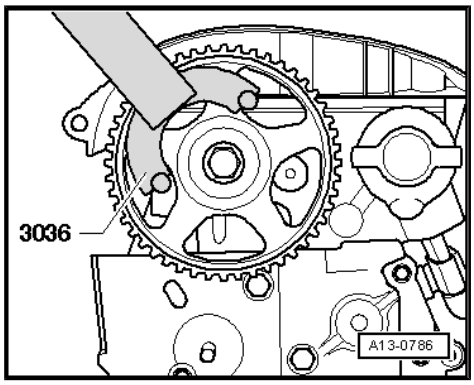

– Detach camshaft sprocket using two-arm puller - T40001- with claws -T40001/6- and -T40001/7- .

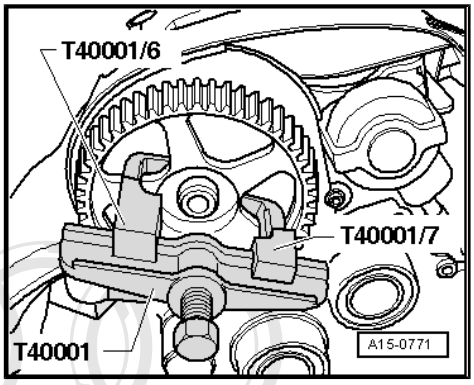

– Unbolt toothed belt cover (rear) from cylinder head -arrows-.

– Remove cylinder head cover ⇒ page 88 .

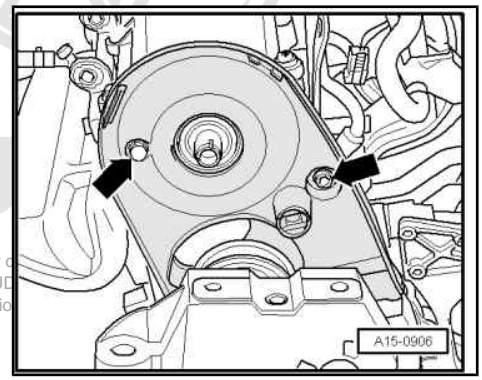

Protected by copyright. Copying for private or c
permitted unless authorised by AUDI AG. AUD
with respect to the correctness of informatio

– Slacken cylinder head bolts using special wrench - T10070- , keeping to sequence shown.

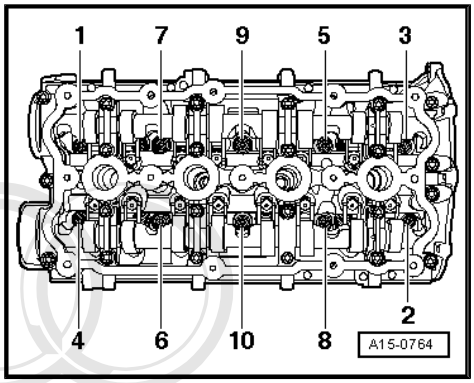

Note

Check that all hoses, pipes and wiring connections between engine, gearbox and body have been detached.

– Remove cylinder head.

Installing cylinder head

- Tightening torques and tightening sequence ⇒ page 84
- Tightening torques ⇒ page 216

Note

- *Renew the cylinder head bolts.*
- *On assembly, renew oil seals and gaskets as well as self-locking nuts and bolts that are tightened by turning through to a specified angle.*
- *Secure all hose connections with the correct type of hose clips (same as original equipment) ⇒ Parts catalogue.*
- *If repairing, carefully remove any remaining gasket material from the cylinder head and cylinder block. Ensure that no long scores or scratches are made on the surfaces.*
- *Carefully remove any remaining emery and abrasive material.*
- *Do not remove new cylinder head gasket from packaging until it is ready to be fitted.*
- *Handle gasket very carefully. Damage to the silicone coating or the indented area will lead to leaks.*
- *No oil or coolant must be allowed to remain in the blind holes for the cylinder head bolts in the cylinder block.*
- *High-temperature paste ⇒ Parts catalogue*

Protected by copyright. Copying for private or commercial purposes, in part or in whole, is not permitted unless authorised by AUDI AG. AUDI AG does not guarantee or accept any liability with respect to the correctness of information in this document. Copyright by AUDI AG.

WARNING

Engine must only be turned in direction of rotation (clockwise) via crankshaft.

Note

Turn over the engine at the central bolt on the crankshaft.

– Align mark on camshaft sprocket with mark on toothed belt cover. The indentations on the camshafts -arrows- face each other.
– If crankshaft has been rotated: set No. 1 cylinder piston to top dead centre and then turn crankshaft back slightly.

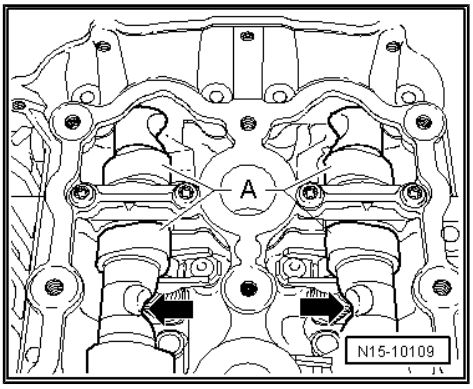

Protected by copyright. Copying for private or commercial purposes, in part or in whole, is not permitted unless authorised by AUDI AG. AUDI AG does not guarantee or accept any liability with respect to the correctness of information in this document. Copyright by AUDI AG.

– Place cylinder head gasket in position.

♦ Note position of centring pins in cylinder block -arrows-.

♦ Note installation position of cylinder head gasket. Part No. should be legible from inlet side.

– Fit cylinder head.

– Insert and hand-tighten cylinder head bolts.

– Tightening sequence for cylinder head ⇒ Item 13 (page 176) :

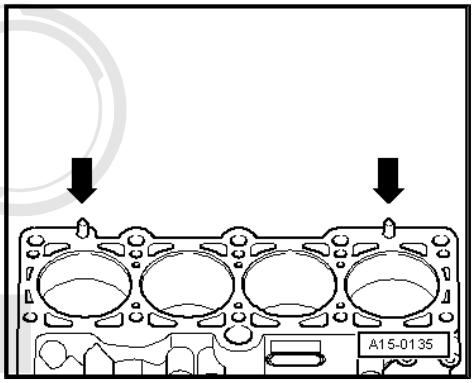

Note

Cylinder head bolts do not have to be torqued down again later after repair work.

Protected by copyright. Copying for private or commercial purposes, in part or in whole, is not permitted unless authorised by AUDI AG. AUDI AG does not guarantee or accept any liability with respect to the correctness of information in this document. Copyright by AUDI AG.

– Install cylinder head cover ⇒ page 90 .

– Install wiper arms ⇒ Electrical system; Rep. Gr. 92 .

– Install toothed belt ⇒ page 61 .

– Install poly V-belt ⇒ page 32 .

– Electrical connections and routing ⇒ Current flow diagrams, Electrical fault finding and Fitting locations.

– Install intake manifold ⇒ Motronic direct injection and ignition system (4-cylinder); Rep. Gr. 24; Servicing injection system .

– Install air pipes with plug-in connectors ⇒ page 173 .

– Connect battery ⇒ Electrical system; Rep. Gr. 27 .

– Bleed fuel system ⇒ Motronic direct injection and ignition system (4-cylinder); Rep. Gr. 24; Servicing fuel injection system .

– Check oil level ⇒ Maintenance ; Booklet 808 .

– Fill up with coolant ⇒ page 157 .

Note

♦ *Drained-off coolant may only be used again if the original cylinder head and cylinder block are re-installed.*

♦ *Contaminated or dirty coolant must not be used again.*

WARNING

Never use battery charging equipment for boost starting. There is danger of damaging the vehicle's control units.

2.5 Checking compression

Special tools and workshop equipment required

- Compression tester - V.A.G 1763-
- Spark plug spanner - 3122 B-
- Puller - T40039-
- Spring type clip pliers - VAS 5024 A-

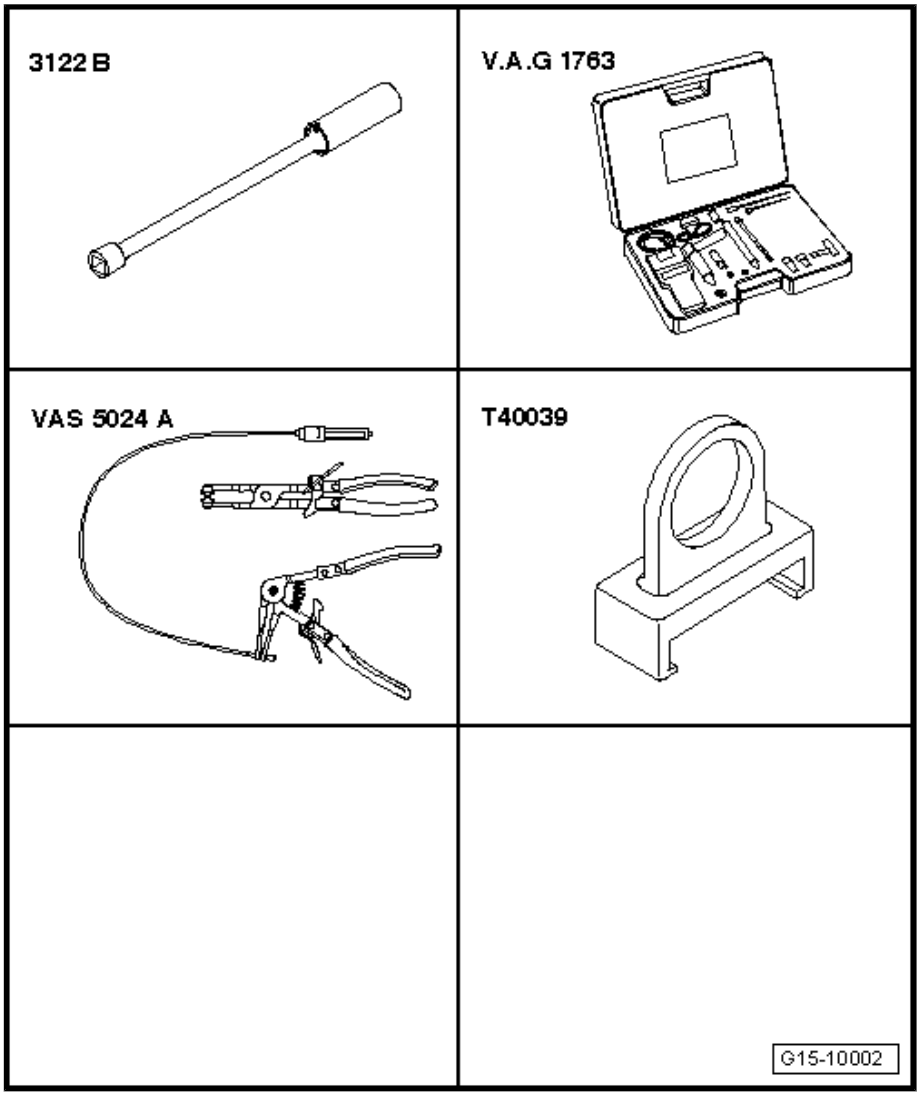

Test sequence

Note

- *Engine oil temperature at least 30 °C*
- *Battery voltage at least 12.7 V*

– Detach engine cover panel with air cleaner ⇒ Rep. gr. 24 .
– Remove ignition coils with output stages ⇒ Rep. gr. 28 .
– Remove spark plugs with spark plug spanner - 3122 B- .
– Unplug 8-pin connector for injectors ⇒ Rep. gr. 24 .
– Check compression with compression tester - V.A.G 1763- and adapter - V.A.G 1763/6- .

Protected by copyright. Copying for private or commercial purposes, in part or in whole, is not permitted unless authorised by AUDI AG. AUDI AG does not guarantee or accept any liability with respect to the correctness of information in this document. Copyright by AUDI AG.

Note

Using the compression tester ⇒ Operating instructions .

– Operate starter until pressure reading on tester no longer rises.

Compression:

New pressure in bar	Wear limit in bar	Permissible difference between cylinders in bar
11.0 … 14.0	7.0	3.0 (maximum)

– Install spark plugs.

– Install ignition coils with output stages ⇒ Rep. gr. 28 .

Note

Faults will have been stored in the memory because connectors have been unplugged. Interrogate and, if necessary, erase fault memory after completing the check.

– Read out fault memory of engine control unit ⇒ vehicle diagnostic, testing and information system VAS 5051 in the function "Guided Fault Finding" .

Protected by copyright. Copying for private or commercial purposes, in part or in whole, is not permitted unless authorised by AUDI AG. AUDI AG does not guarantee or accept any liability with respect to the correctness of information in this document. Copyright by AUDI AG.

3 Valve gear

Note

- *Cylinder head and retaining frame must be renewed together.*
- *After installing camshafts, wait for approx. 30 minutes before starting engine. Hydraulic valve compensation elements have to settle (otherwise valves will strike pistons).*
- *After working on the valve gear, turn the engine carefully at least 2 rotations to ensure that none of the valves make contact when the starter is operated.*
- *Always fit new seals and gaskets.*

Protected by copyright. Copying for private or commercial purposes, in part or in whole, is not permitted unless authorised by AUDI AG. AUDI AG does not guarantee or accept any liability with respect to the correctness of information in this document. Copyright by AUDI AG.

3.1 Exploded view - valve gear

1 - Bolt
- ❑ 50 Nm + turn 180° further
- ❑ Renew
- ❑ Use counterhold tool -3036- when loosening and tightening ⇒ page 63

2 - Camshaft sprocket

3 - Oil seal
- ❑ Renewing ⇒ page 121

4 - Cylinder head
- ❑ Machining limit ⇒ page 105

5 - Valve guide
- ❑ Checking ⇒ page 121

6 - Valve stem oil seal

7 - Valve spring

8 - Upper valve spring plate
- ❑ Renewing: with cylinder head installed ⇒ page 113 , with cylinder head removed ⇒ page 118

9 - Cotters

10 - Hydraulic valve clearance compensation element
- ❑ Do not interchange
- ❑ Lubricate contact sur-

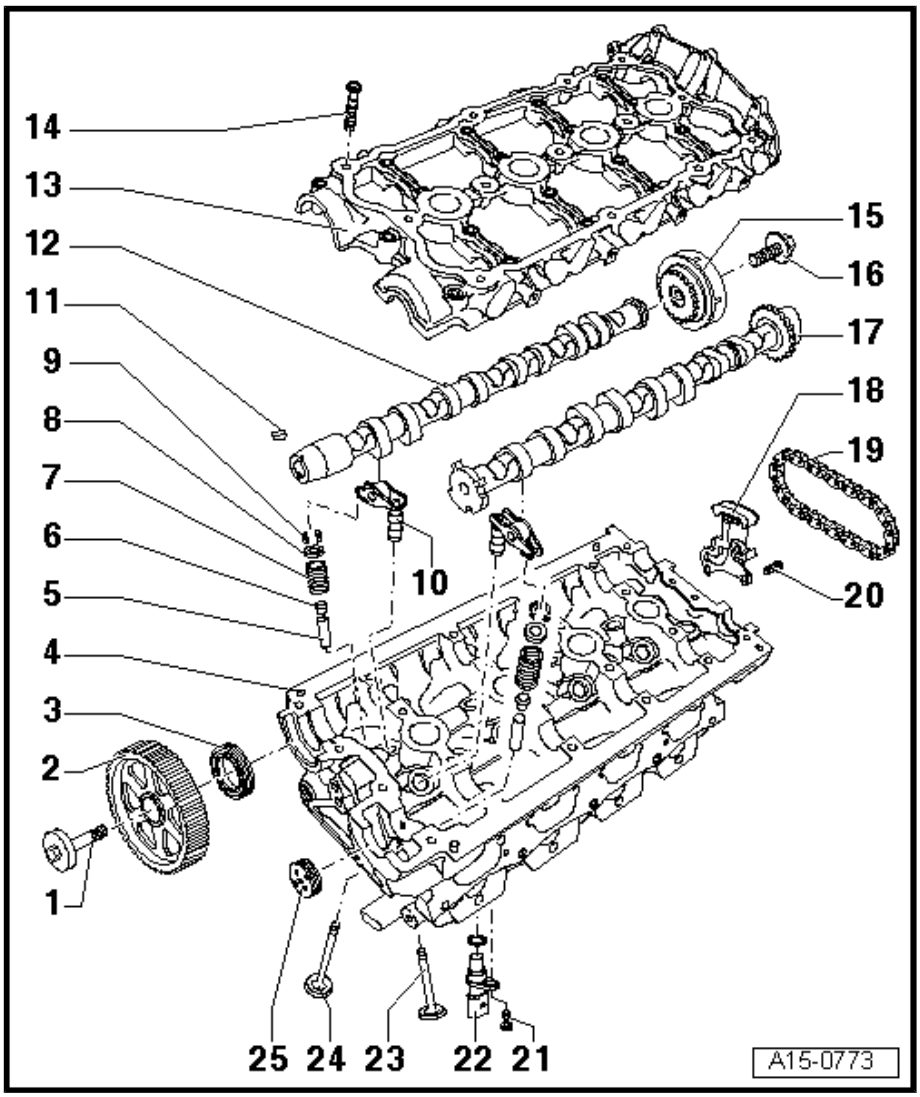

face

11 - Parallel key
- ❑ Check for firm attachment

12 - Exhaust camshaft
- ❑ Check radial clearance with Plastigauge (roller rocker fingers removed)
- ❑ Radial clearance when bearing ∅ is 24 mm: 0.024 ... 0.066 mm
- ❑ Radial clearance when bearing ∅ is 32 mm: 0.030 ... 0.051 mm
- ❑ Runout: max. 0.04 mm

13 - Retaining frame
- ❑ With integrated camshaft bearings
- ❑ Clean sealing surface; machining not permitted
- ❑ Remove old sealant residues

14 - Bolt
- ❑ Tightening sequence ⇒ page 105
- ❑ Renew

15 - Camshaft adjuster

16 - Bolt
- ❑ 20 Nm + turn 45° further
- ❑ Renew

17 - Inlet camshaft
- ❑ Check radial clearance with Plastigauge (roller rocker fingers removed)
- ❑ Radial clearance when bearing ∅ is 24 mm: 0.024 ... 0.066 mm
- ❑ Runout: max. 0.04 mm

Protected by copyright. Copying for private or commercial purposes, in part or in whole, is not permitted unless authorised by AUDI AG. AUDI AG does not guarantee or accept any liability with respect to the correctness of information in this document. Copyright by AUDI AG.

18 - Chain tensioner
- ❑ Remove ⇒ page 105 Removing and installing camshaft adjuster
- ❑ Before removing, lock in place using locking pin - T10115-

19 - Drive chain

20 - Bolt
- ❑ 10 Nm

21 - Bolt
- ❑ 10 Nm

22 - Phase sensor

23 - Exhaust valve
- ❑ Do not machine, only grinding-in is permitted
- ❑ Valve dimensions ⇒ page 105
- ❑ Checking valve guides ⇒ page 121

24 - Inlet valve
- ❑ Do not machine, only grinding-in is permitted
- ❑ Valve dimensions ⇒ page 105
- ❑ Checking valve guides ⇒ page 121

25 - Sealing cap
- ❑ Renew
- ❑ Removing sealing cap with retaining frame installed: pierce on one side with an awl and pry out
- ❑ Installing: press in 1 ... 2 mm deep without sealant using thrust piece - 3334-

Cylinder head machining limit

– Machining of the cylinder head (surface grinding) is only permissible down to the minimum dimension a.

♦ Minimum dimension a = 139.20 mm

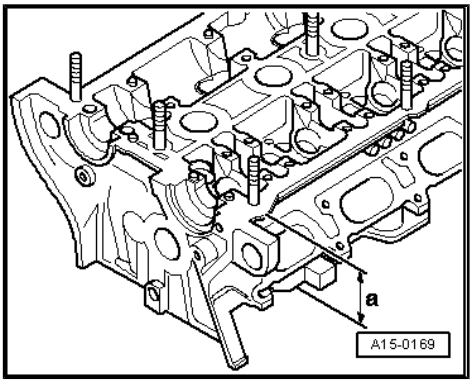

Tightening sequence for retaining frame

– Renew bolts

1. Fit bolts in the sequence -1 ... 6- and hand-tighten in several stages.
2. Tighten bolts in the sequence -1 ... 6- to 8 Nm using torque wrench.
3. Turn 90° ($^1/_4$ turn) further in the sequence -1 ... 6- using a rigid wrench.

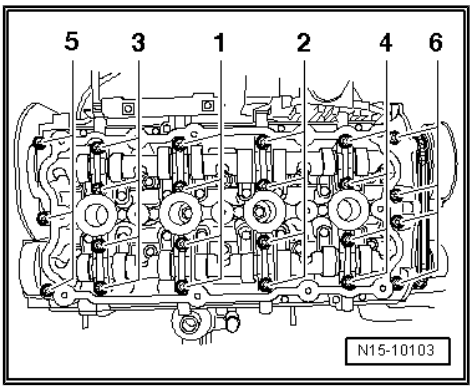

Note

Take care to keep retaining frame straight.

Valve dimensions

Note

Inlet and exhaust valves must not be machined. Only grinding-in is permitted.

Dimension		Inlet valve	Exhaust valve
∅ a	mm	33.85 + 0.10	28.0 + 0.1
∅ b	mm	5.98 + 0.01	5.96 + 0.01
c	mm	104.0 + 0.2	101.9 + 0.2
α	∠°	45	45

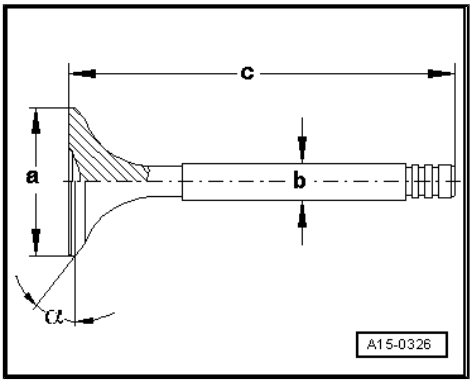

3.2 Removing and installing camshaft adjuster

Protected by copyright. Copying for private or commercial purposes, in part or in whole, is not permitted unless authorised by AUDI AG. AUDI AG does not guarantee or accept any liability with respect to the correctness of information in this document. Copyright by AUDI AG.

Special tools and workshop equipment required

- Socket - T40080-
- Camshaft clamp - T10252-
- Pin wrench - T10020-
- Locking pin - T10115-

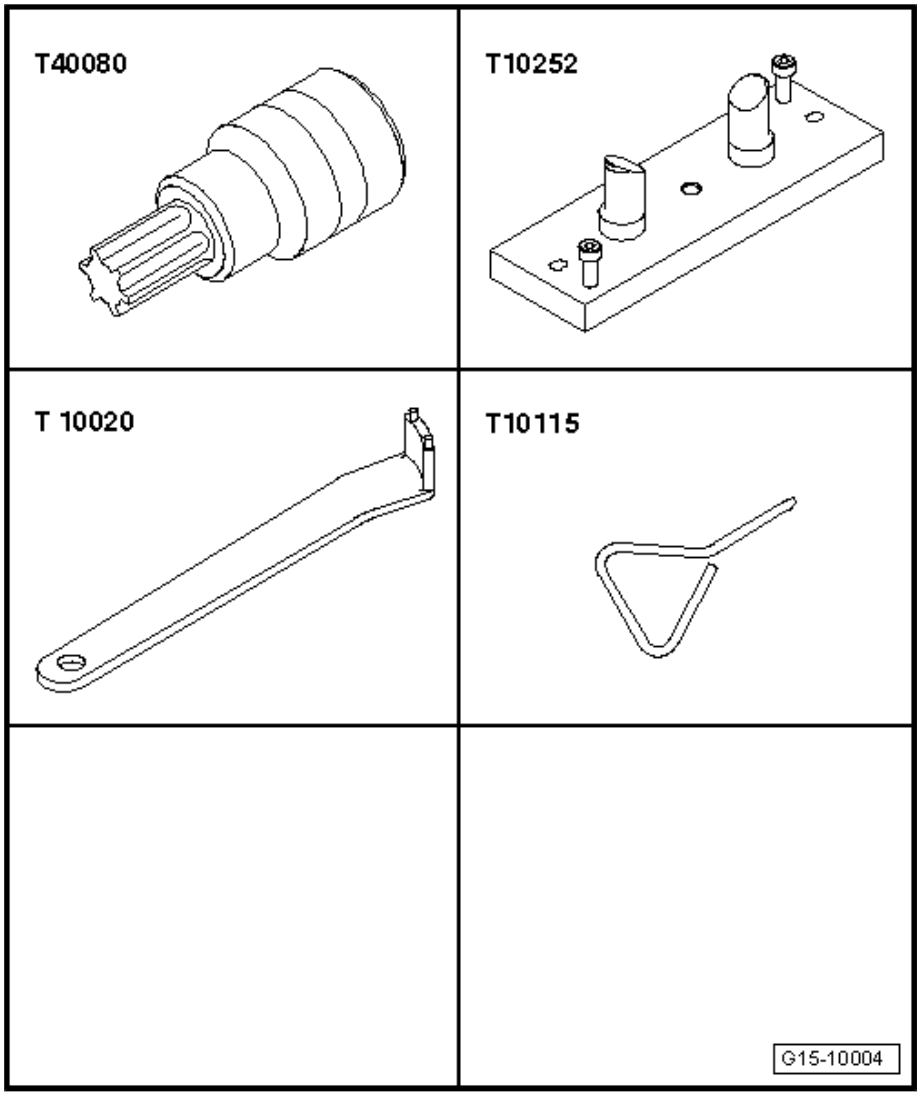

Removing

– Remove high-pressure pump ⇒ Rep. gr. 24 .
– Remove cylinder head cover ⇒ page 88 .
– Remove vacuum pump.
– Remove housing for camshaft adjuster -arrows-.

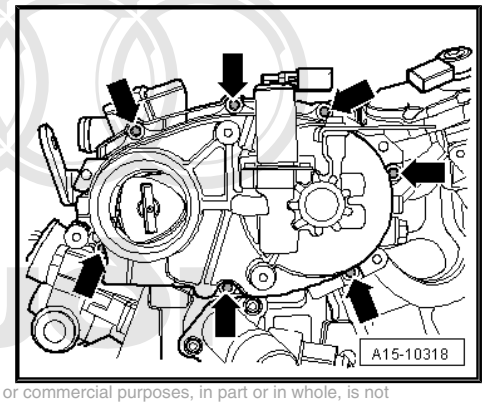

Protected by copyright. Copying for private or commercial purposes, in part or in whole, is not permitted unless authorised by AUDI AG. AUDI AG does not guarantee or accept any liability with respect to the correctness of information in this document. Copyright by AUDI AG.

– Align mark on camshaft sprocket with mark on toothed belt cover. The indentations on the camshafts -arrows- face each other.

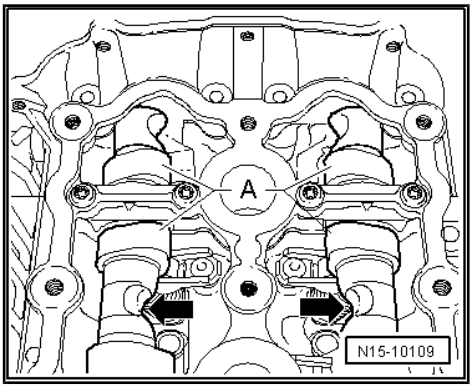

– Fit camshaft clamp - T10252- as shown and secure -arrows-.

– Loosen securing bolt from camshaft adjuster using special wrench - T40080- .

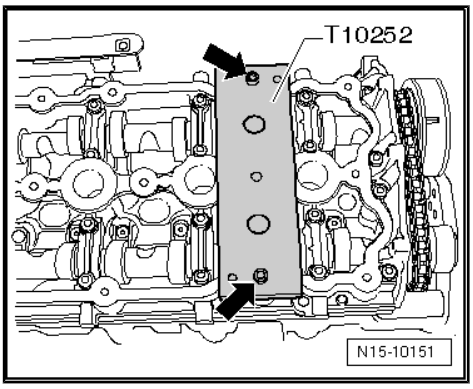

– Compress chain tensioner -arrow A- and lock with locking pin - T10115- -arrow B-.

– Remove securing bolt from camshaft adjuster and remove camshaft adjuster together with chain.

Installing

- Tightening torques ⇒ page 103
- Tightening torques ⇒ page 84

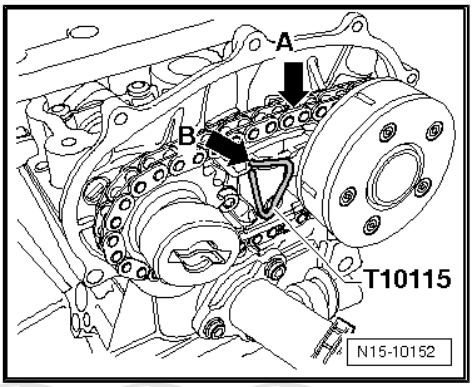

- The camshafts are located with the camshaft clamp - T10252- .

– Fit chain onto camshaft adjuster.

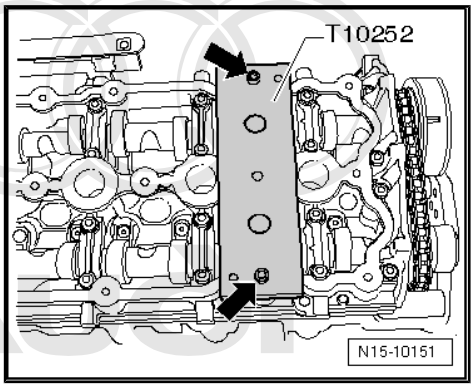

Protected by copyright. Copying for private or commercial purposes, in part or in whole, is not permitted unless authorised by AUDI AG. AUDI AG does not guarantee or accept any liability with respect to the correctness of information in this document. Copyright by AUDI AG.

– Hold camshaft adjuster in front of exhaust camshaft so that notch -A- is aligned with pin -B-.

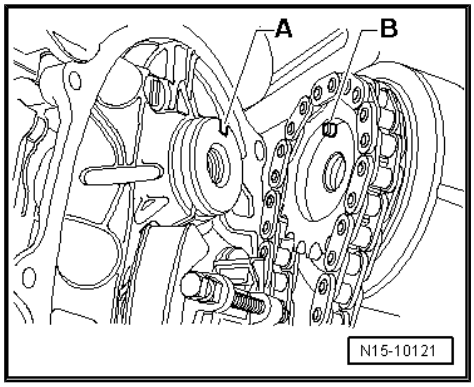

– Lay chain over inlet camshaft sprocket starting at top -arrow- without changing its position.

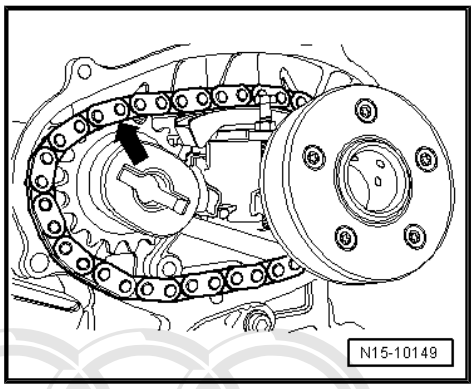

– Turn inlet camshaft slowly in direction of arrow -A- using pin wrench - T10020- until the camshaft adjuster fits onto the camshaft.

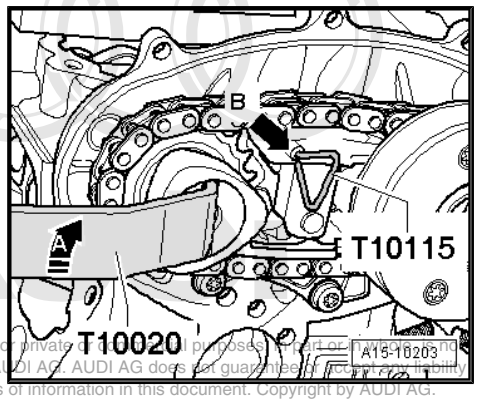

Note

If it is not possible to fit the pin into the notch: remove chain and fit chain again.

– Renew securing bolt for camshaft adjuster.

– Tighten securing bolt for camshaft adjuster. Use special wrench - T40080- for this purpose.

Protected by copyright. Copying for private or commercial purposes, in part or in whole, is not permitted unless authorised by AUDI AG. AUDI AG does not guarantee or accept any liability with respect to the correctness of information in this document. Copyright by AUDI AG.

– Remove locking pin - T10115- -arrow B-.

Further assembly is basically carried out in reverse order of dismantling.

– Install cylinder head cover ⇒ page 88 .

– Install high-pressure pump ⇒ Rep. gr. 24 .

– Install vacuum pump ⇒ Rep. gr. 47 .

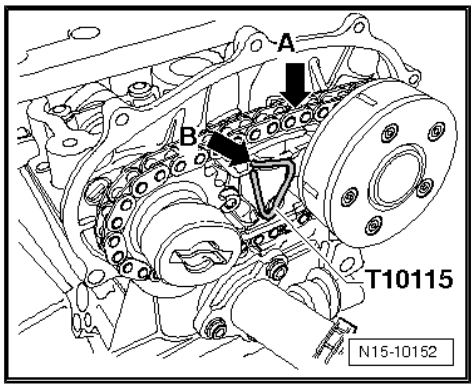

3.3 Removing and installing camshafts

Special tools and workshop equipment required

Protected by copyright. Copying for private or commercial purposes, in part or in whole, is not permitted unless authorised by AUDI AG. AUDI AG does not guarantee or accept any liability with respect to the correctness of information in this document. Copyright by AUDI AG.

- Two-arm puller - T40001-

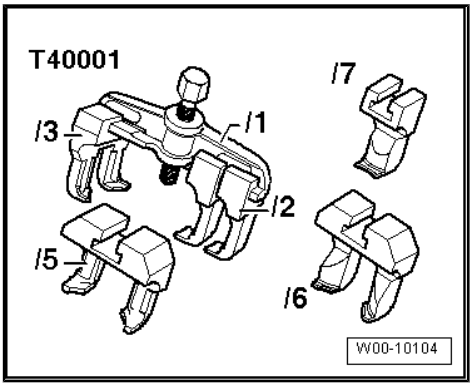

- Counterhold tool - 3036-

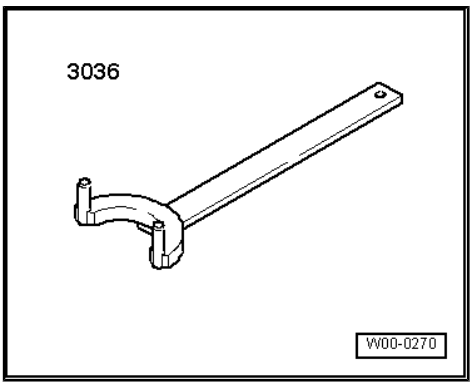

Removing

Note

- *Sealing surfaces at bottom of retaining frame and top of cylinder head may not be machined.*
- *The camshaft bearings are integrated into the cylinder head and retaining frame. Toothed belt must be slackened before removing retaining frame.*
- *Renew camshaft oil seal and sealing cap if retaining frame has been unfastened.*

– Remove cylinder head cover ⇒ page 88 .

– Remove camshaft adjuster ⇒ page 105 .

– Remove toothed belt ⇒ page 61 .

– Loosen camshaft sprocket using counterhold tool - 3036- .

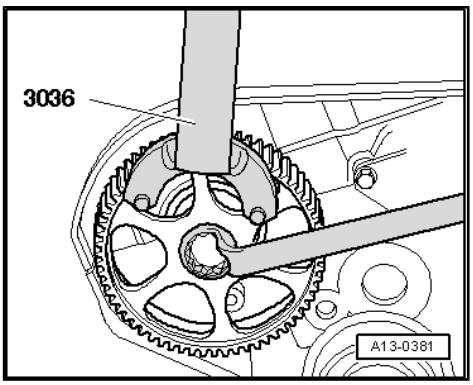

– Use puller - T40001- , claw - T40001/6- and claw - T40001/7- to pull off camshaft sprocket.

– Detach toothed belt cover (rear) from cylinder head.

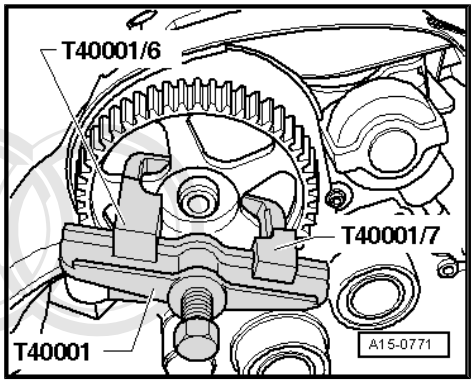

– Unscrew retaining frame bolts in the sequence -6 ... 1- and carefully remove retaining frame.

– Remove camshafts together with drive chain from cylinder head.

– Make sure dirt and remnants of sealant do not drop into cylinder head.

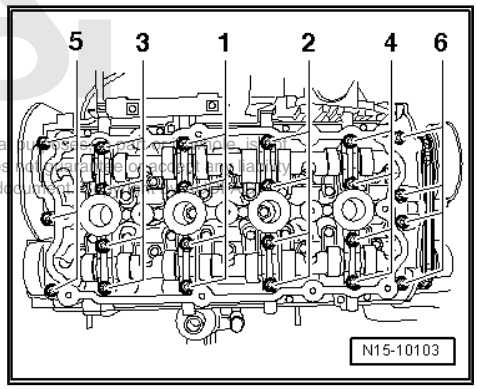

Protected by copyright. Copying for private or commercial purposes, in part or in whole, is not permitted unless authorised by AUDI AG. AUDI AG does not guarantee or accept any liability with respect to the correctness of information in this document.

Installing

- Tightening torques ⇒ page 103
- Tightening torques ⇒ page 84

Note

- ♦ *The sealing surfaces must be free of oil and grease.*
- ♦ *Pistons must not be at TDC.*
- ♦ *Ensure that all roller rocker fingers contact the valve ends correctly.*

– Remove old sealant from groove in retaining frame and from sealing surfaces.

– Make sure dirt and remnants of sealant do not drop into cylinder head.

– Lubricate running surfaces of the camshafts with oil.

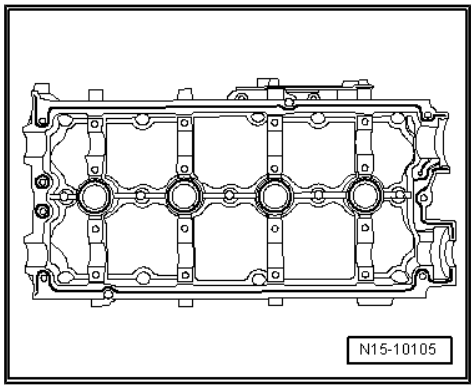

– Position drive chain on chain sprockets as follows (with camshafts removed):

– Lubricate running surfaces of camshafts.

- Cams -A- of cylinder 4 must face each other.
- Recesses -arrows- on both camshafts must face each other.
- The side surfaces of the recesses should be positioned exactly vertical.

– Insert camshafts together with drive chain into cylinder head and chain tensioner.

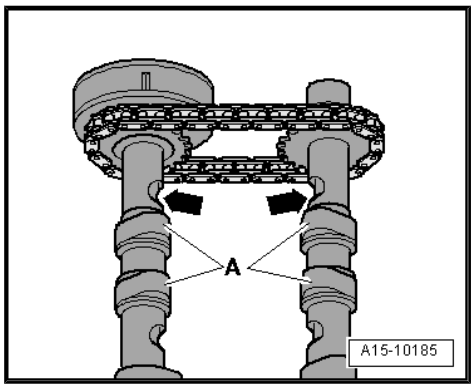

– Check TDC position of camshafts again.
- Cams -A- of cylinder 4 must face each other.
- Recesses -arrows- on both camshafts must face each other.
- The side surfaces of the recesses should be positioned in exactly vertical line to the cylinder head.

– Lubricate running surfaces of camshafts.

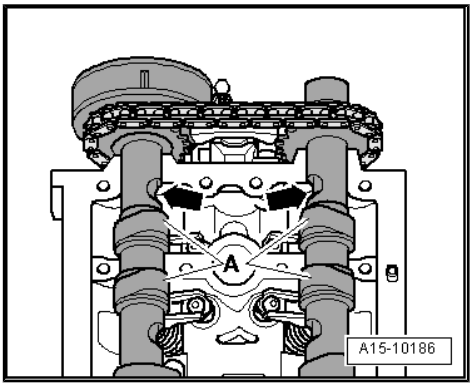

– Apply an even, slightly projecting sealant bead into the clean groove of the retaining frame.

Sealant ⇒ Parts catalogue

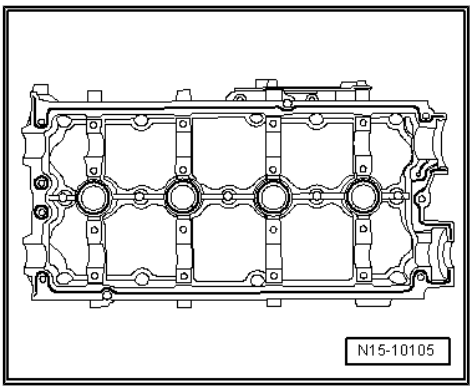

Note

♦ *Do not apply the sealant thicker than prescribed.*

♦ *No time should be allowed to elapse when fitting and securing retaining frame, as sealant starts to harden as soon as sealing surfaces make contact.*

Protected by copyright. Copying for private or commercial purposes, in part or in whole, is not permitted unless authorised by AUDI AG. AUDI AG does not guarantee or accept any liability with respect to the correctness of information in this document. Copyright by AUDI AG.

♦ *Note the use-by date of the sealant.*

– Fit retaining frame so that it goes past the exhaust gas recirculation valve - N18- -arrow-.

– Renew bolts for retaining frame.

– Tighten bolts lightly in several stages, working from inside outwards.

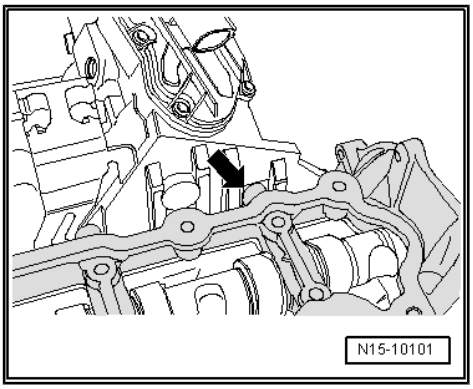

– Tighten bolts in several stages; tightening sequence ⇒ page 105 .

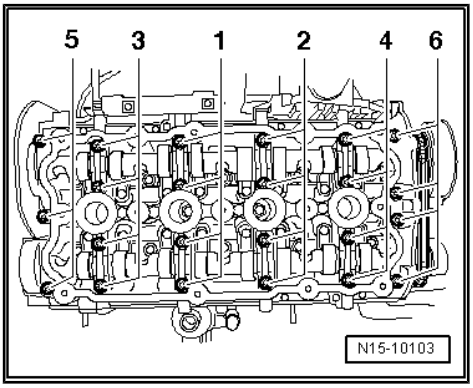

Note

Take care to keep retaining frame straight.

– Then check that camshafts are in TDC position (insert camshaft clamp - T10252- as far as stop).

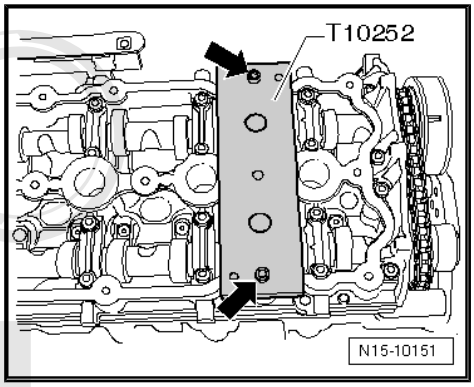

Note

- *If necessary, turn camshafts slightly backwards or forwards when inserting camshaft clamp - T10252- .*
- *Disregard -arrows-.*

– If it is not possible to insert camshaft clamp - T10252- , retaining frame must be removed and camshafts installed for a second time ⇒ page 110 .

– Detach camshaft clamp - T10252- .

Protected by copyright. Copying for private or commercial purposes, in part or in whole, is not permitted unless authorised by AUDI AG. AUDI AG does not guarantee or accept any liability with respect to the correctness of information in this document. Copyright by AUDI AG.

– Drive in cap ⇒ Item 25 (page 104) approx. 1 ... 2 mm deep using thrust piece - 3334- .

– Install camshaft oil seal ⇒ page 121 .

– Install toothed belt cover (rear).

– Insert parallel key into camshaft.

– Install camshaft sprocket. To tighten bolt, hold camshaft sprocket in position using counterhold tool - 3036- .

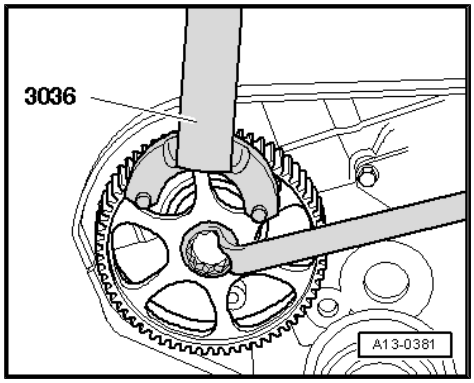

Note

- *When turning the camshaft, the pistons must not be at TDC. This could otherwise result in damage to valves and pistons.*
- *Make sure parallel key is correctly seated.*

– Install toothed belt ⇒ page 61 .

– Install camshaft adjuster ⇒ page 105 .

– Install cylinder head cover ⇒ page 88 .

Further assembly is basically carried out in reverse order of dismantling.

3.4 Checking axial clearance of camshafts

Special tools and workshop equipment required

- Universal dial gauge bracket - VW 387-

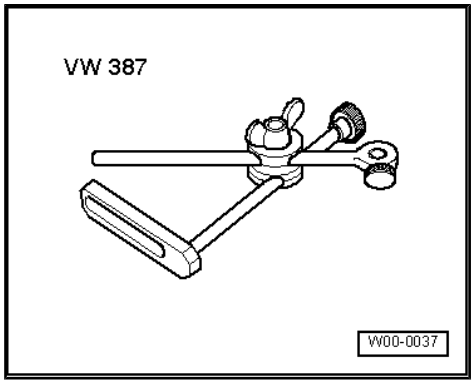

♦ Dial gauge - VAS 6079-

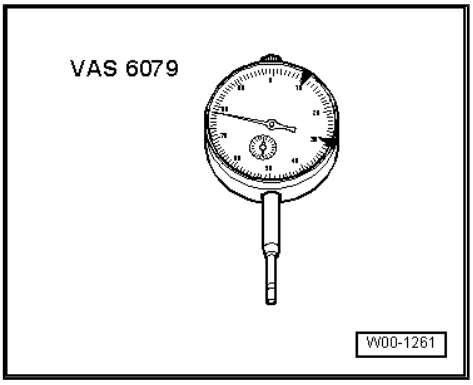

Test sequence

– Perform measurement with retaining frame removed.
– Fit camshaft to be tested in retaining frame.
– Attach dial gauge - VAS 6079- with universal dial gauge bracket - VW 387- to cylinder head.
– Press camshaft against dial gauge by hand.
– Set dial gauge to “0”.
– Press camshaft away from dial gauge and read off value:
• Axial clearance: 0.05 ... 0.17 mm

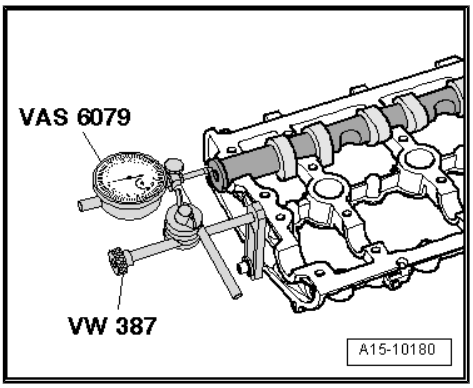

3.5 Renewing valve stem oil seals with cylinder head installed

Protected by copyright. Copying for private or commercial purposes, in part or in whole, is not permitted unless authorised by AUDI AG. AUDI AG does not guarantee or accept any liability with respect to the correctness of information in this document. Copyright by AUDI AG.

Special tools and workshop equipment required

- Spark plug spanner - 3122 B-
- Valve stem seal puller - 3364-
- Valve stem seal fitting tool - 3365-
- Adapters - T40012-
- Torque wrench - V.A.G 1331-
- Removal and installation device for valve cotters - VAS 5161-
- Guide plate for 2.0 ltr. and 3.0 ltr. FSI engine - VAS 5161/19B-

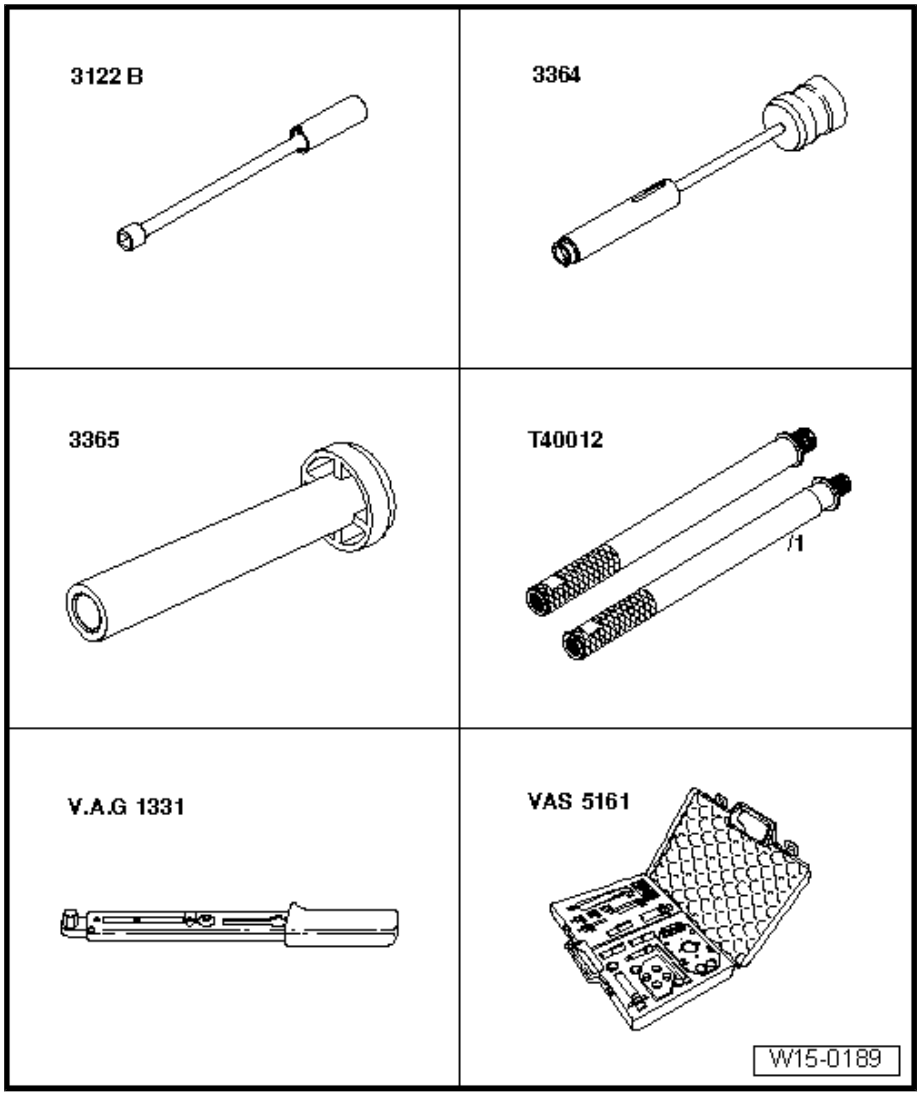

Removing valve stem oil seals

– Remove camshafts ⇒ page 108 .

Note

In order to renew the valve stem oil seals of exhaust valves of cylinder 3 and cylinder 4, the exhaust gas recirculation valve - N18- must also be removed.

– Remove roller rocker fingers and place onto a clean surface. When doing so, make sure that roller rocker fingers are not interchanged.

– Remove spark plugs using spark plug spanner - 3122 B- .

Protected by copyright. Copying for private or commercial purposes, in part or in whole, is not permitted unless authorised by AUDI AG. AUDI AG does not guarantee or accept any liability with respect to the correctness of information in this document. Copyright by AUDI AG.

– Secure guide plate for 2.0 ltr. and 3.0 ltr. FSI engine - VAS 5161/19B- to cylinder head with knurled screws - VAS 5161/12- as shown.

– Set piston of the respective cylinder to “bottom dead centre”.

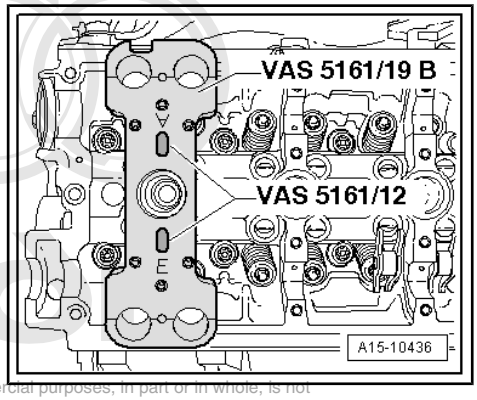

Protected by copyright. Copying for private or commercial purposes, in part or in whole, is not permitted unless authorised by AUDI AG. AUDI AG does not guarantee or accept any liability with respect to the correctness of information in this document. Copyright by AUDI AG.

– Screw adapter - T40012- into spark plug hole and connect to compressed air supply of at least 6 bar.

– Knock loose sticking valve cotters using punch - VAS 5161/3- and a plastic-headed hammer.

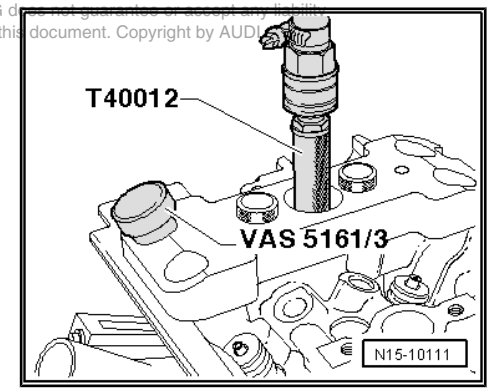

For inlet side

– Screw snap-in device - VAS 5161/6- with engaging fork - VAS 5161/5- into centre thread on guide plate for 2.0 ltr. and 3.0 ltr. FSI engine - VAS 5161/19B- .

– Insert assembly cartridge - VAS 5161/8- into guide plate for 2.0 ltr. and 3.0 ltr. FSI engine - VAS 5161/19B- .

– Engage pressure fork - VAS 5161/2- on snap-in device - VAS 5161/6- .

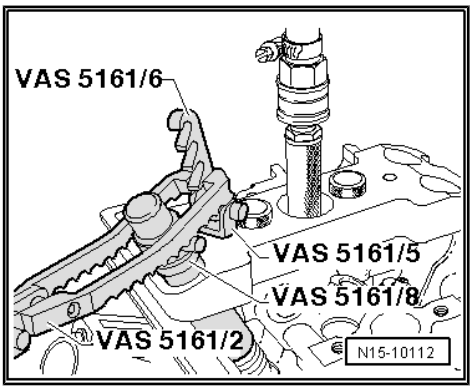

For exhaust side

– Screw snap-in device - VAS 5161/6- with engaging fork - VAS 5161/5- into outer thread on guide plate for 2.0 ltr. and 3.0 ltr. FSI engine - VAS 5161/19B- .

– Press down assembly cartridge - VAS 5161/8- and at the same time, turn knurled screw of assembly cartridge - VAS 5161/8- clockwise until tips engage in valve cotters.

– Move knurled screw back and forth slightly; the valve cotters are thus forced apart and taken up by the assembly cartridge.

– Release pressure fork - VAS 5161/2- .

– Take out assembly cartridge - VAS 5161/8- .

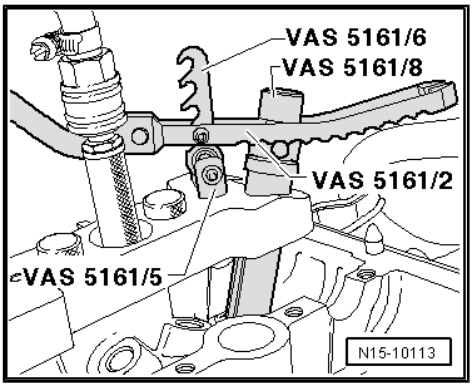

– Pull off valve stem oil seal with valve stem seal puller - 3364- .

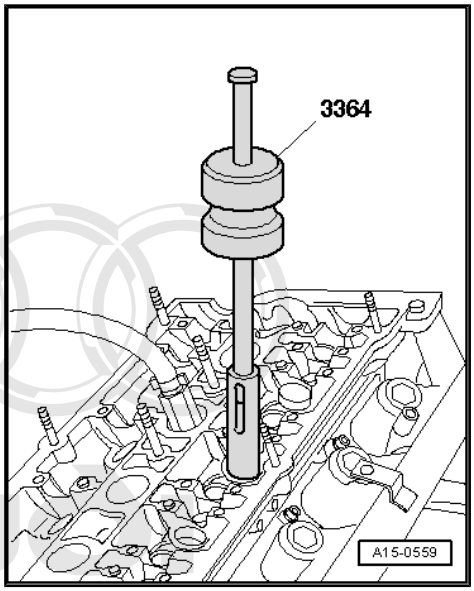

– If valve stem seal puller - 3364- cannot be used on account of restricted space, knock out pin -arrow- with a punch and remove the impact extractor attachment.

Protected by copyright. Copying for private or commercial purposes, in part or in whole, is not permitted unless authorised by AUDI AG. AUDI AG does not guarantee or accept any liability with respect to the correctness of information in this document. Copyright by AUDI AG.

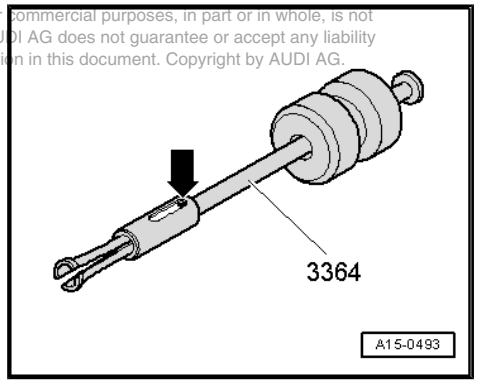

– Position lower part of valve stem seal puller - 3364- on valve stem oil seal.
– Insert a punch -1- through hole in lower section of puller.
– Apply assembly lever to puller and pull out valve stem oil seal -arrow-.

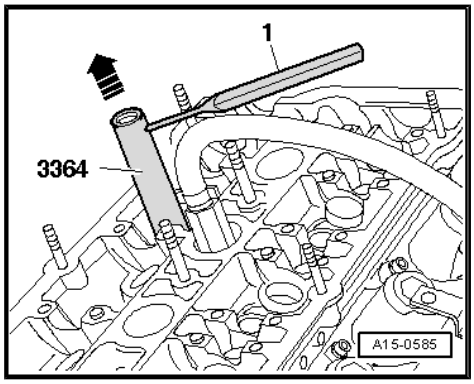

Installing valve stem oil seals

– To prevent damage to the new valve stem seals -B-, attach plastic sleeve -A- to valve stem.
– Lubricate sealing lip of valve stem oil seal -B-, place it in the valve stem seal fitting tool - 3365- and push carefully onto valve guide.
– Remove plastic sleeve -A-.
– Insert valve spring and valve spring plate.
– Set up removal and installation device - VAS 5161- as shown.

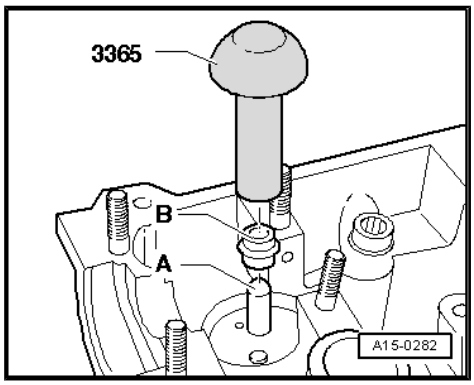

Inlet side

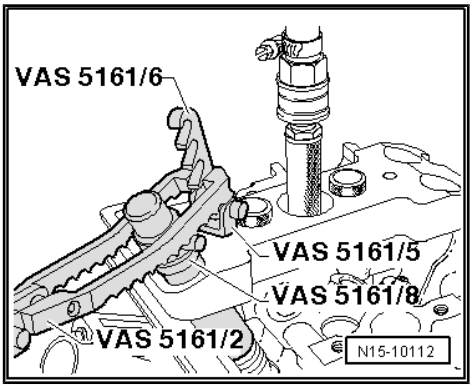

Exhaust side

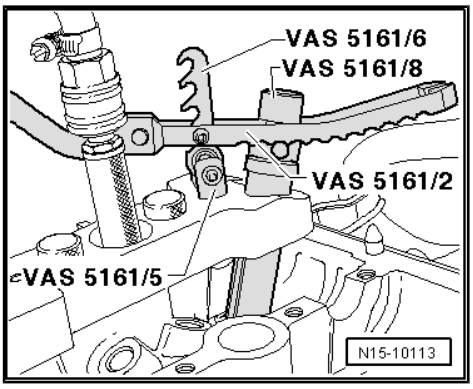

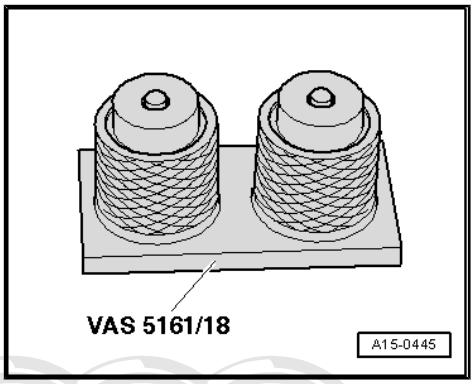

Note

- *If valve cotters have been removed from assembly cartridge, they need to be put into insertion device - VAS 5161/18- first.*
- *Press assembly cartridge -VAS 5161/8- onto insertion device from above and pick up valve cotters.*

– Press down assembly cartridge - VAS 5161/8- with pressure fork - VAS 5161/2- and pull knurled screw of assembly cartridge up, at the same time turning it in both directions.

– Release the pressure fork - VAS 5161/2- with knurled screw still in pulled-out position.

– Take off removal and installation device - VAS 5161- .

Further assembly is basically carried out in reverse order of dismantling.

– Install camshafts ⇒ page 108 .

Protected by copyright. Copying for private or commercial purposes, in part or in whole, is not permitted unless authorised by AUDI AG. AUDI AG does not guarantee or accept any liability with respect to the correctness of information in this document. Copyright by AUDI AG.

3.6 Renewing valve stem oil seals with cylinder head removed

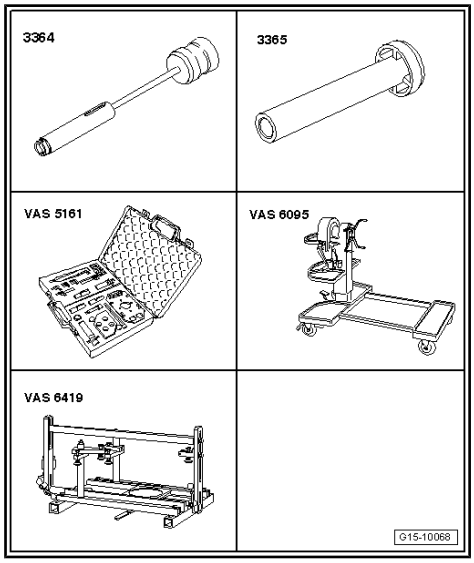

Special tools and workshop equipment required

- Valve stem seal puller - 3364-
- Valve stem seal fitting tool - 3365-
- Removal and installation device for valve cotters - VAS 5161-
- Guide plate for 2.0 ltr. and 3.0 ltr. FSI engine - VAS 5161/19B-
- Engine and gearbox support - VAS 6095-
- Cylinder head tensioning device - VAS 6419-

Procedure

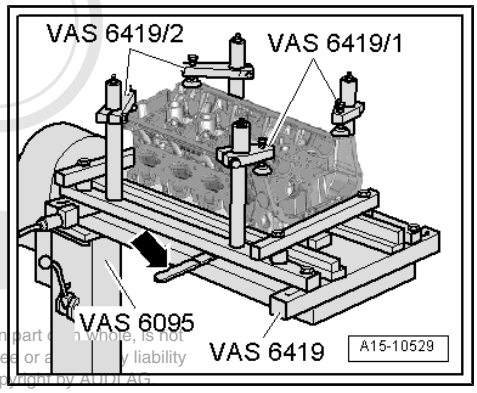

– Remove camshafts ⇒ page 108 .
– Mark original positions of roller rocker fingers and hydraulic compensation elements for re-installation.
– Remove roller rocker fingers together with hydraulic compensation elements and put down on a clean surface.
– Insert cylinder head tensioning device - VAS 6419- into engine and gearbox support - VAS 6095- .
– Secure cylinder head in cylinder head tensioning device - VAS 6419- , as illustrated.
– Connect cylinder head tensioning device - VAS 6419- to compressed air supply.
– Using lever -arrow-, slide air pad under combustion chamber where valve stem oil seals are to be removed.
– Apply just enough compressed air to bring air pad into contact with valve heads.

Protected by copyright. Copying for private or commercial purposes, in part or in whole, is not permitted unless authorised by AUDI AG. AUDI AG does not guarantee or assume any liability with respect to the correctness of information in this document. Copyright by AUDI AG.

– Fit guide plate -VAS 5161/19B- from removal and installation device for valve cotters - VAS 5161- on cylinder head.

– Secure guide plate with knurled screws -VAS 5161/12- .

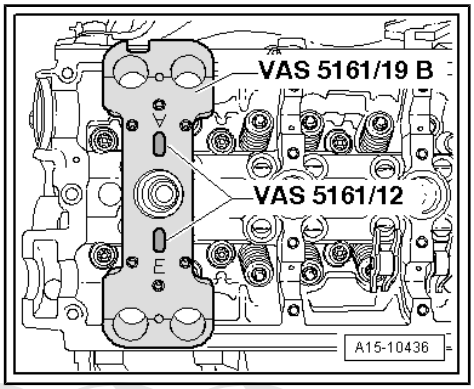

– Apply drift -VAS 5161/3- to guide plate and use plastic-headed hammer to release sticking valve cotters.

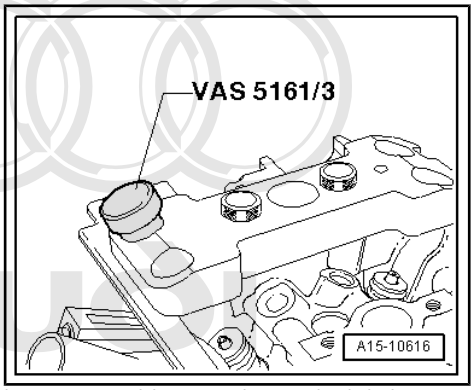

Protected by copyright. Copying for private or commercial purposes, in part or in whole, is not permitted unless authorised by AUDI AG. AUDI AG does not guarantee or accept any liability with respect to the correctness of information in this document. Copyright by AUDI AG.

– Screw snap-in device -VAS 5161/6- with engaging fork -VAS 5161/5- into guide plate.

– Insert assembly cartridge -VAS 5161/8- in guide plate.

Inlet side:

– Engage pressure fork -VAS 5161/2- at snap-in device, as shown in illustration.

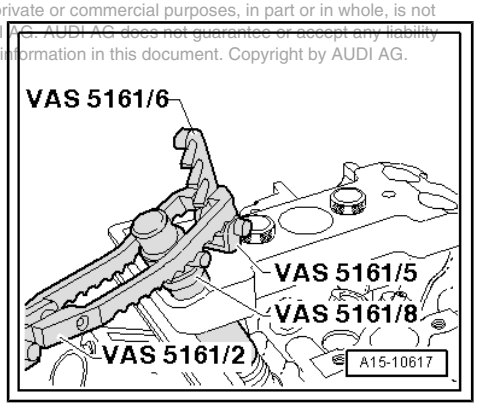

Exhaust side:

– Engage pressure fork -VAS 5161/2- at snap-in device, as shown in illustration.

Both sides (continued):

– Press down with pressure fork for assembly cartridge.

– At the same time, turn knurled screw of assembly cartridge clockwise until tips engage in valve cotters.

– Turn knurled screw in both directions.

• The valve cotters are forced apart and are taken up by the cartridge.

– Release pressure fork.

– Take out assembly cartridge.

– Detach guide plate and turn to one side.

– Detach valve spring with valve spring plate.

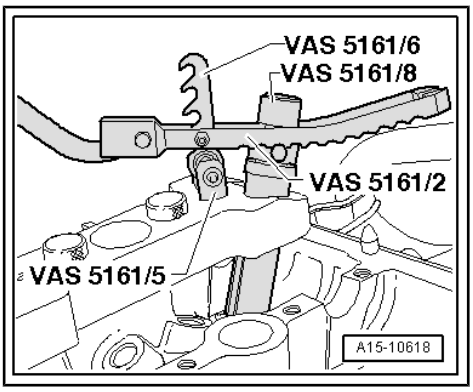

– Pull off valve stem oil seal with valve stem seal puller - 3364- .

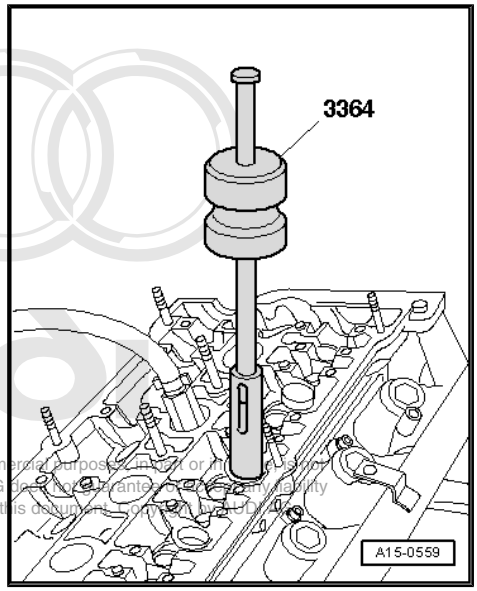

Protected by copyright. Copying for private or commercial purposes, in part or in whole, is not permitted unless authorised by AUDI AG. AUDI AG does not guarantee or assume any liability with respect to the correctness of information in this document. Copyright by AUDI AG.

> ⚠ **Caution**
>
> ***Make sure valve stem oil seals are not damaged when installing.***
>
> ◆ ***New valve stem oil seals -B- are supplied with plastic sleeve; fit plastic sleeve -A- onto valve stem.***

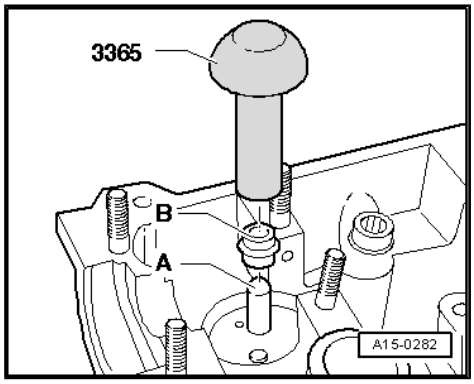

– Lightly oil sealing lip of valve stem oil seal.

– Slide valve stem oil seal onto plastic sleeve.

– Carefully press valve stem oil seal onto valve guide using valve stem seal fitting tool - 3365- .

– Remove plastic sleeve.

If valve cotters have been removed from assembly cartridge, they must first be inserted in insertion device -VAS 5161/18- .

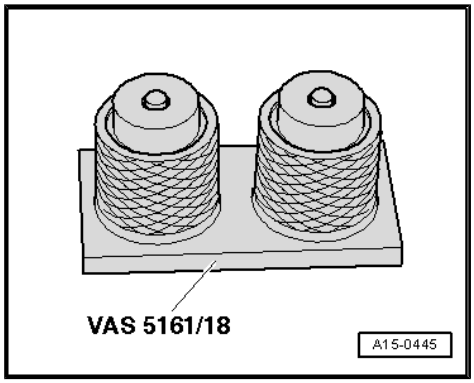

• Larger diameter of valve cotters faces upwards.

– Press assembly cartridge onto insertion device from above and take up valve cotters.

– Insert valve spring and valve spring plate.

– Secure guide plate back onto cylinder head.

– Insert assembly cartridge with knurled spacer ring in guide plate.

– Press down pressure fork and pull knurled screw upwards while turning screw in both directions.

• This will insert the valve cotters.

– Release the pressure fork with knurled screw still in pulled position.

– Repeat procedure for each valve.

Installation is carried out in the reverse order; note the following:

– Install camshafts ⇒ page 108 .

3.7 Checking valve guides

Special tools and workshop equipment required

- Universal dial gauge bracket - VW 387-

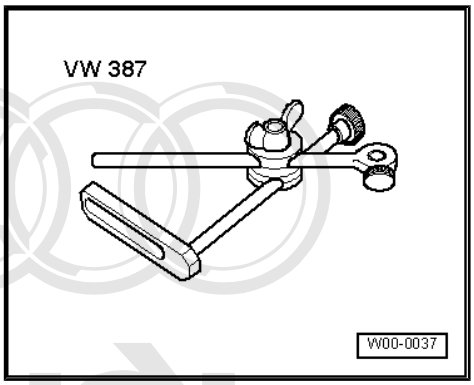

- Dial gauge - VAS 6079-

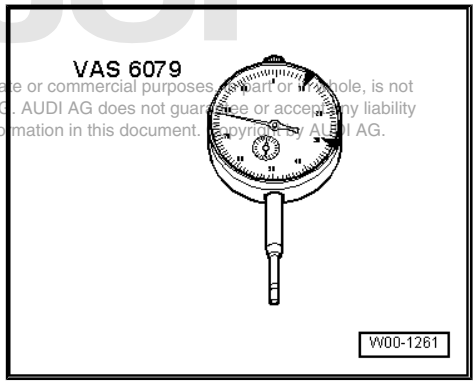

Protected by copyright. Copying for private or commercial purposes, in part or in whole, is not permitted unless authorised by AUDI AG. AUDI AG does not guarantee or accept any liability with respect to the correctness of information in this document. Copyright by AUDI AG.

Test sequence

– Insert valve into guide. End of valve stem must be flush with guide. Only insert inlet valve into inlet guide and exhaust valve into exhaust guide, as the stem diameters are different.

– Measure the amount of sideways play.

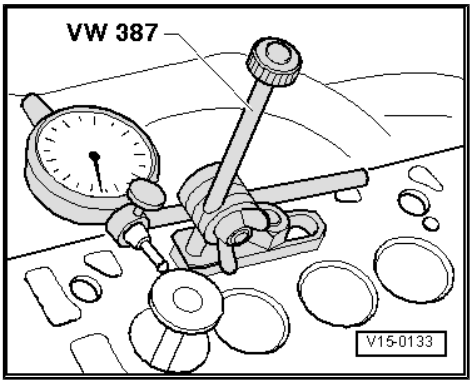

Wear limit

Inlet valve guide	Exhaust valve guide
0.80 mm	0.80 mm

Note

- *If the wear limit is exceeded, repeat the measurement with new valves. Renew cylinder head if wear limit is still exceeded.*
- *If the valve has to be renewed as part of a repair, use a new valve for the measurement.*

3.8 Renewing exhaust camshaft oil seal

Special tools and workshop equipment required

- Oil seal extractor - 2085-
- Assembly tool - 3066-
- Assembly tool - T10071-
- Puller - T40001-

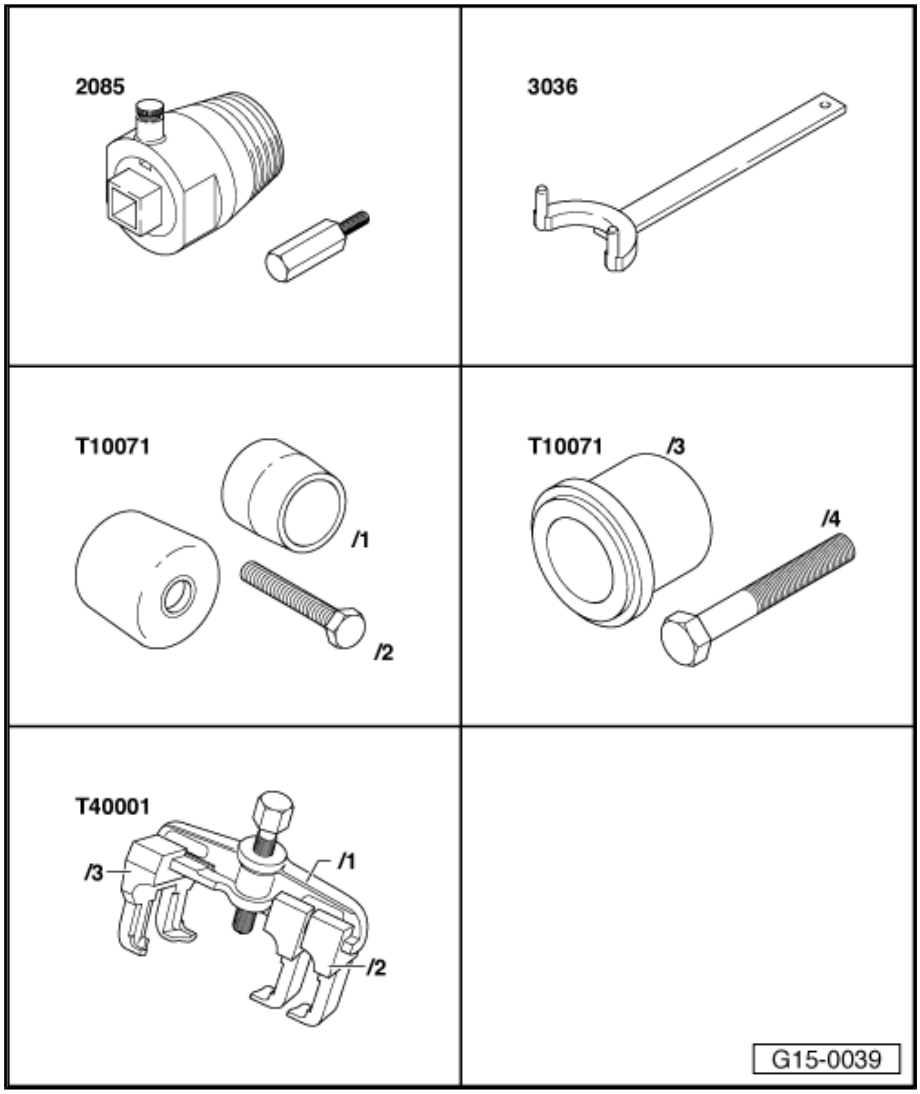

Special tools and workshop equipment required

- Support bracket - 10 - 222 A-

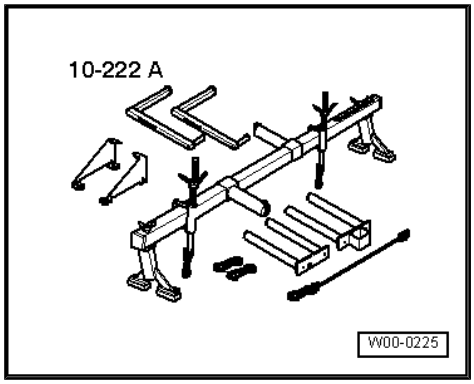

Protected by copyright. Copying for private or commercial purposes, in part or in whole, is not permitted unless authorised by AUDI AG. AUDI AG does not guarantee or accept any liability with respect to the correctness of information in this document. Copyright by AUDI AG.

- Shackle - 10 - 222 A /12-

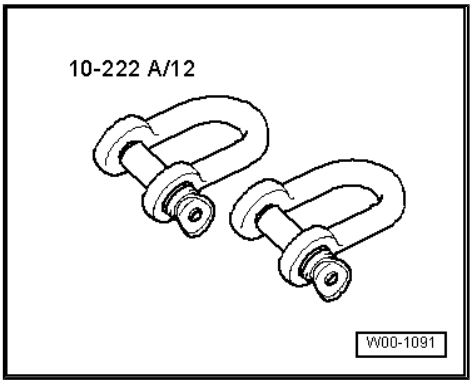

- Pin wrench - T10020-

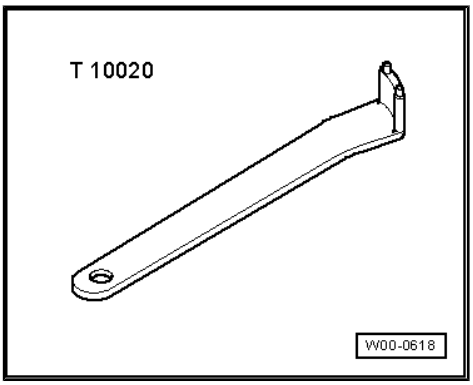

- Locking pin - T10060A-

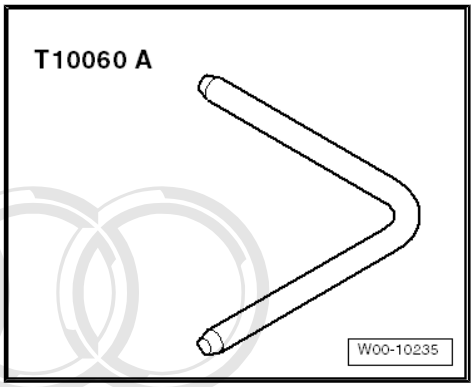

Protected by copyright. Copying for private or commercial purposes, in part or in whole, is not permitted unless authorised by AUDI AG. AUDI AG does not guarantee or accept any liability with respect to the correctness of information in this document. Copyright by AUDI AG.

Removing

– Detach engine cover panel with air cleaner ⇒ Rep. gr. 24 .

> ⚠ **WARNING**
>
> *Hot steam/hot coolant may escape when opening expansion tank. Cover cap with cloth and open carefully.*

– Open filler cap on coolant expansion tank.
– Remove noise insulation ⇒ Rep. gr. 50 .
– Drain off coolant ⇒ page 157 .
– Remove toothed belt ⇒ page 61 .

– Loosen camshaft sprocket (apply counterhold tool - 3036-).

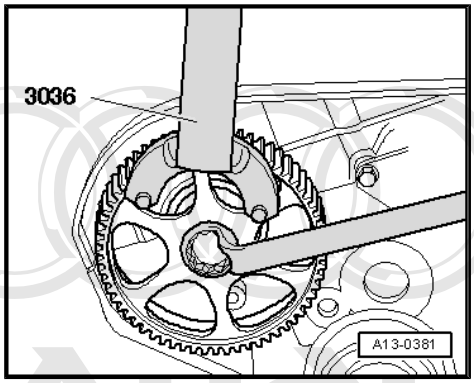

– Detach the camshaft sprocket using puller - T40001- and claws T40001/6 and T40001/7.

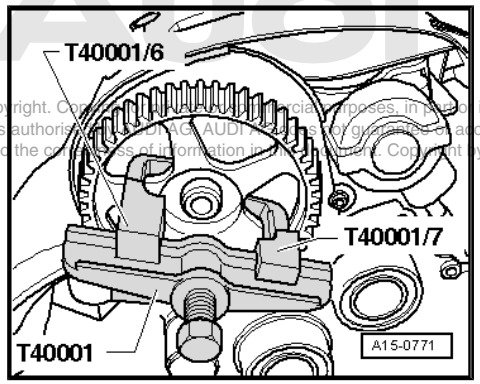

Protected by copyright. Copying for private or commercial purposes, in part or in whole, is not permitted unless authorised by AUDI AG. AUDI AG does not guarantee or accept any liability with respect to the correctness of information in this document. Copyright by AUDI AG.

– To guide oil seal extractor, screw special tool 2085/2 from oil seal extractor - 2085- by hand into camshaft as far as it will go.

– Unscrew inner part of oil seal extractor - 2085- two turns (approx. 3 mm) from the outer part and lock in position with the knurled screw.

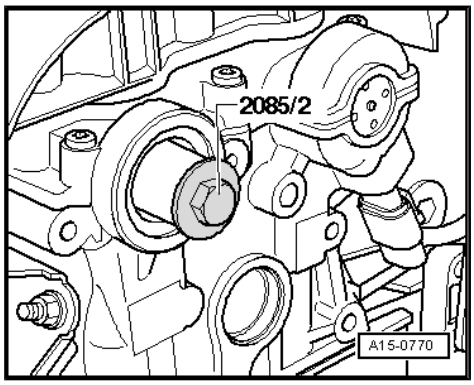

– Lubricate threaded head of oil seal extractor - 2085- , place it in position and, exerting firm pressure, screw it into oil seal as far as possible.

– Loosen knurled screw and turn inner part of extractor against camshaft until oil seal has been extracted.

– Clamp flats of oil seal extractor in vice. Remove oil seal with pliers.

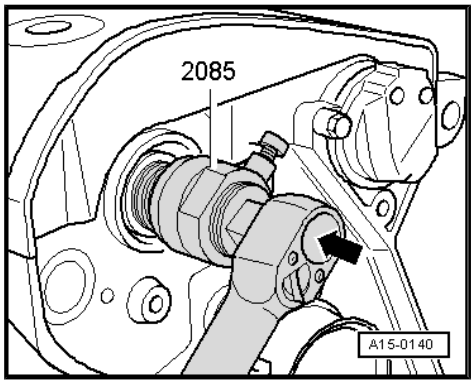

Installing

• Tightening torques ⇒ page 103

– Do not lubricate sealing lip of oil seal.

– Fit guide sleeve - T10071/1- from assembly tool - T10071- onto camshaft journal.

– Push oil seal over guide sleeve onto shaft.

– Detach guide sleeve.

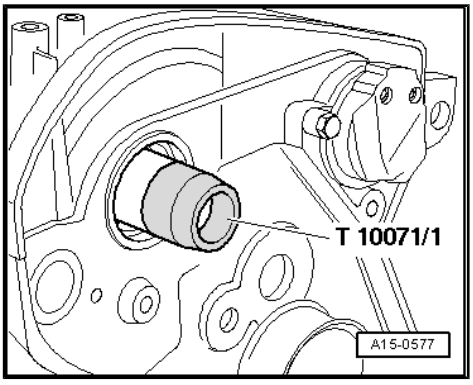

– Press in oil seal all the way using guide sleeve - T10071/3- and bolt - T10071/4- from assembly tool - T10071- .

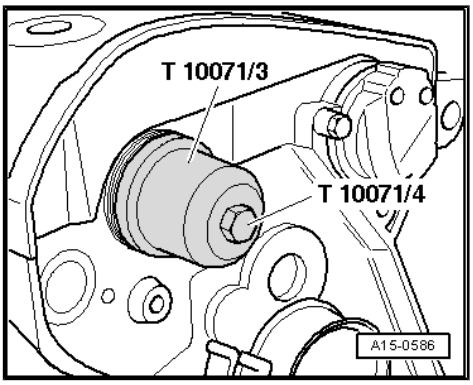

– Install camshaft sprocket.

♦ Check installation position: The thinner web of the camshaft sprocket faces outwards -arrows- and the marking for No. 1 cylinder TDC is visible.

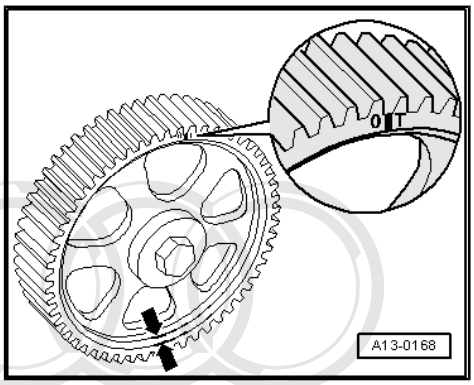

– Fit securing bolt of camshaft sprocket (use counterhold tool - 3036-).

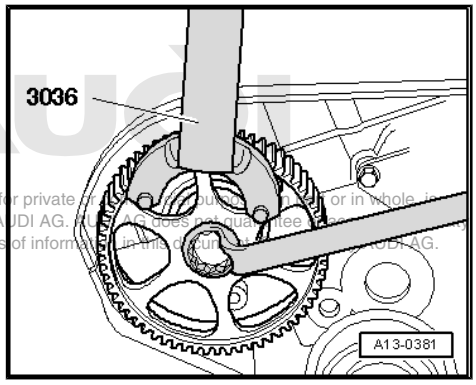

Note

If a piston is at TDC the valves could strike the piston when turning the camshaft. Pistons must therefore not be at TDC This could otherwise result in damage to valves and pistons.

Protected by copyright. Copying for private or commercial purposes, in part or in whole, is prohibited unless authorised by AUDI AG. AUDI AG does not guarantee or accept any liability with respect to the correctness of information in this document. © AUDI AG.

– Install toothed belt ⇒ page 61 .

17 – Lubrication

1 Oil pump and sump

Note

If large quantities of metal shavings or other particles are found in the engine oil when repairing the engine (possibly caused by partial seizure of crankshaft and conrod bearings), clean the oil passages thoroughly and renew the oil cooler to prevent further damage occurring later.

Check oil pressure ⇒ page 145 .

Viscosity grades and oil specifications: ⇒ Maintenance ; Booklet 808

For oil capacities refer to ⇒ Maintenance tables .

1.1 Sump - exploded view

Balance shaft assembly with oil pump ⇒ page 131

Oil filter bracket ⇒ page 138

1 - Bolt
- ❑ 9 Nm

2 - Oil level and oil temperature sender - G266-
- ❑ Removing and installing ⇒ page 127

3 - Seal
- ❑ Renew

4 - Bolt
- ❑ Tightening torque and sequence ⇒ page 39

5 - Sump
- ❑ Clean sealing surface before installing
- ❑ Removing and installing ⇒ page 128

6 - Baffle plate

7 - Bolt
- ❑ 9 Nm

8 - Oil return line

9 - Bolt
- ❑ Tightening torque ⇒ Item 13 (page 176)

10 - Gasket
- ❑ Renew

11 - Bolt
- ❑ Tightening torque and sequence ⇒ page 127

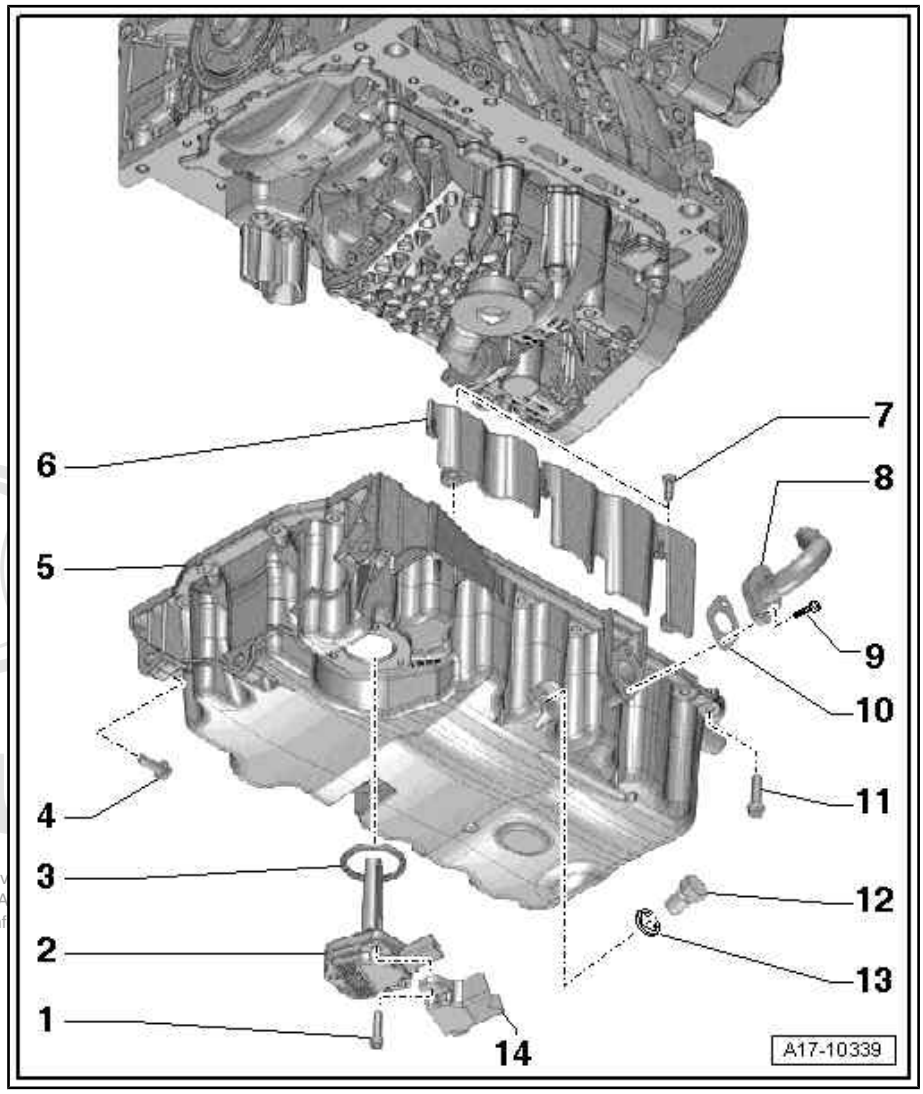

Protected by copyright. Copying for priv
permitted unless authorised by AUDI A
No liability for the correctness of inf

12 - Oil drain plug

❑ 30 Nm

13 - Seal

❑ Renew

14 - Cover

Sump - tightening torque and sequence

– Tighten bolts securing sump in three stages as follows:

1. Tighten bolts -1 ... 20- securing sump to cylinder block in diagonal sequence initially to 5 Nm.
2. Tighten bolts securing sump to gearbox -arrows- to 40 Nm.
3. Tighten bolts -1 ... 20- securing sump to cylinder block in diagonal sequence to 15 Nm.

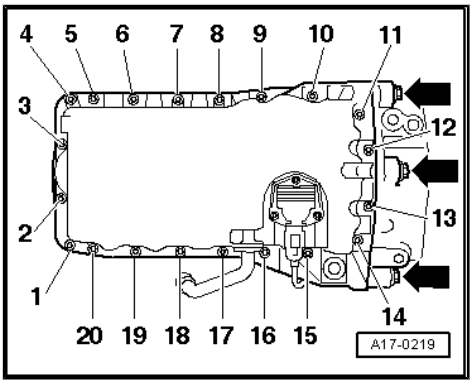

Guide tube for oil dipstick - tightening torque

– Tighten centre hex stud -arrow- to 6 Nm.

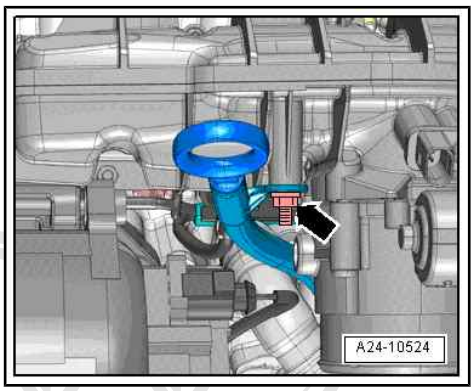

1.2 Removing and installing oil level and oil temperature sender - G266-

Removing

– Drain off engine oil ⇒ Maintenance ; Booklet 808 .

– Unplug electrical connector -5-.

– Unscrew three bolts -1- and remove cover -2-.

– Pull oil level and oil temperature sender - G266- -item 3- off sump and remove together with seal -4-.

Protected by copyright. Copying for pr
permitted unless authorised by AUDI
with respect to the correctness of i

Installing

• Tightening torque ⇒ page 126

Installation is carried out in the reverse order; note the following:

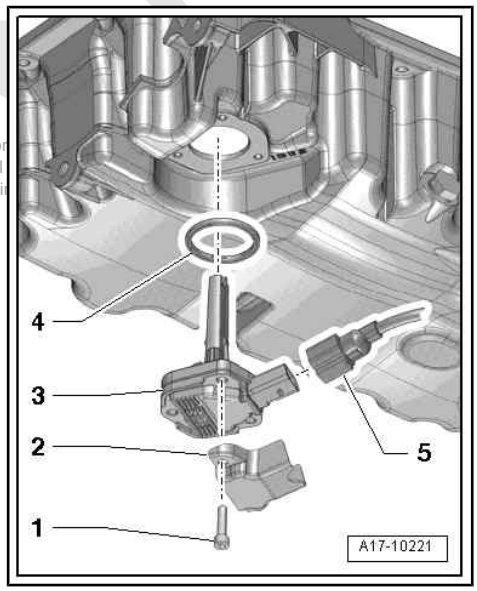

Note

Renew seal.

– Fill with engine oil and check oil level ⇒ Maintenance ; Booklet 808 .

1.3 Removing and installing sump

Special tools and workshop equipment required

- Socket - T10058-

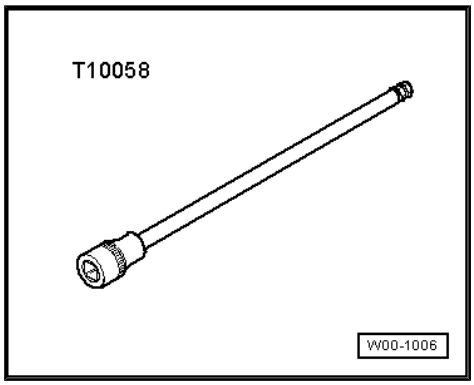

- Electric drill with plastic brush attachment
- Safety goggles
- Silicone sealant ⇒ Parts catalogue

Removing

– Detach engine cover panel with air cleaner ⇒ Rep. gr. 24 .

– Remove noise insulation ⇒ Rep. gr. 50 .

– Remove noise insulation (right-side) -fasteners 1 ... 3-.

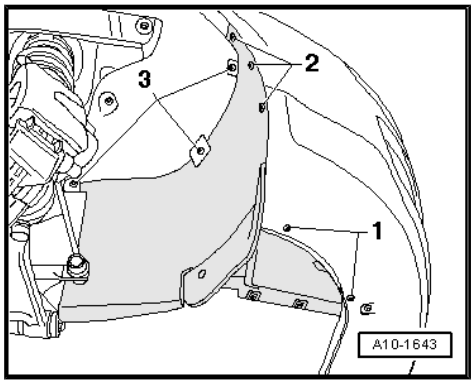

– Detach air pipe -arrow- from charge air cooler.

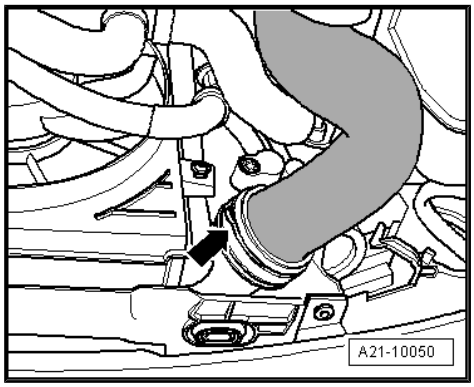

Protected by copyright. Copying for private or commercial purposes, in part or in whole, is not permitted unless authorised by AUDI AG. AUDI AG does not guarantee or accept any liability with respect to the correctness of information in this document. Copyright by AUDI AG.

– Unbolt air pipe from turbocharger -arrows-.

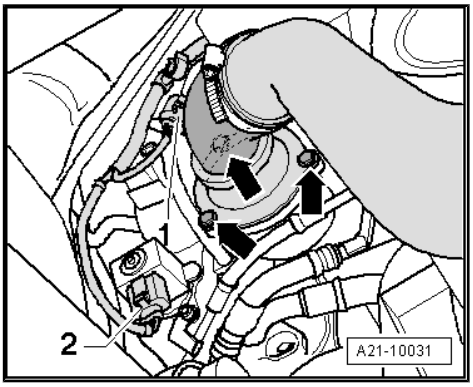

– Unscrew bolts -arrows- and remove air pipe.

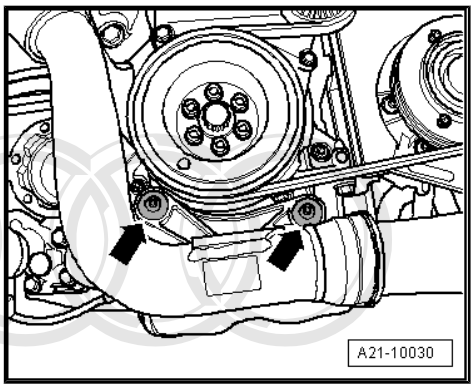

– Detach air pipe -1- from charge air cooler.
– Unplug connector from charge pressure sender - G31- ⇒ Rep. gr. 24 ; Overview of fitting locations .
– Remove air pipe.

Protected by copyright. Copying for pr
permitted unless authorised by AUD
with respect to the correctness

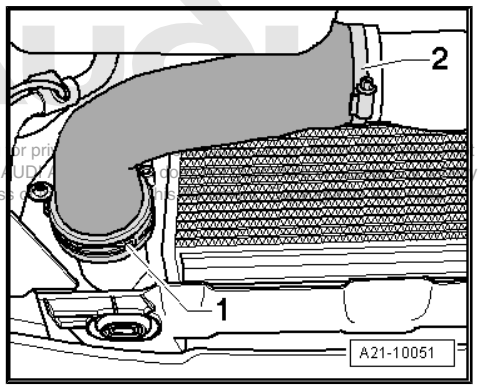

– Unplug electrical connector -1- at oil level and oil temperature sender - G266- .
– Unbolt oil return line from turbocharger -arrows-.
– Drain off engine oil.

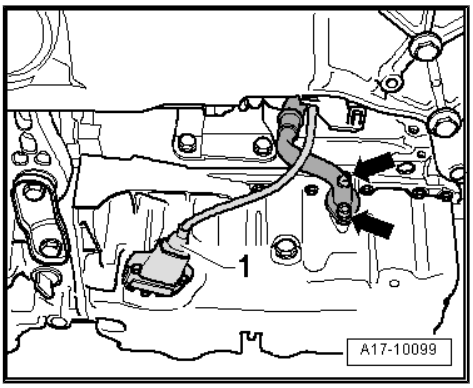

– Unscrew sump/gearbox bolts -arrows-.
– Unscrew bolts -1 ... 20- in diagonal sequence.
– Take off sump: if necessary loosen it by striking lightly with a rubber hammer.

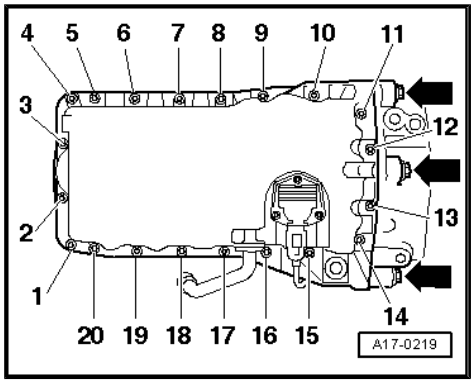

Installing

- Tightening torques ⇒ page 126

♦ Silicone sealant ⇒ Parts catalogue

Note

♦ *Note expiry date of silicone sealant.*

♦ *The sump must be installed within 5 minutes after applying the silicone sealant.*

– Remove sealant residue from cylinder block using a flat scraper.

> **WARNING**
>
> *Put on safety goggles.*

– Remove remaining sealant from sump (with rotating plastic brush or similar).
– Clean sealing surfaces; they must be free of oil and grease.

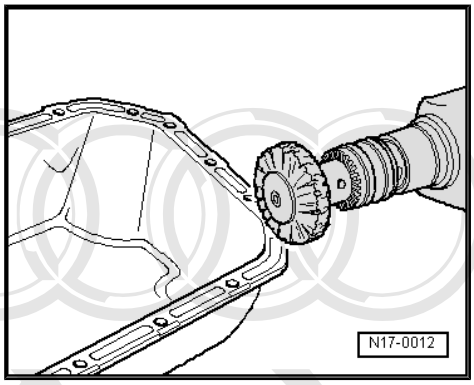

– Cut off nozzle of tube at front marking (∅ of nozzle approx. 3 mm).

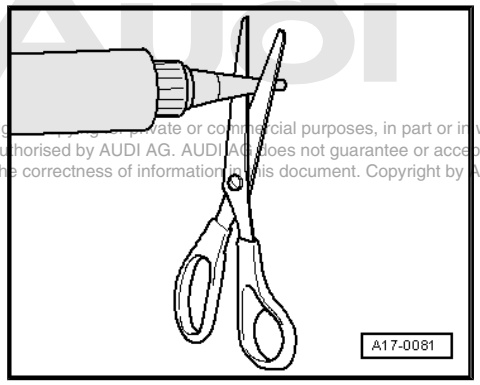

Protected by copyright. Copying for private or commercial purposes, in part or in whole, is not permitted unless authorised by AUDI AG. AUDI AG does not guarantee or accept any liability with respect to the correctness of information in this document. Copyright by AUDI AG.

– Apply the bead of silicone sealant onto the clean sealing surface of the sump, as illustrated.

♦ Thickness of sealant bead: 2 ... 3 mm

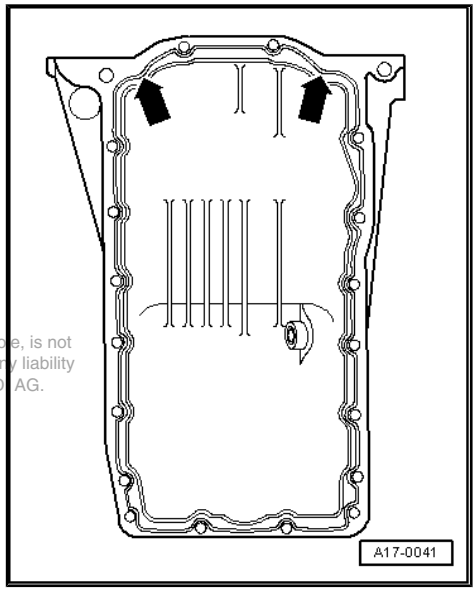

Note

♦ *The sump must be installed within 5 minutes after applying the silicone sealant.*

♦ *The bead of sealant must not be thicker than specified, otherwise excess sealant can enter the sump and obstruct the strainer in the oil intake pipe.*

Protected by copyright. Copying for private or commercial purposes, in part or in whole, is not permitted unless authorised by AUDI AG. AUDI AG does not guarantee or accept any liability with respect to the correctness of information in this document. Copyright by AUDI AG.

♦ *Take particular care when applying sealant bead in area of rear sealing flange -arrows- as shown in this figure.*

– Fit sump immediately and tighten bolts; tightening sequence ⇒ page 127 .

Note

♦ *When installing sump with engine removed from vehicle, ensure that sump is positioned flush with cylinder block at flywheel end.*

♦ *After fitting sump assembly, the sealant must dry for approx. 30 minutes. Then (and only then) fill the engine with engine oil.*

– Fill up with engine oil and check oil level.

The remaining installation steps are carried out in the reverse sequence. Note the following points:

– Install air pipes with plug-in connectors ⇒ page 173 .

1.4 Balance shaft assembly with oil pump - exploded view

Balance shaft assembly ⇒ page 126

Oil filter bracket ⇒ page 138

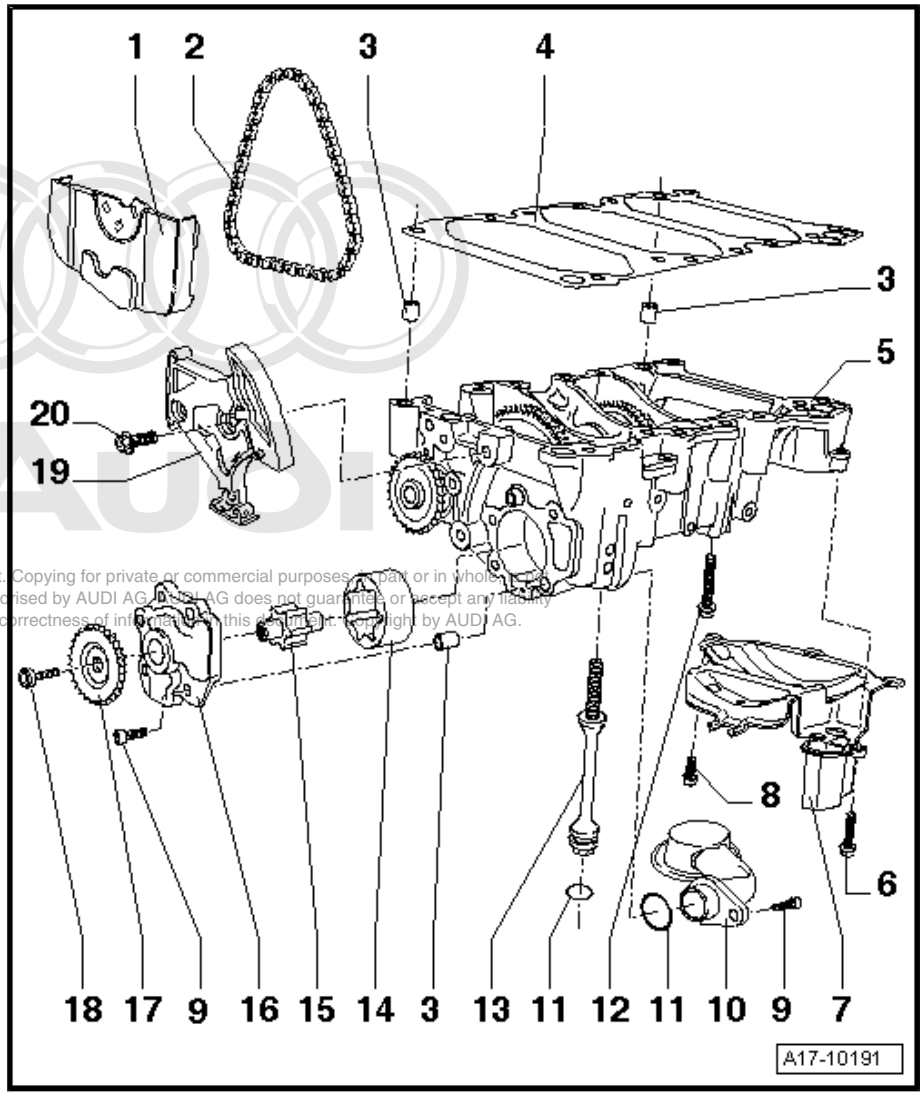

Protected by copyright. Copying for private or commercial purposes, in part or in whole, is not permitted unless authorised by AUDI AG. AUDI AG does not guarantee or accept any liability with respect to the correctness of information in this document. Copyright by AUDI AG.

1 - Chain guard

2 - Chain

- ❑ Before removing, mark running direction (fitting position) with paint

3 - Dowel sleeves

4 - Intermediate plate

5 - Balance shaft assembly with oil pump

- ❑ Before installing, check that the two dowel sleeves for centring oil pump/cylinder block are fitted
- ❑ Removing and installing ⇒ page 133

6 - Bolt

- ❑ 9 Nm

7 - Cover

- ❑ Prevents foam build-up in engine oil

8 - Bolt

- ❑ 20 Nm

9 - Bolt

- ❑ 8 Nm

10 - Oil intake pipe

- ❑ Clean strainer if dirty

11 - O-ring

- ❑ Renew

12 - Bolt

- ❑ Renew
- ❑ Note different bolt lengths ⇒ page 133
- ❑ Tightening sequence ⇒ page 133

13 - Bolt

- ❑ Renew
- ❑ Note different bolt lengths ⇒ page 133
- ❑ Tightening sequence ⇒ page 133

14 - Outer rotor

- ❑ Check contact surfaces for scores
- ❑ Marking must be visible

15 - Inner rotor

- ❑ Check contact surfaces for scores

16 - Oil pump cover

17 - Chain sprocket

18 - Bolt

- ❑ 20 Nm + turn 90° further
- ❑ Renew

19 - Chain tensioner with tensioning rail

- ❑ Pre-tensioning before installing ⇒ page 137

20 - Bolt

- ❑ 15 Nm

Positions of bolts for balance shaft housing

A - Hexagon collared bolt M7x40

B - Hexagon collared bolt M7x70

C - Hexagon collared bolt M7x90

D - Hexagon collared bolt M7x55

E - Screw plug with O-ring

Protected by copyright. Copying for private or commercial purposes, in part or in whole, is not permitted unless authorised by AUDI AG. AUDI AG does not guarantee or accept any liability with respect to the correctness of information in this document. Copyright by AUDI AG.

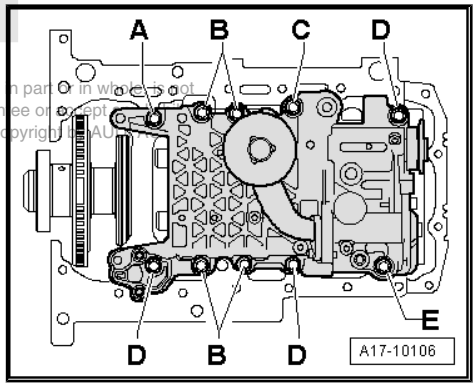

Tightening sequence for balance shaft housing

1. Screw in bolts -arrows- hand-tight.
2. Tighten bolts -arrows- to 15 Nm in diagonal sequence starting from inside and working outwards.
3. Turn bolts -arrows- 90° further ($^1/_4$ turn) in diagonal sequence starting from inside and working outwards using a rigid wrench.

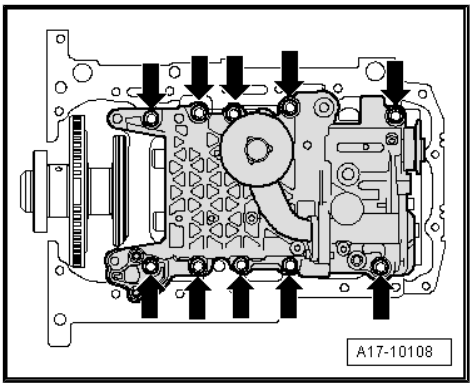

1.5 Removing and installing balance shaft assembly with oil pump

Special tools and workshop equipment required

- ♦ Locking pin - T10027 A-

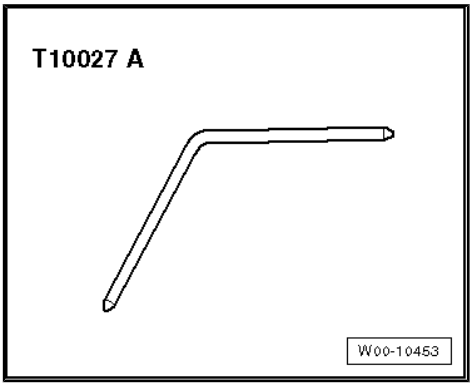

Removing

– Remove sump ⇒ page 128 .

> ⚠ **WARNING**
>
> *Engine must only be turned in direction of rotation (clockwise) via crankshaft.*

Note

Turn over the engine at the central bolt on the crankshaft.

– Set camshaft sprocket to TDC marking by turning crankshaft. Marking on camshaft sprocket must align with arrow on toothed belt cover.

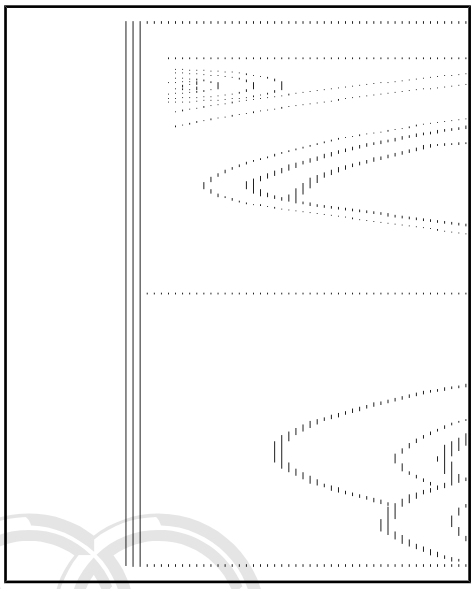

– Pull off chain guard. Retaining tabs can be released with a small screwdriver (insert in openings -arrows-).

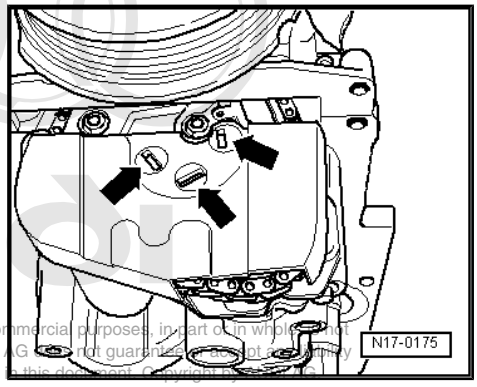

Protected by copyright. Copying for private or commercial purposes, in part or in whole, is not permitted unless authorised by AUDI AG. AUDI AG does not guarantee or assume any liability with respect to the correctness of information in this document. Copyright by AUDI AG.

– Loosen bolt on oil pump chain sprocket. Counterhold on central bolt of vibration damper.

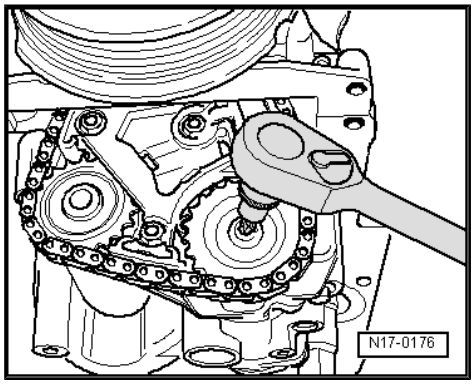

– Use screwdriver to slacken chain rail -arrow- and lock it in position using a 3 mm Allen key -1-.

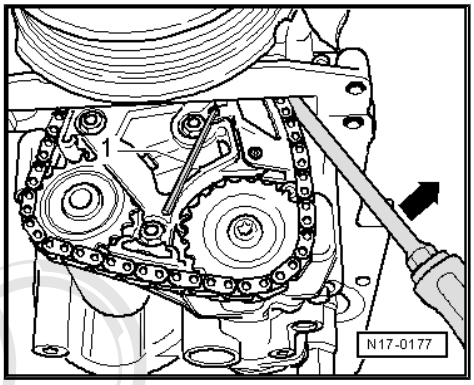

– Detach oil pump chain sprocket and disengage chain at balance shaft drive.

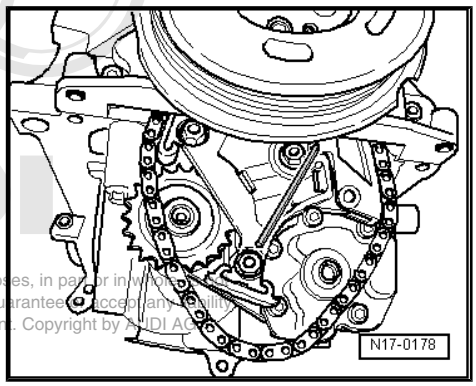

Protected by copyright. Copying for private or commercial purposes, in part or in whole, is not permitted unless authorised by AUDI AG. AUDI AG does not guarantee or accept any liability with respect to the correctness of information in this document. Copyright by AUDI AG.

– Unscrew bolts -1 and 2- and remove baffle plate.

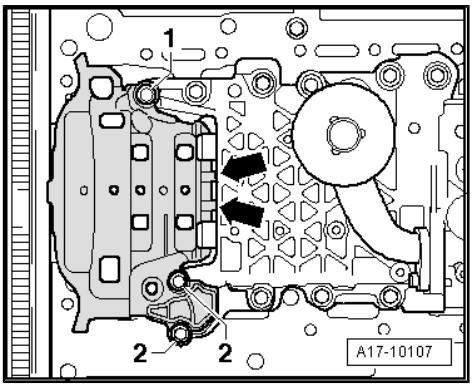

– Loosen bolts -arrows- on balance shaft assembly, working from outside inwards, and then remove balance shaft assembly.

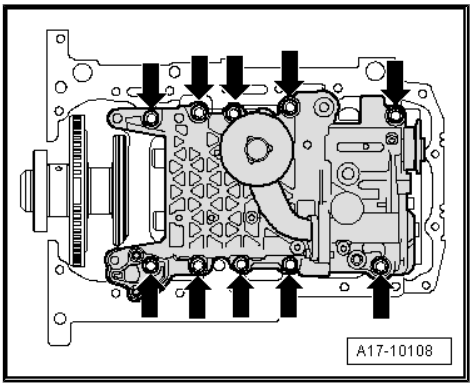

Installing

- Tightening torques ⇒ page 131
- Chain tensioner must be pre-tensioned ⇒ page 137 .

– Renew all bolts on balance shaft assembly.

– Renew seal on bolt for balance shaft assembly ⇒ Item 13 (page 132) .

– Fit intermediate plate onto dowel sleeves on balance shaft assembly as shown -arrows-.

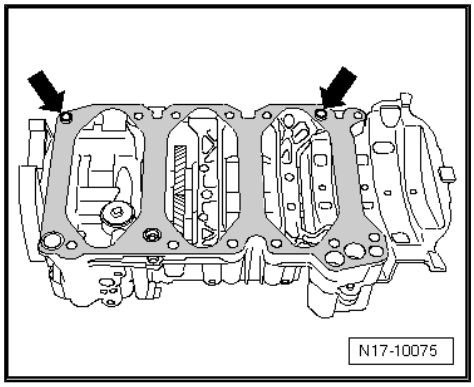

– Install balance shaft assembly with oil pump and intermediate plate. Tighten securing bolts -arrows-, working from inside outwards.

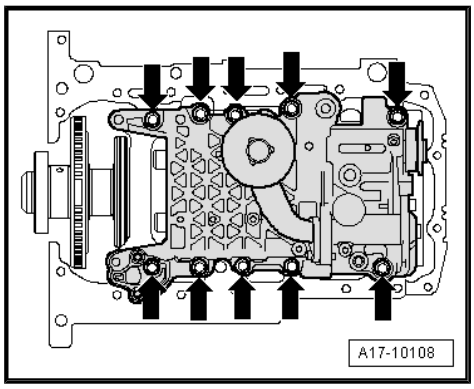

Note

- *Note different bolt lengths* ⇒ page 133 .
- *Note tightening sequence* ⇒ page 133
- *Note the dowel sleeves.*

– Install baffle plate. To do so, insert pins in balance shaft assembly -arrows-.

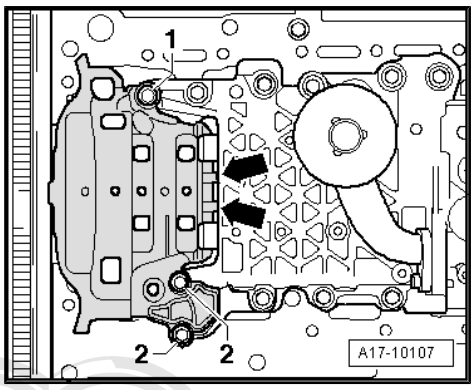

Note

Turn over the engine at the central bolt on the crankshaft.

– Rotate engine to TDC of No. 1 cylinder by turning central bolt of crankshaft sprocket in normal direction of rotation. Marking on camshaft sprocket and marking on crankshaft must be aligned to TDC of cylinder No. 1 -arrows-.

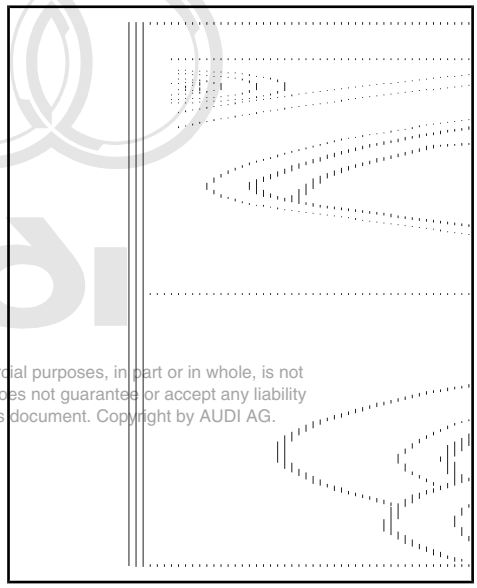

Protected by copyright. Copying for private or commercial purposes, in part or in whole, is not permitted unless authorised by AUDI AG. AUDI AG does not guarantee or accept any liability with respect to the correctness of information in this document. Copyright by AUDI AG.

– Marking on chain sprocket of balance shaft -arrow- must be positioned opposite the locating hole. Use locking pin - T10027 A- to lock chain sprocket in this position. Place chain on chain sprocket of balance shaft.

– Install oil pump chain sprocket with new bolt and hand-tighten the bolt.

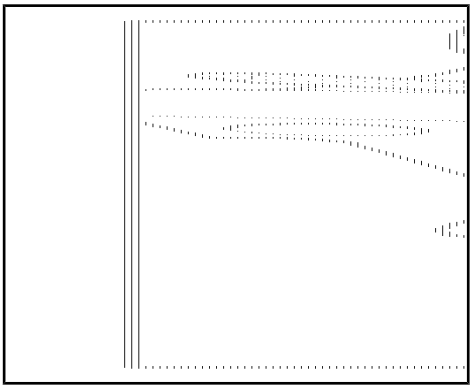

Note

The oil pump chain sprocket can only be installed correctly in one position. When installing, you may ONLY turn the oil pump.

– Remove locking pin - T10027 A- and Allen key -1-. Secure chain sprocket for oil pump. Counterhold on central bolt of vibration damper.

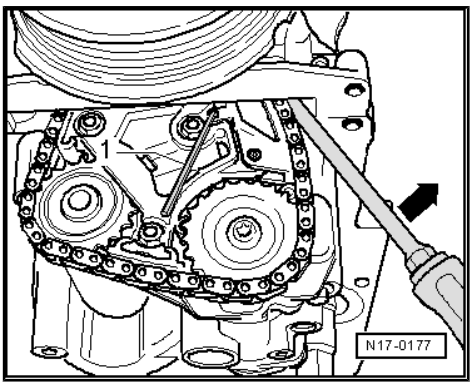

Further assembly is basically carried out in reverse order of dismantling.

– Install sump ⇒ page 128 .

1.5.1 Pre-tensioning chain tensioner

– Compress piston by hand -arrow-.

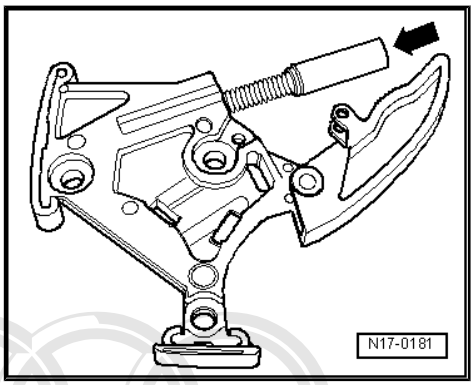

– Press chain rail in direction of arrow and lock in position using a 3 mm Allen key -1-.

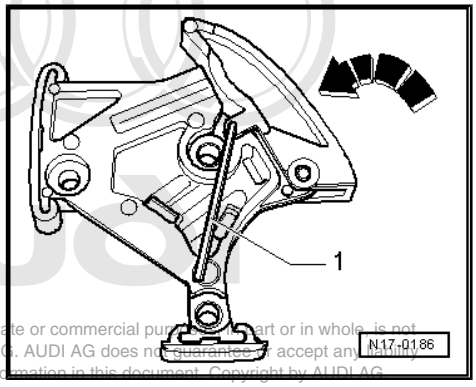

Protected by copyright. Copying for private or commercial purposes, in part or in whole, is not permitted unless authorised by AUDI AG. AUDI AG does not guarantee or accept any liability with respect to the correctness of information in this document. Copyright by AUDI AG.

2 Oil filter bracket and oil cooler

2.1 Exploded view - oil filter bracket

Sump with balance shaft housing ⇒ page 126

Balance shaft assembly with oil pump ⇒ page 131

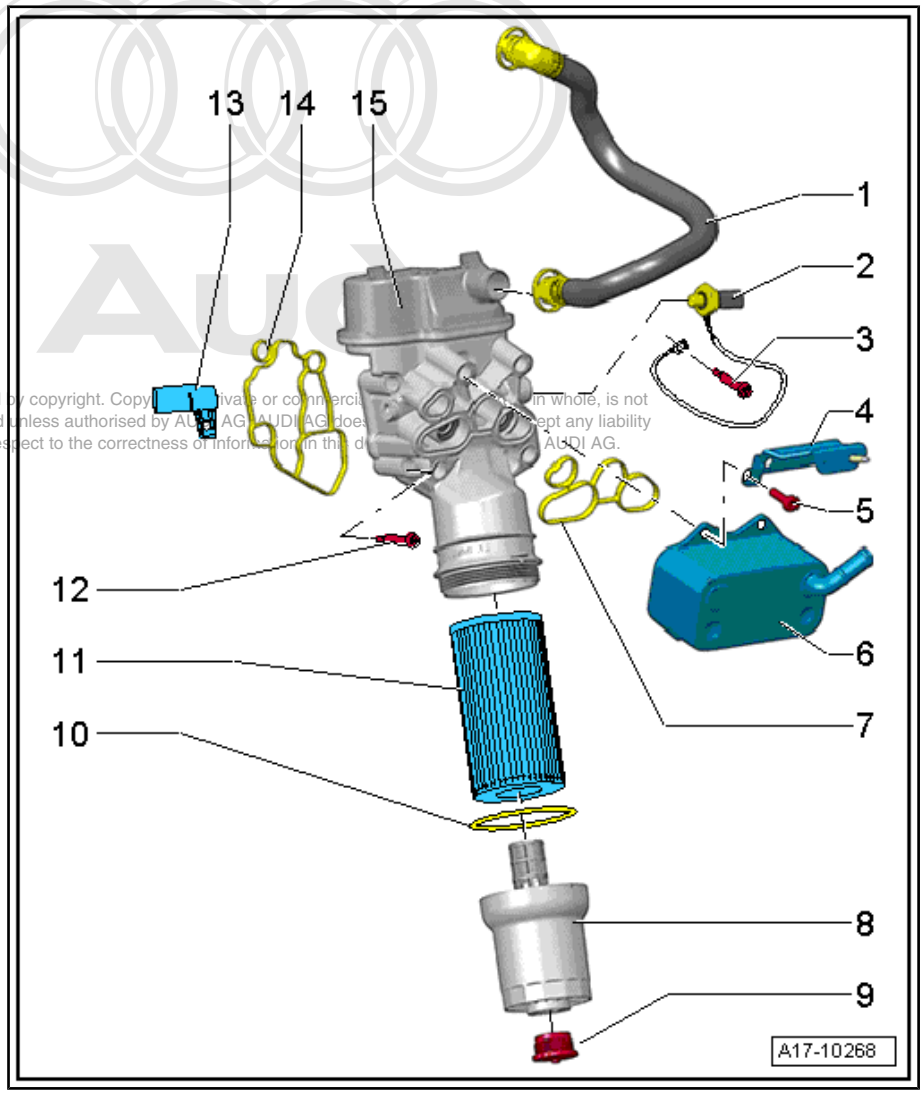

Protected by copyright. Copy[illegible]ivate or commerci[illegible] in whole, is not permitted unless authorised by AU[illegible] AG. AUDI AG does [illegible]ept any liability with respect to the correctness of information in this d[illegible] AUDI AG.

1 - Pipe
- ❑ For crankcase breather

2 - Oil pressure switch - F1-
- ❑ 1.4 bar - black
- ❑ Checking ⇒ page 145
- ❑ Removing and installing ⇒ page 147
- ❑ 21 Nm

3 - Bolt
- ❑ 15 Nm
- ❑ With earth wire for oil pressure switch

4 - Bracket

5 - Bolt
- ❑ 15 Nm

6 - Oil cooler
- ❑ See note ⇒ page 126
- ❑ Ensure clearance from surrounding components
- ❑ Connection diagram - coolant hoses ⇒ page 156
- ❑ Removing and installing ⇒ page 140

7 - Gasket
- ❑ Renew

8 - Oil filter housing
- ❑ Remove and install using oil filter tool - 3417- or 36 mm socket, e.g. socket, 36 mm - T10125-
- ❑ Draining ⇒ page 139

9 - Plug

10 - Seal
- ❑ Renew
- ❑ Lubricate lightly with oil
- ❑ Installation position ⇒ page 139

11 - Oil filter element
- ❑ Observe change intervals ⇒ Maintenance ; Booklet 810

12 - Bolt
- ❑ 15 Nm

13 - Baffle plate

- ❑ Installation position ⇒ page 139

14 - Seal

- ❑ Renew

15 - Oil filter bracket

- ❑ Removing and installing ⇒ page 142

Installation position of baffle plate

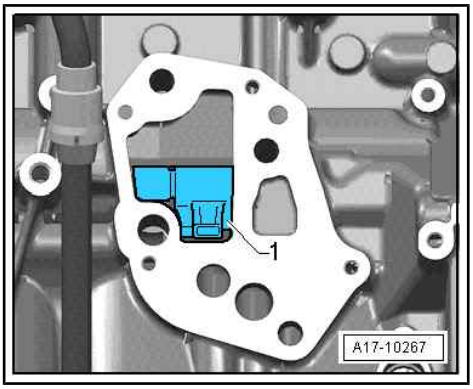

Installation position of seal

– Note position of service tab on seal -arrow-.

– Flat side of seal must face outwards.

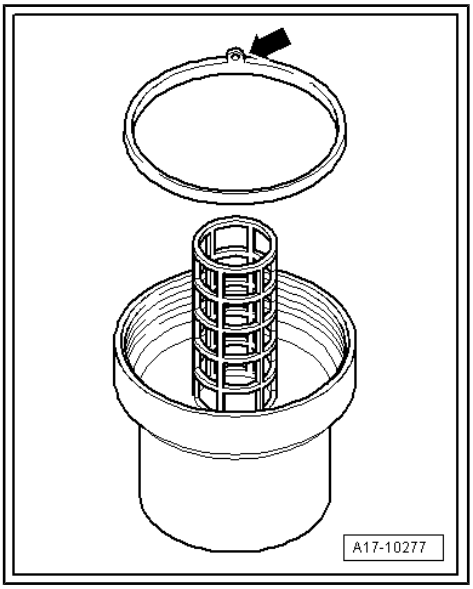

Protected by copyright. Copying for private or commercial purposes, in part or in whole, is not permitted unless authorised by AUDI AG. AUDI AG does not guarantee or accept any liability with respect to the correctness of information in this document. Copyright by AUDI AG.

2.2 Draining oil filter housing

Note

A valve in the oil filter housing will be opened when the oil drain adapter - T40057- is screwed in. The valve will be closed again as soon as the oil drain adapter - T40057- is unscrewed.

Special tools and workshop equipment required

♦ Oil drain adapter - T40057-

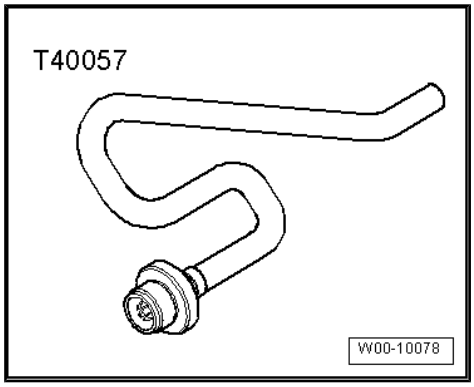

– Unscrew dust cap from oil filter housing -arrow-.

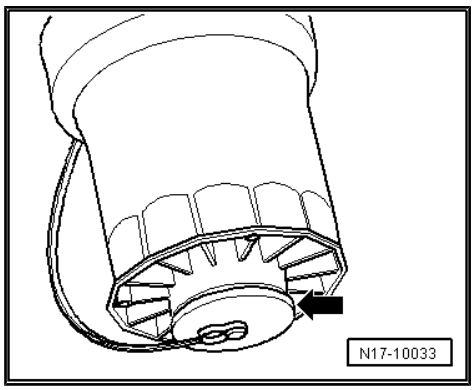

– Direct hose of oil drain adapter - T40057- into a drip tray and screw oil drain adapter - T40057- into oil filter housing.
– Drain engine oil

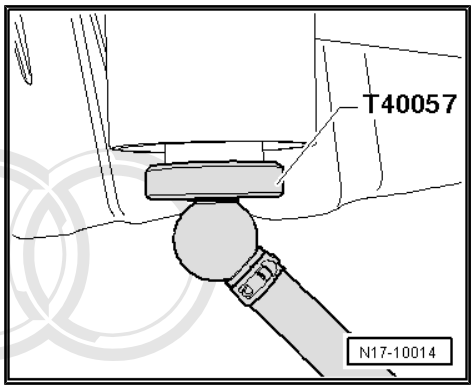

2.3 Removing and installing oil cooler

Special tools and workshop equipment required

♦ Drip tray for workshop hoist - VAS 6208-

Protected by copyright. Copying for private or commercial purposes, in part or in whole, is not permitted unless authorised by AUDI AG. AUDI AG does not guarantee or accept any liability with respect to the correctness of information in this document. Copyright by AUDI AG.

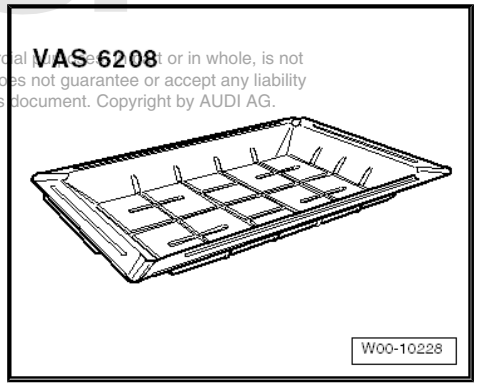

♦ Spring type clip pliers - VAS 5024 A-

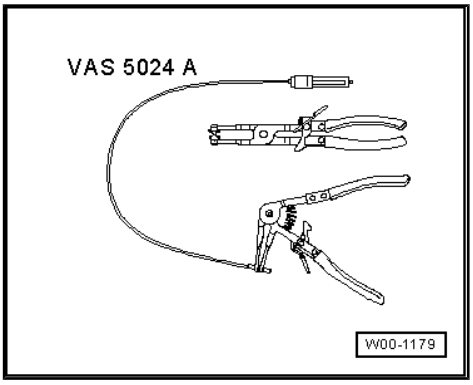

Removing

> ⚠ **WARNING**
>
> *Hot steam/hot coolant may escape when opening expansion tank. Cover cap with cloth and open carefully.*

– Open filler cap on coolant expansion tank.
– Detach engine cover panel with air cleaner ⇒ Rep. gr. 24 .
– Remove noise insulation ⇒ Rep. gr. 50 .
– Drain off coolant ⇒ page 157 .
– Remove intake manifold and fuel rail ⇒ Motronic direct injection and ignition system (4-cylinder); Repair group 24; Servicing injection system .
– Unbolt bracket for connectors -arrows- from coolant pipe.

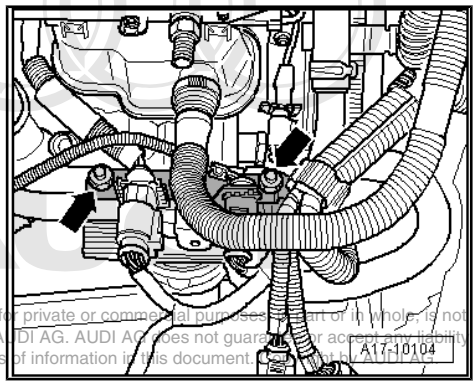

Protected by copyright. Copying for private or commercial purposes, in part or in whole, is not permitted unless authorised by AUDI AG. AUDI AG does not guarantee or accept any liability with respect to the correctness of information in this document. Copyright by AUDI AG.

– Disconnect coolant hose -1-.
– Remove bolt -2-.

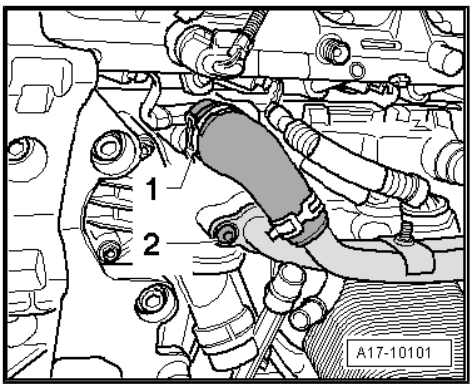

– Detach coolant hoses -arrows- from coolant pipe.
– Unscrew bolt -1- and detach coolant pipe.

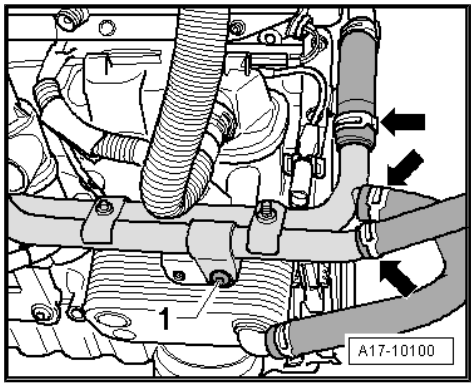

– Remove oil cooler -arrows-.

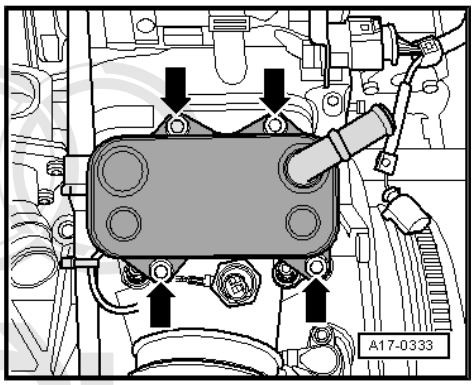

Installing

Installation is carried out in the reverse order; note the following:

- Tightening torques ⇒ page 138

Note

♦ *Renew gaskets and seals.*

♦ *Secure all hose connections with the correct type of hose clips (same as original equipment) ⇒ Parts catalogue .*

– Fill up with coolant ⇒ page 157 .

Protected by copyright. Copying for private or commercial purposes, in part or in whole, is not permitted unless authorised by AUDI AG. AUDI AG does not guarantee or accept any liability with respect to the correctness of information in this document. Copyright by AUDI AG.

2.4 Removing and installing oil filter bracket

Special tools and workshop equipment required

♦ Drip tray for workshop hoist - VAS 6208-

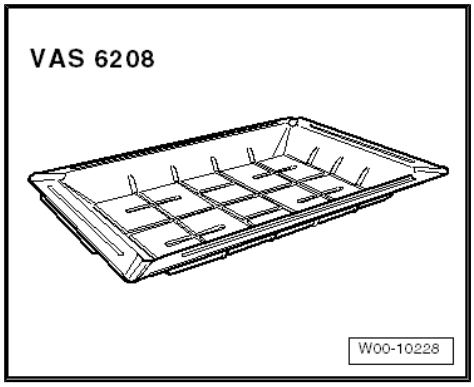

♦ Spring type clip pliers - VAS 5024 A-

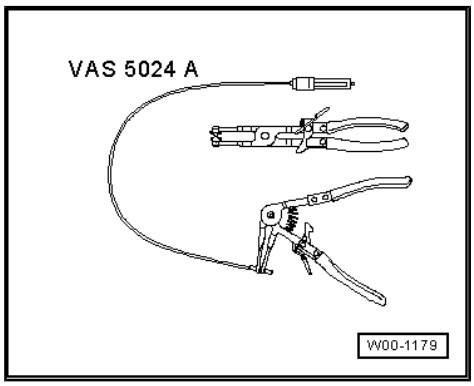

♦ Locking pin - T10060A-

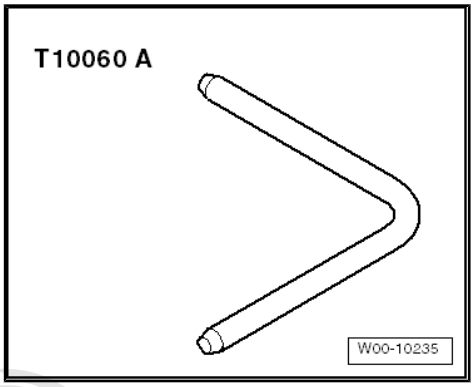

Removing

> ⚠ **WARNING**
>
> ***Hot steam/hot coolant may escape when opening expansion tank. Cover cap with cloth and open carefully.***

– Open filler cap on coolant expansion tank.

Removing

– Detach engine cover panel with air cleaner ⇒ Rep. gr. 24 .

– Remove noise insulation ⇒ Rep. gr. 50 .

Protected by copyright. Copying for private or commercial purposes, in part or in whole, is not permitted unless authorised by AUDI AG. AUDI AG does not guarantee or accept any liability with respect to the correctness of information in this document. Copyright by AUDI AG.

– Drain off coolant ⇒ page 157 .

– To slacken poly V-belt, turn tensioner in -direction of arrow-.

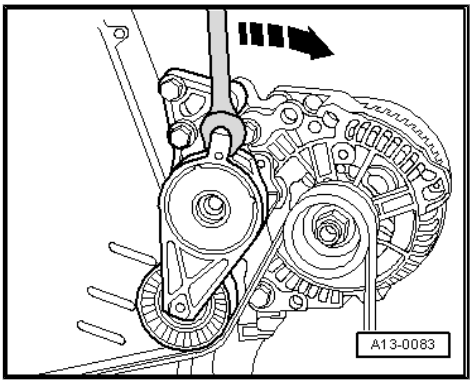

– Lock tensioner in position with locking pin - T10060A- .

– Take off poly V-belt.

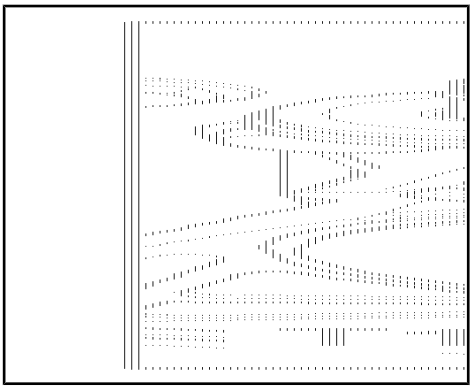

– Remove tensioner for poly V-belt -arrows-.
– Remove alternator ⇒ Electrical system; Repair group 27 .
– Remove intake manifold and fuel rail ⇒ Motronic direct injection and ignition system (4-cylinder); Repair group 24; Servicing injection system .

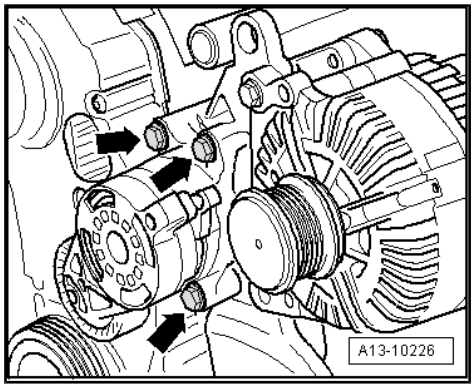

– Unbolt bracket for connectors -arrows- from coolant pipe.

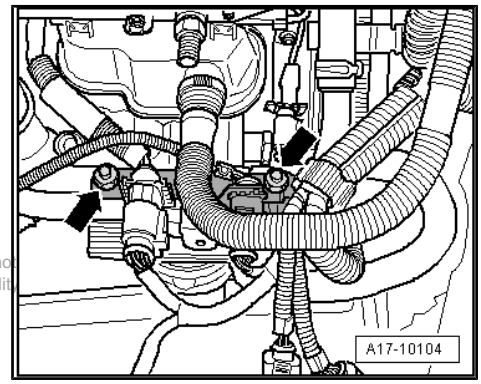

Protected by copyright. Copying for private or commercial purposes, in part or in whole, is not permitted unless authorised by AUDI AG. AUDI AG does not guarantee or accept any liability with respect to the correctness of information in this document. Copyright by AUDI AG.

– Disconnect coolant hose -1-.
– Remove bolt -2-.

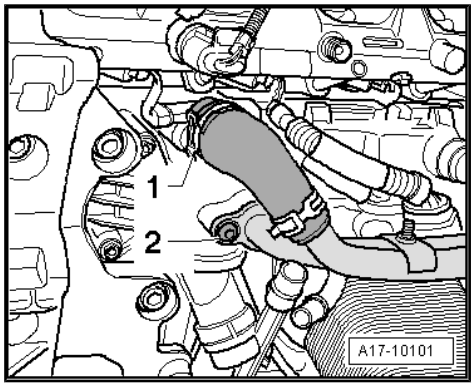

– Detach coolant hoses -arrows- from coolant pipe.
– Unscrew bolt -1- and detach coolant pipe.

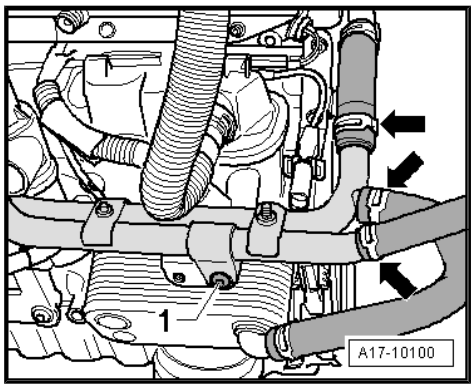

– Remove oil cooler -arrows-.

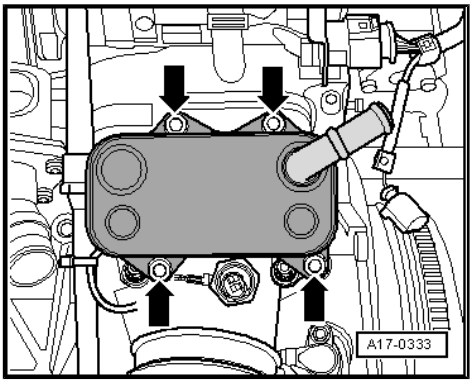

– Detach pipe -1- for crankcase breather system.
– Unscrew earth cable -2- for oil pressure switch.
– Unscrew bolts -arrows- and remove oil filter bracket.

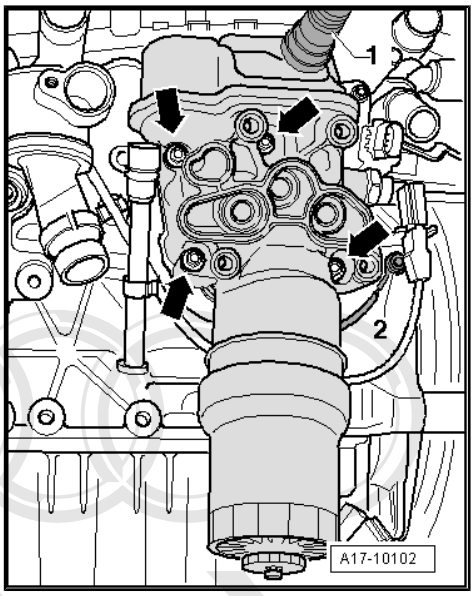

Installing

Installation is carried out in the reverse order; note the following:

- Tightening torques ⇒ page 138

Note

- *Renew gaskets and seals.*
- *Secure all hose connections with the correct type of hose clips (same as original equipment) ⇒ Parts catalogue .*

– Install baffle plate ⇒ Item 13 (page 139) .
– Fill up with coolant ⇒ page 157 .

2.5 Checking oil pressure and oil pressure switch

Protected by copyright. Copying for private or commercial purposes, in part or in whole, is not permitted unless authorised by AUDI AG. AUDI AG does not guarantee or accept any liability with respect to the correctness of information in this document. Copyright by AUDI AG.

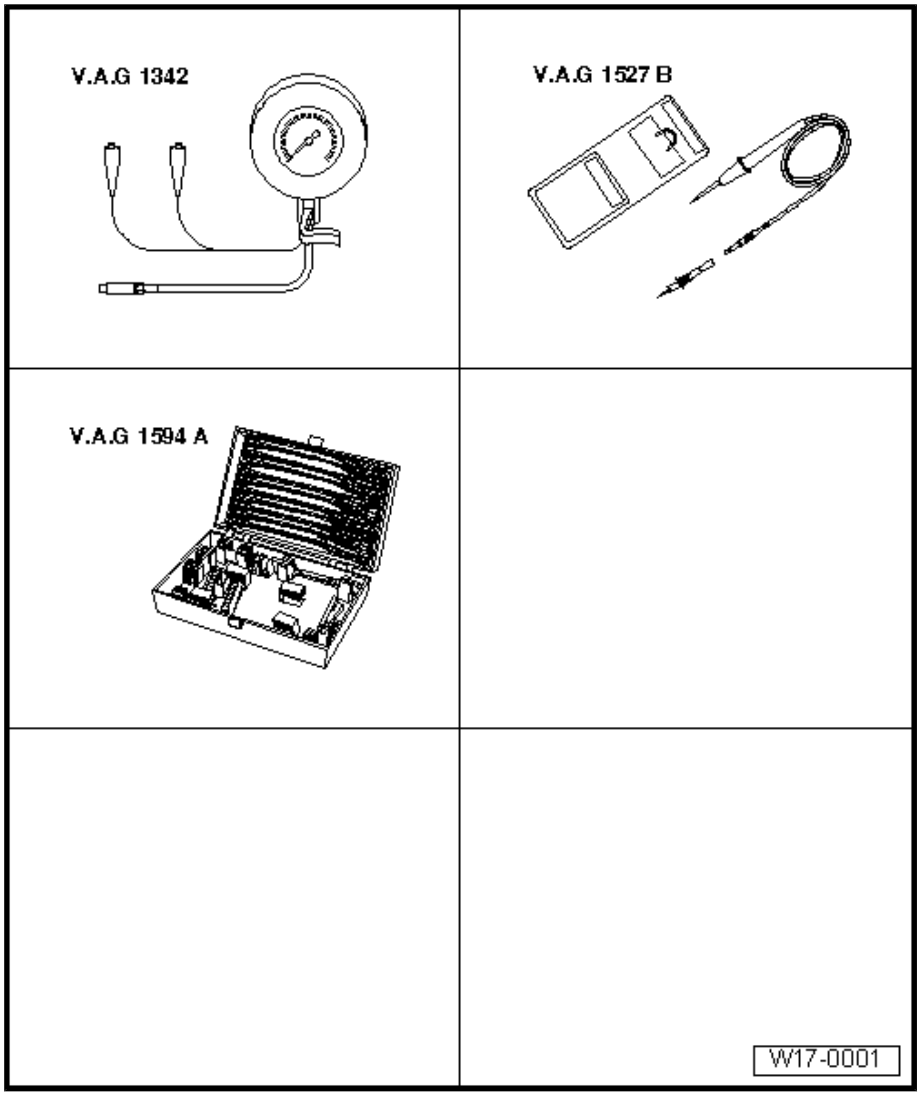

Special tools and workshop equipment required

- Oil pressure tester - V.A.G 1342-
- Voltage tester - V.A.G 1527 B-
- Auxiliary measuring set - V.A.G 1594 C-

Test requirements

- Engine oil level OK, checking ⇒ Maintenance ; Booklet 808 .
- Oil pressure warning lamp must light up for approx. 3 seconds when ignition is switched on.
- In vehicles with auto-check system, the “OK” display must light up (select symbol).
- Engine oil temperature at least 80°C (radiator fan must have run once).

Protected by copyright. Copying for private or commercial purposes, in part or in whole, is not permitted unless authorised by AUDI AG. AUDI AG does not guarantee or accept any liability with respect to the correctness of information in this document. Copyright by AUDI AG.

Note

Functional check and servicing the visual and acoustic oil pressure warning: Current flow diagrams, ⇒ Vehicle diagnostic tester; “Function and component selection” .

Test sequence

- Tightening torques ⇒ page 138

– Remove oil pressure switch - F1- -A- and screw it onto tester.

– Screw tester into oil filter bracket in place of oil pressure switch.

– Connect brown wire of tester to earth (–).

– Connect voltage tester - V.A.G 1527 B- with adapter leads from auxiliary measuring set - V.A.G 1594 C- to battery positive (+) and oil pressure switch - F1- -B-. LED must not light up.

– If LED lights up, renew 1.4 bar oil pressure switch.

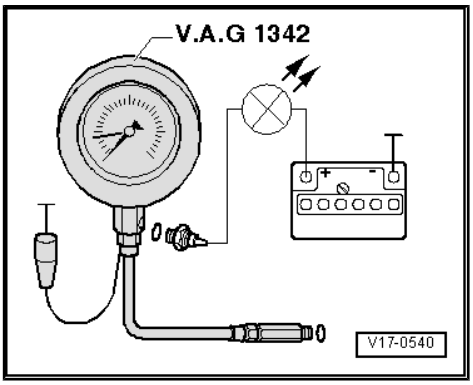

If LED does not light up:

– Start engine and run at increased speed: at 1.2 ... 1.6 bar pressure the LED should light up, otherwise oil pressure switch - F1- must be renewed. Increase engine speed further. At 2,000 rpm and an oil temperature of 80 °C the oil pressure should be between 2.7 ... 4.5 bar.

2.6 Removing and installing oil pressure switch - F1-

Protected by copyright. Copying for private or commercial purposes, in part or in whole, is not permitted unless authorised by AUDI AG. AUDI AG does not guarantee or accept any liability with respect to the correctness of information in this document. Copyright by AUDI AG.

Special tools and workshop equipment required

♦ Assembly tool - T10118-

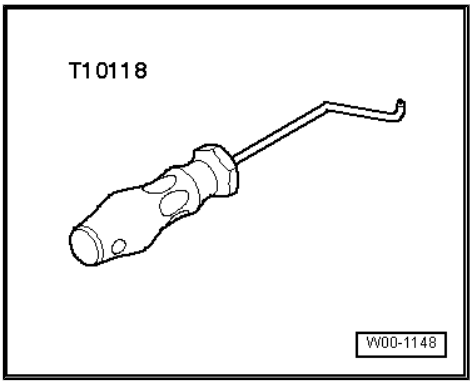

♦ U/J extension and socket for oil pressure switch -T40175-

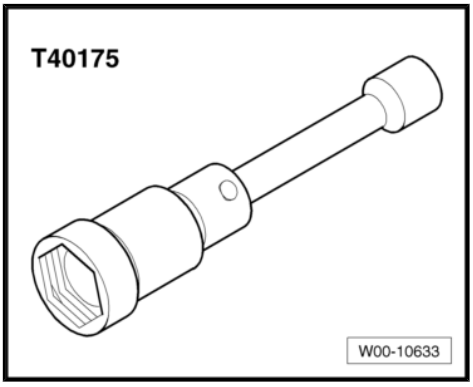

Removing:

– Remove noise insulation ⇒ General body repairs, exterior; Rep. gr. 50 ; Noise insulation .

– Remove charge air hose (left-side) -items 1 and 2-.

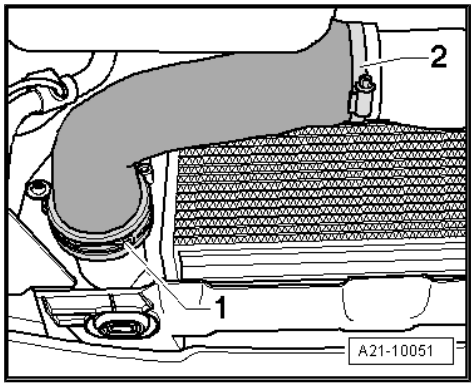

– Take electrical connector -1- out of bracket and unplug it from oil pressure switch - T10118- -arrow- using assembly tool - F1- .

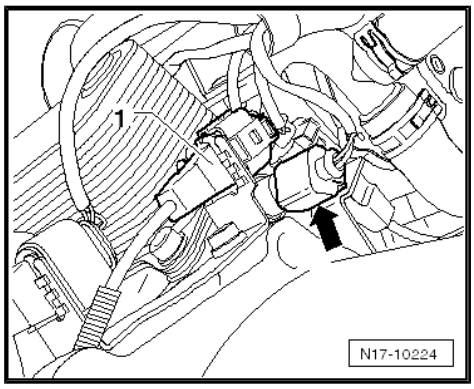

– Unscrew oil pressure switch using articulated wrench, 24 mm - T40175- .

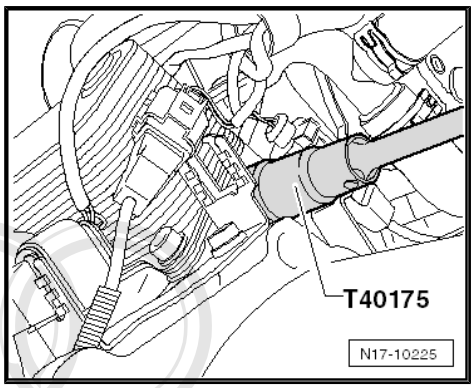

Installing:

- Tightening torque ⇒ page 138

Installation is carried out in the reverse order; note the following:

Note

- *1-pin oil pressure switch: Check that earth wire is connected.*
- *Hose connections and air pipes and hoses must be free of oil and grease before assembly.*
- *Secure all hose connections with the correct type of hose clips (same as original equipment) ⇒ Electronic parts catalogue .*

2.7 Checking oil pressure and oil pressure switch (1-pin oil pressure switch)

Protected by copyright. Copying for private or commercial purposes, in part or in whole, is not permitted unless authorised by AUDI AG. AUDI AG does not guarantee or accept any liability with respect to the correctness of information in this document. Copyright by AUDI AG.

Note

Check which oil pressure switch version is installed (1-pin or 2-pin oil pressure switch). Checking oil pressure and oil pressure switch (2-pin oil pressure switch) *⇒ page 150*

Special tools and workshop equipment required

- Oil pressure tester - V.A.G 1342-
- 0
- Voltage tester - V.A.G 1527 B-
- Auxiliary measuring set - V.A.G 1594C-

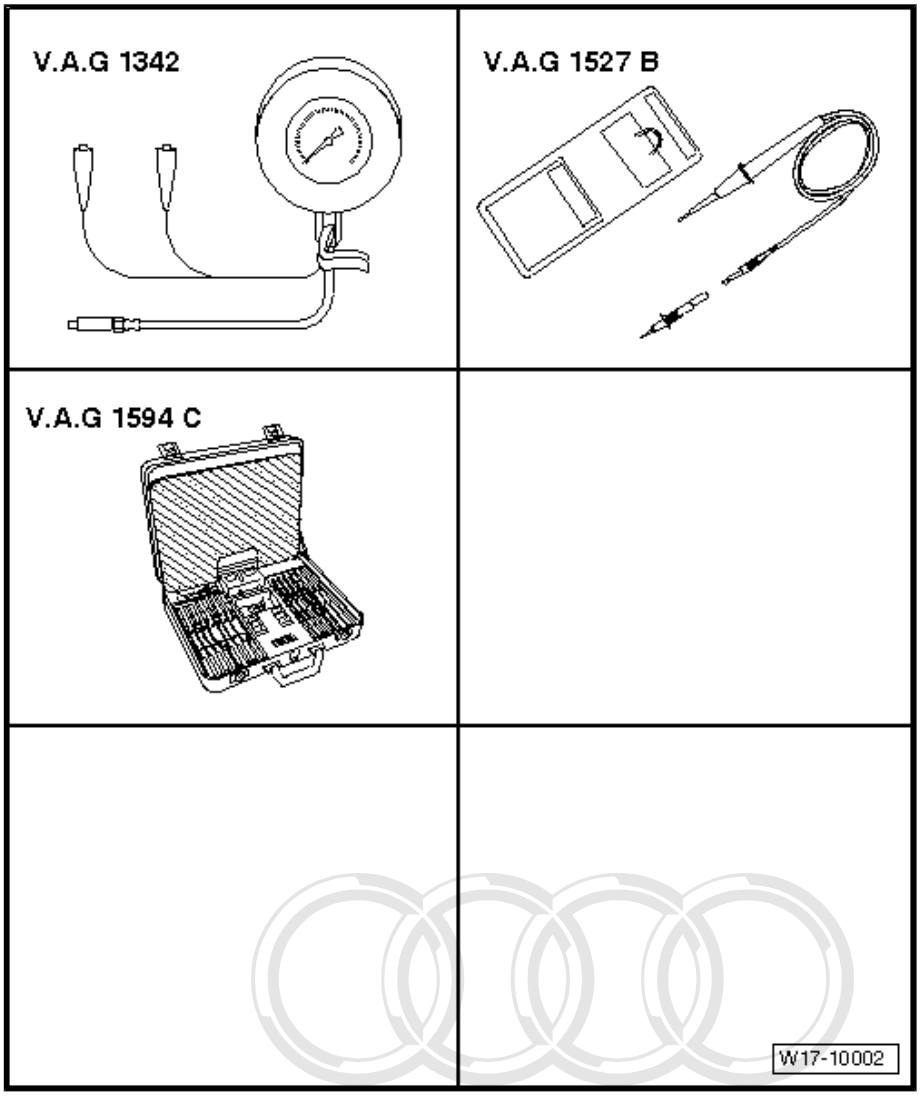

- Engine oil level OK
- Engine oil temperature at least 80 °C (radiator fan must have run once)

Protected by copyright. Copying for private or commercial purposes, in part or in whole, is not permitted unless authorised by AUDI AG. AUDI AG does not guarantee or accept any liability with respect to the correctness of information in this document. Copyright by AUDI AG.

Note

Functional check and servicing the visual and acoustic oil pressure warning: Current flow diagrams, ⇒ Vehicle diagnostic tester; "Function and component selection" .

– Remove oil pressure switch - F1- ⇒ page 147 .

– Screw oil pressure tester - V.A.G 1342- into bore for oil pressure switch in oil filter bracket.
– Connect brown wire of tester to earth (–).
– Connect voltage tester - V.A.G 1527 B- to battery positive (+) and oil pressure switch with adapter cable from auxiliary measuring set - V.A.G 1594C- . LED must not light up.
– If the LED lights up, renew oil pressure switch - F1- (1.4 bar).

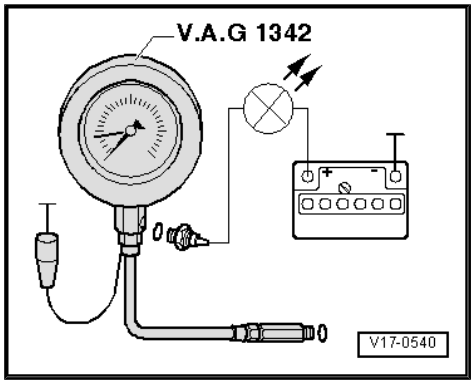

If the LED does not light up:

– Start engine and run at increased speed: At a pressure of 1.2 ... 1.6 bar the LED should light up; otherwise oil pressure switch must be renewed.
– Increase engine speed further. At 2,000 rpm and an oil temperature of 80 °C the oil pressure should be between 2.7 ... 4.5 bar.

At higher engine speeds, the oil pressure must not exceed 7.0 bar.

2.8 Checking oil pressure and oil pressure switch (2-pin oil pressure switch)

Note

Check which oil pressure switch version is installed (1-pin or 2-pin oil pressure switch). Checking oil pressure and oil pressure switch (1-pin oil pressure switch) ⇒ page 148

Special tools and workshop equipment required

♦ Oil pressure tester - V.A.G 1342-

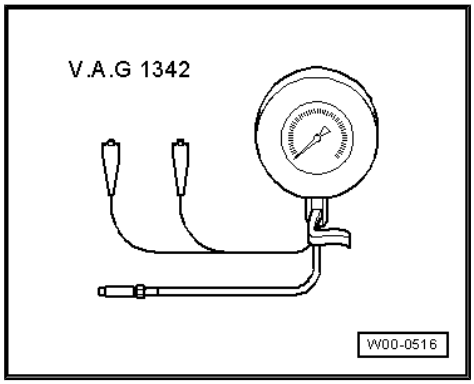

Protected by copyright. Copying for private or commercial purposes, in part or in whole is not permitted unless authorised by AUDI AG. AUDI AG does not guarantee or accept any liability with respect to the correctness of information in this document. Copyright by AUDI AG.

♦ Test instrument adapter/DSO (2-pin) - VAS 5256-

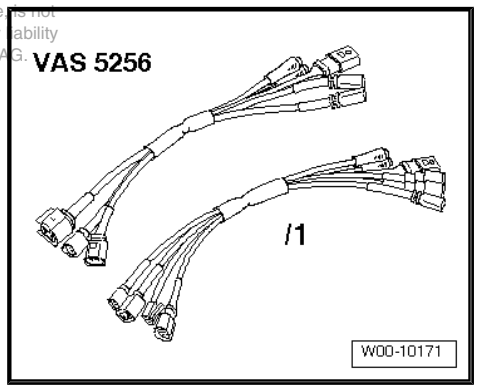

Protected by copyright. Copying for private or commercial purposes, in part or in whole, is not permitted unless authorised by AUDI AG. AUDI AG does not guarantee or accept any liability with respect to the correctness of information in this document. Copyright by AUDI AG.

♦ Hand-held multimeter - V.A.G 1526D-

Procedure

- Engine oil level OK
- Engine oil temperature at least 80 °C (radiator fan must have run once)

Note

Functional check and servicing the visual and acoustic oil pressure warning: Current flow diagrams, ⇒ Vehicle diagnostic tester; "Function and component selection".

– Remove oil pressure switch - F1- ⇒ page 147 and screw switch into oil pressure tester - V.A.G 1342- .

– Screw oil pressure tester - V.A.G 1342- into oil filter bracket in place of oil pressure switch.

– Attach test instrument adapter/DSO (2-pin) - VAS 5256- to oil pressure switch.

– Connect hand-held multimeter - V.A.G 1526D- to test instrument adapter/DSO (2-pin) - VAS 5256- and set to continuity test.

- At pressures below 1.2 bar, oil pressure switch must be open.

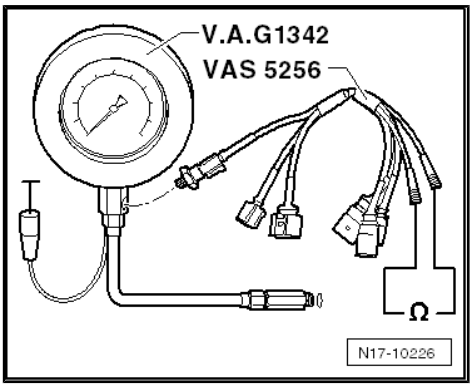

– Start engine and run at increased speed: At a pressure of 1.2 ... 1.6 bar the oil pressure switch should close; otherwise oil pressure switch must be renewed.

– Increase engine speed further. At 2,000 rpm and an oil temperature of 80 °C the oil pressure should be between 2.7 ... 4.5 bar.

At higher engine speeds, the oil pressure must not exceed 7.0 bar.

2.9 Checking oil pressure

Special tools and workshop equipment required

♦ Oil pressure tester - V.A.G 1342-

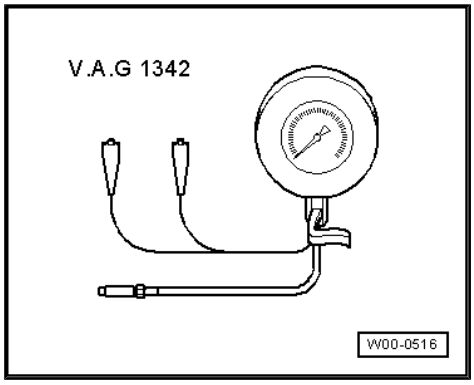

Procedure

- Oil level OK
- Engine oil temperature approx. 80 °C

– Remove oil pressure switch ⇒ page 147 .

– Screw oil pressure switch into oil pressure tester - V.A.G 1342- .

– Screw oil pressure tester - V.A.G 1342- into bore for oil pressure switch in oil filter bracket.

– Start engine.

- Oil pressure at idling speed: at least 1.2 bar.
- Oil pressure at 2000 rpm: at least 2.7 bar.

– Install oil pressure switch ⇒ page 147 .

Protected by copyright. Copying for private or commercial purposes, in part or in whole, is not permitted unless authorised by AUDI AG. AUDI AG does not guarantee or accept any liability with respect to the correctness of information in this document. Copyright by AUDI AG.

19 – Cooling

1 Parts of cooling system (on engine)

WARNING

Hot steam/hot coolant may escape when opening expansion tank. Cover cap with cloth and open carefully.

Note

- *The cooling system is under pressure when the engine is hot. If necessary, relieve pressure before commencing repair work.*
- *Secure all hose connections with the correct type of hose clips (same as original equipment) ⇒ Parts catalogue .*
- *Hose clip pliers - V.A.G 1921- or spring-type clip pliers - VAS 5024 A- are recommended for installing spring-type clips.*
- *Renew gaskets and seals.*
- *The arrow markings on coolant pipes and on ends of hoses must align.*

1.1 Cooling system components (on engine) - exploded view

Protected by copyright. Copying for private or commercial purposes, in part or in whole, is not permitted unless authorised by AUDI AG. AUDI AG does not guarantee or accept any liability with respect to the correctness of information in this document. Copyright by AUDI AG.

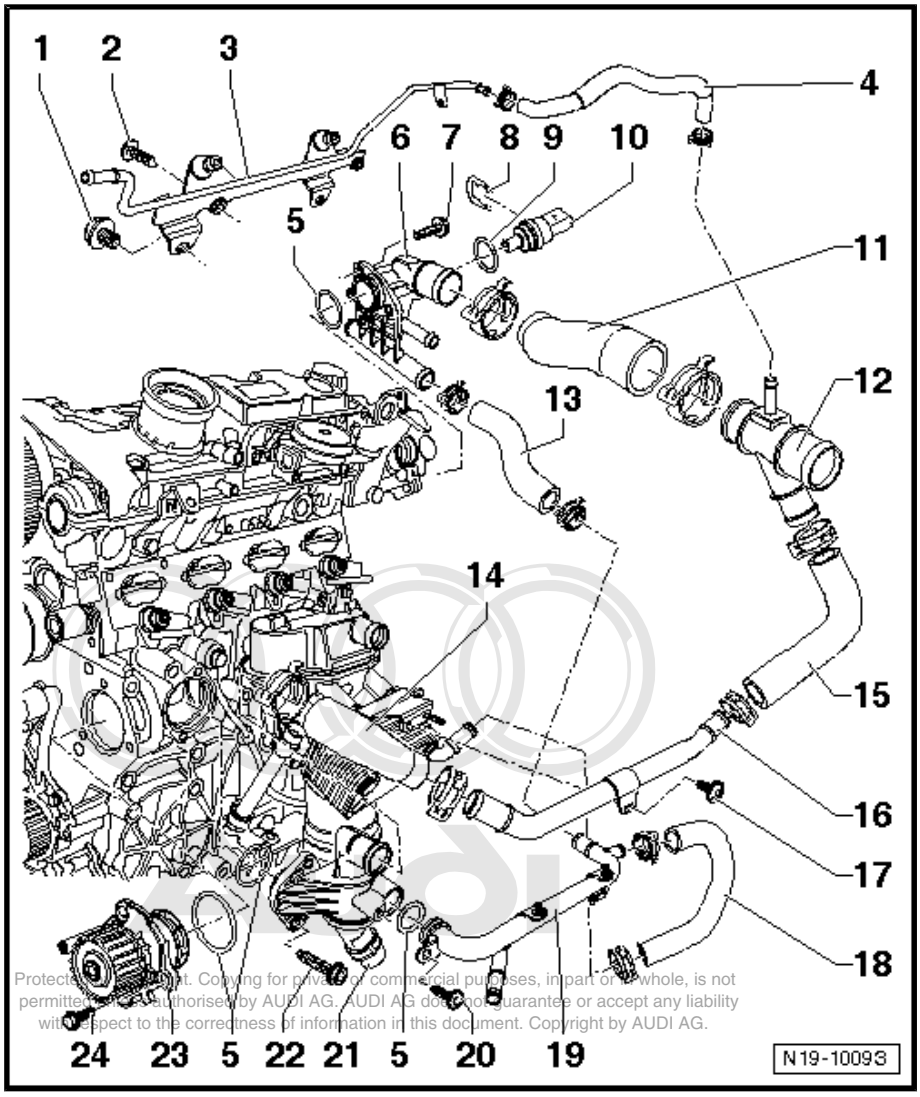

Protected by copyright. Copying for private or commercial purposes, in part or in whole, is not permitted unless authorised by AUDI AG. AUDI AG does not guarantee or accept any liability with respect to the correctness of information in this document. Copyright by AUDI AG.

1 - Bolt
- ❑ 40 Nm

2 - Bolt
- ❑ 23 Nm

3 - Coolant pipe

4 - Connecting hose

5 - O-ring
- ❑ Renew

6 - Connection

7 - Bolt
- ❑ 10 Nm

8 - Retaining clip

9 - O-ring
- ❑ Renew

10 - Coolant temperature sender - G62-
- ❑

11 - Connecting hose

12 - Connecting piece

13 - Connecting hose

14 - Connecting hose

15 - Connecting hose

16 - Coolant pipe

17 - Bolt
- ❑ 9 Nm

18 - Connecting hose

19 - Coolant pipe

20 - Bolt
- ❑ 10 Nm

21 - Coolant distributor housing
- ❑ With thermostat
- ❑ Starts to open at 87°C

22 - Bolt
- ❑ 15 Nm

23 - Coolant pump
- ❑ Removing and installing ⇒ page 165

24 - Bolt
- ❑ 15 Nm

1.2 Exploded view - continued coolant circulation pump - V51-

1 - Nut
- ❑ 3 Nm

2 - Coolant pipe

3 - Spring-type clip

4 - Coolant pipe
- ❑ To turbocharger

5 - Bolt
- ❑ 5 Nm

6 - Spring-type clip

7 - Coolant hose

8 - Bracket

9 - Coolant hose
- ❑ Going to radiator

10 - Spring-type clip

11 - Continued coolant circulation pump - V51-

12 - Bolt
- ❑ 5 Nm

13 - Spring-type clip

14 - Nut
- ❑ 5 Nm

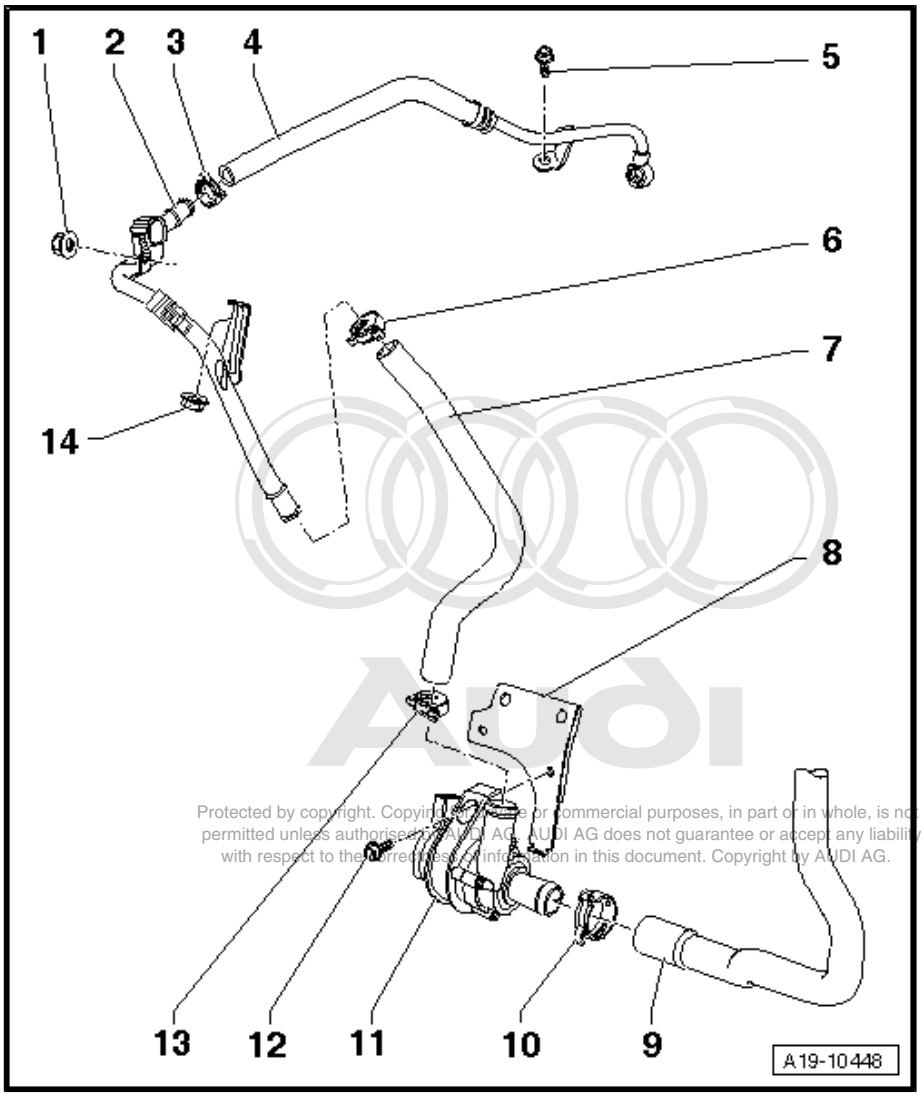

Protected by copyright. Copying for private or commercial purposes, in part or in whole, is not permitted unless authorised by AUDI AG. AUDI AG does not guarantee or accept any liability with respect to the correctness of information in this document. Copyright by AUDI AG.

1.3 Connection diagram - coolant hoses

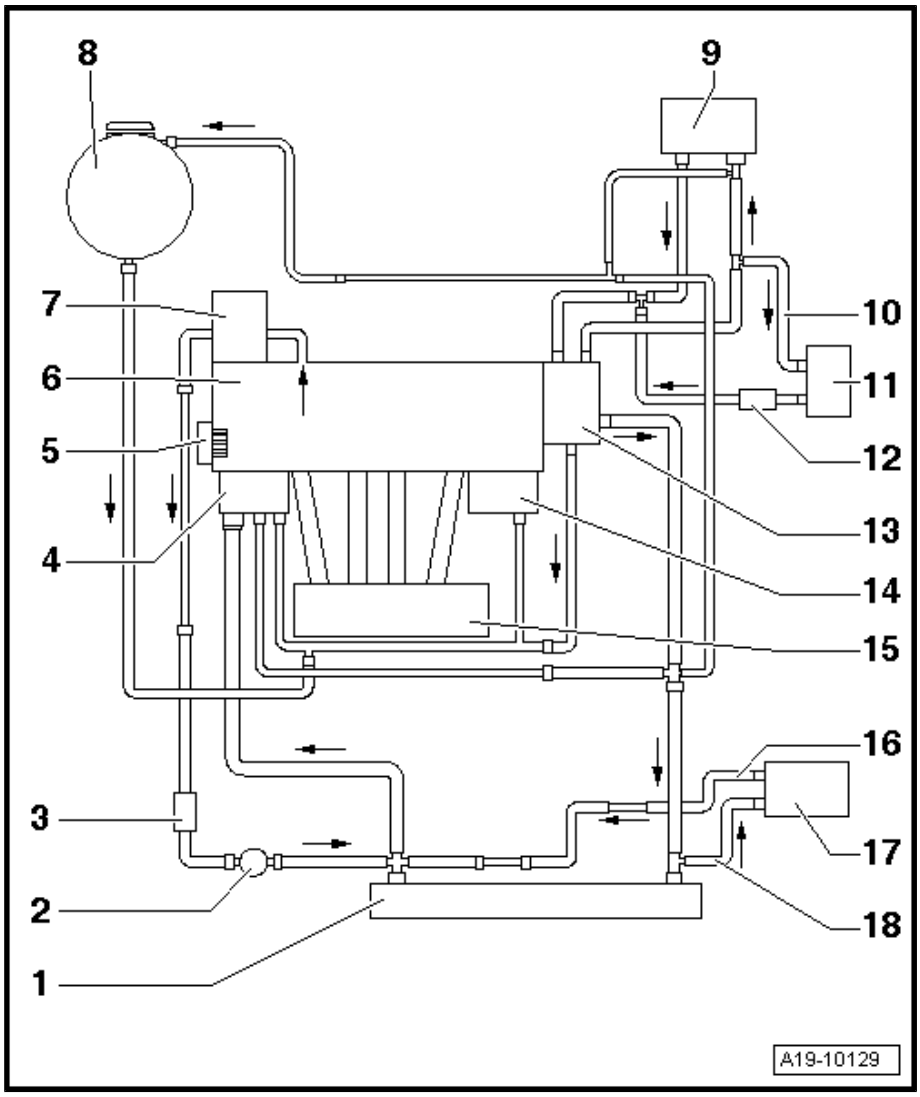

1 - Radiator

- ❑ Removing and installing ⇒ page 168
- ❑ If renewed, refill system with fresh coolant

2 - Continued coolant circulation pump - V51-

3 - Return hose from turbocharger

- ❑ With bypass thermostat in hose

4 - Map-controlled engine cooling thermostat - F265-

- ❑ Removing and installing ⇒ page 164

5 - Coolant pump

- ❑ Removing and installing ⇒ page 165

6 - Cylinder head/cylinder block

- ❑ If renewed, refill system with fresh coolant

7 - Turbocharger

- ❑ Removing and installing, vehicles with engine codes AXX, BPY, BWA ⇒ page 178
- ❑ Removing and installing, engines with code letters BHZ, BZC, CDLA, CDLC ⇒ page 202

8 - Expansion tank

- ❑ With filler cap
- ❑ Checking pressure relief valve in filler cap ⇒ page 160

9 - Heat exchanger (for heating system)

- ❑ If renewed, refill system with fresh coolant

10 - Hose

- ❑ For automatic gearbox only

11 - Gear oil cooler

- ❑ For automatic gearbox only

12 - Hose

- ❑ For automatic gearbox only
- ❑ With bypass thermostat in hose

Protected by copyright. Copying for private or commercial purposes, in part or in whole, is not permitted unless authorised by AUDI AG. AUDI AG does not guarantee or accept any liability with respect to the correctness of information in this document. Copyright by AUDI AG.

13 - Coolant connection

14 - Engine oil cooler

15 - Intake manifold

- ❑ Removing and installing ⇒ Rep. gr. 24

16 - Hose

- ❑ Only fitted in vehicles with auxiliary radiator

17 - Auxiliary radiator

18 - Hose

- ❑ Only fitted in vehicles with auxiliary radiator

1.4 Draining and filling cooling system

Special tools and workshop equipment required

- ♦ Adapter for cooling system tester - V.A.G 1274/8-
- ♦ Drip tray for workshop hoist - VAS 6208-
- ♦ Hose clip pliers - V.A.G 1921-
- ♦ Cooling system charge unit - VAS 6096-
- ♦ Refractometer - T10007-

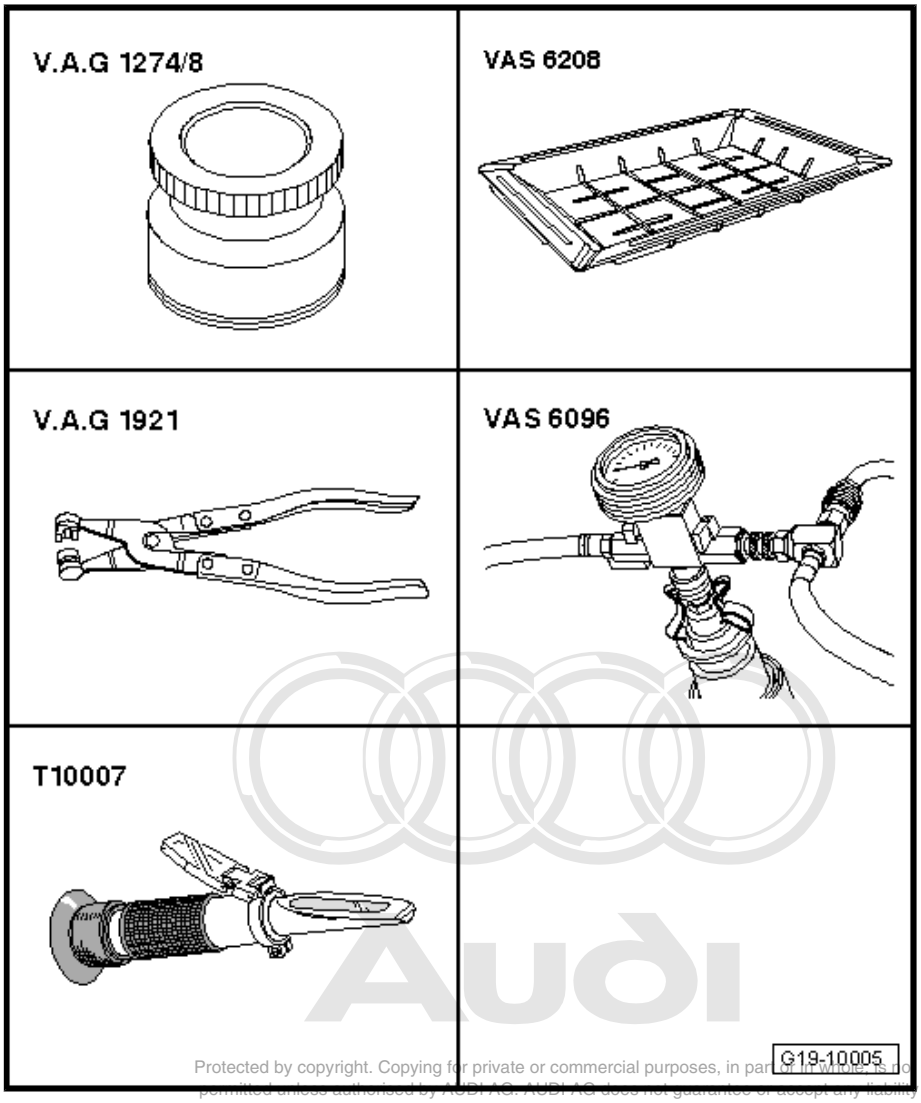

Protected by copyright. Copying for private or commercial purposes, in part or in whole, is not permitted unless authorised by AUDI AG. AUDI AG does not guarantee or accept any liability with respect to the correctness of information in this document. Copyright by AUDI AG.

Draining

Note

Collect drained coolant in a clean container for re-use or disposal.

WARNING

Hot steam/hot coolant may escape when opening expansion tank. Cover cap with cloth and open carefully.

– Open filler cap on coolant expansion tank.
– Remove noise insulation ⇒ Rep. gr. 50 .
– Place drip tray for workshop hoist - VAS 6208- beneath engine.
– To drain off coolant, detach bottom coolant hose -arrow-.

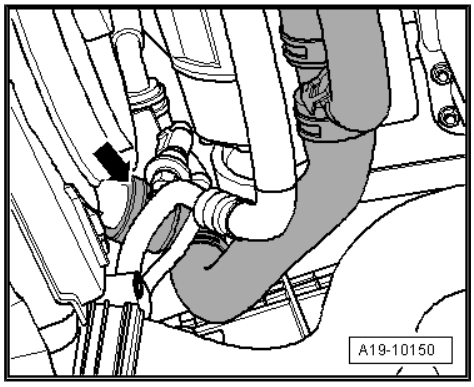

Filling

Note

- *The cooling system is filled all year round with a mixture of water and coolant additive. Mixture ratio ⇒ page 159 .*
- *Use only the coolant additive listed in the ⇒ Electronic parts catalogue . If you use other coolant additives, this can significantly impair in particular the corrosion protection effect. The resulting damage could lead to loss of coolant and consequently to serious engine damage.*
- *The specified coolant (based on recommended mixture ratio) ⇒ page 159 prevents frost and corrosion damage and stops scaling. Such additives also raise the boiling point of the coolant. It is therefore essential to use the correct coolant additive in the cooling system all year round.*
- *Because of its high boiling point, the coolant improves engine reliability under heavy loads, particularly in countries with tropical climates.*
- *Frost protection is required down to about -25 °C (in countries with arctic climate: down to about -35 °C).*
- *The coolant concentration must not be reduced by adding water even in warmer seasons and in warmer countries. The coolant concentration must be at least 40 %.*
- *If greater frost protection is required in very cold climates, the concentration of coolant additive can be increased, but only up to 60 % (this gives frost protection to about –40 °C). If the concentration exceeds 60%, frost protection decreases again and cooling efficiency is also impaired.*
- *Use only clean tap water for mixing coolant.*
- *If the radiator, heat exchanger, cylinder head, cylinder head gasket or cylinder block have been renewed, do not re-use old the coolant.*
- *Contaminated or dirty coolant must not be used again.*
- *For checking anti-freeze protection in cooling system, use refractometer - T10007- .*

Protected by copyright. Copying for private or commercial purposes, in part or in whole, is not permitted unless authorised by AUDI AG. AUDI AG does not guarantee or accept any liability with respect to the correctness of information in this document. Copyright by AUDI AG.

– Connect bottom coolant hose to radiator -arrow-.

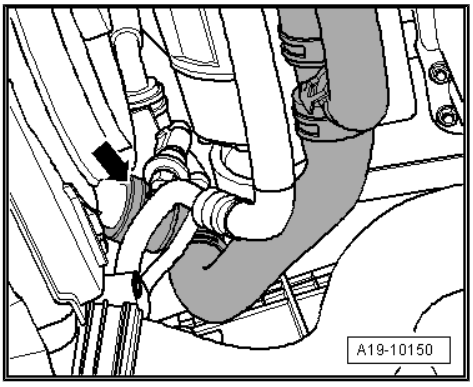

– Fill reservoir of cooling system charge unit - VAS 6096- with at least 8 litres of premixed coolant (based on recommended ratio) ⇒ page 159

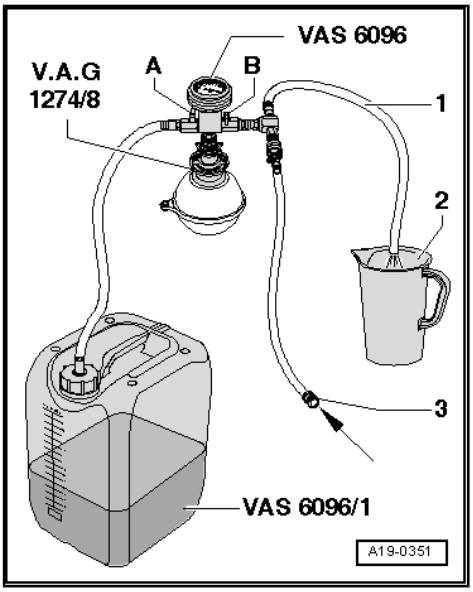

Recommended mixture ratio for coolant

- Coolant (40 %) and water (60 %) for frost protection to -25 °C
- Coolant (50 %) and water (50 %) for frost protection to -35 °C

◆ Coolant ⇒ Electronic parts catalogue

– Screw adapter for cooling system tester - V.A.G 1274/8- onto coolant expansion tank.

– Fit cooling system charge unit - VAS 6096- onto adapter for cooling system tester - V.A.G 1274/8- .

– Run vent hose -1- into a small container -2-. (The vented air draws along a small amount of coolant, which should be collected.)

– Close the two valves -A- and -B- (levers at right angles to direction of flow).

– Connect hose -3- to compressed air.

- Pressure: 6 ... 10 bar

Protected by copyright. Copying for private or commercial purposes, in part or in whole, is not permitted unless authorised by AUDI AG. AUDI AG does not guarantee or accept any liability with respect to the correctness of information in this document. Copyright by AUDI AG.

– Open valve -B- (lever in direction of flow).

The suction jet pump generates a partial vacuum in the cooling system.

• The needle on the gauge should move into the green zone.

– Additionally open valve -A- briefly (lever in direction of flow) so that hose from cooling system charge unit - VAS 6096- is filled with coolant.

– Close valve -A- again.

– Leave valve -B- open for another 2 minutes.

The suction jet pump will continue generating a vacuum in the cooling system.

• The needle on the gauge should remain in the green zone.

– Close valve -B-.

• The needle on the gauge should stop in the green zone. The vacuum level in the cooling system is then sufficient for subsequent filling.

If the needle does not reach the green zone, repeat the process.

If the vacuum level drops, there is a leak in the cooling system.

– Detach compressed air hose.

– Open valve -A-.

The partial vacuum in the cooling system causes the coolant to be drawn up out of the cooling system charge unit - VAS 6096- ; the cooling system is then filled.

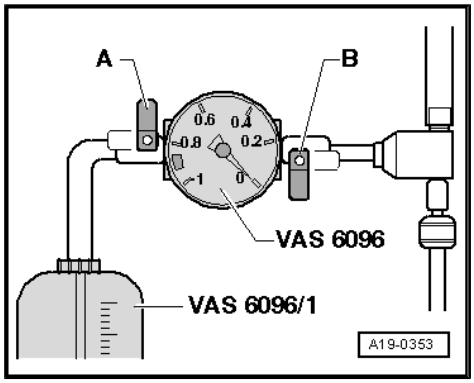

– Check the coolant level and top up coolant as far as the max mark.

– Start engine, run for 2 minutes (maximum) at approx. 1500 rpm and top up coolant to overflow hole on expansion tank with engine running.

– Fit expansion tank cap.

– Run engine until radiator fan cuts in.

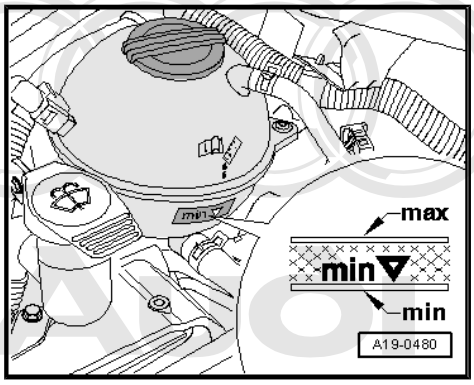

WARNING

Hot steam/hot coolant may escape when opening expansion tank. Cover cap with cloth and open carefully.

Protected by copyright. Copying for private or commercial purposes, in part or in whole, is not permitted unless authorised by AUDI AG. AUDI AG does not guarantee or accept any liability with respect to the correctness of information in this document. Copyright by AUDI AG.

– Check coolant level and top up if necessary. When engine is at normal operating temperature, coolant level should be at max. mark; when engine is cold it should be between min. and max. marks.

– Switch off engine.

1.5 Checking cooling system for leaks

Special tools and workshop equipment required

- Cooling system tester - V.A.G 1274-
- Adapter for cooling system tester - V.A.G 1274/8-
- Adapter for cooling system tester - V.A.G 1274/9-

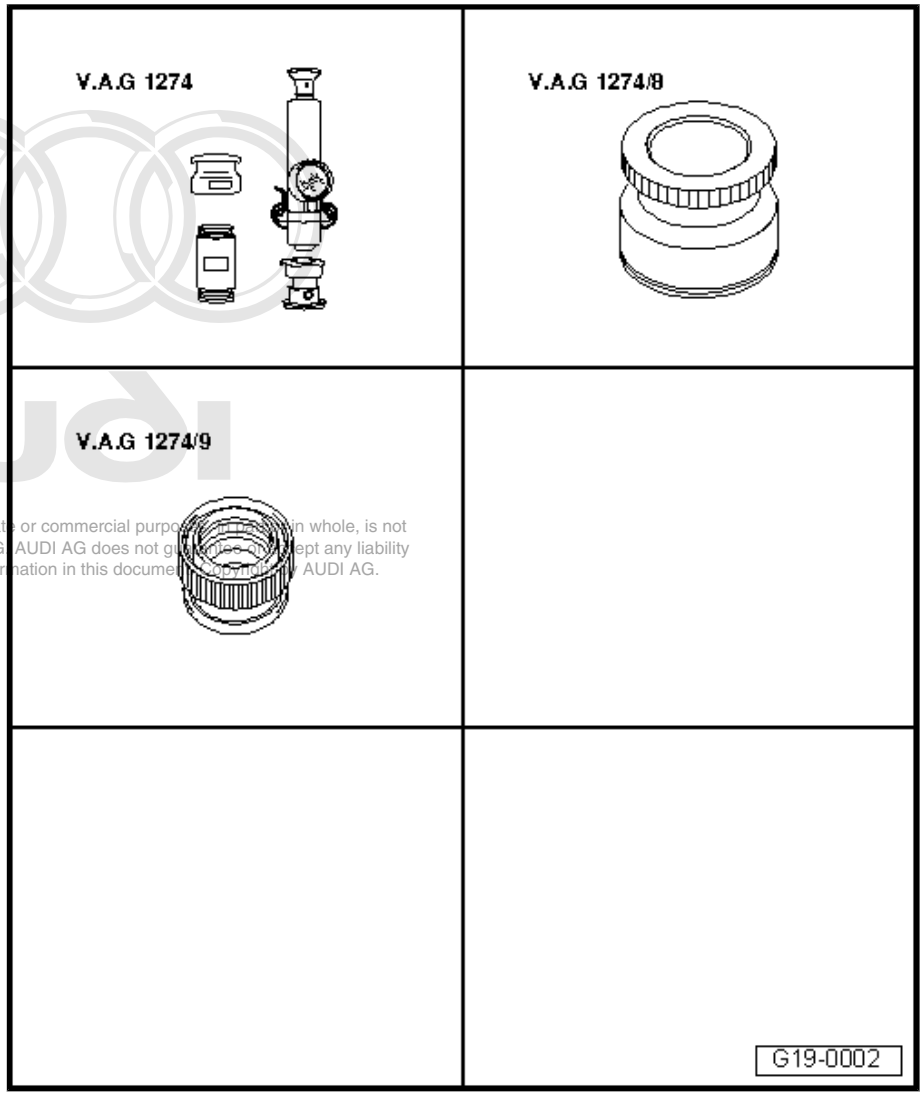

Protected by copyright. Copying for private or commercial purposes, in whole, is not permitted unless authorised by AUDI AG. AUDI AG does not guarantee or accept any liability with respect to the correctness of information in this document. Copyright by AUDI AG.

Test condition

- Engine must be warm.

Test sequence

> ⚠ WARNING
>
> *Hot steam/hot coolant may escape when opening expansion tank. Cover cap with cloth and open carefully.*

– Open filler cap on coolant expansion tank.

– Fit cooling system tester - V.A.G 1274- with adapter for cooling system tester - V.A.G 1274/8- on coolant expansion tank.
– Using hand pump on tester, build up a pressure of approx. 1.0 bar.
– If this pressure is not maintained, locate and rectify leaks.

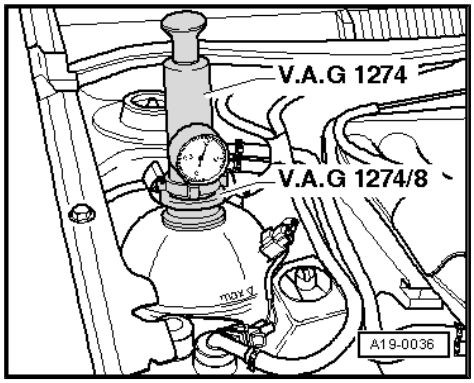

Checking pressure relief valve in filler cap

– Fit cooling system tester - V.A.G 1274- with adapter for cooling system tester - V.A.G 1274/9- on filler cap.
– Operate hand pump.
♦ The pressure relief valve should open at a pressure of 1.4 ... 1.6 bar.

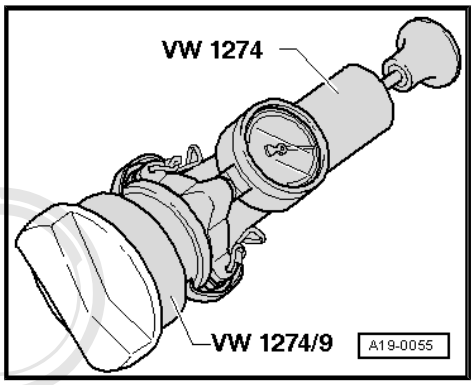

1.6 Removing and installing coolant pipes

Special tools and workshop equipment required

♦ Spring type clip pliers - VAS 5024A-

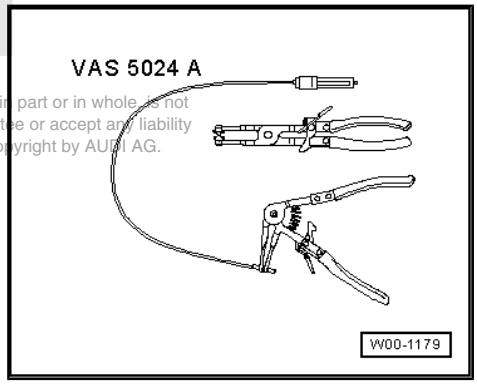

Protected by copyright. Copying for private or commercial purposes, in part or in whole, is not permitted unless authorised by AUDI AG. AUDI AG does not guarantee or accept any liability with respect to the correctness of information in this document. Copyright by AUDI AG.

Removing

– Detach engine cover panel with air cleaner ⇒ Rep. gr. 24 .
– Remove pipe -A- and hose -B- -arrows-.
– Remove noise insulation ⇒ Rep. gr. 50 .

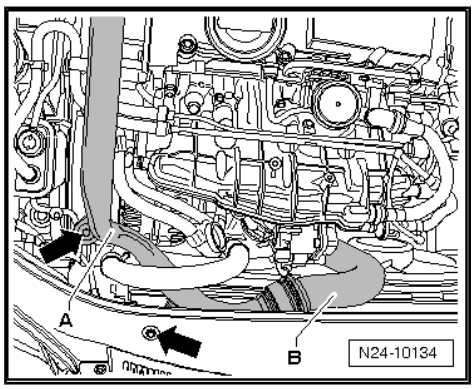

– Remove air pipe -1 and 2- for charge air cooler.

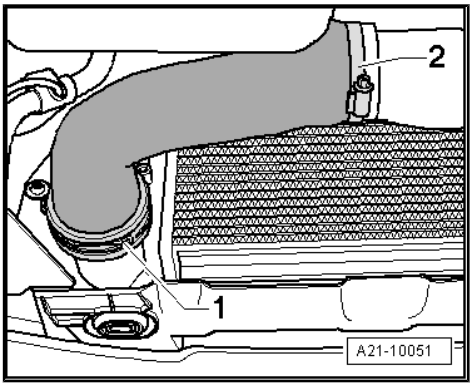

– Slacken clip -2-.
– Unplug electrical connector -4-.
– Remove nut -3- and bolt -1-.
– Take out intake connecting pipe downwards.
– Drain off coolant ⇒ page 157 .

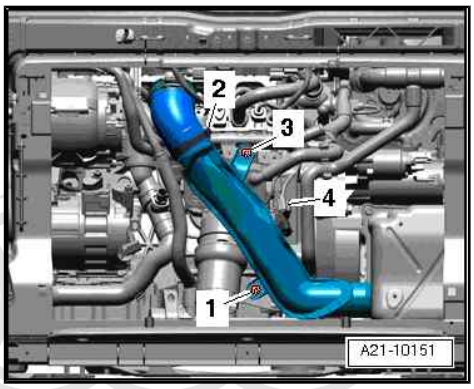

– Unplug electrical connectors -arrows-.

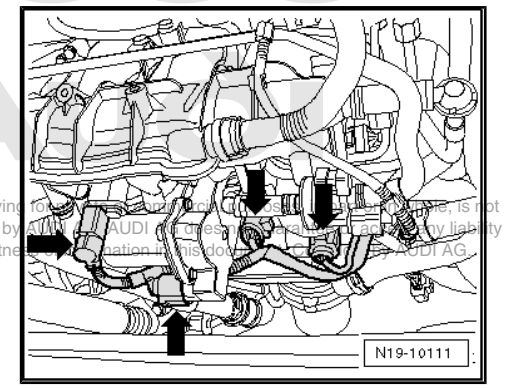

Protected by copyright. Copying for private or commercial purposes, in part or in whole, is not permitted unless authorised by AUDI AG. AUDI AG does not make any representation or warranty with respect to the correctness of information in this document. Copyright by AUDI AG.

– Detach coolant hoses from coolant pipes -arrows-.

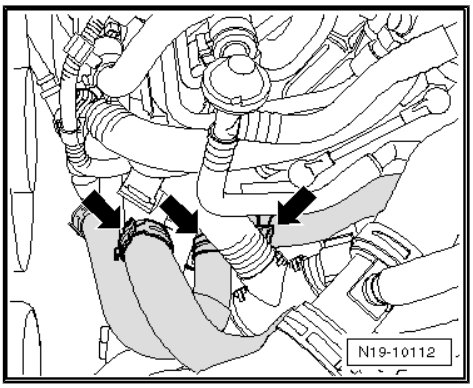

– Detach hose -A- and unscrew bolt -B-. Remove front coolant pipe.

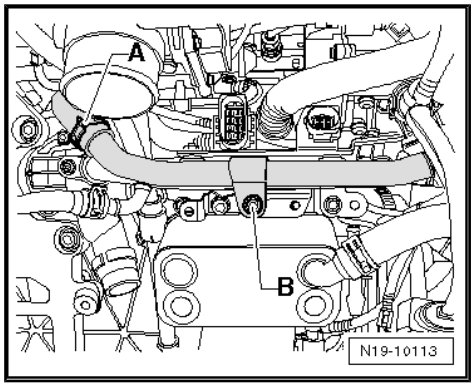

– Release connectors -A- from bracket, detach hose -B- and unscrew bolts -C-. Remove rear coolant pipe.

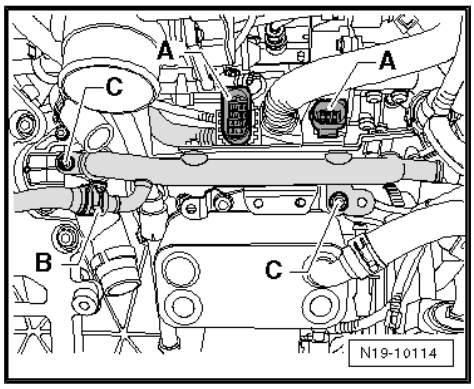

Installing

Installation is carried out in the reverse order; note the following:

- Tightening torques ⇒ page 153

Note

- *Renew gaskets and seals.*
- *Secure all hose connections with the correct type of hose clips (same as original equipment) ⇒ Parts catalogue .*

– Fill up with coolant ⇒ page 157 .

1.7 Removing and installing coolant distributor housing with map-controlled engine cooling thermostat - F265-

Removing

– Remove alternator ⇒ Electrical system; Rep. gr. 27 ; Alternator .

– Remove coolant pipes ⇒ page 162 .

– Detach coolant hose -2- from coolant distributor housing; to do so, pull out retaining clip -1-.

Protected by copyright. Copying for private or commercial purposes, in part or in whole, is not permitted unless authorised by AUDI AG. AUDI AG does not guarantee or assume any liability with respect to the correctness of information in this document. Copyright by AUDI AG.

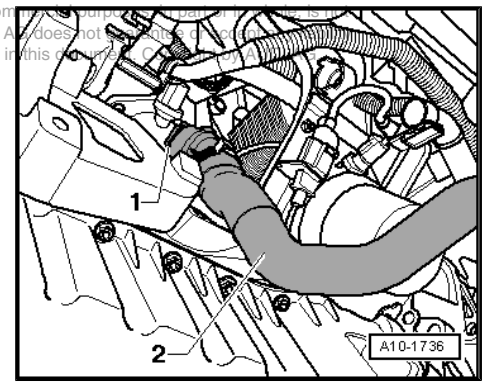

– Unscrew bolts -arrows- and remove coolant distributor housing with map-controlled engine cooling thermostat - F265- from engine.

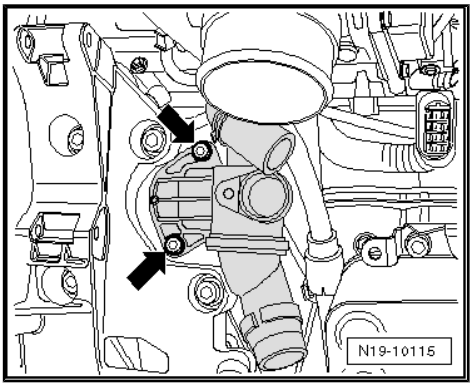

Installing

Installation is carried out in the reverse order; note the following:

- Tightening torques ⇒ page 153

Note

- *Renew gaskets and seals.*
- *Secure all hose connections with the correct type of hose clips (same as original equipment) ⇒ Parts catalogue .*

– Clean sealing surface for O-ring.

– Renew O-ring and lubricate with coolant.

– Install alternator ⇒ Electrical system; Rep. gr. 27 ; Alternator .

– Fill up with coolant ⇒ page 157 .

1.8 Removing and installing coolant pump

Special tools and workshop equipment required

- Drip tray for workshop hoist - VAS 6208-

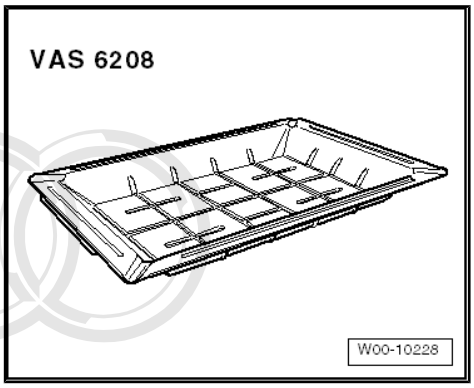

- Spring type clip pliers - VAS 5024 A-

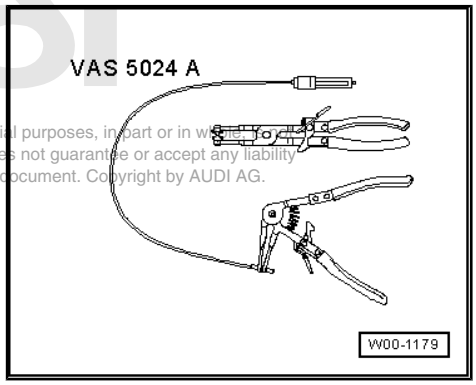

Protected by copyright. Copying for private or commercial purposes, in part or in whole, is not permitted unless authorised by AUDI AG. AUDI AG does not guarantee or accept any liability with respect to the correctness of information in this document. Copyright by AUDI AG.

Removing

WARNING

Hot steam/hot coolant may escape when opening expansion tank. Cover cap with cloth and open carefully.

– Open filler cap on coolant expansion tank.
– Detach engine cover panel with air cleaner ⇒ Rep. gr. 24 .
– Remove noise insulation ⇒ Rep. gr. 50 .
– Drain off coolant ⇒ page 157 .
– Remove toothed belt ⇒ page 61 .
– Unscrew coolant pump securing bolts -1- and remove coolant pump -2-.
– Remove O-ring -3-.

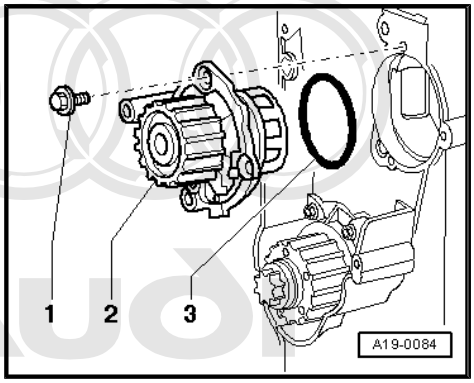

Installing

Installation is carried out in the reverse order; note the following:

• Tightening torques ⇒ page 153
– Clean and smoothen sealing surface for O-ring.

Protected by copyright. Copying for private or commercial purposes, in part or in whole, is not permitted unless authorised by AUDI AG. AUDI AG does not guarantee or accept any liability with respect to the correctness of information in this document. Copyright by AUDI AG.

– Moisten new O-ring -3- with coolant.
– Fit coolant pump -2-.
• Installation position: Sealing plug in housing faces downwards.
– Install toothed belt ⇒ page 61 .
– Install poly V-belt ⇒ page 32 .
– Fill up with coolant ⇒ page 157 .

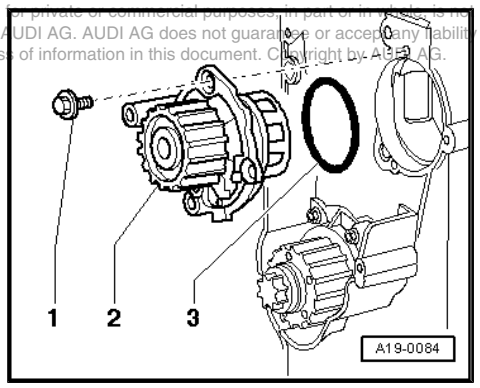

2 Parts of cooling system (on body)

WARNING

Hot steam/hot coolant can escape - risk of scalding.

- *The cooling system is under pressure when the engine is hot.*
- *To allow pressure to dissipate, cover filler cap on coolant expansion tank with cloth and open carefully.*

WARNING

Risk of injury as the radiator fans may start up automatically.

- *Unplug electrical connectors before starting to work in the area of radiator cowl.*

Protected by copyright. Copying for private or commercial purposes, in part or in whole, is not permitted unless authorised by AUDI AG. AUDI AG does not guarantee or accept any liability with respect to the correctness of information in this document. Copyright by AUDI AG.

Note

- *The cooling system is under pressure when the engine is hot. If necessary, relieve pressure before commencing repair work.*
- *Secure all hose connections with the correct type of hose clips (same as original equipment) ⇒ Parts catalogue .*
- *Hose clip pliers - V.A.G 1921- or spring-type clip pliers - VAS 5024 A- are recommended for installing spring-type clips.*
- *Renew gaskets and seals.*
- *The arrow markings on coolant pipes and on ends of hoses must align.*
- *If there are slight impressions on the fins, refer to ⇒ page 7 .*

2.1 Exploded view - radiator and radiator fans

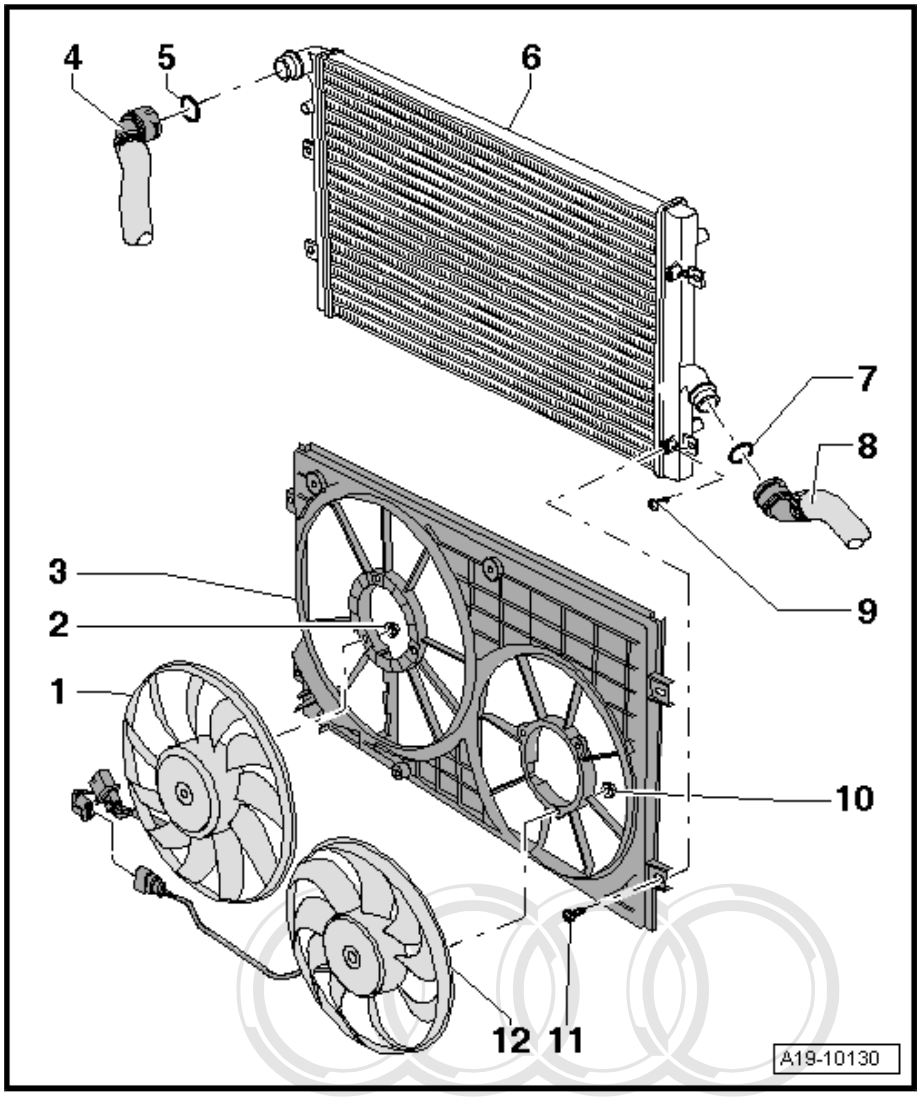

1 - Radiator fan - V7-
- ❑ Removing and installing ⇒ page 167

2 - Nut
- ❑ 10 Nm

3 - Radiator cowl

4 - Coolant hose (top)
- ❑ To connection at cylinder head

5 - O-ring
- ❑ Renew if damaged

6 - Radiator
- ❑ Removing and installing ⇒ page 168
- ❑ If renewed, change coolant in entire system

7 - O-ring
- ❑ Renew if damaged

8 - Coolant hose (bottom)
- ❑ To connection for thermostat

9 - Bolt
- ❑ 5 Nm
- ❑ To charge air cooler

10 - Nut
- ❑ 10 Nm

11 - Bolt
- ❑ 5 Nm
- ❑ To radiator

12 - Radiator fan 2 - V177-
- ❑ Removing and installing ⇒ page 167

2.2 Removing and installing radiator

Protected by copyright. Copying for private or commercial purposes, in part or in whole, is not permitted unless authorised by AUDI AG. AUDI AG does not guarantee or accept any liability with respect to the correctness of information in this document. Copyright by AUDI AG.

Special tools and workshop equipment required

♦ Drip tray for workshop hoist - VAS 6208-

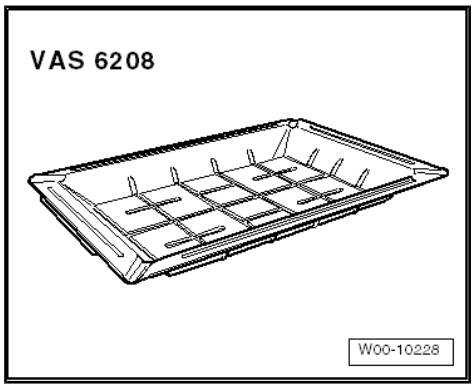

♦ Spring type clip pliers - VAS 5024 A-

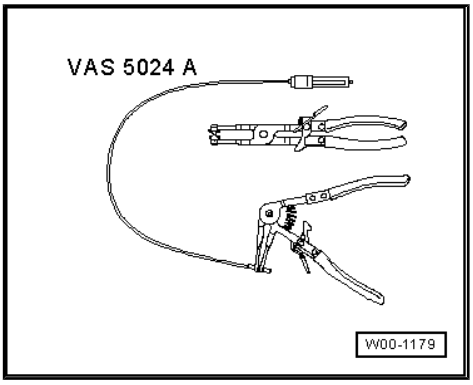

Removing

Note

If there are slight impressions on the fins, refer to ⇒ page 7 .

WARNING

Hot steam/hot coolant may escape when opening expansion tank. Cover cap with cloth and open carefully.

– Open filler cap on coolant expansion tank.
– Use spring type clip pliers - VAS 5024 A- to disconnect intake connecting pipe -1-.
– Unscrew intake connecting pipe from lock carrier -arrows- and remove.

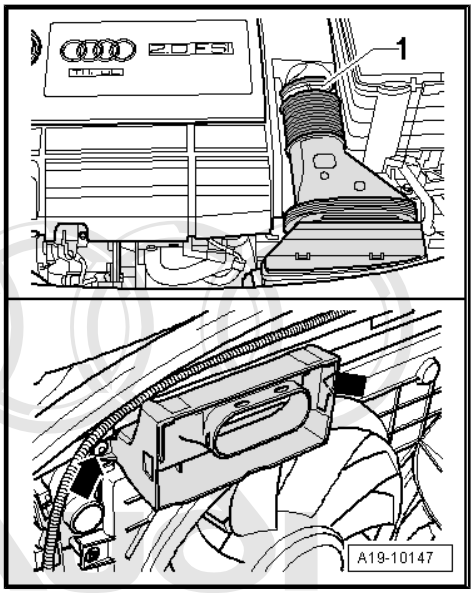

– Unscrew bolts -1- from above.
– Remove noise insulation ⇒ Rep. gr. 50 .

Protected by copyright. Copying for private or commercial purposes, in part or in whole, is not permitted unless authorised by AUDI AG. AUDI AG does not guarantee or assume any liability with respect to the correctness of information in this document. Copyright by AUDI AG.

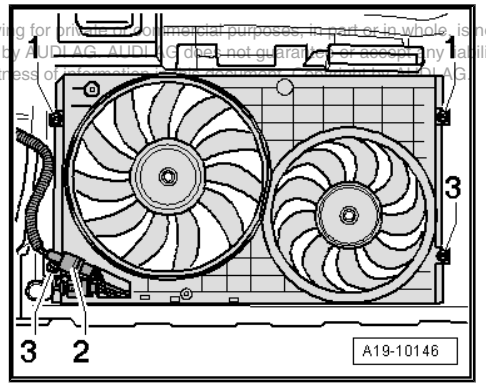

– Remove air pipe -1 and 2- for charge air cooler.

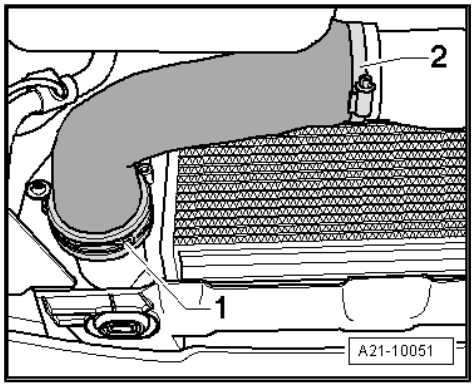

– Unplug electrical connector -2-.
– Unscrew the bolts -3- and remove radiator cowl from below.
– Place drip tray for workshop hoist - VAS 6208- beneath engine.

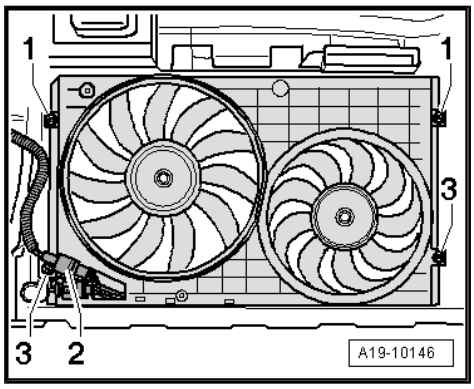

– To drain off coolant, detach bottom coolant hose -arrow-.

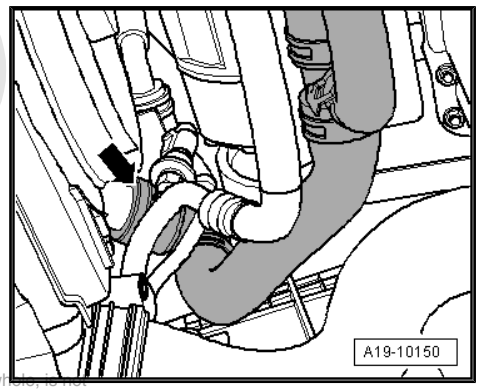

Protected by copyright. Copying for private or commercial purposes, in part or in whole, is not permitted unless authorised by AUDI AG. AUDI AG does not guarantee or accept any liability with respect to the correctness of information. Copyright by AUDI AG.

– Detach electrical connector -1- at longitudinal member (left-side) from bracket.
– Remove retainer for connector -2-.

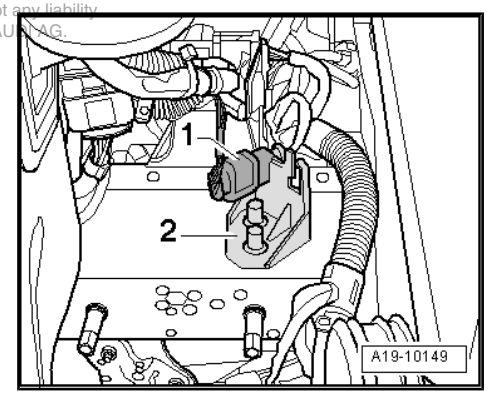

– Unplug electrical connector at bonnet lock -1-.
– Detach top coolant hose from radiator -2-.

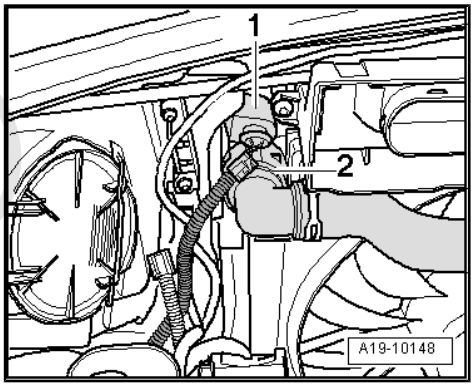

– Unscrew bolts -arrows- on backside of radiator.
– Lift up radiator slightly and remove upwards.

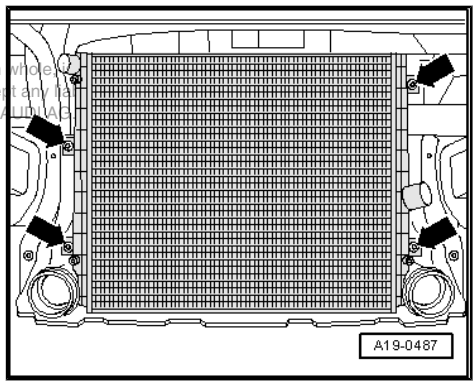

Protected by copyright. Copying for private or commercial purposes, in part or in whole, is permitted unless authorised by AUDI AG. AUDI AG does not guarantee or accept any liability with respect to the correctness of information in this document. Copyright by AUDI AG.

Installing

Installation is carried out in the reverse order; note the following:

- Tightening torques ⇒ page 167
– Install air pipes with plug-in connectors ⇒ page 173 .
– Fill up with coolant ⇒ page 157 .

2.3 Removing and installing radiator cowl

Special tools and workshop equipment required

♦ Hose clip pliers - V.A.G 1921-

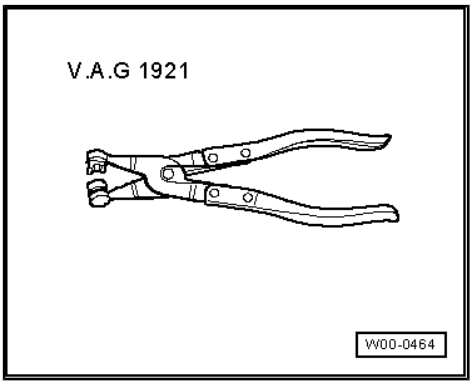

Removing

– Unscrew bolts -1- from above.
– Remove noise insulation ⇒ Rep. gr. 50 .

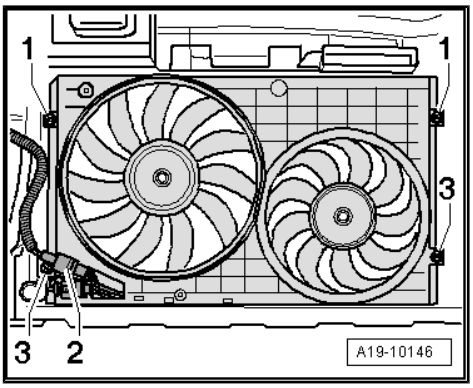

– Remove air pipe -1 and 2- for charge air cooler.

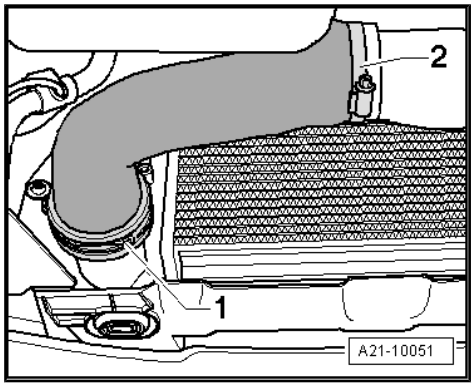

– Unplug electrical connector -2-.
– Unscrew the bolts -3- and remove radiator cowl from below.

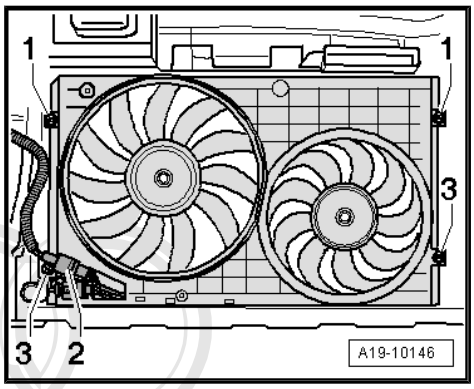

Installing

Installation is carried out in the reverse order; note the following:

- Tightening torques ⇒ page 167
– Install air pipes with plug-in connectors ⇒ page 173 .

2.4 Removing and installing radiator fan - V7- and radiator fan 2 - V177-

Removing

– Remove radiator cowl ⇒ page 171 .
– Unplug electrical connector -1-.
– Move wiring clear.
– Unscrew nuts -arrows- and remove fans.

Protected by copyright. Copying for private or commercial pu
permitted unless authorised by AUDI AG. AUDI AG does no
with respect to the correctness of information in this docu

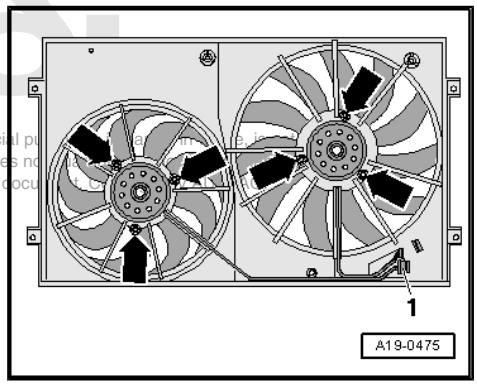

Installing

Installation is carried out in the reverse order; note the following:

- Tightening torques ⇒ page 167
– Install radiator cowl ⇒ page 171 .

21 – Turbocharging/supercharging

1 Turbocharger with charge air system, engine codes AXX, BPY, BWA

Note

- *Secure all hose connections with the correct type of hose clips (same as original equipment).*
- *Hose connections and charge air system hoses must be free of oil and grease prior to fitting. However (applies only to plug-in connectors); the seal and the sealing surface of plug-in connectors should be lubricated lightly with oil* *⇒ page 173* *.*
- *Charge air system must be free of leaks, checking for leaks* *⇒ page 195* *.*
- *Renew self-locking nuts.*
- *Hose clip pliers - VAS 5024A- or spring-type clip pliers - V.A.G 1921- are recommended for installing spring-type hose clips.*
- *Fill turbocharger with engine oil at connection for oil supply line.*
- *After installing turbocharger, allow engine to idle for approx. 1 minute and do not rev up immediately to ensure turbocharger is supplied with oil.*
- *Observe rules for cleanliness* *⇒ page 5* *.*

Copyright by AUDI AG. All rights reserved. Reproduction in part or in whole, is not permitted without the express written consent of AUDI AG. AUDI AG does not guarantee or accept any liability with respect to the correctness of information in this document. Copyright by AUDI AG.

Fitting hose connections with plug-in connectors ⇒ page 173 .

1.1 Fitting hose connections with plug-in connectors - vehicles with engine codes AXX, BPY, BWA

Caution

The seal in the plug-in connector can be damaged if the securing clip is in the locked position when fitting the connector. This can cause leakage. Note assembly instructions.

Removing:

– Release plug-in connector by pulling out retaining clip -arrow-. Disconnect pipe/hose (do not use tools of any kind).

Installing

– When renewing seal, fit seal in groove on charge air hose. Make sure that the seal is correctly seated in the groove all round the complete circumference and that it is not twisted.

– Lubricate sealing surface and seal with oil.

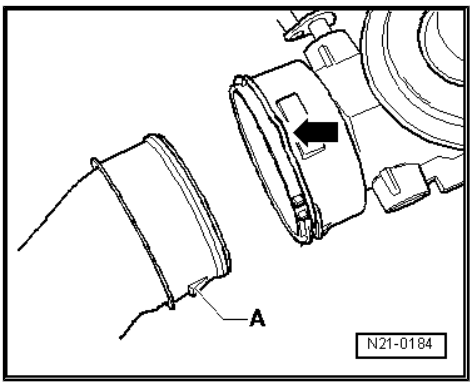

– Move securing clip to released position -1-.
– Push charge air hose into connector as far as stop.
– Move securing clip to locked position -2- and press charge air hose in once again.
– Then pull hose to check that it is fitted correctly and that plug-in connector is locked.

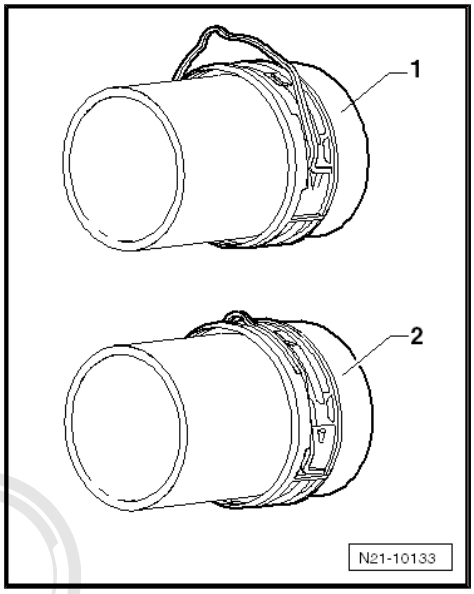

1.2 Turbocharger - exploded view, vehicles with engine codes AXX, BPY, BWA

Part I

Part II ⇒ page 176
Part III ⇒ page 176
Part IV ⇒ page 177

Protected by copyright. Copying for private or commercial purposes, in part or in whole, is not permitted unless authorised by AUDI AG. AUDI AG does not guarantee or accept any liability with respect to the correctness of information in this document. Copyright by AUDI AG.

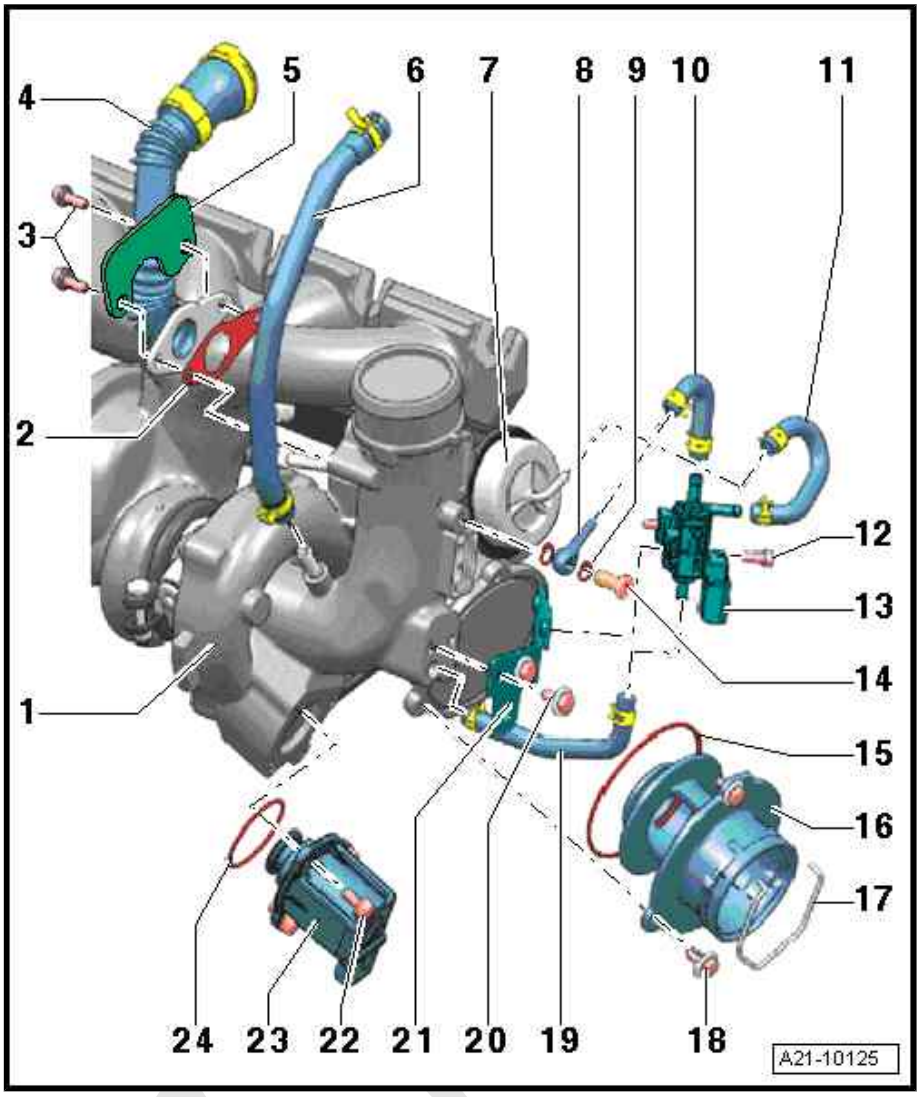

1 - Turbocharger
- ❑ Can only be renewed together with exhaust manifold and vacuum unit as one unit
- ❑ Removing and installing ⇒ page 178

2 - Gasket
- ❑ Renew

3 - 9 Nm

4 - Crankcase breather hose

5 - Heat shield

6 - ACF line

7 - Vacuum unit for turbocharger
- ❑ Removing and installing ⇒ page 186
- ❑ Adjusting ⇒ page 187

8 - Nipple

9 - Seal
- ❑ Renew

10 - Hose

11 - Hose

12 - 3 Nm

13 - Charge pressure control solenoid valve - N75-

14 - 8 Nm

15 - Seal
- ❑ Renew

16 - Connection

17 - Securing clip

18 - 9 Nm

19 - Hose

20 - 7 Nm

21 - Bracket

22 - 7 Nm

23 - Turbocharger air recirculation valve - N249-
- ❑ Note installation position ⇒ page 176

24 - Seal
- ❑ Renew

Protected by copyright. Copying for private or commercial purposes, in part or in whole, is not permitted unless authorised by AUDI AG. AUDI AG does not guarantee or accept any liability with respect to the correctness of information in this document. Copyright by AUDI AG.

Fitting location of turbocharger air recirculation valve - N249-

– Heed installation position -arrows-.

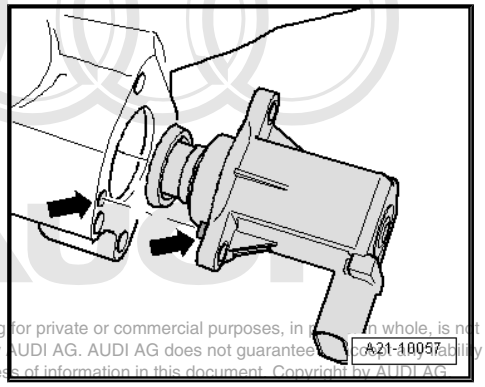

Protected by copyright. Copying for private or commercial purposes, in part or in whole, is not permitted unless authorised by AUDI AG. AUDI AG does not guarantee or accept any liability with respect to the correctness of information in this document. Copyright by AUDI AG.

Part II

Part I ⇒ page 174

Part III ⇒ page 176

Part IV ⇒ page 177

1 - Seal
- ❑ Renew

2 - 30 Nm

3 - Oil supply line

4 - Turbocharger
- ❑ Can only be renewed together with exhaust manifold and vacuum unit as one unit
- ❑ Removing and installing ⇒ page 178

5 - 9 Nm

6 - 30 Nm

7 - Seal
- ❑ Renew

8 - 35 Nm

9 - Seal
- ❑ Renew

10 - Coolant supply line

11 - 23 Nm

12 - 35 Nm

13 - Bolt
- ❑ 9 Nm

14 - Seal
- ❑ Renew

15 - Gasket
- ❑ Renew

16 - Oil return line

17 - 9 Nm

18 - Gasket
- ❑ Renew

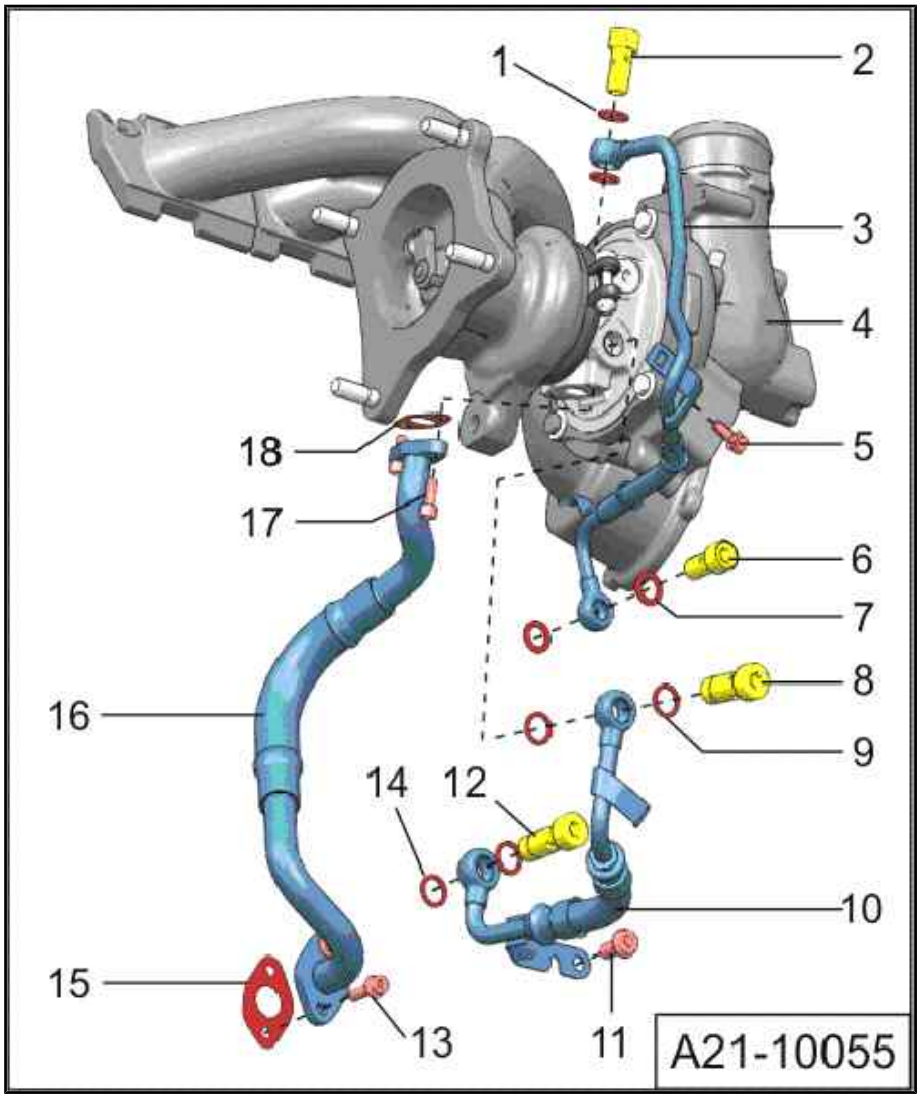

Part III

Part I ⇒ page 174

Part II ⇒ page 176

Part IV ⇒ page 177

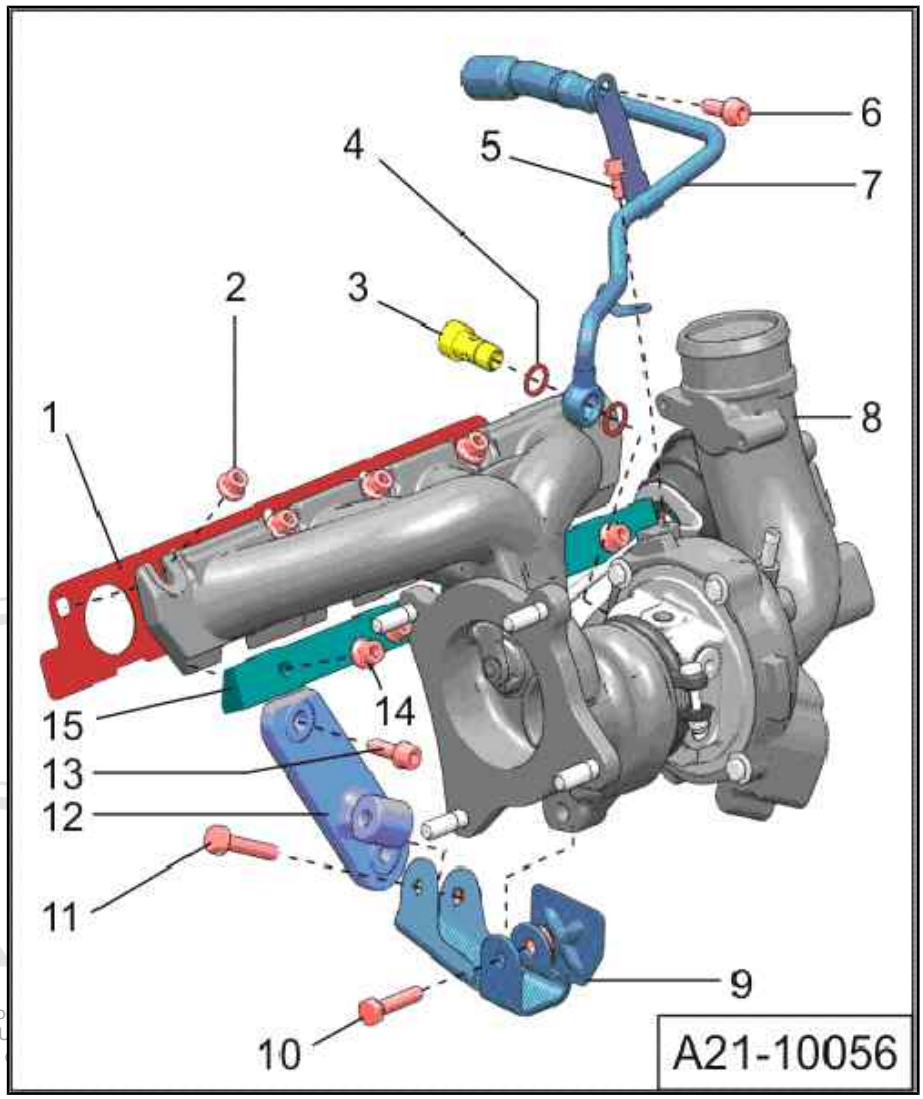

1 - Gasket
- ❑ Renew

2 - 21 Nm
- ❑ Renew
- ❑ Coat studs of exhaust manifold with high-temperature paste
- ❑ High-temperature paste ⇒ Parts catalogue

3 - 35 Nm

4 - Seal
- ❑ Renew

5 - 9 Nm

6 - 23 Nm
- ❑ Not fitted on all versions

7 - Coolant return line

8 - Turbocharger
- ❑ Can only be renewed together with exhaust manifold and vacuum unit as one unit
- ❑ Removing and installing ⇒ page 178

9 - Bracket

10 - 30 Nm
- ❑ Lubricate bolts with high-temperature paste
- ❑ High-temperature paste ⇒ Parts catalogue

Protected by copyright. Copying fo
permitted unless authorised by AU
with respect to the correctness

11 - 30 Nm
- ❑ Lubricate bolts with high-temperature paste
- ❑ High-temperature paste ⇒ Parts catalogue

12 - Bracket

13 - 23 Nm

14 - 30 Nm
- ❑ Do not slacken when removing turbocharger
- ❑ Renew
- ❑ Coat studs of exhaust manifold with high-temperature paste
- ❑ High-temperature paste ⇒ Parts catalogue

15 - Fastening strip

Part IV

Part I ⇒ page 174

Part II ⇒ page 176

Part III ⇒ page 176

1 - Turbocharger

- ❑ Can only be renewed together with exhaust manifold and vacuum unit as one unit
- ❑ Removing and installing ⇒ page 178

2 - Vacuum unit for turbocharger

- ❑ Removing and installing ⇒ page 186
- ❑ Checking ⇒ page 185
- ❑ Adjusting ⇒ page 187

3 - 10 Nm

4 - Retaining clip

5 - 9 Nm

- ❑ Secure with sealing paint
- ❑ Sealing paint ⇒ Parts catalogue

6 - Knurled nut

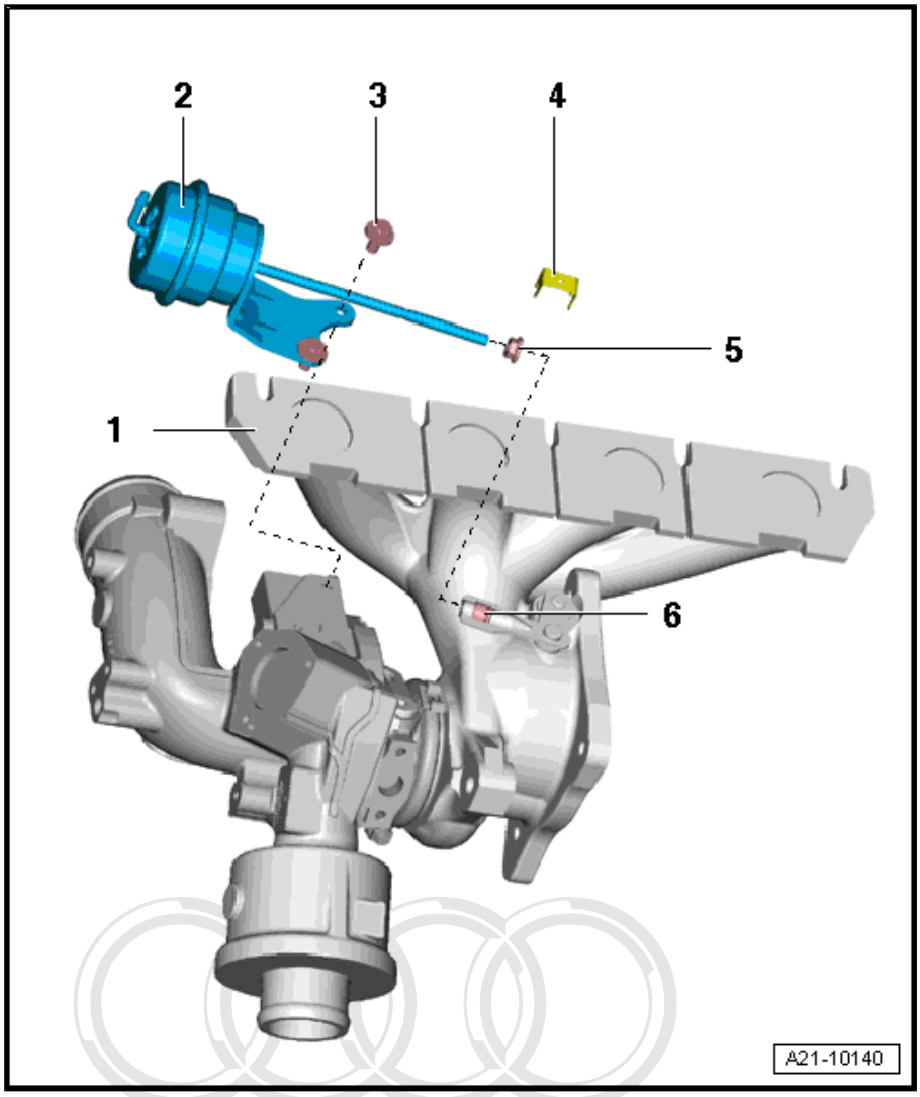

1.3 Removing and installing turbocharger, vehicles with engine codes AXX, BPY, BWA

Special tools and workshop equipment required

Protected by copyright. Copying for private or commercial purposes, in part or in whole, is not permitted unless authorised by AUDI AG. AUDI AG does not guarantee or accept any liability with respect to the correctness of information in this document. Copyright by AUDI AG.

- ♦ Spring type clip pliers - VAS 5024 A-

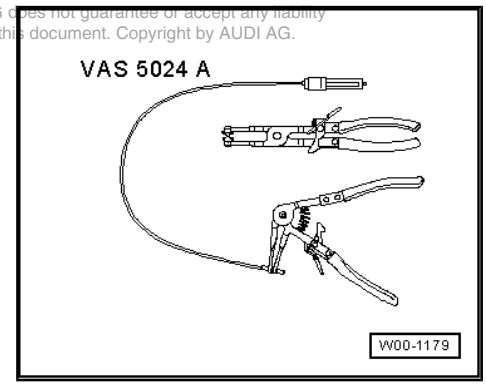

- Socket (8 mm) - 3247-

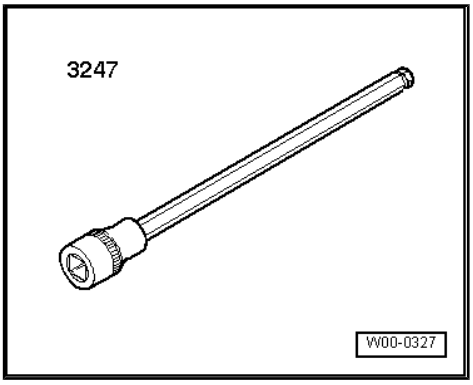

- Engine bung set - VAS 6122-

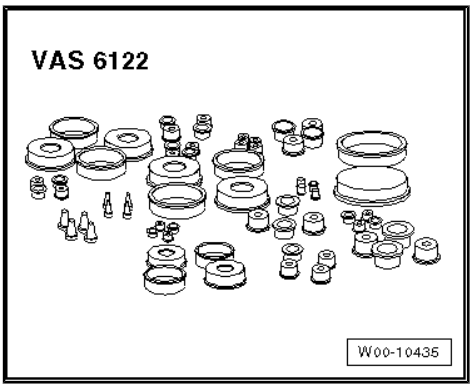

Caution

If the turbocharger has suffered mechanical damage (e.g. damaged compressor wheel), it is not sufficient merely to fit a new turbocharger. The following work must be performed in order to avoid further damage:

- *Check the air cleaner housing, air filter element and intake hoses for dirt and foreign particles.*
- *Check the entire charge air system (including the charge air cooler) for foreign matter.*

If foreign matter is found in the charge air system, clean all relevant ducts and hoses and renew the charge air cooler if necessary.

Protected by copyright. Copying for private or commercial purposes, in part or in whole, is not permitted unless authorised by AUDI AG. AUDI AG does not guarantee or accept any liability with respect to the correctness of information in this document. Copyright by AUDI AG.

Removing

– Detach engine cover panel with air cleaner ⇒ Rep. gr. 24 .

WARNING

Hot steam/hot coolant may escape when opening expansion tank. Cover cap with cloth and open carefully.

– Open filler cap on coolant expansion tank.

– Drain off coolant ⇒ page 157 .

– Use screwdriver to pry off cover caps on wiper arms and unscrew hexagon nuts.

– Pull wiper arms off wiper shafts and remove.

– Unclip washer jets -arrow-.
– Push washer jets through assembly opening back into plenum chamber, leaving hoses connected.

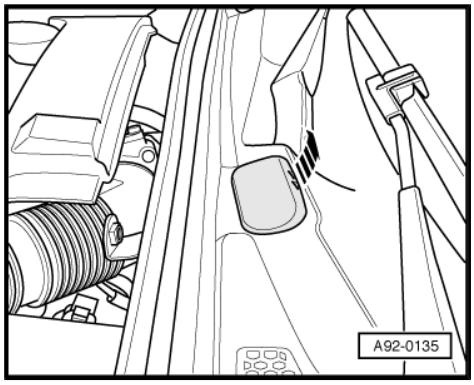

– Detach rubber seal -1- from plenum chamber cover.
– Detach plenum chamber cover -2-.
– Detach engine wiring harness at rear plenum chamber panel.

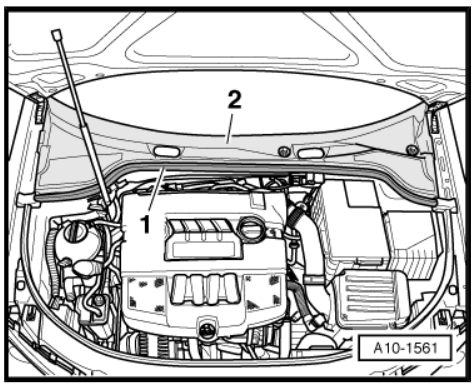

– Remove electrical connector -arrow- for Lambda probe - G39- and Lambda probe heater - Z19- (before catalytic converter) from bracket, unplug and move clear.

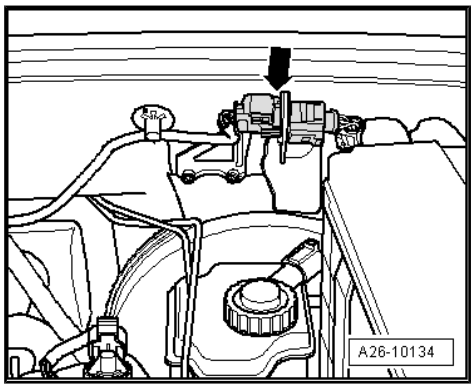

Protected by copyright. Copying for private or commercial purposes, in part or in whole, is not permitted unless authorised by AUDI AG. AUDI AG does not guarantee or accept any liability with respect to the correctness of information in this document. Copyright by AUDI AG.

– Remove plenum chamber intermediate plate -arrows-.

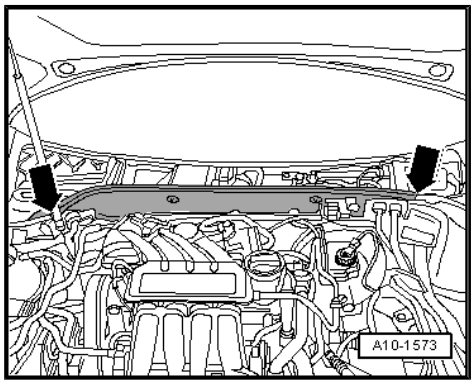

– Unplug connectors -1- on ignition coils.

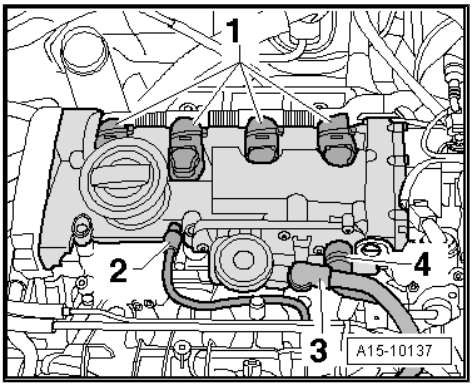

Note

Shown in illustration from rear with engine removed.

– Remove heat shield -arrows-.

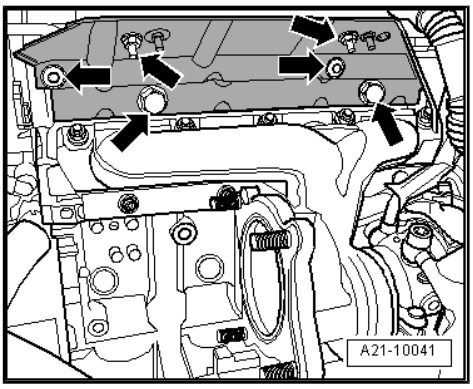

– Disconnect coolant pipe going to coolant expansion tank -arrow-.

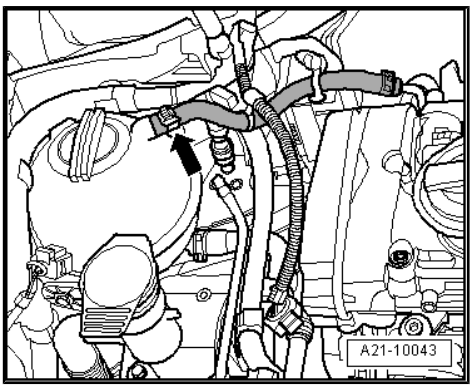

– Disconnect coolant hose -1-.
– Disconnect coolant hose -2-.
– Unscrew coolant line -3-.

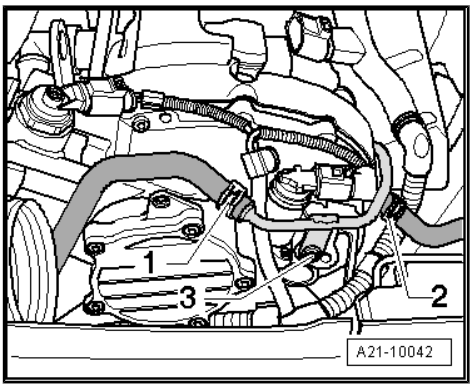

Protected by copyright. Copying for private or commercial purposes, in part or in whole, is not permitted unless authorised by AUDI AG. AUDI AG does not guarantee or accept any liability with respect to the correctness of information in this document. Copyright by AUDI AG.

– Unscrew crankcase breather line with heat shield from turbocharger -1-.
– Disconnect crankcase breather line from cylinder head cover -2- and remove.
– Disconnect ACF line going to turbocharger from cylinder head cover -3-.
– Unscrew oil supply line from turbocharger -4-.
– Remove catalytic converter together with front exhaust pipe.

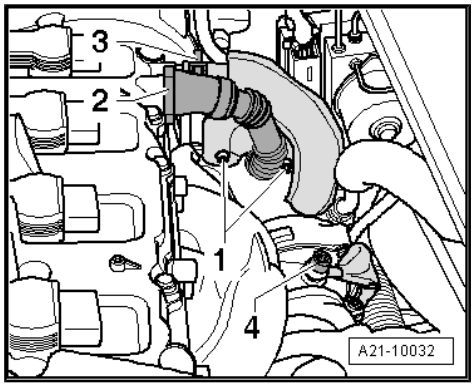

Engines with code letters AXX, BPY, BWA ⇒ page 218 .

Engines with code letters BHZ, BZC, CDLA, CDLC ⇒ page 225

– Remove noise insulation ⇒ Rep. gr. 50 .

– Remove noise insulation (right-side) -fasteners 1 ... 3-.
– Remove drive shaft (right-side) ⇒ Rep. gr. 40 .

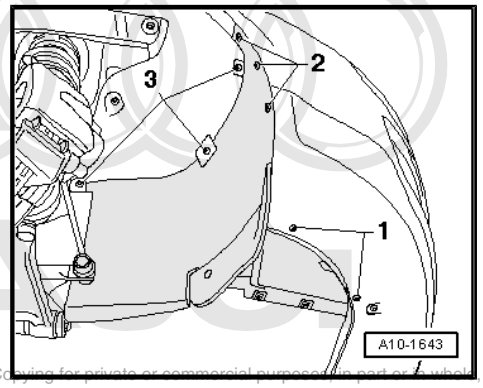

Protected by copyright. Copying for private or commercial purposes, in part or in whole, is not permitted unless authorised by AUDI AG. AUDI AG does not guarantee or accept any liability with respect to the correctness of information in this document. Copyright by AUDI AG.

Vehicles with four-wheel drive

– Remove heat shield above drive shaft using hexagon key extension, 8 mm - 3247- .

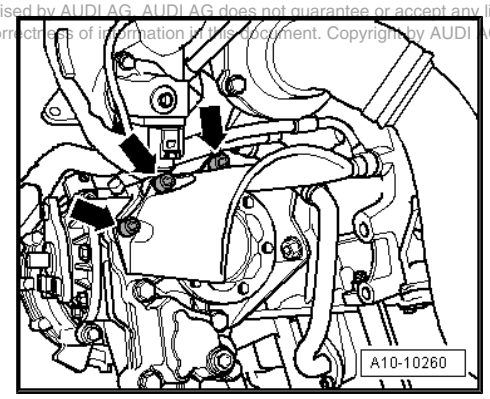

Vehicles with front-wheel drive

– Unbolt heat shield for drive shaft (right-side) -arrows-.

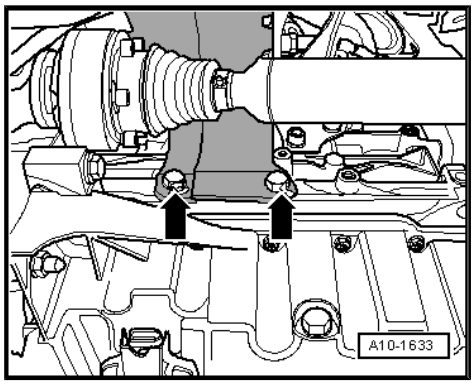

All vehicles:

– Detach air pipe -arrow- from charge air cooler.

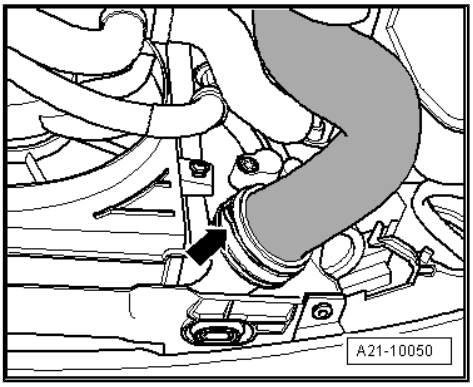

– Unbolt air pipe from turbocharger -arrows-.

– Detach electrical connectors -1 and 2- and move wire clear.

Protected by copyright. Copying for private or commercial purposes, in part or in whole, is not permitted unless authorised by AUDI AG. AUDI AG does not guarantee or accept any liability with respect to the correctness of information in this document. Copyright by AUDI AG.

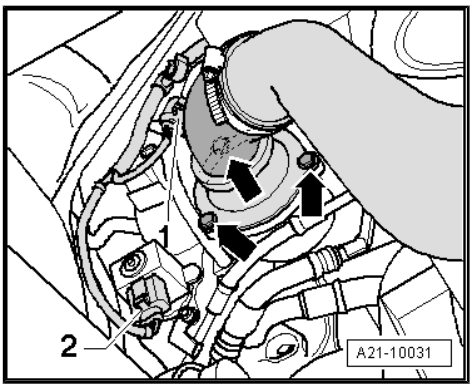

– Unscrew bolts -arrows- and remove air pipe.

Note

Shown in illustration from rear with engine removed.

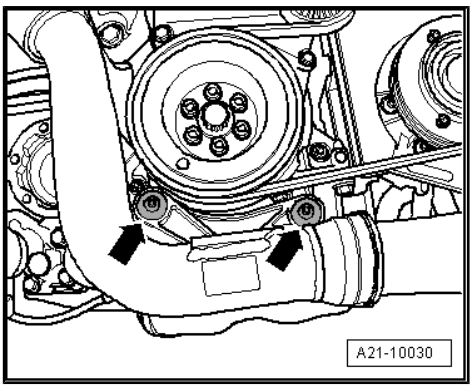

– Unscrew oil supply line from turbocharger -2-.

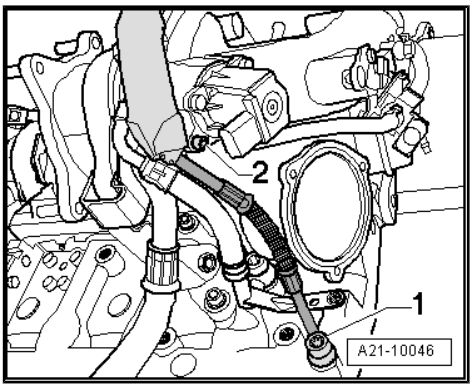

– Unscrew coolant supply line at turbocharger -2-.

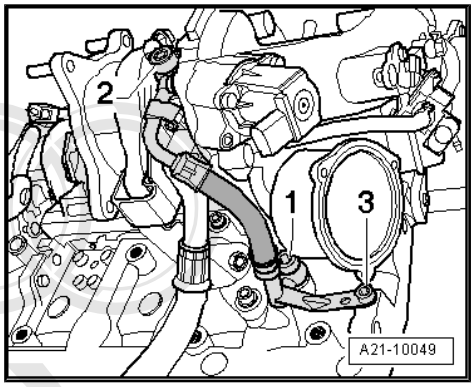

– Detach oil return line at turbocharger -arrows-.

Protected by copyright. Copying for private or commercial purposes, in part or in whole, is not permitted unless authorised by AUDI AG. AUDI AG does not guarantee or accept any liability with respect to the correctness of information in this document. Copyright by AUDI AG.

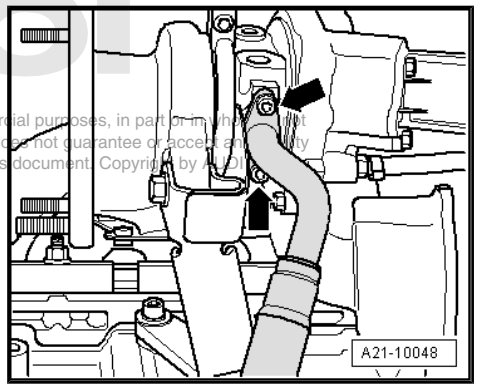

– Remove bolts -1- and -2- and remove support for turbocharger.

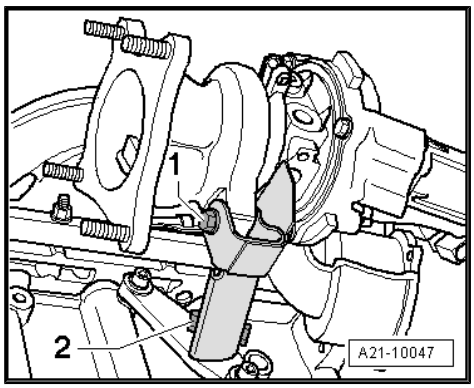

– Disconnect coolant pipe -arrow-.

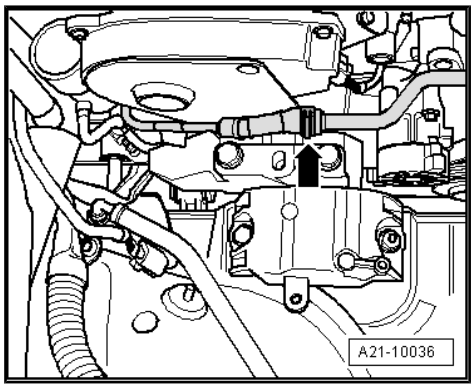

Note

- *Shown in illustration from rear with engine removed.*
- *Nuts of fastening strip do not have to be unscrewed.*

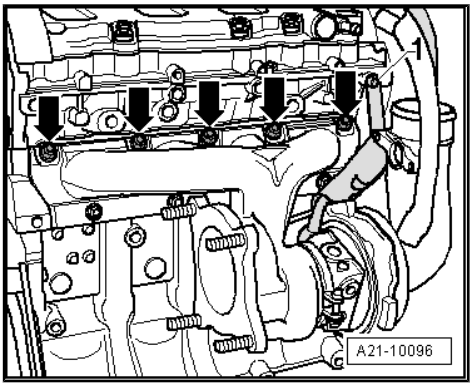

– Remove coolant pipe bolt -1- (if fitted) from cylinder head.
– Unscrew top nuts -arrows-.
– Lift out turbocharger/exhaust manifold.

Installing

Installation is carried out in the reverse order; note the following:

- Tightening torques ⇒ page 174

Note

- *Renew seals, gaskets and self-locking nuts.*
- *Fill turbocharger with engine oil at connection for oil supply line.*
- *Hose connections and charge air system hoses must be free of oil and grease prior to fitting.*
- *Secure all hose connections with the correct type of hose clips (same as original equipment) ⇒ Parts catalogue .*

– Install exhaust system and align it free of stress ⇒ page 221 .
– Install drive shaft ⇒ Rep. gr. 40 .
– Install air pipes with plug-in connectors ⇒ page 173 .
– Fill up with coolant ⇒ page 157 .
– Check oil level ⇒ Maintenance ; Booklet 808 .

Note

After installing turbocharger, allow engine to idle for approx. 1 minute and do not rev up immediately to ensure turbocharger is supplied with oil.

1.4 Checking vacuum unit for turbocharger, engines with code letters AXX, BPY, BWA

Special tools and workshop equipment required

- Hand vacuum pump - VAS 6213-

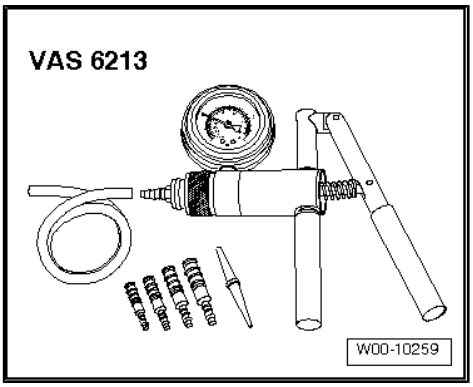

Protected by copyright. Copying for private or commercial purposes, in part or in whole, is not permitted unless authorised by AUDI AG. AUDI AG does not guarantee or accept any liability with respect to the correctness of information in this document. Copyright by AUDI AG.

Test condition:

- Hose from turbocharger via charge pressure control solenoid valve - N75- to vacuum unit must not be blocked.

♦ Charge pressure control solenoid valve - N75- OK.

Procedure:

– Detach engine cover panel with air cleaner ⇒ Rep. gr. 24 .

– Connect hand vacuum pump - VAS 6213- to vacuum unit -arrow-.

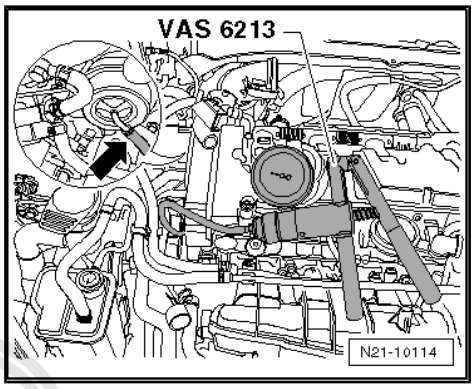

– Move adjuster ring -1- on hand vacuum pump - VAS 6213- to position -B- to select “pressure”.

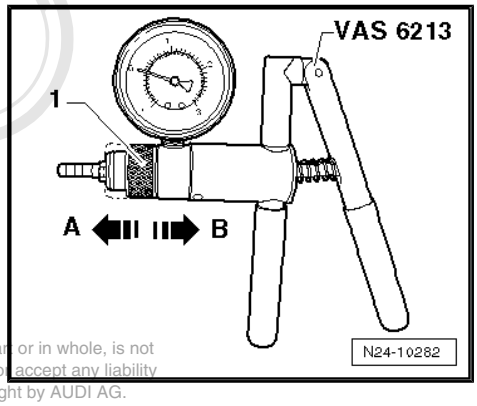

> ⚠ **Caution**
>
> ***The pressure must not exceed 750 mbar. The vacuum unit could be damaged if the pressure is exceeded.***

– Operate hand vacuum pump - VAS 6213- several times and at the same time observe linkage.

Protected by copyright. Copying for private or commercial purposes, in part or in whole, is not permitted unless authorised by AUDI AG. AUDI AG does not guarantee or accept any liability with respect to the correctness of information in this document. Copyright by AUDI AG.

The linkage -A- should start to move at a pressure of approx. 300 mbar and be at its limit stop at a pressure of approx. 700 mbar.

The linkage should travel approx. 10 mm.

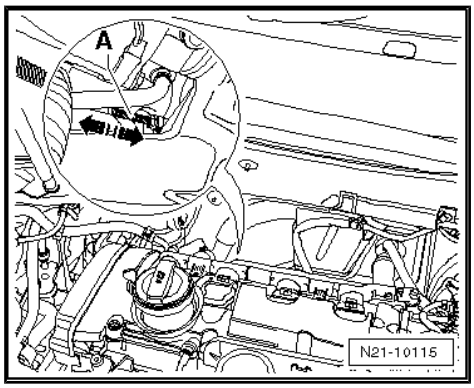

> ℹ **Note**
>
> *If it is not possible to build up pressure with hand vacuum pump - VAS 6213- or if the pressure drops again immediately, check hand vacuum pump - VAS 6213- and connecting hoses for leaks. If no fault is found: renew vacuum unit ⇒ page 186 .*

1.5 Removing and installing vacuum unit for turbocharger

Removing

– Remove turbocharger ⇒ page 178 .

– Detach locking plate -1- on turbocharger linkage.

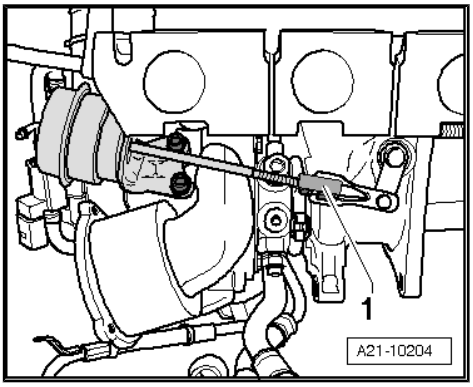

– Slacken lock nut -2-.
– Disconnect linkage from turbocharger -3-.
– Detach vacuum unit -1- from turbocharger -arrows-.

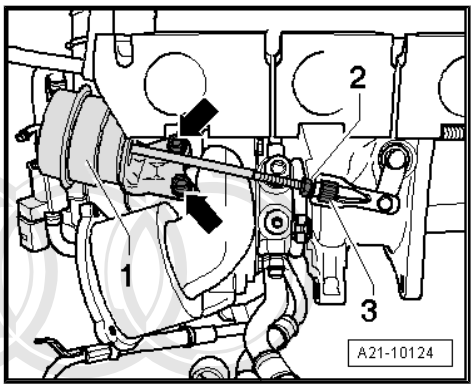

Installing

Installation is carried out in the reverse order; note the following:

Tightening torques ⇒ page 177

– Adjust vacuum unit for turbocharger ⇒ page 187 .
– Install turbocharger ⇒ page 178 .

1.6 Adjusting vacuum unit for turbocharger, engines with code letters AXX, BPY, BWA

Turbocharger removed

Protected by copyright. Copying for private or commercial purposes, in part or in whole, is not permitted unless authorised by AUDI AG. AUDI AG does not guarantee or accept any liability with respect to the correctness of information in this document. Copyright by AUDI AG.

Special tools and workshop equipment required

- Universal dial gauge bracket - VW 387-
- Hand vacuum pump - VAS 6213-
- Pressure control valve - VAS 6342-
- Turbocharger tester - V.A.G 1397A-
- Dial gauge set, 4-part - VAS 6341-
- Torque wrench - V.A.G 1783-

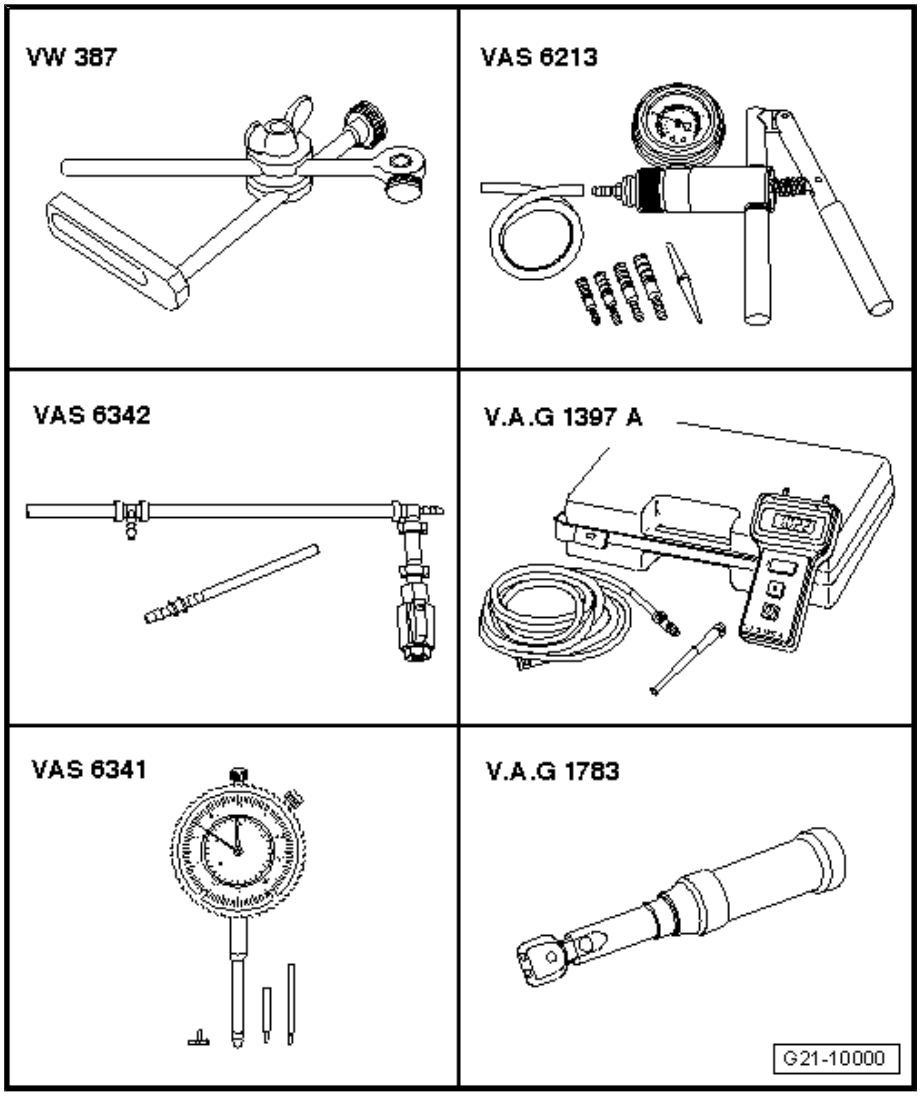

- Open end spanner insert (10 mm) - V.A.G 1783/1-

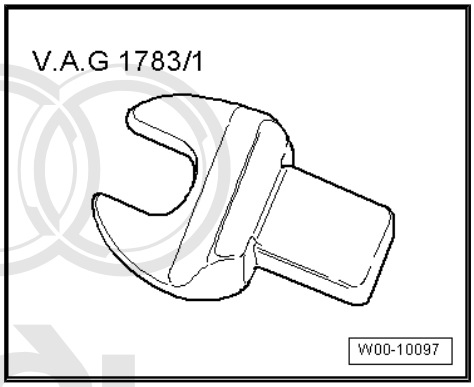

Adjusting

- Tightening torques ⇒ page 177

Protected by copyright. Copying for private or commercial purposes, in part or in whole, is not permitted unless authorised by AUDI AG. AUDI AG does not guarantee or accept any liability with respect to the correctness of information in this document. Copyright by AUDI AG.

– Disconnect hose -arrow- at vacuum unit on turbocharger.
– Detach locking plate above turbocharger linkage.

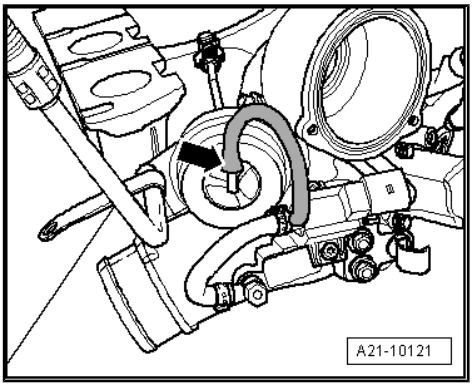

– Loosen lock nut -2-.

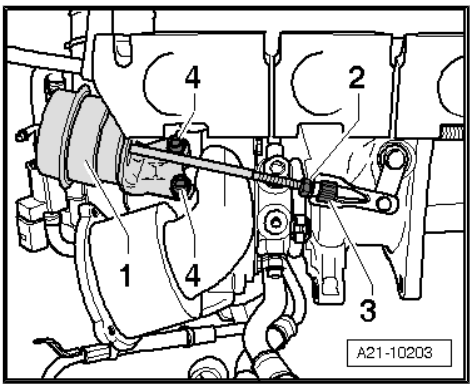

– Pre-adjust bypass flap -1- at knurled nut -arrow- so that bypass flap can still just be turned by hand.
– Hand-tighten lock nut.

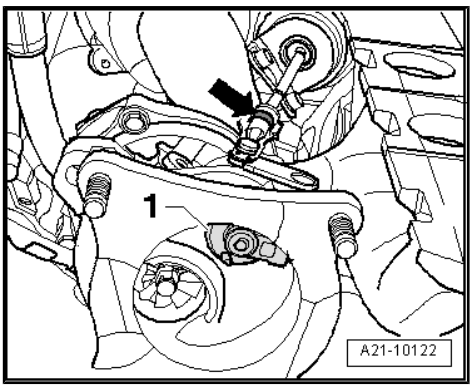

– Connect up hand vacuum pump - VAS 6213- , turbocharger tester - V.A.G 1397A- (connection II) and pressure control valve - VAS 6342- as shown in illustration.
– Close pressure control valve - VAS 6342- at lever -1-.

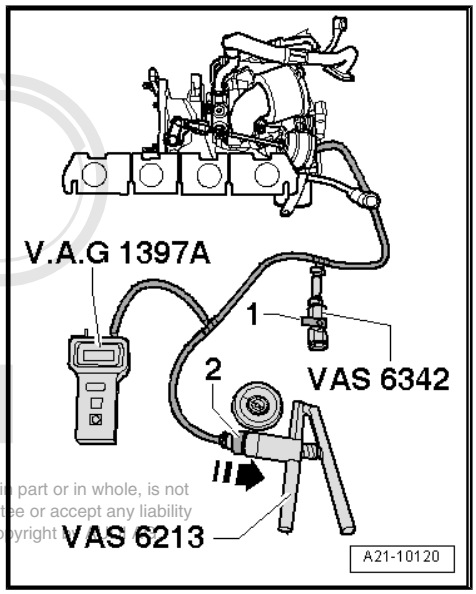

Protected by copyright. Copying for private or commercial purposes, in part or in whole, is not permitted unless authorised by AUDI AG. AUDI AG does not guarantee or accept any liability with respect to the correctness of information in this document. Copyright

– Move adjuster ring -1- on hand vacuum pump - VAS 6213- to position -B- to select “pressure”.
– Switch on turbocharger tester - V.A.G 1397A- and set sliding switch to position II.

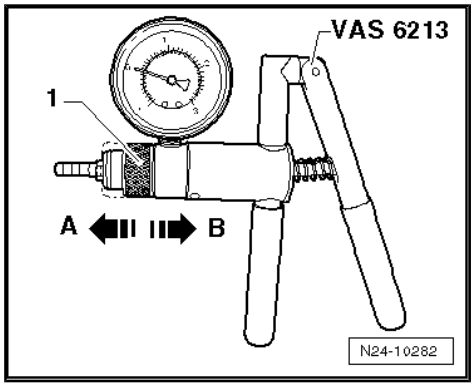

Protected by copyright. Copying for private or commercial purposes, in part or in whole, is not permitted unless authorised by AUDI AG. AUDI AG does not guarantee or accept any liability with respect to the correctness of information in this document. Copyright by AUDI AG.

– Secure universal dial gauge bracket - VW 387- to turbocharger -arrow-.

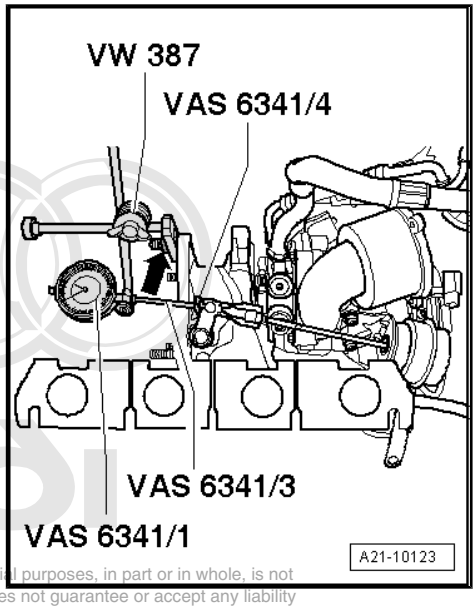

Note

The dial gauge values (mm) listed here include the 1 mm preload that is initially set on the gauge.

– Attach dial gauge - VAS 6341/1- with extension, 30 mm - VAS 6341/3- and flat probe - VAS 6341/4- to universal dial gauge bracket - VW 387- .
– With pressure at 0 bar, set dial gauge - VAS 6341/1- to 1 mm preload.
– Set scale of dial gauge - VAS 6341/1- to 0.
– Make sure that dial gauge can move freely.
– Operate hand vacuum pump - VAS 6213- until turbocharger tester - V.A.G 1397A- indicates 350 +/- 5 mbar.
– The dial gauge should now indicate a value between 4.1 mm and 4.3 mm. If not, turn knurled nut until this value is indicated.
– Hand-tighten lock nut.
– Repeat measurement.
– Vent system via pressure control valve - VAS 6342- so that pressure reading drops to 0 mbar.
– Set dial gauge - VAS 6341/1- to 0.

Copyright by copying for private or commercial purposes, in part or in whole, is not permitted unless authorised by AUDI AG. AUDI AG does not guarantee or accept any liability with respect to the correctness of information in this document. Copyright by AUDI AG.

Note

The following measurements must be performed in continuous sequence. Do not allow the pressure to drop to 0 between measurements.

– Operate hand vacuum pump - VAS 6213- until turbocharger tester - V.A.G 1397A- indicates 350 +/- 5 mbar.
– Read off and note value indicated on dial gauge - VAS 6341/1- .
– Operate hand vacuum pump - VAS 6213- until turbocharger tester - V.A.G 1397A- indicates 650 to 700 mbar.
– Vent system via pressure control valve - VAS 6342- so that pressure reading drops to 350 +/- 5 mbar.
– Read off and note value indicated on dial gauge - VAS 6341/1- .
– Add values 1 and 2 together and divide by 2.
– The result (mean value) should be 5 +/- 0.25 mm.
– If the result (mean value) is not 5 +/- 0.25 mm, correct the setting accordingly, tighten the lock nut hand-tight and repeat the measurement.
– If the result (mean value) is 5 +/- 0.25 mm, tighten the lock nut and secure with sealing paint. For sealing paint refer to ⇒ Parts catalogue .

– Secure locking plate -1- on linkage of vacuum unit.

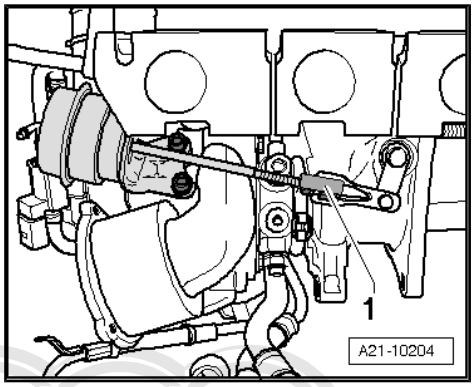

1.7 Charge air cooler - exploded view, engine codes AXX, BPY, BWA

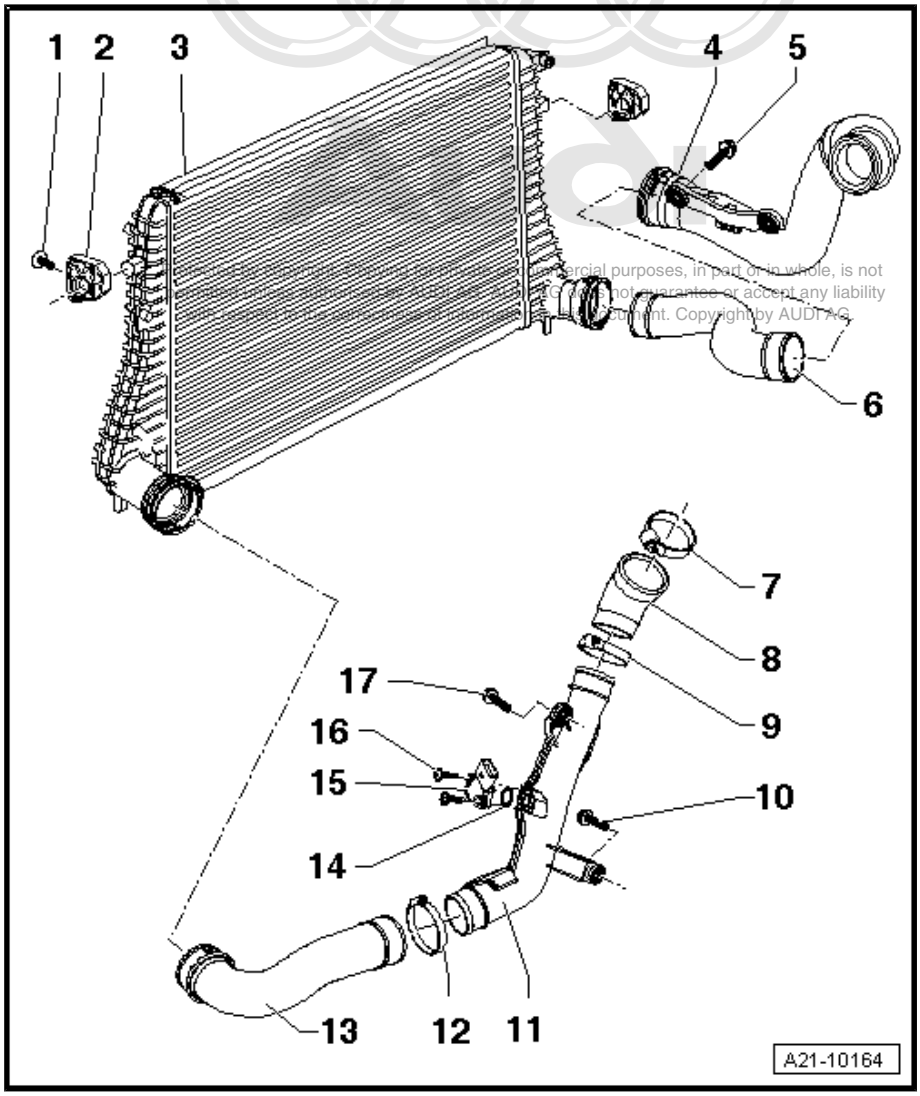

1 - Bolt
- ❑ 5 Nm

2 - Mounting
- ❑ For charge air cooler

3 - Charge air cooler

4 - Charge air pipe
- ❑ Fitting hose connections with plug-in connectors ⇒ page 173

5 - Bolt
- ❑ 10 Nm

6 - Charge air hose
- ❑ Fitting hose connections with plug-in connectors ⇒ page 173

7 - Hose clip

8 - Charge air hose
- ❑ To throttle valve module - J338-

9 - Hose clip

10 - Bolt
- ❑ 10 Nm

11 - Charge air pipe

12 - Hose clip

13 - Charge air hose
- ❑ Fitting hose connections with plug-in connectors ⇒ page 173

14 - Seal
- ❑ Renew

15 - Charge pressure sender - G31-

16 - Bolt
- ❑ 5 Nm

17 - Bolts
- ❑ 10 Nm

1.8 Diagram of turbocharger system, engines with code letters AXX, BPY, BWA

1 - Vacuum unit

2 - Charge pressure control solenoid valve - N75-

3 - Turbocharger air recirculation valve - N249-

4 - Turbocharger

5 - Brake servo

6 - Non-return valve

7 - Coolant connection

8 - Vacuum pump

9 - Non-return valve

10 - Oil filter bracket

11 - Activated charcoal filter solenoid valve 1 - N80-

12 - Dual non-return valve

13 - Charge air cooler

14 - Throttle valve module - J338-

15 - Pressure control valve

16 - To activated charcoal filter

17 - Air mass meter - G70-

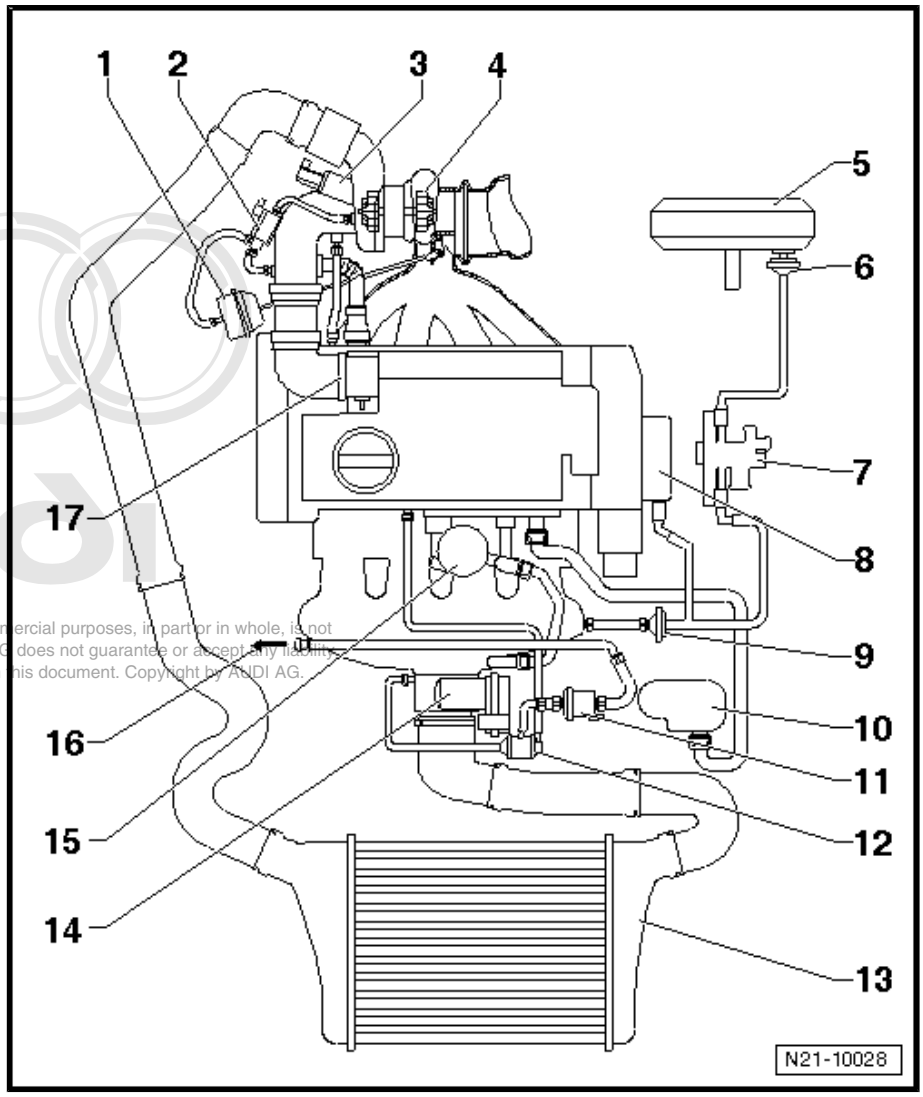

Protected by copyright. Copying for private or commercial purposes, in part or in whole, is not permitted unless authorised by AUDI AG. AUDI AG does not guarantee or accept any liability with respect to the correctness of information in this document. Copyright by AUDI AG.

1.9 Removing and installing charge air cooler - vehicles with engine codes AXX, BPY and BWA

Special tools and workshop equipment required

- Engine bung set - VAS 6122-

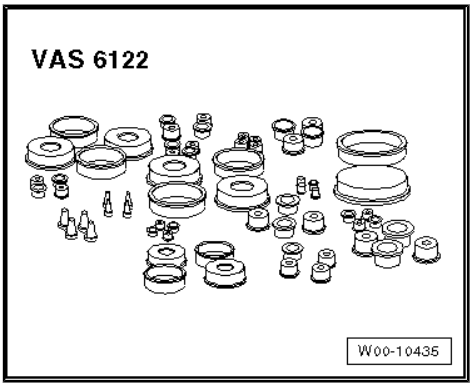

Removing

Note

If there are slight impressions on the fins, refer to ⇒ page 7 .

– Remove radiator ⇒ page 168 .

– Remove front bumper cover ⇒ General body repairs, exterior; Rep. gr. 63 .

Note

To prevent damage to the condenser, refrigerant pipes and refrigerant hoses, ensure that the pipes and hoses are not stretched, kinked or bent.

WARNING

The air conditioner refrigerant circuit must not be opened.

Protected by copyright. Copying for private or commercial purposes, in part or in whole, is not permitted unless authorised by AUDI AG. AUDI AG does not guarantee or assume any liability with respect to the correctness of inform

– Unscrew bolts -arrows-; to do so, release air ducts (left and right) and swivel towards headlights.

– Tilt top edge of charge air cooler slightly to rear.

– Disengage charge air cooler from bottom mounting points by lifting charge air cooler.

– Push charge air cooler towards engine.

– Support charge air cooler from below to prevent it from dropping.

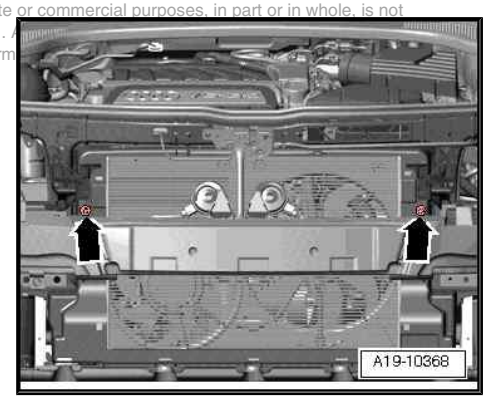

– Remove bolts -arrows-.

– Detach charge air cooler upwards and remove from below.

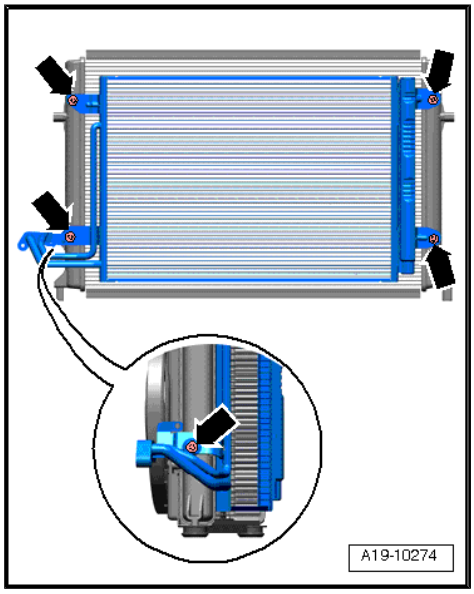

Installing

Installation is carried out in the reverse order; note the following:

• Tightening torques ⇒ page 192

– Install air pipes with plug-in connectors ⇒ page 173 .

– Fill up with coolant ⇒ page 157 .

– Install front bumper cover ⇒ General body repairs, exterior; Rep. gr. 63 .

1.10 Checking charge air system for leaks, vehicles with engine codes AXX, BPY, BWA

Special tools and workshop equipment required

♦ Charge air system tester - V.A.G 1687-

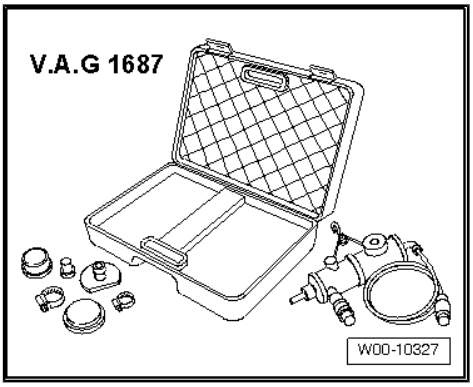

♦ Adapters - V.A.G 1687/5-

– Remove noise insulation tray ⇒ General body repairs, exterior; Rep. gr. 50 ; Body - front, noise insulation .

– Release clip -A- and detach hose -B- from charge air pipe.

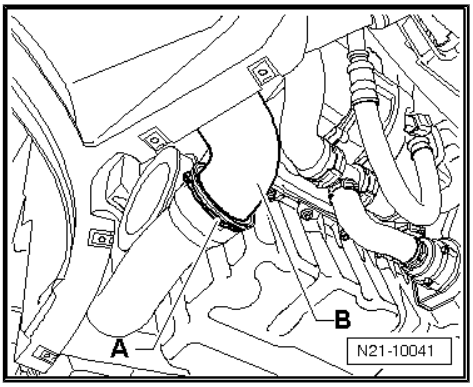

– Fit adapter - V.A.G 1687/5- onto charge air hose -A- and turn adapter through approx. 90° -B-.

Prepare charge air system tester - V.A.G 1687- as follows:

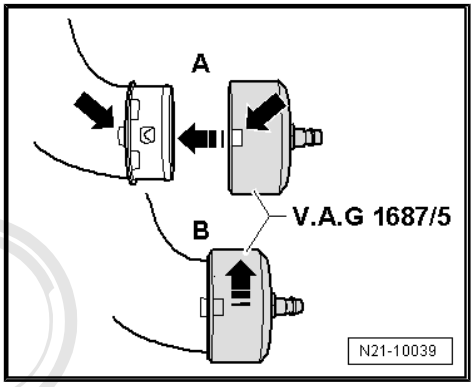

Protected by copyright. Copying for private or commercial purposes, in part or in whole, is not permitted unless authorised by AUDI AG. AUDI AG does not guarantee or accept any liability with respect to the correctness of information in this document. Copyright by AUDI AG.

– Unscrew pressure control valve -2- all the way and close valves -3- and -4-.

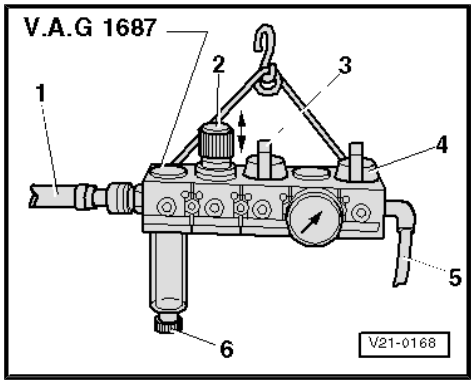

Note

Make sure knob is pulled out before turning pressure control valve -2-.

– Connect charge air system tester - V.A.G 1687- as illustrated.

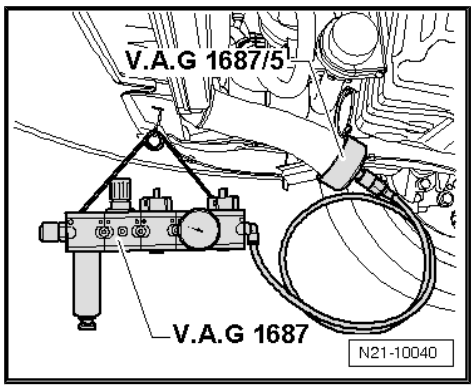

Protected by copyright. Copying for private or commercial purposes, in part or in whole, is not permitted unless authorised by AUDI AG. AUDI AG does not guarantee or accept any liability with respect to the correctness of information in this document. Copyright by AUDI AG.

– Connect pressure hose -1- (compressed air supply line) to charge air system tester - V.A.G 1687- .

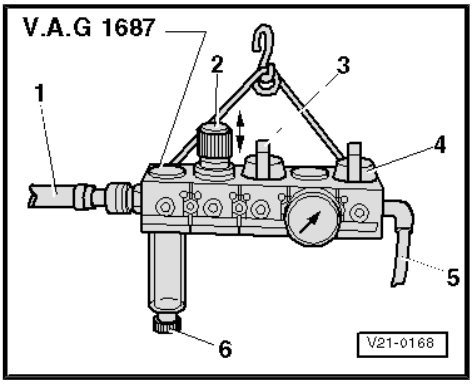

Note

If sight glass contains water, loosen drain plug and drain water -6-.

– Open valve -3-.

– Adjust pressure to 0.5 bar via pressure control valve -2-.

Caution

Protected by copyright. Copying for private or commercial purposes, in part or in whole, is not permitted unless authorised by AUDI AG. AUDI AG does not guarantee or accept any liability with respect to the correctness of information in this document. Copyright by AUDI AG.

The pressure must not exceed 0.5 bar. If the pressure is set too high this can damage the engine.

– Open valve -4- and wait until test system is pressurised. Re-adjust pressure to 0.5 bar if necessary.

– Check charge air system for visible or audible leaks and apply commercially available leak detecting spray or use ultrasonic tester - V.A.G 1842- .

Note

- *A small amount of air escapes through the valves and enters the engine. Therefore it is not possible to perform a pressure retention test.*
- *Operation of ultrasonic tester - V.A.G 1842- ⇒ Operating instructions .*
- *Release pressure by detaching coupling from adapter - V.A.G 1687/5- before removing adapter.*
- *Hose connections and charge air system hoses must be free of oil and grease prior to fitting.*

– Install air pipes with plug-in connectors ⇒ page 173 .

2 Turbocharger with charge air system, engines with code letters BHZ, BZC, CDLA, CDLC

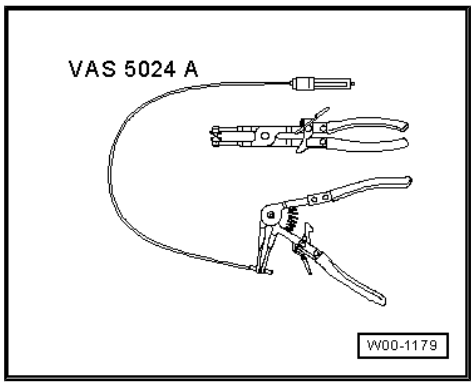

Note

- *Observe the rules for cleanliness ⇒ page 5 .*
- *Secure all hose connections with the correct type of hose clips (same as original equipment).*
- *Hose connections and charge air system hoses must be free of oil and grease prior to fitting. However (applies only to plug-in connectors); the seal and the sealing surface of plug-in connectors should be lubricated lightly with oil ⇒ page 173 .*
- *Charge air system must be free of leaks, checking for leaks ⇒ page 213 .*
- *Renew self-locking nuts.*
- *Hose clip pliers - VAS 5024A- or spring-type clip pliers - V.A.G 1921- are recommended for installing spring-type hose clips.*
- *Fill turbocharger with engine oil at connection for oil supply line.*
- *After installing turbocharger, allow engine to idle for approx. 1 minute and do not rev up immediately to ensure turbocharger is supplied with oil.*

Protected by copyright. Copying or printing of this document in part or in whole or in part is not permitted without the express consent of AUDI AG. AUDI AG does not accept any liability with respect to the correctness of information in this document. Copyright by AUDI AG.

Fitting hose connections with plug-in connectors ⇒ page 173 .

2.1 Turbocharger - exploded view, engines with code letters BHZ, BZC, CDLA, CDLC

Part I

Part II ⇒ page 200

Part III ⇒ page 201

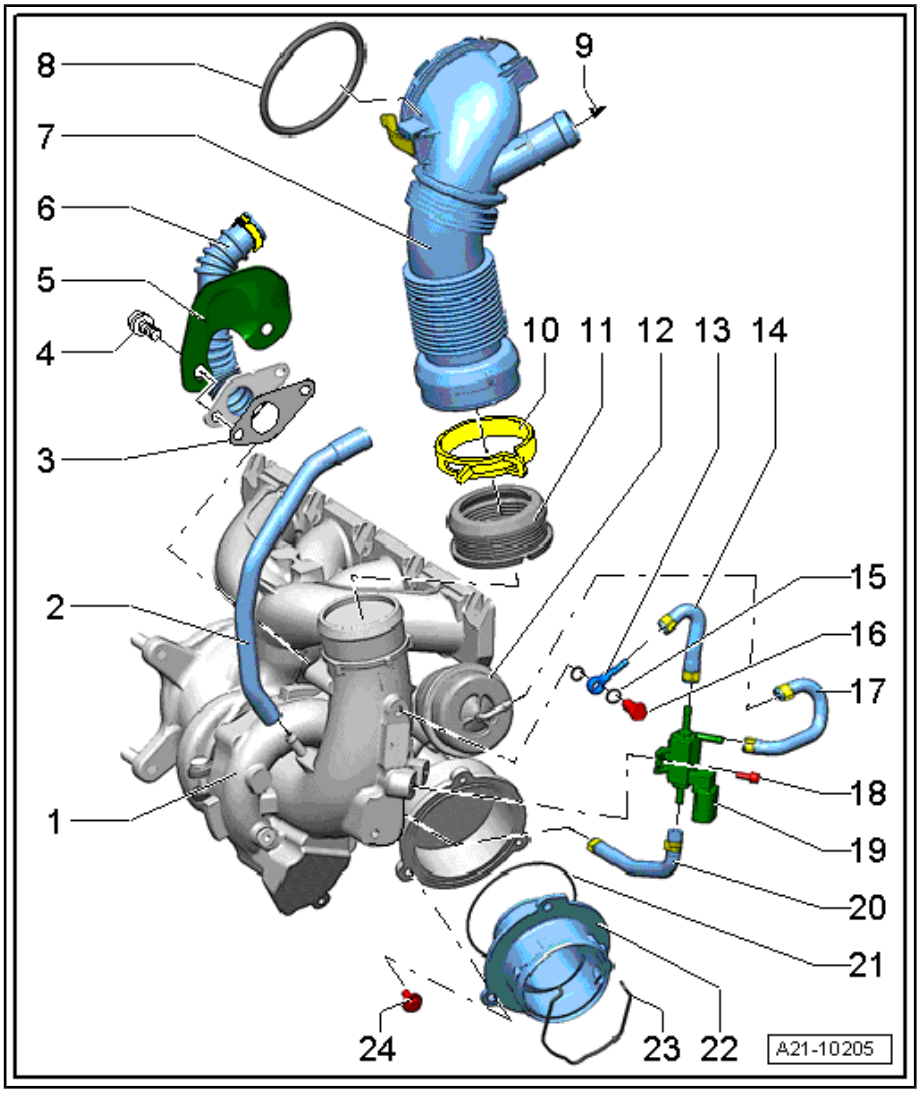

1 - Turbocharger

- ❑ Can only be renewed together with exhaust manifold and vacuum unit as one unit
- ❑ Removing and installing ⇒ page 202

2 - ACF line

3 - Gasket

- ❑ Renew

4 - Bolt

- ❑ 9 Nm

5 - Heat shield

6 - Crankcase breather hose

7 - Air hose

- ❑ Note installation position ⇒ page 200

8 - Seal

- ❑ Renew

9 - To turbocharger air recirculation valve - N249-

- ❑ Refer to ⇒ Item 9 (page 209)

10 - Spring-type clip

11 - Seal

- ❑ Note installation position ⇒ page 200

12 - Vacuum unit for turbocharger

- ❑ Checking ⇒ page 185

13 - Nipple

14 - Hose

15 - Seal

- ❑ Renew

16 - Bolt

- ❑ 8 Nm

17 - Hose

18 - Bolt

- ❑ 3 Nm

19 - Charge pressure control solenoid valve - N75-

20 - Hose

Protected by copyright. Copying for private or commercial purposes, in part or in whole, is not permitted unless authorised by AUDI AG. AUDI AG does not guarantee or accept any liability with respect to the correctness of information in this document. Copyright by AUDI AG.

21 - Seal

- ❑ Renew

22 - Connection

23 - Securing clip

24 - Bolt

- ❑ 9 Nm

Installation position of air hose

– Note installation position -arrows-

Part II

Part I ⇒ page 198

Part III ⇒ page 201

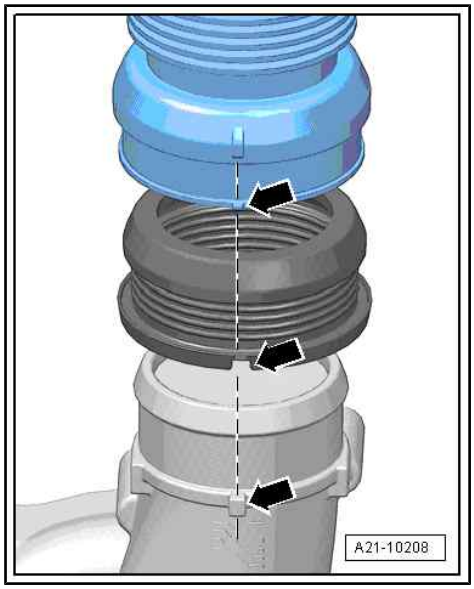

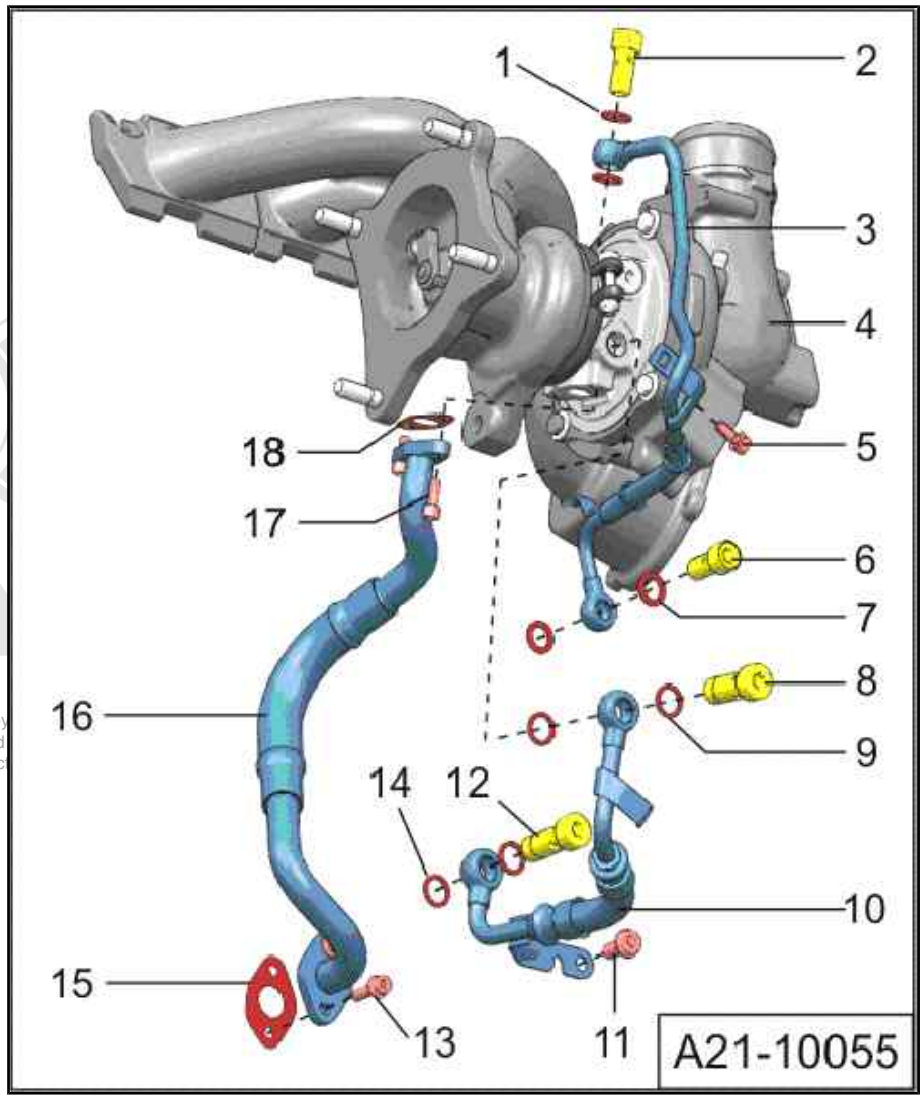

1 - Seal
- ❑ Renew

2 - Bolt
- ❑ 30 Nm

3 - Oil supply line

4 - Turbocharger
- ❑ Can only be renewed together with exhaust manifold and vacuum unit as one unit
- ❑ Removing and installing ⇒ page 202

5 - Bolt
- ❑ 9 Nm

6 - Bolt
- ❑ 30 Nm

7 - Seal
- ❑ Renew

8 - Bolt
- ❑ 35 Nm

Protected by copyright. Copy
permitted unless authorised
with respect to the correct

9 - Seal
- ❑ Renew

10 - Coolant supply line

11 - Bolt
- ❑ 23 Nm

12 - Bolt
- ❑ 23 Nm

13 - Bolt
- ❑ 9 Nm

14 - Seal
- ❑ Renew

15 - Gasket
- ❑ Renew

16 - Oil return line

17 - Bolt
- ❑ 9 Nm

18 - Gasket
- ❑ Renew

Part III

Part I ⇒ page 198

Part II ⇒ page 200

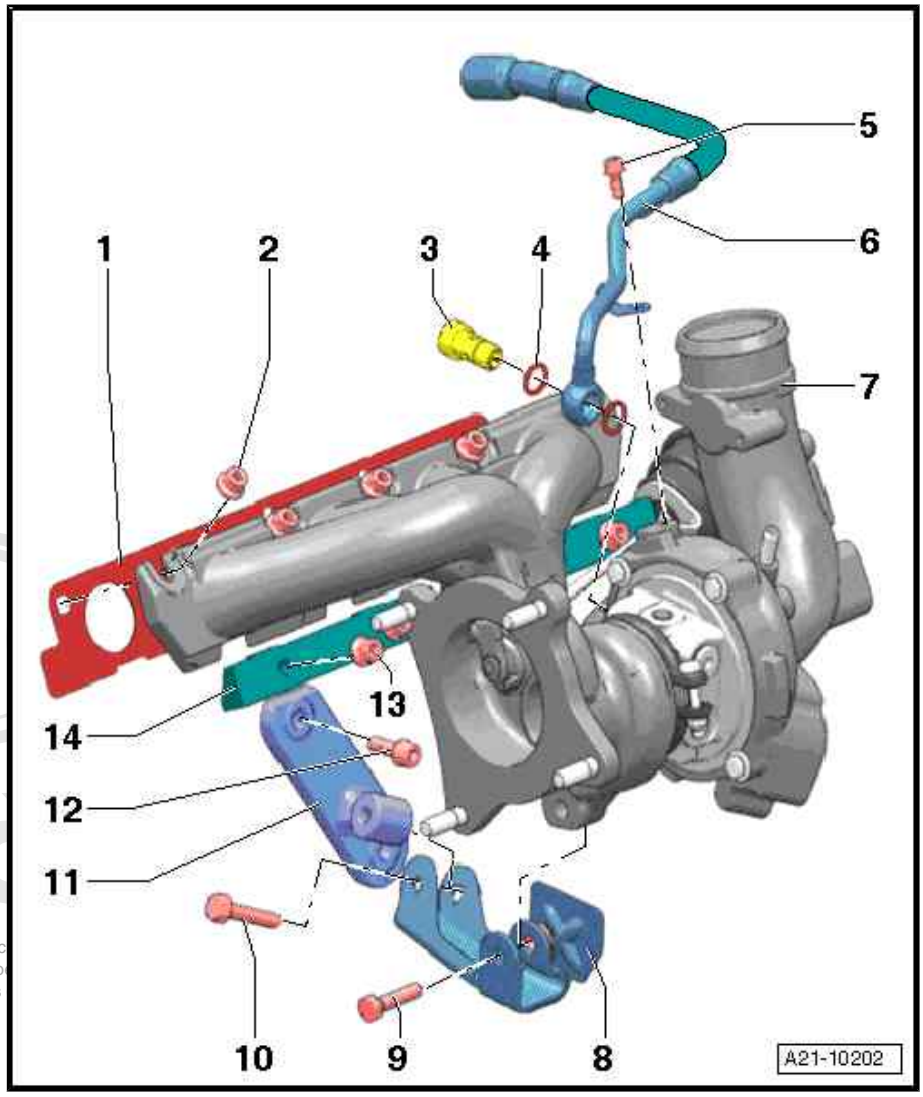

1 - Gasket
- ❑ Renew

2 - Nut
- ❑ 21 Nm
- ❑ Renew
- ❑ Coat studs of exhaust manifold with high-temperature paste
- ❑ High-temperature paste ⇒ Parts catalogue

3 - Bolt
- ❑ 35 Nm

4 - Seal
- ❑ Renew

5 - Bolt
- ❑ 9 Nm

6 - Coolant return line

7 - Turbocharger
- ❑ Can only be renewed together with exhaust manifold and vacuum unit as one unit
- ❑ Removing and installing ⇒ page 202

8 - Bracket

9 - Bolt
- ❑ 30 Nm
- ❑ Lubricate bolts with high-temperature paste
- ❑ High-temperature paste ⇒ Parts catalogue

Protected by copyright. Copying for private or commerc
permitted unless authorised by AUDI AG. AUDI AG do
with respect to the correctness of information in this

10 - Bolt
- ❑ 30 Nm
- ❑ Lubricate bolts with high-temperature paste
- ❑ High-temperature paste ⇒ Parts catalogue

11 - Bracket

12 - Bolt

- ❑ 23 Nm

13 - Nut

- ❑ 30 Nm
- ❑ Do not slacken when removing turbocharger
- ❑ Renew
- ❑ Coat studs of exhaust manifold with high-temperature paste
- ❑ High-temperature paste ⇒ Parts catalogue

14 - Fastening strip

2.2 Removing and installing turbocharger, engines with code letters BHZ, BZC, CDLA, CDLC

Special tools and workshop equipment required

- ♦ Spring type clip pliers - VAS 5024 A-

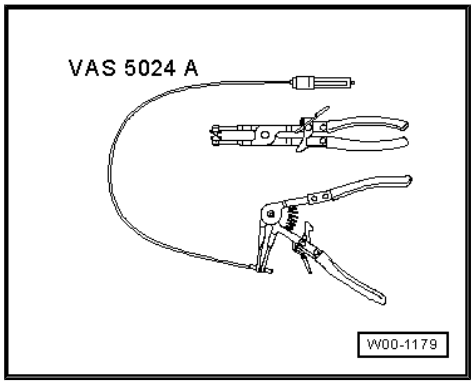

- ♦ Socket (8 mm) - 3247-

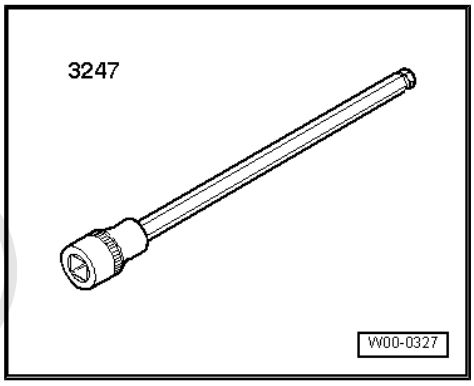

Removing

– Detach engine cover panel with air cleaner ⇒ Rep. gr. 24 .

Protected by copyright. Copying for private or commercial purposes, in part or in whole, is not permitted unless authorised by AUDI AG. AUDI AG does not guarantee or accept any liability with respect to the correctness of information in this document. Copyright by AUDI AG.

– Remove air hose -1 and 2- using hose clip pliers - V.A.G 1921- .

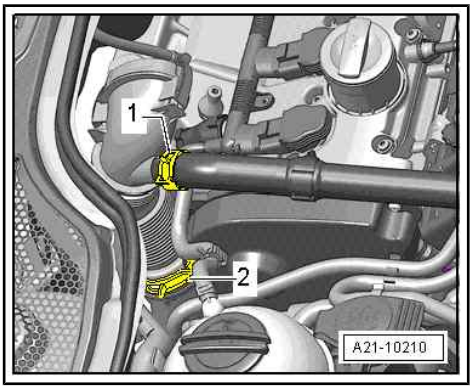

WARNING

Hot steam/hot coolant may escape when opening expansion tank. Cover cap with cloth and open carefully.

– Open filler cap on coolant expansion tank.

– Drain off coolant ⇒ page 157 .

– Use screwdriver to pry off cover caps on wiper arms and unscrew hexagon nuts.

– Pull wiper arms off wiper shafts and remove.

– Unclip washer jets -arrow-.

– Push washer jets through assembly opening back into plenum chamber, leaving hoses connected.

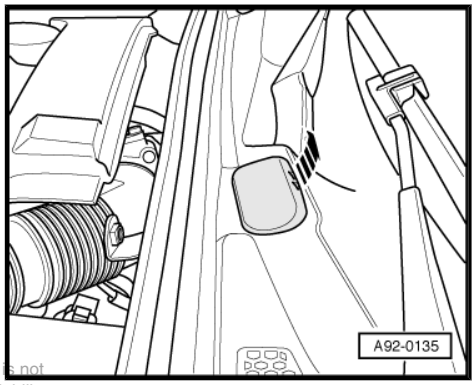

Protected by copyright. Copying for private or commercial purposes, in part or in whole, is not permitted unless authorised by AUDI AG. AUDI AG does not guarantee or accept any liability with respect to the correctness of information contained in this document. Copyright by AUDI AG.

– Detach rubber seal -1- from plenum chamber cover.

– Detach plenum chamber cover -2-.

– Detach engine wiring harness at rear plenum chamber panel.

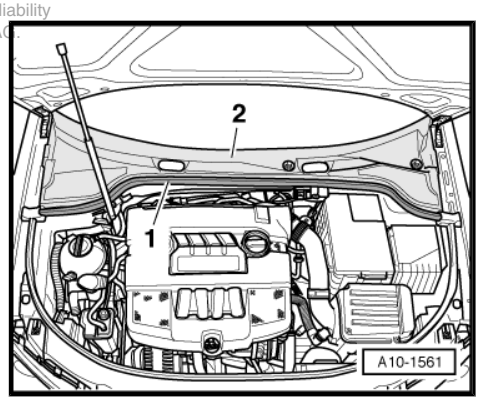

– Remove electrical connector -arrow- for Lambda probe - G39- and Lambda probe heater - Z19- (before catalytic converter) from bracket, unplug and move clear.

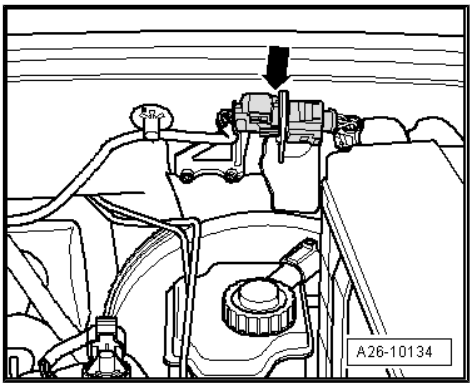

– Remove plenum chamber intermediate plate -arrows-.

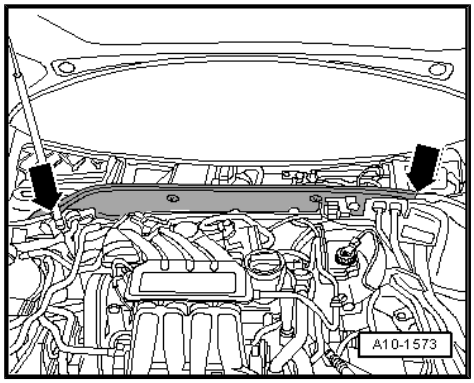

– Unplug connectors -1- on ignition coils.

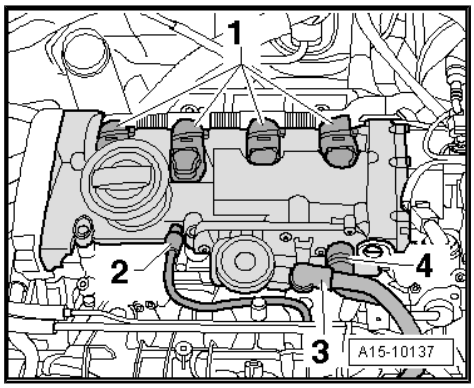

Note

Shown in illustration from rear with engine removed.

– Remove heat shield -arrows-.

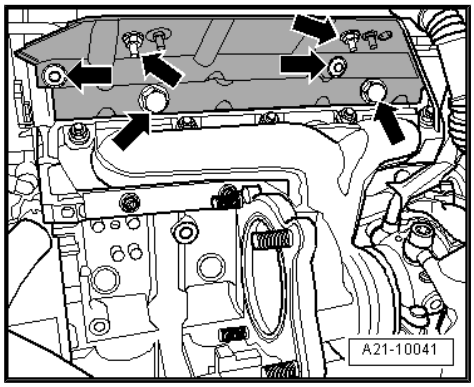

– Disconnect coolant pipe going to coolant expansion tank -arrow-.

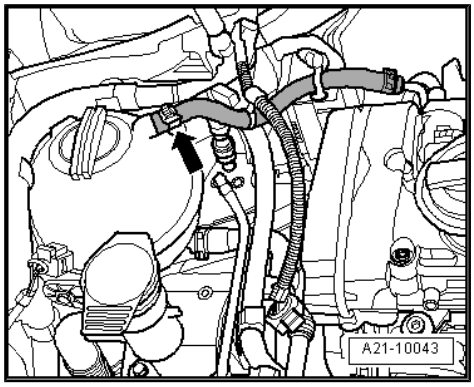

Protected by copyright. Copying for private or commercial purposes, in part or in whole, is not permitted unless authorised by AUDI AG. AUDI AG does not guarantee or accept any liability with respect to the correctness of information in this document. Copyright by AUDI AG.

– Disconnect coolant hose -1-.
– Disconnect coolant hose -2-.
– Unscrew coolant line -3-.

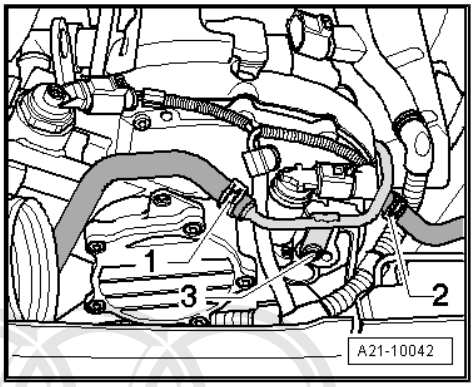

– Unscrew crankcase breather line with heat shield from turbocharger -1-.
– Disconnect crankcase breather line from cylinder head cover -2- and remove.
– Disconnect ACF line going to turbocharger from cylinder head cover -3-.
– Unscrew oil supply line from turbocharger -4-.
– Remove catalytic converter with front exhaust pipe ⇒ page 225 .
– Remove noise insulation ⇒ Rep. gr. 50 .

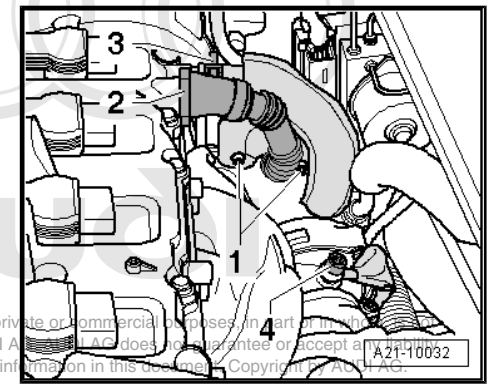

Protected by copyright. Copying for private or commercial purposes, in part or in whole, is not permitted unless authorised by AUDI AG. AUDI AG does not guarantee or accept any liability with respect to the correctness of information in this document. Copyright by AUDI AG.

– Remove noise insulation (right-side) -fasteners 1 ... 3-.
– Remove drive shaft (right-side) ⇒ Rep. gr. 40 .

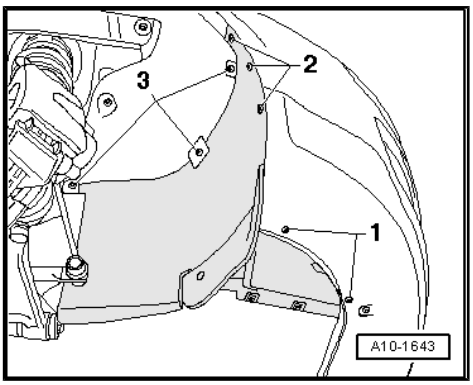

– Remove heat shield above drive shaft using hexagon key extension, 8 mm - 3247- .

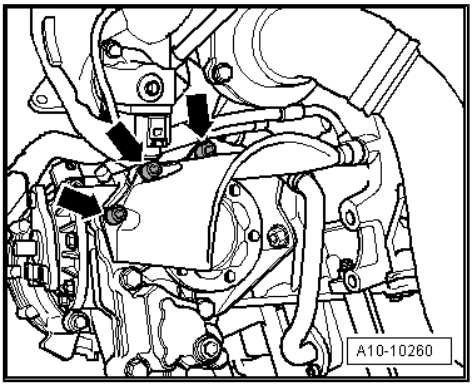

– Detach air pipe -arrow- from charge air cooler.

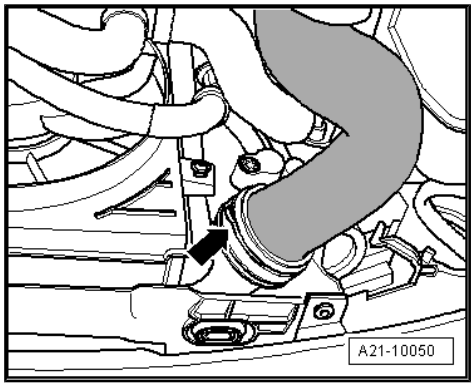

– Unbolt air pipe from turbocharger -arrows-.

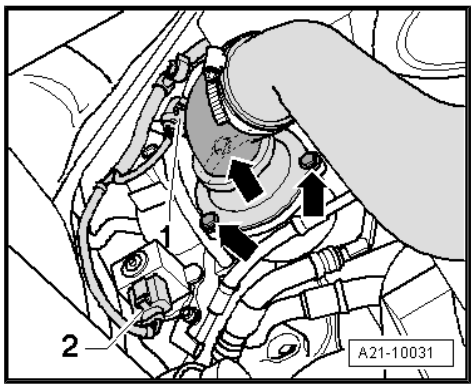

– Unscrew bolts -arrows- and remove air pipe.

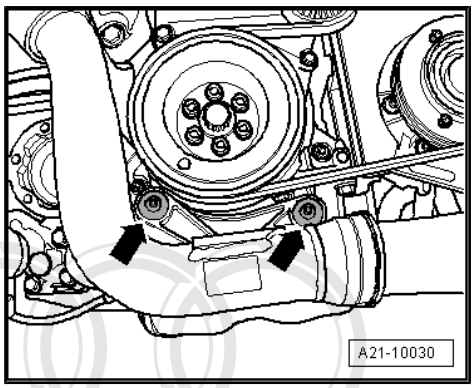

Note

Shown in illustration from rear with engine removed.

– Unscrew oil supply line from turbocharger -2-.

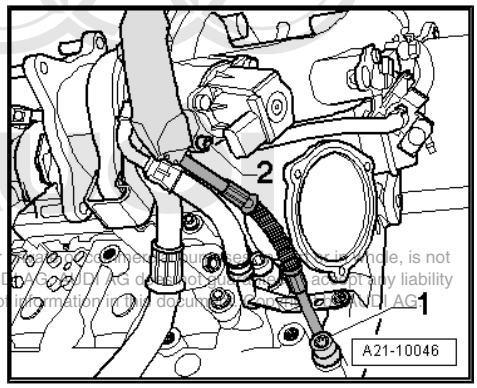

Protected by copyright. Copying for private or commercial purposes, in part or in whole, is not permitted unless authorised by AUDI AG. AUDI AG does not guarantee or assume any liability with respect to the correctness of information in this document. Copyright by AUDI AG.

– Unscrew coolant supply line at turbocharger -2-.

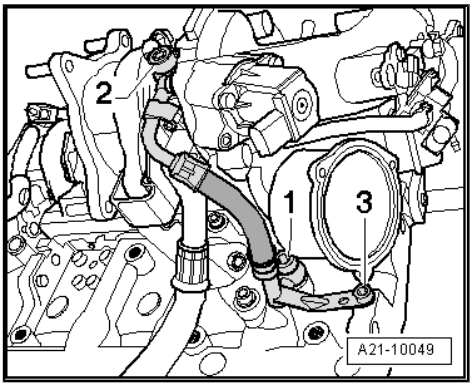

– Detach oil return line at turbocharger -arrows-.

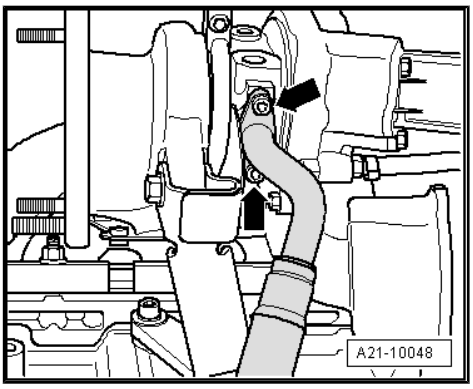

– Remove bolts -1- and -2- and remove support for turbocharger.

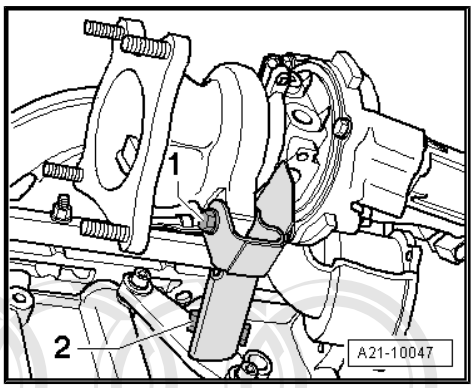

– Disconnect coolant pipe -arrow-.

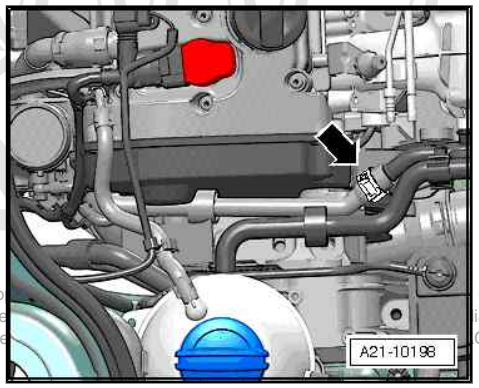

Note

- *Shown in illustration from rear with engine removed.*
- *The nuts on the fastening strip (bottom) do not have to be loosened.*

Protected by copyright. Co is not
permitted unless authorise iability
with respect to the corre G.

– Unscrew top nuts -arrows-.

– Lift out turbocharger/exhaust manifold.

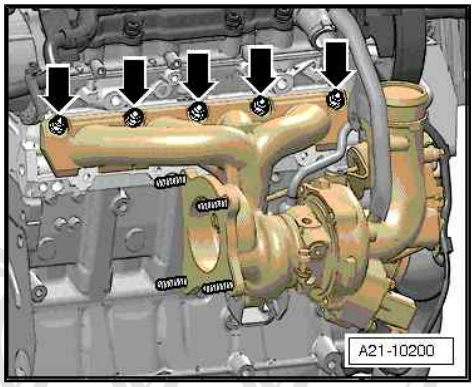

Installing

Installation is carried out in the reverse order; note the following:

- Tightening torques ⇒ page 174

Note

- *Renew seals, gaskets and self-locking nuts.*
- *Fill turbocharger with engine oil at connection for oil supply line.*
- *Hose connections and charge air system hoses must be free of oil and grease prior to fitting.*
- *Secure all hose connections with the correct type of hose clips (same as original equipment) ⇒ Parts catalogue .*

– Install exhaust system and align it free of stress ⇒ page 221 .

Protected by copyright. Copying for private or commercial purposes, in part or in whole, is not permitted unless authorised by AUDI AG. AUDI AG does not guarantee or accept any liability with respect to the correctness of information in this document. Copyright by AUDI AG.

– Install drive shaft ⇒ Rep. gr. 40 .

– Install air pipes with plug-in connectors ⇒ page 173 .

– Fill up with coolant ⇒ page 157 .

– Check oil level ⇒ Maintenance ; Booklet 808 .

Note

After installing turbocharger, allow engine to idle for approx. 1 minute and do not rev up immediately to ensure turbocharger is supplied with oil.

2.3 Charge air system - exploded view, engines with code letters BHZ, BZC, CDLA, CDLC

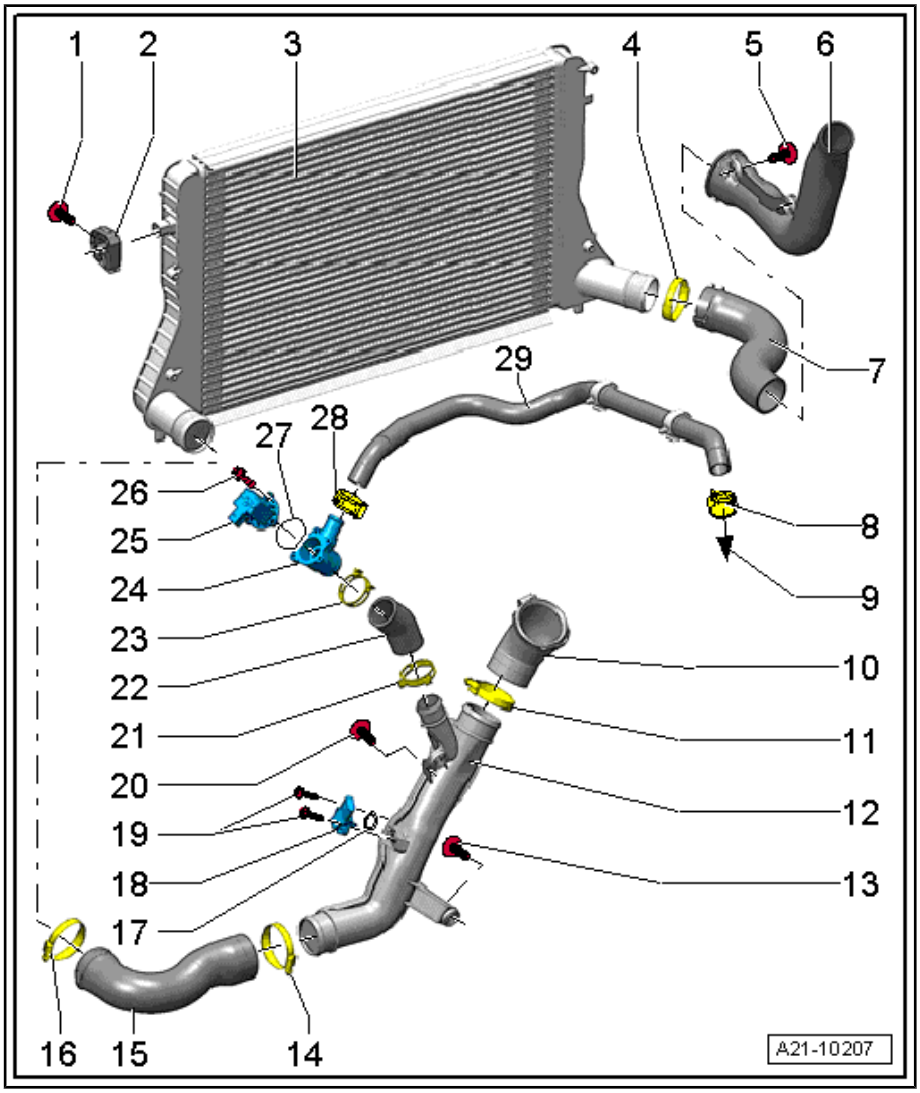

1 - Bolt
- ❑ 5 Nm

2 - Mounting
- ❑ For charge air cooler

3 - Charge air cooler

4 - Hose clip

5 - Bolt
- ❑ 10 Nm

6 - Charge air pipe
- ❑ Fitting hose connections with plug-in connectors ⇒ page 173

7 - Charge air hose
- ❑ Fitting hose connections with plug-in connectors ⇒ page 173

8 - Hose clip

9 - Leading to air intake hose
- ❑ Refer to ⇒ Item 9 (page 199)

10 - Charge air hose
- ❑ To throttle valve module - J338-

11 - Hose clip

12 - Charge air pipe

13 - Bolt
- ❑ 10 Nm

14 - Hose clip

15 - Charge air hose

16 - Hose clip

17 - Seal
- ❑ Renew

18 - Charge pressure sender - G31-

19 - Bolt
- ❑ 5 Nm

20 - Bolt
- ❑ 10 Nm

21 - Hose clip

22 - Hose

23 - Hose clip

24 - Housing

25 - Turbocharger air recirculation valve - N249-
- ❑ Installation position ⇒ page 210

26 - Bolt
- ❑ 7 Nm

Protected by copyright. Copying for private or commercial purposes, in part or in whole, is not permitted unless authorised by AUDI AG. AUDI AG does not guarantee or accept any liability with respect to the correctness of information in this document. Copyright by AUDI AG.

27 - Seal

- ❑ Renew

28 - Hose clip

29 - Hose

Fitting location of turbocharger air recirculation valve - N249-

– The marks -arrows- must align.

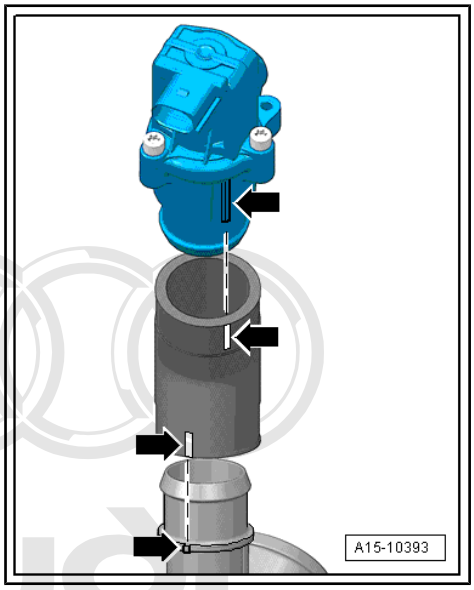

Protected by copyright. Copying for private or commercial purposes, in part or in whole, is not permitted unless authorised by AUDI AG. AUDI AG does not guarantee or accept any liability with respect to the correctness of information in this document. Copyright by AUDI AG.

2.4 Diagram of turbocharger system, engines with code letters BHZ, BZC, CDLA, CDLC

1 - Vacuum unit

2 - Charge pressure control solenoid valve - N75-

3 - Turbocharger

4 - Brake servo

5 - Non-return valve

6 - Coolant connection

7 - Vacuum pump

8 - Non-return valve

9 - Oil filter bracket

10 - Activated charcoal filter solenoid valve 1 - N80-

11 - Dual non-return valve

12 - Charge pressure sender - G31-

13 - Charge air cooler

14 - Turbocharger air recirculation valve - N249-

15 - Throttle valve module - J338-

16 - Pressure control valve

17 - To activated charcoal filter

18 - Air recirculation hose

19 - Air mass meter - G70-

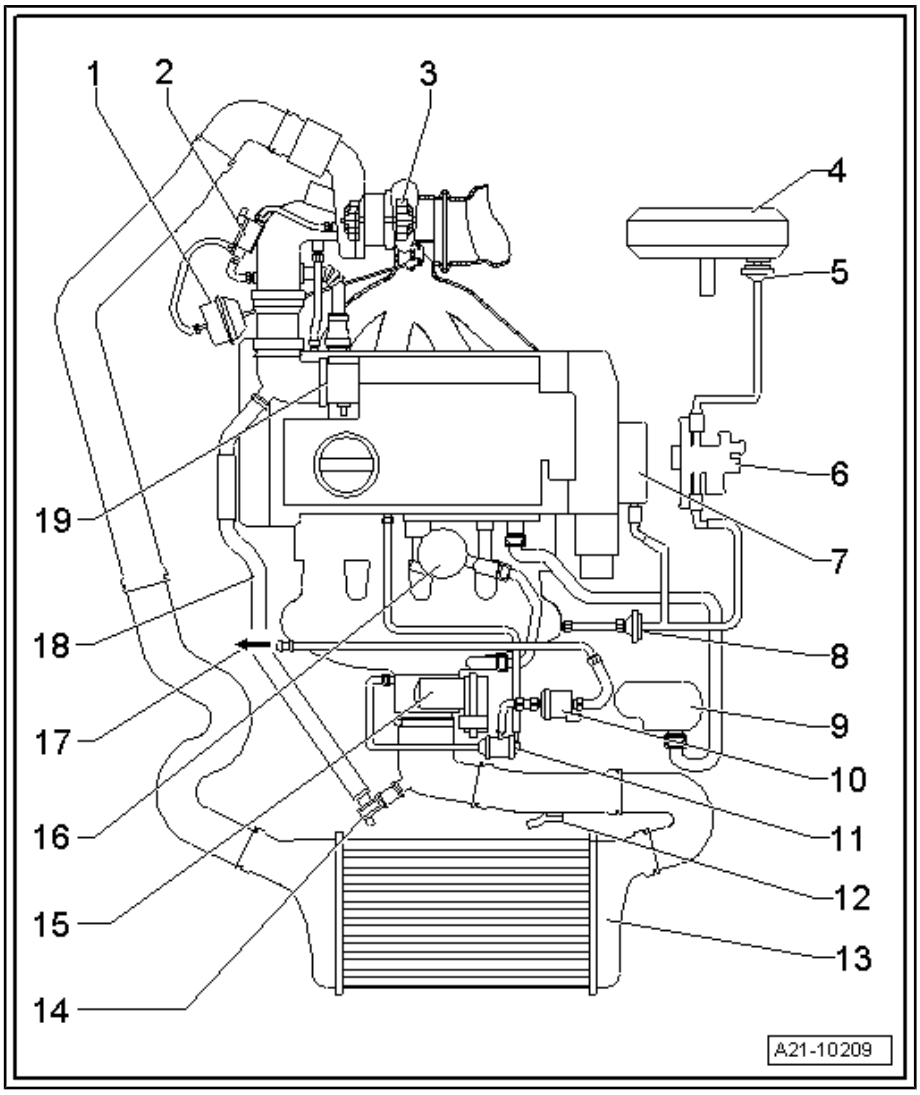

2.5 Removing and installing charge air cooler, engines with code letters BHZ, BZC, CDLA, CDLC

Special tools and workshop equipment required

- Engine bung set - VAS 6122-

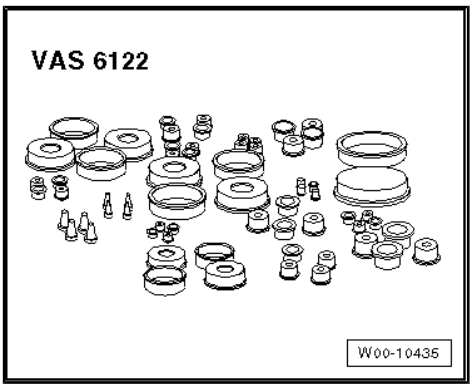

Protected by copyright. Copying for private or commercial purposes, in part or in whole, is not permitted unless authorised by AUDI AG. AUDI AG does not guarantee or accept any liability with respect to the correctness of information in this document. Copyright by AUDI AG.

Removing

Note

If there are slight impressions on the fins, refer to ⇒ page 7 .

– Remove radiator ⇒ page 168 .

– Remove front bumper cover ⇒ General body repairs, exterior; Rep. gr. 63 .

Note

To prevent damage to the condenser, refrigerant pipes and refrigerant hoses, ensure that the pipes and hoses are not stretched, kinked or bent.

WARNING

The air conditioner refrigerant circuit must not be opened.

– Unscrew bolts -arrows-; to do so, release air ducts (left and right) and swivel towards headlights.

– Tilt top edge of charge air cooler slightly to rear.

– Disengage charge air cooler from bottom mounting points by lifting charge air cooler.

– Push charge air cooler towards engine.

– Support charge air cooler from below to prevent it from dropping.

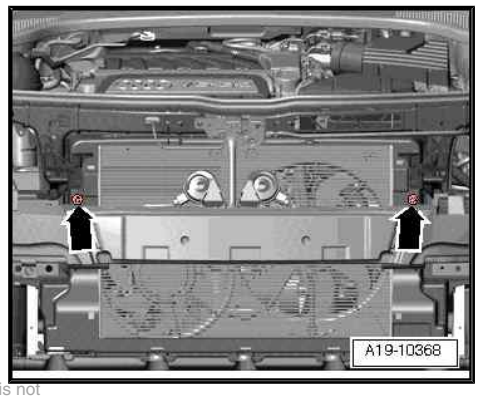

Protected by copyright. Copying for private or commercial purposes, in part or in whole, is not permitted unless authorised by AUDI AG. AUDI AG does not guarantee or accept any liability with respect to the correctness of information in this document. Copyright by AUDI AG

– Remove bolts -arrows-.

– Detach charge air cooler upwards and remove from below.

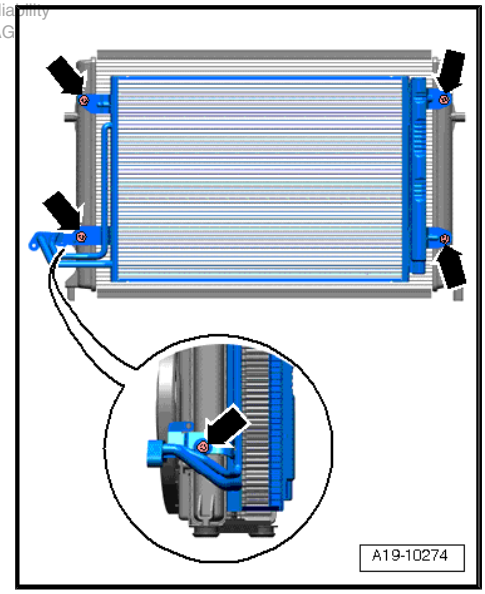

Installing

Installation is carried out in the reverse order; note the following:

• Tightening torques ⇒ page 192

– Install air pipes with plug-in connectors ⇒ page 173 .

– Fill up with coolant ⇒ page 157 .

– Install front bumper cover ⇒ General body repairs, exterior; Rep. gr. 63 .

2.6 Checking charge air system for leaks, engines with code letters BHZ, BZC, CDLA, CDLC

Special tools and workshop equipment required

♦ Charge air system tester - V.A.G 1687-

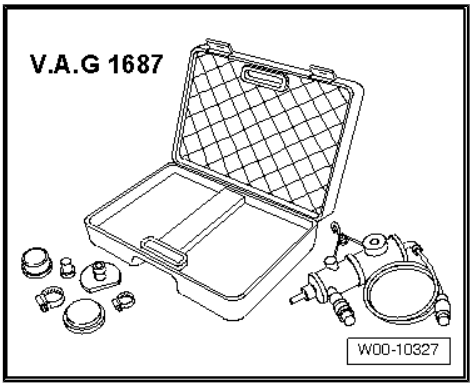

♦ Adapters - V.A.G 1687/5-

– Remove noise insulation tray ⇒ General body repairs, exterior; Rep. gr. 50 ; Body - front, noise insulation .

– Release clip -A- and detach hose -B- from charge air pipe.

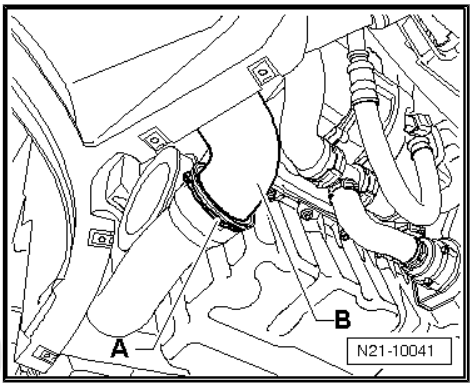

– Fit adapter - V.A.G 1687/5- onto charge air hose -A- and turn adapter through approx. 90° -B-.

Prepare charge air system tester - V.A.G 1687- as follows:

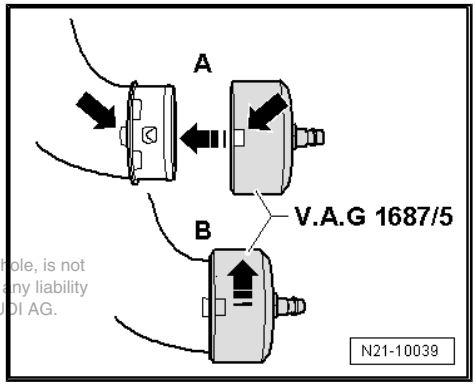

Protected by copyright. Copying for private or commercial purposes, in part or in whole, is not permitted unless authorised by AUDI AG. AUDI AG does not guarantee or accept any liability with respect to the correctness of information in this document. Copyright by AUDI AG.

– Unscrew pressure control valve -2- all the way and close valves -3- and -4-.

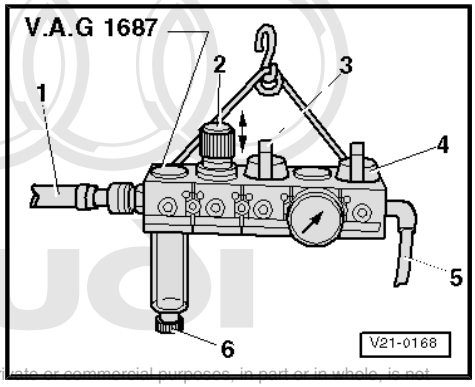

Note

Make sure knob is pulled out before turning pressure control valve -2-.

Protected by copyright. Copying for private or commercial purposes, in part or in whole, is not permitted unless authorised by AUDI AG. AUDI AG does not guarantee or accept any liability with respect to the correctness of information in this document. ©Copyright by AUDI AG.

– Connect charge air system tester - V.A.G 1687 - as illustrated.

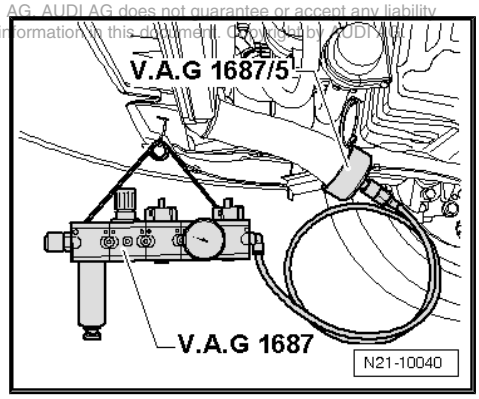

– Connect pressure hose -1- (compressed air supply line) to charge air system tester - V.A.G 1687- .

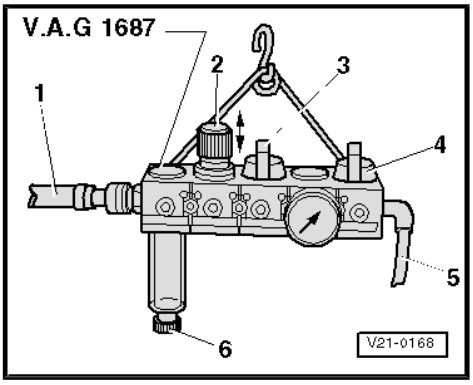

Note

If sight glass contains water, loosen drain plug and drain water -6-.

– Open valve -3-.

– Adjust pressure to 0.5 bar via pressure control valve -2-.

Caution

The pressure must not exceed 0.5 bar. If the pressure is set too high this can damage the engine.

– Open valve -4- and wait until test system is pressurised. Re-adjust pressure to 0.5 bar if necessary.

– Check charge air system for visible or audible leaks and apply commercially available leak detecting spray or use ultrasonic tester - V.A.G 1842- .

Note

- *A small amount of air escapes through the valves and enters the engine. Therefore it is not possible to perform a pressure retention test.*
- *Operation of ultrasonic tester - V.A.G 1842- ⇒ Operating instructions .*
- *Release pressure by detaching coupling from adapter - V.A.G 1687/5- before removing adapter.*
- *Hose connections and charge air system hoses must be free of oil and grease prior to fitting.*

– Install air pipes with plug-in connectors ⇒ page 173 .

Protected by copyright. Copying for private or commercial purposes, in part or in whole, is not permitted unless authorised by AUDI AG. AUDI AG does not guarantee or accept any liability with respect to the correctness of information in this document. Copyright by AUDI AG.

26 – Exhaust system

1 Exhaust system, engines with code letters AXX, BPY, BWA

Note

- *The flexible joint in the front exhaust pipe must not be bent more than 10° – otherwise it can be damaged.*
- *Renew gaskets and self-locking nuts.*
- *After working on the exhaust system, ensure that the system is not under stress and that it has sufficient clearance from the body. If necessary, loosen clamp and align silencers and exhaust pipe so that sufficient clearance is maintained to the body at all points and the mountings are evenly loaded.*
- *The exhaust manifold and the turbocharger are combined as one unit; removing and installing* ⇒ page 178 .

1.1 Exhaust system - exploded view, engines with code letters AXX, BPY, BWA

Protected by copyright. Copying for private or commercial purposes, in part or in whole, is not permitted unless authorised by AUDI AG. AUDI AG does not guarantee or accept any liability with respect to the correctness of information in this document. Copyright by AUDI AG.

1 - Nut

- ❑ 40 Nm
- ❑ Renew
- ❑ Coat studs of turbocharger with high-temperature paste
- ❑ High-temperature paste ⇒ Parts catalogue

2 - Front exhaust pipe with catalytic converters and front silencer

- ❑ With front exhaust pipe
- ❑ Protect against knocks and impact
- ❑ With flexible joint
- ❑ Do not bend flexible joint more than 10° - otherwise it can be damaged
- ❑ Removing and installing ⇒ page 218
- ❑ Align exhaust system so it is free of stress ⇒ page 221

3 - Lambda probe after catalytic converter - G130- and Lambda probe heater 1 after catalytic converter - Z29-

- ❑ Tightening torque: 55 Nm
- ❑ Grease only the threads with high-temperature paste. The paste must not penetrate into the slots on the probe body.

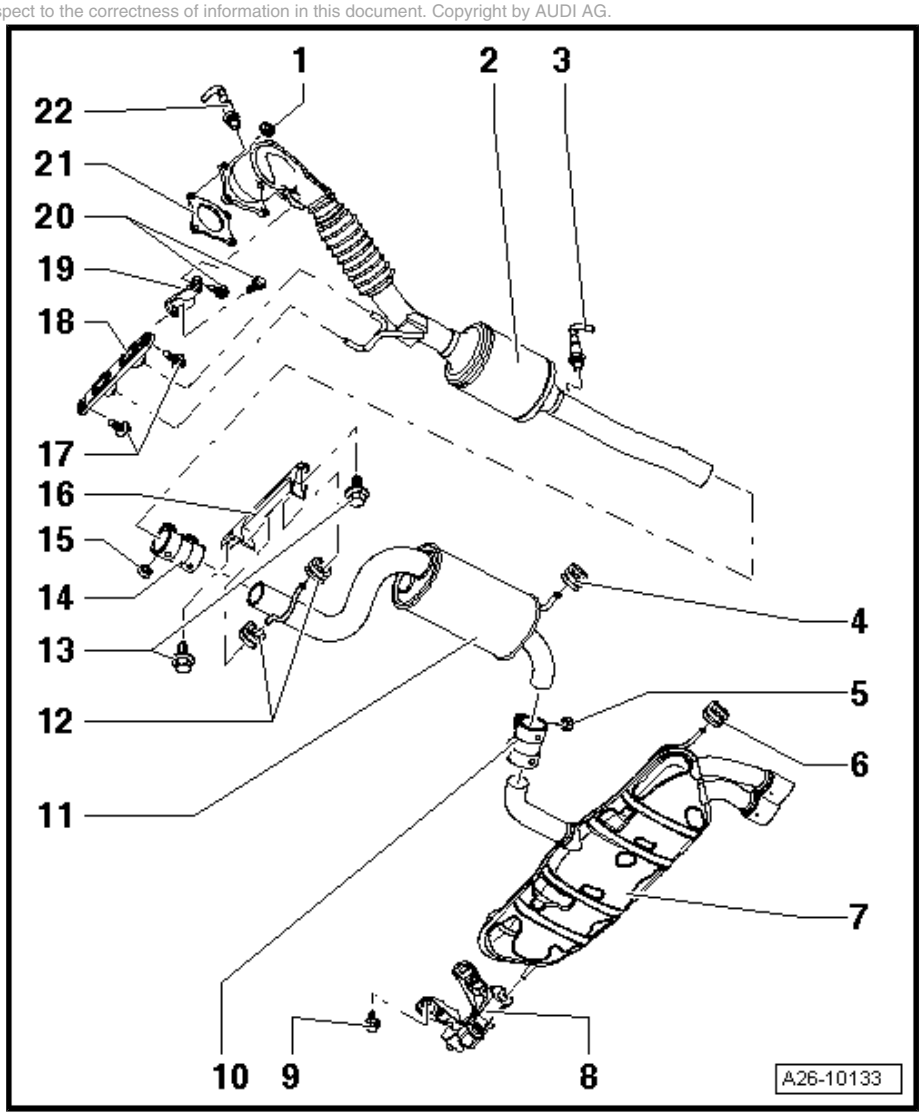

- ❑ High-temperature paste
  ⇒ Parts catalogue
- ❑ Removing and installing ⇒ Rep. gr. 24

4 - Rubber mounting

- ❑ Renew if damaged

5 - Nut

- ❑ 23 Nm

6 - Rubber mounting

- ❑ Renew if damaged

7 - Rear silencer

- ❑ Combined in one unit with centre silencer as original equipment. Can be renewed individually for repair purposes
- ❑ Cutting point ⇒ page 221
- ❑ Align exhaust system so it is free of stress ⇒ page 221

8 - Mounting

- ❑ Renew if damaged

9 - Bolt

- ❑ 23 Nm

10 - Clamp (rear)

- ❑ For separate replacement of centre and rear silencers
- ❑ Installation position ⇒ page 218
- ❑ Tighten bolt connections evenly.

11 - Centre silencer

- ❑ Combined in one unit with rear silencer as original equipment. Can be renewed individually for repair purposes
- ❑ Cutting point ⇒ page 221
- ❑ Align exhaust system so it is free of stress ⇒ page 221

12 - Rubber mounting

- ❑ Renew if damaged

13 - Bolt

- ❑ 23 Nm

14 - Clamp (front)

- ❑ Align exhaust system so it is free of stress before tightening clamp ⇒ page 221
- ❑ Installation position ⇒ page 218
- ❑ Tighten bolt connections evenly.

15 - Nut

- ❑ 23 Nm

Protected by copyright. Copying for private or commercial purposes, in part or in whole, is not permitted unless authorised by AUDI AG. AUDI AG does not guarantee or accept any liability with respect to the correctness of information in this document. Copyright by AUDI AG.

16 - Mounting

17 - Bolt

- ❑ 23 Nm

18 - Mounting

19 - Support

20 - 40 Nm

21 - Gasket

- ❑ Renew

22 - Lambda probe - G39- and Lambda probe heater - Z19-

- ❑ Tightening torque: 55 Nm

- ❑ Grease only the threads with high-temperature paste. The paste must not penetrate into the slots on the probe body.
- ❑ High-temperature paste ⇒ Parts catalogue
- ❑ Removing and installing ⇒ Rep. gr. 24

Installation position of front clamp

– Install clamp so that ends of bolts do not protrude beyond bottom of clamp.

• Bolt connection faces to right.

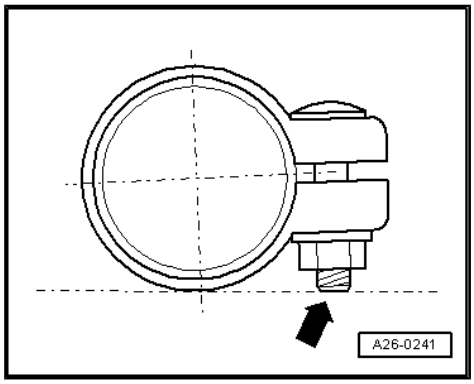

Installation position of rear clamp

– Install clamp so that ends of bolts do not protrude beyond bottom of clamp.

• Bolted connection faces to rear

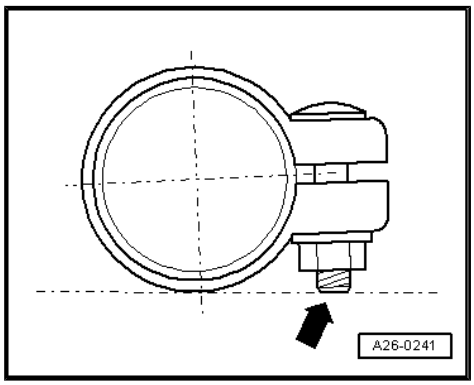

1.2 Removing and installing front exhaust pipe with catalytic converters and front silencer, engines with code letters AXX, BPY, BWA

Special tools and workshop equipment required

♦ Spring type clip pliers - VAS 5024 A-

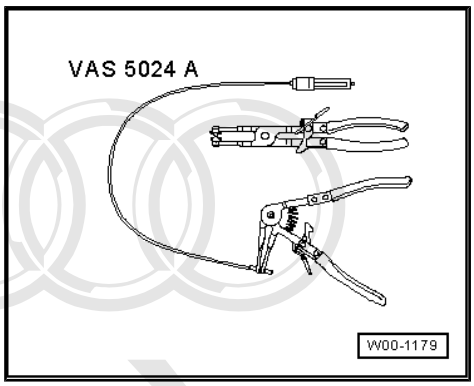

Removing

– Detach engine cover panel with air cleaner ⇒ Rep. gr. 24 .

Protected by copyright. Copying for private or commercial purposes, in part or in whole, is not permitted unless authorised by AUDI AG. AUDI AG does not guarantee or accept any liability with respect to the correctness of information in this document. Copyright by AUDI AG.

– Unplug electrical connector -arrow- for Lambda probe - G39- and Lambda probe heater - Z19- and move wiring clear.

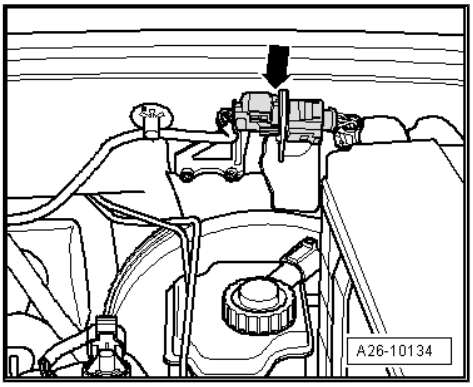

Protected by copyright. Copying for private or commercial purposes, in part or in whole, is not permitted unless authorised by AUDI AG. AUDI AG does not guarantee or accept any liability with respect to the correctness of information in this document. Copyright by AUDI AG.

– Unscrew securing nuts -arrows- of front exhaust pipe/turbo-charger accessible from above.

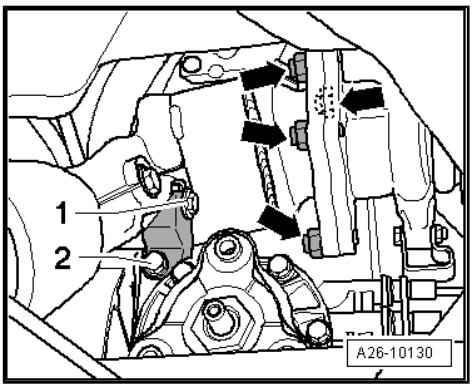

Vehicles with four-wheel drive

– Remove propshaft (front) ⇒ Rep. gr. 39 .

All vehicles:

– Remove underbody cover (right-side) -arrows-.

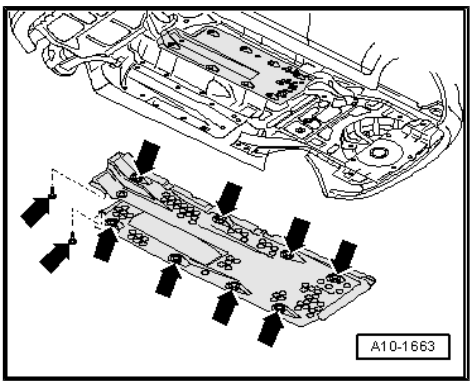

– Unplug electrical connector -arrow- for Lambda probe after catalytic converter - G130- and Lambda probe 1 heater after catalytic converter - Z29- and move wiring clear.

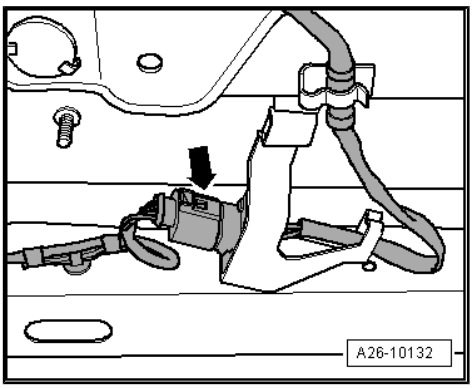

– Unscrew remaining securing nuts -arrows- for front exhaust pipe/turbocharger from below.

– Remove support for front exhaust pipe with catalytic converter (unscrew bolts -1 and 2-).

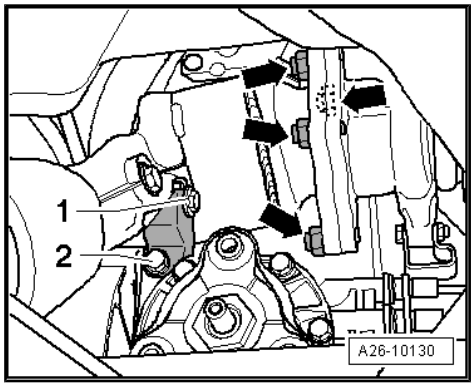

Note

To avoid damage, the flexible joints in the front exhaust pipe must not be bent more than 10 °.

– Separate exhaust system at clamp -arrows-.

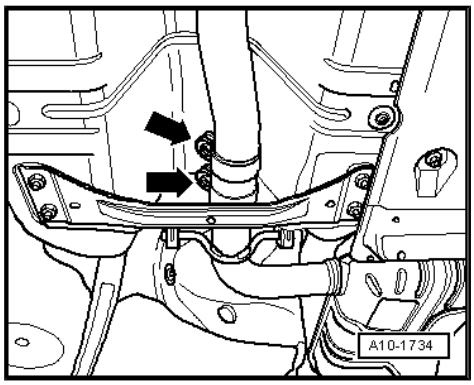

– Remove front cross-piece for underbody -arrows-.

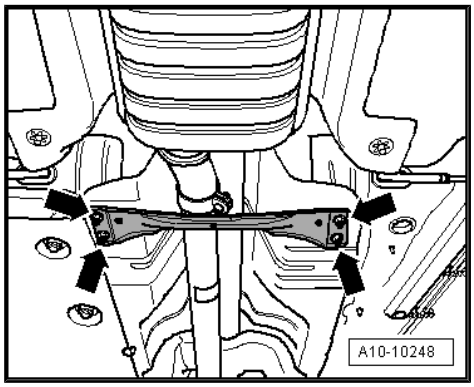

Protected by copyright. Copying for private or commercial purposes, in part or in whole, is not permitted unless authorised by AUDI AG. AUDI AG does not guarantee or accept any liability with respect to the correctness of information in this document. Copyright by AUDI AG.

– Unbolt bracket for exhaust system -arrows-.

– Remove front exhaust pipe with catalytic converters and front silencer.

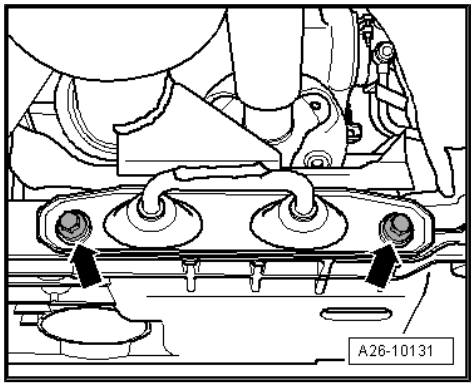

Installing

Installation is carried out in the reverse order; note the following:

- Tightening torques ⇒ page 216

Note

Renew gaskets and self-locking nuts.

– Install propshaft (front) ⇒ Rep. gr. 39 .

– Align the exhaust system so it is free of stress ⇒ page 221 .

1.3 Separating centre and rear silencers, engines with code letters AXX, BPY, BWA

- The connecting pipe can be cut through at the cutting point provided in order to renew the centre and rear silencers separately.
- The cutting point is marked by an indentation on the outside of the exhaust pipe.

Special tools and workshop equipment required

- Chain pipe cutter - VAS 6254-

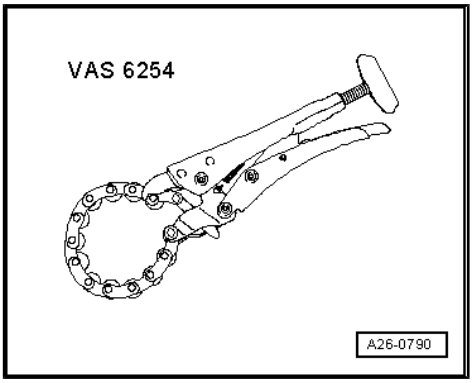

Procedure

- Tightening torques ⇒ page 216
- Cut through exhaust pipe at the position marked -arrow 2- using chain pipe cutter - VAS 6254- .
- Position clamp -4- centrally at side marks when installing - arrows -1- and -3-.

Protected by copyright. Copying for private or commercial purposes, in part or in whole, is not permitted unless authorised by AUDI AG. AUDI AG does not guarantee or accept any liability with respect to the correctness of information in this document. Copyright by AUDI AG.

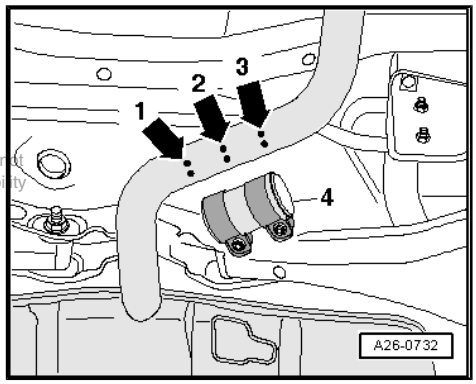

- Install clamp so that the bolt end does not protrude beyond bottom of clamp -arrow-.
- Bolted connection faces to rear
- Align the exhaust system so it is free of stress ⇒ page 221 .

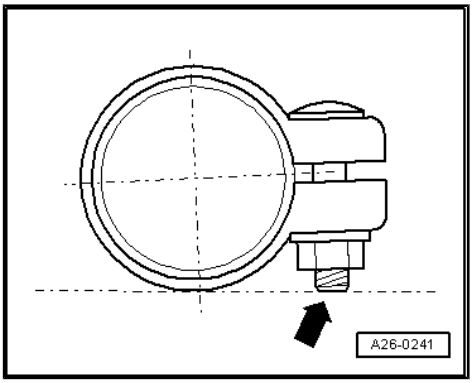

1.4 Stress-free alignment of exhaust system, vehicles with engine codes AXX, BPY, BWA

- The exhaust system must be aligned when it is cool.
- Tightening torques ⇒ page 216

– Loosen bolt connections of front clamp
⇒ Item 14 (page 217) .

– Push exhaust system towards front of vehicle so that mounting for rear silencer is preloaded by a = 5 ... 11 mm.

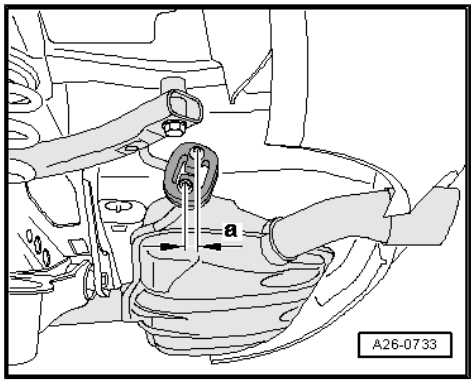

– Install clamp so that ends of bolts do not protrude beyond bottom of clamp.

• Bolt connection faces right

– Tighten bolt connections on clamp evenly.

Aligning tailpipe:

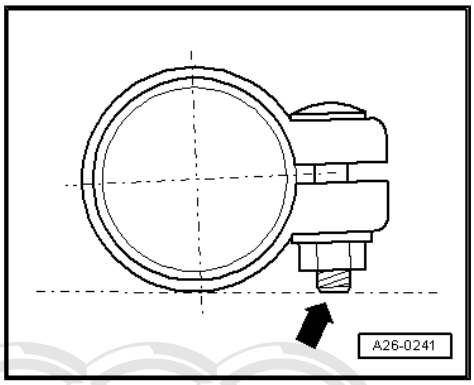

– Align tailpipes so that distance -a- (left-side) is the same as distance -a- (right-side).

– At the same time, distance -b- must be obtained between bumper cut-out and top of tailpipes.

♦ Dimension b = min. 22 mm

– If necessary, unfasten rear silencer mounting to align tailpipes.

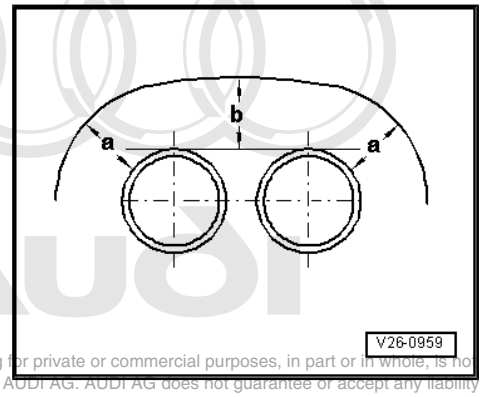

Protected by copyright. Copying for private or commercial purposes, in part or in whole, is not permitted unless authorised by AUDI AG. AUDI AG does not guarantee or accept any liability with respect to the correctness of information in this document. Copyright by AUDI AG.

1.5 Checking exhaust system for leaks, vehicles with engine codes AXX, BPY, BWA

– Start engine and run at idling speed.

– Plug the tailpipe (e. g. with rags or stopper) and leave plugged until the check is complete.

– Listen for noise at connection points (cylinder head/exhaust manifold, exhaust manifold/front exhaust pipe, etc.) to locate any leaks.

– Rectify any leaks that are found.

2 Exhaust system, engines with code letters BHZ, BZC, CDLA, CDLC

Note

- *The flexible joint in the front exhaust pipe must not be bent more than 10° – otherwise it can be damaged.*
- *Renew gaskets and self-locking nuts.*
- *After working on the exhaust system, ensure that the system is not under stress and that it has sufficient clearance from the body. If necessary, loosen clamp and align silencers and exhaust pipe so that sufficient clearance is maintained to the body at all points and the mountings are evenly loaded.*
- *The exhaust manifold and the turbocharger are combined as one unit; removing and installing* ⇒ page 202 .

2.1 Exhaust system - exploded view, engines with code letters BHZ, BZC, CDLA, CDLC

1 - Centre silencer
- ❑ Combined with rear silencer
- ❑ Align exhaust system so it is free of stress ⇒ "2.3 Stress-free alignment of exhaust system, engines with code letters BHZ, BZC, CDLA, CDLC", page 227

2 - Rubber mounting
- ❑ Renew if damaged

3 - Bolt
- ❑ 23 Nm

4 - Bracket for exhaust system

5 - Bolt
- ❑ 23 Nm

6 - Mounting
- ❑ Renew if damaged

7 - Gasket
- ❑ Renew

8 - Nut
- ❑ 40 Nm
- ❑ Renew
- ❑ Coat studs of turbocharger with high-temperature paste
- ❑ High-temperature paste ⇒ Parts catalogue

9 - Lambda probe - G39- and Lambda probe heater - Z19-
- ❑ 55 Nm

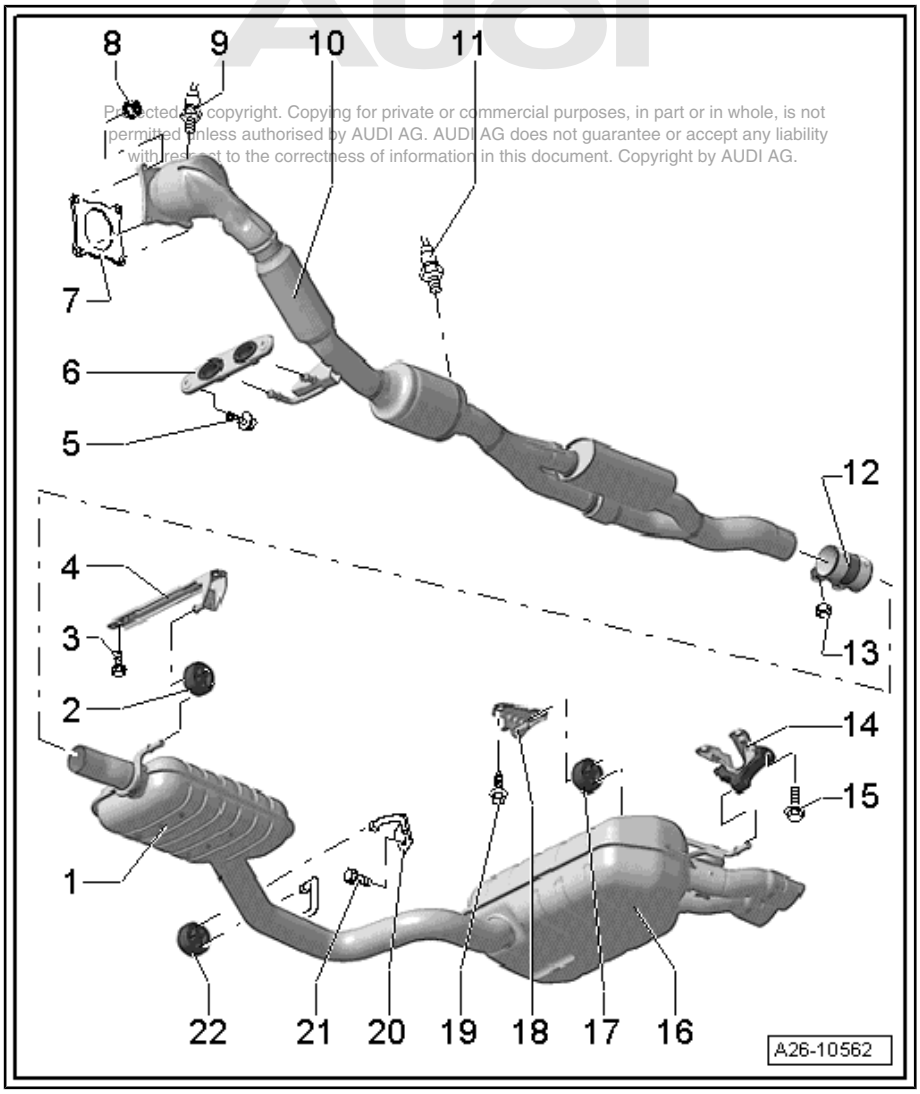

Protected by copyright. Copying for private or commercial purposes, in part or in whole, is not permitted unless authorised by AUDI AG. AUDI AG does not guarantee or accept any liability with respect to the correctness of information in this document. Copyright by AUDI AG.

- ❑ Grease only the threads with high-temperature paste. The paste must not penetrate into the slots on the probe body.
- ❑ High-temperature paste ⇒ Parts catalogue
- ❑ Removing and installing ⇒ Rep. gr. 24

10 - Front exhaust pipe with catalytic converter and front silencer

- ❑ Do not bend flexible joint more than 10° - otherwise it can be damaged
- ❑ Install flexible joint so that it is not under tension.
- ❑ Take care not to damage wire mesh on flexible joint
- ❑ Protect catalytic converter from damage by knocks and impact
- ❑ Removing and installing ⇒ page 225
- ❑ Align exhaust system so it is free of stress ⇒ page 227

11 - Lambda probe after catalytic converter - G130- and Lambda probe heater 1 after catalytic converter - Z29-

- ❑ 55 Nm
- ❑ Grease only the threads with high-temperature paste. The paste must not penetrate into the slots on the probe body.
- ❑ High-temperature paste ⇒ Parts catalogue
- ❑ Removing and installing ⇒ Rep. gr. 24

Protected by copyright. Copying for private or commercial purposes, in part or in whole, is not permitted unless authorised by AUDI AG. AUDI AG does not guarantee or accept any liability with respect to the correctness of information in this document. Copyright by AUDI AG.

12 - Clamp

- ❑ Align exhaust system so it is free of stress before tightening clamp
  ⇒ “2.3 Stress-free alignment of exhaust system, engines with code letters BHZ, BZC, CDLA, CDLC”, page 227
- ❑ Installation position ⇒ page 225
- ❑ Tighten bolt connections evenly.

13 - Nut

- ❑ 23 Nm
- ❑ Renew

14 - Mounting

- ❑ Renew if damaged

15 - Bolt

- ❑ 23 Nm

16 - Rear silencer

- ❑ Combined with centre silencer
- ❑ Align exhaust system so it is free of stress
  ⇒ “2.3 Stress-free alignment of exhaust system, engines with code letters BHZ, BZC, CDLA, CDLC”, page 227

17 - Rubber mounting

- ❑ Renew if damaged

18 - Bracket for exhaust system

19 - Bolt

- ❑ 23 Nm

20 - Bracket for exhaust system

21 - Bolt

- ❑ 23 Nm

22 - Rubber mounting

- ❑ Renew if damaged

Installation position of clamp

– Fit clamp in horizontal position.

• Bolt connection faces to right.

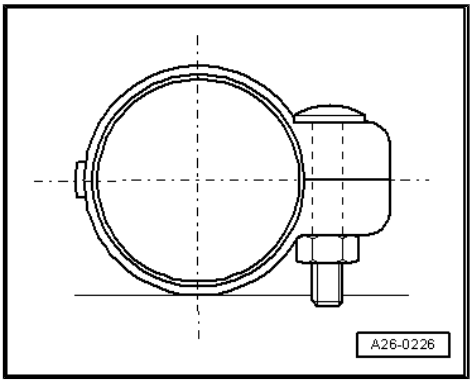

2.2 Removing and installing front exhaust pipe with catalytic converter and front silencer, engines with code letters BHZ, BZC, CDLA, CDLC

Special tools and workshop equipment required

♦ Spring type clip pliers - VAS 5024 A-

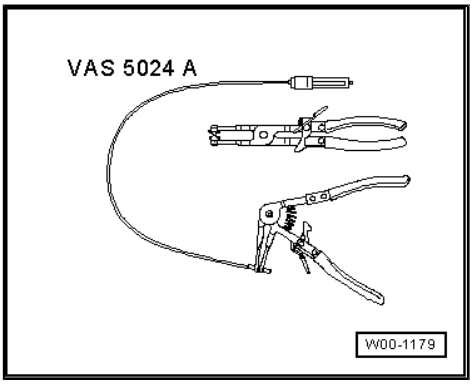

Removing

– Detach engine cover panel with air cleaner ⇒ Rep. gr. 24 .

– Unplug electrical connector -arrow- for Lambda probe - G39- and Lambda probe heater - Z19- and move wiring clear.

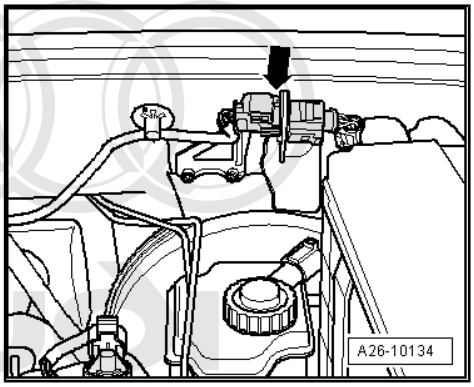

Protected by copyright. Copying for private or commercial purposes, in part or in whole, is not permitted unless authorised by AUDI AG. AUDI AG does not guarantee or accept any liability with respect to the correctness of information in this document. Copyright by AUDI AG.

– Unscrew securing nuts -arrows- of front exhaust pipe/turbocharger accessible from above.

– Remove propshaft (front) ⇒ Rep. gr. 39 .

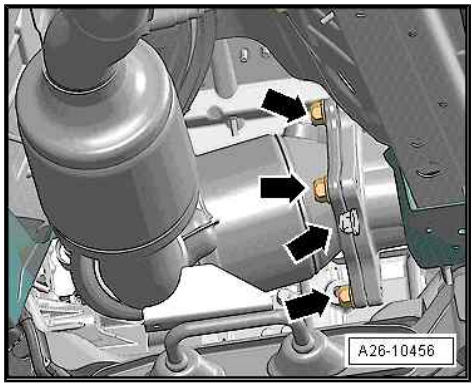

– Remove underbody cover (right-side) -arrows-.

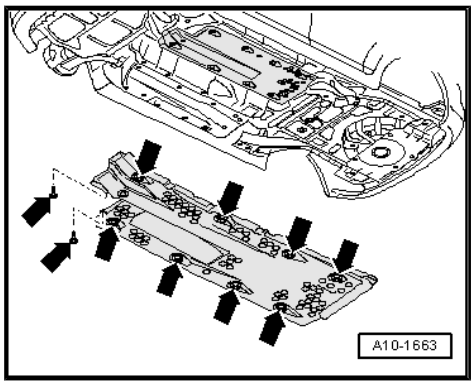

– Unplug electrical connector -arrow- for Lambda probe after catalytic converter - G130- and Lambda probe 1 heater after catalytic converter - Z29- and move wiring clear.

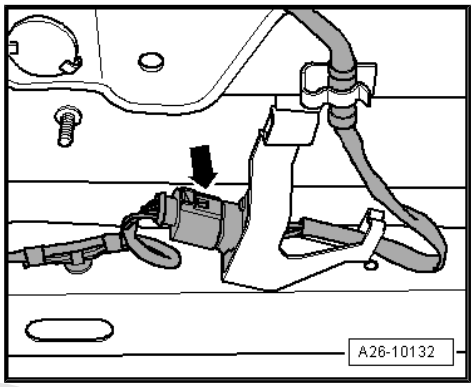

– Unscrew remaining securing nuts -arrows- for front exhaust pipe/turbocharger from below.

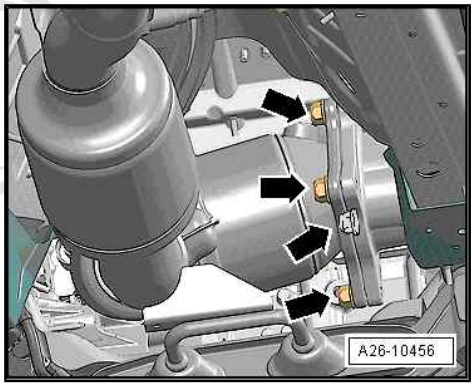

Note

To avoid damage, the flexible joints in the front exhaust pipe must not be bent more than 10 °.

Protected by copyright. Copying for private or commercial purposes, in part or in whole, is not permitted unless authorised by AUDI AG. AUDI AG does not guarantee or accept any liability with respect to the correctness of information in this document. Copyright by AUDI AG.

– Separate exhaust system at clamp -arrows-.

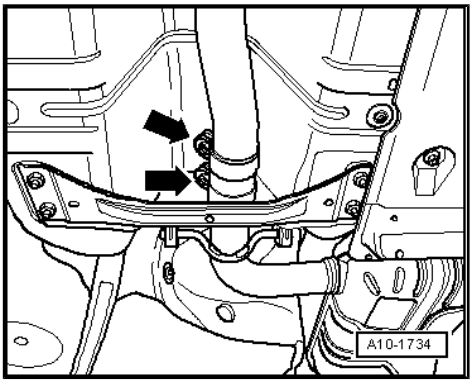

– Remove front cross-piece for underbody -arrows-.

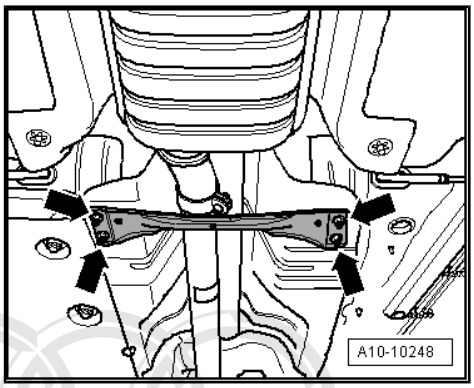

– Unbolt bracket for exhaust system -arrows-.
– Remove front exhaust pipe with catalytic converters and front silencer.

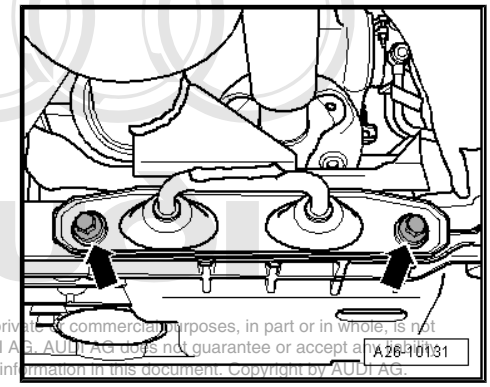

Installing

Installation is carried out in the reverse order; note the following:

- Tightening torques ⇒ page 223

Note

Renew gaskets and self-locking nuts.

Protected by copyright. Copying for private or commercial purposes, in part or in whole, is not permitted unless authorised by AUDI AG. AUDI AG does not guarantee or accept any liability with respect to the correctness of information in this document. Copyright by AUDI AG.

– Install propshaft (front) ⇒ Rep. gr. 39 .
– Align the exhaust system so it is free of stress ⇒ "2.3 Stress-free alignment of exhaust system, engines with code letters BHZ, BZC, CDLA, CDLC", page 227 .

2.3 Stress-free alignment of exhaust system, engines with code letters BHZ, BZC, CDLA, CDLC

- The exhaust system must be aligned when it is cool.
- Tightening torques ⇒ page 223

– Loosen bolts of clamp ⇒ Item 12 (page 224) .

– Push rear section of exhaust system towards front of vehicle -arrow- so that mounting ⇒ Item 22 (page 224) between centre and rear silencer is preloaded by -a- = 13 ... 17 mm.

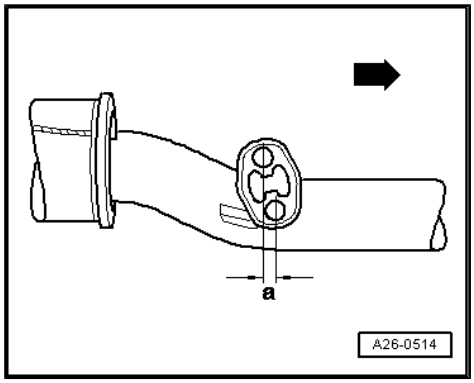

– Fit clamp in horizontal position.

• Bolt connection faces to right.

– Tighten bolt connections on clamp evenly.

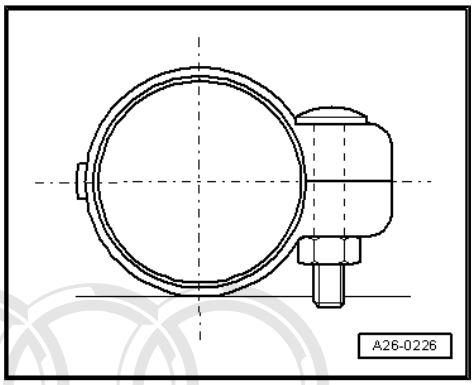

Aligning tailpipes

– Align rear silencer so that there is an equal distance -a- and -b- between the cut-out in the bumper and the pipe ends.

– If necessary, loosen mountings for rear silencer to adjust the tailpipes.

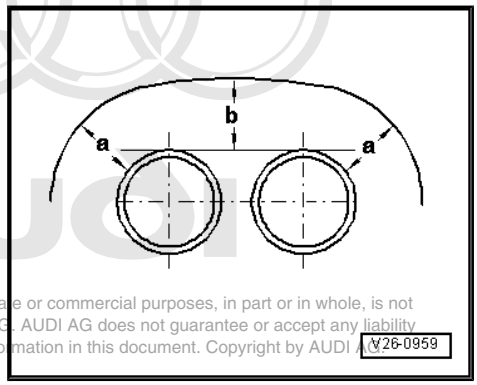

Protected by copyright. Copying for private or commercial purposes, in part or in whole, is not permitted unless authorised by AUDI AG. AUDI AG does not guarantee or accept any liability with respect to the correctness of information in this document. Copyright by AUDI AG.

2.4 Checking exhaust system for leaks, engines with code letters BHZ, BZC, CDLA, CDLC

– Start engine and run at idling speed.

– Plug the tailpipe (e. g. with rags or stopper) and leave plugged until the check is complete.

– Listen for noise at connection points (cylinder head/exhaust manifold, exhaust manifold/front exhaust pipe, etc.) to locate any leaks.

– Rectify any leaks that are found.

3 Exhaust manifold

Note

Exhaust manifold and turbocharger are combined as one unit.

– Removing and installing exhaust manifold: vehicles with engine codes AXX, BPY, BWA ⇒ page 178 , vehicles with engine codes BHZ, BZC, CDLA, CDLC ⇒ page 202

Protected by copyright. Copying for private or commercial purposes, in part or in whole, is not permitted unless authorised by AUDI AG. AUDI AG does not guarantee or accept any liability with respect to the correctness of information in this document. Copyright by AUDI AG.