chevrolet.com (U.S.)
chevrolet.gm.ca (Canada)

2015

City Express

2015 Chevrolet City Express Owner Manual

In Brief 1-1
Instrument Panel 1-2
Initial Drive Information 1-3
Vehicle Features 1-12
Performance and Maintenance 1-15

Keys, Doors, and Windows 2-1
Keys and Locks 2-1
Doors 2-8
Vehicle Security 2-10
Exterior Mirrors 2-12
Interior Mirrors 2-13
Windows 2-14

Seats and Restraints 3-1
Head Restraints 3-2
Front Seats 3-3
Safety Belts 3-8
Airbag System 3-15
Child Restraints 3-30

Storage 4-1
Storage Compartments 4-1
Additional Storage Features ... 4-2

Instruments and Controls 5-1
Controls 5-2
Warning Lights, Gauges, and Indicators 5-6
Vehicle Messages 5-20
Trip Computer 5-20
Vehicle Personalization 5-21

Lighting 6-1
Exterior Lighting 6-1
Interior Lighting 6-3
Lighting Features 6-5

Infotainment System 7-1
Introduction 7-1
Radio 7-5
Audio Players 7-7
Phone 7-10
Trademarks and License Agreements 7-19

Climate Controls 8-1
Climate Control Systems 8-1
Air Vents 8-3
Maintenance 8-4

Driving and Operating 9-1
Driving Information 9-2
Starting and Operating 9-13
Engine Exhaust 9-17
Automatic Transmission 9-18
Brakes 9-22
Ride Control Systems 9-25
Cruise Control 9-28
Driver Assistance Systems ... 9-30
Fuel 9-37
Trailer Towing 9-41
Conversions and Add-Ons ... 9-41

Vehicle Care 10-1
General Information 10-2
Vehicle Checks 10-4
Headlamp Aiming 10-23
Bulb Replacement 10-23
Electrical System 10-24
Wheels and Tires 10-26
Jump Starting 10-55

2015 Chevrolet City Express Owner Manual

Towing the Vehicle 10-59
Appearance Care 10-61

Service and Maintenance . . . 11-1
General Information 11-1
Maintenance Schedule 11-3
Special Application Services 11-7
Additional Maintenance and Care 11-7
Recommended Fluids 11-11
Maintenance Records 11-13

Technical Data 12-1
Vehicle Identification 12-1
Vehicle Data 12-2

Customer Information 13-1
Customer Information 13-1
Reporting Safety Defects 13-13
Vehicle Data Recording and Privacy 13-14

Index i-1

The names, logos, emblems, slogans, vehicle model names, and vehicle body designs appearing in this manual including, but not limited to, GM, the GM logo, CHEVROLET, the CHEVROLET Emblem, and CITY EXPRESS are trademarks and/or service marks of General Motors LLC, its subsidiaries, affiliates, or licensors.

For vehicles first sold in Canada, substitute the name “General Motors of Canada Limited” for Chevrolet Motor Division wherever it appears in this manual.

This manual describes features that may or may not be on the vehicle because of optional equipment that was not purchased on the vehicle, model variants, country specifications, features/applications that may not be available in your region, or changes subsequent to the printing of this owner manual.

Refer to the purchase documentation relating to your specific vehicle to confirm the features.

Keep this manual in the vehicle for quick reference.

Canadian Vehicle Owners

Propriétaires Canadiens

A French language manual can be obtained from your dealer, at www.helminc.com, or from:

On peut obtenir un exemplaire de ce guide en français auprès du concessionnaire ou à l'adresse savant:

Helm, Incorporated
Attention: Customer Service
47911 Halyard Drive
Plymouth, MI 48170

Using this Manual

To quickly locate information about the vehicle, use the Index in the back of the manual. It is an alphabetical list of what is in the manual and the page number where it can be found.

Litho in U.S.A.
Part No. 23433684 B Second Printing

©2014 General Motors LLC. All Rights Reserved.

Danger, Warning, and Caution

Warning messages found on vehicle labels and in this manual describe hazards and what to do to avoid or reduce them.

⚠ Danger
Danger indicates a hazard with a high level of risk which will result in serious injury or death.

⚠ Warning
Warning indicates a hazard that could result in injury or death.

⚠ Caution
Caution indicates a hazard that could result in property or vehicle damage.

A circle with a slash through it is a safety symbol which means “Do Not,” “Do not do this,” or “Do not let this happen.”

Symbols

The vehicle has components and labels that use symbols instead of text. Symbols are shown along with the text describing the operation or information relating to a specific component, control, message, gauge, or indicator.

: This symbol is shown when you need to see the owner manual for additional instructions or information.

: This symbol is shown when you need to see a service manual for additional instructions or information.

Vehicle Symbol Chart

Here are some additional symbols that may be found on the vehicle and what they mean. For more information on the symbol, refer to the Index.

: Airbag Readiness Light

ABS **or** **:** Antilock Brake System (ABS)

BRAKE **or** **:** Brake System Warning Light

: Charging System

CRUISE **:** Cruise Control

: Engine Coolant Temperature

: Exterior Lamps

: Fuel Gauge

: Headlamp High/Low-Beam Changer

: Top Tether Anchors for Child Restraints

: Malfunction Indicator Lamp

: Oil Pressure

: Safety Belt Reminders

: Tire Pressure Monitor

: Turn Signal

: Traction Control/Electronic Stability Control

: Windshield Washer Fluid

✍ NOTES

In Brief

Instrument Panel
Instrument Panel 1-2

Initial Drive Information
Initial Drive Information 1-3
Remote Keyless Entry (RKE) System 1-3
Door Locks 1-4
Windows 1-5
Seat Adjustment 1-5
Head Restraint Adjustment 1-8
Safety Belts 1-8
Passenger Sensing System . . . 1-9
Mirror Adjustment 1-9
Interior Lighting 1-9
Exterior Lighting 1-10
Windshield Wiper/Washer 1-11
Climate Controls 1-11

Vehicle Features
Infotainment System 1-12
Radio(s) 1-12
Portable Audio Devices 1-12
Bluetooth® 1-12
Steering Wheel Controls 1-13
Cruise Control 1-13
Trip Computer 1-14
Rear Vision Camera (RVC) 1-14
Parking Assist 1-14
Power Outlets 1-14

Performance and Maintenance
Traction Control/Electronic Stability Control 1-15
Tire Pressure Monitor 1-15
Driving for Better Fuel Economy 1-15
Roadside Assistance Program 1-16

Instrument Panel

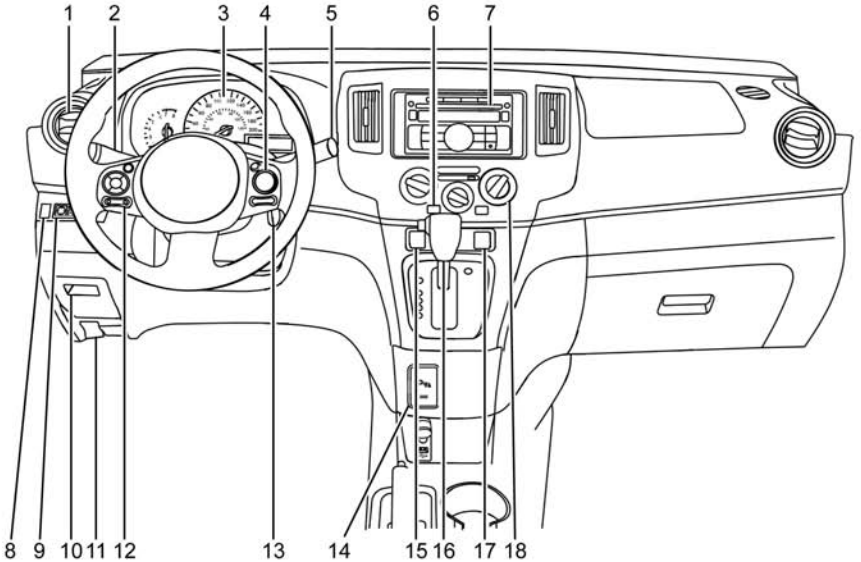

1. *Air Vents on page 8-3*.
2. Turn Signal Lever. See *Turn and Lane-Change Signals on page 6-3*.
3. *Instrument Cluster on page 5-7*.
4. *Cruise Control on page 9-28* (If Equipped).
5. *Windshield Wiper/Washer on page 5-2*.
6. Rear Window Defogger and Heated Mirror Button (if Equipped). See *Climate Control Systems on page 8-1* and *Heated Mirrors on page 2-13*.
7. *Infotainment on page 7-1*.
8. *Traction Control/Electronic Stability Control on page 9-25*.
9. *Power Mirrors on page 2-13* (If Equipped).
10. *Fuses and Circuit Breakers on page 10-25*.
11. Fuel Door Release. See *Filling the Tank on page 9-39*.

    Hood Release. See *Hood on page 10-5*.
12. *Steering Wheel Controls on page 5-2* (If Equipped).
13. *Ignition Positions on page 9-14*.
14. *Parking Assist on page 9-30* (If Equipped).
15. *Hazard Warning Flashers on page 6-2*.
16. Shift Lever. See *Continuously Variable Transmission (CVT) on page 9-18*.
17. *Passenger Airbag Status Indicator on page 5-10*.
18. *Climate Control Systems on page 8-1*.

Initial Drive Information

This section provides a brief overview about some of the important features that may or may not be on your specific vehicle.

For more detailed information, refer to each of the features which can be found later in this owner manual.

Remote Keyless Entry (RKE) System

If equipped, the RKE transmitter is used to remotely lock and unlock the doors from up to 10 m (33 ft) away from the vehicle.

Keyless Access

🔒 **:** Press to lock all doors.

The hazard warning flashers flash twice and the horn chirps once to indicate all doors are locked.

If a door is open and 🔒 is pressed, the doors will lock but the horn will not beep and the hazard warning flashers will not flash. The horn may or may not beep. See “Silencing the Horn Sound Feature” under *Remote Keyless Entry (RKE) System Operation on page 2-3*.

🔓 **:** Press once to unlock the driver door. The hazard warning flashers flash once if all doors are closed with the ignition switch in any position except ON.

The interior lamp comes on and the lamp timer activates for 30 seconds when the interior lamp switch is in the DOOR position with the ignition switch in any position except ON. The interior lamp can be immediately turned off by inserting the key into the ignition switch and placing the ignition switch in ON or START, by locking the doors with the RKE transmitter, by pressing the door switch, or by pressing OFF on the interior lamp switch.

Press 🔓 again within five seconds to unlock all remaining doors. The hazard warning flashers flash once if all doors are completely closed.

When 🔓 is pressed, all doors will automatically lock within one minute unless a door is opened, the ignition switch is turned from OFF to ON, or 🔒 is pressed.

: Press and hold to sound the panic alarm. Press any button on the RKE transmitter to cancel the panic alarm.

See *Keys on page 2-1* and *Remote Keyless Entry (RKE) System Operation on page 2-3*.

Door Locks

Manual Door Locks

Lock and unlock the door from the outside using the key or the Remote Keyless Entry (RKE) transmitter, if equipped. From the inside, slide the manual lever on the door forward to lock and rearward to unlock.

See *Door Locks on page 2-5*.

Power Door Locks

On the front doors, press 🔒 or 🔓 on the power door lock switch to lock or unlock the doors.

See *Power Door Locks on page 2-7*.

Windows

Power Windows

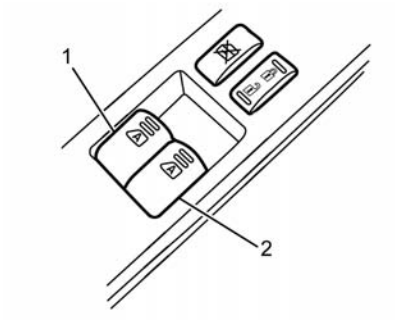

The power window controls (1) are on the front doors. The driver door also has a control (2) to operate the front passenger window.

Press or pull up on the switch to lower or raise the window.

Express-Up/Down

If equipped, the front windows have an express feature that allows the window to be raised or lowered without holding the switch. Press or pull the switch fully and release it to activate the express feature.

This mode can be canceled by briefly pressing or pulling the switch.

See *Power Windows on page 2-14*.

Seat Adjustment

Seat Adjustment

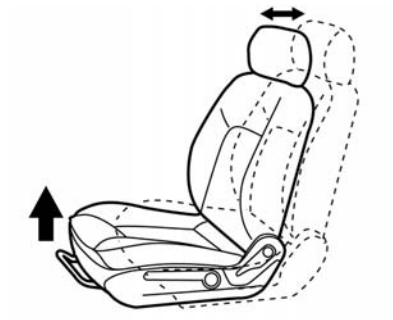

To adjust the seat:

1. Lift the bar to unlock the seat.
2. Slide the seat to the desired position and release the bar.
3. Try to move the seat back and forth to be sure the seat is locked in place.

To lift the seat, pull up or push down the lever to adjust the seat.

See *Seat Adjustment on page 3-3*.

Lumbar Adjustment

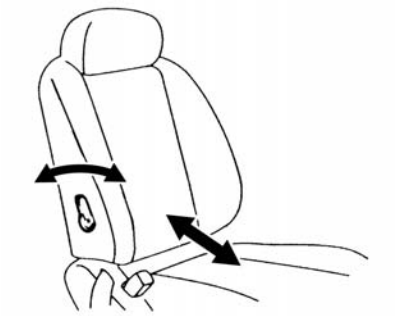

On the driver seat, move the lever on the inboard side of the seat forward or rearward.

See *Lumbar Adjustment on page 3-4*.

Reclining Seatbacks

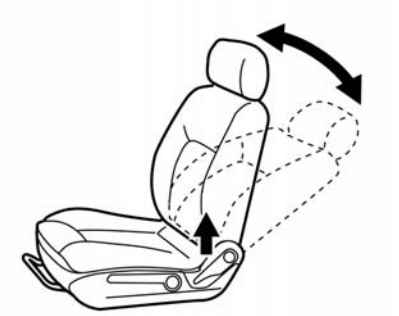

To recline the seatback:

1. Lift the lever on the side of the seat.
2. Move the seatback to the desired position, and then release the lever to lock the seatback in place.
3. Push and pull on the seatback to make sure it is locked.

To return the seatback to the upright position:

1. Lift the lever fully without applying pressure to the seatback, and the seatback will return to the upright position.
2. Push and pull on the seatback to make sure it is locked.

See *Reclining Seatbacks on page 3-4*.

Folding Seatback

The front passenger seatback may fold flat.

To fold the seatback:

1. Lower the head restraint all the way. See *Head Restraints on page 3-2*.
2. Move the seat as far back as possible. See *Seat Adjustment on page 3-3*.

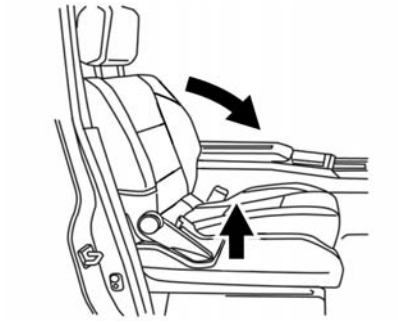

3. Lift the lever fully and fold the seatback forward until it disengages.

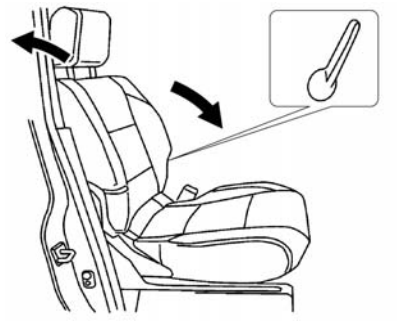

4. Lift the latch on the inboard side of the seatback to release the seat.

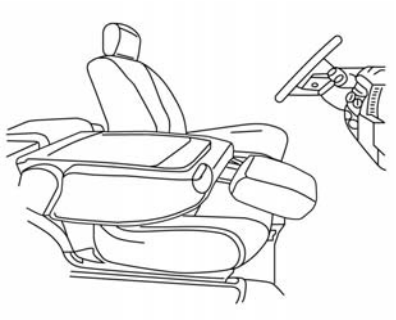

5. Fold the seatback flat over the seat cushion.

To raise the seatback:

1. Raise the seatback and push it rearward.
2. Pull up on the recline lever and lean the seatback to the upright seating position. See *Reclining Seatbacks on page 3-4*.
3. Push and pull on the seatback to make sure it is locked in place.

See *Folding Seatback on page 3-6*.

Head Restraint Adjustment

Do not drive until the head restraints for all occupants are installed and adjusted properly.

To achieve a comfortable seating position, change the seatback recline angle as little as necessary while keeping the seat and the head restraint height in the proper position.

See *Head Restraints on page 3-2* and *Seat Adjustment on page 3-3*.

Safety Belts

Refer to the following sections for important information on how to use safety belts properly:

- *Safety Belts on page 3-8*.
- *How to Wear Safety Belts Properly on page 3-9*.
- *Lap-Shoulder Belt on page 3-10*.
- *Lower Anchors and Tethers for Children (LATCH System) on page 3-38*.

Passenger Sensing System

The passenger sensing system will turn off the front outboard passenger frontal airbag under certain conditions. No other airbag is affected by the passenger sensing system. See *Passenger Sensing System on page 3-22*.

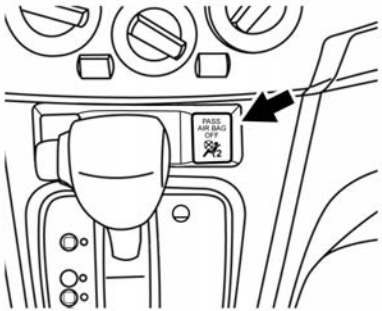

The passenger airbag status indicator is under the climate controls and is visible when the vehicle is started. See *Passenger Airbag Status Indicator on page 5-10*.

Mirror Adjustment

Interior Mirror

Adjust the rearview mirror for a clear view of the area behind your vehicle.

Push the tab forward for daytime use and pull it rearward for nighttime use to avoid glare of the headlamps from behind.

See *Manual Rearview Mirror on page 2-13*.

Exterior Mirrors

If equipped with manual outside mirrors, adjust by pressing up, down, left, or right on the mirror to have a clear view of objects behind you.

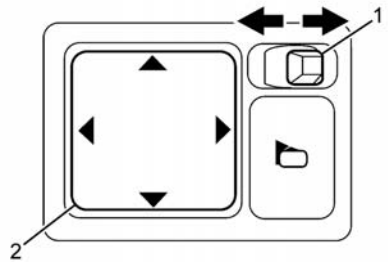

If equipped with power outside mirrors, adjust by selecting the left or right mirror (1) and then use the control pad (2) to move each mirror to the desired position. See *Power Mirrors on page 2-13*.

Interior Lighting

The dome lamp and reading lamps are in the overhead console.

Dome Lamps

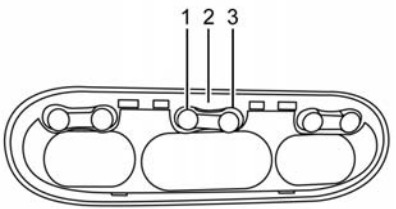

The dome lamp operates in any ignition switch position.

The dome lamp switch has three positions, press the switch to adjust the settings.

Press (1) to turn the lamp off, even when a door is open. When the switch is in the (2) position, the lamp comes on when a door is opened. Press (3) to turn the lamp on.

Reading Lamps

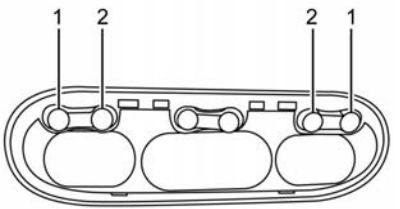

Press (1) to turn the reading lamp on or (2) to turn the reading lamp off.

See *Dome Lamps on page 6-4*.

Exterior Lighting

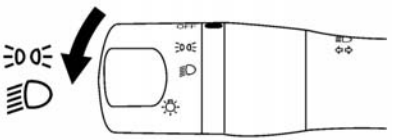

The exterior lamp control is on the turn signal lever on the left side of the steering column.

There are three positions:

OFF: Turns all the lamps off, except the Daytime Running Lamps (DRL).

: Turns on the parking lamps including all lamps, except the headlamps.

: Turns on the headlamps together with the parking lamps and instrument panel lights.

See:

- *Exterior Lamp Controls on page 6-1*
- *Daytime Running Lamps (DRL) on page 6-2*

Windshield Wiper/Washer

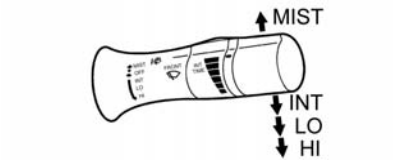

With the ignition in the ON position, move the windshield wiper lever down to select the wiper speed.

HI: Use for fast wipes.

LO: Use for slow wipes.

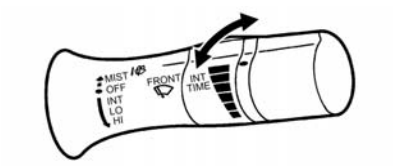

INT: Use for intermittent wipes. To adjust wipe frequency, turn the INT TIME band forward for less frequent wipes or rearward for more frequent wipes.

OFF: Use to turn the wipers off.

MIST: For a single wipe, briefly move the wiper lever up.

Windshield Washer

Pull the windshield wiper lever toward you to spray windshield washer fluid and activate the wipers.

See *Windshield Wiper/Washer on page 5-2*.

Climate Controls

The vehicle's heating, cooling, and ventilation can be controlled with this system.

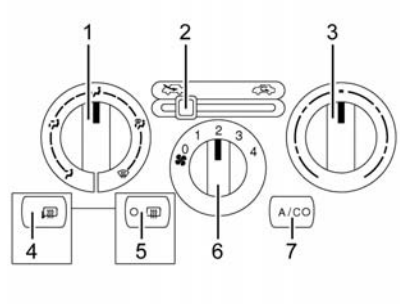

1. Air Delivery Mode Control
2. Outside Air/Recirculation Air Intake Control
3. Temperature Control
4. Heated Mirrors (If Equipped)
5. Rear Window Defogger (If Equipped)
6. Fan Control
7. A/C (Air Conditioning)

See *Climate Control Systems on page 8-1*.

Vehicle Features

Infotainment System

The base radio information is included in this manual. See the infotainment manual for information on the uplevel radio, audio player, phone, navigation system, and voice recognition. There is also information on settings.

Radio(s)

The ignition most be in ACC/ACCESSORY or RUN/START.

PUSH/PWR: Press to turn the system on and off.

VOL: Turn to increase or decrease the volume.

AM: Press to change to AM stations.

FM: Press to change to FM stations and press to change between FM1 and FM2.

CD: Press to change to play a CD.

AUX: Press to change to an auxiliary device.

🔇 : Press to mute and unmute the audio.

▲ SEEK/TRACK ▼ : Radio: Press to fast seek or scan stations.

▲ TUNE/FF-REW/FOLDER ▼ : Press to seek or scan one station at a time.

For more information about these and other radio features, see *Infotainment on page 7-1*.

Storing a Favorite Station

Up to 18 stations (six FM1, six FM2, and six AM), can be programmed on the six numbered buttons.

For more information on storing a favorite station, see *Operation on page 7-4*.

Setting the Clock

For detailed instructions on setting the clock for your specific audio system, see *Clock on page 5-3*.

Portable Audio Devices

This vehicle has an auxiliary input jack on the lower right side of the faceplate. External devices such as an iPod®, laptop computer, MP3 player, cassette player, or CD changer can be connected to the auxiliary port using a 3.5 mm (1/8 in) input cable.

This input jack is not an audio output; do not plug headphones into the front auxiliary input jack.

See *Auxiliary Jack on page 7-9*.

Bluetooth®

If equipped with a Bluetooth system, it allows users with a Bluetooth-enabled cell phone to make and receive hands-free calls using the vehicle's audio system and controls.

The Bluetooth-enabled cell phone must be paired with the Bluetooth system before it can be used in the vehicle. Not all phones will support

all functions. For more information, see www.gm.com/bluetooth and *Bluetooth on page 7-10*.

Steering Wheel Controls

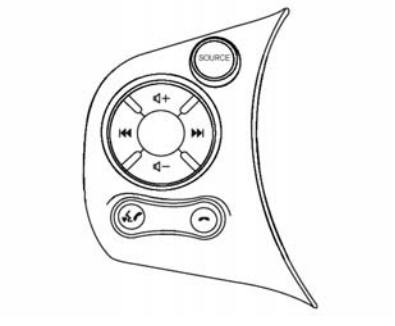

Some audio and Bluetooth® controls (if equipped) can be adjusted at the steering wheel.

SOURCE: Press to change between AM, FM, CD, and AUX devices.

⏮ or ⏭ : While in one of the preset radio station banks, press and hold for less than 1.5 seconds to change to the previous or next preset radio station or press to go to the previous or next track on a CD.

Press and hold for more than 1.5 seconds to change to the previous or next radio station.

Press to change the Bluetooth system language. See “Choosing a Language” in *Bluetooth on page 7-10*.

: If equipped, press and hold to end a call or reject a call.

: If equipped, press to interact with Bluetooth or answer an incoming call. See *Bluetooth on page 7-10*.

− or + : Press − to decrease volume or press + to increase the volume.

See *Steering Wheel Controls on page 5-2*.

Cruise Control

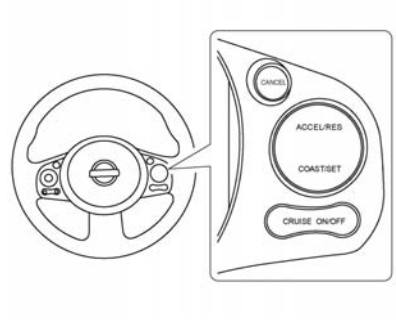

If equipped with cruise control, use the following buttons:

CRUISE ON/OFF: Press to turn cruise control on or off. The white indicator comes on in the instrument cluster when cruise control is turned on.

ACCEL/RES (Accelerate/ Resume): If there is a set speed in memory, press briefly to resume to a previously set speed, or press and

hold to accelerate. If cruise control is already active, use to increase vehicle speed.

COAST/SET: Press briefly to set the speed and activate cruise control, or press and hold to decelerate. If cruise control is already active, use to decrease vehicle speed.

CANCEL: Press to disengage cruise control without erasing the set speed from memory.

See *Cruise Control on page 9-28*.

Trip Computer

The vehicle may have a trip computer. It provides the driver with driving information such as the driving distance for the remaining fuel, average fuel economy, and instant fuel economy.

Use the trip odometer reset stem in the cluster to cycle through the available trip computer displays.

See *Trip Computer on page 5-20*.

Rear Vision Camera (RVC)

If equipped, RVC displays a view of the area behind the vehicle, on the infotainment system display, when the vehicle is shifted into R (Reverse).

See *Rear Vision Camera (RVC) on page 9-31*.

Parking Assist

If equipped, this system uses sensors on the rear bumper to assist with parking and avoiding objects while in R (Reverse). It operates at speeds less than 5 km/h (3 mph). Rear Parking Assist (RPA) uses audible beeps to provide distance and system information.

Keep the sensors on the vehicle's rear bumper clean to ensure proper operation.

See *Parking Assist on page 9-30*.

Power Outlets

The accessory power outlets can be used to plug in electrical equipment, such as a cell phone or an MP3 player.

The vehicle may have two accessory power outlets:

- Near the bottom of the center stack.
- On the rear of the center floor console.

Remove the cover to access and replace when not in use.

See *Power Outlets on page 5-4*.

Performance and Maintenance

Traction Control/ Electronic Stability Control

The vehicle has a Traction Control System (TCS) and an Electronic Stability Control system that assists with directional control of the vehicle in difficult driving conditions. Both systems turn on automatically every time the vehicle is started.

- To turn off the TCS and Electronic Stability Control systems, press and release the TCS/Electronic Stability Control button on the instrument panel to the left of the steering wheel. The indicator will come on in the instrument cluster.
- Press and release the TCS/ Electronic Stability Control button again to turn the TCS and Electronic Stability Control systems back on. The indicator will turn off in the instrument cluster.

See *Traction Control/Electronic Stability Control on page 9-25*.

Tire Pressure Monitor

This vehicle may have a Tire Pressure Monitor System (TPMS).

The low tire pressure warning light alerts to a significant loss in pressure of one of the vehicle's tires. If the warning light comes on, stop as soon as possible and inflate the tires to the recommended pressure shown on the Tire and Loading Information label. See *Vehicle Load Limits on page 9-9*. The warning light will remain on until the tire pressure is corrected.

The low tire pressure warning light may come on in cool weather when the vehicle is first started, and then turn off as the vehicle is driven. This may be an early indicator that the tire pressures are getting low and the tires need to be inflated to the proper pressure.

The TPMS does not replace normal monthly tire maintenance. Maintain the correct tire pressures.

See *Tire Pressure Monitor System on page 10-36*.

Driving for Better Fuel Economy

Driving habits can affect fuel mileage. Here are some driving tips to get the best fuel economy possible.

- Avoid fast starts and accelerate smoothly.
- Brake gradually and avoid abrupt stops.

- Avoid idling the engine for long periods of time.
- When road and weather conditions are appropriate, use cruise control.
- Always follow posted speed limits or drive more slowly when conditions require.
- Keep vehicle tires properly inflated.
- Combine several trips into a single trip.
- Replace the vehicle's tires with the same size and type as the originals.
- Follow recommended scheduled maintenance.

Roadside Assistance Program

U.S.: 1-800-243-8872

TTY Users (U.S. Only): 1-888-889-2438

Canada: 1-800-268-6800

New Chevrolet owners are automatically enrolled in the Roadside Assistance Program.

See *Roadside Assistance Program on page 13-5*.

Keys, Doors, and Windows

Keys and Locks
Keys 2-1
Remote Keyless Entry (RKE) System 2-2
Remote Keyless Entry (RKE) System Operation 2-3
Door Locks 2-5
Power Door Locks 2-7
Automatic Door Locks 2-7
Lockout Protection 2-7

Doors
Sliding Door 2-8
Back Doors 2-8

Vehicle Security
Vehicle Security 2-10
Vehicle Alarm System 2-10
Immobilizer 2-11
Immobilizer Operation 2-11

Exterior Mirrors
Convex Mirrors 2-12
Manual Mirrors 2-12
Power Mirrors 2-13
Folding Mirrors 2-13
Heated Mirrors 2-13

Interior Mirrors
Interior Rearview Mirrors 2-13
Manual Rearview Mirror 2-13

Windows
Windows 2-14
Power Windows 2-14
Sun Visors 2-16

Keys and Locks

Keys

⚠ Warning

Leaving children in a vehicle with the ignition key is dangerous and children or others could be seriously injured or killed. They could operate the power windows or other controls or make the vehicle move. The windows will function with the keys in the ignition, and children or others could be caught in the path of a closing window. Do not leave children in a vehicle with the ignition key.

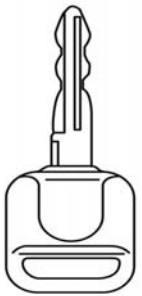

Key Access

Keyless Access

The key is used for the ignition and all door locks.

A key number plate is supplied with the keys. Record the key number and keep it in a safe place not in the vehicle. If the key is lost, see a dealer for duplicates by using the key number. Key numbers are not recorded so it is very important to keep track of the key number plate.

See your dealer if a replacement key or additional key is needed.

If it becomes difficult to turn a key, inspect the key blade for debris. Periodically clean with a brush or pick.

Remote Keyless Entry (RKE) System

See *Radio Frequency Statement on page 13-12*.

If there is a decrease in the RKE operating range:

- Check the distance. The transmitter may be too far from the vehicle.
- Check the location. Other vehicles or objects may be blocking the signal.
- Check the transmitter's battery. See “Battery Replacement” later in this section.
- If the transmitter is still not working correctly, see your dealer or a qualified technician for service.

Remote Keyless Entry (RKE) System Operation

If equipped, the RKE transmitter functions work up to 10 m (33 ft) away from the vehicle.

Other conditions can affect the performance of the transmitter. See *Remote Keyless Entry (RKE) System on page 2-2*.

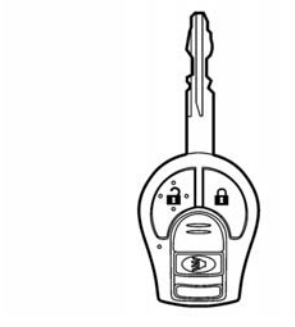

(Lock): Press to lock all doors. The hazard warning flashers flash twice and the horn chirps once to indicate all doors are locked.

If a door is open and is pressed, the doors will lock but the horn will not beep and the hazard warning flashers will not flash. The horn can be disabled. See “Silencing the Horn Sound Feature” in this section.

(Unlock): Press once to unlock the driver door. The hazard warning flashers flash once if all doors are closed with the ignition switch in any position except ON.

Press again within five seconds to unlock all remaining doors. The hazard warning flashers flash once if all doors are completely closed.

The interior lamp comes on and the lamp timer activates for 30 seconds when the interior lamp switch is in the DOOR position with the ignition switch in any position except ON. The interior lamp can be immediately turned off by inserting the key into the ignition switch and placing the ignition switch in ON or START, by locking the doors with the RKE transmitter, by pressing the door lock switch, or by pressing OFF on the interior lamp switch.

When is pressed, all doors will automatically lock within one minute unless a door is opened, the ignition switch is turned from OFF to ON, or is pressed.

(Panic Alarm): Press and hold to sound the panic alarm. Press any button on the RKE transmitter to cancel the panic alarm. The panic alarm will not work if the key is in the ignition.

Auto Relock

When is pressed, all doors will automatically lock within one minute unless a door is opened, the ignition switch is turned from OFF to ON, or is pressed.

Silencing the Horn Sound Feature

The Horn Sound feature can be deactivated using the RKE transmitter.

Press and hold 🔒 and 🔓 for at least two seconds to deactivate the horn sound. The hazard warning flashers will flash three times to confirm that the horn sound feature has been deactivated.

Press and hold again for at least two seconds to activate the horn sound. The hazard warning flashers will flash once and the horn will sound once to confirm that the horn sound is activated. The horn sound will not deactivate if the alarm is triggered.

The RKE transmitter buttons will not operate when the key is in the ignition.

Programming Transmitters to the Vehicle

Only RKE transmitters programmed to the vehicle will work. If a transmitter is lost or stolen, a replacement can be purchased and programmed through your dealer. When the replacement transmitter is programmed to the vehicle, all remaining transmitters must also be programmed. Any lost or stolen transmitters no longer work once the new transmitter is programmed. Each vehicle can have up to five transmitters programmed to it.

Battery Replacement

⚠ Caution

When replacing the battery, do not touch any of the circuitry on the transmitter. Static from your body could damage the transmitter.

To replace the battery:

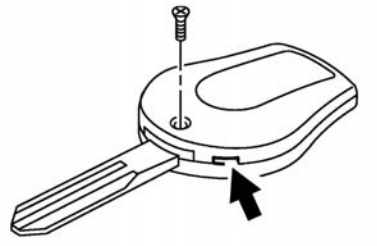

1. Remove the screw.
2. Separate the transmitter with a flat, thin tool.
   - Carefully insert the tool into the notch located along the parting line of the transmitter.
   - Twist the tool until the transmitter is separated.
3. Remove the old battery.

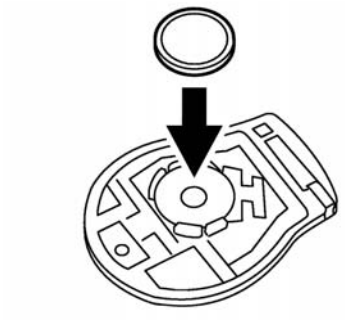

4. Insert the new battery, positive side facing the bottom of the case. Replace with a CR1620 or equivalent battery.
5. Close the lid and install the screw securely.

Door Locks

⚠ Warning

Unlocked doors can be dangerous.

- Passengers, especially children, can easily open the doors and fall out of a moving vehicle. When a door is locked, the handle will not open it. The chance of being thrown out of the vehicle in a crash is increased if the doors are not locked. So, all passengers should wear safety belts properly and the doors should be locked whenever the vehicle is driven.
- Young children who get into unlocked vehicles may be unable to get out. A child can be overcome by extreme heat and can suffer permanent

(Continued)

Warning (Continued)

injuries or even death from heat stroke. Always lock the vehicle whenever leaving it.

- Outsiders can easily enter through an unlocked door when you slow down or stop the vehicle. Locking the doors can help prevent this from happening.

Manual Door Locks

Lock and unlock the doors from the outside using the key or the Remote Keyless Entry (RKE) transmitter, if equipped.

If the vehicle is equipped with Keyless Entry, see *Remote Keyless Entry (RKE) System Operation on page 2-3*.

Front Doors

From the outside, turn the key toward the front of the vehicle to lock and toward the rear to unlock.

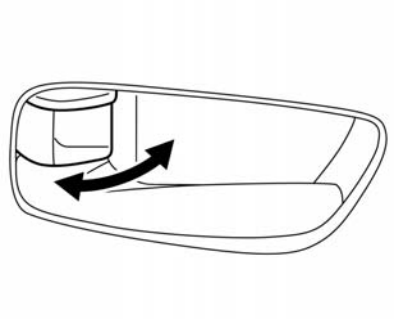

From the inside, move the inside lock knob inward to the lock position, then close the door. To unlock, move the inside lock knob outward to the unlock position.

Sliding Doors

From the outside, turn the key toward the front of the vehicle to lock and toward the rear to unlock.

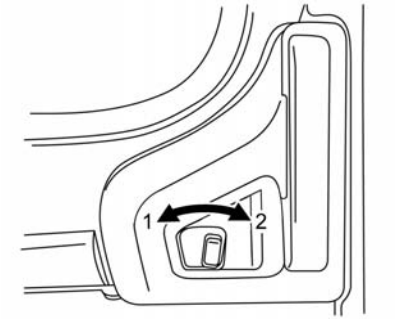

From the inside, slide the lever forward (2) to lock and rearward (1) to unlock.

Back Door

Turn the key toward the right of the vehicle to lock. Turn the key toward the left of the vehicle to unlock.

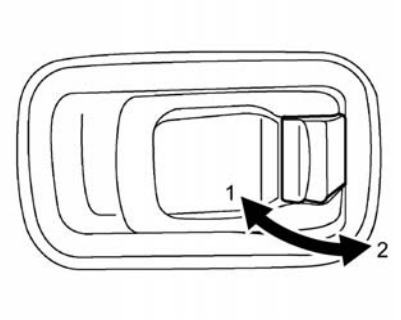

From the inside, push the lever inward to lock (1) or pull outward to unlock (2).

Power Door Locks

From the outside, if equipped, turn the key toward the front of the vehicle to lock all doors. Turn the key rearward one time to unlock that door. Turn the key rearward again within five seconds to unlock all doors.

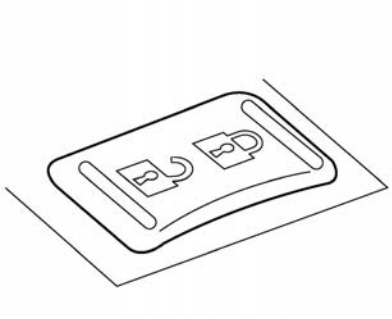

From the inside, press 🔒 or 🔓 on the power door lock switch to lock or unlock the doors.

Automatic Door Locks

The doors will lock automatically when the vehicle speed reaches 24 km/h (15 mph).

To unlock the doors:

- Press 🔓 on a door.
- Shift the transmission into P (Park).

The doors will unlock automatically when the ignition is placed in the OFF position or when the key is removed from the ignition.

To deactivate or activate automatic door unlock:

1. Close all doors.
2. Place the ignition in the ON position.
3. Within 20 seconds of performing Step 2, press and hold 🔓 on the power door lock switch for more than five seconds.
4. When activated, the hazard warning flashers will flash twice. When deactivated, the hazard warning flashers will flash once.
5. The ignition switch must be placed in the OFF and ON position again between each settings change.

Lockout Protection

When locking is requested with the driver door open and the key in the ignition, all the doors will lock and then the driver door will unlock.

Doors

Sliding Door

From the outside:

To open, pull the handle and slide the door toward the rear of the vehicle until the door clicks into the detent.

To close, pull the handle again. The door will release from the open position and slide closed.

From the inside:

To open, pull the handle toward the rear of the vehicle and slide the door until it clicks into the detent.

To close, pull the handle toward the rear of the vehicle. The door will release from the open position and slide closed.

Make sure the door is completely closed before driving away.

Back Doors

⚠ Warning

Unlocked doors can be dangerous.

- Passengers, especially children, can easily open the doors and fall out of a moving vehicle. When a door is locked, the handle will not open it. The chance of being thrown out of the vehicle in a crash is increased if the doors are not locked. So, all passengers should wear safety belts properly and the doors should be locked whenever the vehicle is driven.
- Young children who get into unlocked vehicles may be unable to get out. A child can be overcome by extreme heat and can suffer permanent

(Continued)

Warning (Continued)

injuries or even death from heat stroke. Always lock the vehicle whenever leaving it.

- Outsiders can easily enter through an unlocked door when you slow down or stop the vehicle. Locking the doors can help prevent this from happening.

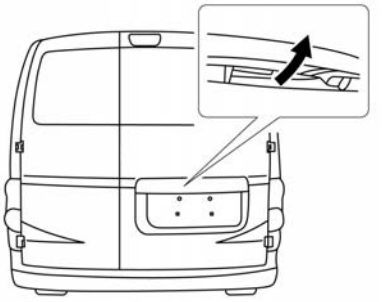

To open the passenger side back door from the outside, pull the handle and open until it stops.

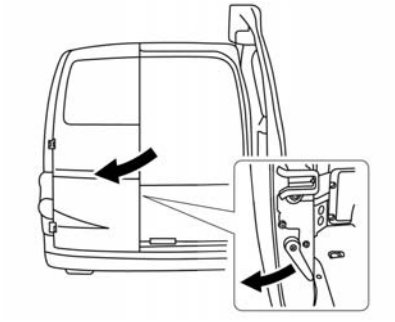

To open the driver side back door, pull the latch release at the inside edge of the door.

To close the back doors, close the driver side back door first. Then close the passenger side back door. Check to make sure both doors are completely closed.

The back doors open fully to approximately 180°. To open either door to the wide open position, open both doors normally.

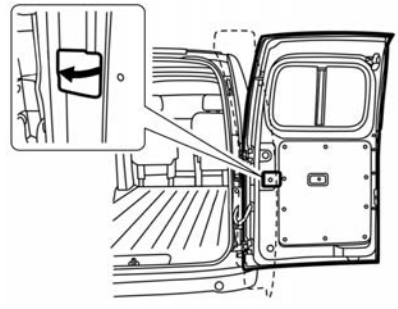

Pull the 180° release latch located on the inside of each back door to release the check link arm. Open the door slowly until it stops.

⚠ Caution

Do not operate the 180° release latch until the door has been fully opened. Doing so can result in damage to the vehicle and/or malfunction of the mechanism.

Always look before fully opening the back doors to avoid an accident with oncoming traffic or pedestrians.

When closing the back doors, be sure to close the left-side door before closing the right-side door.

Vehicle Security

This vehicle has theft-deterrent features; however, they do not make the vehicle impossible to steal.

Vehicle Alarm System

This vehicle may have a security system.

The security light shows the status of the system.

Arming the Alarm System

1. Close the windows. The system will arm with open windows.

   Turn off the vehicle and remove the key.

2. Close all the doors and lock the vehicle in one of three ways:

   - Use the key.
   - With the door open, press the inside lock button and close the door. Make sure the key is not inside the vehicle.
   - Use the RKE transmitter. See *Remote Keyless Entry (RKE) System Operation on page 2-3*.

     If the lock button is pressed when the doors are locked, the lights flash twice and the horn may beep once to indicate the doors are locked.

3. Confirm that the security light comes on. The security light stays on for about 30 seconds. The vehicle security system is now pre-armed.

After 30 seconds the alarm system will arm, and the security light will begin to slowly flash indicating the alarm system is operating.

The system will not arm if any of the following occur during the 30-second pre-arm time period:

- The door is unlocked with the key, the power door lock switch, or the RKE transmitter.
- Any door is open.
- The ignition key is turned to ACC or ON.
- The key is turned slowly when locking the door.

If the key is turned beyond the vertical position toward the unlock position to remove the key, the system may be disarmed when the key is removed. If the security light fails to glow for a period of time, unlock the door once and lock it again.

When the driver and/or passengers are in the vehicle, the system will still arm when all doors are closed and locked and the ignition key is in the OFF position.

Vehicle Security System Activation

The security system will activate as follows:

- The headlamps blink and the horn sounds intermittently. The alarm automatically turns off after a period of time. The alarm will sound if the vehicle is tampered with again.
- The alarm will sound if opening a door without using the key or RKE transmitter, even if the door is unlocked by using the inside lock knob or the power door lock switch.

Disarming the Alarm System

Do one of the following to disarm the alarm system or turn off the alarm if it has been activated:

- Press 🔓 on the RKE transmitter.
- Unlock the driver door using the key.

Immobilizer

See *Radio Frequency Statement on page 13-12*.

Immobilizer Operation

This vehicle has an alarm system.

The system does not have to be manually armed or disarmed.

The vehicle is automatically immobilized when the key is removed.

This security light blinks whenever the ignition is placed in LOCK, OFF, or ACC.

The system is automatically disarmed when the vehicle is started with the correct key. The key uses a transponder that matches an immobilizer control unit in the vehicle and automatically disarms the system. Only the correct key starts the vehicle. The vehicle may not start if the key is damaged.

If the immobilizer system is malfunctioning, the security light will remain on while the ignition switch is placed in ON.

If the engine will not start using a registered key:

1. Leave the ignition in ON for about five seconds.
2. Turn the ignition to OFF or LOCK, and wait for about 10 seconds.

3. Repeat Steps 1 and 2.
4. Restart the engine.

If the engine will not start, place the key on a separate key ring to avoid interference from other devices.

If the light still remains on and/or the engine will not start, see a dealer for service. Bring all registered keys along to the dealer.

Do not leave the key or device that disarms or deactivates the theft-deterrent system in the vehicle.

Exterior Mirrors

Convex Mirrors

⚠ Warning

A convex mirror can make things, like other vehicles, look farther away than they really are. If you cut too sharply into the right lane, you could hit a vehicle on the right. Check the inside mirror or glance over your shoulder before changing lanes.

The passenger side mirror is convex shaped. A convex mirror's surface is curved so more can be seen from the driver seat.

Manual Mirrors

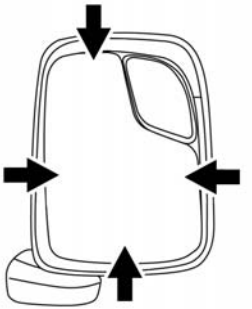

Adjust the mirrors by pressing up, down, left, or right on the sides of the mirror.

Power Mirrors

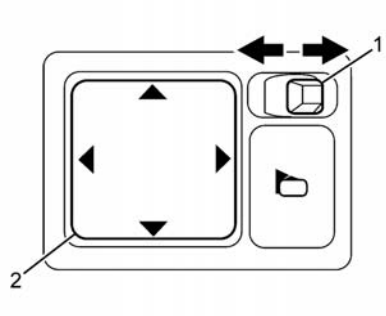

If equipped with power outside mirrors, adjust by selecting the left or right mirror (1) and then use the control pad (2) to move each mirror to the desired position.

The power mirrors will operate only when the ignition is in the ACC or ON position.

Folding Mirrors

Manual Folding Mirrors

The mirrors can be folded inward toward the vehicle to prevent damage when going through an automatic car wash. Push the mirror outward to return it to the original position.

Heated Mirrors

For vehicles with heated mirrors:

(Rear Defogger): Press to heat the mirrors.

An indicator light in the button lights when the outside heated mirrors are activated.

See “Rear Window Defogger” under *Climate Control Systems on page 8-1* for more information.

Interior Mirrors

Interior Rearview Mirrors

Adjust the rearview mirror for a clear view of the area behind your vehicle.

Do not spray glass cleaner directly on the mirror. Use a soft towel dampened with water.

Manual Rearview Mirror

If equipped, push the tab forward for daytime use and pull it rearward for nighttime use to avoid glare of the headlamps from behind.

Windows

⚠ Warning

Never leave a child, a helpless adult, or a pet alone in a vehicle, especially with the windows closed in warm or hot weather. They can be overcome by the extreme heat and suffer permanent injuries or even death from heat stroke.

Power Windows

⚠ Warning

Leaving children in a vehicle with the Remote Keyless Entry (RKE) transmitter is dangerous for many reasons; children or others could be badly injured or even killed. They could operate the power windows or other controls or even make the vehicle move. They could be seriously injured or killed if caught in the path of a closing window. Do not leave the RKE transmitter in a vehicle with children.

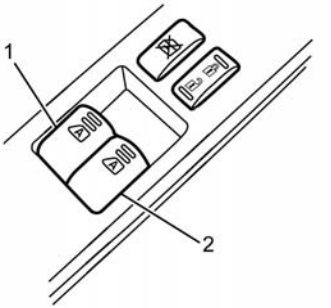

The power window controls (1) are on the front doors. The driver door also has a control (2) to operate the front passenger window.

Press the switch to the first detent to lower the window. Pull to the first detent to raise the window. Release to stop at the desired position.

The switches work when the ignition is in ON or for a period of time after the ignition is placed in the OFF position. If the driver or passenger door is opened the power to the windows is canceled.

Express- Up/Down

If equipped, the front windows have an express feature that allows the window to be raised or lowered without holding the switch. Press or pull the switch fully and release it to activate the express feature. This mode can be canceled by briefly pressing or pulling the switch.

Auto-Reverse Function

If any object is in the path of the window when express operation is active, the window stops at the obstacle and auto-reverses to a preset factory position. Weather conditions such as severe icing also cause the window to auto-reverse. The window returns to normal operation once the obstacle or condition is removed.

If the battery on the vehicle has been recharged, disconnected, or is not working, the auto-reverse function may not operate properly. If this occurs, see “Programming the Power Windows” later in this section.

⚠ Warning

There are some small distances immediately before the closed position which cannot be detected. Make sure that all passengers have their hands, etc., inside the vehicle before closing the window.

Window Lockout

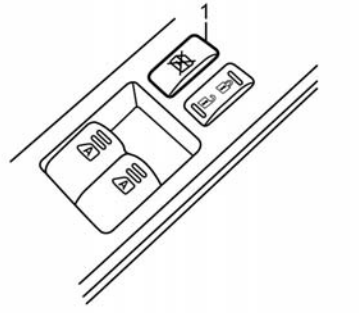

When the window lockout button (1) is pressed, only the driver side window can be opened or closed. Press again to cancel the window lockout function.

Programming the Power Windows

If the power window automatic function (closing only) does not operate properly, perform the following procedure to reprogram the windows:

To program each front window:

1. With the ignition in ON or ACC/ ACCESSORY, close all doors.
2. Press and hold the power window switch until the window is fully open.
3. Pull the power window switch up until the window is fully closed.
4. Continue holding the switch up for approximately two seconds after the window is completely closed.

The window is now reprogrammed. Repeat the process for the other windows.

If the power window automatic function does not operate properly after performing this procedure, see your dealer.

Sun Visors

Pull the sun visor down to block glare. Detach the sun visor from the center mount to pivot to the side window.

Seats and Restraints

Head Restraints
Head Restraints 3-2

Front Seats
Seat Adjustment 3-3
Lumbar Adjustment 3-4
Reclining Seatbacks 3-4
Front Seat Armrest 3-6
Folding Seatback 3-6

Safety Belts
Safety Belts 3-8
How to Wear Safety Belts Properly 3-9
Lap-Shoulder Belt 3-10
Safety Belt Use During Pregnancy 3-13
Safety Belt Extender 3-13
Safety System Check 3-13
Safety Belt Care 3-14
Replacing Safety Belt System Parts after a Crash 3-14

Airbag System
Airbag System 3-15
Where Are the Airbags? 3-17
When Should an Airbag Inflate? 3-18
What Makes an Airbag Inflate? 3-20
How Does an Airbag Restrain? 3-20
What Will You See after an Airbag Inflates? 3-20
Passenger Sensing System 3-22
Servicing the Airbag-Equipped Vehicle 3-28
Adding Equipment to the Airbag-Equipped Vehicle . . . 3-29
Airbag System Check 3-29
Replacing Airbag System Parts after a Crash 3-30

Child Restraints
Older Children 3-30
Infants and Young Children 3-32
Child Restraint Systems 3-34
Where to Put the Restraint . . . 3-37
Lower Anchors and Tethers for Children (LATCH System) 3-38
Replacing LATCH System Parts After a Crash 3-42
Securing Child Restraints 3-42

Head Restraints

The vehicle's front seats have adjustable head restraints in the outboard seating positions.

⚠ Warning

With head restraints that are not installed and adjusted properly, there is a greater chance that occupants will suffer a neck/spinal injury in a crash. Do not drive until the head restraints for all occupants are installed and adjusted properly.

For adjustable head restraints

Adjust the head restraint/headrest so the center is level with the center of your ears. If your ear position is still higher than the recommended alignment, place the head restraint at the highest position.

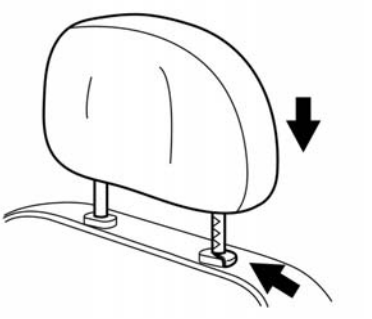

The height of the head restraint can be adjusted. Pull the head restraint up to raise it. Try to move the head restraint to make sure that it is locked in place.

To lower the head restraint, press the button located on the top of the seatback and push the restraint down. Try to move the head restraint after the button is released to make sure that it is locked in place.

Head Restraint Removal and Reinstallation

⚠ Warning

If the head restraints are removed for any reason, they should be securely stored to prevent them from causing injury to passengers or damage to the vehicle in case of sudden braking or an accident.

Use the following procedure to remove the head restraint:

1. Pull the head restraint up to the highest position.
2. Press and hold the lock knob.
3. Remove the head restraint from the seat.
4. Store the head restraint properly in a secure place so it is not loose in the vehicle.
5. Reinstall and properly adjust the head restraint before an occupant uses the seating position.

Use the following procedure to reinstall the head restraint.

1. Align the head restraint stalks with the holes in the seat. Make sure that the head restraint is facing the correct direction. The stalk with the notch (notches) must be installed in the hole with the lock knobs.
2. Push and hold the lock knob and push the head restraint down.
3. Properly adjust the head restraint before an occupant uses the seating position.

⚠ Warning

With head restraints that are not installed and adjusted properly, there is a greater chance that occupants will suffer a neck/spinal injury in a crash. Do not drive until the head restraints for all occupants are installed and adjusted properly.

Front Seats

Seat Adjustment

⚠ Warning

You can lose control of the vehicle if you try to adjust a driver seat while the vehicle is moving. Adjust the driver seat only when the vehicle is not moving.

To adjust the seat:

1. Lift the bar under the front edge of the seat cushion to unlock the seat.
2. Slide the seat to the desired position and release the bar.
3. Try to move the seat back and forth to be sure the seat is locked in place.

To lift the seat, pull up or push down the lever to adjust the seat.

Lumbar Adjustment

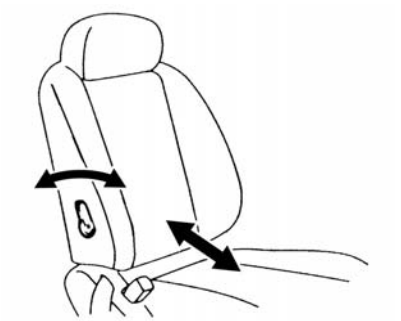

On the driver seat, move the lever on the inboard side of the seat forward or rearward.

Reclining Seatbacks

⚠ Warning

If either seatback is not locked, it could move forward in a sudden stop or crash. That could cause

(Continued)

Warning (Continued)

injury to the person sitting there. Always push and pull on the seatbacks to be sure they are locked.

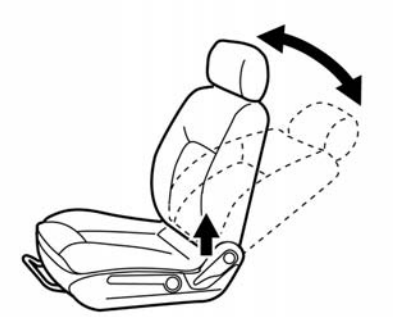

To recline the seatback:

1. Lift the lever on the side of the seat.

2. Move the seatback to the desired position, and then release the lever to lock the seatback in place.
3. Push and pull on the seatback to make sure it is locked.

To return the seatback to the upright position:

1. Lift the lever fully without applying pressure to the seatback, and the seatback will return to the upright position.
2. Push and pull on the seatback to make sure it is locked.

⚠ Warning

Sitting in a reclined position when the vehicle is in motion can be dangerous. Even when buckled up, the safety belts cannot do their job.

(Continued)

Warning (Continued)

The shoulder belt will not be against your body. Instead, it will be in front of you. In a crash, you could go into it, receiving neck or other injuries.

The lap belt could go up over your abdomen. The belt forces would be there, not at your pelvic bones. This could cause serious internal injuries.

For proper protection when the vehicle is in motion, have the seatback upright. Then sit well back in the seat and wear the safety belt properly.

Do not have a seatback reclined if the vehicle is moving.

Front Seat Armrest

There is an armrest on the inboard side of the driver seat. To raise or lower the armrest, push up or pull down on the armrest.

Folding Seatback

The front passenger seatback may fold flat.

⚠ Warning

If you fold the seatback forward to carry longer objects, such as skis, be sure any such cargo is not near an airbag. In a crash, an inflating airbag might force that object toward a person. This could cause severe injury or even death. Secure objects away from the area in which an airbag would inflate. For more information, see *Where Are the Airbags? on page 3-17* and *Vehicle Load Limits on page 9-9*.

⚠ Warning

Things you put on this seatback can strike and injure people in a sudden stop or turn, or in a crash. Remove or secure all items before driving.

⚠ Caution

Folding a seat with the safety belts still fastened may cause damage to the seat or the safety belts. Always unbuckle the safety belts and return them to their normal stowed position before folding a seat.

To fold the seatback:

1. Lower the head restraint all the way. See *Head Restraints on page 3-2*.
2. Move the seat as far back as possible. See *Seat Adjustment on page 3-3*.

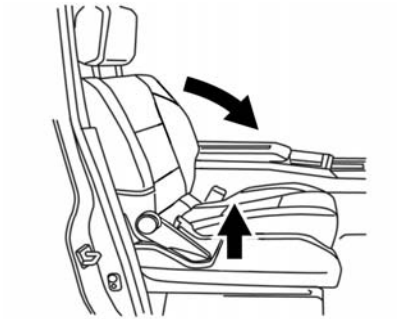

3. Lift the lever fully and fold the seatback forward until it disengages.

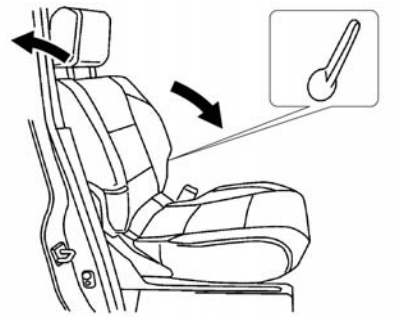

4. Lift the latch on the inboard side of the seatback to release the seat.

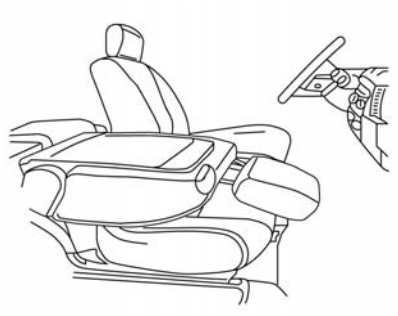

5. Fold the seatback flat over the seat cushion.

To raise the seatback:

1. Raise the seatback and push it rearward.
2. Pull up on the recline lever and lean the seatback to the upright seating position. See *Reclining Seatbacks on page 3-4*.

⚠ Warning

If either seatback is not locked, it could move forward in a sudden stop or crash. That could cause injury to the person sitting there. Always push and pull on the seatbacks to be sure they are locked.

3. Push and pull on the seatback to make sure it is locked in place.

Safety Belts

This section of the manual describes how to use safety belts properly. It also describes some things not to do with safety belts.

⚠ Warning

Do not let anyone ride where a safety belt cannot be worn properly. In a crash, if you or your passenger(s) are not wearing safety belts, injuries can be much worse than if you are wearing safety belts. You can be seriously injured or killed by hitting things inside the vehicle harder or by being ejected from the vehicle. In addition, anyone who is not buckled up can strike other passengers in the vehicle.

It is extremely dangerous to ride in a cargo area, inside or outside of a vehicle. In a collision, passengers riding in these areas

(Continued)

Warning (Continued)

are more likely to be seriously injured or killed. Do not allow passengers to ride in any area of the vehicle that is not equipped with seats and safety belts.

Always wear a safety belt, and check that all passenger(s) are restrained properly too.

This vehicle has indicators as a reminder to buckle the safety belts. See *Safety Belt Reminders on page 5-9*.

Why Safety Belts Work

When riding in a vehicle, you travel as fast as the vehicle does. If the vehicle stops suddenly, you keep going until something stops you. It could be the windshield, the instrument panel, or the safety belts!

When you wear a safety belt, you and the vehicle slow down together. There is more time to stop because you stop over a longer distance and, when worn properly, your strongest bones take the forces from the safety belts. That is why wearing safety belts makes such good sense.

Questions and Answers About Safety Belts

Q: Will I be trapped in the vehicle after a crash if I am wearing a safety belt?

A: You *could* be — whether you are wearing a safety belt or not. Your chance of being conscious during and after a crash, so you *can* unbuckle and get out, is *much* greater if you are belted.

Q: If my vehicle has airbags, why should I have to wear safety belts?

A: Airbags are supplemental systems only; so they work *with* safety belts — not instead of them. Whether or not an airbag is provided, all occupants still have to buckle up to get the most protection.

Also, in nearly all states and in all Canadian provinces, the law requires wearing safety belts.

How to Wear Safety Belts Properly

This section is only for people of adult size.

There are special things to know about safety belts and children. And there are different rules for smaller children and infants. If a child will be riding in the vehicle, see *Older Children on page 3-30* or *Infants and Young Children on page 3-32*. Follow those rules for everyone's protection.

It is very important for all occupants to buckle up. Statistics show that unbelted people are hurt more often in crashes than those who are wearing safety belts.

There are important things to know about wearing a safety belt properly.

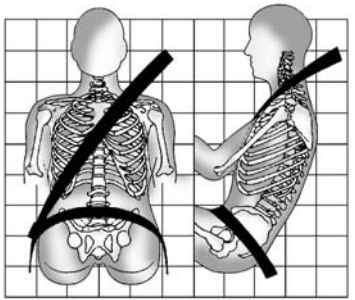

- Sit up straight and always keep your feet on the floor in front of you.
- Always use the correct buckle for your seating position.
- Wear the lap part of the belt low and snug on the hips, just touching the thighs. In a crash, this applies force to the strong pelvic bones and you would be less likely to slide under the lap belt. If you slid under it, the belt would apply force on your abdomen. This could cause serious or even fatal injuries.
- Wear the shoulder belt over the shoulder and across the chest. These parts of the body are best able to take belt restraining forces. The shoulder belt locks if there is a sudden stop or crash.

⚠ Warning

You can be seriously injured, or even killed, by not wearing your safety belt properly.

- Never allow the lap or shoulder belt to become loose or twisted.
- Never wear the shoulder belt under both arms or behind your back.
- Never route the lap or shoulder belt over an armrest.

Lap-Shoulder Belt

All seating positions in the vehicle have a lap-shoulder belt.

The following instructions explain how to wear a lap-shoulder belt properly.

1. Adjust the seat, if the seat is adjustable, so you can sit up straight. To see how, see “Seats” in the Index.

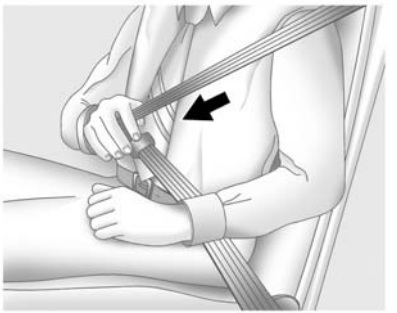

2. Pick up the latch plate and pull the belt across you. Do not let it get twisted.

   The lap-shoulder belt may lock if you pull the belt across you very quickly. If this happens, let the belt go back slightly to unlock it. Then pull the belt across you more slowly.

   If the shoulder portion of the passenger belt is pulled out all the way, the child restraint locking feature may be engaged. If this happens, let the belt go back all the way and start again.

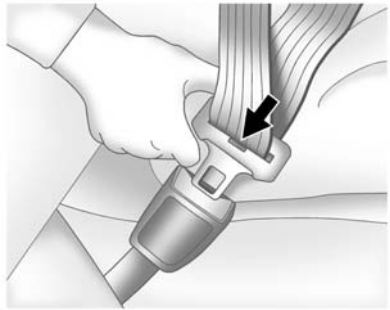

3. Push the latch plate into the buckle until it clicks.

   Pull up on the latch plate to make sure it is secure. If the belt is not long enough, see *Safety Belt Extender on page 3-13*.

   Position the release button on the buckle so that the safety belt could be quickly unbuckled if necessary.

4. If equipped with a shoulder belt height adjuster, move it to the height that is right for you. See “Shoulder Belt Height Adjuster” later in this section for instructions on use and important safety information.

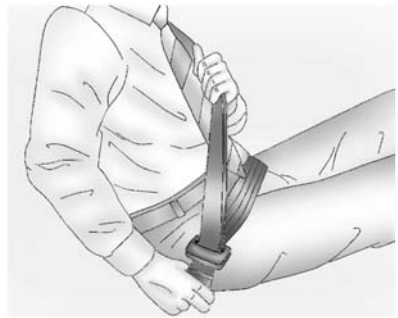

5. To make the lap part tight, pull up on the shoulder belt.

To unlatch the belt, push the button on the buckle. The belt should return to its stowed position.

Before a door is closed, be sure the safety belt is out of the way. If a door is slammed against a safety belt, damage can occur to both the safety belt and the vehicle.

Shoulder Belt Height Adjuster

The vehicle has a shoulder belt height adjuster for the driver.

Adjust the height so the shoulder portion of the belt is on the shoulder and not falling off of it. The belt should be close to, but not contacting, the neck. Improper shoulder belt height adjustment could reduce the effectiveness of the safety belt in a crash. See *How to Wear Safety Belts Properly on page 3-9*.

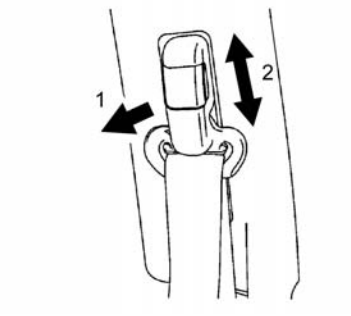

To adjust, pull out the adjustment button (1) and move the height adjuster (2) to the desired position so the belt passes over the center of the shoulder. The belt should be away from your face and neck, but not falling off your shoulder.

Release the adjustment button (1) to lock the shoulder belt height adjuster into position.

After the height adjuster is set to the desired position, make sure it is locked in place. Try to move the height adjuster up or down without pulling out on the button (1).

Safety Belt Pretensioners

This vehicle has safety belt pretensioners for front outboard occupants. Although the safety belt pretensioners cannot be seen, they are part of the safety belt assembly. They can help tighten the safety belts during certain types of frontal crashes if the threshold conditions for pretensioner activation are met. Safety belt pretensioners can also help tighten the safety belts in a side crash or rollover event.

When a pretensioner activates, smoke is released and a loud noise may be heard. This smoke is not harmful and does not indicate a fire.

This could cause breathing problems for people with a history of asthma or other breathing trouble.

Pretensioners work only once. If the pretensioners activate in a crash, they will need to be replaced, and the vehicle's safety belt system will probably need other new parts. See *Replacing Safety Belt System Parts after a Crash on page 3-14*.

Safety Belt Use During Pregnancy

Safety belts work for everyone, including pregnant women. Like all occupants, they are more likely to be seriously injured if they do not wear safety belts.

A pregnant woman should wear a lap-shoulder belt, and the lap portion should be worn as low as possible, below the rounding, throughout the pregnancy.

The best way to protect the fetus is to protect the mother. When a safety belt is worn properly, it is more likely that the fetus will not be hurt in a crash. For pregnant women, as for anyone, the key to making safety belts effective is wearing them properly.

Safety Belt Extender

If the vehicle's safety belt will fasten around you, you should use it.

But if a safety belt is not long enough, your dealer will order you an extender. When you go in to order it, take the heaviest coat you will wear, so the extender will be long enough for you. To help avoid personal injury, do not let someone else use it, and use it only for the seat it is made to fit. The extender has been designed for adults. Never use it for securing child seats. To wear it, attach it to the regular safety belt. See the instruction sheet that comes with the extender.

Safety System Check

Now and then, check that the safety belt reminder light, safety belts, buckles, latch plates, retractors, and anchorages are all working properly. Look for any other loose or damaged safety belt system parts that might keep a safety belt system from doing its job. See your dealer

to have it repaired. Torn or frayed safety belts may not protect you in a crash. They can rip apart under impact forces. If a belt is torn or frayed, get a new one right away.

Make sure the safety belt reminder light is working. See *Safety Belt Reminders on page 5-9*.

Keep safety belts clean and dry. See *Safety Belt Care on page 3-14*.

Safety Belt Care

- To clean the safety belt webbing, apply a mild soap solution or any solution recommended for cleaning upholstery or carpet. Then, wipe with a cloth and allow the safety belts to dry in the shade. Do not allow the safety belts to retract until they are completely dry.
- If dirt builds up in the shoulder belt guide of the safety belt anchors, the safety belts may retract slowly. Wipe the shoulder belt guide with a clean, dry cloth.

  Periodically check to see that the safety belt and the metal components, such as buckles, tongues, retractors, flexible wires and anchors, work properly. If loose parts, deterioration, cuts, or other damage on the webbing is found, the entire safety belt assembly should be replaced.

⚠ Warning

Do not bleach or dye safety belts. It may severely weaken them. In a crash, they might not be able to provide adequate protection. Clean safety belts only with mild soap and lukewarm water.

Replacing Safety Belt System Parts after a Crash

⚠ Warning

A crash can damage the safety belt system in the vehicle. A damaged safety belt system may not properly protect the person using it, resulting in serious injury or even death in a crash. To help make sure the safety belt systems are working properly after a crash, have them inspected and any necessary replacements made as soon as possible.

After a minor crash, replacement of safety belts may not be necessary. But the safety belt assemblies that were used during any crash may have been stressed or damaged.

See your dealer to have the safety belt assemblies inspected or replaced.

New parts and repairs may be necessary even if the safety belt system was not being used at the time of the crash.

Have the safety belt pretensioners checked if the vehicle has been in a crash, or if the airbag readiness light stays on after you start the vehicle or while you are driving. See *Airbag Readiness Light on page 5-9*.

Airbag System

The vehicle has the following airbags:

- A frontal airbag for the driver.
- A frontal airbag for the front outboard passenger.
- A seat-mounted side impact airbag for the driver.
- A seat-mounted side impact airbag for the front outboard passenger.
- A roof-rail airbag for the driver.
- A roof-rail airbag for the front outboard passenger.

All of the airbags have the word SRS AIRBAG on the trim or on a label near the deployment opening.

For frontal airbags, the word SRS AIRBAG will appear on the middle part of the steering wheel for the driver and on the instrument panel for the front outboard passenger.

For seat-mounted side impact airbags, the word SRS AIRBAG is on the side of the seatback closest to the door.

For roof-rail airbags, the word SRS CURTAIN AIRBAG is at the top of the pillar behind the front seats.

Airbags are designed to supplement the protection provided by safety belts. Even though today's airbags are also designed to help reduce the risk of injury from the force of an inflating bag, all airbags must inflate very quickly to do their job.

Here are the most important things to know about the airbag system:

⚠ Warning

You can be severely injured or killed in a crash if you are not wearing your safety belt, even with airbags. Airbags are designed to work with safety belts, not replace them. Also,

(Continued)

Warning (Continued)

airbags are not designed to inflate in every crash. In some crashes safety belts are the only restraint. See *When Should an Airbag Inflate? on page 3-18*.

Wearing your safety belt during a crash helps reduce the chance of hitting things inside the vehicle or being ejected from it. Airbags are “supplemental restraints” to the safety belts. Everyone in the vehicle should wear a safety belt properly, whether or not there is an airbag for that person.

⚠ Warning

Because airbags inflate with great force and faster than the blink of an eye, anyone who is up against, or very close to any

(Continued)

Warning (Continued)

airbag when it inflates can be seriously injured or killed. Do not sit unnecessarily close to any airbag, as you would be if sitting on the edge of the seat or leaning forward. Safety belts help keep you in position before and during a crash. Always wear a safety belt, even with airbags. The driver should sit as far back as possible while still maintaining control of the vehicle.

Occupants should not lean on or sleep against the door or side windows in seating positions with seat-mounted side impact airbags and/or roof-rail airbags.

⚠ Warning

Children who are up against, or very close to, any airbag when it inflates can be seriously injured or killed. Always secure children properly in the vehicle. To read how, see *Older Children on page 3-30* or *Infants and Young Children on page 3-32*.

There is an airbag readiness light on the instrument cluster, which shows the airbag symbol.

The system checks the airbag electrical system for malfunctions. The light tells you if there is an electrical problem. See *Airbag Readiness Light on page 5-9*.

Where Are the Airbags?

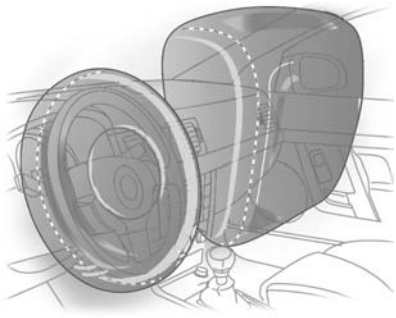

The driver frontal airbag is in the center of the steering wheel.

The front outboard passenger frontal airbag is in the passenger side instrument panel.

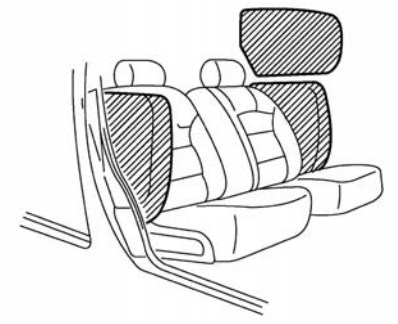

Passenger Side Shown, Driver Side Similar

The seat-mounted side impact airbags for the driver and front outboard passenger are in the side of the seatbacks closest to the door.

The roof-rail airbags for the driver and front outboard passenger are in the trim above the side windows.

⚠ Warning

If something is between an occupant and an airbag, the airbag might not inflate properly or it might force the object into that person causing severe injury or even death. The path of an inflating airbag must be kept clear. Do not put anything between an occupant and an airbag, and do not attach or put anything on the steering wheel hub or on or near any other airbag covering.

Do not use seat accessories that block the inflation path of a seat-mounted side impact airbag.

Never secure anything to the roof of a vehicle with roof-rail airbags by routing a rope or tie-down through any door or window opening. If you do, the path of an inflating roof-rail airbag will be blocked.

When Should an Airbag Inflate?

This vehicle is equipped with airbags. See *Airbag System on page 3-15*. Airbags are designed to inflate when the ignition is in the ON position and the impact exceeds the specific airbag system's deployment threshold. Deployment thresholds are used to predict how severe a crash is likely to be in time for the airbags to inflate and help restrain the occupants. The vehicle has electronic sensors that help the airbag system determine the severity of the impact. Deployment thresholds can vary with specific vehicle design.

Frontal airbags are designed to inflate in higher severity frontal collisions, although they may inflate if the forces in another type of collision are similar to those of a higher severity frontal impact, to help reduce the potential for severe injuries, mainly to the driver's or front outboard passenger's head and chest. Frontal airbags do not provide restraint to the lower body.

Depending upon sensor input and crash severity, it is possible that only one frontal airbag may inflate during a crash.

In addition, the vehicle has advanced technology frontal airbags. Advanced technology frontal airbags adjust the restraint according to crash severity and safety belt usage.

In any particular crash, no one can say whether an airbag should have inflated simply because of the vehicle damage or repair costs.

⚠ Warning

- The front airbags ordinarily will not inflate in the event of a side impact, rear impact, rollover, or lower severity frontal collision. Always wear your safety belt to help

(Continued)

Warning (Continued)

reduce the risk or severity of injury in various kinds of accidents.

- The front passenger airbag will not inflate if the passenger airbag status indicator is lit or if the front passenger seat is unoccupied. For more information, see *Passenger Airbag Status Indicator on page 5-10*.
- The safety belts and the front airbags are most effective when you are sitting well back and upright in the seat with both feet on the floor. The front airbags inflate with great force. Even with the advanced airbag system, if you are unrestrained, leaning forward, sitting sideways, or out of position in

(Continued)

Warning (Continued)

any way, you are at greater risk of injury or death in a crash. You may also receive serious or fatal injuries from the front airbag if you are up against it when it inflates. Always sit back against the seatback and as far away as practical from the steering wheel or instrument panel. Always use the safety belts.

- The driver and front passenger safety belt buckles are equipped with sensors that detect if the safety belts are fastened. The advanced airbag system monitors the severity of a collision and safety belt usage, then inflates the airbags as needed. Failure to properly wear the safety belts can increase the risk or severity of injury in an accident.

(Continued)

Warning (Continued)

- The front passenger seat is equipped with a Passenger Sensing System (weight sensor) that turns the front passenger airbag off under some conditions. This sensor is only used in this seat. Failure to be properly seated and wearing the safety belt can increase the risk or severity of injury in an accident. For more information, see *Passenger Airbag Status Indicator on page 5-10*.
- Keep hands on the outside of the steering wheel. Placing them inside the steering wheel rim could increase the risk that they are injured when the front airbag inflates.

⚠ Warning

Front seat-mounted side impact airbags and roof-rail rollover airbags:

- The seat-mounted side impact airbags and roof-rail airbags ordinarily will not inflate in the event of a frontal impact, rear impact, or lower severity side collision. Always wear your safety belts to help reduce the risk or severity of injury in various kinds of accidents.
- The safety belts, the seat-mounted side impact airbags, and roof-rail airbags are most effective when you are sitting with both feet on the floor. The seat-mounted side impact airbags and roof-rail airbags inflate with great force. Do not allow anyone sitting in the seats to

(Continued)

Warning (Continued)

extend their hand out of the window or lean against the door.

- Do not use seat covers on the seatbacks. They may interfere with seat-mounted side impact airbag inflation.

What Makes an Airbag Inflate?

In a deployment event, the sensing system sends an electrical signal triggering a release of gas from the inflator. Gas from the inflator fills the airbag causing the bag to break out of the cover. The inflator, the airbag, and related hardware are all part of the airbag module.

For airbag locations, see *Where Are the Airbags? on page 3-17*.

How Does an Airbag Restrain?

In moderate to severe frontal or near frontal collisions, even belted occupants can contact the steering wheel or the instrument panel. In moderate to severe side collisions, even belted occupants can contact the inside of the vehicle.

Airbags supplement the protection provided by safety belts by distributing the force of the impact more evenly over the occupant's body.

Rollover capable roof-rail airbags are designed to help contain the head and chest of occupants in the front outboard seating positions. The rollover capable roof-rail airbags are designed to help reduce the risk of full or partial ejection in rollover events, although no system can prevent all such ejections.

But airbags would not help in many types of collisions, primarily because the occupant's motion is not toward those airbags. See *When Should an Airbag Inflate? on page 3-18*.

Airbags should never be regarded as anything more than a supplement to safety belts.

What Will You See after an Airbag Inflates?

After the frontal airbags and seat-mounted side impact airbags inflate, they quickly deflate, so quickly that some people may not even realize an airbag inflated. Roof-rail airbags may still be at least partially inflated for some time after they inflate. Some components of the airbag module may be hot for several minutes. For location of the airbags, see *Where Are the Airbags? on page 3-17*.

The parts of the airbag that come into contact with you may be warm, but not too hot to touch. There may be some smoke and dust coming from the vents in the deflated airbags. Airbag inflation does not

prevent the driver from seeing out of the windshield or being able to steer the vehicle, nor does it prevent people from leaving the vehicle.

⚠ Warning

When an airbag inflates, there may be dust in the air. This dust could cause breathing problems for people with a history of asthma or other breathing trouble. To avoid this, everyone in the vehicle should get out as soon as it is safe to do so. If you have breathing problems but cannot get out of the vehicle after an airbag inflates, then get fresh air by opening a window or a door. If you experience breathing problems following an airbag deployment, you should seek medical attention.

⚠ Warning

A crash severe enough to inflate the airbags may have also damaged important functions in the vehicle, such as the fuel system, brake and steering systems, etc. Even if the vehicle appears to be drivable after a moderate crash, there may be concealed damage that could make it difficult to safely operate the vehicle.

Use caution if you should attempt to restart the engine after a crash has occurred.

In many crashes severe enough to inflate the airbag, windshields are broken by vehicle deformation. Additional windshield breakage may also occur from the front outboard passenger airbag.

- Airbags are designed to inflate only once. After an airbag inflates, you will need some new parts for the airbag system. If you do not get them, the airbag system will not be there to help protect you in another crash. A new system will include airbag modules and possibly other parts. The service manual for the vehicle covers the need to replace other parts.
- The vehicle has a crash sensing and diagnostic module which records information after a crash. See *Vehicle Data Recording and Privacy on page 13-14* and *Event Data Recorders on page 13-14*.
- Let only qualified technicians work on the airbag systems. Improper service can mean that an airbag system will not work properly. See your dealer for service.

Passenger Sensing System

⚠ Warning

The front passenger airbag is designed to automatically turn off under some conditions. Read this section carefully to learn how it operates. Proper use of the seat, safety belt, and child restraints is necessary for most effective protection. Failure to follow all instructions in this manual concerning the use of seats, safety belts, and child restraints can increase the risk or severity of injury in an accident.

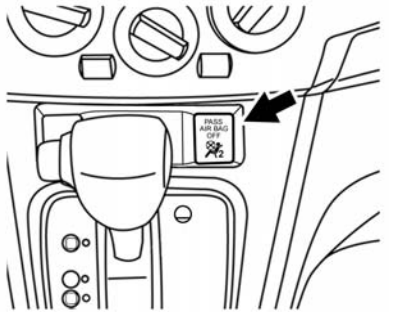

The vehicle has a passenger sensing system for the front outboard passenger position. The passenger airbag status indicator is under the climate controls.

After the ignition switch is placed in the ON position, the passenger airbag status indicator on the instrument panel will light for about seven seconds. When the system check is complete, the word OFF and the symbol for off will be visible if the front outboard passenger frontal airbag is turned off and the front outboard passenger seat is occupied. See *Passenger Airbag Status Indicator on page 5-10*.

The passenger sensing system turns off the front outboard passenger frontal airbag, under certain conditions. No other airbag is affected by the passenger sensing system.

The passenger sensing system works with sensors that are part of the front outboard passenger seat. The sensors are designed to detect the presence of a properly seated occupant and determine if the front outboard passenger frontal airbag should be allowed to inflate or not. If the front outboard passenger seat is unoccupied, the passenger airbag status indicator will not remain lit, and the front outboard passenger frontal airbag will be turned off.

⚠ Warning

To ensure proper operation of the passenger's advanced airbag system, observe the following items:

- Do not place heavy loads heavier than 1 kg (2.2 lb) on the seatback, in the underseat storage bin, head restraint, or in the seatback pocket.
- Do not store luggage behind the seat that can press into the seatback.
- If a forward-facing child restraint is installed in the passenger seat, do not position the passenger seat so the child restraint contacts the instrument panel. If the child restraint does contact the instrument panel, the system may determine the seat is occupied and the

(Continued)

Warning (Continued)

passenger airbag may deploy in a collision. Also, the passenger airbag status indicator may not light. For more information, see *Securing Child Restraints on page 3-42* for information about installing and using child restraints.

- Confirm the operating condition with the passenger airbag status indicator.
- If you notice that the passenger airbag status indicator light is not operating as described in this section, take your vehicle to your dealer to check the passenger sensing system.

According to accident statistics, children are safer when properly secured in a rear seat in a correct child restraint for their weight and size.

Rear-facing child restraints should not be transported in the vehicle, even if the airbag is off.

Never put a rear-facing child seat in the front. This is because the risk to the rear-facing child is so great, if the airbag inflates.

⚠ Warning

A child in a rear-facing child restraint can be seriously injured or killed if the front outboard passenger frontal airbag inflates. This is because the back of the rear-facing child restraint would be very close to the inflating airbag. A child in a forward-facing child restraint can be seriously injured or killed if the front outboard passenger frontal airbag inflates and the passenger seat is in a forward position.

(Continued)

Warning (Continued)

Even if the passenger sensing system has turned off the front outboard passenger frontal airbag, no system is fail-safe. No one can guarantee that an airbag will not deploy under some unusual circumstance, even though it is turned off.

Do not secure a rear-facing child restraint in the vehicle.

If you secure a forward-facing child restraint in the vehicle, always move the front passenger seat as far back as it will go.

The passenger sensing system is designed to turn off the front outboard passenger airbag if:

- The front outboard passenger seat is unoccupied.
- The system determines that an infant is present in a rear-facing child restraint.
- The system determines that a small child is present in a child restraint.
- The system determines that a small child is present in a booster seat.
- A front outboard passenger takes his/her weight off of the seat for a period of time.
- The front outboard passenger seat is occupied by a smaller person, such as a child who has outgrown child restraints.
- There is a critical problem with the airbag system or the passenger sensing system.

The passenger sensing system is designed to turn on the front outboard passenger frontal airbag anytime the system senses that a person of adult size is sitting properly in the front outboard passenger seat.

When the passenger sensing system has allowed the airbag to be enabled, the passenger airbag status indicator will not be lit.

For some children who have outgrown child restraints, and for very small adults, the passenger sensing system may or may not turn off the front outboard passenger frontal airbag, depending upon the person's seating posture and body build. Everyone in the vehicle who has outgrown child restraints should wear a safety belt properly — whether or not there is an airbag for that person.

⚠ Warning

If the airbag readiness light ever comes on and stays on, or flashes, it means that something may be wrong with the airbag system. To help avoid injury to yourself or others, have the vehicle serviced right away.

(Continued)

Warning (Continued)

See *Airbag Readiness Light on page 5-9* for more information, including important safety information.

If the Off Indicator Is Not Lit for a Child Restraint

If a child restraint has been installed and the off indicator is not lit:

1. Turn the vehicle off.
2. Remove the child restraint from the vehicle.
3. Remove any additional items from the seat such as blankets, cushions, seat covers, seat heaters, or seat massagers.
4. Reinstall the child restraint following the directions provided by the child restraint manufacturer and refer to *Securing Child Restraints on page 3-42*.
5. If, after reinstalling the child restraint and restarting the vehicle, the off indicator is still not lit, turn the vehicle off. Then slightly recline the vehicle seatback and adjust the seat cushion, if adjustable, to make sure that the vehicle seatback is not pushing the child restraint into the seat cushion. Also make sure the child restraint is not trapped under the vehicle head restraint. If this happens, adjust the head restraint. See *Head Restraints on page 3-2*.
6. Restart the vehicle.

If the off indicator is still not lit, do not install a child restraint in this vehicle and check with your dealer.

If the Off Indicator Is Lit for an Adult-Sized Occupant

If a person of adult size is sitting in the front outboard passenger seat, but the off indicator is lit, it could be because that person is not sitting properly in the seat. Use the following steps to allow the system to detect that person and enable the front outboard passenger frontal airbag:

1. Turn the vehicle off.

2. Remove any additional material from the seat, such as blankets, cushions, seat covers, seat heaters, or seat massagers.
3. Place the seatback in the fully upright position.
4. Have the person sit upright in the seat, centered on the seat cushion, with legs comfortably extended.
5. Restart the vehicle and have the person remain in this position for two to three minutes after the off indicator is not lit.

⚠ Warning

If the front outboard passenger airbag is turned off for an adult-sized occupant, the airbag will not be able to inflate and help protect that person in a crash, resulting in an increased risk of serious injury or even death. An adult-sized occupant should not

(Continued)

Warning (Continued)

ride in the front outboard passenger seat, if the passenger airbag off indicator is lit.

Additional Factors Affecting System Operation

Safety belts help keep the passenger in position on the seat during vehicle maneuvers and braking, which helps the passenger sensing system maintain the passenger airbag status. See “Safety Belts” and “Child Restraints” in the Index for additional information about the importance of proper restraint use.

A thick layer of additional material, such as a blanket or cushion, or aftermarket equipment such as seat covers, seat heaters, and seat massagers can affect how well the passenger sensing system operates. We recommend that you not use seat covers or other aftermarket equipment except when approved by GM for your specific vehicle. See *Adding Equipment to the Airbag-Equipped Vehicle on page 3-29* for more information about modifications that can affect how the system operates.

⚠ Warning

Stowing of articles under the passenger seat or between the passenger seat cushion and seatback may interfere with the proper operation of the passenger sensing system.

⚠ Warning

- Do not place any objects on the steering wheel pad or on the instrument panel. Also, do not place any objects between any occupant and the steering wheel or

(Continued)

Warning (Continued)

instrument panel. Such objects may become dangerous projectiles and cause injury if the front airbags inflate.

- Do not place objects with sharp edges on the seat. Also, do not place heavy objects on the seat that will leave permanent impressions in the seat. Such objects can damage the seat or passenger sensing system sensors (weight sensors). This can affect the operation of the airbag system and result in serious personal injury.
- Do not use water or acidic cleaners (hot steam cleaners) on the seat. This can damage the seat or passenger sensing system sensors. This

(Continued)

Warning (Continued)

can also affect the operation of the airbag system and result in serious personal injury.

- Immediately after inflation, several front airbag system components will be hot. Do not touch them; you may severely burn yourself.
- No unauthorized changes should be made to any components or wiring of the supplemental airbag system. This is to prevent accidental inflation of the supplemental airbag or damage to the supplemental airbag system.
- Do not make unauthorized changes to your vehicle's electrical system, suspension system, or front end

(Continued)

Warning (Continued)

structure. This could affect proper operation of the front airbag system.

- Tampering with the front airbag system may result in serious personal injury. Tampering includes changes to the steering wheel and the instrument panel assembly by placing material over the steering wheel pad and above the instrument panel, or by installing additional trim material around the airbag system.
- Removing or modifying the front passenger seat may affect the function of the airbag and result in serious personal injury.
- Modifying or tampering with the front passenger seat may result personal injury. For

(Continued)

Warning (Continued)

example, do not change the front seats by placing material on the seat cushion or by installing additional trim material, such as seat covers, on the seat that are not specifically designed to assure proper airbag operation. Additionally, do not stow any objects under the front passenger seat or the seat cushion and seatback. Such objects may interfere with the proper operation of the passenger sensing system sensor (weight sensor).

- No unauthorized changes should be made to any components or wiring of the safety belt system. This may affect the front airbag system.

(Continued)

Warning (Continued)

Tampering with the safety belt system may result in serious personal injury.

- Work on and around the front airbag system should be done by your dealer. Installation of electrical equipment should also be done by your dealer. The supplemental airbag system wiring harnesses should not be modified or disconnected; airbag wiring harness connectors are yellow and orange for easy identification. Unauthorized electrical test equipment and probing devices should not be used on the airbag system.
- A cracked windshield should be replaced immediately by a qualified repair facility. A cracked windshield could affect the function of the supplemental airbag system.

Servicing the Airbag-Equipped Vehicle

Airbags affect how the vehicle should be serviced. There are parts of the airbag system in several places around the vehicle. Your dealer and the service manual have information about servicing the vehicle and the airbag system. To purchase a service manual, see *Service Publications Ordering Information on page 13-11*.

⚠ Warning

For up to three minutes after the vehicle is turned off and the battery is disconnected, an airbag can still inflate during improper service. You can be injured if you are close to an airbag when it inflates. Avoid yellow connectors. They are probably part of the airbag system. Be sure to follow

(Continued)

Warning (Continued)

proper service procedures, and make sure the person performing work for you is qualified to do so.

Adding Equipment to the Airbag-Equipped Vehicle

Adding accessories that change the vehicle's frame, bumper system, height, front end, or side sheet metal, may keep the airbag system from working properly. The operation of the airbag system can also be affected by changing or moving any parts of the front seats, safety belts, the airbag sensing and diagnostic module, steering wheel, instrument panel, any of the airbag modules, ceiling or pillar garnish trim, front sensors, side impact sensors, or airbag wiring.

Your dealer and the service manual have information about the location of the airbag sensors, sensing and diagnostic module, and airbag wiring.

In addition, the vehicle has a passenger sensing system for the front outboard passenger position, which includes sensors that are part of the passenger seat. The passenger sensing system may not operate properly if the original seat trim is replaced with non-GM covers, upholstery, or trim; or with GM covers, upholstery, or trim designed for a different vehicle. Any object, such as an aftermarket seat heater or a comfort-enhancing pad or device, installed under or on top of the seat fabric, could also interfere with the operation of the passenger sensing system. This could either prevent proper deployment of the passenger airbag(s) or prevent the passenger sensing system from properly turning off the passenger airbag(s). See *Passenger Sensing System on page 3-22*.

If the vehicle has rollover roof-rail airbags, see *Different Size Tires and Wheels on page 10-43* for additional important information.

If you have to modify your vehicle because you have a disability and you have questions about whether the modifications will affect the vehicle's airbag system, or if you have questions about whether the airbag system will be affected if the vehicle is modified for any other reason, call Customer Assistance. See *Customer Assistance Offices on page 13-3*.

Airbag System Check

The airbag system does not need regularly scheduled maintenance or replacement. Make sure the airbag readiness light is working. See *Airbag Readiness Light on page 5-9*.

⚠ Caution

If an airbag covering is damaged, opened, or broken, the airbag may not work properly. Do not open or break the airbag coverings. If there are any opened or broken airbag coverings, have the airbag covering and/or airbag module replaced. For the location of the airbags, see *Where Are the Airbags? on page 3-17*. See your dealer for service.

Replacing Airbag System Parts after a Crash

⚠ Warning

A crash can damage the airbag systems in the vehicle.
A damaged airbag system may not work properly and may not

(Continued)

Warning (Continued)

protect you and your passenger(s) in a crash, resulting in serious injury or even death. To help make sure the airbag systems are working properly after a crash, have them inspected and any necessary replacements made as soon as possible.

If an airbag inflates, you will need to replace airbag system parts. See your dealer for service.

If the airbag readiness light stays on after the vehicle is started or comes on when you are driving, the airbag system may not work properly. Have the vehicle serviced right away. See *Airbag Readiness Light on page 5-9*.

Child Restraints

Older Children

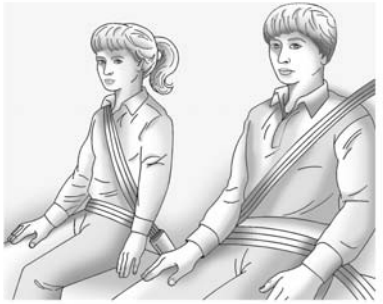

Older children who have outgrown booster seats should wear the vehicle safety belts.

The manufacturer's instructions that come with the booster seat state the weight and height limitations for that booster. Use a booster seat with a lap-shoulder belt until the child passes the fit test below:

- Sit all the way back on the seat. Do the knees bend at the seat edge? If yes, continue. If no, return to the booster seat.
- Buckle the lap-shoulder belt. Does the shoulder belt rest on the shoulder? If yes, continue. If no, return to the booster seat.
- Does the lap belt fit low and snug on the hips, touching the thighs? If yes, continue. If no, return to the booster seat.
- Can proper safety belt fit be maintained for the length of the trip? If yes, continue. If no, return to the booster seat.

Q: What is the proper way to wear safety belts?

A: An older child should wear a lap-shoulder belt and get the additional restraint a shoulder belt can provide. The shoulder belt should not cross the face or neck. The lap belt should fit snugly below the hips, just touching the top of the thighs. This applies belt force to the child's pelvic bones in a crash. It should never be worn over the abdomen, which could cause severe or even fatal internal injuries in a crash.

According to accident statistics, children are safer when properly restrained in a rear seating position.

In a crash, children who are not buckled up can strike other people who are buckled up, or can be thrown out of the vehicle. Older children need to use safety belts properly.

⚠ Warning

Never allow more than one child to wear the same safety belt. The safety belt cannot properly spread the impact forces. In a crash, they can be crushed together and seriously injured. A safety belt must be used by only one person at a time.

⚠ Warning

Never allow a child to wear the safety belt with the shoulder belt behind their back. A child can be seriously injured by not wearing the lap-shoulder belt properly. In a crash, the child would not be restrained by the shoulder belt. The child could move too far forward increasing the chance of head and neck injury. The child might also slide under the lap belt. The belt force would then be applied right on the abdomen. That could cause serious or fatal injuries. The shoulder belt should go over the shoulder and across the chest.

Infants and Young Children

Everyone in a vehicle needs protection! This includes infants and all other children. Neither the distance traveled nor the age and size of the traveler changes the need, for everyone, to use safety restraints. In fact, the law in every state in the United States and in every Canadian province says children up to some age must be restrained while in a vehicle.

⚠ Warning

Children can be seriously injured or strangled if a shoulder belt is wrapped around their neck. The shoulder belt can tighten but cannot be loosened if it is locked. The shoulder belt locks when it is pulled all the way out of the retractor. It unlocks when the shoulder belt is allowed to go all the way back into the retractor, but it cannot do this if it is wrapped around a child's neck. If the shoulder belt is locked and tightened around a child's neck, the only way to loosen the belt is to cut it.

Never leave children unattended in a vehicle and never allow children to play with the safety belts.

Every time infants and young children ride in vehicles, they should have the protection provided by

appropriate child restraints. Neither the vehicle's safety belt system nor its airbag system is designed for them.

Children who are not restrained properly can strike other people, or can be thrown out of the vehicle.

⚠ Warning

Never hold an infant or a child while riding in a vehicle. Due to crash forces, an infant or a child will become so heavy it is not possible to hold it during a crash. For example, in a crash at only 40 km/h (25 mph), a 5.5 kg (12 lb) infant will suddenly become a 110 kg (240 lb) force on a person's arms. An infant should be secured in an appropriate restraint.

⚠ Warning

Children who are up against, or very close to, any airbag when it inflates can be seriously injured or killed. Never put a rear-facing child restraint in the front outboard seat. If you must secure a forward-facing child restraint in the front outboard seat, always move the front passenger seat as far back as it will go.

Q: What are the different types of add-on child restraints?

A: Add-on child restraints, which are purchased by the vehicle owner, are available in four basic types. Selection of a particular restraint should take into consideration not only the child's weight, height, and age but also whether or not the restraint will be compatible with the motor vehicle in which it will be used.

For most basic types of child restraints, there are many different models available. When purchasing a child restraint, be

sure it is designed to be used in a motor vehicle. If it is, the restraint will have a label saying that it meets federal motor vehicle safety standards.

The restraint manufacturer instructions that come with the restraint state the weight and height limitations for a particular child restraint. In addition, there are many kinds of restraints available for children with special needs.

⚠ Warning

To reduce the risk of neck and head injury in a crash, infants and toddlers should be secured in a rear-facing child restraint until age two, or until they reach the maximum height and weight limits of their child restraint.

⚠ Warning

A young child's hip bones are still so small that the vehicle's regular safety belt may not remain low on the hip bones, as it should. Instead, it may settle up around the child's abdomen. In a crash, the belt would apply force on a body area that is unprotected by any bony structure. This alone could cause serious or fatal injuries. To reduce the risk of serious or fatal injuries during a crash, young children should always be secured in appropriate child restraints.

Child Restraint Systems

Rear-Facing Infant Seat

A rear-facing infant seat provides restraint with the seating surface against the back of the infant.

The harness system holds the infant in place and, in a crash, acts to keep the infant positioned in the restraint.

Forward-Facing Child Seat

A forward-facing child seat provides restraint for the child's body with the harness.

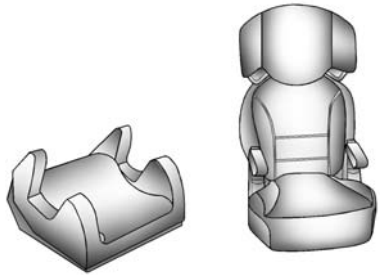

Booster Seats

⚠ Warning

If a booster seat and safety belt are not used properly, the risk of a child being injured in a sudden stop or collision greatly increases:

- Make sure the shoulder portion of the belt is away from the child's face and neck and the lap portion of the belt does not cross the stomach.

(Continued)

Warning (Continued)

- Make sure the shoulder belt is not behind the child or under the child's arm.
- A booster seat must only be installed in a seating position that has a lap/shoulder belt.

A booster seat is a child restraint designed to improve the fit of the vehicle's safety belt system.
A booster seat can also help a child to see out the window.

Booster seats of various sizes are offered by several manufacturers. When selecting any booster seat, keep the following points in mind:

- Choose only a booster seat with a label certifying that it complies with Federal Motor Vehicle Safety Standard 213 or Canadian Motor Vehicle Safety Standard 213.

- Check the booster seat in your vehicle to be sure it is compatible with the vehicle's seat and safety belt system.
- Make sure the child's head will be properly supported by the booster seat or vehicle seat. The seatback must be at or above the center of the child's ears. For example, if a low back booster seat is chosen, the vehicle seatback must be at or above the center of the child's ears. If the seatback is lower than the center of the child's ears, a high back booster seat should be used.
- If the booster seat is compatible with your vehicle, place the child in the booster seat and check the various adjustments to be sure the booster seat is compatible with the child. Always follow all recommended procedures.

All U.S. states and Canadian provinces or territories require that infants and small children be restrained in an approved child restraint at all times while the vehicle is being operated.

The instructions in this section apply to booster seat installation in the front passenger seat. See "Securing a Booster Seat" under *Securing Child Restraints on page 3-42*.

Securing an Add-On Child Restraint in the Vehicle

⚠ Warning

A child can be seriously injured or killed in a crash if the child restraint is not properly secured in the vehicle. Secure the child restraint properly in the vehicle using the vehicle safety belt or LATCH system, following the instructions that came with that child restraint and the instructions in this manual.

To help reduce the chance of injury, the child restraint must be secured in the vehicle. Child restraint systems must be secured in vehicle seats by lap belts or the lap belt portion of a lap-shoulder belt, or by the LATCH system. See *Lower Anchors and Tethers for Children (LATCH System) on page 3-38*. Children can be endangered in a crash if the child restraint is not properly secured in the vehicle.

When securing an add-on child restraint, refer to the instructions that come with the restraint which may be on the restraint itself or in a booklet, or both, and to this manual. The child restraint instructions are important, so if they are not available, obtain a replacement copy from the manufacturer.

Keep in mind that an unsecured child restraint can move around in a collision or sudden stop and injure people in the vehicle. Be sure to properly secure any child restraint in the vehicle — even when no child is in it.

In some areas of the United States and Canada, Certified Child Passenger Safety Technicians (CPSTs) are available to inspect and demonstrate how to correctly use and install child restraints. In the U.S., refer to the National Highway Traffic Safety Administration (NHTSA) website to locate the nearest child safety seat inspection station. For CPST availability in Canada, check with Transport Canada or the Provincial Ministry of Transportation office.

Securing the Child Within the Child Restraint

⚠ Warning

A child can be seriously injured or killed in a crash if the child is not properly secured in the child restraint. Secure the child properly following the instructions that came with that child restraint.

Where to Put the Restraint

According to accident statistics, children and infants are safer when properly restrained in a child restraint system or infant restraint system secured in a rear seating position.

Whenever possible, children aged 12 and under should be secured in a rear seating position.

Never put a rear-facing child seat in the front. This is because the risk to the rear-facing child is so great if the airbag deploys.

⚠ Warning

A child in a rear-facing child restraint can be seriously injured or killed if the front passenger frontal airbag inflates. This is because the back of the rear-facing child restraint would be very close to the inflating

(Continued)

Warning (Continued)

airbag. A child in a forward-facing child restraint can be seriously injured or killed if the front passenger frontal airbag inflates and the passenger seat is in a forward position.

Even if the passenger sensing system has turned off the front passenger frontal airbag, no system is fail-safe. No one can guarantee that an airbag will not deploy under some unusual circumstance, even though it is turned off.

Do not secure a rear-facing child restraint in the vehicle.

See *Passenger Sensing System on page 3-22* for additional information.

When securing a child restraint in the front outboard passenger seat, study the instructions that came with the child restraint to make sure it is compatible with this vehicle.

Child restraints and booster seats vary considerably in size, and some may fit in certain seating positions better than others.

Keep in mind that an unsecured child restraint can move around in a collision or sudden stop and injure people in the vehicle. Be sure to properly secure any child restraint in the vehicle — even when no child is in it.

Lower Anchors and Tethers for Children (LATCH System)

Some child restraints have a LATCH system. As part of the LATCH system, your child restraint may have lower attachments and/or a top tether. The LATCH system can help hold the child restraint in place during driving or in a crash. Some vehicles have lower and/or top tether anchors designed to secure a child restraint with lower attachments and/or a top tether.

Your vehicle does not have lower anchors to accommodate lower attachments. Your vehicle does have a top tether anchor. If your child restraint has a top tether, make sure your child restraint is properly installed using the top tether anchor and the vehicle's safety belt. A child restraint must never be installed using only the top tether and anchor. Refer to your child restraint instructions and see *Securing Child Restraints on page 3-42* for instructions on securing your child restraint using the vehicle's safety belts.

In order to use the top tether anchors in your vehicle, you need a child restraint equipped with a top tether. The child restraint manufacturer will provide you with instructions on how to use the child restraint and its top tether. The following explains how to attach a child restraint with the top tether in your vehicle.

Top Tether Anchor

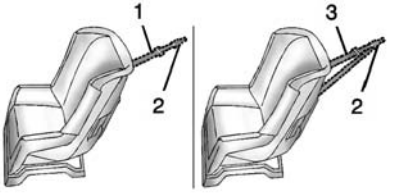

A top tether (1, 3) secures the top of the child restraint to the vehicle. A top tether anchor is built into the vehicle. The top tether attachment (2) on the child restraint connects to the top tether anchor in the vehicle in order to reduce the forward movement and rotation of the child restraint during driving or in an accident.

The child restraint may have a single tether (1) or a dual tether (3). Either will have a single attachment (2) to secure the top tether to the anchor.

Top Tether Anchor Location

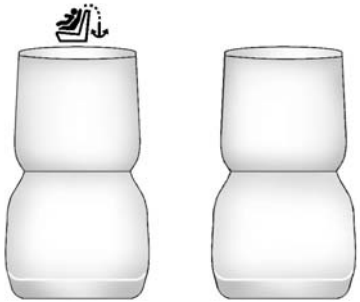

Front Seat

(Top Tether Anchor): Seating positions with top tether anchor.

To assist in locating the top tether anchor, there is a top tether anchor symbol on the seatback.

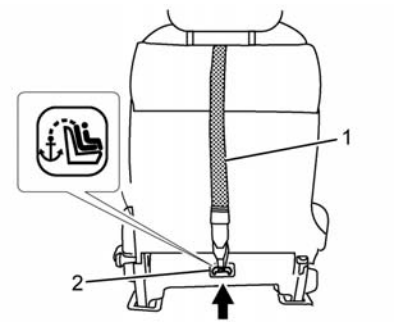

Top Tether Anchor

1. Top Tether
2. Top Tether Anchor

The top tether anchor is on the front passenger seatback.

Do not secure a child restraint in a position without a top tether anchor.

Securing a Child Restraint Using Top Tether Anchor

⚠ Warning

If a LATCH-type child restraint is not attached to anchors or with the safety belt, the child restraint will not be able to protect the child correctly. In a crash, the child could be seriously injured or killed. Install a LATCH-type child restraint properly using the anchors, or use the vehicle safety belts to secure the restraint, following the instructions that came with the child restraint and the instructions in this manual.

⚠ Warning

Children can be seriously injured or strangled if a shoulder belt is wrapped around their neck. The shoulder belt can tighten but cannot be loosened if it is locked. The shoulder belt locks when it is pulled all the way out of the retractor. It unlocks when the shoulder belt is allowed to go all the way back into the retractor, but it cannot do this if it is wrapped around a child's neck. If the shoulder belt is locked and tightened around a child's neck, the only way to loosen the belt is to cut it.

Buckle any unused safety belts behind the child restraint so children cannot reach them. Pull the shoulder belt all the way out of the retractor to set the lock, and tighten the belt behind the child restraint after the child restraint has been installed.

⚠ Warning

A child in a rear-facing child restraint can be seriously injured or killed if the right front passenger airbag inflates. This is because the back of the rear-facing child restraint would be very close to the inflating airbag. A child in a forward-facing child restraint can be seriously injured or killed if the right front passenger airbag inflates and the passenger seat is in a forward position.

Even if the passenger sensing system has turned off the right front passenger frontal airbag, no system is fail-safe. No one can guarantee that an airbag will not deploy under some unusual circumstance, even though it is turned off.

(Continued)

Warning (Continued)

Since this vehicle does not have a rear seat that will accommodate a rear-facing child restraint, a rear-facing child restraint should not be installed in your vehicle, even if the airbag is off.

See *Passenger Sensing System on page 3-22* for additional information.

The vehicle has a front outboard passenger frontal airbag and a passenger sensing system. The passenger sensing system is designed to turn off the front passenger frontal airbag when an infant in a rear-facing infant seat or a small child in a forward-facing child restraint or booster seat is detected. See "Securing Child Restraints (Front Passenger Seat)" later in this section and *Passenger Sensing System on page 3-22* for important safety information and

additional information on installing a child restraint in the front passenger position.

Make sure to attach the child restraint at the proper anchor location.

1. If the child restraint manufacturer recommends that the top tether be attached, attach the top tether to the top tether anchor. Refer to the child restraint instructions and the following steps:

   1.1. Find the top tether anchor.

   1.2. Route, attach, and tighten the top tether according to the child restraint instructions and the following instructions:

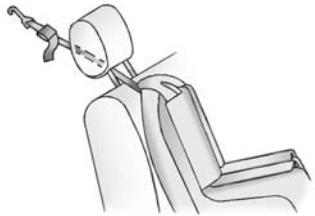

If the position you are using has an adjustable headrest or head restraint and you are using a single tether, route the tether under the headrest or head restraint and in between the headrest or head restraint posts.

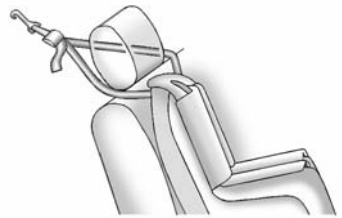

If the position you are using has an adjustable headrest or head restraint and you are using a dual tether, route the tether around the headrest or head restraint.

2. Before placing a child in the child restraint, make sure it is securely held in place. Refer to your child restraint manufacturer instructions.

See “Head Restraint Removal and Reinstallation” under *Head Restraints on page 3-2* for information on removing a head restraint to fit a child restraint.

Replacing LATCH System Parts After a Crash

⚠ Warning

A crash can damage the LATCH system in the vehicle. A damaged LATCH system may not properly secure the child restraint, resulting in serious injury or even death in a crash. To help make sure the LATCH system is working properly after a crash, see your dealer to have the system inspected and any necessary replacements made as soon as possible.

If the vehicle has the LATCH system and it was being used during a crash, new LATCH system parts may be needed.

New parts and repairs may be necessary even if the LATCH system was not being used at the time of the crash.

Securing Child Restraints

This vehicle has airbags. In addition, the vehicle has a passenger sensing system which is designed to turn off the front outboard passenger frontal airbag under certain conditions. See *Passenger Sensing System on page 3-22* and *Passenger Airbag Status Indicator on page 5-10* for more information, including important safety information.

Never put a rear-facing child seat in the front. This is because the risk to the rear-facing child is so great if the airbag deploys.

⚠ Warning

A child in a rear-facing child restraint can be seriously injured or killed if the front outboard passenger frontal airbag inflates. This is because the back of the rear-facing child restraint would

(Continued)

Warning (Continued)

be very close to the inflating airbag. A child in a forward-facing child restraint can be seriously injured or killed if the front outboard passenger frontal airbag inflates and the passenger seat is in a forward position.

Even if the passenger sensing system has turned off the front outboard passenger frontal airbag, no system is fail-safe. No one can guarantee that an airbag will not deploy under some unusual circumstance, even though it is turned off.

Do not secure a rear-facing child restraint in the vehicle.

If you secure a forward-facing child restraint in the vehicle, always move the front passenger seat as far back as it will go.

(Continued)

Warning (Continued)

See *Passenger Sensing System on page 3-22* for additional information.

Rear-facing child restraints should not be installed in the vehicle, even if the airbag is off.

If a child restraint uses a top tether, see *Lower Anchors and Tethers for Children (LATCH System) on page 3-38* for top tether anchor locations.

Do not secure a child seat in a position without a top tether anchor if a national or local law requires that the top tether be anchored, or if the instructions that come with the child restraint say that the top strap must be anchored.

In Canada, the law requires that forward-facing child restraints have a top tether, and that the tether be attached.

Securing a Forward-Facing Child Restraint

When using the lap-shoulder belt to secure a forward-facing child restraint in this position, follow the instructions that came with the child restraint and the following instructions:

1. Move the seat as far back as it will go before securing the forward-facing child restraint.

   When the passenger sensing system has turned off the front outboard passenger frontal airbag, the off indicator on the passenger airbag status indicator should light and stay lit when you start the vehicle unless the passenger seat is unoccupied. See *Passenger Airbag Status Indicator on page 5-10*.

2. Put the child restraint on the seat.

3. Pick up the latch plate, and run the lap and shoulder portions of the vehicle's safety belt through or around the restraint. The child restraint instructions will show you how.

4. Push the latch plate into the buckle until it clicks.

   Position the release button on the buckle so that the safety belt could be quickly unbuckled if necessary.

5. Pull the shoulder belt all the way out of the retractor to set the lock. When the retractor lock is set, the belt can be tightened but not pulled out of the retractor.

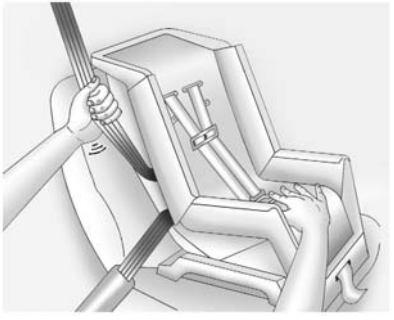

6. To tighten the belt, push down on the child restraint, pull the shoulder portion of the belt to tighten the lap portion of the belt, and feed the shoulder belt back into the retractor. It may be helpful to use your knee to push down on the child restraint or booster seat as you tighten the belt.

   Try to pull the belt out of the retractor to make sure the retractor is locked. If the retractor is not locked, repeat Step 5 and 6.

7. If the child restraint has a top tether, follow the child restraint manufacturer's instructions regarding the use of the top tether. See *Lower Anchors and Tethers for Children (LATCH System) on page 3-38*.

8. Before placing a child in the child restraint, make sure it is securely held in place. To check, grasp the child restraint at the safety belt path and attempt to move it side to side and back and forth. When the child restraint is properly installed, there should be no more than 2.5 cm (1 in) of movement.

If the airbag is off, the off indicator in the passenger airbag status indicator will come on and stay on when the vehicle is started unless the passenger seat is unoccupied.

If a child restraint has been installed and the off indicator is not lit, see "If the Off Indicator Is Not Lit for a Child Restraint" under *Passenger Sensing System on page 3-22*.

To remove the child restraint, unbuckle the vehicle safety belt and let it return to the stowed position.

Securing a Booster Seat

⚠ Warning

Do not use the child restraint locking feature when using a booster seat with the safety belts.

Follow these steps to install a booster seat in the front passenger seat:

1. If you must install a booster seat in the front seat, move the seat to the rear-most position.
2. Position the booster seat on the seat. Only place it in a front-facing direction. Always follow the booster seat manufacturer's instructions.
3. The booster seat should be positioned on the vehicle seat so that it is stable.

   If necessary, adjust or remove the head restraint to obtain the correct booster seat fit. If the head restraint is removed, store it in a secure place. Be sure to reinstall the head restraint when the booster seat is removed. For more information, see *Head Restraints on page 3-2* for head restraint adjustment, removal, and installation information.

   If the seating position does not have an adjustable head restraint and it is interfering with the proper booster seat fit, try a different booster seat.
4. Position the lap portion of the safety belt low and snug on the child's hips. Be sure to follow the booster seat manufacturer's instructions for adjusting the safety belt routing.
5. Pull the shoulder belt portion of the safety belt toward the retractor to take up the extra slack. Be sure the shoulder belt is positioned across the top, middle portion of the child's shoulder. Be sure to follow the booster seat manufacturer's instructions for adjusting the safety belt routing.
6. Follow the warnings, cautions, and instructions for properly fastening a safety belt. See *Lap-Shoulder Belt on page 3-10*.

7. If the booster seat is installed in the front passenger seat, place the ignition switch in the ON position. The passenger airbag status indicator may or may not be lit, depending on the size of the child and the type of booster seat being used. For more information, see *Passenger Airbag Status Indicator on page 5-10*.

Storage

Storage Compartments
Storage Compartments 4-1
Glove Box 4-1
Underseat Storage 4-1

Additional Storage Features
Cargo Tie-Downs 4-2

Storage Compartments

⚠ Warning

Do not store heavy or sharp objects in storage compartments. In a crash, these objects may cause the cover to open and could result in injury.

Glove Box

Open the glove box by lifting up on the lever.

Underseat Storage

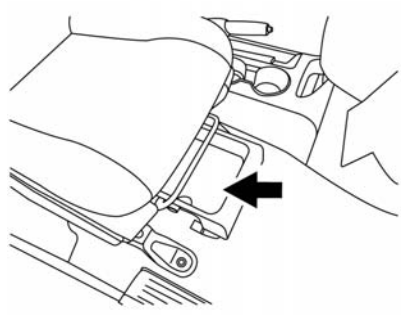

There is storage under the front passenger seat. Lift the end of the tray and pull it forward to open. Push it in toward the seat to close.

To remove the tray, pull to the point of resistance and lift up and pull.

⚠ Caution

To avoid damaging the tray under the seat, cargo should not exceed 1.8 kg (4 lb).

Additional Storage Features

Cargo Tie-Downs

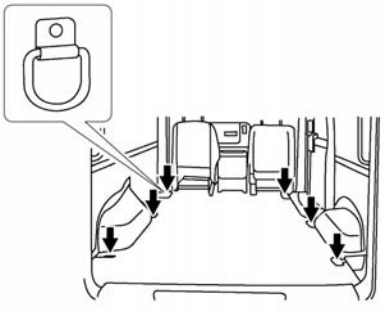

There are six cargo tie-downs in the cargo area that can be used to secure cargo.

Do not apply a total load of more than 5 000 N (1,124 lb) to a single cargo tie-down when securing cargo. See *Vehicle Load Limits on page 9-9*.

⚠ Warning

The child restraint top tether strap may be damaged by contact with items in the cargo area. Your child could be seriously injured or killed in a collision if the top tether strap is damaged. Properly secure all cargo.

⚠ Warning

Properly secure all cargo with ropes or straps to help prevent it from sliding or shifting. Do not place cargo higher than the seatbacks. In a sudden stop or collision, unsecured cargo could cause personal injury. Use suitable ropes or straps to secure cargo.

⚠ Warning

Never allow anyone to ride in the cargo area. It is extremely dangerous to ride in the cargo area of a vehicle. In a collision, people riding in these areas are more likely to be seriously injured or killed.

Do not allow people to ride in any area of the vehicle that is not equipped with seats and safety belts. Be sure everyone in the vehicle is in a seat and using a safety belt properly.

Instruments and Controls

Controls

Steering Wheel Controls 5-2
Horn 5-2
Windshield Wiper/Washer 5-2
Clock 5-3
Power Outlets 5-4
Cigarette Lighter 5-5
Ashtrays 5-5

Warning Lights, Gauges, and Indicators

Warning Lights, Gauges, and Indicators 5-6
Instrument Cluster 5-7
Speedometer 5-8
Odometer 5-8
Trip Odometer 5-8
Tachometer 5-8
Fuel Gauge 5-8
Safety Belt Reminders 5-9
Airbag Readiness Light 5-9
Passenger Airbag Status Indicator 5-10
Charging System Light 5-11
Malfunction Indicator Lamp 5-11
Brake System Warning Light 5-14
Antilock Brake System (ABS) Warning Light 5-15
Overdrive Off Light 5-15
Power Steering Warning Light 5-15
Traction Control System (TCS)/Electronic Stability Control Light 5-16
Electronic Stability Control (ESC) Off Light 5-16
Engine Coolant Temperature Warning Light 5-17
Tire Pressure Light 5-17
Engine Oil Pressure Light 5-18
Low Fuel Warning Light 5-18
Security Light 5-19
High-Beam On Light 5-19
Low Washer Fluid Warning Light 5-19
Cruise Control Light 5-19
Door Ajar Light 5-19

Vehicle Messages

Fuel System Messages 5-20
Tire Messages 5-20

Trip Computer

Trip Computer 5-20

Vehicle Personalization

Vehicle Personalization (Radio with Touchscreen Only) 5-21

Controls

Steering Wheel Controls

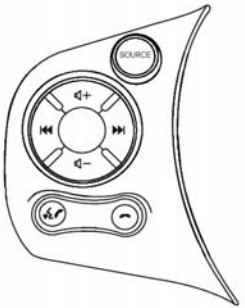

Some audio and Bluetooth® controls (if equipped) can be adjusted at the steering wheel.

SOURCE: Press to change between AM, FM, CD, and AUX devices.

⏮ or ⏭ (Tuning): While in one of the preset radio station banks, press and hold for less than 1.5 seconds to change to the previous or next preset radio station or press to go to the previous or next track on a CD.

Press and hold for more than 1.5 seconds to change to the previous or next radio station.

Press to change the Bluetooth system language. See “Choosing a Language” in *Bluetooth on page 7-10*.

(End Call): If equipped, press and hold to end a call or reject a call.

(Press to Talk): If equipped, press to interact with Bluetooth or answer an incoming call. See *Bluetooth on page 7-10*.

− or + (Volume): Press − to decrease volume or press + to increase the volume.

Horn

Press on the steering wheel pad to sound the horn.

Windshield Wiper/Washer

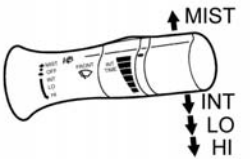

With the ignition in the ON position, move the windshield wiper lever down to select the wiper speed.

HI (High): Use for fast wipes.

LO (Low): Use for slow wipes.

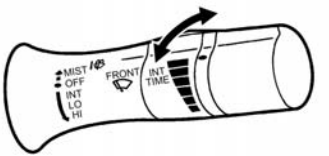

INT (Intermittent Wipes): Use for intermittent wipes. To adjust wipe frequency, turn the INT TIME band forward for less frequent wipes or rearward for more frequent wipes.

OFF: Use to turn the wipers off.

MIST: For a single wipe, briefly move the wiper lever up.

Clear snow and ice from the wiper blades before using them. If frozen to the windshield, carefully loosen or thaw them. Damaged blades should be replaced. See *Wiper Blade Replacement on page 10-22*.

Heavy snow or ice can overload the wiper motor.

Windshield Washer

Pull the windshield wiper lever toward you to spray windshield washer fluid and activate the wipers. See *Washer Fluid on page 10-18* for information on filling the windshield washer fluid reservoir.

⚠ Warning

In freezing weather, do not use the washer until the windshield is warmed. Otherwise the washer fluid can form ice on the windshield, blocking your vision.

Clock

Set the clock with the ignition in ACC/ACCESSORY or ON.

Radio without Navigation

To set the clock:

1. Press and hold CLOCK on the radio faceplate until the clock display flashes.
2. Press ▲ SEEK/TRACK ▼ to set the hour.
3. Press ▲ TUNE/FF-REW/ FOLDER ▼ to set the minutes.
4. Press CLOCK to exit or let the display time out.

Radio with Navigation

To set the clock:

1. Press ☼/☽ MENU on the radio faceplate.
2. Select ⚙ Settings - System - Clock Settings.

Time Format

Select to change between 12 hours and 24 hours clock.

Date Format

Select the desired format.

Clock Mode

Select between Auto and Manual. If Auto is selected, the clock is automatically updated through the Global Positioning System (GPS). If Manual is selected, see “Set Clock Manually” following.

Select “Time Zone” to have the time set to a specific time, see “Time Zone” following.

Set Clock Manually

Press − or + to change any of the settings for Hour, Minute, Day, Month, and Year.

Daylight Savings Time

Select to turn on and off.

Time Zone

This feature is only available if selected in Clock Mode.

Select the desired setting.

Power Outlets

The accessory power outlets can be used to plug in electrical equipment, such as a cell phone or an MP3 player.

The vehicle may have two accessory power outlets:

- Near the bottom of the center stack.
- On the rear of the center floor console.

Remove the cover to access and replace when not in use.

Certain power accessory plugs may not be compatible to the accessory power outlet and could overload vehicle or adapter fuses. If a problem is experienced, see your dealer.

The outlets are rated at 12 volt, 120W (10A) maximum.

⚠ Warning

Power is always supplied to the outlets. Do not leave electrical equipment plugged in when the vehicle is not in use because the vehicle could catch fire and cause injury or death.

⚠ Caution

Leaving electrical equipment plugged in for an extended period of time while the vehicle is off will drain the battery. Always unplug electrical equipment when not in use and do not plug in equipment that exceeds the maximum 12 volt, 120W (10A) rating.

When adding electrical equipment, be sure to follow the proper installation instructions included with the equipment. See *Add-On Electrical Equipment on page 9-41*.

⚠ Caution

Hanging heavy equipment from the power outlet can cause damage not covered by the vehicle warranty. The power outlets are designed for accessory power plugs only, such as cell phone charge cords.

Cigarette Lighter

If equipped with a cigarette lighter, to heat push it in all the way and let go. When it is ready for use, it will pop back out by itself.

Do not use the lighter to plug in accessory devices. Use the power outlets provided.

⚠ Caution

Holding a cigarette lighter in while it is heating does not let the lighter back away from the heating element when it is hot. Damage from overheating can occur to the lighter or heating element, or a fuse could be blown. Do not hold a cigarette lighter in while it is heating.

Ashtrays

If equipped with a removable ashtray, it can be placed into the front floor console cupholder. Open the cover to use.

⚠ Caution

If papers, pins, or other flammable items are put in the ashtray, hot cigarettes or other smoking materials could ignite them and possibly damage the vehicle. Never put flammable items in the ashtray.

Warning Lights, Gauges, and Indicators

Warning lights and gauges can signal that something is wrong before it becomes serious enough to cause an expensive repair or replacement. Paying attention to the warning lights and gauges could prevent injury.

Warning lights come on when there could be a problem with a vehicle function. Some warning lights come on briefly when the engine is started to indicate they are working.

Gauges can indicate when there could be a problem with a vehicle function. Often gauges and warning lights work together to indicate a problem with the vehicle.

When one of the warning lights comes on and stays on while driving, or when one of the gauges shows there may be a problem, check the section that explains what to do. Waiting to do repairs can be costly and even dangerous.

Instrument Cluster

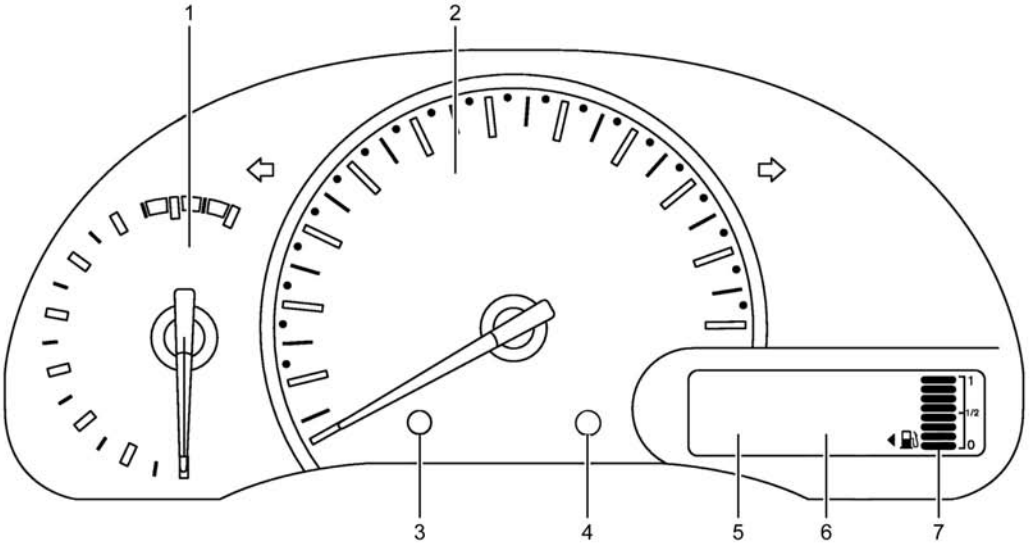

1. Tachometer
2. Speedometer
3. Trip Odometer Reset Stem
4. Instrument Brightness Control
5. Transmission Position Indicator
6. Odometer/Trip Computer
7. Fuel Gauge

Speedometer

The speedometer shows the vehicle speed in kilometers per hour (km/h) and miles per hour (mph).

Odometer

The odometer shows how far the vehicle has been driven, in either kilometers or miles.

Trip Odometer

The trip odometer shows how far the vehicle has been driven since the trip odometer was last reset.

Press the trip odometer reset stem on the cluster to switch between the odometer, trip odometer A, and trip odometer B.

To reset each trip odometer to zero, press and hold the trip odometer reset stem. Only the trip odometer that is currently displayed will be reset.

Tachometer

The tachometer displays the engine speed in revolutions per minute (rpm).

⚠ Caution

If the engine is operated with the rpm's in the warning area at the high end of the tachometer, the vehicle could be damaged, and the damage would not be covered by the vehicle warranty. Do not operate the engine with the rpm's in the warning area.

Fuel Gauge

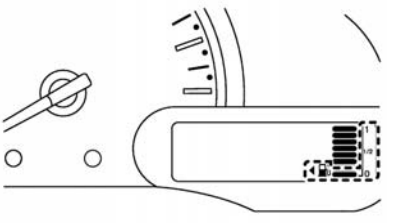

The fuel gauge indicates about how much fuel is left when the ignition is turned to ON.

When the tank nears empty, the low fuel warning light may come on or the segments of the gauge may blink. There is still a little fuel left, but the vehicle's fuel tank should be filled soon. See *Low Fuel Warning Light on page 5-18*.

An arrow on the fuel gauge indicates the side of the vehicle on which the fuel door is located.

Here are four things that some owners ask about. None of these show a problem with the fuel gauge:

- At the service station, the gas pump shuts off before the gauge reads full.
- It takes a little more or less fuel to fill up than the gauge indicated. For example, the gauge may have indicated the tank was half full, but it actually took a little more or less than half the tank's capacity to fill the tank.
- The indicator moves a little when turning a corner or speeding up.
- The gauge goes back to empty when the ignition is turned off.

Safety Belt Reminders

The light and chime remind you to fasten your safety belts. The light illuminates when the ignition is placed in ON or START and remains illuminated until the driver's safety belt is fastened. At the same time, the chime sounds for about six seconds unless the driver's safety belt is securely fastened.

The safety belt warning light may also illuminate if the front passenger's safety belt is not fastened when the front passenger seat is occupied. For seven seconds after the ignition switch is placed in ON, the system does not activate the warning light for the front passenger.

⚠ Warning

If the safety belt warning light stays on continuously while the ignition is turned ON with all doors closed and all safety belts fastened, it may indicate a malfunction in the system. Have the system checked by your dealer.

See *Safety Belts on page 3-8*.

Airbag Readiness Light

This light shows if there is an electrical problem with the airbag system. The system check includes the airbag sensor(s), passenger sensing system, the pretensioners, the airbag modules, the wiring, and the crash sensing and diagnostic module. For more information on the airbag system, see *Airbag System on page 3-15*.

The airbag readiness light comes on for several seconds when the vehicle is started. If the light does not come on then, have it fixed immediately.

⚠ Warning

If the airbag readiness light stays on or comes on and flashes after the vehicle is started or comes on while driving, it means the airbag system might not be working properly. The airbags in the vehicle might not inflate in a crash, or they could even inflate without a crash. To help avoid injury, have the vehicle serviced right away.

Passenger Airbag Status Indicator

⚠ Warning

The front passenger airbag is designed to automatically turn off under some conditions. Read this section carefully to learn how it operates. Proper use of the seat, safety belt, and child restraints is necessary for most effective protection. Failure to follow all instructions in this manual concerning the use of seats, safety belts, and child restraints can increase the risk or severity of injury in an accident.

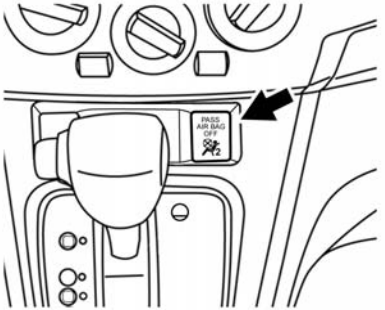

The passenger airbag status indicator is under the climate controls.

After the ignition switch is placed in the ON position, the passenger airbag status indicator on the instrument panel will light for about seven seconds and then go out or stay lit depending on the front outboard seat occupied status. The passenger airbag status indicator operates as follows:

- Passenger seat occupied by a small adult, child, or child restraint: The passenger airbag status indicator lights to indicate that the front passenger frontal airbag is off and will not inflate in a collision.
- Occupied passenger seat and the passenger meets the conditions outlined in this manual: The passenger airbag status indicator is not lit to indicate that the front passenger frontal airbag is operational.

See *Passenger Sensing System on page 3-22* for more information.

Charging System Light

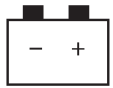

This light will come on briefly when the ignition is turned on, and the engine is not running, as a check to show it is working.

It should go out when the engine is started. If it stays on, or comes on while driving, there may be a problem with the electrical charging system. Have it checked by your dealer. Driving while this light is on could drain the battery. If a short distance must be driven with the light on, turn off all accessories, such as the radio and air conditioner, to help reduce the drain on the battery.

Malfunction Indicator Lamp

A computer system called OBD II (On-Board Diagnostics-Second Generation) monitors the operation of the vehicle to ensure emissions are at acceptable levels, helping to maintain a clean environment. The malfunction indicator lamp comes on when the vehicle is placed in ON, as a check to show it is working. If it does not, have the vehicle serviced by your dealer. See *Ignition Positions on page 9-14* for more information.

If the malfunction indicator lamp comes on while the engine is running, this indicates that the

OBD II system has detected a problem and diagnosis and service might be required.

Malfunctions often are indicated by the system before any problem is apparent. Being aware of the light can prevent more serious damage to the vehicle. This system also assists the service technician in correctly diagnosing any malfunction.

⚠ Caution

If the vehicle is continually driven with this light on, the emission controls might not work as well, the vehicle fuel economy might not be as good, and the engine might not run as smoothly. This could lead to costly repairs that might not be covered by the vehicle warranty.

⚠ Caution

Modifications made to the engine, transmission, exhaust, intake, or fuel system of the vehicle or the replacement of the original tires with other than those of the same size and type as the originals can affect the vehicle's emission controls and can cause this light to come on. Modifications to these systems could lead to costly repairs not covered by the vehicle warranty. This could also result in a failure to pass a required Emission Inspection/Maintenance test. See *Accessories and Modifications on page 10-3*.

This light comes on during a malfunction in one of two ways:

Light Flashing: A misfire condition has been detected. A misfire increases vehicle emissions and could damage the emission control system on the vehicle. Diagnosis and service might be required.

To prevent more serious damage to the vehicle:

- Do not drive at speeds above 72 km/h (45 mph)
- Avoid hard accelerations.
- Avoid steep uphill grades.

If the light continues to flash, find a safe place to stop and park the vehicle. Turn the vehicle off, wait at least 10 seconds, and restart the engine. If the light is still flashing, follow the previous steps and see your dealer for service as soon as possible.

Light On Steady: An emission control system malfunction has been detected on the vehicle. Diagnosis and service might be required.

The following may correct an emission control system malfunction:

- Check that the fuel cap is fully installed. See *Filling the Tank on page 9-39*. The diagnostic system can determine if the fuel cap has been left off or improperly installed. A loose or missing fuel cap allows fuel to evaporate into the atmosphere. A few driving trips with the cap properly installed should turn the light off.
- Check that good quality fuel is used. Poor fuel quality causes the engine not to run as efficiently as designed and may cause stalling after start-up, stalling when the vehicle is changed into gear, misfiring, hesitation on acceleration, or stumbling on acceleration. These conditions might go away once the engine is warmed up.

If one or more of these conditions occurs, change the fuel brand used. It may require at least one full tank of the proper fuel to turn the light off.

See *Fuel on page 9-37*.

If none of the above have made the light turn off, your dealer can check the vehicle. The dealer has the proper test equipment and diagnostic tools to fix any mechanical or electrical problems that might have developed.

Emissions Inspection and Maintenance Programs

Depending on where you live, your vehicle may be required to participate in an emission control system inspection and maintenance program. For the inspection, the emission system test equipment will likely connect to the vehicle's Data Link Connector (DLC).

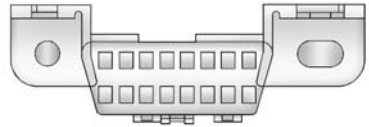

The DLC is under the instrument panel to the left of the steering wheel. See your dealer if assistance is needed.

The vehicle may not pass inspection if:

- The malfunction indicator lamp is on with the engine running, or if the light does not come on when the ignition is turned to ON while the engine is off. See your dealer for assistance in verifying proper operation of the malfunction indicator lamp.
- The OBD II (On-Board Diagnostics) system determines that critical emission control systems have not been completely diagnosed. The vehicle would be considered not ready for inspection. This can

happen if the 12-volt battery has recently been replaced or run down. The diagnostic system is designed to evaluate critical emission control systems during normal driving. This can take several days of routine driving. If this has been done and the vehicle still does not pass the inspection for lack of OBD II system readiness, your dealer can prepare the vehicle for inspection.

Brake System Warning Light

The vehicle brake system consists of two hydraulic circuits. If one circuit is not working, the remaining circuit can still work to stop the vehicle. For normal braking performance, both circuits need to be working.

If the warning light comes on, there could be a brake problem. Have the brake system inspected right away.

BRAKE

Metric **English**

This light should come on briefly when the ignition key is turned to ON. If it does not come on, have it fixed so it will be ready to warn if there is a problem.

When the ignition is on, the brake system warning light also comes on when the parking brake is set. See *Parking Brake on page 9-24*. The light stays on if the parking brake does not fully release. If it stays on after the parking brake is fully released, it means the vehicle has a brake problem.

If the light comes on while driving, pull off the road and stop carefully. The pedal might be harder to push, or the pedal might go closer to the floor. It could take longer to stop. If the light is still on, check the brake fluid level and have the vehicle towed for service. See *Towing the Vehicle on page 10-59*.

⚠ Warning

The brake system might not be working properly if the brake system warning light is on. Driving with the brake system warning light on can lead to a crash. If the light is still on after the vehicle has been pulled off the road and carefully stopped, have the vehicle towed for service.

Antilock Brake System (ABS) Warning Light

ABS

Metric **English**

For vehicles with the Antilock Brake System (ABS), this light comes on briefly when the engine is started.

If it does not, have the vehicle serviced by your dealer. If the system is working normally the indicator light then goes off.

If the ABS light stays on, turn the ignition off. If the light comes on while driving, stop as soon as it is safely possible and turn the ignition off. Then start the engine again to reset the system. If the ABS light stays on, or comes on again while driving, the vehicle needs service.

If the regular brake system warning light is not on, the vehicle still has brakes, but not antilock brakes.
If the regular brake system warning light is also on, the vehicle does not have antilock brakes and there is a problem with the regular brakes.
See *Brake System Warning Light on page 5-14*.

Overdrive Off Light

O/D
OFF

This light comes on when the overdrive is turned off.

See *Continuously Variable Transmission (CVT) on page 9-18*.

Power Steering Warning Light

PS

If equipped, this light comes on briefly when the ignition is turned to ON as a check to show it is working.

If it does not come on have the vehicle serviced by your dealer.

⚠ Warning

- If the engine is not running or is turned off while driving, the power assist for the steering will not work. Steering will be harder to operate.
- When the power steering warning light illuminates with the engine running, there will

(Continued)

Warning (Continued)

be no power assist for the steering. You will still have control of the vehicle but the steering will be harder to operate. Have the power steering system checked by your dealer.

When the power steering warning light illuminates with the engine running, there will be no power assist for the steering but you will still have control of the vehicle. At this time, greater steering effort is required to operate the steering wheel, especially in sharp turns and at low speeds.

Traction Control System (TCS)/Electronic Stability Control Light

If equipped, the Electronic Stability Control (ESC) or TCS indicator/warning light comes on briefly when the engine is started.

If the light does not come on, have the vehicle serviced by your dealer. If the system is working normally, the indicator light turns off.

If the light is on and not flashing, the TCS, and potentially the ESC system have been disabled.

If the indicator/warning light is on and flashing, the TCS and/or the ESC system is actively working.

See *Traction Control/Electronic Stability Control on page 9-25*.

Electronic Stability Control (ESC) Off Light

This light comes on briefly while starting the engine. If it does not, have the vehicle serviced by your dealer.

This light comes on when the ESC system is turned off. If ESC is off, the Traction Control System (TCS) is also off.

If the ESC and TCS are off, the system does not assist in controlling the vehicle. Turn on the TCS and the ESC systems and the warning light turns off.

See *Traction Control/Electronic Stability Control on page 9-25*.

Engine Coolant Temperature Warning Light

This light comes on briefly while starting the vehicle.

If it does not, have the vehicle serviced by your dealer. If the system is working normally the indicator light goes off.

⚠ Caution

The engine coolant temperature warning light indicates that the vehicle has overheated. Driving with this light on can damage the engine and it may not be covered by the vehicle warranty. See *Engine Overheating on page 10-16*.

The engine coolant temperature warning light comes on when the engine has overheated.

If this happens, pull over and turn off the engine as soon as possible. See *Engine Overheating on page 10-16*.

Tire Pressure Light

For vehicles with the Tire Pressure Monitor System (TPMS), this light comes on briefly when the engine is started. It provides information about tire pressures and the TPMS.

When the Light Is On Steady

This indicates that one or more of the tires are significantly underinflated.

Stop as soon as possible, and inflate the tires to the pressure value shown on the Tire and Loading Information label. See *Tire Pressure on page 10-35*.

When the Light Flashes First and Then Is On Steady

If the light flashes for about a minute and then stays on, there may be a problem with the TPMS. If the problem is not corrected, the light will come on at every ignition cycle. See *Tire Pressure Monitor Operation on page 10-37*.

Engine Oil Pressure Light

⚠ Caution

Lack of proper engine oil maintenance can damage the engine. Driving with the engine oil low can also damage the engine. The repairs would not be covered by the vehicle warranty. Check the oil level as soon as possible. Add oil if required, but if the oil level is within the operating range and the oil pressure is still low, have the vehicle serviced. Always follow the maintenance schedule for changing engine oil.

This light should come on briefly as the engine is started. If it does not come on, have the vehicle serviced by your dealer.

If the light comes on and stays on, it means that oil is not flowing through the engine properly. The vehicle could be low on oil and might have some other system problem. See your dealer.

Low Fuel Warning Light

The low fuel warning light may come on when the fuel tank is low on fuel. When fuel is added, the light should go off. If it does not, have the vehicle serviced.

On some vehicles, the segments of the fuel gauge may flash as a low fuel indicator.

Security Light

This light is used to indicate the status of the anti-theft alarm system when the ignition is turned off. The light will flash to indicate the system is armed.

If this light stays on when the ignition is in ON, the system needs service.

See *Vehicle Alarm System on page 2-10* and *Immobilizer Operation on page 2-11*.

High-Beam On Light

This light comes on when the high-beam headlamps are in use.

See *Headlamp High/Low-Beam Changer on page 6-1* for more information.

Low Washer Fluid Warning Light

If equipped, the low washer fluid warning light comes on when the windshield washer fluid is low. See *Washer Fluid on page 10-18*.

Cruise Control Light

CRUISE

The CRUISE light comes on when the cruise control is on.

See *Cruise Control on page 9-28* for more information.

Door Ajar Light

This light comes on when a door is open or not securely latched. Before driving, check that all doors are properly closed.

Vehicle Messages

Fuel System Messages

LOOSE FUEL CAP

This message displays when the fuel cap is not on tight. Tighten the fuel cap, then press and hold the trip odometer reset stem to reset the message.

Tire Messages

CHECK TIRE PRES (Pressure)

If the vehicle has the Tire Pressure Monitor System (TPMS), this message displays when the pressure in one or more of the tires is low. The low tire pressure warning light will also come on. See *Tire Pressure Light on page 5-17*. If a tire pressure message appears, stop as soon as you can. Have the tire pressures checked and set to those shown on the Tire and Loading Information label. See *Tires on page 10-26*, *Vehicle Load Limits on page 9-9*, and *Tire Pressure on page 10-35*.

Trip Computer

The vehicle may have a trip computer. It provides the driver with driving information such as the driving distance for the remaining fuel, instant fuel economy, and average fuel economy.

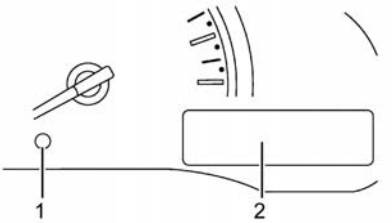

1. Trip Odometer Reset Stem
2. Trip Computer Display

The trip odometer reset stem is used to cycle through the available trip computer displays. All of the displays except Trip A and Distance to Empty can be reset by pressing and holding the trip odometer reset stem for more than three seconds.

Trip A or Trip B

See *Trip Odometer on page 5-8*.

Instant Fuel Economy

This display shows the approximate fuel economy at any given moment.

Average Fuel Economy

This display shows the approximate average fuel economy since the last time it was reset.

Distance to Empty

This display shows an estimated distance that the vehicle can be driven before refueling.

When the fuel level is low, the display will automatically show the distance to empty display and the numbers will flash. When the fuel level is even lower, (– – – –) is displayed.

Outside Temperature (If Equipped)

On some vehicles, the outside temperature can be displayed.

Vehicle Personalization

Vehicle Personalization (Radio with Touchscreen Only)

Use the audio system controls to access the personalization menus for customizing vehicle features.

The following are all possible personalization features. Depending on the vehicle, some may not be available.

Infotainment System Audio Controls

Using the Faceplate

BACK

- Press to exit a menu.
- Press to return to a previous screen.

Using the Touch Screen

Press a screen feature to:

- View more feature options.
- Enable or disable the feature.

▲ : Press to scroll up.

▼ : Press to scroll down.

To access the personalization menu:

1. Press INFO on the faceplate, then select ⚙ Settings on the Home page.
2. Select the desired feature to display a list of available options.
3. Select the desired feature setting.

Personalization Menus

The following list of menu items may be available:

- ♪ Audio
- System

- Navigation
- Traffic
- Phone & Bluetooth
- **SXM** SXM

Each menu is detailed in the following information.

Audio

See “Audio Settings” in “AM-FM Radio” in the infotainment manual.

System

Select and the following may display:

- Display
- Clock Settings
- Language
- Camera Settings
- Temperature Unit
- Touchscreen Click
- System Beeps
- Return to Factory Settings/Clear Memory
- Software Licenses

Display

Select and the following may display:

- Brightness
- Display Mode
- Scroll Direction

Brightness

This feature adjusts the brightness of the display.

Select Very Bright, Bright, Default, Dark, or Very Dark.

Display Mode

This feature adjusts the display to make it easier to see due to the lighting in the vehicle.

Select Automatic, Day, or Night.

Scroll Direction

This feature changes what direction the menus scroll on the screen.

Select Up or Down.

Clock Settings

See *Clock on page 5-3*.

Language

Select Language, then select from the available language(s).

Camera Settings

Select and the following may display:

- Display Mode
- Brightness
- Contrast
- Color

Display Mode

This feature changes the display mode of the rear view camera..

Select Automatic, Day, or Night.

Brightness

This feature adjusts the brightness of the display.

Select − or + to change the setting.

Contrast

This feature adjusts the contrast of the display.

Select − or + to change the setting.

Color

This feature adjusts the color of the display.

Select − or + to change the setting.

Temperature Unit

Select to change the temperature unit reading between celsius and fahrenheit.

Touchscreen Click

When on, a click sound will be heard when a key on the screen is touched.

Select ON or OFF.

System Beeps

When on, a beep sound will be heard when a pop-up message appears on the screen or a faceplate button is pressed and held for two seconds.

Select ON or OFF.

Return to Factory Settings/Clear Memory

Select to return all settings to default and to clear the memory.

Select Yes or No.

Software Licenses

Select to view software license information.

Navigation

See “Navigation” in the infotainment manual.

Traffic

See “ Traffic” in the infotainment manual.

Phone & Bluetooth

See “Bluetooth” in the infotainment manual.

SXM SXM

See “SXM Settings” in “AM-FM Radio” in the infotainment manual.

✍ NOTES

Lighting

Exterior Lighting
Exterior Lamp Controls 6-1
Exterior Lamps Off Reminder 6-1
Headlamp High/Low-Beam Changer 6-1
Flash-to-Pass 6-2
Daytime Running Lamps (DRL) 6-2
Hazard Warning Flashers 6-2
Turn and Lane-Change Signals 6-3

Interior Lighting
Instrument Panel Illumination Control 6-3
Cargo Lamp 6-4
Dome Lamps 6-4
Reading Lamps 6-5

Lighting Features
Exterior Lighting Battery Saver 6-5

Exterior Lighting

Exterior Lamp Controls

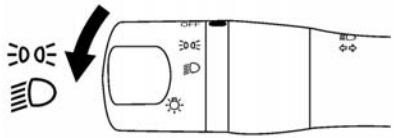

The exterior lamp control is on the turn signal lever on the left side of the steering column.

There are three positions:

OFF: Turns all the lamps off, except the Daytime Running Lamps (DRL).

(Parking Lamps): Turns on the parking lamps including all lamps, except the headlamps.

(Headlamps): Turns on the headlamps together with the parking lamps and instrument panel lights.

Exterior Lamps Off Reminder

A warning chime sounds if the driver door is opened while the ignition is off and the exterior lamps are on.

Headlamp High/ Low-Beam Changer

(Headlamp High/Low-Beam Changer): Push the turn signal lever away from you and release, to turn the high beams on. To return to low beams, push the lever again or pull it toward you and release.

This indicator light turns on in the instrument cluster when the high-beam headlamps are on.

Flash-to-Pass

This feature is used to signal to the vehicle ahead that you want to pass.

If the headlamps are off or in the low-beam position, pull the turn signal lever toward you to momentarily switch to high beams.

Release the lever to turn the high-beam headlamps off.

Daytime Running Lamps (DRL)

DRL can make it easier for others to see the front of your vehicle during the day.

A light sensor on top of the instrument panel makes the DRL work, so be sure it is not covered.

The DRL system makes the low-beam headlamps come on at a reduced brightness when the following conditions are met:

- The ignition is in the ON position.
- The exterior lamp control is in the OFF position.
- The parking brake is released.

If the parking brake is applied before the engine is started, the DRL do not come on.

When the DRL are on, only the low-beam headlamps, at a reduced level of brightness, will be on. The taillamps, sidemarker, instrument panel, and other lamps will not be on.

Turn the exterior lamp control to the ⊃00⊂ or ≡D position for full illumination when driving at night.

The DRL remain on until the ignition switch is placed in the OFF position.

Hazard Warning Flashers

The hazard warning switch is on the center stack below the climate control system.

Press this button to make the front and rear turn signal lamps flash on and off. This warns others that you are having trouble. Press again to turn the flashers off.

The hazard warning flashers work with the ignition switch in any position.

Some localities may prohibit the use of the hazard warning flashers while driving.

Turn and Lane-Change Signals

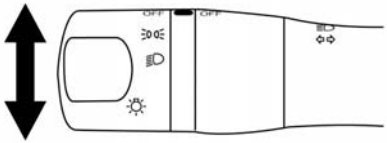

Move the lever all the way up or down to signal a turn.

An arrow on the instrument cluster flashes in the direction of the turn or lane change.

Raise or lower the lever until the arrow starts to flash to signal a lane change. Hold it there until the lane change is completed. If the lever is briefly pressed and released, the turn signal flashes three times.

The lever returns to its starting position whenever it is released.

If after signaling a turn or lane change the arrow flashes rapidly or does not come on, a signal bulb may be burned out.

Have any burned out bulbs replaced. If a bulb is not burned out, check the fuse. See *Electrical System Overload on page 10-24*.

Interior Lighting

Instrument Panel Illumination Control

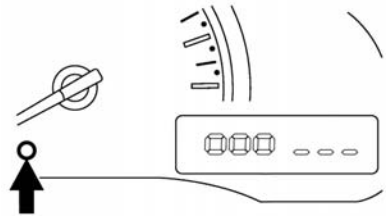

The instrument panel illumination control only works if the exterior lamp control is in the ⇶ or ⇶ position.

The knob for this feature is on the instrument cluster.

Press the knob to adjust the brightness of the instrument panel lights.

Cargo Lamp

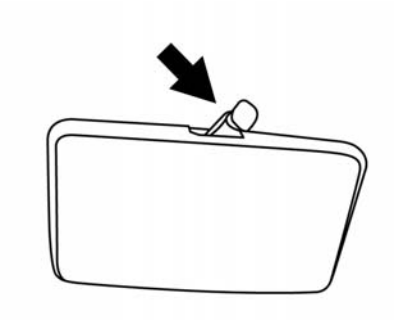

The interior light switch has two positions and operates in any ignition switch position.

ON: Turns the interior light on in any door position. The light turns off automatically after a period of time unless the ignition switch is turned to ACC/ACCESSORY or ON.

OFF: Turns the interior light off and it will not come on regardless of the door position.

Dome Lamps

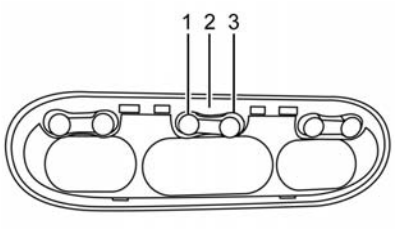

The dome lamp in the overhead console operates in any ignition switch position.

The dome lamp switch has three positions. Press the switch to adjust the settings.

Press (1) to turn the lamp off, even when a door is open.

When the switch is in the (2) position, the lamp comes on when a door is opened. When the dome lamp is in this position, the light stays on for a period of time when:

- The doors are unlocked while all the doors are closed and the ignition switch is in the OFF position.
- The driver door is opened and then closed while the key is removed from the ignition switch.
- The key is removed from the ignition switch while all doors are closed.

The dome lamp turns off while the timer is activated when:

- The driver door is locked by the key or the power door lock switch.
- The ignition switch is placed in the ON position.

Press (3) to turn the lamp on.

The light turns off after a period of time unless the ignition switch is put in the ACC/ACCESSORY or ON position.

The light turns off automatically after a period of time while the doors are open to prevent the battery from becoming discharged.

Reading Lamps

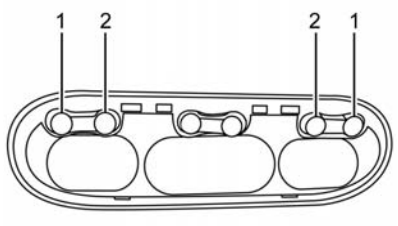

There are reading lamps on the overhead console.

Press (1) to turn the reading lamp on or (2) to turn the reading lamp off.

Lighting Features

Exterior Lighting Battery Saver

If the ignition is turned off and the parking lamps or headlamps have been left on, they will automatically turn off after a period of time. This protects against draining the battery.

✍ NOTES

Infotainment System

Introduction
Infotainment 7-1
Theft-Deterrent Feature 7-2
Overview 7-2
Operation 7-4

Radio
AM-FM Radio 7-5
Radio Reception 7-6
Fixed Mast Antenna 7-6

Audio Players
CD Player 7-7
Auxiliary Jack 7-9

Phone
Bluetooth 7-10

Trademarks and License Agreements
Trademarks and License Agreements 7-19

Introduction

Infotainment

Base radio information is included in this manual. See the infotainment manual for information on other available infotainment systems.

Read the following pages to become familiar with these features.

⚠ Warning

Taking your eyes off the road for too long or too often while using any infotainment feature can cause a crash. You or others could be injured or killed. Do not give extended attention to infotainment tasks while driving. Limit your glances at the vehicle displays and focus your attention on driving. Use voice commands whenever possible.

The infotainment system has built-in features intended to help avoid distraction by disabling some functions when driving. These functions may gray out when they are unavailable. Many infotainment features are also available through the instrument cluster and steering wheel controls.

Before driving:

- Become familiar with the operation, faceplate buttons, and screen buttons.
- Set up the audio by presetting favorite stations, setting the tone, and adjusting the speakers.
- Set up phone numbers in advance so they can be called easily by pressing a single button or by using a single voice command if equipped with Bluetooth phone capability.

See *Defensive Driving on page 9-2*.

Theft-Deterrent Feature

The theft-deterrent feature works by learning a portion of the Vehicle Identification Number (VIN) to the infotainment system. The infotainment system does not operate if it is stolen or moved to a different vehicle.

Overview

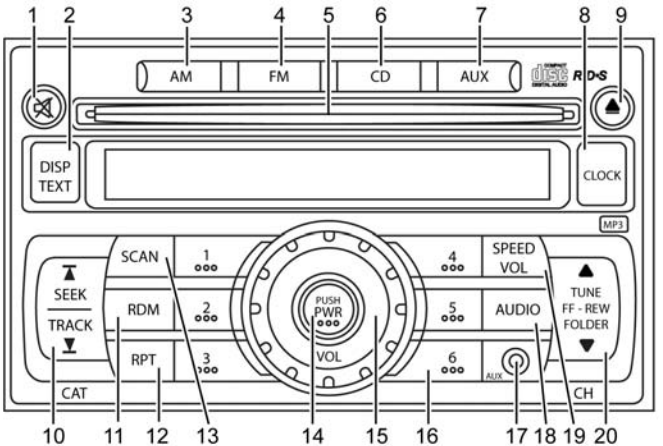

1. (Mute)
   - Press to mute the audio system.
2. DISP/TEXT (Display Text)
   - Radio: Press to view station and song information.
   - CD: Press to scroll through track number, disc title, and song title.
   - CD with MP3 or WMA: Press to scroll through track number, folder title, album title, artist, and song title.

3. AM
   - Press to listen to AM stations.
4. FM
   - Press to listen to FM stations.
5. CD Slot
6. CD
   - Press to start playing a loaded CD when the system is off.
   - Press to start playing a loaded CD when listening to another audio source.
7. AUX (Auxiliary)
   - Press to play a connected auxiliary device.
8. CLOCK
   - Press to turn the clock display off and on when the ignition is in ACC/ACCESSORY or ON/START.
   - Press and hold to set the clock. See *Clock on page 5-3*.
9. ⏏ (Eject)
   - Press to eject the loaded CD.
10. ▲ SEEK/TRACK ▼
    - Press ▲ SEEK to seek the next station or next CD track. Press repeatedly to go forward several tracks.
    - Press TRACK ▼ to seek the previous station or start the current CD track from the beginning. Press repeatedly to go back several tracks.
11. RDM (Random)
    - CD: Press to change the playing pattern of the CD between Disc Random and Disc Repeat.
    - CD with MP3 or WMA: Press to change the playing pattern of the CD between Disc Random, Folder Random, and Disc Repeat.
12. RPT (Repeat)
    - CD: Press to change the playing pattern of the CD between Track Repeat and Disc Repeat.
    - CD with MP3 or WMA: Press to change the playing pattern of the CD between Folder Repeat, Track Repeat, and Disc Repeat.
13. SCAN
    - Press to scan the next radio station for five seconds. Press the button again within the five seconds and the radio will stay on that station.
14. PUSH/PWR (Power)
    - Press to turn the infotainment system on or off.

15. VOL (Volume)
    - Turn to adjust the volume.
16. Buttons 1–6
    - Save and select favorite stations.
17. Auxiliary Input Jack
    - Use to connect external audio devices.
18. AUDIO
    - Press to set the bass, treble, fade, balance, and beep.
19. SPEED VOL
    - Press to change Speed Sensitive Volume (SSV).
20. ▲ TUNE/FF-REW/FOLDER ▼
    - Press to change to the next or previous radio stations one at a time.
    - CD: Press and hold to fast forward or fast reverse the CD track.
    - CD with MP3 or WMA: Press and hold for less than 90 seconds to change the folders in the CD. Press and hold for more than 90 seconds to fast forward or fast reverse the CD track.

Operation

Using the Radio

PUSH/PWR (Power): Press to turn the system on and off.

VOL (Volume): Turn clockwise or counterclockwise to increase or decrease the volume.

🔇 **(Mute):** Press to mute the audio system. Press again to unmute the audio system.

SPEED VOL: Speed Sensitive Volume (SSV) automatically adjusts the radio volume to compensate for road and wind noise as the vehicle speed changes while driving, so that the volume level stays consistent.

To activate SSV:

1. Press SPEED VOL.
2. Press ▲ TUNE/FF-REW/FOLDER ▼ to change between Off, Low, Mid, and High.
3. Press AM, FM, or CD to return to the desired option or let the screen time out.

Setting the Tone (Bass/Treble)

To adjust the bass or treble:

1. Press AUDIO until Bass or Treble displays.
2. Press ▲ TUNE/FF-REW/FOLDER ▼ or ▲ SEEK/TRACK ▼ to adjust the selected mode to the desired setting.

Adjusting the Speakers (Fade/Balance)

The vehicle is not equipped with rear speakers. If fade is adjusted to the rear no sound will be heard.

To adjust the fade or balance:

1. Press AUDIO until Fade or Balance displays.
2. Press ▲ TUNE/FF-REW/ FOLDER ▼ or ▲ SEEK/TRACK ▼ to adjust the selected mode to the desired setting.

Menu Selection Sound (Beep)

To turn the menu selection sound on or off:

1. Press AUDIO until Beep ON/ OFF displays.
2. Press ▲ TUNE/FF-REW/ FOLDER ▼ or ▲ SEEK/TRACK ▼ to select ON or OFF.

Radio

AM-FM Radio

Finding a Station

AM: Press to change to AM stations.

FM: Press to change to FM stations and press to change between FM1 and FM2. The FM stereo indicator (ST) illuminates during FM stereo reception. When the stereo broadcast signal is weak, the radio automatically changes from stereo to monaural reception.

▲ SEEK/TRACK ▼ : Press ▲ SEEK to fast seek or scan the next station.

Press TRACK ▼ to fast seek or scan the previous station.

▲ TUNE/FF-REW/FOLDER ▼ : Press to change to the next or previous radio stations one at a time.

SCAN: Press to scan the next radio station for five seconds. Press the button again within the five seconds and the radio will stay on that station.

Storing a Favorite Station

Set up radio station favorites while the vehicle is parked.

Up to 18 stations (six FM1, six FM2, and six AM), can be programmed on the six numbered buttons.

To store a station as a favorite:

1. Select the desired radio band AM, FM1, or FM2.
2. Tune to the desired radio station.
3. Press and hold one of the six keys until a beep sounds. When that key is pressed and released, the station that was set returns.
4. Repeat the steps for each radio station to be stored as a favorite.

Radio Reception

Frequency interference and static can occur during normal radio reception if items such as cell phone chargers, vehicle convenience accessories, and external electronic devices are plugged into the accessory power outlet. If there is interference or static, unplug the item from the accessory power outlet.

AM

The range for most AM stations is greater than for FM, especially at night. The longer range can cause station frequencies to interfere with each other. For better radio reception, most AM radio stations boost the power levels during the day, and then reduce these levels during the night. Static can also occur when things like storms and power lines interfere with radio reception. When this happens, try reducing the treble on the radio.

FM Stereo

FM stereo gives the best sound, but FM signals reach only about 16 to 65 km (10 to 40 mi). Tall buildings or hills can interfere with FM signals, causing the sound to fade in and out.

Cellular Phone Usage

Cellular phone usage may cause interference with the radio. This interference may occur when making or receiving phone calls, charging the phone's battery, or simply having the phone on. This interference causes an increased level of static while listening to the radio. If static is received while listening to the radio, unplug the cellular phone and turn it off.

Fixed Mast Antenna

The multi-band antenna is on the roof of the vehicle. The antenna is used for AM, FM, and navigation System, if equipped. Tall buildings, hills, trees, heavy foliage, tunnels, bridges, and garages will affect reception. Keep the antenna clear of obstructions for clear reception. Make sure there is sufficient clearance when entering garages or parking structures.

Audio Players

CD Player

Care of the CD Player

Only use high quality 12 cm (4.7 in) round discs that have the "COMPACT disc DIGITAL AUDIO" logo on the disc or packaging. Do not add any label to a CD. It could get caught in the CD. If a CD is recorded on a personal computer and a description label is needed, try labeling the top of the recorded CD with a marking pen.

The use of CD lens cleaners is not advised, due to the risk of contaminating the lens of the CD optics with lubricants internal to the CD player mechanism.

⚠ Caution

If a label is added to a CD, more than one CD is inserted into the slot at a time, or an attempt is made to play scratched or damaged CDs, the CD player could be damaged. While using the CD player, use only CDs in good condition without any label, load one CD at a time, and keep the CD player and the loading slot free of foreign materials, liquids, and debris.

If an error displays, see "CD Player Messages" later in this section.

Care of CDs

Handle them carefully. Store CDs in their original cases or other protective cases and away from direct sunlight and dust. The CD player scans the bottom surface of the disc. Do not touch the bottom side of a CD while handling it; this could damage the surface. Pick up CDs by the outer edges or the edge of the hole and the outer edge.

If the surface of a CD is soiled, clean it with a soft, lint-free cloth or dampen a clean, soft cloth in a mild, neutral detergent solution mixed with water. Make sure the wiping process starts from the center to the edge.

The following CDs may not work properly: Copy control compact discs (CCCD), Recordable compact discs (CD-R), and Rewritable compact discs (CD-RW).

Do not use the following CDs as they may cause the CD player to malfunction, 8 cm (3.1 in) discs with an adapter, CDs that are not round, CDs with a paper label, CD that are damaged, such as cracked, broken, scratched, or with abnormal edges.

Inserting a CD

Insert a CD partway into the slot, label side up. The player pulls it in and the CD should begin playing.

Ejecting a CD

⏏ **:** Press and release to eject the disc. Remove the CD when Remove Disc displays. If the disc is not removed, after several seconds the disc is automatically pulled back into the player, but doesn't start to play.

Playing a CD

If the ignition or radio is turned off with a CD in the player, it stays in the player. When the ignition or radio is turned on, the CD starts playing where it stopped, if it was the last selected audio source.

CD: Press to start a loaded CD.

DISP/TEXT (Display Text): Press to display additional information related to the CD. If information is available, the track number, disc title, folder title, album title, artist, and song title information will display on the screen with each press of the button.

▲ SEEK/TRACK ▼ : Press ▲ SEEK to seek the next CD track. Press repeatedly to go forward several tracks.

Press TRACK ▼ to start the current CD track from the beginning. Press repeatedly to go back several tracks.

RDM (Random): CD: Press to change the playing pattern of the CD between Disc Random and Disc Repeat.

CD with MP3 or WMA: Press to change the playing pattern of the CD between Disc Random, Folder Random, and Disc Repeat.

RPT (Repeat): CD: Press to change the playing pattern of the CD between Track Repeat and Disc Repeat.

CD with MP3 or WMA: Press to change the playing pattern of the CD between Folder Repeat, Track Repeat, and Disc Repeat.

MP3-Supported Files

Radios with CD/MP3 have the capability of playing CD, CD-R, or CD-RW disc.

Format

Radios that have the capability of playing MP3s can play .mp3 or .wma files that were recorded onto a CD-R or CD-RW disc. The files can be recorded with the following fixed bit rates: 8 kbps, 48 kbps, 192 kbps, and 320 kbps or a variable bit rate.

Compressed Audio or Mixed Mode Discs

The radio can play discs that contain both uncompressed CD audio and MP3 files. If both formats are on the disc, the radio reads all MP3 files first, then the uncompressed CD audio files.

CD-R- or CD-RW-Supported File and Folder Structure

The radio supports:

- Up to eight folders in depth.
- Up to 255 folders.
- Up to 512 files.
- Up to 255 files for one folder.

Root Directory

The root directory is treated as a folder. Files are stored in the root directory when the disc or storage device does not contain folders.

Empty Folder

Folders that do not contain files are skipped, and the player advances to the next folder that contains files.

Order of Play

The playback order is the order in which the files were written by the writing software. Therefore, the files may not play in the desired order.

File System and Naming

The artist/song title that displays is the artist/song title contained in the ID3 tag. The ID3 tag information is displayed on the artist/song title line on the screen.

Text character limit is 128 characters.

CD Player Messages

CHECK DISC: If this message displays and/or the CD ejects, it could be for one of the following reasons:

- Confirm that the CD is inserted correctly (the label side is facing up, etc.).
- Confirm that the CD is not bent or warped and it is free of scratches.

PRESS EJECT: This is an error due to excessive temperature inside the player. Remove the CD by pressing ⏏. After a short time, reinsert the CD. The CD can be played when the temperature of the player returns to normal.

UNPLAYABLE: The file is unplayable in this audio system (only MP3 or WMA, if equipped.

If the CD is not playing correctly, for any other reason, try a known good CD.

Auxiliary Jack

Using the Auxiliary Input Jack

The auxiliary input jack is on the lower right side of the faceplate. External devices such as an iPod®, laptop computer, MP3 player, cassette player, or CD changer can be connected to the auxiliary port using a 3.5 mm (1/8 in) input cable.

This input jack is not an audio output; do not plug headphones into the front auxiliary input jack.

Drivers are encouraged to set up any auxiliary device while the vehicle is in P (Park). See *Defensive Driving on page 9-2* for more information on driver distraction.

VOL (Volume): Turn clockwise or counterclockwise to increase or decrease the volume of the portable player. Additional volume adjustments might have to be made from the portable device if the volume is not loud or soft enough.

AUX (Auxiliary): Press to play a portable audio device.

To use a portable audio player, connect a 3.5 mm (1/8 in) cable to the auxiliary input jack. When a device is connected, press the AUX button to begin playing audio from the device.

For optimal sound quality, increase the portable audio device's volume to the loudest level.

It is always best to power the portable audio device through its own battery while playing.

Phone

Bluetooth

If equipped with Bluetooth® capability, the system can interact with many cell phones, allowing:

- Placement and receipt of calls in a hands-free mode.
- Sharing of the cell phone's address book or contact list with the vehicle.

To minimize driver distraction, before driving, and with the vehicle parked:

- Become familiar with the features of the cell phone. Organize the phone book and contact lists clearly and delete duplicate or rarely used entries. If possible, program speed dial or other shortcuts.
- Review the controls and operation of the infotainment system.

- When the vehicle is in motion, some commands may not be available so full attention may be given to operating the vehicle.
- Pair cell phone(s) to the vehicle. The system may not work with all cell phones. See “Pairing” in this section later.
- If the cell phone has voice dialing capability, learn to use that feature to access the address book or contact list.

⚠ Warning

When using a cell phone, it can be distracting to look too long or too often at the screen of the phone or the infotainment system. Taking your eyes off the road too long or too often could cause a crash resulting in injury or death. Focus your attention on driving.

Bluetooth Controls

Use the buttons on the steering wheel to operate the in-vehicle Bluetooth system. See *Steering Wheel Controls on page 5-2*.

(Press to Talk): Press to answer incoming calls and start speech recognition.

(End): Press and hold to end a call or reject a call.

A Bluetooth system can use a Bluetooth-capable cell phone with a Hands-Free Profile to make and receive phone calls. The system can be used while the key is in the ON or ACC/ACCESSORY position.

If the button on the steering wheel is pressed before the initialization completes, the system will announce “Hands-free phone system not ready” and will not react to voice commands. Not all phones support all functions, and not all phones work with the in-vehicle Bluetooth system. See www.gm.com/bluetooth for more information on compatible phones.

Choosing a Language

The available languages are English, Spanish, and French.

To change the language:

1. Press and hold for more than fivecseconds.
2. The system responds with, “Press the PHONE/SEND ( ) button for the hands-free phone system to enter the voice adaptation mode or press the PHONE/END ( ) button to select a different language.”
3. Press .
4. The system responds with the current language and gives the option to change to another language. Do nothing and the session will end after five seconds and the current language will remain.

5. To select a different language, press ⏮ or ⏭ on the steering wheel.
6. To select the language, press 🗣 📞 within five seconds.

Voice Recognition

The Bluetooth system uses voice recognition to interpret voice commands to dial phone numbers and name tags.

For available commands for the current menu again, say “Help” and the system will repeat them.

Noise: Keep interior noise levels to a minimum. The system may not recognize voice commands if there is too much background noise.

When to Speak: A tone sounds after the system responds indicating when it is waiting for a voice command. Wait until the tone and then speak. Start speaking a command within 5 seconds after the tone sounds.

How to Speak: Speak clearly in a calm and natural voice without pausing between words.

Mute: Say to mute the call. Say mute again to unmute the call.

Audio System

When using the in-vehicle Bluetooth system, sound comes through the vehicle's audio system speakers and overrides the audio system. Use the audio system volume knob or press 🔈 − or 🔈 + on the steering wheel, during a call, to change the volume level.

Pairing

A Bluetooth-enabled cell phone must be paired to the Bluetooth system and then connected to the vehicle before it can be used. See the cell phone manufacturer's user guide for Bluetooth functions before pairing the cell phone.

Pairing Information

- A Bluetooth phone with MP3 capability cannot be paired to the vehicle as a phone and an MP3 player at the same time.
- Up to five cell phones can be paired to the Bluetooth system.
- The pairing process is disabled when the vehicle is moving.
- Pairing only needs to be completed once, unless the pairing information on the cell phone changes or the cell phone is deleted from the system.
- Only one paired cell phone can be connected to the Bluetooth system at a time.
- If multiple paired cell phones are within range of the system, the system connects to the first available paired cell phone in the order that they were first paired to the system. To connect to a different paired phone, see

"Listing All Paired and Connected Phones" later in this section.

Pairing a Phone

1. Press .
2. Say "Connect Phone." The system acknowledges the command and announces the next set of available commands.
3. Say "Add Phone." The system acknowledges the command and asks you to initiate connecting from the phone handset.

   The connecting procedure of the cell phone varies according to each cell phone model. See the cell phone Owner's Manual for details.

   When prompted for a Passkey code, enter "1234" from the handset.
4. The system asks you to say a name for the phone.

   If the name is too long or too short, the system tells you, then prompts you for a name again.

   If more than one phone is connected and the name sounds too much like a name already used, the system tells you, then prompts you for a name again.

Listing All Paired and Connected Phones

The system can list all cell phones paired to it. If a paired cell phone is also connected to the vehicle, the system responds with "is connected" after that phone name:

1. Press .
2. Say "Select Phone."

Deleting a Paired Phone

The system will list the names assigned to each phone and then prompt you for the phone you wish to delete. Deleting a phone from the vehicle will also delete the phone book for that phone:

1. Press .
2. Say "Delete Phone."

Replace Phone

The system will replace an existing phone pairing with a new phone. The system will keep all voice tags assigned to your phone book.

1. Press .
2. Say "Replace Phone."

Bluetooth Off

Use the Bluetooth Off command to prevent a wireless connection to your phone.

1. Press .
2. Say "Bluetooth Off."

Making a Call

Calls can be made using the following commands:

Call: This command is used to dial a stored name.

Phone Number: This command allows a phone number to be dialed by entering the digits one at a time.

Special Number: This command allows special characters in a phone number.

Re-dial: This command is used to dial the last number used on the cell phone.

Call Back: This command is used to call the last incoming phone number.

During a Call

During a call there are several command options available. Press on the steering wheel to mute the receiving voice and enter commands.

Help: The system announces the available commands.

Cancel or Quit: The system announces “Cancel,” ends the session, and returns to the call.

Send: Use the Send command to enter numbers, “*” or “#” during a call. For example, if you were directed to dial an extension by an automated system, say “Send one two three four.”

The system acknowledges the command and sends the tones associated with the numbers. The system then ends the session and returns to the call. Say “star” for “*” and say “pound” for “#”.

Transfer call: Use the Transfer Call command to transfer the call from the Bluetooth® Hands-Free Phone System to the cell phone when privacy is desired.

The system announces, “Transfer call. Call transferred to privacy mode.” The system then ends the session.

To reconnect the call from the cell phone to the Bluetooth Hands-Free System, press the button.

Mute: Use this command to mute your voice so the other party cannot hear it. Use the mute command again to unmute your voice.

Using the “Call” Command

1. Press .
2. Say “Call.”
3. Say the name you want to call.
4. The system repeats it back. If there are multiple numbers associated with the name, the system asks you to choose the correct number.
5. Once you have confirmed the name and location, the system begins the call.

Using the “Phone Number” Command

The Phone Number command allows a phone number to be dialed by entering the digits one at a time.

1. Press .
2. Say “Call.”
3. Say “Phone Number.”
4. Say each digit, one at a time, that you want to dial. After the number is entered, the system repeats it back.
5. Say “Dial.”

Using the “Special Number” Command

The Special Number command allows for dialing more than 10 digits or any special characters.

1. Press .
2. Say “Call.”
3. Say “Special Number.”
4. Say each digit, one at a time, that you want to dial. After the number is entered, the system repeats it back.
5. Say “Dial.”

Using the “Re-dial” Command

Use the Re-dial command to call the last number that was dialed.

1. Press .
2. Say “Call.”
3. Say “Re-dial.”

Using the “Call Back” Command

Use the Call Back command to dial the number of the last incoming call.

1. Press .
2. Say “Call.”
3. Say “Call Back.”

Phonebook

Without Automatic Download

For phones that do not support automatic download of the phone book the Phone book command is used to manually add entries to the vehicle phone book.

The phone book stores up to 40 names for each phone connected to the system.

The following commands are used to delete and store phone numbers.

Transfer Entry: This command will store a name into the system.

Delete Entry: This command will erase one entry from the phone book.

List Names: This command will list all the names in the phone book.

Using the “Transfer Entry” Command

1. Press .
2. Say “Transfer Entry.”

3. When prompted, say the new entry name.
4. The system will ask you to transfer a phone number stored in the cell phone's memory.
5. Enter a phone number by voice command.
6. Say "Transfer Entry." The system acknowledges the command and asks you to start the transfer from the phone handset.
7. The system repeats the number and prompts you for the next command. When you have finished entering numbers or transferring an entry, say "Store."
8. The system confirms the name, location, and number.

Using the "Delete Entry" Command

1. Press .
2. Say "Delete Entry."
3. Speak the name to delete or say "List Names" to choose an entry.

Using the "List Names" Command

1. Press .
2. Say "List Names."
3. The system responds with a list of names from the phone book. To stop the playback of the list at any time press .

With Automatic Download

For phones that support automatic download of the phone book the "Phone book" command is used to manage phone book entries.

The phone book stores up to 1,000 names for each phone connected to the system.

When a phone is connected to the system, the phone book is automatically downloaded to the vehicle. This feature allows access to the phone book from the Bluetooth system and calls contacts by name. You can record a custom voice tag for contact names that the system has difficulty recognizing. See "Record name" in this section.

List Names: This command will list all the names and locations in the phone book.

Record Name: This command will record custom voice tags for contact names in the phone book that the vehicle has difficulty recognizing.

Using the "List Names" Command

1. Press .
2. Say "List Names."
3. The system responds with a list of names and locations in the phone book. To stop the playback of the list at any time press .

Using the "Record Name" Command

1. Press .
2. Say "Record Name."

This feature can also be used to record voice tags to directly dial an entry with multiple numbers. Up to 40 voice tags can be recorded to the system.

Recent Calls

Use the Recent Calls command to access outgoing, incoming, or missed calls or dial numbers for the last incoming or outgoing calls.

Outgoing: Use the Outgoing command to list the outgoing calls made.

Incoming: Use the Incoming command to list the incoming calls made.

Missed: Use the Missed command to list the calls not answered.

Call Back: Use the Call Back command to call the last incoming phone number.

Re-dial: Use the Re-dial command to call the last outgoing number called.

Using the "Outgoing" Command

1. Press .
2. Say "Outgoing."
3. The system repeats a list of the outgoing calls.

Using the "Incoming" Command

1. Press .
2. Say "Incoming."
3. The system repeats a list of the incoming calls.

Using the "Missed" Command

1. Press .
2. Say "Missed."
3. The system repeats a list of missed calls.

Using the "Call Back" Command

1. Press .
2. Say "Call Back."
3. The system calls back the last incoming phone number.

Using the "Re-dial" Command

1. Press .
2. Say "Re-dial."
3. The system calls the last outgoing number called.

Receiving a Call

When an incoming call is received, the audio system mutes and a ring tone is heard in the vehicle.

- Press to answer the call.
- Press to ignore a call.

Ending a Call

Press to end a call.

Voice Adaptation (VA) Mode

VA allows up to two out-of-dialect users to train the system to improve recognition accuracy. By repeating a number of commands, the users can create a voice model of their own voice that is stored in the system. The system is capable of storing a different voice adaptation model for each connected phone.

Training

To train a voice:

1. Park the vehicle in a reasonably quiet outdoor location.

2. Sit in the driver seat with the engine running and the parking brake on.
3. Press and hold for more than five seconds.
4. The system responds with, “Press the PHONE/SEND ( ) button for the hands-free phone system to enter the voice adaptation mode or press the PHONE/END ( ) button to select a different language.” See “Language” previously in this section.
5. Voice memory A or B is automatically selected. If both memory locations are already used, the system will prompt you to overwrite one. Follow the instructions provided by the system.
6. When the preparation is complete and you are ready to begin, press .
7. The VA mode will be explained. Follow the instructions provided by the system.
8. When the training is finished, the system will tell you that an adequate number of phrases have been recorded.
9. The system will announce that VA has been completed and the system is ready.

The VA mode will stop if:

- The button is pressed for more than five seconds in VA mode.
- The vehicle begins moving during VA mode.
- The ignition switch is placed in the OFF or LOCK position.

Manual Control

While using the voice recognition system, it is possible to select menu options to use the steering wheel controls instead of speaking voice commands. This can be especially helpful if the noise of driving makes it difficult for the voice recognition system to accurately interpret commands. The manual control mode does not allow dialing a phone number by digits. The user may select an entry from the Phonebook or Recent Calls lists. To re-activate voice recognition, exit the manual control mode by pressing and holding , then press to start the Hands Free Phone System.

To start Manual Control Mode:

1. From an active Phone book or Recent Call list, press ▲ TUNE/ FF-REW FOLDER ▼ up or down.

2. The system responds with “Showing Manual Options.”
3. Browse the menu by pressing ▲ TUNE/FF-REW FOLDER ▼ up or down. The system will speak the current menu option. Depending on the audio display, it will also show the current menu option.
4. Press to select the menu option.
5. Press to go back to the previous menu.
6. Press and hold for five seconds to exit.

Trademarks and License Agreements

FCC Information

See *Radio Frequency Statement on page 13-12*.

“Made for iPod” and “Made for iPhone” mean that an electronic accessory has been designed to connect specifically to iPod or iPhone and has been certified by the developer to meet Apple performance standards.

iPod and iPhone are trademarks of Apple Computer, Inc., registered in the U.S. and other countries.

Bluetooth

The Bluetooth® word mark and logos are owned by the Bluetooth® SIG, Inc. and any use of such marks by General Motors is under license. Other trademarks and trade names are those of their respective owners.

✍ NOTES

Climate Controls

Climate Control Systems
Climate Control Systems 8-1

Air Vents
Air Vents 8-3

Maintenance
Service 8-4

Climate Control Systems

The vehicle's heating, cooling, and ventilation can be controlled with this system.

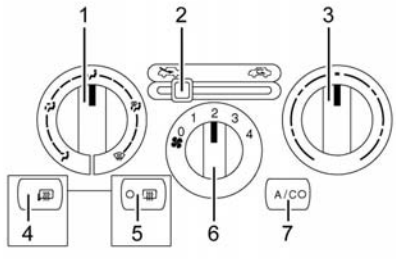

1. Air Delivery Mode Control
2. Outside Air/Recirculation Air Intake Control
3. Temperature Control
4. Heated Outside Mirrors (If Equipped)
5. Rear Window Defogger (If Equipped)
6. Fan Control
7. A/C (Air Conditioning)

(Fan Control): Turn clockwise or counterclockwise to increase or decrease the fan speed. Turning the fan control to 0 turns the fan off. The fan must be turned on to run the air conditioning compressor.

Temperature Control: Turn clockwise or counterclockwise to increase or decrease the temperature.

Air Delivery Mode Control: Turn clockwise or counterclockwise to change the current airflow mode.

Select from the following air delivery modes:

(Vent): Air is directed to the instrument panel outlets.

(Bi-Level): Air is divided between the instrument panel and floor outlets.

(Floor): Air is directed to the floor outlets.

(Defog): This mode clears the windows of fog or moisture. Air is directed to the floor, windshield, and side window outlets.

(Defrost): This mode clears the windshield of fog or frost more quickly. Air is directed to the windshield and side window outlets.

Do not drive the vehicle until all windows are clear.

In defrost or defog mode, excessive air conditioning use can cause the windows to fog. If this happens, change the air delivery mode to and reduce the fan speed.

Move the air intake control to or to select the outside air or recirculation modes.

(Outside Air): This mode pulls outside air inside the vehicle.

(Recirculation): This mode recirculates and helps to quickly cool the air inside the vehicle. It can be used to reduce the outside air and odors that may enter the vehicle.

Using the recirculation mode for extended periods may cause the windows to fog. If this happens, select the defrost mode.

To allow outside air to enter in these conditions, move the air intake control to .

A/C (Air Conditioning): Turn the fan control to the desired speed and press A/C . The air conditioning does not operate when the fan control knob is in the off position. Press A/C to turn the air conditioning on and off. When A/C is pressed, an indicator light comes on to show that the air conditioning is on.

For quick cool down on hot days:

1. Open the windows to let hot air escape.
2. Move the air intake control to .
3. Press A/C.
4. Select the coolest temperature.
5. Select the highest speed.

Using these settings together for long periods of time may cause the air inside the vehicle to become too dry. To prevent this from happening, after the air in the vehicle has cooled, move the air intake control to

Rear Window Defogger and Heated Outside Mirrors

(Rear Window Defogger, If Equipped): Press to turn the rear window defogger on or off. An indicator light comes on in the display to show that the feature is on. This helps to clear frost from the rear window and outside mirrors. The ignition must be on for the defogger to work.

The rear window defogger can be turned off by pressing again or by turning the ignition to ACC/ ACCESSORY or LOCK.

(Heated Outside Mirrors, If Equipped): Press to turn on or off. An indicator light comes on in the display to show that the feature is on. This helps to clear fog or frost from the surface of the mirror. The ignition must be in the ON position for the heated outside mirrors to work.

Caution

Using a razor blade or sharp object on the inside rear window can damage the antenna or defogger. Repairs would not be covered by the vehicle warranty. Do not stick anything to the rear window.

Air Vents

Adjustable air vents are on the sides and center of the instrument panel.

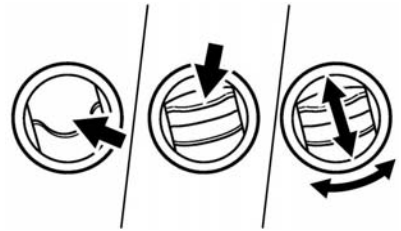

Open, close, or turn the slats to adjust the airflow.

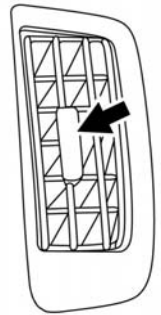

Move the sliding knob to adjust the airflow.

Operation Tips

- Clear away any ice, snow, or leaves from the air inlets at the base of the windshield that may block the flow of air into the vehicle.
- Use of non-GM approved hood deflectors may adversely affect the performance of the system.
- Keep the path under the front seats clear of objects to help circulate the air inside of the vehicle more effectively.

Maintenance

Service

This vehicle may have the new environmentally friendly refrigerant, R1234yf. This refrigerant has a significantly reduced global warming impact on the environment, compared to the traditional automotive refrigerant, R-134a. All vehicles have a label underhood that identifies the refrigerant used in the vehicle.

The refrigerant system should only be serviced by trained and certified technicians. The air conditioning evaporator should never be repaired or replaced by one from a salvage vehicle. It should only be replaced by a new evaporator to ensure proper and safe operation.

During service, all refrigerants should be reclaimed with proper equipment. Venting refrigerants directly to the atmosphere is harmful to the environment and may also create unsafe conditions based on inhalation, combustion, frostbite, or other health-based concerns.

Driving and Operating

Driving Information
Distracted Driving 9-2
Defensive Driving 9-2
Drunk Driving 9-3
Control of a Vehicle 9-3
Braking 9-3
Steering 9-3
Off-Road Recovery 9-4
Loss of Control 9-5
Driving on Wet Roads 9-5
Hill and Mountain Roads 9-6
Winter Driving 9-7
If the Vehicle Is Stuck 9-8
Vehicle Load Limits 9-9

Starting and Operating
New Vehicle Break-In 9-13
Ignition Positions 9-14
Starting the Engine 9-15
Parking over Things That Burn 9-17

Engine Exhaust
Engine Exhaust 9-17
Running the Vehicle While Parked 9-18

Automatic Transmission
Continuously Variable Transmission (CVT) 9-18

Brakes
Antilock Brake System (ABS) 9-22
Parking Brake 9-24

Ride Control Systems
Traction Control/Electronic Stability Control 9-25

Cruise Control
Cruise Control 9-28

Driver Assistance Systems
Parking Assist 9-30
Rear Vision Camera (RVC) 9-31

Fuel
Fuel 9-37
California Fuel Requirements 9-38
Fuels in Foreign Countries . . . 9-38
Fuel Additives 9-38
Filling the Tank 9-39
Filling a Portable Fuel Container 9-40

Trailer Towing
General Towing Information 9-41

Conversions and Add-Ons
Add-On Electrical Equipment 9-41

Driving Information

Distracted Driving

Distraction comes in many forms and can take your focus from the task of driving. Exercise good judgment and do not let other activities divert your attention away from the road. Many local governments have enacted laws regarding driver distraction. Become familiar with the local laws in your area.

To avoid distracted driving, always keep your eyes on the road, hands on the wheel, and mind on the drive.

- Do not use a phone in demanding driving situations. Use a hands-free method to place or receive necessary phone calls.
- Watch the road. Do not read, take notes, or look up information on phones or other electronic devices.
- Designate a front seat passenger to handle potential distractions.
- Become familiar with vehicle features before driving, such as programming favorite radio stations and adjusting climate control and seat settings. Program all trip information into any navigation device prior to driving.
- Wait until the vehicle is parked to retrieve items that have fallen to the floor.
- Stop or park the vehicle to tend to children.
- Keep pets in an appropriate carrier or restraint.
- Avoid stressful conversations while driving, whether with a passenger or on a cell phone.

⚠ Warning

Taking your eyes off the road too long or too often could cause a crash resulting in injury or death. Focus your attention on driving.

Refer to the infotainment section for more information on using that system and the navigation system, if equipped, including pairing and using a cell phone.

Defensive Driving

Defensive driving means “always expect the unexpected.” The first step in driving defensively is to wear the safety belt. See *Safety Belts on page 3-8*.

- Assume that other road users (pedestrians, bicyclists, and other drivers) are going to be careless and make mistakes. Anticipate what they might do and be ready.

- Allow enough following distance between you and the driver in front of you.
- Focus on the task of driving.

Drunk Driving

Death and injury associated with drinking and driving is a global tragedy.

⚠ Warning

Drinking and then driving is very dangerous. Your reflexes, perceptions, attentiveness, and judgment can be affected by even a small amount of alcohol. You can have a serious — or even fatal — collision if you drive after drinking.

Do not drink and drive or ride with a driver who has been drinking. Ride home in a cab; or if you are with a group, designate a driver who will not drink.

Control of a Vehicle

Braking, steering, and accelerating are important factors in helping to control a vehicle while driving.

Braking

Braking action involves perception time and reaction time. Deciding to push the brake pedal is perception time. Actually doing it is reaction time.

Average driver reaction time is about three-quarters of a second. In that time, a vehicle moving at 100 km/h (60 mph) travels 20 m (66 ft), which could be a lot of distance in an emergency.

Helpful braking tips to keep in mind include:

- Keep enough distance between you and the vehicle in front of you.
- Avoid needless heavy braking.
- Keep pace with traffic.

Vacuum Assisted Brakes

The brake booster aids braking by using engine vacuum. If the engine stops, you can stop the vehicle by depressing the brake pedal. However, greater foot pressure on the brake pedal will be required to stop the vehicle and stopping distance will be longer.

⚠ Warning

If the engine is not running or is turned off while driving, the power assist for the brakes will not work. Braking will be harder.

Steering

Electric Power Steering

The vehicle has electric power steering. It does not have power steering fluid. Regular maintenance is not required.

If power steering assist is lost due to a system malfunction, the vehicle can be steered, but may require increased effort.

See your dealer if there is a problem.

If the steering wheel is turned until it reaches the end of its travel and is held against that position for an extended period of time, power steering assist may be reduced.

If the steering assist is used for an extended period of time, power assist may be reduced.

Normal use of the power steering assist should return when the system cools down.

Curve Tips

- Take curves at a reasonable speed.
- Reduce speed before entering a curve.
- Maintain a reasonable steady speed through the curve.
- Wait until the vehicle is out of the curve before accelerating gently into the straightaway.

Steering in Emergencies

- There are some situations when steering around a problem may be more effective than braking.
- Holding both sides of the steering wheel allows you to turn 180 degrees without removing a hand.
- The Antilock Brake System (ABS) allows steering while braking.

Off-Road Recovery

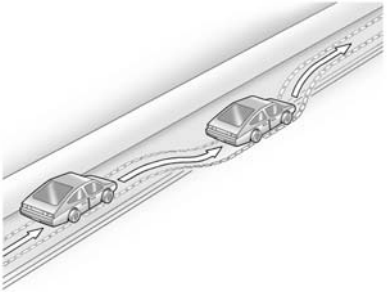

The vehicle's right wheels can drop off the edge of a road onto the shoulder while driving. Follow these tips:

1. Ease off the accelerator and then, if there is nothing in the way, steer the vehicle so that it straddles the edge of the pavement.
2. Turn the steering wheel about one-eighth of a turn, until the right front tire contacts the pavement edge.

3. Turn the steering wheel to go straight down the roadway.

Loss of Control

Skidding

There are three types of skids that correspond to the vehicle's three control systems:

- Braking Skid — wheels are not rolling.
- Steering or Cornering Skid — too much speed or steering in a curve causes tires to slip and lose cornering force.
- Acceleration Skid — too much throttle causes the driving wheels to spin.

Defensive drivers avoid most skids by taking reasonable care suited to existing conditions, and by not overdriving those conditions. But skids are always possible.

If the vehicle starts to slide, follow these suggestions:

- Ease your foot off the accelerator pedal and steer the way you want the vehicle to go. The vehicle may straighten out. Be ready for a second skid if it occurs.
- Slow down and adjust your driving according to weather conditions. Stopping distance can be longer and vehicle control can be affected when traction is reduced by water, snow, ice, gravel, or other material on the road. Learn to recognize warning clues — such as enough water, ice, or packed snow on the road to make a mirrored surface — and slow down when you have any doubt.
- Try to avoid sudden steering, acceleration, or braking, including reducing vehicle speed by shifting to a lower gear. Any sudden changes could cause the tires to slide.

Remember: Antilock brakes help avoid only the braking skid.

Driving on Wet Roads

Rain and wet roads can reduce vehicle traction and affect your ability to stop and accelerate. Always drive slower in these types of driving conditions and avoid driving through large puddles and deep-standing or flowing water.

⚠ Warning

Wet brakes can cause crashes. They might not work as well in a quick stop and could cause pulling to one side. You could lose control of the vehicle.

After driving through a large puddle of water or a car/vehicle wash, lightly apply the brake pedal until the brakes work normally.

(Continued)

Warning (Continued)

Flowing or rushing water creates strong forces. Driving through flowing water could cause the vehicle to be carried away. If this happens, you and other vehicle occupants could drown. Do not ignore police warnings and be very cautious about trying to drive through flowing water.

Hydroplaning

Hydroplaning is dangerous. Water can build up under the vehicle's tires so they actually ride on the water. This can happen if the road is wet enough and you are going fast enough. When the vehicle is hydroplaning, it has little or no contact with the road.

There is no hard and fast rule about hydroplaning. The best advice is to slow down when the road is wet.

Other Rainy Weather Tips

Besides slowing down, other wet weather driving tips include:

- Allow extra following distance.
- Pass with caution.
- Keep windshield wiping equipment in good shape.
- Keep the windshield washer fluid reservoir filled.
- Have good tires with proper tread depth. See *Tires on page 10-26*.
- Turn off cruise control.

Hill and Mountain Roads

Driving on steep hills or through mountains is different than driving on flat or rolling terrain. Tips for driving in these conditions include:

- Keep the vehicle serviced and in good shape.
- Check all fluid levels and brakes, tires, cooling system, and transmission.
- Shift to a lower gear when going down steep or long hills.

⚠ Warning

Using the brakes to slow the vehicle on a long downhill slope can cause brake overheating, can reduce brake performance, and could result in a loss of braking. Shift the transmission to a lower gear to let the engine assist the brakes on a steep downhill slope.

⚠ Warning

Coasting downhill in N (Neutral) or with the ignition off is dangerous. This can cause overheating of the brakes and loss of steering. Always have the engine running and the vehicle in gear.

- Stay in your own lane. Do not swing wide or cut across the center of the road. Drive at speeds that let you stay in your own lane.
- Be alert on top of hills; something could be in your lane (stalled car, accident).
- Pay attention to special road signs (falling rocks area, winding roads, long grades, passing or no-passing zones) and take appropriate action.

Winter Driving

Driving on Snow or Ice

Drive carefully when there is snow or ice between the tires and the road, creating less traction or grip. Wet ice can occur at about 0°C (32° F) when freezing rain begins to fall, resulting in even less traction. Avoid driving on wet ice or in freezing rain until roads can be treated with salt or sand.

Drive with caution, whatever the condition. Accelerate gently so traction is not lost. Accelerating too quickly causes the wheels to spin and makes the surface under the tires slick, so there is even less traction.

Traction Control should be turned on. See *Traction Control/Electronic Stability Control on page 9-25*.

The Antilock Brake System (ABS) improves vehicle stability during hard stops on slippery roads, but apply the brakes sooner than when on dry pavement. See *Antilock Brake System (ABS) on page 9-22*.

Allow greater following distance on any slippery road and watch for slippery spots. Icy patches can occur on otherwise clear roads in shaded areas. The surface of a curve or an overpass can remain icy when the surrounding roads are clear. Avoid sudden steering maneuvers and braking while on ice.

Turn off cruise control on slippery surfaces.

Blizzard Conditions

Being stuck in snow can be a serious situation. Stay with the vehicle unless there is help nearby. If possible, use Roadside Assistance. See *Roadside Assistance Program on page 13-5*. To get help and keep everyone in the vehicle safe:

- Turn on the hazard warning flashers.
- Tie a red cloth to an outside mirror.

⚠ Warning

Snow can trap engine exhaust under the vehicle. This may cause exhaust gases to get inside. Engine exhaust contains carbon monoxide (CO) which

(Continued)

Warning (Continued)

cannot be seen or smelled. It can cause unconsciousness and even death.

If the vehicle is stuck in the snow:

- Clear away snow from around the base of your vehicle, especially any that is blocking the exhaust pipe.
- Check again from time to time to be sure snow does not collect there.
- Open a window about 5 cm (2 in) on the side of the vehicle that is away from the wind to bring in fresh air.
- Fully open the air outlets on or under the instrument panel.
- Adjust the climate control system to a setting that circulates the air inside the

(Continued)

Warning (Continued)

vehicle and set the fan speed to the highest setting. See "Climate Control Systems."

For more information about carbon monoxide, see *Engine Exhaust on page 9-17*.

To save fuel, run the engine for only short periods as needed to warm the vehicle and then shut the engine off and close the window most of the way to save heat. Repeat this until help arrives but only when you feel really uncomfortable from the cold. Moving about to keep warm also helps.

If it takes some time for help to arrive, now and then when you run the engine, push the accelerator pedal slightly so the engine runs faster than the idle speed. This keeps the battery charged to restart the vehicle and to signal for help with the headlamps. Do this as little as possible to save fuel.

If the Vehicle Is Stuck

Slowly and cautiously spin the wheels to free the vehicle when stuck in sand, mud, ice, or snow.

If stuck too severely for the traction system to free the vehicle, turn the traction system off and use the rocking method. See *Traction Control/Electronic Stability Control on page 9-25*.

⚠ Warning

If the vehicle's tires spin at high speed, they can explode, and you or others could be injured. The vehicle can overheat, causing an engine compartment fire or other damage. Spin the wheels as little as possible and avoid going above 56 km/h (35 mph).

Rocking the Vehicle to Get it Out

Turn the steering wheel left and right to clear the area around the front wheels. Turn off any traction system. Shift back and forth between R (Reverse) and a low forward gear, spinning the wheels as little as possible. To prevent transmission wear, wait until the wheels stop spinning before shifting gears. Release the accelerator pedal while shifting, and press lightly on the accelerator pedal when the transmission is in gear. Slowly spinning the wheels in the forward and reverse directions causes a rocking motion that could free the vehicle. If that does not get the vehicle out after a few tries, it might need to be towed out. If the vehicle does need to be towed out, see *Towing the Vehicle on page 10-59*.

Vehicle Load Limits

It is very important to know how much weight the vehicle can carry. This weight is called the vehicle capacity weight and includes the weight of all occupants, cargo and all nonfactory-installed options. Two labels on the vehicle show how much weight it may properly carry, the Tire and Loading Information label and the Certification label.

⚠ Warning

Do not load the vehicle any heavier than the Gross Vehicle Weight Rating (GVWR), or either the maximum front or rear Gross Axle Weight Rating (GAWR). This can cause systems to break and change the way the

(Continued)

Warning (Continued)

vehicle handles. This could cause loss of control and a crash. Overloading can also shorten the life of the vehicle.

Tire and Loading Information Label

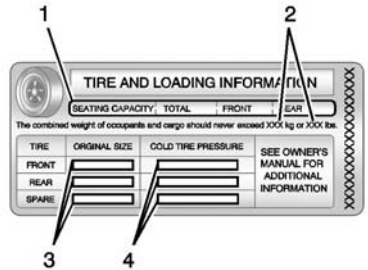

Label Example

A vehicle specific Tire and Loading Information label is attached to the vehicle's center

pillar (B-pillar). With the driver door open, you will find the label attached near the door lock post. The Tire and Loading Information label shows the number of occupant seating positions (1), and the maximum vehicle capacity weight (2) in kilograms and pounds.

The Tire and Loading Information label also shows the tire size of the original equipment tires (3) and the recommended cold tire inflation pressures (4). For more information on tires and inflation, see *Tires on page 10-26* and *Tire Pressure on page 10-35*.

There is also important loading information on the Certification label. It tells you the Gross Vehicle Weight Rating (GVWR) and the Gross Axle Weight Rating (GAWR) for the front and rear axle. See “Certification Label” later in this section.

“Steps for Determining Correct Load Limit–

1. Locate the statement "The combined weight of occupants and cargo should never exceed XXX kg or XXX lbs." on your vehicle’s placard.
2. Determine the combined weight of the driver and passengers that will be riding in your vehicle.
3. Subtract the combined weight of the driver and passengers from XXX kg or XXX lbs.
4. The resulting figure equals the available amount of cargo and luggage load capacity. For example, if the "XXX" amount equals 1400 lbs. and there will be five 150 lb passengers in your vehicle, the amount of available cargo and luggage load capacity is 650 lbs. (1400-750 (5 x 150) = 650 lbs.)
5. Determine the combined weight of luggage and cargo being loaded on the vehicle. That weight may not safely exceed the available cargo and luggage load capacity calculated in Step 4.
6. If your vehicle will be towing a trailer, load from your trailer will be transferred to your vehicle. Consult this manual to determine how this reduces the available cargo and luggage load capacity of your vehicle.”

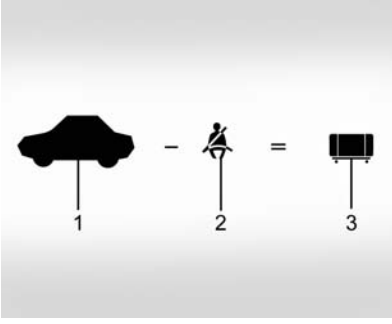

Example 1

1. Vehicle Capacity Weight for Example 1 = 181 kg (400 lbs)
2. Subtract Occupant Weight @ 68 kg (150 lbs) × 1 = 68 kg (150 lbs)
3. Available Occupant and Cargo Weight = 113 kg (250 lbs)

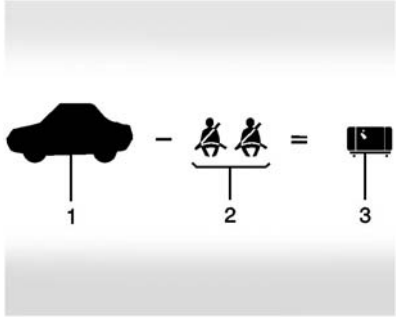

Example 2

1. Vehicle Capacity Weight for Example 2 = 181 kg (400 lbs)
2. Subtract Occupant Weight @ 68 kg (150 lbs) × 2 = 136 kg (300 lbs)
3. Available Cargo Weight = 45 kg (100 lbs)

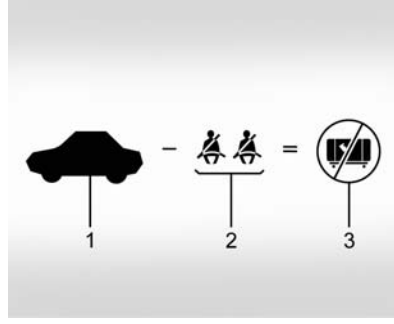

Example 3

1. Vehicle Capacity Weight for Example 3 = 181 kg (400 lbs)
2. Subtract Occupant Weight @ 91 kg (200 lbs) × 2 = 181 kg (400 lbs)
3. Available Cargo Weight = 0 kg (0 lbs)

Refer to the vehicle's Tire and Loading Information label for specific information about the vehicle's capacity weight and seating positions. The combined

weight of the driver, passengers, and cargo should never exceed the vehicle's capacity weight.

Certification Label

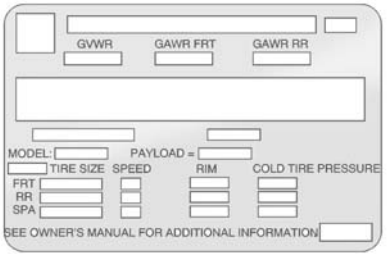

Label Example

A vehicle-specific Certification label is attached to the vehicle's center pillar (B-pillar). The label shows the size of the vehicle's original tires and the inflation pressures needed to obtain the gross weight capacity of the vehicle. This is called Gross Vehicle Weight Rating (GVWR). The GVWR includes the weight of the vehicle, all occupants, fuel, and cargo.

The Certification label also tells you the maximum weights for the front and rear axles, called Gross Axle Weight Rating (GAWR). To find out the actual loads on the front and rear axles, you need to go to a weigh station and weigh the vehicle. Your dealer can help you with this. Be sure to spread out the load equally on both sides of the center line.

Never exceed the GVWR for the vehicle, or the GAWR for either the front or rear axle.

If the vehicle is carrying a heavy load, it should be spread out. See “Steps for Determining Correct Load Limit” earlier in this section.

⚠ Warning

Do not load the vehicle any heavier than the Gross Vehicle Weight Rating (GVWR), or either the maximum front or rear Gross Axle Weight Rating (GAWR). This can cause systems to break and change the way the vehicle handles. This could cause loss of control and a crash. Overloading can also shorten the life of the vehicle.

Your warranty does not cover parts or components that fail because of overloading.

The label will help you decide how much cargo and installed equipment your vehicle can carry.

Using heavier suspension components to get added durability might not change your weight ratings. Ask your dealer to help you load your vehicle the right way.

If you put things inside your vehicle – like suitcases, tools, packages, or anything else – they will go as fast as the vehicle goes. If you have to stop or turn quickly, or if there is a crash, they will keep going.

⚠ Warning

Things inside the vehicle can strike and injure people in a sudden stop or turn, or in a crash.

- Put things in the cargo area of the vehicle. In the cargo area, put them as

(Continued)

Warning (Continued)

(Continued)

far forward as possible. Try to spread the weight evenly.

- Never stack heavier things, like suitcases, inside the vehicle so that some of them are above the tops of the seats.
- Do not leave an unsecured child restraint in the vehicle.
- Secure loose items in the vehicle.
- Do not leave a seat folded down unless needed.

Also, check the tires for proper inflation pressure. Refer to the Tire and Loading Information label.

Starting and Operating

New Vehicle Break-In

⚠ Caution

The vehicle does not need an elaborate break-in. But it will perform better in the long run if you follow these guidelines for the first 2 000 km (1,200 mi):

- Do not drive at any one constant speed, fast or slow.
- Avoid quick starts. Avoid accelerating at full-throttle in any gear. Do not exceed 4000 rpm.
- Avoid downshifting to brake or slow the vehicle.
- Avoid making hard stops. During this time the new brake linings are not yet broken in. Hard stops with

(Continued)

Caution (Continued)

new linings can mean premature wear and earlier replacement. Follow this breaking-in guideline every time you get new brake linings.

Following break-in, engine speed and load can be gradually increased.

Ignition Positions

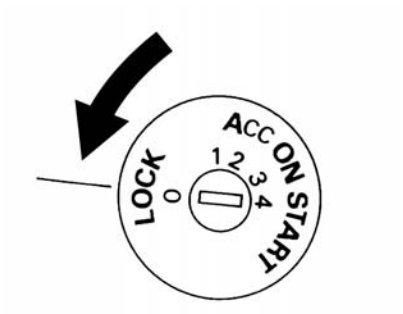

The ignition lock is designed so that the ignition switch cannot be turned to the LOCK position until the shift lever is moved to the P (Park) position.

- When placing the ignition switch in the LOCK position, make sure that the shift lever is in the P (Park) position.
- When removing the key from the ignition switch (if it is inserted), make sure that the shift lever is in the P (Park) position.

When the ignition switch cannot be placed to the LOCK position:

1. Shift the shift lever to the P (Park) position.
2. Move the ignition switch slightly in the ON direction.
3. Turn the ignition switch to the LOCK position.
4. Remove the key if it is inserted in the ignition switch.

⚠ Warning

Turning off the vehicle while moving may cause loss of power assist in the brake and steering systems and disable the airbags. While driving, only shut the vehicle off in an emergency.

If the ignition switch is placed to the LOCK position, the shift lever cannot be moved from the P (Park) position.

The shift lever can be moved if the ignition switch is in the ON position and the foot brake pedal is depressed.

There is an OFF position between the LOCK and ACC positions. The OFF position is indicated by a “1” on the key cylinder.

> **⚠ Caution**
>
> Using a tool to force the key to turn in the ignition could cause damage to the switch or break the key. Use the correct key, make sure it is all the way in, and turn it only with your hand. If the key cannot be turned by hand, see your dealer.

Ignition Switch Positions

LOCK (0): Normal parking position.

OFF (1): The engine can be turned off without locking the steering wheel.

ACC (2): Accessories. This position activates electrical accessories such as the radio when the engine is not running.

ON (3): Normal operating position. This position turns on the ignition system and the electrical accessories.

START (4): This position starts the engine. As soon as the engine has started, release the key.
It automatically returns to the ON position.

Starting the Engine

To place the transmission in the proper gear:

Move the shift lever to P (Park) or N (Neutral). The engine will not start in any other position. To restart the engine when the vehicle is already moving, use N (Neutral) only.

> **⚠ Caution**
>
> If you add electrical parts or accessories, you could change the way the engine operates. Any resulting damage would not be covered by the vehicle warranty. See *Add-On Electrical Equipment on page 9-41*.

> **⚠ Caution**
>
> Do not try to shift to P (Park) if the vehicle is moving. If you do, you could damage the transmission. Shift to P (Park) only when the vehicle is stopped.

Starting Procedure

1. Apply the parking brake.
2. Move the shift lever to P (Park) or N (Neutral). P (Park) is recommended.

   The shift lever cannot be moved out of P (Park) and into any of the other gear positions if the ignition switch is turned to the OFF position or if the key is removed from the ignition switch.

   The starter is designed not to operate if the shift lever is in any of the driving positions.
3. Crank the engine with your foot off the accelerator pedalby placing the ignition switch in the

START position. Release the key when the engine starts.
If the engine starts, but fails to run, repeat the above procedure.

- If the engine is very hard to start in extremely cold weather or when restarting, depress the accelerator pedal a little (approximately 1/3 to the floor) and hold it and then crank the engine. Release the key and the accelerator pedal when the engine starts.
- If the engine is very hard to start because it is flooded, depress the accelerator pedal all the way to the floor and hold it. Crank the engine for five to six seconds.

  After cranking the engine, release the accelerator pedal. Crank the engine with your foot off the accelerator pedal by turning the ignition key to START. Release the key when the engine starts.

  If the engine starts, but fails to run, repeat the above procedure.

⚠ Caution

Do not operate the starter for more than 15 seconds at a time. If the engine does not start, turn the key off and wait 10 seconds before cranking again, otherwise the starter could be damaged.

4. Allow the engine to idle for at least 30 seconds after starting. Do not race the engine while warming it up. Drive at moderate speed for a short distance first, especially in cold weather.

   In cold weather, keep the engine running for a minimum of two to three minutes before shutting it off. Starting and stopping the engine over a short period of time may make the vehicle more difficult to start.

Note: Care should be taken to avoid situations that can lead to potential battery discharge and potential no-start conditions such as:

1. Installation or extended use of electronic accessories that consume battery power when the engine is not running (Phone chargers, GPS, DVD players, etc.).
2. Vehicle is not driven regularly and/or only driven short distances. In these cases, the battery may need to be charged to maintain battery health.

Parking over Things That Burn

⚠ Warning

Things that can burn could touch hot exhaust parts under the vehicle and ignite. Do not park over papers, leaves, dry grass, or other things that can burn.

Engine Exhaust

⚠ Warning

Engine exhaust contains carbon monoxide (CO) which cannot be seen or smelled. Exposure to CO can cause unconsciousness and even death.

Exhaust may enter the vehicle if:

- The vehicle idles in areas with poor ventilation (parking garages, tunnels, deep snow that may block underbody airflow or tail pipes).
- The exhaust smells or sounds strange or different.
- The exhaust system leaks due to corrosion or damage.
- The vehicle exhaust system has been modified, damaged, or improperly repaired.

(Continued)

Warning (Continued)

- There are holes or openings in the vehicle body from damage or aftermarket modifications that are not completely sealed.

If unusual fumes are detected or if it is suspected that exhaust is coming into the vehicle:

- Drive it only with the windows completely down.
- Have the vehicle repaired immediately.

Never park the vehicle with the engine running in an enclosed area such as a garage or a building that has no fresh air ventilation.

Running the Vehicle While Parked

It is better not to park with the engine running.

If the vehicle is left with the engine running, follow the proper steps to be sure the vehicle will not move. See *Engine Exhaust on page 9-17*.

Automatic Transmission

Continuously Variable Transmission (CVT)

⚠ Warning

- Do not depress the accelerator pedal while shifting from P (Park) or N (Neutral) to R (Reverse), D (Drive) or L (Low). Always depress the brake pedal until shifting is completed. Failure to do so could cause you to lose control and have an accident.
- Cold engine idle speed is high, so use caution when shifting into a forward or reverse gear before the engine has warmed up.

(Continued)

Warning (Continued)

- Do not downshift abruptly on slippery roads. This may cause a loss of control.
- Never shift to P (Park) or R (Reverse) while the vehicle is moving. This could cause an accident.
- Except in an emergency, do not shift to the N (Neutral) position while driving. Coasting with the transmission in the N (Neutral) position may cause serious damage to the transmission.

⚠ Caution

When stopping the vehicle on an uphill grade, do not hold the vehicle by depressing the accelerator pedal. The foot brake should be used for this purpose.

The CVT in your vehicle is electronically controlled to produce maximum power and smooth operation.

The recommended operating procedures for this transmission are shown on the following pages. Follow these procedures for maximum vehicle performance and driving enjoyment.

Note: Engine power may be automatically reduced to protect the CVT if the engine speed increases quickly when driving on slippery roads or while being tested on some dynamometers.

Starting the Vehicle

1. After starting the engine, fully depress the foot brake pedal before moving the shift lever out of the P (Park) position.
2. Keep the foot brake pedal depressed and move the shift lever into a driving gear.
3. Release the foot brake, then gradually start the vehicle in motion.
4. Stop the vehicle completely before moving the shift lever into the P (Park) position.

The CVT is designed so the foot brake pedal MUST be depressed before shifting from P (Park) to any drive position while the ignition switch is in the ON position.

The shift lever cannot be moved out of P (Park) and into any of the other gear positions if the ignition switch is placed in the LOCK, OFF or ACC position or if the key is removed.

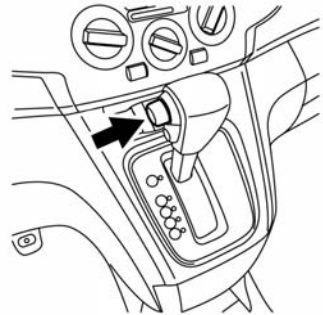

Shifting

After starting the engine, fully depress the brake pedal and move the shift lever from P (Park) to any of the desired shift positions.

⚠ Warning

Apply the parking brake if the shift lever is in any position while the engine is not running. Failure to do so could cause the vehicle to move unexpectedly or roll away and result in serious personal injury or property damage.

If the ignition switch is placed in the OFF or ACC position for any reason while the vehicle is in N (Neutral), or any drive position, the key cannot be turned to the LOCK position and be removed from the ignition switch. If this occurs, perform the following steps:

1. Apply the parking brake when the vehicle is stopped.
2. Move the shift lever to P (Park) to park the vehicle and place the ignition switch in the LOCK position to remove the key.

> **⚠ Caution**
>
> To prevent transmission damage, use the P (Park) or R (Reverse) position only when the vehicle is completely stopped.

P (Park): Use the P (Park) shift lever position when the vehicle is parked or when starting the engine. Make sure the vehicle is completely stopped. The brake pedal must be depressed and the shift lever button pushed in to move the shift lever from N (Neutral) or any drive position to P (Park). Apply the parking brake. When parking on a hill, apply the parking brake first, then place the shift lever into the P (Park) position.

> **⚠ Caution**
>
> To prevent transmission damage, use the P (Park) or R (Reverse) position only when the vehicle is completely stopped.

R (Reverse): Use the R (Reverse) position to back up. Make sure the vehicle is completely stopped before selecting the R (Reverse) position. R (Reverse) speed is limited to 30 MPH (48 km/h). Do not exceed 30 MPH (48 km/h) in the R (Reverse) position. The brake pedal must be depressed and the shift lever button pushed in to move the shift lever from P (Park), N (Neutral) or any drive position to R (Reverse).

N (Neutral): Neither forward nor reverse gear is engaged. The engine can be started in this position. You may shift to N (Neutral) and restart a stalled engine while the vehicle is moving.

D (Drive): Use this position for all normal forward driving.

L (Low): Use this position for engine braking on steep downhill gradients/climbing steep slopes and whenever approaching sharp bends. Do not use the L (Low) position in any other circumstances.

Engine power may be automatically reduced to protect the CVT if the engine speed increases quickly when driving on slippery roads or while being tested on some dynamometers.

Shift Lock Release

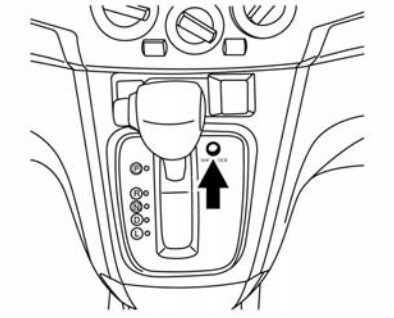

If the battery is discharged, the shift lever may not be moved from the P (Park) position even with the foot brake pedal depressed.

To move the shift lever, perform the following procedure:

1. Place the ignition switch to the LOCK position and remove the key.
2. Apply the parking brake.
3. Remove the shift lock release cover using a suitable tool.
4. Push down the shift lock release using a suitable tool.
5. Push the shift lever button and move the shift lever to the N (Neutral) position while holding down the shift lock release.

Place the ignition switch in the ON position to unlock the steering wheel. The vehicle may be moved to the desired location.

Replace the removed shift lock release cover after the operation.

If the shift lever cannot be moved out of the P (Park) position, have a dealer check the CVT system as soon as possible.

Overdrive (O/D) OFF Switch

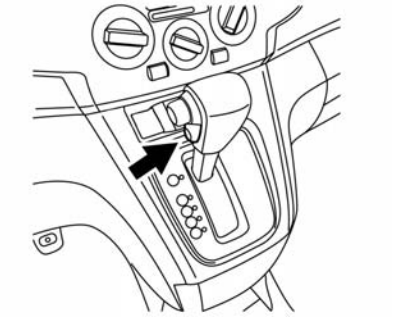

When the O/D OFF switch is pressed with the shift lever in the D (Drive) position, the light in the instrument panel illuminates. See *Overdrive Off Light on page 5-15*.

Use the Overdrive off mode when you need improved engine braking.

To turn off the Overdrive off mode, push the O/D OFF switch again. The indicator light will turn off.

Each time the engine is started, or when the shift lever is shifted to any position other than D (Drive), the Overdrive off mode will be automatically turned off.

Accelerator Downshift in D Position

For passing or hill climbing, depress the accelerator pedal to the floor. This shifts the transmission down into a lower gear, depending on the vehicle speed.

Fail Safe

When the fail-safe operation occurs, the CVT will not be shifted into the selected driving position.

If the vehicle is driven under extreme conditions, such as excessive wheel spinning and subsequent hard braking, the fail-safe system may be activated. The MIL may come on to indicate the fail-safe mode is activated. See *Malfunction Indicator Lamp on page 5-11*. This will occur even if all electrical circuits are functioning properly. In this case, place the ignition switch in the OFF position and wait for 10 seconds. Then place the ignition switch back in the ON position. The vehicle should return to its normal operating condition. If it does not return to its normal operating condition, have a dealer check the transmission and repair if necessary.

⚠ Warning

When the high fluid temperature protection mode or fail-safe operation occurs, vehicle speed may be gradually reduced. The reduced speed may be lower than other traffic, which could increase the chance of a collision. Be especially careful when driving. If necessary, pull to the side of the road at a safe place and allow the transmission to return to normal operation, or have it repaired if necessary.

Brakes

Antilock Brake System (ABS)

⚠ Warning

- The ABS is a sophisticated device, but it cannot prevent accidents resulting from careless or dangerous driving techniques. It can help maintain vehicle control during braking on slippery surfaces. Remember that stopping distances on slippery surfaces will be longer than on normal surfaces even with ABS. Stopping distances may also be longer on rough, gravel or snow covered roads, or if you are using tire chains. Always maintain a safe distance from

(Continued)

Warning (Continued)

the vehicle in front of you. Ultimately, the driver is responsible for safety.

- Tire type and condition may also affect braking effectiveness.
- When replacing tires, install the specified size of tires on all four wheels.
- When installing a spare tire, make sure that it is the proper size and type as specified on the Tire and Loading Information label.
- For additional information, refer to “Wheels and Tires” in the “Vehicle Care” section of this manual.

This vehicle has ABS, an advanced electronic braking system that helps prevent a braking skid. The ABS operates at speeds above 5–10 km/h (3–6 mph). The speed varies according to road conditions.

When the vehicle begins to drive away, ABS checks itself. A momentary motor or clicking noise might be heard while this test is going on, and it might even be noticed that the brake pedal moves a little. This is normal.

Metric

ABS

English

If there is a problem with ABS, this warning light stays on. See *Antilock Brake System (ABS) Warning Light on page 5-15*.

If driving safely on a wet road and it becomes necessary to slam on the brakes and continue braking to avoid a sudden obstacle, a computer senses the wheels are slowing down. If one of the wheels is about to stop rolling, the computer will separately work the brakes at each wheel.

ABS can change the brake pressure to each wheel, as required, faster than any driver could. This can help you steer around the obstacle while braking hard.

As the brakes are applied, the computer keeps receiving updates on wheel speed and controls braking pressure accordingly.

Remember: ABS does not change the time needed to get a foot up to the brake pedal or always decrease stopping distance. If you get too close to the vehicle in front of you, there will not be enough time to apply the brakes if that vehicle suddenly slows or stops. Always leave enough room up ahead to stop, even with ABS.

Using ABS

Do not pump the brakes. Just hold the brake pedal down firmly and let ABS work. You may hear the ABS

pump or motor operating and feel the brake pedal pulsate. This is normal.

Braking in Emergencies

ABS allows you to steer and brake at the same time. In many emergencies, steering can help more than even the very best braking.

Brake Force Distribution

During braking while driving through turns, the system optimizes the distribution of force to each of the four wheels depending on the radius of the turn.

Parking Brake

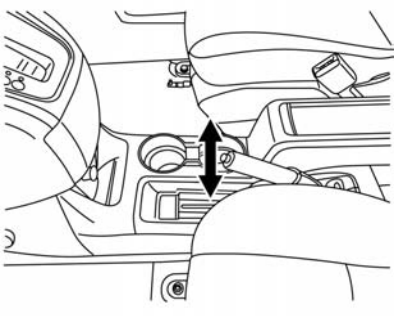

To apply the parking brake, pull up on the parking brake handle. It is not necessary to press the release button in while applying the parking brake. If the ignition is in the ON/RUN position, the brake system warning light will come on. See *Brake System Warning Light on page 5-14*.

⚠ Warning

- Be sure the parking brake is fully released before driving. Failure to do so can cause brake failure and lead to an accident.
- Do not release the parking brake from outside the vehicle.
- Do not use the shift lever in place of the parking brake. When parking, be sure the parking brake is fully engaged.
- Do not leave children unattended in a vehicle. They could release the parking brake and cause an accident.

To release the parking brake:

1. Shift the transmission to P (Park). Hold the brake pedal down.

2. Pull the parking brake handle up until you can press the release button.
3. Hold the release button in as you move the brake handle all the way down.

⚠ Caution

Driving with the parking brake on can overheat the brake system and cause premature wear or damage to brake system parts. Make sure that the parking brake is fully released and the brake warning light is off before driving.

Parking Brake Break-in

Break-in the brake shoes whenever the effect of the parking brake is weakened or whenever the brake shoes and/or drums are replaced, in order to assure the best brake performance. This procedure can be performed at the dealer.

Ride Control Systems

Traction Control/ Electronic Stability Control

System Operation

The vehicle has a Traction Control System (TCS) and Electronic Stability Control, an electronic stability control system. These systems use various sensors to monitor driver inputs and vehicle motion. Under certain driving conditions, the TCS and Electronic Stability Control systems help to perform the following functions:

- Control brake pressure to reduce wheel slip on one slipping drive wheel so power is transferred to a non–slipping drive wheel on the same axle.
- Control brake pressure and engine output to reduce drive wheel slip based on vehicle speed (traction control function).
- Control brake pressure at individual wheels and engine output to help the driver maintain control of the vehicle in the following conditions:
  - Understeer (vehicle tends to not follow the steered path despite increased steering input)
  - Oversteer (vehicle tends to spin due to certain road or driving conditions)

TCS and Electronic Stability Control can help the driver to maintain control of the vehicle, but cannot prevent loss of vehicle control in all driving situations.

When the TCS and Electronic Stability Control systems operate, the indicator in the instrument cluster flashes to note the following:

- The road may be slippery or the system may determine some action is required to help keep the vehicle on the steered path.

- You may feel a pulsation in the brake pedal and hear a noise or vibration from under the hood. This is normal and indicates that the traction control system is working properly.
- Adjust your speed and driving to the road conditions.

See *Traction Control System (TCS)/ Electronic Stability Control Light on page 5-16* and *Electronic Stability Control (ESC) Off Light on page 5-16*.

If a malfunction occurs in the systems, the indicator comes on in the instrument cluster. The TCS and Electronic Stability Control systems automatically turn off when the indicator light is on.

Turning the Systems Off and On

The TCS/Electronic Stability Control button is on the instrument panel, to the left of the steering wheel.

⚠ Caution

Do not repeatedly brake or accelerate heavily when TCS is off. The vehicle driveline could be damaged.

To turn off TCS and Electronic Stability Control, press and release the button. The Electronic Stability Control (ESC) Off Light comes on and stays on in the instrument cluster.

To turn TCS and Electronic Stability Control on again, press and release the button. The Electronic Stability Control (ESC) Off Light displayed in the instrument cluster will turn off.

When the TCS/Electronic Stability Control button is used to turn off the systems, the TCS system still operates to prevent one drive wheel from slipping by transferring power to a non–slipping drive wheel. The indicator flashes if this occurs. All other functions are off and the indicator will not flash.

The TCS and Electronic Stability Control systems are automatically reset to on when the ignition is placed in the OFF position then back to the ON position.

The systems have a built in diagnostic feature that test the systems each time the engine is started and the vehicle moved forward or in reverse at a slow speed. When the test occurs a clunk

noise may be heard and/or a pulsation in the brake pedal may be felt. This is normal and is not an indication of a malfunction.

Adding accessories can affect the vehicle performance. See *Accessories and Modifications on page 10-3*.

⚠ Warning

- The Traction Control System (TCS) and Electronic Stability Control (ESC) system are designed to help the driver maintain stability but do not prevent accidents due to abrupt steering operation at high speeds or by careless or dangerous driving techniques. Reduce vehicle speed and be especially careful when driving and cornering on slippery surfaces and always drive carefully.

(Continued)

Warning (Continued)

- Do not modify the vehicle's suspension. If suspension parts such as shock absorbers, struts, springs, stabilizer bars, bushings, and wheels are not recommended for your vehicle or are extremely deteriorated, the TCS and ESC systems may not operate properly. This could adversely affect vehicle handling performance, and the indicator may flash or the indicator light may illuminate.
- If brake related parts such as brake pads, rotors, and calipers are not recommended or are extremely deteriorated, the TCS and ESC systems may

(Continued)

Warning (Continued)

not operate properly and the indicator light may illuminate.

- If engine control related parts are not recommended or are extremely deteriorated, the indicator light may illuminate.
- When driving on extremely inclined surfaces such as higher banked corners, the TCS and ESC systems may not operate properly and the indicator may flash or the indicator light may illuminate. Do not drive on these types of roads.
- When driving on an unstable surface such as a turntable, ferry, elevator, or ramp, the indicator may flash or the indicator light may illuminate.

(Continued)

Warning (Continued)

This is not a malfunction. Restart the engine after driving onto a stable surface.

- If wheels or tires other than the recommended ones are used, the TCS and ESC systems may not operate properly and the indicator may flash or the indicator light may illuminate.
- The TCS and ESC systems are not a substitute for winter tires or tire chains on a snow covered road.

Cruise Control

⚠ Warning

Cruise control can be dangerous where you cannot drive safely at a steady speed. Do not use cruise control on winding roads or in heavy traffic.

Cruise control can be dangerous on slippery roads. On such roads, fast changes in tire traction can cause excessive wheel slip, and you could lose control. Do not use cruise control on slippery roads.

If equipped with cruise control, a speed of about 48 km/h (30 mph) or more can be maintained without keeping your foot on the accelerator. Cruise control does not work at speeds below about 48 km/h (30 mph).

If the brakes are applied, cruise control disengages.

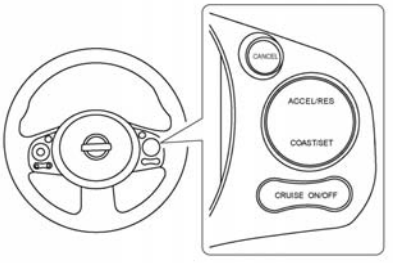

CRUISE ON/OFF: Press to turn cruise control on or off. The white indicator comes on in the instrument cluster when cruise control is turned on.

ACCEL/RES (Accelerate/ Resume): If there is a set speed in memory, press briefly to resume to a previously set speed, or press and hold to accelerate. If cruise control is already active, use to increase vehicle speed.

COAST/SET: Press briefly to set the speed and activate cruise control, or press and hold to decelerate. If cruise control is already active, use to decrease vehicle speed.

CANCEL: Press to disengage cruise control without erasing the set speed from memory.

Setting Cruise Control

If the CRUISE ON/OFF button is on when not in use, the COAST/SET or ACCEL/RES button could get pressed and go into cruise when not desired. Keep the CRUISE ON/OFF button off when cruise is not being used.

1. Press CRUISE ON/OFF to turn the cruise system on.
2. Get up to the desired speed.
3. Press and release COAST/SET. The desired set speed briefly appears in the instrument cluster.
4. Remove your foot from the accelerator.

Resuming a Set Speed

If the cruise control is set at a desired speed and then the brakes are applied, the cruise control is disengaged without erasing the set speed from memory.

Once the vehicle speed reaches about 48 km/h (30 mph) or more, briefly press ACCEL/RES. The vehicle returns to the previous set speed.

Increasing Speed While Using Cruise Control

If the cruise control system is already activated:

- Press and hold ACCEL/RES until the desired speed is reached, then release it.
- To increase vehicle speed in small increments, briefly press ACCEL/RES. For each press, the vehicle goes about 1.6 km/h (1 mph) faster.

Reducing Speed While Using Cruise Control

If the cruise control system is already activated:

- Press and hold COAST/SET until the desired lower speed is reached, then release it.
- To decrease the vehicle speed in small increments, briefly press COAST/SET. For each press, the vehicle goes about 1.6 km/h (1 mph) slower.

Passing Another Vehicle While Using Cruise Control

Use the accelerator pedal to increase the vehicle speed. When you take your foot off the pedal, the vehicle will slow down to the previous set cruise speed. While pressing the accelerator pedal or shortly following the release to override cruise control, briefly pressing COAST/SET will result in cruise set to the current vehicle speed.

Ending Cruise Control

There are four ways to end cruise control:

- Step lightly on the brake pedal.
- Press CANCEL.
- Shift the transmission to N (Neutral).
- To turn off cruise control, press CRUISE ON/OFF.

Erasing Speed Memory

The cruise control set speed is erased from memory if CRUISE ON/OFF is pressed or if the vehicle is turned off.

Driver Assistance Systems

Parking Assist

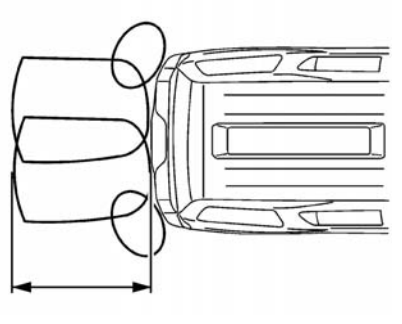

⚠ Warning

- Always turn and look back before backing up. The RPA is not a substitute for proper backing procedures.

(Continued)

Warning (Continued)

- Read and understand the limitations of the rear parking assist system as contained in this section. Inclement weather may affect the function of the RPA; this may include reduced performance or a false activation.
- This system is not designed to prevent contact with small or moving objects.
- The system is designed as a aid to the driver in detecting large stationary objects to help avoid damaging the vehicle. The system will not detect small objects below the bumper, and may not detect objects close to the bumper or on the ground.
- If your vehicle sustains damage to the rear bumper fascia, leaving it misaligned

(Continued)

Warning (Continued)

or bent, the sensing zone may be altered causing inaccurate measurement of obstacles or false alarms.

The Rear Parking Assist (RPA) sounds a tone to warn the driver of obstacles near the rear bumper when the shift lever is in R (Reverse). The system may not detect objects at speeds above 5 km/h (3 mph) and may not detect certain angular or moving objects.

The RPA detects objects up to 1.8 m (5.9 ft) from the rear bumper with a decreased coverage area at the outer corners of the bumper. As you move closer to the obstacle, the rate of the tone increases. When the obstacle is less than 25 cm (10 in) away, the tone will sound continuously. If the RPA detects a stationary or receding object further than 25 cm (10 in) from the side of the vehicle, the tone will sound for only three seconds. Once the system detects an object approaching, the tone will sound again.

The RPA automatically turns on when the shift lever is placed in R (Reverse) and the ignition switch is in ON. The RPA OFF switch on the instrument panel allows the driver to turn the RPA on and off. To turn the RPA off, the ignition switch must be placed in ON. An indicator light on the switch will illuminate when the system is turned off. If the indicator light illuminates when the RPA is not turned off, it may indicate a malfunction in the RPA.

Keep the RPA sensors, located on the rear bumper, free from snow, ice, and large accumulations of dirt. Do not clean the sensors with sharp objects. If the sensors are covered, it will affect the accuracy of the RPA.

Rear Vision Camera (RVC)

When the shift lever is shifted into R (Reverse), the display shows the view to the rear of the vehicle.

⚠ Warning

- Failure to follow the warnings and instructions for proper use of the Rear Vision Camera (RVC) could result in serious injury or death.
- The RVC is a convenience but it is not a substitute for proper backing. Always turn and look out the windows, and check mirrors to be sure that it is safe to move before operating the vehicle. Always back up slowly.
- The system is designed as an aid to the driver in showing large stationary objects

(Continued)

Warning (Continued)

directly behind the vehicle, to help avoid damaging the vehicle.

- The system cannot completely eliminate blind spots and may not show every object.
- Underneath the bumper and the corner areas of the bumper cannot be viewed on the RVC display because of its monitoring range limitation. The system will not show small objects below the bumper, and may not show objects close to the bumper or on the ground.
- Objects viewed on the RVC display differ from actual distance because a wide-angle lens is used.

(Continued)

Warning (Continued)

- Objects on the RVC display will appear visually opposite than when viewed in the rearview and outside mirrors.
- Make sure that the back doors are securely closed when backing up.
- Do no put anything on the rearview camera. The rearview camera is installed on the back door.
- When washing the vehicle with high pressure water, be sure not to spray it around the camera. Otherwise, water may enter the camera unit causing water condensation on the lens, a malfunction, fire, or an electric shock.
- Do not strike the camera. It is a precision instrument. Otherwise, it may malfunction or cause damage resulting in a fire or an electric shock.

⚠ Caution

There is a plastic cover over the camera. Do not scratch the cover when cleaning dirt or snow from the cover.

How to Read the Displayed Lines

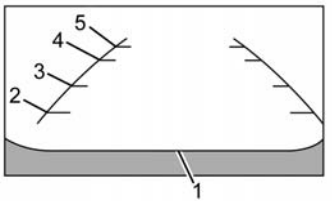

1. Vehicle Body Line
2. 0.5 m (1.5 ft)
3. 1 m (3 ft)
4. 2 m (7 ft)
5. 3 m (10 ft)

Guidelines indicating the vehicle width and distance to objects with reference to the vehicle body line are shown on the RVC display.

The guidelines can be turned on or off. When the shift lever is in R (Reverse), press the CAMERA button to switch the guidelines on and off. When the shift lever is in any other position, press the CAMERA button and then touch the Show Guidelines key to switch the guidelines on and off.

Difference Between Predicted and Actual Distances

The distance guideline and the vehicle width guideline should be used as a reference only when the vehicle is on a level, paved surface. The distance viewed on the display is for reference only and may be different than the actual distance between the vehicle and displayed objects.

Backing up on a Steep Uphill

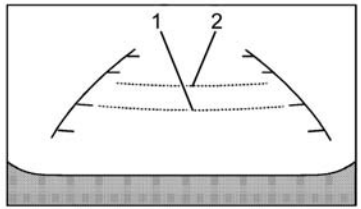

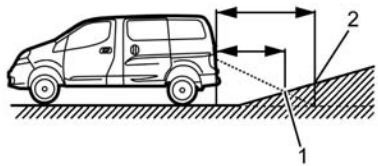

1. Displayed Distance
2. Actual Distance

When backing up the vehicle up a hill, the distance guidelines and the vehicle width guidelines are shown closer than the actual distance. For example, the display shows 1 m (3 ft) to 1, but the actual 1 m (3 ft) distance on the hill is 2. Note that any object on the hill is further than it appears on the display.

Backing up on a Steep Downhill

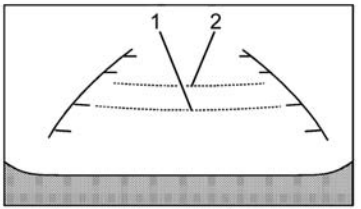

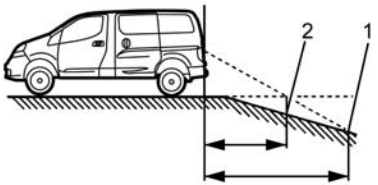

1. Displayed Distance
2. Actual Distance

When backing up the vehicle down a hill, the distance guidelines and the vehicle width guidelines are shown farther than the actual distance. For example, the display shows 1 m (3 ft) to 1, but the actual 1 m (3 ft) distance on the hill is 2. Note that any object on the hill is closer than it appears on the display.

Backing up Behind a Projecting Object

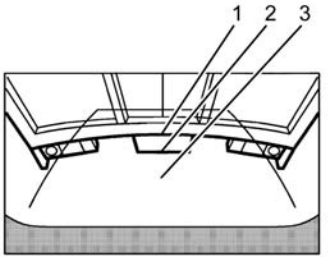

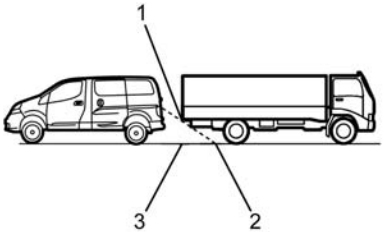

1. Object
2. Displayed Distance to Object
3. Actual Distance to Object

The position 1 is shown farther than the position 2 in the display. However, the position 1 is actually at the same distance as the position 3. The vehicle may hit the object when backing up to the position 3 if the object projects over the actual backing up course.

Adjusting the Screen

The procedure for adjusting the display settings of the screen differs depending on the type of screen present on the vehicle.

For vehicles without Navigation System:

1. Firmly apply the brake and place the shift lever in R (Reverse).
2. Press the ENTER/SETTING button.
3. The screen will display the Brightness settings.
4. Turn the TUNE/SCROLL knob to adjust the setting up or down.
5. Press the ENTER/SETTING button again to display the Contrast settings.
6. Turn the TUNE/SCROLL knob to adjust the setting up or down.
7. Press the ENTER/SETTING button to complete the adjustment.

Do not adjust the display settings of the RVC while the vehicle is moving.

For vehicles with Navigation System:

1. Firmly apply the brake and place the shift lever in R (Reverse).
2. Press the ☼/☽ button on the control panel.
3. The screen will display the Night settings.
4. Turn the TUNE/SCROLL knob to adjust the setting up or down.
5. Press the ☼/☽ button again to access the Auto settings.
6. Turn the TUNE/SCROLL knob to adjust the setting up or down.

Do not adjust the display settings of the RVC while the vehicle is moving.

Operating Tips

⚠ Caution

- Do not use alcohol, benzine or thinner to clean the camera. This will cause discoloration. To clean the camera, wipe with a cloth dampened with a diluted mild cleaning agent and then wipe with a dry cloth.
- Do not damage the camera as the monitor screen may be adversely affected.

- When the shift lever is shifted to R (Reverse), the screen automatically changes to the RVC mode. However, the radio can be heard.
- It may take some time until the RVC is displayed after the shift lever has been shifted to R (Reverse). Objects may be distorted momentarily until the RVC screen is displayed completely. When the shift lever is returned to a position other than R (Reverse), it may take some time until the screen changes. Objects on the screen may be distorted until they are completely displayed.
- When the temperature is extremely high or low, the screen may not clearly display objects. This is not a malfunction.
- When strong light directly enters the camera, objects may not be displayed clearly.
- Vertical lines may be seen in objects on the screen. This is due to strong reflected light from the bumper. This is not a malfunction.
- The screen may flicker under fluorescent light. This is not a malfunction.
- The colors of objects on the display may differ somewhat from those of the actual object.
- When the contrast of objects is low at night, pressing the SETTING button or MENU button may not change the brightness.
- Objects on the display may not be clear in a dark place or at night.
- If dirt, rain or snow attaches to the camera, the RVC may not display objects. Clean the camera.
- Do not use body wax on the camera window. If body wax does get on the camera window, wipe off the wax with a clean cloth dampened with mild detergent diluted with water.

Fuel

Use of the recommended fuel is an important part of the proper maintenance of this vehicle. When driving in the U.S. and Canada, to help keep the engine clean and maintain optimum vehicle performance, we recommend using TOP TIER Detergent Gasolines. See www.toptiergas.com for a list of TOP TIER Detergent Gasolines.

TOP TIER™
Detergent Gasoline

CATEGORIE SUPERIÉURE™
Essences Détergentes

Use regular unleaded gasoline meeting ASTM specification D4814 with a posted octane rating of 87 or higher. Do not use gasoline with an octane rating below 87, as it may cause engine damage and will lower fuel economy.

Use of Seasonal Fuels

Use summer and winter fuels in the appropriate season. The fuels industry automatically modifies the fuel for the appropriate season. If fuel is left in the vehicle tank for long periods of time, driving or starting could be affected. Drive the vehicle until the fuel is at one-half tank or less, then refuel with the current seasonal fuel.

Prohibited Fuels

Gasolines containing oxygenates such as ethers and ethanol, as well as reformulated gasolines, are available in some cities. If these gasolines comply with the previously described specification, then they are acceptable to use.

⚠ Warning

- Using a fuel other than what is specified could adversely affect the emission control system, and may also affect the warranty coverage.
- Under no circumstances should either a leaded gasoline or gasoline with MMTbe used. Doing so will damage the catalytic converter.
- Do not use E-15 or E-85 fuel in your vehicle. Your vehicle is not designed to run on E-15 or E-85 fuel. Using E-15 or E-85 fuel in a vehicle not specifically designed for E-15 or E-85 fuel can adversely damage the emission control devices and systems of the vehicle. Damage caused by such fuel is not covered by the new vehicle limited warranty.

Some gasolines, mainly high octane racing gasolines, can contain an octane-enhancing additive called methylcyclopentadienyl manganese tricarbonyl (MMT). Do not use gasolines and/or fuel additives with MMT as they will reduce spark plug life and affect emission control system. The malfunction indicator lamp may turn on. If this occurs, see your dealer for service.

California Fuel Requirements

If the vehicle is certified to meet California Emissions Standards, it is designed to operate on fuels that meet California specifications. See the underhood emission control label. If this fuel is not available in states adopting California Emissions Standards, the vehicle will operate satisfactorily on fuels meeting federal specifications, but emission control system performance might be affected. The malfunction indicator lamp could turn on and the vehicle may not pass a smog-check test. See *Malfunction Indicator Lamp on page 5-11*. If this occurs, return to your authorized dealer for diagnosis. If it is determined that the condition is caused by the type of fuel used, repairs may not be covered by the vehicle warranty.

Fuels in Foreign Countries

If planning to drive in countries outside the U.S. or Canada, the proper fuel might be hard to find. Check regional auto club or fuel retail brand websites for availability in the country where driving. Never use leaded gasoline, fuel containing methanol, manganese, or any other fuel not recommended. Costly repairs caused by use of improper fuel would not be covered by the vehicle warranty.

Fuel Additives

To keep fuel systems clean, TOP TIER Detergent Gasoline is recommended. See *Fuel on page 9-37*.

If TOP TIER Detergent Gasoline is not available, one bottle of Fuel System Treatment PLUS added to the fuel tank at every engine oil change can help. Fuel System Treatment PLUS is the only gasoline additive recommended by General Motors. It is available at your dealer.

Do not use additives with E85 or FlexFuel.

Filling the Tank

⚠ Warning

Fuel vapors and fuel fires burn violently and can cause injury or death.

- To help avoid injuries to you and others, read and follow all the instructions on the fuel pump island.
- Turn off the engine when refueling.
- Keep sparks, flames, and smoking materials away from fuel.
- Do not leave the fuel pump unattended.
- Do not reenter the vehicle while pumping fuel.
- Keep children away from the fuel pump and never let children pump fuel.

(Continued)

Warning (Continued)

- Fuel can spray out if the fuel cap is opened too quickly. This spray can happen if the tank is nearly full, and is more likely in hot weather. Open the fuel cap slowly and wait for any hiss noise to stop then unscrew the cap all the way.

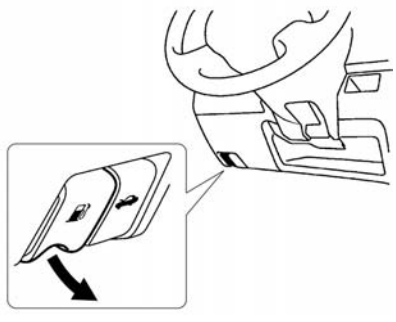

The fuel cap is behind a hinged fuel door on the passenger side of the vehicle. The fuel door release is below the instrument panel. To open the fuel-filler door, pull the release. To lock, close the fuel-filler door securely.

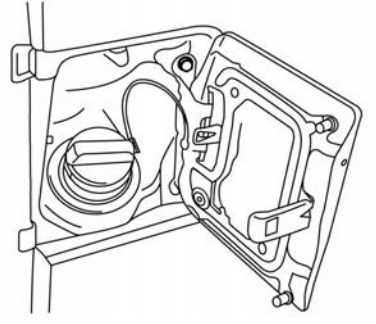

To remove the fuel cap, turn it slowly counterclockwise.

While refueling, hang the tethered fuel cap from the hook on the fuel door.

Be careful not to spill fuel. Do not top off or overfill the tank and wait a few seconds after you have finished pumping before removing the nozzle. Clean fuel from painted surfaces as soon as possible. See *Exterior Care on page 10-61*.

When replacing the fuel cap, turn it clockwise until it clicks. Make sure the cap is fully installed.

⚠ Warning

If a fire starts while you are refueling, do not remove the nozzle. Shut off the flow of fuel by shutting off the pump or by notifying the station attendant. Leave the area immediately.

⚠ Caution

If a new fuel cap is needed, be sure to get the right type of cap from your dealer. The wrong type of fuel cap may not fit properly, may cause the malfunction indicator lamp to light, and could damage the fuel tank and emissions system. See *Malfunction Indicator Lamp on page 5-11*.

LOOSE FUEL CAP Warning Message

The LOOSE FUEL CAP message displays in the odometer when the fuel cap is not tightened correctly after the vehicle has been refueled. See *Fuel System Messages on page 5-20*.

Failure to tighten the fuel cap properly after the LOOSE FUEL CAP warning message is displayed may cause the malfunction indicator light (MIL) to turn on. See *Malfunction Indicator Lamp on page 5-11*.

Filling a Portable Fuel Container

⚠ Warning

Filling a portable fuel container while it is in the vehicle can cause fuel vapors that can ignite either by static electricity or other means. You or others could be badly burned and the vehicle could be damaged. Always:

- Use approved fuel containers.
- Remove the container from the vehicle, trunk, or pickup bed before filling.
- Place the container on the ground.

(Continued)

Warning (Continued)

- Place the nozzle inside the fill opening of the container before dispensing fuel, and keep it in contact with the fill opening until filling is complete.
- Fill the container no more than 95% full to allow for expansion.
- Do not smoke, light matches, or use lighters while pumping fuel.
- Avoid using cell phones or other electronic devices.

Trailer Towing

General Towing Information

The vehicle is neither designed nor intended to tow a trailer.

Conversions and Add-Ons

Add-On Electrical Equipment

⚠ Caution

Some electrical equipment can damage the vehicle or cause components to not work and would not be covered by the warranty. Always check with your dealer before adding electrical equipment.

Add-on equipment can drain the vehicle's 12-volt battery, even if the vehicle is not operating.

The vehicle has an airbag system. Before attempting to add anything electrical to the vehicle, see *Servicing the Airbag-Equipped Vehicle on page 3-28* and *Adding Equipment to the Airbag-Equipped Vehicle on page 3-29*.

✍ NOTES

Vehicle Care

General Information
General Information 10-2
California Proposition 65 Warning 10-2
California Perchlorate Materials Requirements 10-2
Accessories and Modifications 10-3

Vehicle Checks
Doing Your Own Service Work 10-4
Hood 10-5
Engine Compartment Overview 10-7
Engine Oil 10-8
Continuously Variable Transmission (CVT) Fluid 10-11
Engine Air Cleaner/Filter 10-11
Cooling System 10-13
Engine Coolant 10-13
Engine Overheating 10-16
Overheated Engine Protection Operating Mode 10-17
Washer Fluid 10-18
Brakes 10-19
Brake Fluid 10-19
Battery 10-21
Wiper Blade Replacement 10-22

Headlamp Aiming
Headlamp Aiming 10-23

Bulb Replacement
Bulb Replacement 10-23
Halogen Bulbs 10-23
Headlamps, Front Turn Signal and Parking Lamps 10-23
Replacement Bulbs 10-23

Electrical System
Electrical System Overload 10-24
Fuses and Circuit Breakers 10-25
Engine Compartment Fuse Block 10-25
Instrument Panel Fuse Block 10-26

Wheels and Tires
Tires 10-26
All-Season Tires 10-27
Winter Tires 10-27
Summer Tires 10-28
All-Terrain Tires 10-28
Tire Sidewall Labeling 10-28
Tire Designations 10-30
Tire Terminology and Definitions 10-32
Tire Pressure 10-35
Tire Pressure Monitor System 10-36
Tire Pressure Monitor Operation 10-37
Tire Inspection 10-39
Tire Rotation 10-39
When It Is Time for New Tires 10-41
Buying New Tires 10-41
Different Size Tires and Wheels 10-43
Uniform Tire Quality Grading 10-44
Wheel Alignment and Tire Balance 10-45
Wheel Replacement 10-45
Tire Chains 10-46

If a Tire Goes Flat 10-47
Tire Changing 10-48
Full-Size Spare Tire 10-55

Jump Starting
Jump Starting 10-55

Towing the Vehicle
Towing the Vehicle 10-59
Recreational Vehicle Towing 10-59

Appearance Care
Exterior Care 10-61
Interior Care 10-65
Floor Mats 10-69

General Information

For service and parts needs, visit your dealer. You will receive genuine GM parts and GM-trained and supported service people.

Genuine GM parts have one of these marks:

California Proposition 65 Warning

WARNING: Most motor vehicles, including this one, contain and/or emit chemicals known to the State of California to cause cancer and birth defects or other reproductive harm. Engine exhaust, many parts and systems, many fluids, and some component wear by-products contain and/or emit these chemicals.

See *Battery on page 10-21* and *Jump Starting on page 10-55*.

California Perchlorate Materials Requirements

Certain types of automotive applications, such as airbag initiators, safety belt pretensioners, and lithium batteries contained in Remote Keyless Entry transmitters, may contain perchlorate materials. Special handling may be necessary. For additional information, see www.dtsc.ca.gov/hazardouswaste/perchlorate.

Accessories and Modifications

Adding non-dealer accessories or making modifications to the vehicle can affect vehicle performance and safety, including such things as airbags, braking, stability, ride and handling, emissions systems, aerodynamics, durability, and electronic systems like antilock brakes, traction control, and stability control. These accessories or modifications could even cause malfunction or damage not covered by the vehicle warranty.

Damage to vehicle components resulting from modifications or the installation or use of non-GM certified parts, including control module or software modifications, is not covered under the terms of the vehicle warranty and may affect remaining warranty coverage for affected parts.

GM Accessories are designed to complement and function with other systems on the vehicle. See your dealer to accessorize the vehicle using genuine GM Accessories installed by a dealer technician.

Also, see *Adding Equipment to the Airbag-Equipped Vehicle on page 3-29*.

⚠ Warning

Any modifications or alterations of this vehicle may affect the safety of the vehicle which may result in a collision, serious personal injury or death.

Modifications made to this vehicle by conversion companies or dealers may affect the final certification of the engine, vehicle, or equipment. The conversion company or dealer has the responsibility to certify that the altered vehicle and equipment complies or continues to comply with all applicable motor vehicle safety standards and emissions

(Continued)

Warning (Continued)

regulations. The conversion company or dealer is responsible for making sure the modifications or installed equipment does not affect the safety of the vehicle.

GM does not assume the responsibility as the final stage manufacturer for modified or altered vehicles. GM is not responsible for the final certification, product liability claims, or warranty claims, resulting from any component, assembly, or system being altered. GM is not responsible for modifications which cause the vehicle to become non-compliant with any of the motor vehicle safety standards, emissions regulations, or modifications that cause the vehicle to be or become defective or unsafe.

(Continued)

Warning (Continued)

Your vehicle's warranty may not cover damage resulting from alterations, modifications, installation of non-approved accessories, or improper installation of accessories. Refer to your Warranty Information Booklet for complete details.

Variable Voltage Control System

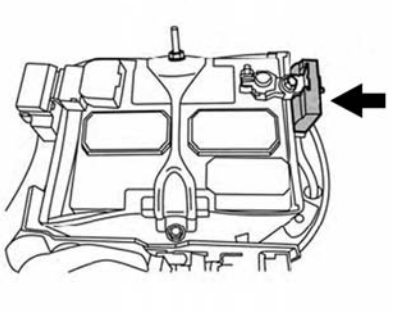

⚠ Caution

- Do not ground accessories directly to the battery terminal. Doing so will bypass the variable voltage control system and the vehicle battery many not charge completely.
- Use electrical accessories with the engine running to avoid discharging the vehicle battery.

Your vehicle is equipped with a variable voltage control system. This system measures the amount of electrical discharge from the battery and controls voltage generated by the generator. The current sensor is located near the battery along the negative battery cable. If you add electrical accessories to your vehicle, be sure to ground them to a suitable body ground such as the frame or engine block area.

Vehicle Checks

Doing Your Own Service Work

⚠ Warning

It can be dangerous to work on your vehicle if you do not have the proper knowledge, service manual, tools, or parts. Always follow owner manual procedures and consult the service manual for your vehicle before doing any service work.

If doing some of your own service work, use the proper service manual. It tells you much more about how to service the vehicle than this manual can. To order the proper service manual, see *Service Publications Ordering Information on page 13-11*.

This vehicle has an airbag system. Before attempting to do your own service work, see *Servicing the Airbag-Equipped Vehicle on page 3-28*.

Keep a record with all parts receipts and list the mileage and the date of any service work performed. See *Maintenance Records on page 11-13*.

⚠ Caution

Even small amounts of contamination can cause damage to vehicle systems. Do not allow contaminants to contact the fluids, reservoir caps, or dipsticks.

Hood

To open the hood:

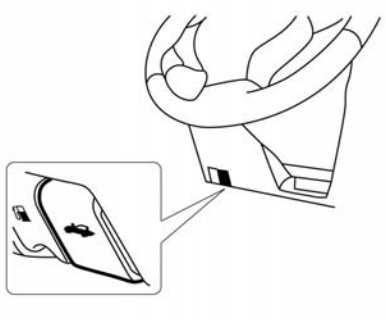

1. Pull the hood lock release handle located below the instrument panel on the left side of the steering wheel.

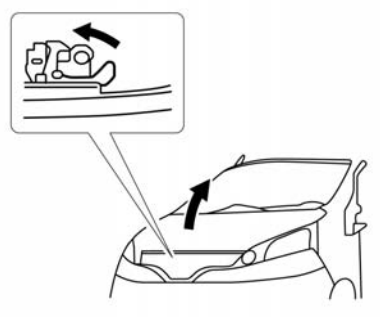

2. Go to the front of the vehicle, locate the hood release lever in between the hood and grille, and push the lever sideways with your fingertips.
3. Raise the hood.

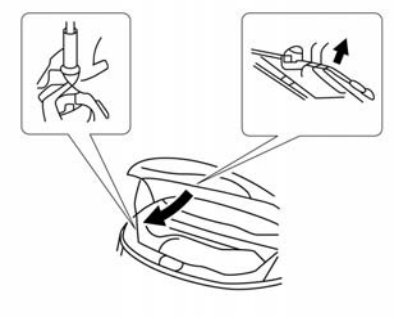

4. Release the hood prop from its underhood retainer.
5. Securely place the hood prop into the slot in the front of the engine compartment.

To close the hood:

1. Before closing the hood, be sure all filler caps are on properly. Then, lift the hood to relieve pressure on the hood prop. Remove the hood prop from the slot in the front of the engine compartment and return the prop to its underhood retainer. The prop rod must click into place when returning it to the retainer to prevent hood damage.
2. Lower the hood to approximately 12 in (30 cm) above the hood release latch and release it. Check to make sure the hood is closed and repeat the process if necessary.

Engine Compartment Overview

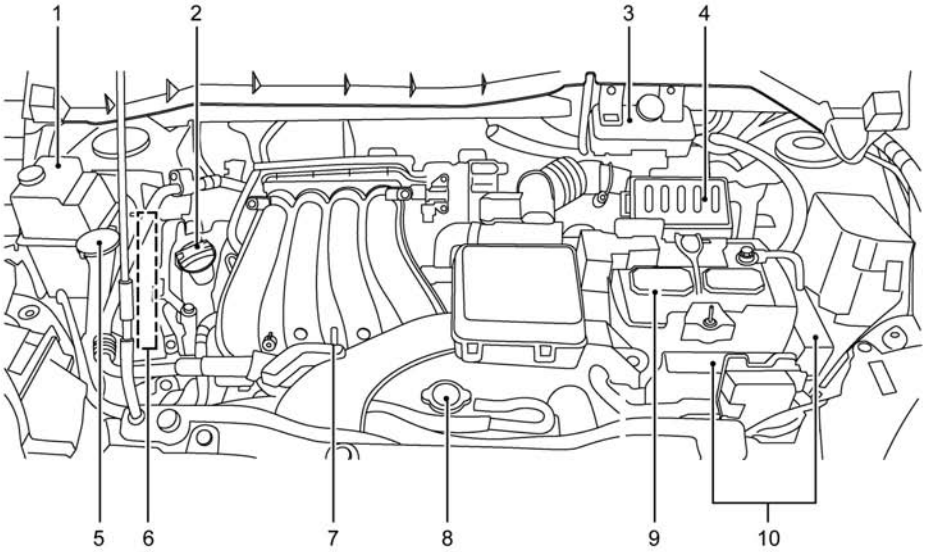

1. Coolant Recovery Tank. See *Cooling System on page 10-13*.
2. Engine Oil Fill Cap. See “When to Add Engine Oil” under *Engine Oil on page 10-8*.
3. Brake Master Cylinder Reservoir. See *Brake Fluid on page 10-19*.
4. *Engine Air Cleaner/Filter on page 10-11*.
5. Windshield Washer Fluid Reservoir. See “Adding Washer Fluid” under *Washer Fluid on page 10-18*.
6. Drive Belt.
7. Engine Oil Dipstick. See “Checking Engine Oil” under *Engine Oil on page 10-8*.
8. Radiator Pressure Cap. See *Cooling System on page 10-13*.
9. *Battery on page 10-21*.
10. *Engine Compartment Fuse Block on page 10-25*.

Engine Oil

To ensure proper engine performance and long life, careful attention must be paid to engine oil. Following these simple, but important steps will help protect your investment:

- Always use engine oil approved to the proper specification and of the proper viscosity grade. See “Selecting the Right Engine Oil” in this section.
- Check the engine oil level regularly and maintain the proper oil level. See “Checking Engine Oil” and “When to Add Engine Oil” in this section.
- Change the engine oil at the appropriate time. See *Maintenance Schedule on page 11-3*.
- Always dispose of engine oil properly. See “What to Do with Used Oil” in this section.

Checking Engine Oil

It is a good idea to check the engine oil level at each fuel fill. In order to get an accurate reading, the vehicle must be on level ground. The engine oil dipstick handle is a loop. See *Engine Compartment Overview on page 10-7* for the location of the engine oil dipstick.

Obtaining an accurate oil level reading is essential:

1. If the engine has been running recently, turn off the engine and allow several minutes for the oil to drain back into the oil pan. Checking the oil level too soon after engine shutoff will not provide an accurate oil level reading.

⚠ Warning

The engine oil dipstick handle may be hot; it could burn you. Use a towel or glove to touch the dipstick handle.

2. Pull out the dipstick and wipe it with a clean paper towel or cloth, then push it back in all the way. Remove it again, keeping the tip down, and check the level.

When to Add Engine Oil

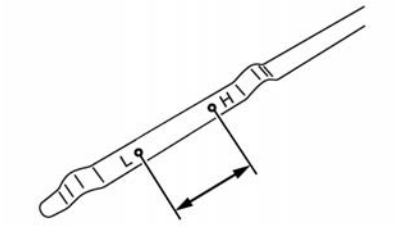

It should be between the H (High) and L (Low) marks. This is the normal operating oil level range. If the oil level is below the L (Low) mark, remove the oil filler cap and pour recommended oil through the opening. See *Engine Compartment Overview on page 10-7* for the location of the engine oil fill cap.

Add some of the recommended oil and then recheck the level. See "Selecting the Right Engine Oil" in this section for an explanation of what kind of oil to use. For engine oil crankcase capacity, see *Capacities and Specifications on page 12-2*. Add enough oil to put the level somewhere in the proper operating range. Do not overfill. Push the dipstick all the way back in when through.

⚠ Caution

Do not add too much oil. Oil levels above or below the acceptable operating range shown on the dipstick are harmful to the engine. If you find that you have an oil level above the operating range, i.e., the engine has so much oil that the oil level gets above the cross-hatched area that shows the proper operating range, the engine could

(Continued)

Caution (Continued)

be damaged. You should drain out the excess oil or limit driving of the vehicle and seek a service professional to remove the excess amount of oil.

Selecting the Right Engine Oil

Selecting the right engine oil depends on both the proper oil specification and viscosity grade. See *Recommended Fluids and Lubricants on page 11-11*.

Specification

Ask for and use engine oils that meet the dexos1™ specification.

Engine oils that have been approved by GM as meeting the dexos1 specification are marked with the dexos1 approved logo. See www.gmdexos.com.

⚠ Caution

Failure to use the recommended engine oil can result in engine damage not covered by the vehicle warranty. Check with your dealer or service provider on whether the oil is approved to the dexos1 specification.

API certification mark

API service symbol

Use of Substitute Engine Oils if dexos1 is unavailable: In the event that dexos1-approved engine oil is not available at an oil change or for maintaining proper oil level, you may use substitute engine oil that meets American Petroleum Institute (API) approved specifications of the appropriate viscosity grade. These oils have the API certification mark on the front of the container.

Viscosity Grade

Use SAE 5W-30 viscosity grade engine oil.

Engine Oil Additives/Engine Oil Flushes

Do not add anything to the oil. The recommended oils meeting the dexos1 specification are all that is needed for good performance and engine protection.

Engine oil system flushes are not recommended and could cause engine damage not covered by the vehicle warranty.

What to Do with Used Oil

Used engine oil contains certain elements that can be unhealthy for your skin and could even cause cancer. Do not let used oil stay on your skin for very long. Clean your skin and nails with soap and water, or a good hand cleaner. Wash or properly dispose of clothing or rags containing used engine oil. See the manufacturer's warnings about the use and disposal of oil products.

Used oil can be a threat to the environment. If you change your own oil, be sure to drain all the oil from the filter before disposal. Never dispose of oil by putting it in the trash or pouring it on the ground, into sewers, or into streams or bodies of water. Recycle it by taking it to a place that collects used oil.

Continuously Variable Transmission (CVT) Fluid

⚠ Caution

- GM recommends using ACDelco CVT Fluid (Part No. 19260800, in Canada 19299096) in CVT. Do not mix with other fluids.
- Do not use Automatic transmission fluid (AFT) or Manual Transmission fluid in a CVT, as it may damage the CVT. Damage caused by the use of fluids other than as recommended is not covered under the vehicle warranty.
- Using fluids that are not equivalent to ACDelco CVT Fluid (Part No. 19260800, in Canada 19299096) may damage the CVT. Damage caused by the use of fluids

(Continued)

Caution (Continued)

other than as recommended is not covered under the vehicle warranty.

When checking or replacement of CVT fluid is required, see your dealer for servicing.

Engine Air Cleaner/Filter

The engine air cleaner/filter is near the rear of the engine compartment on the driver side. See *Engine Compartment Overview on page 10-7*.

When to Inspect the Engine Air Cleaner/Filter

Inspect or replace the air cleaner/filter at the scheduled maintenance intervals. See *Maintenance Schedule on page 11-3*. If driving in dusty/dirty conditions, inspect the filter at each engine oil change.

How to Inspect the Engine Air Cleaner/Filter

To inspect the air cleaner/filter, remove the filter from the vehicle and lightly shake it to release loose dust and dirt. If the filter remains covered with dirt, a new filter is required. Never use compressed air to clean the filter.

To inspect or replace the engine air cleaner/filter:

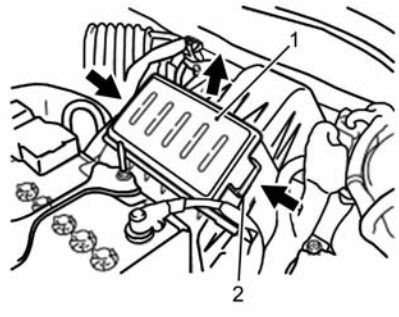

1. Air Cleaner/Filter Cover
2. Air Cleaner/Filter Tabs (2)

1. Push the tabs (2) in at both ends of the air cleaner/filter cover (1).
2. Pull the air cleaner/filter cover (1) up from the air cleaner/filter assembly.

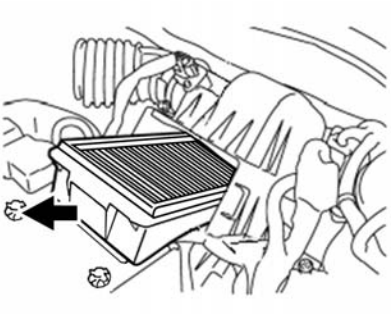

3. Remove the air cleaner holder and filter from the engine air cleaner housing. Be careful to dislodge as little dirt as possible.
4. Clean the engine air cleaner/filter housing.
5. Remove the air cleaner/filter from the air cleaner holder.
6. Inspect or replace the engine air cleaner/filter. Make sure that the filter fits properly into the air cleaner holder.
7. Reinstall the air cleaner/filter on the air cleaner holder and slide them into the air cleaner housing.

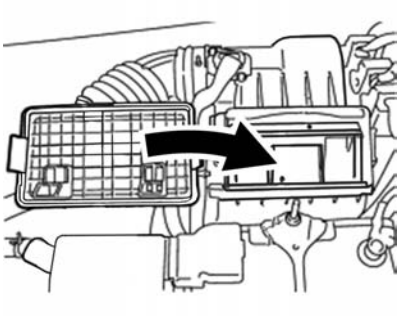

8. Reinstall the air cleaner/filter cover and be sure that the tabs click into place.

⚠ Warning

Operating the engine with the air cleaner/filter off can cause you or others to be burned. The air cleaner not only cleans the air; it helps to stop flames if the engine backfires. Use caution when working on the engine and do not drive with the air cleaner/filter off.

⚠ Warning

Never pour fuel into the throttle body or attempt to start the engine with the air cleaner removed. Doing so could result in serious injury.

⚠ Caution

If the air cleaner/filter is off, dirt can easily get into the engine, which could damage it. Always have the air cleaner/filter in place when you are driving.

Cooling System

The cooling system allows the engine to maintain the correct working temperature.

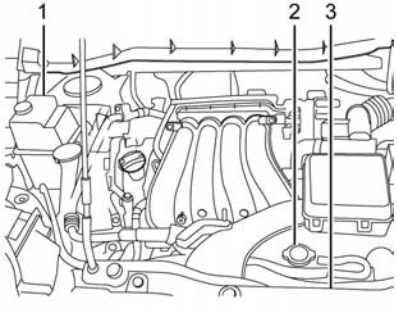

1. Coolant Recovery Tank
2. Radiator Pressure Cap
3. Engine Cooling Fans (Out of View)

⚠ Warning

An electric engine cooling fan can start even when the engine is not running. To avoid injury, always keep hands, clothing, and tools away from any engine cooling fan.

⚠ Warning

Heater and radiator hoses, and other engine parts, can be very hot. Do not touch them. If you do, you can be burned.

Do not run the engine if there is a leak. If you run the engine, it could lose all coolant. That could cause an engine fire, and you could be burned. Get any leak fixed before you drive the vehicle.

⚠ Caution

Using coolant other than the recommended engine coolant can cause premature engine, heater core, or radiator corrosion. In addition, the engine coolant could require changing sooner. Any repairs would not be covered by the vehicle warranty. Always use the recommended engine coolant. See *Recommended Fluids and Lubricants on page 11-11*.

Engine Coolant

The cooling system in the vehicle is filled with long life antifreeze coolant. See *Recommended Fluids and Lubricants on page 11-11*.

The following explains the cooling system and how to check and add coolant when it is low. If there is a problem with engine overheating, see *Engine Overheating on page 10-16*.

What to Use

⚠ Warning

Adding water or some other liquid to the cooling system can be dangerous. Water and other liquids can boil before the proper coolant mixture will. The coolant warning system is set for the proper coolant mixture. With water or the wrong mixture, the engine could get too hot but you would not get the overheat warning. The engine could catch fire and you or others could be burned. Use the recommended engine coolant. See *Recommended Fluids and Lubricants on page 11-11*.

Use the recommended engine coolant. See *Recommended Fluids and Lubricants on page 11-11*.
If using this coolant, nothing else needs to be added. This coolant:

- Gives freezing protection down to −37°C (−34°F), outside temperature.
- Gives boiling protection up to 129°C (265°F), engine temperature.
- Protects against rust and corrosion.
- Will not damage aluminum parts.
- Helps keep the proper engine temperature.

⚠ Caution

If the improper coolant mixture, inhibitors, or additives are used in the vehicle cooling system, the engine could overheat and be damaged. Too much water in the

(Continued)

Caution (Continued)

mixture can freeze and crack engine cooling parts. The repairs would not be covered by the vehicle warranty. Use only the recommended engine coolant for the cooling system. See *Recommended Fluids and Lubricants on page 11-11*.

Never dispose of engine coolant by putting it in the trash, by pouring it on the ground, or by pouring into sewers, streams, or bodies of water. Have the coolant changed by an authorized service center, familiar with legal requirements regarding used coolant disposal. This will help protect the environment and your health.

Checking Engine Coolant Level

⚠ Warning

You can be burned if you spill coolant on hot engine parts. Coolant contains ethylene glycol and it will burn if the engine parts are hot enough. Do not spill coolant on a hot engine.

⚠ Caution

This vehicle has a specific coolant fill procedure. Failure to follow this procedure could cause the engine to overheat and be severely damaged.

⚠ Warning

Steam and scalding liquids from a hot cooling system can blow out and burn you badly. Never turn the cap when the cooling system, including the surge tank pressure cap, is hot. Wait for the cooling system and surge tank pressure cap to cool.

The vehicle must be on a level surface when checking the coolant level.

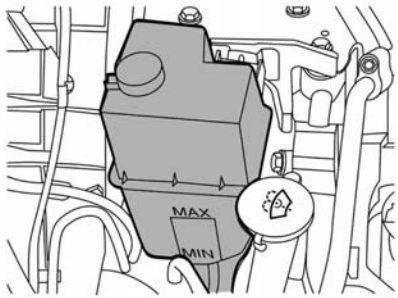

Check the coolant level in the reservoir when the engine is cold. If the coolant level is below the MIN level, add coolant to the MAX level. If the reservoir is empty, check the coolant level in the radiator when the engine is cold. If there is insufficient coolant in the radiator, fill the radiator with coolant up to the filler opening and also add it to the reservoir up to the MAX level.

The vehicle contains long life coolant. The life expectancy of the factory-fill coolant is 168,000 km (105,000 miles) or seven years. Mixing any other type of coolant or the use of non-distilled water will reduce the life expectancy of the factory-fill coolant. Refer to the *Recommended Fluids and Lubricants on page 11-11* for more details.

The engine coolant reservoir is a pressurized tank. When installing the cap, tighten.

If the cooling system frequently requires coolant, have it checked by your dealer.

Changing Engine Coolant

A dealer can change the engine coolant. The service procedure can be found in the service manual. See *Service Publications Ordering Information on page 13-11*.

Improper servicing can result in reduced heater performance and engine overheating.

⚠ Warning

- To avoid the danger of being scalded, never change the coolant when the engine is hot.
- Never remove the radiator or engine coolant reservoir cap when the engine is hot. Serious burns could be caused by high pressure fluid escaping from the radiator.

(Continued)

Warning (Continued)

- Avoid direct skin contact with used coolant. If skin contact is made, wash thoroughly with soap or hand cleaner as soon as possible.
- Keep coolant out of the reach of children and pets.

Engine coolant must be disposed of properly. Check your local regulations.

Engine Overheating

The vehicle has an engine coolant temperature warning light on the instrument cluster to warn of engine overheating. See *Engine Coolant Temperature Warning Light on page 5-17*.

If the decision is made not to lift the hood when this warning appears, but instead get service help right away, see *Roadside Assistance Program on page 13-5*.

If the decision is made to lift the hood, make sure the vehicle is parked on a level surface.

Then check to see if the engine cooling fans are running. If the engine is overheating, the fans should be running. If they are not, do not continue to run the engine and have the vehicle serviced.

See if the engine cooling fan speed increases when idle speed is doubled by pushing the accelerator pedal down. If it does not, the vehicle needs service. Turn off the engine.

⚠ Caution

Running the engine without coolant may cause damage or a fire. Vehicle damage would not be covered by the vehicle warranty.

If Steam is Coming from the Engine Compartment

⚠ Warning

Steam from an overheated engine can burn you badly, even if you just open the hood. Stay away from the engine if you see or hear steam coming from it. Just turn it off and get everyone away from the vehicle until it cools down. Wait until there is no sign of steam or coolant before you open the hood.

If you keep driving when the engine is overheated, the liquids in it can catch fire. You or others could be badly burned. Stop the engine if it overheats, and get out of the vehicle until the engine is cool.

Overheated Engine Protection Operating Mode

The engine has an engine protection mode to reduce the chance of damage if the coolant temperature goes too high (for example, when climbing steep grades in high temperature with heavy loads, such as when towing a trailer). When the engine temperature reaches a certain level:

- The engine coolant temperature warning light will illuminate.
- Engine power may be reduced.
- The air conditioning cooling function may be automatically turned OFF for a short time (the blower will continue to operate).

Engine power and under certain conditions, vehicle speed will decrease. Vehicle speed can be controlled with the accelerator pedal, but the vehicle may not accelerate at the desired speed.

The transmission will downshift or upshift as it reaches prescribed shift points. You can also shift manually.

As driving conditions change and engine coolant temperature is reduced, vehicle speed can be increased using the accelerator pedal, and air conditioning cooling function will automatically be turned back ON.

If:

1. The engine coolant temperature is not reduced.
2. The air conditioning cooling function does not turn back ON.
3. The engine oil pressure low/ engine coolant temperature high warning light illuminates, this may indicate a malfunction. Move the vehicle off the road in a safe area and allow the engine to cool. If after checking the oil and coolant, the oil pressure low/engine coolant temperature

high warning light remains on, do not continue to drive, call your dealer.

The malfunction indicator light (MIL) may also come ON. If only it remains on, you do not need to have the vehicle towed, but have it inspected soon by your dealer. For additional information, see *Malfunction Indicator Lamp on page 5-11*.

Washer Fluid

What to Use

When the vehicle needs windshield washer fluid, read the manufacturer's instructions before use. If operating the vehicle in an area where the temperature may fall below freezing, use a fluid that has sufficient protection against freezing.

Adding Washer Fluid

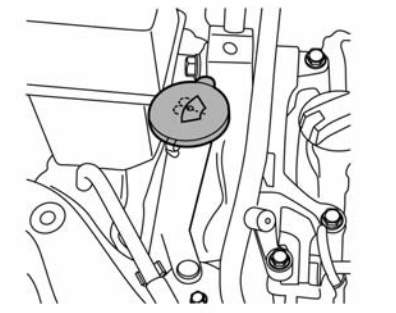

Open the cap with the washer symbol on it. Add washer fluid until the reservoir is full. See *Engine Compartment Overview on page 10-7* for reservoir location.

⚠ Caution

- Do not use engine coolant (antifreeze) in the windshield washer. It can damage the windshield washer system and paint.
- Do not mix water with ready-to-use washer fluid. Water can cause the solution to freeze and damage the washer fluid tank and other parts of the washer system.
- When using concentrated washer fluid, follow the manufacturer instructions for adding water.
- Fill the washer fluid tank only three-quarters full when it is very cold. This allows for fluid expansion if freezing occurs, which could damage the tank if it is completely full.

Brakes

Disc brake pads have built-in wear indicators that make a high-pitched warning sound when the brake pads are worn and new pads are needed. The sound can come and go or be heard all the time when the vehicle is moving, except when applying the brake pedal firmly.

⚠ Warning

The brake wear warning sound means that soon the brakes will not work well. That could lead to a crash. When the brake wear warning sound is heard, have the vehicle serviced.

⚠ Caution

Continuing to drive with worn-out brake pads could result in costly brake repair.

Some driving conditions or climates can cause a brake squeal when the brakes are first applied or lightly applied. This does not mean something is wrong with the brakes.

Properly torqued wheel nuts are necessary to help prevent brake pulsation. When tires are rotated, inspect brake pads for wear and evenly tighten wheel nuts in the proper sequence to torque specifications. See *Capacities and Specifications on page 12-2*.

Brake pads should be replaced as complete sets.

Brake Pedal Travel

See your dealer if the brake pedal does not return to normal height, or if there is a rapid increase in pedal travel. This could be a sign that brake service may be required.

Replacing Brake System Parts

Always replace brake system parts with new, approved replacement parts. If this is not done, the brakes may not work properly. The braking performance expected can change in many other ways if the wrong replacement brake parts are installed or parts are improperly installed.

Brake Fluid

The brake master cylinder reservoir is filled with DOT 3 brake fluid. See *Engine Compartment Overview on page 10-7* for the location of the reservoir.

There are only two reasons why the brake fluid level in the reservoir might go down:

- The brake fluid level goes down because of normal brake lining wear. When new linings are installed, the fluid level goes back up.

- A fluid leak in the brake hydraulic system can also cause a low fluid level. Have the brake hydraulic system fixed, since a leak means that sooner or later the brakes will not work well.

Do not top off the brake fluid. Adding fluid does not correct a leak. If fluid is added when the linings are worn, there will be too much fluid when new brake linings are installed. Add or remove brake fluid, as necessary, only when work is done on the brake hydraulic system.

⚠ Warning

If too much brake fluid is added, it can spill on the engine and burn, if the engine is hot enough. You or others could be burned, and the vehicle could be damaged. Add brake fluid only when work is done on the brake hydraulic system. See “Checking Brake Fluid” in this section.

Refer to the Maintenance Schedule to determine when to check the brake fluid. See *Maintenance Schedule on page 11-3*.

Checking Brake Fluid

Check brake fluid by looking at the brake fluid reservoir. See *Engine Compartment Overview on page 10-7*.

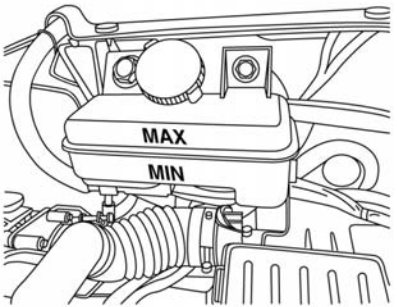

The fluid level should be above MIN. If it is not, have the brake hydraulic system checked to see if there is a leak.

After work is done on the brake hydraulic system, make sure the level is above the MIN but not over the MAX mark.

If the brake fluid is below the MIN line, the brake warning light will illuminate. Add brake fluid up to the MAX line.

What to Add

Use only new DOT 3 brake fluid from a sealed container. See *Recommended Fluids and Lubricants on page 11-11*.

Always clean the brake fluid reservoir cap and the area around the cap before removing it. This helps keep dirt from entering the reservoir.

⚠ Warning

With the wrong kind of fluid in the brake hydraulic system, the brakes might not work well. This could cause a crash. Always use the proper brake fluid.

⚠ Caution

- Using the wrong fluid can badly damage brake hydraulic system parts. For example, just a few drops of mineral-based oil, such as engine oil, in the brake hydraulic system can damage brake hydraulic system parts so badly that they will have to be replaced. Do not let someone put in the wrong kind of fluid.
- If brake fluid is spilled on the vehicle's painted surfaces, the paint finish can be damaged. Be careful not to spill brake fluid on the vehicle. If you do, wash it off immediately.

Battery

The original equipment battery is maintenance free. Do not remove the cap and do not add fluid.

Refer to the replacement number shown on the original battery label when a new battery is needed. See *Engine Compartment Overview on page 10-7* for battery location.

⚠ Warning

WARNING: Battery posts, terminals, and related accessories contain lead and lead compounds, chemicals known to the State of California to cause cancer and birth defects or other reproductive harm. **Wash hands after handling.** See *California Proposition 65 Warning on page 10-2*.

Vehicle Storage

⚠ Warning

Batteries have acid that can burn you and gas that can explode. You can be badly hurt if you are

(Continued)

Warning (Continued)

not careful. See *Jump Starting on page 10-55* for tips on working around a battery without getting hurt.

Extended Storage Switch

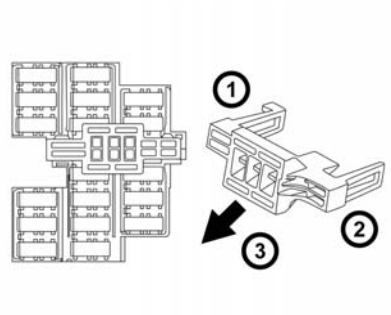

If any electrical equipment does not operate, remove the extended storage switch and check for an open fuse.

Note: The extended storage switch is used for long term vehicle storage. Even if the extended storage switch is broken it is not necessary to replace it. Replace only the open fuse in the switch with a new fuse.

How to replace the extended storage switch:

1. To remove the extended storage switch, be sure the ignition switch is in the OFF or LOCK position.
2. Be sure the headlight switch is in the OFF position.
3. Remove the fuse box cover.
4. Pinch the locking tabs (1) and (2) found on each side of the storage switch.
5. Pull the storage switch straight out from the fuse box (3).

Wiper Blade Replacement

Windshield wiper blades should be inspected for wear and cracking. See *Maintenance Schedule on page 11-3*.

Replacement blades come in different types and are removed in different ways. For proper type and length, see *Maintenance Replacement Parts on page 11-12*.

⚠ Caution

Allowing the wiper arm to touch the windshield when no wiper blade is installed could damage the windshield. Any damage that occurs would not be covered by the vehicle warranty. Do not allow the wiper arm to touch the windshield.

1. Lift the wiper arm away from the windshield.

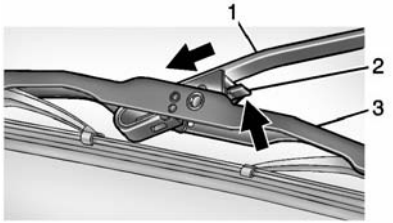

2. Push the release lever (2) to disengage the hook and push the wiper arm (1) out of the blade assembly (3).
3. Push the new blade assembly securely on the wiper arm until the release lever clicks into place.

Headlamp Aiming

Headlamp aim has been preset and should need no further adjustment.

If the vehicle is damaged in a crash, the headlamp aim may be affected. If adjustment to the headlamps is necessary, see your dealer.

Bulb Replacement

For the proper type of replacement bulbs, see *Replacement Bulbs on page 10-23*.

For any bulb-changing procedure not listed in this section, contact your dealer.

Halogen Bulbs

⚠ Warning

Halogen bulbs have pressurized gas inside and can burst if you drop or scratch the bulb. You or others could be injured. Be sure to read and follow the instructions on the bulb package.

Headlamps, Front Turn Signal and Parking Lamps

High-Beam Headlamp/ Low-Beam Headlamp

1. Open the hood.
2. Release the clip on the connector.
3. Turn the bulb counterclockwise and pull straight back.

Turn Signal and Parking Lamp

1. Open the hood.
2. Turn the bulb counterclockwise and pull straight back.

Replacement Bulbs

Lamp	Bulb Number
Headlamp	H13
Front Turn Signal and Parking Lamp	3457K
Map Lamp	W5W

Lamp	Bulb Number
Cargo Lamp	W5W
High-Mounted Stop Lamp	W16W
Tail Lamp	3047
Back-Up Lamp	921
Rear Turn Signal Lamp	3157AK
License Plate Lamp	T10

For replacement bulbs not listed here, contact your dealer.

Electrical System

Electrical System Overload

The vehicle has fuses and circuit breakers to protect against an electrical system overload.

When the current electrical load is too heavy, the circuit breaker opens and closes, protecting the circuit until the current load returns to normal or the problem is fixed. This greatly reduces the chance of circuit overload and fire caused by electrical problems.

Fuses and circuit breakers protect power devices in the vehicle.

Replace a bad fuse with a new one of the identical size and rating.

If there is a problem on the road and a fuse needs to be replaced, the same amperage fuse can be borrowed. Choose some feature of the vehicle that is not needed to use and replace it as soon as possible.

Headlamp Wiring

An electrical overload may cause the lamps to go on and off, or in some cases to remain off. Have the headlamp wiring checked right away if the lamps go on and off or remain off.

Windshield Wipers

If the wiper motor overheats due to heavy snow or ice, the windshield wipers will stop until the motor cools and will then restart.

Although the circuit is protected from electrical overload, overload due to heavy snow or ice may cause wiper linkage damage. Always clear ice and heavy snow from the windshield before using the windshield wipers.

If the overload is caused by an electrical problem and not snow or ice, be sure to get it fixed.

Fuses and Circuit Breakers

The wiring circuits in the vehicle are protected from short circuits by a combination of fuses and circuit breakers. This greatly reduces the chance of fires caused by electrical problems.

Look at the silver-colored band inside the fuse. If the band is broken or melted, replace the fuse. Be sure you replace a bad fuse with a new one of the identical size and rating.

Spare fuses are provided and can be found in the passenger compartment fuse box.

Engine Compartment Fuse Block

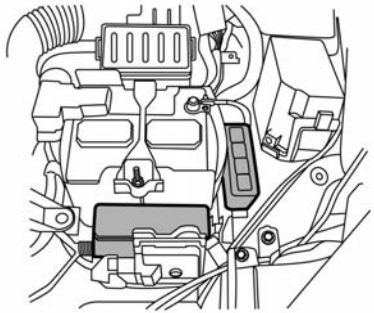

The fuse block is in the engine compartment of the vehicle. Remove the cover by pushing the tab and lifting the cover up.

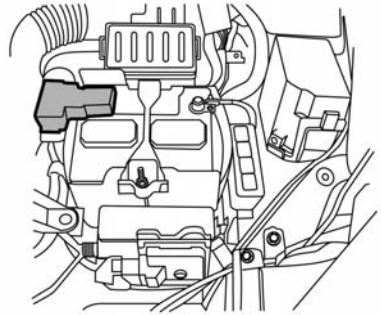

Fusible Links

If the electrical equipment does not operate and fuses are in good condition, check the fusible links. If any of these fusible links are melted, replace with only Genuine GMus parts.

⚠ Caution

Spilling liquid on any electrical component on the vehicle may damage it. Always keep the covers on any electrical component.

Instrument Panel Fuse Block

⚠ Caution

Spilling liquid on any electrical component on the vehicle may damage it. Always keep the covers on any electrical component.

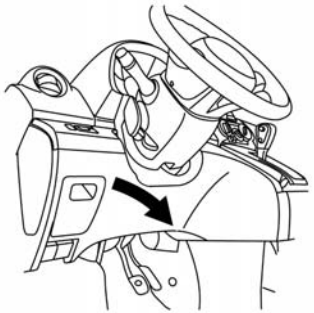

Pull the fuse box cover to remove. Push the fuse box cover to install.

Wheels and Tires

Tires

Every new GM vehicle has high-quality tires made by a leading tire manufacturer. See the warranty manual for information regarding the tire warranty and where to get service. For additional information refer to the tire manufacturer.

⚠ Warning

- Poorly maintained and improperly used tires are dangerous.
- Overloading the tires can cause overheating as a result of too much flexing. There could be a blowout

(Continued)

Warning (Continued)

and a serious crash. See *Vehicle Load Limits on page 9-9*.

- Underinflated tires pose the same danger as overloaded tires. The resulting crash could cause serious injury. Check all tires frequently to maintain the recommended pressure. Tire pressure should be checked when the tires are cold.
- Overinflated tires are more likely to be cut, punctured, or broken by a sudden impact — such as when hitting a pothole. Keep tires at the recommended pressure.

(Continued)

Warning (Continued)

- Worn or old tires can cause a crash. If the tread is badly worn, replace them.
- Replace any tires that have been damaged by impacts with potholes, curbs, etc.
- Improperly repaired tires can cause a crash. Only the dealer or an authorized tire service center should repair, replace, dismount, and mount the tires.
- Do not spin the tires in excess of 56 km/h (35 mph) on slippery surfaces such as snow, mud, ice, etc. Excessive spinning may cause the tires to explode.

All-Season Tires

This vehicle may come with all-season tires. These tires are designed to provide good overall performance on most road surfaces and weather conditions. Original equipment tires designed to meet all-season requirements have MS molded onto the sidewall. This symbol can usually be found following the size designation.

Consider installing winter tires on the vehicle if frequent driving on snow or ice-covered roads is expected. All-season tires provide adequate performance for most winter driving conditions, but they may not offer the same level of traction or performance as winter tires on snow or ice-covered roads. See *Winter Tires on page 10-27*.

Winter Tires

This vehicle was not originally equipped with winter tires. Winter tires are designed for increased traction on snow and ice-covered roads. Consider installing winter tires on the vehicle if frequent driving on ice or snow covered roads is expected. See your dealer for details regarding winter tire availability and proper tire selection. Also, see *Buying New Tires on page 10-41*.

With winter tires, there may be decreased dry road traction, increased road noise, and shorter tread life. After changing to winter tires, be alert for changes in vehicle handling and braking.

If using winter tires:

- Use tires of the same brand and tread type on all four wheel positions.
- Use only radial ply tires of the same size, load range, and speed rating as the original equipment tires.

Winter tires with the same speed rating as the original equipment tires may not be available for H, V, W, Y, and ZR speed rated tires. If winter tires with a lower speed rating are chosen, never exceed the tire's maximum speed capability.

Summer Tires

This vehicle may come with high performance summer tires. These tires have a special tread and compound that are optimized for maximum dry and wet road performance. This special tread and compound will have decreased performance in cold climates, and on ice and snow. We recommend installing winter tires on the vehicle if frequent driving at temperatures below approximately 5°C (40°F) or on ice or snow covered roads is expected. See *Winter Tires on page 10-27*.

All-Terrain Tires

This vehicle may have All-Terrain Tires. These tires provide good performance on most road surfaces, weather conditions, and for off-road driving.

The tread pattern on these tires may wear more quickly than other tires. Consider rotating the tires more frequently than at 8 000 km (5,000 mi) intervals if irregular wear is noted when the tires are inspected. See *Tire Inspection on page 10-39*.

Tire Sidewall Labeling

Useful information about a tire is molded into the sidewall. The examples show a typical passenger vehicle and light truck tire sidewall.

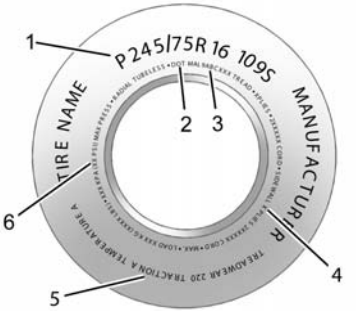

Passenger (P-Metric) Tire

(1) Tire Size: The tire size code is a combination of letters and numbers used to define a particular tire's width, height, aspect ratio, construction type, and service description. See the “Tire Size” illustration later in this section for more detail.

(2) DOT (Department of Transportation): The Department of Transportation (DOT) code indicates that the tire is in compliance with the

U.S. Department of Transportation Motor Vehicle Safety Standards.

DOT Tire Date of Manufacture: The last four digits of the TIN indicate the tire manufactured date. The first two digits represent the week (01-52) and the last two digits, the year. For example, the third week of the year 2010 would have a four-digit DOT date of 0310.

(3) Tire Identification Number (TIN): The letters and numbers following the DOT code are the Tire Identification Number (TIN). The TIN shows the manufacturer and plant code, tire size, and date the tire was manufactured. The TIN is molded onto both sides of the tire, although only one side may have the date of manufacture.

(4) Tire Ply Material: The type of cord and number of plies in the sidewall and under the tread.

(5) Uniform Tire Quality Grading (UTQG): Tire manufacturers are required to grade tires based on three performance factors: treadwear, traction, and temperature resistance. For more information, see *Uniform Tire Quality Grading on page 10-44*.

(6) Maximum Cold Inflation Load Limit: Maximum load that can be carried and the maximum pressure needed to support that load. For information on recommended tire pressure see *Tire Pressure on page 10-35* and *Vehicle Load Limits on page 9-9*.

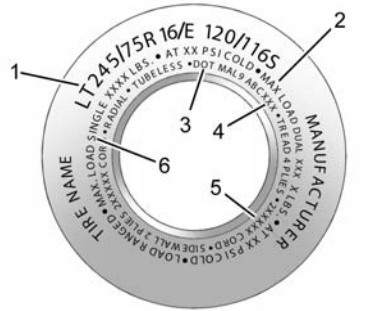

Light Truck (LT-Metric) Tire

(1) Tire Size: The tire size code is a combination of letters and numbers used to define a particular tire's width, height, aspect ratio, construction type, and service description. See the “Tire Size” illustration later in this section for more detail.

(2) Dual Tire Maximum Load: Maximum load that can be carried and the maximum pressure needed to support that load when used in a dual configuration. For information on recommended tire pressure see *Tire Pressure on page 10-35* and *Vehicle Load Limits on page 9-9*.

(3) DOT (Department of Transportation): The Department of Transportation (DOT) code indicates that the tire is in compliance with the U.S. Department of Transportation Motor Vehicle Safety Standards.

DOT Tire Date of Manufacture: The last four digits of the TIN indicate the tire manufactured date. The first two digits represent the week (01-52) and the last two digits, the year. For example, the third week of the year 2010 would have a four-digit DOT date of 0310.

(4) Tire Identification Number (TIN): The letters and numbers following the DOT code are the Tire Identification Number (TIN). The TIN shows the manufacturer and plant code, tire size, and date the tire was manufactured. The TIN is molded onto both sides of the tire, although only one side may have the date of manufacture.

(5) Tire Ply Material: The type of cord and number of plies in the sidewall and under the tread.

(6) Single Tire Maximum Load: Maximum load that can be carried and the maximum pressure needed to support that load when used as a single. For information on recommended tire pressure see *Tire Pressure on page 10-35* and *Vehicle Load Limits on page 9-9*.

Tire Designations

Tire Size

The following examples show the different parts of a tire size.

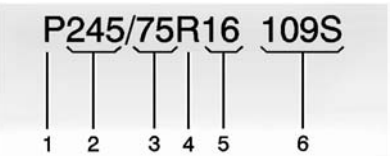

Passenger (P-Metric) Tire

(1) Passenger (P-Metric) Tire: The United States version of a metric tire sizing system. The letter P as the first character in

the tire size means a passenger vehicle tire engineered to standards set by the U.S. Tire and Rim Association.

(2) Tire Width: The three-digit number indicates the tire section width in millimeters from sidewall to sidewall.

(3) Aspect Ratio: A two-digit number that indicates the tire height-to-width measurements. For example, if the tire size aspect ratio is 75, as shown in item 3 of the illustration, it would mean that the tire's sidewall is 75 percent as high as it is wide.

(4) Construction Code: A letter code is used to indicate the type of ply construction in the tire. The letter R means radial ply construction; the letter D means diagonal or bias ply construction; and the letter B means belted-bias ply construction.

(5) Rim Diameter: Diameter of the wheel in inches.

(6) Service Description: These characters represent the load index and speed rating of the tire. The load index represents the load carrying capacity a tire is certified to carry. The speed rating is the maximum speed a tire is certified to carry a load.

Light Truck (LT-Metric) Tire

(1) Light Truck (LT-Metric) Tire: The United States version of a metric tire sizing system. The letters LT as the first two characters in the tire size mean a light truck tire engineered to standards set by the U.S. Tire and Rim Association.

(2) Tire Width: The three-digit number indicates the tire section width in millimeters from sidewall to sidewall.

(3) Aspect Ratio: A two-digit number that indicates the tire height-to-width measurements. For example, if the tire size aspect ratio is 75, as shown in item 3 of the light truck (LT-Metric) tire illustration, it would mean that the tire's sidewall is 75 percent as high as it is wide.

(4) Construction Code: A letter code is used to indicate the type of ply construction in the tire. The letter R means radial ply construction; the letter D means diagonal or bias ply construction; and the letter B means belted-bias ply construction.

(5) Rim Diameter: Diameter of the wheel in inches.

(6) Load Range: Load Range.

(7) Service Description: The service description indicates the load index and speed rating of a tire. If two numbers are given as in the example, 120/116, then this represents the load index for single versus dual wheel usage (single/dual). The speed rating is the maximum speed a tire is certified to carry a load. This does not apply to Goodyear LT225/75R16 G949 RSA and Goodyear LT225/75R16 G933 RSD commercial truck tires; see the dual tire and single tire maximum load and load range letter designations on the tire sidewall.

Tire Terminology and Definitions

Air Pressure: The amount of air inside the tire pressing outward on each square inch of the tire. Air pressure is expressed in kPa (kilopascal) or psi (pounds per square inch).

Accessory Weight: The combined weight of optional accessories. Some examples of optional accessories are automatic transmission, power windows, power seats, and air conditioning.

Aspect Ratio: The relationship of a tire's height to its width.

Belt: A rubber coated layer of cords between the plies and the tread. Cords may be made from steel or other reinforcing materials.

Bead: The tire bead contains steel wires wrapped by steel cords that hold the tire onto the rim.

Bias Ply Tire: A pneumatic tire in which the plies are laid at alternate angles less than 90 degrees to the centerline of the tread.

Cold Tire Pressure: The amount of air pressure in a tire, measured in kPa (kilopascal) or psi (pounds per square inch) before a tire has built up heat from driving. See *Tire Pressure on page 10-35*.

Curb Weight: The weight of a motor vehicle with standard and optional equipment including the maximum capacity of fuel, oil, and coolant, but without passengers and cargo.

DOT Markings: A code molded into the sidewall of a tire signifying that the tire is in compliance with the U.S. Department of Transportation (DOT) Motor Vehicle Safety Standards. The DOT code

includes the Tire Identification Number (TIN), an alphanumeric designator which can also identify the tire manufacturer, production plant, brand, and date of production.

GVWR: Gross Vehicle Weight Rating. See *Vehicle Load Limits on page 9-9*.

GAWR FRT: Gross Axle Weight Rating for the front axle. See *Vehicle Load Limits on page 9-9*.

GAWR RR: Gross Axle Weight Rating for the rear axle. See *Vehicle Load Limits on page 9-9*.

Intended Outboard Sidewall: The side of an asymmetrical tire that must always face outward when mounted on a vehicle.

Kilopascal (kPa): The metric unit for air pressure.

Light Truck (LT-Metric) Tire: A tire used on light duty trucks and some multipurpose passenger vehicles.

Load Index: An assigned number ranging from 1 to 279 that corresponds to the load carrying capacity of a tire.

Maximum Inflation Pressure: The maximum air pressure to which a cold tire can be inflated. The maximum air pressure is molded onto the sidewall.

Maximum Load Rating: The load rating for a tire at the maximum permissible inflation pressure for that tire.

Maximum Loaded Vehicle Weight: The sum of curb weight, accessory weight, vehicle capacity weight, and production options weight.

Normal Occupant Weight: The number of occupants a vehicle is designed to seat multiplied by 68 kg (150 lb). See *Vehicle Load Limits on page 9-9*.

Occupant Distribution: Designated seating positions.

Outward Facing Sidewall: The side of an asymmetrical tire that has a particular side that faces outward when mounted on a vehicle. The side of the tire that contains a whitewall, bears white lettering, or bears manufacturer, brand, and/or model name molding that is higher or deeper than the same moldings on the other sidewall of the tire.

Passenger (P-Metric) Tire: A tire used on passenger cars and some light duty trucks and multipurpose vehicles.

Recommended Inflation Pressure: Vehicle manufacturer's recommended tire inflation pressure as shown on the tire placard. See *Tire Pressure on page 10-35* and *Vehicle Load Limits on page 9-9*.

Radial Ply Tire: A pneumatic tire in which the ply cords that extend to the beads are laid at 90 degrees to the centerline of the tread.

Rim: A metal support for a tire and upon which the tire beads are seated.

Sidewall: The portion of a tire between the tread and the bead.

Speed Rating: An alphanumeric code assigned to a tire indicating the maximum speed at which a tire can operate.

Traction: The friction between the tire and the road surface. The amount of grip provided.

Tread: The portion of a tire that comes into contact with the road.

Treadwear Indicators: Narrow bands, sometimes called wear bars, that show across the tread of a tire when only 1.6 mm (1/16 in) of tread remains. See *When It Is Time for New Tires on page 10-41*.

UTQGS (Uniform Tire Quality Grading Standards): A tire information system that provides consumers with ratings for a tire's traction, temperature, and treadwear. Ratings are determined by tire manufacturers using government testing procedures. The ratings are molded into the sidewall of the tire. See *Uniform Tire Quality Grading on page 10-44*.

Vehicle Capacity Weight: The number of designated seating positions multiplied by 68 kg (150 lb) plus the rated cargo load. See *Vehicle Load Limits on page 9-9*.

Vehicle Maximum Load on the Tire: Load on an individual tire due to curb weight, accessory weight, occupant weight, and cargo weight.

Vehicle Placard: A label permanently attached to a vehicle showing the vehicle capacity weight and the original equipment tire size and recommended inflation pressure. See “Tire and Loading Information Label” under *Vehicle Load Limits on page 9-9*.

Tire Pressure

Tires need the correct amount of air pressure to operate effectively.

⚠ Caution

Neither tire underinflation nor overinflation is good. Underinflated tires, or tires that do not have enough air, can result in:

- Tire overloading and overheating which could lead to a blowout.
- Premature or irregular wear.
- Poor handling.
- Reduced fuel economy.

(Continued)

Caution (Continued)

Overinflated tires, or tires that have too much air, can result in:

- Unusual wear.
- Poor handling.
- Rough ride.
- Needless damage from road hazards.

The Tire and Loading Information label on the vehicle indicates the original equipment tires and the correct cold tire inflation pressures. The recommended pressure is the minimum air pressure needed to support the vehicle's maximum load carrying capacity.

For additional information regarding how much weight the vehicle can carry, and an example of the Tire and Loading Information label, see *Vehicle Load Limits on page 9-9*. How the vehicle is loaded affects vehicle handling and ride comfort. Never load the vehicle with more weight than it was designed to carry.

When to Check

Check the tires once a month or more.

Do not forget the spare tire, if the vehicle has one. See *Full-Size Spare Tire on page 10-55* for additional information.

How to Check

Use a good quality pocket-type gauge to check tire pressure. Proper tire inflation cannot be determined by looking at the tire. Check the tire inflation pressure when the tires are cold, meaning

the vehicle has not been driven for at least three hours or no more than 1.6 km (1 mi).

Remove the valve cap from the tire valve stem. Press the tire gauge firmly onto the valve to get a pressure measurement. If the cold tire inflation pressure matches the recommended pressure on the Tire and Loading Information label, no further adjustment is necessary. If the inflation pressure is low, add air until the recommended pressure is reached. If the inflation pressure is high, press on the metal stem in the center of the tire valve to release air.

Re-check the tire pressure with the tire gauge.

Return the valve caps on the valve stems to prevent leaks and keep out dirt and moisture.

Tire Pressure Monitor System

The Tire Pressure Monitor System (TPMS) uses radio and sensor technology to check tire pressure levels. The TPMS sensors monitor the air pressure in your tires and transmit tire pressure readings to a receiver located in the vehicle.

Each tire, including the spare (if provided), should be checked monthly when cold and inflated to the inflation pressure recommended by the vehicle manufacturer on the vehicle placard or tire inflation pressure label. (If your vehicle has tires of a different size than the size indicated on the vehicle placard or tire inflation pressure label, you should determine the proper tire inflation pressure for those tires.)

As an added safety feature, your vehicle has been equipped with a tire pressure monitoring system (TPMS) that illuminates a low tire pressure telltale when one or more of your tires is significantly under-inflated.

Accordingly, when the low tire pressure telltale illuminates, you should stop and check your tires as soon as possible, and inflate them to the proper pressure. Driving on a significantly under-inflated tire causes the tire to overheat and can lead to tire failure. Under-inflation also reduces fuel efficiency and tire tread life, and may affect the vehicle's handling and stopping ability.

Please note that the TPMS is not a substitute for proper tire maintenance, and it is the driver's responsibility to maintain correct tire pressure, even if under-inflation has not reached the level to trigger illumination of the TPMS low tire pressure telltale.

Your vehicle has also been equipped with a TPMS malfunction indicator to indicate when the system is not operating properly.

The TPMS malfunction indicator is combined with the low tire pressure telltale. When the system detects a malfunction, the telltale will flash for approximately one minute and then remain continuously illuminated. This sequence will continue upon subsequent vehicle start-ups as long as the malfunction exists.

When the malfunction indicator is illuminated, the system may not be able to detect or signal low tire pressure as intended. TPMS malfunctions may occur for a variety of reasons, including the installation of replacement or alternate tires or wheels on the vehicle that prevent the TPMS from functioning properly. Always check the TPMS malfunction telltale after replacing one or more tires or wheels on your vehicle to ensure that the replacement or alternate tires and wheels allow the TPMS to continue to function properly.

See *Tire Pressure Monitor Operation on page 10-37*.

See *Radio Frequency Statement on page 13-12*.

Tire Pressure Monitor Operation

This vehicle may have a Tire Pressure Monitor System (TPMS). The TPMS is designed to warn the driver when a low tire pressure condition exists. TPMS sensors are mounted onto each tire and wheel assembly, excluding the spare tire and wheel assembly. The TPMS sensors monitor the air pressure in the tires and transmit the tire pressure readings to a receiver located in the vehicle.

When a low tire pressure condition is detected, the TPMS illuminates the low tire pressure warning light located on the instrument cluster. If the warning light comes on, stop as soon as possible and inflate the tires to the recommended pressure shown on the Tire and Loading Information label. See *Vehicle Load Limits on page 9-9*.

A message displays when the low tire pressure warning light comes on and low tire pressure is detected. See *Tire Messages on page 5-20*.

The message and low tire pressure warning light come on at each ignition cycle until the tires are inflated to the correct inflation pressure. The vehicle must be driven at speeds above 25 km/h (16 mph) to activate the TPMS and turn off the low tire pressure warning light.

The low tire pressure warning light may come on in cool weather when the vehicle is first started, and then turn off as the vehicle is driven. This could be an early indicator that the

air pressure is getting low and needs to be inflated to the proper pressure.

A Tire and Loading Information label shows the size of the original equipment tires and the correct inflation pressure for the tires when they are cold. See *Vehicle Load Limits on page 9-9*, for an example of the Tire and Loading Information label and its location. Also see *Tire Pressure on page 10-35*.

The TPMS can warn about a low tire pressure condition but it does not replace normal tire maintenance. See *Tire Inspection on page 10-39*, *Tire Rotation on page 10-39* and *Tires on page 10-26*.

⚠ Caution

Tire sealant materials are not all the same. A non-approved tire sealant could damage the TPMS sensors. TPMS sensor damage

(Continued)

Caution (Continued)

caused by using an incorrect tire sealant is not covered by the vehicle warranty. Always use only the GM approved tire sealant available through your dealer or included in the vehicle.

TPMS Malfunction Light and Message

The TPMS will not function properly if one or more of the TPMS sensors are missing or inoperable. When the system detects a malfunction, the low tire pressure warning light flashes for about one minute and then stays on for the remainder of the ignition cycle. The malfunction light comes on at each ignition cycle until the problem is corrected. Some of the conditions that can cause these to come on are:

- One of the road tires has been replaced with the spare tire. The spare tire does not have a TPMS sensor. The malfunction light should go off after the road tire is replaced and the sensor matching process is performed successfully. See "TPMS Sensor Matching Process" later in this section.
- The TPMS sensor matching process was not done or not completed successfully after rotating the tires. The malfunction light should go off after successfully completing the sensor matching process. See "TPMS Sensor Matching Process" later in this section.
- One or more TPMS sensors are missing or damaged. The malfunction light should go off when the TPMS sensors are installed and the sensor matching process is performed successfully. See your dealer for service.
- Replacement tires or wheels do not match the original equipment tires or wheels. Tires and wheels

other than those recommended could prevent the TPMS from functioning properly. See *Buying New Tires on page 10-41*.

- Operating electronic devices or being near facilities using radio wave frequencies similar to the TPMS could cause the TPMS sensors to malfunction.

If the TPMS is not functioning properly, it cannot detect or signal a low tire condition. See your dealer for service if the TPMS malfunction light comes on and stays on.

TPMS Sensor Matching Process

Each TPMS sensor has a unique identification code. The identification code needs to be matched to a new tire/wheel position after rotating the vehicle's tires or replacing one or more of the TPMS sensors. Also, the TPMS sensor matching process should be performed after replacing a spare tire with a road tire containing the TPMS sensor. The malfunction light will go off when the vehicle is driven at speeds above 25 km/h (16 mph) after the next ignition cycle.

See your dealer to perform the TPMS sensor matching process.

Tire Inspection

We recommend that the tires, including the spare tire, if the vehicle has one, be inspected for signs of wear or damage at least once a month.

Replace the tire if:

- The indicators at three or more places around the tire can be seen.
- There is cord or fabric showing through the tire's rubber.
- The tread or sidewall is cracked, cut, or snagged deep enough to show cord or fabric.
- The tire has a bump, bulge, or split.
- The tire has a puncture, cut, or other damage that cannot be repaired well because of the size or location of the damage.

Tire Rotation

Tires should be rotated every 8 000 km (5,000 mi). See *Maintenance Schedule on page 11-3*.

Tires are rotated to achieve a uniform wear for all tires. The first rotation is the most important.

Anytime unusual wear is noticed, rotate the tires as soon as possible, check for proper tire inflation pressure, and check for damaged tires or wheels. If the unusual wear continues after the rotation, check the wheel alignment. See *When It Is Time for New Tires on page 10-41* and *Wheel Replacement on page 10-45*.

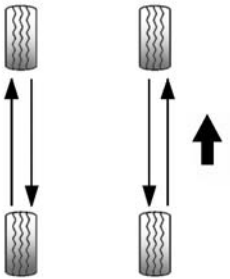

Use this rotation pattern when rotating the tires.

Do not include the spare tire in the tire rotation.

Adjust the front and rear tires to the recommended inflation pressure on the Tire and Loading Information label after the tires have been rotated. See *Tire Pressure on page 10-35* and *Vehicle Load Limits on page 9-9*.

Reset the Tire Pressure Monitor System. See *Tire Pressure Monitor Operation on page 10-37*.

Check that all wheel nuts are properly tightened. See “Wheel Nut Torque” under *Capacities and Specifications on page 12-2*.

Retighten the wheel nuts when the vehicle has been driven 1 000 km (600 mi).

⚠ Warning

Rust or dirt on a wheel, or on the parts to which it is fastened, can make wheel nuts become loose after time. The wheel could come off and cause an accident. When changing a wheel, remove any rust or dirt from places where the wheel attaches to the vehicle. In an emergency, a cloth or a paper towel can be used; however, use a scraper or wire brush later to remove all rust or dirt.

Lightly coat the center of the wheel hub with wheel bearing grease after a wheel change or tire rotation to prevent corrosion or rust build-up. Do not get grease on the flat wheel mounting surface or on the wheel nuts or bolts.

When It Is Time for New Tires

Factors such as maintenance, temperatures, driving speeds, vehicle loading, and road conditions affect the wear rate of the tires.

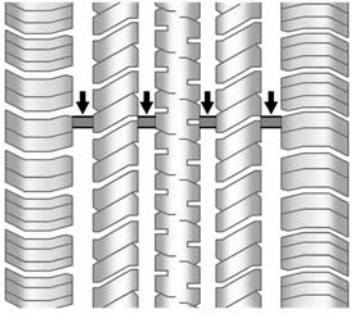

Treadwear indicators are one way to tell when it is time for new tires. Treadwear indicators appear when the tires have only 1.6 mm (1/16 in) or less of tread remaining. See *Tire Inspection on page 10-39* and *Tire Rotation on page 10-39*.

The rubber in tires ages over time. This also applies to the spare tire, if the vehicle has one, even if it is never used. Multiple factors including temperatures, loading conditions, and inflation pressure maintenance affect how fast aging takes place. GM recommends that tires, including the spare if equipped, be replaced after six years, regardless of tread wear. The tire manufacture date is the last four digits of the DOT Tire Identification Number (TIN) which is molded into one side of the tire sidewall. The first two digits represent the week (01–52) and the last two digits, the year. For example, the third week of the year 2010 would have a four-digit DOT date of 0310.

Vehicle Storage

Tires age when stored normally mounted on a parked vehicle. Park a vehicle that will be stored for at least a month in a cool, dry, clean area away from direct sunlight to slow aging. This area should be free of grease, gasoline, or other substances that can deteriorate rubber.

Parking for an extended period can cause flat spots on the tires that may result in vibrations while driving. When storing a vehicle for at least a month, remove the tires or raise the vehicle to reduce the weight from the tires.

Buying New Tires

The original equipment tires installed were designed with requirements to specifically match the vehicle.

Over a dozen critical specifications that impact the overall performance of the vehicle, including brake system performance, ride and handling, traction control, and tire pressure monitoring performance were considered.

GM recommends replacing worn tires in complete sets of four (six for dual rear wheels). Uniform tread depth on all tires will help to maintain the performance of the vehicle. Braking and handling performance may be adversely affected if all the tires are not replaced at the same time. If proper rotation and maintenance have been done, all four tires (six for dual rear wheels) should wear out at about the same time. See *Tire Rotation on page 10-39* for information on proper tire rotation. However, if it is necessary to replace only one axle set of worn tires, place the new tires on the rear axle (two for single rear wheels, four for dual rear wheels).

⚠ Warning

Tires could explode during improper service. Attempting to mount or dismount a tire could cause injury or death. Only your dealer or authorized tire service center should mount or dismount the tires.

⚠ Warning

Mixing tires of different sizes, brands, or types may cause loss of control of the vehicle, resulting in a crash or other vehicle damage. Use the correct size, brand, and type of tires on all wheels.

This vehicle may have a different size spare than the road tires originally installed on the vehicle. When new, the

(Continued)

Warning (Continued)

vehicle included a spare tire and wheel assembly with a similar overall diameter as the road tires and wheels, so it is all right to drive on it. The spare tire was developed for use on this vehicle and will not affect vehicle handling.

⚠ Warning

Using bias-ply tires on the vehicle may cause the wheel rim flanges to develop cracks after many miles of driving. A tire and/or wheel could fail suddenly and cause a crash. Use only radial-ply tires with the wheels on the vehicle.

Winter tires with the same speed rating as the original equipment tires may not be available for H, V, W, Y and ZR speed rated tires. Never exceed the winter tires' maximum speed capability when using winter tires with a lower speed rating.

When replacement tires are needed, GM strongly recommends buying the same original equipment spec tires.

This vehicle is equipped with special high load tires with a load index of 94.

When purchasing replacement tires, this load index must be followed, or max payload capacity will be reduced.

Refer to the tire information label.

Size	Cold Tire Inflation Pressure
Front Original Tire: 185/60R15C 94/92T	44 psi (300 kPa)
Rear Original Tire: 185/60R15C 94/92T	48 psi (325 kPa)
Spare Tire (Front): 185/60R15C 94/92T	44 psi (300 kPa)
Spare Tire (Rear): 185/60R15C 94/92T	48 psi (325 kPa)

The Tire and Loading Information label indicates the original equipment tires on the vehicle. See *Vehicle Load Limits on page 9-9* for the label location and more information about the Tire and Loading Information label.

Different Size Tires and Wheels

If wheels or tires are installed that are a different size than the original equipment wheels and tires, vehicle performance, including its braking, ride and handling characteristics, stability, and resistance to rollover may be affected. If the vehicle has electronic systems such as antilock brakes, rollover airbags, traction control, electronic stability control, or All-Wheel Drive, the performance of these systems can also be affected.

⚠ Warning

If different sized wheels are used, there may not be an acceptable level of performance and safety if tires not recommended for those wheels are selected. This increases the chance of a crash and serious injury. Only use GM

(Continued)

Warning (Continued)

specific wheel and tire systems developed for the vehicle, and have them properly installed by a GM certified technician.

See *Buying New Tires on page 10-41* and *Accessories and Modifications on page 10-3*.

Uniform Tire Quality Grading

The following information relates to the system developed by the United States National Highway Traffic Safety Administration (NHTSA), which grades tires by treadwear, traction, and temperature performance. This applies only to vehicles sold in the United States. The grades are molded on the sidewalls of most passenger car tires. The Uniform Tire Quality Grading (UTQG) system does not apply to deep tread, winter tires, compact spare tires, tires with nominal rim diameters of 10 to 12 inches (25 to 30 cm), or to some limited-production tires.

While the tires available on General Motors passenger cars and light trucks may vary with respect to these grades, they must also conform to federal safety requirements.

Quality grades can be found where applicable on the tire sidewall between tread shoulder and maximum section width. For example:

Treadwear 200 Traction AA Temperature A

All Passenger Car Tires Must Conform to Federal Safety Requirements In Addition To These Grades.

Treadwear

The treadwear grade is a comparative rating based on the wear rate of the tire when tested under controlled conditions on a specified government test course. For example, a tire graded 150 would wear one and one-half (1½) times as well on the government course as a tire graded 100. The relative performance of tires depends upon the actual conditions of their use, however, and may depart significantly from the norm due to variations in driving habits, service practices and differences in road characteristics and climate.

Traction

The traction grades, from highest to lowest, are AA, A, B, and C. Those grades represent the tire's ability to stop on wet pavement as measured under

controlled conditions on specified government test surfaces of asphalt and concrete. A tire marked C may have poor traction performance. Warning: The traction grade assigned to this tire is based on straight-ahead braking traction tests, and does not include acceleration, cornering, hydroplaning, or peak traction characteristics.

Temperature

The temperature grades are A (the highest), B, and C, representing the tire's resistance to the generation of heat and its ability to dissipate heat when tested under controlled conditions on a specified indoor laboratory test wheel. Sustained high temperature can cause the material of the tire to degenerate and reduce tire life, and excessive temperature can lead to sudden tire failure. The grade C corresponds to a level of performance which all passenger car tires must meet under the Federal Motor Safety Standard No. 109. Grades B and A represent higher levels of performance on the laboratory test wheel than the minimum required by law. Warning: The temperature grade for this tire is established for a tire that is properly inflated and not overloaded. Excessive speed, underinflation, or excessive loading, either separately or in combination, can cause heat buildup and possible tire failure.

Wheel Alignment and Tire Balance

The tires and wheels were aligned and balanced at the factory to provide the longest tire life and best overall performance. Adjustments to wheel alignment and tire balancing are not necessary on a regular basis. Consider an alignment check if there is unusual tire wear or the vehicle is significantly pulling to one side or the other. Some slight pull to the left or right, depending on the crown of the road and/or other road surface variations such as troughs or ruts, is normal. If the vehicle is vibrating when driving on a smooth road, the tires and wheels may need to be rebalanced. See your dealer for proper diagnosis.

Wheel Replacement

Replace any wheel that is bent, cracked, or badly rusted or corroded. If wheel nuts keep coming loose, the wheel, wheel bolts, and wheel nuts should be replaced.
If the wheel leaks air, replace it.

Your dealer will know the kind of wheel that is needed.

Each new wheel should have the same load-carrying capacity, diameter, width, offset, and be mounted the same way as the one it replaces.

Replace wheels, wheel bolts, wheel nuts, or Tire Pressure Monitor System (TPMS) sensors with new GM original equipment parts.

⚠ Warning

Using the wrong replacement wheels, wheel bolts, or wheel nuts can be dangerous. It could affect the braking and handling of the vehicle. Tires can lose air, and cause loss of control, causing a crash. Always use the correct wheel, wheel bolts, and wheel nuts for replacement.

⚠ Caution

The wrong wheel can also cause problems with bearing life, brake cooling, speedometer or odometer calibration, headlamp aim, bumper height, vehicle ground clearance, and tire or tire chain clearance to the body and chassis.

Used Replacement Wheels

⚠ Warning

Replacing a wheel with a used one is dangerous. How it has been used or how far it has been driven may be unknown. It could fail suddenly and cause a crash. When replacing wheels, use a new GM original equipment wheel.

Tire Chains

⚠ Warning

Do not use tire chains. There is not enough clearance. Tire chains used on a vehicle without the proper amount of clearance can cause damage to the brakes, suspension, or other vehicle parts. The area damaged by the tire chains could cause loss of control and a crash.

Use another type of traction device only if its manufacturer recommends it for the vehicle's tire size combination and road conditions. Follow that manufacturer's instructions. To avoid vehicle damage, drive slow and readjust or remove the traction device if it contacts the vehicle. Do not spin the wheels. If traction devices are used, install them on the front tires.

If a Tire Goes Flat

It is unusual for a tire to blow out while driving, especially if the tires are maintained properly. See *Tires on page 10-26*. If air goes out of a tire, it is much more likely to leak out slowly. But if there ever is a blowout, here are a few tips about what to expect and what to do:

If a front tire fails, the flat tire creates a drag that pulls the vehicle toward that side. Take your foot off the accelerator pedal and grip the steering wheel firmly. Steer to maintain lane position, and then gently brake to a stop, well off the road, if possible.

A rear blowout, particularly on a curve, acts much like a skid and may require the same correction as used in a skid. Stop pressing the accelerator pedal and steer to straighten the vehicle. It may be very bumpy and noisy. Gently brake to a stop, well off the road, if possible.

⚠ Warning

Driving on a flat tire will cause permanent damage to the tire. Re-inflating a tire after it has been driven on while severely underinflated or flat may cause a blowout and a serious crash. Never attempt to re-inflate a tire that has been driven on while severely underinflated or flat. Have your dealer or an authorized tire service center repair or replace the flat tire as soon as possible.

⚠ Warning

Lifting a vehicle and getting under it to do maintenance or repairs is dangerous without the appropriate safety equipment and training. If a jack is provided with the vehicle, it is designed only for

(Continued)

Warning (Continued)

changing a flat tire. If it is used for anything else, you or others could be badly injured or killed if the vehicle slips off the jack. If a jack is provided with the vehicle, only use it for changing a flat tire.

If a tire goes flat, avoid further tire and wheel damage by driving slowly to a level place, well off the road, if possible. Turn on the hazard warning flashers. See *Hazard Warning Flashers on page 6-2*.

⚠ Warning

Changing a tire can be dangerous. The vehicle can slip off the jack and roll over or fall causing injury or death. Find a level place to change the tire. To help prevent the vehicle from moving:

1. Set the parking brake firmly.
2. Put an automatic transmission in P (Park) or a manual transmission in 1 (First) or R (Reverse).
3. Turn off the engine and do not restart while the vehicle is raised.
4. Do not allow passengers to remain in the vehicle.
5. Place wheel blocks, if equipped, on both sides of the tire at the opposite corner of the tire being changed.

When the vehicle has a flat tire (2), use the following example as a guide to assist in the placement of the wheel blocks (1), if equipped.

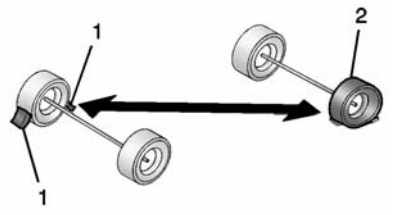

1. Wheel Block (If Equipped)
2. Flat Tire

The following information explains how to repair or change a tire.

Tire Changing

Removing the Spare Tire and Tools

The jack and tools are located under the front passenger seat.

1. Move the passenger seat rearward.

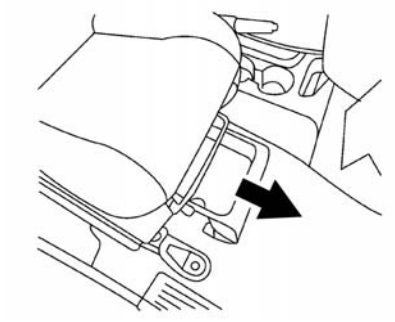

2. Remove the tray under the passenger seat.

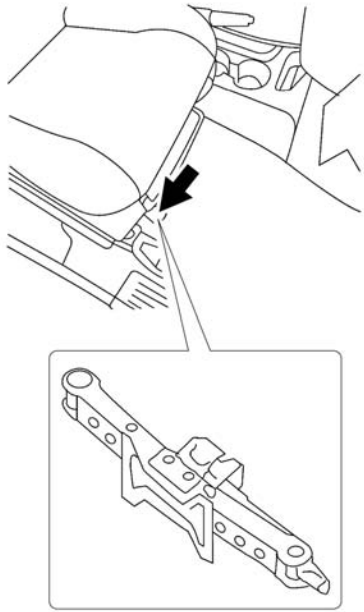

3. Turn the jack screw counterclockwise to loosen it.
4. Lift the jack up.
5. Pull the jack forward.
6. Release the strap to remove the tool bag.

The spare tire is mounted in the rear underbody of the vehicle.

To lower the spare tire from the vehicle:

1. Open the rear door.

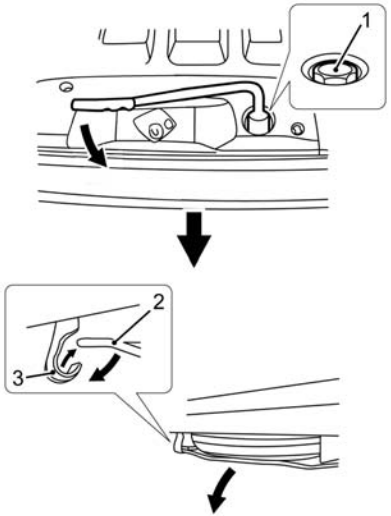

2. Turn the bolt (1) counterclockwise about 40 turns to lower the spare tire.

   Stop turning the bolt when the spare tire is low enough that the tire basket (2) can be removed from the hook (3).

3. Push the tire basket (2) upward to remove it.
4. Lower the tire basket (2) to the ground and remove the spare tire.

Removing the Flat Tire and Installing the Spare Tire

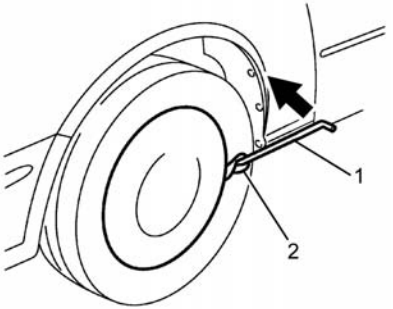

1. Jack Rod
2. Cloth

If the vehicle has wheel covers, use the jack rod (1) to remove it. Apply a cloth (2) between the wheel and jack rod (1) to prevent damage.

1. Do a safety check before proceeding. See *If a Tire Goes Flat on page 10-47*.

2. Turn the wheel wrench counterclockwise to loosen all the wheel nuts. Do not remove the wheel nuts until the tire is off the ground.

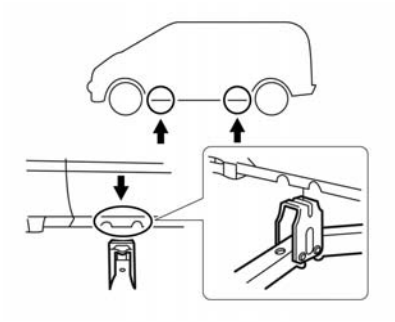

3. Position the jack under the vehicle, as shown.

   The jacking points are indicated by stamped arrows on the side of the frame.

⚠ Warning

Getting under a vehicle when it is jacked up is dangerous. If the vehicle slips off the jack you could be badly injured or killed. Never get under a vehicle when it is supported only by a jack.

⚠ Warning

Raising the vehicle with the jack improperly positioned can damage the vehicle and even make the vehicle fall. To help avoid personal injury and vehicle damage, be sure to fit the jack lift head into the proper location before raising the vehicle.

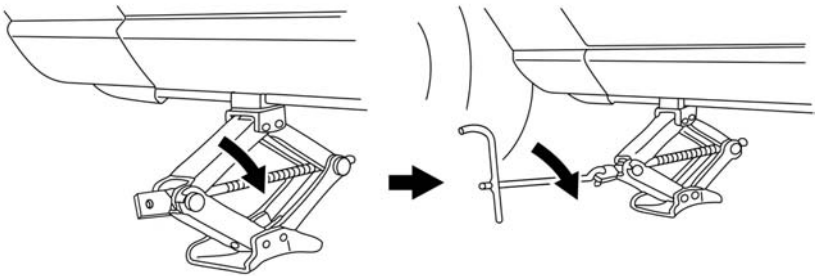

4. Install the assembled jack rod into the jack, as shown.
5. Turn the jack lever and rod clockwise to raise the vehicle. Raise the vehicle until the tire is off the ground.
6. Remove all the wheel nuts.
7. Remove the flat tire from the mounting surface.

⚠ Warning

Rust or dirt on a wheel, or on the parts to which it is fastened, can make wheel nuts become loose after time. The wheel could come off and cause an accident. When changing a wheel, remove any rust or dirt from places where the wheel attaches to the vehicle. In an emergency, a cloth or a paper

(Continued)

Warning (Continued)

towel can be used; however, use a scraper or wire brush later to remove all rust or dirt.

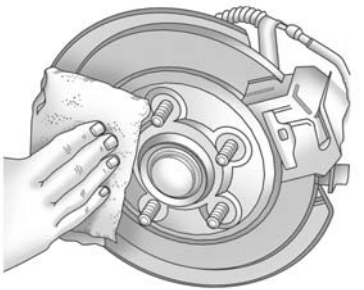

8. Remove any rust or dirt from the wheel bolts, mounting surfaces, and spare wheel.
9. Place the spare tire on the wheel-mounting surface.

⚠ Warning

Never use oil or grease on bolts or nuts because the nuts might come loose. The vehicle's wheel could fall off, causing a crash.

10. Put the wheel nuts back on.

    Tighten each wheel nut by hand until the wheel is held against the hub.

11. Turn the jack lever and rod counterclockwise to lower the vehicle. Lower the jack completely.

⚠ Warning

Wheel nuts that are not tight can work loose. If all the nuts on a wheel come off, the wheel can come off the vehicle, causing a crash. All wheel nuts must be properly tightened. Follow the rules in this section to be sure they are.

⚠ Warning

If wheel studs are damaged, they can break. If all the studs on a wheel broke, the wheel could come off and cause a crash.
If any stud is damaged because of a loose-running wheel, it could be that all of the studs are damaged. To be sure, replace all studs on the wheel. If the stud holes in a wheel have become larger, the wheel could collapse in

(Continued)

Warning (Continued)

operation. Replace any wheel if its stud holes have become larger or distorted in any way. Inspect hubs and hub-piloted wheels for damage. Because of loose running wheels, piloting pad damage may occur and require replacement of the entire hub, for proper centering of the wheels. When replacing studs, hubs, wheel nuts or wheels, be sure to use GM original equipment parts.

⚠ Warning

Wheel nuts that are improperly or incorrectly tightened can cause the wheels to become loose or come off. The wheel nuts should be tightened with a torque wrench to the proper torque specification after replacing. Follow the torque

(Continued)

Warning (Continued)

specification supplied by the aftermarket manufacturer when using accessory locking wheel nuts. See *Capacities and Specifications on page 12-2* for original equipment wheel nut torque specifications.

⚠ Caution

Improperly tightened wheel nuts can lead to brake pulsation and rotor damage. To avoid expensive brake repairs, evenly tighten the wheel nuts in the proper sequence and to the proper torque specification. See *Capacities and Specifications on page 12-2* for the wheel nut torque specification.

Use the wheel wrench to tighten the nuts firmly. Turn the wheel wrench clockwise and in a crisscross sequence, as shown.

12. Replace the wheel cover, if equipped.

    Remove any wheel blocks.

13. Check the tire pressure.

Storing a Flat or Spare Tire and Tools

⚠ Warning

Storing a jack, a tire, or other equipment in the passenger compartment of the vehicle could cause injury. In a sudden stop or collision, loose equipment could strike someone. Store all these in the proper place.

Reverse the steps for “Removing the Spare Tire and Tools” to properly store them.

Full-Size Spare Tire

If this vehicle came with a full-size spare tire, it was fully inflated when new, however, it can lose air over time. Check the inflation pressure regularly. See *Tire Pressure on page 10-35* and *Vehicle Load Limits on page 9-9*. For instructions on how to remove, install, or store a spare tire, see *Tire Changing on page 10-48*.

After installing the spare tire on the vehicle, stop as soon as possible and check that the spare is correctly inflated. The spare tire is made to perform well at speeds up to 112 km/h (70 mph) at the recommended inflation pressure, so you can finish your trip.

Have the damaged or flat road tire repaired or replaced back onto the vehicle, as soon as possible, so the spare tire will be available in case it is needed again.

Do not mix tires and wheels of different sizes, because they will not fit. Keep the spare tire and its wheel together.

Jump Starting

For more information about the vehicle battery, see *Battery on page 10-21*.

If the vehicle battery has run down, you may want to use another vehicle and jumper cables to start your vehicle. Use the following steps to do it safely.

⚠ Warning

WARNING: Battery posts, terminals, and related accessories contain lead and lead compounds, chemicals known to the State of California to cause cancer and birth defects or other reproductive harm. **Wash hands after handling.** See *California Proposition 65 Warning on page 10-2*.

⚠ Warning

Batteries can hurt you. They can be dangerous because:

- They contain acid that can burn you.
- They contain gas that can explode or ignite.
- They contain enough electricity to burn you.
- Explosive hydrogen gas is always present in the vicinity of the battery. Keep all sparks and flames away from the battery.

If you do not follow these steps exactly, some or all of these things can hurt you.

⚠ Caution

Ignoring these steps could result in costly damage to the vehicle that would not be covered by the vehicle warranty. Trying to start the vehicle by pushing or pulling it will not work, and it could damage the vehicle.

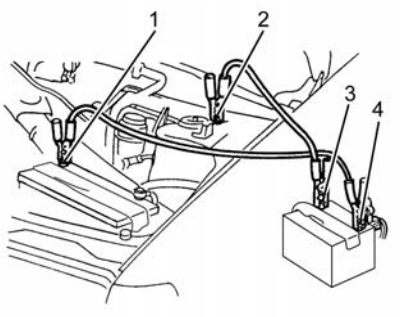

1. Discharged Battery Positive (+) Terminal
2. Discharged Battery Negative (−) Grounding Point
3. Good Battery Negative (−) Terminal
4. Good Battery Positive (+) Terminal

1. Check the other vehicle. It must have a 12-volt battery with a negative ground system.

⚠ Caution

If the other vehicle does not have a 12-volt system with a negative ground, both vehicles can be damaged. Only use a vehicle that has a 12-volt system with a negative ground for jump starting.

2. Get the vehicles close enough so the jumper cables can reach, but be sure the vehicles are not touching each other. If they are, it could cause a ground connection you do not want. You would not be able to start your vehicle, and the bad grounding could damage the electrical systems.

   To avoid the possibility of the vehicles rolling, set the parking brake firmly on both vehicles involved in the jump start procedure. Put an automatic transmission in P (Park) or a manual transmission in Neutral before setting the parking brake.

⚠ Caution

If any accessories are left on or plugged in during the jump starting procedure, they could be damaged. The repairs would not be covered by the vehicle

(Continued)

Caution (Continued)

warranty. Whenever possible, turn off or unplug all accessories on either vehicle when jump starting.

3. Turn off the ignition on both vehicles. Unplug unnecessary accessories from the cigarette lighter or the accessory power outlet. Turn off the radio and all lamps that are not needed. This will avoid sparks and help save both batteries. And it could save the radio!
4. Open the hoods and locate the positive (+) and negative (−) terminal locations of the other vehicle.

⚠ Warning

Using a match near a battery can cause battery gas to explode. People have been hurt doing this,

(Continued)

Warning (Continued)

and some have been blinded. Use a flashlight if you need more light.

Battery fluid contains acid that can burn you. Do not get it on you. If you accidentally get it in your eyes or on your skin, flush the place with water and get medical help immediately.

⚠ Warning

Fans or other moving engine parts can injure you badly. Keep your hands away from moving parts once the engine is running.

5. Check that the jumper cables do not have loose or missing insulation. If they do, you could get a shock. The vehicles could be damaged too.

   Before you connect the cables, here are some basic things you should know. Positive (+) will go to positive (+) or to a remote positive (+) terminal if equipped. Negative (−) will go to an unpainted metal part or to a remote negative (−) terminal if equipped.

   Do not connect positive (+) to negative (−) or you will get a short that would damage the battery and possibly other parts too. Do not connect the negative (−) cable to the negative (−) terminal on the dead battery because this can cause sparks.

6. Connect the red positive (+) cable to the positive (+) terminal (1) of the dead battery. Use a remote positive (+) terminal if equipped. Do not let the other end touch metal. Connect it to the positive (+) terminal (4) of the good battery. Use a remote positive (+) terminal if equipped.

7. Connect the black negative (−) cable to the negative (−) terminal (3) of the good battery. Use a remote negative (−) terminal if equipped.

   Do not let the other end touch anything until the next step. The other end of the negative (−) cable does not go to the dead battery. It goes to the shock tower, or to a remote negative (−) terminal on the vehicle with the dead battery.

8. Connect the other end of the negative (−) cable to the negative (−) grounding point (2) on the shock tower of the vehicle with the dead battery.

⚠ Caution

Make sure the jumper cables do not touch moving parts in the engine compartment and that the cable clamps do not contact any other metal.

9. Start the vehicle with the good battery and run the engine for a few minutes.

10. Keep the engine speed of the booster vehicle at about 2,000 rpm, and start the engine of the vehicle being jump started.

⚠ Caution

Do not keep the starter motor engaged for more than 10 seconds. If the engine does not start right away, turn the key off and wait three to four seconds before trying again.

11. After starting the engine, disconnect jumper cables as directed below.
12. If it will not start after a few tries, it probably needs service.

⚠ Caution

If the jumper cables are connected or removed in the wrong order, electrical shorting may occur and damage the vehicle. The repairs would not be covered by the vehicle warranty. Always connect and remove the jumper cables in the correct order, making sure that the cables do not touch each other or other metal.

Jumper Cable Removal

Reverse the sequence exactly when removing the jumper cables.

Push Starting

⚠ Caution

- Do not push start this vehicle. The three-way catalyst may be damaged.
- Continuously Variable Transmission (CVT) models cannot be push-started or tow-started. Attempting to do so may cause transmission damage.

Towing the Vehicle

⚠ Caution

Incorrectly towing a disabled vehicle may cause damage. The damage would not be covered by the vehicle warranty.

Have the vehicle towed on a flatbed car carrier or a wheel lift tow truck. If a wheel lift tow truck is used, the drive wheels cannot contact the road while the vehicle is being towed. A wheel dolly must be used to lift all drive wheels off the ground.

Consult your dealer or a professional towing service if the disabled vehicle must be towed.

Recreational Vehicle Towing

Recreational vehicle towing means towing the vehicle behind another vehicle, such as behind a motor home. The two most common types

of recreational vehicle towing are known as dinghy towing and dolly towing. Dinghy towing is towing the vehicle with all four wheels on the ground. Dolly towing is towing the vehicle with two wheels on the ground and two wheels up on a device known as a dolly.

Here are some important things to consider before recreational vehicle towing:

- What is the towing capacity of the towing vehicle? Be sure to read the tow vehicle manufacturer's recommendations.
- What is the distance that will be traveled? Some vehicles have restrictions on how far and how long they can tow.
- Is the proper towing equipment going to be used? See your dealer or trailering professional for additional advice and equipment recommendations.
- Is the vehicle ready to be towed? Just as preparing the vehicle for a long trip, make sure the vehicle is prepared to be towed.

Dinghy Towing

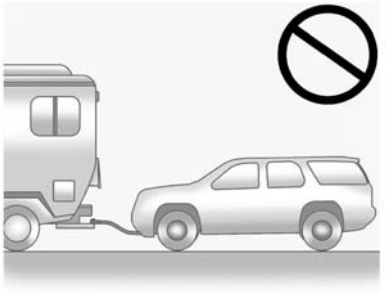

⚠ Caution

If the vehicle is towed with all four wheels on the ground, the drivetrain components could be damaged. The repairs would not

(Continued)

Caution (Continued)

be covered by the vehicle warranty. Do not tow the vehicle with all four wheels on the ground.

The vehicle should not be towed with all four wheels on the ground.

Dolly Towing

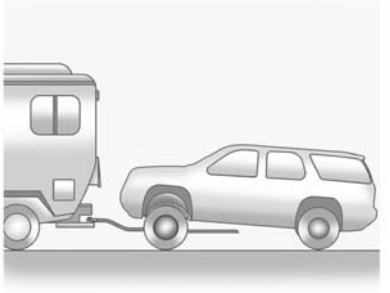

To tow the vehicle from the front with the rear wheels on the ground:

1. Attach the dolly to the tow vehicle following the dolly manufacturer's instructions.
2. Drive the front wheels onto the dolly.
3. Put the transmission in P (Park).
4. Secure the vehicle to the dolly following the manufacturer's instructions.

Appearance Care

Exterior Care

Locks

Locks are lubricated at the factory. Use a de-icing agent only when absolutely necessary, and have the locks greased after using. See *Recommended Fluids and Lubricants on page 11-11*.

Washing the Vehicle

To preserve the vehicle's finish, wash it often and out of direct sunlight.

⚠ Caution

Do not use petroleum-based, acidic, or abrasive cleaning agents as they can damage the vehicle's paint, metal, or plastic parts. If damage occurs, it would not be covered by the vehicle warranty. Approved cleaning

(Continued)

Caution (Continued)

products can be obtained from your dealer. Follow all manufacturer directions regarding correct product usage, necessary safety precautions, and appropriate disposal of any vehicle care product.

⚠ Caution

Avoid using high-pressure washes closer than 30 cm (12 in) to the surface of the vehicle. Use of power washers exceeding 8,274 kPa (1,200 psi) can result in damage or removal of paint and decals.

If using an automatic car wash, follow the car wash instructions. The windshield wiper and rear window wiper, if equipped, must be off.

Remove any accessories that may be damaged or interfere with the car wash equipment.

Rinse the vehicle well, before washing and after, to remove all cleaning agents completely. If they are allowed to dry on the surface, they could stain.

Dry the finish with a soft, clean chamois or an all-cotton towel to avoid surface scratches and water spotting.

Finish Care

Application of aftermarket clearcoat sealant/wax materials is not recommended. If painted surfaces are damaged, see your dealer to have the damage assessed and repaired. Foreign materials such as calcium chloride and other salts, ice melting agents, road oil and tar, tree sap, bird droppings, chemicals from industrial chimneys, etc., can damage the vehicle's finish if they remain on painted surfaces. Wash the vehicle as soon as possible. If necessary, use non-abrasive cleaners that are marked safe for painted surfaces to remove foreign matter.

Occasional hand waxing or mild polishing should be done to remove residue from the paint finish. See your dealer for approved cleaning products.

Do not apply waxes or polishes to uncoated plastic, vinyl, rubber, decals, simulated wood, or flat paint as damage can occur.

⚠ Caution

Machine compounding or aggressive polishing on a basecoat/clearcoat paint finish may damage it. Use only non-abrasive waxes and polishes that are made for a basecoat/clearcoat paint finish on the vehicle.

To keep the paint finish looking new, keep the vehicle garaged or covered whenever possible.

Protecting Exterior Bright Metal Moldings

⚠ Caution

Failure to clean and protect the bright metal moldings can result in a hazy white finish or pitting. This damage would not be covered by the vehicle warranty.

The bright metal moldings on the vehicle are aluminum or stainless steel. To prevent damage always follow these cleaning instructions:

- Be sure the molding is cool to the touch before applying any cleaning solution.
- Use a cleaning solution approved for aluminum or stainless steel. Some cleaners are highly acidic or contain alkaline substances and can damage the moldings.

- Always dilute a concentrated cleaner according to the manufacturer's instructions.
- Do not use chrome cleaners.
- Do not use cleaners that are not intended for automotive use.
- Use a nonabrasive wax on the vehicle after washing to protect and extend the molding finish.

Cleaning Exterior Lamps/ Lenses, Emblems, Decals and Stripes

Use only lukewarm or cold water, a soft cloth, and a car washing soap to clean exterior lamps, lenses, emblems, decals and stripes. Follow instructions under "Washing the Vehicle" previously in this section.

Lamp covers are made of plastic, and some have a UV protective coating. Do not clean or wipe them when dry.

Do not use any of the following on lamp covers:

- Abrasive or caustic agents.
- Washer fluids and other cleaning agents in higher concentrations than suggested by the manufacturer.
- Solvents, alcohols, fuels, or other harsh cleaners.
- Ice scrapers or other hard items.
- Aftermarket appearance caps or covers while the lamps are illuminated, due to excessive heat generated.

⚠ Caution

Failure to clean lamps properly can cause damage to the lamp cover that would not be covered by the vehicle warranty.

⚠ Caution

Using wax on low gloss black finish stripes can increase the gloss level and create a

(Continued)

Caution (Continued)

non-uniform finish. Clean low gloss stripes with soap and water only.

Air Intakes

Clear debris from the air intakes, between the hood and windshield when washing the vehicle.

Windshield and Wiper Blades

Clean the outside of the windshield with glass cleaner.

Clean rubber blades using a lint-free cloth or paper towel soaked with windshield washer fluid or a mild detergent. Wash the windshield thoroughly when cleaning the blades. Bugs, road grime, sap, and a buildup of vehicle wash/wax treatments may cause wiper streaking.

Replace the wiper blades if they are worn or damaged. Damage can be caused by extreme dusty conditions, sand, salt, heat, sun, snow, and ice.

Weatherstrips

Apply Dielectric silicone grease on weatherstrips to make them last longer, seal better, and not stick or squeak. Lubricate weatherstrips at least once a year. Hot, dry climates may require more frequent application. Black marks from rubber material on painted surfaces can be removed by rubbing with a clean cloth. See *Recommended Fluids and Lubricants on page 11-11*.

Tires

Use a stiff brush with tire cleaner to clean the tires.

⚠ Caution

Using petroleum-based tire dressing products on the vehicle may damage the paint finish and/or tires. When applying a tire dressing, always wipe off any overspray from all painted surfaces on the vehicle.

Wheels and Trim — Aluminum or Chrome

Use a soft, clean cloth with mild soap and water to clean the wheels. After rinsing thoroughly with clean water, dry with a soft, clean towel. A wax may then be applied.

⚠ Caution

Chrome wheels and other chrome trim may be damaged if the vehicle is not washed after driving on roads that have been sprayed with magnesium, calcium,

(Continued)

Caution (Continued)

or sodium chloride. These chlorides are used on roads for conditions such as ice and dust. Always wash the chrome with soap and water after exposure.

⚠ Caution

To avoid surface damage, do not use strong soaps, chemicals, abrasive polishes, cleaners, brushes, or cleaners that contain acid on aluminum or chrome-plated wheels. Use only approved cleaners. Also, never drive a vehicle with aluminum or chrome-plated wheels through an automatic car wash that uses silicone carbide tire cleaning brushes. Damage could occur and the repairs would not be covered by the vehicle warranty.

Brake System

Visually inspect brake lines and hoses for proper hook-up, binding, leaks, cracks, chafing, etc. Inspect disc brake pads for wear and rotors for surface condition. Inspect drum brake linings/shoes for wear or cracks. Inspect other brake parts, including drums, wheel cylinders, calipers, parking brake, master cylinder, brake fluid reservoir, vacuum pipes, electric vacuum pump including bracket and vent hose, if equipped.

Steering, Suspension, and Chassis Components

Visually inspect steering, suspension, and chassis components for damaged, loose, or missing parts or signs of wear at least once a year.

Inspect power steering for proper hook-up, binding, leaks, cracks, chafing, etc.

Visually check constant velocity joint boots and axle seals for leaks.

Body Component Lubrication

Lubricate all key lock cylinders, hood hinges, liftgate hinges, steel fuel door hinge, unless the components are plastic. Applying silicone grease on weatherstrips with a clean cloth will make them last longer, seal better, and not stick or squeak.

Underbody Maintenance

At least twice a year, spring and fall use plain water to flush any corrosive materials from the underbody. Take care to thoroughly clean any areas where mud and other debris can collect.

Sheet Metal Damage

If the vehicle is damaged and requires sheet metal repair or replacement, make sure the body repair shop applies anti-corrosion material to parts repaired or replaced to restore corrosion protection.

Original manufacturer replacement parts will provide the corrosion protection while maintaining the vehicle warranty.

Finish Damage

Quickly repair minor chips and scratches with touch-up materials available from your dealer to avoid corrosion. Larger areas of finish damage can be corrected in your dealer's body and paint shop.

Chemical Paint Spotting

Airborne pollutants can fall upon and attack painted vehicle surfaces causing blotchy, ring-shaped discolorations, and small, irregular dark spots etched into the paint surface. See “Finish Care” previously in this section.

Interior Care

To prevent dirt particle abrasions, regularly clean the vehicle's interior. Immediately remove any soils. Note that newspapers or dark garments that can transfer color to home

furnishings can also permanently transfer color to the vehicle's interior.

Use a soft bristle brush to remove dust from knobs and crevices on the instrument cluster. Using a mild soap solution, immediately remove hand lotions, sunscreen, and insect repellent from all interior surfaces or permanent damage may result.

Your dealer may have products for cleaning the interior. Use cleaners specifically designed for the surfaces being cleaned to prevent permanent damage. Apply all cleaners directly to the cleaning cloth. Do not spray cleaners directly on any switches or controls. Cleaners should be removed quickly. Never allow cleaners to remain on the surface being cleaned for extended periods of time.

Cleaners may contain solvents that can become concentrated in the interior. Before using cleaners, read and adhere to all safety instructions on the label. While cleaning the interior, maintain adequate ventilation by opening the doors and windows.

To prevent damage, do not clean the interior using the following cleaners or techniques:

- Never use a razor or any other sharp object to remove a soil from any interior surface.
- Never use a brush with stiff bristles.
- Never rub any surface aggressively or with excessive pressure.
- Do not use laundry detergents or dishwashing soaps with degreasers. For liquid cleaners, use approximately 20 drops per 3.8 L (1 gal) of water.
  A concentrated soap solution will leave a residue that creates streaks and attracts dirt. Do not use solutions that contain strong or caustic soap.
- Do not heavily saturate the upholstery when cleaning.
- Do not use solvents or cleaners containing solvents.

Interior Glass

To clean, use a terry cloth fabric dampened with water. Wipe droplets left behind with a clean dry cloth. Commercial glass cleaners may be used, if necessary, after cleaning the interior glass with plain water.

⚠ Caution

To prevent scratching, never use abrasive cleaners on automotive glass. Abrasive cleaners or aggressive cleaning may damage the rear window defogger.

Cleaning the windshield with water during the first three to six months of ownership will reduce tendency to fog.

Speaker Covers

Vacuum around a speaker cover gently, so that the speaker will not be damaged. Clean spots with just water and mild soap.

Coated Moldings

Coated moldings should be cleaned.

- When lightly soiled, wipe with a sponge or soft lint-free cloth dampened with water.
- When heavily soiled, use warm soapy water.

Fabric/Carpet/Suede

Start by vacuuming the surface using a soft brush attachment. If a rotating brush attachment is being used during vacuuming, only use it on the floor carpet. Before cleaning, gently remove as much of the soil as possible using one of the following techniques:

- Gently blot liquids with a paper towel. Continue blotting until no more soil can be removed.
- For solid soils, remove as much as possible prior to vacuuming.

To clean:

1. Saturate a clean lint-free colorfast cloth with water. Microfiber cloth is recommended to prevent lint transfer to the fabric or carpet.
2. Remove excess moisture by gently wringing until water does not drip from the cleaning cloth.
3. Start on the outside edge of the soil and gently rub toward the center. Rotate the cleaning cloth to a clean area frequently to prevent forcing the soil in to the fabric.
4. Continue gently rubbing the soiled area until there is no longer any color transfer from the soil to the cleaning cloth.
5. If the soil is not completely removed, use a mild soap solution followed only by plain water.

If the soil is not completely removed, it may be necessary to use a commercial upholstery cleaner or spot lifter. Test a small hidden area for colorfastness before using a commercial upholstery cleaner or spot lifter. If ring formation occurs, clean the entire fabric or carpet.

Following the cleaning process, a paper towel can be used to blot excess moisture.

Cleaning High Gloss Surfaces and Vehicle Information and Radio Displays

For vehicles with high gloss surfaces or vehicle displays, use a microfiber cloth to wipe surfaces. Before wiping the surface with the microfiber cloth, use a soft bristle brush to remove dirt that could scratch the surface. Then use the microfiber cloth by gently rubbing to clean. Never use window cleaners or solvents. Periodically hand wash the microfiber cloth separately,

using mild soap. Do not use bleach or fabric softener. Rinse thoroughly and air dry before next use.

⚠ Caution

Do not attach a device with a suction cup to the display. This may cause damage and would not be covered by the vehicle warranty.

Use a cloth dampened only with water to clean the meter and gauge lens.

Instrument Panel, Leather, Vinyl, Other Plastic Surfaces, Low Gloss Paint Surfaces and Natural Open Pore Wood Surfaces

Use a soft microfiber cloth dampened with water to remove dust and loose dirt. For a more thorough cleaning, use a soft microfiber cloth dampened with a mild soap solution.

⚠ Caution

Soaking or saturating leather, especially perforated leather, as well as other interior surfaces, may cause permanent damage. Wipe excess moisture from these surfaces after cleaning and allow them to dry naturally. Never use heat, steam, or spot removers. Do not use cleaners that contain silicone or wax-based products. Cleaners containing these solvents can permanently change the appearance and feel of leather or soft trim, and are not recommended.

Do not use cleaners that increase gloss, especially on the instrument panel. Reflected glare can decrease visibility through the windshield under certain conditions.

⚠ Caution

Use of air fresheners may cause permanent damage to plastics and painted surfaces. If an air freshener comes in contact with any plastic or painted surface in the vehicle, blot immediately and clean with a soft cloth dampened with a mild soap solution. Damage caused by air fresheners would not be covered by the vehicle warranty.

Care of Safety Belts

Keep belts clean and dry.

⚠ Warning

Do not bleach or dye safety belts. It may severely weaken them. In a crash, they might not be able to provide adequate protection. Clean safety belts only with mild soap and lukewarm water.

Floor Mats

⚠ Warning

If a floor mat is the wrong size or is not properly installed, it can interfere with the pedals. Interference with the pedals can cause unintended acceleration and/or increased stopping distance which can cause a crash and injury. Make sure the floor mat does not interfere with the pedals.

Use the following guidelines for proper floor mat usage.

- The original equipment floor mats were designed for the vehicle. If the floor mats need replacing, it is recommended that GM certified floor mats be purchased. Non-GM floor mats may not fit properly and may interfere with the pedals. Always check that the floor mats do not interfere with the pedals.
- Do not use a floor mat if the vehicle is not equipped with a floor mat retainer on the driver side floor.
- Use the floor mat with the correct side up. Do not turn it over.
- Do not place anything on top of the driver side floor mat.
- Use only a single floor mat on the driver side.
- Do not place one floor mat on top of another.

Removing and Replacing the Floor Mats

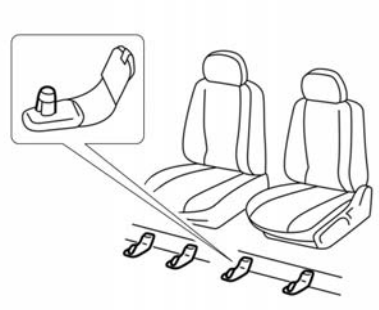

This vehicle includes two driver and passenger side front floor mat brackets. The driver and passenger side floor mats have two grommet holes. Position each mat by placing the floor mat bracket hook through the floor mat grommet holes while centering the mat.

Make sure floor mat is properly secured in place.

Verify the floor mat does not interfere with the pedals.

✍ NOTES

Service and Maintenance

General Information
General Information 11-1

Maintenance Schedule
Maintenance Schedule 11-3

Special Application Services
Special Application Services 11-7

Additional Maintenance and Care
Additional Maintenance and Care 11-7

Recommended Fluids
Recommended Fluids and Lubricants 11-11
Maintenance Replacement Parts 11-12

Maintenance Records
Maintenance Records 11-13

General Information

Your vehicle is an important investment. This section describes the required maintenance for the vehicle. Follow this schedule to help protect against major repair expenses resulting from neglect or inadequate maintenance. It may also help to maintain the value of the vehicle if it is sold. It is the responsibility of the owner to have all required maintenance performed.

Your dealer has trained technicians who can perform required maintenance using genuine replacement parts. They have up-to-date tools and equipment for fast and accurate diagnostics. Many dealers have extended evening and Saturday hours, courtesy transportation, and online scheduling to assist with service needs.

Your dealer recognizes the importance of providing competitively priced maintenance and repair services. With trained technicians, the dealer is the place for routine maintenance such as oil changes and tire rotations and additional maintenance items like tires, brakes, batteries, and wiper blades.

⚠ Caution

Damage caused by improper maintenance can lead to costly repairs and may not be covered by the vehicle warranty. Maintenance intervals, checks, inspections, recommended fluids, and lubricants are important to keep the vehicle in good working condition.

The Tire Rotation and Required Services are the responsibility of the vehicle owner. It is recommended to have your dealer perform these services every 8 000 km/5,000 mi. Proper vehicle maintenance helps to keep the vehicle in good working condition, improves fuel economy, and reduces vehicle emissions.

Because of the way people use vehicles, maintenance needs vary. There may need to be more frequent checks and services.

Normal Service

All maintenance services, including those listed under Additional Required Services, are for vehicles that:

- Carry passengers and cargo within recommended limits on the Tire and Loading Information label. See *Vehicle Load Limits on page 9-9*.
- Are driven on reasonable road surfaces within legal driving limits.
- Use the recommended fuel. See *Fuel on page 9-37*.

Severe Service

In addition to the normal service schedule, some vehicles require service more often. Severe service is for vehicles that are:

- Mainly driven in heavy city traffic in hot weather.
- Mainly driven in hilly or mountainous terrain.
- Frequently towing a trailer.
- Used for high-speed or competitive driving.
- Used for taxi, police, or delivery service.

⚠ Warning

Performing maintenance work can be dangerous and can cause serious injury. Perform maintenance work only if the required information, proper tools, and equipment are available.
If they are not, see your dealer to have a trained technician do the work. See *Doing Your Own Service Work on page 10-4*.

Maintenance Schedule

Owner Checks and Services

At Each Fuel Stop

- Check the engine oil level. See *Engine Oil on page 10-8*.

Once a Month

- Check the tire inflation pressures. See *Tire Pressure on page 10-35*.
- Inspect the tires for wear. See *Tire Inspection on page 10-39*.
- Check the windshield washer fluid level. See *Washer Fluid on page 10-18*.

Oil Change, Tire Rotation, and Required Services Every 8 000 km/5,000 mi

Rotate the tires, if recommended for the vehicle, and perform the following services. See *Tire Rotation on page 10-39*.

- Change engine oil and filter. See *Engine Oil on page 10-8*.
- Check engine coolant level. See *Engine Coolant on page 10-13*.
- Check drive shaft boots.
- Check windshield washer fluid level. See *Washer Fluid on page 10-18*.
- Visually inspect windshield wiper blades for wear, cracking, or contamination. See *Exterior Care on page 10-61*. Replace worn or damaged wiper blades. See *Wiper Blade Replacement on page 10-22*.
- Check tire inflation pressures. See *Tire Pressure on page 10-35*.
- Inspect tire wear. See *Tire Inspection on page 10-39*.
- Visually check for fluid leaks.
- Inspect engine air cleaner filter. See *Engine Air Cleaner/Filter on page 10-11*.

- Inspect brake system. See *Exterior Care on page 10-61*.
- Visually inspect steering, suspension, and chassis components for damaged, loose, or missing parts or signs of wear. See *Exterior Care on page 10-61*.
- Check restraint system components. See *Safety System Check on page 3-13*.
- Visually inspect fuel system for damage or leaks.
- Visually inspect exhaust system and nearby heat shields for loose or damaged parts.
- Lubricate body components. See *Exterior Care on page 10-61*.
- Check accelerator pedal for damage, high effort, or binding. Replace if needed.

Maintenance Schedule Additional Required Services - Normal	8 000 km/5,000 mi	16 000 km/10,000 mi	24 000 km/15,000 mi	32 000 km/20,000 mi	40 000 km/25,000 mi	48 000 km/30,000 mi	56 000 km/35,000 mi	64 000 km/40,000 mi	72 000 km/45,000 mi	80 000 km/50,000 mi	88 000 km/55,000 mi	96 000 km/60,000 mi	104 000 km/65,000 mi	112 000 km/70,000 mi	120 000 km/75,000 mi	128 000 km/80,000 mi	136 000 km/85,000 mi	144 000 km/90,000 mi	152 000 km/95,000 mi	160 000 km/100,000 mi
Change engine oil and filter, rotate tires, and perform Required Services.	✓	✓	✓	✓	✓	✓	✓	✓	✓	✓	✓	✓	✓	✓	✓	✓	✓	✓	✓	✓
Inspect evaporative control system. (1)				✓				✓				✓				✓				✓
Replace engine air cleaner filter. (2)						✓						✓						✓		
Replace spark plugs.																				✓
Drain and fill engine cooling system. (3)																				✓
Visually inspect accessory drive belts. (4)								✓		✓		✓		✓		✓		✓		✓
Replace brake fluid. (5)									✓									✓		

Footnotes — Maintenance Schedule Additional Required Services - Normal

(1) Check all fuel and vapor lines and hoses for proper hook-up, routing, and condition.

(2) If operating mainly in dusty conditions, more frequent maintenance may be required.

(3) First replacement interval is 160 000 km (100,000 mi) or 84 months. After first replacement, replace every 120 000 km (75,000 mi) or 60 months. See *Cooling System on page 10-13*.

(4) After 64 000 km (40,000 mi) or 48 months, inspect every 16 000 km (10,000 mi) or 12 months. Replace the drive belts if found damaged.

(5) Or every three years, whichever occurs first.

Maintenance Schedule Additional Required Services - Severe	8 000 km/5,000 mi	16 000 km/10,000 mi	24 000 km/15,000 mi	32 000 km/20,000 mi	40 000 km/25,000 mi	48 000 km/30,000 mi	56 000 km/35,000 mi	64 000 km/40,000 mi	72 000 km/45,000 mi	80 000 km/50,000 mi	88 000 km/55,000 mi	96 000 km/60,000 mi	104 000 km/65,000 mi	112 000 km/70,000 mi	120 000 km/75,000 mi	128 000 km/80,000 mi	136 000 km/85,000 mi	144 000 km/90,000 mi	152 000 km/95,000 mi	160 000 km/100,000 mi
Change engine oil and filter, rotate tires, and perform Required Services.	✓	✓	✓	✓	✓	✓	✓	✓	✓	✓	✓	✓	✓	✓	✓	✓	✓	✓	✓	✓
Inspect evaporative control system. (1)				✓				✓				✓				✓				✓
Replace engine air cleaner filter. (2)						✓						✓						✓		
Replace spark plugs.																				✓
Replace CVT transmission fluid.												✓								
Drain and fill engine cooling system. (3)																				✓
Visually inspect accessory drive belts. (4)								✓		✓		✓		✓		✓		✓		✓
Replace brake fluid. (5)									✓									✓		

Footnotes — Maintenance Schedule Additional Required Services - Severe

(1) Check all fuel and vapor lines and hoses for proper hook-up, routing, and condition.

(2) If operating mainly in dusty conditions, more frequent maintenance may be required.

(3) First replacement interval is 160 000 km (100,000 mi) or 84 months. After first replacement, replace every 120 000 km (75,000 mi) or 60 months. See *Cooling System on page 10-13*.

(4) After 64 000 km (64,000 mi) or 48 months, inspect every 16 000 km (10,000 mi) or 12 months. Replace the drive belts if found damaged.

(5) Or every three years, whichever occurs first.

Special Application Services

- Severe Commercial Use Vehicles Only: Lubricate chassis components every 5 000 km/ 3,000 mi.
- Have underbody flushing service performed. See “Underbody Maintenance” in *Exterior Care on page 10-61*.

Additional Maintenance and Care

Your vehicle is an important investment and caring for it properly may help to avoid future costly repairs. To maintain vehicle performance, additional maintenance services may be required.

It is recommended that your dealer perform these services — their trained dealer technicians know your vehicle best. Your dealer can also perform a thorough assessment with a multi-point inspection to recommend when your vehicle may need attention.

The following list is intended to explain the services and conditions to look for that may indicate services are required.

Battery

The battery supplies power to start the engine and operate any additional electrical accessories.

- To avoid break-down or failure to start the vehicle, maintain a battery with full cranking power.
- Trained dealer technicians have the diagnostic equipment to test the battery and ensure that the connections and cables are corrosion-free.

Belts

- Belts may need replacing if they squeak or show signs of cracking or splitting.
- Trained dealer technicians have access to tools and equipment to inspect the belts and recommend adjustment or replacement when necessary.

Brakes

Brakes stop the vehicle and are crucial to safe driving.

- Signs of brake wear may include chirping, grinding, or squealing noises, or difficulty stopping.
- Trained dealer technicians have access to tools and equipment to inspect the brakes and recommend quality parts engineered for the vehicle.

Fluids

Proper fluid levels and approved fluids protect the vehicle's systems and components. See *Recommended Fluids and Lubricants on page 11-11* for GM approved fluids.

- Engine oil and windshield washer fluid levels should be checked at every fuel fill.
- Instrument cluster lights may come on to indicate that fluids may be low and need to be filled.

Hoses

Hoses transport fluids and should be regularly inspected to ensure that there are no cracks or leaks. With a multi-point inspection, your dealer can inspect the hoses and advise if replacement is needed.

Lamps

Properly working headlamps, taillamps, and brake lamps are important to see and be seen on the road.

- Signs that the headlamps need attention include dimming, failure to light, cracking, or damage. The brake lamps need to be checked periodically to ensure that they light when braking.
- With a multi-point inspection, your dealer can check the lamps and note any concerns.

Shocks and Struts

Shocks and struts help aid in control for a smoother ride.

- Signs of wear may include steering wheel vibration, bounce/sway while braking, longer stopping distance, or uneven tire wear.
- As part of the multi-point inspection, trained dealer technicians can visually inspect the shocks and struts for signs of leaking, blown seals, or damage, and can advise when service is needed.

Tires

Tires need to be properly inflated, rotated, and balanced. Maintaining the tires can save money and fuel, and can reduce the risk of tire failure.

- Signs that the tires need to be replaced include three or more visible treadwear indicators; cord or fabric showing through the rubber; cracks or cuts in the tread or sidewall; or a bulge or split in the tire.
- Trained dealer technicians can inspect and recommend the right tires. Your dealer can also provide tire/wheel balancing services to ensure smooth vehicle operation at all speeds. Your dealer sells and services name brand tires.

Vehicle Care

To help keep the vehicle looking like new, vehicle care products are available from your dealer. For information on how to clean and protect the vehicle's interior and exterior, see *Interior Care on page 10-65* and *Exterior Care on page 10-61*.

Wheel Alignment

Wheel alignment is critical for ensuring that the tires deliver optimal wear and performance.

- Signs that the alignment may need to be adjusted include pulling, improper vehicle handling, or unusual tire wear.
- Your dealer has the required equipment to ensure proper wheel alignment.

Windshield

For safety, appearance, and the best viewing, keep the windshield clean and clear.

- Signs of damage include scratches, cracks, and chips.
- Trained dealer technicians can inspect the windshield and recommend proper replacement if needed.

Wiper Blades

Wiper blades need to be cleaned and kept in good condition to provide a clear view.

- Signs of wear include streaking, skipping across the windshield, and worn or split rubber.
- Trained dealer technicians can check the wiper blades and replace them when needed.

Recommended Fluids

Recommended Fluids and Lubricants

Fluids and lubricants identified below by name, part number, or specification can be obtained from your dealer.

Usage	Fluid/Lubricant
Engine Oil	Use only engine oil meeting the dexos1™ specification of the proper SAE viscosity grade. Look for the dexos1 approved logo for GM approved engine oil. See *Engine Oil on page 10-8*.
Engine Coolant	Prediluted ACDelco CE Long Life Antifreeze Coolant (blue) or equivalent (GM Part No. 19317140). See *Engine Coolant on page 10-13*.
Hydraulic Brake System	DOT 3 Hydraulic Brake Fluid (GM Part No. 19299818, in Canada 19299819).
Windshield Washer	Automotive windshield washer fluid that meets regional freeze protection requirements.
Continuously Variable Transmission (CVT)	ACDelco CVT Fluid (Part No. 19260800, in Canada 19299096).
Key Lock Cylinders	Multi-Purpose Lubricant, Superlube (GM Part No. 12346241, in Canada 10953474).
Chassis Lubrication	Chassis Lubricant (GM Part No. 12377985, in Canada 88901242) or lubricant meeting requirements of NLGI #2, Category LB or GC-LB.

Usage	Fluid/Lubricant
Weatherstrip Conditioning	Weatherstrip Lubricant (GM Part No. 3634770, in Canada 10953518) or Dielectric Silicone Grease (GM Part No. 12345579, in Canada 10953481).
Weatherstrip Squeaks	Synthetic Grease with Teflon, Superlube (GM Part No. 12371287, in Canada 10953437).

Maintenance Replacement Parts

Replacement parts identified below by name, part number, or specification can be obtained from your dealer.

Part	GM Part Number	ACDelco Part Number
Engine Air Cleaner/Filter	19316246	A3198C
Engine Oil Filter	19317651	PF2132
Spark Plugs	19316339	—
Wiper Blades		
Driver Side – 55 cm (22 in)	19316483	—
Passenger Side – 40 cm (16 in)	19317320	—
Battery	88865293	121RPS

Maintenance Records

After the scheduled services are performed, record the date, odometer reading, who performed the service, and the type of services performed in the boxes provided. Retain all maintenance receipts.

Date	Odometer Reading	Serviced By	Services Performed

Date	Odometer Reading	Serviced By	Services Performed

Technical Data

Vehicle Identification
Vehicle Identification Number (VIN) 12-1

Vehicle Data
Capacities and Specifications 12-2
Engine Drive Belt Routing . . . 12-3

Vehicle Identification

Vehicle Identification Number (VIN)

This legal identifier is in the front corner of the instrument panel, on the left side of the vehicle. It can be seen through the windshield from outside. The VIN also appears on the Vehicle Certification and certificates of title and registration.

Engine Identification

The fourth character in the VIN is the engine code. This code identifies the vehicle's engine, specifications, and replacement parts. See “Engine Specifications” under *Capacities and Specifications on page 12-2* for the vehicle's engine code.

Vehicle Data

Capacities and Specifications

The following approximate capacities are given in metric and English conversions. See *Recommended Fluids and Lubricants on page 11-11* for more information.

Application	Capacities	
	Metric	English
Air Conditioning Refrigerant	For the air conditioning system refrigerant type and charge amount, see the refrigerant label under the hood. See your dealer for more information.	
Cooling System	7.6 L	8.0 qt
Engine Oil with Filter	4.4 L	4–5/8 qt
Fuel Tank	55 L	14.5 gal
Wheel Nut Torque	113 N•m	83 lb ft
All capacities are approximate. When adding, be sure to fill to the approximate level, as recommended in this manual. Recheck fluid level after filling.		

Engine Specifications

Engine	VIN Code	Transmission	Spark Plug Gap
2.0L L4	3	Automatic	1.1 mm (0.043 in)

Engine Drive Belt Routing

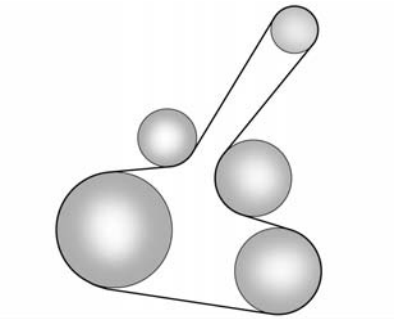

✍ NOTES

Customer Information

Customer Information
Customer Satisfaction Procedure 13-1
Customer Assistance Offices 13-3
Customer Assistance for Text Telephone (TTY) Users 13-4
Online Owner Center 13-4
GM Mobility Reimbursement Program 13-5
Roadside Assistance Program 13-5
Scheduling Service Appointments 13-7
Courtesy Transportation Program 13-7
Collision Damage Repair 13-9
Service Publications Ordering Information 13-11
Radio Frequency Identification (RFID) 13-12
Radio Frequency Statement 13-12

Reporting Safety Defects
Reporting Safety Defects to the United States Government 13-13
Reporting Safety Defects to the Canadian Government 13-13
Reporting Safety Defects to General Motors 13-14

Vehicle Data Recording and Privacy
Vehicle Data Recording and Privacy 13-14
Event Data Recorders 13-14
Infotainment System 13-15

Customer Information

Customer Satisfaction Procedure

Your satisfaction and goodwill are important to your dealer and to Chevrolet. Normally, any concerns with the sales transaction or the operation of the vehicle will be resolved by your dealer's sales or service departments. Sometimes, however, despite the best intentions of all concerned, misunderstandings can occur. If your concern has not been resolved to your satisfaction, the following steps should be taken:

STEP ONE: Discuss your concern with a member of dealership management. Normally, concerns can be quickly resolved at that level. If the matter has already been reviewed with the sales, service, or parts manager, contact the owner of your dealership or the general manager.

STEP TWO: If after contacting a member of dealership management, it appears your concern cannot be resolved by your dealership without further help, in the U.S., call the Chevrolet Customer Assistance Center at 1-800-222-1020. In Canada, call General Motors of Canada Customer Care Centre at 1-800-263-3777 (English), or 1-800-263-7854 (French).

We encourage you to call the toll-free number in order to give your inquiry prompt attention. Have the following information available to give the Customer Assistance representative:

- Vehicle Identification Number (VIN). This is available from the vehicle registration or title, or the plate at the top left of the instrument panel and visible through the windshield.
- Dealership name and location.
- Vehicle delivery date and present mileage.

When contacting Chevrolet, remember that your concern will likely be resolved at a dealer's facility. That is why we suggest following Step One first.

STEP THREE — U.S. Owners: Both General Motors and your dealer are committed to making sure you are completely satisfied with your new vehicle. However, if you continue to remain unsatisfied after following the procedure outlined in Steps One and Two, you can file with the Better Business Bureau (BBB) Auto Line® Program to enforce your rights.

The BBB Auto Line Program is an out-of-court program administered by the Council of Better Business Bureaus to settle automotive disputes regarding vehicle repairs or the interpretation of the New Vehicle Limited Warranty. Although you may be required to resort to this informal dispute resolution program prior to filing a court action, use of the program is free of charge and your case will generally be heard within 40 days. If you do not agree with the decision given in your case, you may reject it and proceed with any other venue for relief available to you.

You may contact the BBB Auto Line Program using the toll-free telephone number or write them at the following address:

BBB Auto Line Program
Council of Better Business Bureaus, Inc.
4200 Wilson Boulevard
Suite 800
Arlington, VA 22203-1838

Telephone: 1-800-955-5100
www.dr.bbb.org/goauto

This program is available in all 50 states and the District of Columbia. Eligibility is limited by vehicle age, mileage, and other factors. General Motors reserves the right to change eligibility limitations and/or discontinue its participation in this program.

STEP THREE — Canadian Owners: In the event that you do not feel your concerns have been addressed after following the procedure outlined in Steps One and Two, General Motors of Canada Limited wants you to be aware of its participation in a no-charge Mediation/Arbitration Program. General Motors of Canada Limited has committed to binding arbitration of owner disputes involving factory-related vehicle service claims. The program provides for the review of the facts involved by an impartial third party arbiter, and may include an informal hearing before the arbiter. The program is designed so that the entire dispute settlement process, from the time you file your complaint to the final decision, should be completed in about 70 days. We believe our impartial program offers advantages over courts in most jurisdictions because it is informal, quick, and free of charge.

For further information concerning eligibility in the Canadian Motor Vehicle Arbitration Plan (CAMVAP), call toll-free 1-800-207-0685, or call the General Motors Customer Care Centre, 1-800-263-3777 (English), 1-800-263-7854 (French), or write to:

The Mediation/Arbitration Program
c/o Customer Care Centre
General Motors of Canada Limited
Mail Code: CA1-163-005
1908 Colonel Sam Drive
Oshawa, Ontario L1H 8P7

Your inquiry should be accompanied by the Vehicle Identification Number (VIN).

Customer Assistance Offices

Chevrolet encourages customers to call the toll-free number for assistance. However, if a customer wishes to write or e-mail Chevrolet, the letter should be addressed to:

United States and Puerto Rico

Chevrolet Motor Division
Chevrolet Customer Assistance Center
P.O. Box 33170
Detroit, MI 48232-5170
www.Chevrolet.com

1-800-222-1020
1-800-833-2438 (For Text Telephone Devices (TTYs))
Roadside Assistance:
1-800-243-8872

From U.S. Virgin Islands:

1-800-496-9994

Canada

General Motors of Canada Limited
Customer Care Centre,
Mail Code: CA1-163-005
1908 Colonel Sam Drive
Oshawa, Ontario L1H 8P7
www.gm.ca

1-800-263-3777 (English)
1-800-263-7854 (French)
1-800-263-3830 (For Text Telephone devices (TTYs))
Roadside Assistance:
1-800-268-6800

Overseas

Please contact the local General Motors Business Unit.

Customer Assistance for Text Telephone (TTY) Users

To assist customers who are deaf, hard of hearing, or speech-impaired and who use Text Telephones (TTYs), Chevrolet has TTY equipment available at its Customer Assistance Center. Any TTY user in the U.S. can communicate with Chevrolet by dialing: 1-800-833-2438. TTY users in Canada can dial 1-800-263-3830.

Online Owner Center

Online Owner Experience (U.S.) my.chevrolet.com

The Chevrolet online owner experience allows interaction with Chevrolet and keeps important vehicle-specific information in one place.

Membership Benefits

(Vehicle Information): Download owner manuals and view vehicle-specific how-to videos.

(Maintenance Information): View maintenance schedules, alerts, and OnStar onboard vehicle diagnostic information. Schedule service appointments.

(Service History): View and print dealer-recorded service records and self-recorded service records.

(Preferred Dealer Information): Select a preferred dealer and view locations, maps, phone numbers, and hours.

(Warranty Tracking Information): Track the vehicle's warranty information.

(Recall Information): View active recalls by Vehicle Identification Number (VIN). See *Vehicle Identification Number (VIN) on page 12-1*.

(Other Account Information): View GM Card, SiriusXM Satellite radio (if equipped), and OnStar account information.

(Live Chat Support): Chat live with online help representatives.

See my.chevrolet.com to register your vehicle.

Chevrolet Owner Centre (Canada) chevroletowner.ca

Visit the Chevrolet Owner Centre:

- Chat live with online help representatives.
- Locate owner resources such as lease-end, financing, and warranty information.
- Retrieve your favorite articles, quizzes, tips, and multimedia galleries organized into the Featured Articles and Auto Care Sections.
- Download owner manuals.
- Find the Chevrolet-recommended maintenance services.

GM Mobility Reimbursement Program

This program is available to qualified applicants for cost reimbursement of eligible aftermarket adaptive equipment required for the vehicle, such as hand controls or a wheelchair/scooter lift for the vehicle.

For more information on the limited offer, visit www.gmmobility.com or call the GM Mobility Assistance Center at 1-800-323-9935. Text Telephone (TTY) users, call 1-800-833-9935.

General Motors of Canada also has a Mobility Program. Visit www.gm.ca or call 1-800-GM-DRIVE (463-7483) for details. TTY users call 1-800-263-3830.

Roadside Assistance Program

For U.S.-purchased vehicles, call 1-800-243-8872. (Text Telephone (TTY): 1-888-889-2438.)

For Canadian-purchased vehicles, call 1-800-268-6800.

Service is available 24 hours a day, 365 days a year.

Calling for Assistance

When calling Roadside Assistance, have the following information ready:

- Your name, home address, and home telephone number.
- Telephone number of your location.
- Location of the vehicle.

- Model, year, color, and license plate number of the vehicle.
- Odometer reading, Vehicle Identification Number (VIN), and delivery date of the vehicle.
- Description of the problem.

Coverage

Services are provided up to 5 years/ 160 000 km (100,000 mi), whichever comes first.

In the U.S., anyone driving the vehicle is covered. In Canada, a person driving the vehicle without permission from the owner is not covered.

Roadside Assistance is not a part of the New Vehicle Limited Warranty. General Motors North America and Chevrolet reserve the right to make any changes or discontinue the Roadside Assistance program at any time without notification.

General Motors North America and Chevrolet reserve the right to limit services or payment to an owner or driver if they decide the claims are made too often, or the same type of claim is made many times.

Services Provided

- **Emergency Fuel Delivery:** Delivery of enough fuel for the vehicle to get to the nearest service station.
- **Lock-Out Service:** Service to unlock the vehicle if you are locked out. A remote unlock may be available if you have OnStar. For security reasons, the driver must present identification before this service is given.
- **Emergency Tow from a Public Road or Highway:** Tow to the nearest Chevrolet dealer for warranty service, or if the vehicle was in a crash and cannot be driven. Assistance is not given when the vehicle is stuck in the sand, mud, or snow.
- **Flat Tire Change:** Service to change a flat tire with the spare tire. The spare tire, if equipped, must be in good condition and properly inflated. It is the owner's responsibility for the repair or replacement of the tire if it is not covered by the warranty.
- **Battery Jump Start:** Service to jump start a dead battery.

Services Not Included in Roadside Assistance

- Impound towing caused by violation of any laws.
- Legal fines.
- Mounting, dismounting, or changing of snow tires, chains, or other traction devices.

Service is not provided if a vehicle is in an area that is not accessible to the service vehicle or is not a regularly traveled or maintained public road, which includes ice and winter roads. Off-road use is not covered.

Services Specific to Canadian-Purchased Vehicles

- **Fuel Delivery:** Reimbursement is up to 7 liters. Diesel fuel delivery may be restricted. Propane and other fuels are not provided through this service.
- **Lock-Out Service:** Vehicle registration is required.
- **Trip Interruption Benefits and Assistance:** Must be over 150 kilometers from where your trip was started to qualify. General Motors of Canada Limited requires pre-authorization, original detailed receipts, and a copy of the repair orders. Once authorization has been received, the Roadside Assistance advisor will help to make arrangements and explain how to receive payment.
- **Alternative Service:** If assistance cannot be provided right away, the Roadside Assistance advisor may give permission to get local emergency road service. You will receive payment, up to $100, after sending the original receipt to Roadside Assistance. Mechanical failures may be covered, however any cost for parts and labor for repairs not covered by the warranty are the owner responsibility.

Scheduling Service Appointments

When the vehicle requires warranty service, contact your dealer and request an appointment. By scheduling a service appointment and advising the service consultant of your transportation needs, your dealer can help minimize your inconvenience.

If the vehicle cannot be scheduled into the service department immediately, keep driving it until it can be scheduled for service, unless, of course, the problem is safety related. If it is, please call your dealership, let them know this, and ask for instructions.

If your dealer requests you to bring the vehicle for service, you are urged to do so as early in the work day as possible to allow for same-day repair.

Courtesy Transportation Program

To enhance your ownership experience, we and our participating dealers are proud to offer Courtesy Transportation, a customer support program for vehicles with the Bumper-to-Bumper (Base Warranty Coverage period in Canada), extended powertrain, and/or hybrid-specific warranties in both the U.S. and Canada.

The Courtesy Transportation program is no longer available for cutaway vehicles.

Several Courtesy Transportation options are available to assist in reducing inconvenience when warranty repairs are required.

Courtesy Transportation is not a part of the New Vehicle Limited Warranty. A separate booklet entitled “Limited Warranty and Owner Assistance Information” furnished with each new vehicle provides detailed warranty coverage information.

Transportation Options

Warranty service can generally be completed while you wait. However, if you are unable to do so, your dealer may offer the following transportation options:

Shuttle Service

This includes one-way or round-trip shuttle service within reasonable time and distance parameters of your dealer's area.

Public Transportation or Fuel Reimbursement

If overnight warranty repairs are needed, and public transportation is used, the expense must be supported by original receipts and within the maximum amount allowed by GM for shuttle service. If U.S. customers arrange their own transportation, limited reimbursement for reasonable fuel expenses may be available. Claim amounts should reflect actual costs and be supported by original receipts. See your dealer for information.

Courtesy Rental Vehicle

For an overnight warranty repair, the dealer may provide an available courtesy rental vehicle or provide for reimbursement of a rental vehicle. Reimbursement is limited and must be supported by original receipts as well as a signed and completed rental agreement and meet state/provincial, local, and rental vehicle provider requirements.

Requirements vary and may include minimum age requirements, insurance coverage, credit card, etc. Additional fees such as fuel usage charges, taxes, levies, usage fees, excessive mileage, or rental usage beyond the completion of the repair are also your responsibility.

It may not be possible to provide a like vehicle as a courtesy rental.

Additional Program Information

All program options, such as shuttle service, may not be available at every dealer. Contact your dealer for specific availability.

General Motors reserves the right to unilaterally modify, change, or discontinue Courtesy Transportation at any time and to resolve all questions of claim eligibility pursuant to the terms and conditions described herein at its sole discretion.

Collision Damage Repair

If the vehicle is involved in a collision and it is damaged, have the damage repaired by a qualified technician using the proper equipment and quality replacement parts. Poorly performed collision repairs diminish the vehicle resale value, and safety performance can be compromised in subsequent collisions.

Collision Parts

Genuine GM Collision parts are new parts made with the same materials and construction methods as the parts with which the vehicle was originally built. Genuine GM Collision parts are the best choice to ensure that the vehicle's designed appearance, durability, and safety are preserved. The use of Genuine GM parts can help maintain the GM New Vehicle Limited Warranty.

Recycled original equipment parts may also be used for repair. These parts are typically removed from vehicles that were total losses in prior crashes. In most cases, the parts being recycled are from undamaged sections of the vehicle. A recycled original equipment GM part may be an acceptable choice to maintain the vehicle's originally designed appearance and safety performance; however, the history of these parts is not known. Such parts are not covered by the GM New Vehicle Limited Warranty, and any related failures are not covered by that warranty.

Aftermarket collision parts are also available. These are made by companies other than GM and may not have been tested for the vehicle. As a result, these parts may fit poorly, exhibit premature durability/corrosion problems, and may not perform properly in subsequent collisions. Aftermarket parts are not covered by the GM New Vehicle Limited Warranty, and any vehicle failure related to such parts is not covered by that warranty.

Repair Facility

GM also recommends that you choose a collision repair facility that meets your needs before you ever need collision repairs. Your dealer may have a collision repair center with GM-trained technicians and state-of-the-art equipment, or be able to recommend a collision repair center that has GM-trained technicians and comparable equipment.

Insuring the Vehicle

Protect your investment in the GM vehicle with comprehensive and collision insurance coverage. There are significant differences in the quality of coverage afforded by various insurance policy terms. Many insurance policies provide reduced protection to the GM vehicle by limiting compensation for damage repairs through the use of aftermarket collision parts. Some insurance companies will not specify aftermarket collision parts. When purchasing insurance, we

recommend that you ensure that the vehicle will be repaired with GM original equipment collision parts. If such insurance coverage is not available from your current insurance carrier, consider switching to another insurance carrier.

If the vehicle is leased, the leasing company may require you to have insurance that ensures repairs with Genuine GM Original Equipment Manufacturer (OEM) parts or Genuine Manufacturer replacement parts. Read the lease carefully, as you may be charged at the end of the lease for poor quality repairs.

If a Crash Occurs

If there has been an injury, call emergency services for help. Do not leave the scene of a crash until all matters have been taken care of. Move the vehicle only if its position puts you in danger, or you are instructed to move it by a police officer.

Give only the necessary information to police and other parties involved in the crash.

For emergency towing see *Roadside Assistance Program on page 13-5*.

Gather the following information:

- Driver name, address, and telephone number.
- Driver license number.
- Owner name, address, and telephone number.
- Vehicle license plate number.
- Vehicle make, model, and model year.
- Vehicle Identification Number (VIN).
- Insurance company and policy number.
- General description of the damage to the other vehicle.

Choose a reputable repair facility that uses quality replacement parts. See “Collision Parts” earlier in this section.

If the airbag has inflated, see *What Will You See after an Airbag Inflates? on page 3-20*.

Managing the Vehicle Damage Repair Process

In the event that the vehicle requires damage repairs, GM recommends that you take an active role in its repair. If you have a pre-determined repair facility of choice, take the vehicle there, or have it towed there. Specify to the facility that any required replacement collision parts be original equipment parts, either new Genuine GM parts or recycled original GM parts. Remember, recycled parts will not be covered by the GM vehicle warranty.

Insurance pays the bill for the repair, but you must live with the repair. Depending on your policy limits, your insurance company may initially value the repair using

aftermarket parts. Discuss this with the repair professional, and insist on Genuine GM parts. Remember, if the vehicle is leased, you may be obligated to have the vehicle repaired with Genuine GM parts, even if your insurance coverage does not pay the full cost.

If another party's insurance company is paying for the repairs, you are not obligated to accept a repair valuation based on that insurance company's collision policy repair limits, as you have no contractual limits with that company. In such cases, you can have control of the repair and parts choices as long as the cost stays within reasonable limits.

Service Publications Ordering Information

Service Manuals

Service Manuals have the diagnosis and repair information on the engines, transmission, axle, suspension, brakes, electrical, steering, body, etc.

Service Bulletins

Service Bulletins give additional technical service information needed to knowledgeably service General Motors cars and trucks. Each bulletin contains instructions to assist in the diagnosis and service of the vehicle.

Owner Information

Owner publications are written specifically for owners and intended to provide basic operational information about the vehicle. The Owner Manual includes the Maintenance Schedule for all models.

In-Portfolio: Includes a Portfolio, Owner Manual, and Warranty Manual.

RETAIL SELL PRICE: $35.00 – $40.00 (U.S.) plus handling and shipping fees.

Without Pouch: Owner Manual only.

RETAIL SELL PRICE: $25.00 (U.S.) plus handling and shipping fees.

Current and Past Models

Technical Service Bulletins and Manuals are available for current and past model GM vehicles.

ORDER TOLL FREE:
1-800-551-4123 Monday – Friday
8:00 AM – 6:00 PM Eastern Time

For Credit Card Orders Only (VISA-MasterCard-Discover), see Helm, Inc. at: www.helminc.com.

Or write to:

Helm, Incorporated
Attention: Customer Service
47911 Halyard Drive
Plymouth, MI 48170

Prices are subject to change without notice and without incurring obligation. Allow ample time for delivery.

All listed prices are quoted in U.S. funds. Make checks payable in U.S. funds.

Radio Frequency Identification (RFID)

RFID technology is used in some vehicles for functions such as tire pressure monitoring and ignition system security, as well as in connection with conveniences such as Remote Keyless Entry (RKE) transmitters for remote door locking/unlocking and starting, and in-vehicle transmitters for garage door openers. RFID technology in GM vehicles does not use or record personal information or link with any other GM system containing personal information.

Radio Frequency Statement

This vehicle has systems that operate on a radio frequency that complies with Part 15/Part 18 of the Federal Communications Commission (FCC) rules and with Industry Canada Standards RSS-GEN/210/220/310, ICES-001.

Operation is subject to the following two conditions:

1. The device may not cause harmful interference.
2. The device must accept any interference received, including interference that may cause undesired operation of the device.

Changes or modifications to any of these systems by other than an authorized service facility could void authorization to use this equipment.

Reporting Safety Defects

Reporting Safety Defects to the United States Government

If you believe that your vehicle has a defect which could cause a crash or could cause injury or death, you should immediately inform the National Highway Traffic Safety Administration (NHTSA) in addition to notifying General Motors.

If NHTSA receives similar complaints, it may open an investigation, and if it finds that a safety defect exists in a group of vehicles, it may order a recall and remedy campaign.

However, NHTSA cannot become involved in individual problems between you, your dealer, or General Motors.

To contact NHTSA, you may call the Vehicle Safety Hotline toll-free at 1-888-327-4236 (TTY: 1-800-424-9153); go to *http://www.safercar.gov;* or write to:

Administrator, NHTSA
1200 New Jersey Avenue, S.E.
Washington, D.C. 20590

You can also obtain other information about motor vehicle safety from *http://www.safercar.gov*.

Reporting Safety Defects to the Canadian Government

If you live in Canada, and you believe that the vehicle has a safety defect, notify Transport Canada immediately, and notify General Motors of Canada Limited. Call Transport Canada at 1-800-333-0510 or write to:

Transport Canada
Road Safety Branch
80 rue Noel
Gatineau, QC J8Z 0A1

Reporting Safety Defects to General Motors

In addition to notifying NHTSA (or Transport Canada) in a situation like this, notify General Motors.

Call 1-800-222-1020, or write:

Chevrolet Motor Division
Chevrolet Customer Assistance Center
P.O. Box 33170
Detroit, MI 48232-5170

In Canada, call 1-800-263-3777 (English) or 1-800-263-7854 (French), or write:

General Motors of Canada Limited
Customer Care Centre,
Mail Code: CA1-163-005
1908 Colonel Sam Drive
Oshawa, Ontario L1H 8P7

Vehicle Data Recording and Privacy

The vehicle has a number of computers that record information about the vehicle's performance and how it is driven. For example, the vehicle uses computer modules to monitor and control engine and transmission performance, to monitor the conditions for airbag deployment and deploy them in a crash, and, if equipped, to provide antilock braking to help the driver control the vehicle. These modules may store data to help the dealer technician service the vehicle. Some modules may also store data about how the vehicle is operated, such as rate of fuel consumption or average speed. These modules may retain personal preferences, such as radio presets, seat positions, and temperature settings.

Event Data Recorders

This vehicle is equipped with an event data recorder (EDR). The main purpose of an EDR is to record, in certain crash or near crash-like situations, such as an air bag deployment or hitting a road obstacle, data that will assist in understanding how a vehicle's systems performed. The EDR is designed to record data related to vehicle dynamics and safety systems for a short period of time, typically 30 seconds or less. The EDR in this vehicle is designed to record such data as:

- How various systems in your vehicle were operating;
- Whether or not the driver and passenger safety belts were buckled/fastened;
- How far (if at all) the driver was depressing the accelerator and/or brake pedal; and,
- How fast the vehicle was traveling.

These data can help provide a better understanding of the circumstances in which crashes and injuries occur. NOTE: EDR data are recorded by your vehicle only if a non-trivial crash situation occurs; no data are recorded by the EDR under normal driving conditions and no personal data (e.g., name, gender, age, and crash location) are recorded. However, other parties, such as law enforcement, could combine the EDR data with the type of personally identifying data routinely acquired during a crash investigation.

To read data recorded by an EDR, special equipment is required, and access to the vehicle or the EDR is needed. In addition to the vehicle manufacturer, other parties, such as law enforcement, that have the special equipment, can read the information if they have access to the vehicle or the EDR.

GM will not access this data or share it with others except: with the consent of the vehicle owner or, if the vehicle is leased, with the consent of the lessee; in response to an official request by police or similar government office; as part of GM's defense of litigation through the discovery process; or, as required by law. Data that GM collects or receives may also be used for GM research needs or may be made available to others for research purposes, where a need is shown and the data is not tied to a specific vehicle or vehicle owner.

Infotainment System

If the vehicle is equipped with a navigation system as part of the infotainment system, use of the system may result in the storage of destinations, addresses, telephone numbers, and other trip information. See the infotainment manual for information on stored data and for deletion instructions.

✍ NOTES

A

Accessories and Modifications 10-3
Add-On Electrical Equipment 9-41
Additional Maintenance and Care 11-7
Adjustments
Lumbar, Front Seats 3-4
Air Cleaner/Filter, Engine 10-11
Air Vents 8-3
Airbag System
Check 3-29
How Does an Airbag Restrain? 3-20
Passenger Sensing System 3-22
What Makes an Airbag Inflate? 3-20
What Will You See after an Airbag Inflates? 3-20
When Should an Airbag Inflate? 3-18
Where Are the Airbags? 3-17
Airbags
Adding Equipment to the Vehicle 3-29
Passenger Status Indicator . . . 5-10
Readiness Light 5-9
Servicing Airbag-Equipped Vehicles 3-28
System Check 3-15
Alarm
Vehicle Security 2-10
All-Season Tires 10-27
All-Terrain Tires 10-28
AM-FM Radio 7-5
Antilock Brake System (ABS) 9-22
Warning Light 5-15
Appearance Care
Exterior 10-61
Interior 10-65
Armrest
Front Seat 3-6
Ashtrays 5-5
Assistance Program, Roadside 13-5
Audio Players 7-7
CD 7-7
Audio System
Fixed Mast Antenna 7-6
Radio Reception 7-6
Theft-Deterrent Feature 7-2
Automatic
Door Locks 2-7
Auxiliary Jack 7-9

B

Back Doors 2-8
Battery 10-21
Exterior Lighting Battery Saver 6-5
Jump Starting 10-55
Battery - California Propostion 65 Warning 10-2
Blade Replacement, Wiper . . . 10-22
Bluetooth
Overview 7-10
Brake
System Warning Light 5-14
Brakes 10-19
Antilock 9-22
Fluid 10-19
Parking 9-24
Braking 9-3

Break-In, New Vehicle 9-13
Bulb Replacement 10-23
Halogen Bulbs 10-23
Headlamp Aiming 10-23
Headlamps 10-23
Headlamps, Front Turn Signal, and Parking Lamps 10-23
Buying New Tires 10-41

C

California
Fuel Requirements 9-38
Perchlorate Materials Requirements 10-2
California Proposition 65 Warning 10-2, 10-21, 10-55
Camera
Rear Vision (RVC) 9-31
Canadian Vehicle Owners iii
Capacities and Specifications 12-2
Carbon Monoxide
Engine Exhaust 9-17
Winter Driving 9-7
Cargo
Tie-Downs 4-2
Cargo Lamp 6-4
Cautions, Danger, and Warnings iv
CD Player 7-7
Chains, Tire 10-46
Charging System Light 5-11
Check
Engine Light 5-11
Child Restraints
Infants and Young Children 3-32
Lower Anchors and Tethers for Children 3-38
Older Children 3-30
Securing 3-42
Systems 3-34
Cigarette Lighter 5-5
Circuit Breakers 10-25
Cleaning
Exterior Care 10-61
Interior Care 10-65
Climate Control Systems 8-1
Air Conditioning 8-1
Heating 8-1
Clock 5-3
Cluster, Instrument 5-7
Collision Damage Repair 13-9
Compartments
Storage 4-1
Computer, Trip 5-20
Continuously Variable Transmission (CVT) 9-18
Continuously Variable Transmission (CVT) Fluid ... 10-11
Control
Traction and Electronic Stability 9-25
Control of a Vehicle 9-3
Convex Mirrors 2-12
Coolant
Engine 10-13
Engine Temperature Warning Light 5-17
Cooling System 10-13
Courtesy Transportation Program 13-7

Cruise Control 9-28
Light 5-19
Customer Assistance 13-4
Offices 13-3
Text Telephone (TTY)
Users 13-4
Customer Information
Service Publications
Ordering Information 13-11
Customer Satisfaction
Procedure 13-1

D

Damage Repair, Collision 13-9
Danger, Warnings, and
Cautions iv
Data Recorders, Event 13-14
Daytime Running
Lamps (DRL) 6-2
Defensive Driving 9-2
Distracted Driving 9-2
Dome Lamps 6-4
Door
Ajar Light 5-19
Locks 2-5
Power Locks 2-7
Sliding 2-8
Doors
Back 2-8
Drive Belt Routing, Engine 12-3
Driving
Defensive 9-2
Drunk 9-3
For Better Fuel Economy 1-15
Hill and Mountain Roads 9-6
If the Vehicle is Stuck 9-8
Loss of Control 9-5
Off-Road Recovery 9-4
Vehicle Load Limits 9-9
Wet Roads 9-5
Winter 9-7

E

Electrical Equipment,
Add-On 9-41
Electrical System
Engine Compartment
Fuse Block 10-25
Fuses and Circuit
Breakers 10-25
Instrument Panel Fuse
Block 10-26
Overload 10-24
Electronic Stability Control
(ESC) Off Light 5-16
Electronic Stability Control Light
Traction Control
System (TCS) 5-16
Engine
Air Cleaner/Filter 10-11
Check and Service Engine
Soon Light 5-11
Compartment Overview 10-7
Coolant 10-13
Coolant Temperature
Warning Light 5-17
Cooling System 10-13
Drive Belt Routing 12-3

Engine (cont'd)
Exhaust 9-17
Overheated Protection
Operating Mode 10-17
Overheating 10-16
Pressure Light 5-18
Running While Parked 9-18
Starting 9-15
Event Data Recorders 13-14
Extender, Safety Belt 3-13
Exterior Lamp Controls 6-1
Exterior Lamps Off Reminder ... 6-1
Exterior Lighting Battery
Saver 6-5

F

Filter,
Engine Air Cleaner 10-11
Flash-to-Pass 6-2
Flashers, Hazard Warning 6-2
Flat Tire 10-47
Changing 10-48
Floor Mats 10-69
Fluid
Brakes 10-19
Washer 10-18
Folding Mirrors 2-13
Folding Seatback 3-6
Frequency Statement
Radio 13-12
Front Seat Armrest 3-6
Front Seats
Adjustment 3-3
Fuel 9-37
Additives 9-38
Economy Driving 1-15
Filling a Portable Fuel
Container 9-40
Filling the Tank 9-39
Foreign Countries 9-38
Gauge 5-8
Low Fuel Warning Light.....5-18
Requirements, California 9-38
System Messages 5-20
Full-Size Spare Tire 10-55
Fuses
Engine Compartment
Fuse Block 10-25
Fuses and Circuit
Breakers 10-25
Instrument Panel Fuse
Block 10-26

G

Gauges
Fuel 5-8
Odometer 5-8
Speedometer 5-8
Tachometer 5-8
Trip Odometer 5-8
Warning Lights and
Indicators 5-6
General Information
Service and Maintenance 11-1
Towing 9-41
Vehicle Care 10-2
Glove Box 4-1
GM Mobility Reimbursement
Program 13-5

H

Halogen Bulbs 10-23
Hazard Warning Flashers 6-2
Head Restraints 3-2
Headlamps
Aiming 10-23
Bulb Replacement 10-23
Daytime Running
Lamps (DRL) 6-2

Headlamps (cont'd)
Flash-to-Pass 6-2
High-Beam On Light 5-19
High/Low Beam Changer 6-1
Heated Mirrors 2-13
Heating and Air Conditioning . . . 8-1
High-Beam On Light 5-19
Hill and Mountain Roads 9-6
Hood 10-5
Horn 5-2
How to Wear Safety Belts Properly 3-9

I

Ignition Positions 9-14
Immobilizer 2-11
Infants and Young Children, Restraints 3-32
Infotainment 7-1
Infotainment System 13-15
Instrument Cluster 5-7
Interior Rearview Mirrors 2-13
Introduction iii

J

Jack
Auxiliary 7-9
Jump Starting 10-55
Jump Starting - California Proposition 65 Warning 10-2

K

Keyless Entry
Remote (RKE) System 2-3
Keys 2-1

L

Labeling, Tire Sidewall 10-28
Lamps
Cargo 6-4
Daytime Running (DRL) 6-2
Dome 6-4
Exterior Controls 6-1
Exterior Lamps Off Reminder 6-1
Exterior Lighting Battery Saver 6-5
Lamps (cont'd)
Headlamps, Front Turn Signal, and Parking Lamps 10-23
Malfunction Indicator 5-11
Reading 6-5
Lap-Shoulder Belt 3-10
LATCH System
Replacing Parts after a Crash 3-42
LATCH, Lower Anchors and Tethers for Children 3-38
Light
Electronic Stability Control (ESC), Off 5-16
Lighter, Cigarette 5-5
Lighting
Illumination Control 6-3
Lights
Airbag Readiness 5-9
Antilock Brake System (ABS) Warning 5-15
Brake System Warning 5-14
Charging System 5-11
Cruise Control 5-19
Door Ajar 5-19

Lights (cont'd)
Engine Coolant
Temperature Warning 5-17
Engine Oil Pressure 5-18
Flash-to-Pass 6-2
High-Beam On 5-19
High/Low Beam Changer 6-1
Low Fuel Warning 5-18
Low Washer Fluid Warning ...5-19
Overdrive Off 5-15
Safety Belt Reminders 5-9
Security 5-19
Tire Pressure 5-17
Warning, Power Steering 5-15
Locks
Automatic Door 2-7
Door 2-5
Lockout Protection 2-7
Power Door 2-7
Loss of Control 9-5
Low Fuel Warning Light 5-18
Low Washer Fluid Warning
Light 5-19
Lower Anchors and Tethers
for Children (LATCH
System) 3-38
Lumbar Adjustment 3-4
Front Seats 3-4

M

Maintenance
Records 11-13
Maintenance and Care
Additional 11-7
Maintenance Schedule 11-3
Recommended Fluids
and Lubricants 11-11
Malfunction Indicator Lamp 5-11
Manual Mirrors 2-12
Messages
Fuel System 5-20
Tire 5-20
Mirrors
Convex 2-12
Folding 2-13
Heated 2-13
Manual 2-12
Manual Rearview 2-13
Power 2-13
Mirrors, Interior Rearview 2-13
Monitor System, Tire
Pressure 10-36

N

New Vehicle Break-In 9-13

O

Odometer 5-8
Trip 5-8
Off-Road
Recovery 9-4
Oil
Engine 10-8
Pressure Light 5-18
Older Children, Restraints 3-30
Online Owner Center 13-4
Operating Mode
Overheated Engine
Protection 10-17
Operation, Infotainment
System 7-4
Ordering
Service Publications 13-11
Outlets
Power 5-4
Overdrive Off Light 5-15
Overheated Engine
Protection
Operating Mode 10-17

Overheating, Engine 10-16
Overview, Infotainment
System 7-2

P

Parking
Brake 9-24
Over Things That Burn 9-17
Parking Assist 9-30
Passenger Airbag Status
Indicator 5-10
Passenger Sensing System . . . 3-22
Perchlorate Materials
Requirements, California 10-2
Personalization
Vehicle 5-21
Phone
Bluetooth 7-10
Power
Door Locks 2-7
Mirrors 2-13
Outlets 5-4
Windows 2-14
Power Steering Warning
Lights 5-15
Pregnancy, Using Safety
Belts 3-13
Privacy
Vehicle Data Recording 13-14
Program
Courtesy Transportation 13-7
Proposition
65 Warning,
California 10-2,
10-21, 10-55

R

Radio Frequency
Identification (RFID) 13-12
Radio Frequency
Statement 13-12
Radios
AM-FM Radio 7-5
Reception 7-6
Reading Lamps 6-5
Rear Vision Camera (RVC) 9-31
Rearview Mirrors 2-13
Reclining Seatbacks 3-4
Recommended Fluids and
Lubricants 11-11
Records
Maintenance 11-13
Recreational Vehicle
Towing 10-59
Reimbursement Program,
GM Mobility 13-5
Remote Keyless Entry
(RKE) System 2-2, 2-3
Replacement Bulbs 10-23
Replacement Parts
Airbags 3-30
Maintenance 11-12
Replacing Airbag System 3-30
Replacing LATCH System
Parts after a Crash 3-42
Replacing Safety Belt
System Parts after a Crash . . . 3-14
Reporting Safety Defects
Canadian Government 13-13
General Motors 13-14
U.S. Government 13-13
Restraints
Where to Put 3-37
Roads
Driving, Wet 9-5

Roadside Assistance
Program 13-5
Rotation, Tires 10-39
Routing, Engine Drive Belt 12-3
Running the Vehicle While
Parked 9-18

S

Safety Belts 3-8
Care 3-14
Extender 3-13
How to Wear Safety Belts
Properly 3-9
Lap-Shoulder Belt 3-10
Reminders 5-9
Replacing after a Crash 3-14
Use During Pregnancy 3-13
Safety Defects Reporting
Canadian Government 13-13
General Motors 13-14
U.S. Government 13-13
Safety System Check 3-13
Scheduling Appointments 13-7
Seats
Adjustment, Front 3-3
Folding Seatback 3-6
Head Restraints 3-2
Lumbar Adjustment, Front 3-4
Reclining Seatbacks 3-4
Underseat Storage 4-1
Securing Child Restraints 3-42
Security
Light 5-19
Vehicle 2-10
Vehicle Alarm 2-10
Service 8-4
Accessories and
Modifications 10-3
Doing Your Own Work 10-4
Engine Soon Light 5-11
Maintenance Records 11-13
Maintenance, General
Information 11-1
Publications Ordering
Information 13-11
Scheduling Appointments 13-7
Services
Special Application 11-7
Servicing the Airbag 3-28
Signals, Turn and
Lane-Change 6-3
Sliding Door 2-8
Special Application Services . . . 11-7
Specifications and
Capacities 12-2
Speedometer 5-8
Starting the Engine 9-15
Steering 9-3
Power, Warning Lights 5-15
Wheel Controls 5-2
Storage Areas
Glove Box 4-1
Underseat 4-1
Storage Compartments 4-1
Stuck Vehicle 9-8
Summer Tires 10-28
Sun Visors 2-16
Symbols iv
System
Infotainment 7-1, 13-15

T

Tachometer 5-8
Text Telephone (TTY) Users ... 13-4
Theft-Deterrent Systems 2-11
  Immobilizer 2-11
Time 5-3
Tires 10-26
  All-Season 10-27
  All-Terrain 10-28
  Buying New Tires 10-41
  Chains 10-46
  Changing 10-48
  Designations 10-30
  Different Size 10-43
  Full-Size Spare 10-55
  If a Tire Goes Flat 10-47
  Inflation Monitor System 10-37
  Inspection 10-39
  Messages 5-20
  Pressure Light 5-17
  Pressure Monitor System ... 10-36
  Rotation 10-39
  Sidewall Labeling 10-28
  Terminology and
    Definitions 10-32
Tires (cont'd)
  Uniform Tire Quality
    Grading 10-44
  Wheel Alignment and Tire
    Balance 10-45
  Wheel Replacement 10-45
  When It Is Time for New
    Tires 10-41
  Winter 10-27
Towing
  General Information 9-41
  Recreational Vehicle 10-59
  Vehicle 10-59
Traction Control System
  (TCS)/Electronic Stability
  Control Light 5-16
Traction Control/Electronic
  Stability Control 9-25
Trademarks and License
  Agreements 7-19
Transmission
  Continuously Variable 9-18
Transmission Fluid
  Continuously Variable 10-11
Transportation Program,
  Courtesy 13-7
Trip Computer 5-20
Trip Odometer 5-8
Turn and Lane-Change
  Signals 6-3

U

Underseat Storage 4-1
Uniform Tire Quality
  Grading 10-44
Using This Manual iii

V

Vehicle
  Alarm System 2-10
  Canadian Owners iii
  Control 9-3
  Identification
    Number (VIN) 12-1
  Load Limits 9-9
  Personalization 5-21
  Security 2-10
  Towing 10-59

Vehicle Care
Tire Pressure 10-35
Vehicle Data Recording
and Privacy 13-14
Ventilation, Air 8-3
Visors 2-16

W

Warning
Brake System Light 5-14
Warning Lights, Gauges, and
Indicators 5-6
Warnings iv
Cautions and Danger iv
Hazard Flashers 6-2
Washer Fluid 10-18
Washer Fluid, Low Warning
Light 5-19
Wheels
Alignment and Tire
Balance 10-45
Different Size 10-43
Replacement 10-45
When It Is Time for New
Tires 10-41
Where to Put the Restraint 3-37
Windows 2-14
Power 2-14
Windshield
Wiper/Washer 5-2
Winter
Driving 9-7
Winter Tires 10-27
Wiper Blade Replacement 10-22