Suspension System

GENERAL

FRONT SUSPENSION SYSTEM
- FRONT STRUT ASSEMBLY
- FRONT LOWER ARM
- FRONT STABILIZER BAR

REAR SUSPENSION SYSTEM
- REAR SHOCK ABSORBER
- REAR UPPER ARM
- REAR LOWER ARM
- REAR ASSIST ARM
- TRAILING ARM
- REAR STABILIZER BAR

TIRES／WHEELS
- WHEEL
- TIRE

GENERAL

SPECIFICATIONS EBB7B67D

FRONT SUSPENSION SYSTEM

Items					Specification
Type					Macpherson strut
Shock Absorber	Type				Gas
	Stroke mm(in)				161(6.34)
	Expansion mm(in)				585.0±3 (23.03±0.12)
	Compression mm(in)				424.0 +3, -Free (16.69 +0.12, -Free)
	I.D. Color				Red
	Damping force (Piston speed : 0.3 m/s)			Expansion N(kgf, lb)	1363±196 (139±20, 306±44)
				Compression N(kgf, lb)	794±147 (81±15, 179±33)
Spring	Diesel 2.2	2WD	MT	Free height mm(in)	375.4 (14.78)
				I.D. Color	Yellow - Blue
			AT	Free height mm(in)	380.8 (14.99)
				I.D. Color	Yellow - Sky blue
		4WD	MT	Free height mm(in)	380.8 (14.99)
				I.D. Color	Yellow - Sky blue
			AT	Free height mm(in)	386.2 (15.20)
				I.D. Color	Yellow - Pink
	Gasoline 2.7	2WD	MT	Free height mm(in)	364.6 (14.35)
				I.D. Color	Yellow - Violet
			AT	Free height mm(in)	-
				I.D. Color	-
		4WD	MT	Free height mm(in)	370.0 (14.57)
				I.D. Color	Yellow - Yellow
			AT	Free height mm(in)	375.4 (14.78)
				I.D. Color	Yellow - Blue

REAR SUSPENSION SYSTEM

Items				Specification
Type				Multi link
Shock Absorber	Type			Gas
	Stroke mm(in)			144 (5.67)
	Expansion mm(in)			436.0±3 (17.17±0.12)
	Compression mm(in)			292.0 +3, -Free (11.50 +0.12, -Free)
	I.D. Color			Red
	Damping force (Piston speed : 0.3 m/s)		Expansion N(kgf, lb)	1442±206 (147±21, 324±46)
			Compression N(kgf, lb)	520±98 (53±10, 117±22)
Shock Absorber (Self levelizer)	Type			Gas
	Stroke mm(in)			142 (5.59)
	Expansion mm(in)			436.0±3 (17.17±0.12)
	Compression mm(in)			294.0 +3, -Free (11.57 +0.12, -Free)
	I.D. Color			Yellow
	Damping force (Piston speed : 0.3 m/s)		Expansion N(kgf, lb)	1785±255 (182±26, 401±57)
			Compression N(kgf, lb)	412±88 (42±9, 93±20)
Spring	2WD	5 Passenger	Free height mm(in)	291.9 (11.49)
			I.D. Color	Pink - Sky blue
		7 Passenger	Free height mm(in)	295.9 (11.65)
			I.D. Color	Pink - Pink
		7 Passenger Self levelizer	Free height mm(in)	293.8 (11.57)
			I.D. Color	Blue - White
	4WD	5 Passenger	Free height mm(in)	299.9 (11.81)
			I.D. Color	Pink -White
		7 Passenger	Free height mm(in)	303.9 (11.96)
			I.D. Color	Pink -Yellow
		7 Passenger Self levelizer	Free height mm(in)	304.9 (12.00)
			I.D. Color	Blue -Pink

WHEELS AND TIRES

Items		Specification	
Tire Size		235/70 R16	
		235/65 R17	
		235/60 R18	
		T 165/90 R17 (Temporary)	
Wheel size	Aluminium	7.0J X 16	
		7.0J X 17	
		7.0J X 18	
		4T X 17 (Temporary)	
Tire Pressure		Front	Rear
	235/70 R16	206 (2.1, 30)	206 (2.1, 30)
	235/65 R17	206 (2.1, 30)	206 (2.1, 30)
	235/60 R18	206 (2.1, 30)	206 (2.1, 30)
	T 165/90 R17 (Temporary)	412 (4.2, 60)	412 (4.2, 60)

WHEEL ALIGNMENT

Items		Front	Rear
Camber		-30´ ± 30´	-1° ± 30´
Caster	to Ground	4° 25´ ± 30´	-
	to Body	4° 48´ ± 30´	-
Toe-in mm(in)		0 ± 2	2 ± 2
King pin angle		12° 59´ ± 30´	-
Tread mm(in)		1615	1619

TIGHTENING TORQUE

FRONT SUSPENSION

Items	Nm	Kgf-m	lb-ft
Front wheel nut	88.3 ~ 107.9	9 ~ 11	65.1 ~ 79.6
Front strut assembly mounting nut (to body)	44.1 ~ 58.8	4.5 ~ 6.0	32.5 ~ 43.4
Front strut assembly mounting bolt (to knuckle)	152.0 ~ 171.6	15.5 ~ 17.5	112.1 ~ 126.6
Front strut assembly self-locking nut	58.8 ~ 68.6	6 ~ 7	43.4 ~ 50.6
Front lower arm ball joint mounting bolt (to knuckle)	98.1 ~ 117.7	10 ~ 12	72.3 ~ 86.8
Front lower arm bushing(A) mounting bolt (to subframe)	137.3 ~ 156.9	14 ~ 16	101.3 ~ 115.7
Front lower arm bushing(G) mounting bolt (to subframe)	137.3 ~ 156.9	14 ~ 16	101.3 ~ 115.7
Front stabilizer link nut (to strut assembly)	98.1 ~ 117.7	10 ~ 12	72.3 ~ 86.8
Front stabilizer bar bracket mounting bolt (to Subframe)	49.0 ~ 63.7	5.0 ~ 6.5	36.2 ~ 47.0
Front stabilizer link self-locking nut	98.1 ~ 117.7	10 ~ 12	72.3 ~ 86.8
Front subframe mounting bolt (to body)	137.3 ~ 156.9	14 ~ 16	101.3 ~ 115.7
Front subframe bracket mounting bolt (to body)	68.6 ~ 88.3	7 ~ 9	50.6 ~ 65.1

REAR SUSPENSION

Items	Nm	Kgf-m	lb-ft
Rear wheel nut	88.3 ~ 107.9	9 ~ 11	65.1 ~ 79.6
Rear shock absorber mounting bolt (to body)	137.3 ~ 156.9	14 ~ 16	101.3 ~ 115.7
Rear shock absorber nut (to rear carrier)	98.1 ~ 117.7	10 ~ 12	72.3 ~ 86.8
Rear upper arm ball joint nut (to rear carrier)	78.5 ~ 88.3	8 ~ 9	57.9 ~ 65.1
Rear upper arm mounting bolt (to cross member)	98.1 ~ 117.7	10 ~ 12	72.3 ~ 86.8
Rear lower arm mounting bolt (to rear carrier)	137.3 ~ 156.9	14 ~ 16	101.3 ~ 115.7
Rear lower arm mounting nut (to cross member)	137.3 ~ 156.9	14 ~ 16	101.3 ~ 115.7
Rear assist arm ball joint nut (to rear carrier)	98.1 ~ 117.7	10 ~ 12	72.3 ~ 86.8
Rear assist arm mounting nut (to cross member)	137.3 ~ 156.9	14 ~ 16	101.3 ~ 115.7
Trailing arm mounting bolt (to cross member)	137.3 ~ 156.9	14 ~ 16	101.3 ~ 115.7
Trailing arm mounting bolt (to rear carrier)	137.3 ~ 156.9	14 ~ 16	101.3 ~ 115.7
Rear stabilizer bar bracket mounting bolt (to cross member)	44.1 ~ 53.9	4.5 ~ 5.5	32.5 ~ 39.8
Rear stabilizer link self-locking nut	58.8 ~ 78.5	6 ~ 8	43.4 ~ 57.9

CAUTION

Replace the self-locking nuts with new ones after removal.

SPECIAL SERVICE TOOLS E806DEFC

Tool (Number and Name)	Illustration	Use
09546-26000 Strut spring compressor	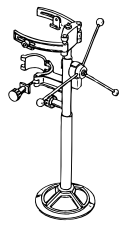 E4626000	Compression of the coil spring
09568-34000 Ball joint remover	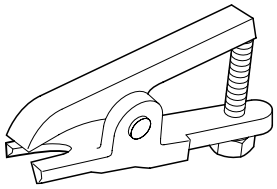 E6834000	Removal of Ball joint (Rear upper arm)
09568-4A000 Ball joint remover	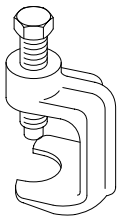 KPRE103I	Removal of Ball joint (Front upper arm/lower arm)

TROUBLESHOOTING E8AA80CE

VEHICLE INSPECTION

To assist the service advisor and the technician, check the suspension and wheel/tire condition with the questions listed below by filling them. It serves as a place to record information as well as data from the testing to be carried out. To begin a successful diagnosis, fill out the questions.

WHEEL/TIRE CHECK :

Tire Pressure Check **Yes/No**

Balance Check **Yes / No**

Maximum Runout Allowed :

Wheel : Radial _____ Lateral _____

Tire : Radial _____ Lateral _____

Measured Runout :

Tire/Wheel	Radial :	LF _____	LR _____	RF _____	RR _____
	Lateral :	LF _____	LR _____	RF _____	RR _____
Wheel Only	Radial :	LF _____	LR _____	RF _____	RR _____
	Lateral :	LF _____	LR _____	RF _____	RR _____

SUSPENSION INSPECTION :

Concerns Shimmy ☐ Clunk ☐ Squeak ☐ Harshness ☐

Suspension Bushing : Loose ☐ Worn ☐ Missing ☐ OK ☐

Front stabilizer ☐ Rear stabilizer (sway bar) ☐ Rear trailing arm ☐

Front lower arm ☐ Rear suspension front ☐ Rear suspension rear arm ☐

Other _____

Suspension/Components : Loose Worn Missing OK

Ball Joint ☐ Shock absorbers F/R ☐ Springs F/R ☐ The rod ends/sleeve ☐

BHKG500C

SYMPTOM CHART

Symptom	Suspect Area	Remedy
Squeak or grunt-noise from the front suspension, occurs more in cold ambient temperatures - more noticeable over rough roads or when turning	Front stabilizer bar	Under these conditions, the noise is acceptable.
Clunk - noise from the front suspension, occurs in and out of turns	Loose front struts or shocks	Inspect for loose nuts or bolts. Tighten to specifications.
Clunk - noise from the rear suspension, occurs when shifting from reverse to drive	Loose rear suspension components	Inspect for loose or damaged rear suspension components. Repair or install new components as necessary.
Click or pop - noise from the front suspension - more noticeable over rough roads or over bumps	Worn or damaged ball joints	Install new lower arm as necessary.
Click or pop - noise occurs when vehicle is turning	Worn or damaged ball joints	Install new lower arm as necessary.
Click or snap - occurs when accelerating around a corner	Damaged or worn Birfield joint	Repair or install a new Birfield joint as necessary. See DS group - driveshaft.
Front suspension noise - A squeak, creak, or rattle noise - occurs mostly over bumps or rough roads	Steering components Loose or bent front struts or shock absorbers Damaged spring or spring mounts Damaged or worn arm bushings Worn or damaged stabilizer bar bushing or links	Go to detailed test A.
Groaning or grinding - noise from the front strut, occurs when driving on bumpy roads or turning the vehicle	Uneven seating surface between the insulator and panel by the burrs around the strut insulator mounting bolts and the insulator bolts mounting holes	Repair or install a new parts as necessary.
Rear suspension noise - a squeak, creak or rattle noise - occurs mostly over bumps or rough roads	Loose or bent rear shock absorbers Damaged spring or spring mounts Damaged or worn control arm bushings	Go to detailed test B.
Shudder - occurs during acceleration from a slow speed or stop	Rear axle assembly mis-positioned Damaged or worn front suspension components	Check the axle mounts and rear suspension for damage or wear. Repair as necessary. Check for a loose stabilizer bar, damaged or loose strut/strut bushings or loose or worn ball joints. Inspect the steering linkage for wear or damage. Repair or Install new components as necessary.
Shimmy - most noticeable on coast/deceleration - also hard steering condition	Excessive positive caster	Check the caster alignment angle. Correct as necessary.

Symptom	Suspect Area	Remedy
Tire noise - hum/moan at constant speeds	Abnormal wear patterns	Spin the tire and Check for tire wear. Install a new tire as necessary. Inspect for damaged/worn suspension components. Perform wheel alignment.
Tire noise - noise tone lowers as the vehicle speed is lowered	Out-of-balance tire	Balance the tire and road test. Install a new tire as necessary.
Tire noise - ticking noise, change with speed	Nail puncture or stone in tire tread	Inspect the tire. Repair or replace as necessary.
Wheel and tire - vibration and noise concern is directly related to vehicle speed and is not affected by acceleration, coasting or decelerating	Damaged or worn tire	Go to detailed test C.
Tire wobble or shudder - occurs at lower speeds	Damaged wheel bearings	Spin the tire and check for abnormal wheel bearing play or roughness. Adjust or Install new wheel bearings as necessary. See DS group - front/rear axle.
	Damaged wheel	Inspect the wheel for damage. Install a new wheel as necessary.
	Damaged or worn suspension components	Inspect the suspension components for wear or damage. Repair as necessary.
	Loosen wheel nuts	Check the wheel nuts. Tighten to specification.
	Damaged or uneven tire wear	Spin the tire and Check for abnormal tire wear or damage. Install a new tire as necessary.
Tire shimmy or shake - occurs at lower speeds	Wheel/tire out of balance	Check for wheel balance.
	Uneven tire wear	Check for abnormal tire wear. Install a new tire as necessary.
	Excessive radial runout of wheel or tire	Perform a radial runout test of the wheel and tire. Install a new tire as necessary.
	Worn or damaged wheel studs or elongate stud holes	Inspect the wheel studs and wheels. Install new components as necessary.
	Excessive lateral runout of the wheel or tire	Perform a lateral runout test of the wheel and tire. Check the wheel, tire and hub. Repair or Install new components as necessary.
	Foreign materal between the brake disc and hub.	Clean the mounting surfaces of the brake disc and hub. See DS group - front/rear axle.

Symptom	Suspect Area	Remedy
High speed shake or shimmy - occurs at high speeds	Excessive wheel hub runout Damaged or worn tires Damaged or worn wheel bearings Worn or damaged suspension or steering linkage Brake disc or drum imbalance	Go to detailed test D.
Drift left or right	Tires Steering linkage Alignment Base brake system	Go to detailed test E.
Steering wheel	Alignment Steering linkage Front lower arm ball joint	Go to detailed test F.
Tracks incorrectly	Rear suspension Caster	Go to detailed test G.
Rough ride	Front strut and spring assembly Rear shock absorber and spring assembly	Go to detailed test H.
Excessive noise	Front or rear stabilizer bar components Springs Suspension components Shock absorbers	Go to detailed test I.
Incorrect tire wear	Tire or unbalanced wheels Tire inflation Strut Alignment	Go to detailed test J.
Vibration	Wheel/tire Front wheel driveshaft(s) Steering system Strut and spring assembly Spring and strut mounting Front lower arm ball joint Front lower arm mounting bolt bushing Stabilizer bar bushings Wheel hubs and bearing Rear suspension arms and bushings	Go to detailed test K.
Vehicle leans	Tire/wheel Vehicle load Suspension components Incorrect ride height	Inflate tires to specification. Redistribute the load as necessary. Visually inspect the suspention system. Correct the ride height as necessary.
Poor steering returnability	High knuckle rotating torque Alignment	Go to detailed test E.

DETAILED TEST A : FRONT SUSPENSION NOISE

CONDITIONS	DETAILS/RESULTS/ACTIONS
A1 ROAD TEST THE VEHICLE	
	1. Test drive the vehicle. 2. During the road test, drive the vehicle over a rough road. Determine from which area/component the noise is originating. ● Is there a squeak, creak or rattle noise ? ⇒ **YES** Go to **A2.** ⇒ **NO** The suspension system is OK. Conduct a diagnosis on other suspect systems.
A2 INSPECT THE STEERING SYSTEM	
	1. Check the steering system for wear or damage. Perform a steering linkage test. Inspect the tire wear pattern. ● Are the steering components worn or damaged ? ⇒ **YES** Repair the steering system. Install new components as necessary. Test the system for normal operation. ⇒ **NO** Go to **A3.**
A3 FRONT SHOCK ABSORBER/STRUT CHECK	
	1. Check the front shock absorbers/strut mounts for loose bolts or nuts. 2. Check the front shock absorbers/struts for damage. Perform a shock absorber check. ● Are the front shock absorbers/struts loose or damaged ? ⇒ **YES** Tighten to specifications if loose. Install new front shock absorbers/struts if damaged. Test the system for normal operation. ⇒ **NO** Go to **A4.**
A4 CHECK THE FRONT SPRINGS	
	Check the front spring and front spring mounts/brackets for wear or damage. ● Are the front springs or spring mounts/brackets worn or damaged ? ⇒ **YES** Repair or Install new components as necessary. Test the system for normal operation. ⇒ **NO** Go to **A5.**

CONDITIONS	DETAILS/RESULTS/ACTIONS
A5 CHECK THE STABILIZER BAR	
	1. Check the stabilizer bar bushings and links for damage or wear. 2. Check the stabilizer bar for damage. 3. Check for loose or damaged stabilizer brackets. ● Are the stabilizer bar/track bar components loose, worn or damaged ? ⇒ **YES** Repair or Install new components as necessary. Test the system for normal operation. ⇒ **NO** Suspension system is OK. Conduct diagnosis on other suspect systems.

DETAILED TEST B : REAR SUSPENSION NOISE

CONDITIONS	DETAILS/RESULTS/ACTIONS
B1 ROAD TEST THE VEHICLE	
	1. Test drive the vehicle. 2. During the road test, drive the vehicle over a rough road. Determine from which area/component the noise is originating. ● Is there a squeak, creak or rattle noise ? ⇒ **YES** Go to **B2.** ⇒ **NO** The suspension system is OK. Conduct a diagnosis on other suspect systems.
B2 REAR SHOCK ABSORBER/STRUT CHECK	
	1. Raise and support the vehicle. See GI group - lift support point. 2. Check the rear shock absorber/strut mounts for loose bolts or nuts. 3. Check the rear shock absorbers/strut for damage. Perform a shock absorber check. ● Are the rear shock absorbers/struts loose or damaged ? ⇒ **YES** Tighten to specifications if loose. Install new rear shock absorbers/struts if damaged. Test the system for normal operation. ⇒ **NO** Go to **B3.**
B3 CHECK THE REAR SPRINGS	
	Check the rear springs and rear spring mounts/brackets for wear or damage. ● Are the rear springs or spring mounts/brackets worn or damaged ? ⇒ **YES** Repair or Install new components as necessary. Test the system for normal operation. ⇒ **NO** Go to **B4.**

CONDITIONS	DETAILS/RESULTS/ACTIONS
B4 CHECK THE TRAILING ARMS	
	1. Inspect the trailing arm bushings for wear or damage. Check for loose trailing arm bolts. 2. Inspect for twisted or bent trailing arms. ● Are the trailing arms loose, damaged or worn ? ⇒ **YES** Repair or Install new components as necessary. Test the system for normal operation. ⇒ **NO** Suspension system is OK. Conduct diagnosis on other suspect systems.

DETAILED TEST C : WHEEL AND TIRE

CONDITIONS	DETAILS/RESULTS/ACTIONS
C1 ROAD TEST THE VEHICLE	
	NOTE *Wheel or tire vibrations felt in the steering wheel are most likely related to the front wheel or tire. Vibration felt through the seat are most likely related to the rear wheel or tire. This may not always be true, but it can help to isolate the problem to the front or rear of the vehicle.* *Test drive the vehicle at different speed ranges.* During the road test, if the vibration can be eliminated by placing the vehicle in neutral or is affected by the speed of the engine, the cause is not the wheels or tires. ● Is there a vibration and noise ? ⇒ **YES** Go to **C2.** ⇒ **NO** The wheel and tires are OK. Conduct a diagnosis on other suspect systems.
C2 CHECK THE FRONT WHEEL BEARINGS	
	Check the front wheel bearings. Refer to Wheel Bearing Check (See DS group - front axle). ● Are the wheel bearings OK ? ⇒ **YES** Go to **C3.** ⇒ **NO** Inspect the wheel bearings. Adjust or Repair as necessary. Test the system for normal operation.

CONDITIONS	DETAILS/RESULTS/ACTIONS
C3 INSPECT THE TIRES	
	1. Check the tires for missing weights. 2. Check the wheels for damage. 3. Inspect the tire wear pattern. ● Do the tires have an abnormal wear pattern ? ⇒ **YES** Correct the condition that caused the abnormal wear. Install new tire(s). Test the system for normal operation. ⇒ **NO** Go to **C4.**
C4 TIRE ROTATION DIAGNOSIS	
	1. Spin the tires slowly and watch for signs of lateral runout. 2. Spin the tires slowly and watch for signs of radial runout. ● Are there signs of visual runout ? ⇒ **YES** Go to **C5.** ⇒ **NO** Check the wheel and tire balance. Correct as necessary. Test the system for normal operation.
C5 RADIAL RUNOUT CHECK ON THE TIRE	
	Measure the radial runout of the wheel and tire assembly. A typical specification for total radial runout is 1.15mm (0.059 inch). ● Is the radial runout within specifications ? ⇒ **YES** Go to **C8.** ⇒ **NO** Go to **C6.**
C6 RADIAL RUNOUT CHECK ON THE WHEEL	
	Measure the radial runout of the wheel. A typical specification for total radial runout is 1.14mm (0.045 inch.). ● Is the radial runout within specifications ? ⇒ **YES** Install a new tire. Test the system for normal operation. ⇒ **NO** Go to **C7.**

CONDITIONS	DETAILS/RESULTS/ACTIONS
C7 CHECK THE HUB/BRAKE DISC OR DRUM PILOT RUNOUT OR BOLT CIRCLE RUNOUT	
	Measure the pilot or bolt circle runout. A typical specification for radial runout is : ● pilot runout - less than 0.15mm (0.006 inch.) ● bolt circle runout - less than 0.38 mm (0.015 inch.) ● Is the radial runout within specification ? ⇒ **YES** Install a new wheel. Test the system for normal operation. ⇒ **NO** Repair or Install new components as necessary.
C8 LATERAL RUNOUT CHECK ON THE TIRE	
	Measure the lateral runout of the wheel and tire assembly. A typical specification for total lateral runout is 2.5mm (0.098 inch). ● Is the lateral runout within specifications ? ⇒ **YES** Wheel and tires are OK. Conduct diagnosis on other suspect systems. ⇒ **NO** Go to **C9.**
C9 LATERAL RUNOUT CHECK ON THE WHEEL	
	Measure the lateral runout of the wheel. A typical specification for total radial runout is 1.2mm (0.047 inch.) ● Is the lateral runout within specifications ? ⇒ **YES** Install a new tire. Test the system for normal operation. ⇒ **NO** Go to **C10.**
C10 CHECK THE FLANGE FACE LATERAL RUNOUT	
	Measure the flange face lateral runout. A typical specification for lateral runout is : ● hub/brake disc - less than 0.13mm (0.005 inch) ● Is the lateral runout within specifications ? ⇒ **YES** Install a new wheel. Test the system for normal operation. ⇒ **NO** Repair or Install new components as necessary.

DETAILED TEST D : HIGH SPEED SHAKE OR SHIMMY

CONDITIONS	DETAILS/RESULTS/ACTIONS
D1 CHECK FOR FRONT WHEEL BEARING ROUGHNESS	
	1. Raise and support the front end of the vehicle so that the front wheel and tire assemblies can spin. See GI group - lift support point. 2. Spin the front tires by hand. ● Do the wheel bearings feel rough ? ⇒ **YES** Inspect the wheel bearings. Repair as necessary. Test the system for normal operation. ⇒ **NO** Go to **D2.**
D2 CHECK THE END PLAY OF THE FRONT WHEEL BEARINGS	
	Check the end play of the front wheel bearings. ● Is the end play OK ? ⇒ **YES** Go to **D3.** ⇒ **NO** Adjust or Repair as necessary. Test the system for normal operation.
D3 MEASURE THE LATERAL RUNOUT AND THE RADIAL RUNOUT OF THE FRONT WHEELS ON THE VEHICLE	
	Measure the lateral runout and the radial runout of the front wheels on the vehicle. Go to detailed test C. ● Are the measurements within specifications ? ⇒ **YES** Go to **D4.** ⇒ **NO** Install new wheels as necessary and Balance the assembly. Test the system for normal operation.
D4 MEASURE THE LATERAL RUNOUT OF THE FRONT TIRES ON THE VEHICLE	
	Measure the lateral runout of the front tires on the vehicle. Go to detailed test C. ● Is the runout within specifications ? ⇒ **YES** Go to **D5.** ⇒ **NO** Install new tires as necessary and Balance the assembly. Test the system for normal operation.

CONDITIONS	DETAILS/RESULTS/ACTIONS
D5 MEASURE THE RADIAL RUNOUT OF THE FRONT TIRES ON THE VEHICLE	
	Measure the radial runout of the front tires on the vehicle. Go to detailed test C. ● Is the runout within specifications ? ⇒ **YES** Balance the front wheel and tire assemblies. If any tire cannot be balanced, Install a new tire. Test the system for normal operation. ⇒ **NO** Go to **D6.**
D6 MATCH MOUNT THE TIRE AND WHEEL ASSEMBLY	
	Mark the high runout location on the tire and also on the wheel. Break the assembly down and rotate the tire 180 degrees (halfway around) on the wheel. Inflate the tire and measure the radial runout. ● Is the runout within specifications ? ⇒ **YES** Balance the assembly. Test the system for normal operation. ⇒ **NO** If the high spot is not within 101.6mm (4 inches) of the first high spot on the tire, Go to **D7.**
D7 MEASURE THE WHEEL FLANGE RUNOUT	
	Dismount the tire and mount the wheel on a wheel balancer. Measure the runout on both wheel flanges. Go to detailed test C ● Is the runout within specifications ? ⇒ **YES** Locate and Mark the low spot on the wheel. Install the tire, matching the high spot on the tire with the low spot on the wheel. Balance the assembly. Test the system for normal operation. If the condition persists, Go to **D8.** ⇒ **NO** Install a new wheel. Check the runout on the new wheel. If the new wheel is within limits, locate and Mark the low spot. Install the tire, matching the high spot on the tire with the low spot on the wheel. Balance the assembly. Test the system for normal operation. If the condition persists, Go to **D8.**
D8 CHECK FOR VIBRATION FROM THE FRONT OF THE VEHICLE	
	Spin the front wheel and tire assemblies with a wheel balancer while the vehicle is raised on a hoist. Feel for vibration in the front fender or while seated in the vehicle. ● Is the vibration present ? ⇒ **YES** Substitute known good wheel and tire assemblies as necessary. Test the system for normal operation. ⇒ **NO** Check the driveline components. Test the system for normal operation.

DETAILED TEST E : DRIFT LEFT OR RIGHT

CONDITIONS	DETAILS/RESULTS/ACTIONS
E1 CHECK THE TIRES	
	Inspect the tires for excessive wear or damage. ● Are the tires excessively worn or damaged ? ⇒ **YES** Install new tires. ⇒ **NO** Go to **E2.**
E2 CHECK THE STEERING LINKAGE	
	1. Raise and support the vehicle. 2. Check the steering components for indications of excessive wear or damage. See ST group - specification. ● Is there an indication of excessive wear or damage ? ⇒ **YES** Repair or Install new components as necessary. ⇒ **NO** Go to **E3.**
E3 CHECK THE VEHICLE ALIGNMENT	
	1. Place the vehicle on an alignment rack. Check the vehicle alignmnt. ● Is the alignment within specification ? ⇒ **YES** Go to **E4.** ⇒ **NO** Adjust the alignment as necessary.
E4 BRAKE DRAG DIAGNOSIS	
	Apply the brakes while driving. ● Does drift or pull occur when the brakes are applied ? ⇒ **YES** See BR group - specification. ⇒ **NO** If the steering wheel is in the center, the vehicle is OK. If the steering wheel is off-center, Go to Detailed Test **F.**

DETAILED TEST F : STEERING WHEEL OFF-CENTER

CONDITIONS	DETAILS/RESULTS/ACTIONS
F1 CHECK THE CLEAR VISION	
	Place the vehicle on an alignment rack. ● Is the clear vision within specification ? ⇒ **YES** Go to **F2.** ⇒ **NO** Adjust the clear vision to specification.
F2 INSPECT THE STEERING COMPONENTS	
	1. Raise and support the vehicle. 2. Inspect the steering components for excessive wear or damage. See ST group - specification. ● Are the steering components excessively worn or damaged ? ⇒ **YES** Repair or Install new components as necessary. ⇒ **NO** If it tracks corectly, vehicle is OK. If it tracks incorrectly, Go to Detailed Test **G.**

DETAILED TEST G : TRACKS INCORRECTLY

CONDITIONS	DETAILS/RESULTS/ACTIONS
G1 CHECK THE CASTER	
	Place the vehicle on an alignment rack. ● Is the caster within specification ? ⇒ **YES** Go to **G2.** ⇒**NO** Replace bent or damaged parts.
G2 CHECK THE REAR SUSPENSION	
	1. Measure the vehicle wheel base for LH and RH. 2. Compare the measurements. ● Are the measurements the same ? ⇒ **YES** If the ride is smooth, vehicle is OK. If the ride is rough, Go to Detailed Test**H.** ⇒ **NO** Inspect the rear suspension components for wear or damage. Repair or Install new components as necessary.

DETAILED TEST H : ROUGH RIDE

CONDITIONS	DETAILS/RESULTS/ACTIONS
H1 CHECK THE FRONT SHOCK ABSORBER	
	1. Raise support the vehicle. 2. Inspect the front shock absorber for oil leaks or damage. ● Are the tires excessively worn or damaged ? ⇒ **YES** Install new front shock absorbers. ⇒ **NO** Go to **H2.**
H2 CHECK THE REAR SHOCK ABSORBERS	
	Inspect the rear shock absorbers for oil leaks or damage. ● Are the rear shock absorbers leaking ? ⇒ **YES** Install new rear shock absorbers. ⇒ **NO** The vehicle is OK. Go to **TROUBLESHOOTING.**

DETAILED TEST I : EXCESSIVE NOISE

CONDITIONS	DETAILS/RESULTS/ACTIONS
I1 INSPECT THE SUSPENSION	
	1. Raise and support the vehicle. 2. Inspect the shock absorber mounting bolts. ● Are the mounting bolts loose or broken ? ⇒ **YES** Tighten or Install new shock absorber mounting bolts. ⇒ **NO** Go to **I2.**
I2 INSPECT THE SPRING AND TORSION BARS	
	Inspect the springs and stabilizer bars for damage. ● Are the spring or stabilizer bars damaged ? ⇒ **YES** Install new spring and/or stabilizer bars. ⇒ **NO** Go to **I3.**
I3 INSPECT THE FRONT SUSPENSION	
	Inspect the front suspension components for excessive wear or damage. ● Are the front suspension components worn or damaged ? ⇒ **YES** Install new front suspension components. ⇒ **NO** The vehicle is OK. Go to **TROUBLESHOOTING.**

DETAILED TEST J : INCORRECT TIRE WEAR

CONDITIONS	DETAILS/RESULTS/ACTIONS
J1 INSPECT THE TIRES	
	1. Raise and support the vehicle. 2. Inspect the tires for uneven wear on the inner or outer shoulder. ● Is there uneven tire wear ? ⇒ **YES** Align the vehicle. Install new tires if badly worn. ⇒ **NO** Go to **J2.**
J2 UNEVEN TIRE WEAR	
	Inspect the tires for a feathering pattern. ● Do the tires have a feathering pattern ? ⇒ **YES** Align the vehicle. Install new tires if badly worn. ⇒ **NO** Go to **J3.**
J3 CHECK FOR CUPPED TIRE	
	Inspect the tires for cupping or dishing. ● Are the tires cupped or dished ? ⇒ **YES** Balance and Rotate the tires. ⇒ **NO** The vehicle is OK. Go to **TROUBLESHOOTING.**

DETAILED TEST K : VIBRATION

CONDITIONS	DETAILS/RESULTS/ACTIONS
K1 ROAD TEST	
	Accelerate the vehicle to the speed at which the customer indicated the vibration occured. ● Is the vibration present ? ⇒ **YES** Go to **K2.** ⇒ **NO** The vehicle is OK. Go to **TROUBLESHOOTING.**
K2 INSPECT THE TIRES	
	1. Raise and support the vehicle with a frame contact hoist. 2. Inspect the tires for extreme wear or damage, cupping, or flat spots. ● Are the tires OK ? ⇒ **YES** Go to **K3.** ⇒ **NO** Check the suspension components for misalignment, abnormal wear, or damage that may have contributed to the tire wear. Correct the suspension concerns and Install new tires.
K3 INSPECT THE WHEEL BEARINGS	
	Spin the tires by hand to check for wheel bearing rougness. ● Is the front wheel bearing OK ? ⇒ **YES** Go to **K4.** ⇒ **NO** Install new front wheel bearings as necessary. See Ds group - front axle.
K4 TIRE/WHEEL BALANCE	
	Check the tire/wheel balance. ● Are the tires balanced ? ⇒ **YES** Go to **K5.** ⇒ **NO** Balance the tires and wheels as necessary.

DETAILED TEST K : VIBRATION

K5 MEASURE THE RUNOUTS	
	For each wheel position measure, locate and mark the following items. - High point of the tire/wheel assembly total radial runout - High point of the wheel radial runout - High point of the wheel lateral runout ● Are the runouts as specified ? ⇒ **YES** Go to **K7.** ⇒ **NO** Go to **K6.**
K6 SUBSTITUTE THE WHEELS AND TIRE	
	1. Substitute a known good set of wheels and tires. 2. Perform a road test. 3. If the vehicle still exhibits a shake or vibration, note the vehicle speed and/or engine rpm which it occurs. ● Is the vibration felt ? ⇒ **YES** Engine/transmission imbalance. See the specification of TR group, EM group, FL group and EC group. ⇒ **NO** Install the original tire/wheel assemblies one by one, Road testing at each step until the damaged tire(s)/wheel(s) as necessary. Test the system for normal operation.

Wheel /tire noise, vibration and harshness concerns are directly related to vehicle speed and are not generally affected by acceleration, coasting or decelerating. Also, out-of-balance wheel and tires can vibrate at more than one speed. A vibration that is affected by the engine rpm, or is eliminated by placing the transmission in Neutral is not related to the tire and wheel. As a general rule, tire and wheel vibrations felt in the steering wheel are related to the front tire and wheel assemblies. Vibrations felt in the seat or floor are related to the rear tire and wheel assemblies. This can initially isolate a concern to the front or rear.

Careful attention must be paid to the tire and wheels. There are several symptoms that can be caused by damaged or worn tire and wheels. Perform a careful visual inspection of the tires and wheel assemblies. Spin the tires slowly and watch for signs of lateral or radial runout. Refer to the tire wear chart to determine the tire wear conditions and actions

WHEEL AND TIRE DIAGNOSIS		
Rapid wear at the center	Rapid wear at both shoulders	Wear at one shoulder
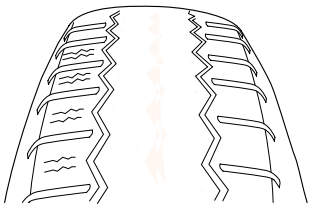 AHIE002A	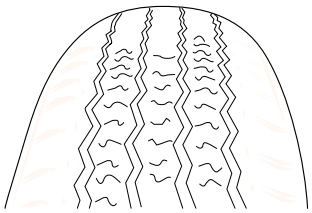 AHIE002B	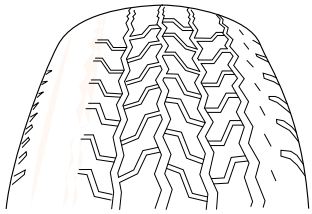 AHIE002C
• Center-tread down to fabric due to excessive over inflated tires • Lack of rotation • Excessive toe on drive wheels • Heavy acceleration on drive	• Under-inflated tires • Worn suspension components • Excessive cornering speeds • Lack of rotation	• Toe adjustment out of specification • Camber out of specification • Damaged strut • Damaged lower arm
Partial wear	Feathered edge	Wear pattern
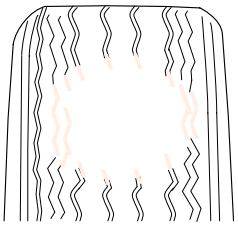 AHIE002D	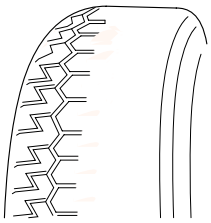 AHIE002F	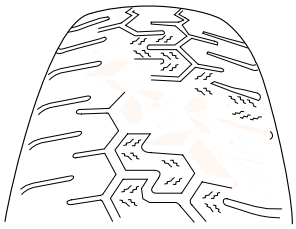 AHIE002G
• Caused by irregular burrs on brake drums	• Toe adjustment out of specification • Damaged or worn tie rods • Damaged knuckle	• Excessive toe on non-drive wheels • Lack of rotation

FRONT SUSPENSION SYSTEM

COMPONENTS EAC2BB36

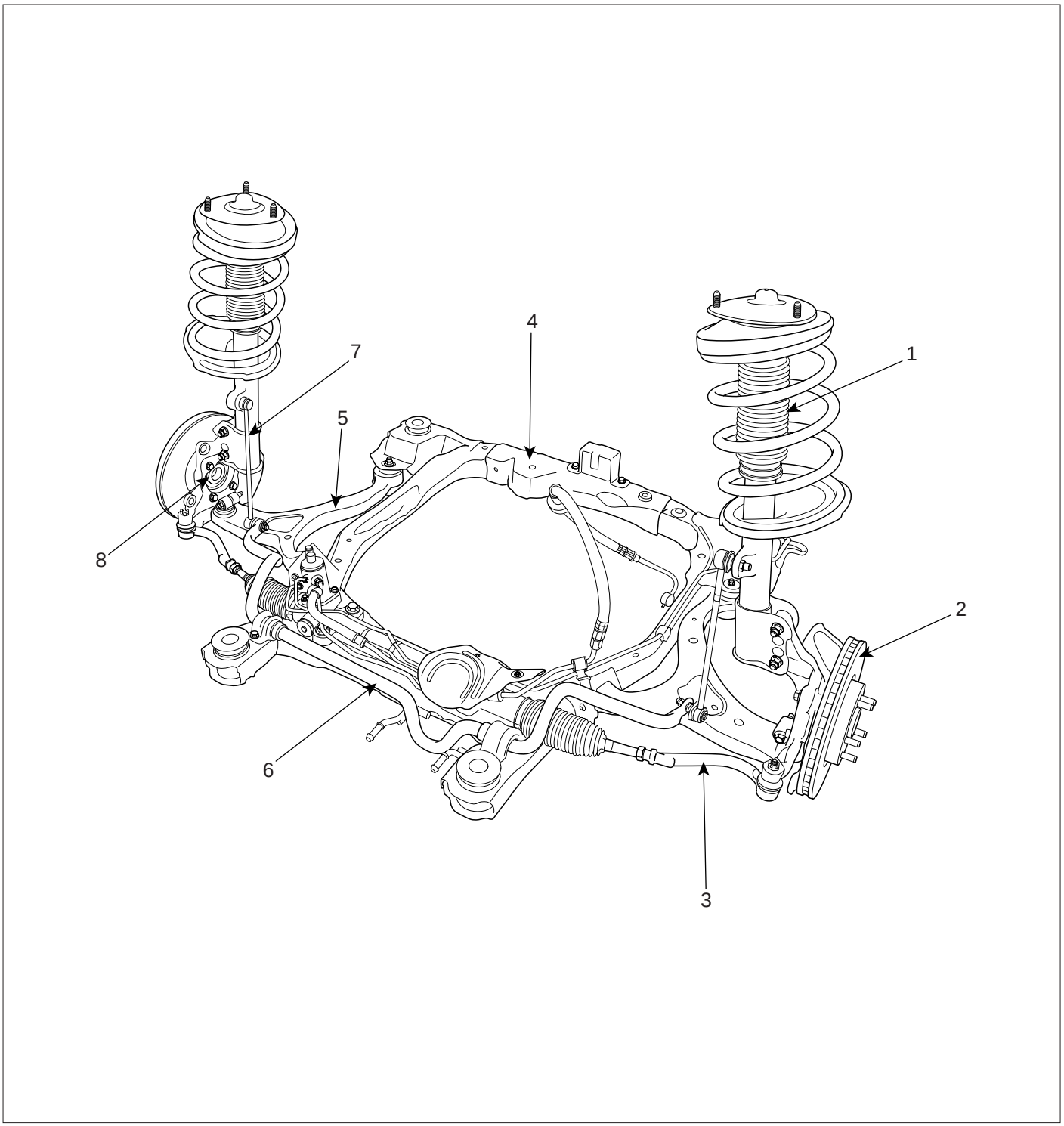

1. Front strut assembly
2. Front disc
3. Tie rod end assembly
4. Front subframe
5. Front lower arm
6. Front stabilizer bar assembly
7. Front stabilizer link assembly
8. Front knuckle assembly

SCMSS6500L

FRONT STRUT ASSEMBLY

COMPONENTS E41E65D1

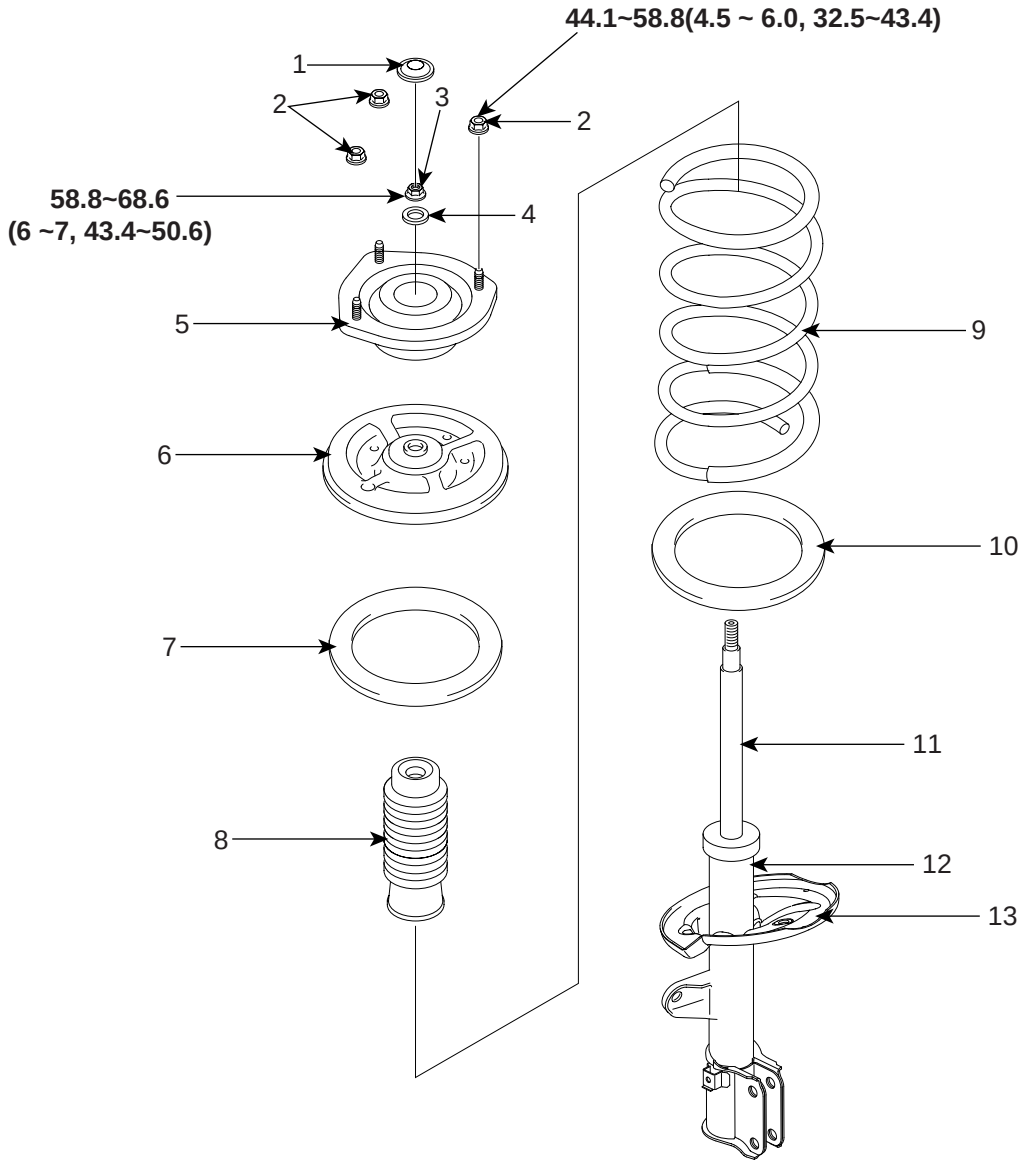

TORQUE : Nm (kgf.m, lb-ft)

1. Dust cover
2. Upper mounting nut
3. Self-locking nut
4. Spacer
5. Insulator
6. Spring upper seat
7. Spring upper pad
8. Strut dust cover and bumper rubber
9. Coil spring
10. Spring lower pad
11. Piston rod
12. Strut assembly
13. Spring lower seat

SCMSS6501L

REMOVAL EDC68431

1. Loosen the wheel nuts slightly.
   Raise the vehicle, and make sure it is securely supported.

2. Remove the front wheel and tire (A) from the front hub (B).

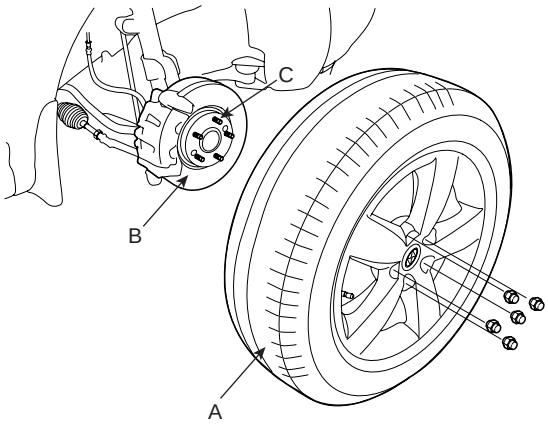

SCMSS6502D

CAUTION

Be careful not to damage to the hub bolts (C) when removing the front wheel and tire (A).

3. Remove the front stabilizer link (A) from the strut assembly.

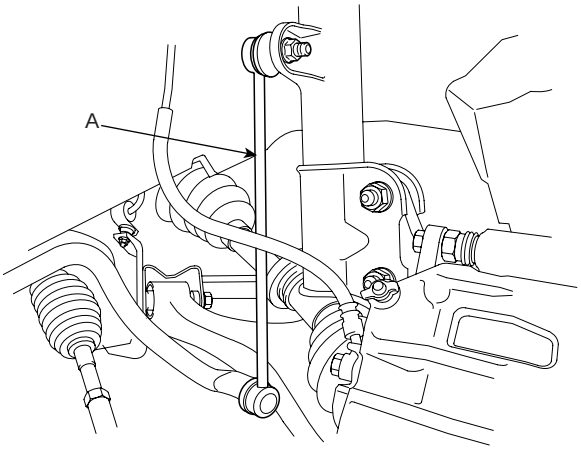

SCMSS6503D

4. Remove the strut upper mounting nuts (A).

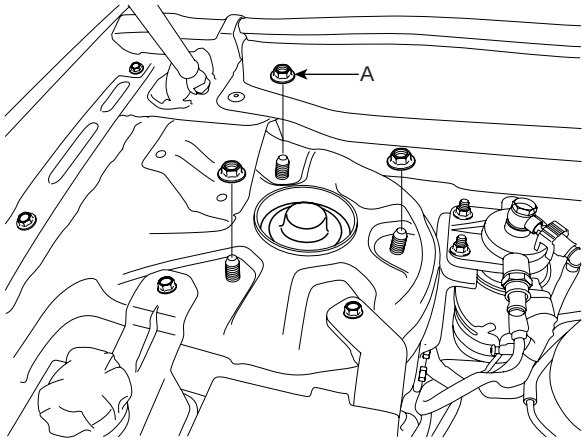

SCMSS6001D

5. Remove the wheel speed sensor cable (A) and strut lower mounting bolts (B), then remove the strut assembly.

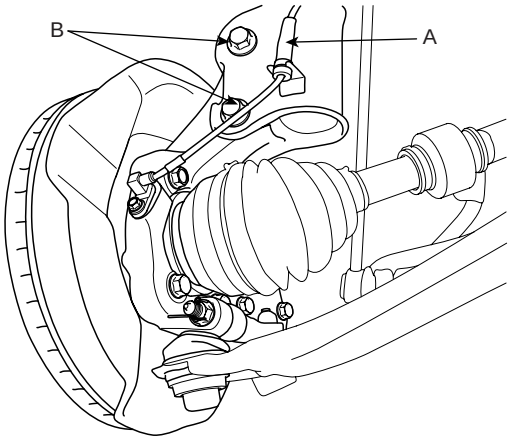

SCMSS6030D

DISASSEMBLY ECD04DAF

1. Remove the dust cover (A).

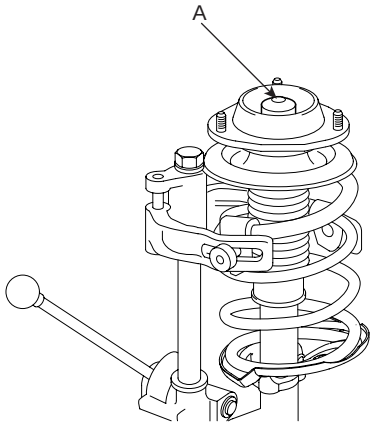

SCMSS6525D

2. Using the special tool (09546-26000), compress the coil spring (A).

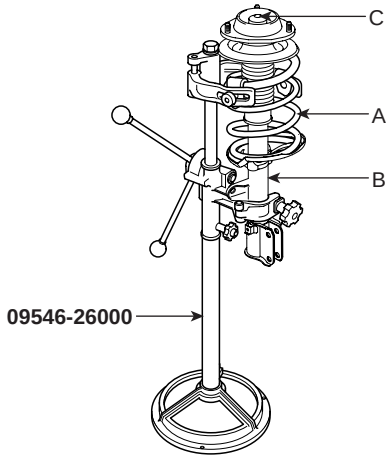

KHQE110C

3. Remove the self-locking nut (C) from the strut assembly(B).

4. Remove the insulator, spring seat, coil spring and dust cover from the strut assembly.

INSPECTION E1755BFA

1. Check the strut insulator for wear or damage.

2. Check rubber parts for damage or deterioration.

3. Compress and extend the piston rod (A) and check that there is no abnormal resistance or unusual sound during operation.

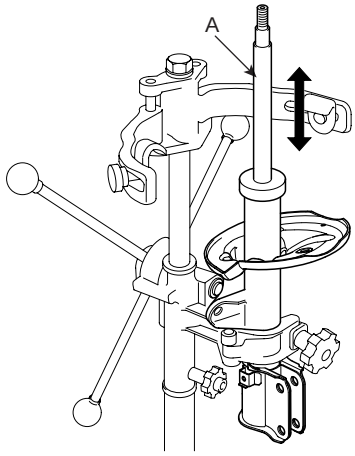

KHQE120A

DISPOSAL

1. Fully extend the piston rod.

2. Drill a hole on the A section to remove gas from the cylinder.

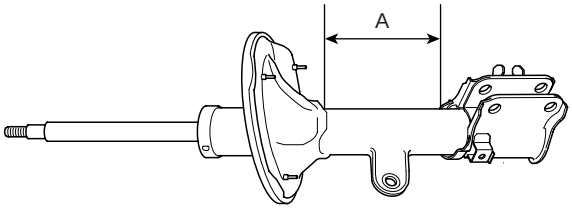

KHQE121A

CAUTION

The gas coming out is harmless, but be careful of chips that may fly when drilling.
Be sure to wear safety goggles or eye protection when performing this task.

REASSEMBLY EEA17FEF

1. Install the spring lower pad (D) so that the protrusions(A) fit in the holes (C) in the spring lower seat (B).

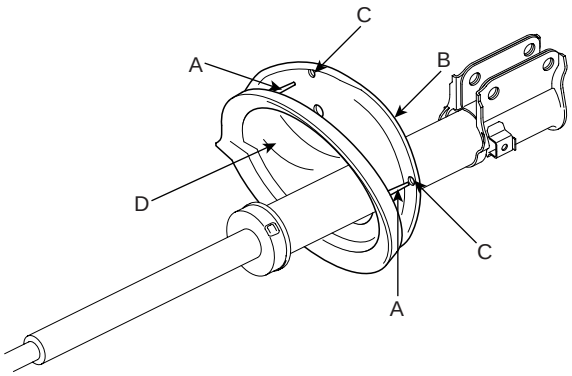

KHQE130A

2. Compress coil spring using special tool (09546-26000). Install compressed coil spring into shock absorber.

NOTE

a. Indicated identification color marks on the coil spring. Pay attention to identification mark and then install them.

b. Install the coil spring with the identification mark directed toward the knuckle.

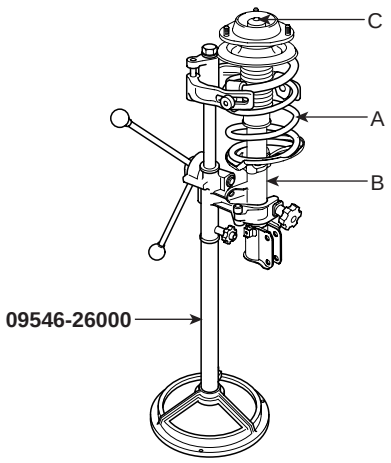

KHQE110C

3. After fully extending the piston rod, install the spring upper seat and insulator assembly.

4. After seating the upper and lower ends of the coil spring (A) in the upper and lower spring seat grooves (B) correctly, tighten new self-locking nut temporarily.

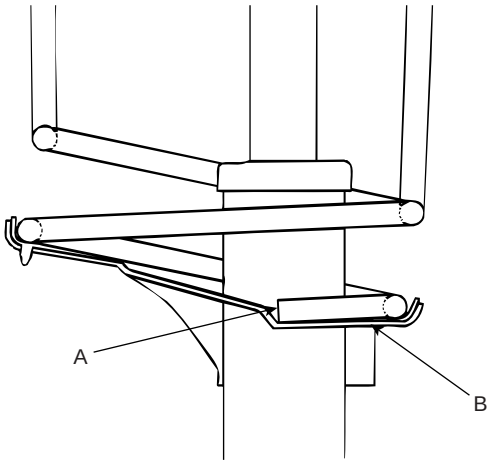

KSMSS44B

5. Remove the special tool (09546-26000).

6. Tighten the self-locking nut to the specified torque.

Tightening torque Nm (kgf-m, lb-ft) :
58.8~68.6 (6~7, 43.4~50.6)

INSTALLATION E16F245F

1. Install the strut assembly and then tighten the strut upper mounting nuts (A).

Tightening torque Nm (kgf-m, lb-ft) :
44.1~58.8 (4.5~6.0, 32.5~43.4)

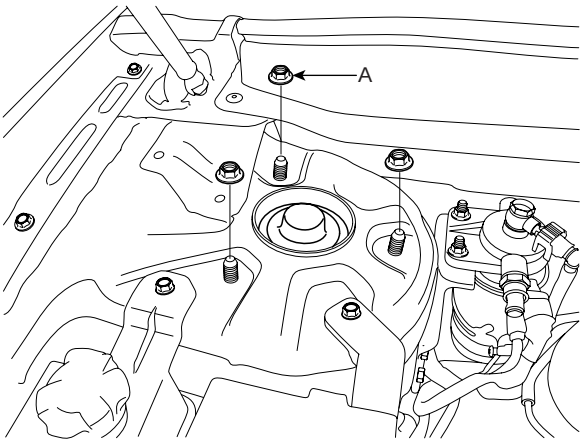

SCMSS6001D

2. Install the wheel speed sensor cable(A) and strut lower mounting bolts(B).

Tightening torque Nm (kgf-m, lb-ft) :
Bolt(B) : 152.0~171.6 (15.5~17.5, 112.1~126.6)

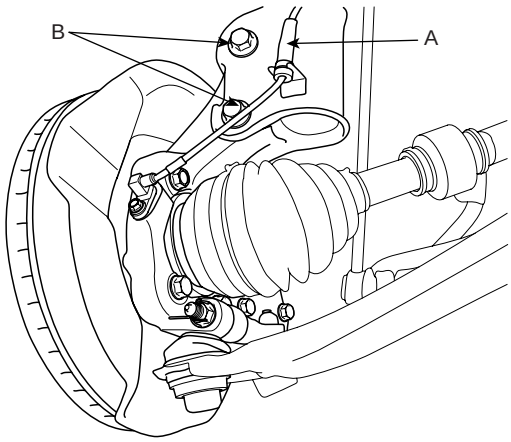

SCMSS6030D

3. Install the front stabilizer link (A) to the strut assembly.

Tightening torque Nm (kgf-m, lb-ft) :
Nut(B) : 98.1~117.7 (10.0~12.0, 72.3~86.8)

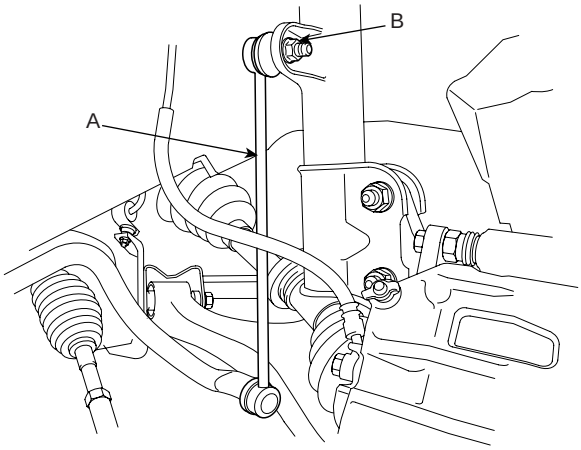

SCMSS6504D

4. Install the wheel and tire (A) to the front hub (B).

Tightening torque Nm (kgf-m, lb-ft) :
88.3~107.9 (9~11, 65.1~79.6)

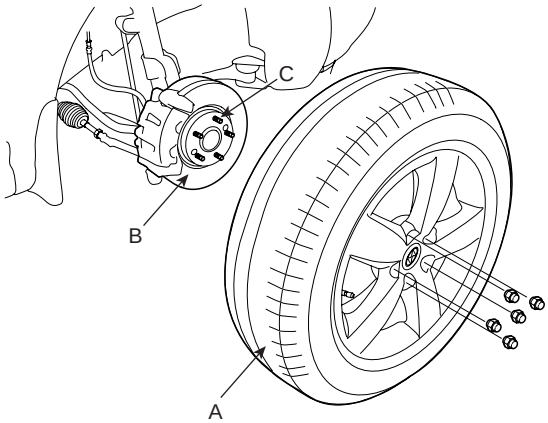

SCMSS6502D

CAUTION

Be careful not to damage the hub bolts (C) when installing the front wheel and tire (A).

FRONT LOWER ARM

COMPONENT EA0C06AB

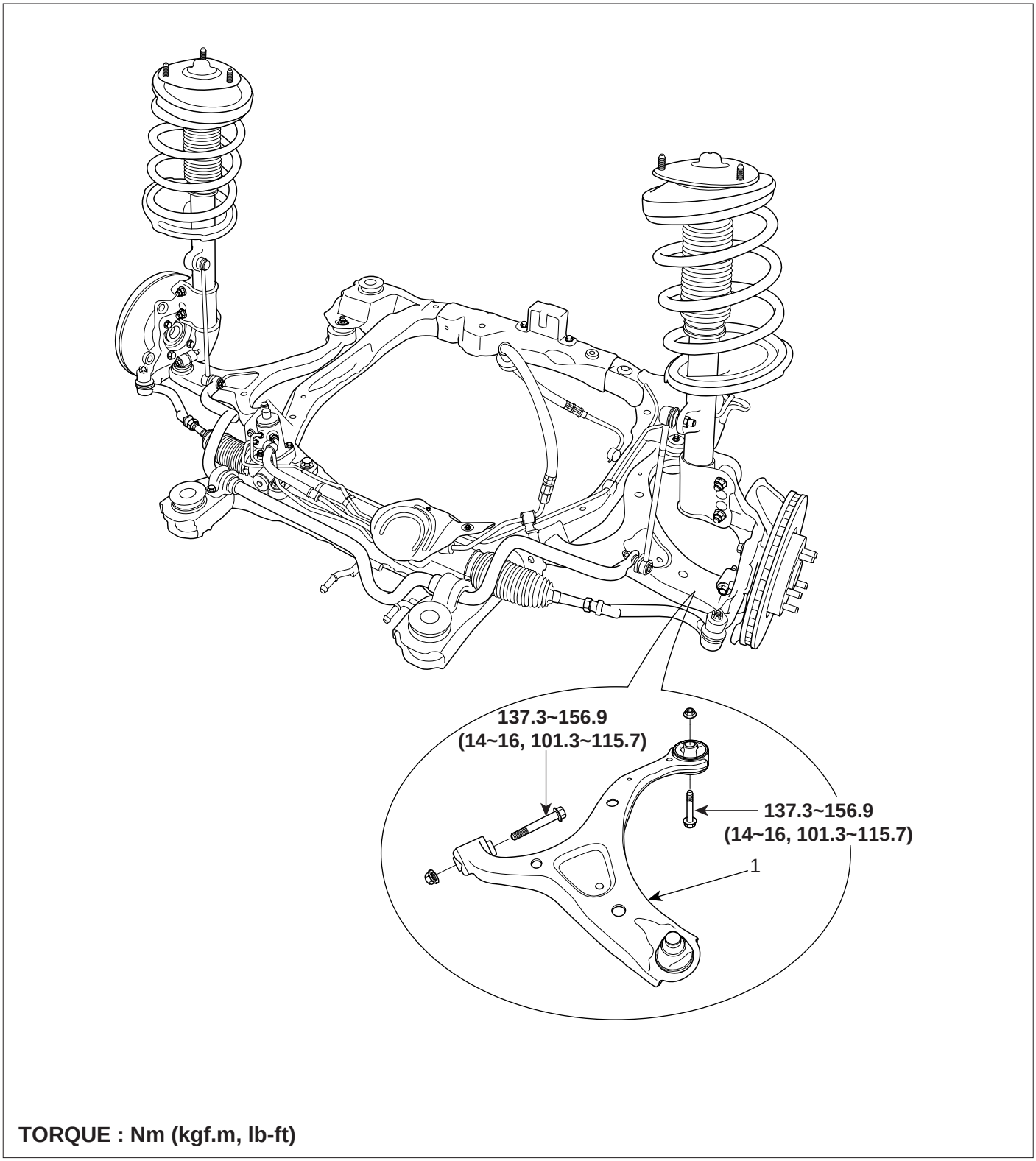

1. Front lower arm

SCMSS6502L

REMOVAL E1F461EA

1. Loosen the wheel nuts slightly.
   Raise the vehicle, and make sure it is securely supported.

2. Remove the front wheel and tire (A) from the front hub (B).

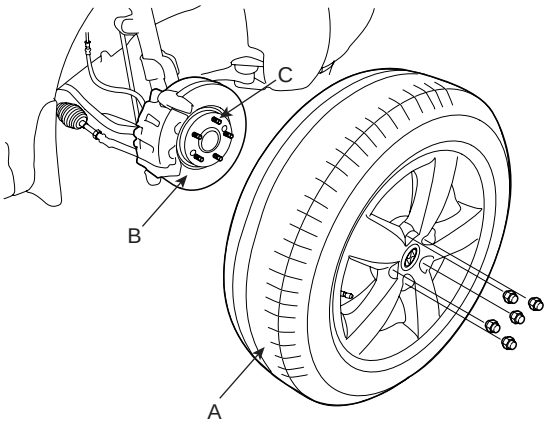

SCMSS6502D

CAUTION

Be careful not to damage to the hub bolts (C) when removing the front wheel and tire (A).

3. Remove the split pin and front lower arm mounting bolt (B) from the knuckle (A).

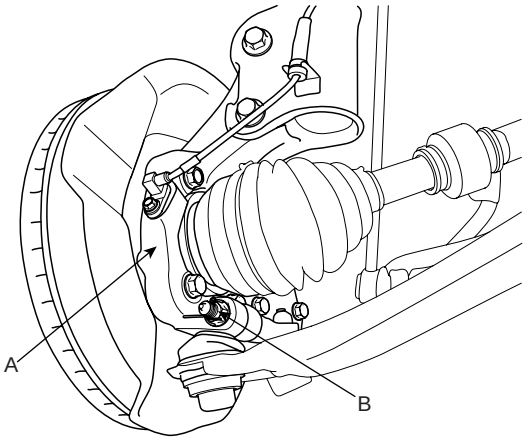

SCMSS6505D

4. Remove the lower arm mounting bolts (A,B) and then remove the lower arm.

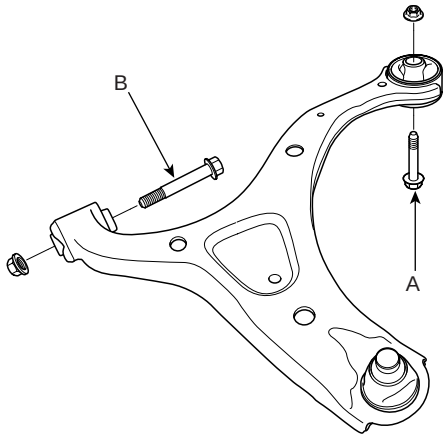

SCMSS6002D

CAUTION

If the bush is excessive worn and damaged, replace the lower arm assembly.

INSPECTION ECA7D9CF

1. Check the bushing for wear and deterioration.
2. Check the lower arm for bending or breakage.
3. Check the ball joint dust cover for cracks.
4. Check all bolts.

INSTALLATION EFFDBA92

1. Install the lower arm and then tighten the lower arm mounting bolts (A, B).

Tightening torque Nm (kgf-m, lb-ft) :
Bolt(A) : 137.3~156.9 (14~16, 101.3~115.7)
Bolt(B) : 137.3~156.9 (14~16, 101.3~115.7)

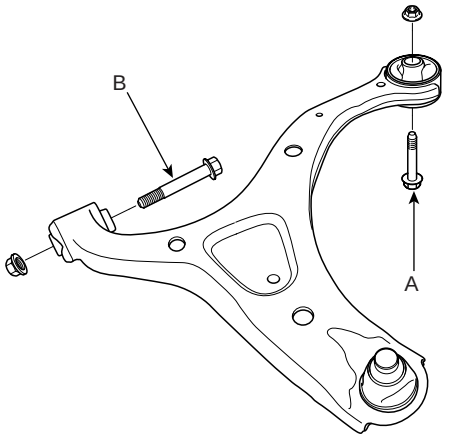

SCMSS6002D

2. Install the split pin and front lower arm mounting bolt (B) to the knuckle (A).

Tightening torque Nm (kgf-m, lb-ft) :
98.1~117.7 (10.0~12.0, 72.3~86.8)

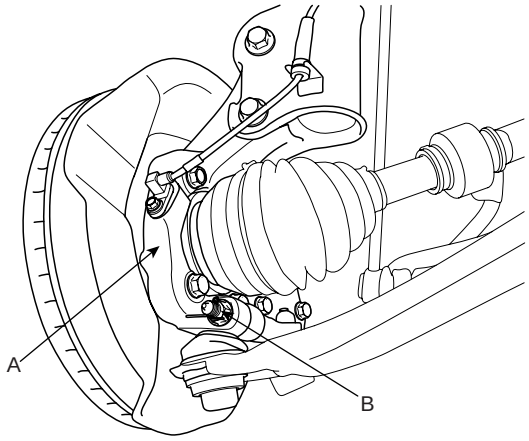

SCMSS6505D

3. Install the wheel and tire (A) to the front hub (B).

Tightening torque Nm (kgf-m, lb-ft) :
88.3~107.9 (9~11, 65.1~79.6)

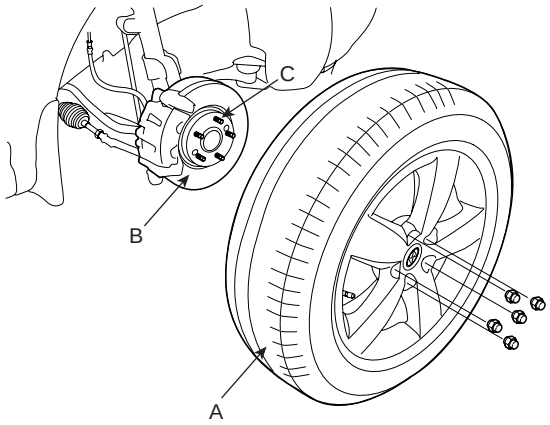

SCMSS6502D

CAUTION

Be careful not to damage the hub bolts(C) when installing the front wheel and tire (A).

FRONT STABILIZER BAR

COMPONENT EA57CFB0

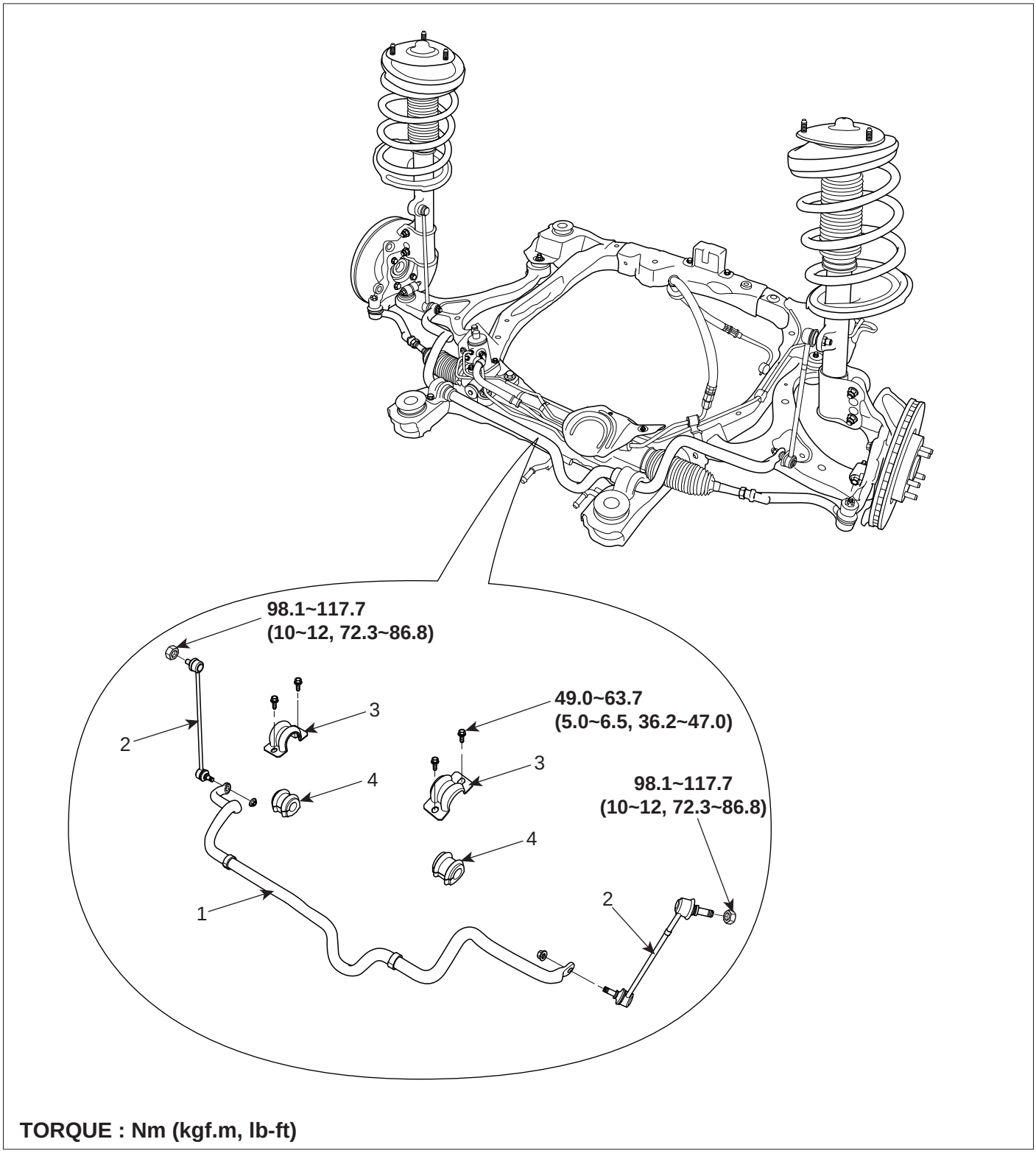

TORQUE : Nm (kgf.m, lb-ft)

1. Front stabilizer bar
2. Front stabilizer link
3. Front stabilizer bar bracket
4. Front stabilizer bushing

SCMSS6503L

REMOVAL EBD7E8CF

1. Loosen the wheel nuts slightly.
   Raise the vehicle, and make sure it is securely supported.

2. Remove the front wheel and tire (A) from the front hub (B).

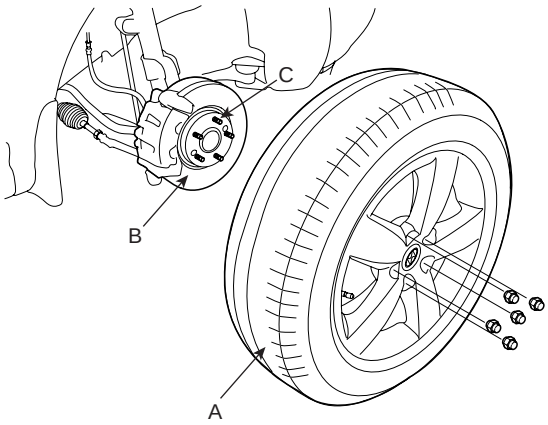

SCMSS6502D

CAUTION

Be careful not to damage to the hub bolts (C) when removing the front wheel and tire (A).

3. Remove the front stabilizer link (A) from the strut assembly.

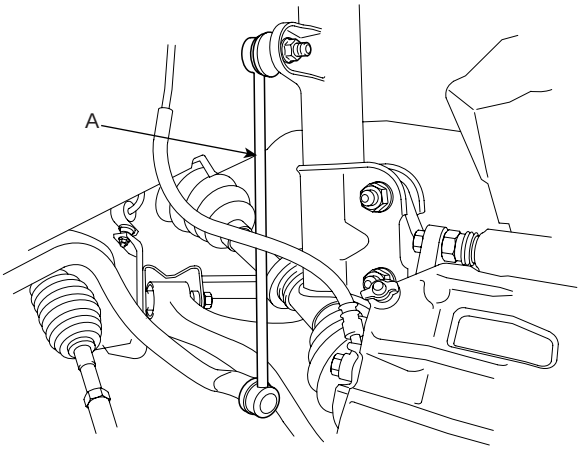

SCMSS6503D

4. Remove the split pin and front lower arm mounting bolt (B) from the knuckle (A).

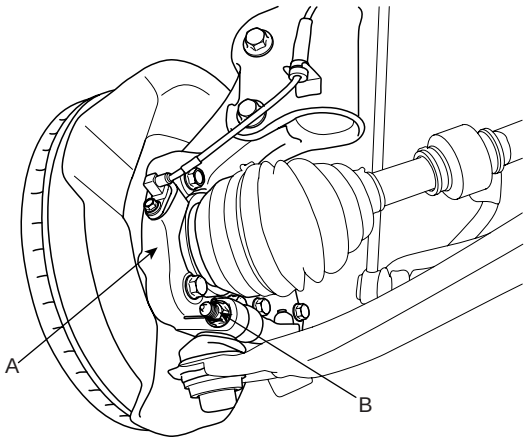

SCMSS6505D

5. Remove the under cover (A).

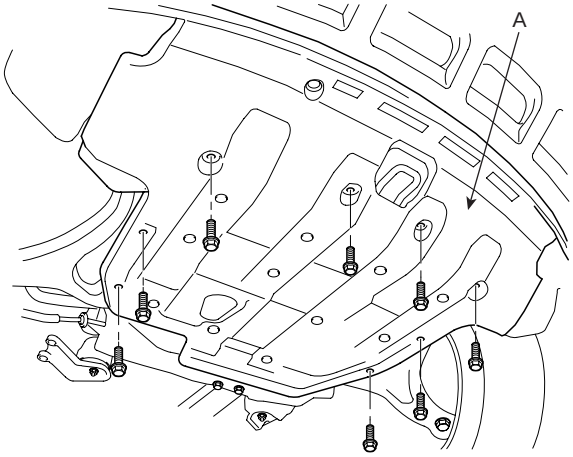

SCMSS6506D

6. Remove the connecting bolt (A) between the steering universal joint assembly and the pinion shaft.

7. Disconnect the EPS connector (B).

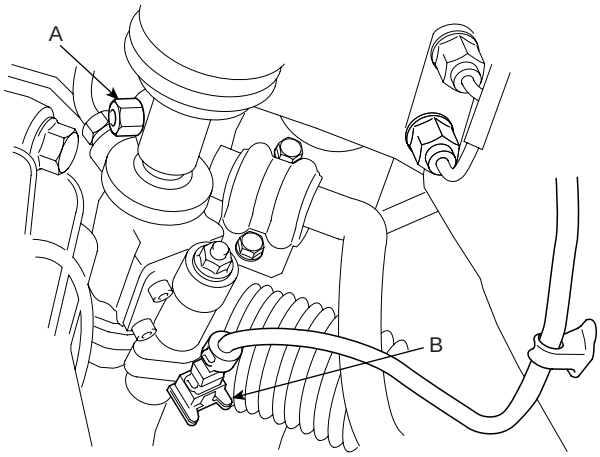

SCMSS6507D

8. Remove the front muffler (A).

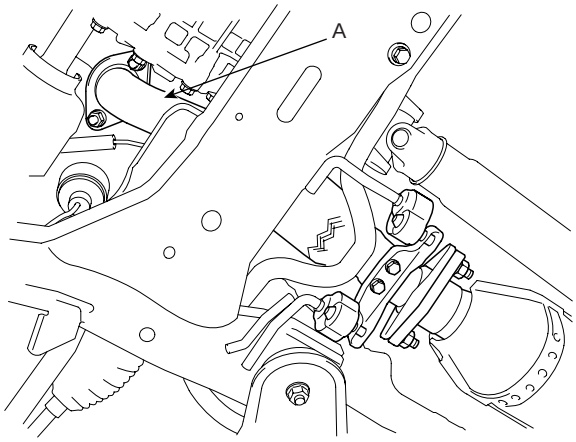

SCMSS6508D

9. Remove the front roll stopper mounting bolts (A).

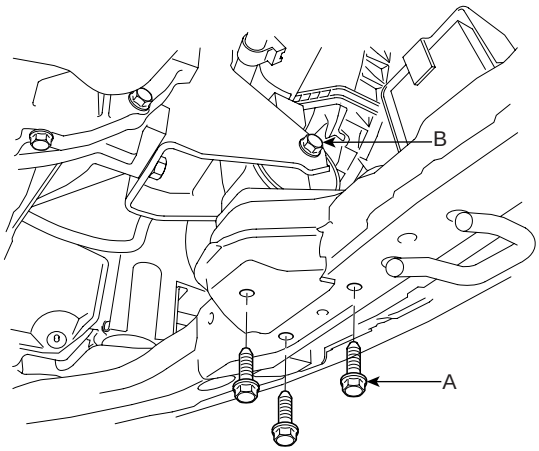

SCMSS6509D

10. Remove the rear roll stopper mounting bolts (A).

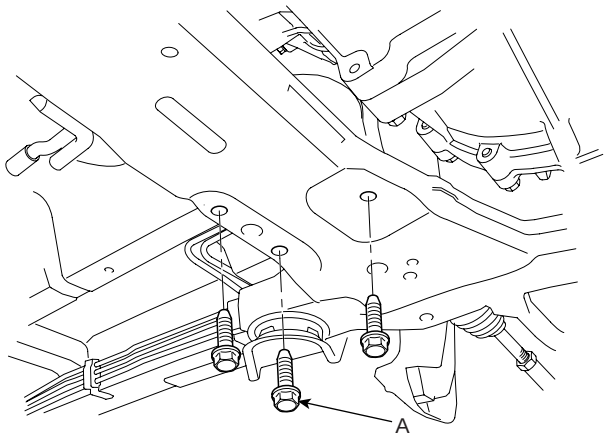

SCMSS6510D

11. Remove the sub frame stay mounting bolts (A), nuts (B) and the sub frame mounting bolts (C) by supporting it with a jack.

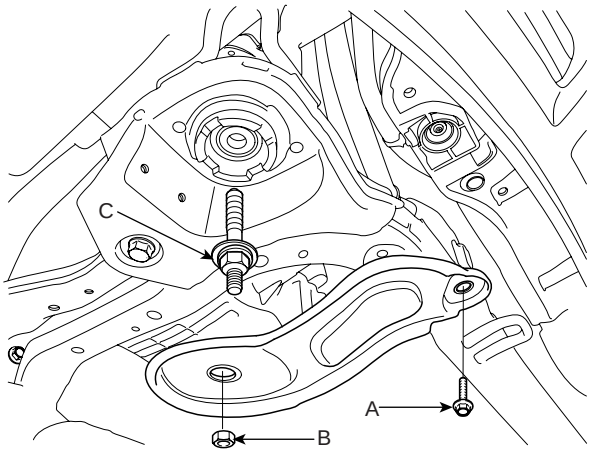

SCMSS6004D

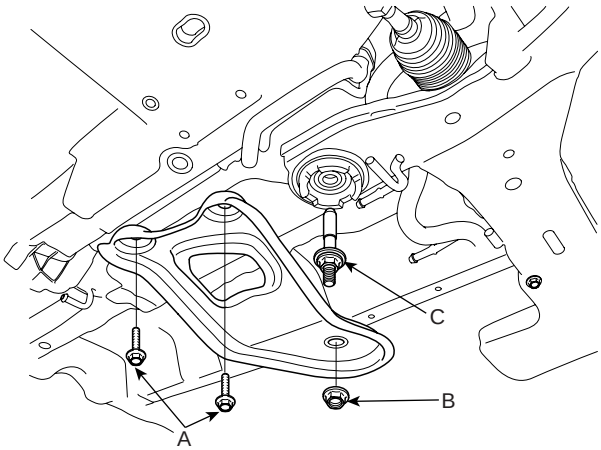

SCMSS6005D

12. Remove the sub frame (A).

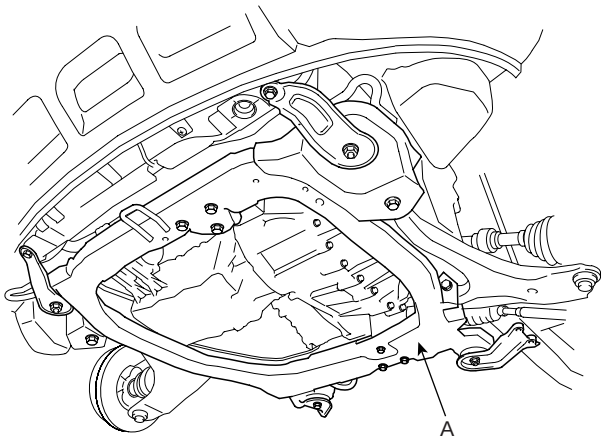

SCMSS6511D

13. Remove the stabilizer bar bracket (A) mounting bolts (B) from the sub frame.

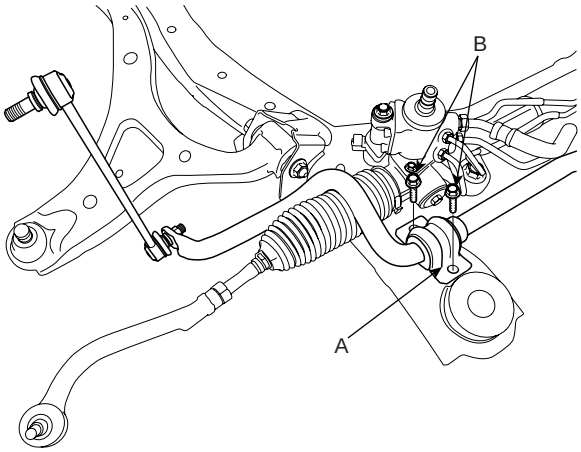

SCMSS6006D

14. Remove the stabilizer bar.

INSPECTION EEE538DD

1. Check the bushing for wear and deterioration.
2. Check the stabilizer bar for bending or breakage.
3. Check the ball joint dust cover for cracks.
4. Check all bolts.

INSTALLATION E2DAFBCB

1. Install the bushing (B) on the stabilizer bar (A).

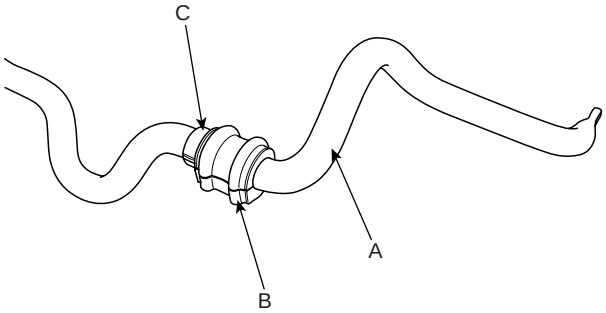

SCMSS6007D

NOTE

Bring clamp (C) of stabilizer bar (A) into contact with bushing (B).

2. Install the bracket on the bushing (B).
3. Install the stabilizer bar to the sub frame.
4. Install the stabilizer bar bracket (A) mounting bolts (B).

Tightening torque Nm (kgf-m, lb-ft) :
Bolt(B) : 49.0~63.7 (5.0~6.5, 36.2~47.0)

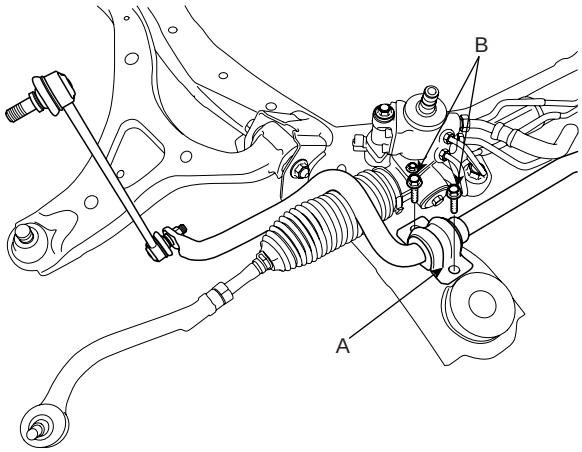

SCMSS6006D

5. Install the sub frame (A) by supporting it with a jack.

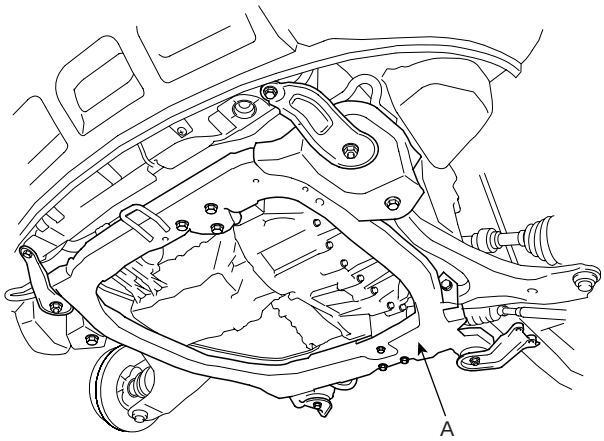

SCMSS6511D

6. Install the sub frame stay mounting bolts(A), nuts(B) and the sub frame mounting bolts(C).

Tightening torque Nm (kgf-m, lb-ft) :
Bolt(A) : 68.6~88.3 (7.0~9.0, 50.6~65.1)
Nut(B) : 68.6~88.3 (7.0~9.0, 50.6~65.1)
Bolt(C) : 137.3~156.9 (14~16, 101.3~115.7)

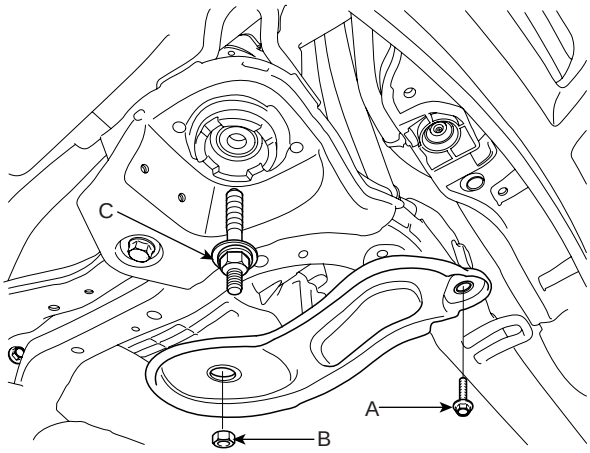

SCMSS6004D

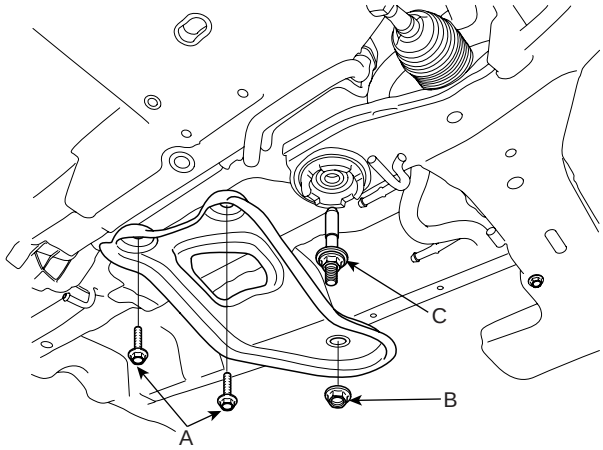

SCMSS6005D

7. Install the front roll stopper mounting bolts (A).

Tightening torque Nm (kgf-m, lb-ft) :
Bolt(A) : 49.0~63.7 (5.0~6.5, 36.2~47.0)
Bolt(B) : 78.5~98.1 (8.0~10.0, 57.9~72.3)

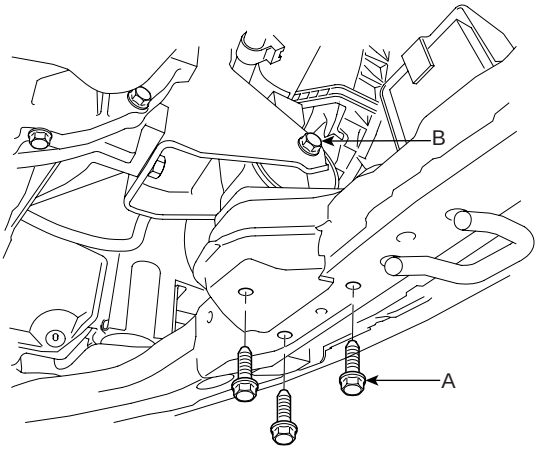

SCMSS6509D

8. Install the rear roll stopper mounting bolts (A).

Tightening torque Nm (kgf-m, lb-ft) :
Bolt(A) : 49.0~63.7 (5.0~6.5, 36.2~47.0)

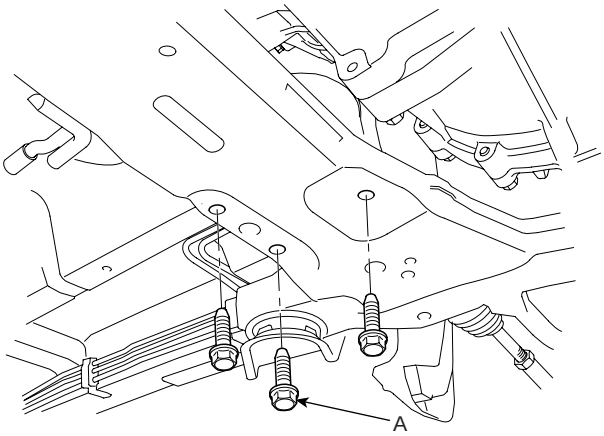

SCMSS6510D

9. Install the front muffler (A).

Tightening torque Nm (kgf-m, lb-ft) :
39.2~58.8 (4.0~6.0, 28.9~43.4)

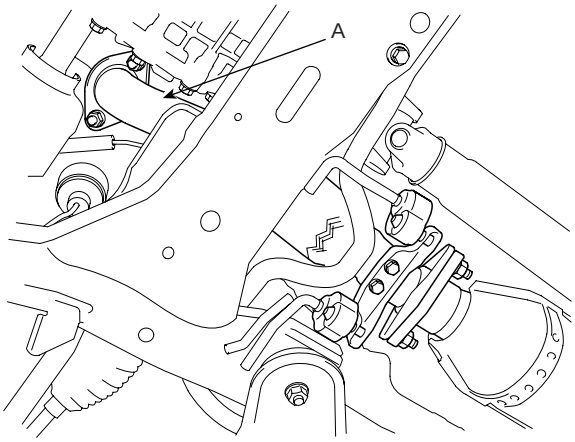

SCMSS6508D

10. Install the connecting bolt (A) between the steering universal joint assembly and the pinion shaft.

Tightening torque Nm (kgf-m, lb-ft) :
29.4~44.1 (3.0~4.5, 21.7~32.5)

11. Reconnect the EPS connector (B).

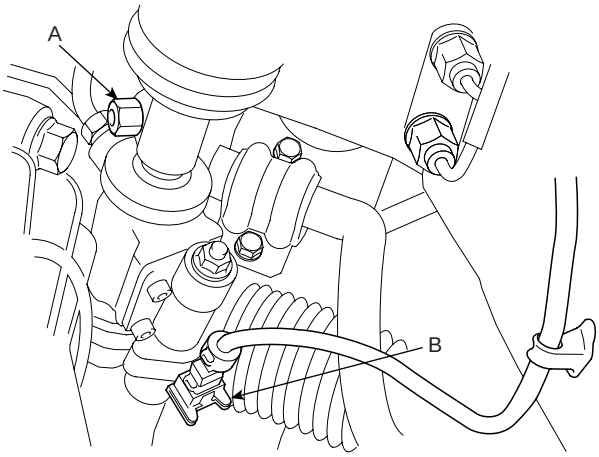

SCMSS6507D

12. Install the under cover (A).

Tightening torque Nm (kgf-m, lb-ft) :
16.7~25.5 (1.7~2.6, 12.3~18.8)

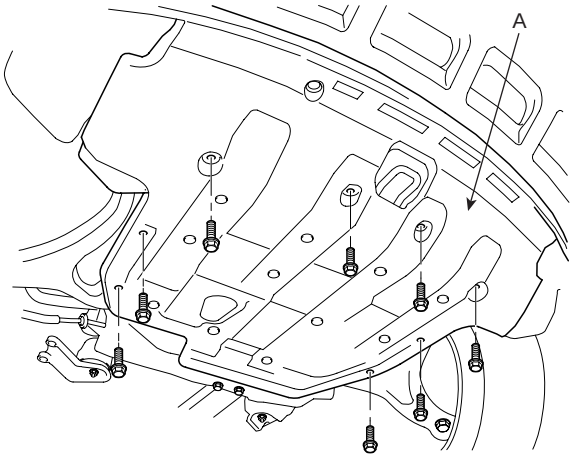

SCMSS6506D

13. Install the split pin and front lower arm mounting bolt (B) to the knuckle (A).

Tightening torque Nm (kgf-m, lb-ft) :
98.1~117.7 (10.0~12.0, 72.3~86.8)

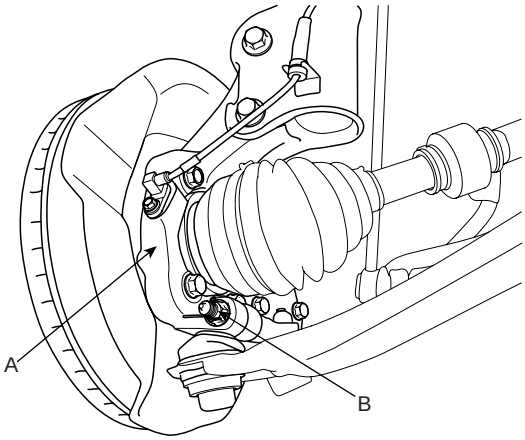

SCMSS6505D

14. Install the front stabilizer link (A) to the strut assembly.

Tightening torque Nm (kgf-m, lb-ft):
Nut(B) : 98.1~117.7 (10.0~12.0, 72.3~86.8)

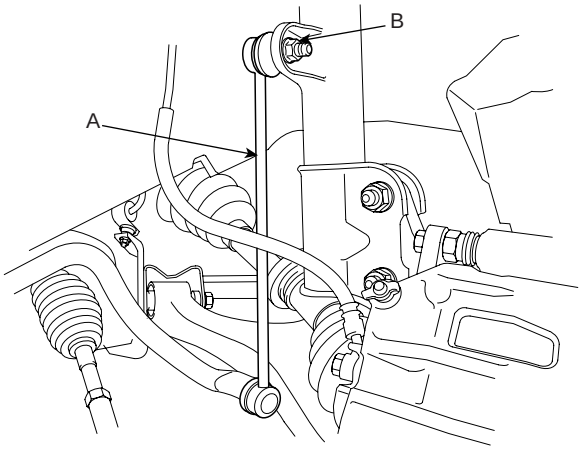

SCMSS6504D

15. Install the wheel and tire (A) to the front hub (B).

Tightening torque Nm (kgf-m, lb-ft):
88.3~107.9 (9~11, 65.1~79.6)

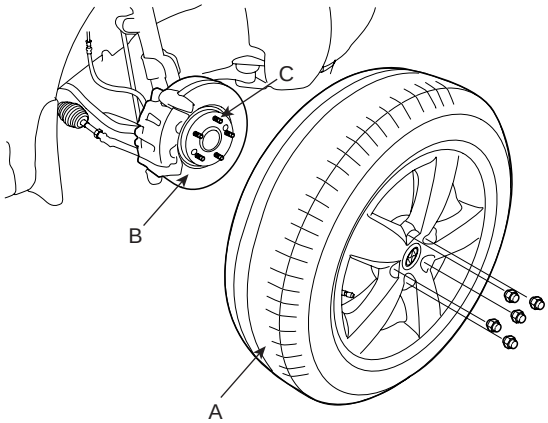

SCMSS6502D

CAUTION

Be careful not to damage the hub bolts (C) when installing the front wheel and tire (A).

REAR SUSPENSION SYSTEM

COMPONENT E0ADC96A

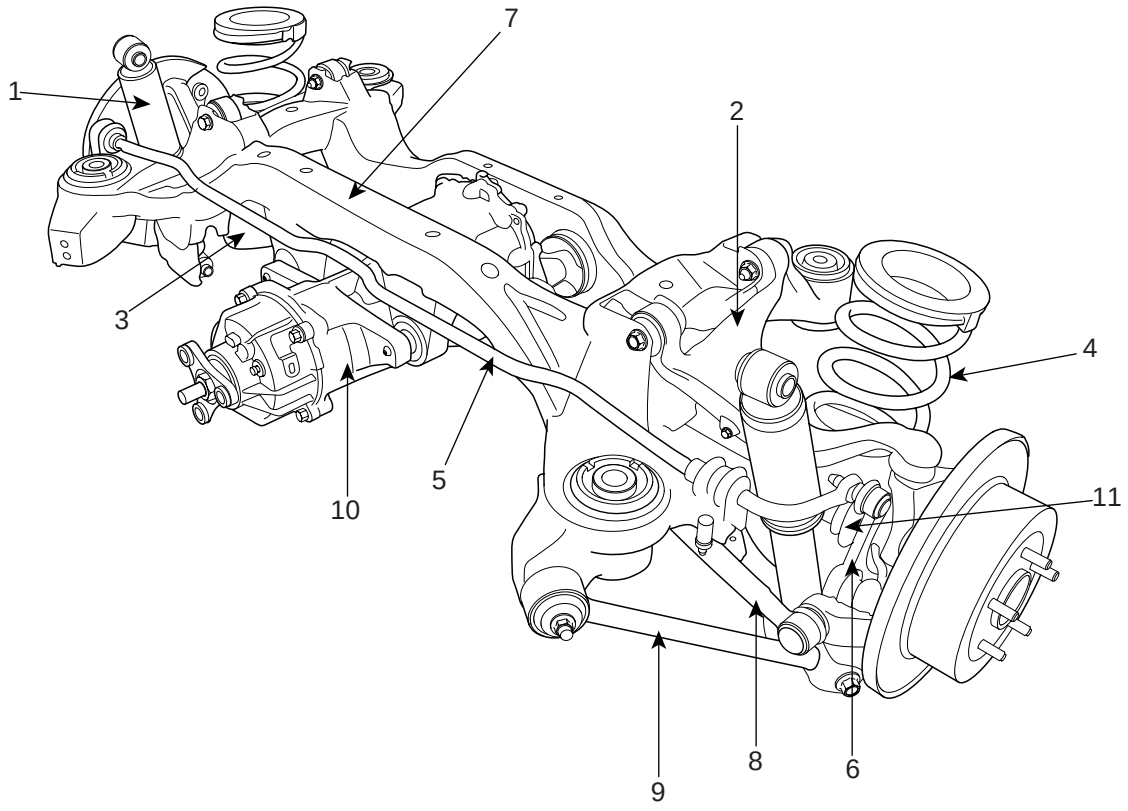

1. Rear shock absorber assembly
2. Rear upper arm
3. Rear lower arm
4. Rear coil spring
5. Rear stabilizer bar assembly
6. Rear stabilizer link assembly
7. Rear cross member
8. Rear assist arm
9. Trailing arm
10. Differential Carrier (4WD)
11. Drive shaft (4WD)

SCMSS6504L

REAR SHOCK ABSORBER

COMPONENT EFEACBB1

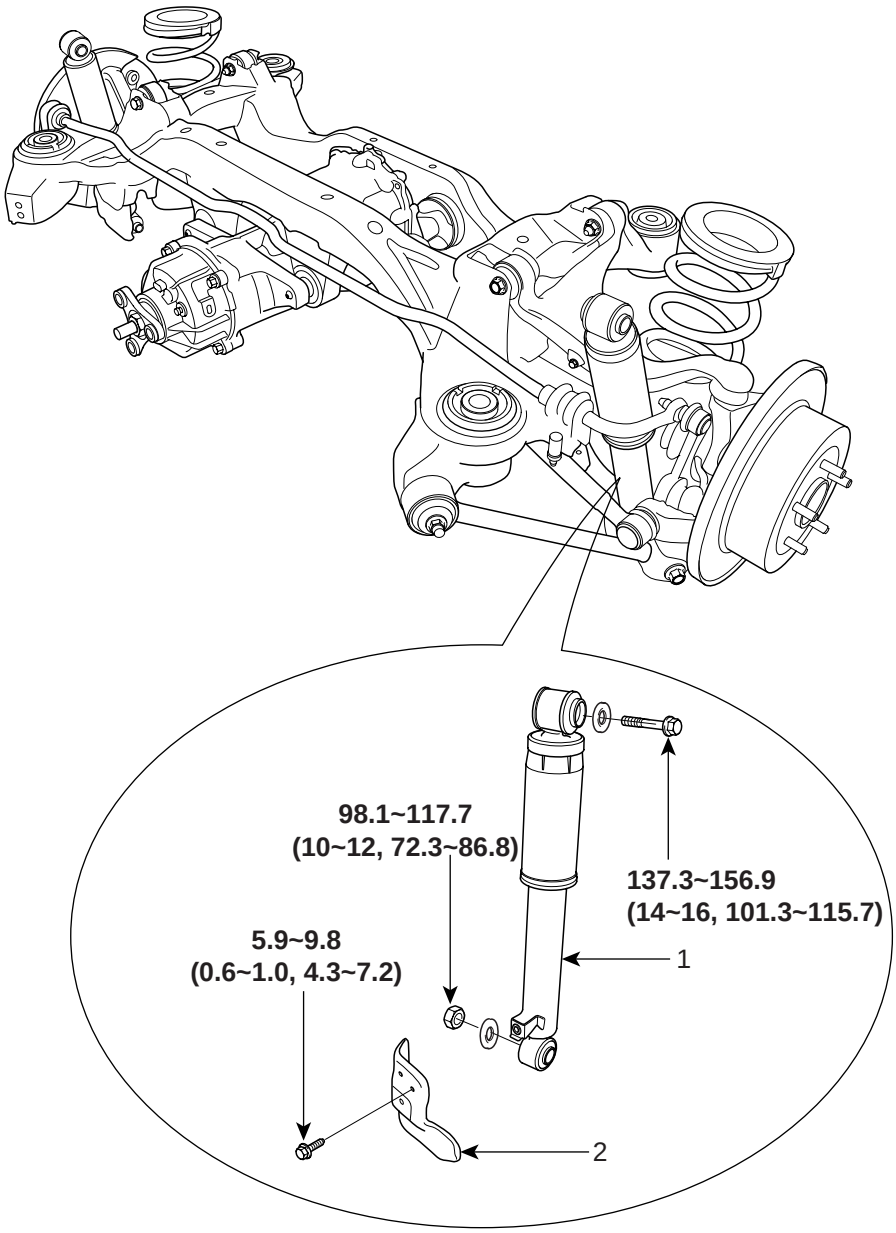

TORQUE : Nm (kgf.m, lb-ft)

1. Rear shock absorber
2. Dust cover

SCMSS6505L

REMOVAL E01096EE

1. Loosen the wheel nuts slightly.
   Raise the vehicle, and make sure it is securely supported.

2. Remove the rear wheel and tire (A) from the rear hub (B).

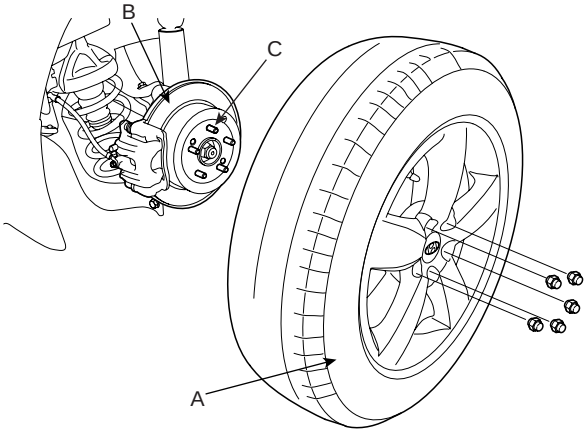

SCMSS6512D

CAUTION

Be careful not to damage to the hub bolts (C) when removing the rear wheel and tire (A).

3. Support the rear lower arm with a jack as shown in the illustration.

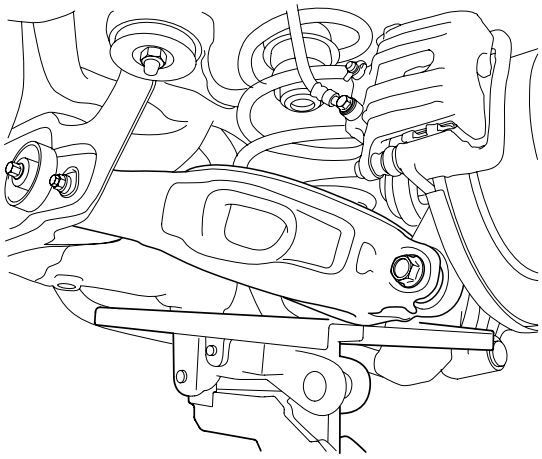

SCMSS6526D

4. Remove the rear shock absorber(A).

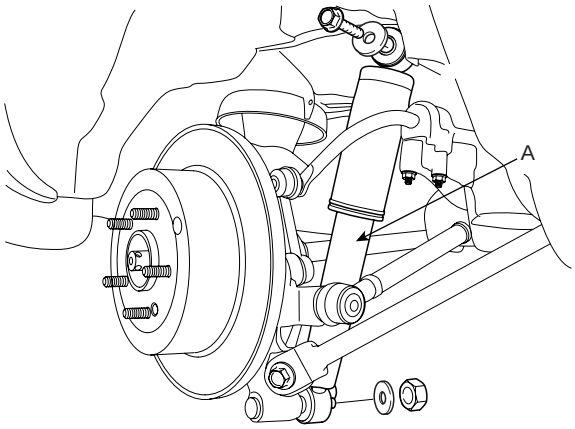

SCMSS6514D

CAUTION

If the bush is excessive worn and damaged, replace the shock absorber assembly.

INSPECTION EFF7BFD5

1. Check the rubber parts for damage or deterioration.
2. Check the shock absorber for abnormal resistance or unusual sounds.

DISPOSAL

1. Fully extend the shock absorber rod.
2. Drill a hole to remove gas from the cylinder.

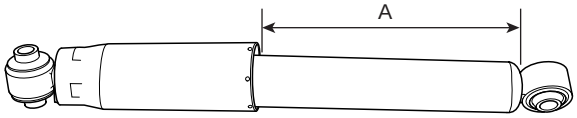

AHKF210G

CAUTION

The gas coming out is harmless, but be careful of chips that may fly up when drilling. Be sure to use face shield and safety goggles.

INSTALLATION E6FBAED1

1. Support the rear lower arm with a jack as shown in the illustration.

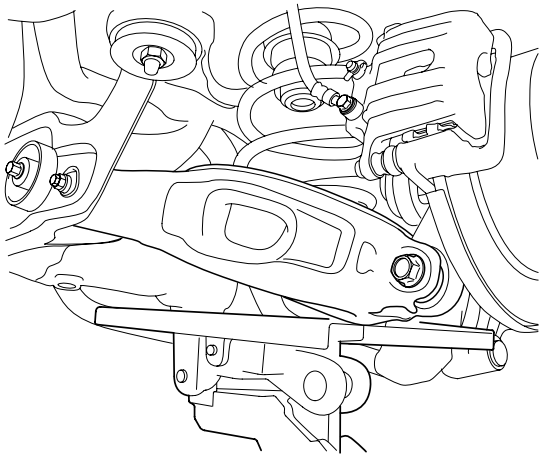

SCMSS6526D

2. Install the rear shock absorber (A).

Tightening torque Nm (kgf-m, lb-ft) :
Bolt(B) : 137.3~156.9 (14~16, 101.3~115.7)
Nut(C) : 98.1~117.7 (10.0~12.0, 72.3~86.8)

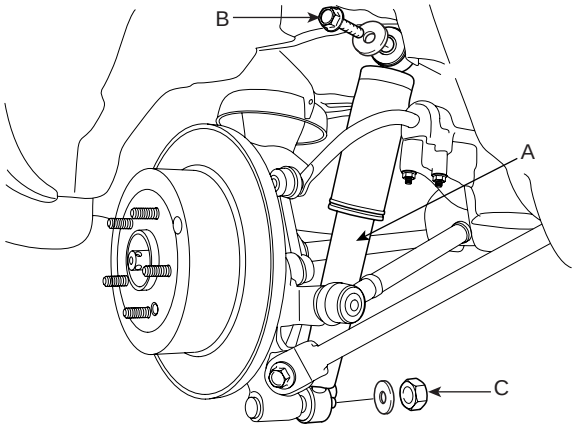

SCMSS6527D

NOTE

After checking the distance(453±10mm(17.83 ±0.39in)) between the wheel housing garnish (A) and the hub assembly (B) as shown in the illustration, tighten the mounting bolts and nuts of rear chassis part with specified torque.

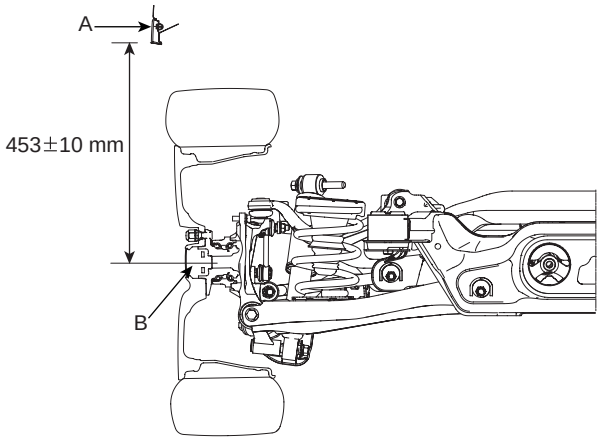

SCMSS6528D

3. Install the wheel and tire (A) to the rear hub (B).

Tightening torque Nm (kgf-m, lb-ft) : 88.3~107.9 (9~11, 65.1~79.6)

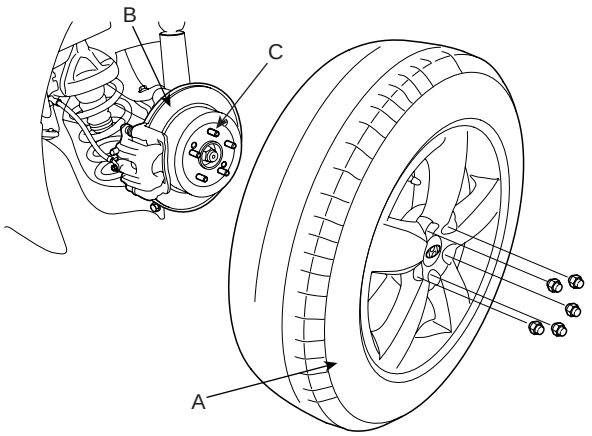

SCMSS6512D

CAUTION

Be careful not to damage the hub bolts (C) when installing the rear wheel and tire (A).

REAR UPPER ARM

COMPONENT E2E5AEF7

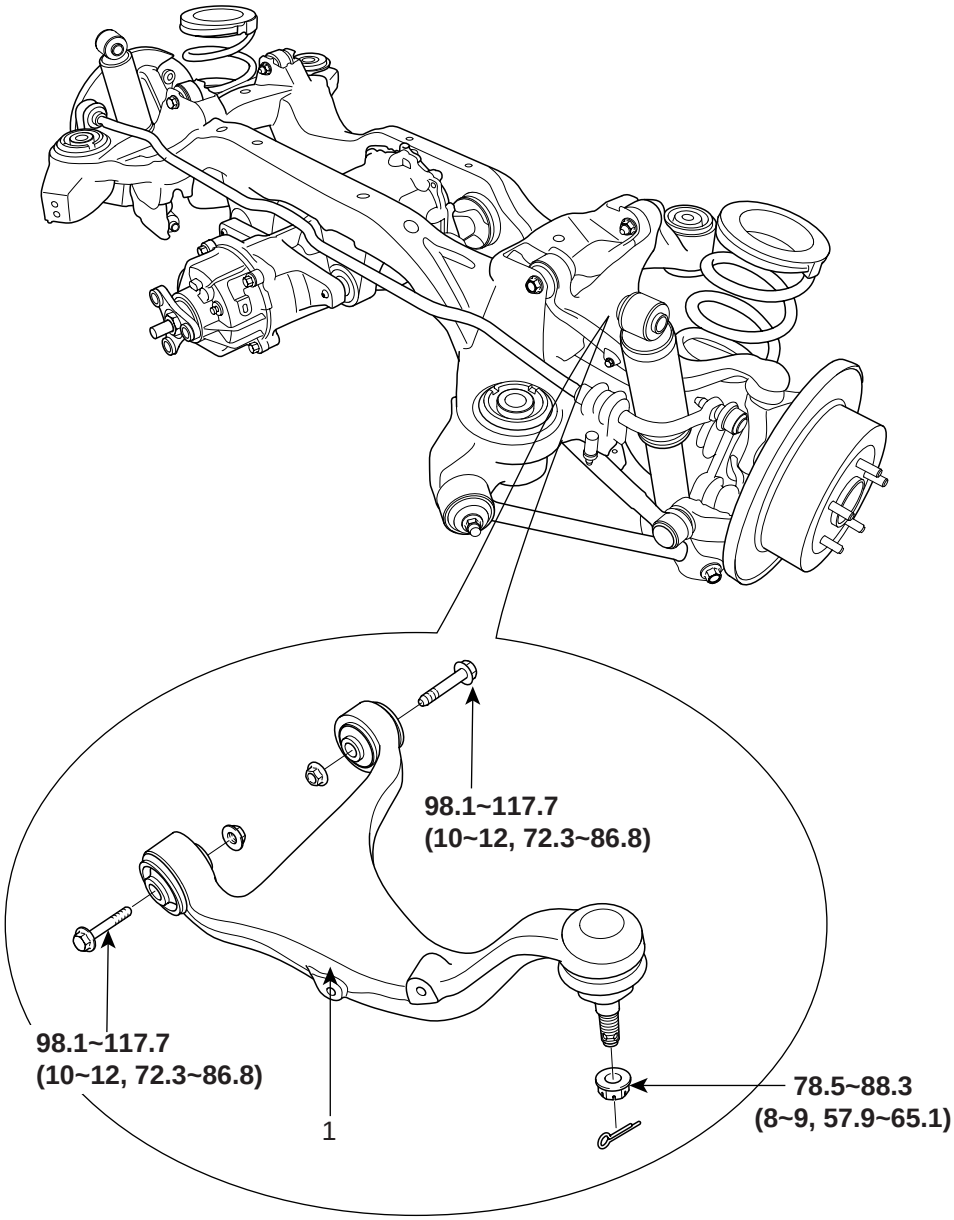

TORQUE : Nm (kgf.m, lb-ft)

1. Rear upper arm

SCMSS6506L

REMOVAL E56EEAC8

1. Loosen the wheel nuts slightly.
   Raise the vehicle, and make sure it is securely supported.

2. Remove the rear wheel and tire (A) from the rear hub (B).

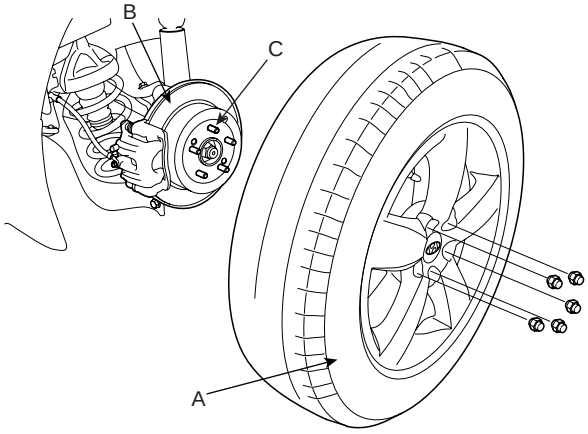

SCMSS6512D

CAUTION

Be careful not to damage to the hub bolts (C) when removing the rear wheel and tire (A).

3. Support the rear lower arm with a jack as shown in the illustration.

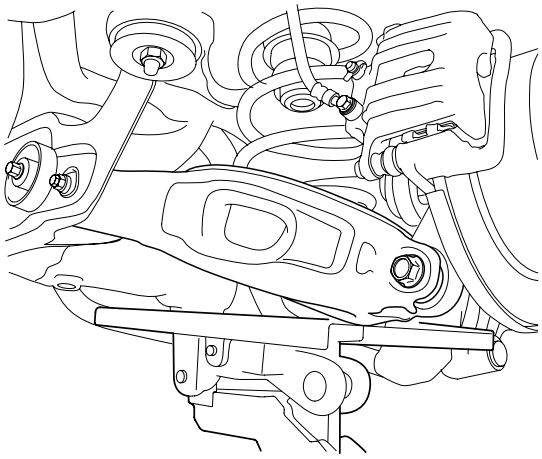

SCMSS6526D

4. Remove the rear shock absorber (A).

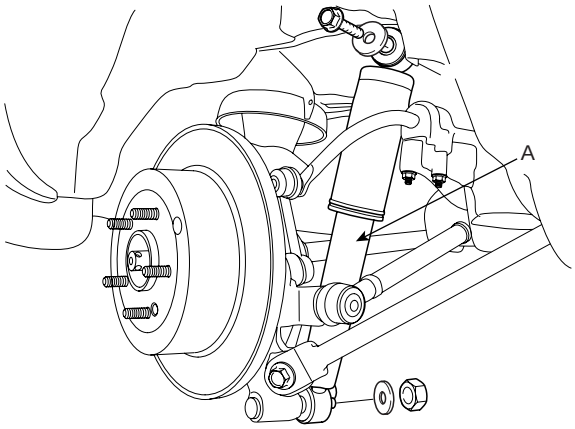

SCMSS6514D

5. Remove the brake caliper mounting bolts (A), and then place the brake caliper assembly (B) with wire as shown in the illustration.

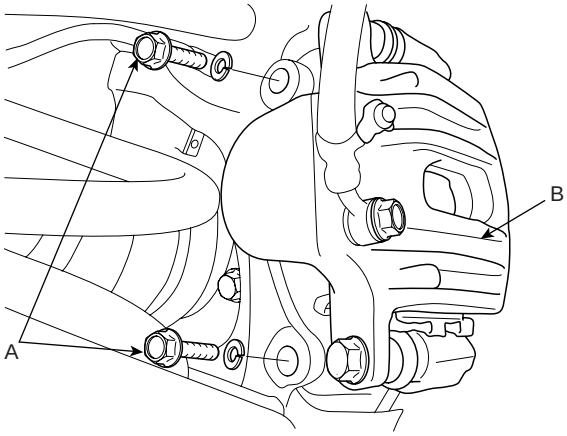

SCMSS6515D

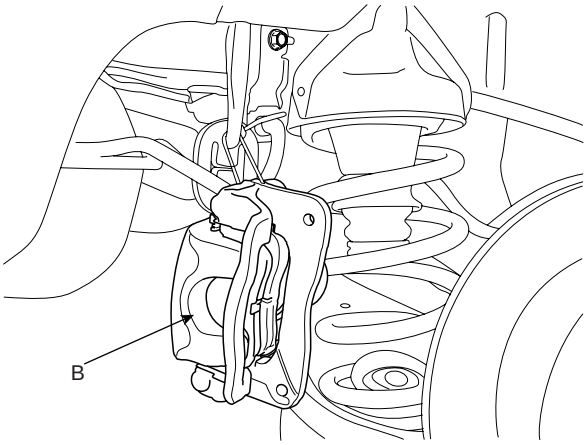

SCMSS6516D

6. Remove the wheel speed sensor (A) and the parking brake cable (B) from the rear axle carrier.

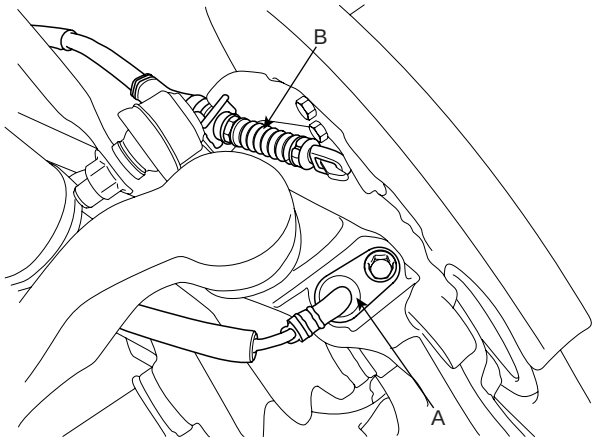

SCMSS6517D

7. After making a match mark (C) on the rubber coupling (A) and rear differential companion (B), remove the propeller shaft mounting bolts (D).

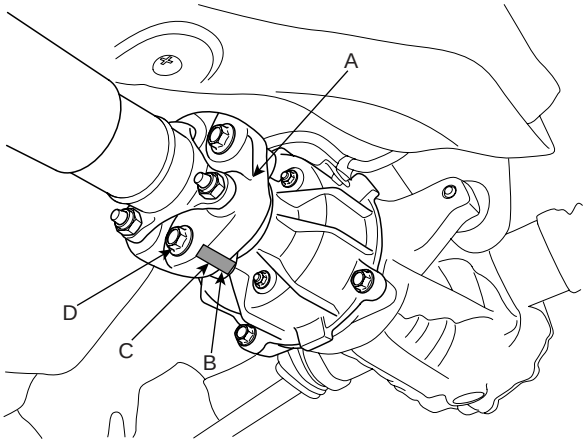

SCMSS6518D

8. Support the rear cross member assembly (A) with the jack.

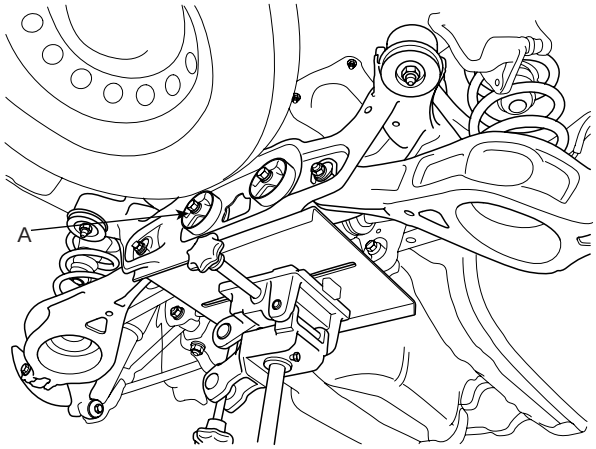

SCMSS6010D

9. Remove the rear cross member stay (A) and mounting bolt (B) and nut (C).

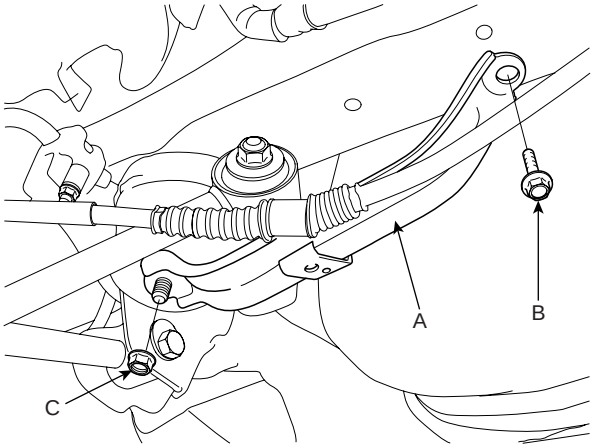

SCMSS6011D

10. Remove the rear cross member mounting bolts (A) , nuts (B) and plate (C).

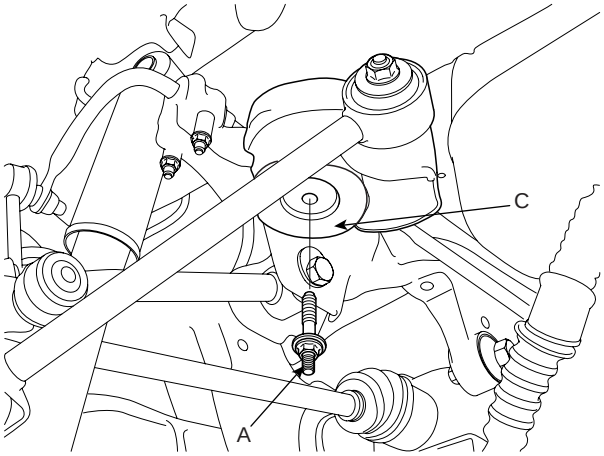

SCMSS6012D

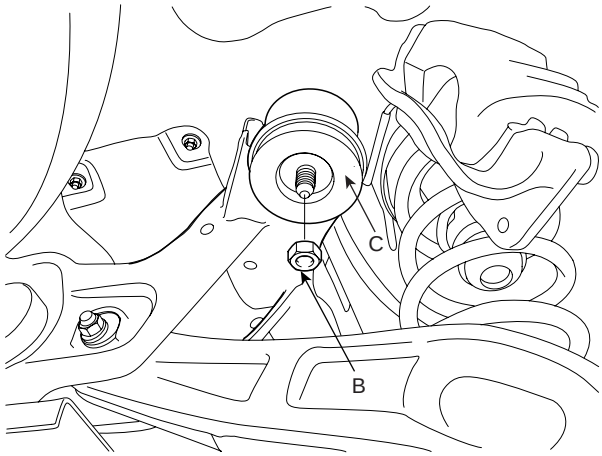

SCMSS6013D

11. Remove the rear cross member.

12. Remove the split pin (A) and the castle nut (B) from the rear upper arm ball joint (C), and then remove the rear upper arm ball joint (C) by using the special tool(09568-34000).

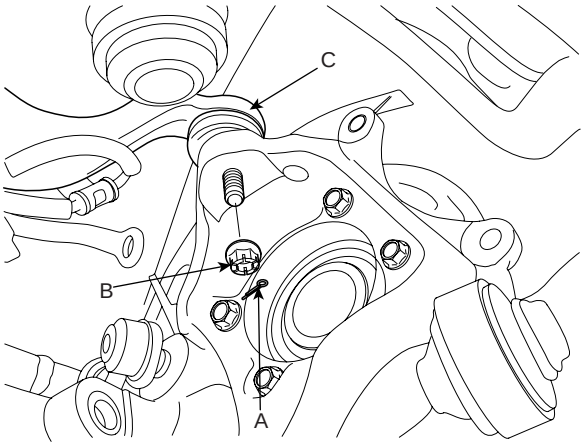

SCMSS6521D

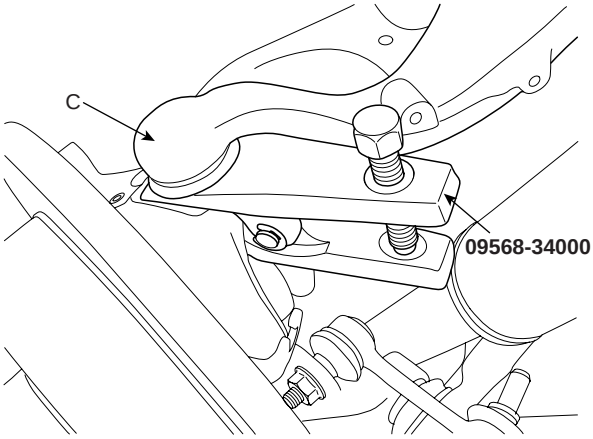

SCMSS6519D

13. Remove the mounting bolts (A) of the rear upper arm and the cross member, then remove the rear upper arm (B).

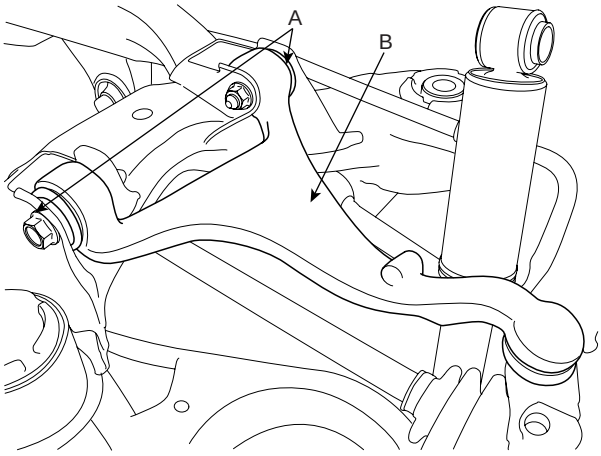

SCMSS6014D

CAUTION

If the bush is excessive worn and damaged, replace the upper arm assembly.

INSPECTION EDD1FF86

1. Check the bushing for wear and deterioration.
2. Check the rear upper arm for bending or breakage.
3. Check the ball joint dust cover for cracks.
4. Check all bolts.

INSTALLATION E163969D

1. Install the rear upper arm (B), then install the mounting bolts (A) of the rear upper arm and the cross member.

Tightening torque Nm (kgf-m, lb-ft) :
98.1~117.7 (10.0~12.0, 72.3~86.8)

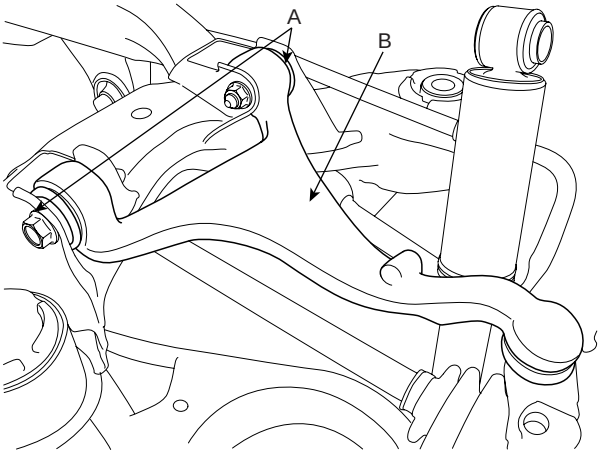

SCMSS6014D

NOTE

After checking the distance(453±10mm(17.83 ±0.39in)) between the wheel housing garnish (A) and the hub assembly (B) as shown in the illustration, tighten the mounting bolts and nuts of rear chassis part with specified torque.

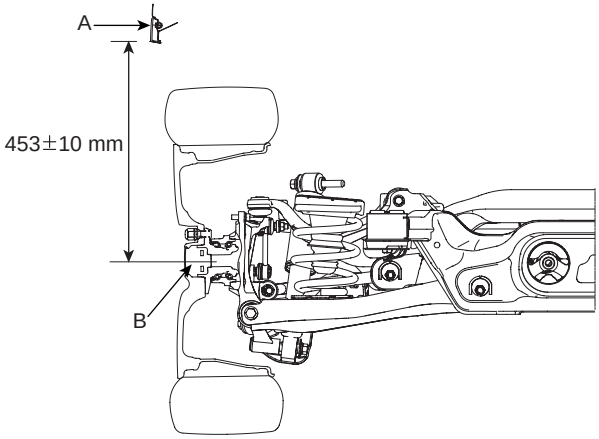

SCMSS6528D

2. Install the split pin (A) and the castle nut (B) to the rear upper arm ball joint (C).

Tightening torque Nm (kgf-m, lb-ft) :
78.5~88.3 (8.0~9.0, 57.9~65.1)

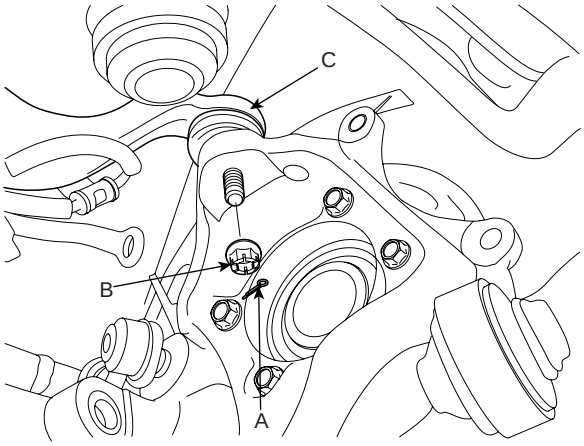

SCMSS6521D

3. Install the rear cross member.

4. Support the rear cross member assembly (A) with the jack.

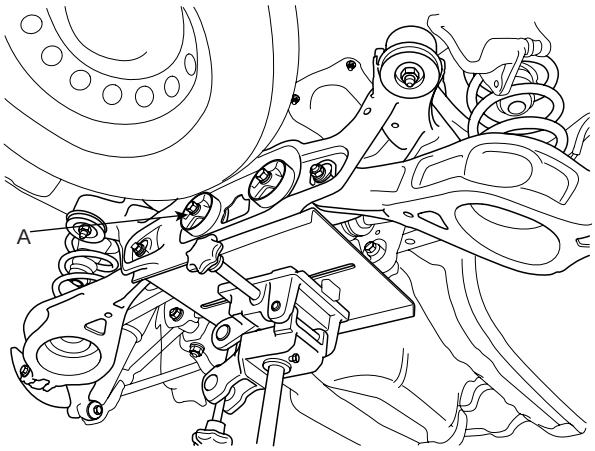

SCMSS6010D

5. Install the rear cross member mounting bolts (A), nuts (B) and plate (C).

Tightening torque Nm (kgf-m, lb-ft) :
Bolts(A) : 156.9~176.5 (16~18, 115.7~130.2)
Nuts(B) : 156.9~176.5 (16~18, 115.7~130.2)

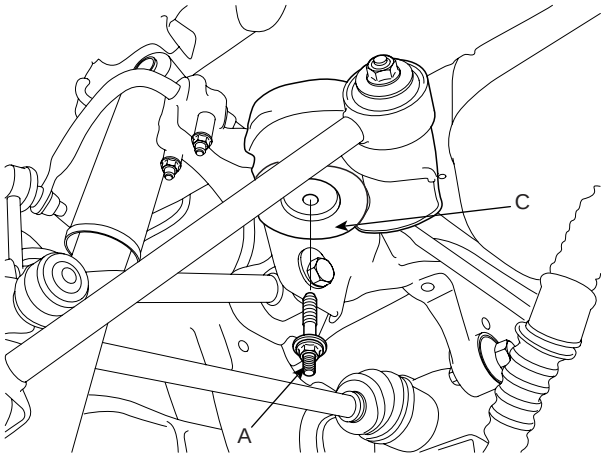

SCMSS6012D

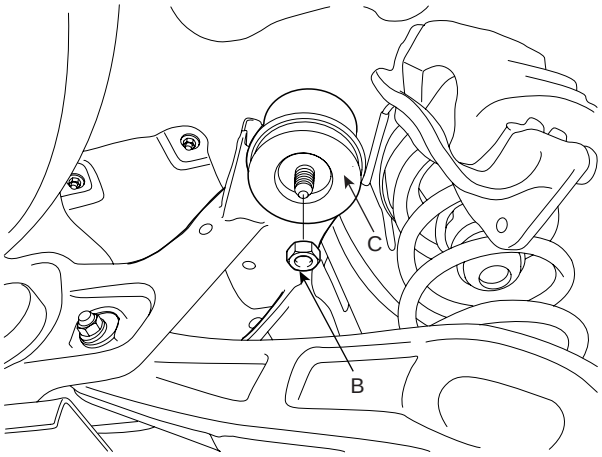

SCMSS6013D

6. Install the rear cross member stay (A) and mounting bolt (B) and nut (C).

Tightening torque Nm (kgf-m, lb-ft) :
Bolt(B) : 68.6~88.3 (7~9, 50.6~65.1)
Nut(C) : 68.6~88.3 (7~9, 50.6~65.1)

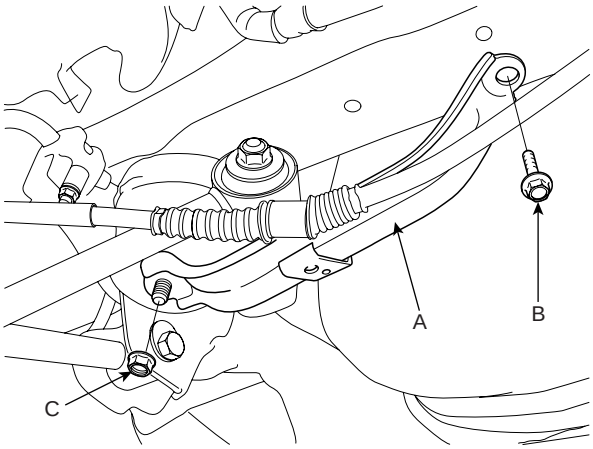

SCMSS6011D

7. After matching a match mark (C) on the rubber coupling (A) and rear differential companion (B), Install the propeller shaft mounting bolts (D).

Tightening torque Nm (kgf-m, lb-ft) :
49.0~68.6 (5~7, 36.2~50.6)

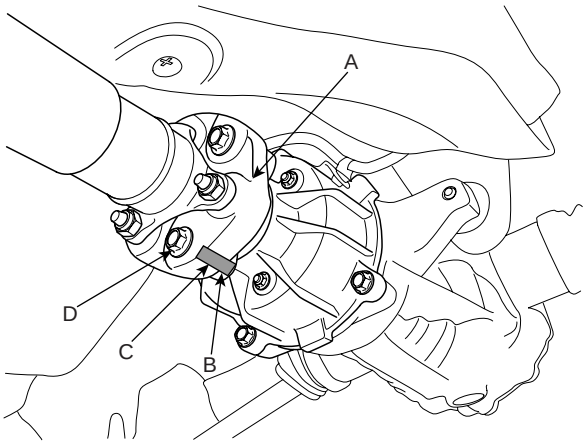

SCMSS6518D

8. Install the wheel speed sensor (A) and the parking brake cable (B) to the rear axle carrier.

Tightening torque Nm (kgf-m, lb-ft) :
Wheel speed sensor (A) :
6.9~10.8 (0.7~1.1, 5.1~8.0)

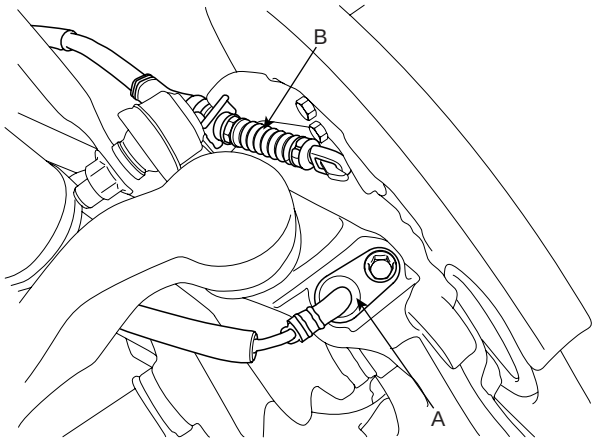

SCMSS6517D

9. Install the brake caliper (B), then tighten the brake caliper mounting bolts (A).

Tightening torque Nm (kgf-m, lb-ft) :
63.7~73.5 (6.5~7.5, 47.0~54.2)

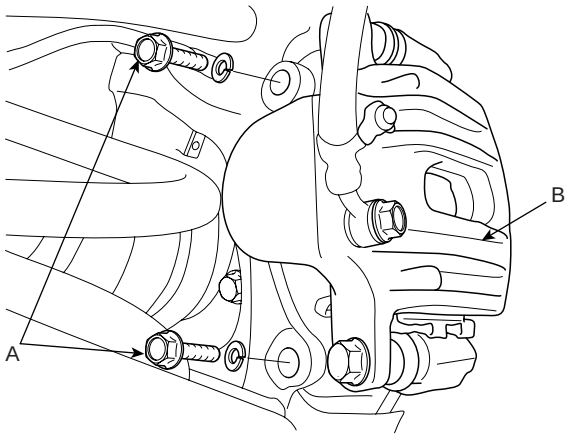

SCMSS6515D

10. Support the rear lower arm with a jack as shown in the illustration.

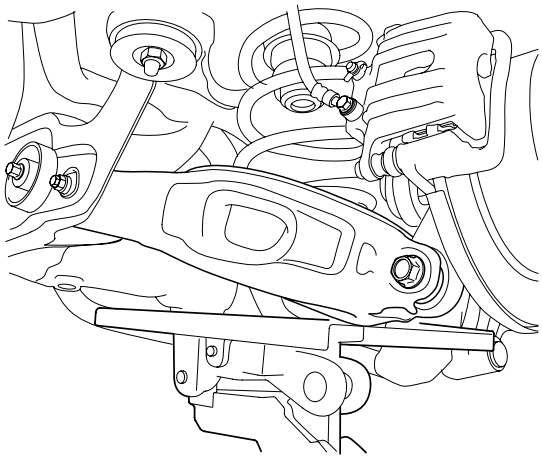

SCMSS6526D

11. Install the rear shock absorber (A).

Tightening torque Nm (kgf-m, lb-ft) :
Bolt(B) : 137.3~156.9 (14~16, 101.3~115.7)
Nut(C) : 98.1~117.7 (10.0~12.0, 72.3~86.8)

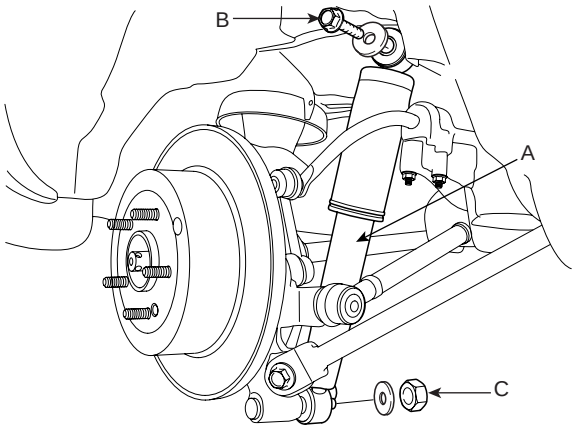

SCMSS6527D

12. Install the wheel and tire (A) to the rear hub (B).

Tightening torque Nm (kgf-m, lb-ft) :
88.3~107.9 (9~11, 65.1~79.6)

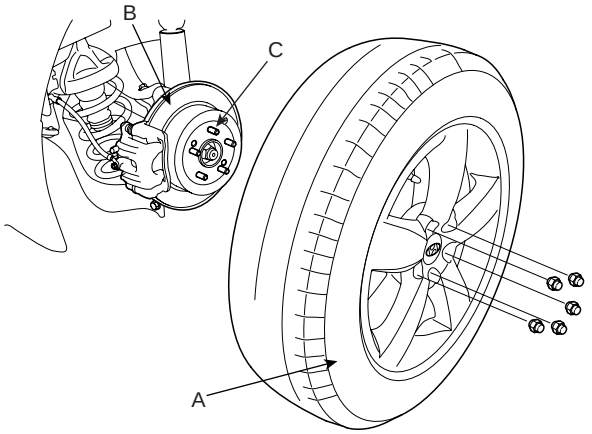

SCMSS6512D

CAUTION

Be careful not to damage the hub bolts (C) when installing the rear wheel and tire (A).

REAR LOWER ARM

COMPONENT EBAFBDF9

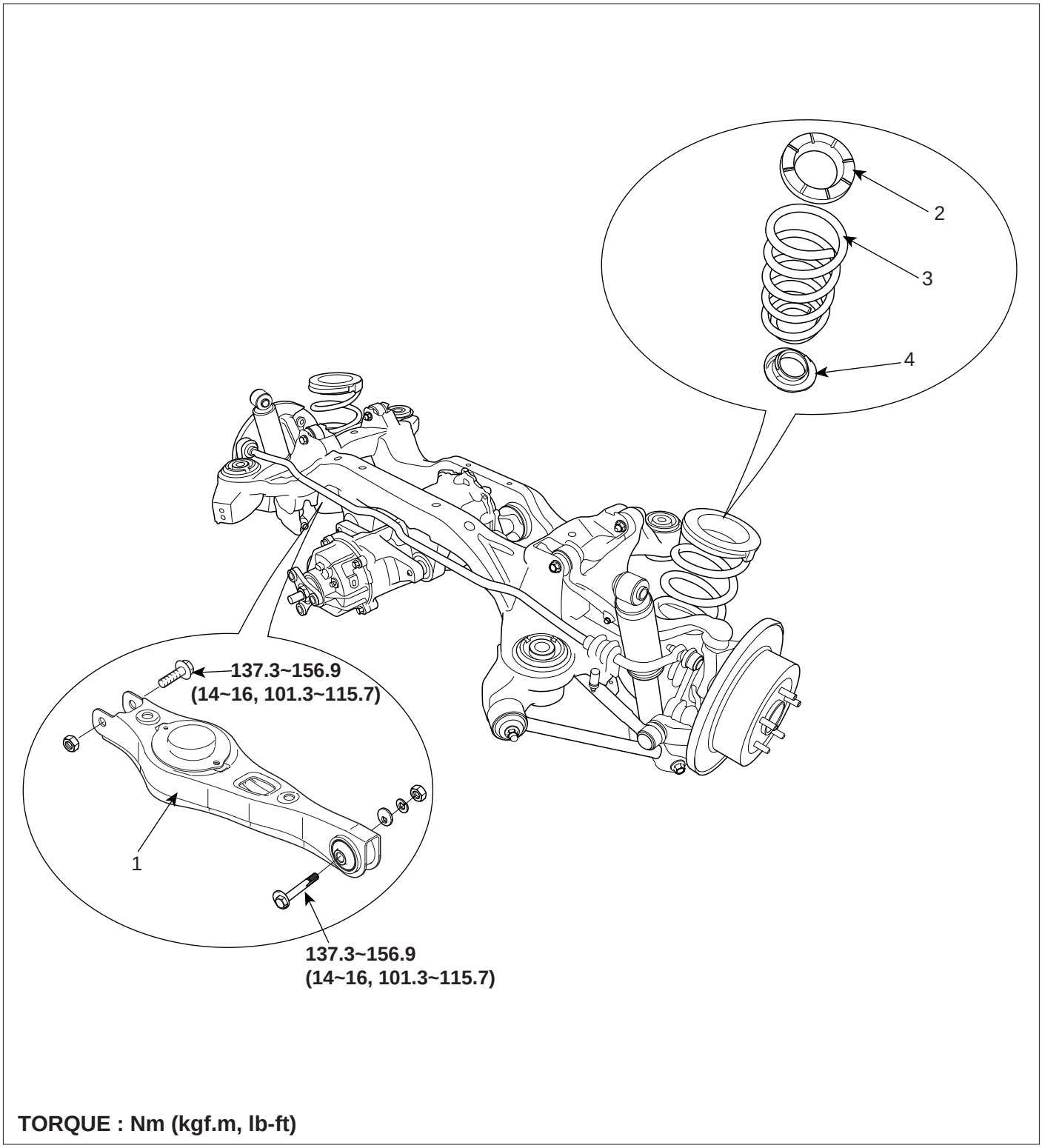

1. Rear lower arm
2. Rear coil spring upper pad
3. Rear coil spring
4. Rear coil spring lower pad

SCMSS6507L

REMOVAL E9AD5A7C

1. Loosen the wheel nuts slightly.
   Raise the vehicle, and make sure it is securely supported.

2. Remove the rear wheel and tire (A) from the rear hub (B).

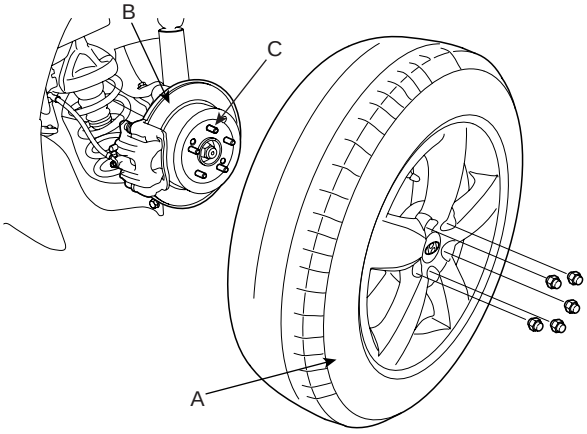

SCMSS6512D

CAUTION

Be careful not to damage to the hub bolts (C) when removing the rear wheel and tire (A).

3. Remove the mounting bolt (B) of the rear lower arm (A) and the rear carrier, while supporting the lower arm (A) with a jack as shown in the illustration. Loosen the mounting bolt (C) of the cross member and the rear lower arm.

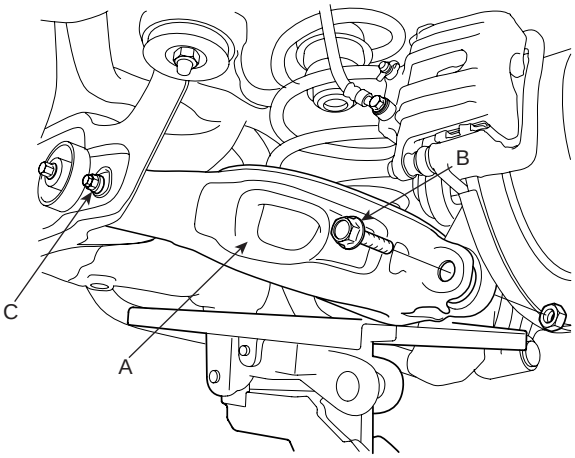

SCMSS6529D

4. Remove the spring (A), the upper pad (B) and the lower pad (C).

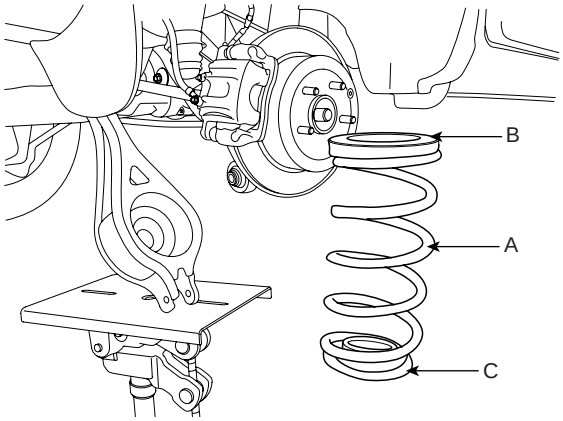

SCMSS6522D

5. Remove the lower arm.

CAUTION

If the bush is excessive worn and damaged, replace the lower arm assembly.

INSPECTION E852A9AA

REAR LOWER ARM

1. Check the bushing for wear and deterioration.

2. Check the rear lower arm for bending or breakage.

3. Check the bolts for damage.

SPRING

1. Check the spring for distortion, aging or damage.

2. Check the spring upper pad and lower pad for aging or damage.

INSTALLATION EEF25C9F

1. Pretighten the mounting bolt of the cross member and the rear lower arm.

2. Install the spring (A), the upper pad (B) and the lower pad (C).

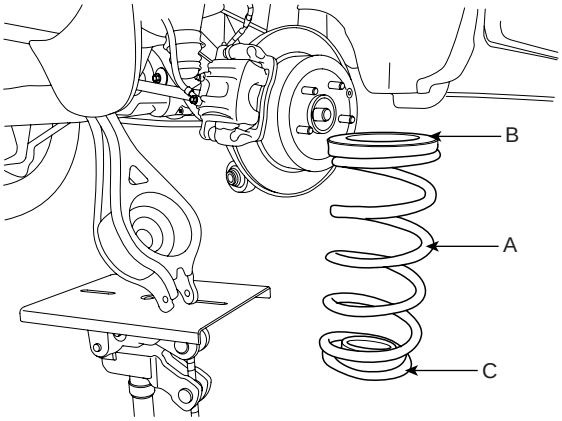

SCMSS6522D

3. Install the mounting bolt (B) of the rear lower arm (A) and the rear carrier with a specified torque, while supporting the lower arm (A) with a jack as shown in the illustration. Tighten the mounting bolt (C) of the cross member and the rear lower arm with a specified torque.

Tightening torque Nm (kgf-m, lb-ft) :
Bolt(B) : 137.3~156.9 (14~16, 101.3~115.7)
Nut(C) : 137.3~156.9 (14~16, 101.3~115.7)

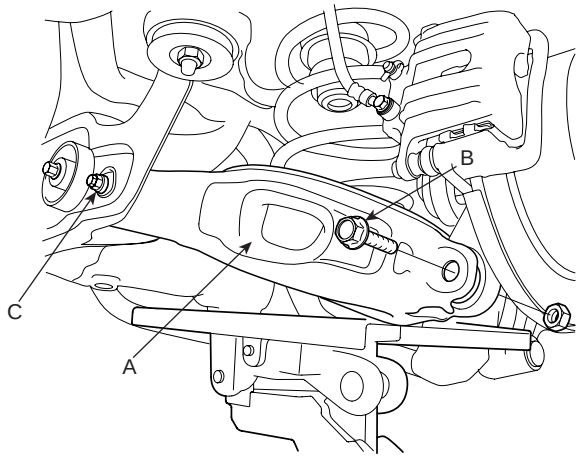

SCMSS6529D

NOTE

After checking the distance(453±10mm(17.83 ±0.39in)) between the wheel housing garnish (A) and the hub assembly (B) as shown in the illustration, tighten the mounting bolts and nuts of rear chassis part with specified torque.

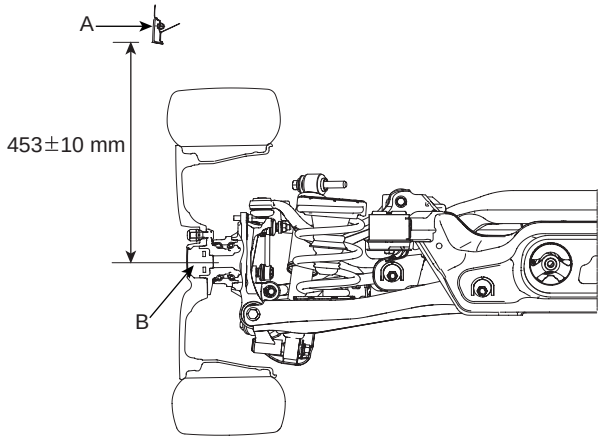

SCMSS6528D

4. Install the wheel and tire (A) to the rear hub (B).

Tightening torque Nm (kgf-m, lb-ft) :
88.3~107.9 (9~11, 65.1~79.6)

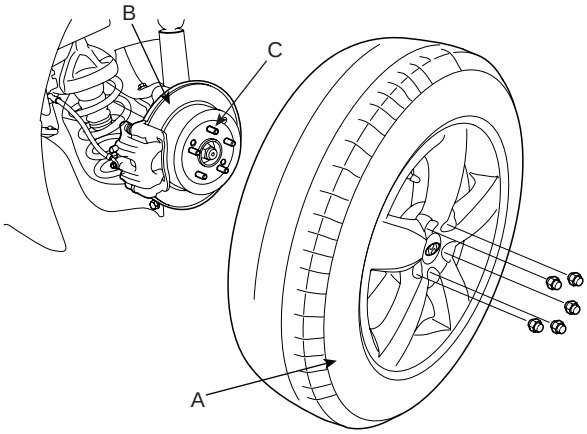

SCMSS6512D

CAUTION

Be careful not to damage the hub bolts (C) when installing the rear wheel and tire (A).

REAR ASSIST ARM

COMPONENT EBE5C437

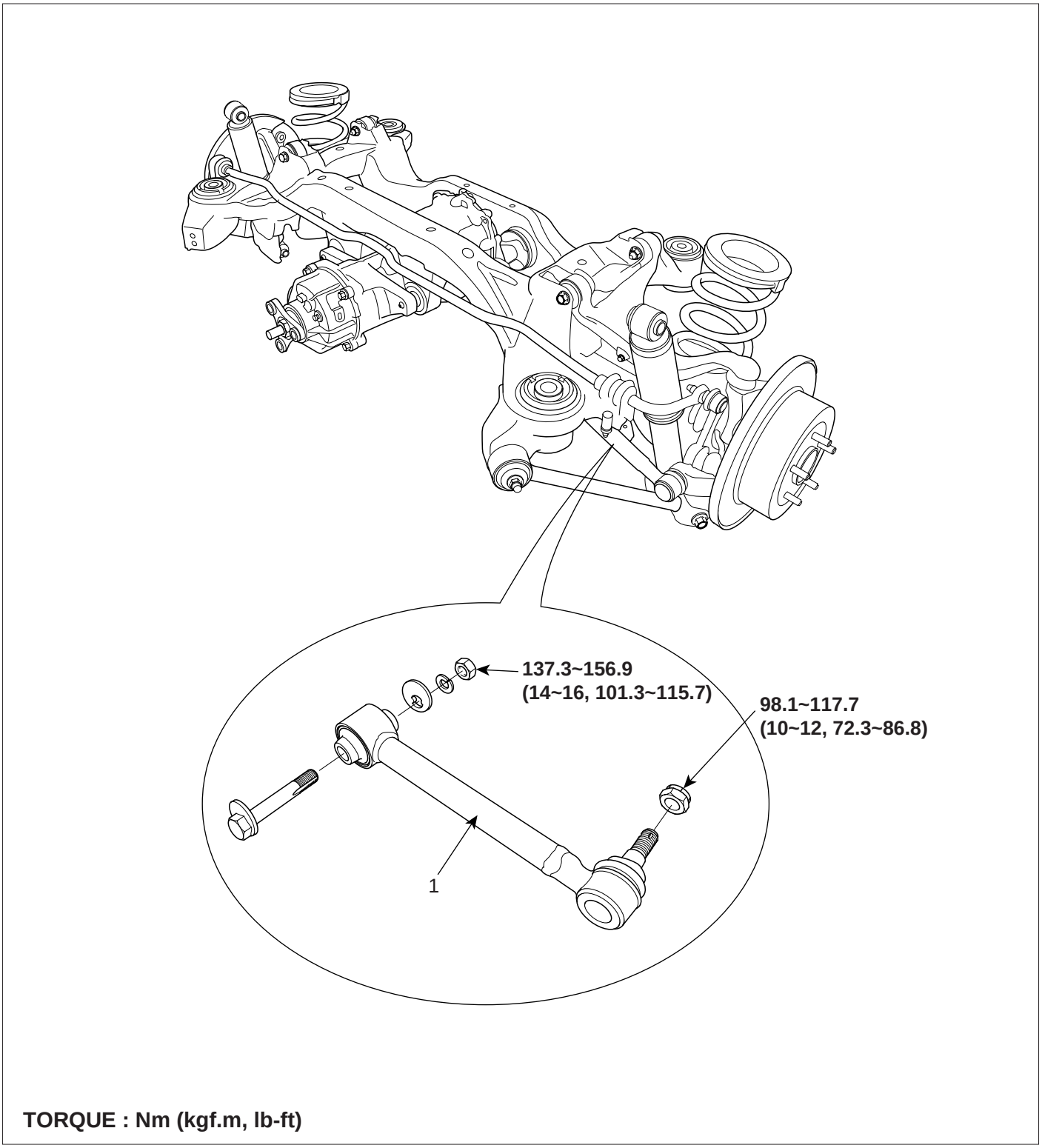

1. Rear assist arm

SCMSS6508L

REMOVAL E46DA66A

1. Loosen the wheel nuts slightly.
   Raise the vehicle, and make sure it is securely supported.

2. Remove the rear wheel and tire (A) from the rear hub (B).

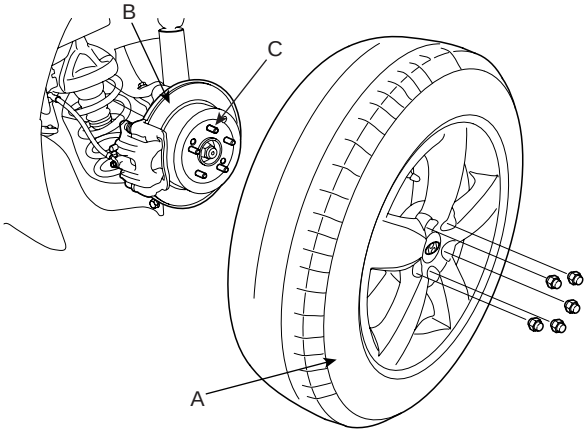

SCMSS6512D

CAUTION

Be careful not to damage to the hub bolts (C) when removing the rear wheel and tire (A).

3. Remove the assist arm (A) from the rear carrier.

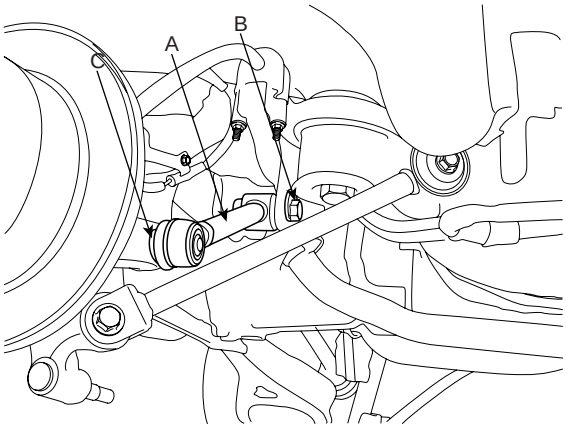

SCMSS6031D

NOTE

Remove the rear assist arm ball joint (A) by using the special tool(09568-4A000).

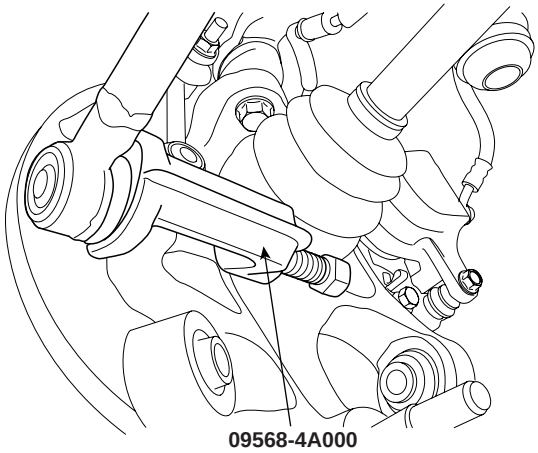

SCMSS6523D

CAUTION

If the bush is excessive worn and damaged, replace the assist arm assembly.

INSPECTION EDACAA4A

1. Check the bushing for wear and deterioration.
2. Check the rear assist arm for bending or breakage.
3. Check the ball joint dust cover for cracks.
4. Check all bolts.

INSTALLATION EC8E3BD8

1. Install the rear assist arm (A) to the rear carrier.

Tightening torque Nm (kgf-m, lb-ft) :
Bolt(B) : 137.3~156.9 (14~16, 101.3~115.7)
Nut(C) : 98.1~117.7 (10.0~12.0, 72.3~86.8)

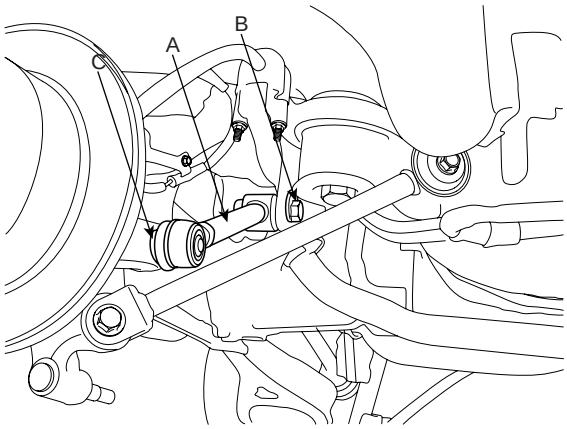

SCMSS6031D

NOTE

After checking the distance(453±10mm(17.83 ±0.39in)) between the wheel housing garnish (A) and the hub assembly (B) as shown in the illustration, tighten the mounting bolts and nuts of rear chassis part with specified torque.

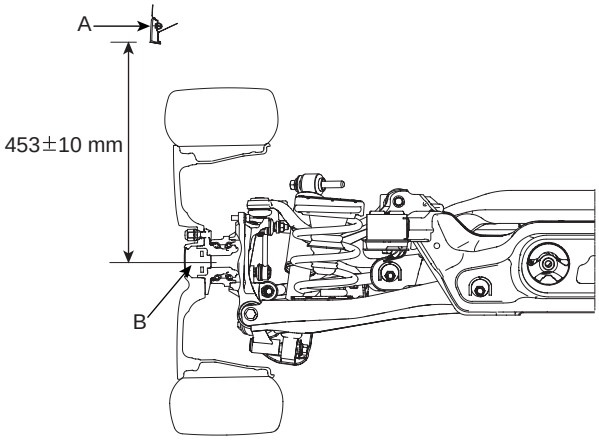

SCMSS6528D

2. Install the wheel and tire (A) to the rear hub (B).

Tightening torque Nm (kgf-m, lb-ft) :
88.3~107.9 (9~11, 65.1~79.6)

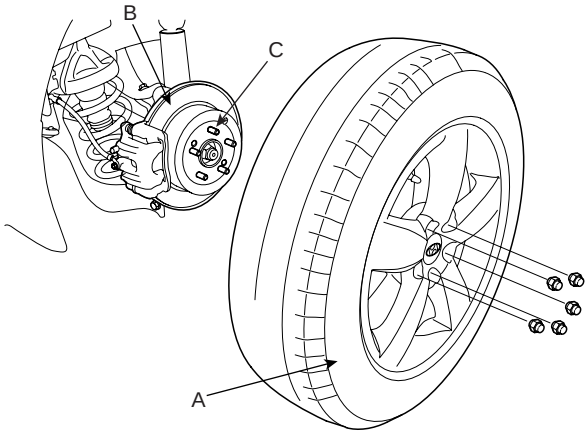

SCMSS6512D

CAUTION

Be careful not to damage the hub bolts (C) when installing the rear wheel and tire (A).

TRAILING ARM

COMPONENT E39A3EAF

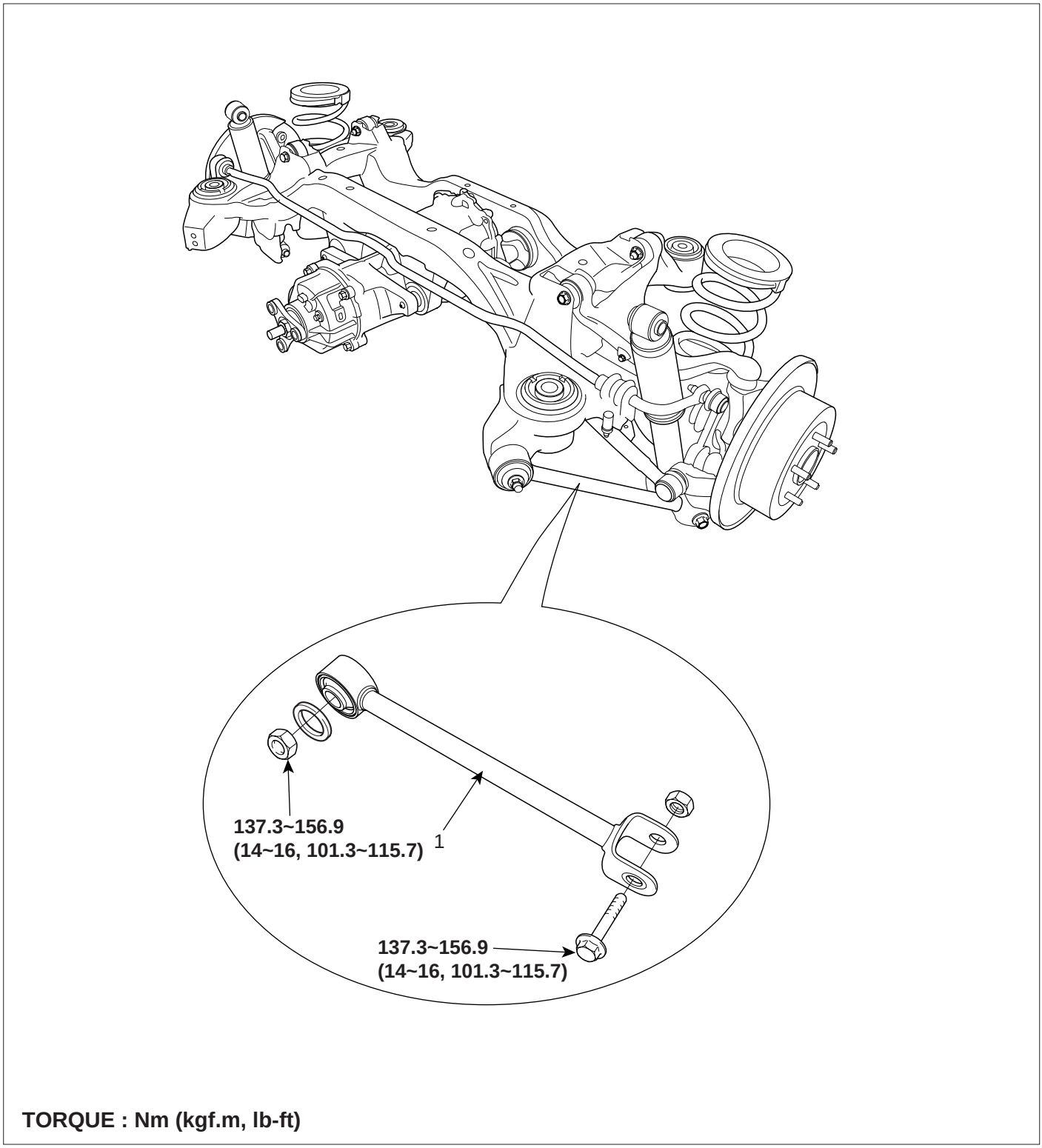

1. Rear trailing arm

SCMSS6509L

REMOVAL EBA34130

1. Loosen the wheel nuts slightly.
   Raise the vehicle, and make sure it is securely supported.

2. Remove the rear wheel and tire (A) from the rear hub (B).

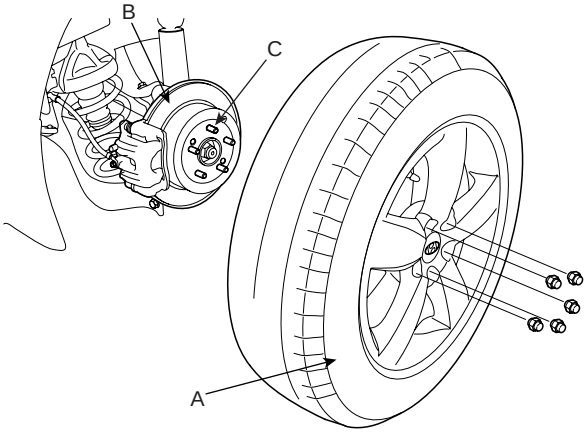

SCMSS6512D

CAUTION

Be careful not to damage to the hub bolts (C) when removing the rear wheel and tire (A).

3. Remove the trailing arm (A) from the rear carrier.

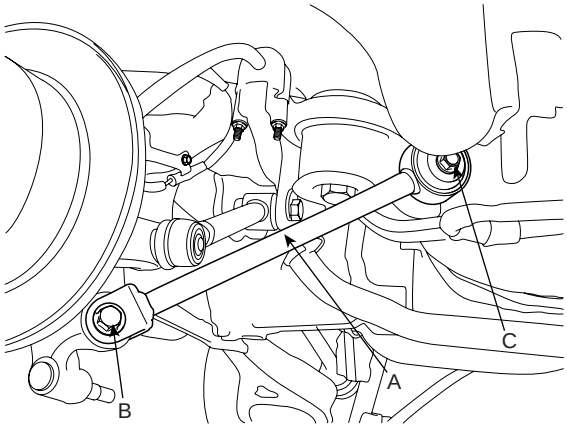

SCMSS6039D

CAUTION

If the bush is excessive worn and damaged, replace the assist arm assembly.

INSPECTION EDFCCDEE

1. Check the bushing for wear and deterioration.

2. Check the rear trailing arm for bending or breakage.

3. Check all bolts.

INSTALLATION EC498CBE

1. Install the rear trailing arm (A) to the rear carrier.

Tightening torque Nm (kgf-m, lb-ft) :
Bolt(B) : 137.3~156.9 (14~16, 101.3~115.7)
Nut(C) : 137.3~156.9 (14~16, 101.3~115.7)

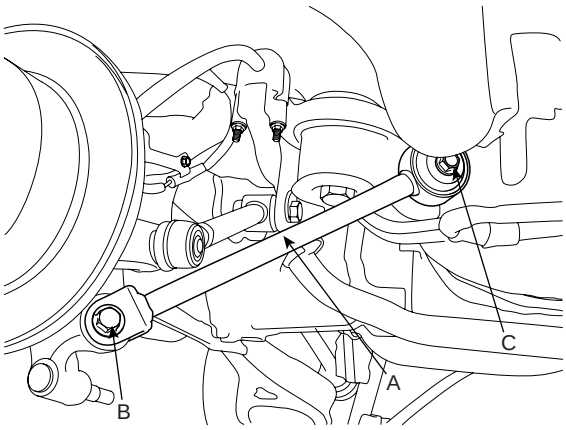

SCMSS6039D

NOTE

After checking the distance(453±10mm(17.83 ±0.39in)) between the wheel housing garnish (A) and the hub assembly (B) as shown in the illustration, tighten the mounting bolts and nuts of rear chassis part with specified torque.

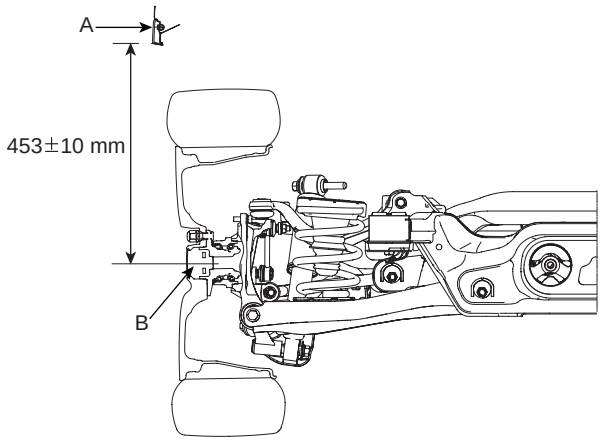

SCMSS6528D

2. Install the wheel and tire (A) to the rear hub (B).

Tightening torque Nm (kgf-m, lb-ft) :
88.3~107.9 (9~11, 65.1~79.6)

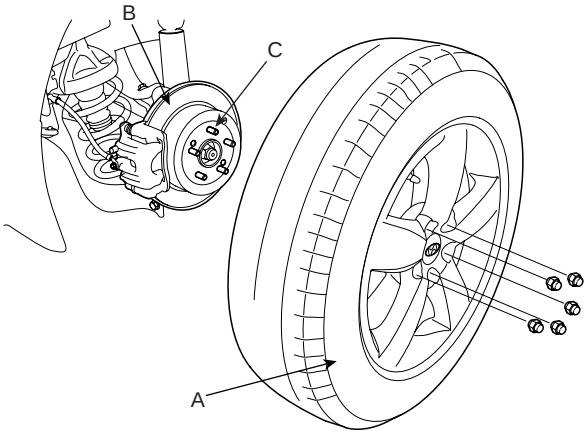

SCMSS6512D

CAUTION

Be careful not to damage the hub bolts (C) when installing the rear wheel and tire (A).

REAR STABILIZER BAR

COMPONENT E4306EFA

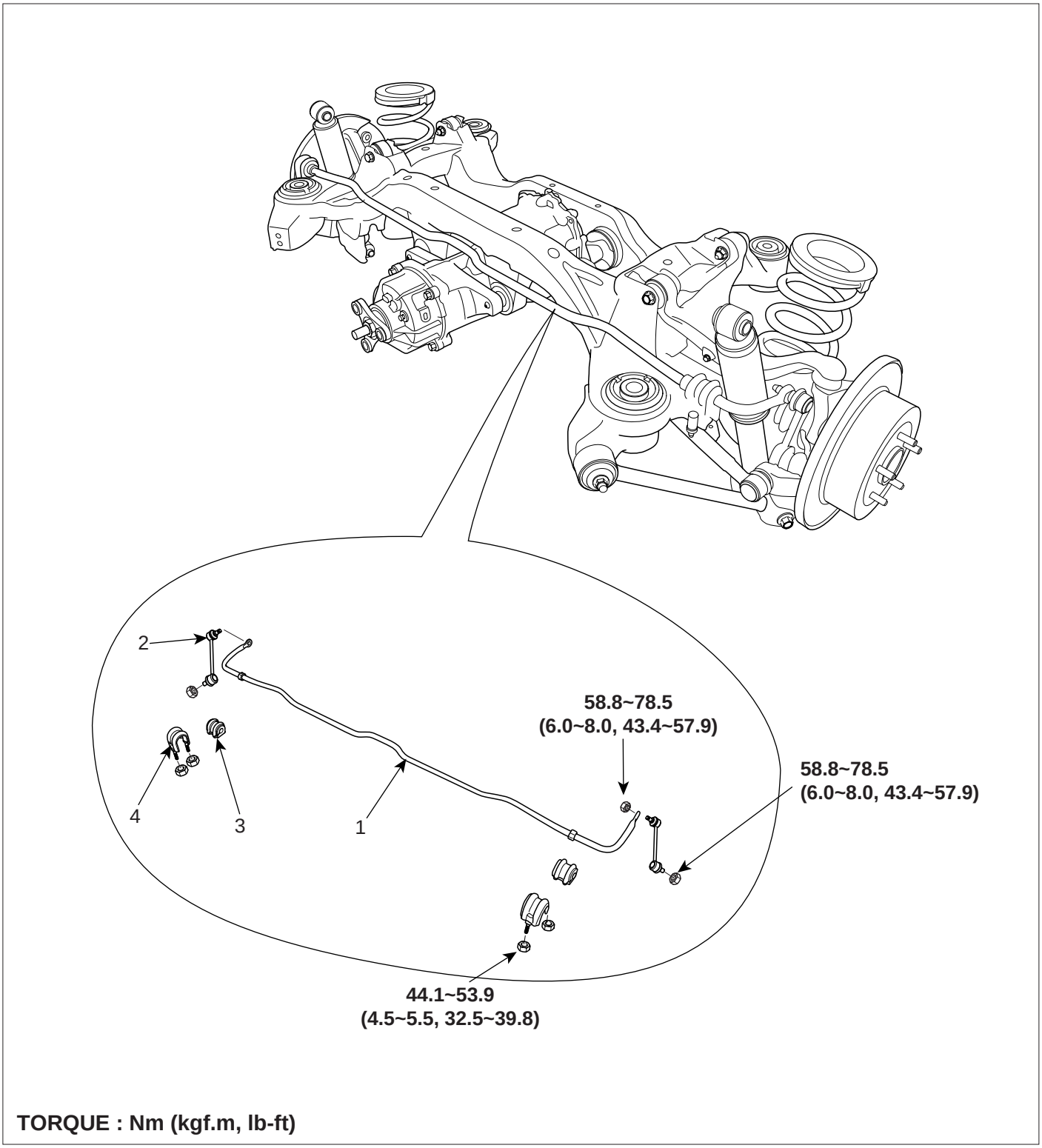

1. Rear stabilizer bar
2. Rear stabilizer link
3. Rear stabilizer bar bushing
4. Rear stabilizer bar bracket

SCMSS6510L

REMOVAL EE1591DC

1. Loosen the wheel nuts slightly.
   Raise the vehicle, and make sure it is securely supported.

2. Remove the rear wheel and tire (A) from the rear hub (B).

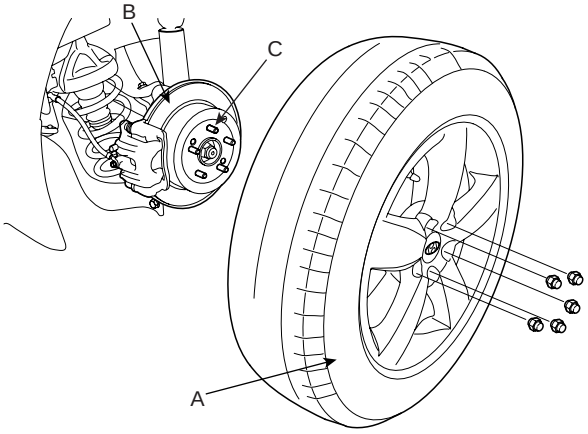

SCMSS6512D

CAUTION

Be careful not to damage to the hub bolts (C) when removing the rear wheel and tire (A).

3. Support the rear lower arm with a jack as shown in the illustration.

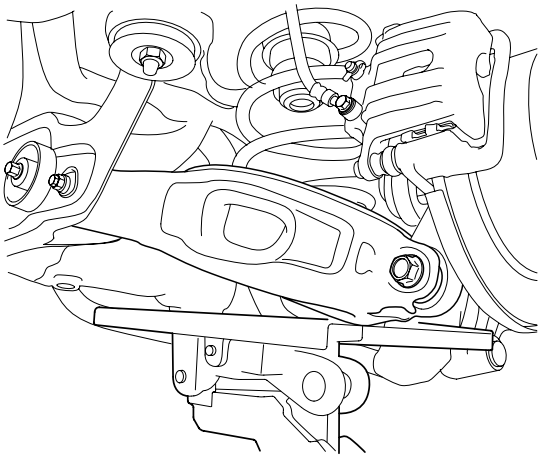

SCMSS6526D

4. Remove the rear shock absorber (A).

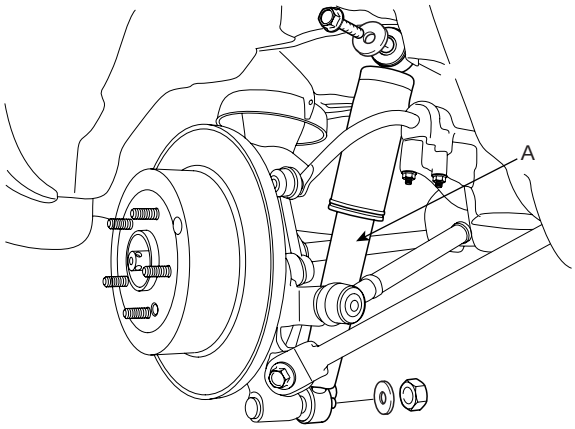

SCMSS6514D

5. Remove the brake caliper mounting bolts (A), and then place the brake caliper assembly (B) with wire as shown in the illustration.

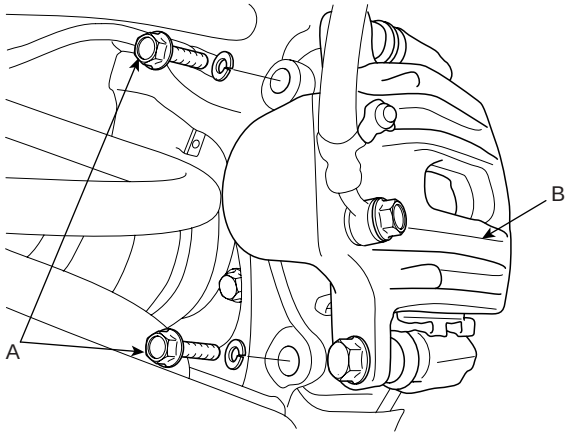

SCMSS6515D

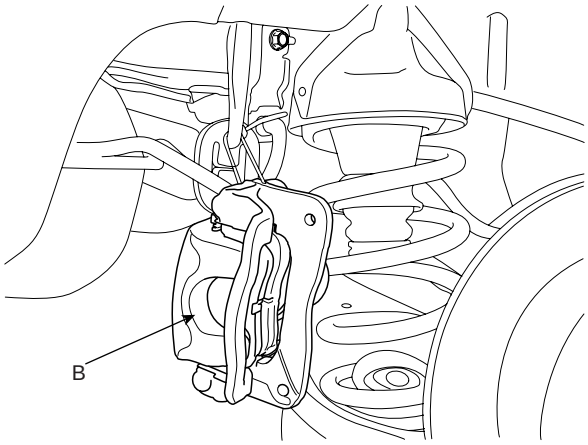

SCMSS6516D

6. Remove the wheel speed sensor (A) and the parking brake cable (B) from the rear axle carrier.

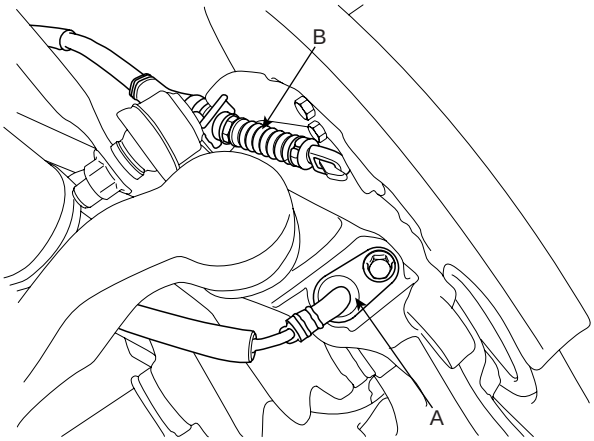

SCMSS6517D

7. After making a match mark (C) on the rubber coupling (A) and rear differential companion (B), remove the propeller shaft mounting bolts (D).

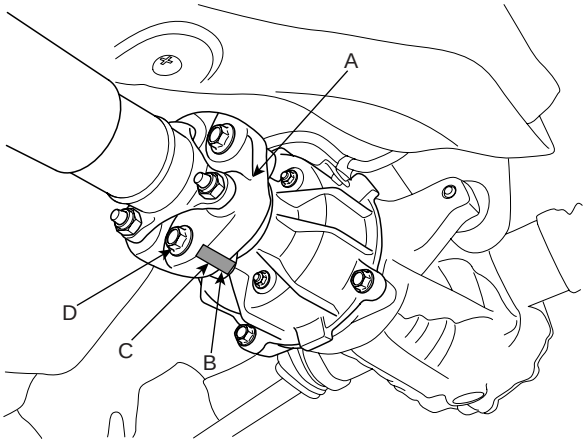

SCMSS6518D

8. Support the rear cross member assembly (A) with the jack.

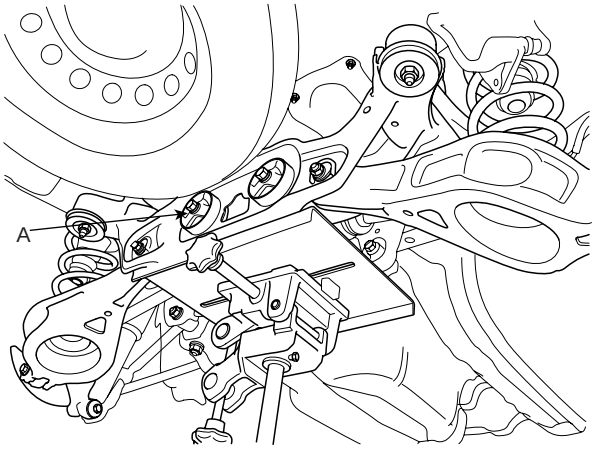

SCMSS6010D

9. Remove the rear cross member stay (A) and mounting bolt (B) and nut (C).

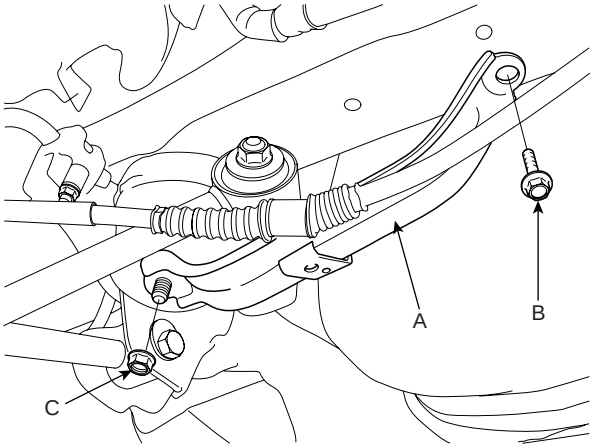

SCMSS6011D

10. Remove the rear cross member mounting bolts (A), nuts (B) and plate (C).

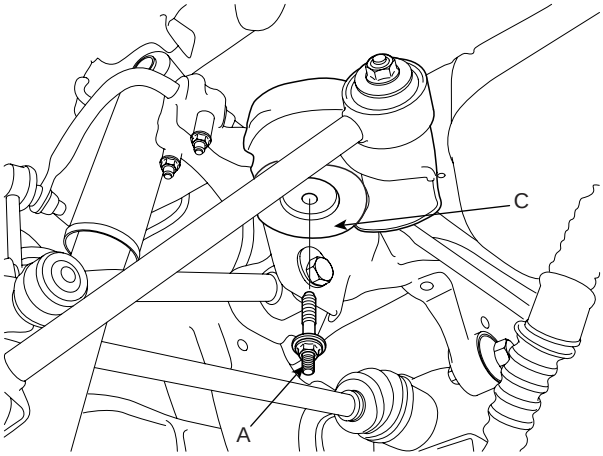

SCMSS6012D

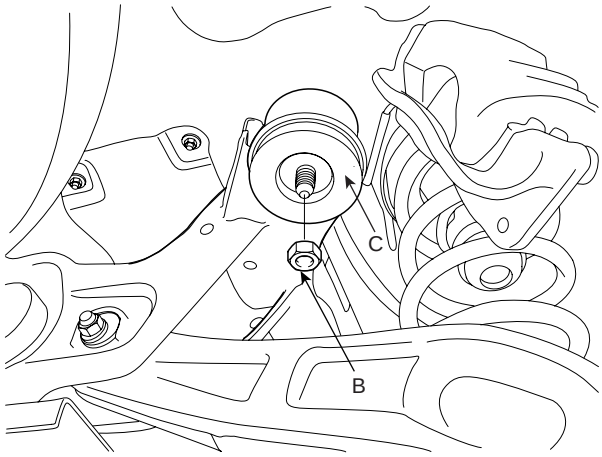

SCMSS6013D

11. Remove the rear cross member.

12. Remove the rear stabilizer bar link (A) and bracket (B).

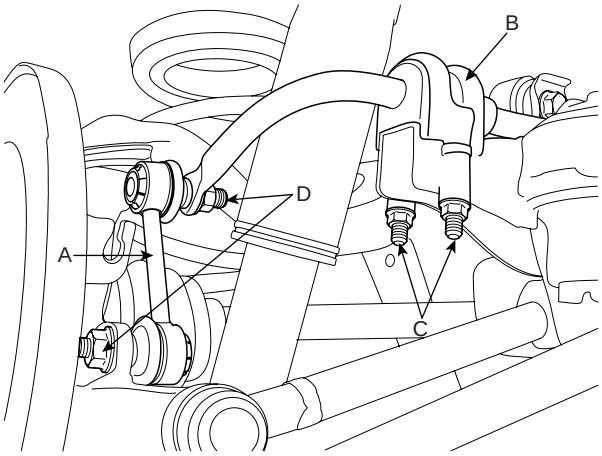

SCMSS6020D

13. Remove the rear stabilizer bar.

INSPECTION ECE1FBDC

1. Check the bushing for wear and deterioration.
2. Check the stabilizer bar for bending or breakage.
3. Check the ball joint dust cover for cracks.
4. Check all bolts.

INSTALLATION EF4C9769

1. Install the bushing (B) on the stabilizer bar (A).

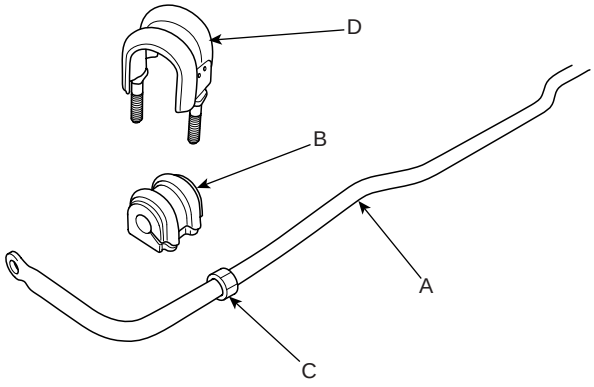

SCMSS6021D

NOTE

Bring clamp (C) of stabilizer bar (A) into contact with bushing (B).

2. Install the bracket (D) on the bushing (B).
3. Install the rear stabilizer bar to the rear cross member.
4. Install the rear stabilizer bar bracket (B) and link (A).

Tightening torque Nm (kgf-m, lb-ft) :
Nut(C) : 44.1~53.9 (4.5~5.5, 32.5~39.8)
Nut(D) : 58.8~78.5 (6.0~8.0, 43.4~57.9)

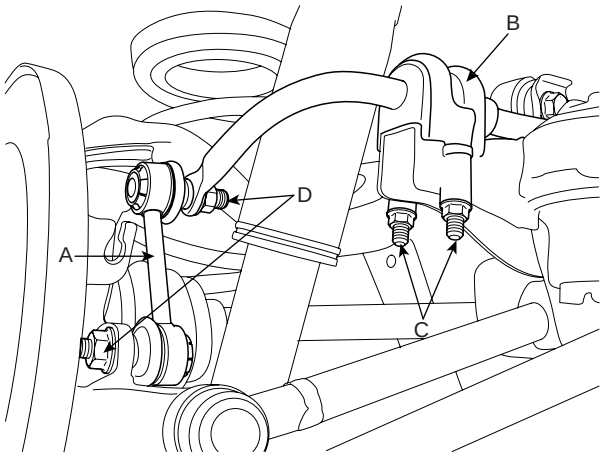

SCMSS6020D

5. Install the rear cross member.

6. Support the rear cross member assembly (A) with the jack.

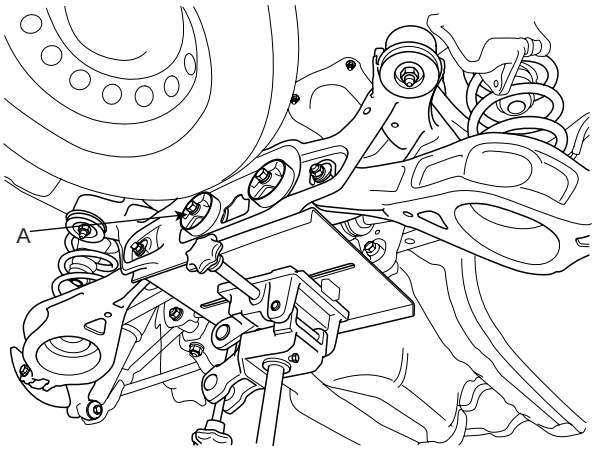

SCMSS6010D

7. Install the rear cross member mounting bolts (A), nuts (B) and plate (C).

Tightening torque Nm (kgf-m, lb-ft) :
Bolts(A) : 156.9~176.5 (16~18, 115.7~130.2)
Nuts(B) : 156.9~176.5 (16~18, 115.7~130.2)

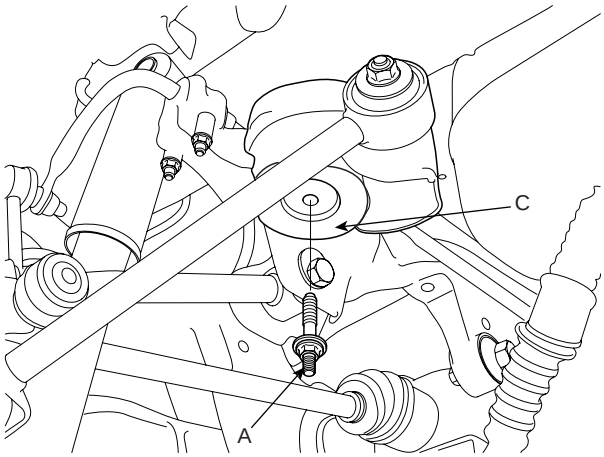

SCMSS6012D

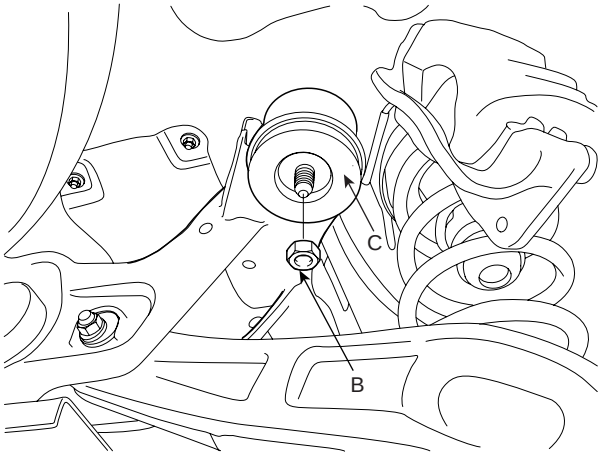

SCMSS6013D

8. Install the rear cross member stay (A) and mounting bolt (B) and nut (C).

Tightening torque Nm (kgf-m, lb-ft) :
Bolt(B) : 68.6~88.3 (7~9, 50.6~65.1)
Nut(C) : 68.6~88.3 (7~9, 50.6~65.1)

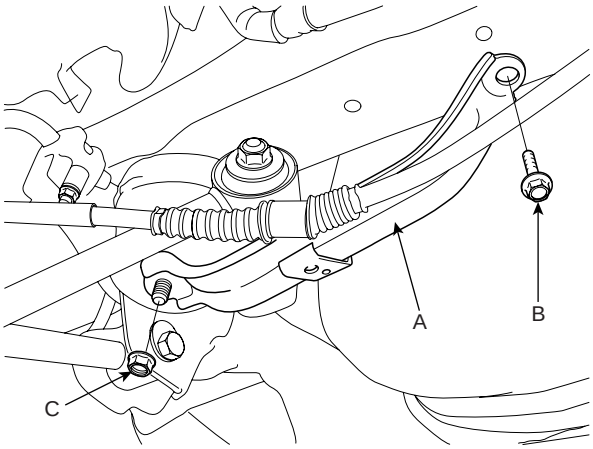

SCMSS6011D

9. After matching a match mark (C) on the rubber coupling (A) and rear differential companion (B), Install the propeller shaft mounting bolts (D).

Tightening torque Nm (kgf-m, lb-ft) :
49.0~68.6 (5~7, 36.2~50.6)

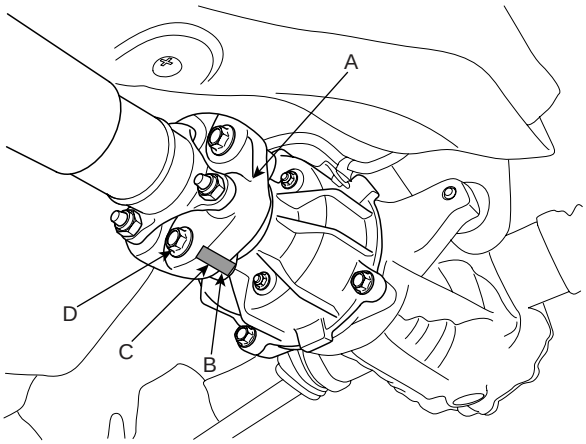

SCMSS6518D

10. Install the wheel speed sensor (A) and the parking brake cable (B) to the rear axle carrier.

Tightening torque Nm (kgf-m, lb-ft) :
Wheel speed sensor (A) :
6.9~10.8 (0.7~1.1, 5.1~8.0)

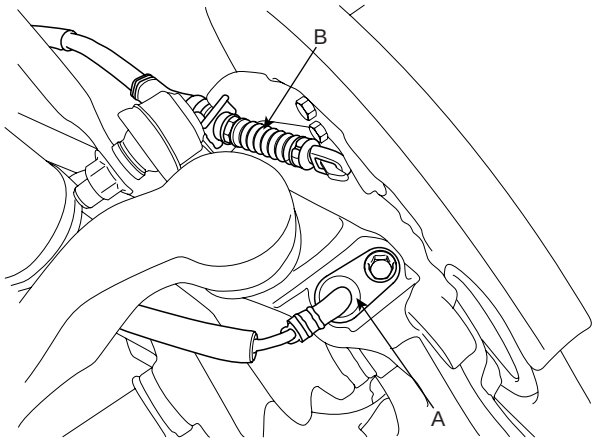

SCMSS6517D

11. Install the brake caliper (B), then tighten the brake caliper mounting bolts (A).

Tightening torque Nm (kgf-m, lb-ft) :
63.7~73.5 (6.5~7.5, 47.0~54.2)

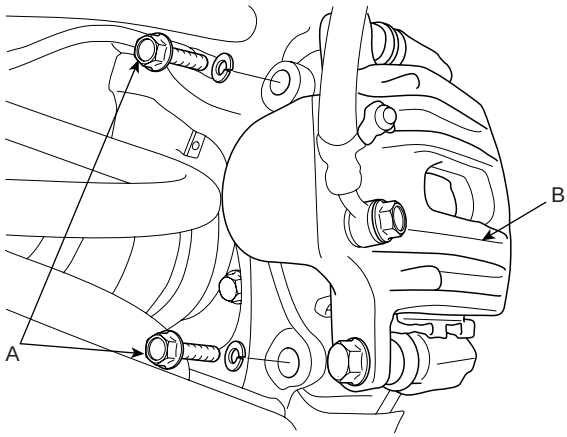

SCMSS6515D

12. Support the rear lower arm with a jack as shown in the illustration.

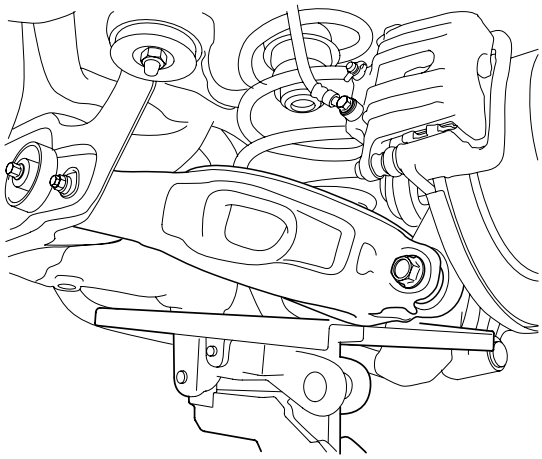

SCMSS6526D

13. Install the rear shock absorber (A).

Tightening torque Nm (kgf-m, lb-ft) :
Bolt(B) : 137.3~156.9 (14~16, 101.3~115.7)
Nut(C) : 98.1~117.7 (10.0~12.0, 72.3~86.8)

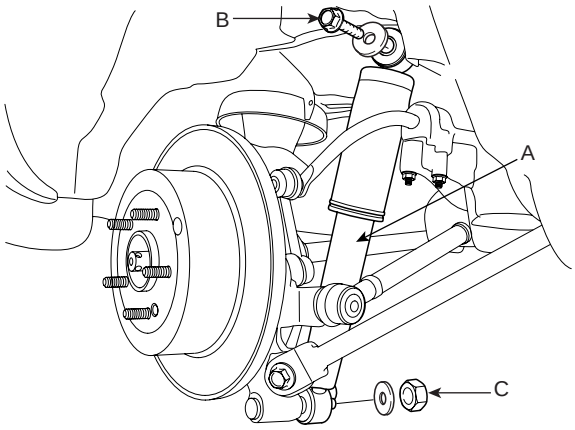

SCMSS6527D

NOTE

After checking the distance(453±10mm(17.83 ±0.39in)) between the wheel housing garnish (A) and the hub assembly (B) as shown in the illustration, tighten the mounting bolts and nuts of rear chassis part with specified torque.

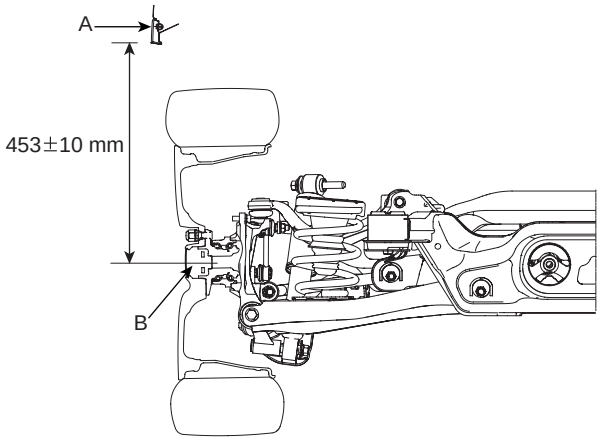

SCMSS6528D

14. Install the wheel and tire (A) to the rear hub (B).

Tightening torque Nm (kgf-m, lb-ft) : 88.3~107.9 (9~11, 65.1~79.6)

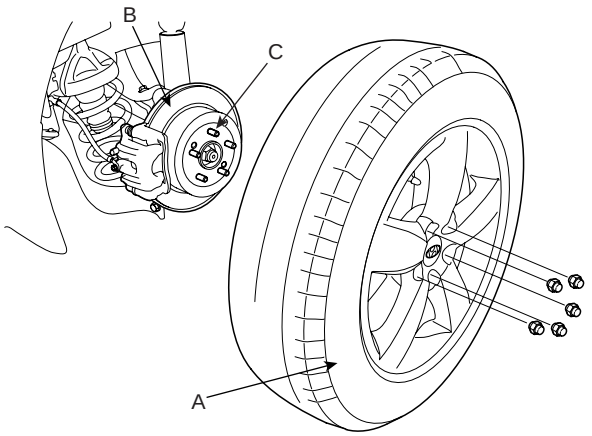

SCMSS6512D

CAUTION

Be careful not to damage the hub bolts (C) when installing the rear wheel and tire (A).

TIRES／WHEELS

WHEEL

WHEEL ALIGNMENT EDA8EF14

When using commercially available computerized four wheel alignment equipment (caster, camber, toe) to inspect the front wheel alignment, always position the car on a level surface with the front wheels facing straight ahead.
Prior to inspection, make sure that the front suspension and steering system are in normal operating condition and that the wheels and tires face straight ahead and the tires are inflated to the specified pressure.

TOE

Toe is a measurement of how much the front of the wheels are turned in or out from the straight-ahead position.

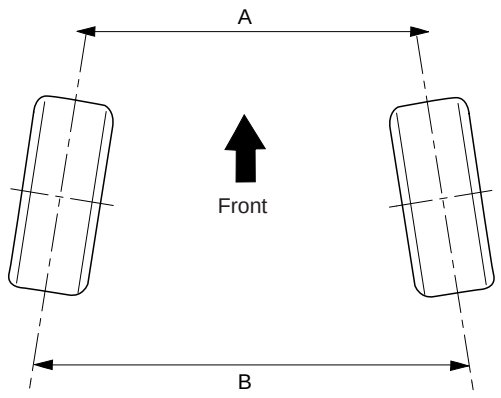

EHRF400A

Item	Description
A-B＜0	Positive (+) toe (toe in)
A-B＞0	Negative (-) toe (toe out)

When the wheels are turned in toward the front of the vehicle, toe is positive (+) (toe in). When the wheels are turned out toward the front of the vehicle, toe is negative (-) (toe out). Toe is measured in degrees, from side to side, and totaled.

TOE [FRONT]

Toe-in (B-A) is adjusted by turning the tie rod turnbuckles. Toe-in on the left front wheel can be reduced by turning the tie rod toward the rear of the car. Toe- in change is adjusted by turning the tie rods for the right and left heels simultaneously at the same amount as follows.

Standard value :
Toe-in (B-A) mm (in) : 0 ± 2 (0 ± 0.0787)

NOTE

- *Toe-in adjustment should be made by turning the right and left tie rods at the same amount.*
- *When adjusting toe-in, loosen the outer bellows clip to prevent twisting the bellows.*
- *After the adjustment, tighten the tie rod end lock nuts firmly and reinstall the bellows clip.*
- *Adjust each toe-in to be the range of ±1 mm.*

Tightening torque Nm (kgf-m, lb-ft) :
Tie rod adjusting nut (A):
49.0~53.9 (5.0~5.5, 36.2~39.8)

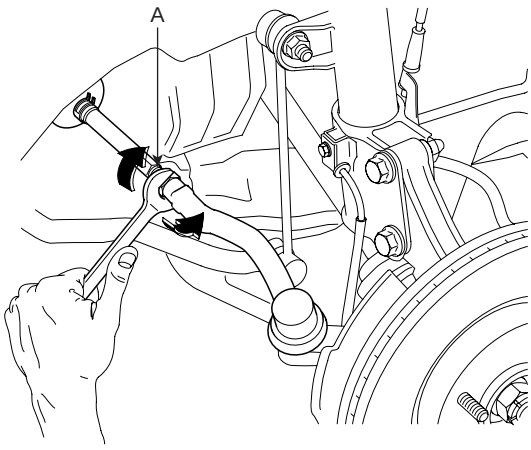

AHIE107B

TOE [REAR]

Standard value :
Toe-in (B-A) mm (in) : 2 ± 2 (0.0787 ± 0.0787)

Adjust the toe-in by turning the cambolt of the rear assist arm.

Left cambolt : Clockwise → toe- out
Right cambolt : Clockwise → toe- in
The variation of toe by a rotation of the cambolt :
About 4.3 mm (0.17 in)

CAUTION

- ***Each toe should be within 1±1 mm (0.039± 0.039 in). If the difference between right and left is not within +2mm (0.079 in), repeat adjustment.***
- ***After adjusting the cambolt, tighten the nut to the specified torque.***

Tightening torque Nm (kgf-m, lb-ft) :
137.3~156.9 (14~16, 101.3~115.7)

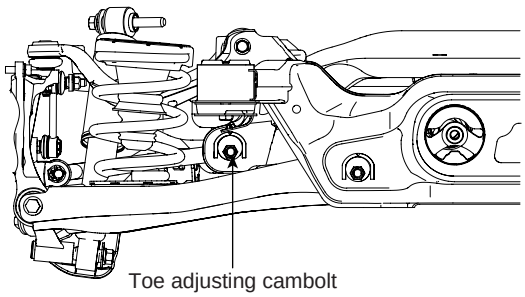

SCMSS6511L

CAMBER

Camber is the inward or outward tilting of the wheels at the top.

CAMBER [FRONT]

Standard value :
Camber angle (A) : 30´ ± 30´

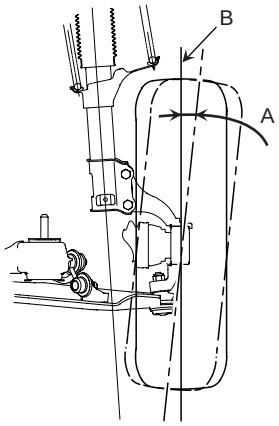

AHKF400F

Item	Description
A	Positive camber angle
B	True vertical

When the wheel tilts out at the top, then the camber is positive (+).
When the wheel tilts in at the top, then the camber is negative(-).

NOTE

Camber is pre-set at the factory and doesn't need to be adjusted. If the camber is not within the standard value, replace the bent or damaged parts.

CAMBER [REAR]

Standard value :
Camber angle (A) : -1° ± 30´
Difference between right and left angle is within 30´

Adjust the camber by turning the cambolt of the rear lower arm.

Left cambolt : Clockwise → camber(-)
Right cambolt : Clockwise →camber(+)
The variation of camber by a rotation of the cambolt : About 0°0.9´

After adjusting the cambolt, tighten the nut to the specified torque.

Tightening torque Nm (kgf-m, lb-ft) :
137.3~156.9 (14~16, 101.3~115.7)

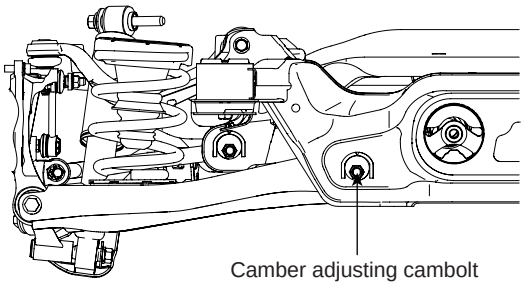

SCMSS6513L

CASTER [FRONT]

Caster is the tilting of the strut axis either forward or backward from vertical. A backward tilt is positive (+) and a forward tilt is negative (-).
Caster is pre-set at the factory and doesn't need to be adjusted. If the caster is not within the standard value, replace the bent or damaged parts.

Standard value :
Caster :
4°25´ ± 30´ (to ground)
4°48´ ± 30´ (to body)

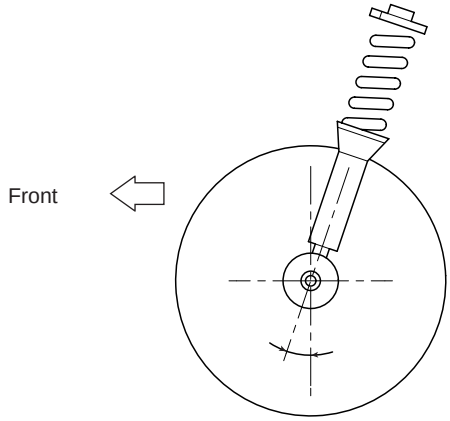

SCMSS6514L

NOTE

- *The worn loose or damaged parts of the front suspension assembly must be replaced prior to measuring front wheel alignment.*
- *Caster are pre-set to the specified value at the factory and don't need to be adjusted.*
- *If the caster are not within specifications, replace bent or damaged parts.*
- *The difference of left and right wheels about the the caster must be within the range of 0°30´.*

WHEEL NUT TIGHTENING

1. Tightening torque.

Tightening torque Nm (kgf-m, lb-ft) :
88.3~107.9 (9~11, 65.1~79.6)

CAUTION

When using an impact gun, final tightening torque should be checked using a torque wrench.

2. Tightening order.
   Check the torque again after tightening the wheel nuts diagonally.

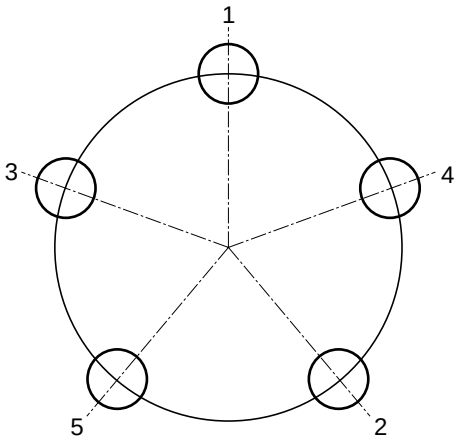

KHQE810A

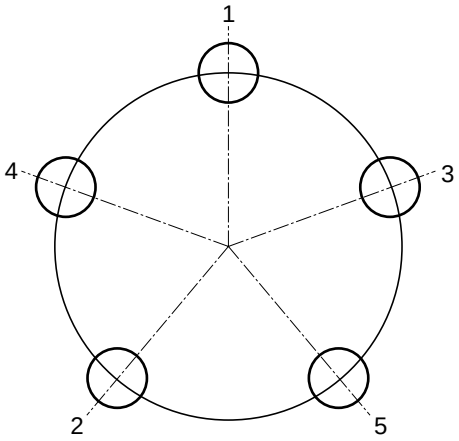

KHQE810B

WHEEL RUNOUT

1. Jack up the vehicle and support it with jack stands.
2. Measure the wheel runout with a dial indicator as illustrated.
3. Replace the wheel if the wheel runout exceeds the limit.

Limit		Radial	Axial
Runout mm(in)	Aluminium	0.3(0.012)	0.3(0.012)
	Spare	0.5(0.020)	0.5(0.020)

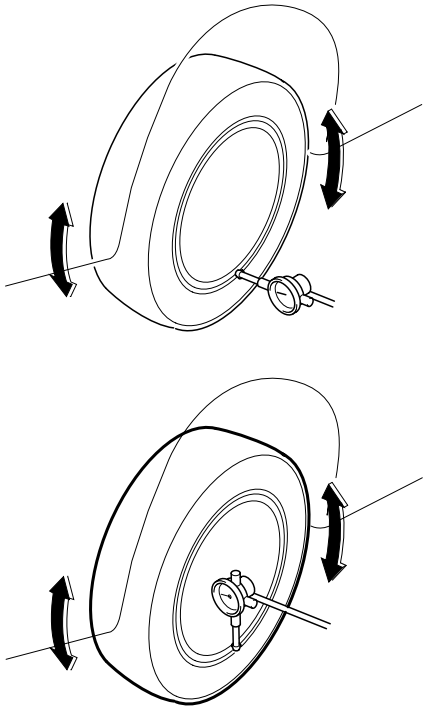

KHRE402A

TIRE

TIRE WEAR E36BFEC6

1. Measure the tread depth of the tires.

Tread depth [limit] : 1.6 mm (0.063 in)

2. If the remaining tread(A) depth is less than the limit, replace the tire.

NOTE

When the tread depth of the tires is less than 1.6 mm(0.063 in), the wear indicators (B) will appear.

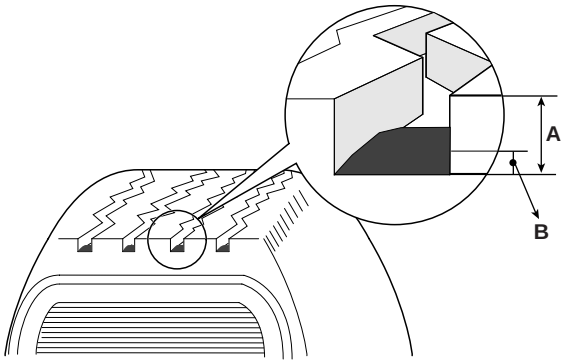

KHRE404A

TIRE ROTATION

Rotate the tires in the pattern illustrated.

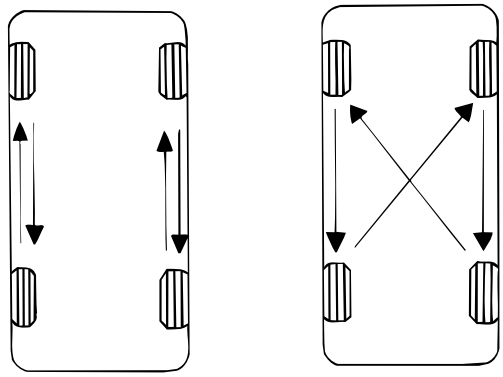

KHRE405A

CHECKING FOR PULL AND WANDER

If the steering pulls to one side, rotate the tires according to the following wheel rotation procedure.

1. Rotate the front right and front left tires, and perform a road test in order to confirm vehicle stability.

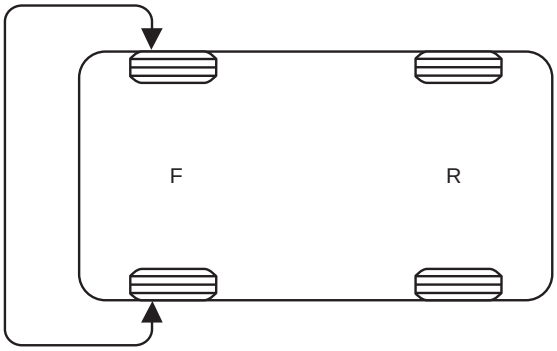

EHRF405B

2. If the steering pulls to the opposite side, rotate the front and rear tires, and perform a road test again.

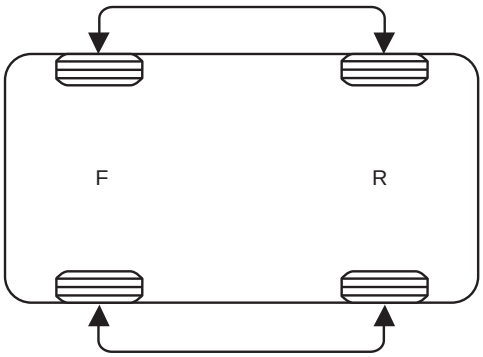

EHRF405C

3. If the steering continues to pull to one side, rotate the front right and left tires again, and perform a road test.

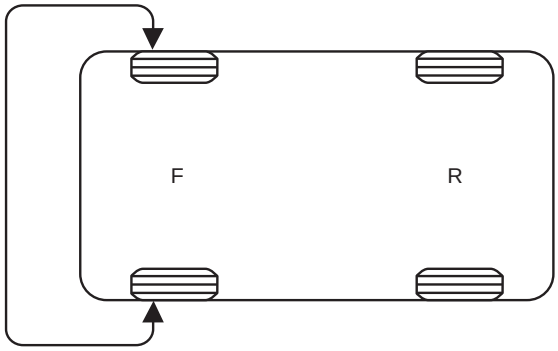

EHRF405B

4. If the steering continues to pull to the opposite side, replace the front wheels with new ones.

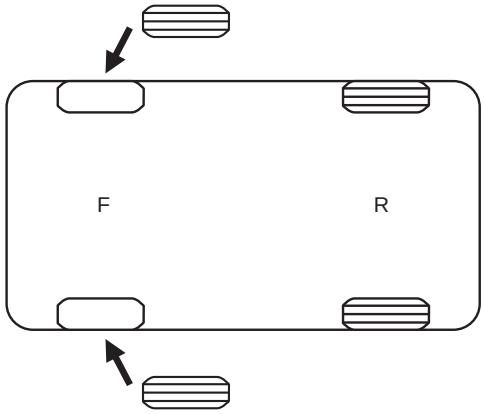

EHRF405E