Manual Shift Detent Lever with Shaft Position Switch Assembly Replacement

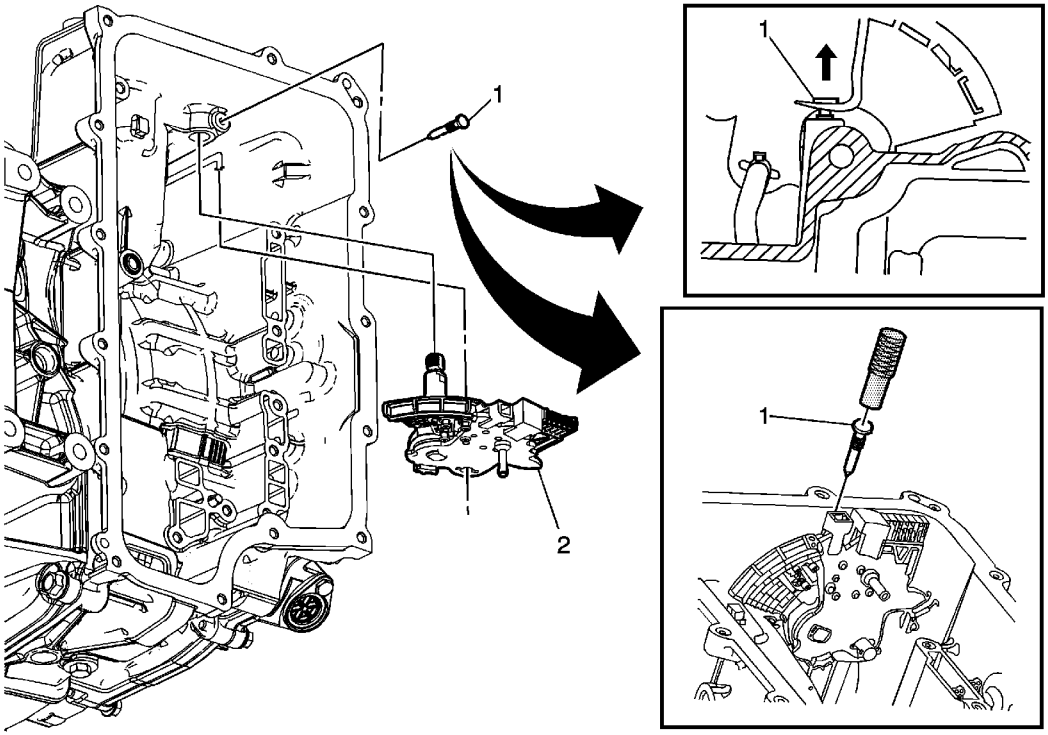

Callout	Component Name
Preliminary Procedures 1. Remove the transmission range selector lever. Refer to Automatic Transmission Range Selector Lever Replacement. 2. Remove the lower control valve body. Refer to Control Valve Lower Body and Upper Body Replacement.	
1	Manual Shaft Detent Lever Pin **Caution:** Use J 41229 to install the manual shaft pin at the correct height in order to properly secure the manual shaft. If you install the pin too deep, the case bore may crack. **Tip** • Use a small nail puller to remove the pin. Discard the pin. It is not reusable. • Use J 41229 Manual Shaft Pin Installer to install the pin. Inspect that the pin installed height is within 6.5 mm-7.5 mm (0.25 in-0.30 in).

cardiagn.com

	J 41229 Manual Shaft Pin Installer
2	Manual Shaft Detent Lever Assembly (w/Shift Position Switch) **Procedure** 1. Removal: partly lower the manual shaft detent lever assembly (w/shift position switch) in order to rotate the detent lever and disconnect the park actuator rod. Then fully remove the manual shaft detent lever assembly from the transmission case. 2. Installation: partly install the manual shaft detent lever assembly (w/shift position switch). Rotate the detent lever and connect the park actuator rod. Then fully install the manual shaft detent lever assembly in the transmission case. 3. Lubricate the manual shaft with automatic transmission fluid (ATF) to prevent damage to the manual shift shaft seal. **Tip** Do not pull the park actuator rod end out beyond the machined oil passage surface in the case. A no park condition will exist if the park pawl actuator assembly is pulled out of the transmission too far and the actuator rod disengages from the park pawl. The transmission assembly will require disassembly to re-install the actuator rod over the park pawl.

cardiagn.com

Transmission Control Lever Knob Replacement

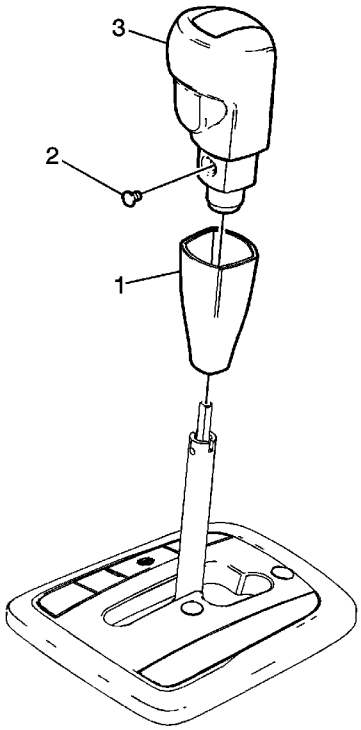

Callout	Component Name
1	Automatic Transmission Control Lever Knob Bezel **Tip** • Removal: carefully insert a small flat-bladed tool between the bezel (1) and the shift knob. Apply careful downward pressure to the bezel to separate the bezel from the shift knob. The bezel will drop down approximately 13.0 mm (0.5 in) exposing the shift knob screws (2). • Installation: Lift the bezel (1) up to the shift knob until a click sound is heard indicating the bezel is secured to the shift knob.
2	Automatic Transmission Control Lever Knob Screw **Caution:** Refer to Fastener Caution in the Preface section. **Tip** Loosen the shift control knob screw approximately 4-5 turns. It is not necessary to fully remove the screws from the shift control knob. **Tighten** 1.5 N·m (13 lb in).

cardiagn.com

cardiagn.com

Automatic Transmission Control Indicator Replacement (Without Traction Control)

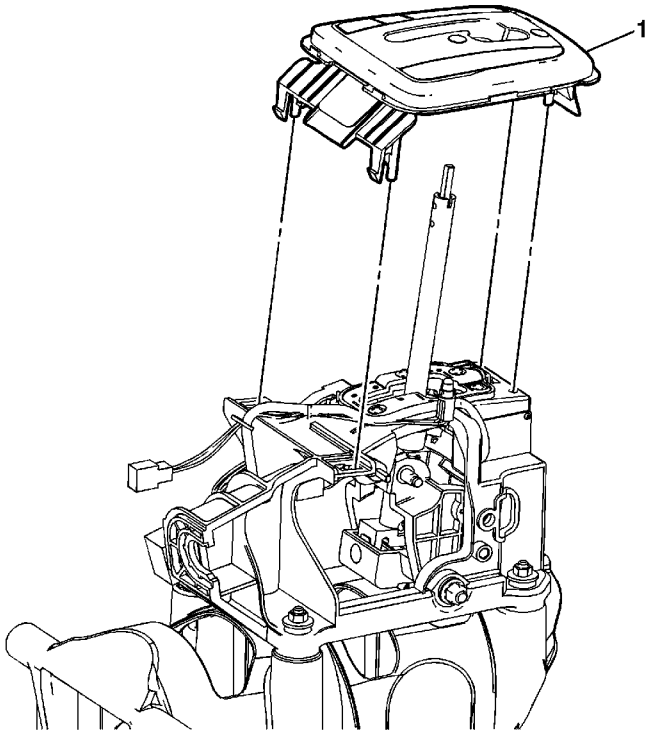

Callout	Component Name
Preliminary Procedures 1. Apply the parking brake. 2. Remove the automatic transmission control lever knob. Refer to Transmission Control Lever Knob Replacement. 3. Remove the front floor console accessory trim plate. Refer to Front Floor Console Accessory Trim Plate Replacement. 4. Remove the control position indicator bulb from the automatic transmisson control indicator.	
1	Automatic Transmisson Control Indicator

cardiagn.com

Automatic Transmission Control Indicator Replacement (With Traction Control)

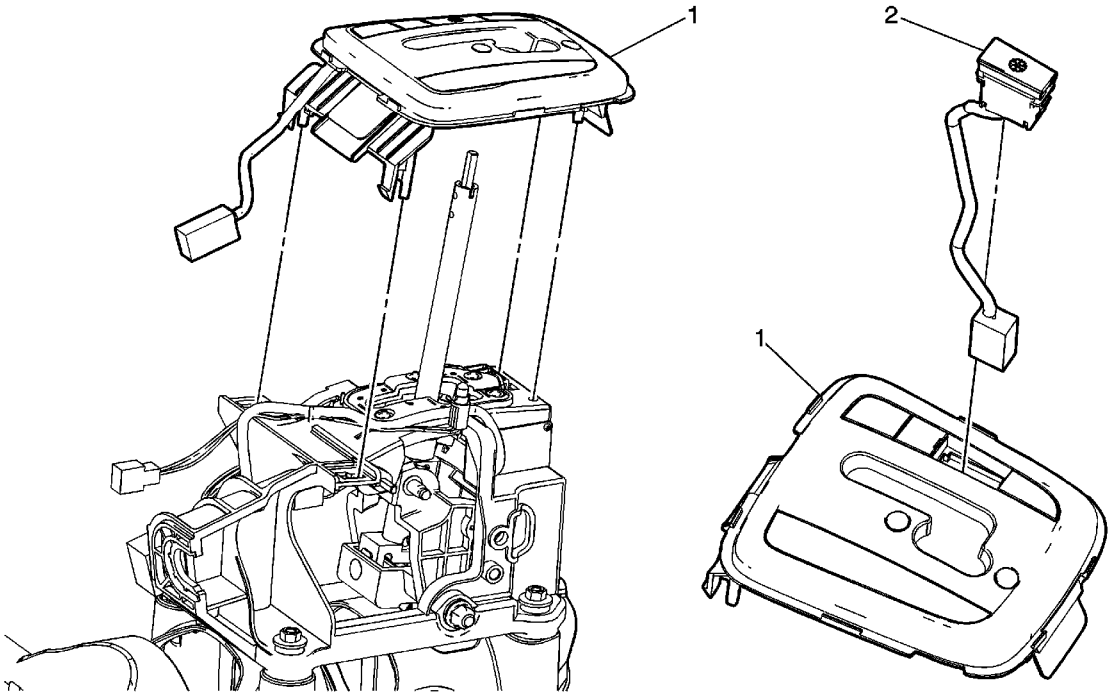

Callout	Component Name
Preliminary Procedures 1. Apply the parking brake. 2. Remove the automatic transmission control lever knob. Refer to Transmission Control Lever Knob Replacement. 3. Remove the front floor console accessory trim plate. Refer to Front Floor Console Accessory Trim Plate Replacement. 4. Remove the control position indicator bulb from the automatic transmisson control indicator. 5. Disconnect the traction control switch electrical connector.	
1	Automatic Transmisson Control Indicator
2	Traction Control Switch

cardiagn.com

Transmission Control Bracket Replacement

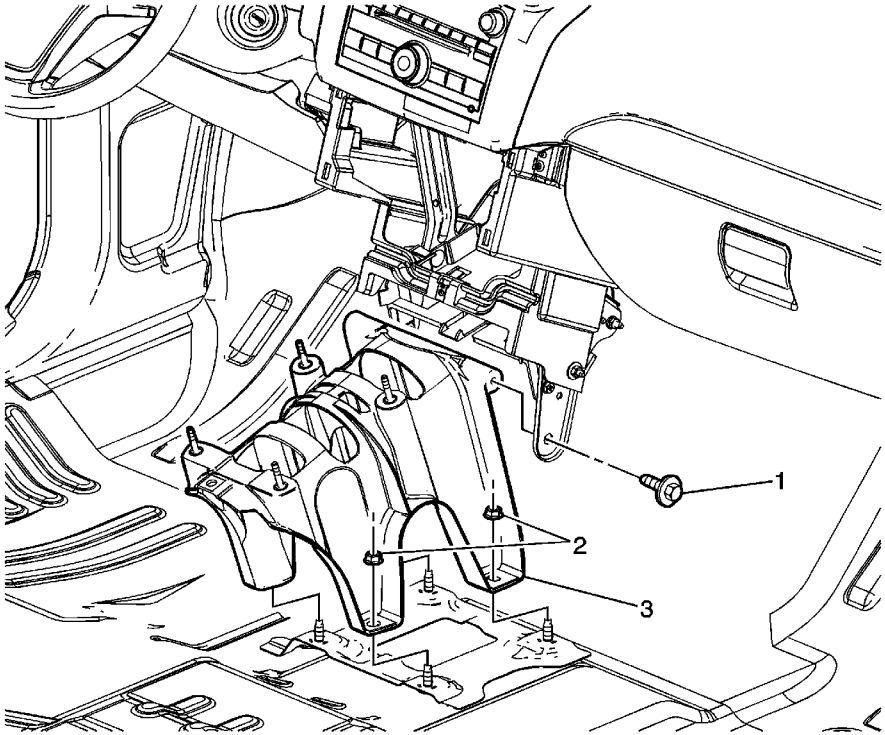

Callout	Component Name
Preliminary Procedures Remove the automatic transmission control. Refer to Transmission Control Replacement.	
1	Transmission Control Bracket Bolt (Qty: 2) **Caution:** Refer to Fastener Caution in the Preface section. **Tighten** 25 N·m (18 lb ft)
2	Transmission Control Bracket Nut (Qty: 4) **Tighten** 25 N·m (18 lb ft)
3	Transmission Control Bracket

cardiagn.com

Transmission Control Replacement

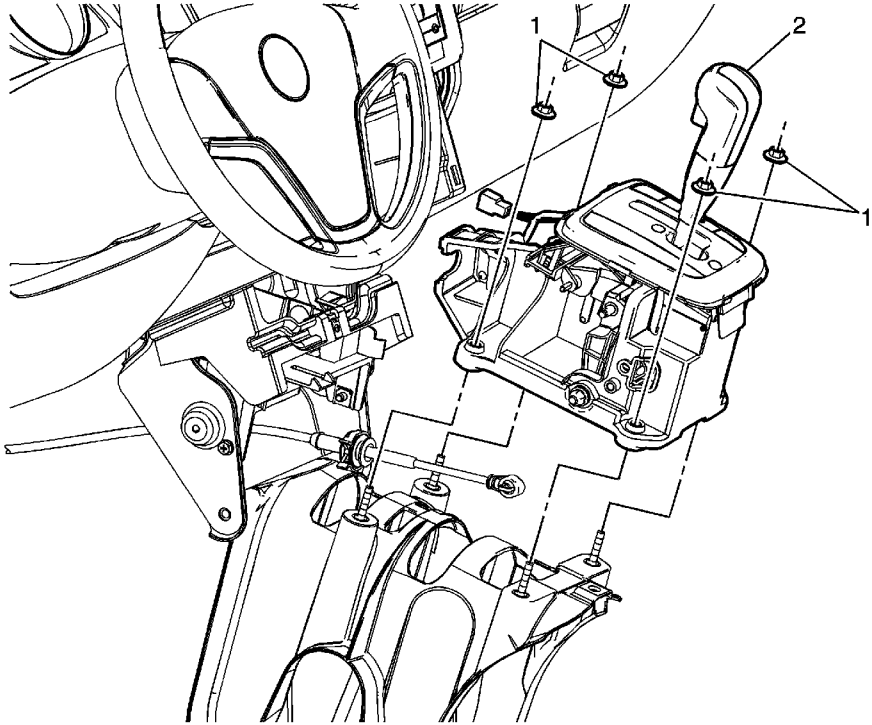

Callout	Component Name
Preliminary Procedures 1. Remove the front floor console extension panel. Refer to Front Floor Console Extension Panel Replacement. 2. Disconnect the range select cable from range select lever. 3. Disconnect the range select lever electrical connector.	
1	Automatic Transmission Range Select Lever Nut (Qty: 4) **Caution:** Refer to Fastener Caution in the Preface section. **Tighten** 8 N·m (71 lb in)
2	Automatic Transmission Range Select Lever

cardiagn.com

Automatic Transmission Range Selector Lever Replacement

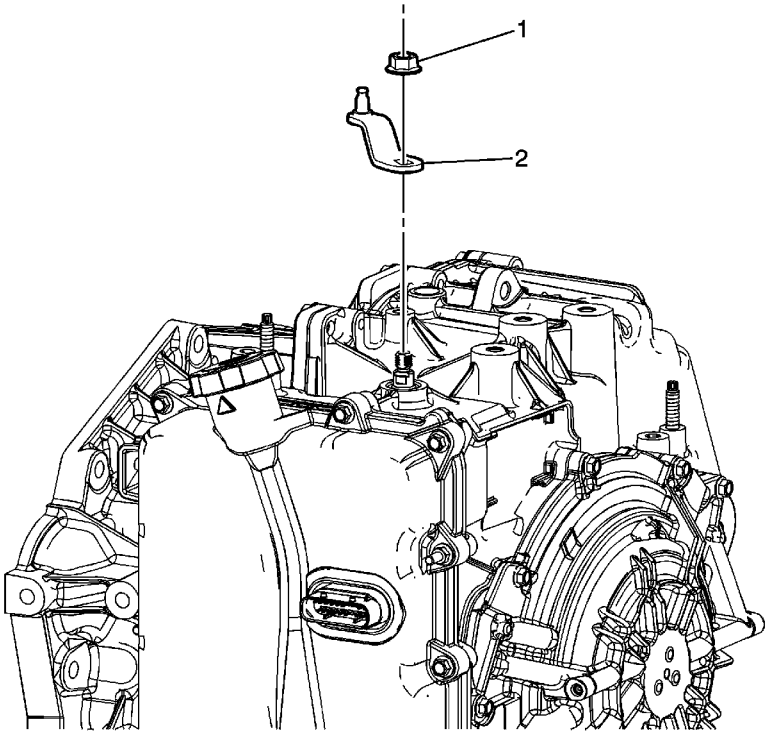

Callout	Component Name
Preliminary Procedures 1. Set the park brake and chock the wheels. 2. Disconnect the range selector cable from the range selector lever.	
1	Transmission Range Selector Lever Nut **Caution:** Refer to Fastener Caution in the Preface section. **Tighten** 20 N·m (15 lb ft)
2	Transmission Range Selector Lever

cardiagn.com

Range Selector Lever Cable Replacement

Removal Procedure

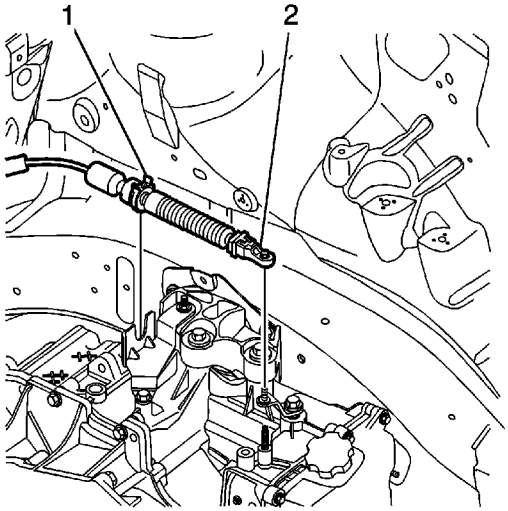

1. Disconnect the range select cable (2) from the range select lever.
2. Release the range select cable retaining clip (1) and remove the cable from the range select cable bracket.
3. Remove the front floor console extension panel. Refer to Front Floor Console Extension Panel Replacement .

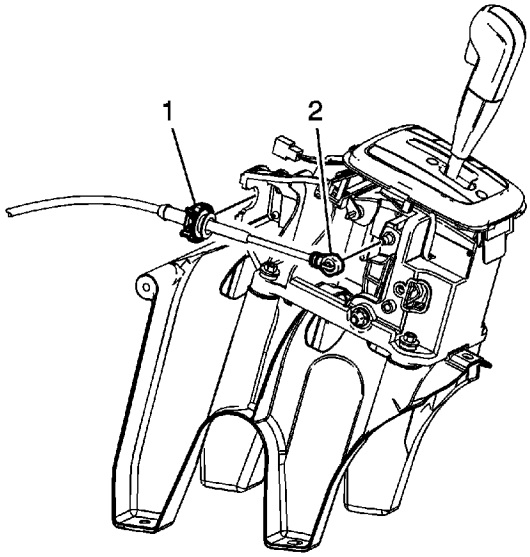

cardiagn.com

housing.

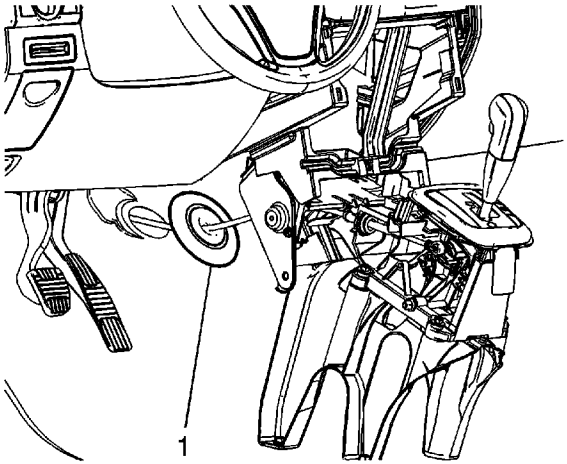

6. Remove the range select cable grommet (1) from the cowl.
7. Remove the range select cable from the vehicle.

Installation Procedure

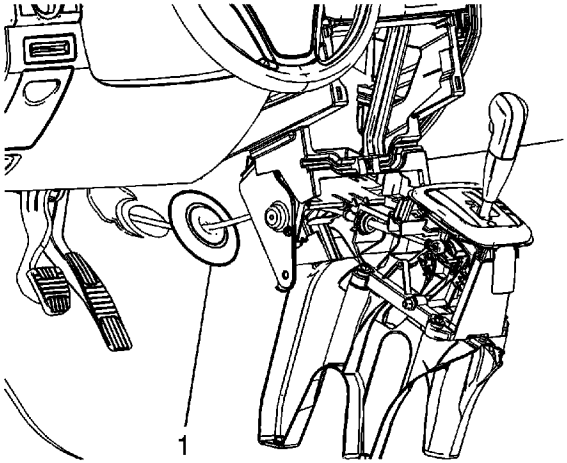

1. Install the range select cable to the vehicle through the cowl and the carpet.
2. Install the range select cable grommet (1) in the cowl.

cardiagn.com

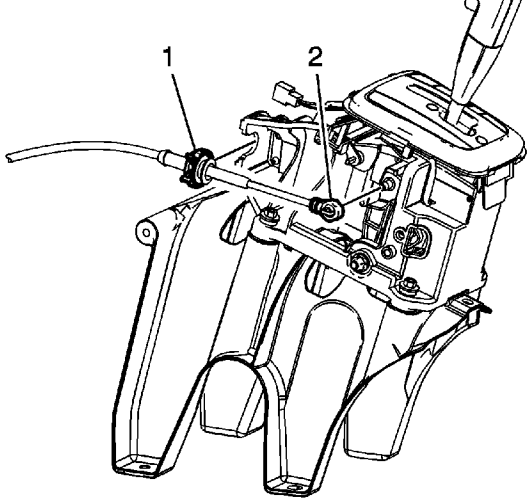

3. Install the range select cable (1) to the automatic transmission range select lever housing.
4. Install the range select cable (2) to the automatic transmission range select lever pin.
5. Install the front floor console extension panel. Refer to Front Floor Console Extension Panel Replacement .

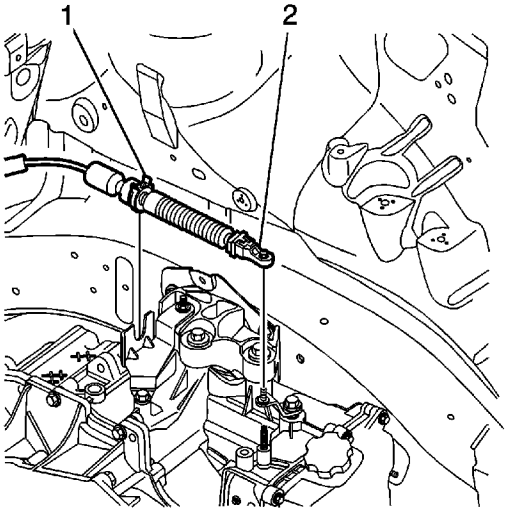

6. Install the range select cable to the range select cable bracket. Ensure the range select cable retaining clip (1) is secured in the bracket.
7. Connect the range select cable (2) to the range select lever.
8. Adjust the cable. Refer to Range Selector Lever Cable Adjustment .

cardiagn.com

Range Selector Lever Cable Adjustment

1. Position the shift lever in NEUTRAL.

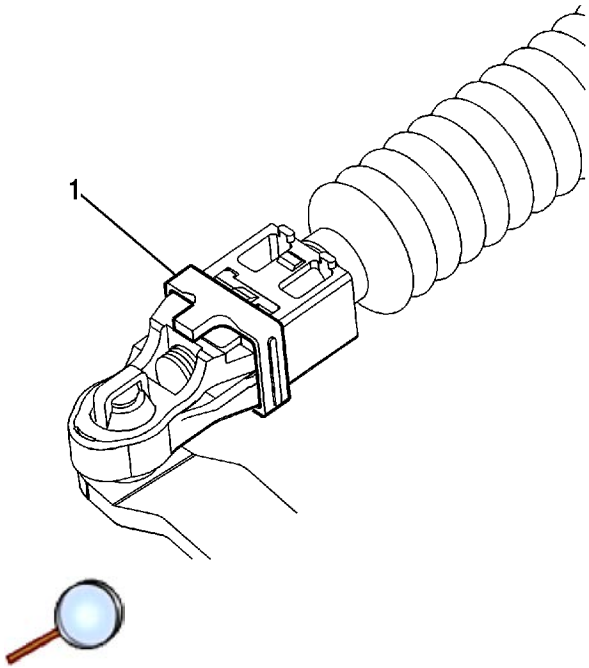

2. Release the shift control cable adjustment lock cover retaining tab (1).

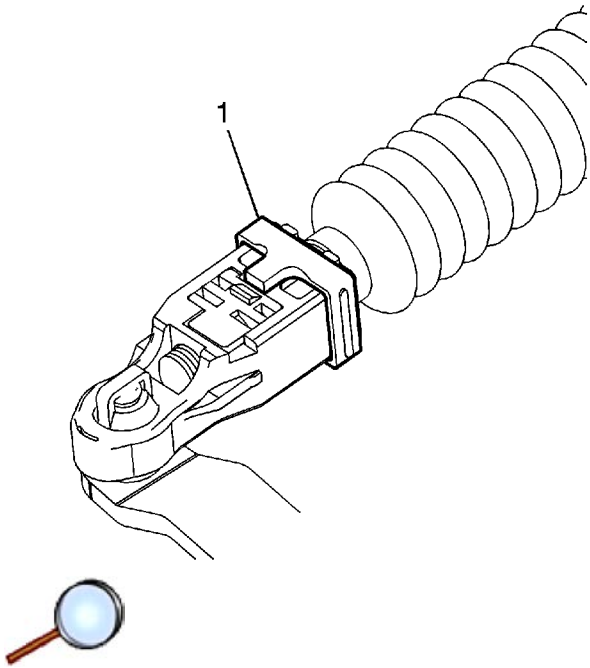

3. Slide the shift control cable adjustment lock cover (1) back exposing the adjustment lock.

cardiagn.com

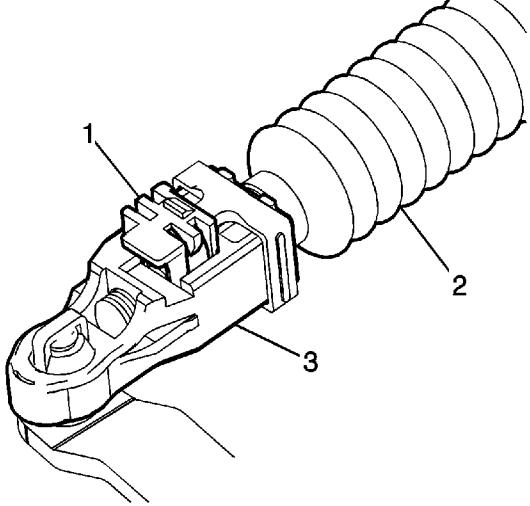

4. Lift the shift control cable adjustment lock (1).
5. The shift control cable (2) and cable end (3) are free to slide to proper adjustment. Ensure the shift lever and transmission are both in the NEUTRAL position.
6. Depress the shift control cable adjustment lock (1) to lock the cable adjustment.

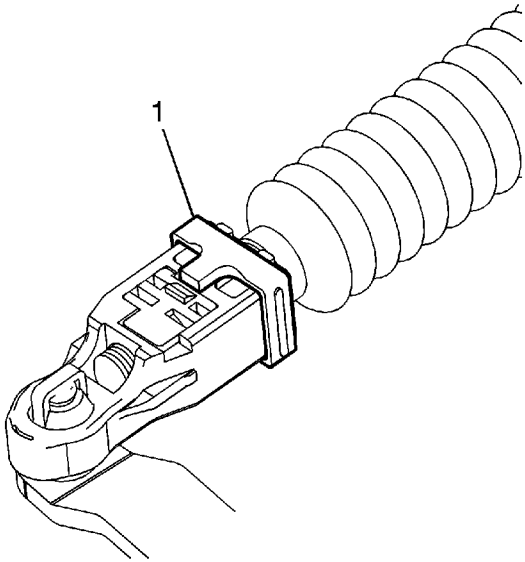

7. Slide the shift control cable adjustment lock cover (1) over the adjustment lock.

cardiagn.com

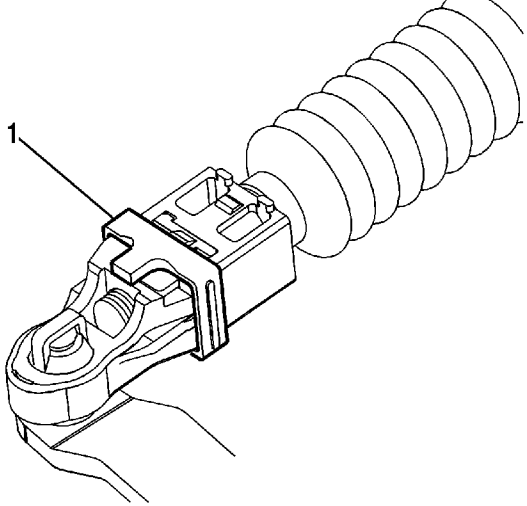

8. Ensure the shift control cable adjustment lock cover (1) is securely latched on the adjustment lock.
9. Inspect the operation of the starting system with the shift lever in each position. The engine should only crank when the lever is in the PARK or NEUTRAL position.

cardiagn.com

Range Selector Lever Cable Bracket Replacement

Removal Procedure

1. Remove the battery tray. Refer to Battery Tray Replacement.

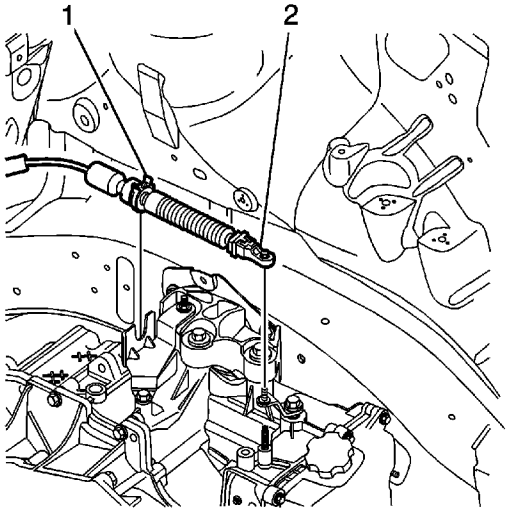

2. Disconnect the range select cable (2) from the range select lever.
3. Release the range select cable retaining clip (1) and remove the cable from the range select cable bracket.

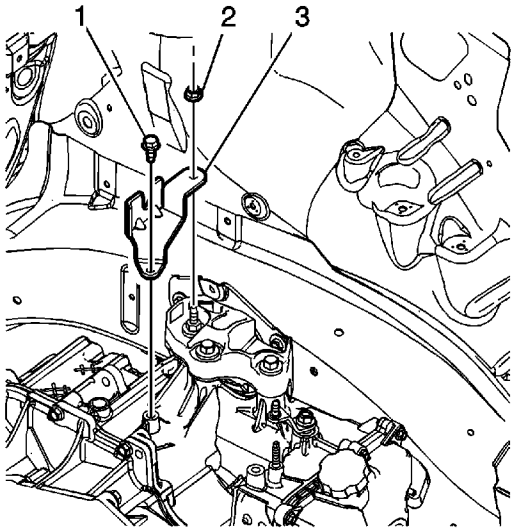

4. Remove the nut (2) securing the range select lever cable bracket.
5. Remove the bolt (1) securing the range select lever cable bracket.

cardiagn.com

Installation Procedure

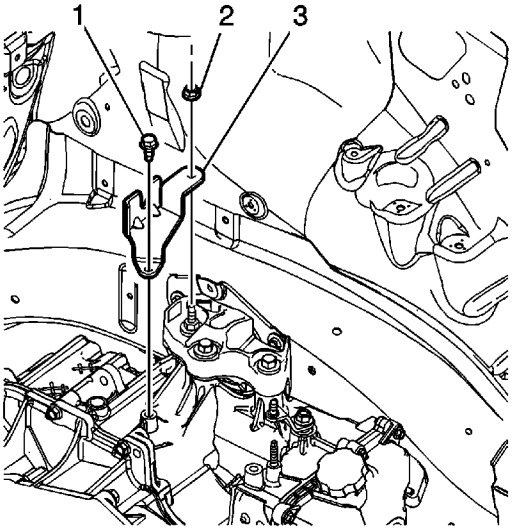

1. Install the range select lever cable bracket (3).

   Caution: Refer to Fastener Caution in the Preface section.

2. Install the bolt (1) securing the range select lever cable bracket. Tighten the bolt to **25 N·m (18 lb ft)**.
3. Install the nut (2) securing the range select lever cable bracket. Tighten the nut to **25 N·m (18 lb ft)**.

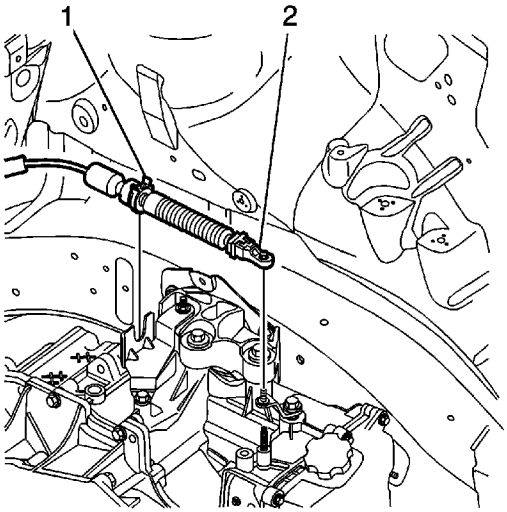

cardiagn.com

4. Install the range select cable to the range select cable bracket. Ensure the range select cable retaining clip (1) is secured in the bracket.
5. Connect the range select cable (2) to the range select lever.
6. Adjust the cable. Refer to Range Selector Lever Cable Adjustment.
7. Install the battery tray. Refer to Battery Tray Replacement.

cardiagn.com

Transmission Fluid Replacement

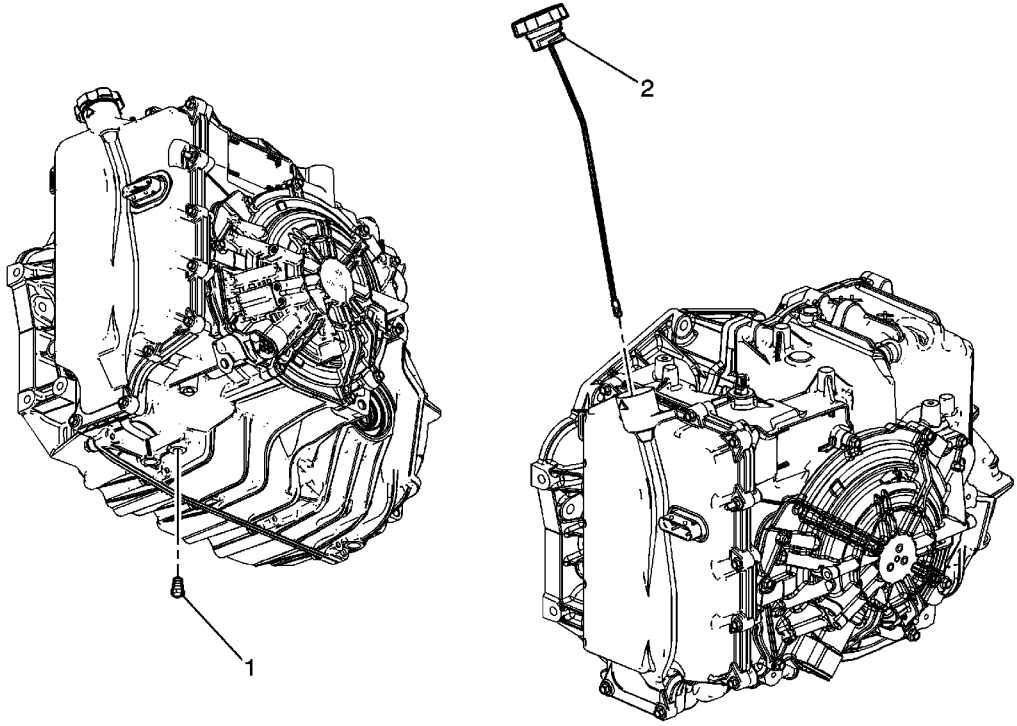

Callout	Component Name
Preliminary Procedure Raise the vehicle. Refer to Lifting and Jacking the Vehicle.	
1	Fluid Drain Plug **Caution:** Refer to Component Fastener Tightening Caution in the Preface section. **Tip** Place a drain pan capable of containing more than 5 quarts of fluid under the transmission before removing the plug to drain the fluid. **Tighten** 12 N·m (106 lb in)
2	Fluid Level Indicator **Tip** • Transmission will require approximately 5 quarts of fluid. • Fill the transmission with fluid. Refer to Transmission Fluid Check.

cardiagn.com

Transmission Fluid Cooler Pipe Connector Replacement - Radiator

Removal Procedure

1. Drain the cooling system. Refer to Cooling System Draining and Filling.
2. Remove the transaxle oil cooler hoses from the oil cooler fittings on the radiator. Refer to Transmission Fluid Cooler Hose/Pipe Quick-Connect Fitting Disconnection and Connection.

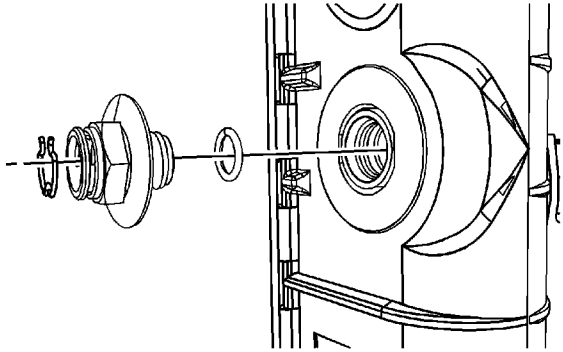

Note: Do not remove the upper and lower transaxle oil cooler fittings from the radiator at the same time other wise the transaxle oil cooler will fall inside the radiator end tank.

3. Remove the oil cooler fitting from the radiator.

Installation Procedure

1. Inspect the new O-ring seals for cracks, cuts or damage. Replace if necessary.

   Caution: Refer to Fastener Caution in the Preface section.

cardiagn.com

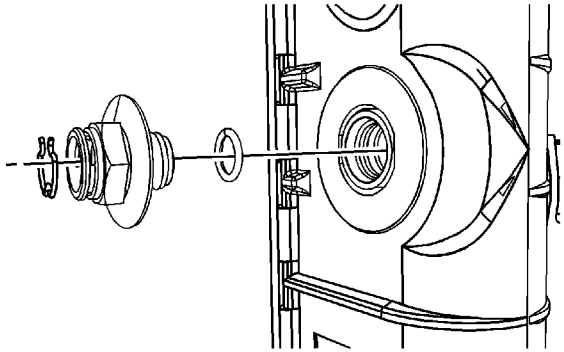

Note: The correct thread engagement is critical. Cross-threaded fittings can achieve proper tightness and still leak.

2. Install the oil cooler fitting to the radiator and tighten to **38 N·m (28 lb ft)**.
3. Install the transaxle oil cooler hoses to the oil cooler fittings on the radiator. Refer to Transmission Fluid Cooler Hose/Pipe Quick-Connect Fitting Disconnection and Connection.
4. Fill the cooling system. Refer to Cooling System Draining and Filling.
5. Adjust the transmission fluid level.
6. Inspect for fluid leaks.

cardiagn.com

Transmission Fluid Cooler Hose / Pipe Quick-Connect Fitting Disconnection and Connection

Removal Procedure

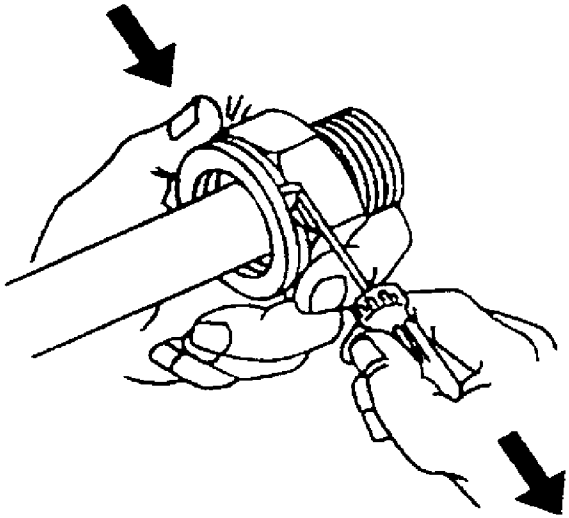

Important: Perform the following procedure when removing the retaining rings and cooler lines from the quick connect fittings located on the radiator and/or the transmission.

1. Pull the plastic cap back from the quick connect fitting and down along the cooler line about 5 cm (2 in).
2. Using a bent-tip screwdriver, pull on one of the open ends of the retaining ring in order to rotate the retaining ring around the quick connect fitting until the retaining ring is out of position and can be completely removed.
3. Remove the retaining ring from the quick connect fitting.
4. Discard the retaining ring.

cardiagn.com

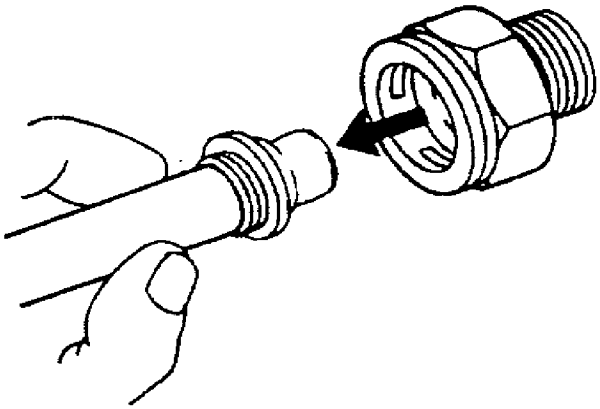

5. Pull the cooler line straight out from the quick connect fitting.

Installation Procedure

Important:

- Do not reuse any of the existing oil lines or oil line fittings if there is excessive corrosion.
- Do not reuse any of the existing retaining rings that were removed from the existing quick connect fittings. Install new retaining rings.
- Ensure the following procedures are performed when installing the new retaining rings onto the fittings.

1. Install a new retaining ring into the quick connect fitting using the following procedure:

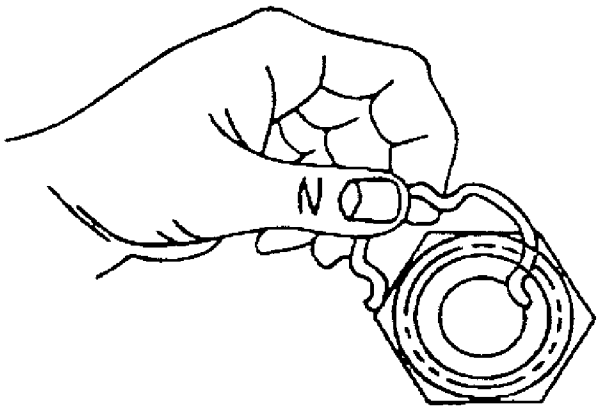

cardiagn.com

2. Hook one of the open ends of the retaining ring in one of the slots in the quick connect fitting.

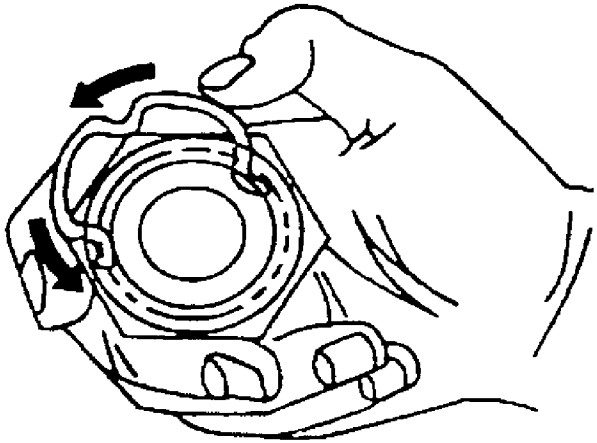

3. Rotate the retaining ring around the fitting until the retaining ring is positioned with all three ears through the three slots on the fitting.

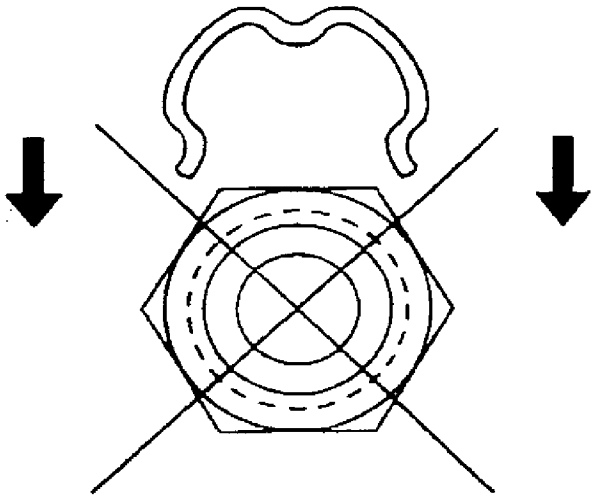

4. Do not install the new retaining ring onto the fitting by pushing the retaining ring.

cardiagn.com

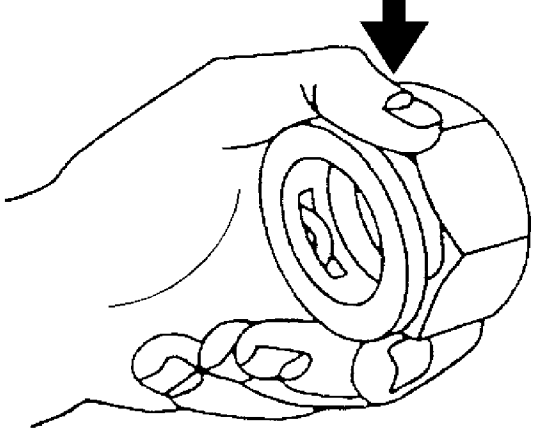

5. Ensure that the three retaining ring ears are seen from inside the fitting and that the retaining ring moves freely in the fitting slots.

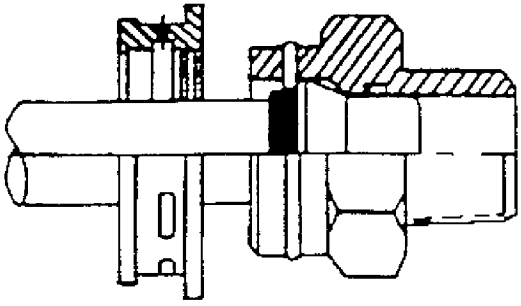

6. Install the cooler line into the quick connect fitting.
7. Insert the cooler line end into the quick connect fitting until a click is either heard or felt.

cardiagn.com

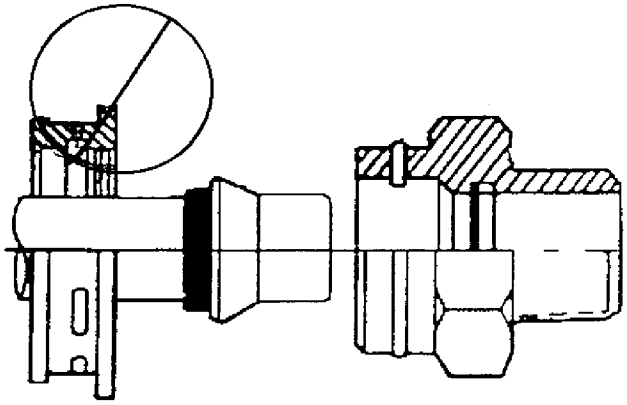

8. Do not use the plastic cap on the cooler line in order to install the cooler line into the fitting.
9. Pull back sharply on the cooler line in order to ensure that the cooler line is fastened into the quick connect fitting.

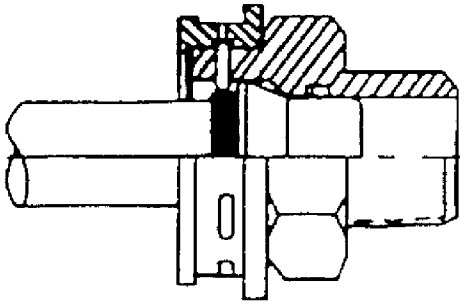

Important: Do not manually depress the retaining clip when installing the plastic cap.

10. Position (snap) the plastic cap onto the fitting. Do not manually depress the retaining ring when installing the plastic cap onto the quick connect fitting.
11. Ensure that the plastic cap is fully seated against the fitting.

cardiagn.com

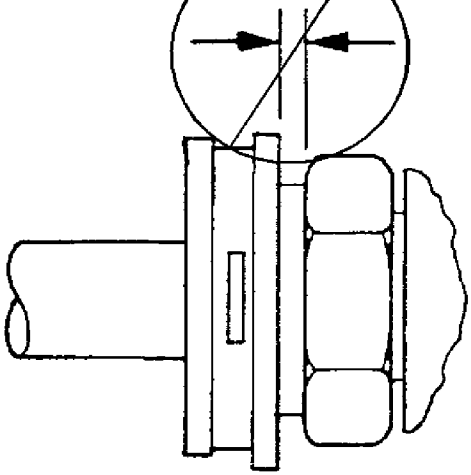

12. Ensure that no gap is present between the cap and the fitting.

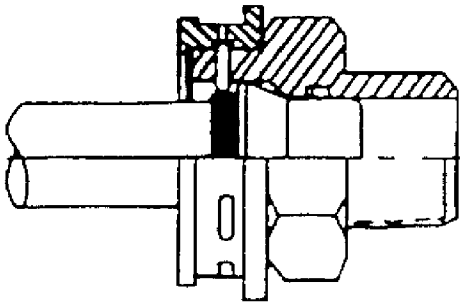

13. Ensure that the yellow identification band on the tube is hidden within the quick connect fitting.

cardiagn.com

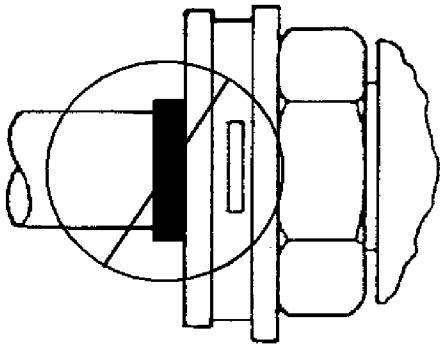

14. A hidden yellow identification band indicates proper joint seating.
15. Fill the transmission to the proper level with DEXRON® VI transmission fluid. Refer to Transmission Fluid Check .

cardiagn.com

Fluid Cooler Inlet Hose Replacement

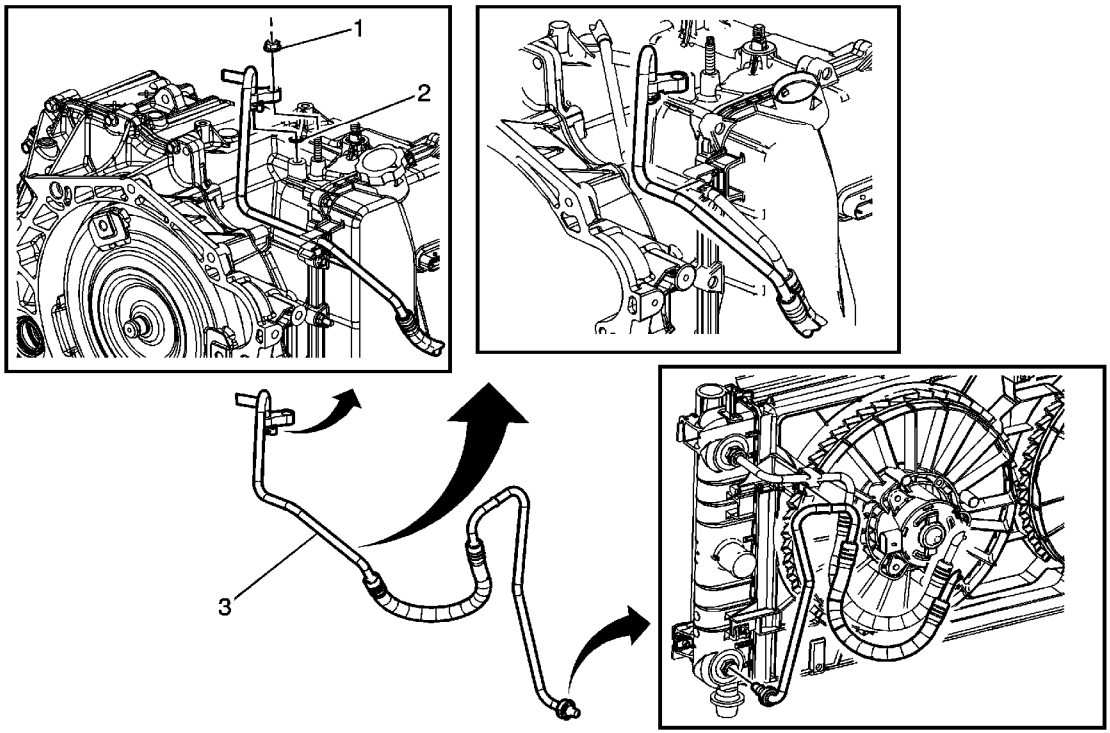

Callout	Component Name
Preliminary Procedure Remove the battery tray. Refer to Battery Tray Replacement.	
1	Transmission Fluid Cooler Pipe Nut **Caution:** Refer to Fastener Caution in the Preface section. **Tighten** 22 N·m (16 lb ft)
2	Sealing Washer **Tip** Remove and discard the sealing washer.
3	Front Transmission Fluid Cooler Inlet Hose **Procedure:** 1. Disconnect the transmission line from the radiator and transmission. Refer to

cardiagn.com

	2. Note the routing of the transmission line to ensure proper installation. 3. Remove the transmission line from the clips securing the line to the transmission and fan shroud. 4. Inspect the transmission fluid level. Refer to Transmission Fluid Check.

cardiagn.com

Fluid Cooler Outlet Hose Replacement

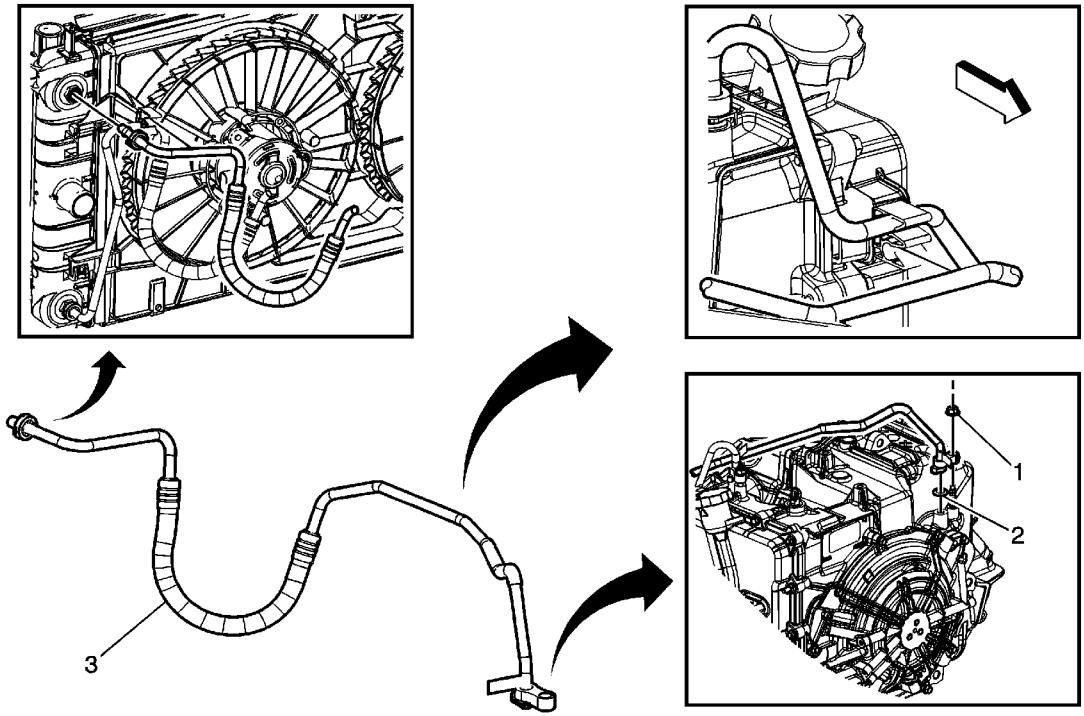

Callout	Component Name
Preliminary Procedure Remove the battery tray. Refer to Battery Tray Replacement.	
1	Transmission Fluid Cooler Pipe Nut **Caution:** Refer to Fastener Caution in the Preface section. **Tighten** 22 N·m (16 lb ft)
2	Sealing Washer **Tip** Remove and discard the sealing washer.
3	Rear Transmission Fluid Cooler Outlet Hose **Procedure:** 1. Disconnect the transmission line from the radiator and transmission. Refer to

cardiagn.com

	2. Note the routing of the transmission line to ensure proper installation. 3. Remove the transmission line from the clips securing the line to the transmission and fan shroud. 4. Inspect the transmission fluid level. Refer to Transmission Fluid Check.

cardiagn.com

Automatic Transmission Fluid Pressure Test Hole Plug Replacement

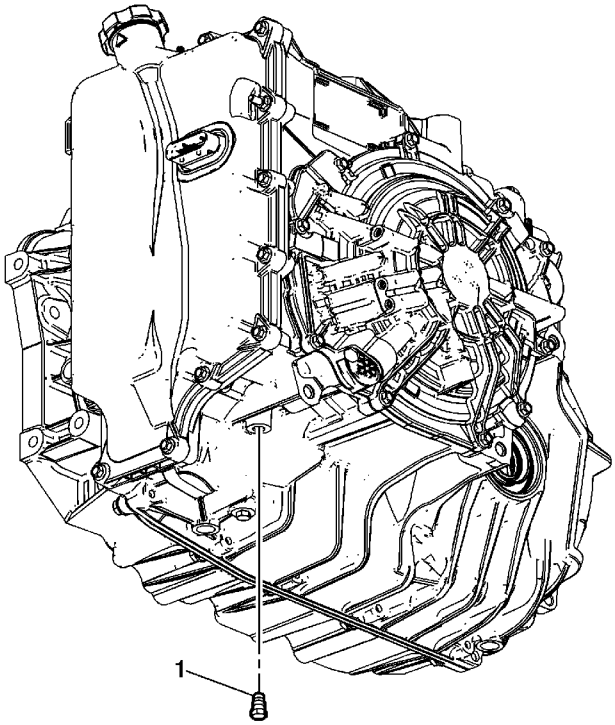

Callout	Component Name
Preliminary Procedure Raise the vehicle. Refer to Lifting and Jacking the Vehicle.	
1	Fluid Pressure Test Plug **Caution:** Refer to Fastener Caution in the Preface section. **Tighten** 12 N·m (106 lb in)

cardiagn.com

Front Wheel Drive Shaft Seal Replacement - Left Side

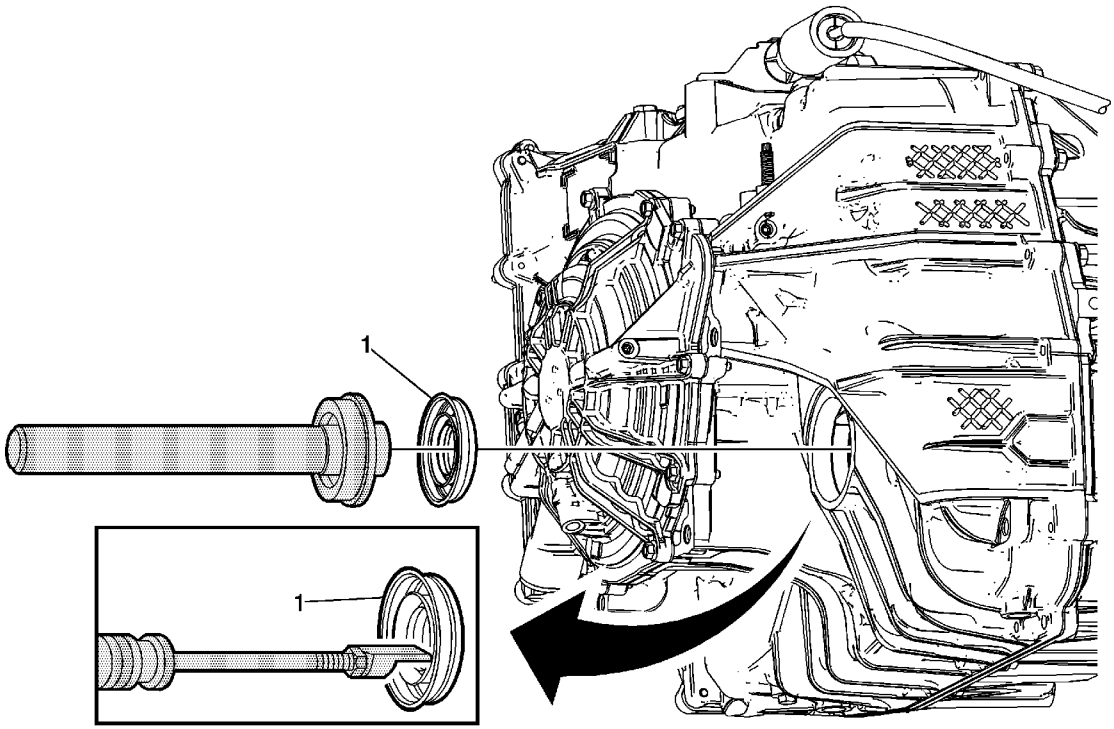

Callout	Component Name
Preliminary Procedures 1. Raise the vehicle. Refer to Lifting and Jacking the Vehicle . 2. Remove the left wheel drive shaft. Refer to Front Wheel Drive Shaft Replacement .	
1	Left Front Wheel Drive Shaft Oil Seal **Tip** • For seal removal use J 6125-1B with J 23129 . • For seal installation use J 8092 with J-46629-A . **Special Tools** • J 6125-1B Slide Hammer with Adapter • J 8092 Driver Handle • J 23129 Universal Seal Remover • J-46629-A Axle Seal Installer

cardiagn.com

Front Wheel Drive Shaft Seal Replacement - Right Side (FWD)

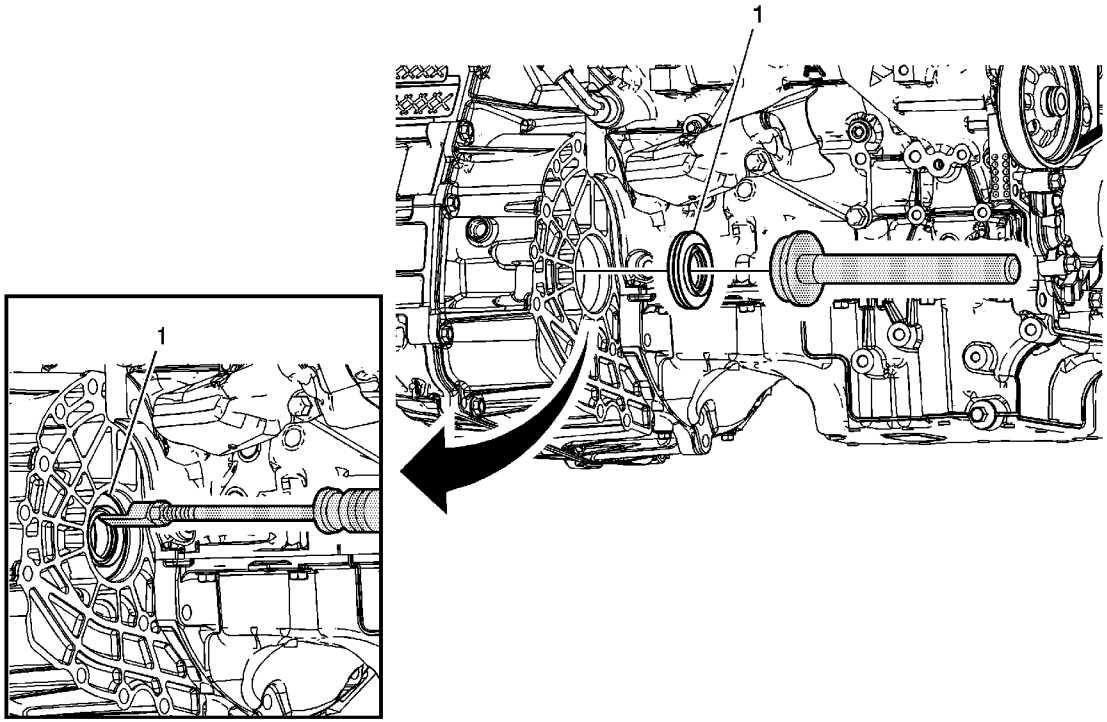

Callout	Component Name
Preliminary Procedures 1. Raise the vehicle. Refer to Lifting and Jacking the Vehicle . 2. Remove the intermediate drive shaft. Refer to Intermediate Shaft Replacement .	
1	Right Front Wheel Drive Shaft Oil Seal **Tip** • For seal removal use J 6125-1B with J 23129 . • For seal installation use J 8092 with J-46629-A . **Special Tools** • J 6125-1B Slide Hammer with Adapter • J 8092 Driver Handle • J 23129 Universal Seal Remover • J-46629-A Axle Seal Installer

cardiagn.com

Manual Shift Shaft and Seal Replacement

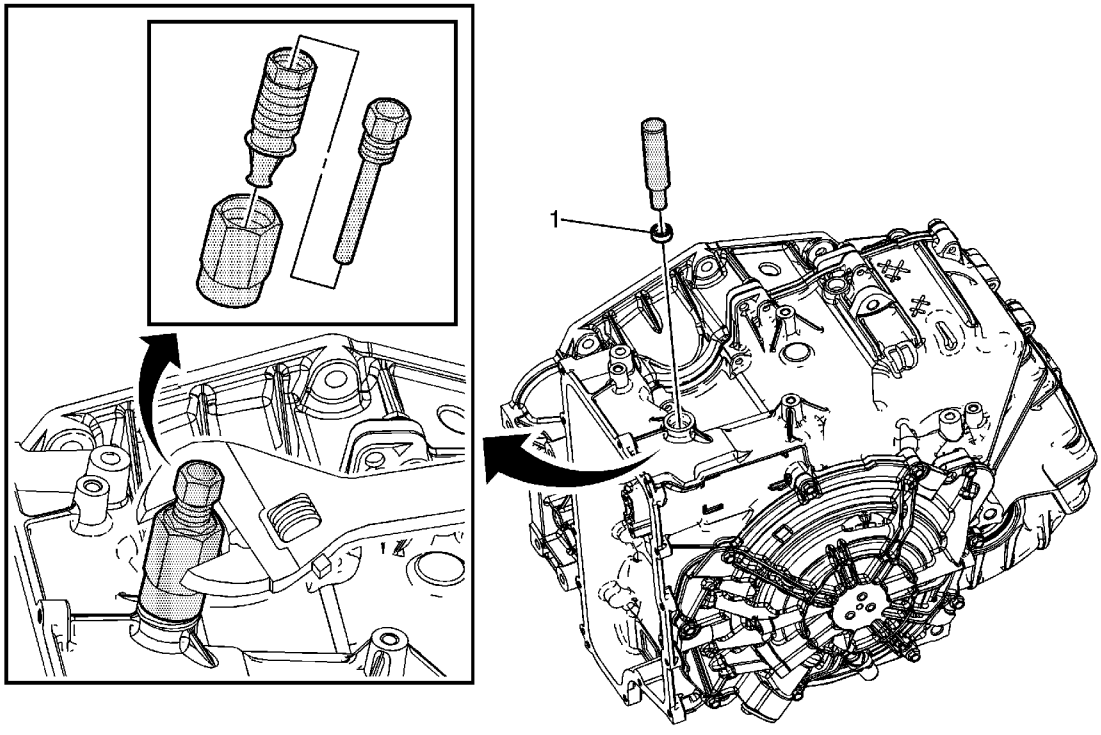

Callout	Component Name
Preliminary Procedures 1. Remove the battery tray. Refer to Battery Tray Replacement. 2. Remove the manual shaft and position switch assembly. Refer to Manual Shift Detent Lever with Shaft Position Switch Assembly Replacement.	
1	Manual Shift Shaft Seal **Tip** • For seal removal use J 45201 . • For seal installation use J-46626 . • Lubricate the manual shaft with automatic transmission fluid (ATF) to prevent damage to the manual shift shaft seal. **Special Tools** • J 45201 Cooler Line Seal Remover • J-46626 Seal Installer

cardiagn.com

Control Valve Body Cover Replacement

Removal Procedure

1. Remove the battery tray. Refer to Battery Tray Replacement.

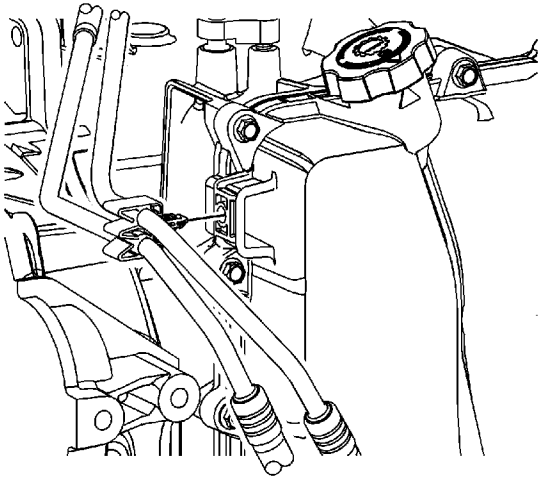

2. Remove the oil cooler inlet and outlet hoses from the retainer on the control valve body cover.
3. Raise and support the vehicle. Refer to Lifting and Jacking the Vehicle.
4. Remove the left engine splash shield. Refer to Engine Splash Shield Replacement.
5. Remove the front transmission mount. Refer to Transmission Front Mount Replacement.
6. Remove the lower nuts from the left transmission mount. Refer to Transmission Mount Replacement - Left Side.
7. Drain the transmission. Refer to Transmission Fluid Replacement.

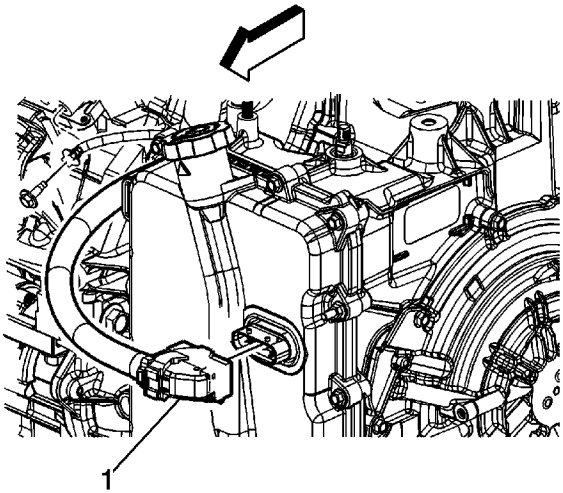

cardiagn.com

8. Disconnect the control valve body transmission control module (TCM) electrical connector (1).

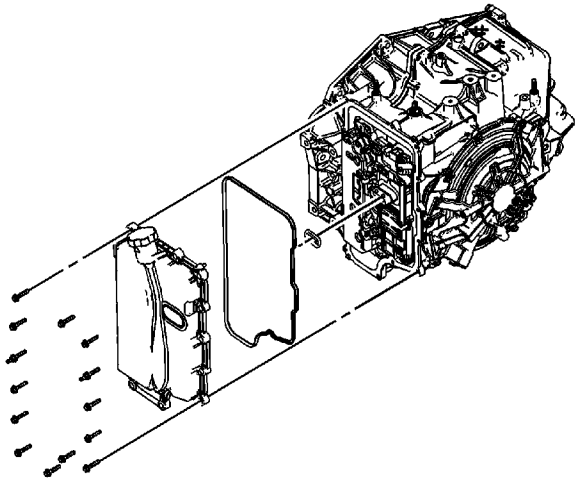

9. Remove the 2 control valve body cover studs M6 x 30.
10. Remove the 12 control valve body cover bolts M6 x 30.
11. Support the transmission with a transmission jack.
12. Using the transmission jack raise the transmission to gain clearance for removal of the control valve body cover.
13. Remove the control valve body cover.
14. Remove the control valve body cover gasket.

Caution: Support the control solenoid valve assembly around the connector when removing the seal. Excessive pulling force can damage the internal electrical connections.

15. Remove the control valve body cover wiring connector hole seal.
16. Remove all traces of the old gasket material. Clean the transmission case and control valve body cover gasket surfaces.

Installation Procedure

cardiagn.com

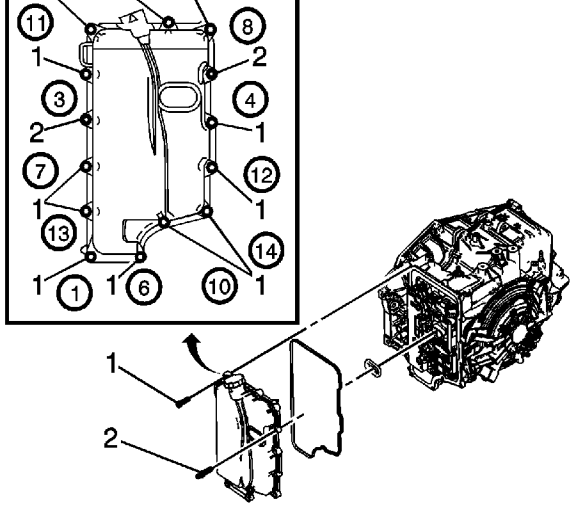

Note: The holes in the control valve body cover wiring connector hole seal must face toward the control solenoid valve assembly. If the holes face toward the valve body cover, there is a potential for a leak around the seal.

1. Install the control valve body cover wiring connector hole seal.
2. Install the control valve body cover gasket to the control valve body cover.
3. Install the control valve body cover.
4. Lower the transmission and remove the transmission jack.

Caution: Refer to Fastener Caution in the Preface section.

Note: Install all control valve body cover bolts and studs by hand then torque all bolts and studs in sequence.

5. Install the 12 control valve body cover bolts (1) M6 x 30 and tighten the bolts in sequence to **12 N·m (106 lb in)**.
6. Install the 2 control valve body cover studs (2) M6 x 30 and tighten the studs in sequence to **12 N·m (106 lb in)**.

cardiagn.com

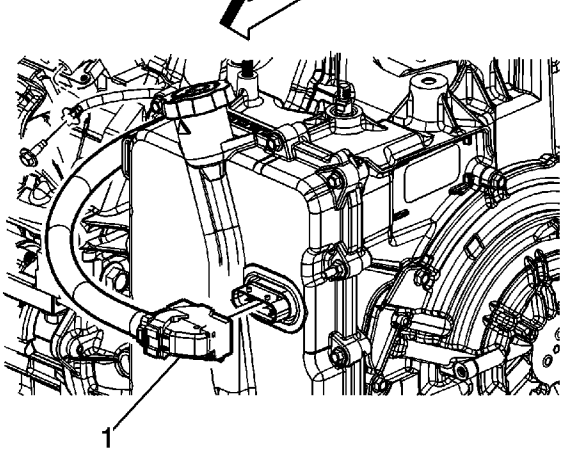

7. Connect the control valve body TCM electrical connector (1).
8. Install the lower nuts to the left transmission mount. Refer to Transmission Mount Replacement - Left Side.
9. Install the front transmission mount. Refer to Transmission Front Mount Replacement.
10. Install the left engine splash shield. Refer to Engine Splash Shield Replacement.
11. Lower the vehicle.

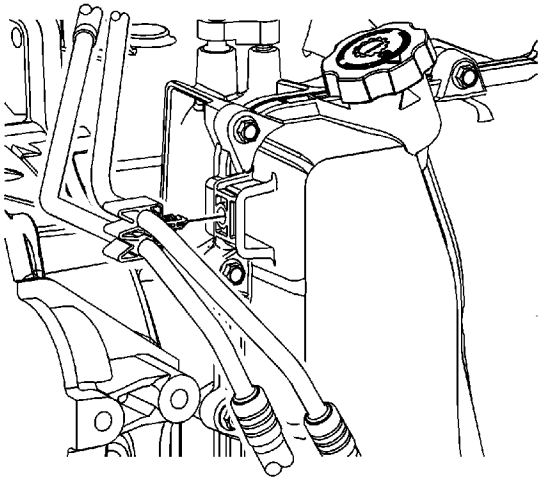

12. Install the oil cooler inlet and outlet hoses to the retainer on the control valve body cover.
13. Install the battery tray. Refer to Battery Tray Replacement.
14. Fill the transmission. Refer to Transmission Fluid Replacement.
15. Check for leaks.

cardiagn.com

Control Solenoid Valve and Transmission Control Module Assembly Replacement

Removal Procedure

1. Remove the control valve body cover. Refer to Control Valve Body Cover Replacement.

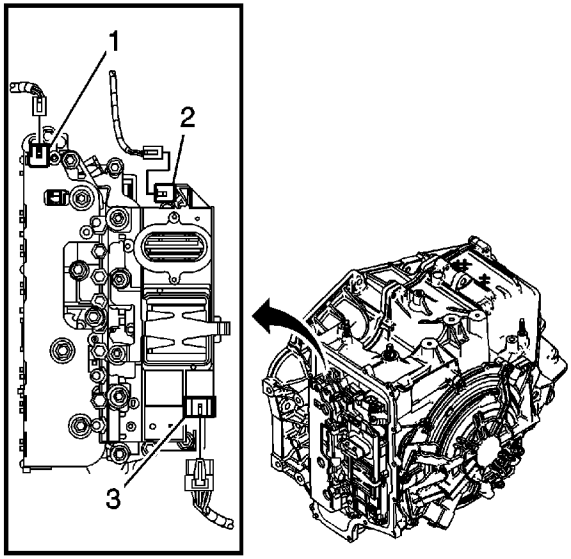

2. Disconnect the input speed sensor electrical connector (1).
3. Disconnect the output speed sensor electrical connector (2).
4. Disconnect the shift position switch electrical connector (3).

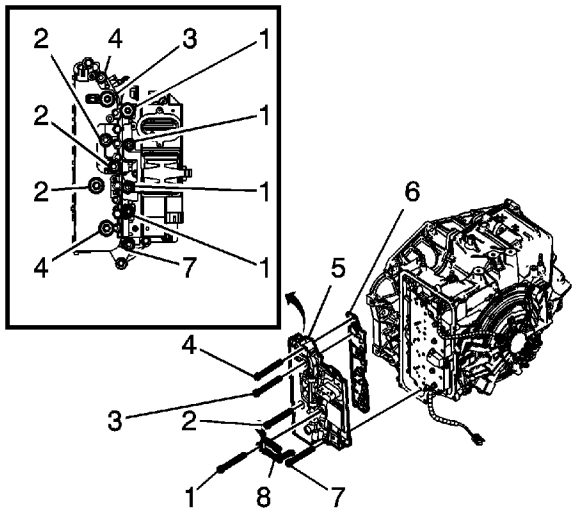

cardiagn.com

removal of the control valve body assembly.

7. Remove the 2 control valve body bolts (4) M6 x 65.
8. Remove the control valve body bolt (3) M6 x 42.
9. Remove the 3 control valve body bolts (2) M6 x 95.
10. Remove the control valve body bolt (7) M6 x 55.
11. Remove the control solenoid valve body and transmission control module (TCM) assembly (5).

Caution: Use care when removing or installing the filter plate assembly. A broken or missing retaining tab may not adequately secure the filter plate to the control solenoid valve assembly, resulting in possible damage or contamination.

12. Remove the control solenoid valve assembly filter plate (6).
    - Discard the filler plate. It is not reusable.
    - Inspect the pressure switch manifold seals for damage or contamination. Replace the control solenoid valve assembly as necessary.
    - Inspect the upper channel plate bolt holes for damage, peening or burnelling. Any damage around the bolt holes near the pressure control switch (PCS) feed holes could cause leakage around the PCS seals. Replace the upper channel plate as necessary.

Installation Procedure

Caution: Use care when removing or installing the filter plate assembly. A broken or missing retaining tab may not adequately secure the filter plate to the control solenoid valve assembly, resulting in possible damage or contamination.

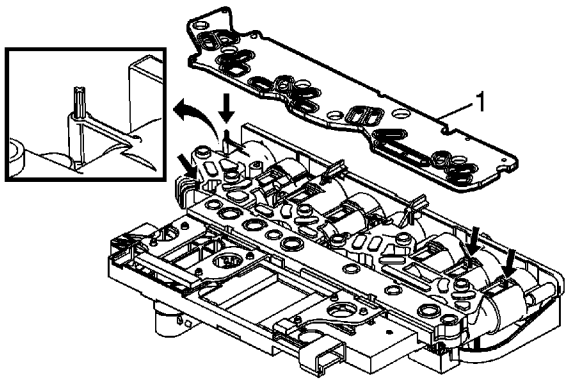

1. Install a NEW control solenoid valve assembly filter plate (1).

cardiagn.com

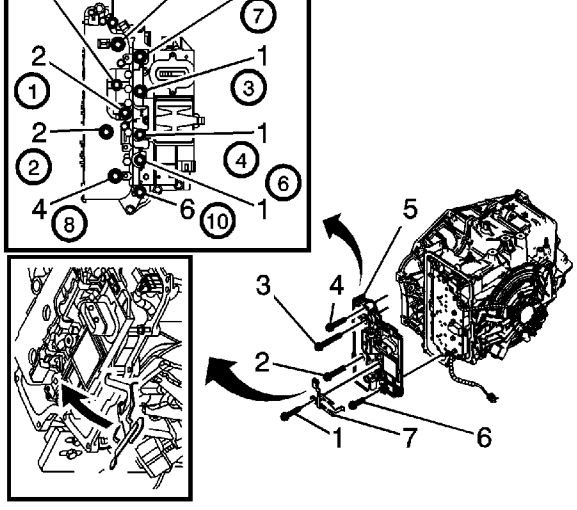

2. Install the control solenoid valve body and TCM assembly (5).
3. Rotate the control solenoid valve spring (7) into position.

Caution: Refer to Fastener Caution in the Preface section.

Note: Install all bolts before tightening, then tighten in specified sequence.

4. Install the 4 control valve body bolts (1) M6 x 80.
5. Install the control valve body bolt (6) M6 x 55.
6. Install the 3 control valve body bolts (2) M6 x 95.
7. Install the control valve body bolt (3) M6 x 42.
8. Install the 2 control valve body bolts (4) M6 x 65.

Tighten the bolts in sequence to **12 N·m (106 lb in)**.

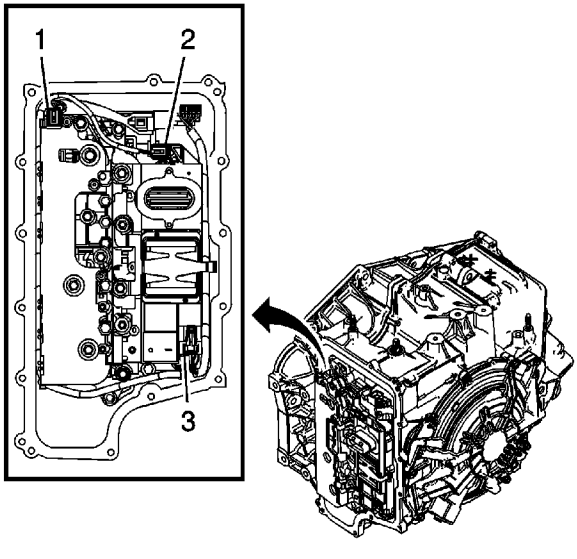

cardiagn.com

9. Connect the input speed sensor electrical connector (1).
10. Connect the output speed sensor electrical connector (2).
11. Connect the shift position switch electrical connector (3).
12. Install the control valve body cover. Refer to Control Valve Body Cover Replacement.
13. For transmission control module programming and setup. Refer to Control Module References.

    Note: After an internal transmission repair or internal part replacement the service fast learn adapt procedure should be performed.

14. Perform the service fast learn adapt procedure. Refer to Service Fast Learn Adapts.

cardiagn.com

Control Valve Lower Body and Upper Body Replacement

Removal Procedure

1. Remove the control valve body cover. Refer to Control Valve Body Cover Replacement.

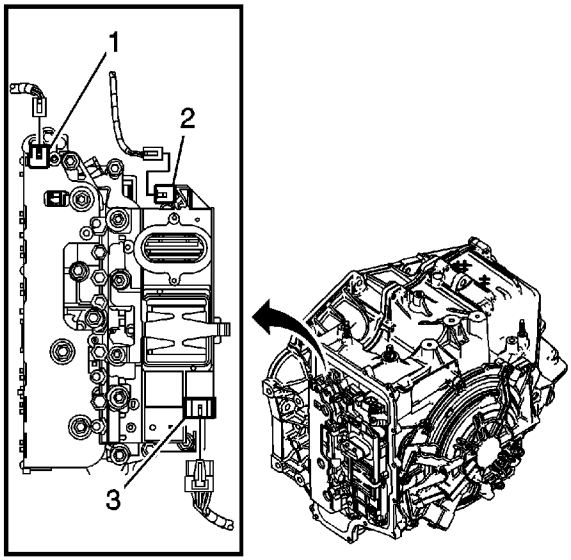

2. Disconnect the input speed sensor electrical connector (1).
3. Disconnect the output speed sensor electrical connector (2).
4. Disconnect the shift position switch electrical connector (3).

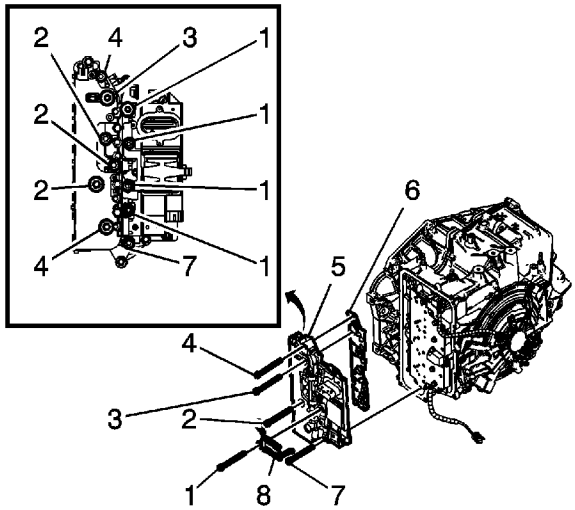

5. Remove the 4 control valve body bolts (1) M6 x 80

cardiagn.com

7. Remove the 2 control valve body bolts (4) M6 x 65.
8. Remove the control valve body bolt (3) M6 x 42.
9. Remove the 3 control valve body bolts (2) M6 x 95.
10. Remove the control valve body bolt (7) M6 x 55.
11. Remove the control solenoid valve body and transmission control module (TCM) assembly (5).

Caution: Use care when removing or installing the filter plate assembly. A broken or missing retaining tab may not adequately secure the filter plate to the control solenoid valve assembly, resulting in possible damage or contamination.

12. Remove the control solenoid valve body assembly filter plate (6).
    - Discard the filler plate. It is not reusable.
    - Inspect the pressure switch manifold seals for damage or contamination. Replace the control solenoid valve assembly as necessary.
    - Inspect the upper channel plate bolt holes for damage, peening or burnelling. Any damage around the bolt holes near the PCS switch feed holes could cause leakage around the PCS switch seals. Replace the upper channel plate as necessary.

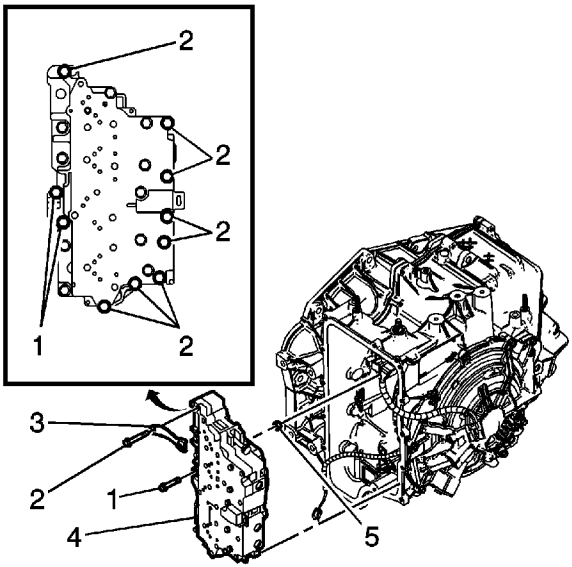

13. Remove the 8 control valve body bolts (2) M6 x 65.
14. Remove the 2 control valve body bolts (1) M6 x 55.
15. Remove the manual shaft detent assembly (3).
16. Remove the control valve body assembly (4).
17. The control solenoid valve spring can now be fully removed from the lower control valve body assembly.

Note: The clutch fluid passage seal is not reusable.

18. Remove the 1-2-3-4 clutch fluid passage seal (5).

cardiagn.com

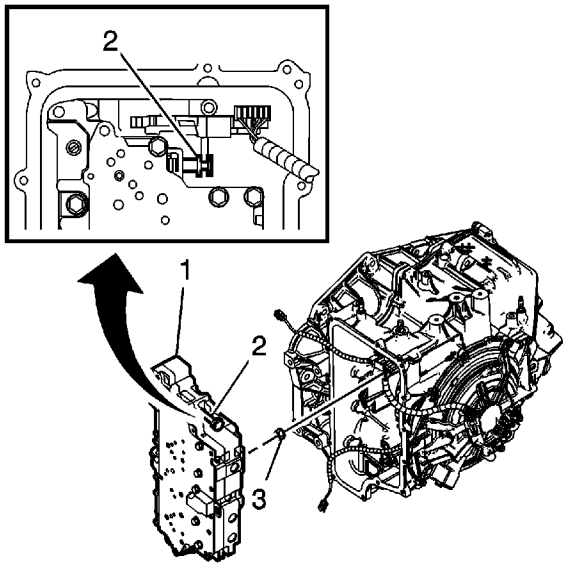

Note: The clutch fluid passage seal is not reusable.

1. Install a NEW 1-2-3-4 clutch fluid passage seal (3).

   Note: Ensure the control solenoid valve spring is attached to the lower control valve body assembly.

   Note: Align the manual valve (2) to the detent lever assembly while installing the lower control valve body assembly.

2. Install the control valve body assembly (1).

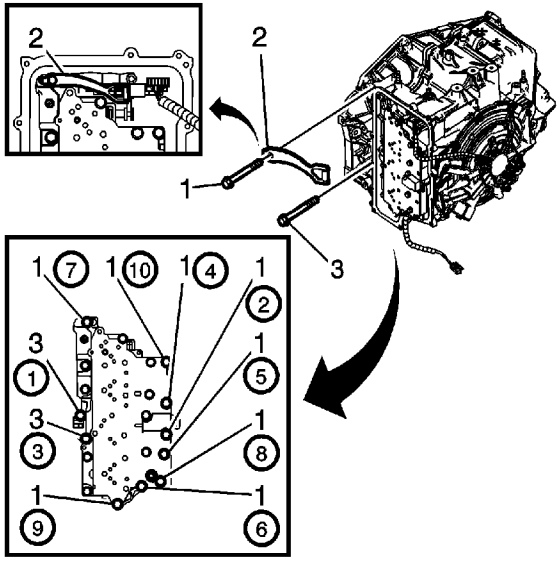

cardiagn.com

Note: Ensure proper alignment of the detent assembly to the detent lever assembly with position switch while tightening the bolt. The detent assembly can move and hit the valve body assembly that could cause improper engagement with the detent lever assembly.

3. Install the manual shaft detent assembly (2).

Caution: Refer to Fastener Caution in the Preface section.

Note: Install all bolts before tightening, then tighten in specified sequence.

4. Install the 8 control valve body bolts (1) M6 x 65 and tighten in sequence to **12 N·m (106 lb in)**.
5. Install the 2 control valve body bolts (3) M6 x 55 and tighten in sequence to **12 N·m (106 lb in)**.

Caution: Use care when removing or installing the filter plate assembly. A broken or missing retaining tab may not adequately secure the filter plate to the control solenoid valve assembly, resulting in possible damage or contamination.

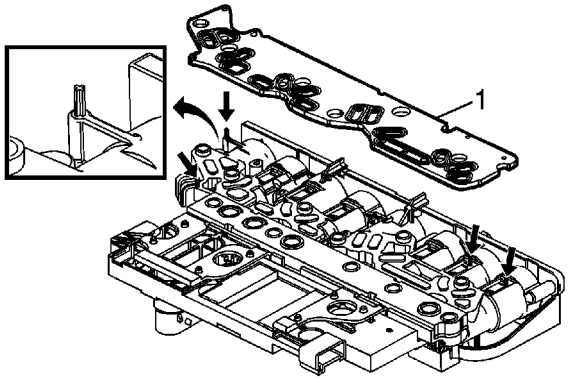

6. Install a NEW control solenoid valve assembly filter plate (1).

cardiagn.com

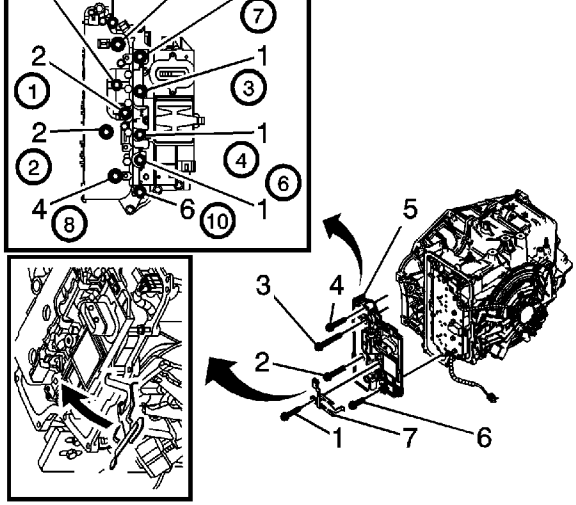

7. Install the control solenoid valve body and TCM assembly (5).
8. Rotate the control solenoid valve spring (7) into position.

Note: Install all bolts before tightening, then tighten in specified sequence.

9. Install the 4 control valve body bolts (1) M6 x 80.
10. Install the control valve body bolt (6) M6 x 55.
11. Install the 3 control valve body bolts (2) M6 x 95.
12. Install the control valve body bolt (3) M6 x 42.
13. Install the 2 control valve body bolts (4) M6 x 65.

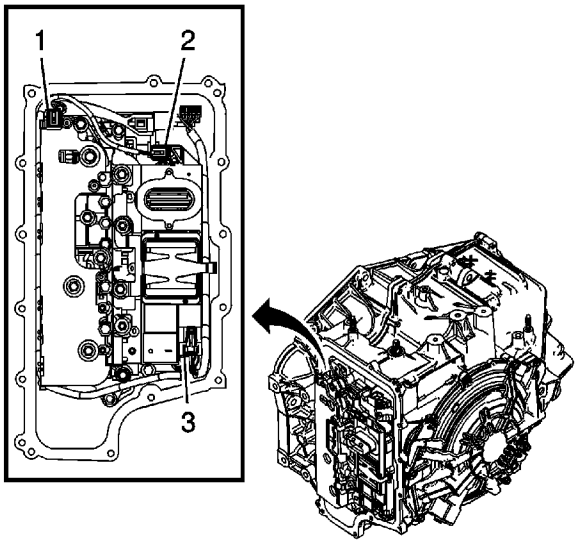

14. Connect the input speed sensor electrical connector (1).
15. Connect the output speed sensor electrical connector (2).
16. Connect the shift position switch electrical connector (3).

cardiagn.com

References.

Note: After an internal transmission repair or internal part replacement the service fast learn adapt procedure should be performed.

19. Perform the service fast learn adapt procedure. Refer to Service Fast Learn Adapts.

cardiagn.com

Output Speed Sensor Replacement

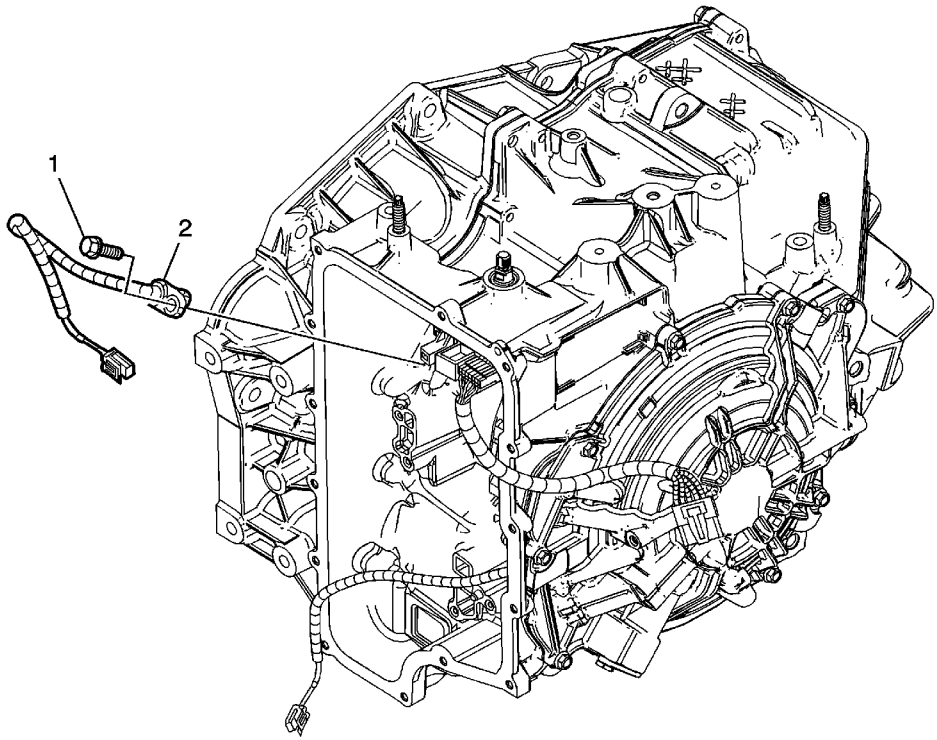

Callout	Component Name
Preliminary Procedures 1. Raise and support the vehicle. Refer to Lifting and Jacking the Vehicle. 2. Remove the control valve lower body and upper body. Refer to Control Valve Lower Body and Upper Body Replacement.	
1	Output Speed Sensor Bolt M6 x 25 **Caution:** Refer to Fastener Caution in the Preface section. **Tighten** 12 N·m (106 lb in)
2	Output Speed Sensor **Procedure** Perform the service fast learn adapt procedure. Refer to Service Fast Learn Adapts. **Tip** After an internal transmission repair or internal part replacement the service fast

cardiagn.com

cardiagn.com

Input Speed Sensor Replacement

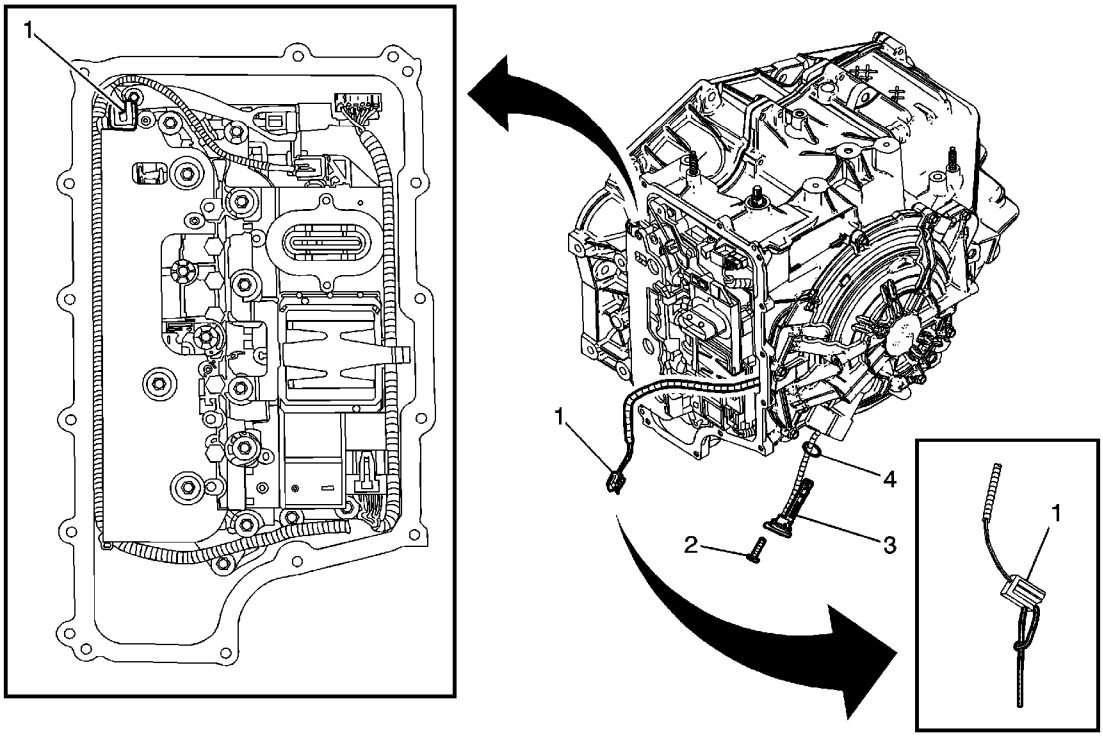

Callout	Component Name
Preliminary Procedures 1. Remove the control valve body cover. Refer to Control Valve Body Cover Replacement. 2. Perform the service fast learn adapt procedure. Refer to Service Fast Learn Adapts.	
1	Input Speed Sensor (ISS) Wire Harness **Procedure** Attach the DT-47734 speed sensor harness tether to the ISS electrical connector locking tab before removal of old ISS to assist in installation of the new ISS. **Special Tools** DT-47734 Speed Sensor Harness Tether
	Input Speed Sensor Bolt M6 x 25 **Caution:** Refer to Fastener Caution in the Preface section.

cardiagn.com

2	Apply threadlocker GM P/N 12345382 (Canadian P/N 10953489) or equivalent to the input speed sensor bolt. **Tighten** 9 N·m (7 lb in)
3	Input Speed Sensor **Tip** After an internal transmission repair or internal part replacement the service fast learn adapt procedure should be performed.
4	Input Speed Sensor Seal

cardiagn.com

Input Speed Sensor Seal Replacement

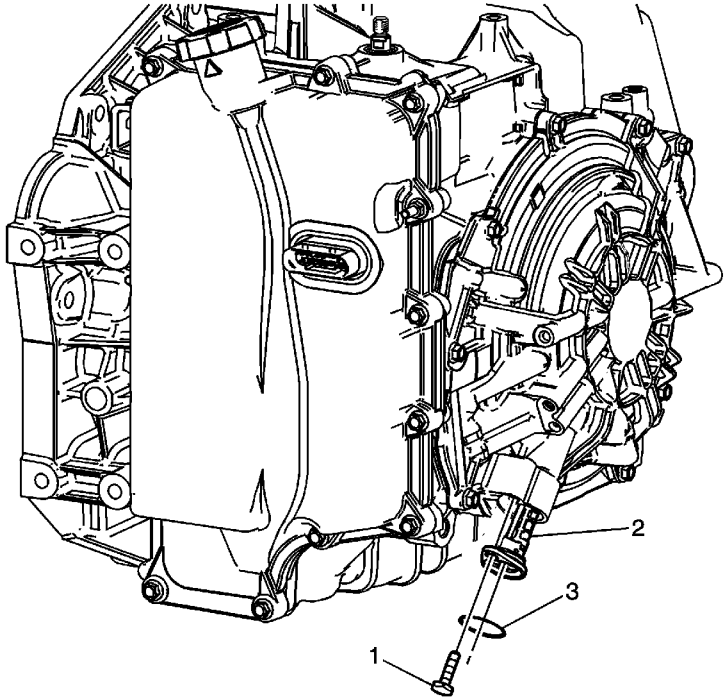

Callout	Component Name
Preliminary Procedures 1. Raise and support the vehicle. Refer to Lifting and Jacking the Vehicle. 2. Drain the transmission, refill when repair is completed. Refer to Transmission Fluid Replacement. 3. Remove the left engine splash shield. Refer to Engine Splash Shield Replacement.	
1	Input Speed Sensor Bolt M6 x 25 **Caution:** Refer to Fastener Caution in the Preface section. **Procedure** Apply threadlocker GM P/N 12345382 (Canadian P/N 10953489) or equivalent to the input speed sensor bolt. **Tighten** 9 N·m (80 lb in)
	Input Speed Sensor (ISS)

cardiagn.com

3	Input Speed Sensor Seal **Tip** • Remove the ISS seal by pulling it over the end of the ISS base. • Install the new ISS Seal by gently stretching it over the ISS base. Overstretching the seal will cause it to not seal properly. The seal is coated with a dry lubricant. If the coating is missing, lubricate the seal with automatic transmission fluid prior to installation.

cardiagn.com

Transmission Mount Bracket Replacement - Rear (FWD)

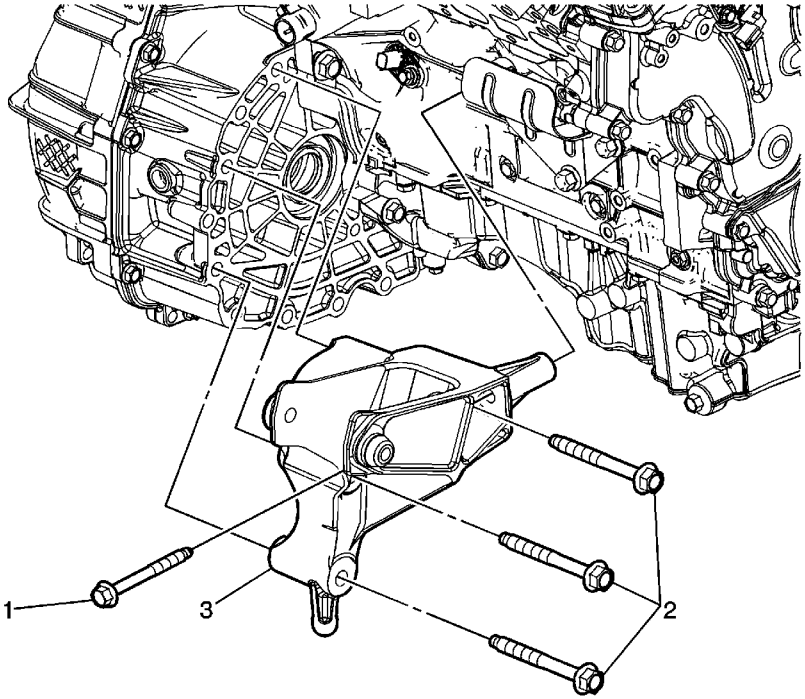

Callout	Component Name
Preliminary Procedures Remove the rear transmission mount. Refer to Transmission Rear Mount Replacement.	
1	Rear Transmission Mount Bracket Bolt **Caution:** Refer to Fastener Caution in the Preface section. **Tighten** 50 N·m (37 lb ft)
2	Rear Transmission Mount Bracket Bolt (Qty: 3) **Tighten** 100 N·m (74 lb ft)
3	Rear Transmission Mount Bracket

cardiagn.com

Transmission Mount Bracket Replacement - Rear (AWD with LZ4)

Removal Procedure

1. Remove the rear transmission mount. Refer to Transmission Rear Mount Replacement.

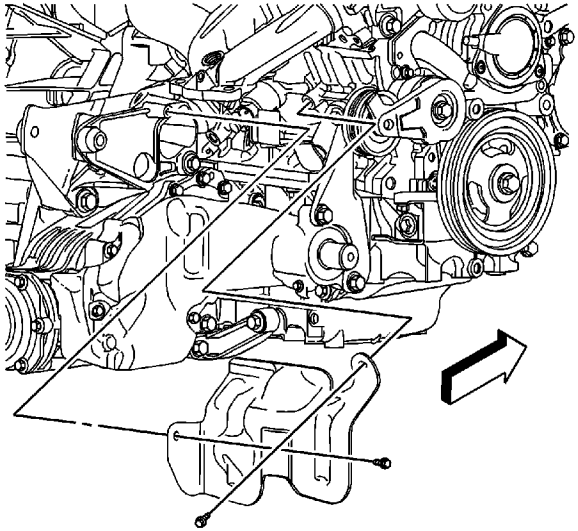

2. Remove the heat shield bolts and shield.

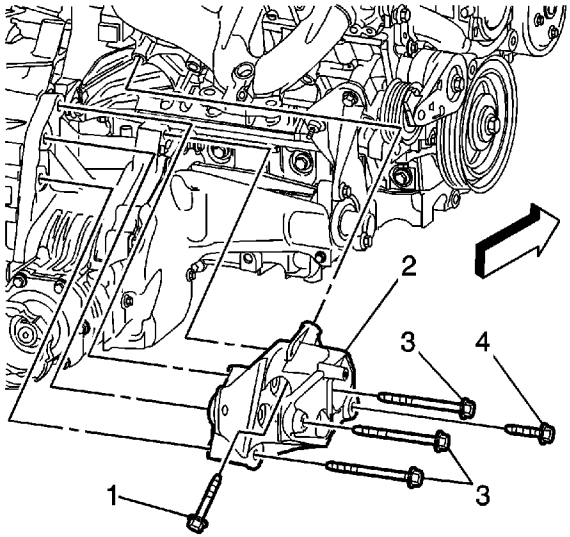

3. Remove the rear transmission mount bracket bolts (1, 3, 4).
4. Remove the rear transmission mount bracket (2).

cardiagn.com

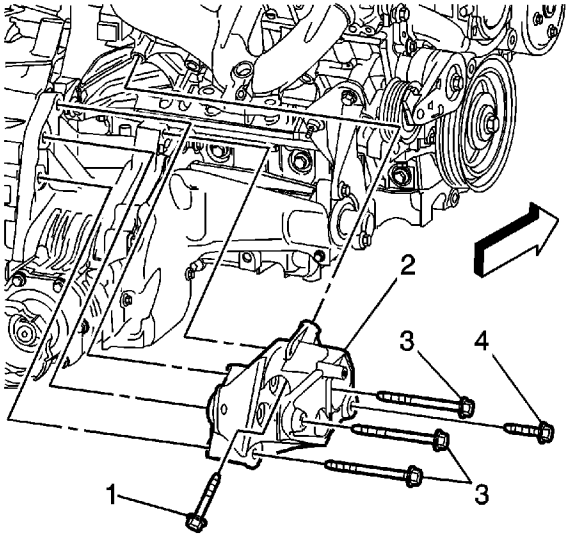

1. Install the rear transmission mount bracket (2).

   Caution: Refer to Fastener Caution in the Preface section.

2. Install the rear transmission mount bracket bolts (1 and 4) and tighten to **50 N·m (37 lb ft)**.
3. Install the rear transmission mount bracket bolts (3) and tighten to **100 N·m (74 lb ft)**.

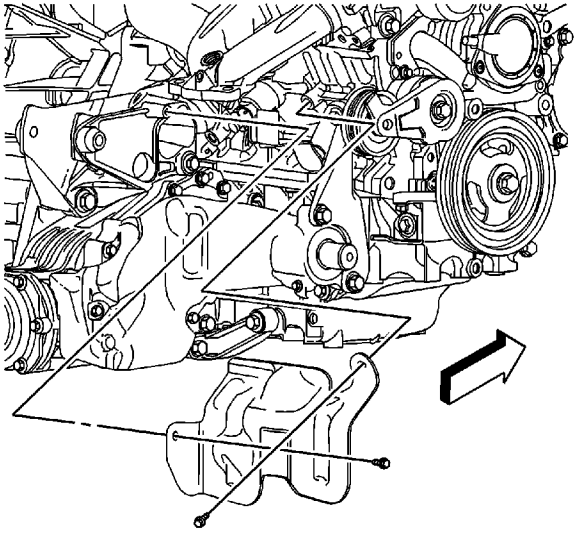

4. Install the heat shield bolts and shield and tighten the bolts to **10 N·m (89 lb in)**.
5. Install the rear transmission mount. Refer to Transmission Rear Mount Replacement.

cardiagn.com

Transmission Mount Bracket Replacement - Rear (AWD with LY7)

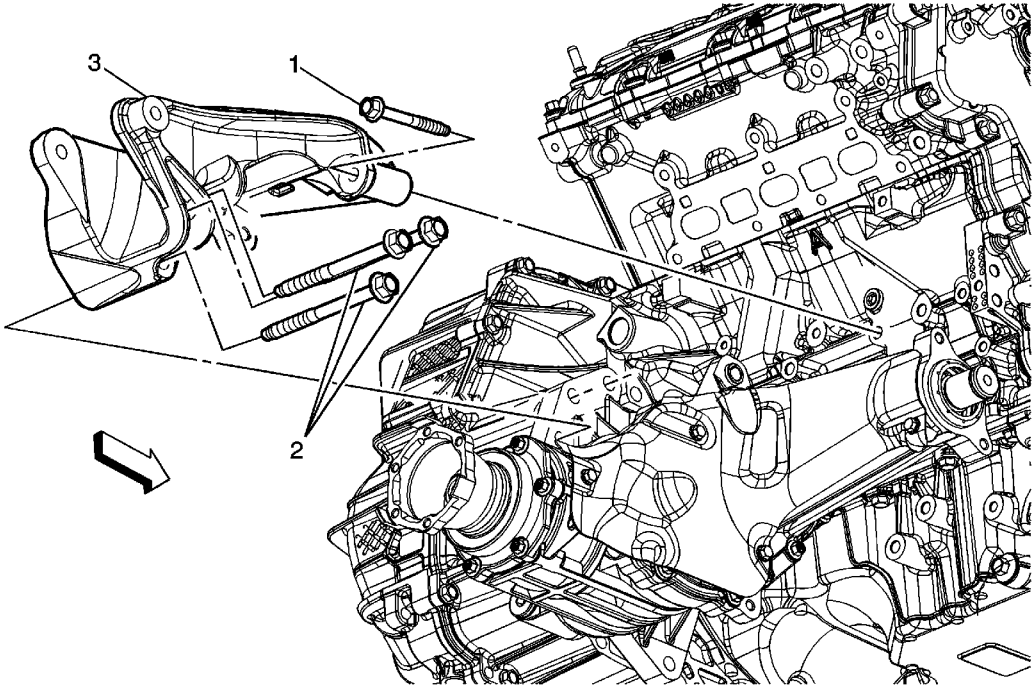

Callout	Component Name
Preliminary Procedures Remove the rear transmission mount. Refer to Transmission Rear Mount Replacement.	
1	Rear Transmission Mount Bracket Bolt **Caution:** Refer to Fastener Caution in the Preface section. **Tighten** 50 N·m (37 lb ft)
2	Rear Transmission Mount Bracket Bolt (Qty: 3) **Tighten** 100 N·m (74 lb ft)
3	Rear Transmission Mount Bracket

cardiagn.com

Transmission Brace Replacement

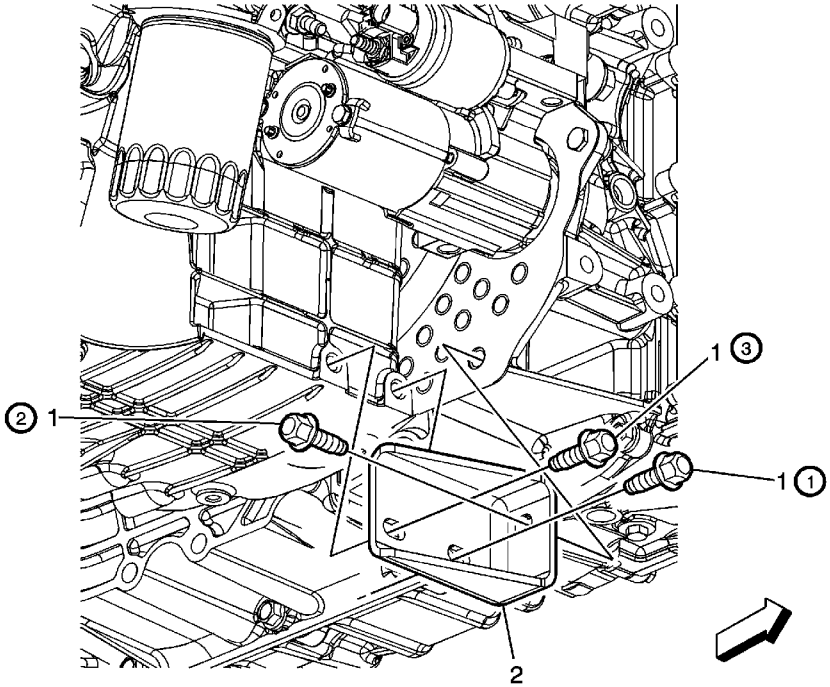

Callout	Component Name
Preliminary Procedures Raise the vehicle. Refer to Lifting and Jacking the Vehicle.	
1	Transmission Brace Bolt (Qty: 3) **Caution:** Refer to Fastener Caution in the Preface section. **Tip** Tighten all bolts in specified sequence. **Tighten** 50 N·m (37 lb ft)
2	Transmission Brace

cardiagn.com

Transmission Mount Replacement - Left Side

Removal Procedure

1. Remove the battery box. Refer to Battery Box Replacement.
2. Remove the range selector cable bracket. Refer to Range Selector Lever Cable Bracket Replacement.
3. Install the engine support fixture. Refer to Engine Support Fixture for the 3.5L LZ4 engine or Engine Support Fixture for the 3.6L LZ7 engine.
4. Raise and support the vehicle. Refer to Lifting and Jacking the Vehicle.

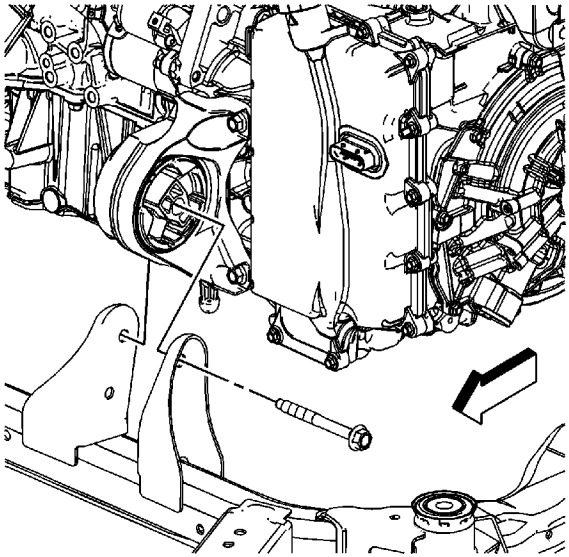

5. Remove the front transmission mount thru bolt.

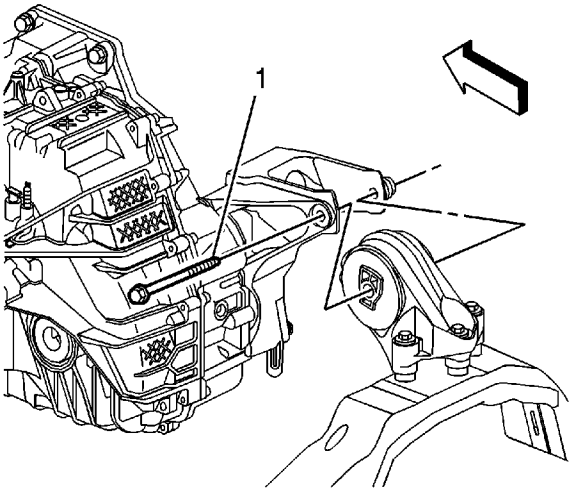

cardiagn.com

6. Remove the rear transmission mount thru bolt (1).
7. Lower the vehicle.

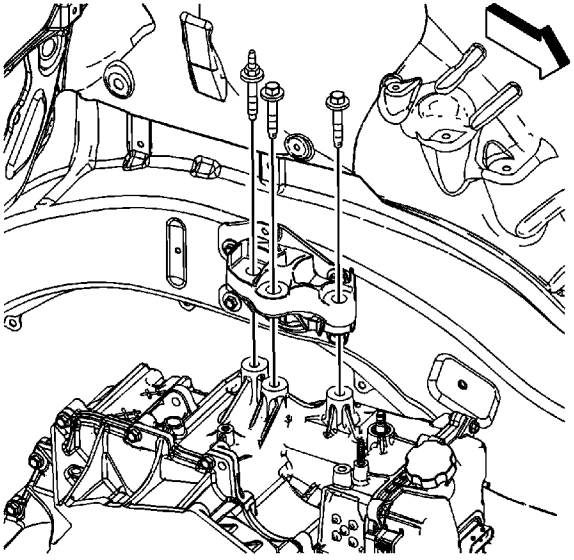

8. Remove the transmission mount to transmission bolts.

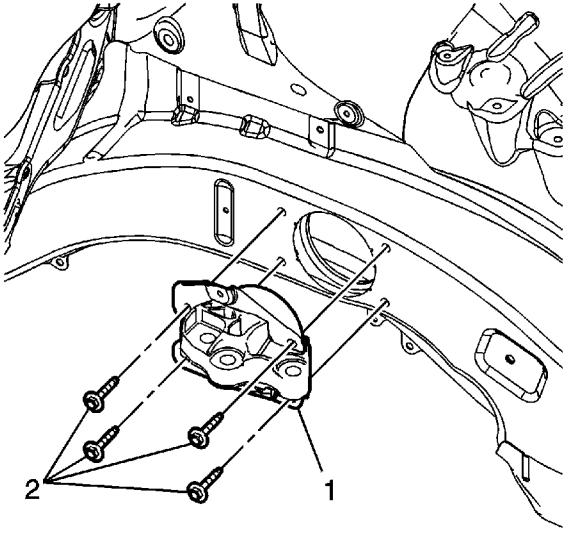

9. Remove the transmission mount to frame rail bolts (2).
10. Using the engine support, lower the transmission enough to provide clearance for the left transmission mount.
11. Remove the left transmission mount (1).

Installation Procedure

cardiagn.com

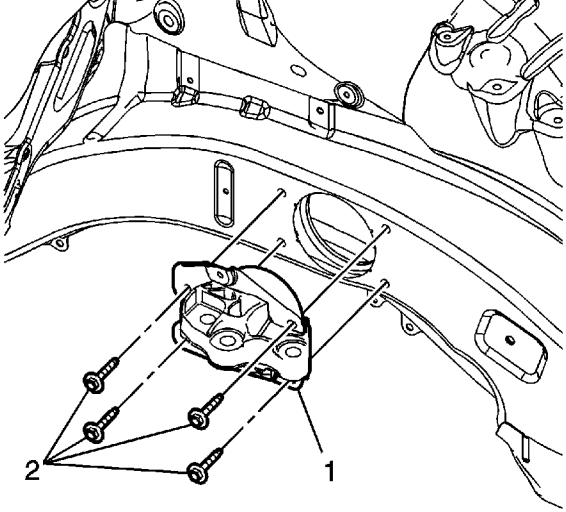

1. Install the left transmission mount (1).

   Caution: Refer to Fastener Caution in the Preface section.

2. Install the transmission mount to frame rail bolts (2) and tighten to **27 N·m (20 lb ft)**.
3. Using the engine support, raise the transmission until the transmission contacts the left transmission mount.

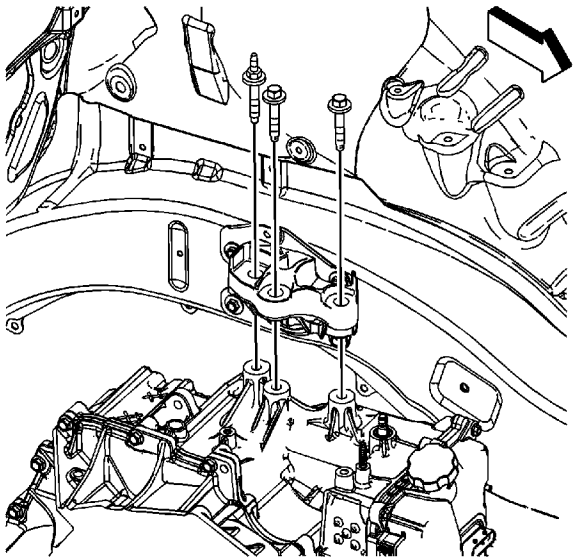

4. Install the transmission mount to transmission bolts and tighten to **50 N·m (37 lb ft)**.
5. Raise the vehicle.

cardiagn.com

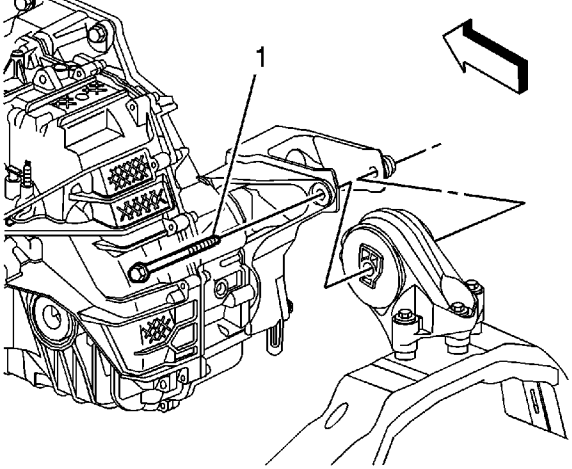

6. Install the rear transmission mount thru bolt (1) and tighten to **110 N·m (81 lb ft)**.

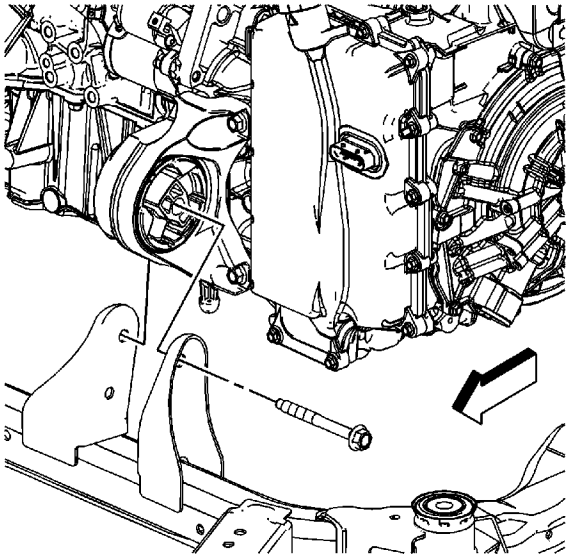

7. Install the front transmission mount thru bolt and tighten to **110 N·m (81 lb ft)**.
8. Lower the vehicle.
9. Remove the engine support fixture.
10. Install the range selector cable bracket. Refer to Range Selector Lever Cable Bracket Replacement.
11. Install the battery box. Refer to Battery Box Replacement.

cardiagn.com

Transmission Front Mount Replacement

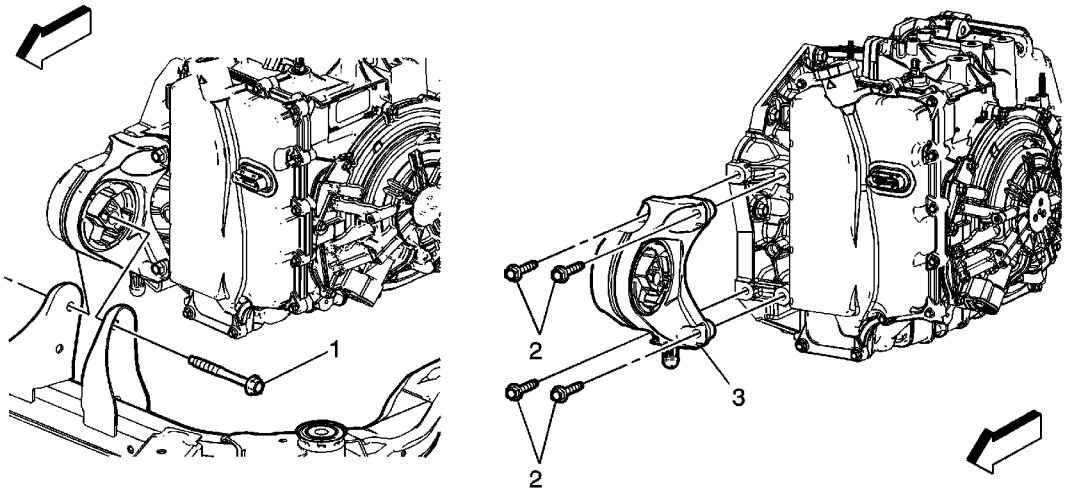

Callout	Component Name
Preliminary Procedures 1. Install the engine support fixture. Refer to Engine Support Fixture for the 3.5L LZ4 engine or Engine Support Fixture for the 3.6L LY7 engine. 2. Raise and support the vehicle. Refer to Lifting and Jacking the Vehicle.	
1	Front Transmission Mount Thru Bolt **Caution:** Refer to Fastener Caution in the Preface section. **Tighten** 110 N·m (81 lb ft)
2	Front Transmission Mount Bolt (Qty: 4) **Tighten** 50 N·m (37 lb ft)
3	Front Transmission Mount **Tip** Remove the mount through the top of the engine compartment.

cardiagn.com

Transmission Rear Mount Replacement (FWD)

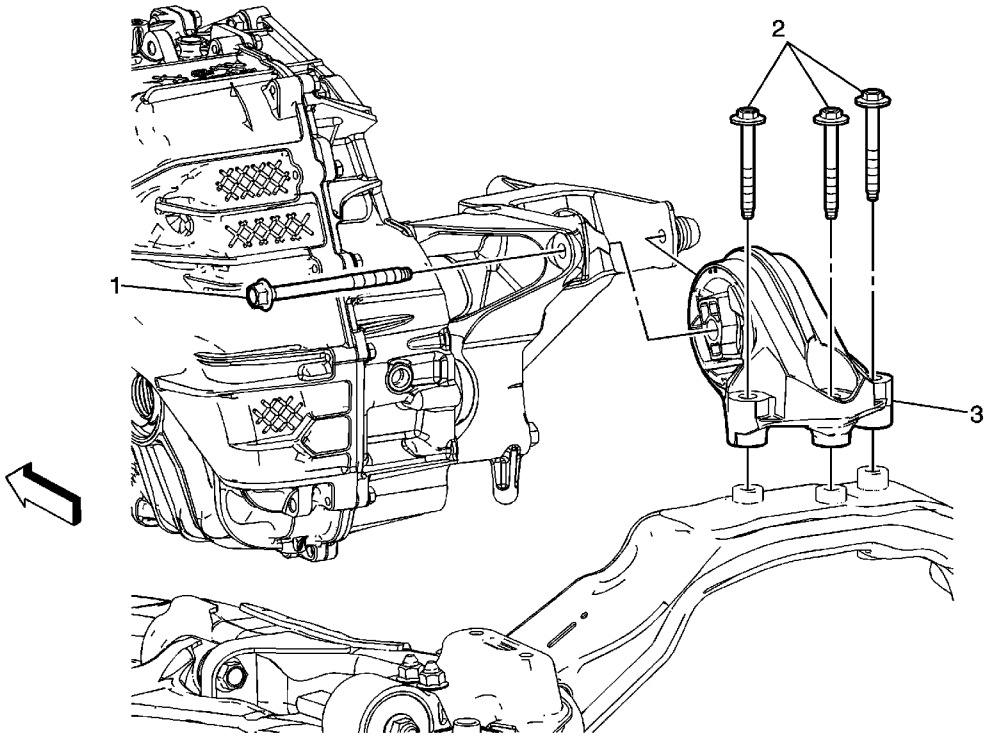

Callout	Component Name
Preliminary Procedures 1. Remove the right exhaust manifold. Refer to Exhaust Manifold Replacement - Right Side. 2. Raise and support the vehicle. Refer to Lifting and Jacking the Vehicle. 3. Support the transmission with a transmission jack.	
1	Rear Transmission Mount Thru Bolt **Caution:** Refer to Fastener Caution in the Preface section. **Tighten** 110 N·m (81 lb ft)
2	Rear Transmission Mount Bolt (Qty: 3) **Tighten** 50 N·m (37 lb ft)
3	Rear Transmission Mount

cardiagn.com

Transmission Rear Mount Replacement (AWD)

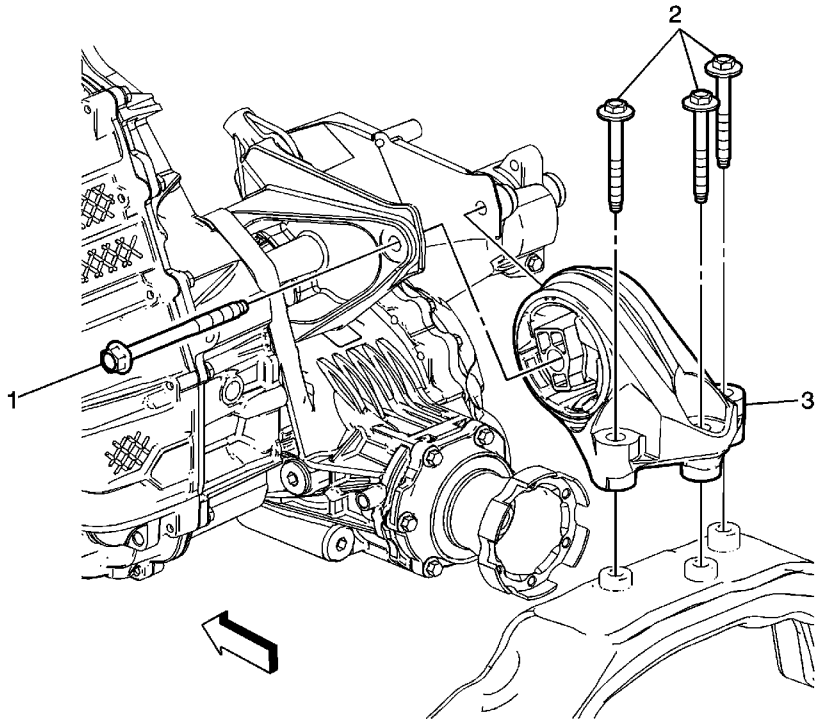

Callout	Component Name
Preliminary Procedures 1. Remove the right exhaust manifold. Refer to Exhaust Manifold Replacement - Right Side. 2. Raise and support the vehicle. Refer to Lifting and Jacking the Vehicle. 3. Support the transmission with a transmission jack.	
1	Rear Transmission Mount Thru Bolt **Caution:** Refer to Fastener Caution in the Preface section. **Tighten** 110 N·m (81 lb ft)
2	Rear Transmission Mount Bolt **Tighten** 50 N·m (37 lb ft)
3	Rear Transmission Mount

cardiagn.com

Transmission Replacement (3.5L LZ4)

Removal Procedure

1. Remove the battery tray support bracket. Refer to Battery Tray Support Bracket Replacement.

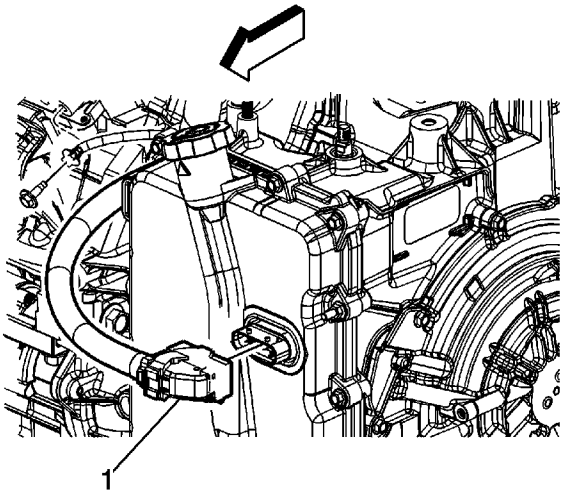

2. Disconnect the control valve body transmission control module (TCM) electrical connector (1).

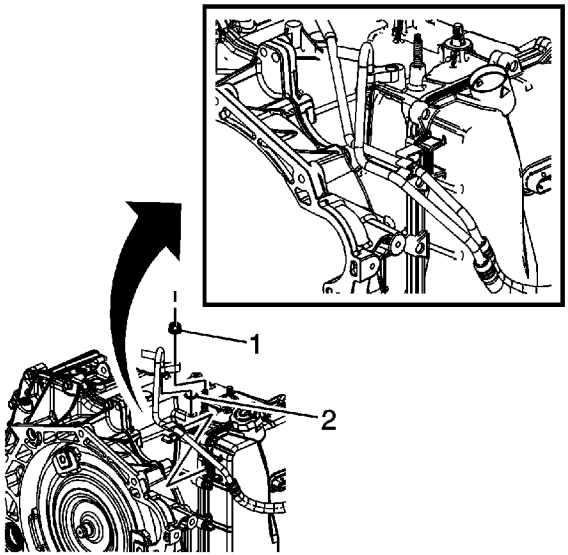

3. Remove the transmission fluid cooler pipe retainer nut (1).

cardiagn.com

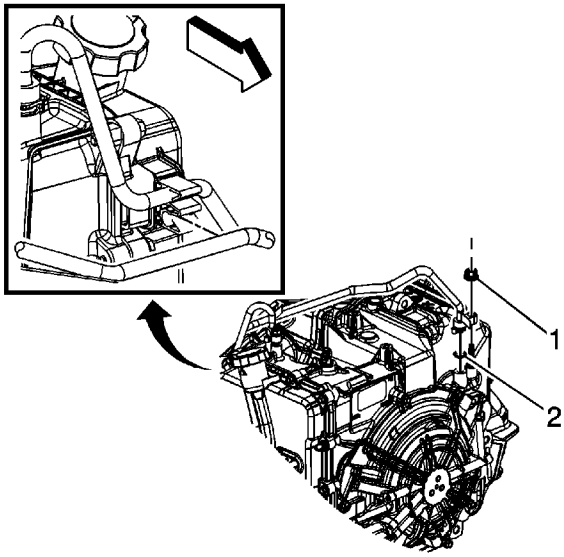

6. Remove the transmission fluid cooler pipe retainer nut (1).
7. Remove the transmission fluid cooler outlet hose and seal (2) from the transmission.
8. Plug and/or cap the hose and transmission to prevent contamination.

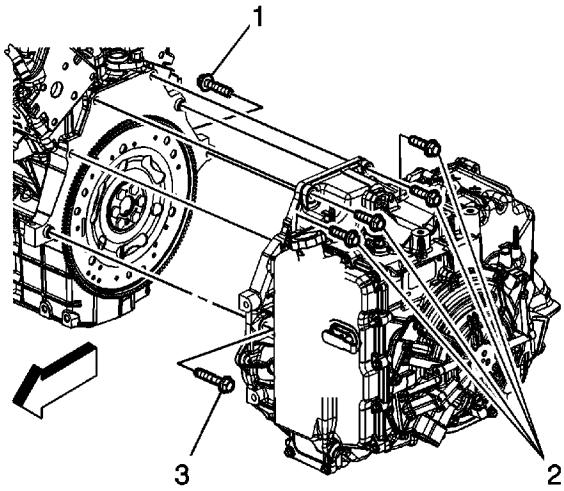

9. Remove the upper transmission to engine bolts (2).
10. Remove the range selector cable, cable bracket, and left transmission mount. Refer to Transmission Mount Replacement - Left Side.
11. Remove the frame. Refer to Frame Replacement.
12. Disconnect the wheel drives. Refer to Front Wheel Drive Shaft Replacement.
13. Remove the intermediate drive shaft. Refer to Intermediate Shaft Replacement.
14. Remove the rear transmission mount bracket. Refer to Transmission Mount Bracket Replacement - Rear.
15. Remove the front transmission mount. Refer to Transmission Front Mount Replacement.

cardiagn.com

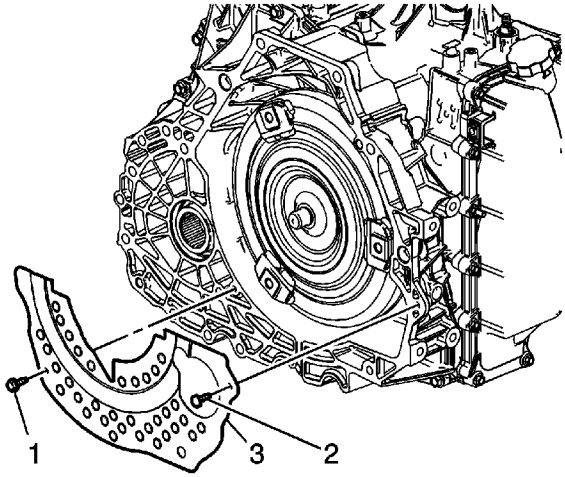

17. Remove the torque converter cover bolts (1, 2).
18. Remove the torque converter cover (3).
19. Remove the starter. Refer to Starter Motor Replacement.

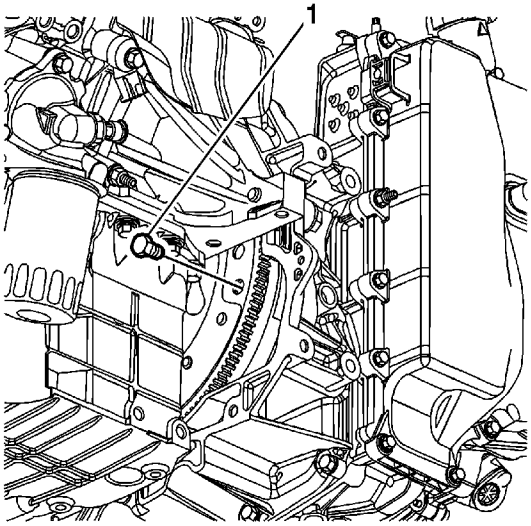

20. Mark the relationship of the flywheel to the torque converter for reassembly.
21. Remove the torque converter to flywheel bolts (1).
22. Use a transmission jack in order to support the transmission.

cardiagn.com

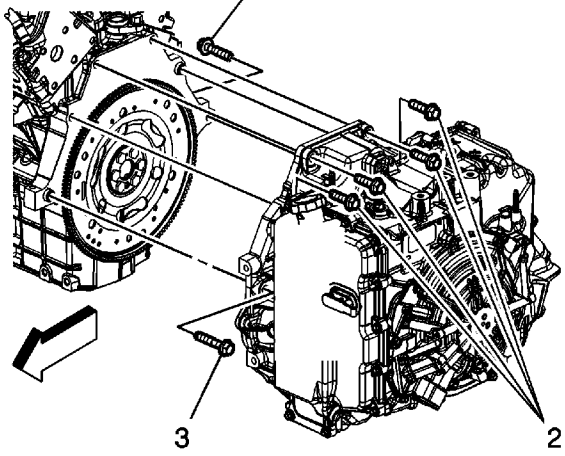

23. Remove the remaining transmission bolts (1, 3).

    Note: Ensure the torque converter is removed with the transmission.

24. Separate the transmission from the engine.
25. Lower the transmission with the transmission jack far enough to remove the transmission.

Installation Procedure

1. Raise the transmission with the transmission jack and position the transmission to the engine.

   Caution: Refer to Fastener Caution in the Preface section.

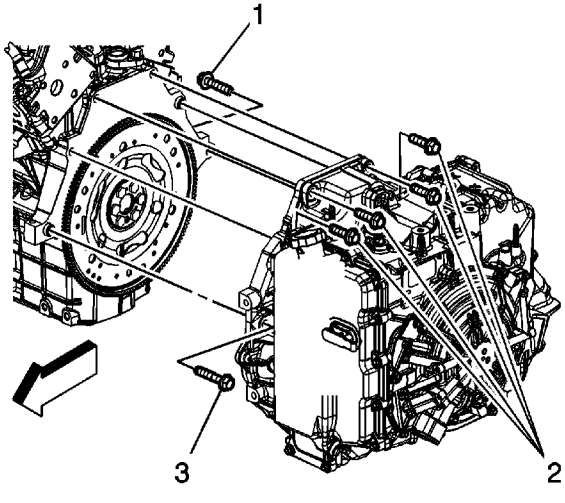

cardiagn.com

2. Install the lower transmission bolts (1, 3) and tighten to **75 N·m (55 lb ft)**.
3. Remove the transmission jack.

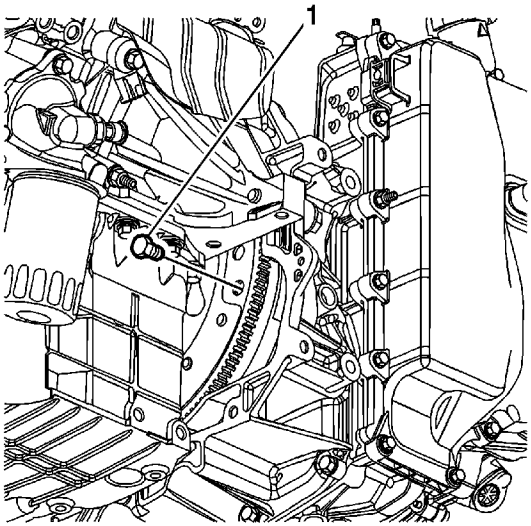

4. Install the torque converter to flywheel bolts (1) and tighten to **62 N·m (46 lb ft)**.
5. Install the starter. Refer to Starter Motor Replacement.

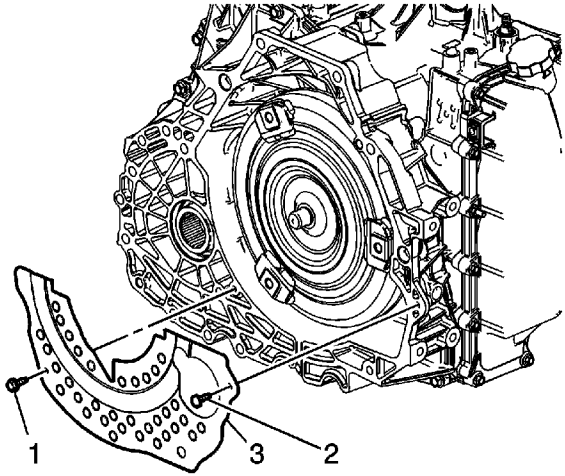

6. Install the torque converter cover (3).
7. Install the torque converter cover bolts (1, 2) and tighten to **12 N·m (106 lb in)**.
8. Install the transmission brace. Refer to Transmission Brace Replacement.
9. Install the front transmission mount. Refer to Transmission Front Mount Replacement.
10. Install the rear transmission mount bracket and mount. Refer to Transmission Mount Bracket Replacement - Rear.
11. Install the intermediate drive shaft. Refer to Intermediate Shaft Replacement.

cardiagn.com

14. Install the left transmission mount, range selector cable bracket, and cable. Refer to Transmission Mount Replacement - Left Side.

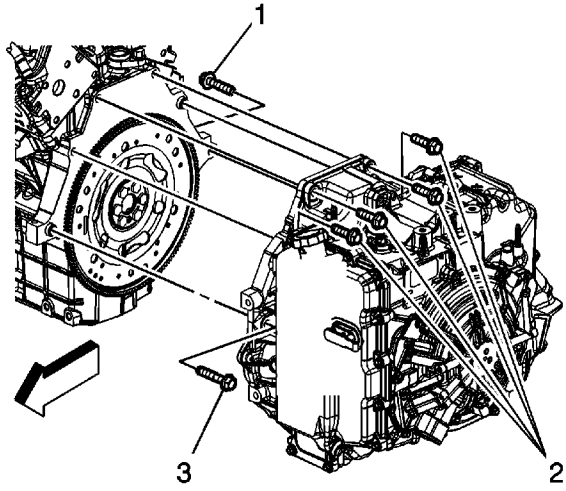

15. Install the upper transmission to engine bolt (2) and tighten to **75 N·m (55 lb ft)**.
16. Install the frame. Refer to Frame Replacement.

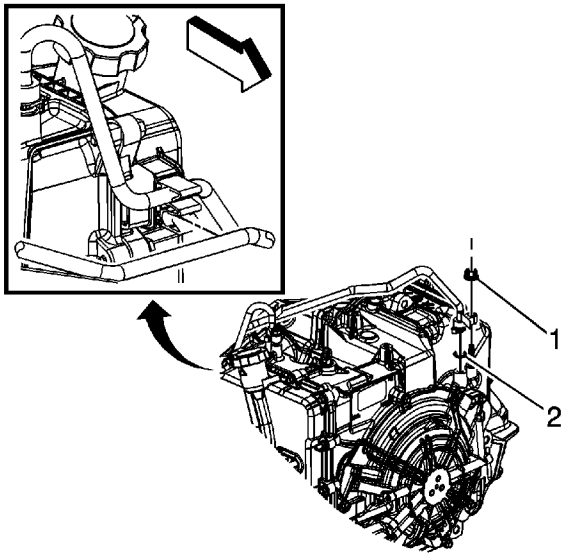

17. Install the transmission fluid cooler outlet hose and seal (2) to the transmission.
18. Install the transmission fluid cooler pipe retainer nut (1) and tighten to **22 N·m (16 lb ft)**.

cardiagn.com

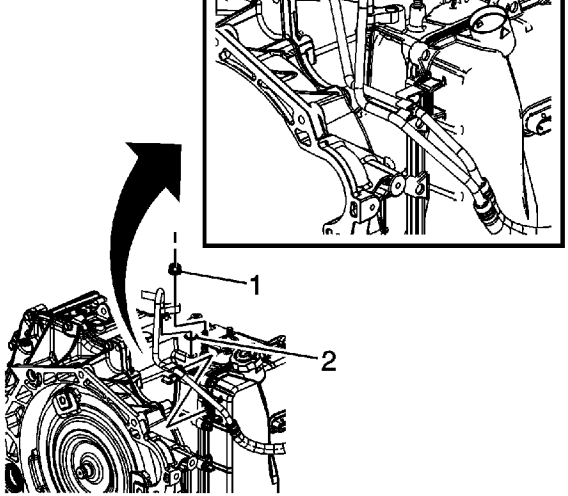

19. Install the transmission fluid cooler inlet hose and seal (2) to the transmission.
20. Install the transmission fluid cooler pipe retainer nut (1) and tighten to **22 N·m (16 lb ft)**.

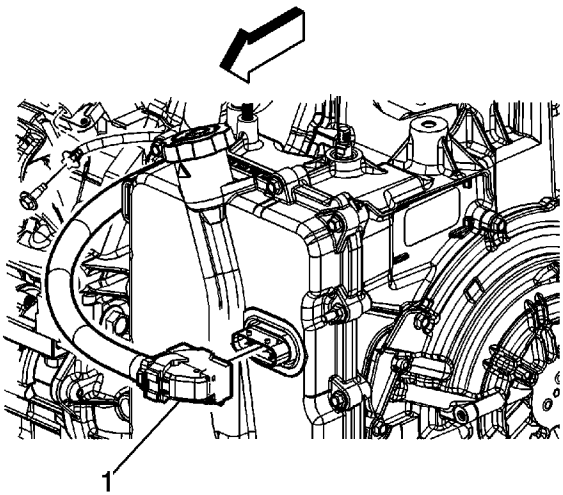

21. Connect the control valve body TCM electrical connector (1).
22. Install the battery tray support bracket. Refer to Battery Tray Support Bracket Replacement.
23. Adjust the automatic transmission range selector lever cable. Refer to Range Selector Lever Cable Adjustment.
24. Verify the proper fluid level of the transmission. Refer to Transmission Fluid Check.
25. For transmission control module programming and setup, refer to Control Module References.

Note: After an internal transmission repair or internal part replacement the service fast learn adapt procedure should be performed.

26. Perform the service fast learn adapt procedure. Refer to Service Fast Learn Adapts.

cardiagn.com

cardiagn.com

Transmission Replacement (3.6L LY7)

Removal Procedure

1. Remove the battery tray support bracket. Refer to Battery Tray Support Bracket Replacement.

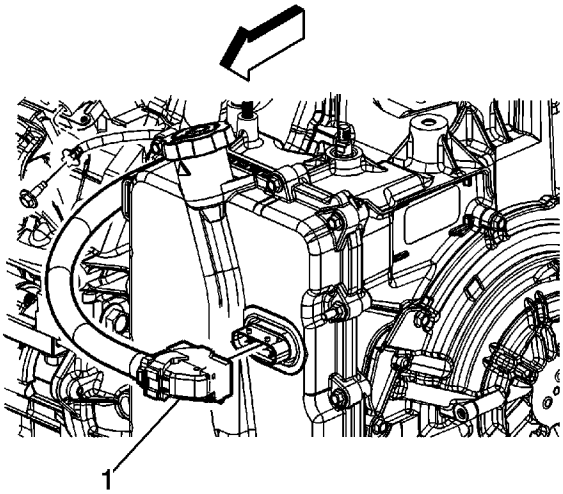

2. Disconnect the control valve body transmission control module (TCM) electrical connector (1).

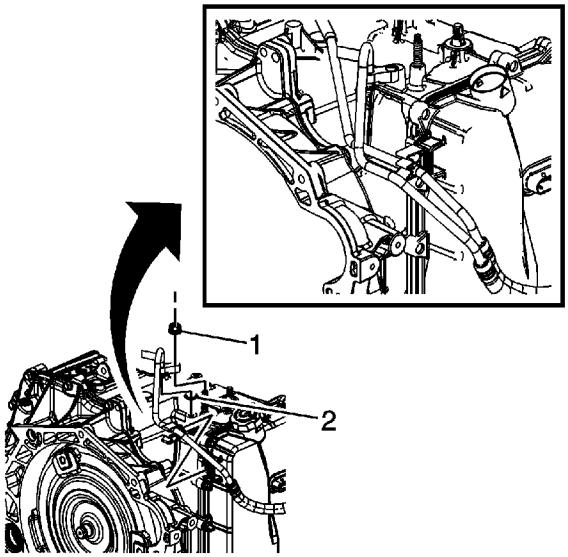

3. Remove the transmission fluid cooler pipe retainer nut (1).
4. Remove the transmission fluid cooler inlet hose and seal (2) from the transmission.

cardiagn.com

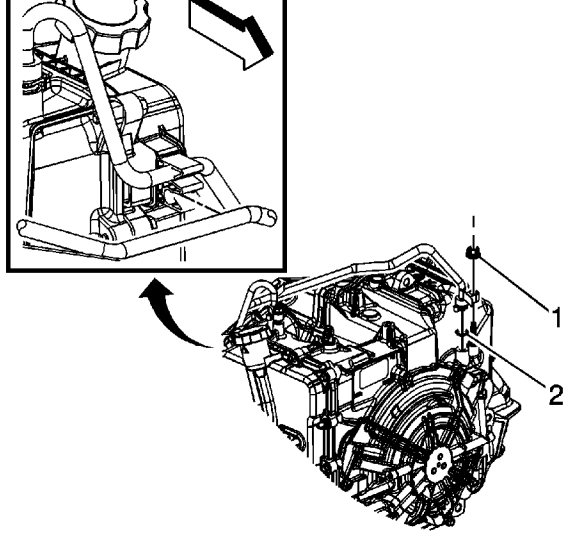

6. Remove the transmission fluid cooler pipe retainer nut (1).
7. Remove the transmission fluid cooler outlet hose and seal (2) from the transmission.
8. Plug and/or cap the hose and transmission to prevent contamination.

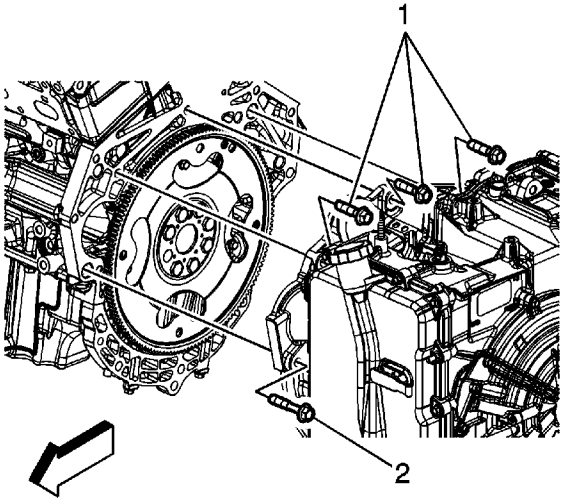

9. Remove the upper transmission to engine bolts (1, 2).
10. Remove the range selector cable, cable bracket, and left transmission mount. Refer to Transmission Mount Replacement - Left Side.
11. Remove the frame. Refer to Frame Replacement.
12. Disconnect the wheel drive shafts. Refer to Front Wheel Drive Shaft Replacement.
13. Remove the transfer case, all wheel drive (AWD) only. Refer to Transfer Case Assembly Replacement.
14. Remove the intermediate drive shaft, front wheel drive (FWD) only. Refer to Intermediate Shaft Replacement.
15. Remove the rear transmission mount bracket, FWD only. Refer to Transmission Mount

cardiagn.com

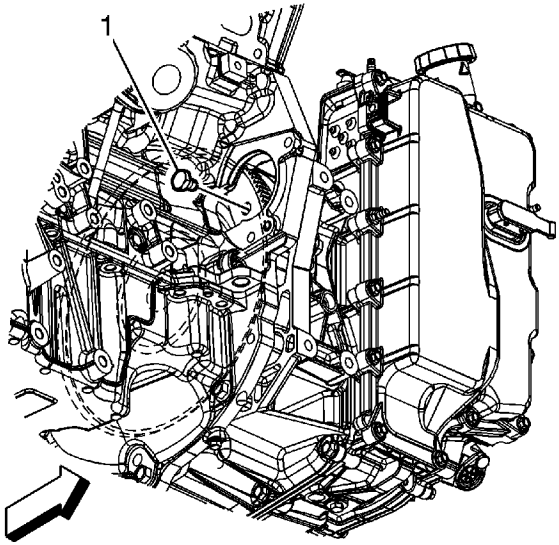

17. Remove the starter. Refer to Starter Motor Replacement.
18. Mark the relationship of the flywheel to the torque converter for reassembly.
19. Remove the torque converter to flywheel bolts (1).
20. Use a transmission jack in order to support the transmission.

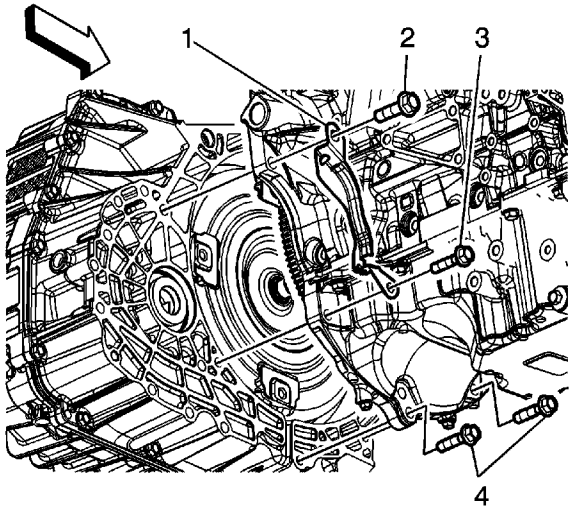

21. Remove the flywheel inspection cover bolts (2, 3).
22. Remove the flywheel inspection cover (1).
23. Remove the remaining transmission bolts (4).
24. Separate the transmission from the engine.
25. Lower the transmission with the transmission jack far enough to remove the transmission.

Installation Procedure

cardiagn.com

Caution: Refer to Fastener Caution in the Preface section.

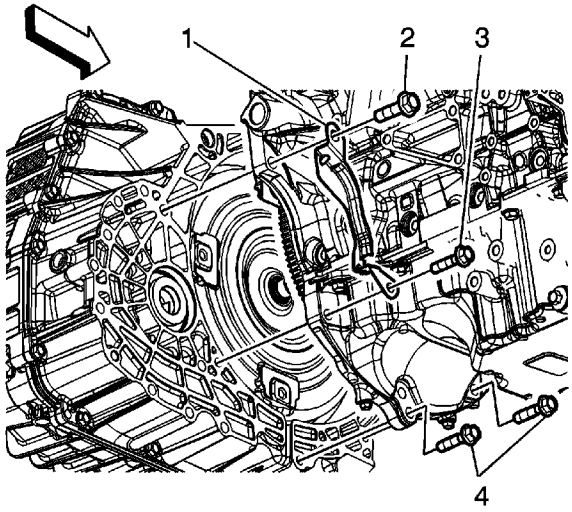

2. Install the transmission bolts (4) and tighten to **75 N·m (55 lb ft)**.
3. Install the flywheel inspection cover (1).
4. Install the flywheel inspection cover bolts (2, 3) and tighten to **75 N·m (55 lb ft)**.
5. Remove the transmission jack.

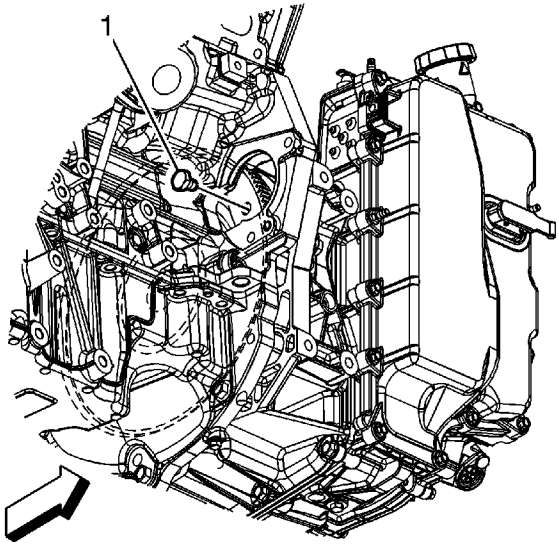

6. Install the torque converter to flywheel bolts (1) and tighten to **62 N·m (46 lb ft)**.
7. Install the starter. Refer to Starter Motor Replacement.
8. Install the front transmission mount. Refer to Transmission Front Mount Replacement.

cardiagn.com

10. Install the intermediate drive shaft, FWD only. Refer to Intermediate Shaft Replacement.
11. Install the transfer case, AWD only. Refer to Transfer Case Assembly Replacement.
12. Install the wheel drive shafts. Refer to Front Wheel Drive Shaft Replacement.
13. Lower the vehicle.
14. Install the left transmission mount, range selector cable bracket, and cable. Refer to Transmission Mount Replacement - Left Side.

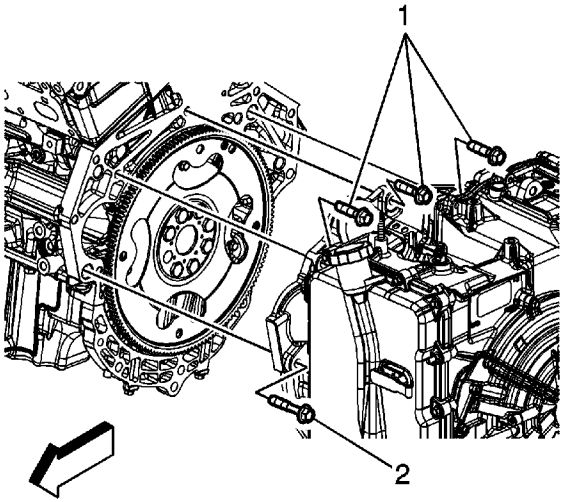

15. Install the upper transmission to engine bolt (1, 2) and tighten to **75 N·m (55 lb ft)**.
16. Install the frame. Refer to Frame Replacement.

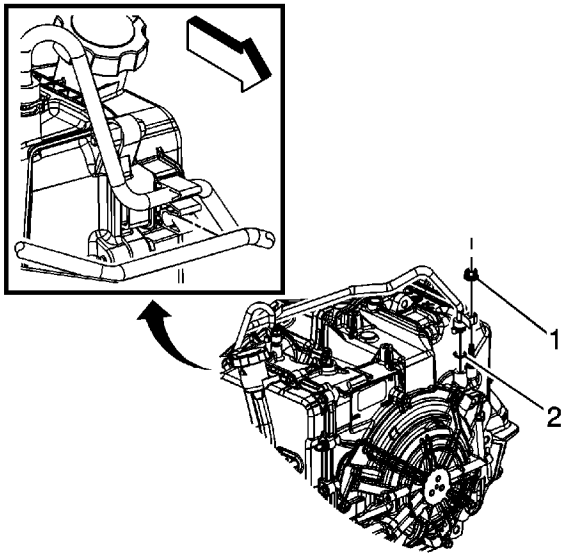

17. Install the transmission fluid cooler outlet hose and seal (2) to the transmission.
18. Install the transmission fluid cooler pipe retainer nut (1) and tighten to **22 N·m (16 lb ft)**.

cardiagn.com

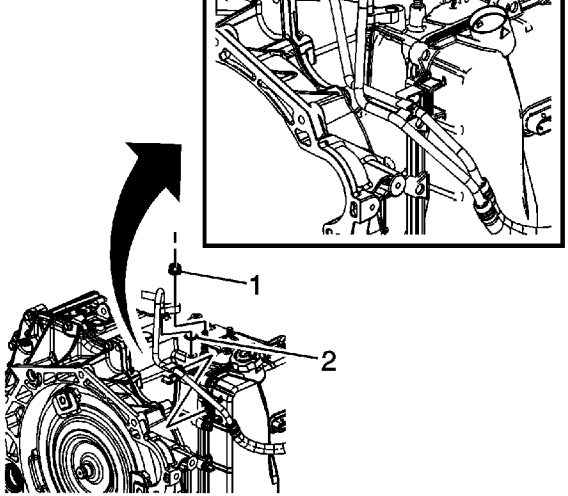

19. Install the transmission fluid cooler inlet hose and seal (2) to the transmission.
20. Install the transmission fluid cooler pipe retainer nut (1) and tighten to **22 N·m (16 lb ft)**.

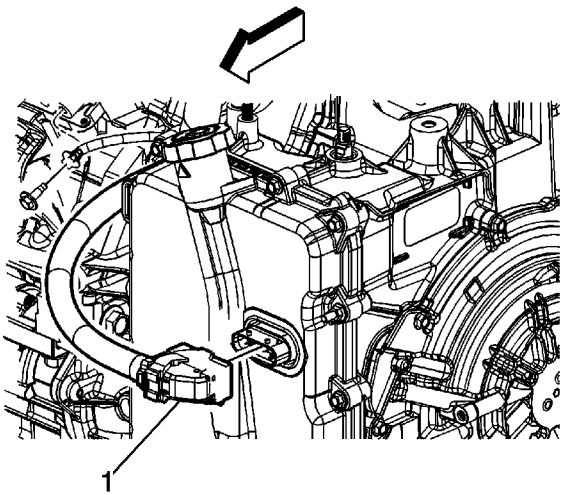

21. Connect the control valve body TCM electrical connector (1).
22. Install the battery tray support bracket. Refer to Battery Tray Support Bracket Replacement.
23. Adjust the automatic transmission range selector lever cable. Refer to Range Selector Lever Cable Adjustment.
24. Verify the proper fluid level of the transmission. Refer to Transmission Fluid Check.
25. For transmission control module programming and setup, refer to Control Module References.

Note: After an internal transmission repair or internal part replacement the service fast learn adapt procedure should be performed.

26. Perform the service fast learn adapt procedure. Refer to Service Fast Learn Adapts.

cardiagn.com

cardiagn.com