SPECIFICATIONS

FASTENER TIGHTENING SPECIFICATIONS

Fastener Tightening Specifications

Application	Specification	
	Metric	English
Adapter Plate Plug	27 N.m	20 lb ft
Adapter Plate to Transmission Case Bolts	48 N.m	36 lb ft
Backup Lamp Switch	27 N.m	20 lb ft
Computer Aided Gear Select Solenoid	40 N.m	30 lb ft
Cover Plate Bolts	20 N.m	15 lb ft
Extension Housing Plug	27 N.m	20 lb ft
Extension Housing to Transmission Case Bolts	48 N.m	36 lb ft
Neutral Return Cam Spring Retaining Bolt	25 N.m	18 lb ft
Reverse Idler Shaft Bracket Bolts	25 N.m	18 lb ft
Reverse Lockout Assembly Bolt	18 N.m	13 lb ft
Reverse Lockout Solenoid	40 N.m	30 lb ft
Shift Detent Assembly	40 N.m	30 lb ft
Shift Guide Plate Bolts	22 N.m	16 lb ft
Shift Lever Guide Bolts	27 N.m	20 lb ft
Temperature Switch (M12 Only)	41 N.m	30 lb ft
Transmission Case Drain Plug	18 N.m	13 lb ft
Transmission Case Fill Plug (MM6 Only)	18 N.m	13 lb ft

SEALERS, ADHESIVES, AND LUBRICANTS

Sealers, Adhesives, and Lubricants

Application	Type Of Material	GM Part Number	
		United States	Canada
Adapter Plate Plug	Sealant	12346004	10953480
Cover Plate	Sealant	12345739	10953472
Extension Housing Bolts	Sealant	12346004	10953480
Extension Housing to Transmission Case Mating Surface	Sealant	12345739	10953472
Reverse Idler Shaft Bracket Bolts	Threadlock	12345382	10953489
Reverse Lamp Switch	Sealant	12346004	10953480
Shift Lever Guide Bolts	Sealant	12346004	10953480

cardiagn.com

Temperature Switch - M12 Only	Sealant	12346004	10953480
Transmission Case Drain Plug	Sealant	12346004	10953480
Transmission Case Fill Plug - MM6 Only	Sealant	12346004	10953480
Transmission Case to Adapter Plate Mating Surface	Sealant	12345739	10953472
Transmission Fluid	Lubricant	DEXRON III (R)	DEXRON III (R)

LUBRICATION SPECIFICATIONS

Lubrication Specifications

Application	Specification	
	Metric	**English**
Dexron(tm) III, IIE	3.45 liters	3.65 quarts

SHIM SIZE SPECIFICATIONS

Shim Size Specifications

Application	Specification	
	Metric	English
Countershaft Extension Shim Axial Play	0.05-0.13 mm	0.002-0.005 in
Countershaft Shim Preload	0.0-0.05 mm	0.0-0.002 in
Input Shaft/Mainshaft Shim Preload	0.0-0.05 mm	0.0-0.002 in

COMPONENT LOCATOR

TRANSMISSION COMPONENT LOCATION (Y CAR)

cardiagn.com

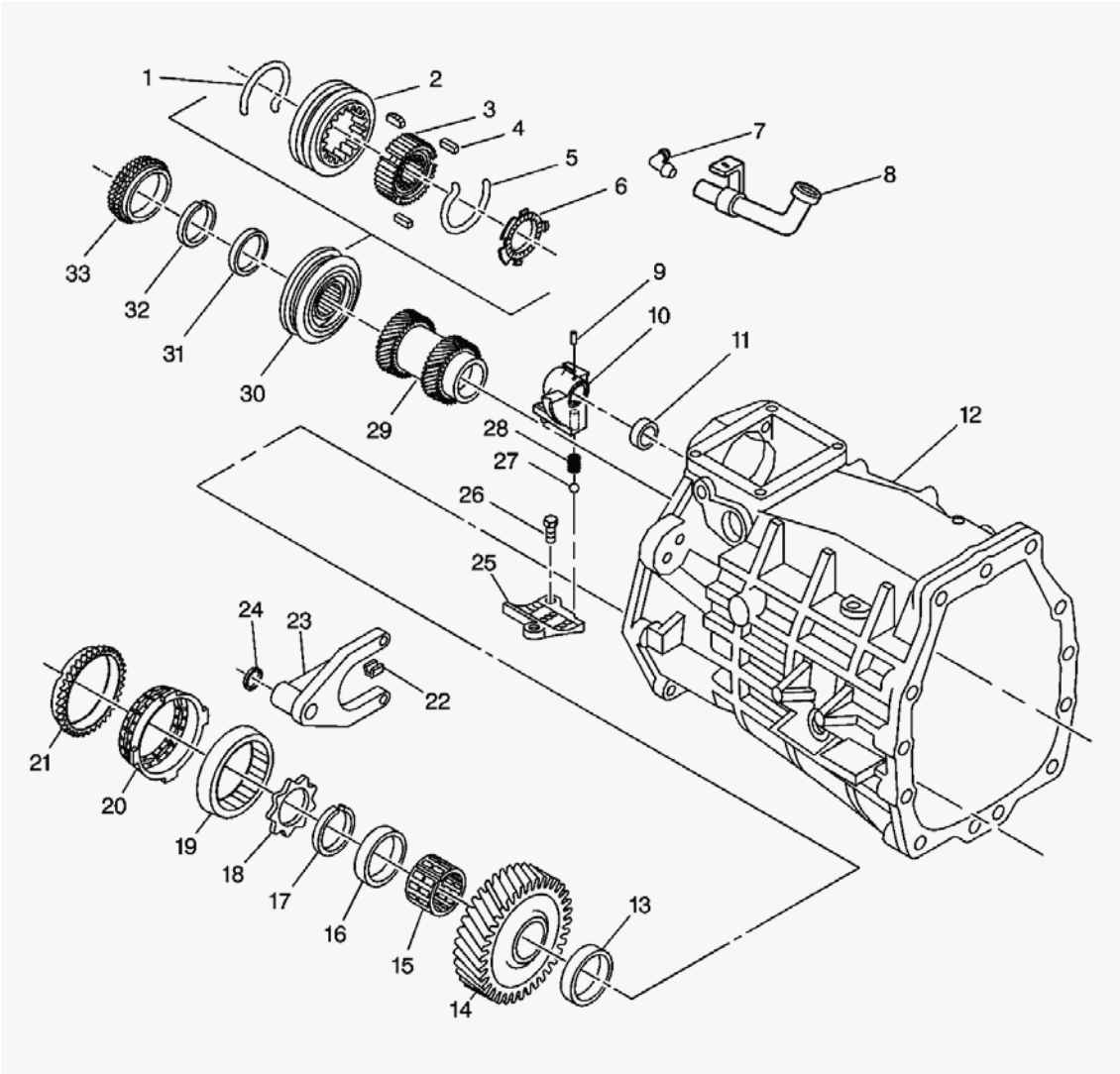

Fig. 1: Transmission Case Component Location (1 of 2) - Y Car
Courtesy of GENERAL MOTORS CORP.

Callouts For Fig. 1

Callout	Component Name
1	Reverse Synchronizer Spring
2	Reverse Synchronizer Sleeve
3	Reverse Synchronizer Hub
4	Reverse Synchronizer Key
5	Reverse Synchronizer Spring
6	Reverse Synchronizer Key Retainer
7	Vent
8	Vent Pipe
9	Offset Lever Roll Pin
10	Offset Shift Lever

cardiagn.com

11	Top Shift Shaft Bushing
12	Transmission Case
13	6th Speed Drive Gear Bearing Spacer
14	6th Speed Drive Gear
15	6th Speed Drive Gear Needle Bearing
16	6th Speed Drive Gear Bearing Spacer
17	Synchronizer Retainer Ring
18	6th Speed Drive Gear Thrust Washer
19	6th Speed Drive Gear Inner Cone
20	6th Speed Drive Gear Friction Cone
21	6th Speed Drive Gear Synchronizer Blocking Ring
22	Reverse Shift Fork Pad
23	Reverse Shift Fork
24	Reverse Shift Fork Retainer Ring
25	Guide Plate
26	Guide Plate Bolt
27	Shift Detent Ball
28	Shift Detent Ball Spring
29	5th and 6th Speed Driven Gear
30	Reverse Synchronizer Hub and Sleeve
31	Reverse Gear Thrust Washer
32	Reverse Synchronizer Retainer Ring
33	Reverse Synchronizer Blocking Ring

cardiagn.com

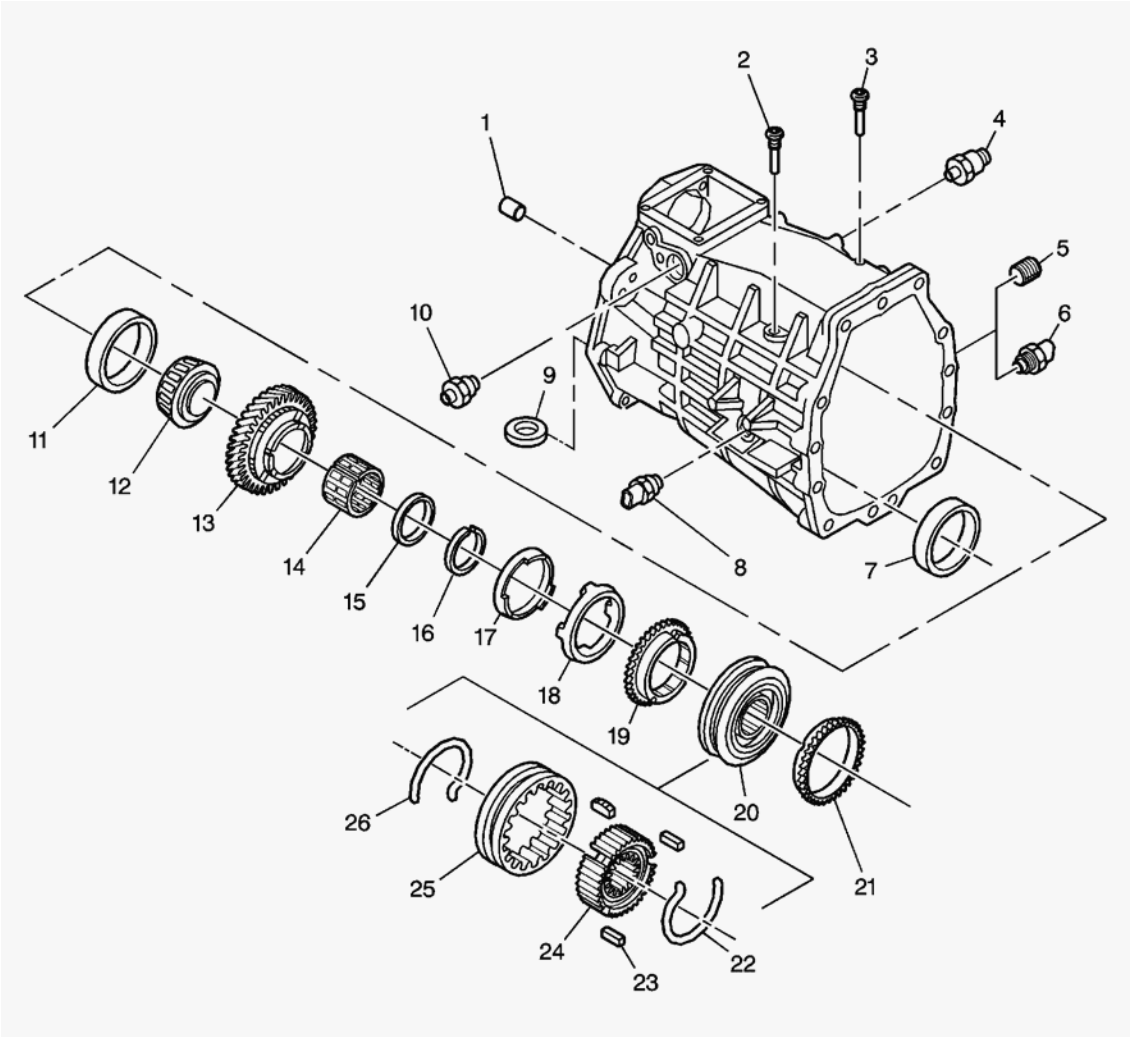

Fig. 2: Transmission Case Component Location (2 of 2) - Y Car
Courtesy of GENERAL MOTORS CORP.

Callouts For Fig. 2

Callout	Component Name
1	Case Rear Extension Pin
2	5th/6th Lever Guide Bolt
3	Interlock Guide Bolt
4	Computer Aided Gear Select Solenoid
5	Oil Fill Plug (MM6 Only)
6	Temperature Switch (M12 Only)
7	Countershaft Bearing Race
8	Backup Lamp Switch
9	Magnet
10	Shift Detent Assembly
11	Mainshaft Rear Bearing Race

cardiagn.com

12	Mainshaft Rear Bearing
13	1st Speed Drive Gear
14	1st Speed Drive Gear Needle Bearing
15	1st Speed Drive Gear Bearing Spacer
16	Synchronizer Retainer Ring
17	1st Speed Drive Gear Inner Cone
18	1st Speed Drive Gear Friction Cone
19	1st Gear Synchronizer Blocking Ring
20	1st/2nd Synchronizer Assembly
21	2nd Gear Synchronizer Blocking Ring
22	1st/2nd Synchronizer Spring
23	1st/2nd Synchronizer Key
24	1st/2nd Synchronizer Hub
25	1st/2nd Synchronizer Sleeve
26	1st/2nd Synchronizer Spring

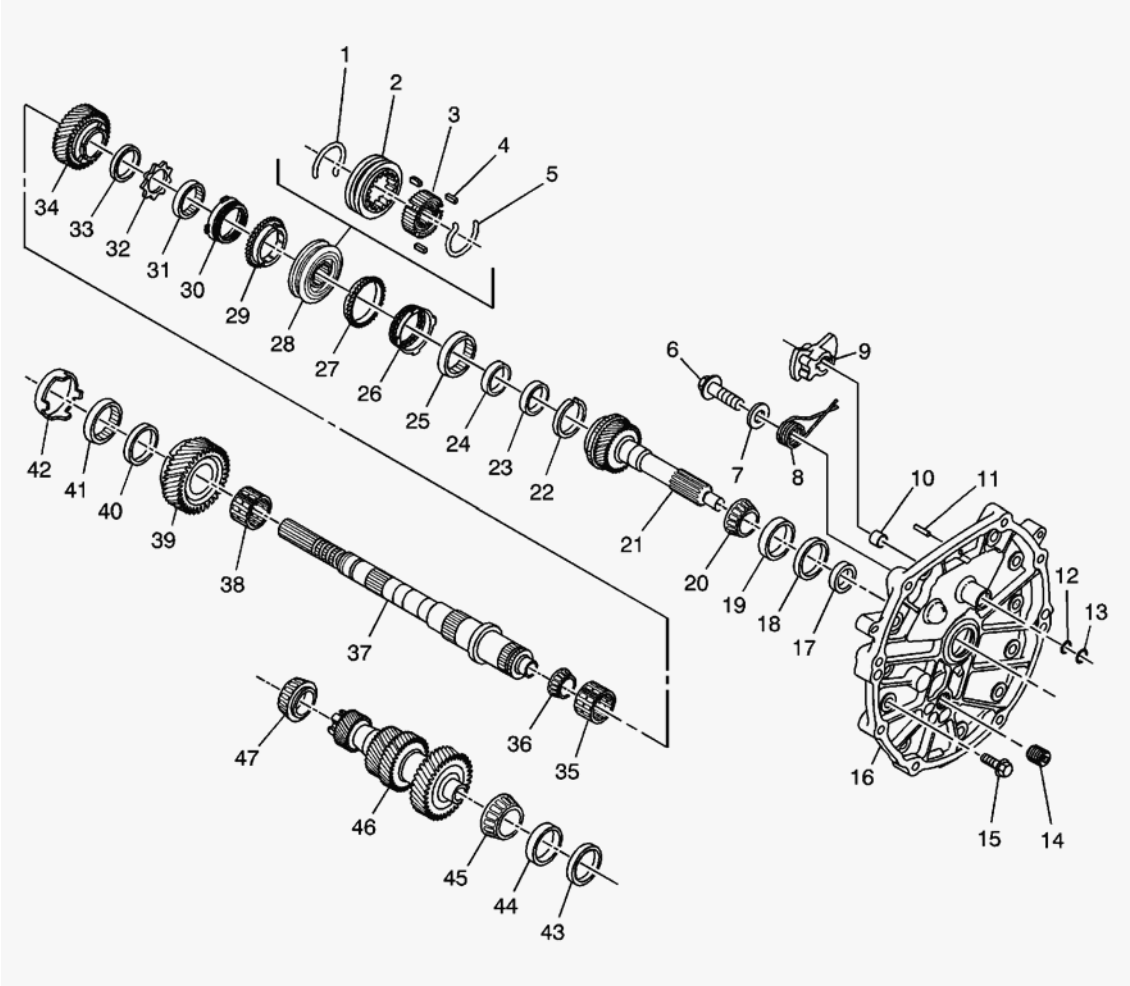

Fig. 3: Adapter Plate and Gears Component Location (Y Car)

cardiagn.com

Courtesy of GENERAL MOTORS CORP.

Callouts For Fig. 3

Callout	Component Name
1	3rd/4th Synchronizer Spring
2	3rd/4th Synchronizer Sleeve
3	3rd/4th Synchronizer Hub
4	3rd/4th Synchronizer Key
5	3rd/4th Synchronizer Spring
6	Neutral Return Cam Spring Bolt
7	Neutral Return Cam Spring Washer
8	Neutral Return Cam Spring
9	Neutral Return Cam
10	Top Shaft Rail Bushing
11	Dowel Pin
12	Inner Shift Shaft Seal
13	Outer Shift Shaft Seal
14	Adapter Plate Inspection Plug
15	Adapter to Transmission Case Bolt
16	Front Adapter Plate
17	Input Shaft Seal
18	Input Shaft Bearing Shim
19	Input Shaft Bearing Race
20	Input Shaft Bearing
21	Input Shaft
22	Input Shaft Bearing Race
23	3rd/4th Synchronizer Retaining Ring
24	4th Speed Drive Gear Thrust Washer
25	4th Speed Drive Gear Inner Cone
26	4th Speed Drive Gear Friction Cone
27	4th Speed Drive Gear Blocker Ring
28	3rd/4th Synchronizer Assembly
29	3rd Speed Drive Gear Synchronizer Blocking Ring
30	3rd Speed Drive Gear Friction Cone
31	3rd Speed Drive Gear Inner Cone
32	3rd Speed Drive Gear Thrust Washer
33	3rd Speed Drive Gear Thrust Washer
34	3rd Speed Drive Gear
35	3rd Speed Drive Gear Bearing
36	Mainshaft Small Tapered Bearing
37	Mainshaft

cardiagn.com

38	2nd Speed Drive Gear Needle Bearing
39	2nd Speed Drive Gear
40	2nd Speed Drive Gear Bearing Spacer
41	2nd Speed Drive Gear Inner Cone
42	2nd Speed Drive Gear Friction Cone
43	Countershaft Bearing Adjust Shim
44	Countershaft Bearing Race
45	Countershaft Front Bearing
46	Countershaft
47	Countershaft Rear Bearing

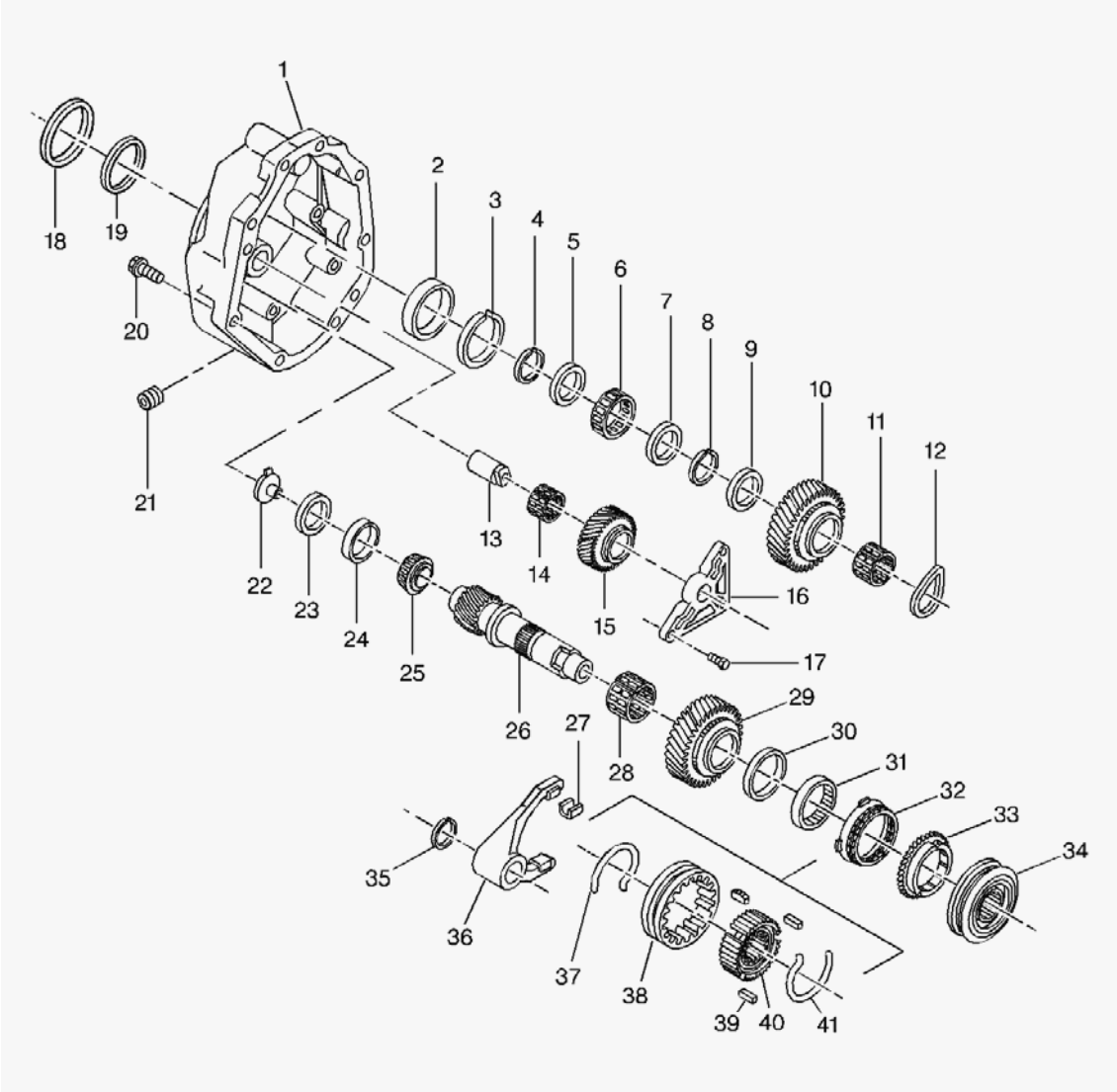

Fig. 4: Extension Housing Component Location (Y Car)
Courtesy of GENERAL MOTORS CORP.

cardiagn.com

Callouts For Fig. 4

Callout	Component Name
1	Extension Housing
2	Mainshaft Bearing Race
3	Mainshaft Rear Bearing Retainer Ring
4	Mainshaft Rear Bearing Retainer Ring
5	Mainshaft Gear Bearing Spacer
6	Mainshaft Rear Bearing
7	Mainshaft Gear Bearing Spacer
8	Synchronizer Retainer Ring
9	Reverse Gear Thrust Washer
10	Mainshaft Reverse Speed Gear
11	Reverse Gear Bearing
12	Reverse Gear Washer
13	Reverse Idler Gear Shaft
14	Reverse Idler Gear Needle Bearing
15	Reverse Idler Gear
16	Reverse Idler Bracket
17	Reverse Idler Bracket Bolt
18	Outer Output Shaft Seal
19	Inner Output Shaft Seal
20	Extension Housing to Transmission Case Bolt
21	Oil Drain Plug
22	Lubrication Funnel
23	Front Countershaft Extension Bearing Shim
24	Countershaft Extension Bearing Race
25	Countershaft Extension Bearing
26	Countershaft Extension
27	Shift Fork Pad
28	5th Speed Drive Gear Needle Bearing
29	5th Speed Drive Gear
30	5th Speed Drive Gear Thrust Washer
31	5th Speed Gear Inner Cone
32	5th Speed Gear Friction Cone
33	5th Gear Synchronizer Blocking Ring
34	5th/6th Synchronizer Assembly
35	5th Gear Shift Fork Retainer Ring
36	5th/6th Shift Fork
37	5th/6th Synchronizer Spring
38	5th/6th Synchronizer Sleeve
39	5th/6th and Reverse Synchronizer Key

cardiagn.com

40	5th/6th Synchronizer Hub
41	5th/6th Synchronizer Spring

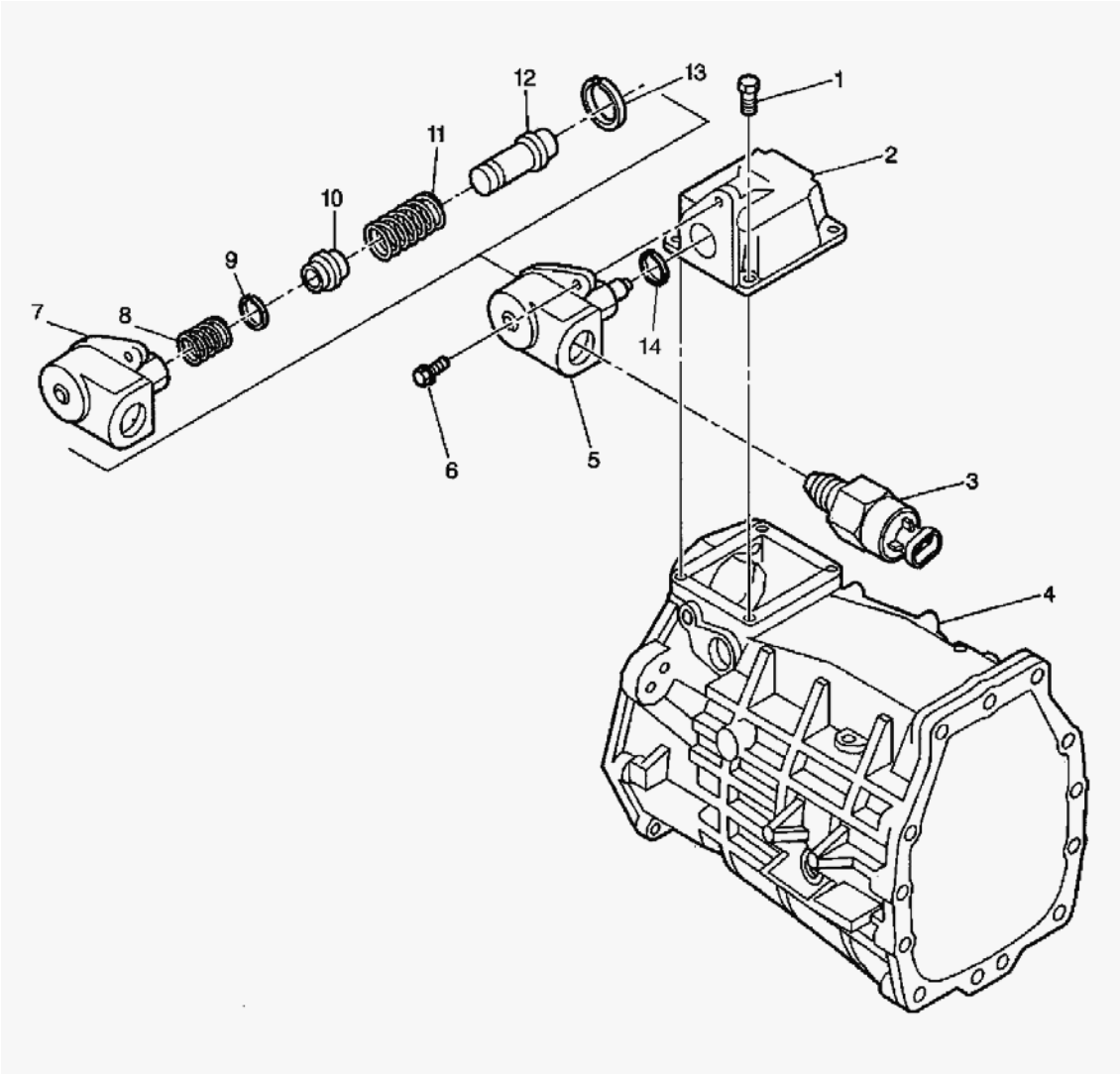

Fig. 5: Reverse Lockout Component Location (Y Car)
Courtesy of GENERAL MOTORS CORP.

Callouts For Fig. 5

Callout	Component Name
1	Transmission Case Cover Bolt
2	Transmission Case Cover
3	Reverse Lockout Solenoid
4	Transmission Case
5	Reverse Lockout Assembly
6	Reverse Lockout Solenoid Mounting Bolt
7	Reverse Lockout Body

cardiagn.com

8	Reverse Lockout Inner Spring
9	Snap Ring
10	Reverse Lockout Collar
11	Reverse Lockout Outer Spring
12	Reverse Lockout Plunger
13	Snap Ring
14	O-Ring

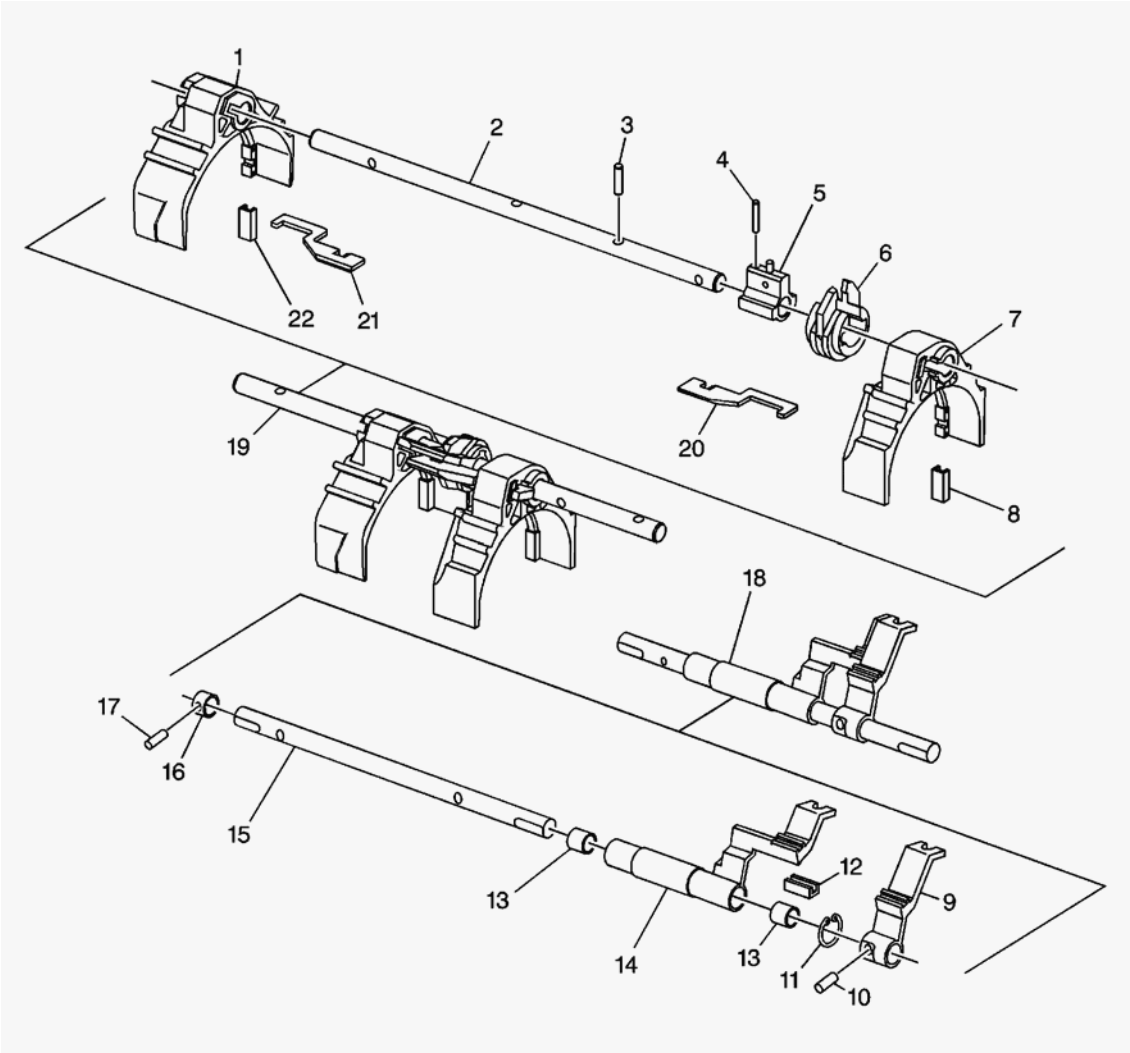

Fig. 6: Shift Shafts Component Location (Y Car)
Courtesy of GENERAL MOTORS CORP.

Callouts For Fig. 6

Callout	Component Name
1	1st/2nd Shift Fork
2	Shift Shaft

cardiagn.com

3	Neutral Return Cam Pin
4	1st/2nd Shift Fork Pin
5	Control Select Arm Pin
6	Gear Select Interlock Plate
7	3rd/4th Shift Fork
8	3rd/4th Shift Fork Pad
9	Offset Shift Lever
10	Reverse Shift Lever Pin
11	Retaining Ring
12	5th/6th Shift Lever Pad
13	5th/6th Shift Shaft Lever Bushing
13	5th/6th Shift Shaft Lever Bushing
14	5th/6th Shift Lever
15	5th/6th Reverse Shift Shaft
16	Reverse Shift Collar
17	Reverse Shift Collar Pin
18	5th/6th Shift Lever Assembly
19	1st/2nd Shift Shaft Assembly
20	Shift Interlock Plate
21	Interlock Shift Plate
22	1st/2nd Shift Fork Pad

TRANSMISSION COMPONENT LOCATION (CTSV)

cardiagn.com

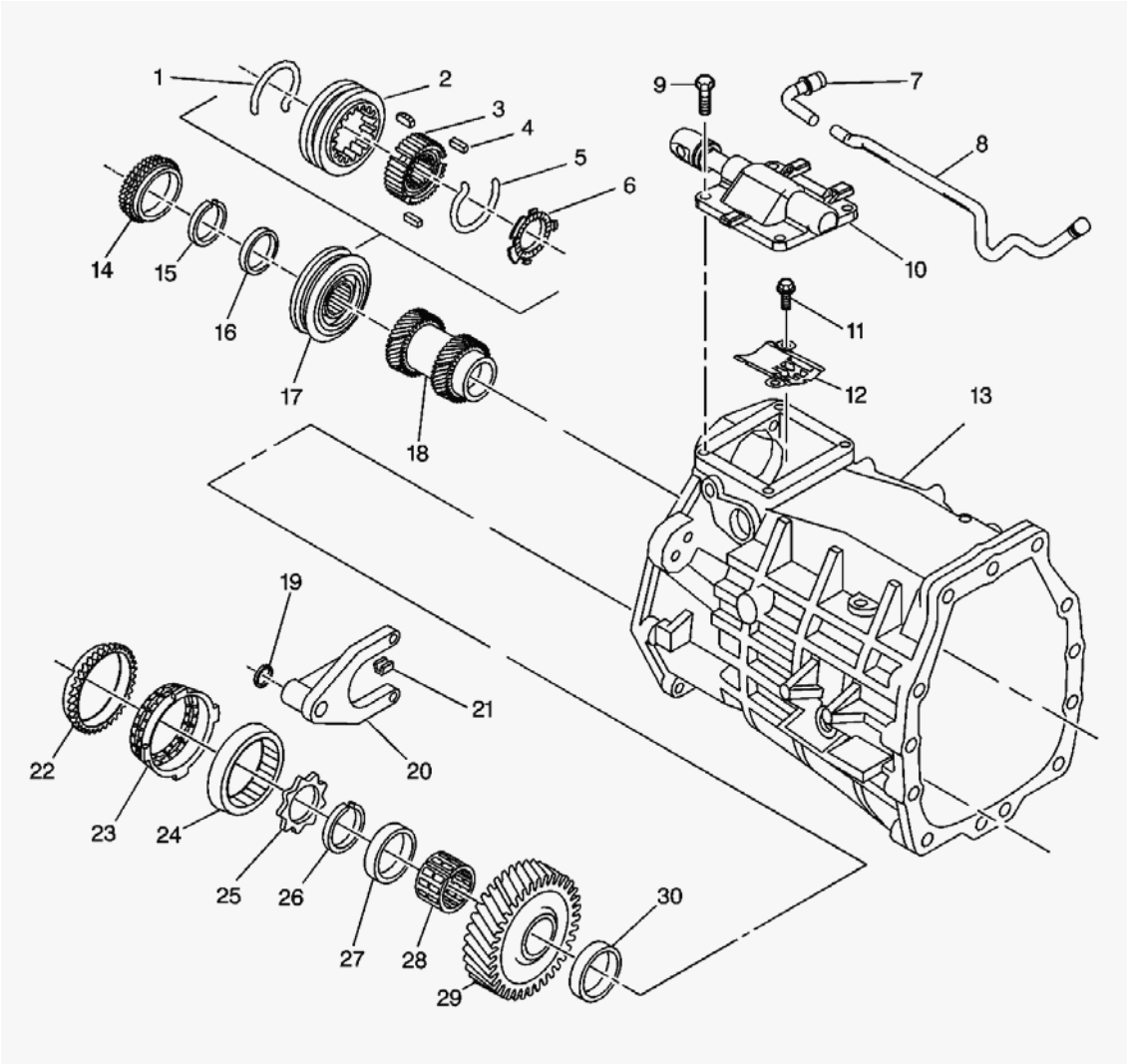

Fig. 7: Transmission Case Component Location (1 of 2) - CTSV
Courtesy of GENERAL MOTORS CORP.

Callouts For Fig. 7

Callout	Component Name
1	Reverse Synchronizer Spring
2	Reverse Synchronizer Sleeve
3	Reverse Synchronizer Hub
4	Reverse Synchronizer Key
5	Reverse Synchronizer Spring
6	Reverse Synchronizer Key Retainer
7	Vent
8	Vent Pipe
9	Shifter Cover Plate Bolt
10	Shifter Cover Plate

cardiagn.com

11	Guide Plate Bolt
12	Guide Plate
13	Transmission Case
14	Reverse Synchronizer Blocking Ring
15	Reverse Synchronizer Retainer Ring
16	Reverse Gear Thrust Washer
17	Reverse Synchronizer Hub and Sleeve
18	5th and 6th Speed Driven Gear
19	Reverse Shift Fork Retainer Ring
20	Reverse Shift Fork
21	Reverse Shift Fork Pad
22	6th Speed Drive Gear Synchronizer Blocking Ring
23	6th Speed Drive Gear Friction Cone
24	6th Speed Drive Gear Inner Cone
25	6th Speed Drive Gear Thrust Washer
26	Synchronizer Retainer Ring
27	6th Speed Drive Gear Bearing Spacer
28	6th Speed Drive Gear Needle Bearing
29	6th Speed Drive Gear
30	6th Speed Drive Gear Bearing Spacer

cardiagn.com

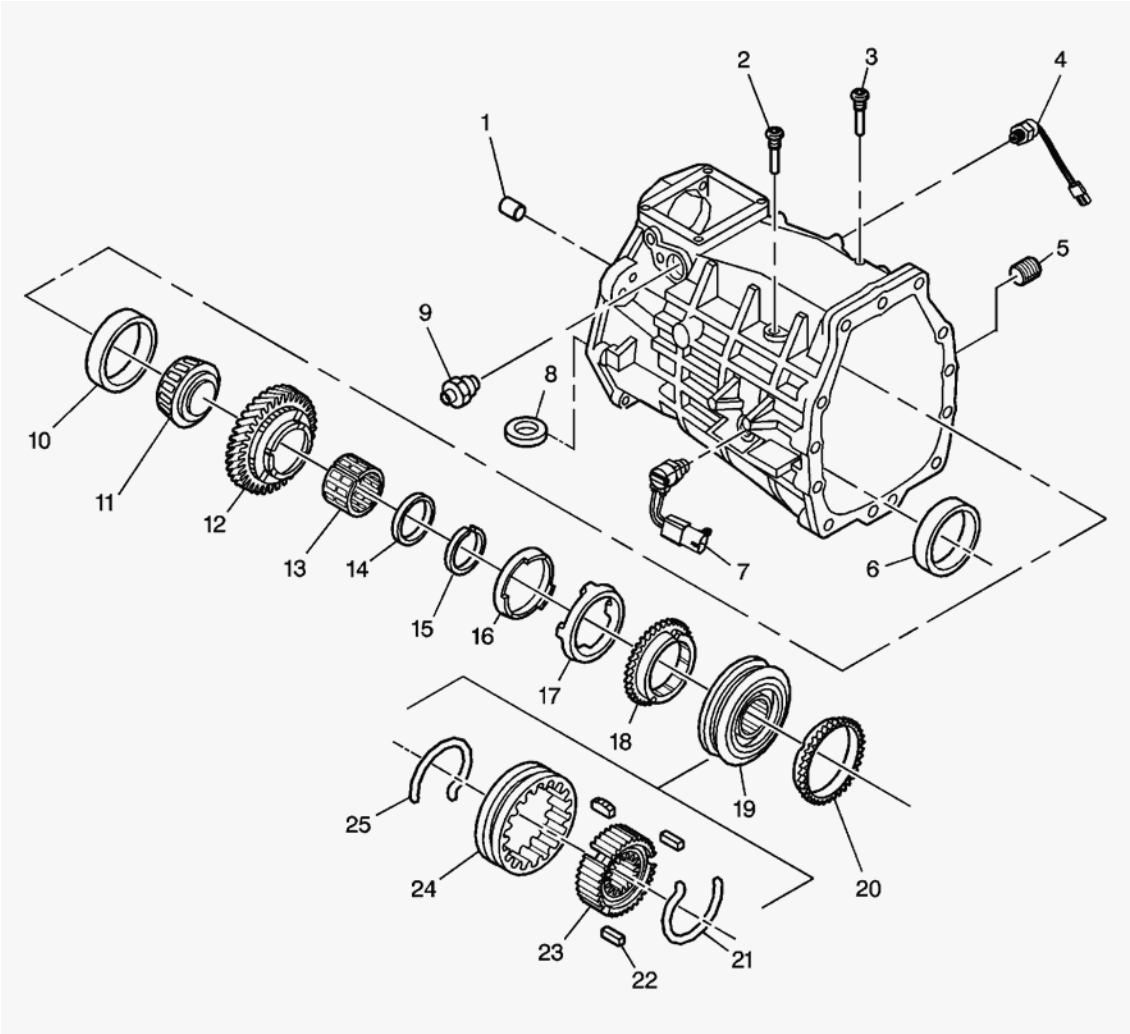

Fig. 8: Transmission Case Component Location (2 of 2) - CTSV)
Courtesy of GENERAL MOTORS CORP.

Callouts For Fig. 8

Callout	Component Name
1	Case Rear Extension Pin
2	5th/6th Lever Guide Bolt
3	Interlock Guide Bolt
4	Computer Aided Gear Select Solenoid
5	Oil Fill Plug
6	Countershaft Bearing Race
7	Backup Lamp Switch
8	Magnet
9	Shift Detent Assembly
10	Mainshaft Rear Bearing Race
11	Mainshaft Rear Bearing

cardiagn.com

12	1st Speed Drive Gear
13	1st Speed Drive Gear Needle Bearing
14	1st Speed Drive Gear Bearing Spacer
15	Synchronizer Retainer Ring
16	1st Speed Drive Gear Inner Cone
17	1st Speed Drive Gear Friction Cone
18	1st Gear Synchronizer Blocking Ring
19	1st/2nd Synchronizer Assembly
20	2nd Gear Synchronizer Blocking Ring
21	1st/2nd Synchronizer Spring
22	1st/2nd Synchronizer Key
23	1st/2nd Synchronizer Hub
24	1st/2nd Synchronizer Sleeve
25	1st/2nd Synchronizer Spring

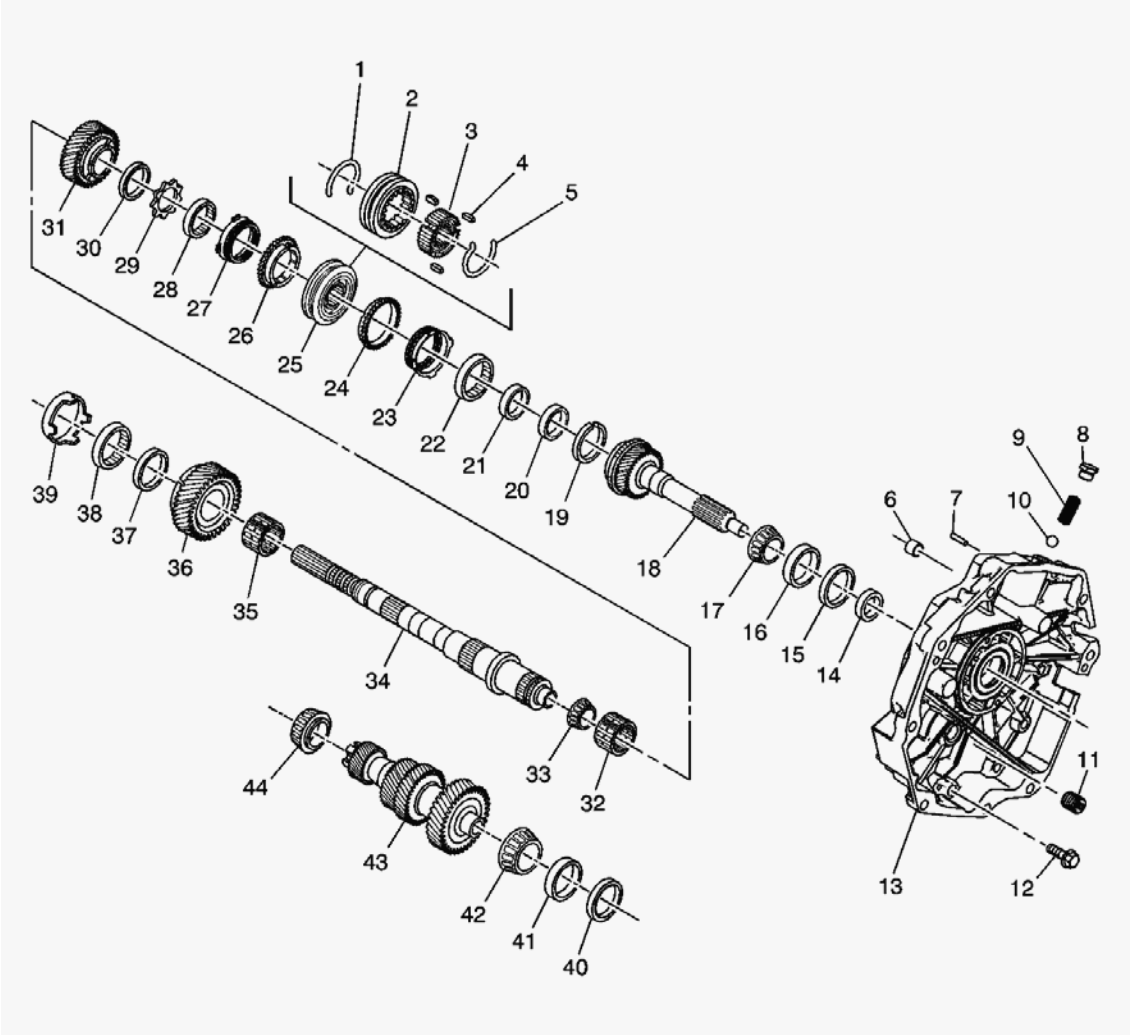

Fig. 9: Adapter Plate and Gears Component Location (CTSV)

cardiagn.com

Courtesy of GENERAL MOTORS CORP.

Callouts For Fig. 9

Callout	Component Name
1	3rd/4th Synchronizer Spring
2	3rd/4th Synchronizer Sleeve
3	3rd/4th Synchronizer Hub
4	3rd/4th Synchronizer Key
5	3rd/4th Synchronizer Spring
6	Top Shaft Rail Bushing
7	Dowel Pin
8	Shift Detent Plug
9	Shift Detent Spring
10	Shift Detent Ball
11	Adapter Plate Inspection Plug
12	Adapter to Transmission Case Bolt
13	Front Adapter Plate
14	Input Shaft Seal
15	Input Shaft Bearing Shim
16	Input Shaft Bearing Race
17	Input Shaft Bearing
18	Input Shaft
19	Input Shaft Bearing Race
20	3rd/4th Synchronizer Retaining Ring
21	4th Speed Drive Gear Thrust Washer
22	4th Speed Drive Gear Inner Cone
23	4th Speed Drive Gear Friction Cone
24	4th Speed Drive Gear Blocker Ring
25	3rd/4th Synchronizer Assembly
26	3rd Speed Drive Gear Synchronizer Blocking Ring
27	3rd Speed Drive Gear Friction Cone
28	3rd Speed Drive Gear Inner Cone
29	3rd Speed Drive Gear Thrust Washer
30	3rd Speed Drive Gear Thrust Washer
31	3rd Speed Drive Gear
32	3rd Speed Drive Gear Bearing
33	Mainshaft Small Tapered Bearing
34	Mainshaft
35	2nd Speed Drive Gear Needle Bearing
36	2nd Speed Drive Gear
37	2nd Speed Drive Gear Bearing Spacer

cardiagn.com

38	2nd Speed Drive Gear Inner Cone
39	2nd Speed Drive Gear Friction Cone
40	Countershaft Bearing Adjust Shim
41	Countershaft Bearing Race
42	Countershaft Front Bearing
43	Countershaft
44	Countershaft Rear Bearing

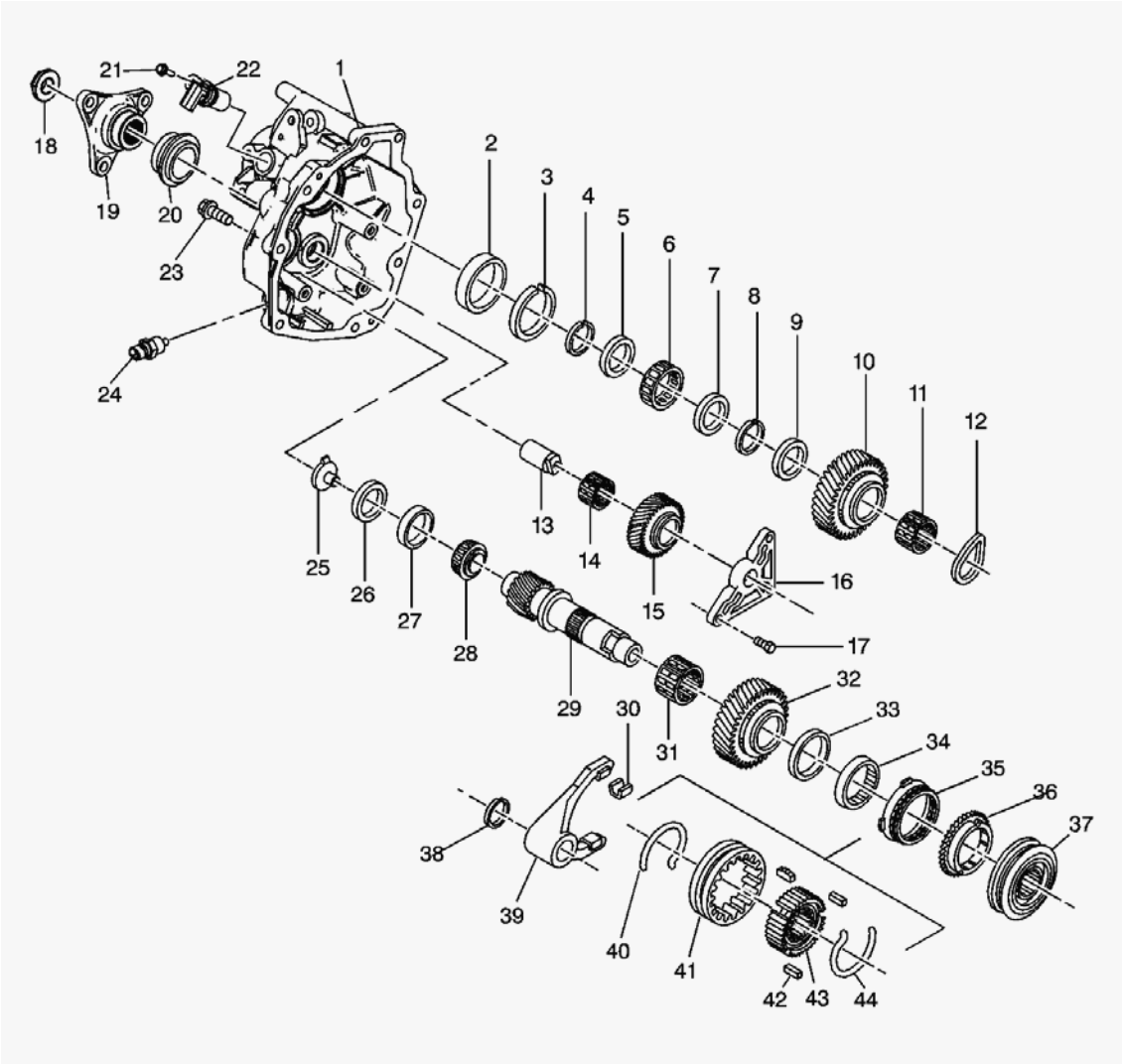

Fig. 10: Extension Housing Component Location (CTSV)
Courtesy of GENERAL MOTORS CORP.

Callouts For Fig. 10

Callout	Component Name
1	Extension Housing
2	Mainshaft Bearing Race

cardiagn.com

3	Mainshaft Rear Bearing Retainer Ring
4	Mainshaft Rear Bearing Retainer Ring
5	Mainshaft Gear Bearing Spacer
6	Mainshaft Rear Bearing
7	Mainshaft Gear Bearing Spacer
8	Synchronizer Retainer Ring
9	Reverse Gear Thrust Washer
10	Mainshaft Reverse Speed Gear
11	Reverse Gear Bearing
12	Reverse Gear Washer
13	Reverse Idler Gear Shaft
14	Reverse Idler Gear Needle Bearing
15	Reverse Idler Gear
16	Reverse Idler Bracket
17	Reverse Idler Bracket Bolt
18	Propshaft Connector Nut
19	Propshaft Connector
20	Output Shaft Seal
21	Vehicle Speed Sensor Bolt
22	Vehicle Speed Sensor
23	Extension Housing to Transmission Case Bolt
24	Temperature Sensor
25	Lubrication Funnel
26	Front Countershaft Extension Bearing Shim
27	Countershaft Extension Bearing Race
28	Countershaft Extension Bearing
29	Countershaft Extension
30	Shift Fork Pad
31	5th Speed Drive Gear Needle Bearing
32	5th Speed Drive Gear
33	5th Speed Drive Gear Thrust Washer
34	5th Speed Gear Inner Cone
35	5th Speed Gear Friction Cone
36	5th Gear Synchronizer Blocking Ring
37	5th/6th Synchronizer Assembly
38	5th Gear Shift Fork Retainer Ring
39	5th/6th Shift Fork
40	5th/6th Synchronizer Spring
41	5th/6th Synchronizer Sleeve
42	5th/6th and Reverse Synchronizer Key
43	5th/6th Synchronizer Hub

cardiagn.com

44	5th/6th Synchronizer Spring

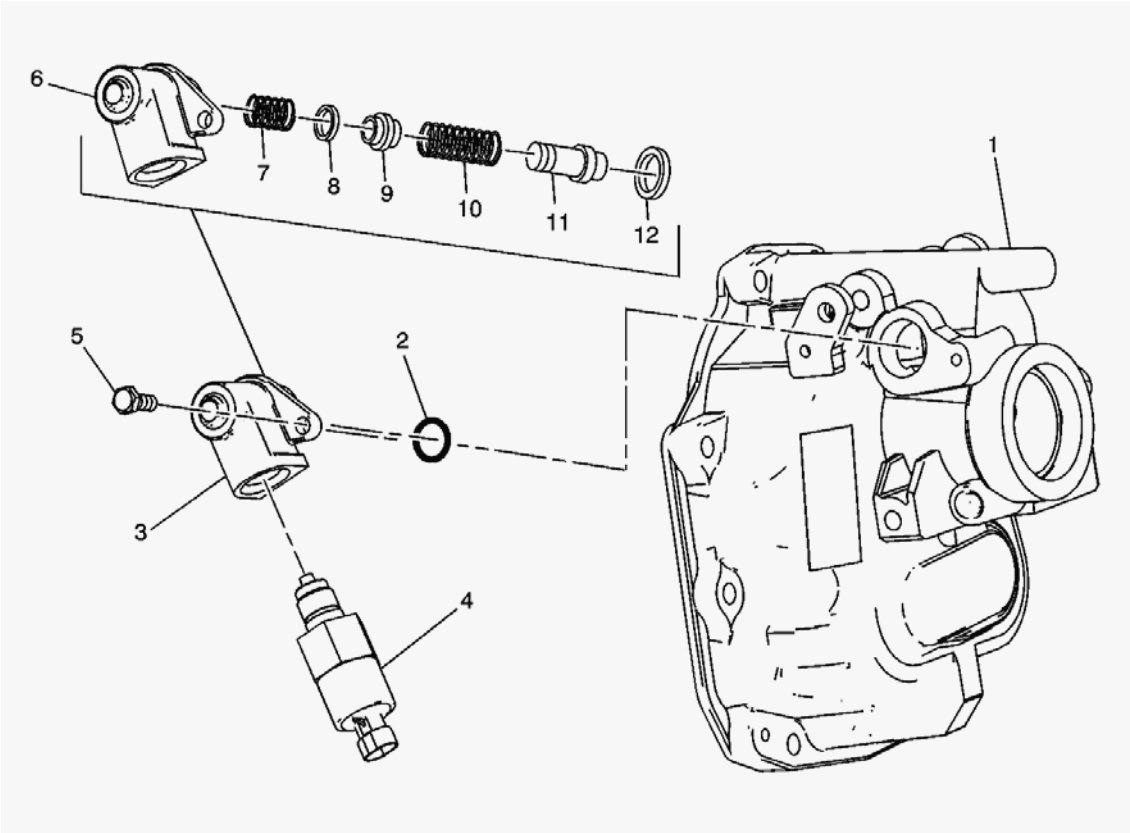

Fig. 11: Reverse Lockout Component Location (CTSV)
Courtesy of GENERAL MOTORS CORP.

Callouts For Fig. 11

Callout	Component Name
1	Extension Housing
2	O-ring
3	Reverse Lockout Assembly
4	Reverse Lockout Solenoid
5	Reverse Lockout Solenoid Mounting Bolt
6	Reverse Lockout Body
7	Reverse Lockout Inner Spring
8	Snap Ring
9	Reverse Lockout Collar
10	Reverse Lockout Outer Spring
11	Reverse Lockout Plunger
12	Snap Ring

cardiagn.com

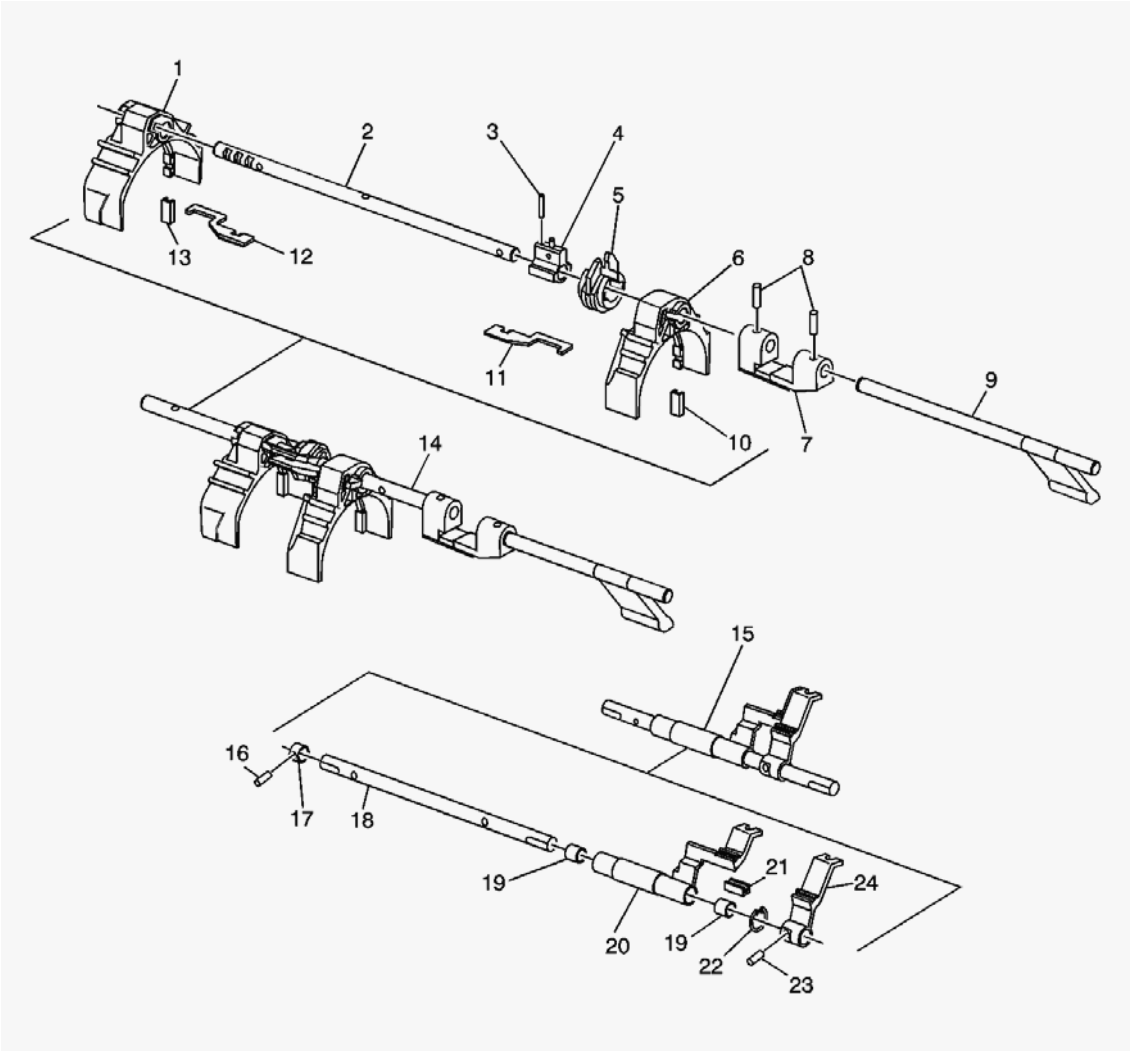

Fig. 12: Shift Shafts Component Location (CTSV)
Courtesy of GENERAL MOTORS CORP.

Callouts For Fig. 12

Callout	Component Name
1	1st/2nd Shift Fork
2	Shift Shaft
3	Control Select Arm Pin Roll Pin
4	Control Select Arm Pin
5	Gear Select Interlock Plate
6	3rd/4th Shift Fork
7	Shift Guide
8	Shift Guide Roll Pins
9	Shift Shaft Extension
10	3rd/4th Shift Fork Pad
11	Shift Interlock Plate

cardiagn.com

12	Interlock Shift Plate
13	1st/2nd Shift Fork Pad
14	1st/2nd Shift Shaft Assembly
15	5th/6th Shift Lever Assembly
16	Reverse Shift Collar Pin
17	Reverse Shift Collar
18	5th/6th Reverse Shift Shaft
19	5th/6th Shift Shaft Lever Bushing
19	5th/6th Shift Shaft Lever Bushing
20	5th/6th Shift Lever
21	5th/6th Shift Lever Pad
22	Retaining Ring
23	Reverse Shift Lever Pin
24	Offset Shift Lever

TRANSMISSION COMPONENT LOCATION (GTO)

cardiagn.com

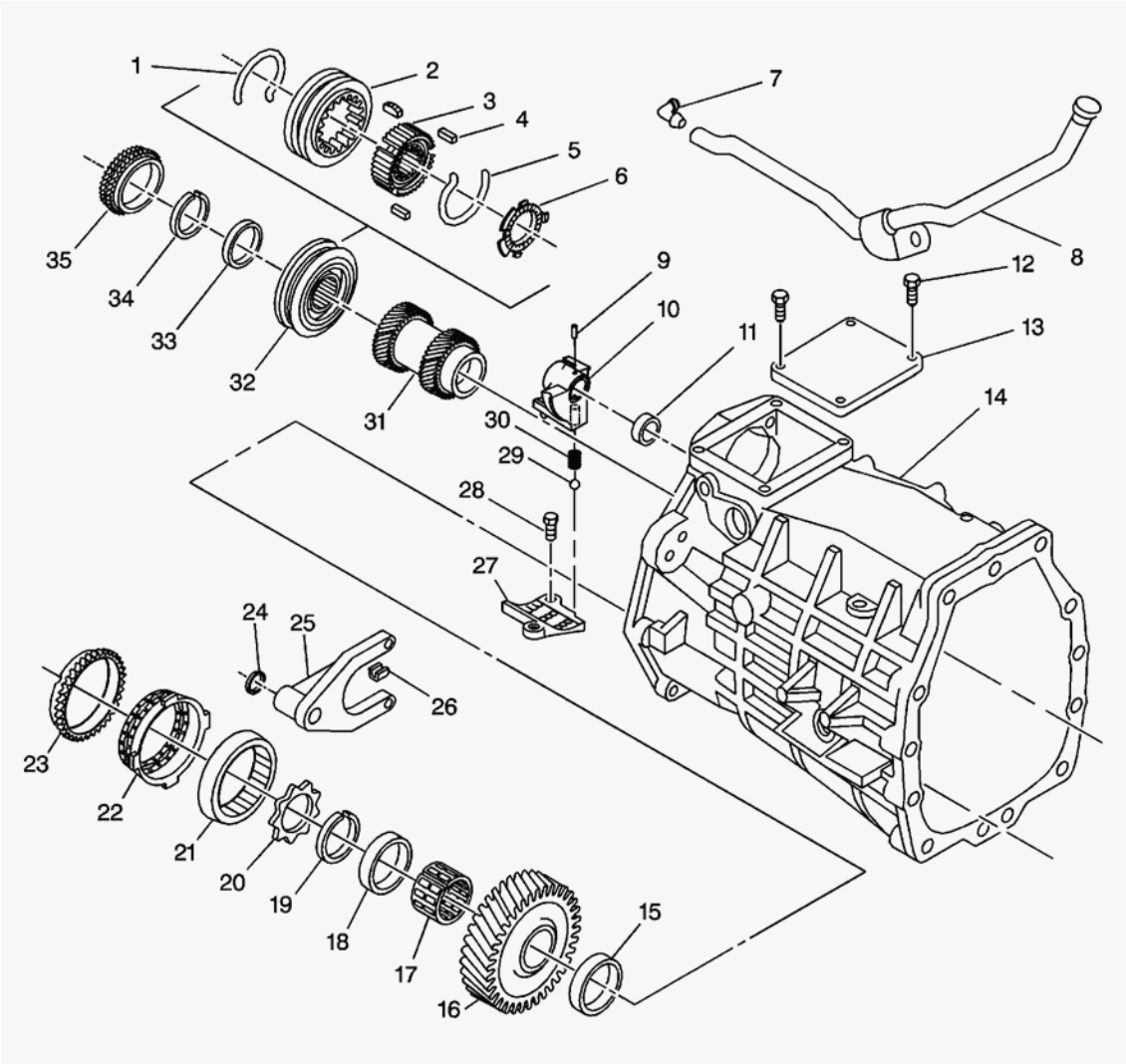

Fig. 13: Transmission Case Component Location (1 of 2) - GTO
Courtesy of GENERAL MOTORS CORP.

Callouts For Fig. 13

Callout	Component Name
1	Reverse Synchronizer Spring
2	Reverse Synchronizer Sleeve
3	Reverse Synchronizer Hub
4	Reverse Synchronizer Key
5	Reverse Synchronizer Spring
6	Reverse Synchronizer Key Retainer
7	Vent
8	Vent Pipe
9	Offset Lever Roll Pin
10	Offset Shift Lever

cardiagn.com

11	Top Shift Shaft Bushing
12	Cover Plate Bolt
13	Cover Plate
14	Transmission Case
15	6th Speed Drive Gear Bearing Spacer
16	6th Speed Drive Gear
17	6th Speed Drive Gear Needle Bearing
18	6th Speed Drive Gear Bearing Spacer
19	Synchronizer Retainer Ring
20	6th Speed Drive Gear Thrust Washer
21	6th Speed Drive Gear Inner Cone
22	6th Speed Drive Gear Friction Cone
23	6th Speed Drive Gear Synchronizer Blocking Ring
24	Reverse Shift Fork Retainer Ring
25	Reverse Shift Fork
26	Reverse Shift Fork Pad
27	Guide Plate
28	Guide Plate Bolt
29	Shift Detent Ball
30	Shift Detent Ball Spring
31	5th and 6th Speed Driven Gear
32	Reverse Synchronizer Hub and Sleeve
33	Reverse Gear Thrust Washer
34	Reverse Synchronizer Retainer Ring
35	Reverse Synchronizer Blocking Ring

cardiagn.com

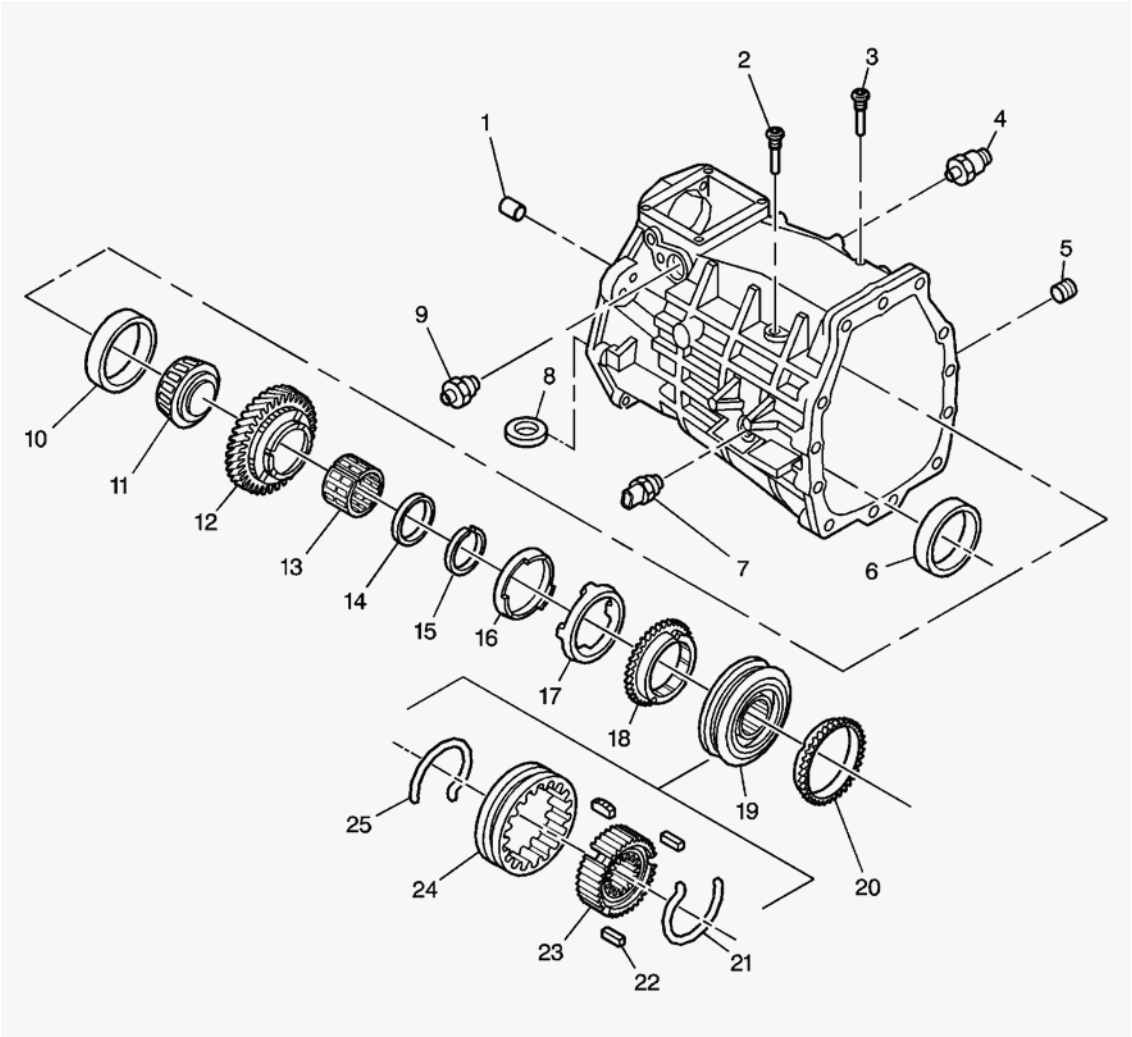

Fig. 14: Transmission Case Component Location (2 of 2) - GTO
Courtesy of GENERAL MOTORS CORP.

Callouts For Fig. 14

Callout	Component Name
1	Case Rear Extension Pin
2	5th/6th Lever Guide Bolt
3	Interlock Guide Bolt
4	Computer Aided Gear Select Solenoid
5	Oil Fill Plug
6	Countershaft Bearing Race
7	Backup Lamp Switch
8	Magnet
9	Shift Detent Switch
10	Mainshaft Rear Bearing Race
11	Mainshaft Rear Bearing

cardiagn.com

12	1st Speed Drive Gear
13	1st Speed Drive Gear Needle Bearing
14	Thrust Washer
15	Synchronizer Retainer Ring
16	1st Speed Gear Inner Cone
17	1st Speed Drive Gear Friction Cone
18	1st Gear Synchronizer Blocking Ring
19	1st/2nd Synchronizer Assembly
20	2nd Gear Synchronizer Blocking Ring
21	1st/2nd Synchronizer Spring
22	1st/2nd Synchronizer Key
23	1st/2nd Synchronizer Hub
24	1st/2nd Synchronizer Sleeve
25	1st/2nd Synchronizer Spring

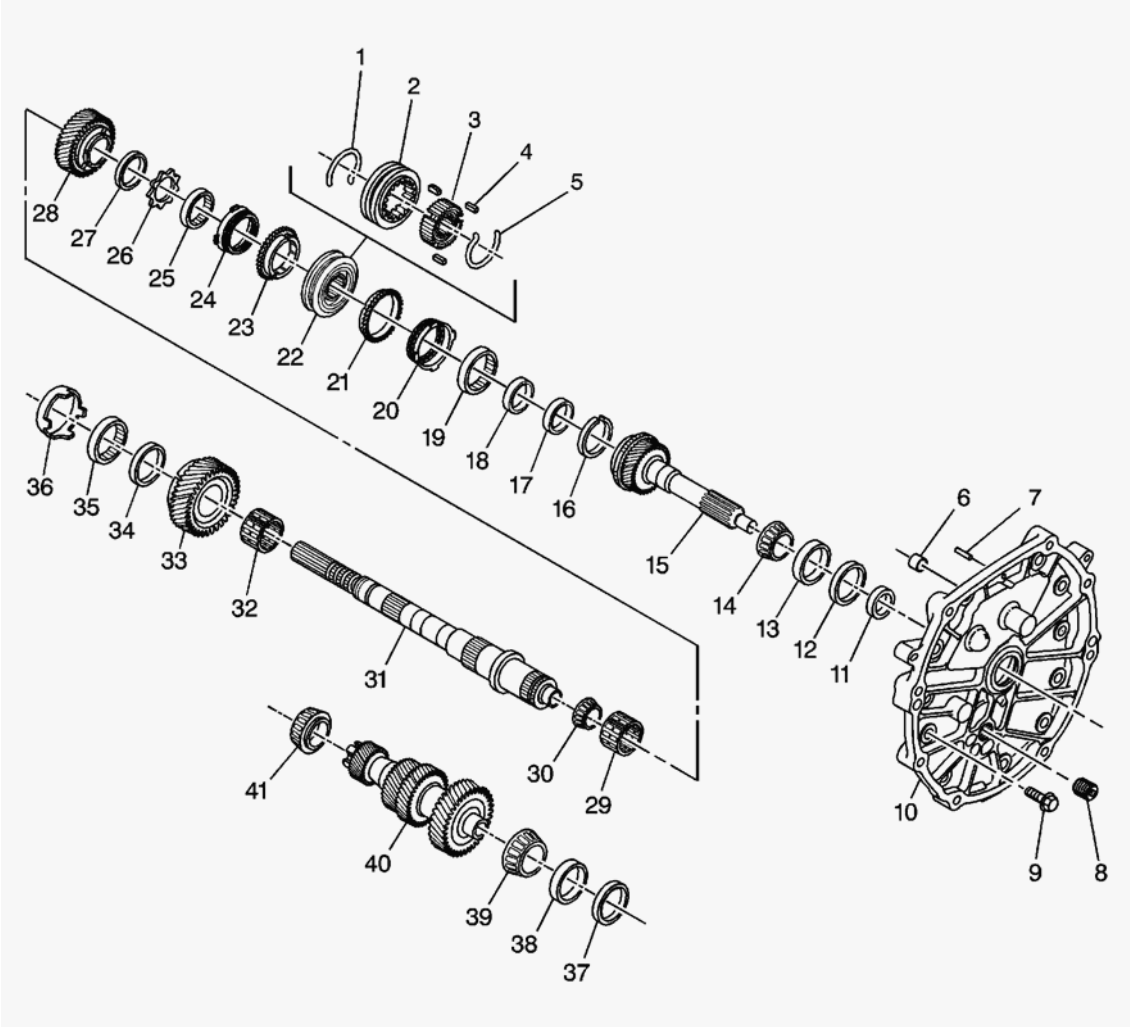

Fig. 15: Adapter Plate and Gears Component Location (GTO)

cardiagn.com

Courtesy of GENERAL MOTORS CORP.

Callouts For Fig. 15

Callout	Component Name
1	3rd/4th Synchronizer Spring
2	3rd/4th Synchronizer Sleeve
3	3rd/4th Synchronizer Hub
4	3rd/4th Synchronizer Key
5	3rd/4th Synchronizer Spring
6	Top Shaft Rail Bushing
7	Dowel Pin
8	Adapter Plate Inspection Plug
9	Adapter to Transmission Case Bolt
10	Front Adapter Plate
11	Input Shaft Seal
12	Input Shaft Bearing Shim
13	Input Shaft Bearing Race
14	Input Shaft Bearing
15	Input Shaft
16	Input Shaft Bearing Race
17	3rd/4th Synchronizer Retaining Ring
18	4th Speed Drive Gear Thrust Washer
19	4th Speed Drive Gear Inner Cone
20	4th Speed Drive Gear Friction Cone
21	4th Speed Drive Gear Blocker Ring
22	3rd/4th Synchronizer Assembly
23	3rd Speed Drive Gear Synchronizer Blocking Ring
24	3rd Speed Drive Gear Friction Cone
25	3rd Speed Drive Gear Inner Cone
26	3rd Speed Drive Gear Thrust Washer
27	3rd Speed Drive Gear Thrust Washer
28	3rd Speed Drive Gear
29	3rd Speed Drive Gear Bearing
30	Mainshaft Small Tapered Bearing
31	Mainshaft
32	2nd Speed Drive Gear Needle Bearing
33	2nd Speed Drive Gear
34	2nd Speed Drive Gear Bearing Spacer
35	2nd Speed Drive Gear Inner Cone
36	2nd Speed Drive Gear Friction Cone
37	Countershaft Bearing Adjust Shim

cardiagn.com

38	Countershaft Bearing Race
39	Countershaft Front Bearing
40	Countershaft
41	Countershaft Rear Bearing

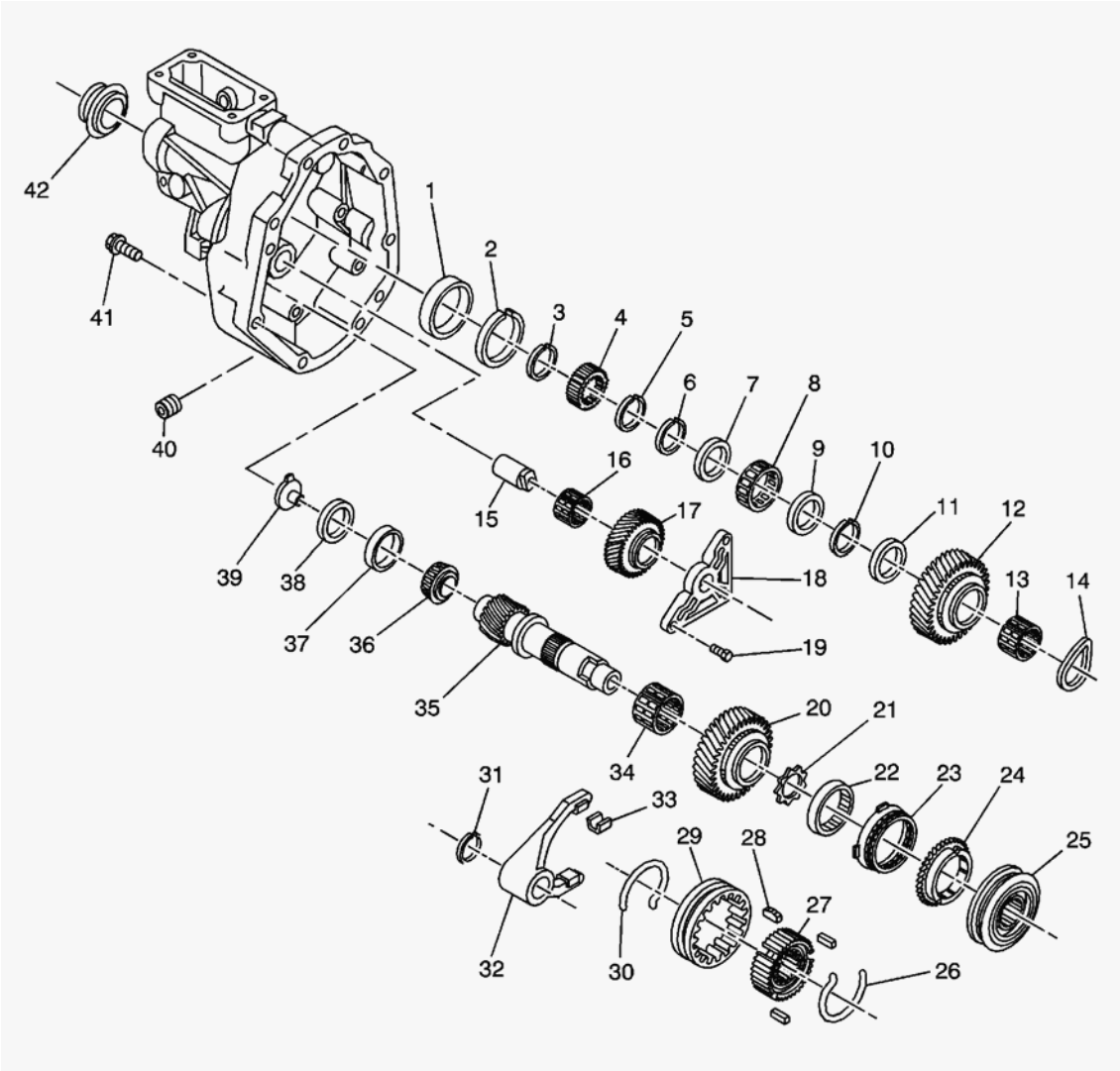

Fig. 16: Extension Housing Component Location (GTO)
Courtesy of GENERAL MOTORS CORP.

Callouts For Fig. 16

Callout	Component Name
1	Mainshaft Bearing Race
2	Mainshaft Rear Bearing Retainer Ring
3	Speedometer Sensor Gear Retainer Ring
4	Speedometer Sensor Gear
5	Speedometer Sensor Gear Retainer Ring

cardiagn.com

6	Mainshaft Rear Bearing Retainer Ring
7	Mainshaft Gear Bearing Spacer
8	Mainshaft Rear Bearing
9	Mainshaft Gear Bearing Spacer
10	Synchronizer Retaining Ring
11	Reverse Gear Thrust Washer
12	Mainshaft Reverse Speed Gear
13	Reverse Gear Needle Bearings
14	Reverse Gear Washer
15	Reverse Idler Gear Shaft
16	Reverse Idler Gear Needle Bearing
17	Reverse Idler Gear
18	Reverse Idler Bracket
19	Reverse Idler Bracket Bolt
20	5th Gear
21	5th Speed Drive Gear Thrust Washer
22	5th Speed Gear Inner Cone
23	5th Speed Gear Friction Cone
24	5th Gear Synchronizer Blocking Ring
25	5th/6th Synchronizer Assembly
26	5th/6th Synchronizer Spring
27	5th/6th Synchronizer Hub
28	5th/6th and Reverse Synchronizer Key
29	5th/6th Synchronizer Sleeve
30	5th Synchronizer Spring
31	5th/6th Gear Shift Fork Retainer Ring
32	5th Gear Shift Fork
33	Fork Pad
34	5th Gear Needle Bearing
35	Countershaft Extension
36	Countershaft Extension Bearing
37	Countershaft Extension Bearing Race
38	Countershaft Extension Bearing Shim
39	Lubrication Funnel
40	Oil Drain Plug
41	Extension Housing to Transmission Case Bolt
42	Mainshaft Seal

cardiagn.com

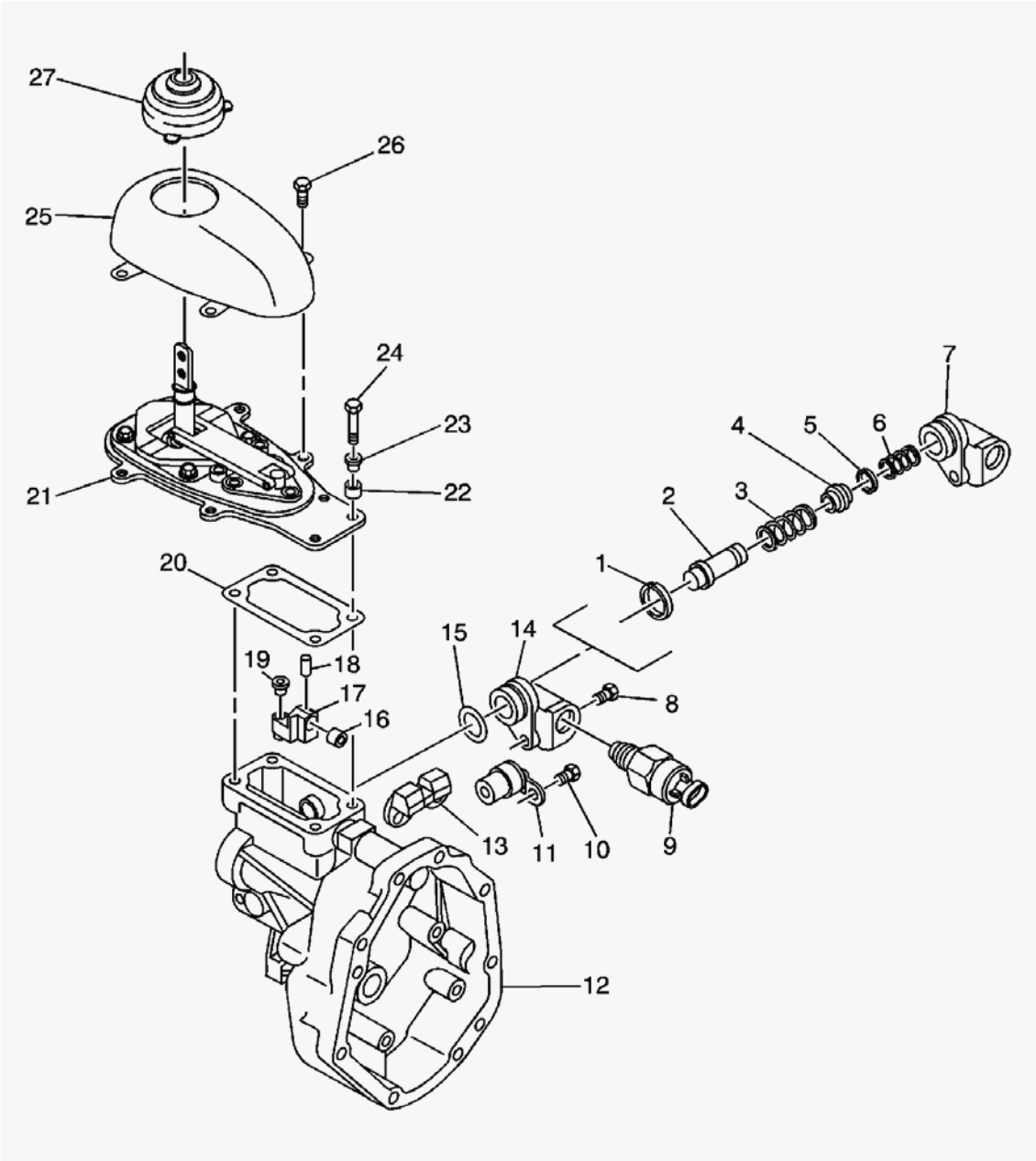

Fig. 17: Reverse Lockout Component Location (GTO)
Courtesy of GENERAL MOTORS CORP.

Callouts For Fig. 17

Callout	Component Name
1	Snap Ring
2	Reverse Lockout
3	Reverse Lockout Outer Spring
4	Reverse Lockout Seat
5	Snap Ring

cardiagn.com

6	Reverse Lockout Inner Spring
7	Reverse Lockout Body
8	Reverse Lockout Solenoid Mounting Bolt
9	Reverse Lockout Solenoid
10	Speed Sensor Bolt
11	Speed Sensor
12	Transmission Extension
13	Bumper
14	Reverse Lockout Assembly
15	Reverse Lockout O-ring Seal
16	Bushing
17	Offset Shift Lever
18	Offset Shift Lever Pin
19	Isolator Cup
20	Shifter Gasket
21	Shifter
22	Insulating Sleeve
23	Shift Cover Bolt Distance Piece
24	Shifter Assembly Bolt
25	Shifter Assembly Cover
26	Shifter Assembly Cover Screw
27	Shifter Boot

cardiagn.com

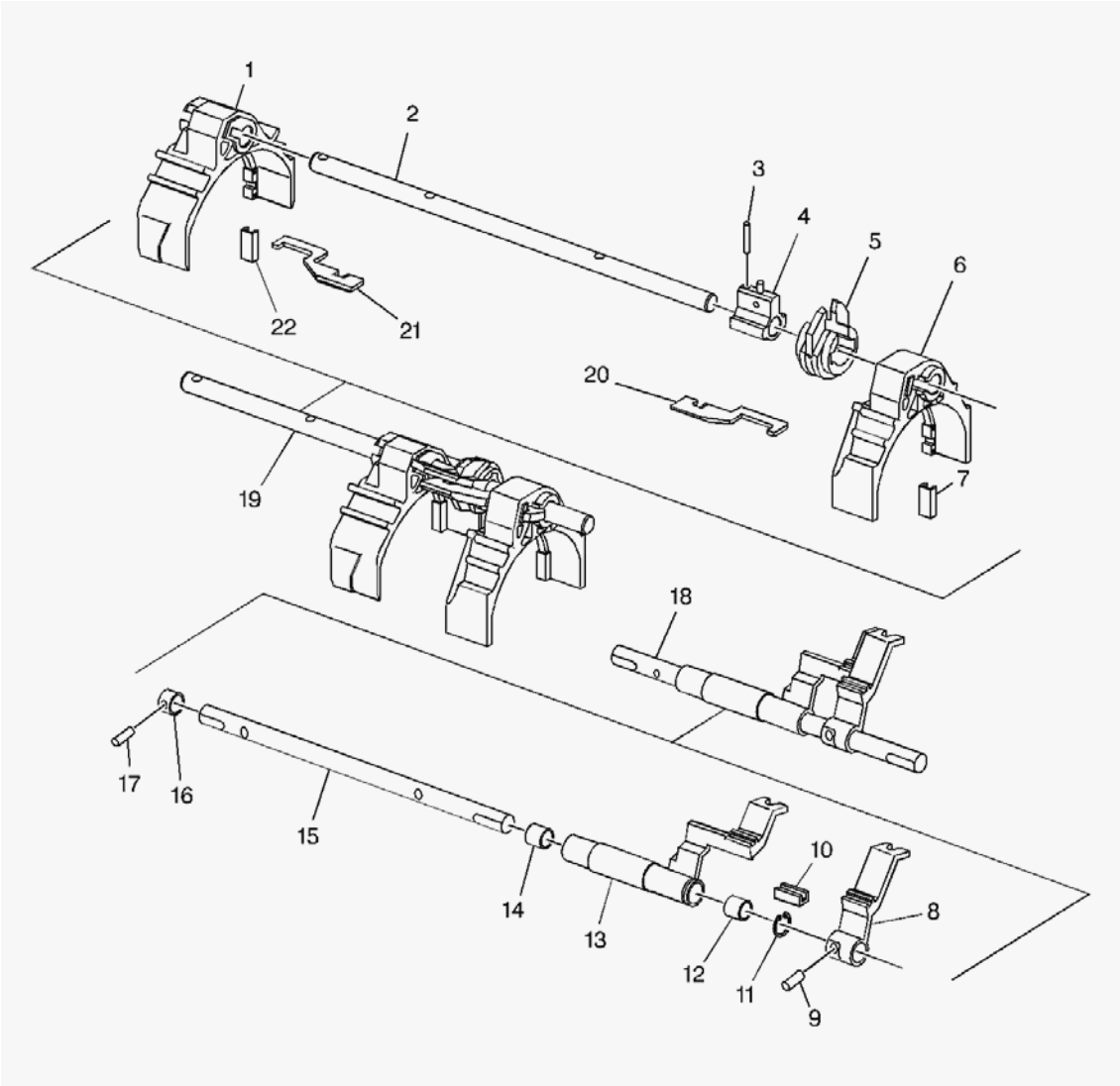

Fig. 18: Shift Shafts Component Location (GTO)
Courtesy of GENERAL MOTORS CORP.

Callouts For Fig. 18

Callout	Component Name
1	1st/2nd Shift Fork
2	Shift Shaft
3	1st/2nd Shift Fork Pin
4	Control Select Arm Pin
5	Gear Select Interlock Plate
6	3rd/4th Shift Fork
7	3rd/4th Shift Fork Pad
8	Offset Shift Lever
9	Reverse Shift Lever Pin

cardiagn.com

10	5th/6th Shift Lever Pad
11	Retaining Ring
12	5th/6th Shift Shaft Lever Bushing
13	5th/6th Shift Lever
14	5th/6th Shift Shaft Lever Bushing
15	5th/6th Reverse Shift Shaft
16	Collar
17	Reverse Shift Collar Pin
18	5th/6th Shift Lever Assembly
19	1st/2nd Shift Shaft Assembly
20	Shift Interlock Plate
21	Interlock Shift Plate
22	1st/2nd Shift Fork Pad

REPAIR INSTRUCTIONS

TRANSMISSION DISASSEMBLE (Y CAR)

Extension Housing Removal

Tools Required

- **J 3289-20** Holding Fixture. See **Special Tools** .
- **J 44395** Transmission Holding Fixture. See **Special Tools** .

cardiagn.com

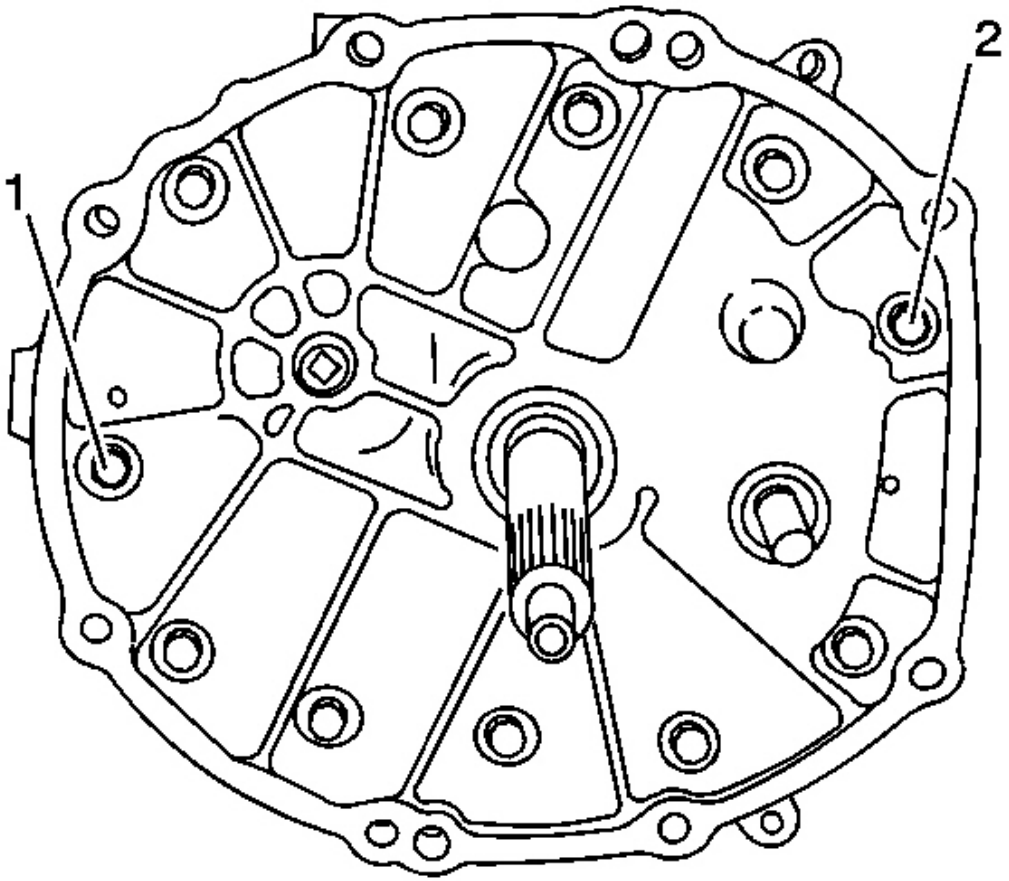

Fig. 19: Installing/Removing Two Adapter Plate Bolts
Courtesy of GENERAL MOTORS CORP.

1. Remove the adapter plate bolts (1) and (2).

cardiagn.com

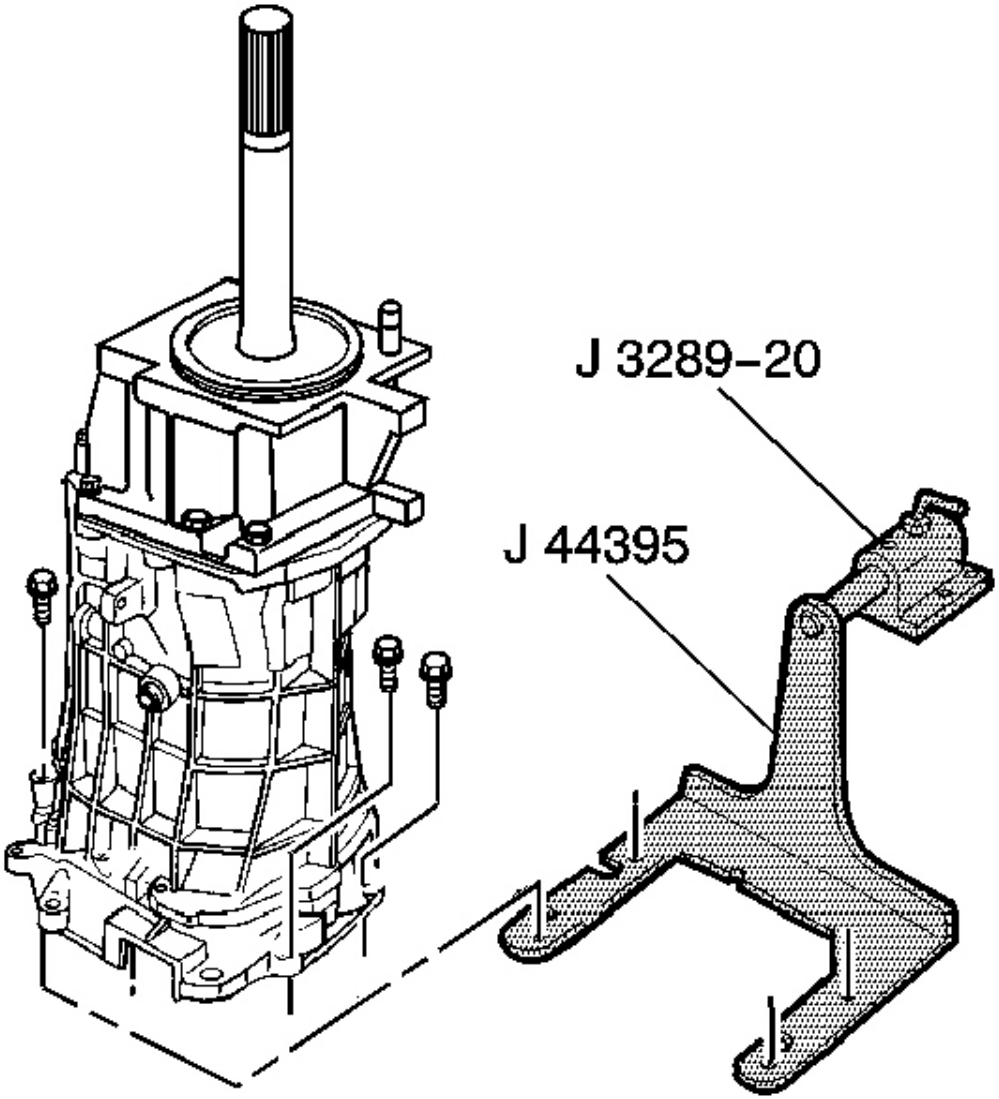

Fig. 20: Removing/Installing J 44395 On Transmission Case
Courtesy of GENERAL MOTORS CORP.

2. Install the **J 44395** .
3. Mount the transmission on a workbench using the **J 3289-20** .
4. Rotate the transmission into a horizontal position.
5. Remove the transmission drain plug and drain the transmission fluid.
6. Shift the transmission into neutral (N).

cardiagn.com

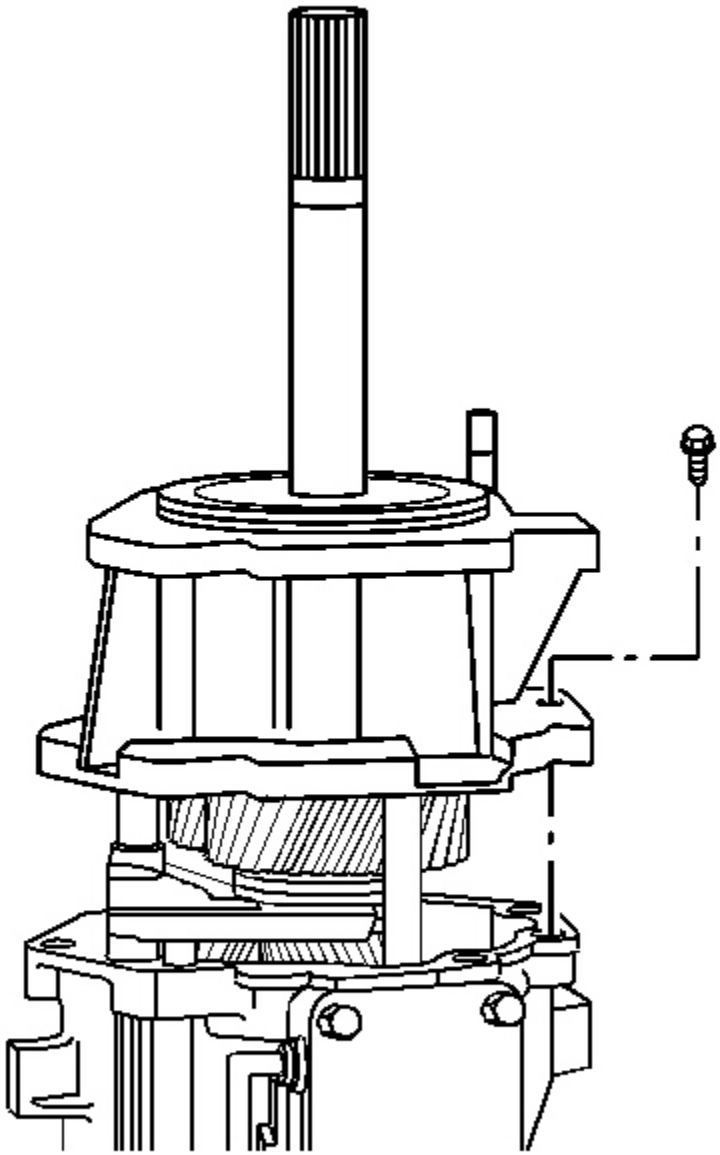

Fig. 21: View Of Extension Housing Bolts & Extension Housing
Courtesy of GENERAL MOTORS CORP.

7. Remove the rear extension housing bolts and the rear extension housing.

Reverse Speed Gear Removal

cardiagn.com

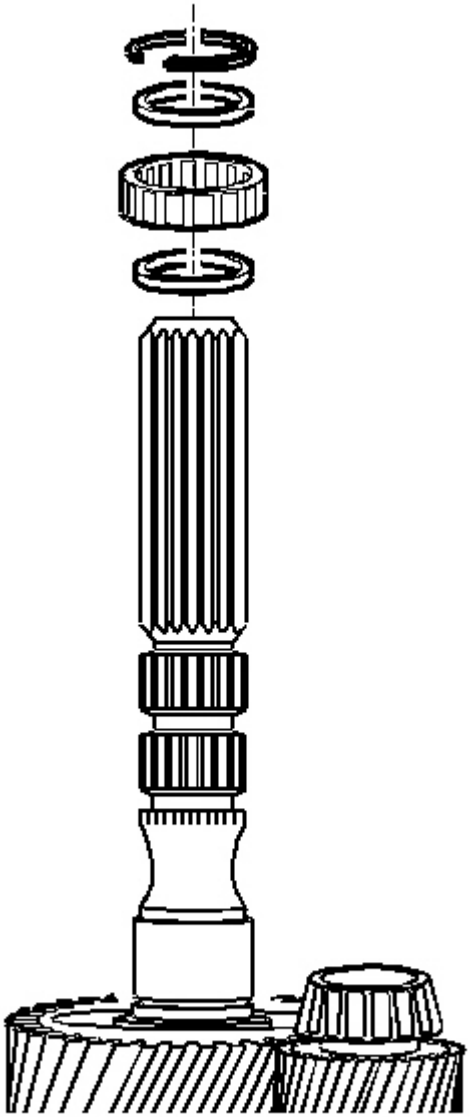

Fig. 22: View Of Mainshaft Rear Roller Bearing, Rear Bearing Retainer Ring & Spacers
Courtesy of GENERAL MOTORS CORP.

1. Remove the rear bearing retainer ring.
2. Remove the spacer.
3. Remove the mainshaft rear roller bearing.
4. Remove the spacer.

cardiagn.com

5. Remove the retainer ring.
6. Remove the reverse gear thrust washer.

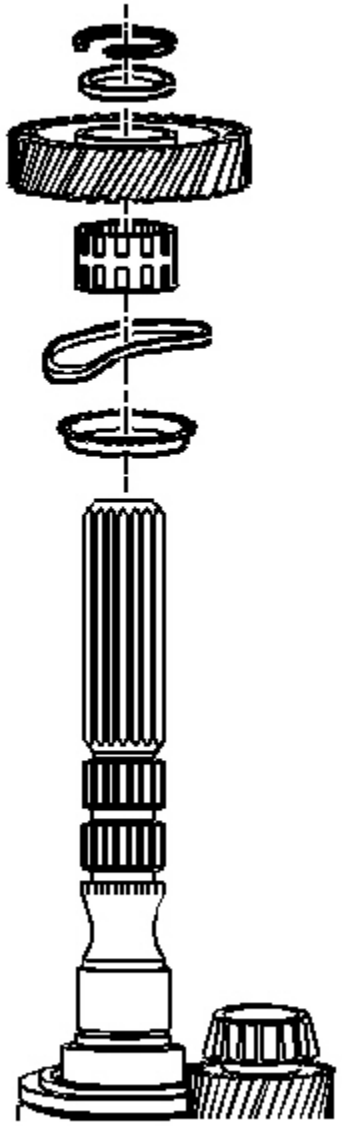

Fig. 23: Identifying Reverse Speed Gear Components
Courtesy of GENERAL MOTORS CORP.

7. Remove the reverse gear.

cardiagn.com

8. Remove the reverse gear caged needle bearing.
9. Remove the wave washer.
10. Remove the reverse gear synchronizer blocking ring.

Reverse Shift Fork Removal

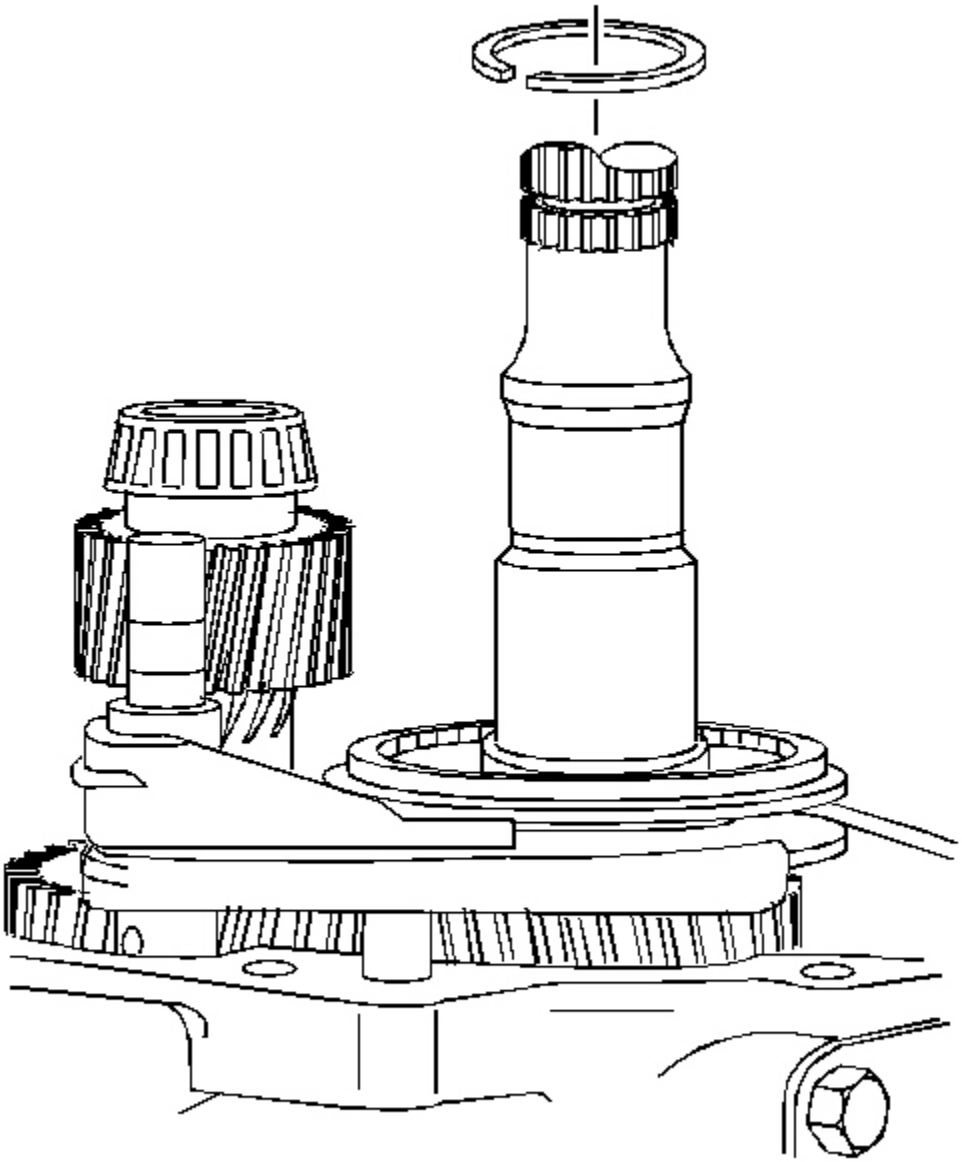

cardiagn.com

Fig. 24: View Of Reverse Synchronizer Retainer Ring
Courtesy of GENERAL MOTORS CORP.

1. Remove the reverse synchronizer retainer ring.

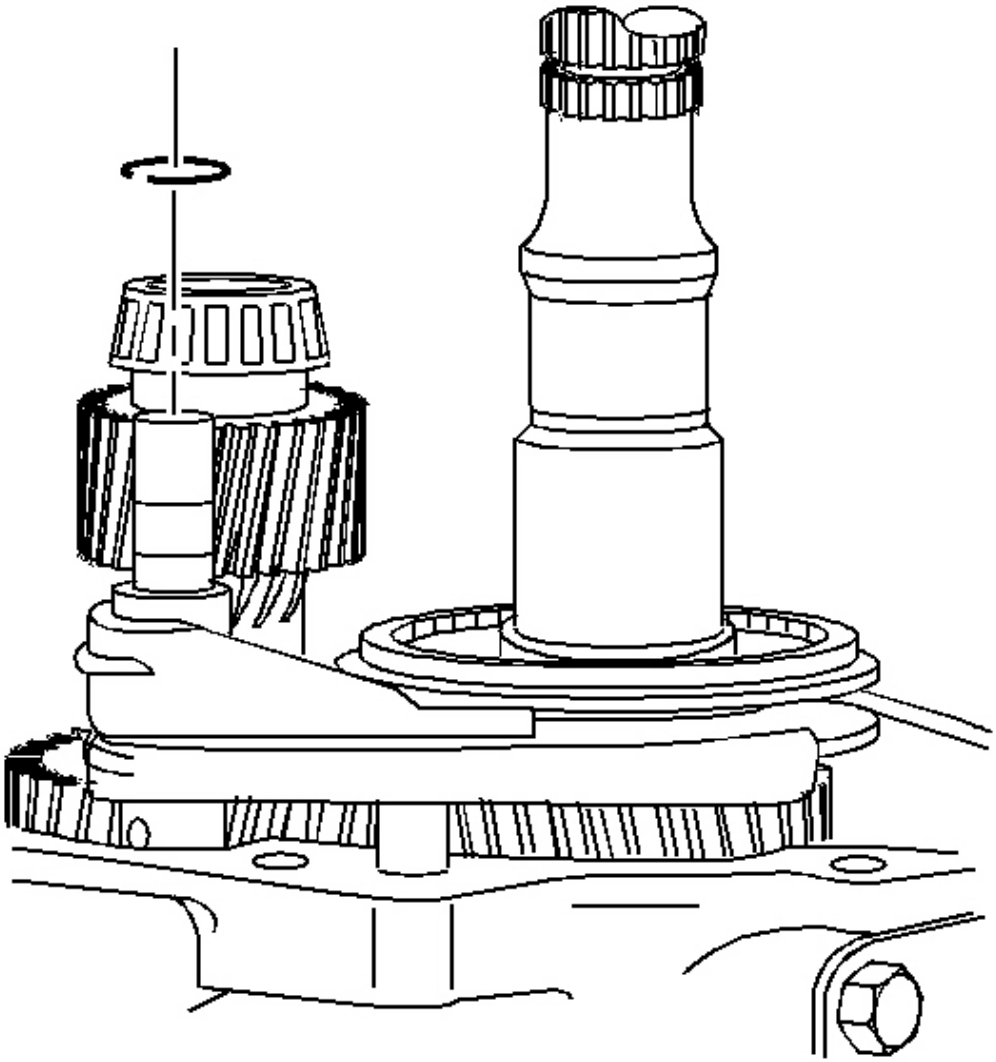

Fig. 25: Installing/Removing Shift Fork Retainer Ring
Courtesy of GENERAL MOTORS CORP.

2. Remove and discard the reverse shift fork retainer ring.

cardiagn.com

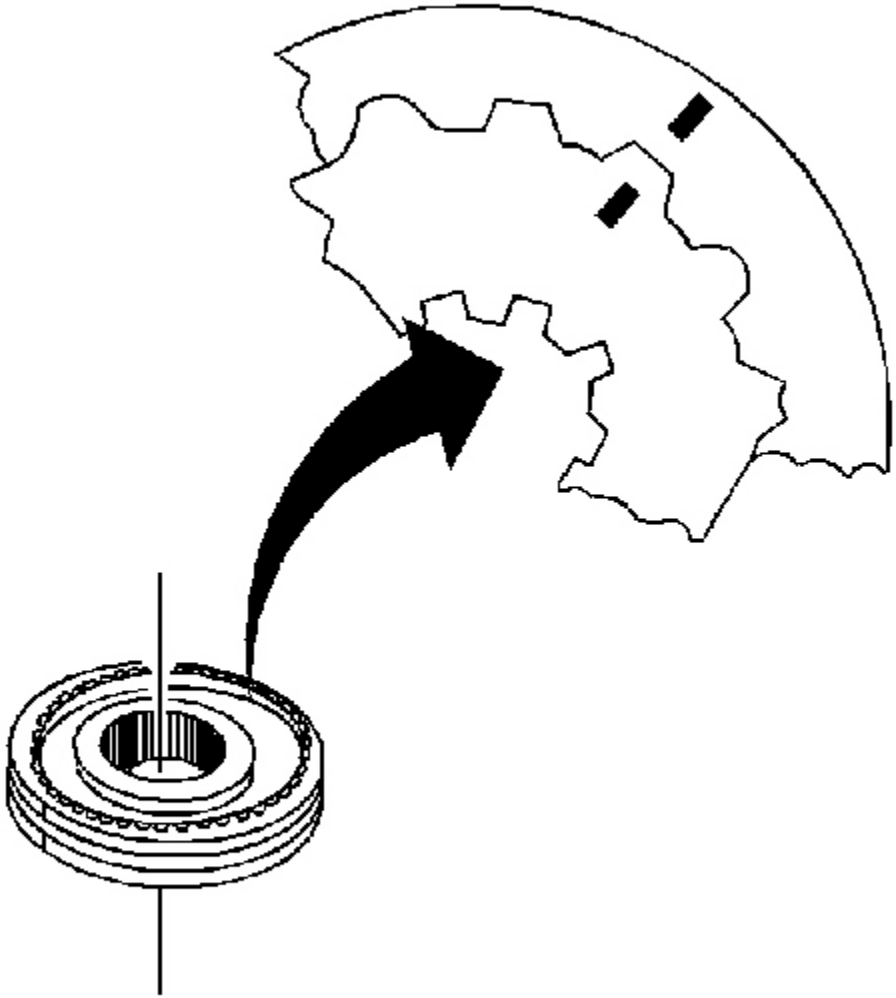

Fig. 26: Identifying Speed Gear Synchronizer Assembly Scribe Marks
Courtesy of GENERAL MOTORS CORP.

3. Scribe a mark on the synchronizer hub and on the sleeve. This will help you to reinstall the parts in the same position.

cardiagn.com

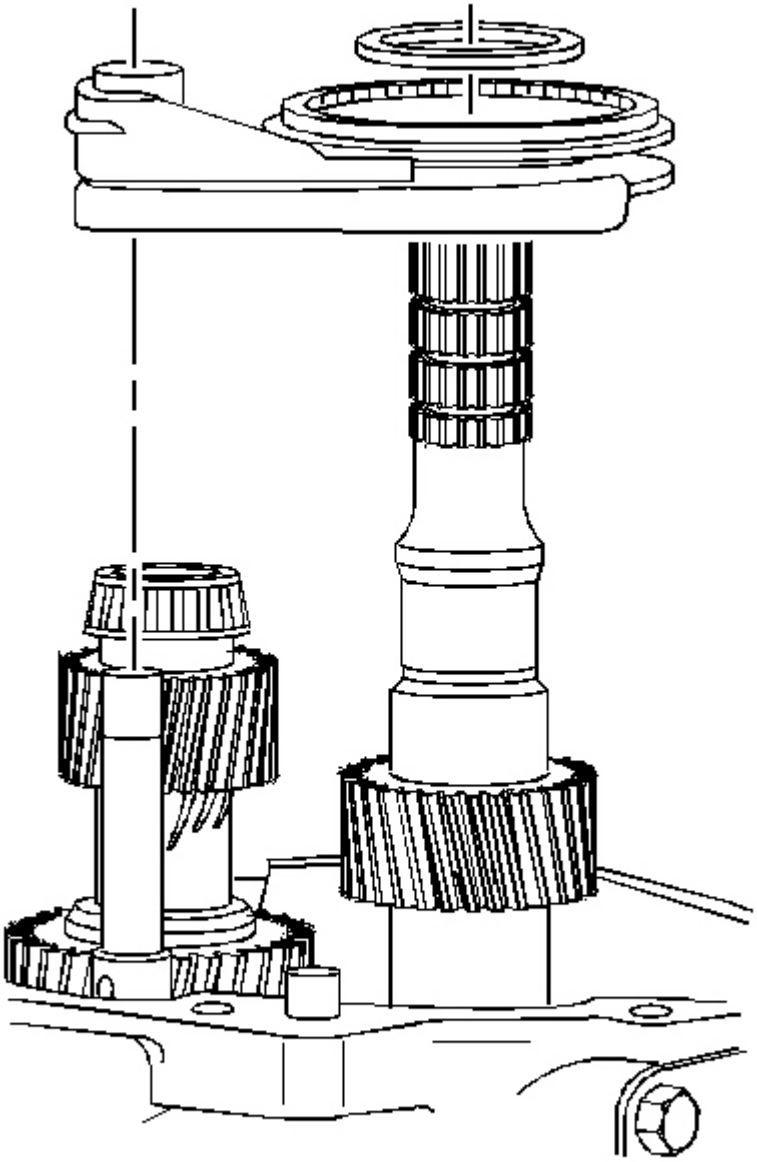

Fig. 27: Identifying Reverse Shift Fork, Synchronizer & Thrust Washer
Courtesy of GENERAL MOTORS CORP.

4. Remove the following parts in order:
    1. The thrust washer
    2. The reverse synchronizer assembly and the shift fork

cardiagn.com

5th/6th Speed Driven Gear Removal

Tools Required

- **J 8433** Universal Bridge Puller. See **Special Tools** .
- **J 39431-1** Gear Remover and Bolts. See **Special Tools** .

cardiagn.com

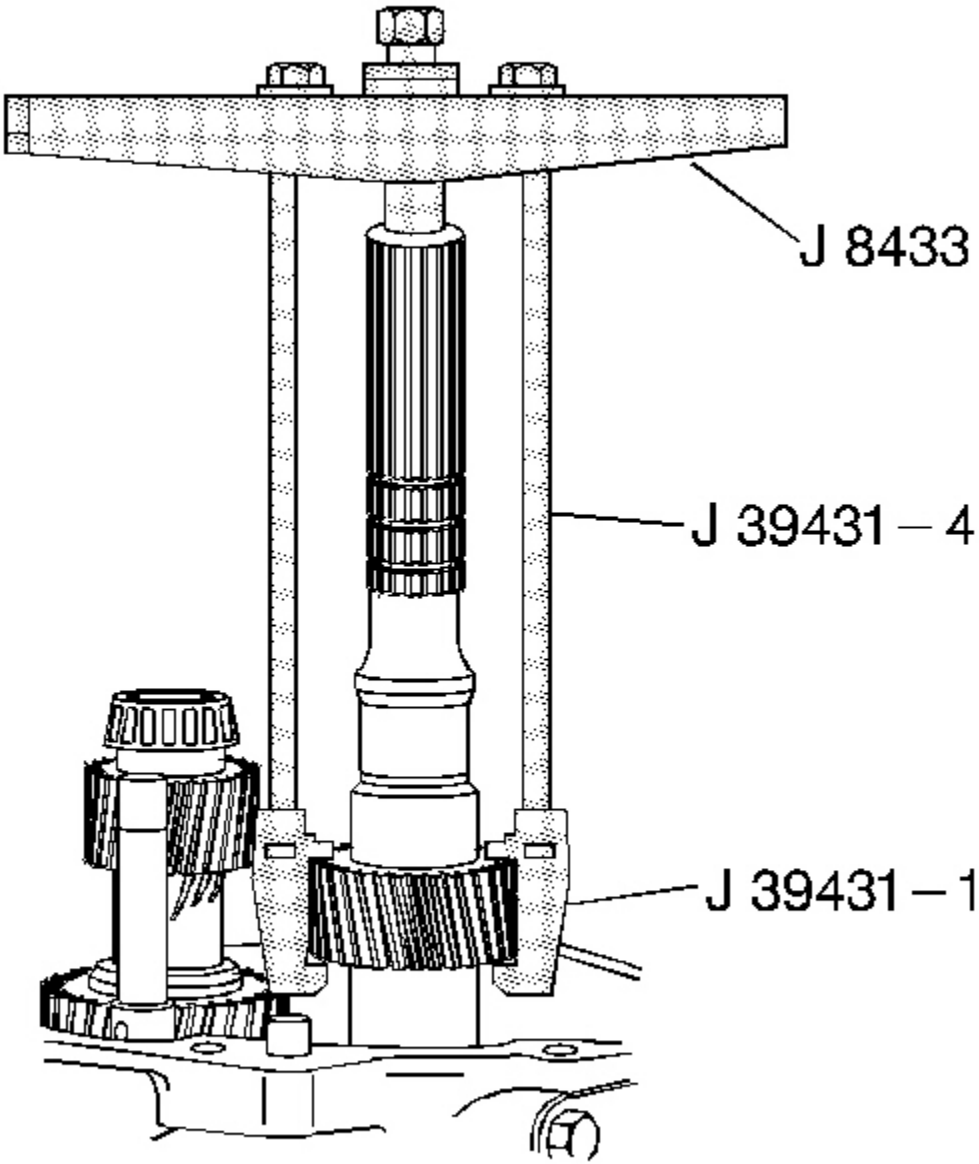

Fig. 28: Removing 5th/6th Speed Driven Gear Using J 8433, J 39431-4 & J 39431-1
Courtesy of GENERAL MOTORS CORP.

Remove the 5th/6th speed driven gear. Use the **J 8433** , the **J 39431-1** and the J 39431-4.

Countershaft Extension Removal

cardiagn.com

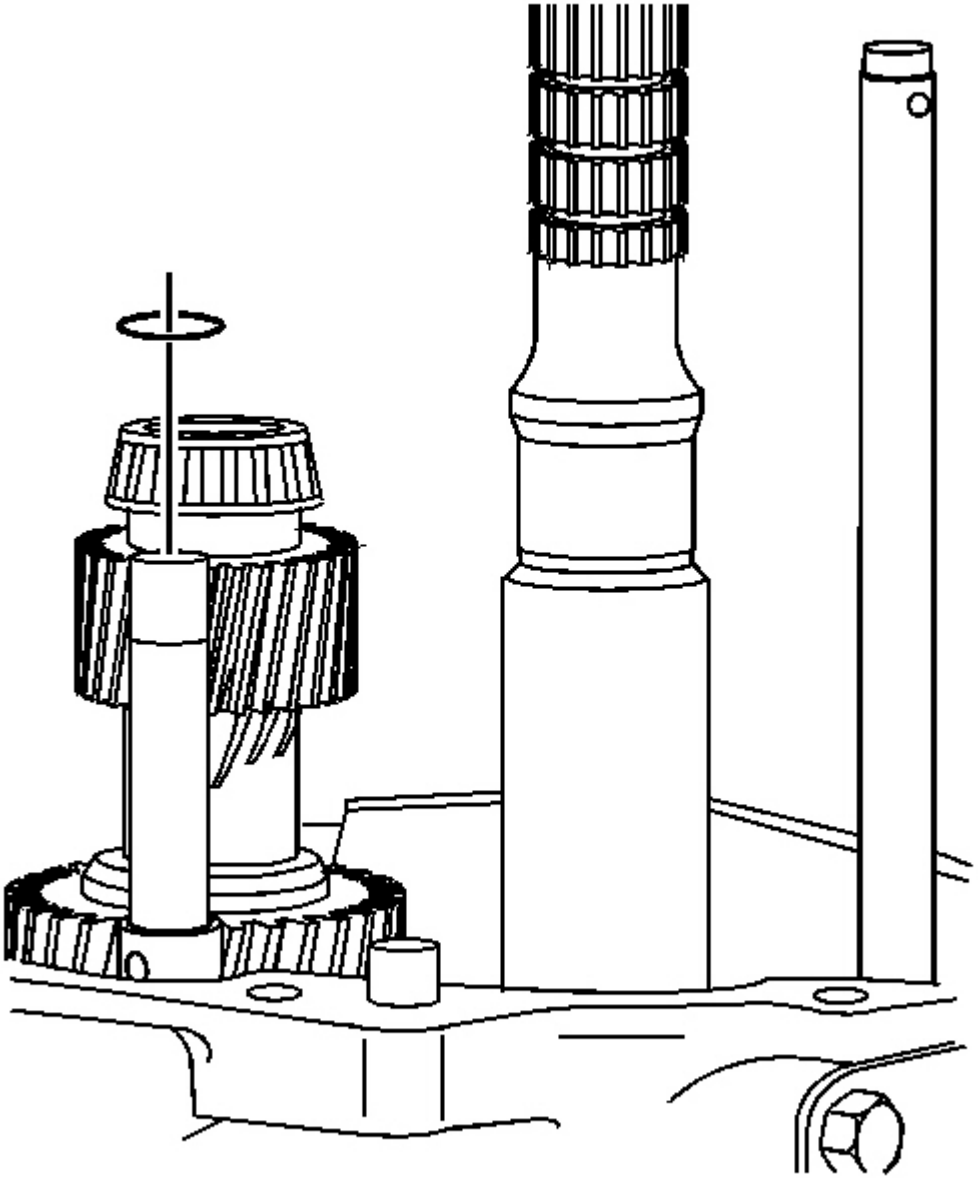

Fig. 29: View Of 5th/6th Shift Fork Retainer Ring
Courtesy of GENERAL MOTORS CORP.

1. Remove the 5th/6th speed shift fork retainer ring.

cardiagn.com

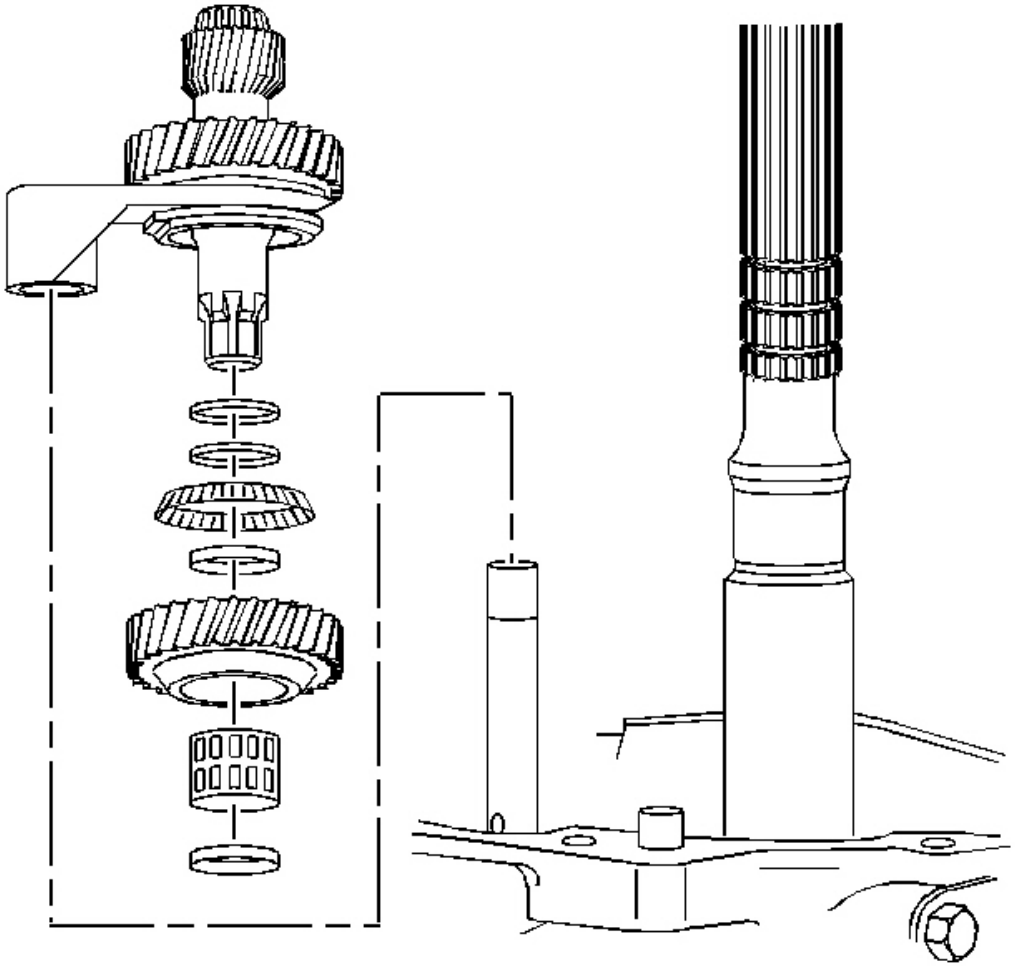

Fig. 30: Identifying Countershaft Extension Assembly & 5th/6th Shift Fork
Courtesy of GENERAL MOTORS CORP.

2. Rotate the transmission in the horizontal position with the guide plate up.
3. Remove the countershaft extension assembly with the 5th/6th speed shift fork, 6th speed gear bearing spacer, 6th speed drive gear, and caged needle bearing. The 6th speed gear bearing spacer will slide out during removal of the countershaft extension assembly.

Tools Required

J 41099 Skip Shift Sensor Remover/Installer. See **Special Tools** .

Transmission Case Removal

cardiagn.com

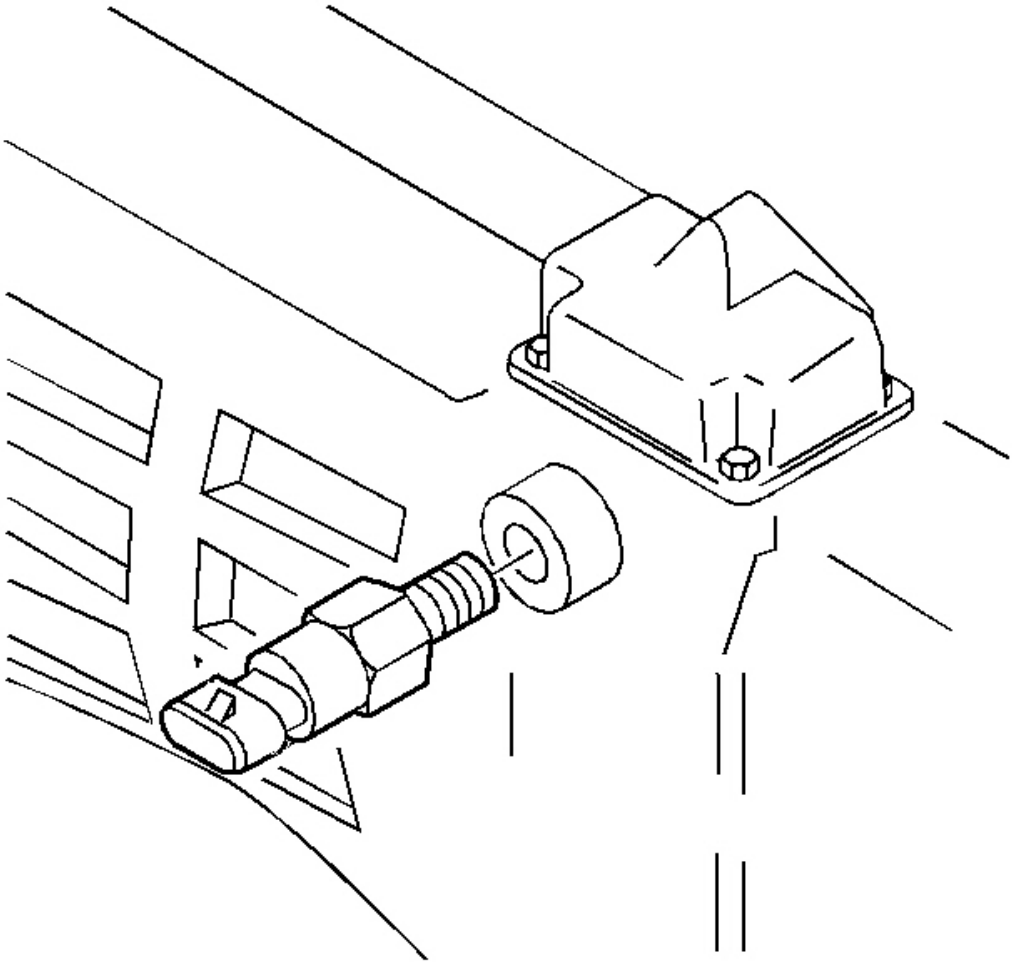

Fig. 31: Identifying Computer Aided Gear Select Solenoid
Courtesy of GENERAL MOTORS CORP.

1. Remove the computer aided gear select solenoid.

cardiagn.com

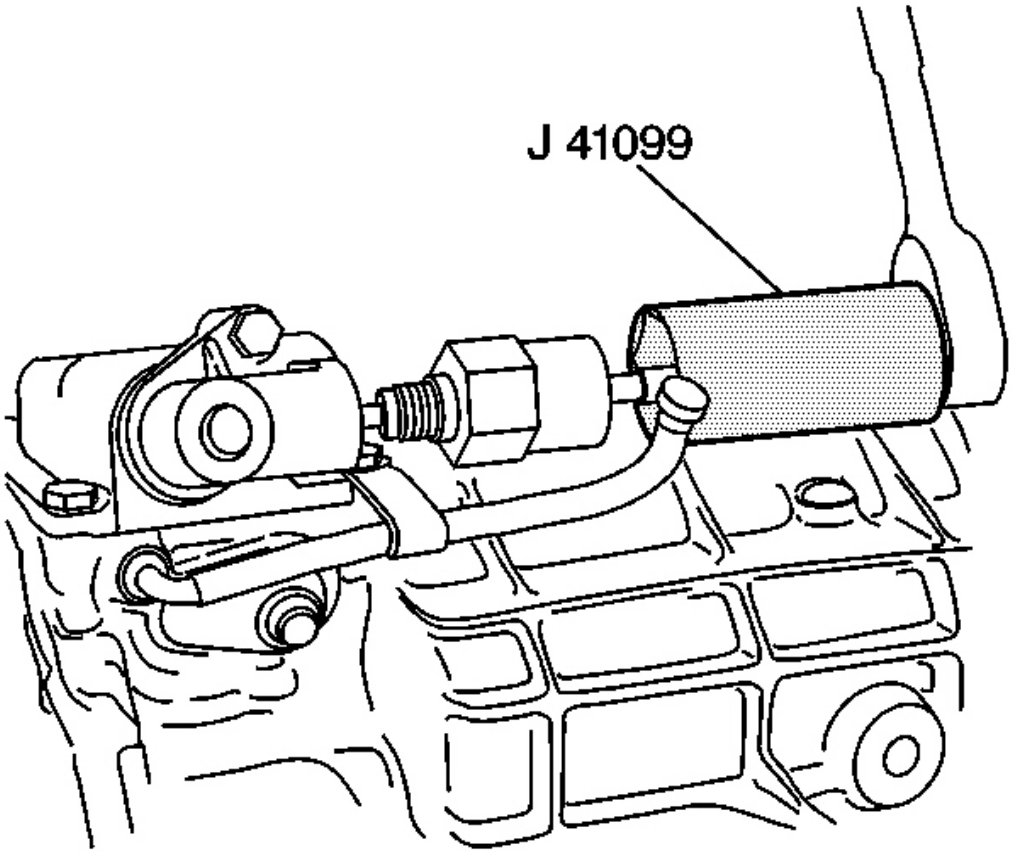

Fig. 32: Using J 41099 To Remove/Install Reverse Lockout Solenoid To Reverse Lockout Body Assembly
Courtesy of GENERAL MOTORS CORP.

2. Remove the reverse lockout solenoid from the reverse lockout body. Use the **J 41099** .

cardiagn.com

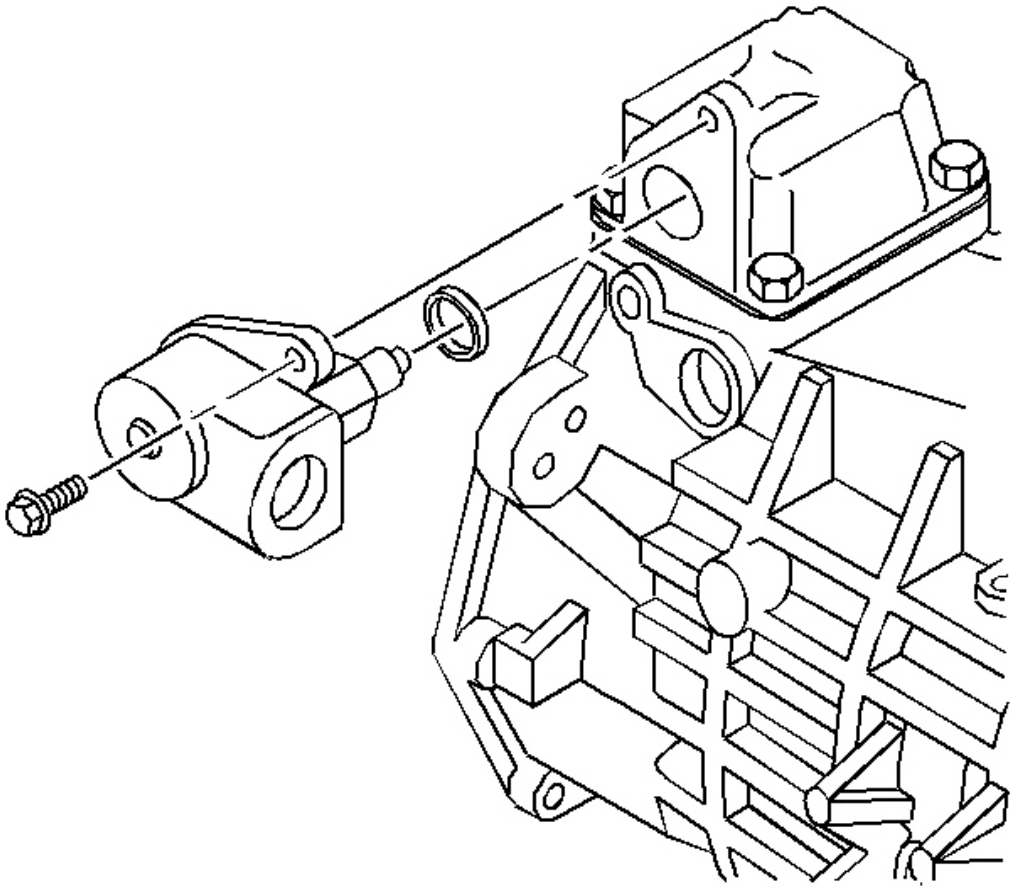

Fig. 33: Installing/Removing Reverse Lockout Body & Bolt
Courtesy of GENERAL MOTORS CORP.

3. Remove the reverse lockout assembly bolt and the reverse lockout body.

cardiagn.com

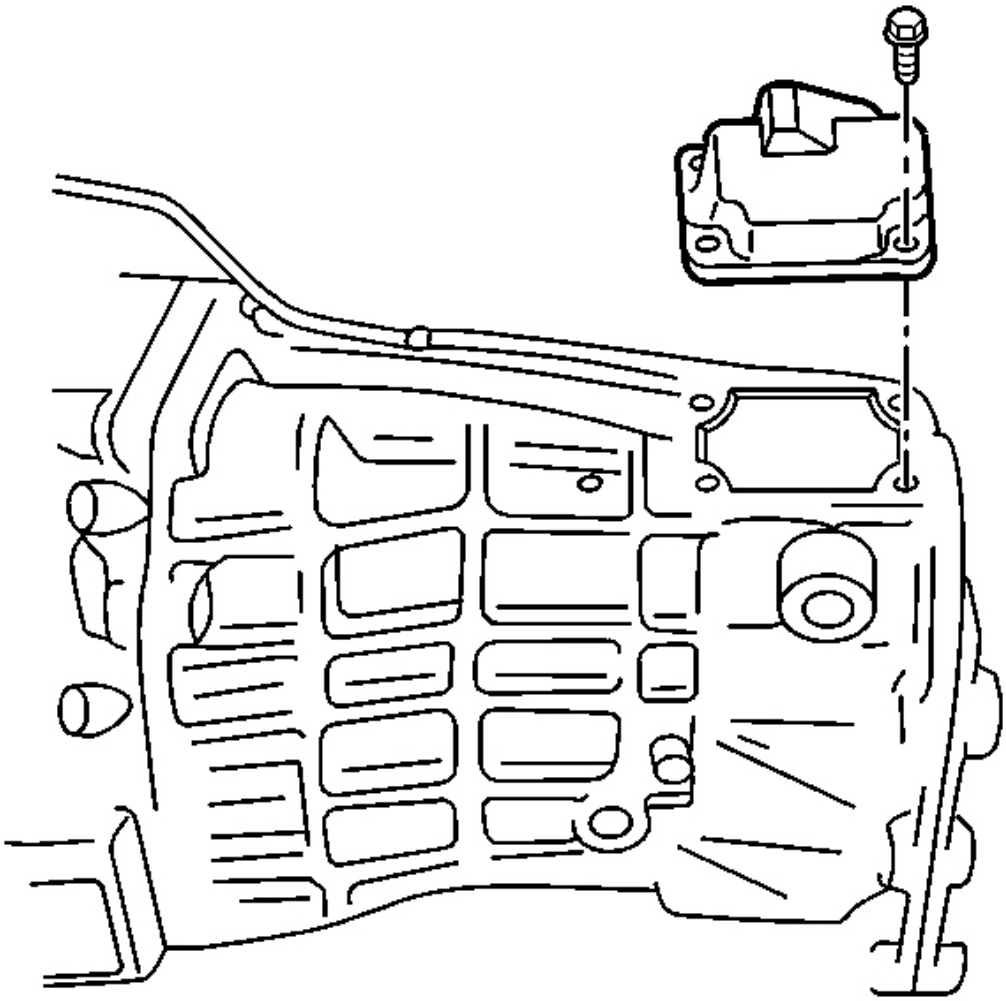

Fig. 34: View Of Transmission Case Cover & Case Cover Bolts
Courtesy of GENERAL MOTORS CORP.

4. Remove the shifter cover plate retainer bolts.
5. Remove the shifter cover plate.

cardiagn.com

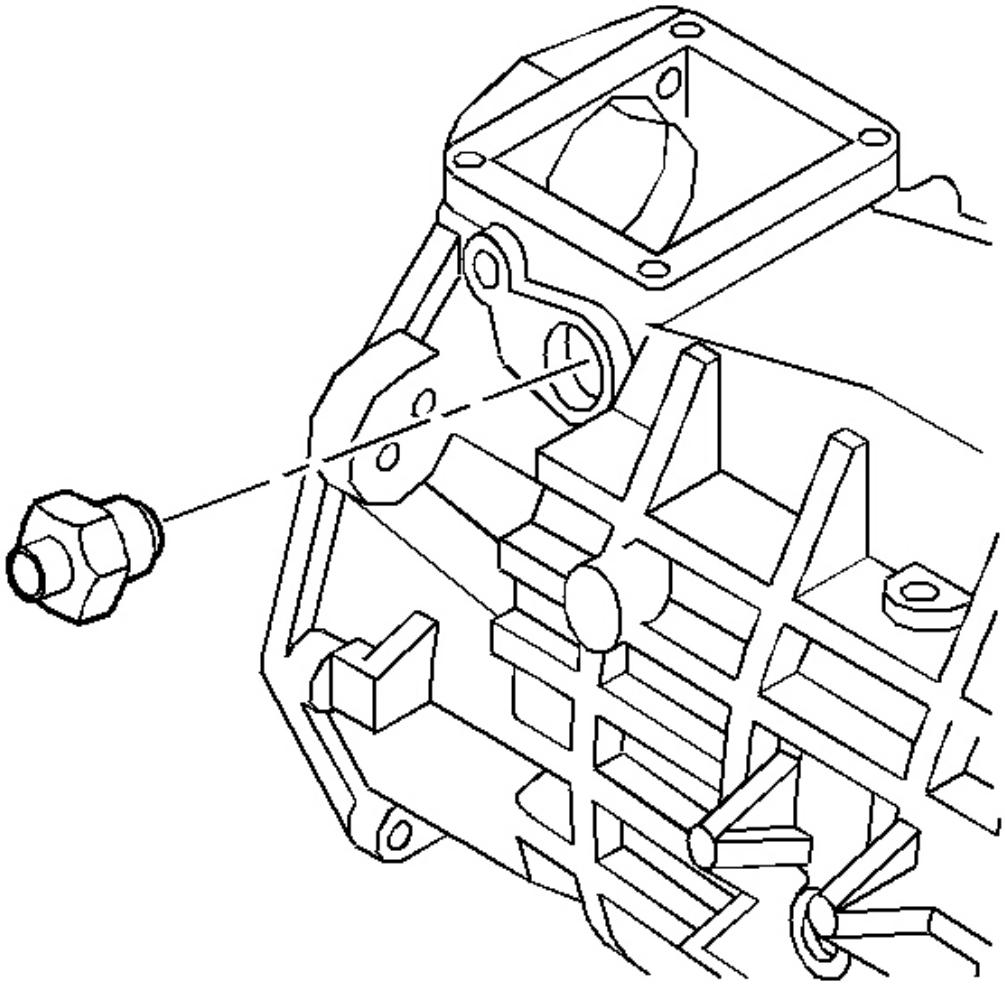

Fig. 35: View Of Shift Detent Assembly
Courtesy of GENERAL MOTORS CORP.

6. Remove the shift detent assembly.

cardiagn.com

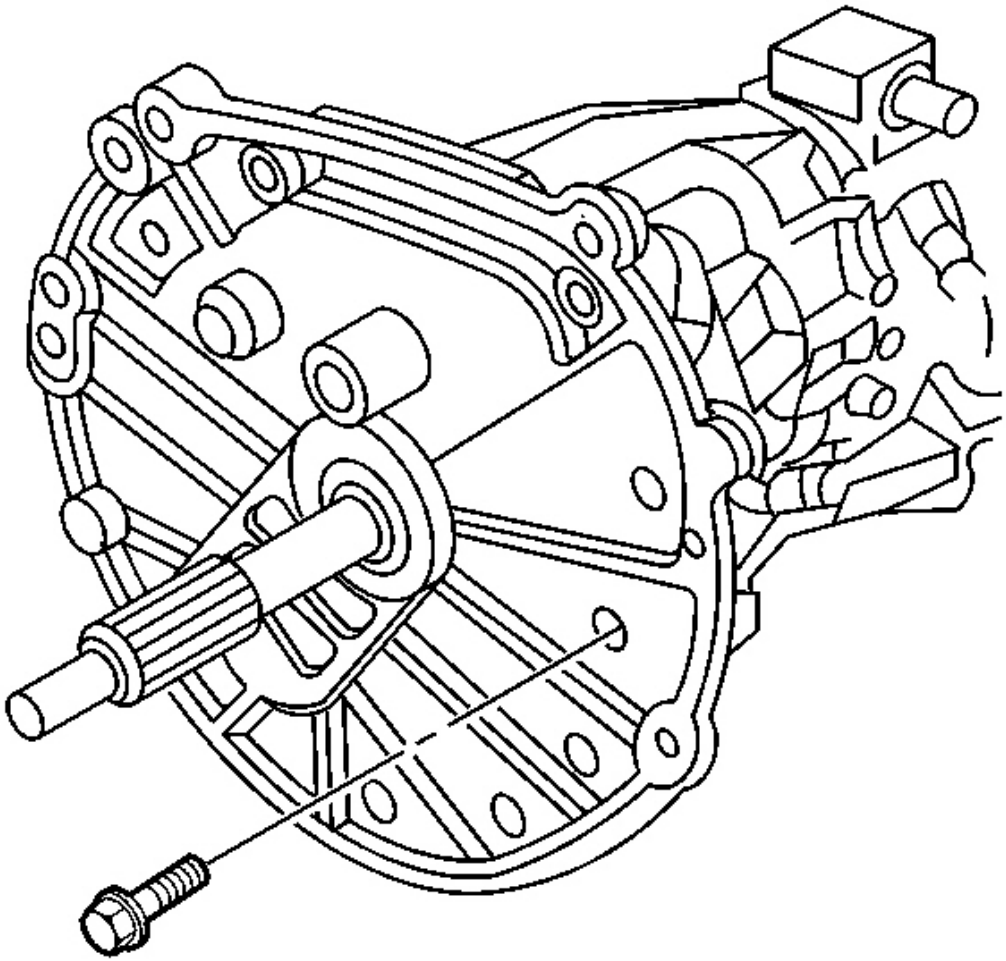

Fig. 36: View Of Adapter Plate & Transmission Case Bolts
Courtesy of GENERAL MOTORS CORP.

7. Remove 9 of the 11 adapter plate to transmission case bolts.
8. Rotate the transmission into the vertical position.
9. Remove the last 2 adapter plate to transmission case bolts.
10. Remove the shift lever guide bolts.

cardiagn.com

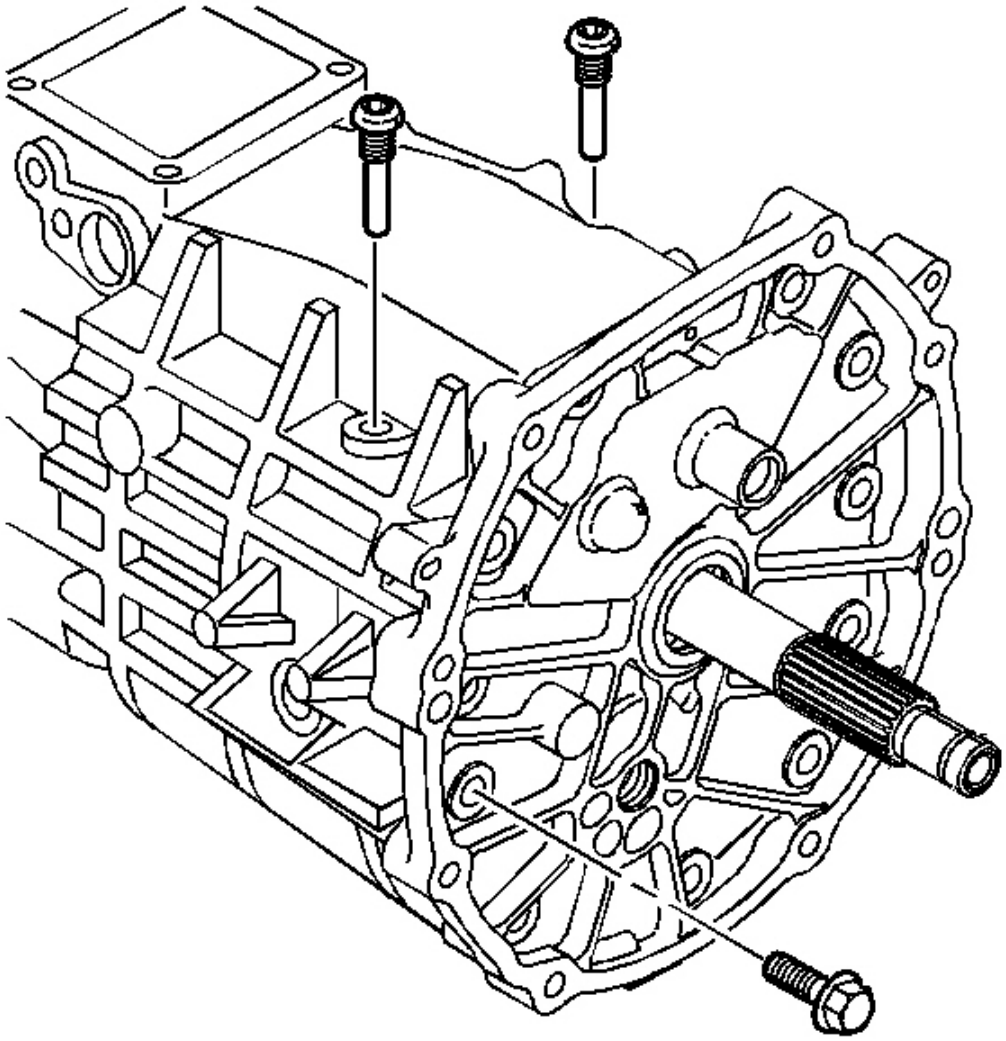

Fig. 37: Installing/Removing Shift Lever Guide Bolts
Courtesy of GENERAL MOTORS CORP.

cardiagn.com

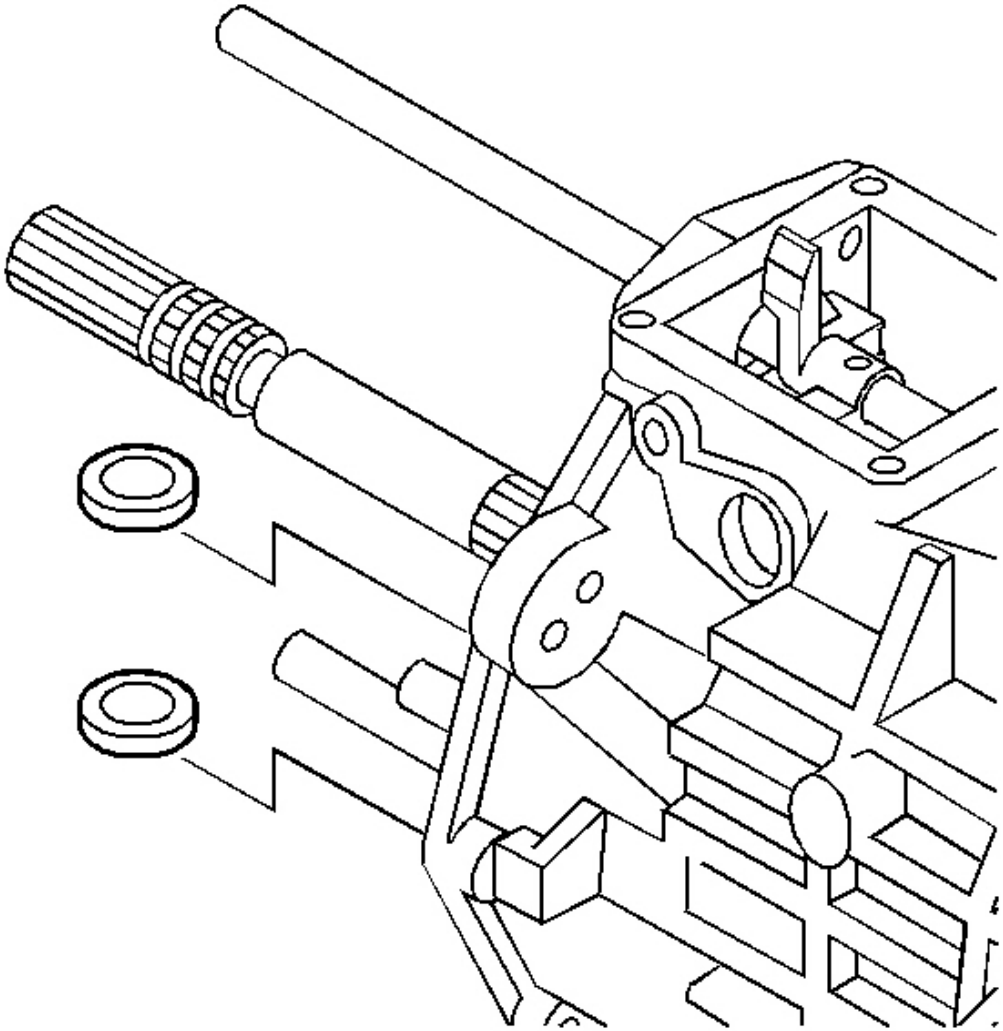

Fig. 38: View Of Transmission Magnets
Courtesy of GENERAL MOTORS CORP.

11. Remove the magnets from the transmission case.

cardiagn.com

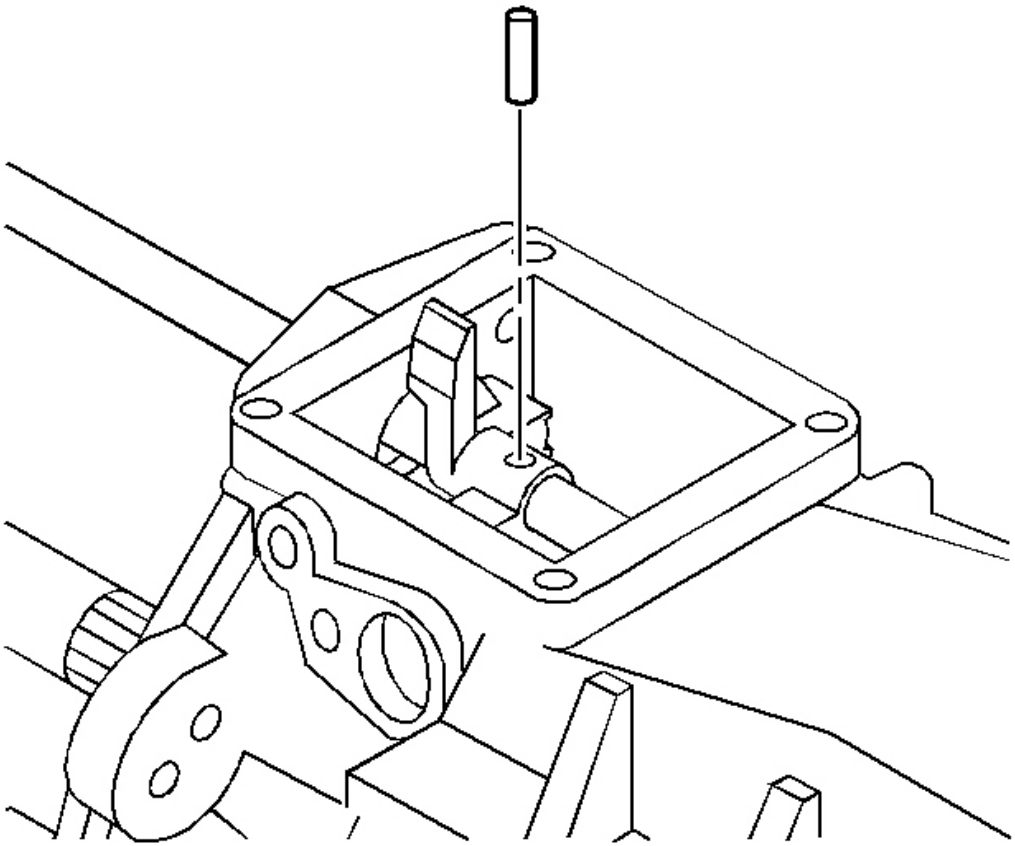

Fig. 39: Installing/Removing Offset Lever Roll Pin
Courtesy of GENERAL MOTORS CORP.

12. Remove the offset lever roll pin.

cardiagn.com

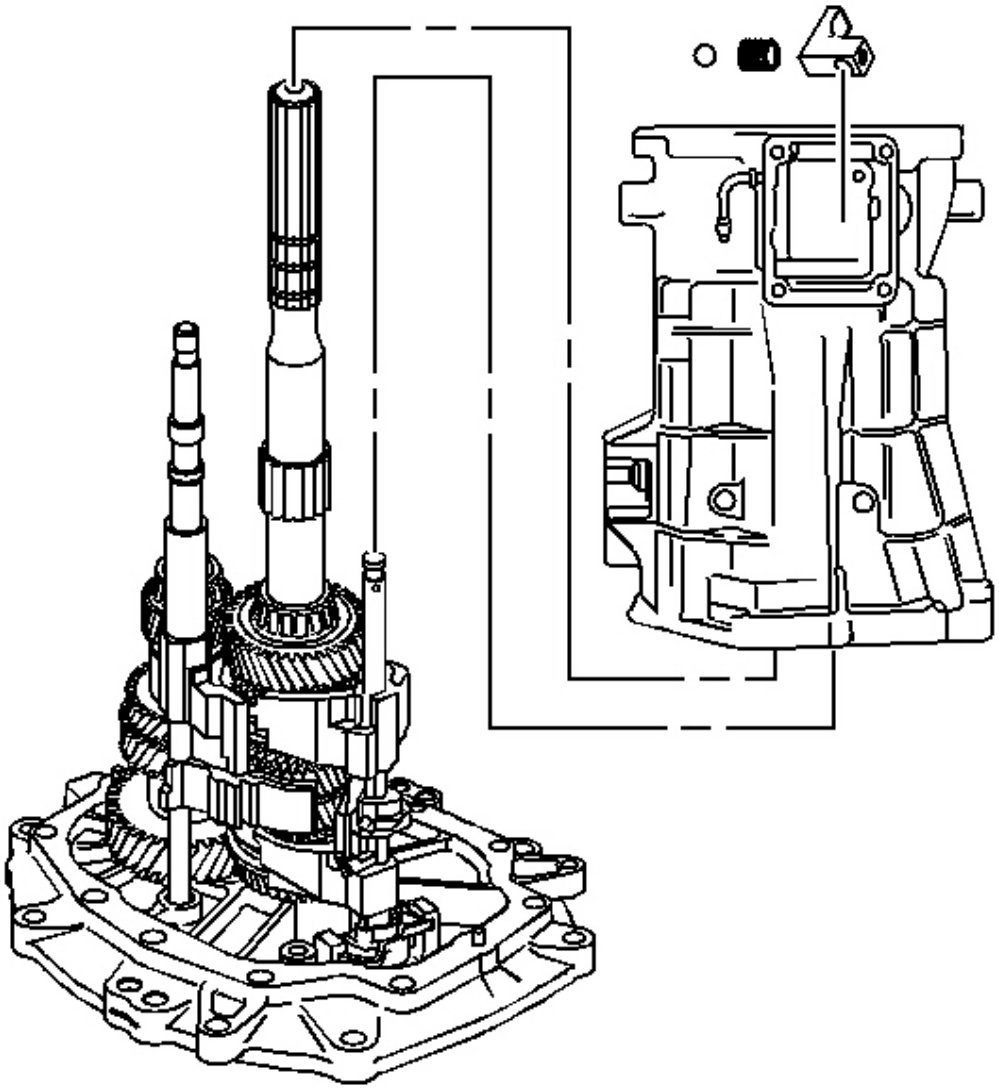

Fig. 40: View Of Front Offset Lever Components
Courtesy of GENERAL MOTORS CORP.

13. Remove the transmission case and the offset lever together as follows:
    1. Slide the transmission case up and off of the gear clusters and the shift shaft components.
    2. Hold the offset lever against the guide plate in order to prevent the release of the detent ball and the spring.
    3. Remove the offset lever from the transmission case.

cardiagn.com

Guide Plate Removal

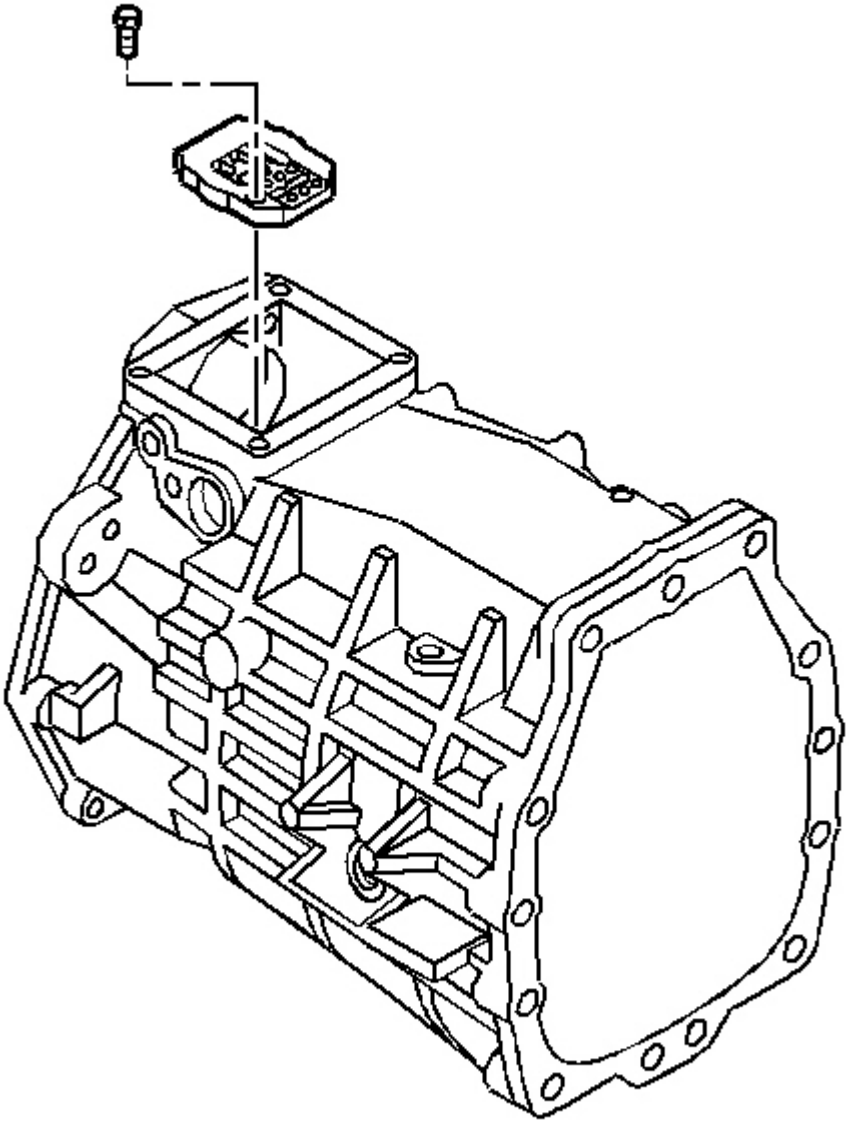

Fig. 41: Locating Detent Guide Plate & Attaching Bolts
Courtesy of GENERAL MOTORS CORP.

1. Remove the detent guide plate attaching bolts.
2. Remove the detent guide plate.

cardiagn.com

Reverse Lockout Assembly Disassemble

1. Remove the O-ring (8) from the body (1).

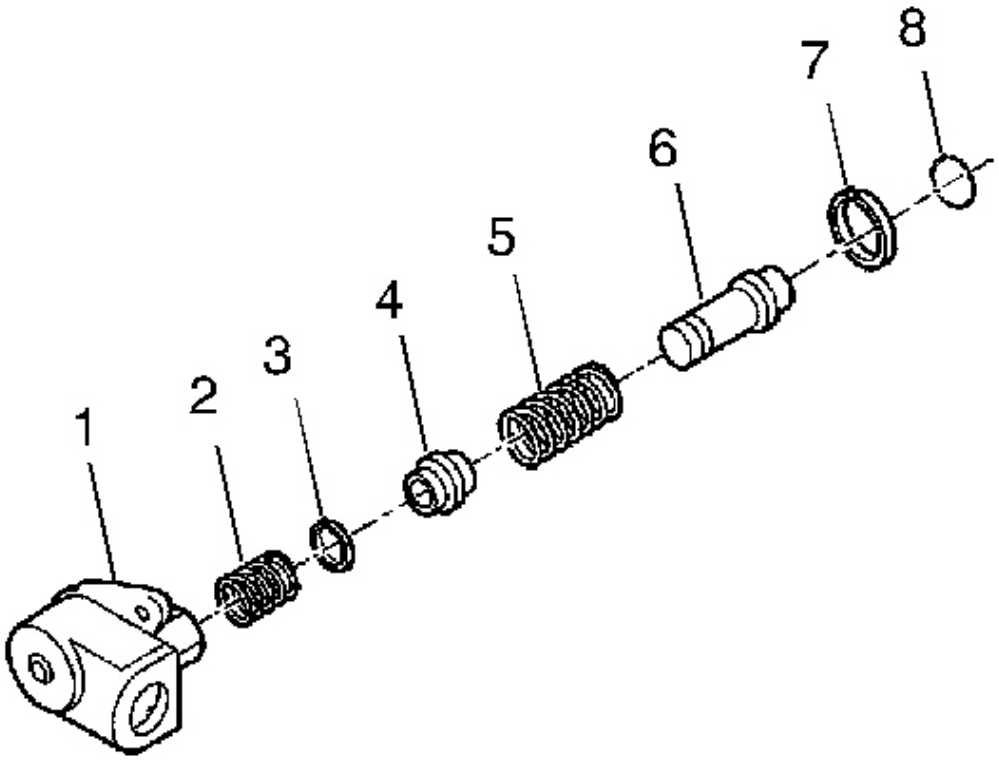

Fig. 42: Exploded View Of Reverse Lockout Assembly
Courtesy of GENERAL MOTORS CORP.

CAUTION: The reverse lockout assembly is under spring pressure. Exercise caution when removing the retainer ring, as bodily injury may result.

2. Remove the retainer ring (7) from the body (1).
3. Remove the reverse lockout inner spring (2).
4. Compress the reverse lockout plunger (6) and the collar (4) in a vise and remove the retainer ring (3).
5. Remove the reverse lockout plunger (6).
6. Remove the reverse lockout outer spring (5).
7. Remove the reverse lockout collar (4).

cardiagn.com

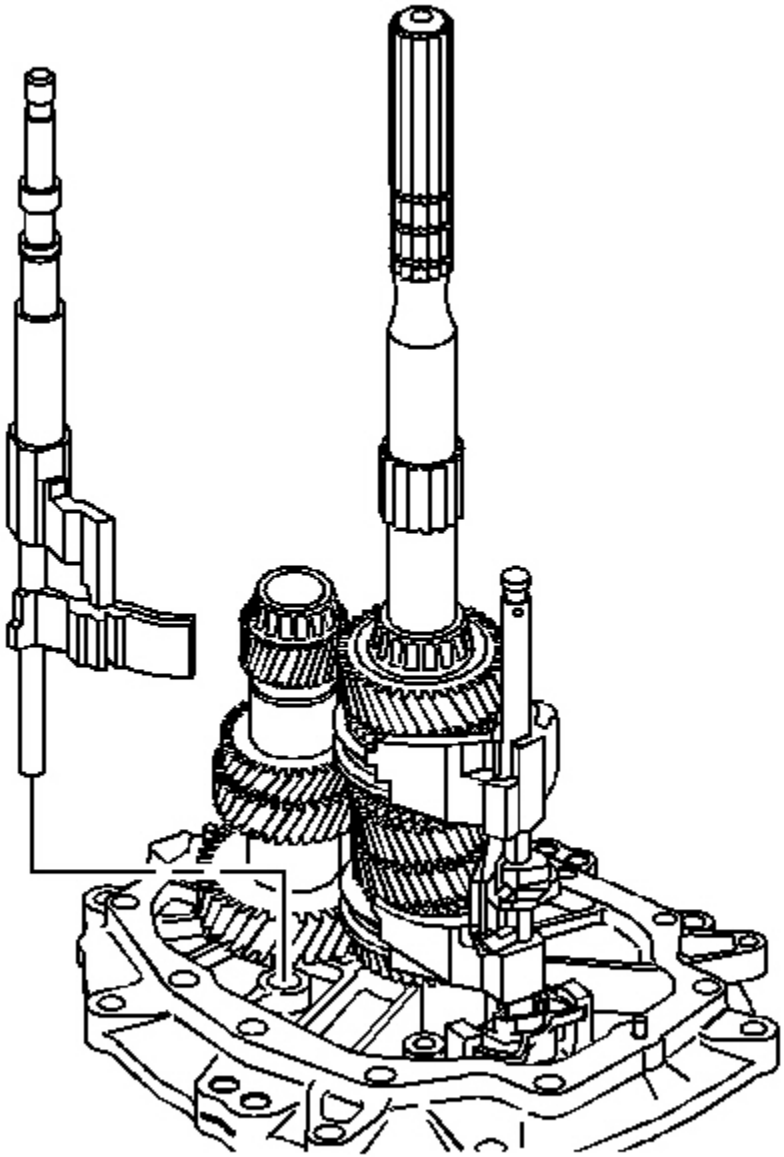

Fig. 43: View Of 5th/6th & Reverse Shift Shaft
Courtesy of GENERAL MOTORS CORP.

1. Rotate the 5th/6th and the reverse shift shaft levers off the shift interlock plate.

cardiagn.com

2. Remove the 5th/6th and the reverse shift shaft assembly.

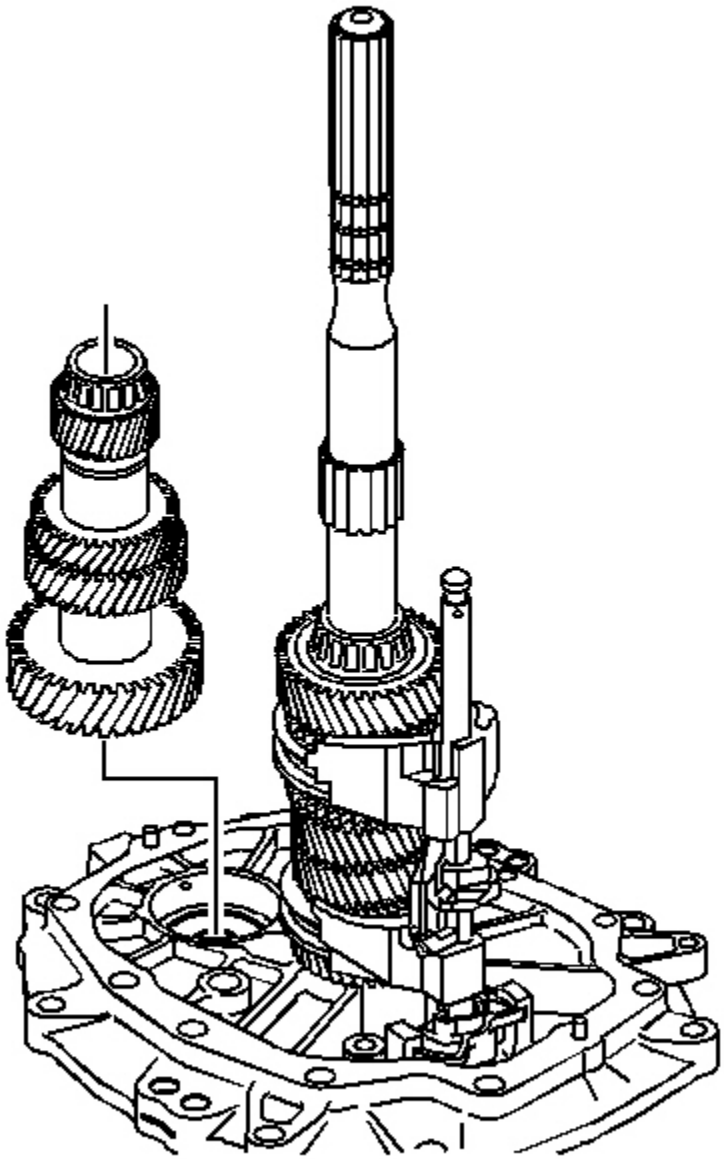

Fig. 44: Installing/Removing Countershaft Assembly
Courtesy of GENERAL MOTORS CORP.

3. Remove the countershaft. Lift up the mainshaft enough in order to remove the countershaft.

cardiagn.com

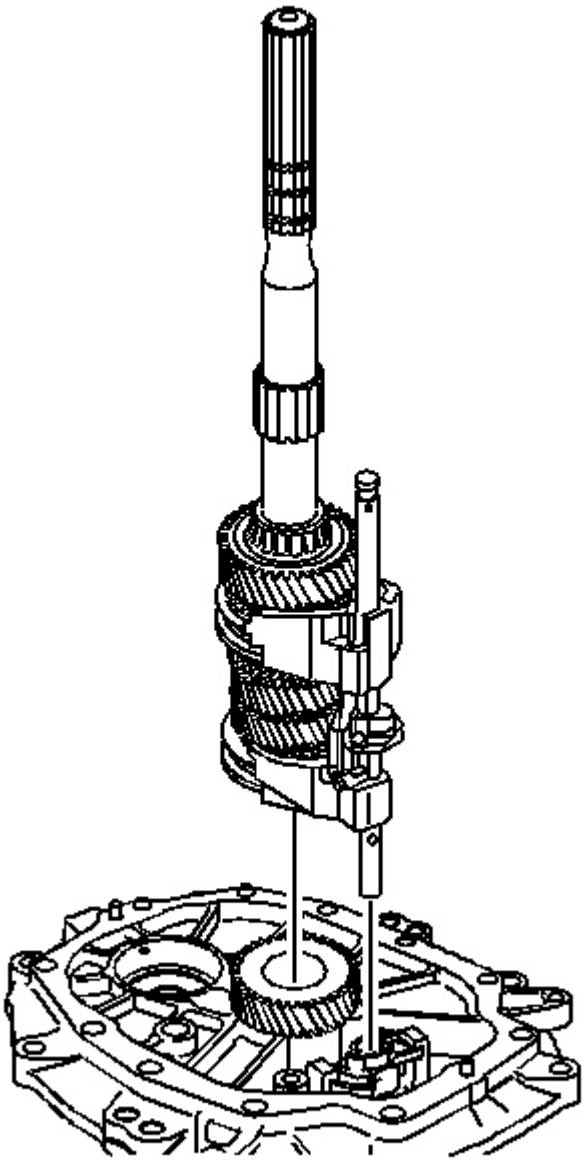

Fig. 45: Installing/Removing Mainshaft Assembly & Shift Shaft Components
Courtesy of GENERAL MOTORS CORP.

4. Remove the mainshaft and the shift shaft components as an assembly.

IMPORTANT: When removing the shift shaft be careful not to lose the dowel pin.

cardiagn.com

5. Remove the shift shaft assembly from the mainshaft.

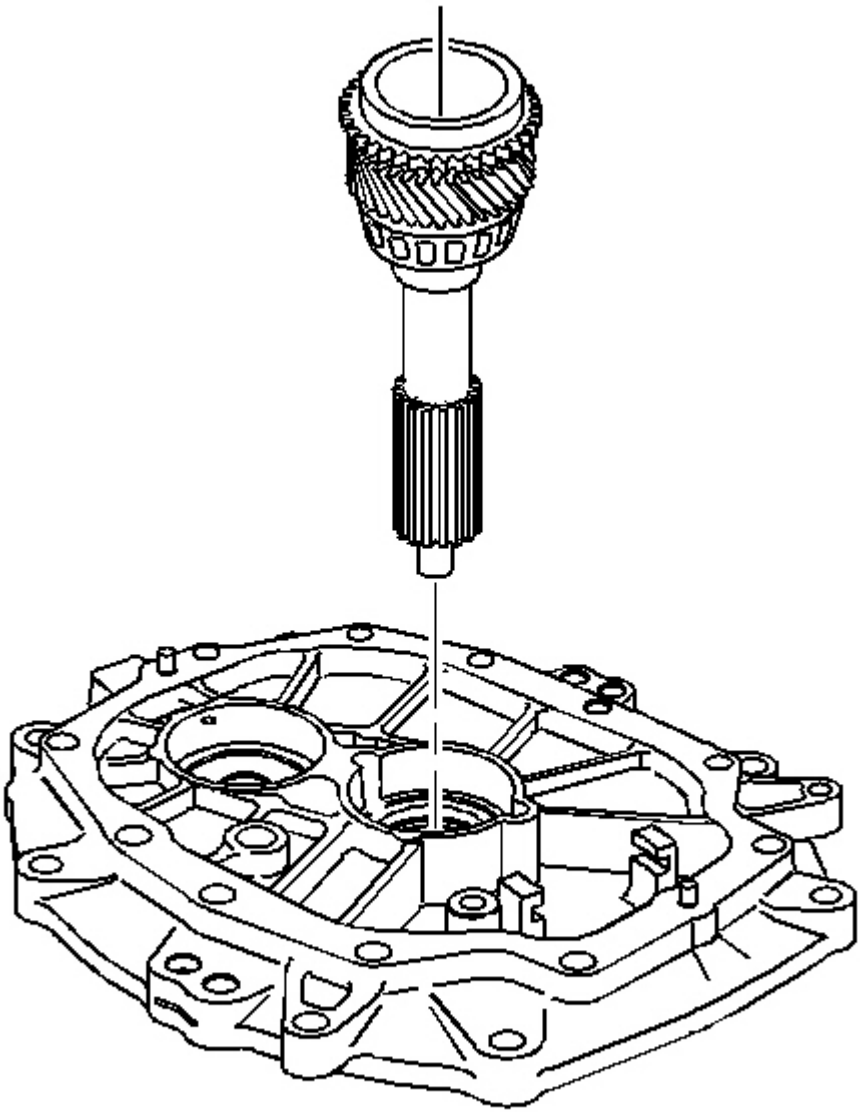

Fig. 46: View Of Input Shaft
Courtesy of GENERAL MOTORS CORP.

6. Remove the input shaft.

cardiagn.com

TRANSMISSION DISASSEMBLE (CTSV)

Extension Housing Removal

Tools Required

- **J 3289-20** Holding Fixture. See **Special Tools** .
- **J 44395** Transmission Holding Fixture. See **Special Tools** .

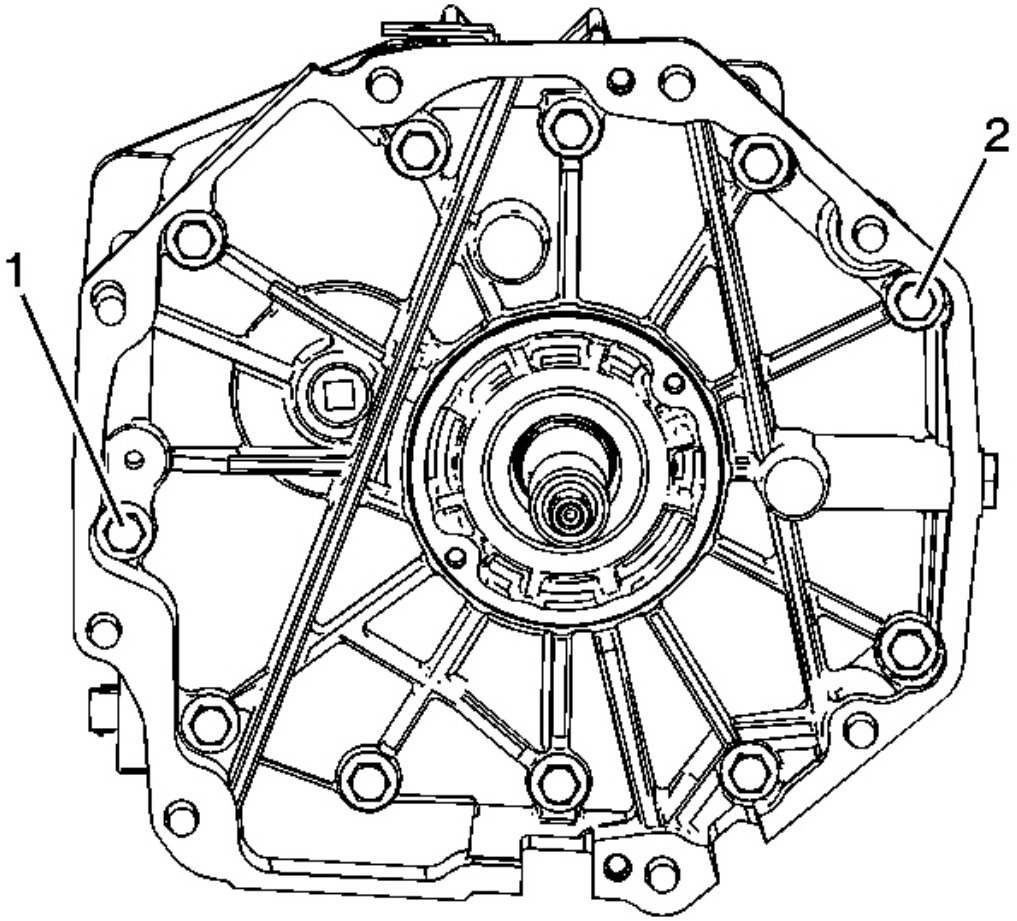

Fig. 47: Locating Adapter Plate Bolts
Courtesy of GENERAL MOTORS CORP.

1. Remove the adapter plate bolts (1) and (2).

cardiagn.com

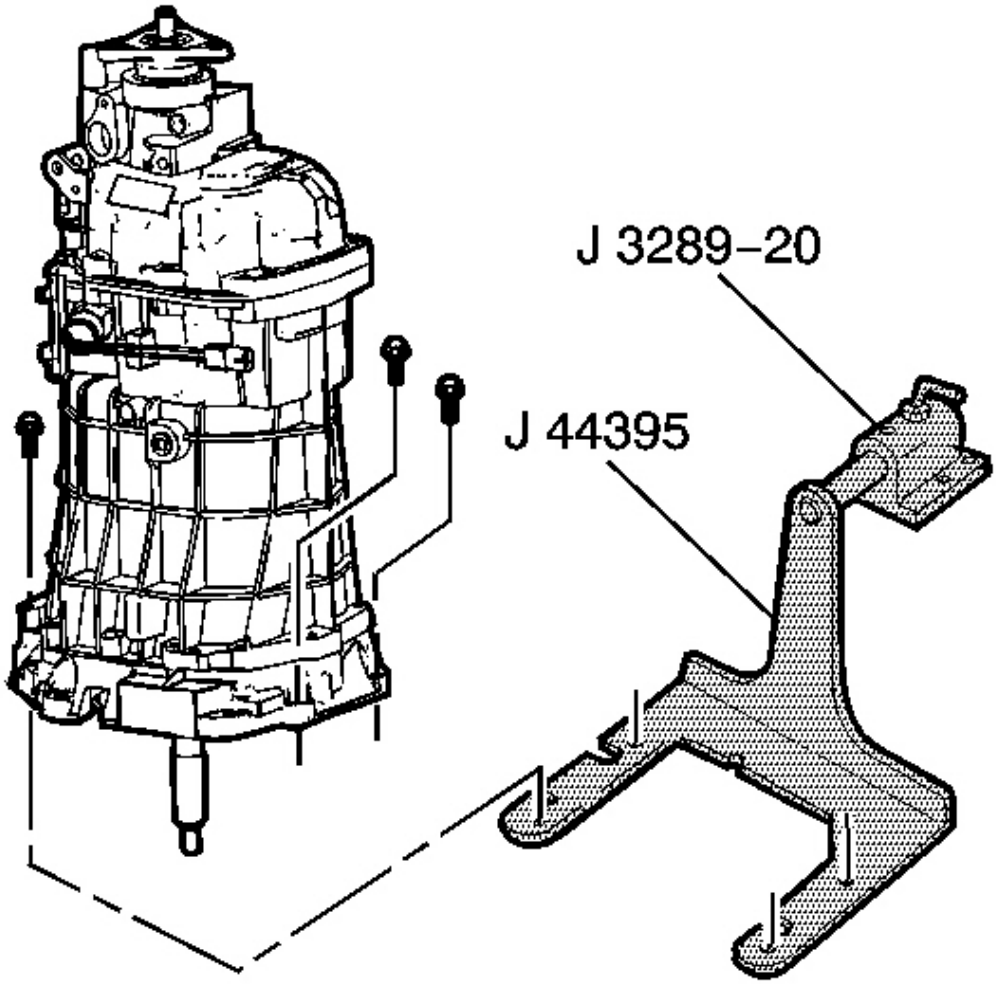

Fig. 48: Installing/Removing Transmission On J 44395 & J 3289-20
Courtesy of GENERAL MOTORS CORP.

2. Install the **J 44395** .
3. Mount the transmission on a workbench using the **J 3289-20** .
4. Rotate the transmission into a horizontal position.
5. Remove the transmission drain plug and drain the transmission fluid.
6. Shift the transmission into neutral (N).

cardiagn.com

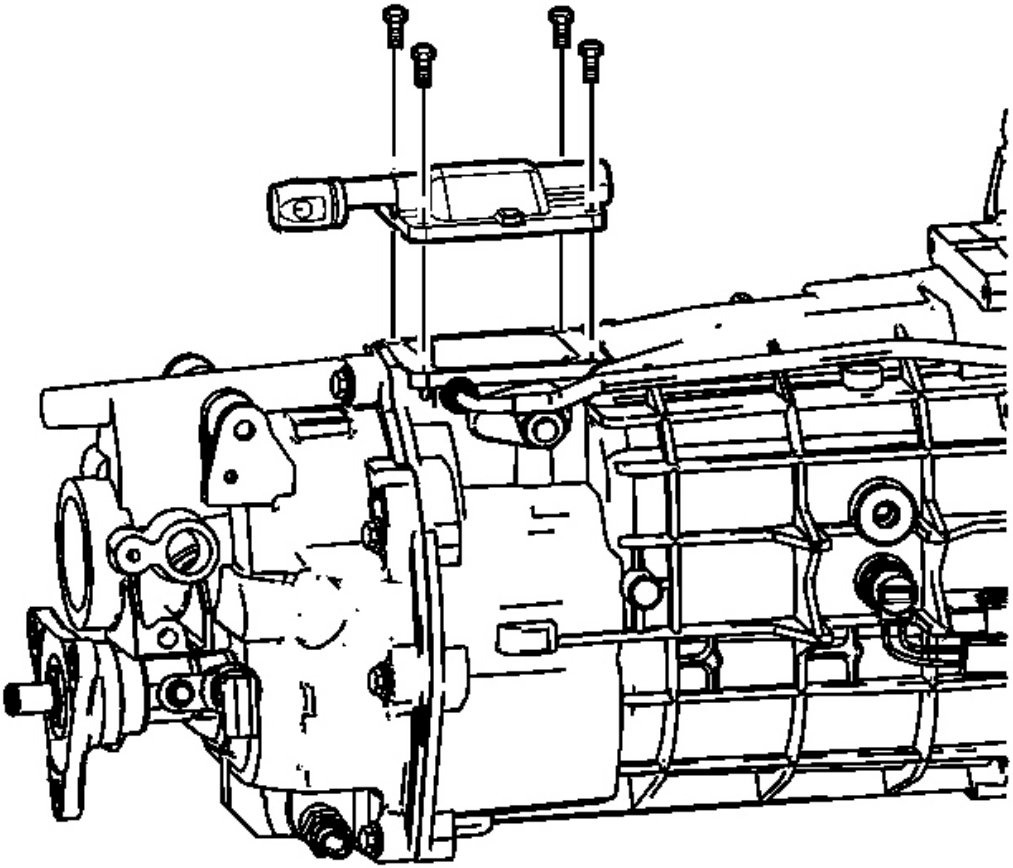

Fig. 49: Removing/Installing Shifter Cover Plate & Bolts
Courtesy of GENERAL MOTORS CORP.

7. Remove the shifter cover plate bolts.
8. Remove the shifter cover plate.

cardiagn.com

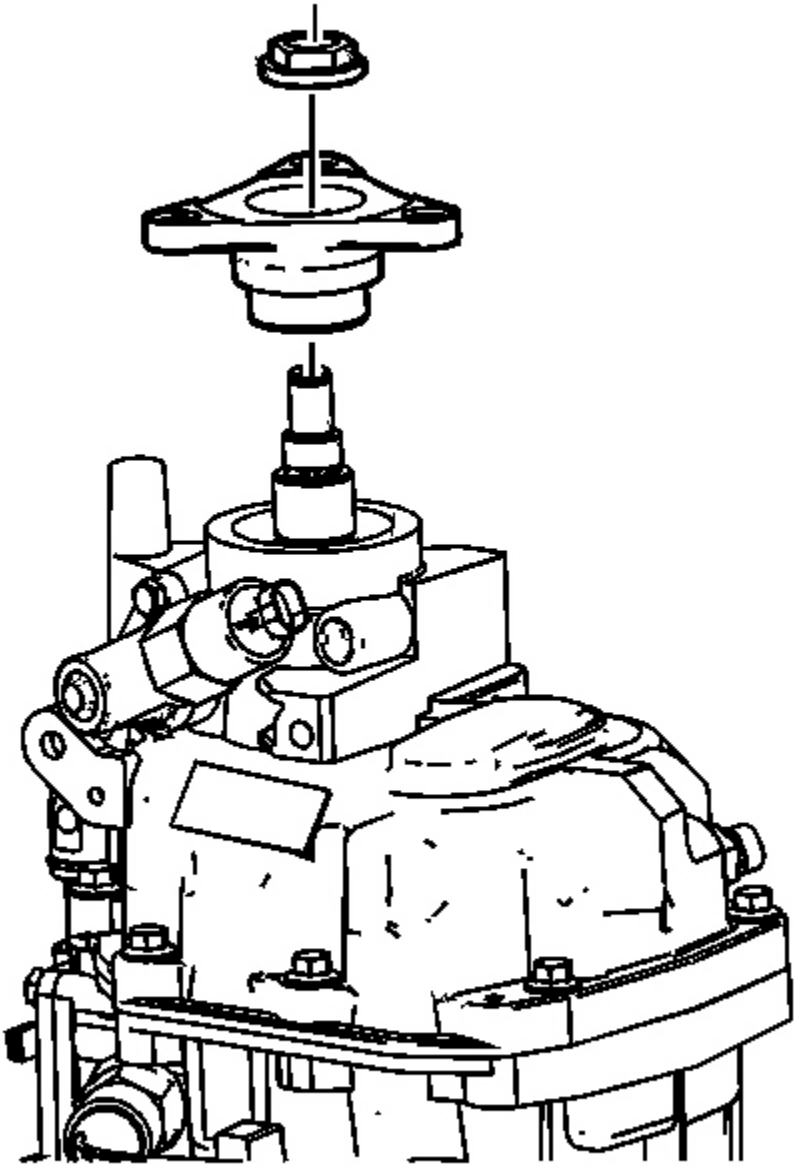

Fig. 50: Locating Propshaft & Connector Bolt
Courtesy of GENERAL MOTORS CORP.

9. Remove the propshaft connector bolt.
10. Remove the propshaft.

cardiagn.com

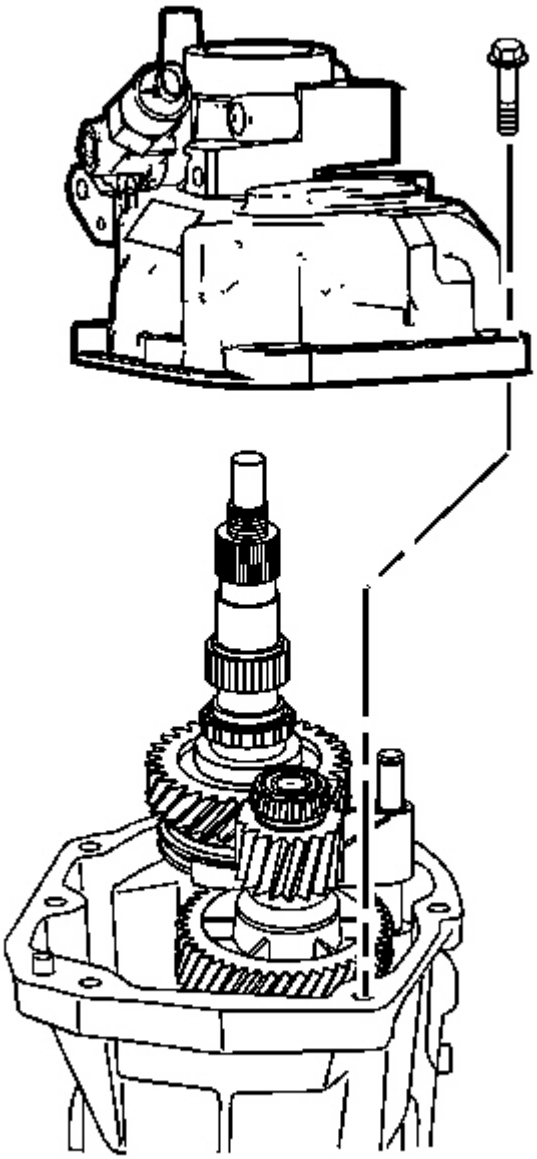

Fig. 51: View Of Rear Extension Housing Bolts & Rear Extension Housing
Courtesy of GENERAL MOTORS CORP.

11. Remove the rear extension housing bolts and the rear extension housing.

Reverse Speed Gear Removal

cardiagn.com

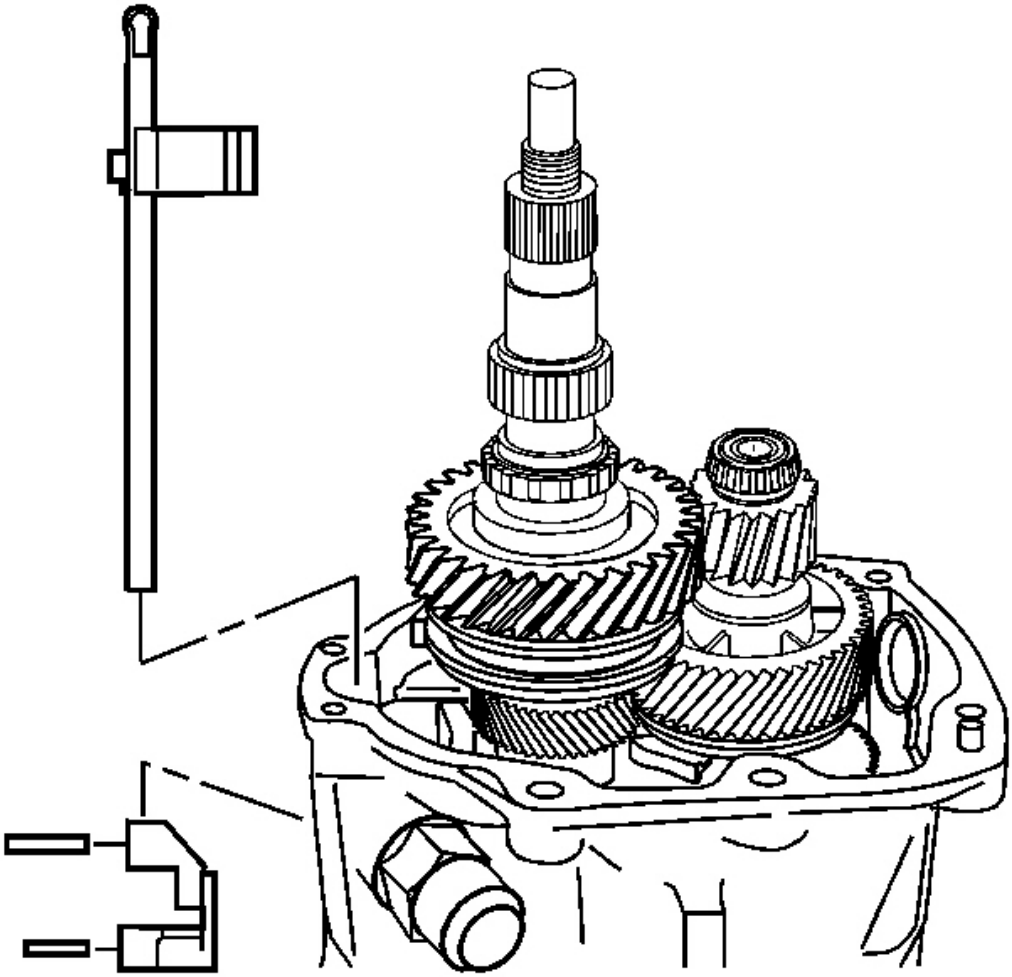

Fig. 52: Identifying Shift Guide, Rollpins & Shift Shaft Extension
Courtesy of GENERAL MOTORS CORP.

1. Roll the shift guide rollpins.
2. Remove the shift guide.
3. Remove the shift shaft extension.

cardiagn.com

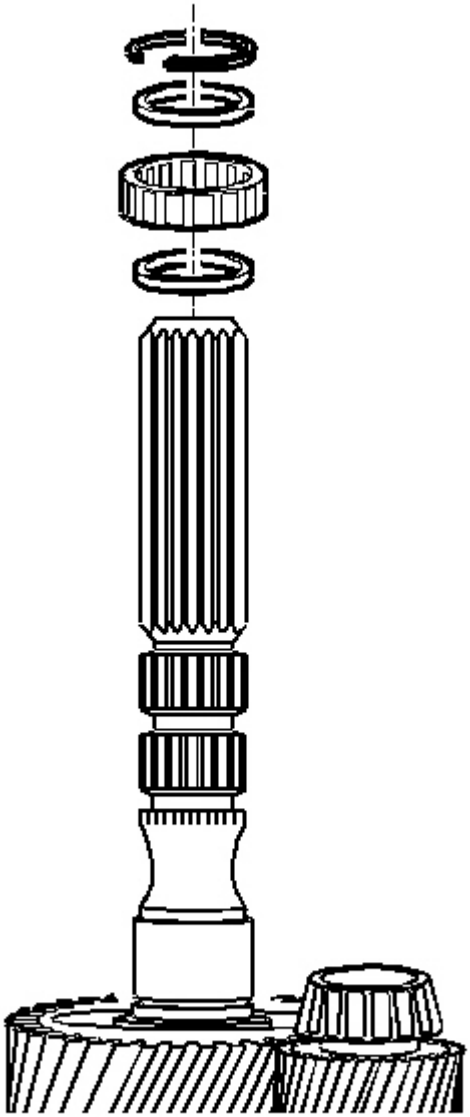

Fig. 53: View Of Mainshaft Rear Roller Bearing, Rear Bearing Retainer Ring & Spacers
Courtesy of GENERAL MOTORS CORP.

4. Remove the rear bearing retainer ring.
5. Remove the spacer.
6. Remove the mainshaft rear roller bearing.
7. Remove the spacer.

cardiagn.com

8. Remove the retainer ring.
9. Remove the reverse gear thrust washer.
10. Remove the reverse gear.

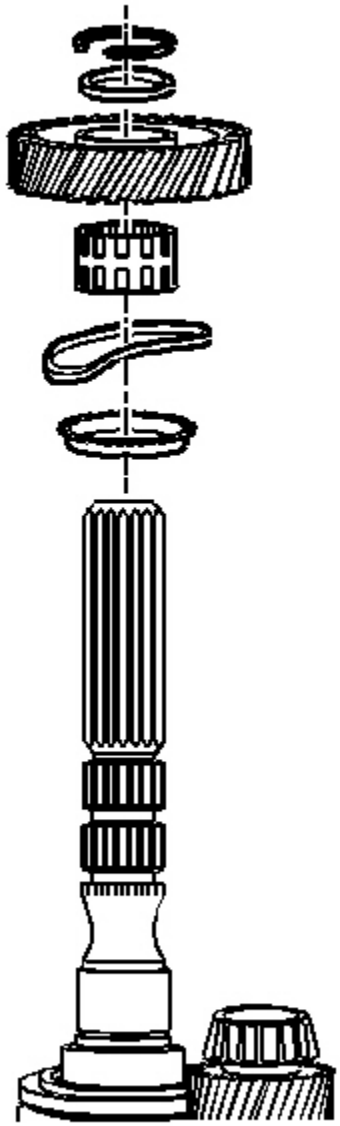

Fig. 54: Identifying Reverse Speed Gear Components
Courtesy of GENERAL MOTORS CORP.

cardiagn.com

11. Remove the reverse gear caged needle bearing.
12. Remove the wave washer.
13. Remove the reverse gear synchronizer blocking ring.

Reverse Shift Fork Removal

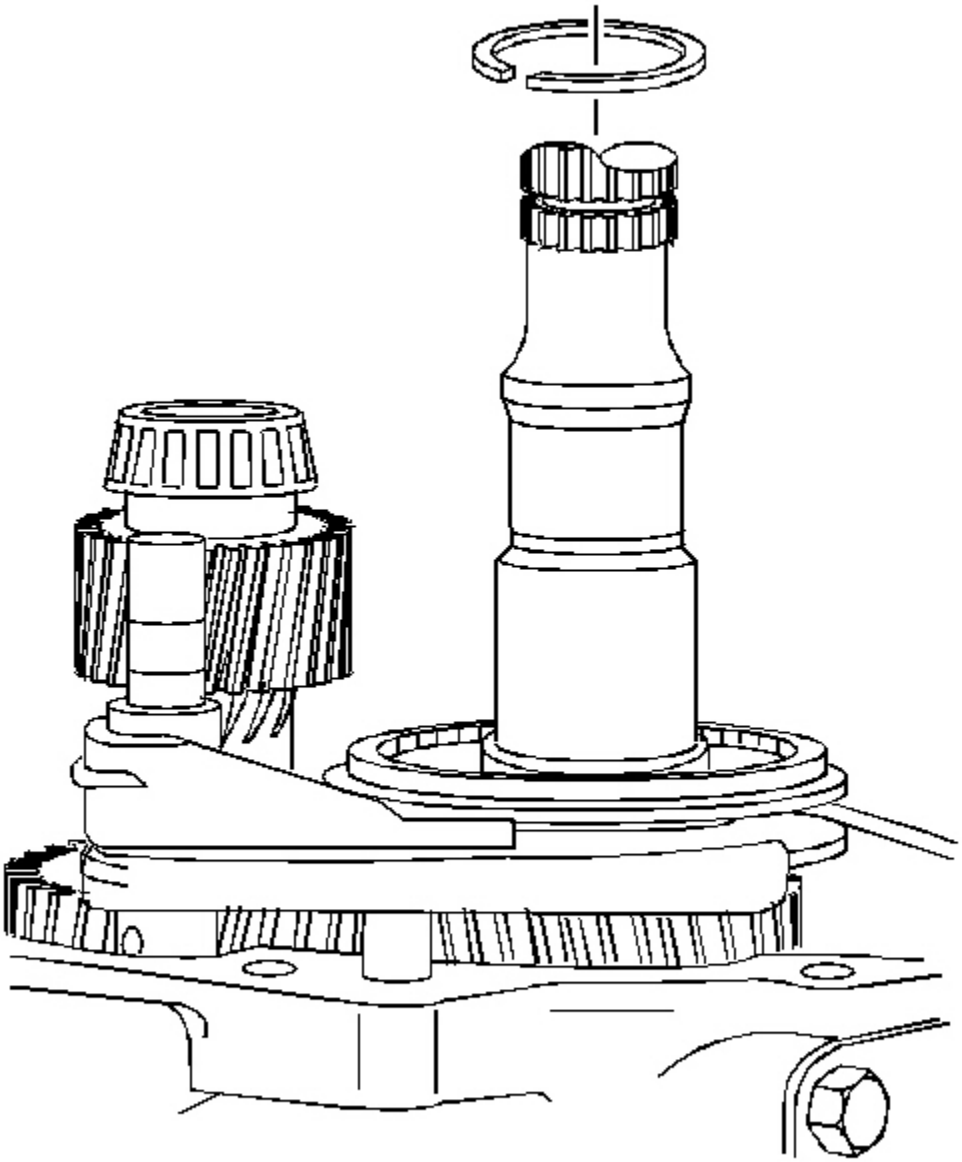

cardiagn.com

Fig. 55: View Of Reverse Synchronizer Retainer Ring
Courtesy of GENERAL MOTORS CORP.

1. Remove the reverse synchronizer retainer ring.

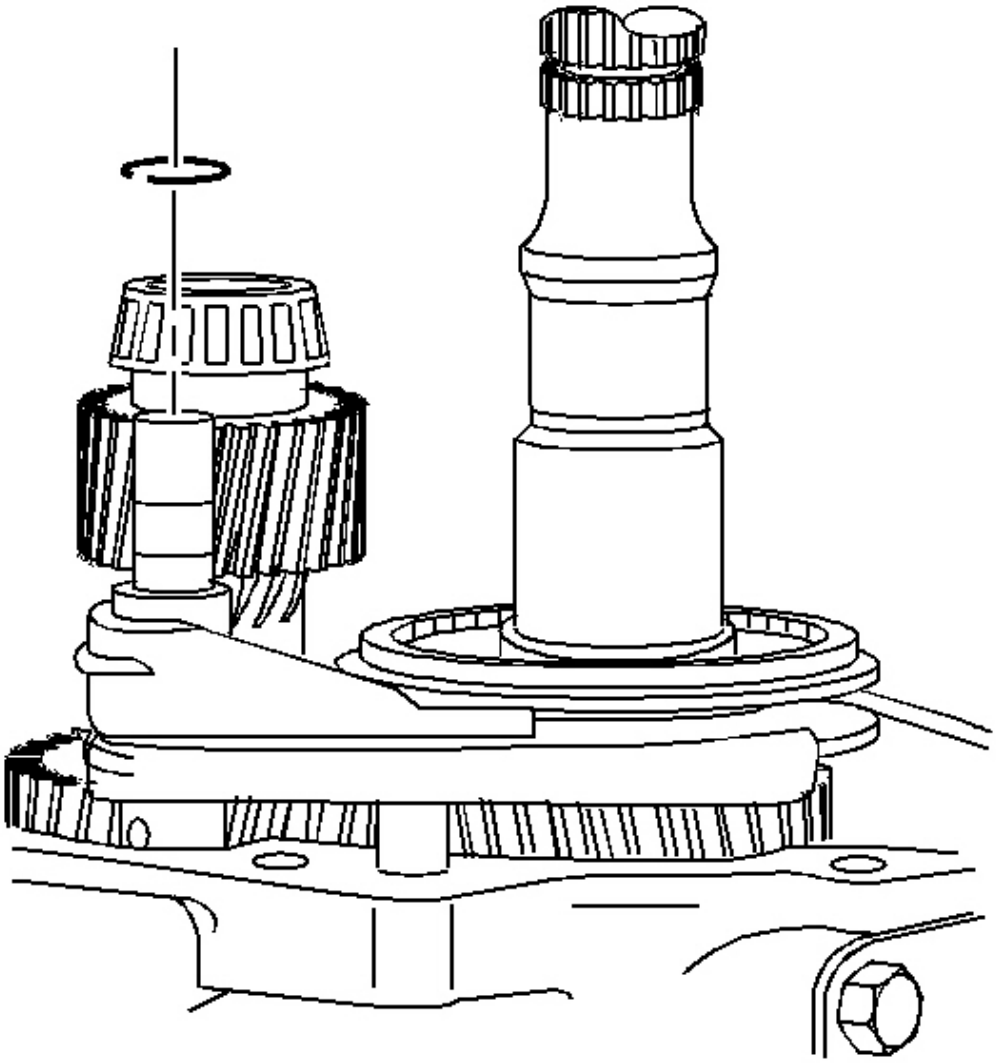

Fig. 56: Installing/Removing Shift Fork Retainer Ring
Courtesy of GENERAL MOTORS CORP.

2. Remove and discard the reverse shift fork retainer ring.

cardiagn.com

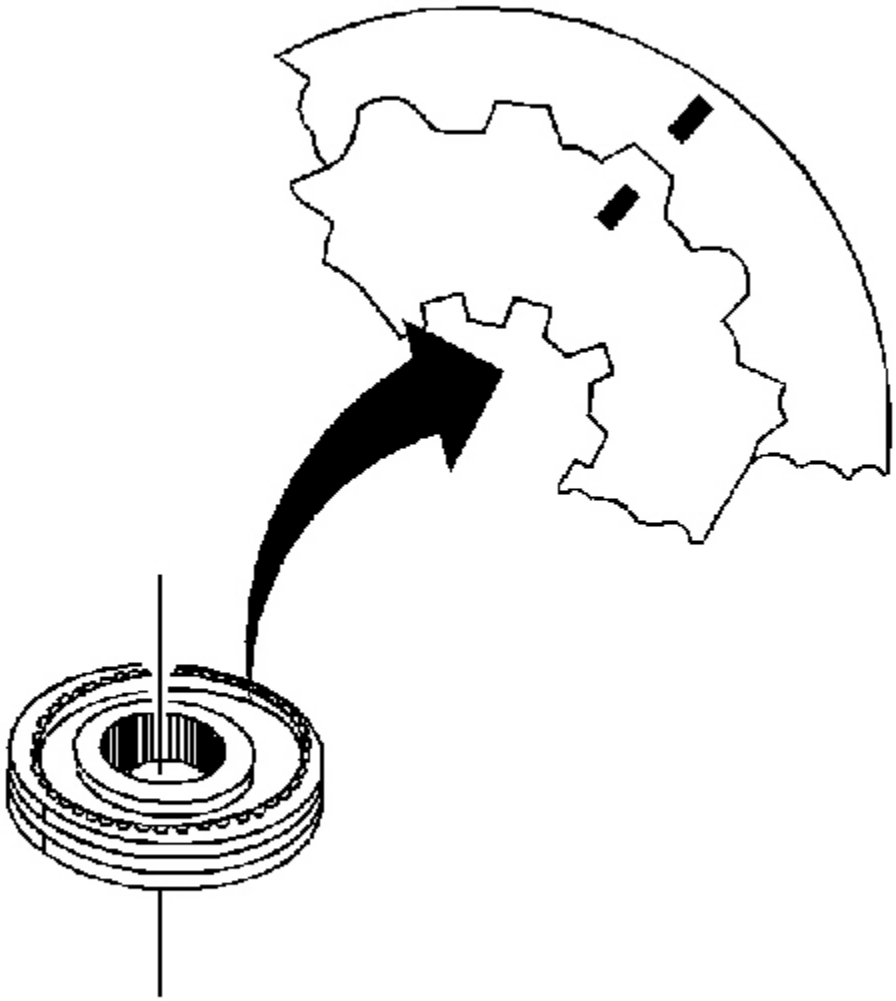

Fig. 57: Identifying Speed Gear Synchronizer Assembly Scribe Marks
Courtesy of GENERAL MOTORS CORP.

3. Scribe a mark on the synchronizer hub and on the sleeve. This will help you to reinstall the parts in the same position.

cardiagn.com

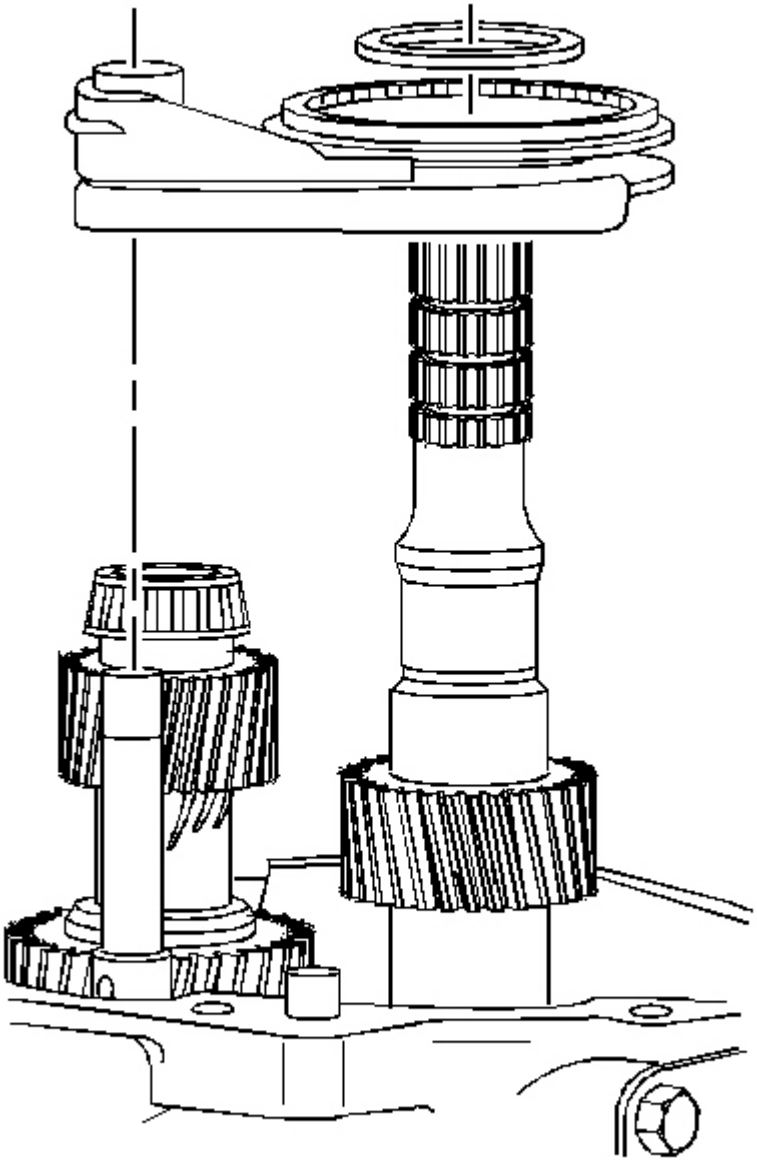

Fig. 58: Identifying Reverse Shift Fork, Synchronizer & Thrust Washer
Courtesy of GENERAL MOTORS CORP.

4. Remove the following parts in order:
    1. The thrust washer
    2. The reverse synchronizer assembly and the shift fork

cardiagn.com

5th/6th Speed Driven Gear Removal

Tools Required

- **J 8433** Universal Bridge Puller. See **Special Tools** .
- **J 39431-1** Gear Remover and Bolts. See **Special Tools** .

cardiagn.com

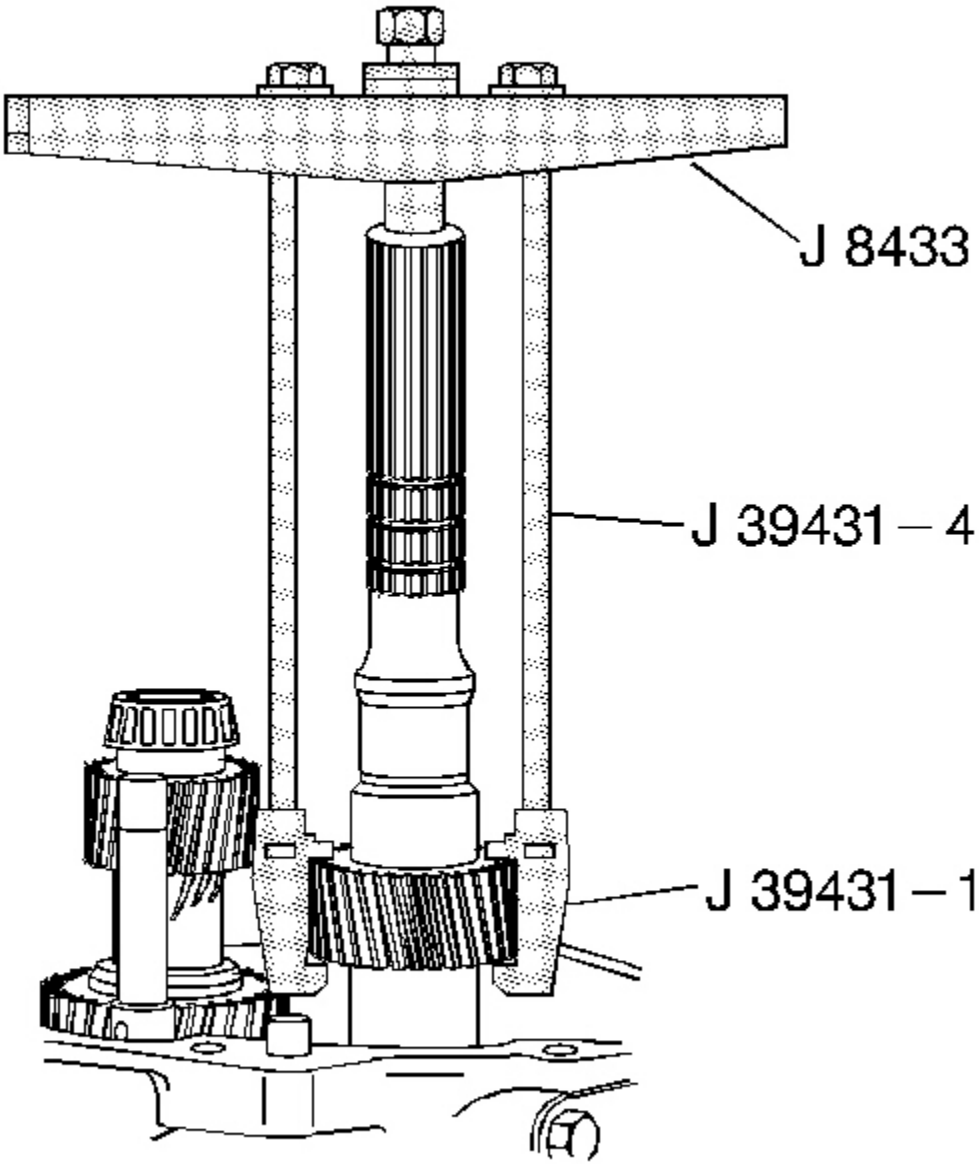

Fig. 59: Removing The 5Th/6Th Speed Driven Gear Using J 8433, J 39431-4 & J 39431-1
Courtesy of GENERAL MOTORS CORP.

Remove the 5th/6th speed driven gear. Use the **J 8433** , the **J 39431-1** and the J 39431-4.

Countershaft Extension Removal

cardiagn.com

1. Remove the 5th/6th speed shift fork retainer ring.

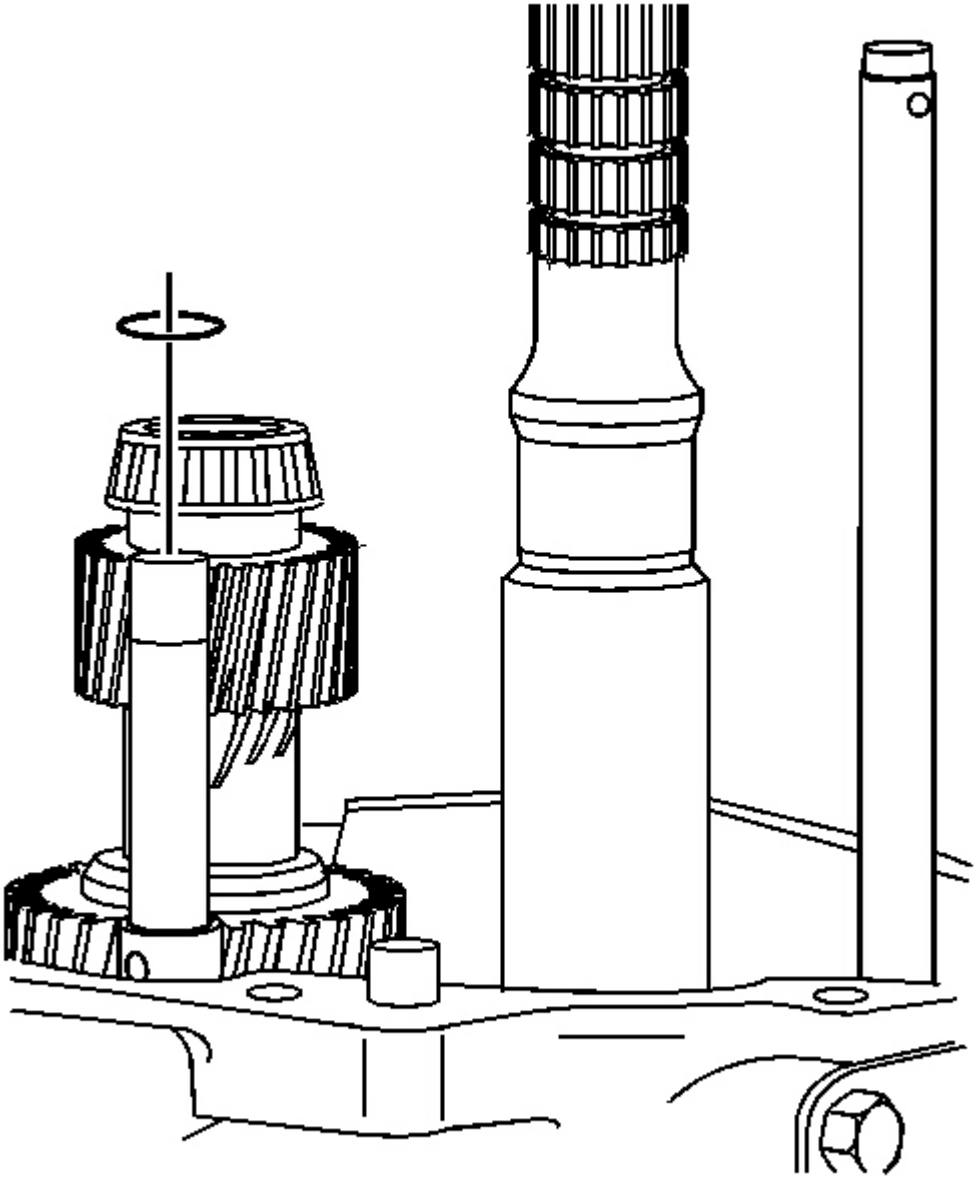

Fig. 60: View Of 5th/6th Shift Fork Retainer Ring
Courtesy of GENERAL MOTORS CORP.

2. Rotate the transmission in the horizontal position with the guide plate up.

cardiagn.com

3. Remove the countershaft extension assembly with the 5th/6th speed shift fork, 6th speed gear bearing spacer, 6th speed drive gear, and caged needle bearing. The 6th speed gear bearing spacer will slide out during removal of the countershaft extension assembly.

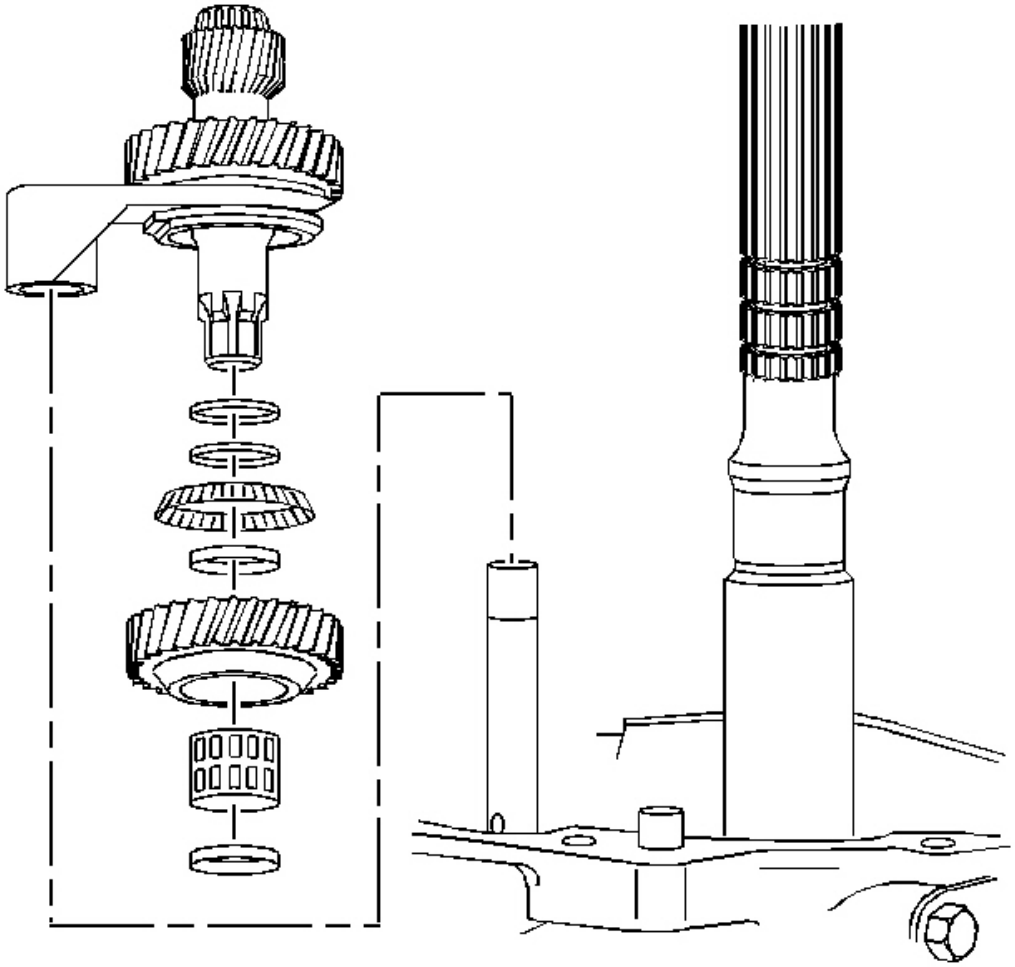

Fig. 61: Identifying Countershaft Extension Assembly & 5th/6th Shift Fork
Courtesy of GENERAL MOTORS CORP.

Tools Required

J 41099 Skip Shift Sensor Remover/Installer. See **Special Tools** .

Transmission Case Removal

cardiagn.com

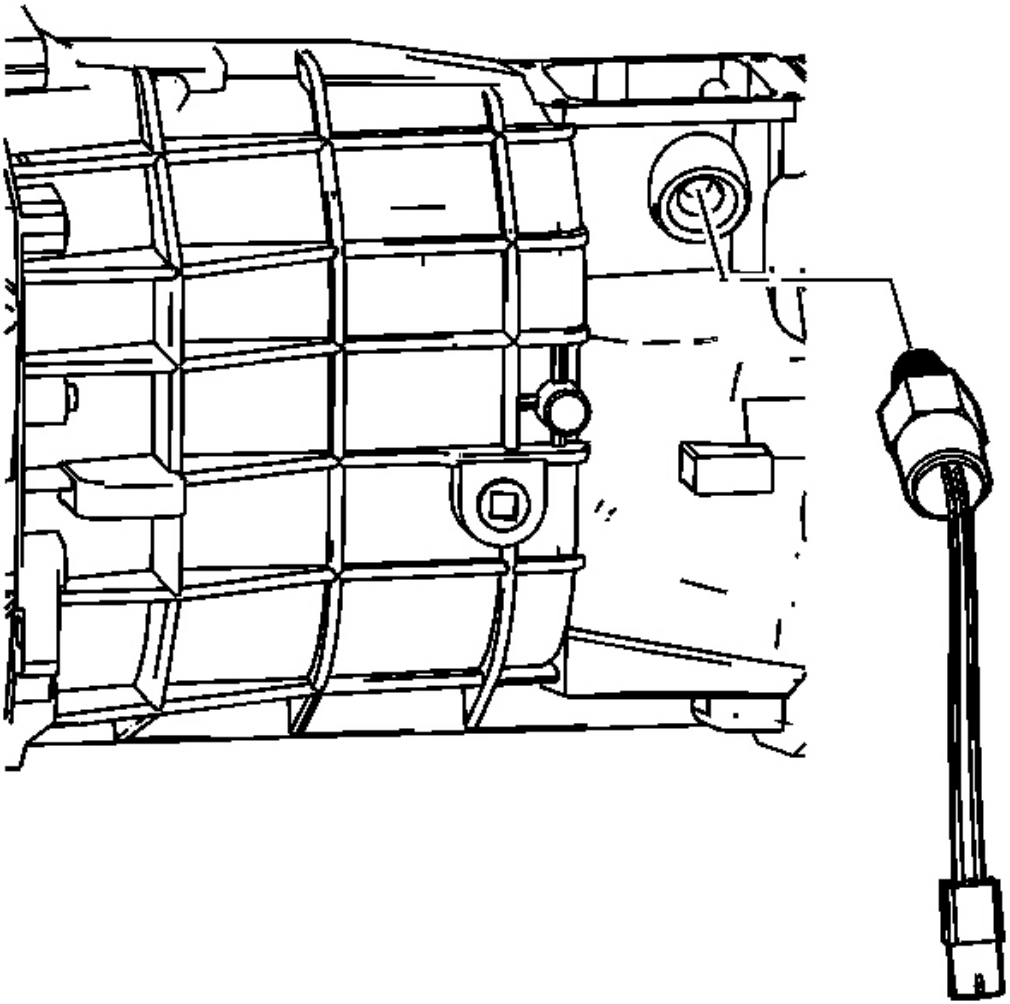

Fig. 62: Locating Computer Aided Gear Select Solenoid
Courtesy of GENERAL MOTORS CORP.

1. Remove the computer aided gear select solenoid.

cardiagn.com

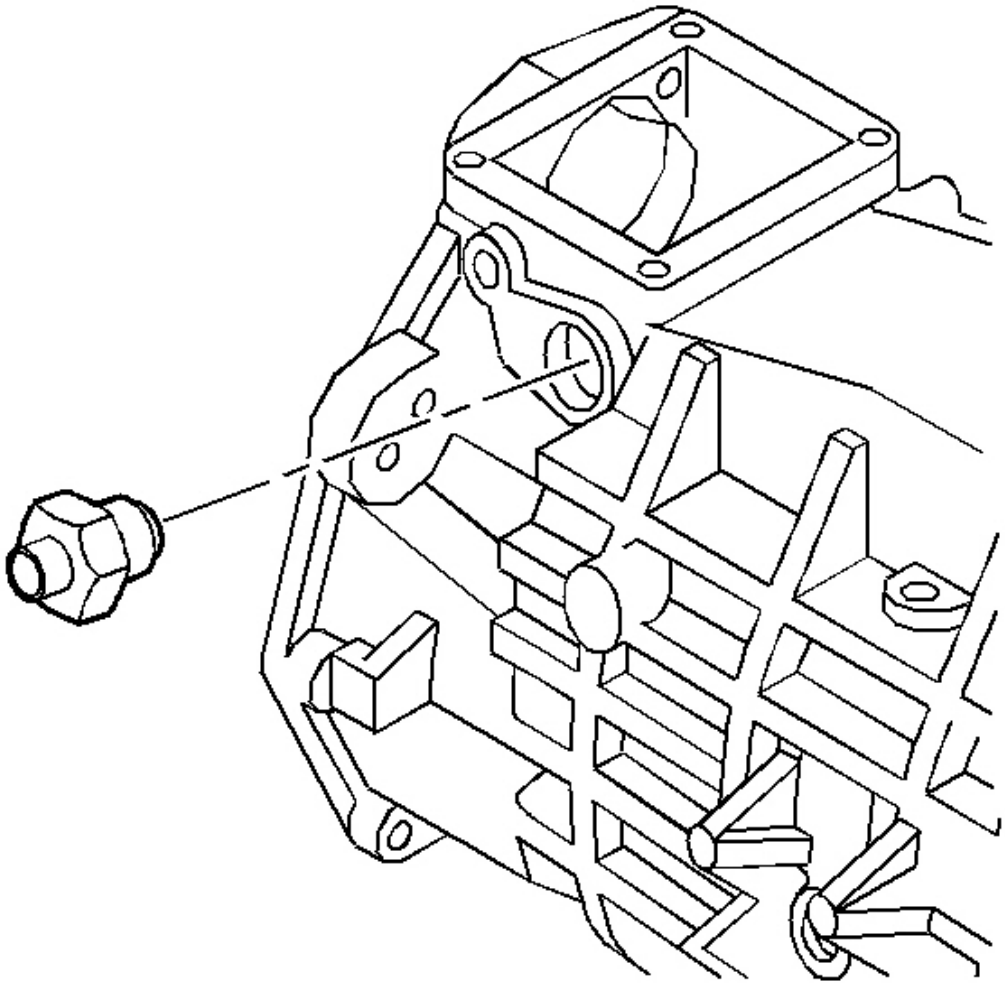

Fig. 63: View Of Shift Detent Assembly
Courtesy of GENERAL MOTORS CORP.

2. Remove the shift detent assembly.

cardiagn.com

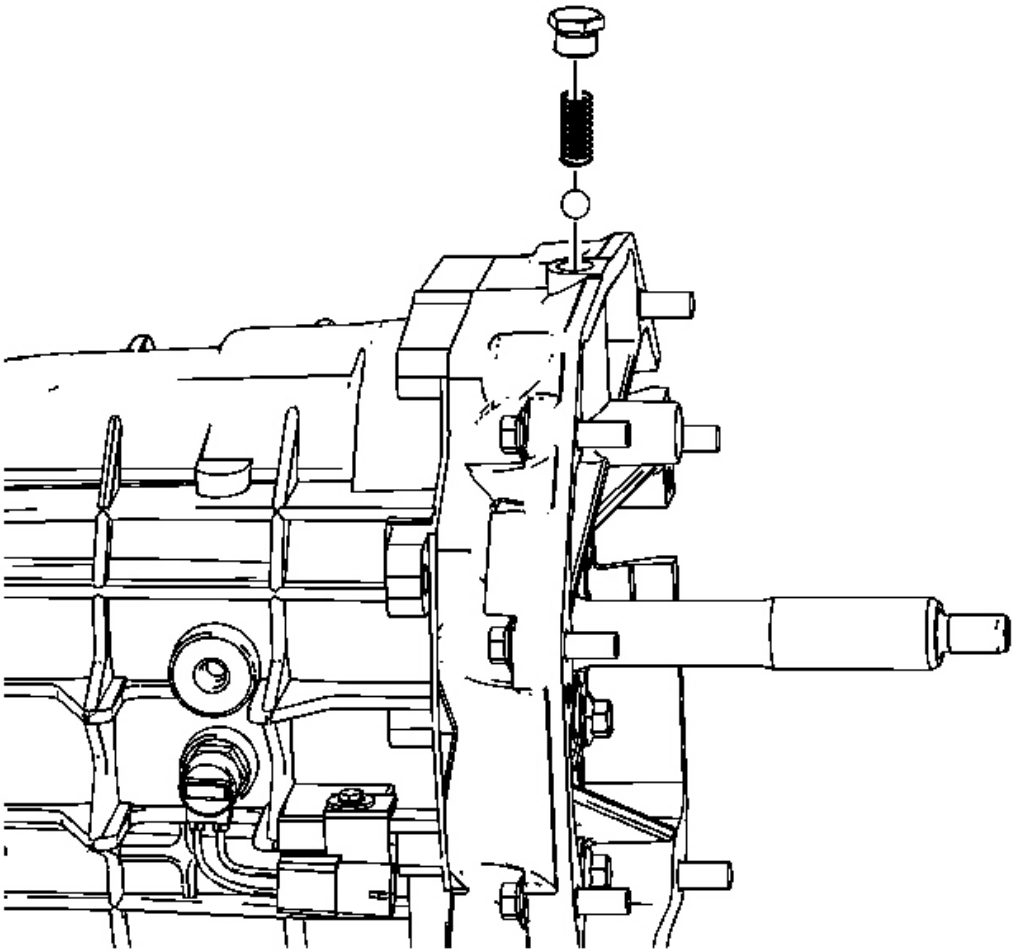

Fig. 64: Installing/Removing Shift Detent Plug, Spring And Ball
Courtesy of GENERAL MOTORS CORP.

3. Remove the shift detent plug, spring, and ball.

cardiagn.com

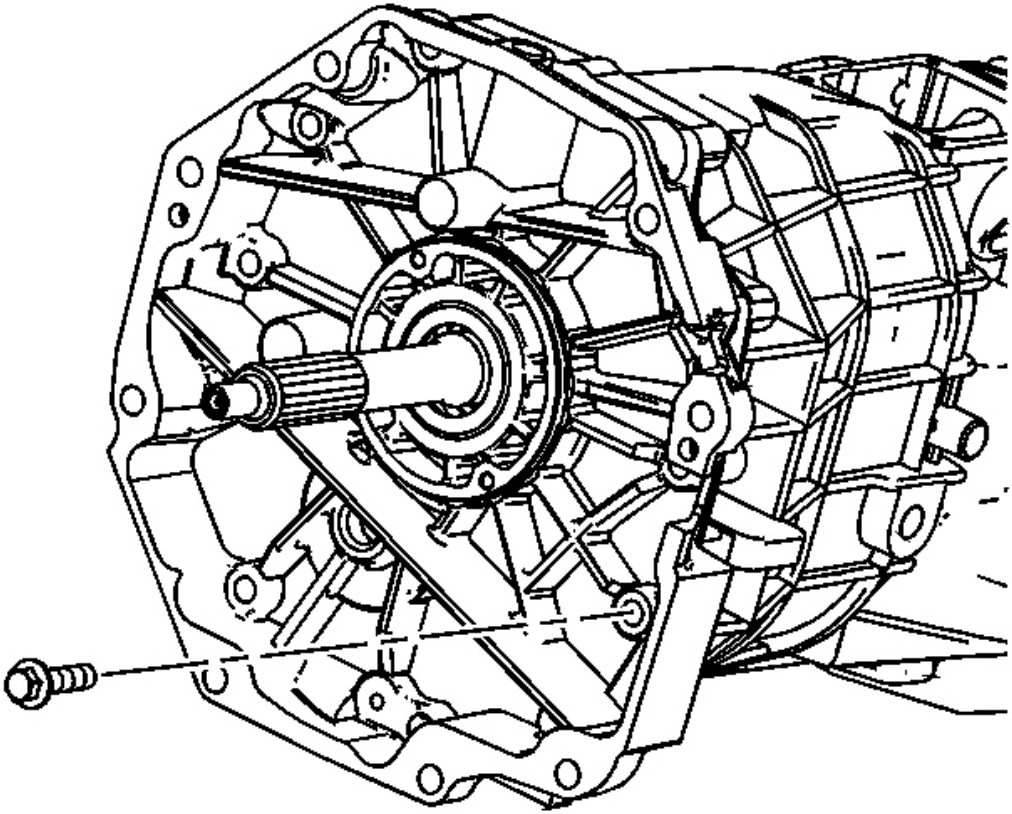

Fig. 65: Locating Adapter Plate To Transmission Case Bolts
Courtesy of GENERAL MOTORS CORP.

4. Remove 9 of the 11 adapter plate to transmission case bolts.
5. Rotate the transmission into the vertical position.

cardiagn.com

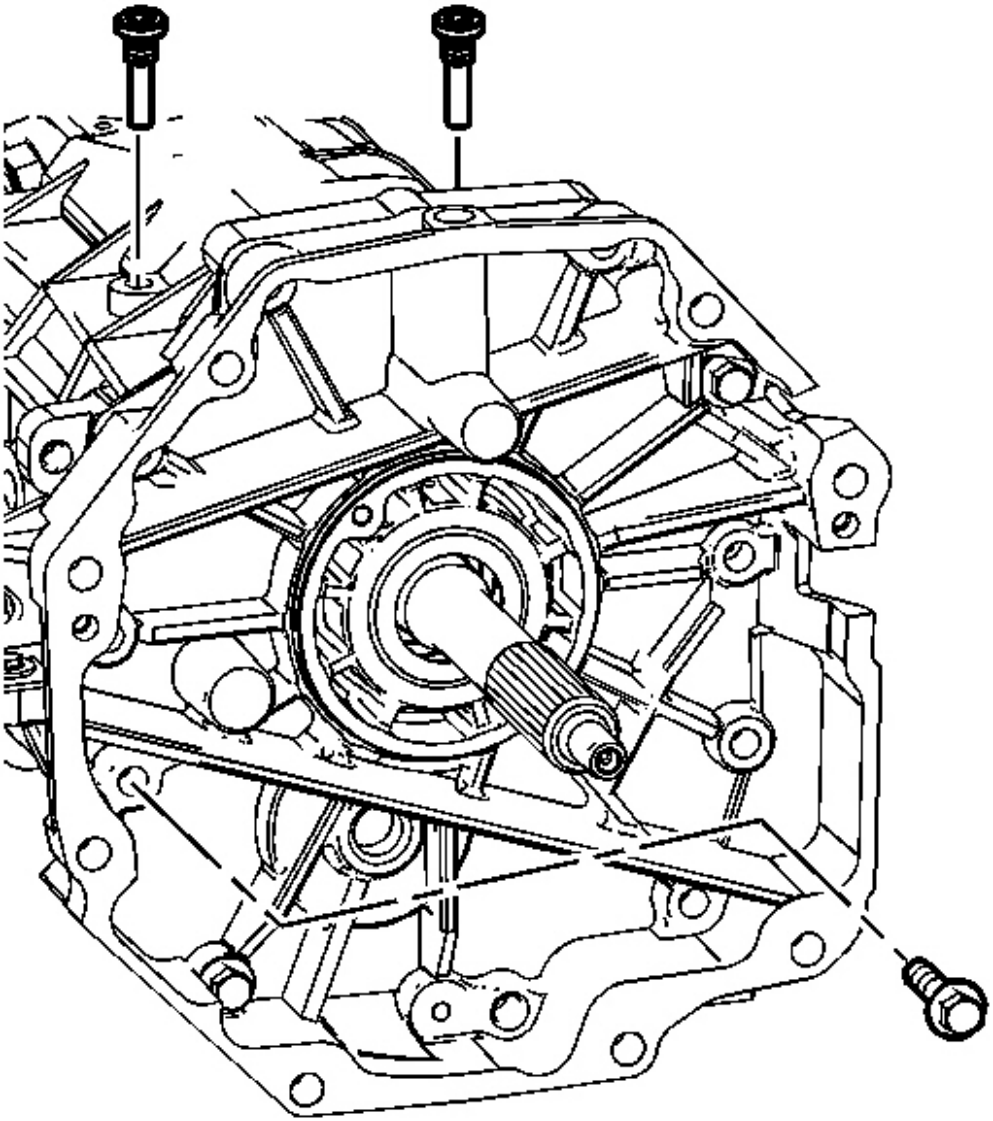

Fig. 66: View Of Adapter Plate To Transmission Case Bolts & Shift Lever Guide Bolts
Courtesy of GENERAL MOTORS CORP.

6. Remove the last 2 adapter plate to transmission case bolts.
7. Remove the shift lever guide bolts.

cardiagn.com

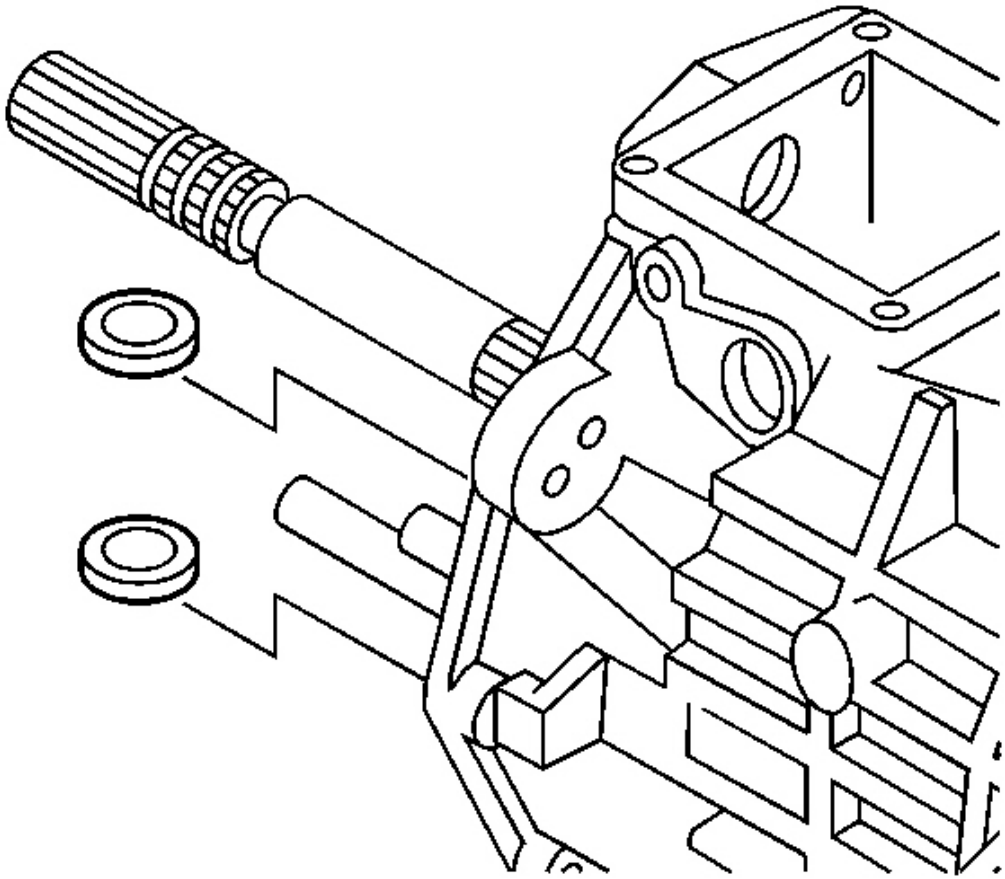

Fig. 67: Identifying Transmission Magnets
Courtesy of GENERAL MOTORS CORP.

8. Remove the magnets from the transmission case.

cardiagn.com

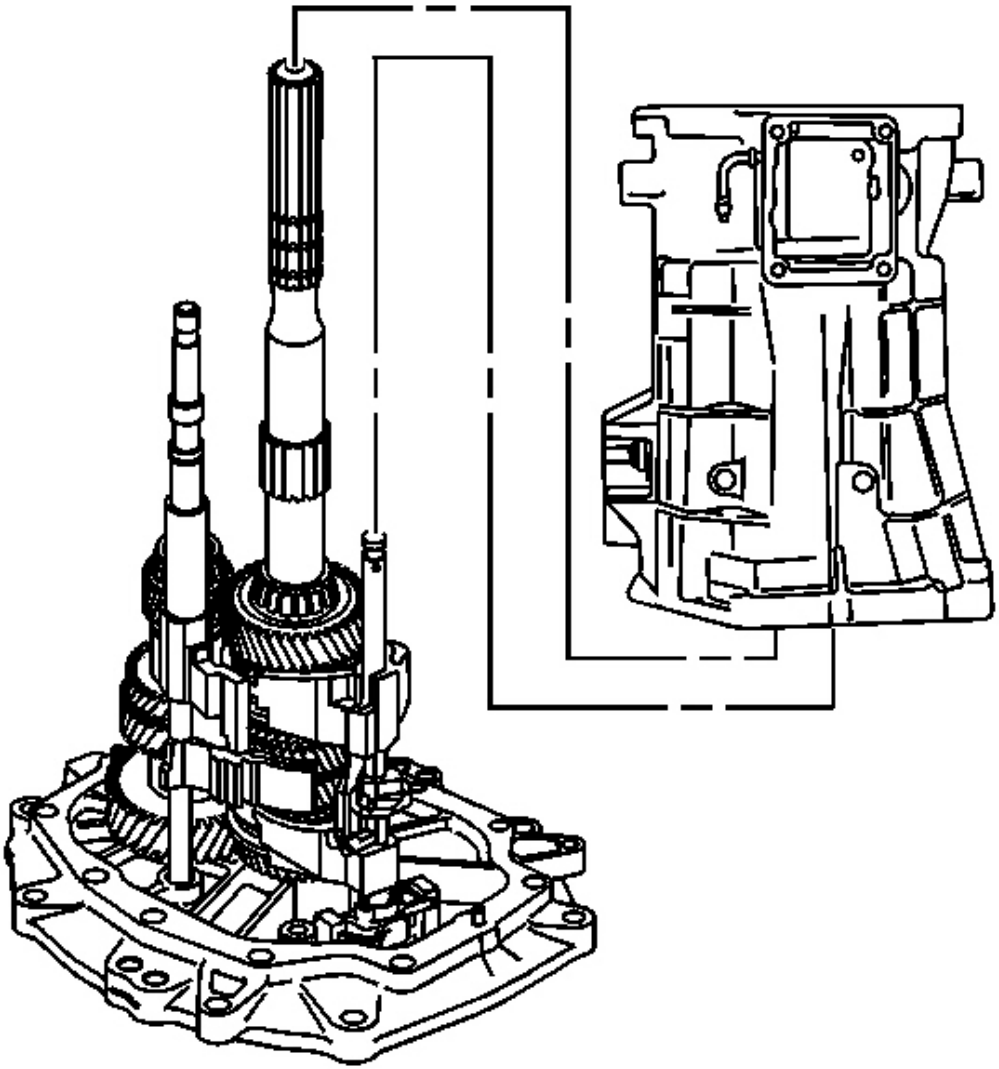

Fig. 68: Installing/Removing Transmission Case
Courtesy of GENERAL MOTORS CORP.

9. Remove the transmission case and the offset lever together as follows:
    1. Slide the transmission case up and off of the gear clusters and the shift shaft components.
    2. Hold the offset lever against the guide plate in order to prevent the release of the detent ball and the spring.
    3. Remove the offset lever from the transmission case.

cardiagn.com

Guide Plate Removal

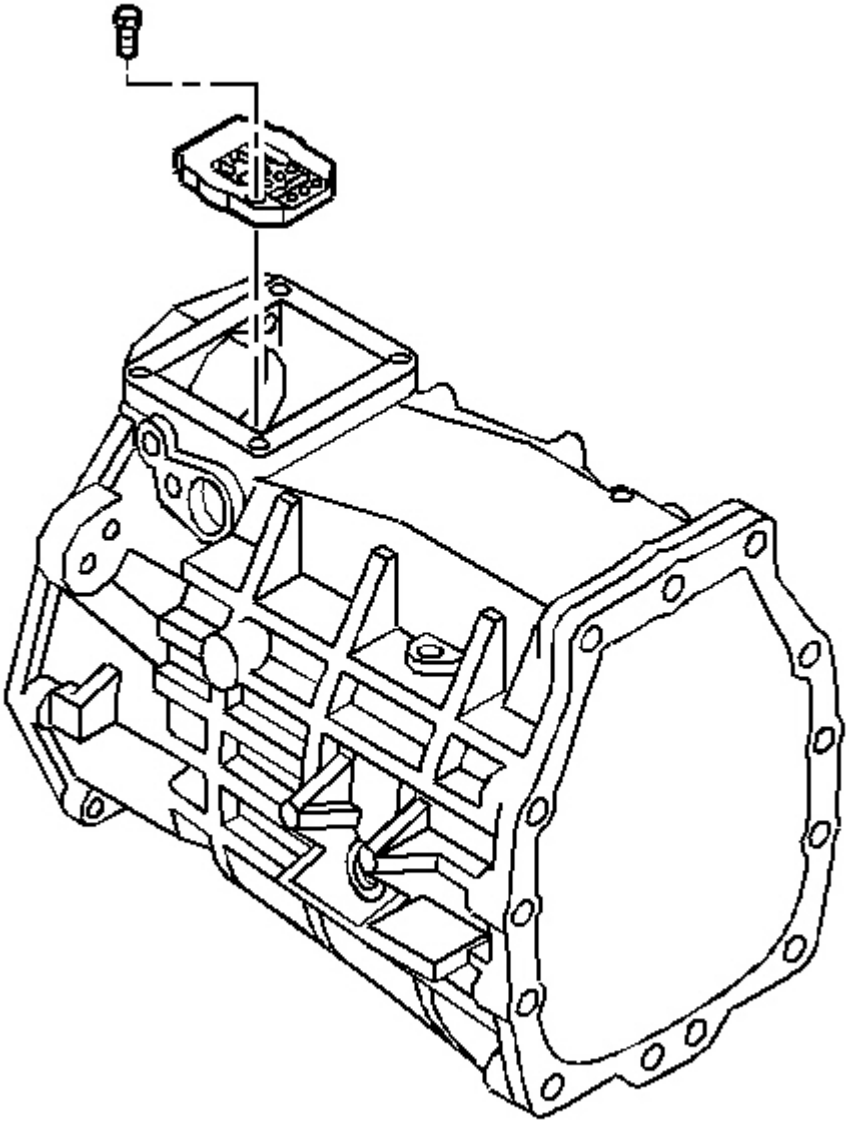

Fig. 69: Locating Detent Guide Plate & Attaching Bolts
Courtesy of GENERAL MOTORS CORP.

1. Remove the detent guide plate attaching bolts.
2. Remove the detent guide plate.

cardiagn.com

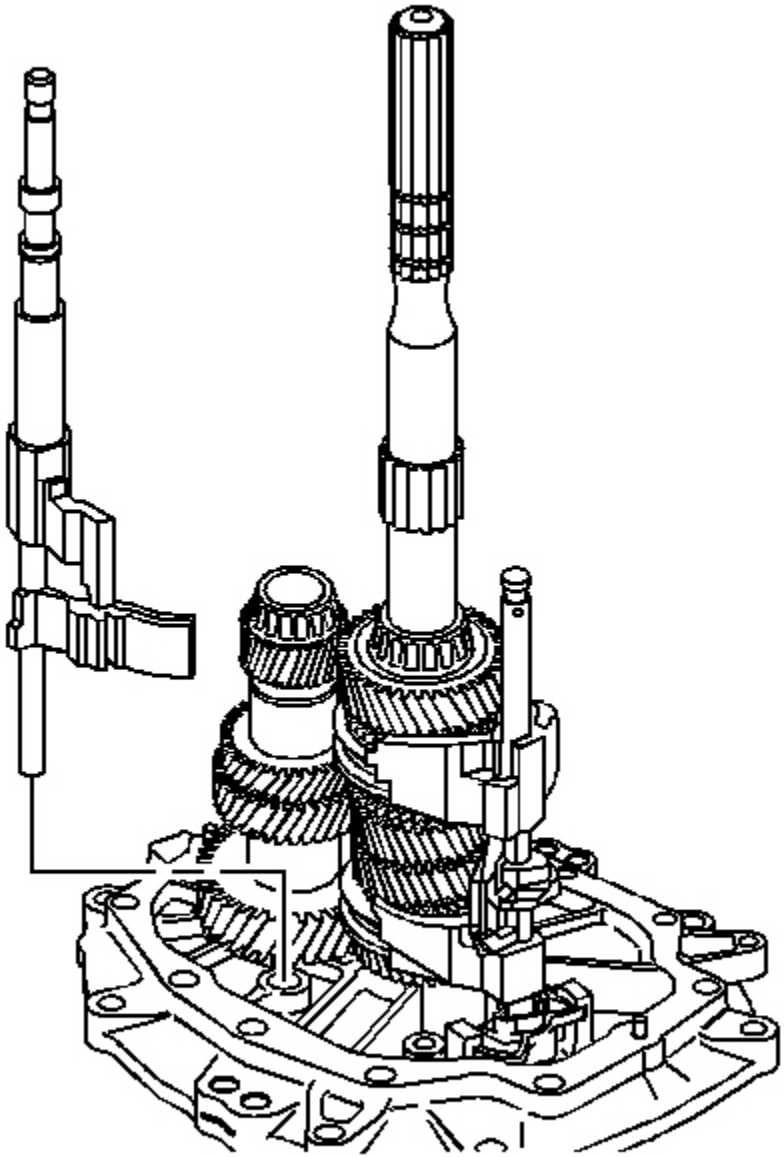

Fig. 70: View Of 5th/6th & Reverse Shift Shaft
Courtesy of GENERAL MOTORS CORP.

1. Rotate the 5th/6th and the reverse shift shaft levers off the shift interlock plate.

cardiagn.com

2. Remove the 5th/6th and the reverse shift shaft assembly.

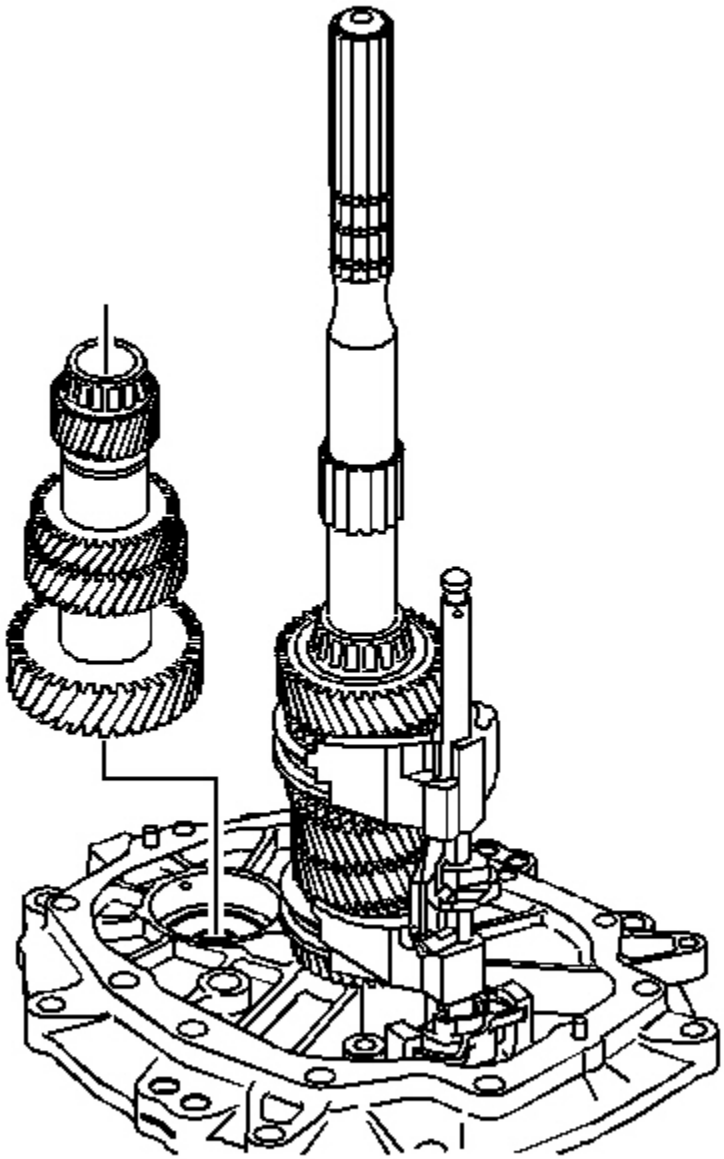

Fig. 71: Installing/Removing Countershaft Assembly
Courtesy of GENERAL MOTORS CORP.

3. Remove the countershaft. Lift up the mainshaft enough in order to remove the countershaft.

cardiagn.com

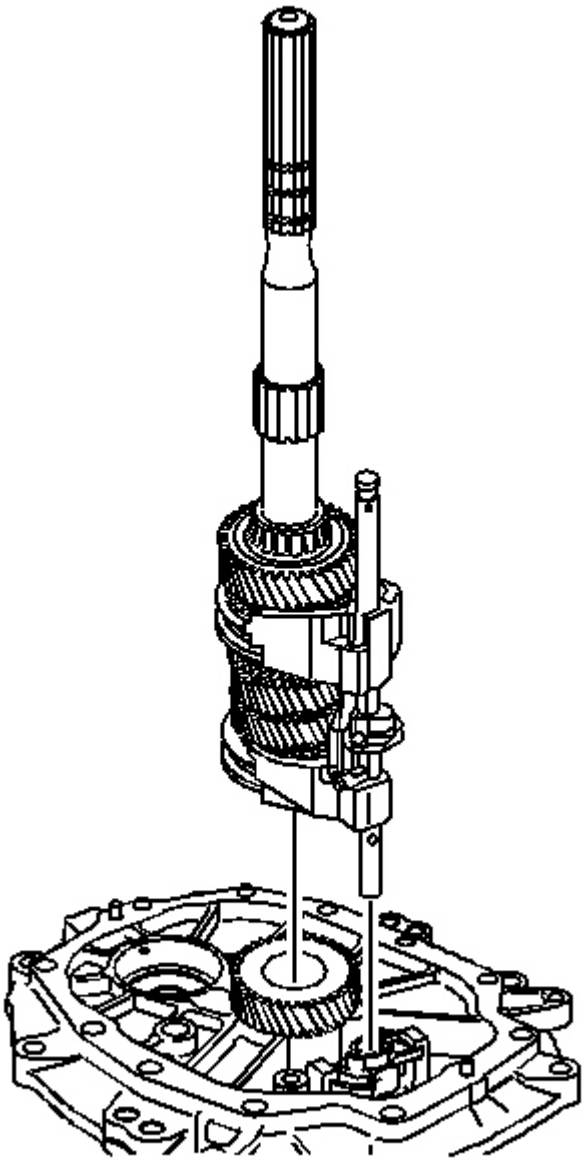

Fig. 72: Installing/Removing Mainshaft Assembly & Shift Shaft Components
Courtesy of GENERAL MOTORS CORP.

4. Remove the mainshaft and the shift shaft components as an assembly.

IMPORTANT: When removing the shift shaft be careful not to lose the dowel pin.

cardiagn.com

5. Remove the shift shaft assembly from the mainshaft.

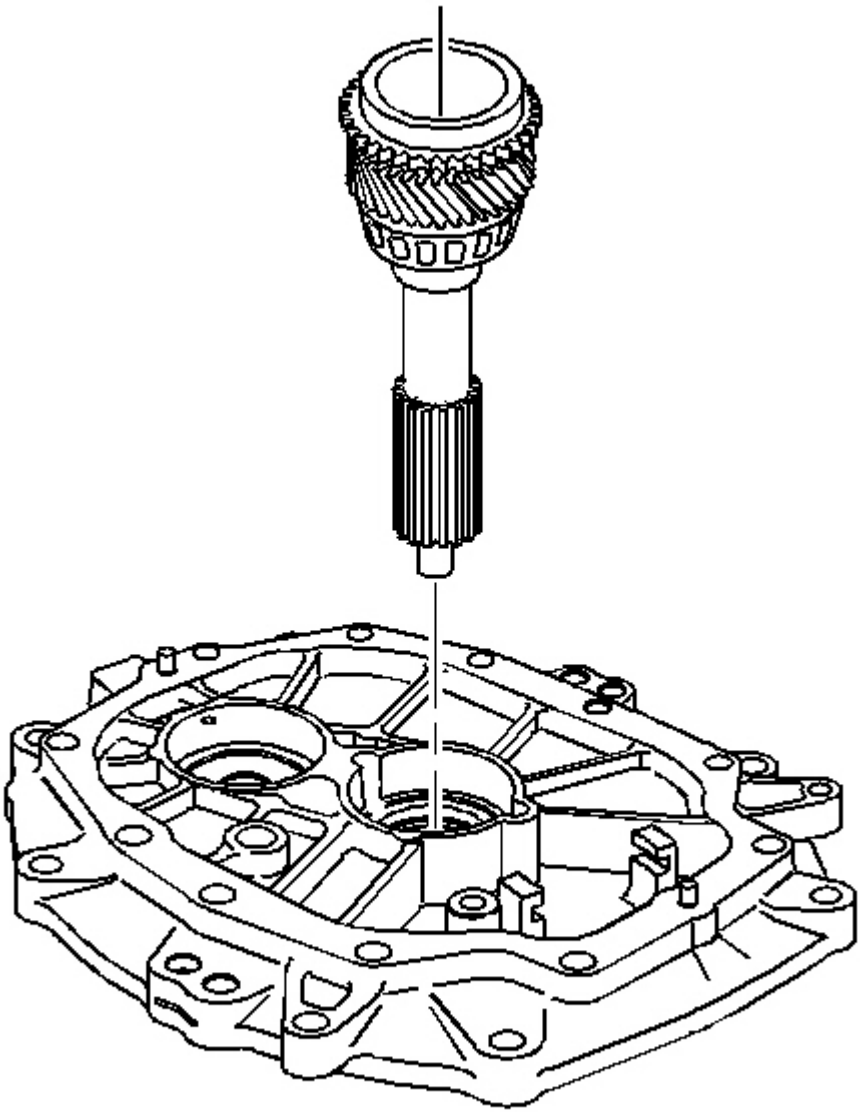

Fig. 73: View Of Input Shaft
Courtesy of GENERAL MOTORS CORP.

6. Remove the input shaft.

cardiagn.com

TRANSMISSION DISASSEMBLE (GTO)

Extension Housing Removal

Tools Required

- **J 3289-20** Holding Fixture Bench Mount. See **Special Tools** .
- J 39430 Transmission Support Fixture
- **J 39431-1** Gear Remover and Bolts. See **Special Tools** .
- **J 8433** Universal Bridge Puller. See **Special Tools** .
- **J 41099** Solenoid Socket. See **Special Tools** .

cardiagn.com

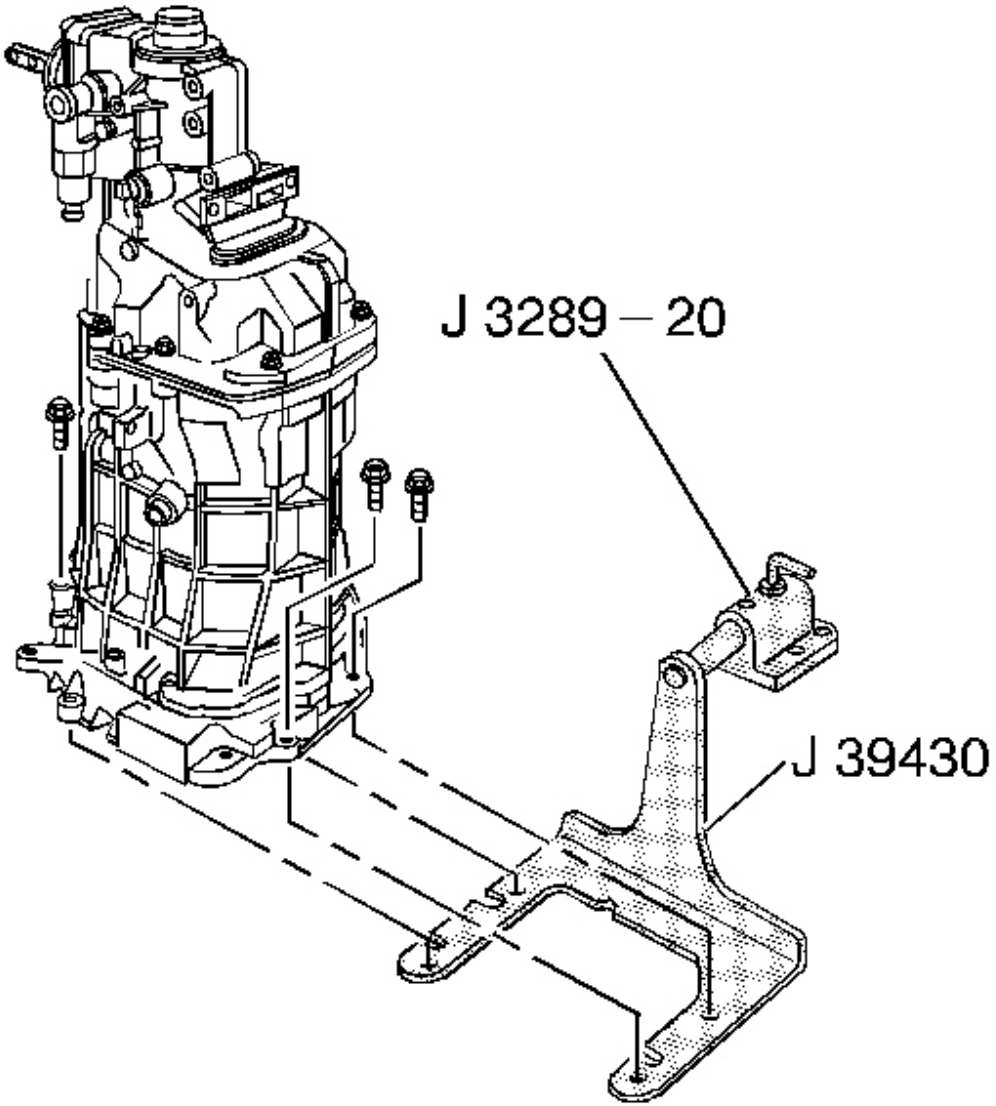

Fig. 74: Mounting Transmission On Workbench Using J 3289-20
Courtesy of GENERAL MOTORS CORP.

1. Remove the vent pipe.
2. Install the J 39430 .
3. Mount the transmission on a workbench using the **J 3289-20** .
4. Rotate the transmission into a horizontal position.

cardiagn.com

5. Remove the transmission drain plug and drain the transmission fluid.
6. Shift the transmission into neutral (N).

cardiagn.com

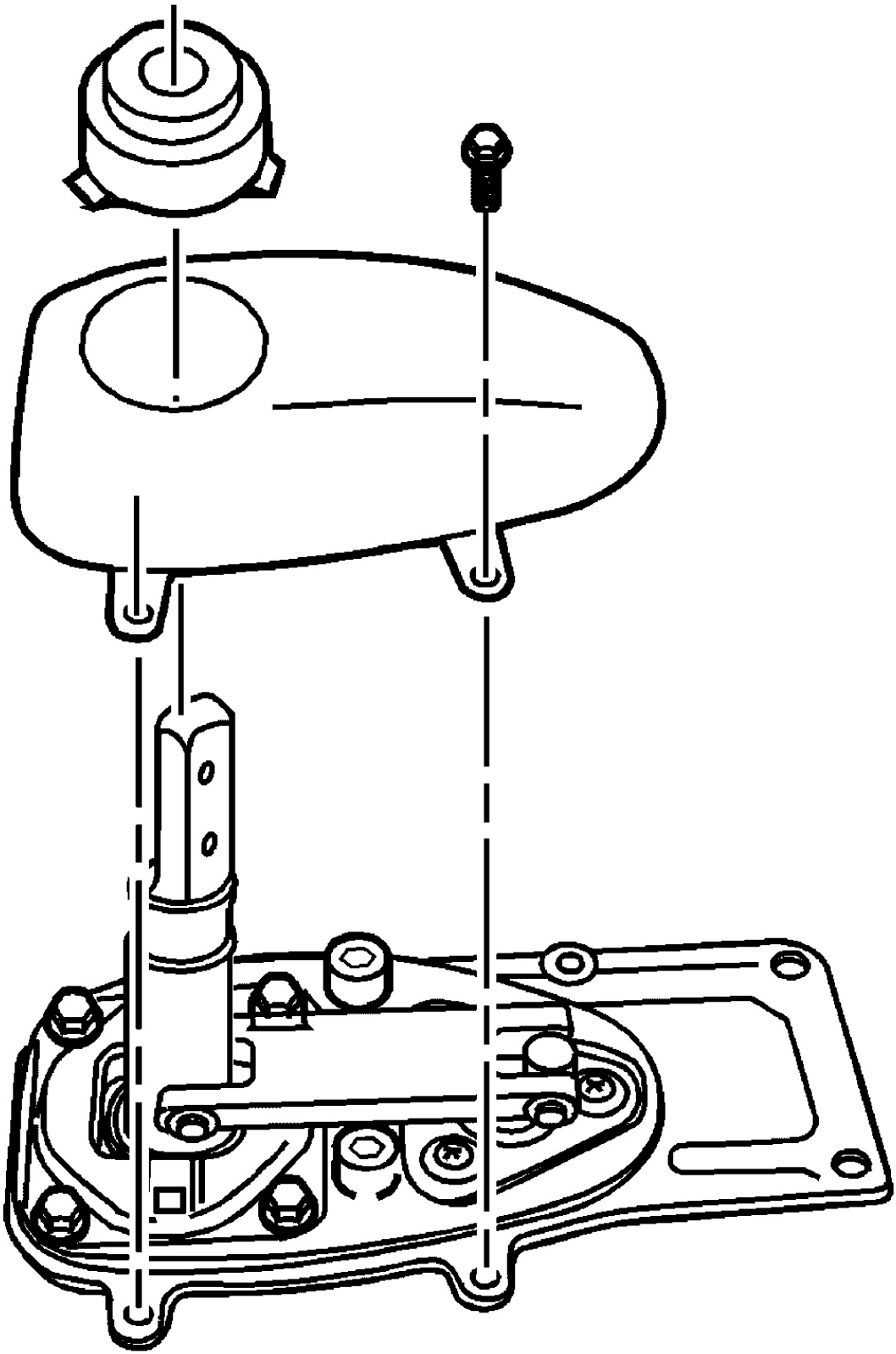

cardiagn.com

Fig. 75: View Of Shift Lever Cover & Retaining Screws
Courtesy of GENERAL MOTORS CORP.

7. Remove the shifter boot.
8. Remove the shift lever cover screws.
9. Remove the shift lever cover.

cardiagn.com

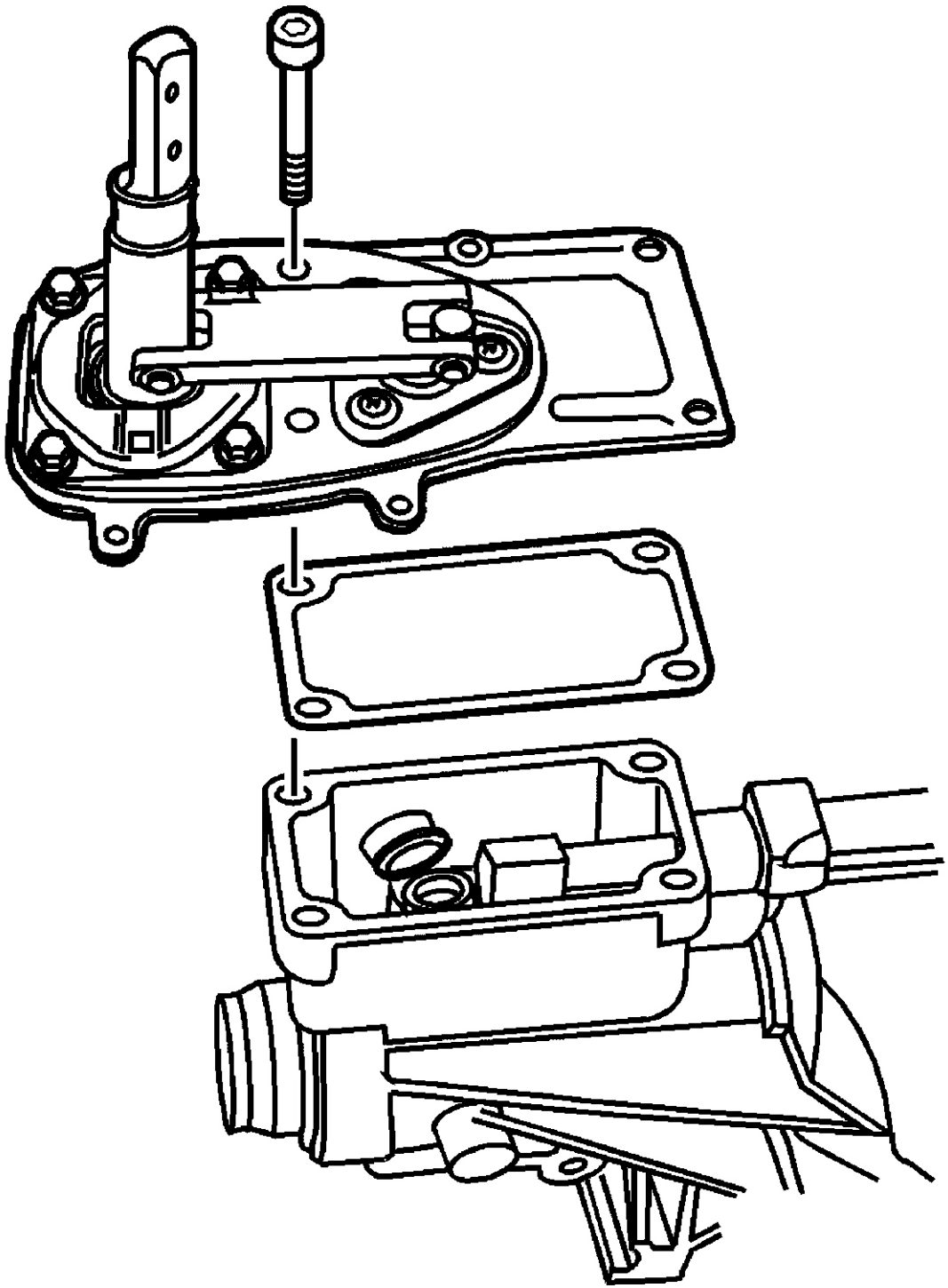

Fig. 76: Identifying Shifter, Gasket & Retaining Bolts
Courtesy of GENERAL MOTORS CORP.

cardiagn.com

10. Remove the shifter bolts.
11. Remove the shifter and shifter gasket.

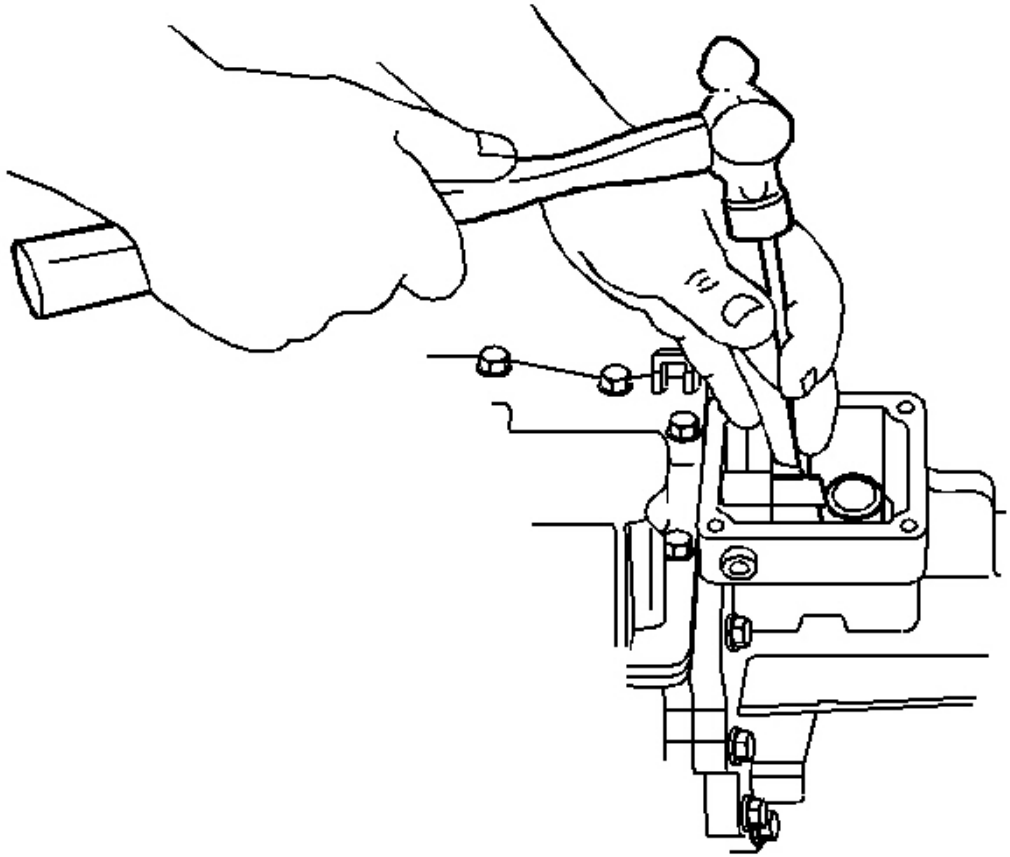

Fig. 77: Installing Rear Offset Shift Lever Roll Pin
Courtesy of GENERAL MOTORS CORP.

12. Remove rear offset shift lever roll pin.

cardiagn.com

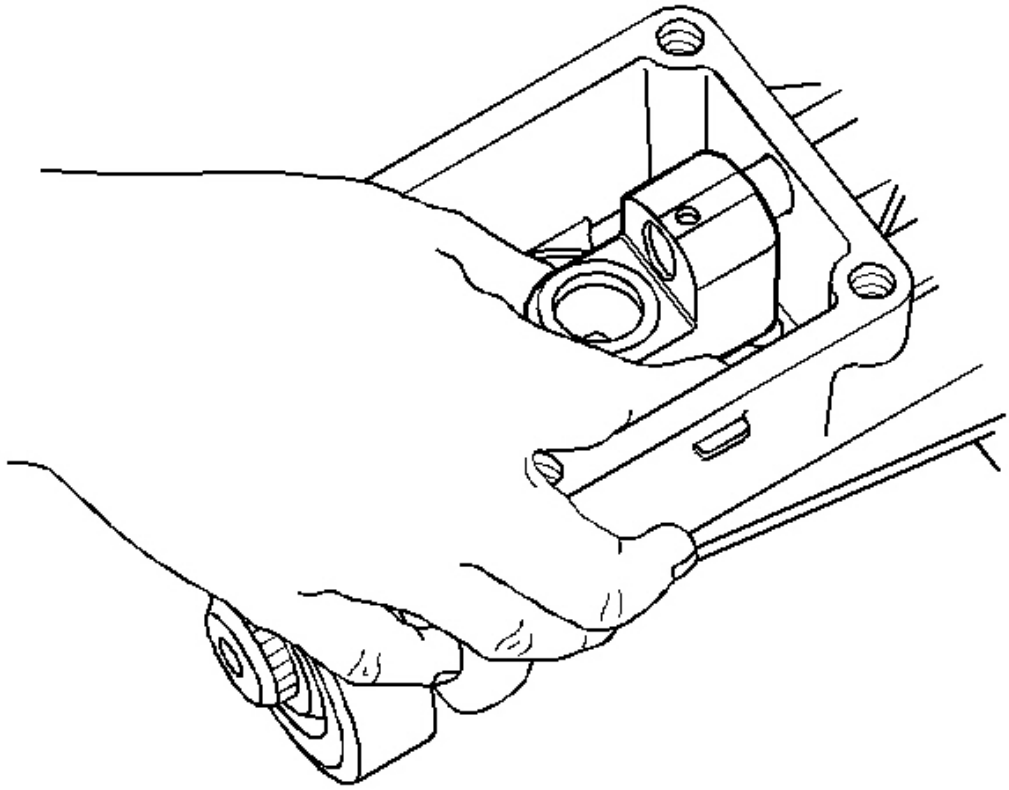

Fig. 78: View Of Rear Offset Shift Lever & Isolator Cup
Courtesy of GENERAL MOTORS CORP.

13. Remove rear offset shift lever and isolator cup.

cardiagn.com

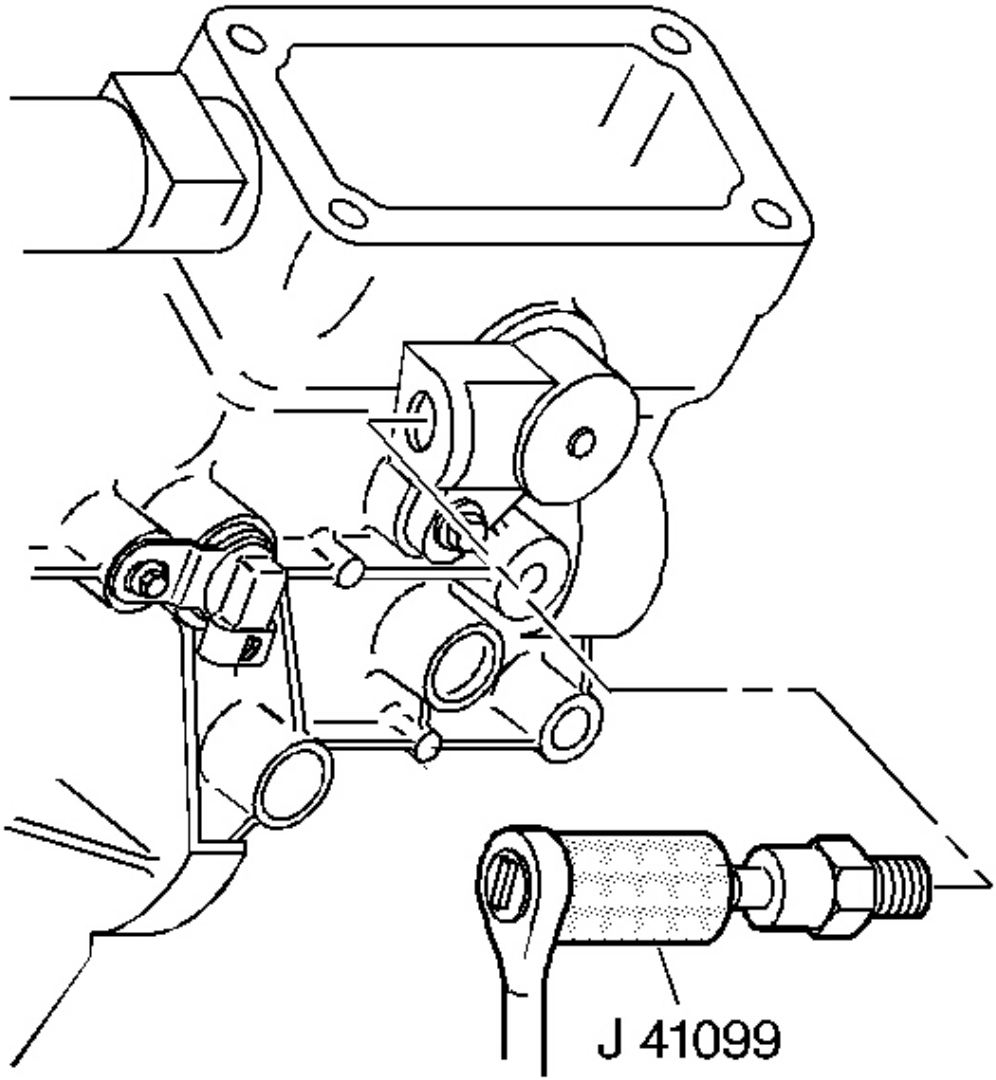

Fig. 79: Installing Reverse Lockout Solenoid Into Reverse Lockout Body Using J 41099
Courtesy of GENERAL MOTORS CORP.

14. Remove the reverse lockout solenoid from the reverse lockout body using **J 41099** .

cardiagn.com

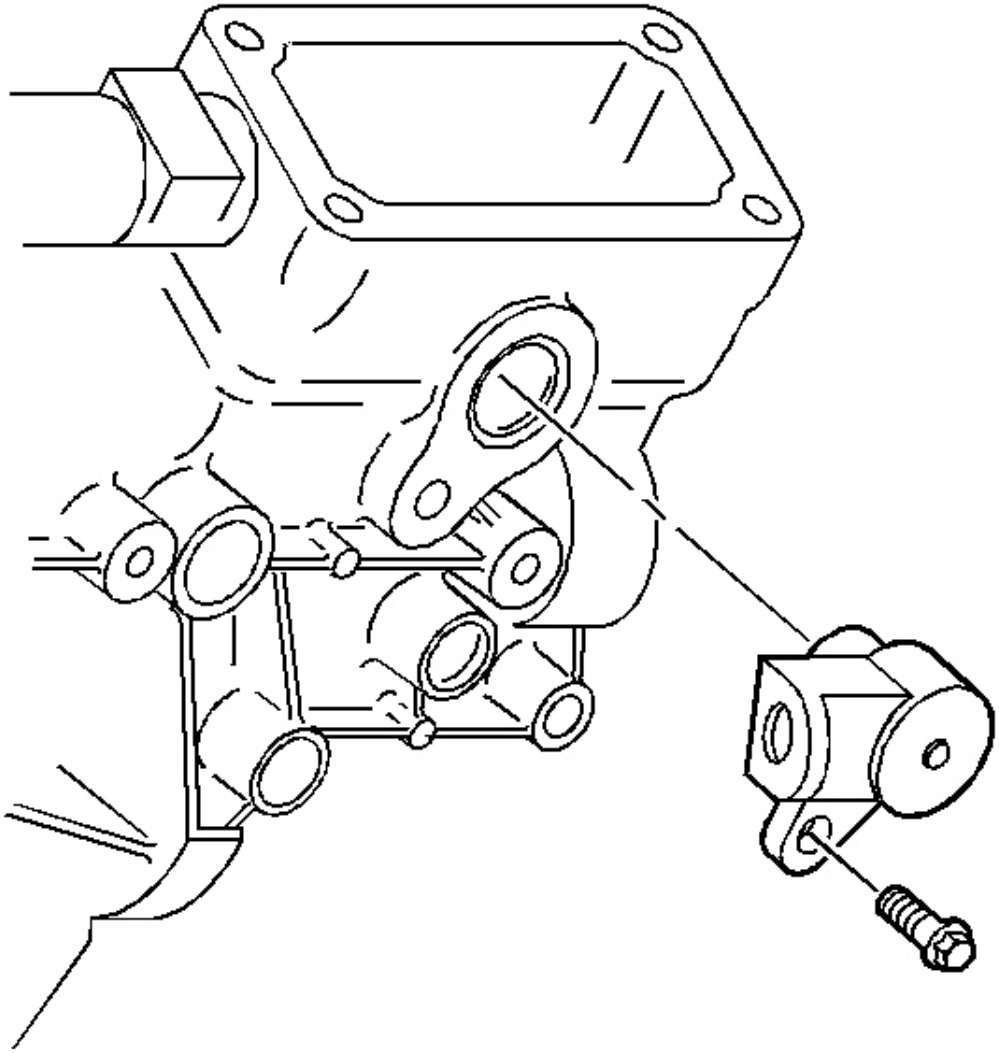

Fig. 80: Installing Reverse Lockout Body & Bolt To Extension Housing
Courtesy of GENERAL MOTORS CORP.

15. Remove the reverse lockout assembly bolt and reverse lockout body.

cardiagn.com

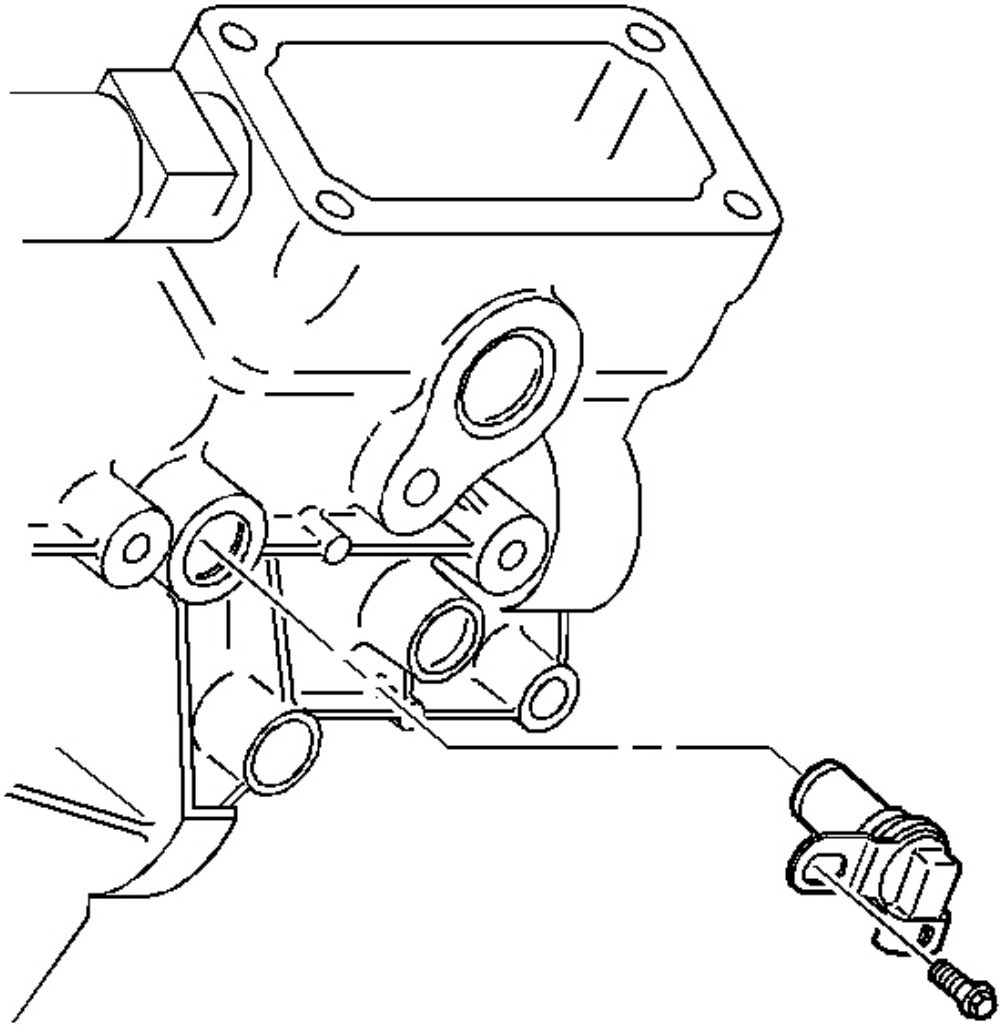

Fig. 81: View Of Vehicle Speed Sensor (VSS)
Courtesy of GENERAL MOTORS CORP.

16. Remove the speed sensor bolt and the speed sensor.

cardiagn.com

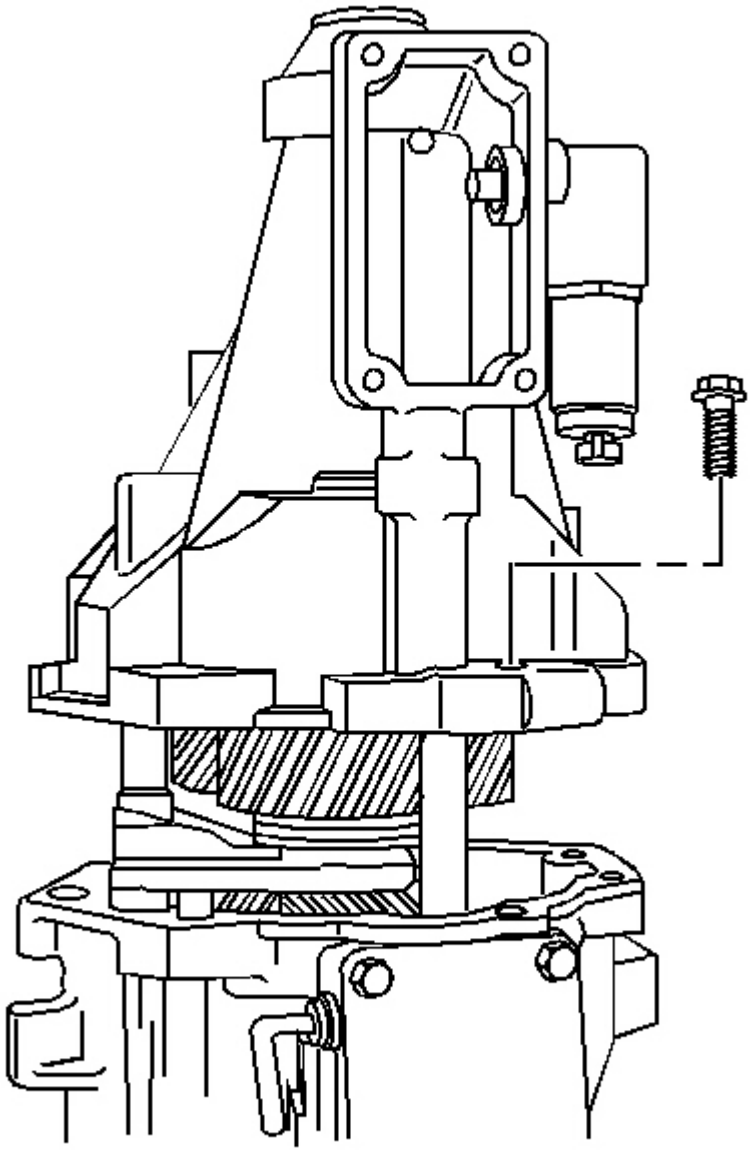

Fig. 82: View Of Extension Housing Bolts & Extension Housing
Courtesy of GENERAL MOTORS CORP.

17. Remove the rear extension housing bolts and the rear extension housing.

cardiagn.com

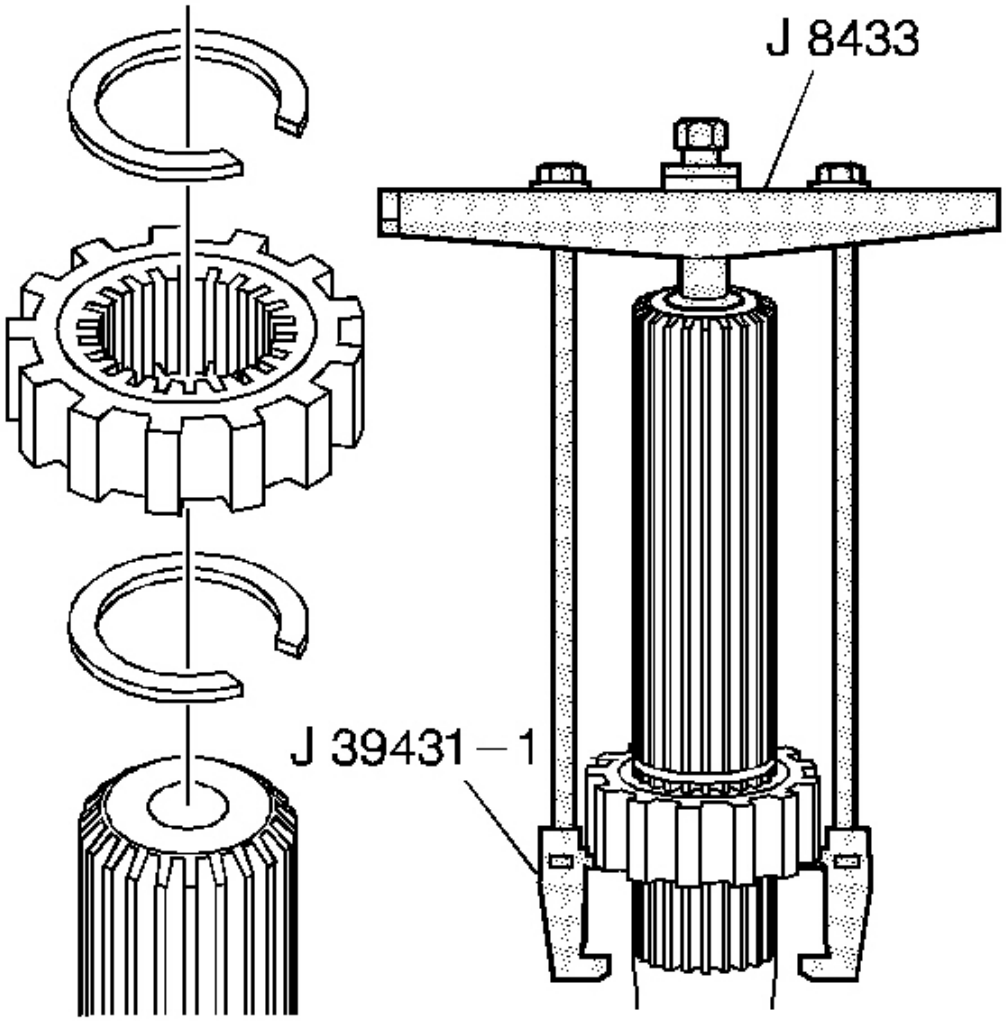

Fig. 83: Locating Speed Sensor Reluctor Wheel & Retaining Ring
Courtesy of GENERAL MOTORS CORP.

18. Remove the speed sensor reluctor wheel retaining ring.
19. Remove the speed sensor reluctor wheel using **J 39431-1** and **J 8433** .
20. Remove the speed sensor reluctor wheel retaining ring.

Reverse Speed Gear Removal

cardiagn.com

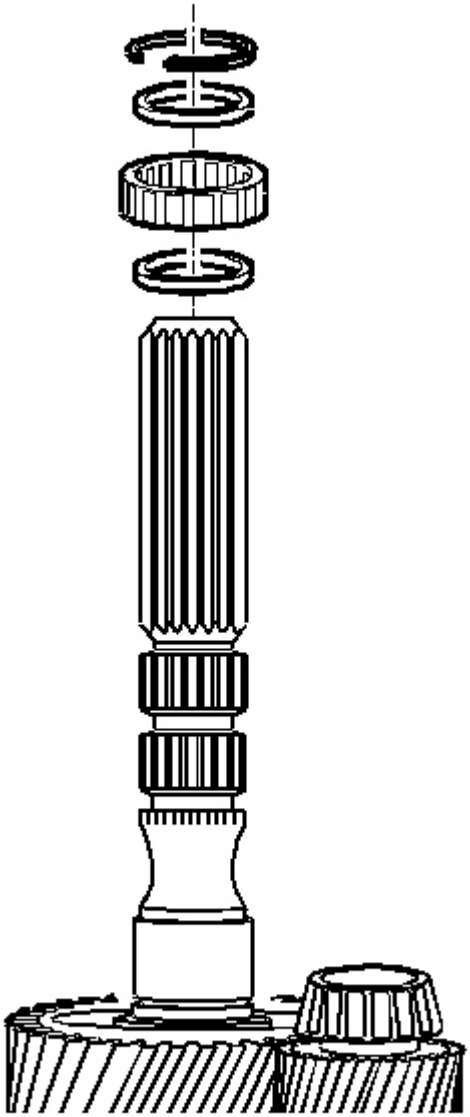

Fig. 84: View Of Mainshaft Rear Roller Bearing, Rear Bearing Retainer Ring & Spacers
Courtesy of GENERAL MOTORS CORP.

1. Remove the rear bearing retainer ring.
2. Remove the spacer.
3. Remove the mainshaft rear roller bearing.
4. Remove the spacer.

cardiagn.com

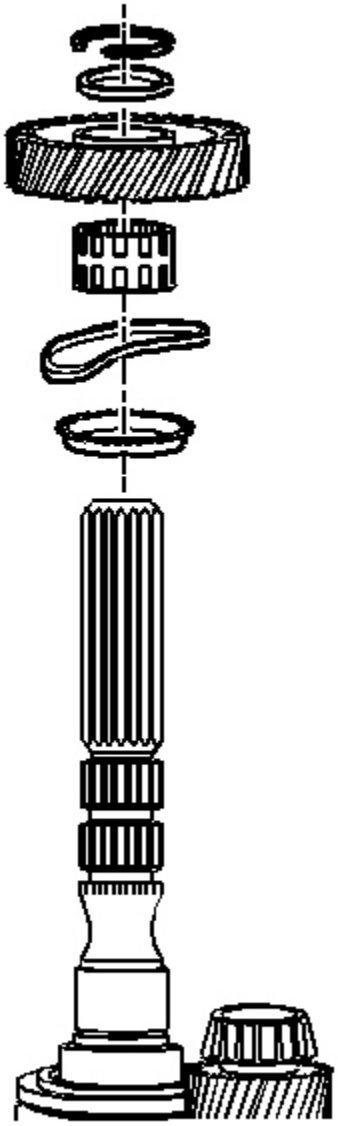

Fig. 85: Identifying Reverse Speed Gear Components
Courtesy of GENERAL MOTORS CORP.

5. Remove the retainer ring.
6. Remove the reverse gear thrust washer.
7. Remove the reverse gear.
8. Remove the reverse gear caged needle bearing.

cardiagn.com

9. Remove the wave washer.
10. Remove the reverse gear synchronizer blocking ring.

Reverse Shift Fork Removal

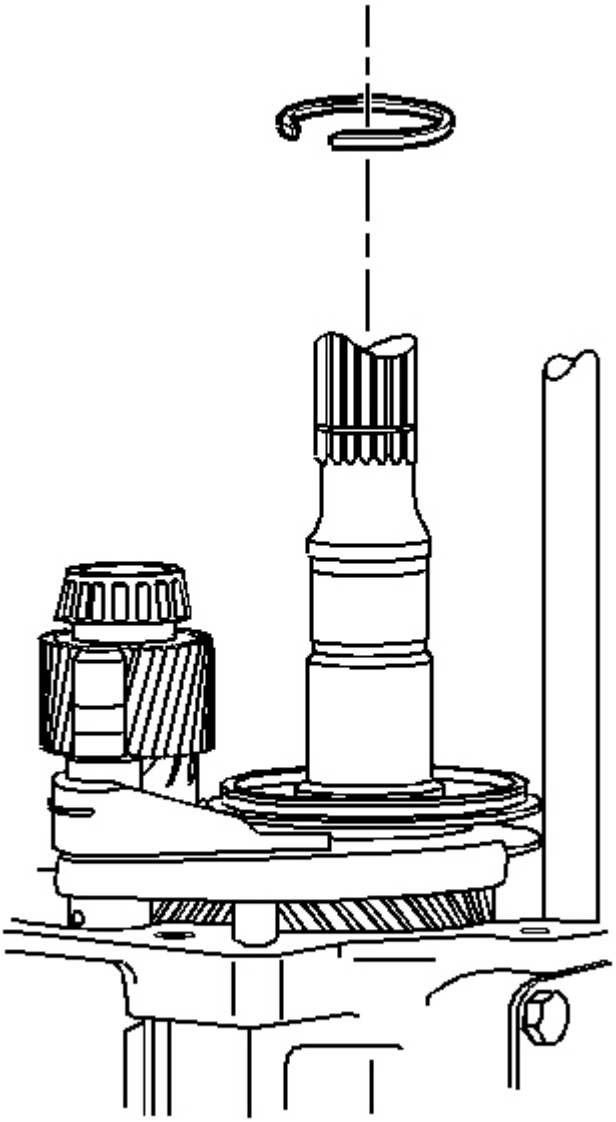

Fig. 86: View Of Reverse Synchronizer Retainer Ring
Courtesy of GENERAL MOTORS CORP.

cardiagn.com

1. Remove the reverse synchronizer retainer ring.

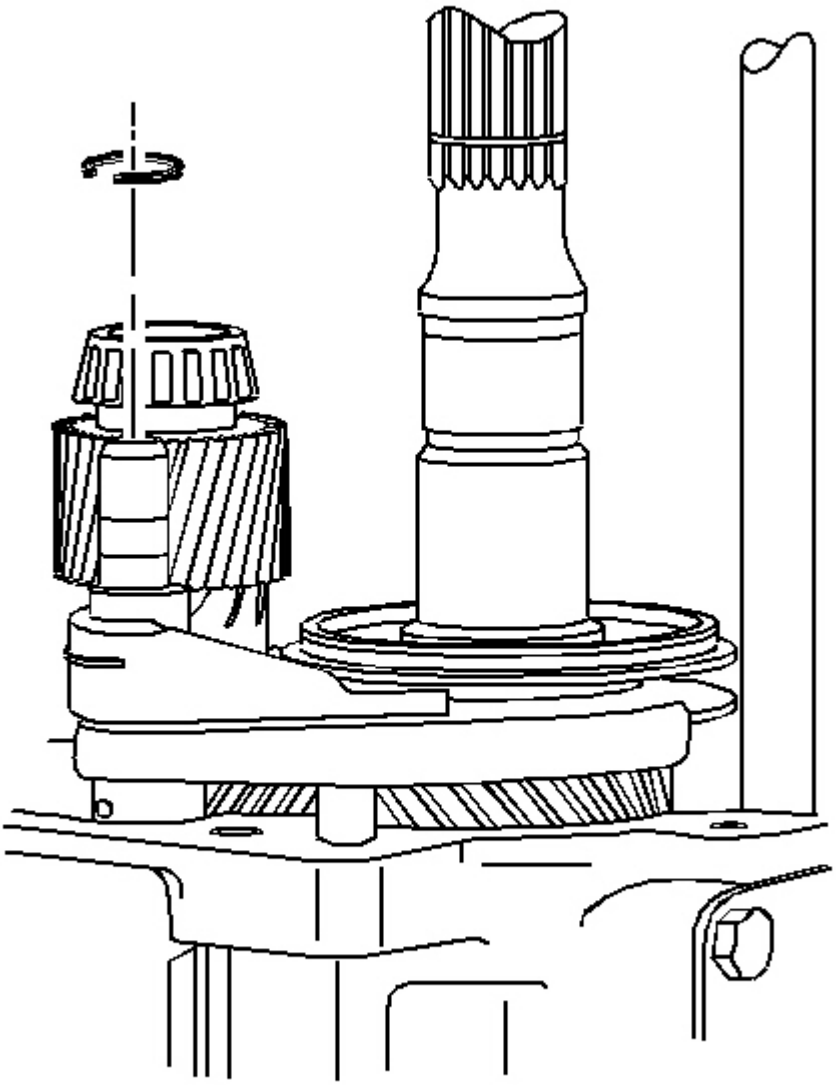

Fig. 87: Locating Shift Fork Retainer Ring
Courtesy of GENERAL MOTORS CORP.

2. Remove the reverse shift fork retainer ring. Discard the retainer ring.

cardiagn.com

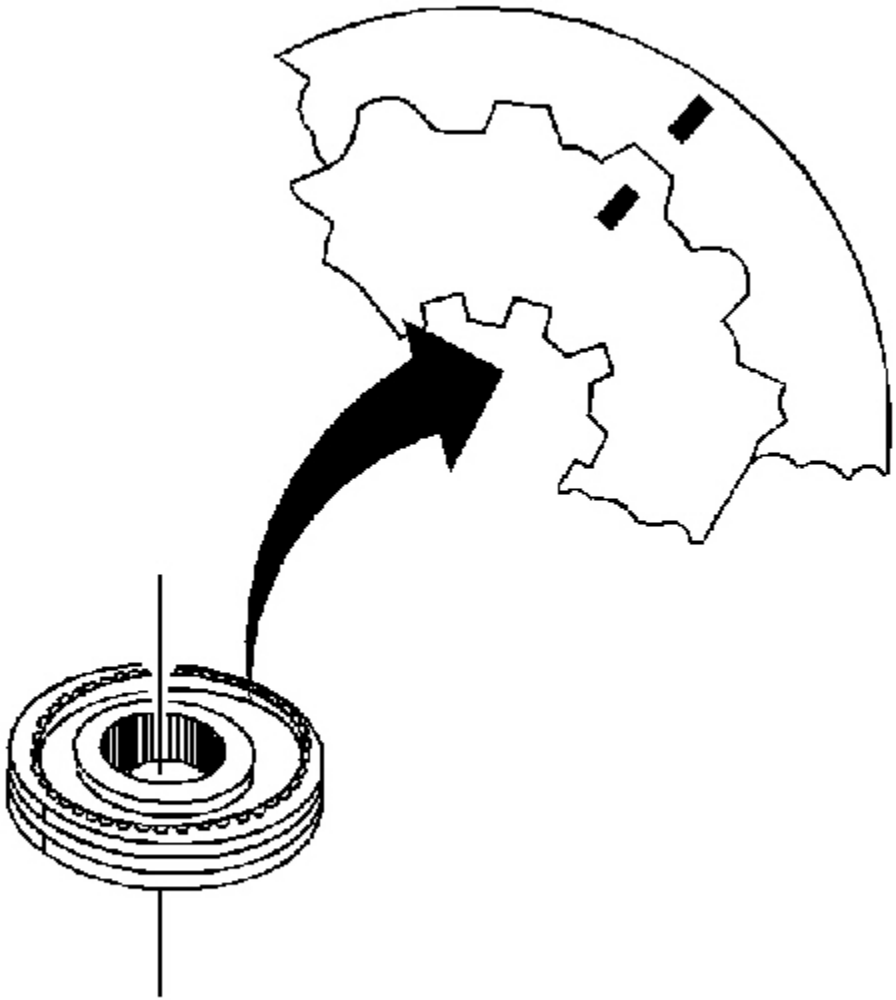

Fig. 88: Identifying Speed Gear Synchronizer Assembly Scribe Marks
Courtesy of GENERAL MOTORS CORP.

3. Scribe a mark on the synchronizer hub and on the sleeve. This will help you to reinstall the parts in the same position.

cardiagn.com

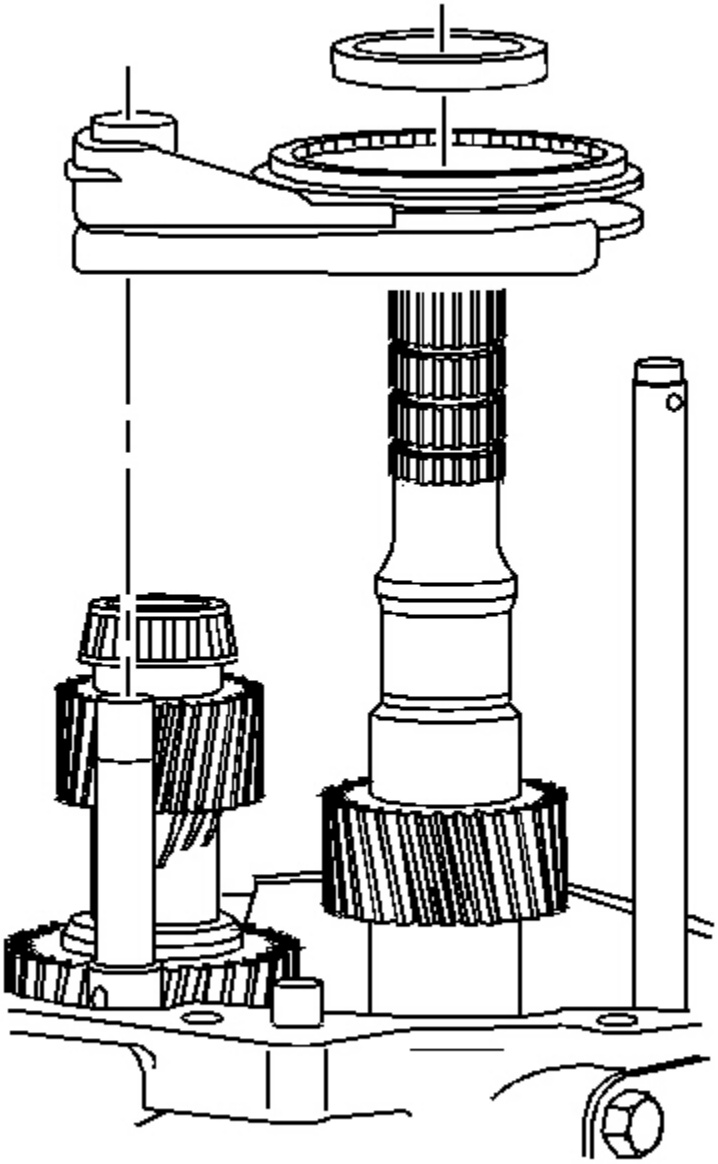

Fig. 89: Installing/Removing Reverse Shift Fork, Synchronizer & Thrust Washer
Courtesy of GENERAL MOTORS CORP.

4. Remove the following parts in order:
    1. The thrust washer
    2. The reverse synchronizer assembly and the shift fork

cardiagn.com

5th/6th Speed Driven Gear Removal

Tools Required

- **J 8433** Universal Bridge Puller. See **Special Tools** .
- **J 39431-1** Gear Remover. See **Special Tools** .

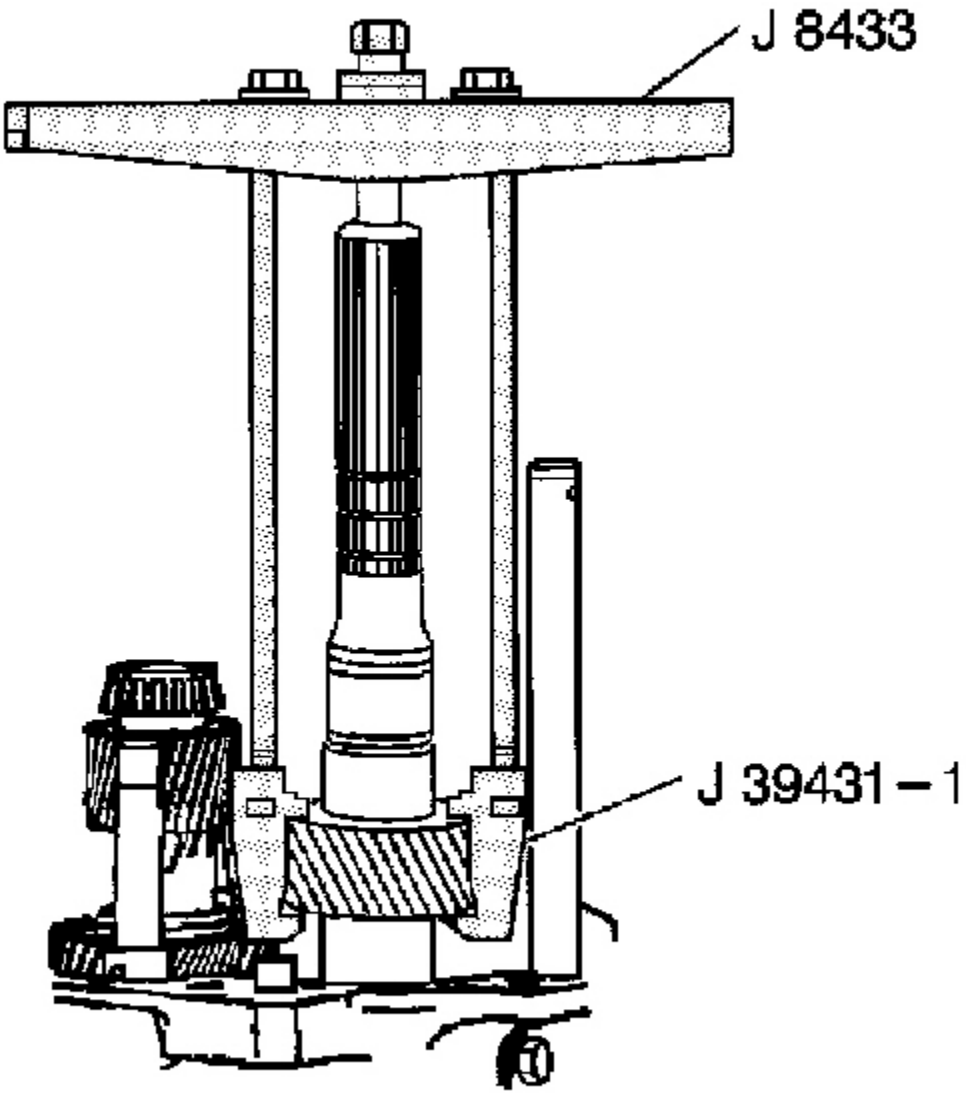

Fig. 90: Removing 5th/6th Speed Driven Gear Using J 8433 & J 39431-1

cardiagn.com

Courtesy of GENERAL MOTORS CORP.

Remove the 5th/6th speed driven gear, using the **J 8433** and the **J 39431-1** .

Countershaft Extension Removal

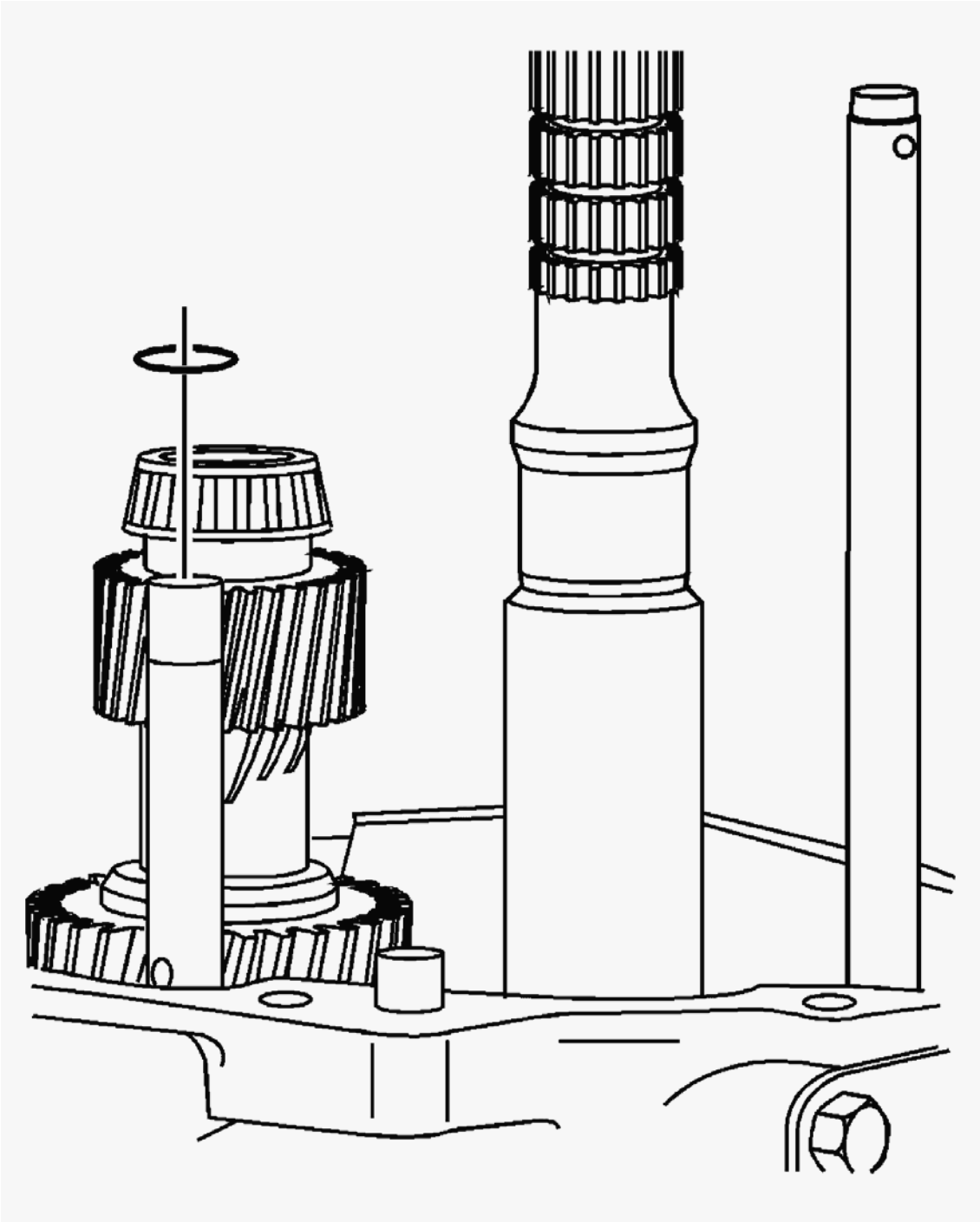

Fig. 91: View Of 5th/6th Shift Fork Retainer Ring
Courtesy of GENERAL MOTORS CORP.

cardiagn.com

1. Remove the 5th/6th speed shift fork retainer ring.

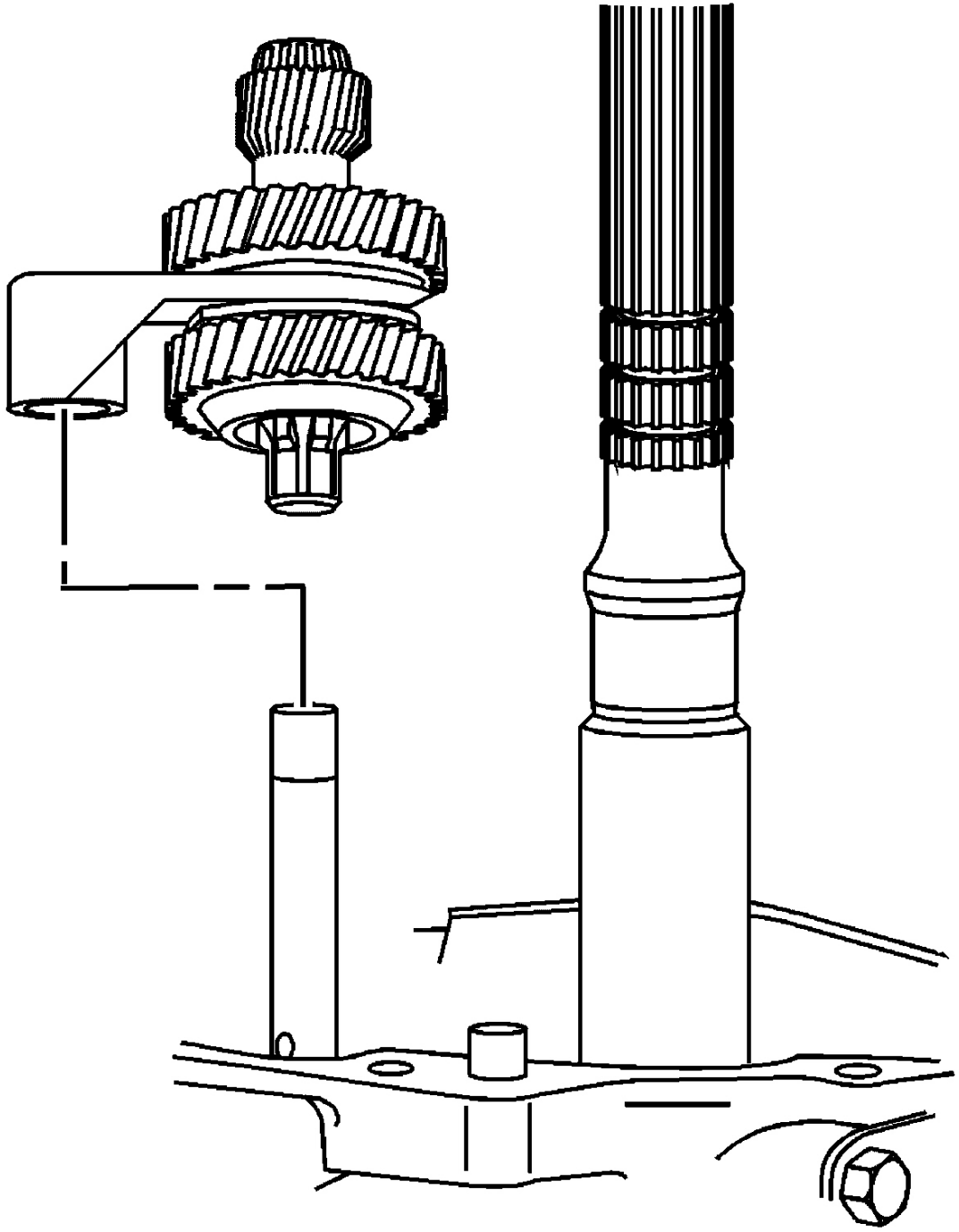

Fig. 92: Installing/Removing Countershaft Extension Assembly & 5th/6th Shift Fork
Courtesy of GENERAL MOTORS CORP.

cardiagn.com

2. Rotate the transmission in the horizontal position with the guide plate up.
3. Remove the countershaft extension assembly with the 5th/6th speed shift fork.

Tools Required

J 41099 Reverse Solenoid Socket. See **Special Tools** .

Transmission Case Removal

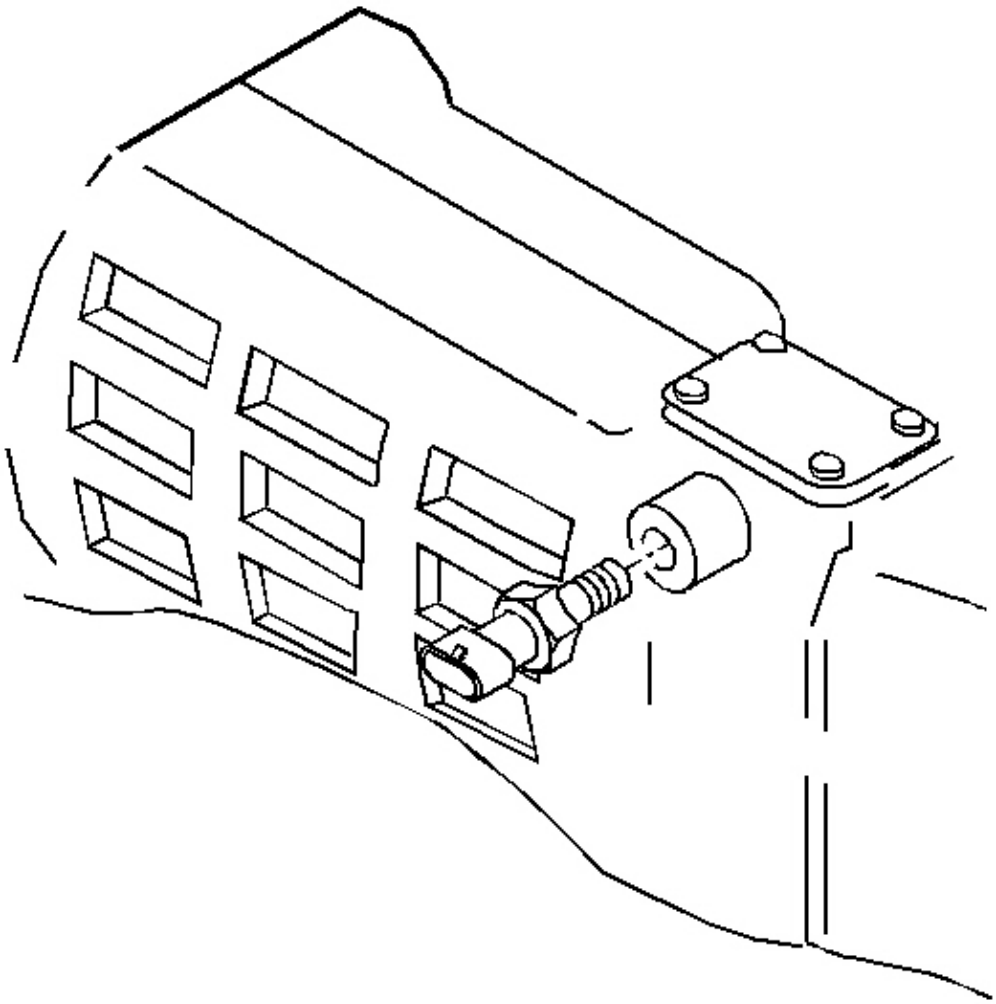

Fig. 93: View Of Computer Aided Gear Select Solenoid
Courtesy of GENERAL MOTORS CORP.

cardiagn.com

1. Remove the computer aided gear select solenoid.

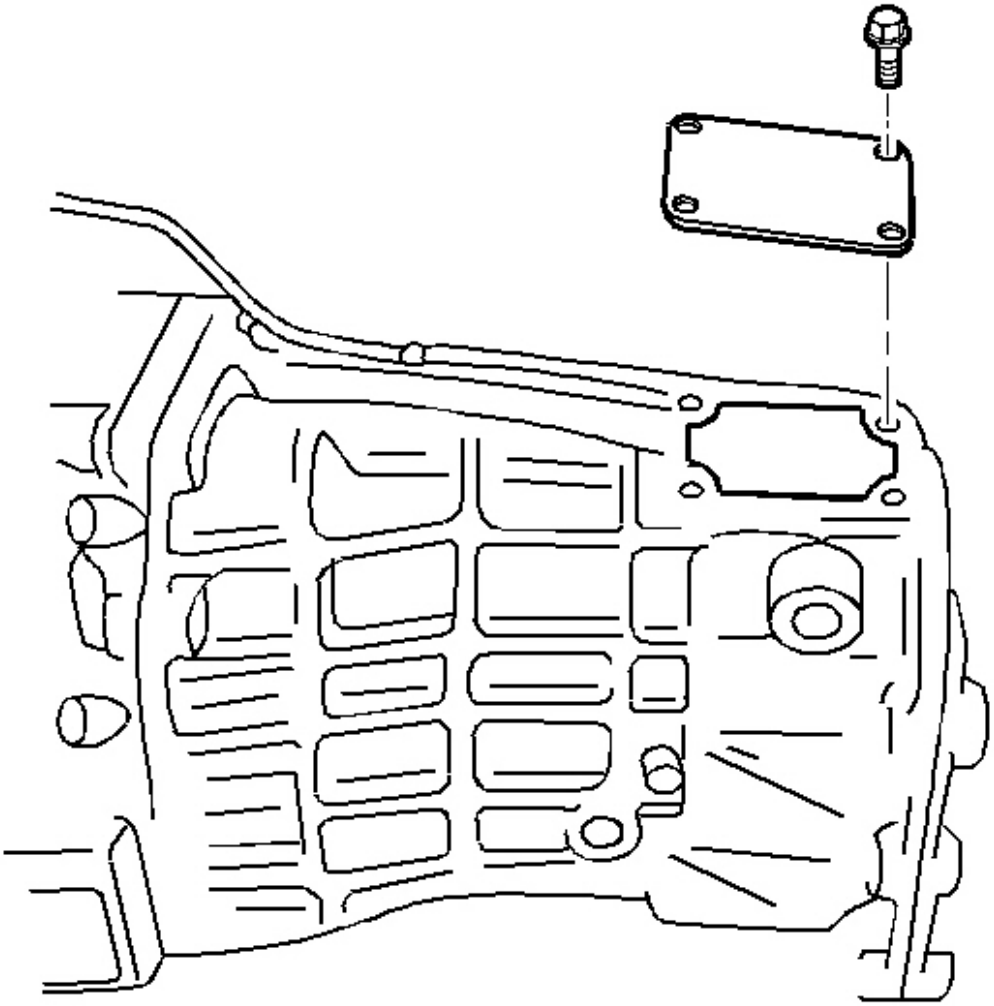

Fig. 94: Installing/Removing Cover Plate & Cover Plate Bolts
Courtesy of GENERAL MOTORS CORP.

2. Remove the shifter cover plate retainer bolts.
3. Remove the shifter cover plate.

cardiagn.com

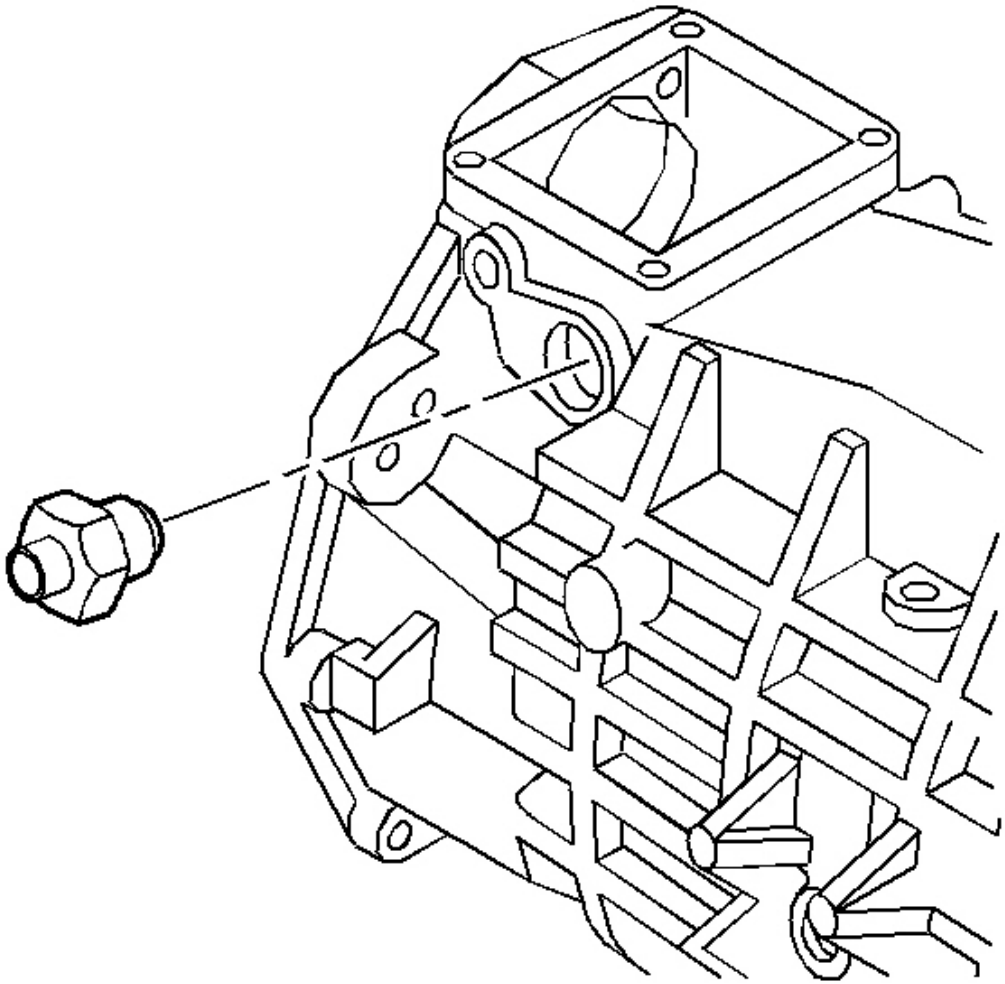

Fig. 95: View Of Shift Detent Assembly
Courtesy of GENERAL MOTORS CORP.

4. Remove the shift detent assembly.

cardiagn.com

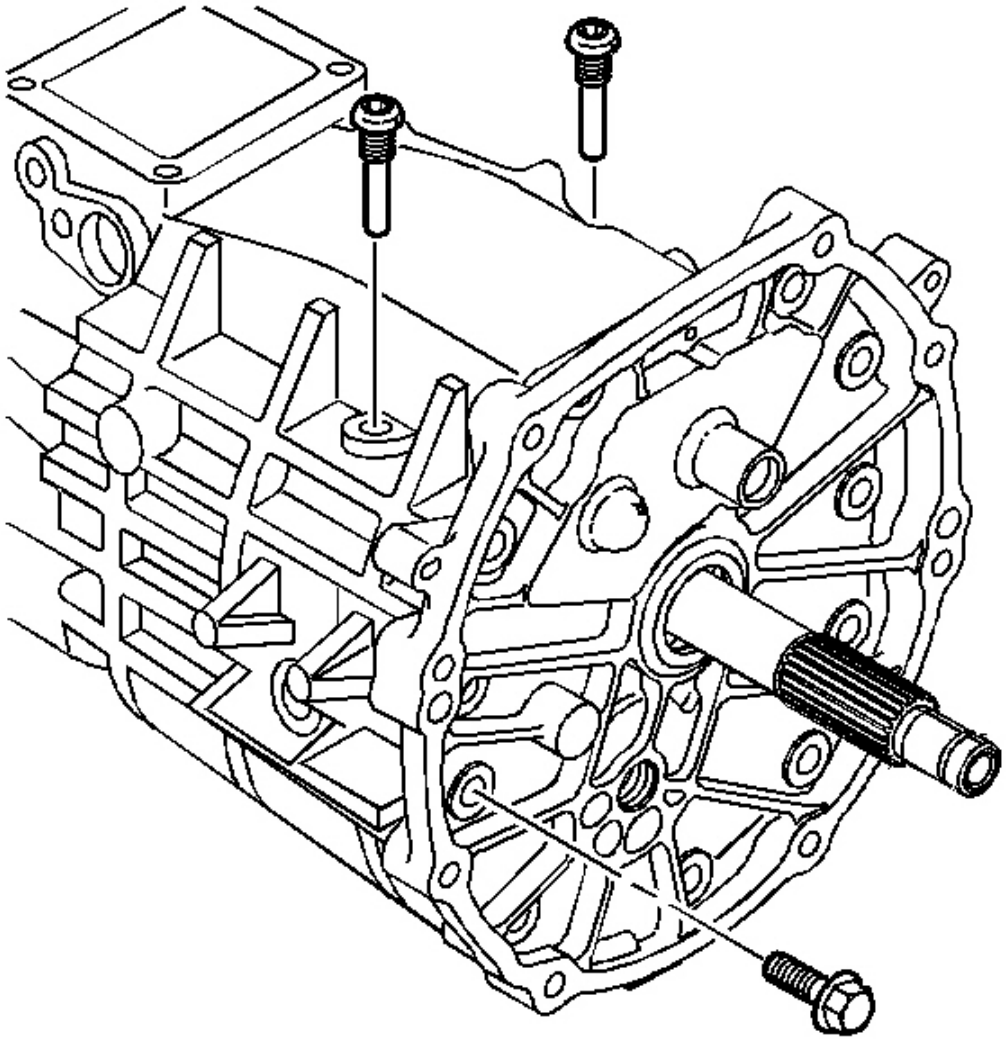

Fig. 96: Installing/Removing Shift Lever Guide Bolts
Courtesy of GENERAL MOTORS CORP.

5. Remove 9 of the 11 adapter plate to transmission case bolts.
6. Rotate the transmission into the vertical position.
7. Remove the last 2 adapter plate to transmission case bolts.
8. Remove the shift lever guide bolts.

cardiagn.com

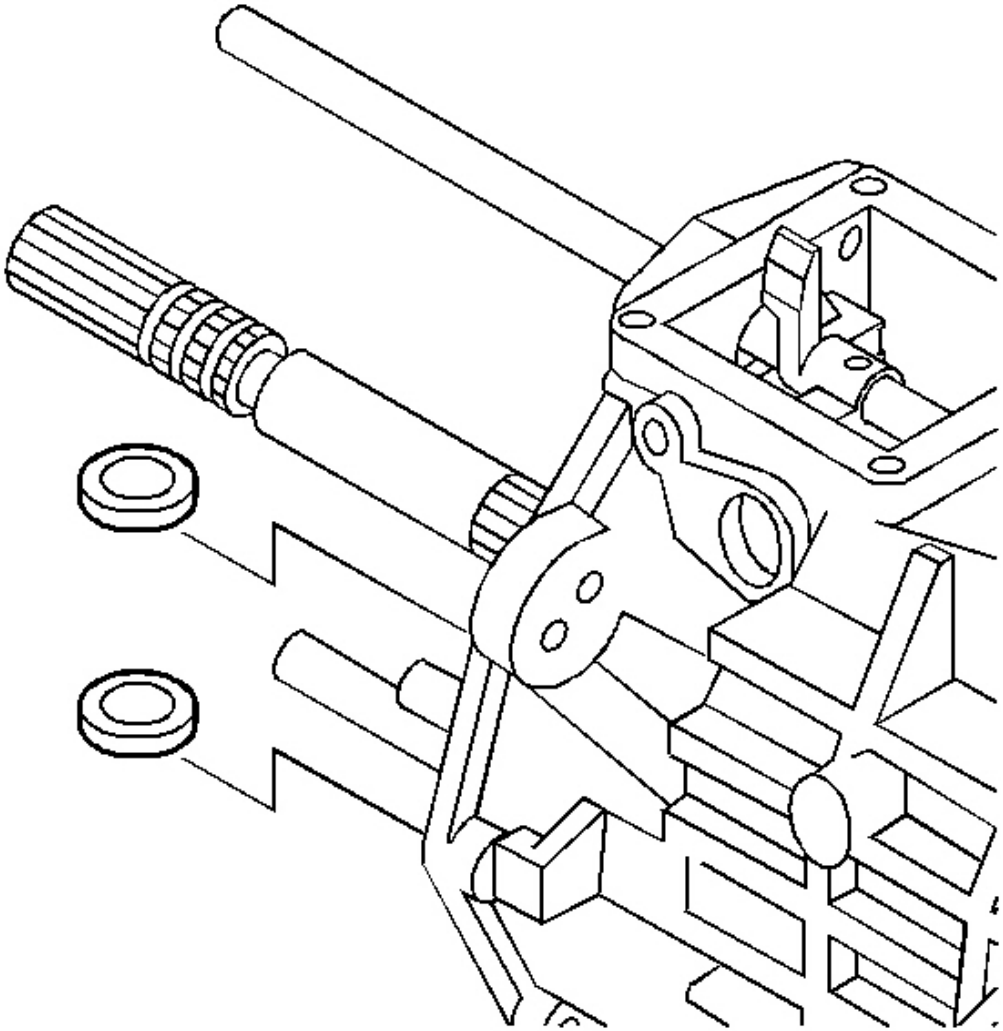

Fig. 97: View Of Transmission Magnets
Courtesy of GENERAL MOTORS CORP.

9. Remove the magnets from the transmission case.

cardiagn.com

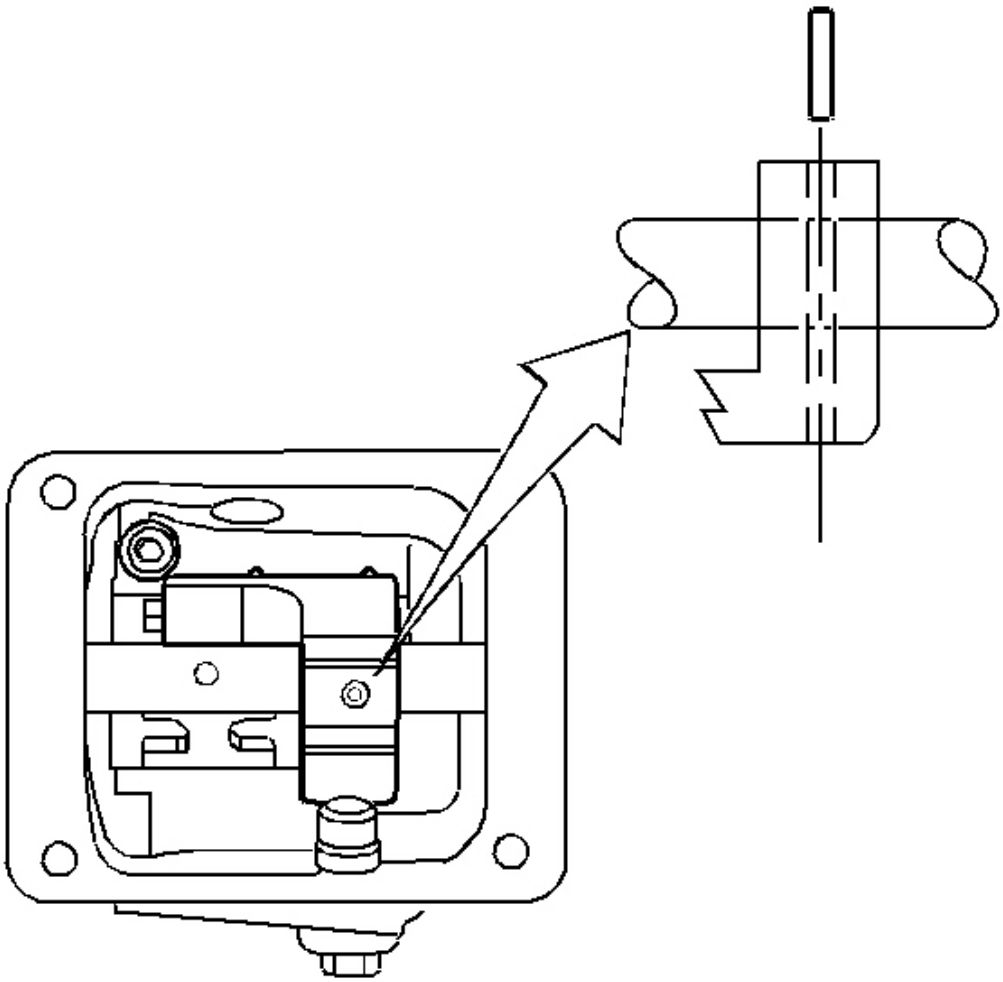

Fig. 98: Installing/Removing Offset Lever Roll Pin
Courtesy of GENERAL MOTORS CORP.

10. Remove the offset lever roll pin.

cardiagn.com

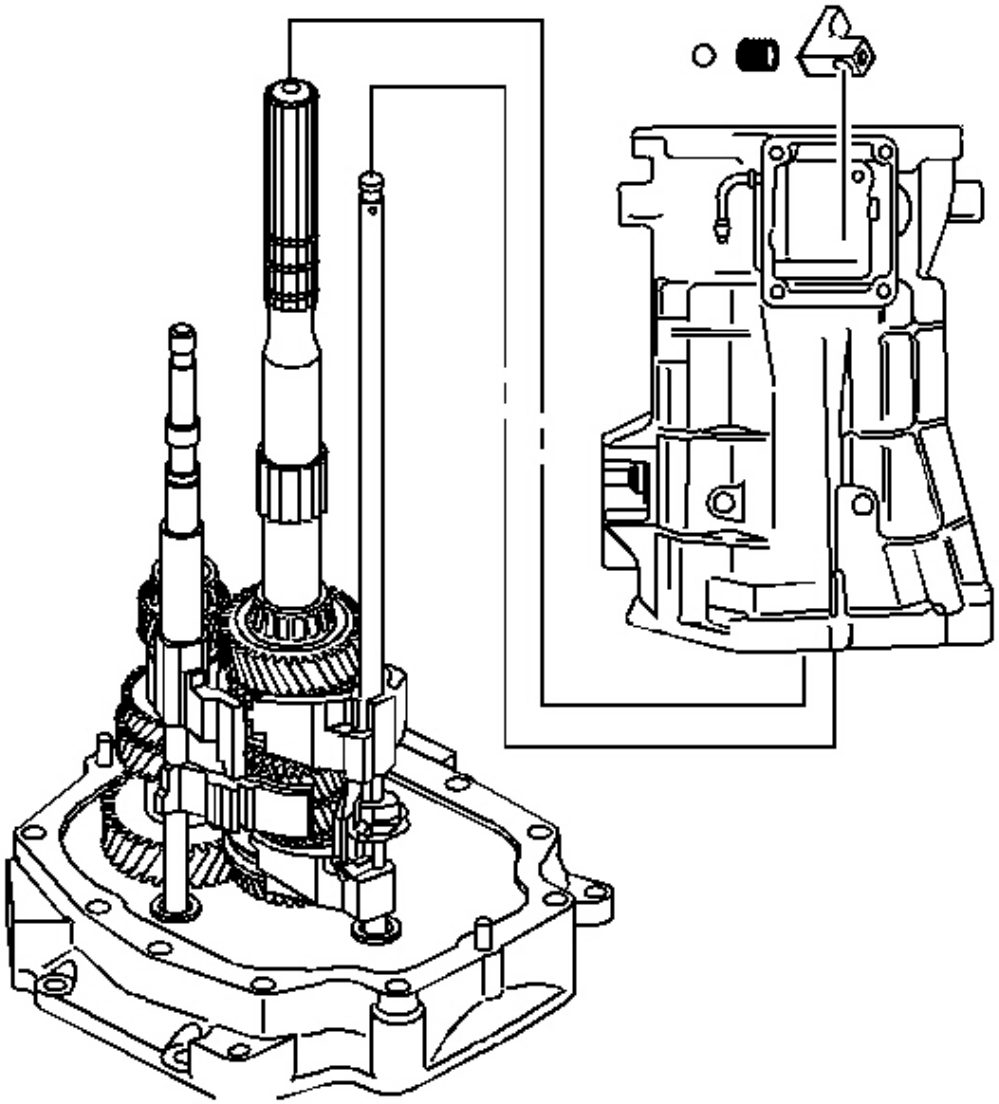

Fig. 99: View Of Offset Lever Components
Courtesy of GENERAL MOTORS CORP.

11. Remove the transmission case and the offset lever together as follows:
    1. Slide the transmission case up and off of the gear clusters and the shift shaft components.
    2. Hold the offset lever against the guide plate in order to prevent the release of the detent ball and the spring.
    3. Remove the offset lever from the transmission case.

cardiagn.com

Guide Plate Removal

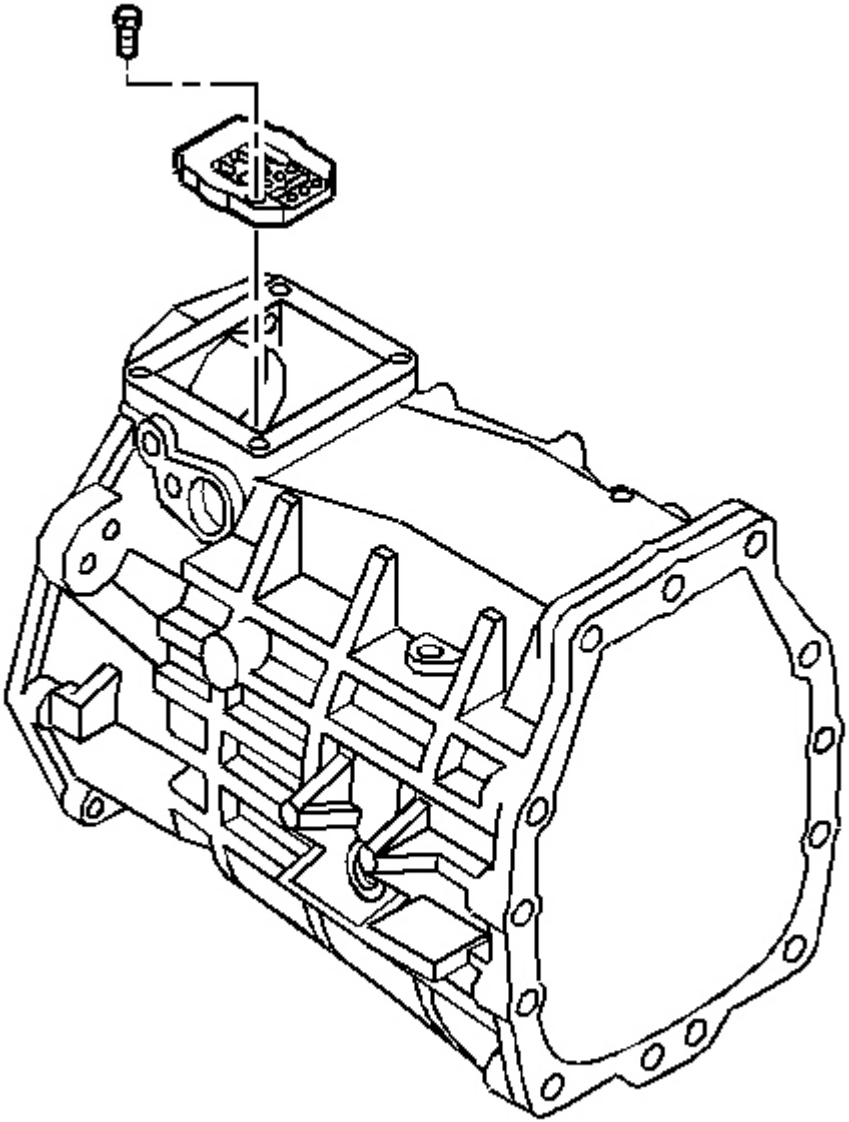

Fig. 100: Locating Detent Guide Plate & Attaching Bolts
Courtesy of GENERAL MOTORS CORP.

1. Remove the detent guide plate attaching bolts.
2. Remove the detent guide plate.

cardiagn.com

Reverse Lockout Assembly Disassemble

1. Disassemble the reverse lockout assembly in the following sequence:
2. Remove the O-ring (8) from the body (1).

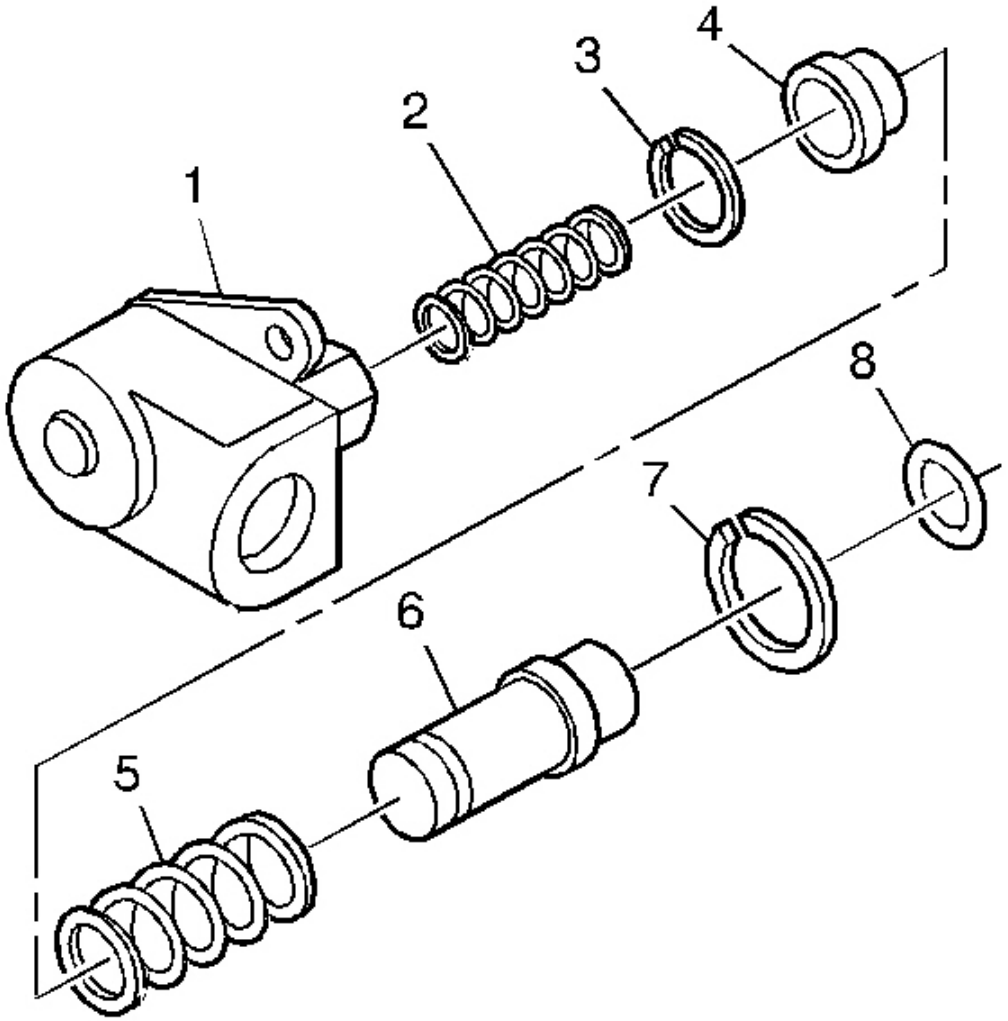

Fig. 101: Exploded View Of Reverse Lockout Assembly
Courtesy of GENERAL MOTORS CORP.

CAUTION: The reverse lockout assembly is under spring pressure. Exercise caution when removing the retainer ring, as bodily injury may result.

cardiagn.com

3. Remove the retainer ring (7) from the body (1).
4. Remove the reverse lockout inner spring (2).
5. Compress the reverse lockout plunger (6) and the collar (4) in a vise and remove the retainer ring (3).
6. Remove the reverse lockout plunger (6).
7. Remove the reverse lockout outer spring (5).
8. Remove the reverse lockout collar (4).

Shift Shaft Assemblies and Gear Cluster Removal

1. Rotate the 5th/6th and the reverse shift shaft levers off the shift interlock plate.
2. Remove the 5th/6th and the reverse shift shaft assembly.

cardiagn.com

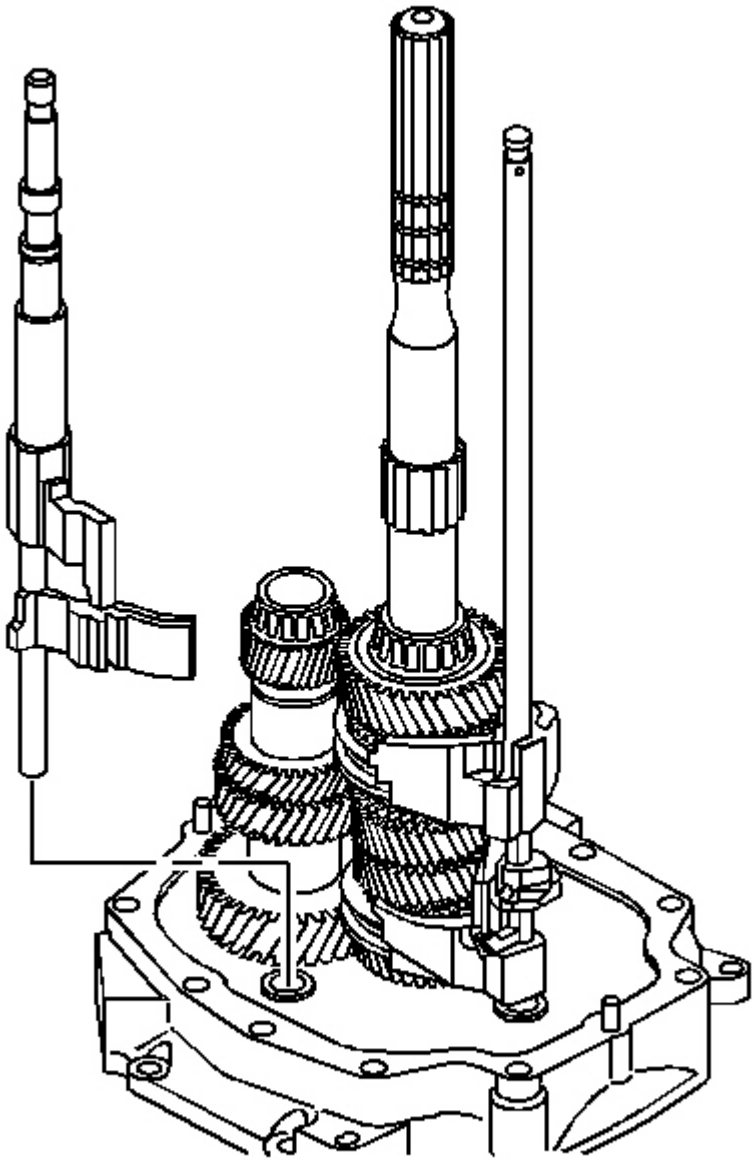

Fig. 102: View Of 5th/6th & Reverse Shift Shaft
Courtesy of GENERAL MOTORS CORP.

cardiagn.com

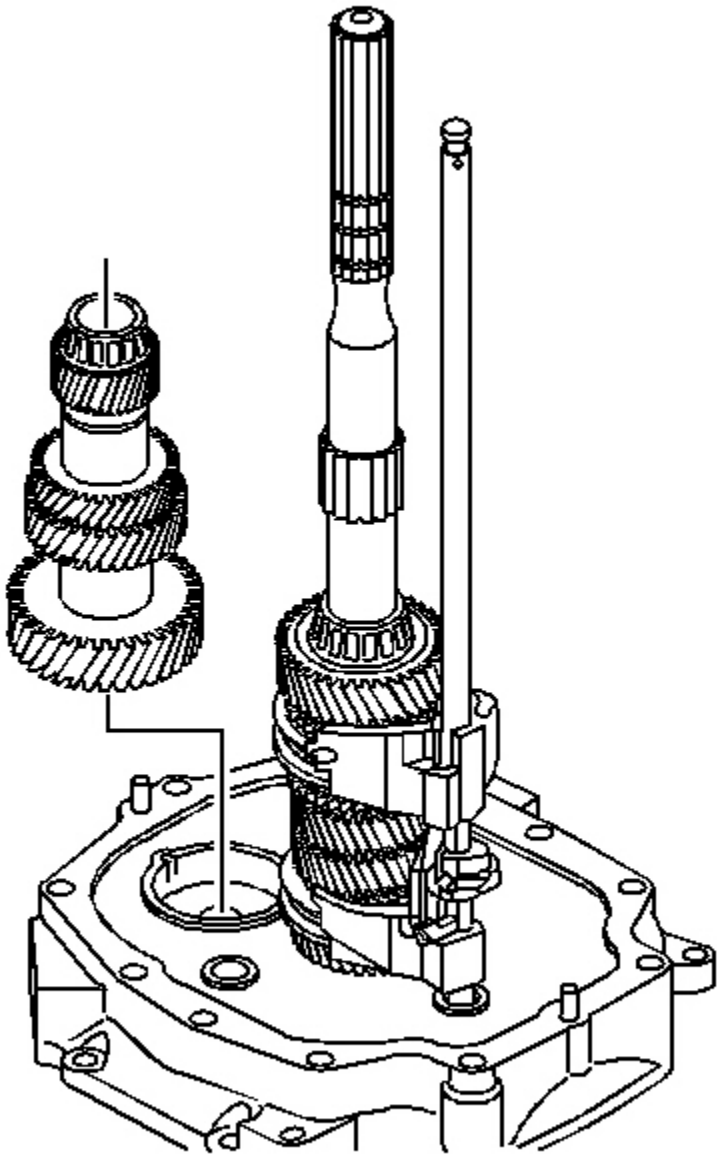

Fig. 103: Identifying Countershaft Assembly
Courtesy of GENERAL MOTORS CORP.

3. Remove the countershaft. Lift up the mainshaft enough in order to remove the countershaft.

cardiagn.com

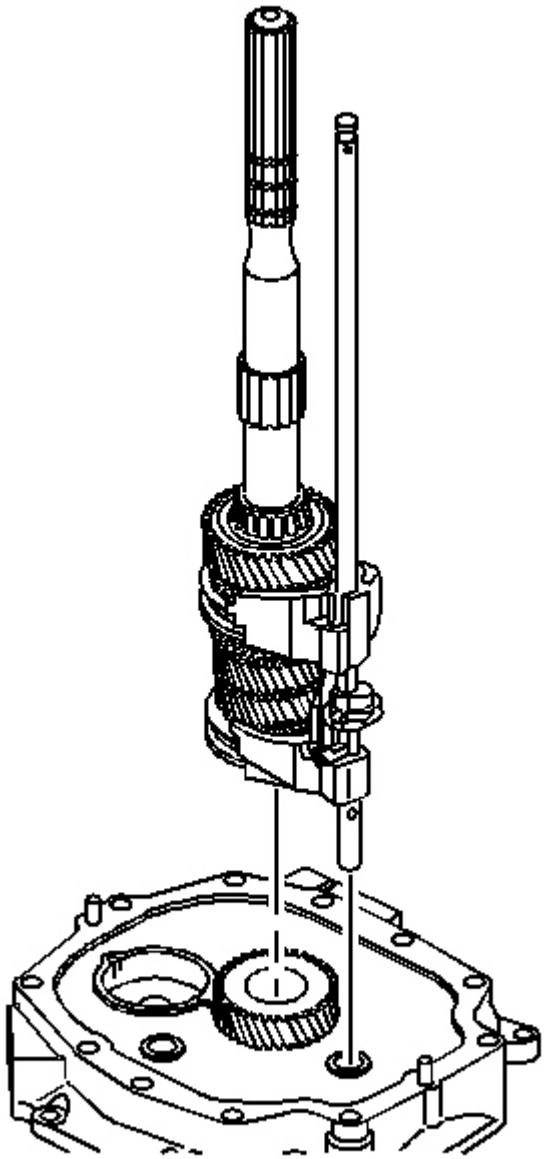

Fig. 104: Installing/Removing Mainshaft & Shift Shaft Assembly
Courtesy of GENERAL MOTORS CORP.

4. Remove the mainshaft and the shift shaft components as an assembly.
5. Remove the shift shaft assembly from the mainshaft.

cardiagn.com

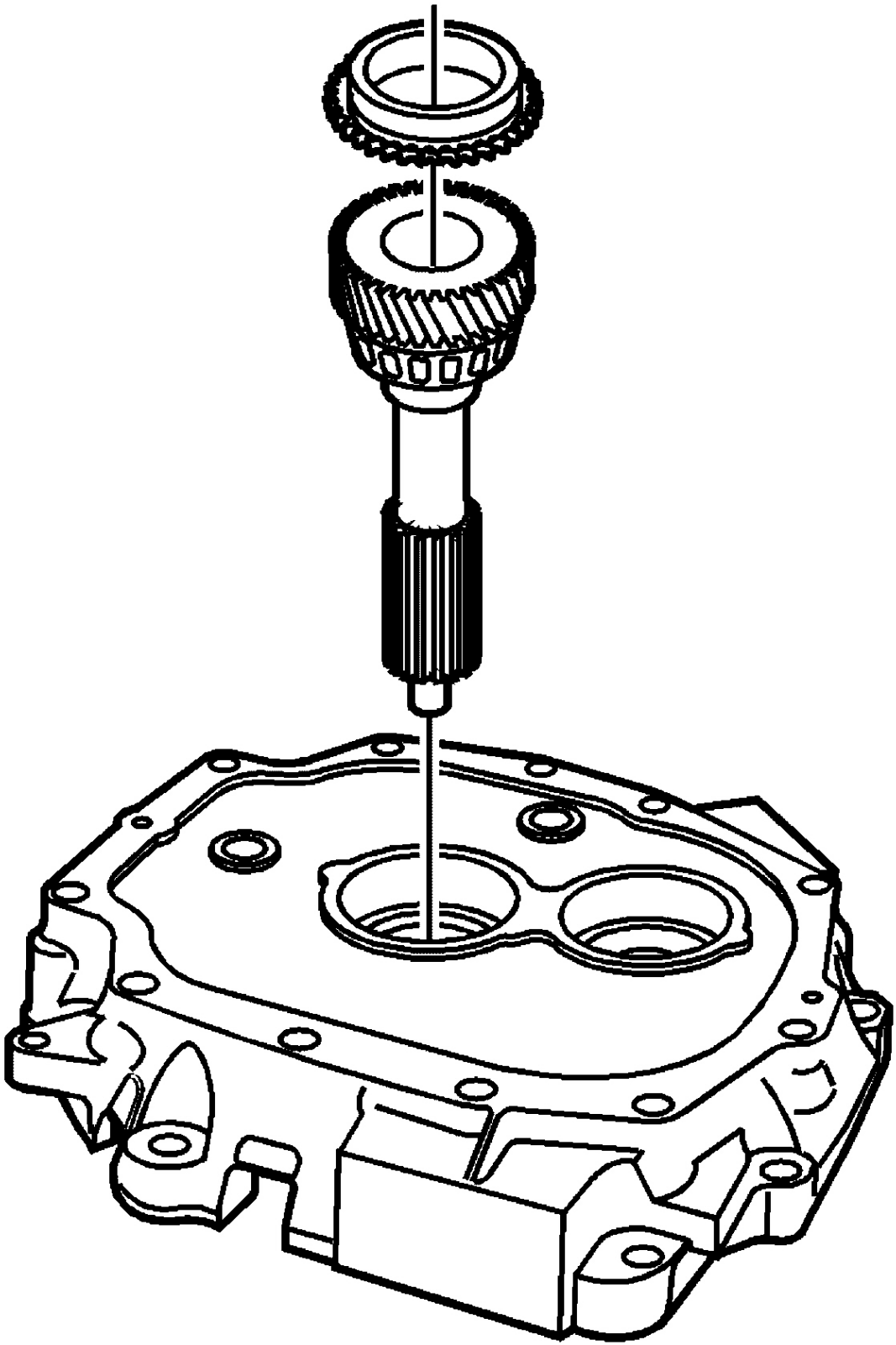

cardiagn.com

Fig. 105: View Of 4th Speed Gear Blocker Ring & Input Shaft
Courtesy of GENERAL MOTORS CORP.

6. Remove the 4th speed gear blocker ring.
7. Remove the input shaft.

MAINSHAFT AND INPUT SHAFT DISASSEMBLE

Mainshaft

Tools Required

- **J 36513** Split Plate. See **Special Tools** .
- **J 39442** Press Adapter. See **Special Tools** .
- **J 39443** Split Plate. See **Special Tools** .
- **J 39473** Mainshaft Bearing Installer. See **Special Tools** .

1. Install the input shaft in the adapter plate.

IMPORTANT: Measure the 4th speed gear synchronizer wear gap before disassembling the mainshaft.

2. Install the mainshaft on the input shaft.

cardiagn.com

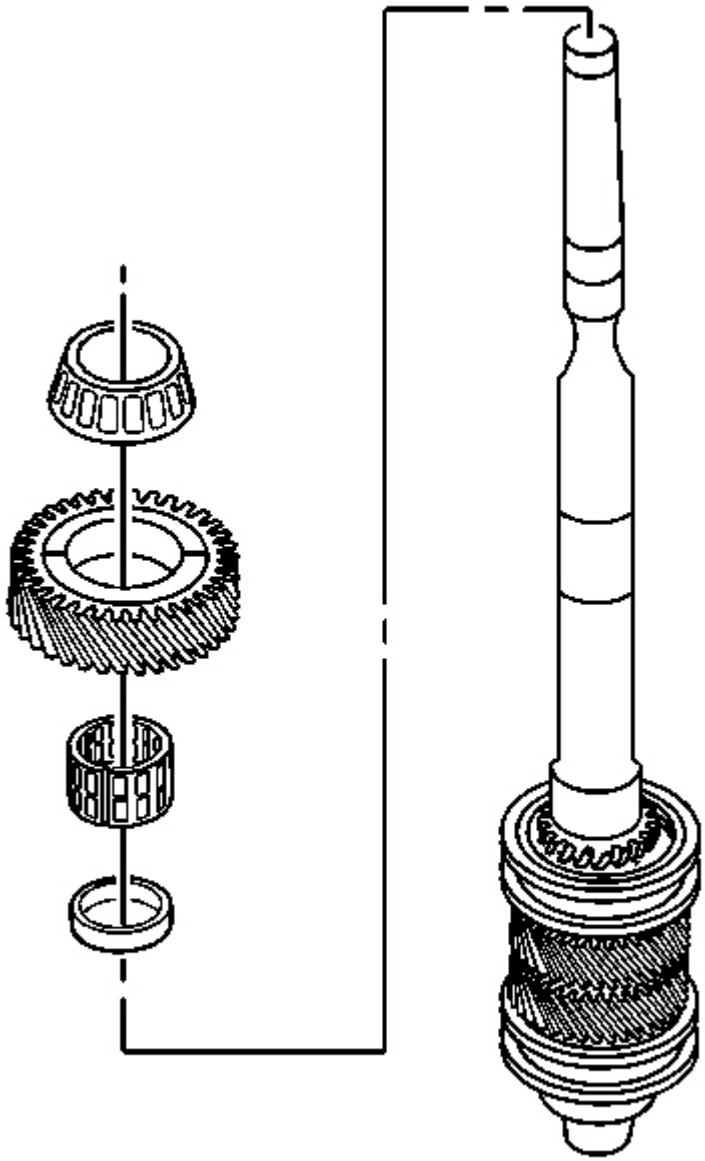

Fig. 106: View Of 1st Speed Gear Components
Courtesy of GENERAL MOTORS CORP.

3. Using a feeler gauge measure the gap between the 4th speed gear blocking ring and the 4th speed gear.
4. Replace the 4th speed gear friction cone and blocking ring when the gap is less than 1.27 mm (0.050 in).

cardiagn.com

NOTE: **Do not overtighten the J 36513 split plate past the gear teeth or damage to gear may occur.**

5. Using the **J 36513** , close the split plate only enough to support the gear teeth, and the **J 39442** , remove the following parts in order:
    1. If an O-ring is present on the mainshaft, remove and discard the O-ring. The O-ring was used for manufacturing purposes only.
    2. The mainshaft large tapered bearing
    3. The 1st speed gear
    4. The 1st speed gear caged needle bearing
    5. The 1st speed bearing spacer

cardiagn.com

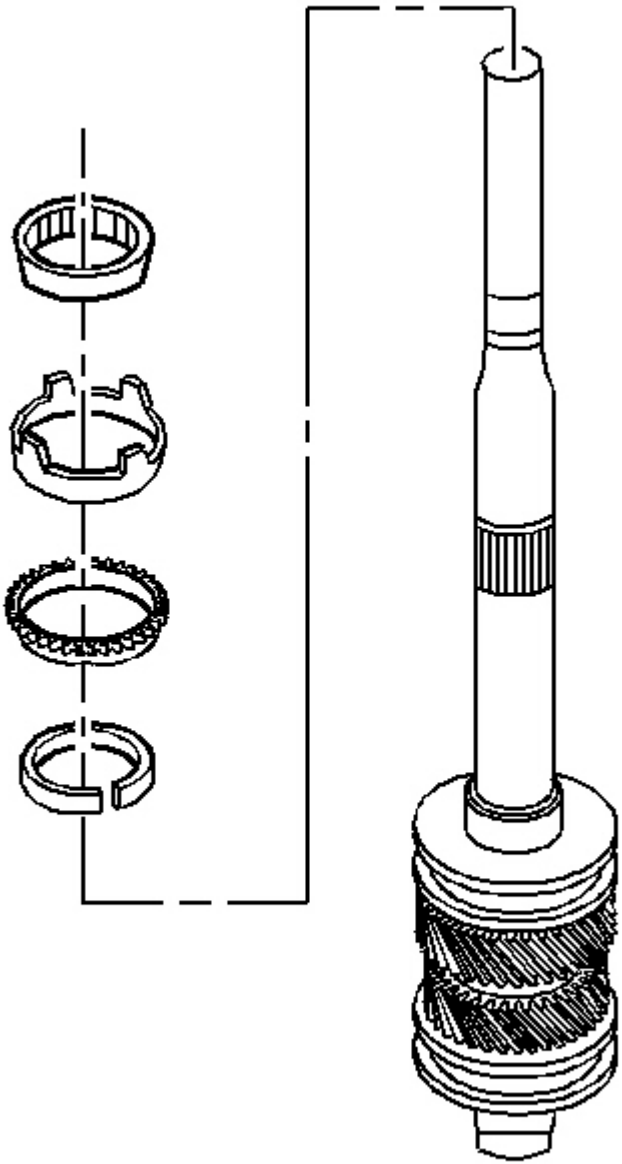

Fig. 107: View Of 1st Speed Gear Cones & Rings
Courtesy of GENERAL MOTORS CORP.

6. Remove the following parts in order:
    1. The 1st speed gear inner cone
    2. The 1st speed gear friction cone

cardiagn.com

3. The 1st speed gear blocking ring
4. The retainer ring

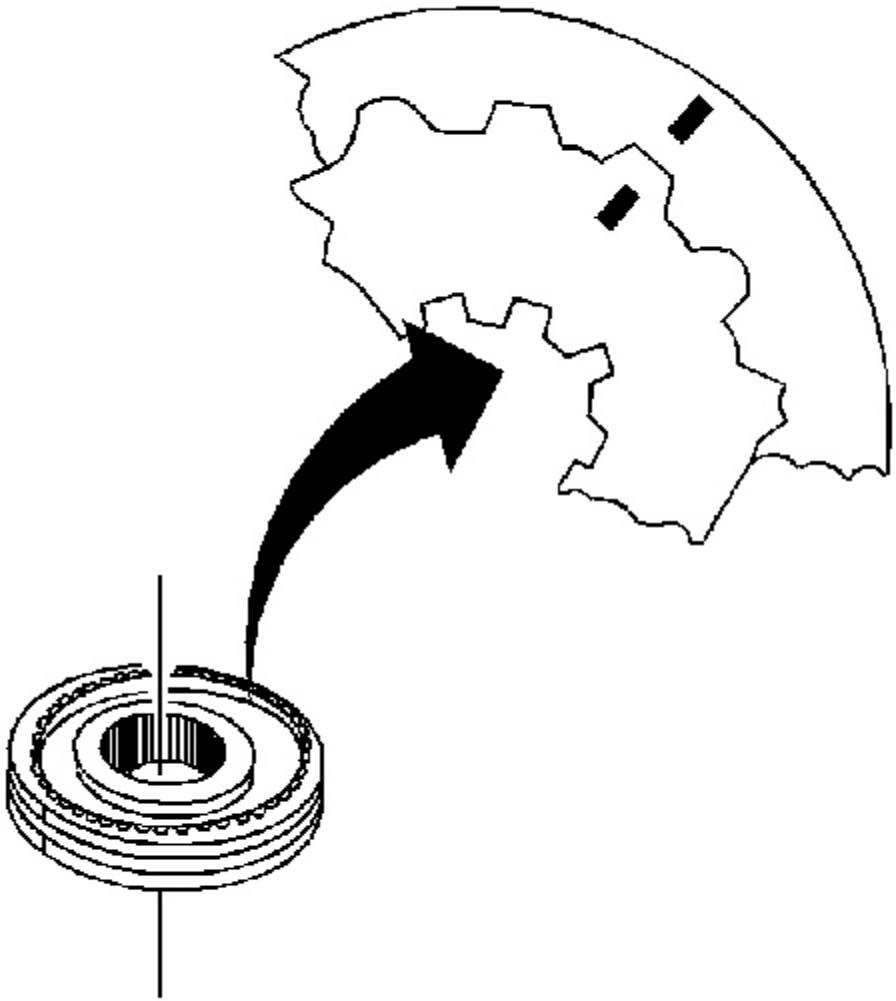

Fig. 108: Identifying Speed Gear Synchronizer Assembly Scribe Marks
Courtesy of GENERAL MOTORS CORP.

IMPORTANT: The synchronizer hubs and sliding sleeves are a selected assembly. Keep these parts together as originally assembled.

7. Scribe a mark on the synchronizer hub and on the sleeve. This will help you to reinstall the parts in the

cardiagn.com

same position.

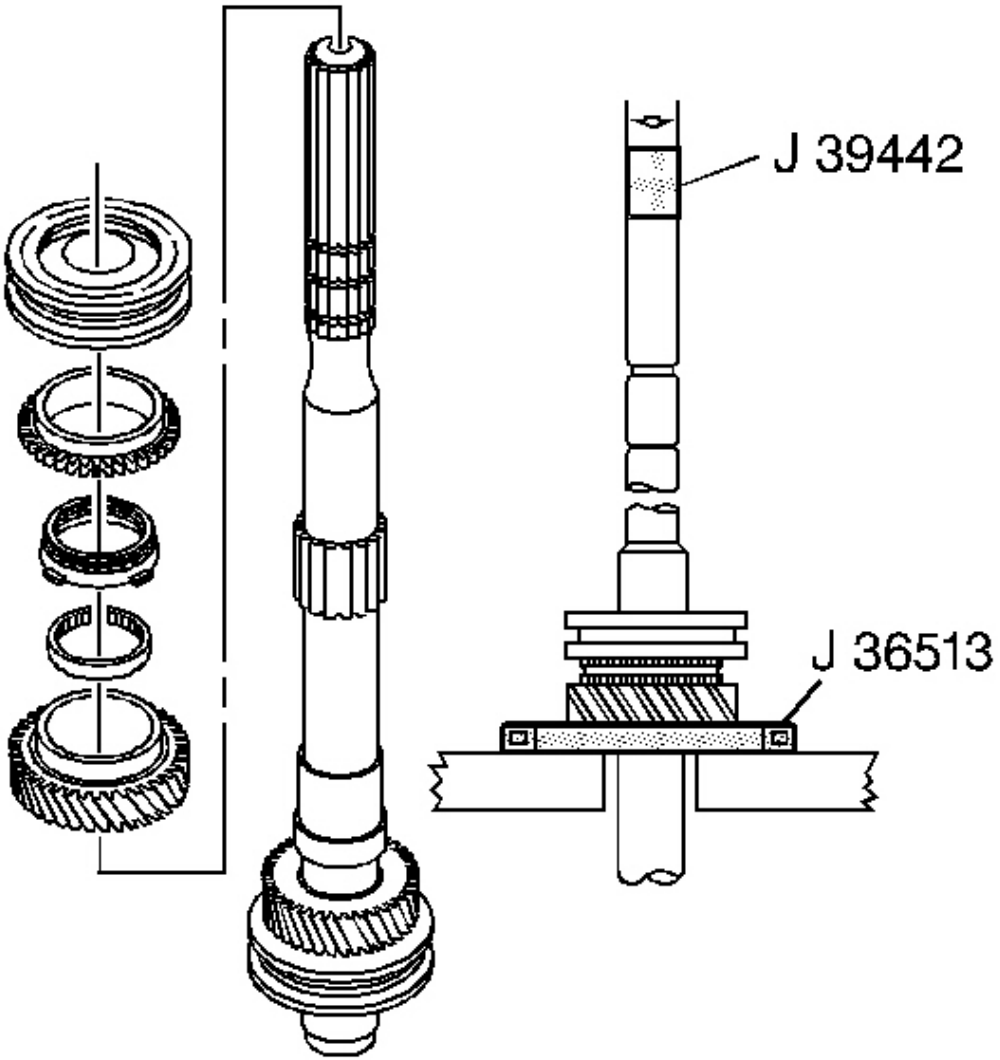

Fig. 109: Locating 2nd Speed Gear Assembly
Courtesy of GENERAL MOTORS CORP.

8. Remove the 2nd speed gear. The 1st/2nd speed synchronizer assembly, the 2nd speed gear blocking ring, the 2nd speed gear friction cone, and the 2nd speed gear inner cone will press off with the 2nd speed gear. Use the **J 36513** in an inverted position, **J 39442** and a hydraulic press.

cardiagn.com

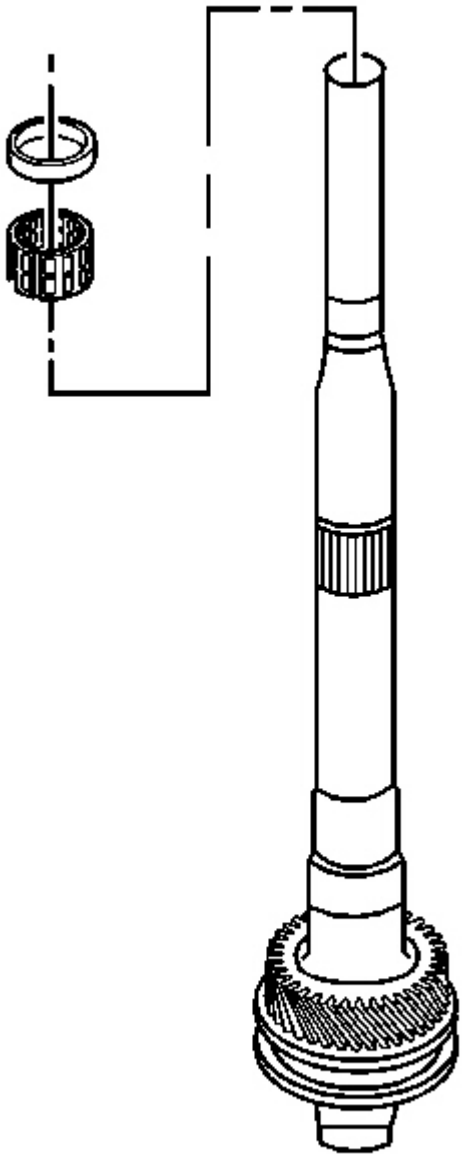

Fig. 110: View Of 2nd Speed Gear Caged Needle Bearing & Bearing Spacer
Courtesy of GENERAL MOTORS CORP.

9. Remove the 2nd speed gear spacer and caged needle bearing.

cardiagn.com

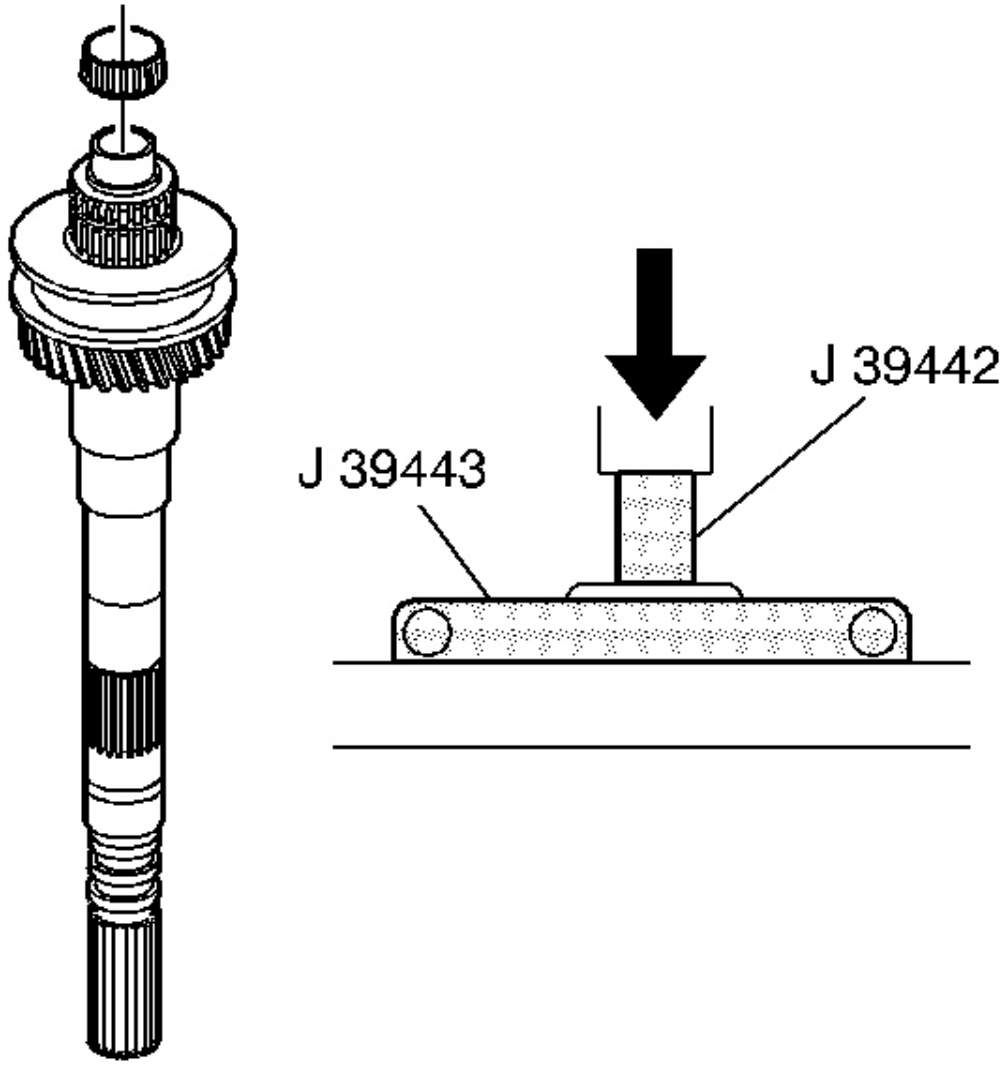

Fig. 111: Removing Mainshaft Small Tapered Bearing Using J 39442 & J 39443
Courtesy of GENERAL MOTORS CORP.

10. Remove the mainshaft small tapered bearing. Use the **J 39442** , the **J 39443** , and a hydraulic press.
11. Discard the small tapered bearing.

cardiagn.com

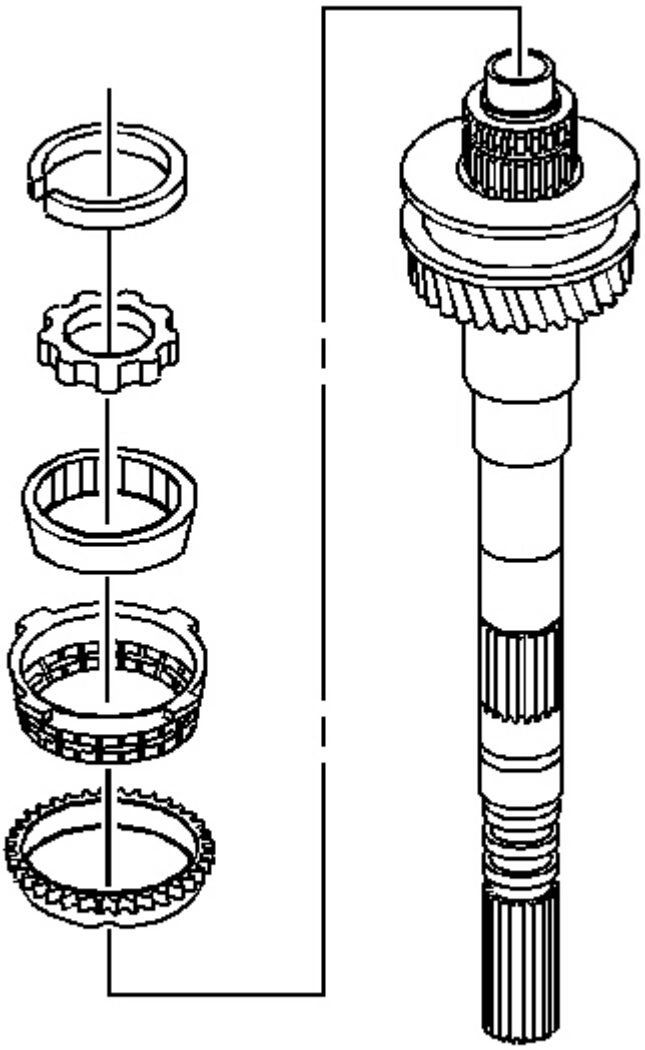

Fig. 112: Exploded View Of 4th Gear Assembly
Courtesy of GENERAL MOTORS CORP.

12. Remove the following parts in order:
    1. Retainer
    2. 4th gear thrust washer
    3. 4th gear inner cone
    4. 4th gear friction cone

cardiagn.com

5. 4th gear blocking ring

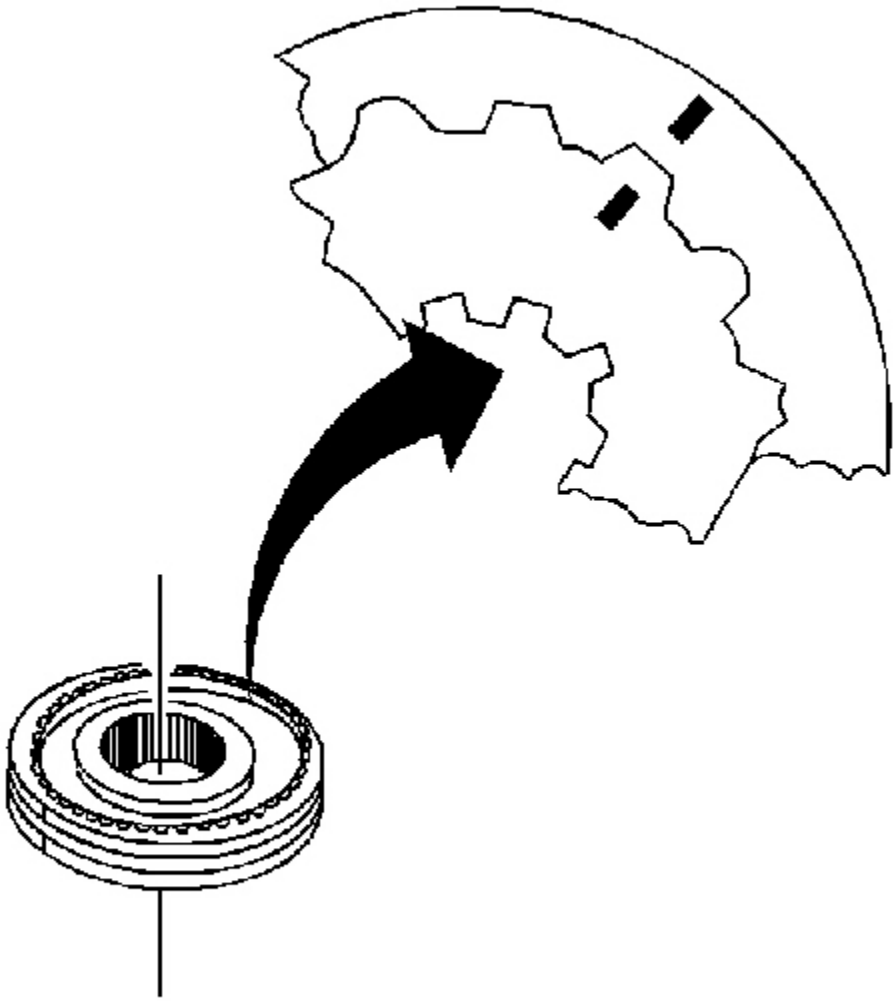

Fig. 113: Identifying Gear Synchronizer Assembly Scribe Marks
Courtesy of GENERAL MOTORS CORP.

IMPORTANT: The synchronizer hubs and sliding sleeves are a selected assembly. Keep these parts together as originally assembled.

13. Scribe a mark on the synchronizer hub and on the sleeve. This will help you to reinstall the parts in the same position.

cardiagn.com

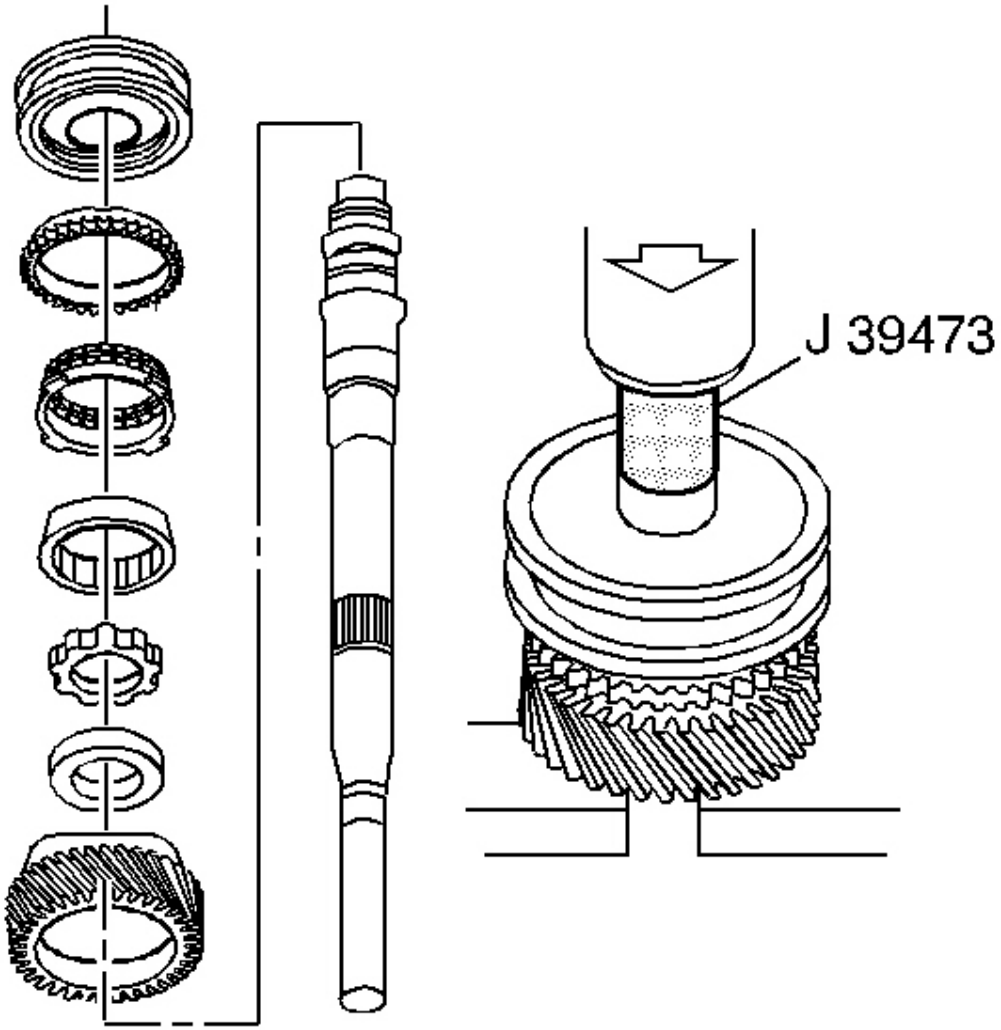

Fig. 114: Identifying 3rd/4th Speed Synchronizer Assembly, Blocking Ring, Cones, Washer & Spacer
Courtesy of GENERAL MOTORS CORP.

14. Use the **J 39473** , V-blocks, and a hydraulic press to remove the 3rd speed gear. The 3rd/4th speed synchronizer assembly, the 3rd speed gear blocking ring, the 3rd speed gear friction cone, the 3rd speed gear inner cone, thrust washer, and spacer will press off with the 3rd speed gear.

cardiagn.com

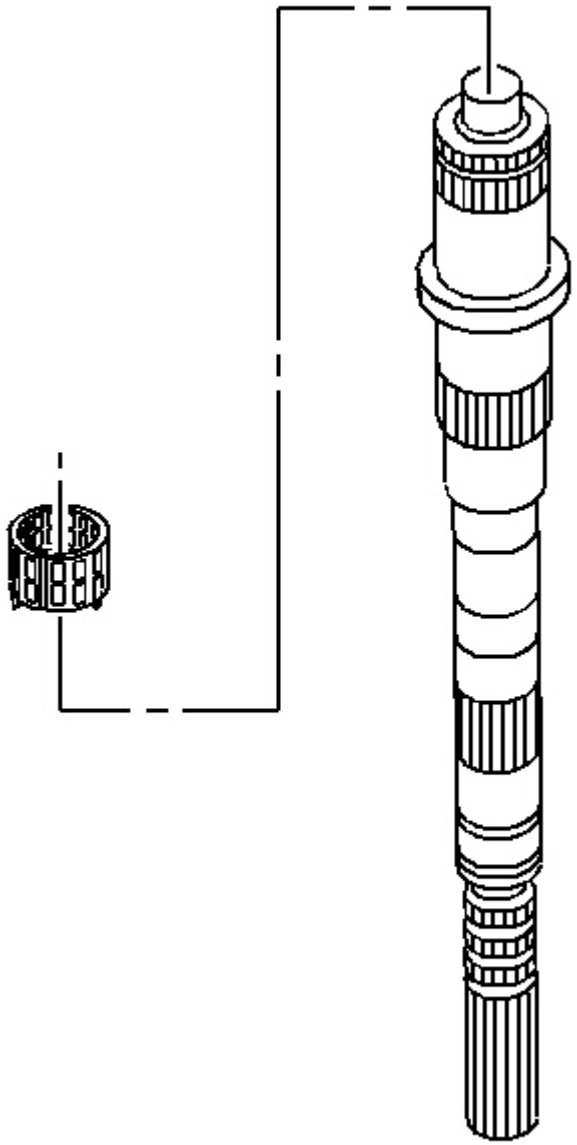

Fig. 115: View Of 3rd Speed Gear Caged Needle Bearing & Spacer
Courtesy of GENERAL MOTORS CORP.

15. Remove the 3rd speed gear caged needle bearing.

Input Shaft

cardiagn.com

Tools Required

- J 22912-O1 Split Plate
- **J 23907** Slide Hammer. See **Special Tools** .
- **J 39594** Bearing Race Remover. See **Special Tools** .

IMPORTANT: Do not replace the tapered bearing or the bearing race unless inspection shows that the bearing or the race are damaged.

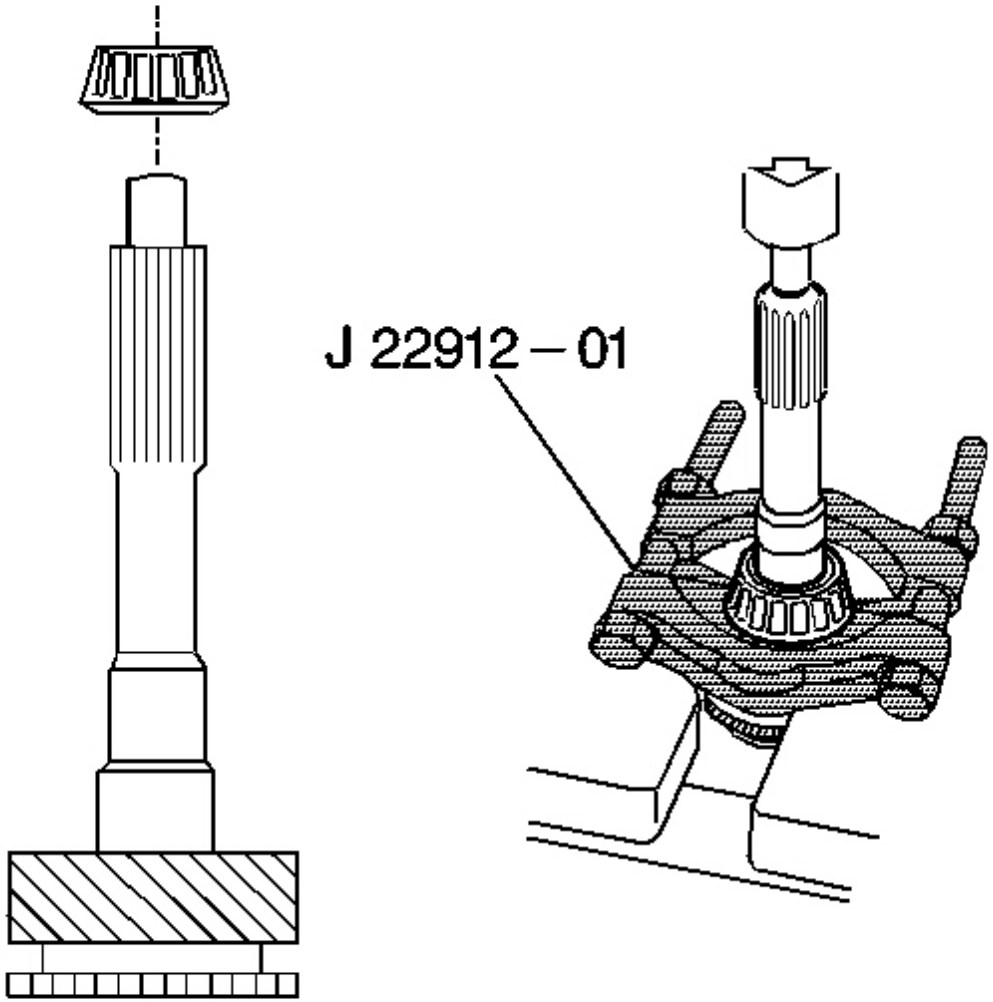

Fig. 116: Using J 22912-O1 To Remove Tapered Bearing From Input Shaft

cardiagn.com

Courtesy of GENERAL MOTORS CORP.

1. Remove the tapered bearing from the input shaft, using the J 22912-O1 and a hydraulic press.

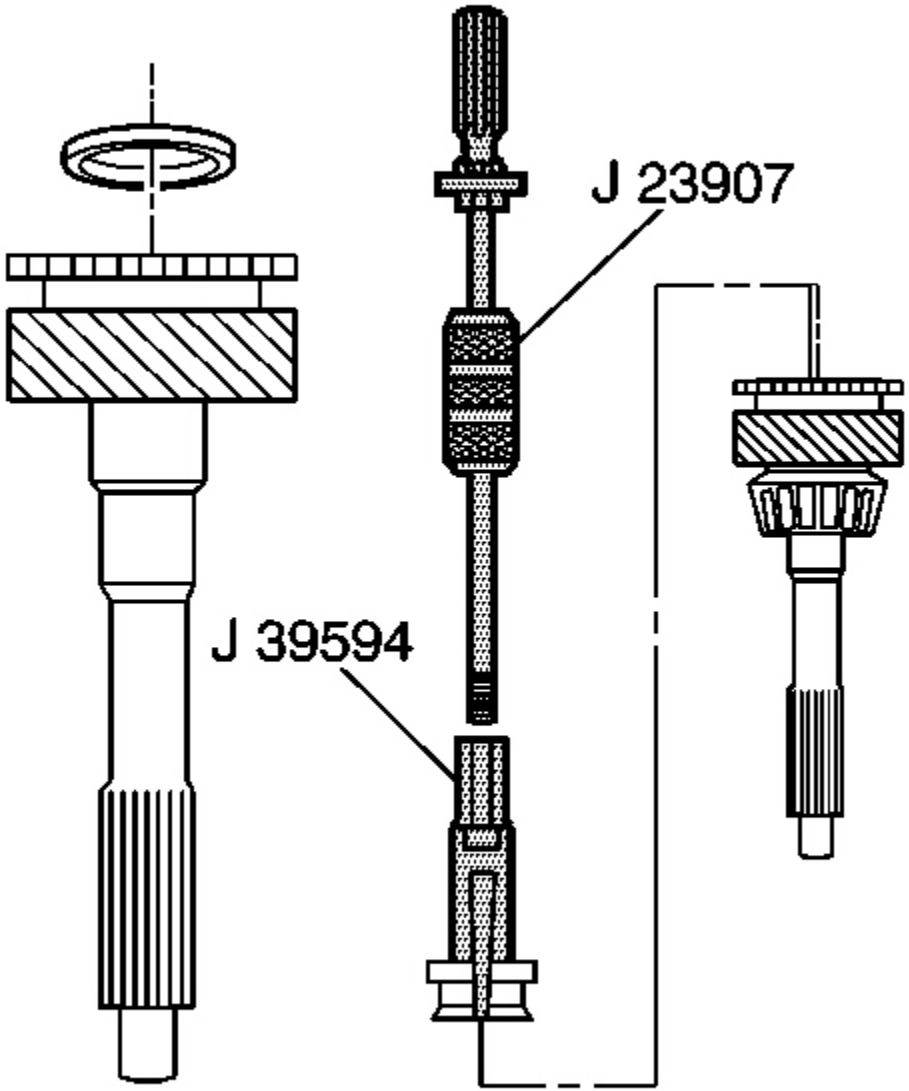

Fig. 117: Removing Bearing Race From Input Shaft Using J 23907 And J 39594
Courtesy of GENERAL MOTORS CORP.

2. Remove the bearing race from the input shaft, using the **J 23907** and the **J 39594** .

cardiagn.com

COUNTERSHAFT DISASSEMBLE

Tools Required

- J 22912-O1 Split Plate
- **J 39473** Mainshaft Bearing Installer. See **Special Tools** .
- **J 39511** Split Plate. See **Special Tools** .
- **J 39547** Press Adapter. See **Special Tools** .

IMPORTANT: Do not replace tapered bearings unless inspection shows bearing damage.

1. Remove the small tapered bearing, using the J 22912-O1 with the **J 39473** and a hydraulic press.

cardiagn.com

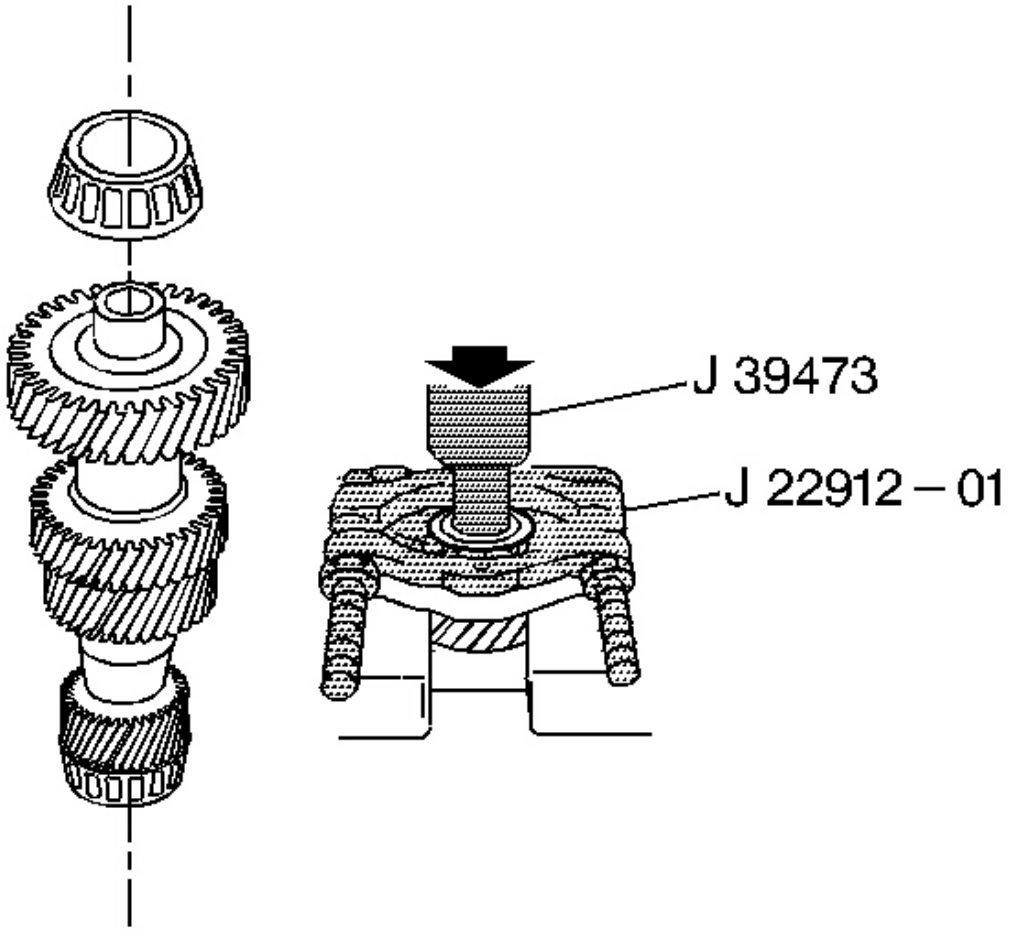

Fig. 118: View Of Small Tapered Countershaft Bearing
Courtesy of GENERAL MOTORS CORP.

2. Discard the small tapered bearing.

cardiagn.com

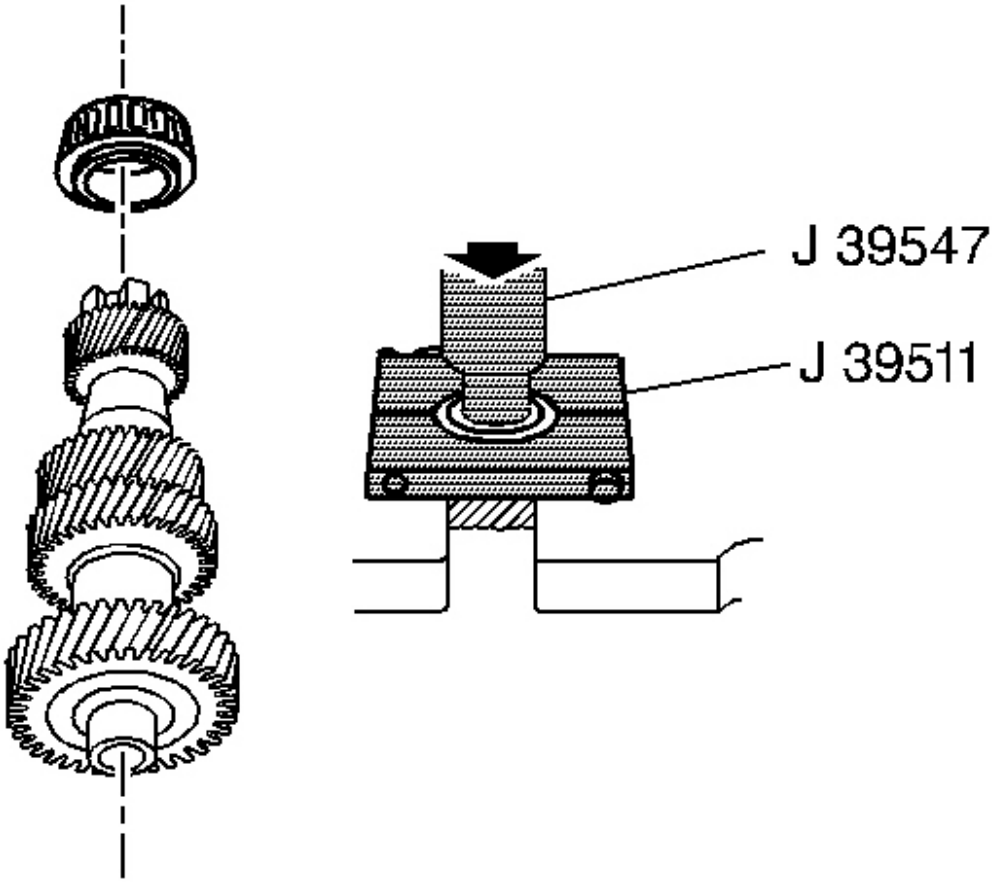

Fig. 119: Identifying Large Tapered Countershaft Bearing
Courtesy of GENERAL MOTORS CORP.

3. Remove the large tapered bearing, using the **J 39511** , the **J 39547** , and a hydraulic press.
4. Discard the large tapered bearing.

COUNTERSHAFT EXTENSION DISASSEMBLE

Tools Required

- **J 22910-01** Split Plate. See **Special Tools** .
- **J 39442** Press Adapter. See **Special Tools** .
- **J 39443** Split Plate. See **Special Tools** .

cardiagn.com

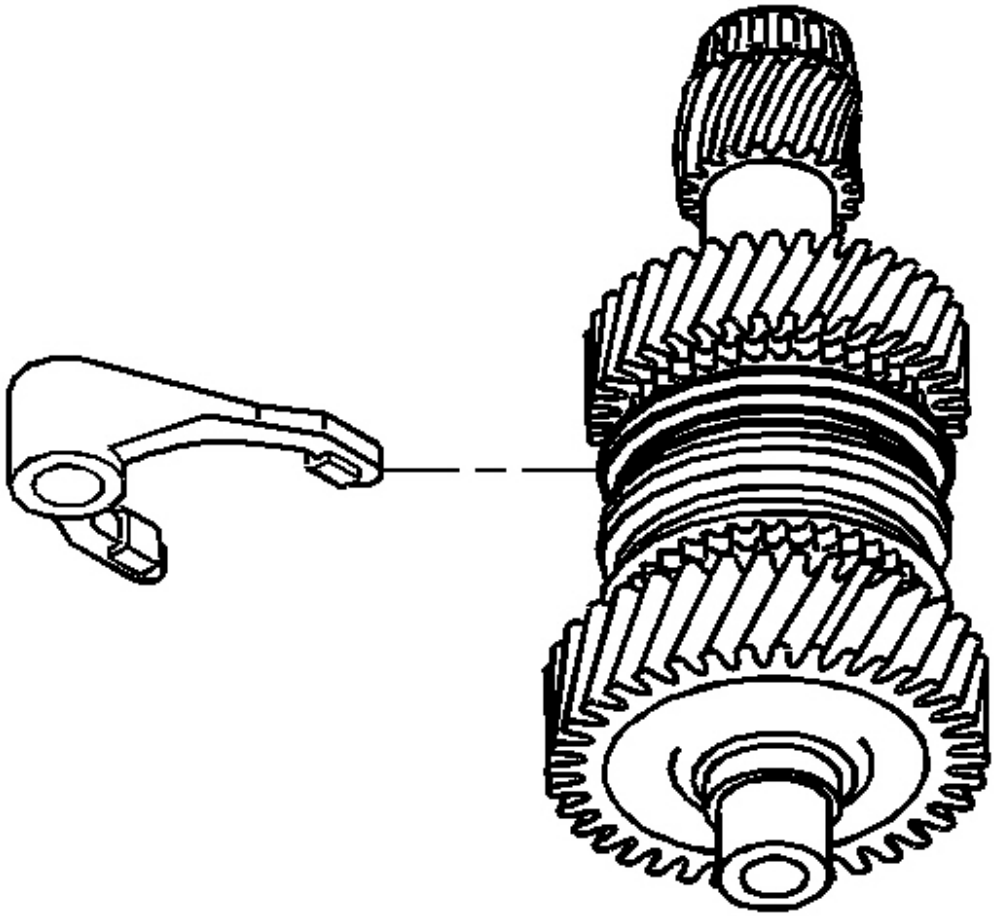

Fig. 120: View Of 5th/6th Speed Shift Fork
Courtesy of GENERAL MOTORS CORP.

1. Remove the 5th/6th speed shift fork.

cardiagn.com

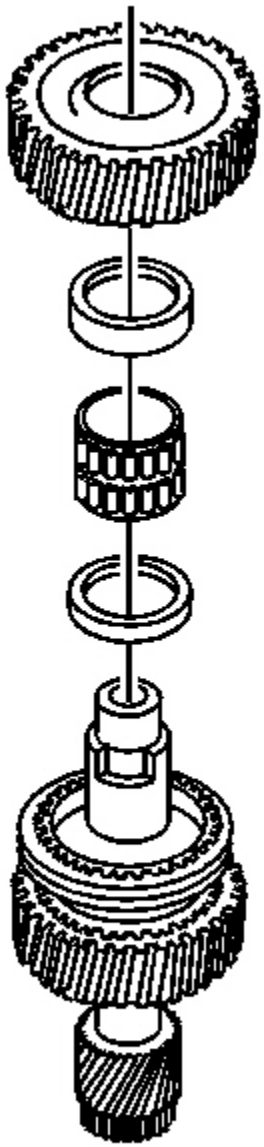

Fig. 121: View Of 6th Speed Assembly
Courtesy of GENERAL MOTORS CORP.

2. Remove the following parts in order:
    1. The 6th speed drive gear
    2. The 6th speed gear bearing spacer

cardiagn.com

3. The caged needle bearing
4. The 6th speed gear bearing spacer

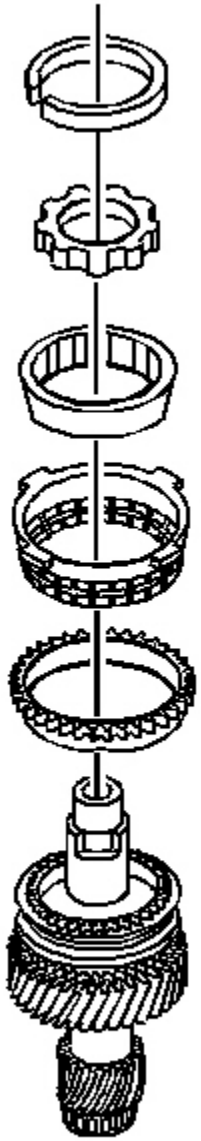

Fig. 122: Identifying 6th Speed Cones & Rings
Courtesy of GENERAL MOTORS CORP.

cardiagn.com

3. Remove the following parts in order:
    1. The 5th/6th speed synchronizer retainer ring
    2. The thrust washer
    3. The 6th speed drive gear inner cone
    4. The 6th speed drive gear friction cone
    5. The 6th speed drive gear blocking ring
4. Discard the retainer ring.

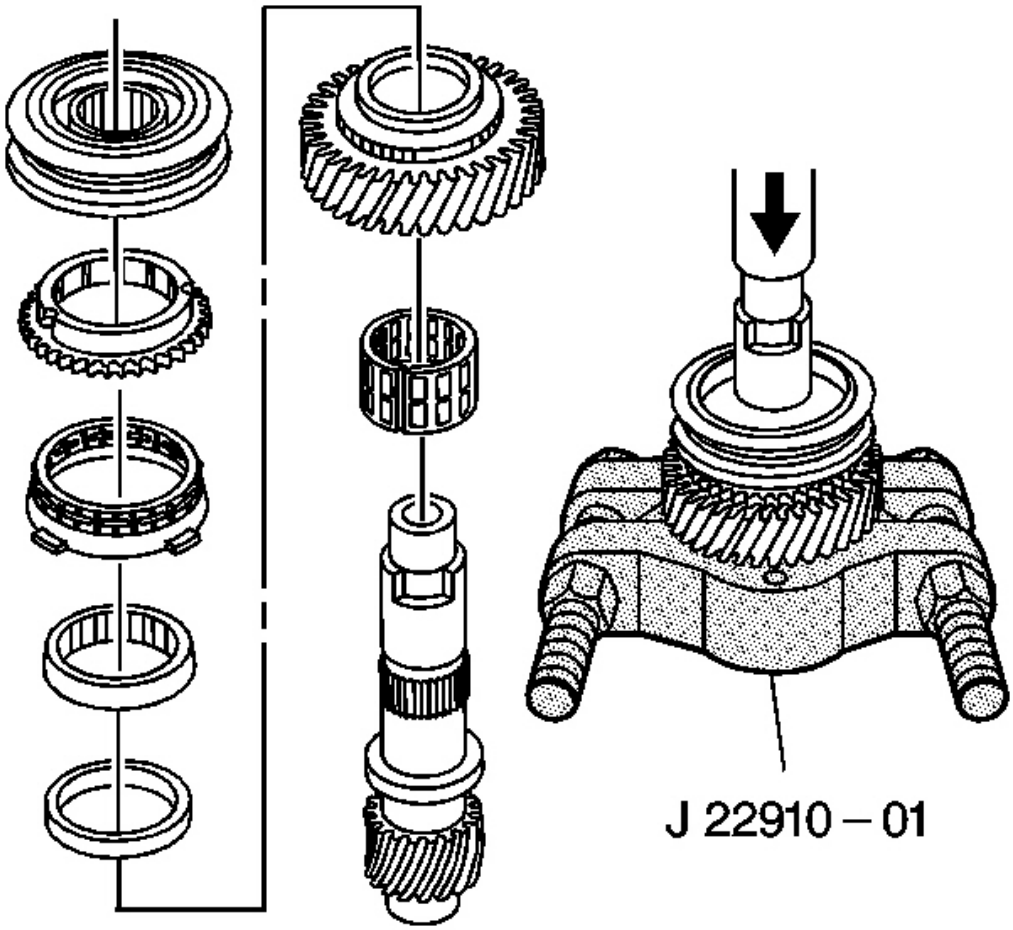

Fig. 123: View Of 5th/6th Speed Synchronizer Assembly, Rings, Cones, Washer & Needle Bearing
Courtesy of GENERAL MOTORS CORP.

5. Remove the 5th speed drive gear, using the **J 22910-01** and a hydraulic press.

cardiagn.com

The 5th/6th speed synchronizer assembly, and the 5th speed drive gear blocking ring, friction cone, inner cone and thrust washer will press off with the 5th speed drive gear.

6. Remove the 5th speed drive gear caged needle bearing.

IMPORTANT: Do not replace the small tapered bearing unless inspection shows bearing damage.

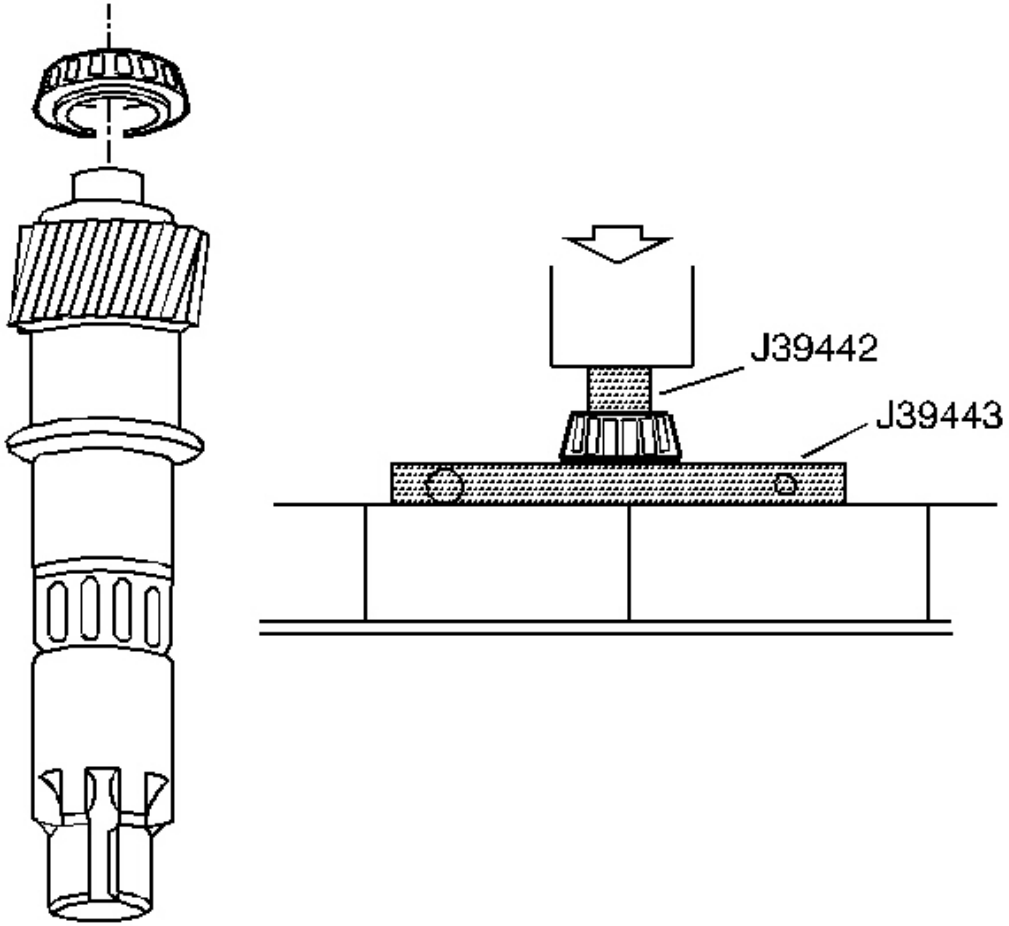

Fig. 124: Removing Small Tapered Bearing Using J 39442 & J 39443
Courtesy of GENERAL MOTORS CORP.

7. Remove the small tapered bearing, using the **J 39442** , the **J 39443** , and a hydraulic press.

cardiagn.com

SYNCHRONIZERS DISASSEMBLE

1st/2nd, 3rd/4th, 5th/6th Synchronizers

IMPORTANT: Synchronizer components are not interchangeable. Keep all the synchronizer components separate. The synchronizer hubs and the sliding sleeves are a selected assembly. Keep the hubs and the sliding sleeves together as originally assembled.

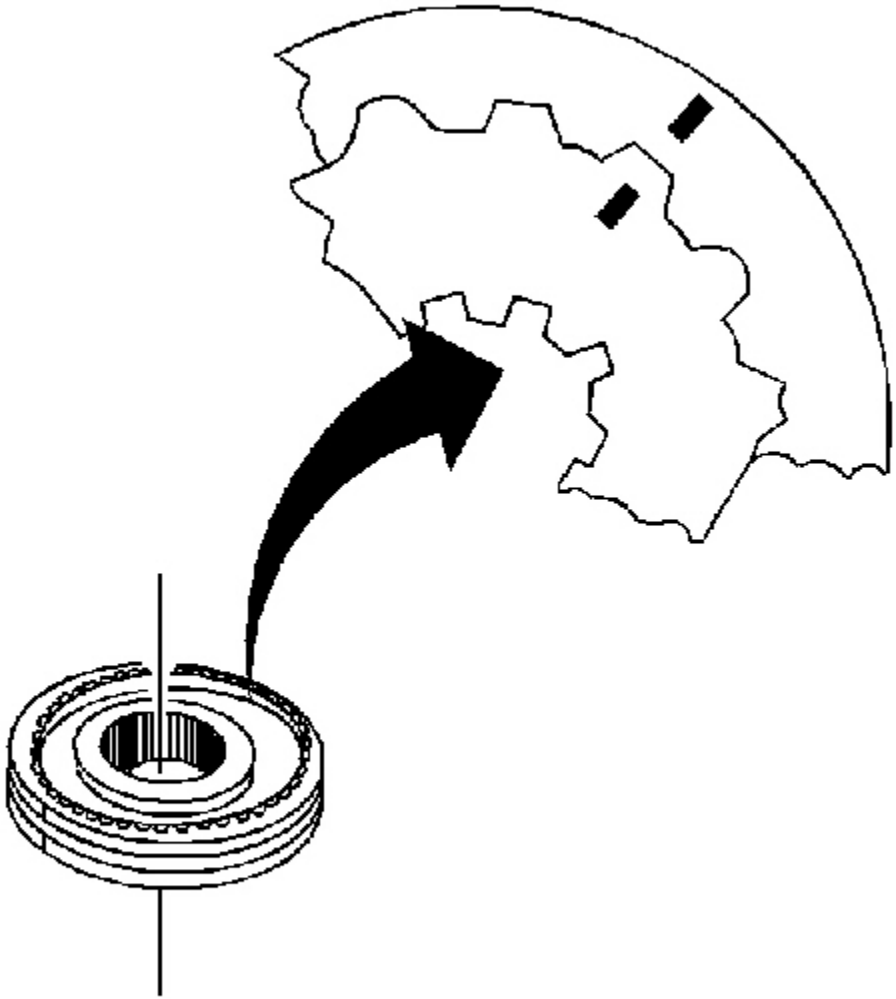

Fig. 125: Identifying Speed Gear Synchronizer Assembly Scribe Marks
Courtesy of GENERAL MOTORS CORP.

cardiagn.com

1. Scribe a mark on the synchronizer hub and on the sleeve. This will help you to reinstall the parts in the same position.

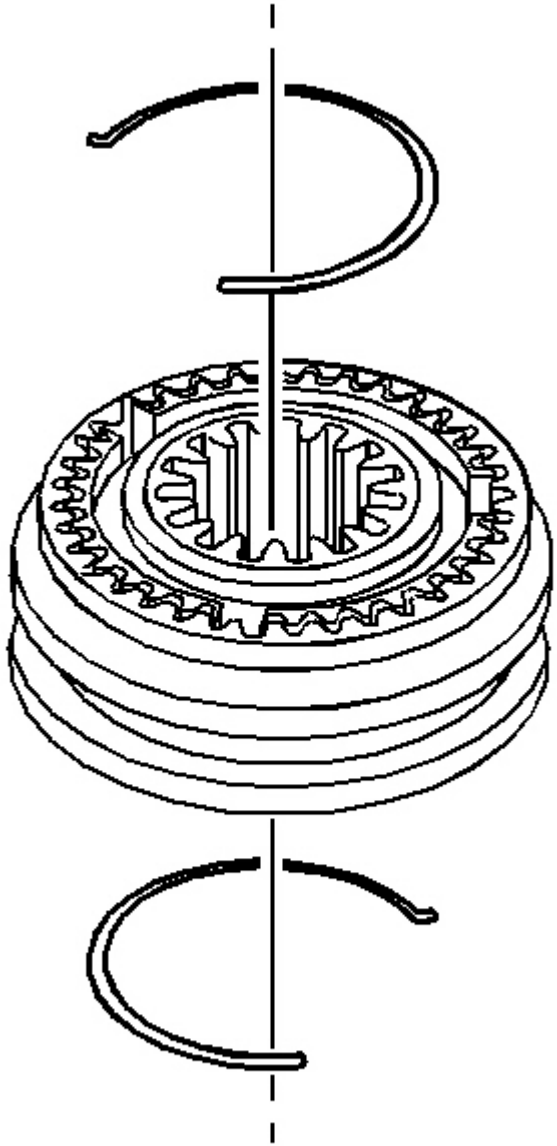

Fig. 126: View Of Synchronizer Springs
Courtesy of GENERAL MOTORS CORP.

cardiagn.com

2. Remove the synchronizer springs. Use a small-blade screwdriver.

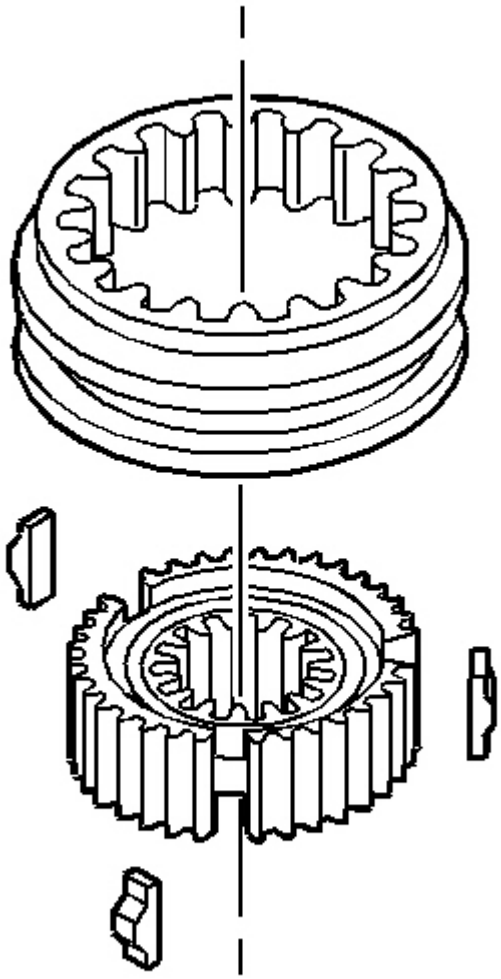

Fig. 127: Installing/Removing Synchronizer Sleeve & Keys On Hub
Courtesy of GENERAL MOTORS CORP.

3. Remove the synchronizer sleeve and the keys from the hub.

Reverse Synchronizer

1. Scribe a mark on the synchronizer hub and on the sleeve. This will help you to reinstall the parts in the same position.

cardiagn.com

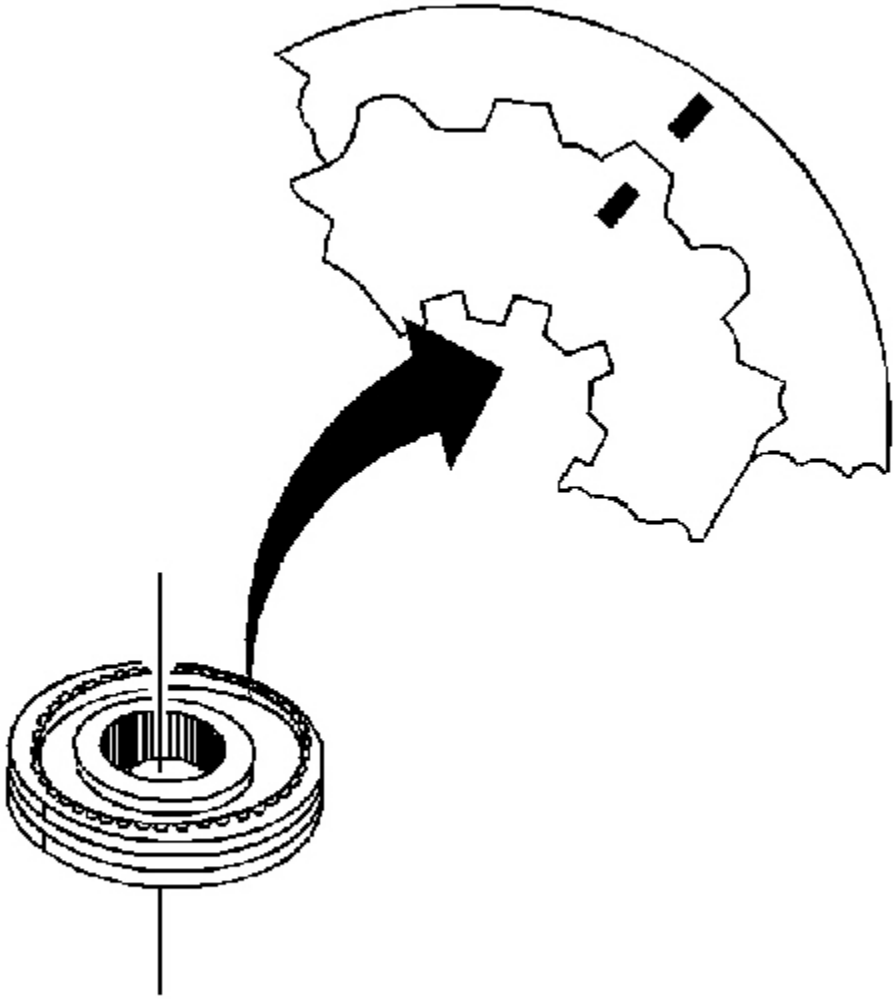

Fig. 128: Identifying Speed Gear Synchronizer Assembly Scribe Marks
Courtesy of GENERAL MOTORS CORP.

cardiagn.com

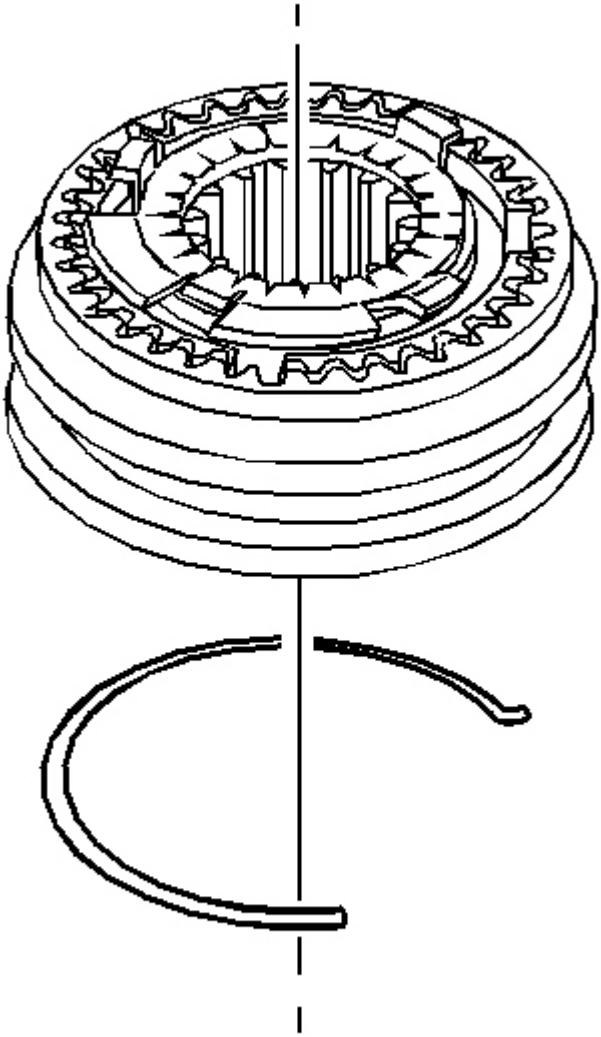

Fig. 129: Locating Synchronizer Spring
Courtesy of GENERAL MOTORS CORP.

2. Remove the synchronizer spring. Use a small-bladed screwdriver.

cardiagn.com

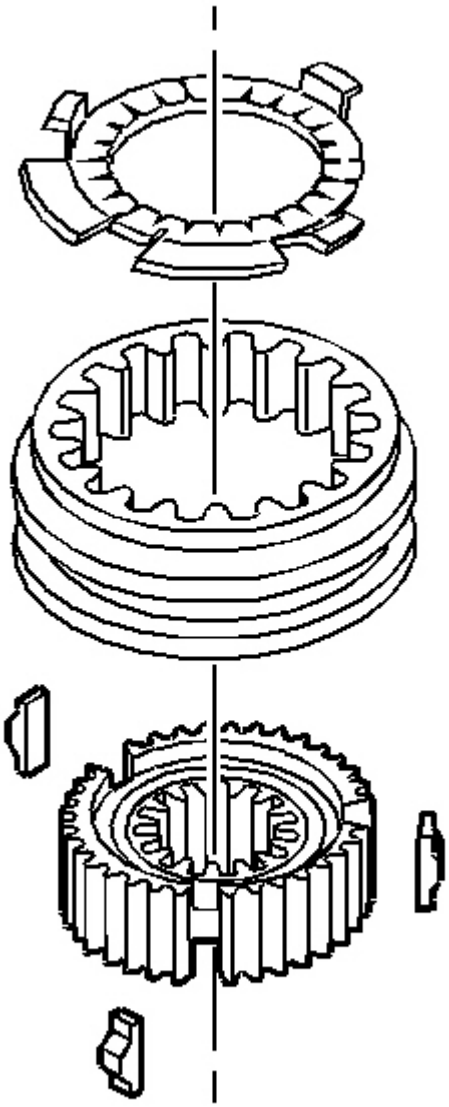

Fig. 130: Installing/Removing Synchronizer Sleeve & Keys On Hub
Courtesy of GENERAL MOTORS CORP.

3. Remove the synchronizer sleeve from the hub. Press against the inner hub.
4. Turn the hub over. The keys will slide out from the hub.

cardiagn.com

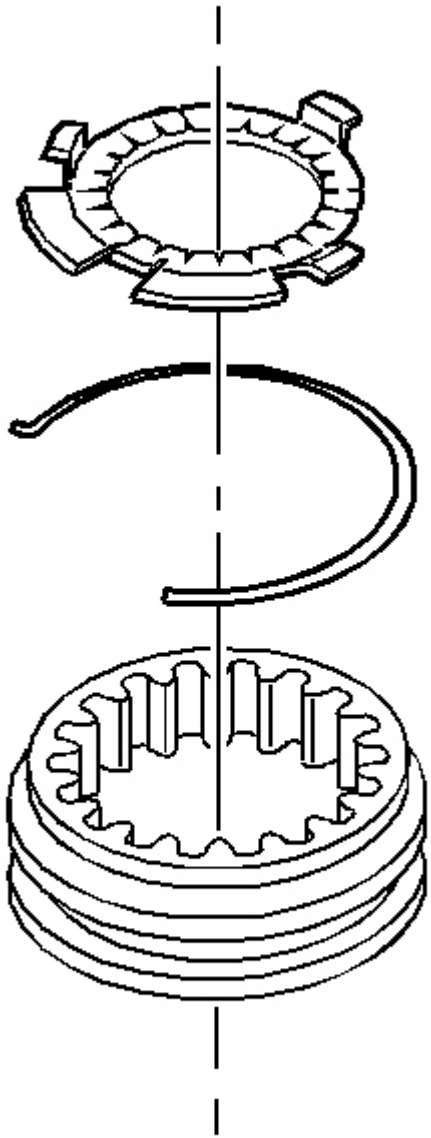

Fig. 131: Identifying Synchronizer Key Retainer & Spring
Courtesy of GENERAL MOTORS CORP.

5. Remove the following parts using a small-blade screwdriver:
    1. The synchronizer key retainer
    2. The synchronizer spring

cardiagn.com

6. Discard the synchronizer key retainer.

SYNCHRONIZERS CLEANING AND INSPECTION

1. Clean all the synchronizer parts in a suitable solvent. Air dry all the synchronizer parts.
2. Inspect the synchronizer parts for the following conditions:
    - Burrs
    - Cracks
    - Chamfer for excessive wear
    - Free movement of the clutching sleeves on their hubs
    - Worn or damaged clutch teeth
    - Distorted springs
3. Replace synchronizer parts that are worn or damaged.

    Replace a burred or nicked part that cannot be reconditioned by hand. Use a soft stone or a crocus cloth.

cardiagn.com

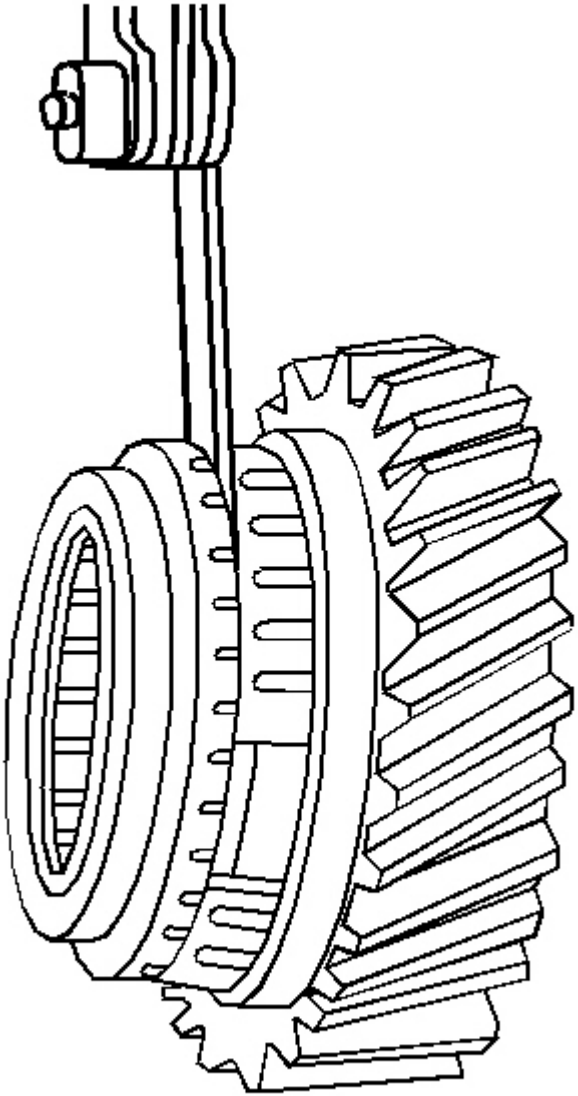

Fig. 132: Measuring Gap Between Blocking Ring & Speed Gear
Courtesy of GENERAL MOTORS CORP.

4. Measure the gap between the vertical faces of the blocking ring teeth and the speed gear as follows:
    1. Assemble the correct blocking ring with the correct speed gear.
    2. The blocking ring must be fully seated on the gear.
    3. Use a feeler gauge to measure the forward gear gap.

cardiagn.com

4. Use a feeler gauge to measure the reverse gear gap.

   Measure the gap without the wave washer in between the blocking ring and the reverse gear.

   The nominal gap is 1.27-2.16 mm (0.050-0.085 in) for the 1st and 2nd gear.

   The nominal gap is 1.27-2.03 mm (0.050-0.080 in) for the 3rd, 4th, 5th and 6th gear.

   Replace the friction cones and blocker rings when the gap is significantly less than specified.

SYNCHRONIZERS ASSEMBLE

1st/2nd Synchronizer

cardiagn.com

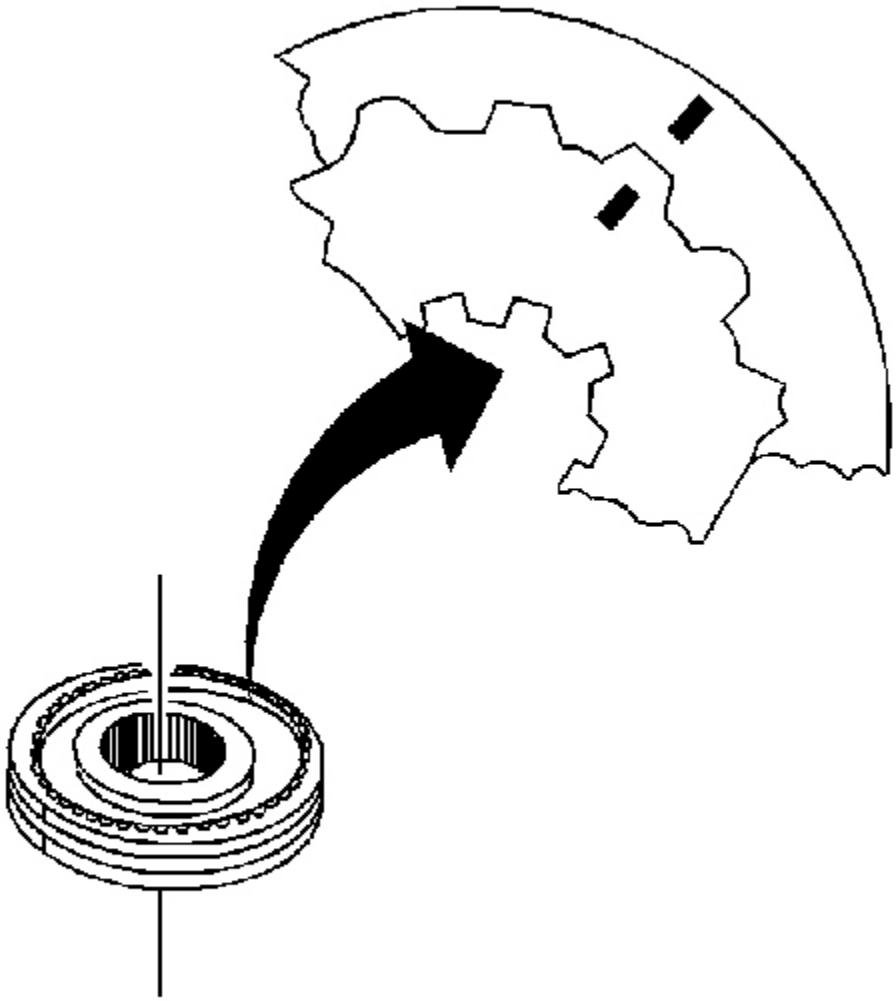

Fig. 133: Identifying Speed Gear Synchronizer Assembly Scribe Marks
Courtesy of GENERAL MOTORS CORP.

1. Check the synchronizer assembly scribe marks for correct positions.

cardiagn.com

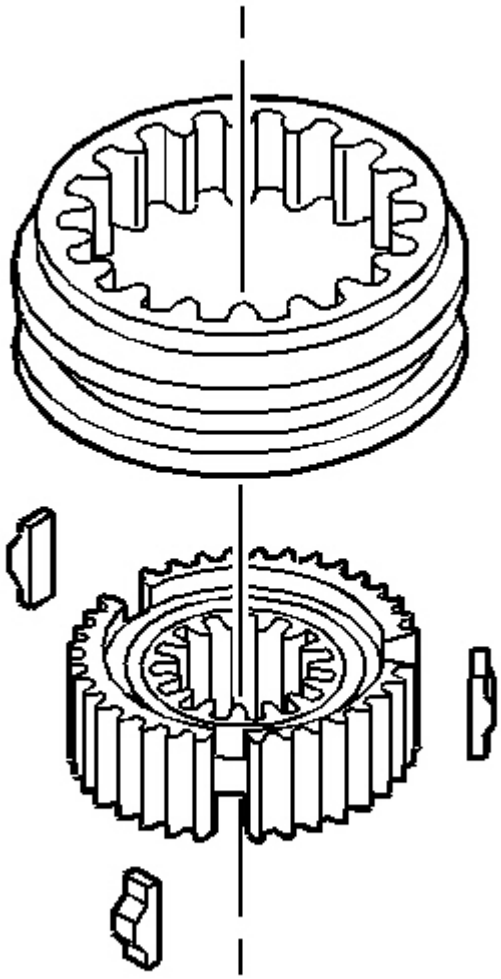

Fig. 134: Installing/Removing Synchronizer Sleeve & Keys On Hub
Courtesy of GENERAL MOTORS CORP.

2. Install the synchronizer sleeve to the hub (align the key openings in the hub with the cuts in the synchronizer sleeve).
3. Install the keys with the slots facing the hub.

cardiagn.com

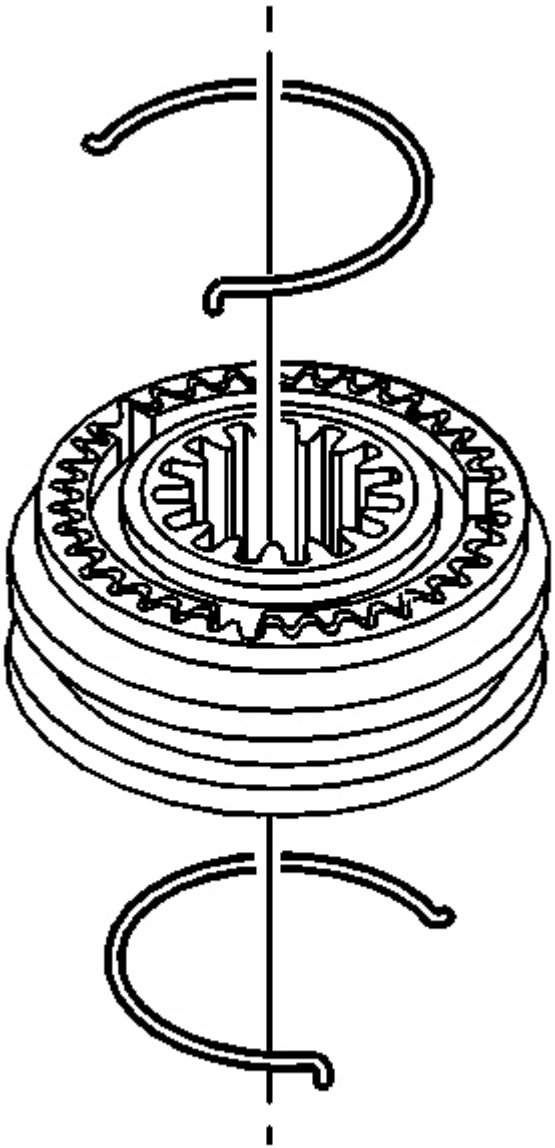

Fig. 135: View Of Reverse Synchronizer Springs
Courtesy of GENERAL MOTORS CORP.

4. Assemble the first spring (assemble the spring tangs to the side of two keys).
5. Assemble the second spring (assemble the spring tangs to the side of two keys such that the gap is not between the same two keys as the first spring).

cardiagn.com

3rd/4th, 5th/6th Synchronizers

1. Check the synchronizer assembly scribe marks for correct positions.

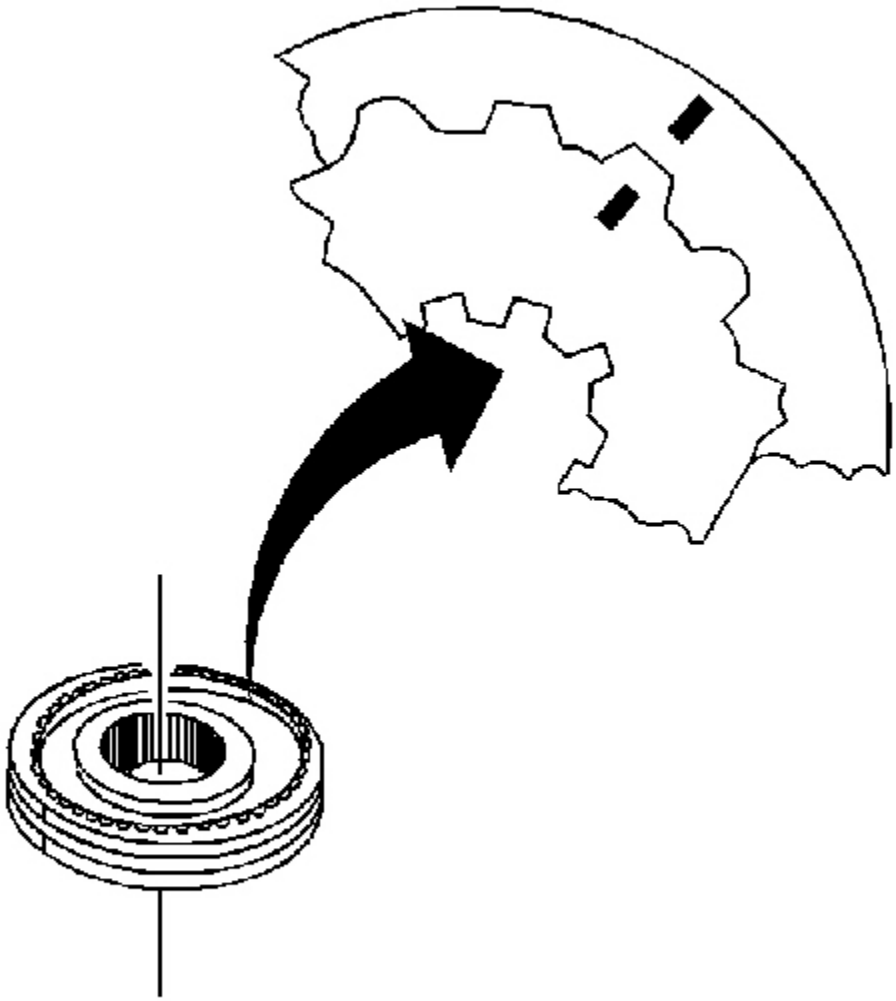

Fig. 136: Identifying Speed Gear Synchronizer Assembly Scribe Marks
Courtesy of GENERAL MOTORS CORP.

cardiagn.com

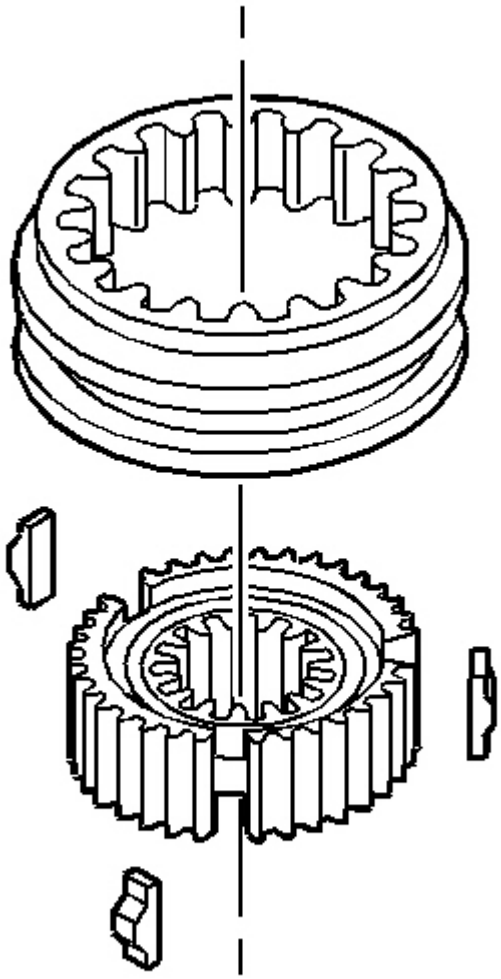

Fig. 137: Installing/Removing Synchronizer Sleeve & Keys On Hub
Courtesy of GENERAL MOTORS CORP.

2. Install the synchronizer sleeve to the hub (align the key openings in the hub with the cuts in the synchronizer sleeve).
3. Install the keys with the slots facing the hub.

cardiagn.com

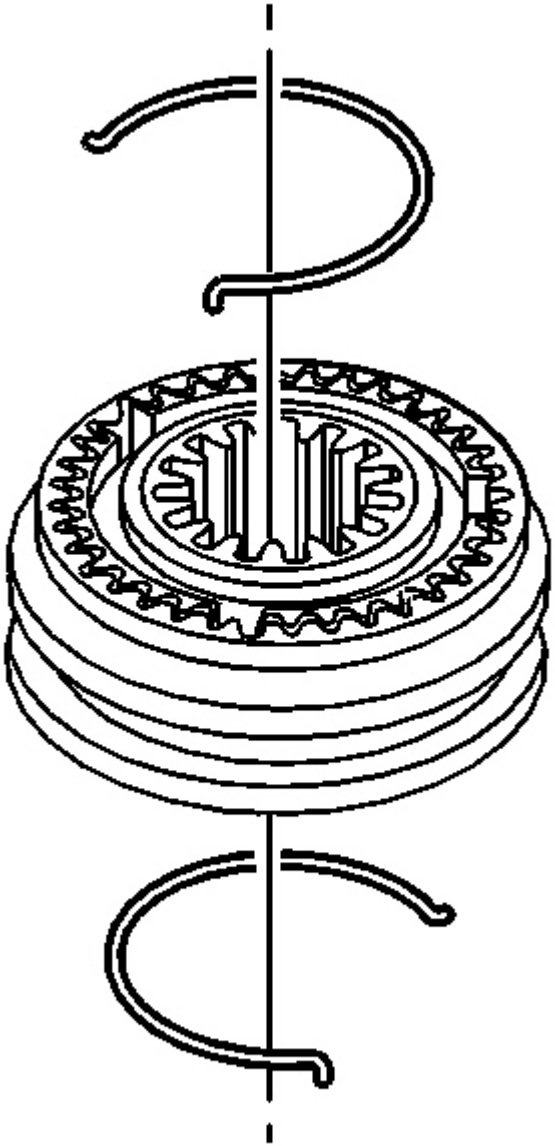

Fig. 138: View Of Reverse Synchronizer Springs
Courtesy of GENERAL MOTORS CORP.

4. Assemble the first spring (assemble the spring tang to one of the key slots).
5. Assemble the second spring (assemble the spring tang on the same key but in the opposite direction).

cardiagn.com

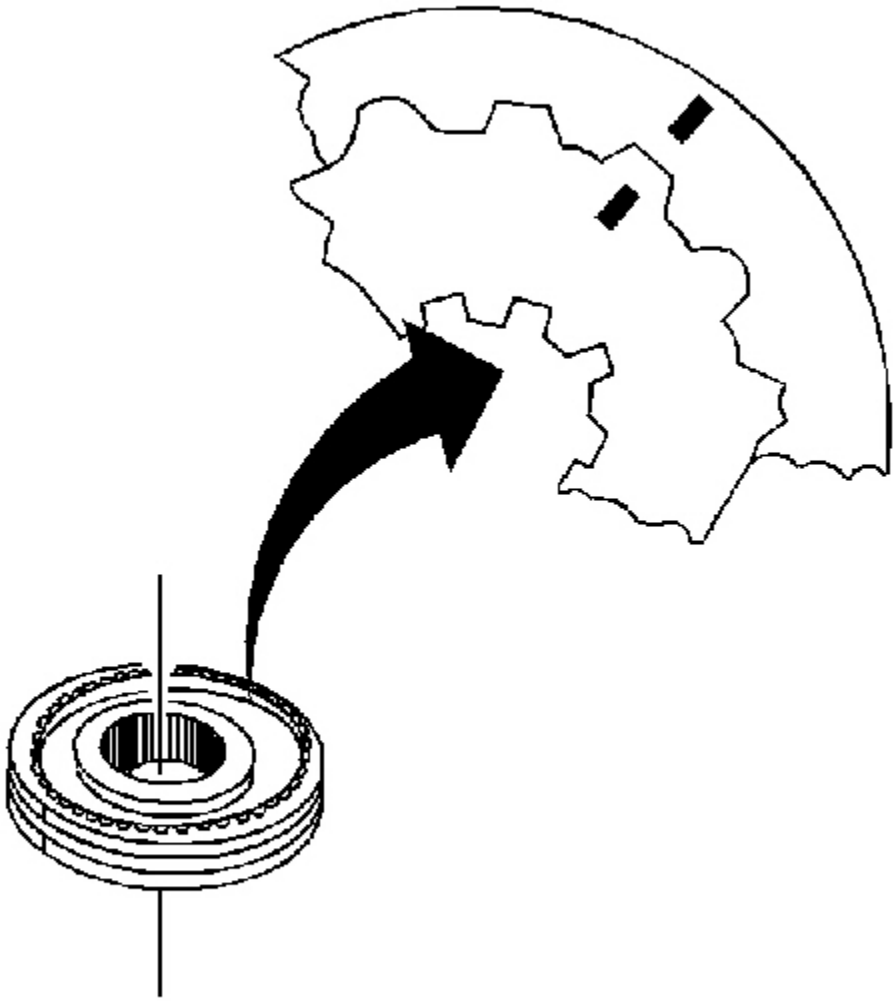

Fig. 139: Identifying Gear Synchronizer Assembly Scribe Marks
Courtesy of GENERAL MOTORS CORP.

1. Check the synchronizer assembly scribe marks for correct positions.

cardiagn.com

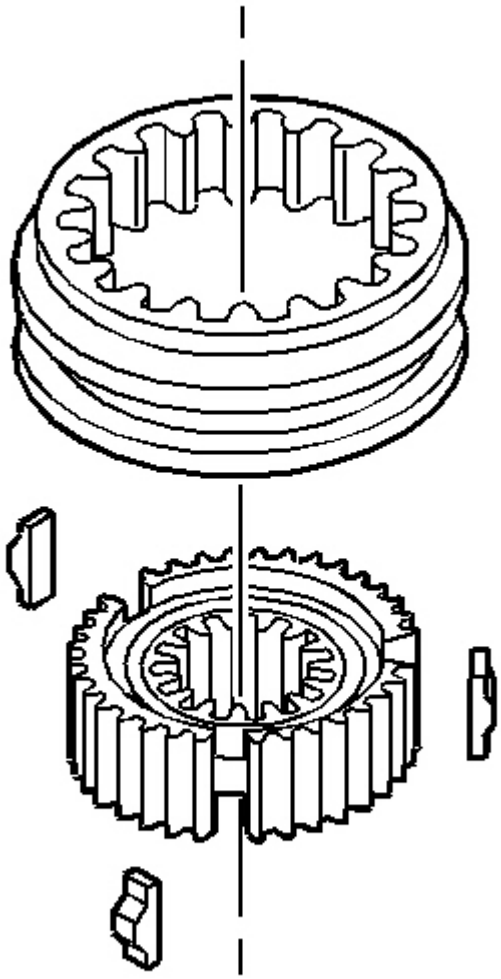

Fig. 140: Installing/Removing Synchronizer Sleeve & Keys On Hub
Courtesy of GENERAL MOTORS CORP.

2. Install the synchronizer sleeve to the hub (align the key openings in the hub with the cuts in the synchronizer sleeve).
3. Install the keys with the slots facing the hub.

cardiagn.com

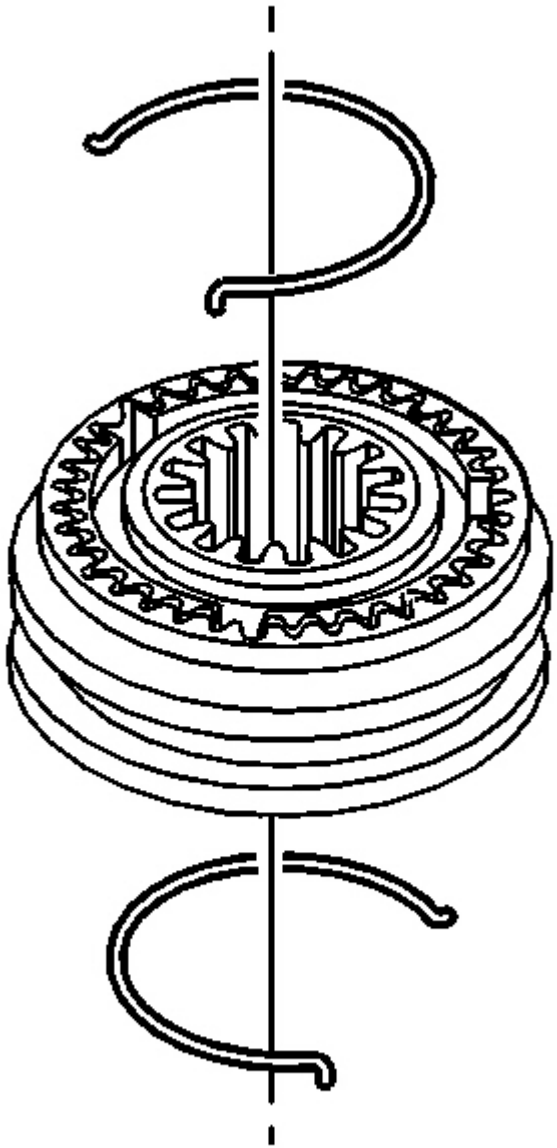

Fig. 141: View Of Reverse Synchronizer Springs
Courtesy of GENERAL MOTORS CORP.

4. Assemble the first spring (assemble the spring tang to one of the key slots).
5. Assemble the second spring (assemble the spring tang on the same key but in the opposite direction).

cardiagn.com

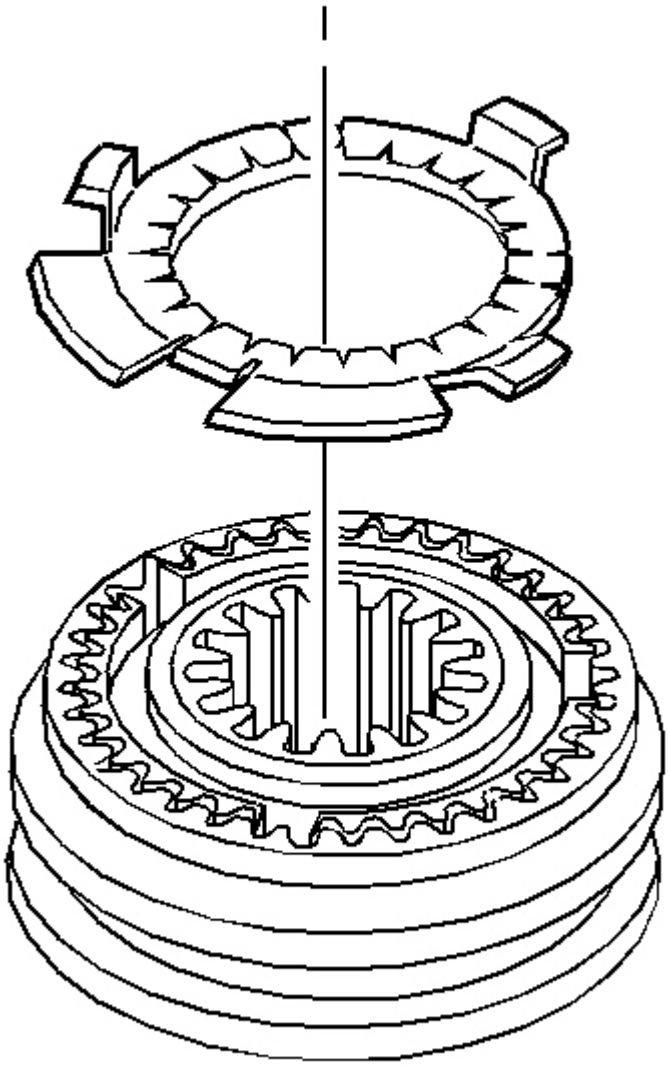

Fig. 142: Aligning Synchronizer Key Retainer Tangs Over Synchronizer Keys
Courtesy of GENERAL MOTORS CORP.

6. Install a new synchronizer key retainer with the key retainer tangs over the synchronizer keys.

SHIFT RAIL AND FORK ASSEMBLIES DISASSEMBLE

1st/2nd, 3rd/4th Shift Rail Assembly

cardiagn.com

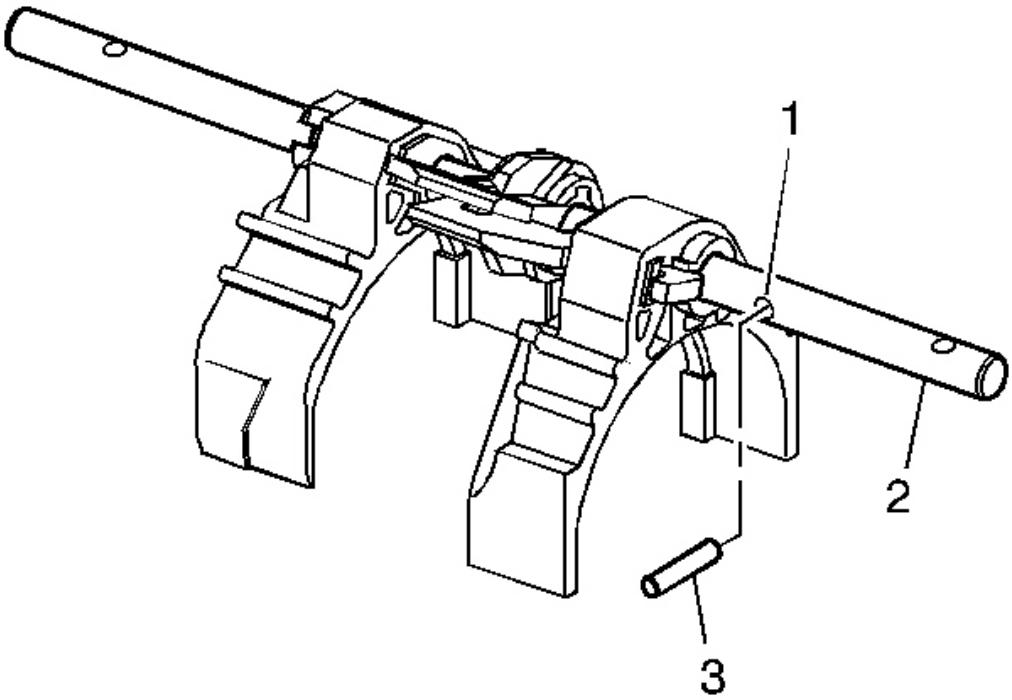

Fig. 143: View Of Neutral Return Cam Pin In Shift Shaft
Courtesy of GENERAL MOTORS CORP.

1. Remove the neutral return cam pin (3) from the shift shaft (2).

cardiagn.com

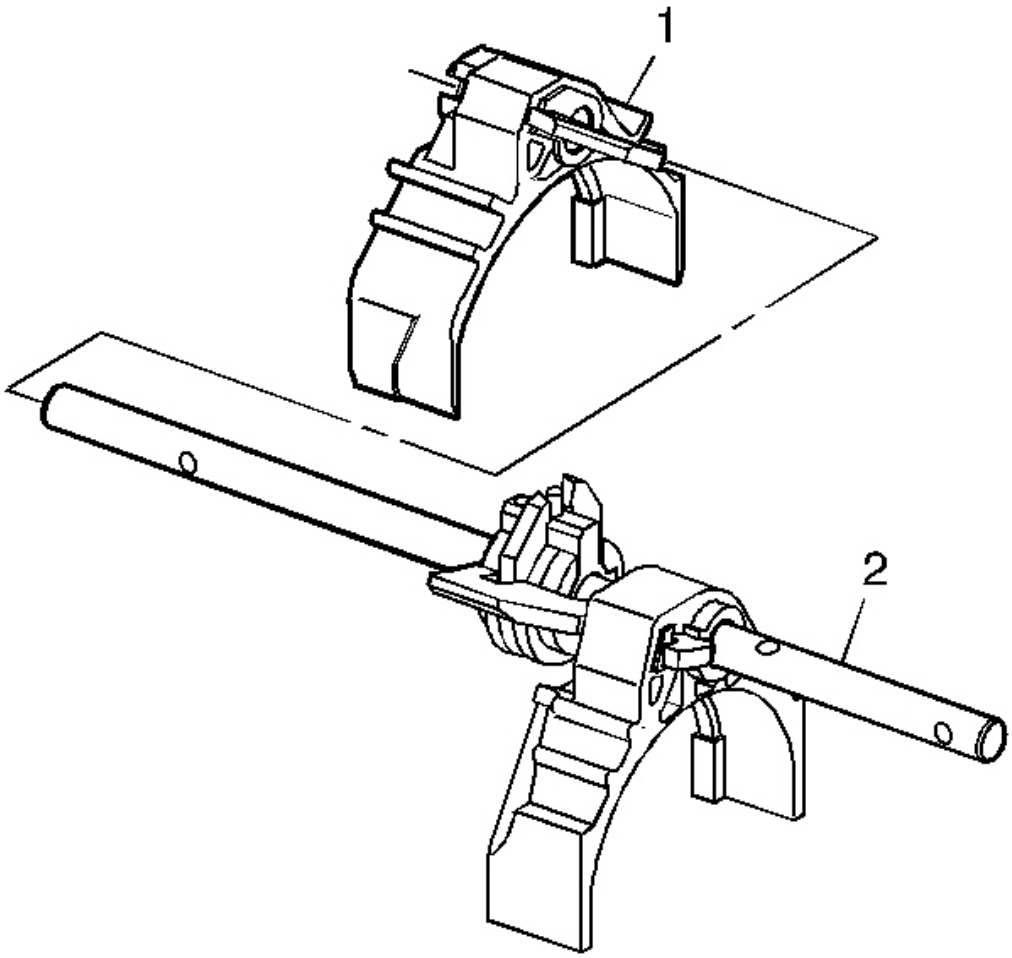

Fig. 144: View Of 1st/2nd Shift Fork On Shift Shaft
Courtesy of GENERAL MOTORS CORP.

2. Remove the 1st/2nd shift fork (1) from the shift shaft (2).

cardiagn.com

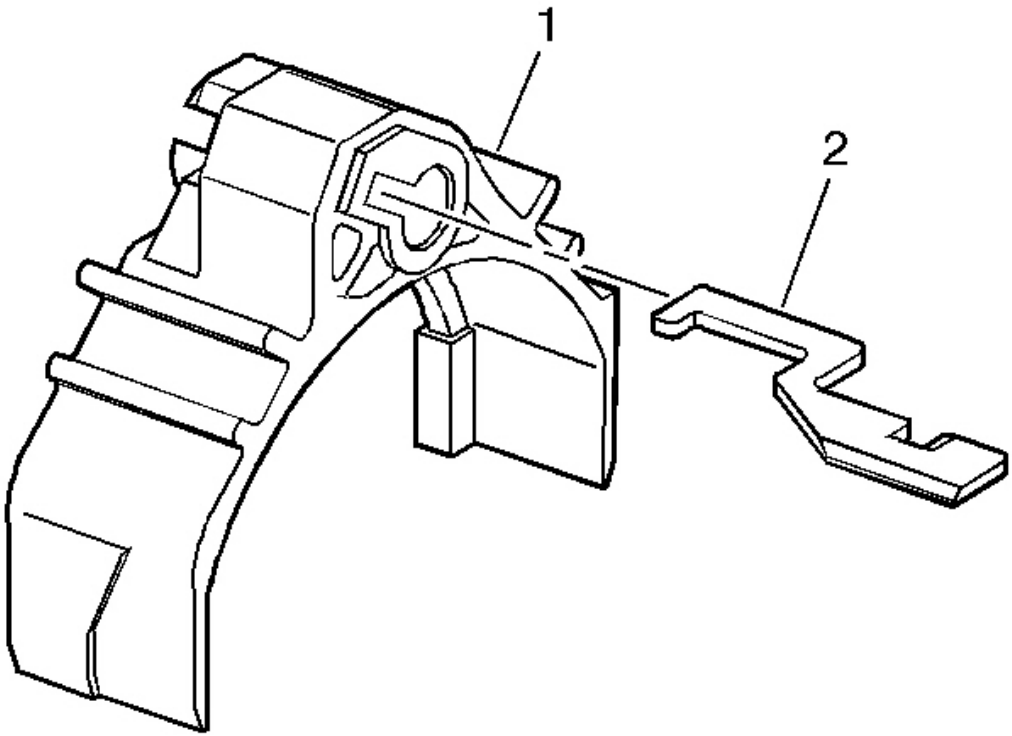

Fig. 145: Locating Shift Link & 1st/2nd Shift Fork
Courtesy of GENERAL MOTORS CORP.

3. Remove the shift link (2) from the 1st/2nd shift fork (1).

cardiagn.com

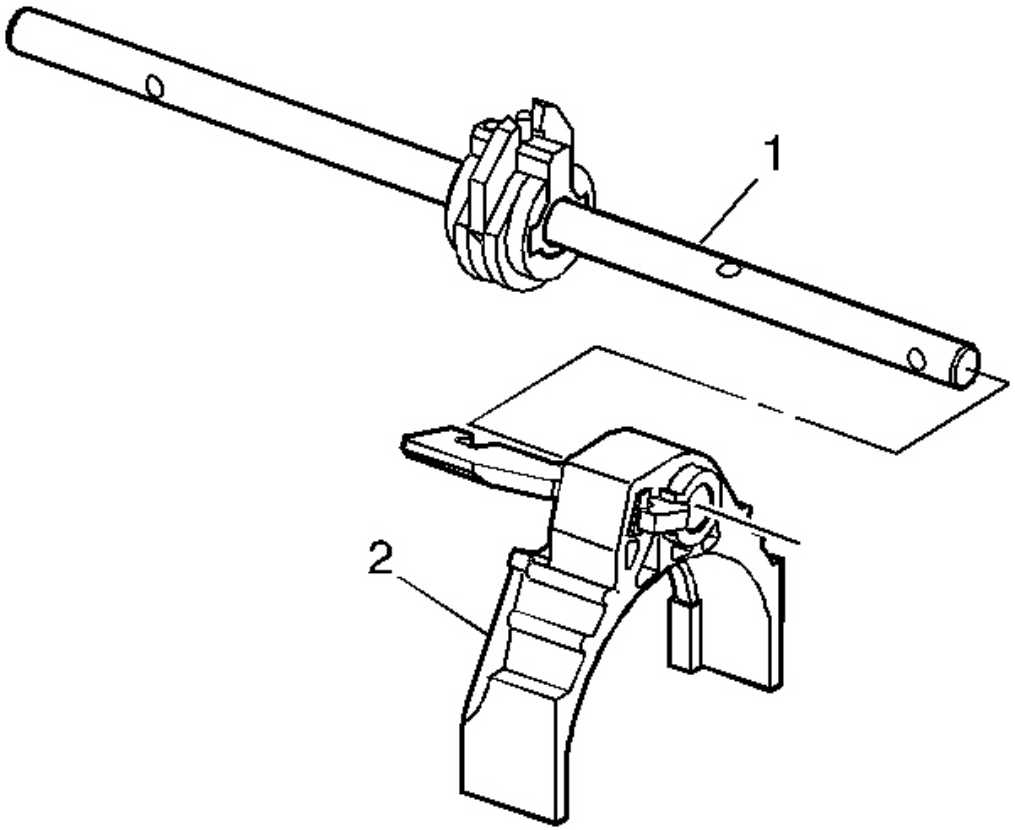

Fig. 146: Identifying 3rd/4th Shift Fork & Shift Shaft
Courtesy of GENERAL MOTORS CORP.

4. Remove the 3rd/4th shift fork (2) from the shift shaft (1).

cardiagn.com

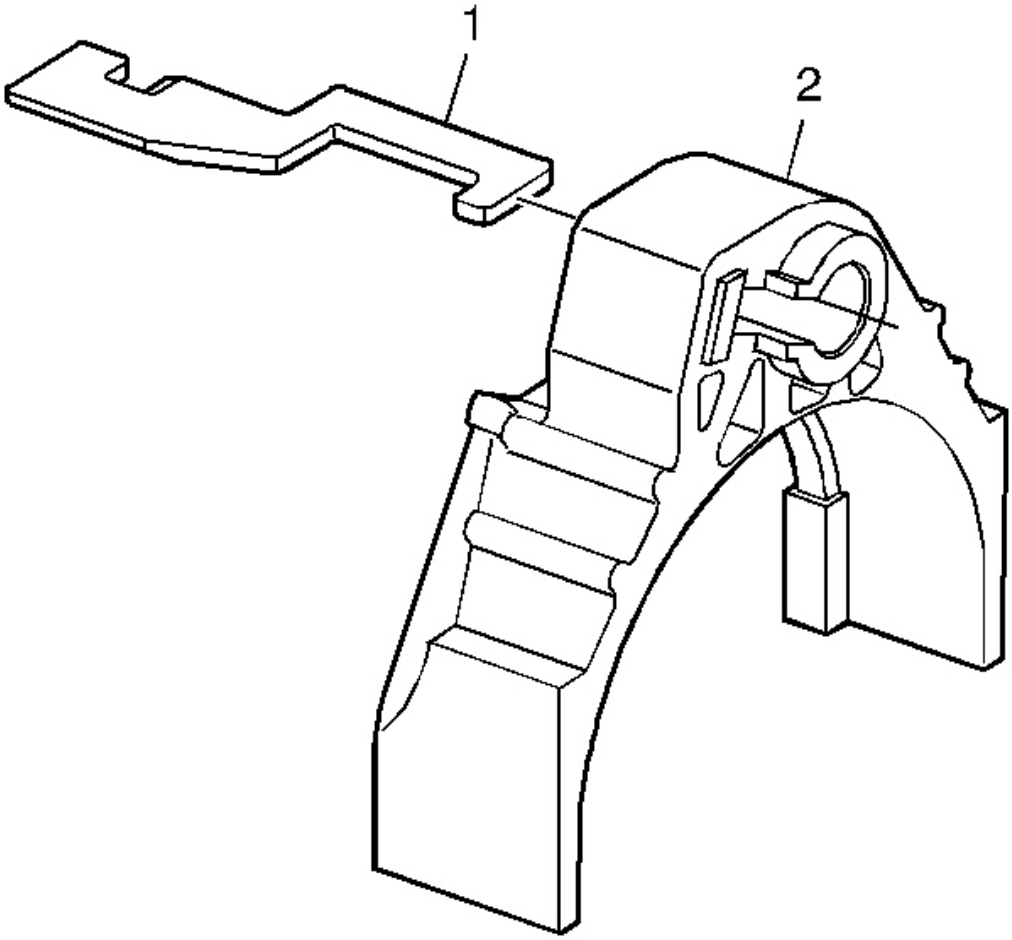

Fig. 147: View Of Shift Link In 3rd/4th Shift Fork
Courtesy of GENERAL MOTORS CORP.

5. Remove the shift link (1) from the 3rd/4th shift fork (2).

cardiagn.com

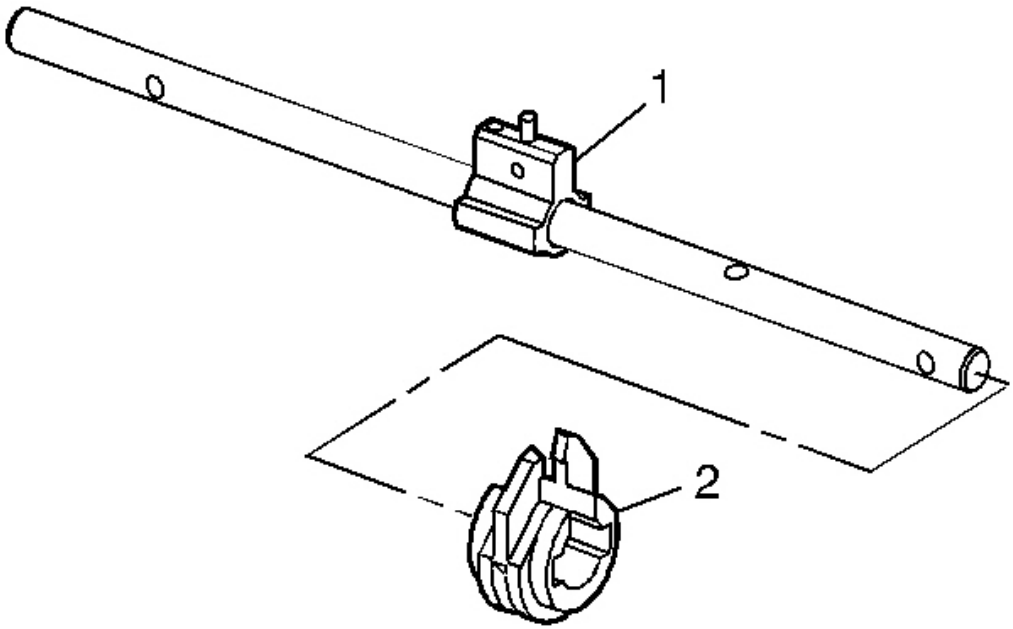

Fig. 148: Locating Interlocking Plate On Selector Pin
Courtesy of GENERAL MOTORS CORP.

6. Remove the interlocking plate (2) from the selector pin (1).

cardiagn.com

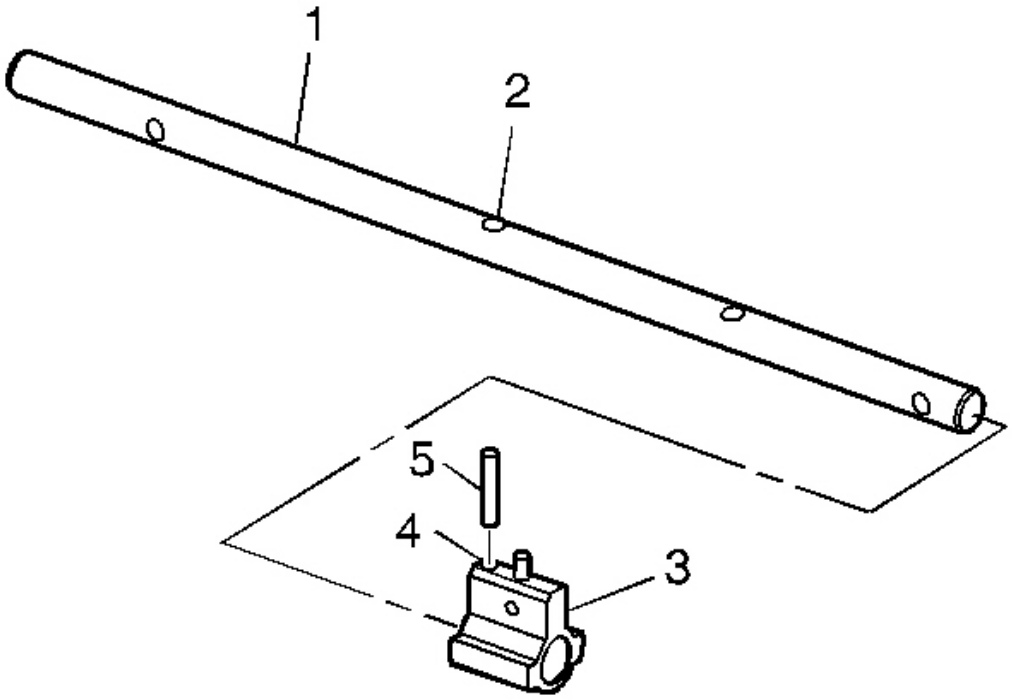

Fig. 149: Installing/Removing Selector Pin & Roll Pin On Shift Shaft
Courtesy of GENERAL MOTORS CORP.

7. Remove the selector roll pin (5).
8. Remove the selector pin (3) from the shift shaft (1).

5th/6th, Reverse Shift Rail Assembly

Tools Required

- **J 23907** Slide Hammer. See **Special Tools** .
- **J 39439-2** Bushing Remover. See **Special Tools** .

cardiagn.com

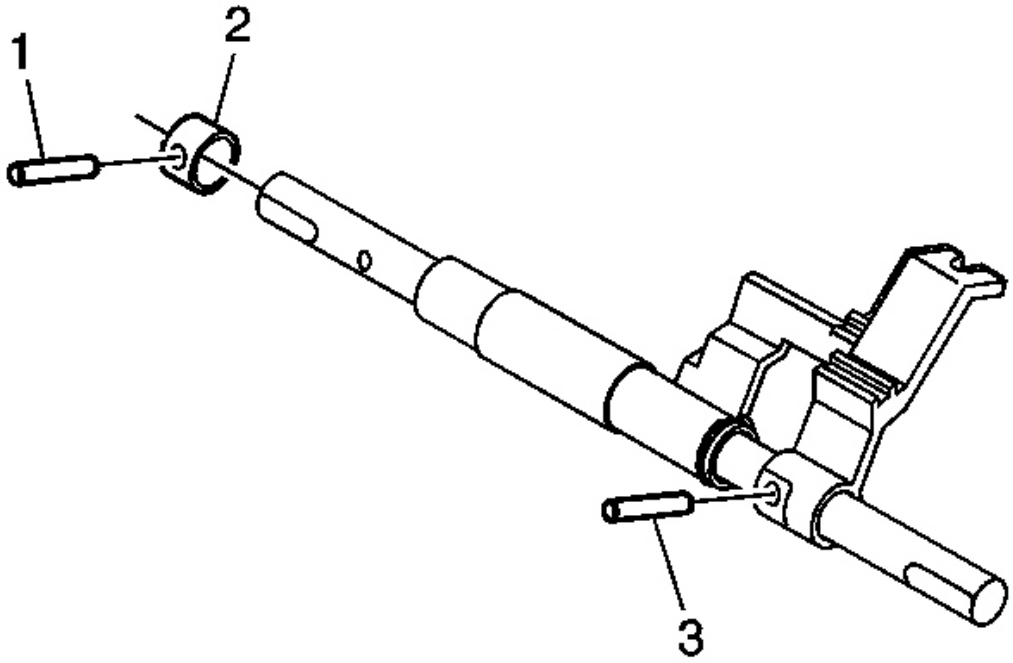

Fig. 150: View Of Reverse Lever Roll Pin, Reverse Collar & Reverse Collar Roll Pin
Courtesy of GENERAL MOTORS CORP.

1. Remove the reverse collar roll pin (1).
2. Remove the reverse collar (2).
3. Remove the reverse shift lever roll pin (3).

cardiagn.com

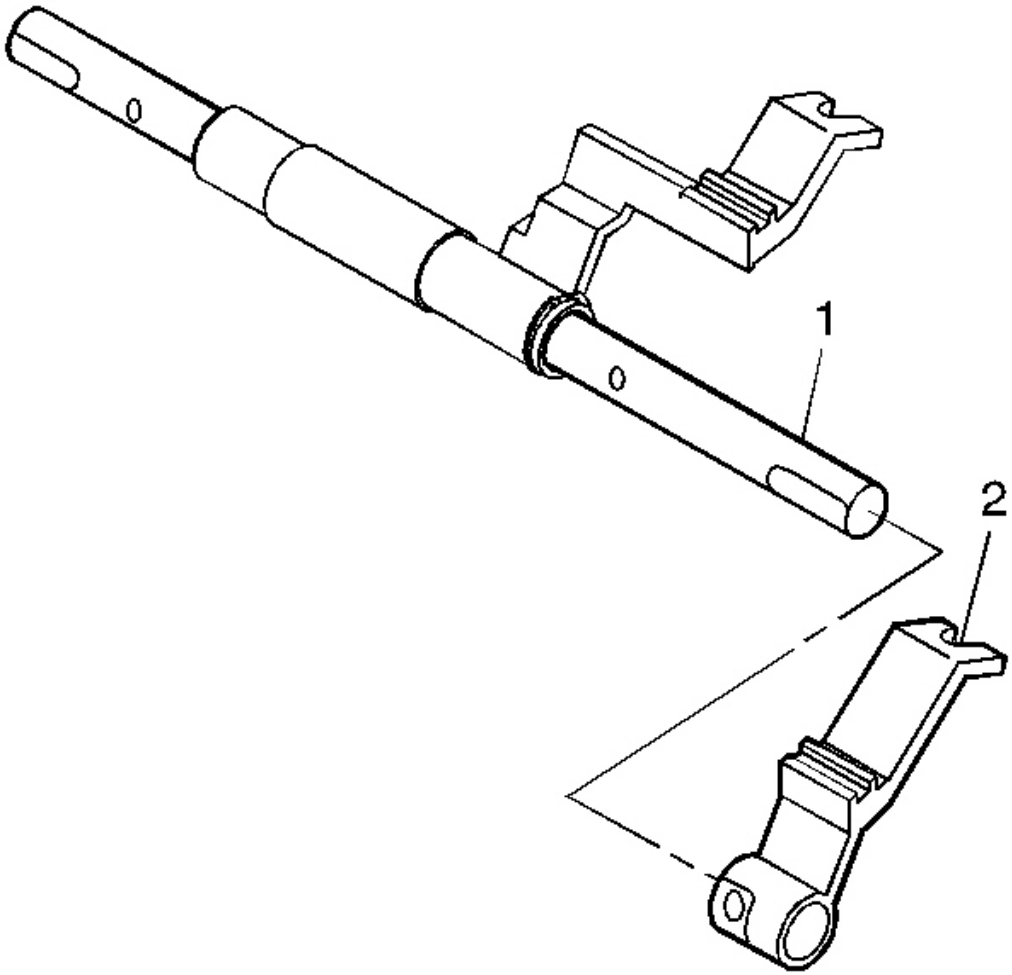

Fig. 151: Installing/Removing Reverse Shift Lever Onto Shift Shaft
Courtesy of GENERAL MOTORS CORP.

4. Remove the reverse shift lever (2) from the shift shaft (1).

cardiagn.com

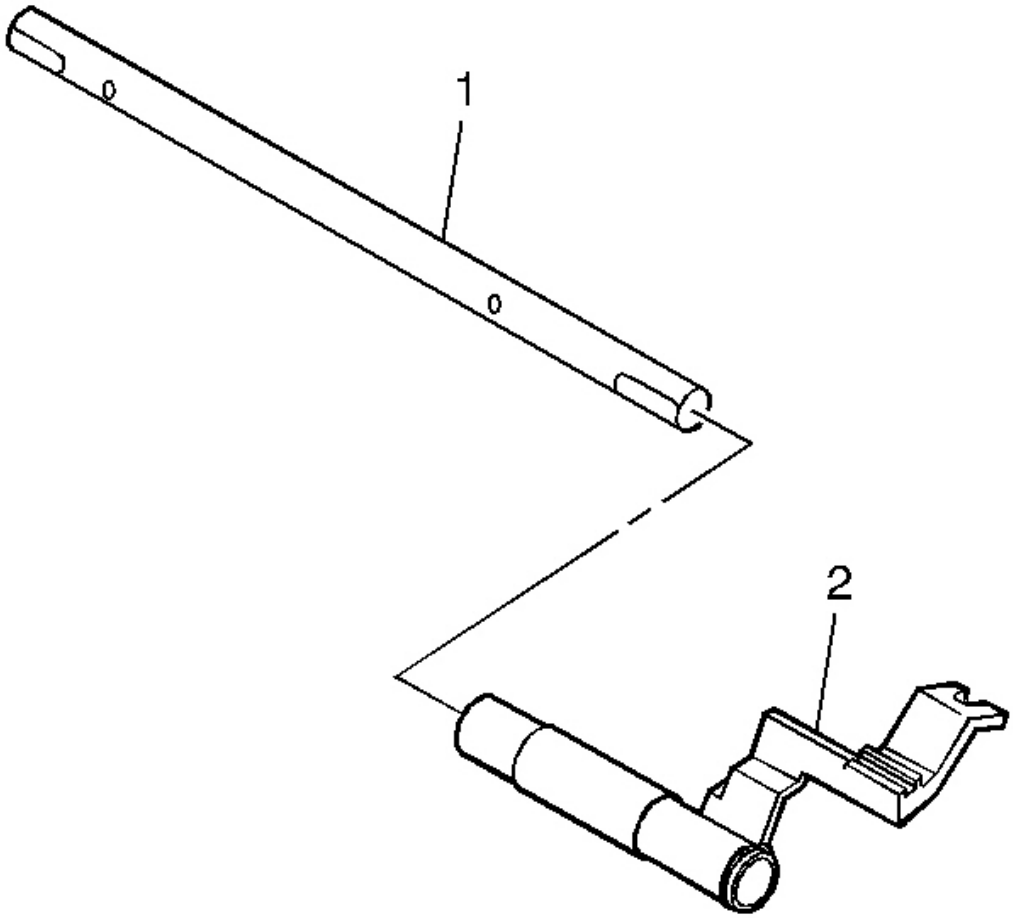

Fig. 152: Identifying 5th/6th Shift Lever
Courtesy of GENERAL MOTORS CORP.

5. Remove the 5th/6th shift lever (2) from the shift rail (1).

cardiagn.com

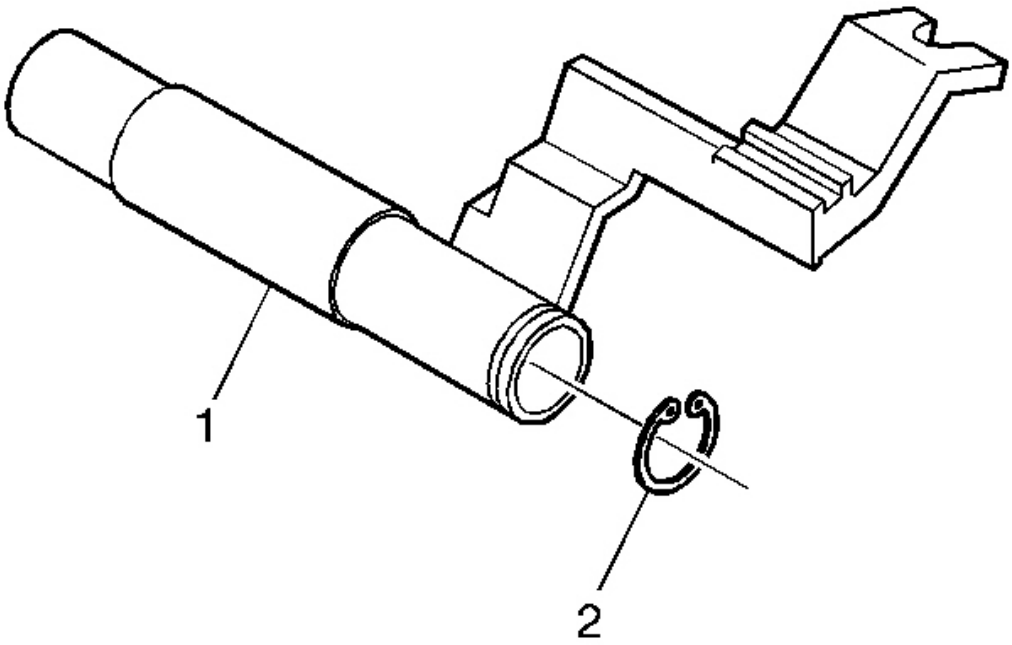

Fig. 153: Locating Retainer Ring On 5th/6th Shift Lever
Courtesy of GENERAL MOTORS CORP.

6. Remove the snap ring (1) from the 5th/6th shift lever (2).

cardiagn.com

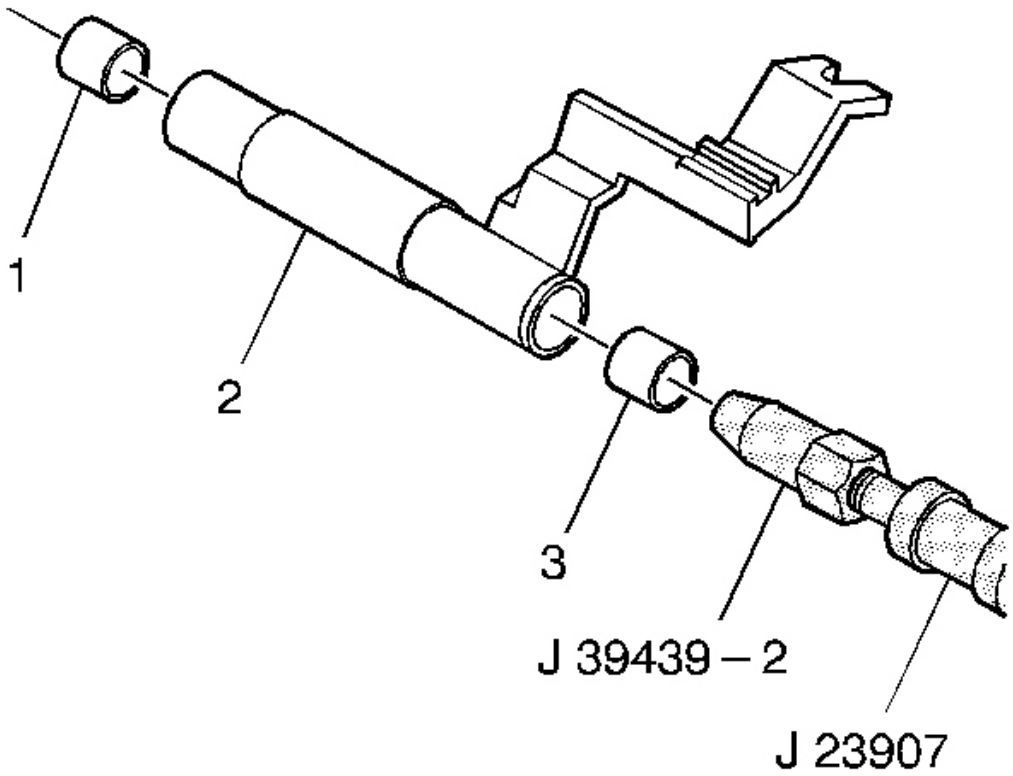

Fig. 154: Removing 5Th/6Th Shift Shaft Lever Bushings From 5Th/6Th Shift Lever Using J 23907 And The J 39439-2
Courtesy of GENERAL MOTORS CORP.

IMPORTANT: Do not replace the bushings unless inspection shows bushing damage.

7. Remove the 5th/6th shift shaft lever bushings (1) and (3) from the 5th/6th shift lever (2) using the **J 23907** and the **J 39439-2** .

SHIFT RAIL AND FORK ASSEMBLIES CLEANING AND INSPECTION (Y CAR)

cardiagn.com

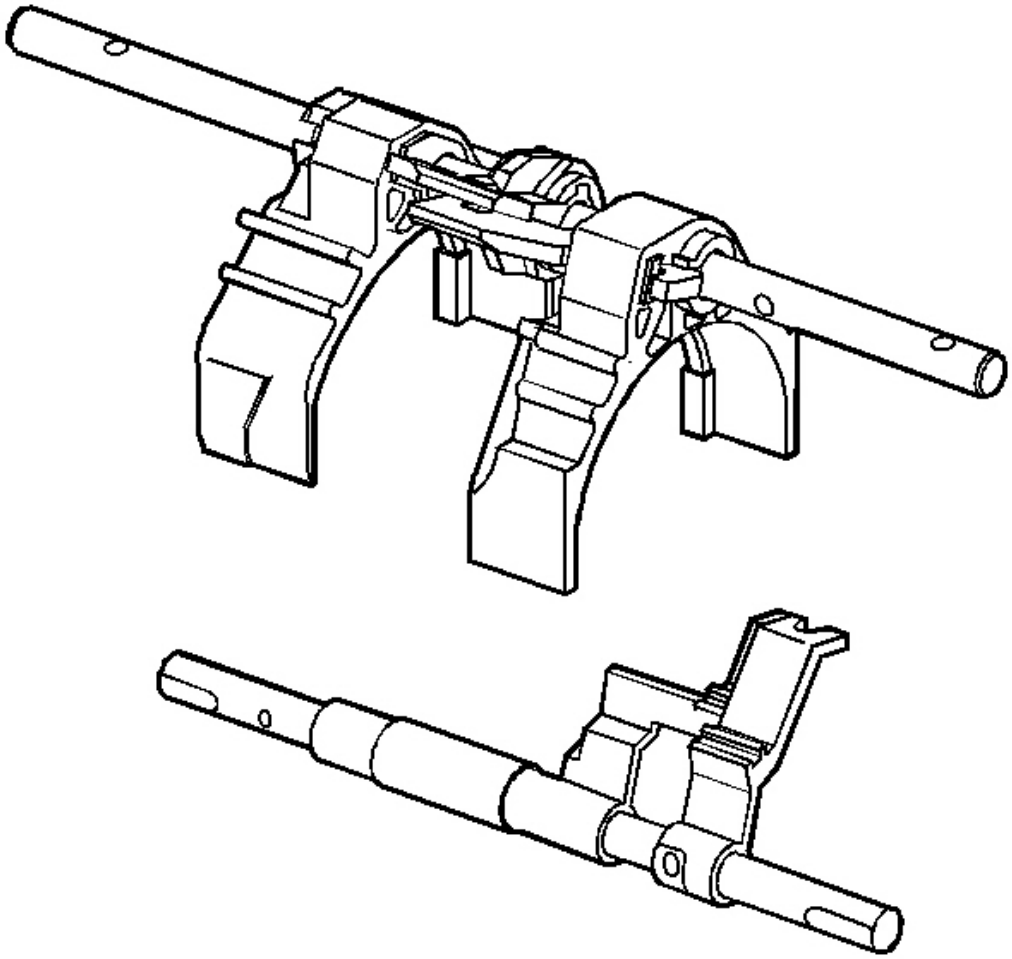

Fig. 155: Fork Assembly & Shift Shaft
Courtesy of GENERAL MOTORS CORP.

1. Clean the shift shaft and fork assembly parts with a suitable solvent. Air dry all the parts.

cardiagn.com

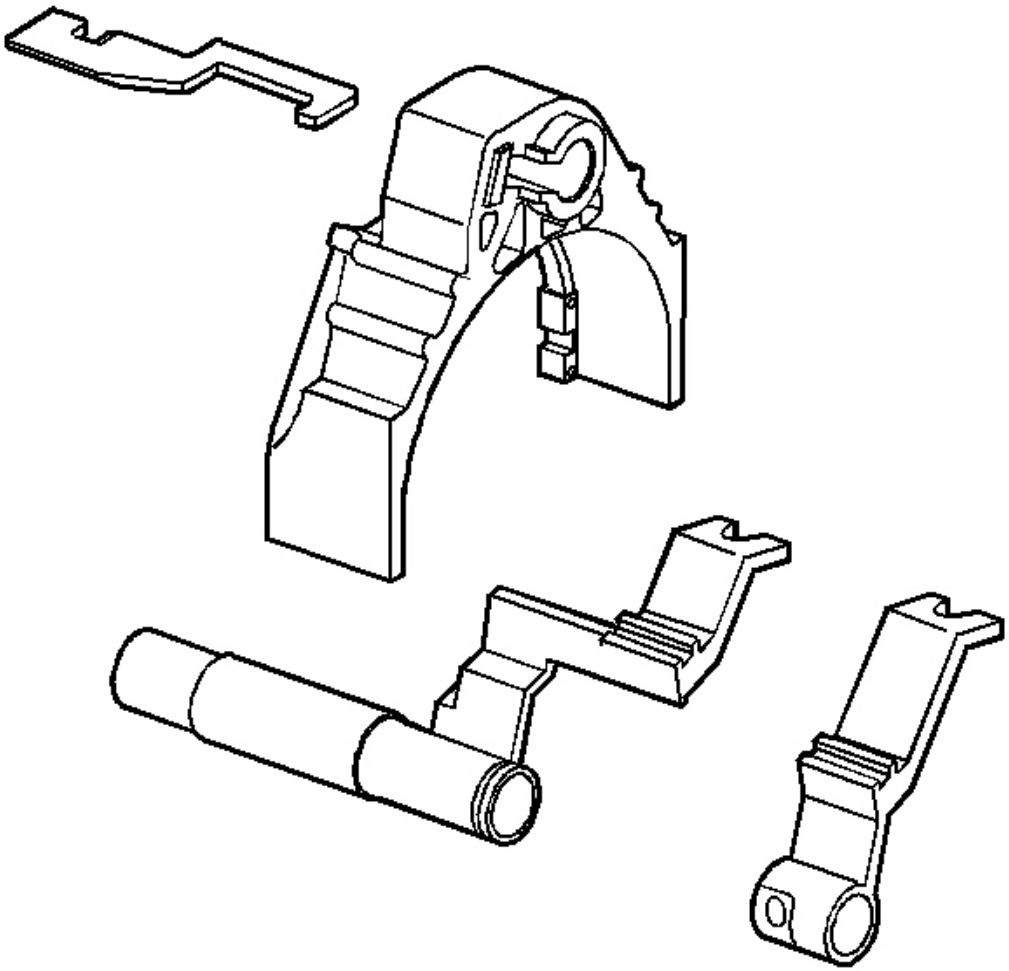

Fig. 156: Shift Links & Shift Forks
Courtesy of GENERAL MOTORS CORP.

2. Inspect the shift forks and the shift links for excessive wear, fractures or distortion.

cardiagn.com

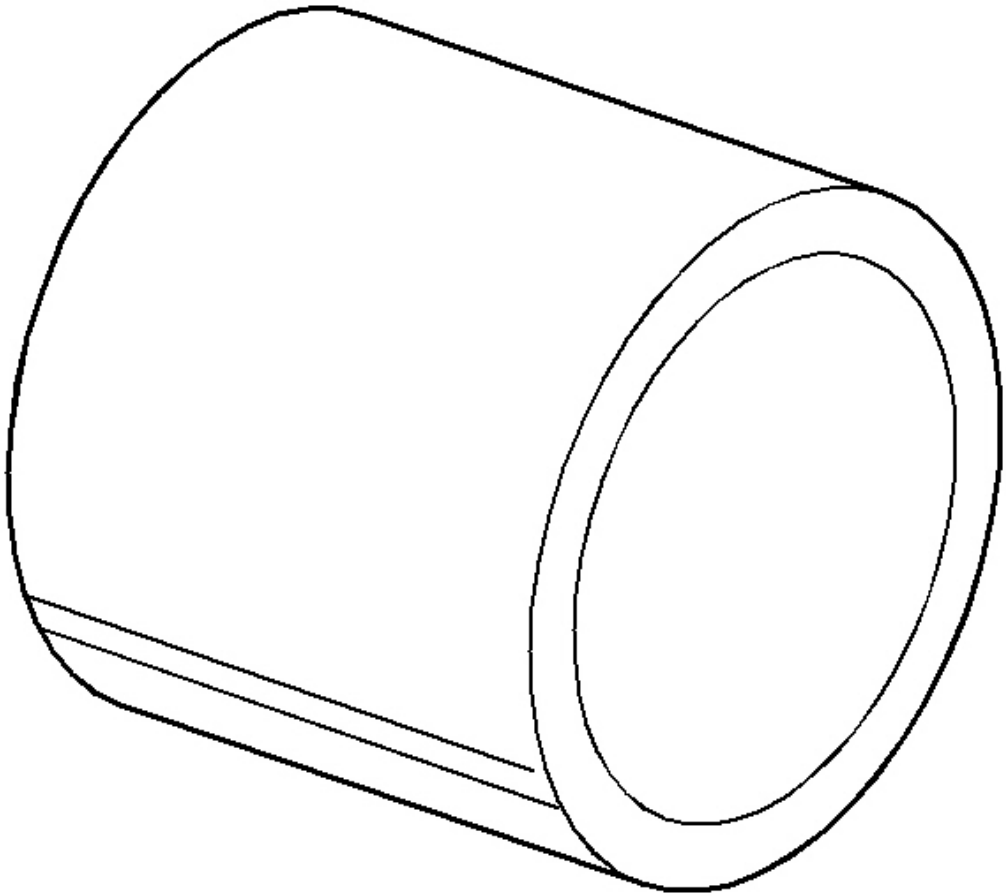

Fig. 157: View Of Shift Shaft Lever Bushing
Courtesy of GENERAL MOTORS CORP.

3. Inspect the shift shaft lever bushings for excessive wear.

cardiagn.com

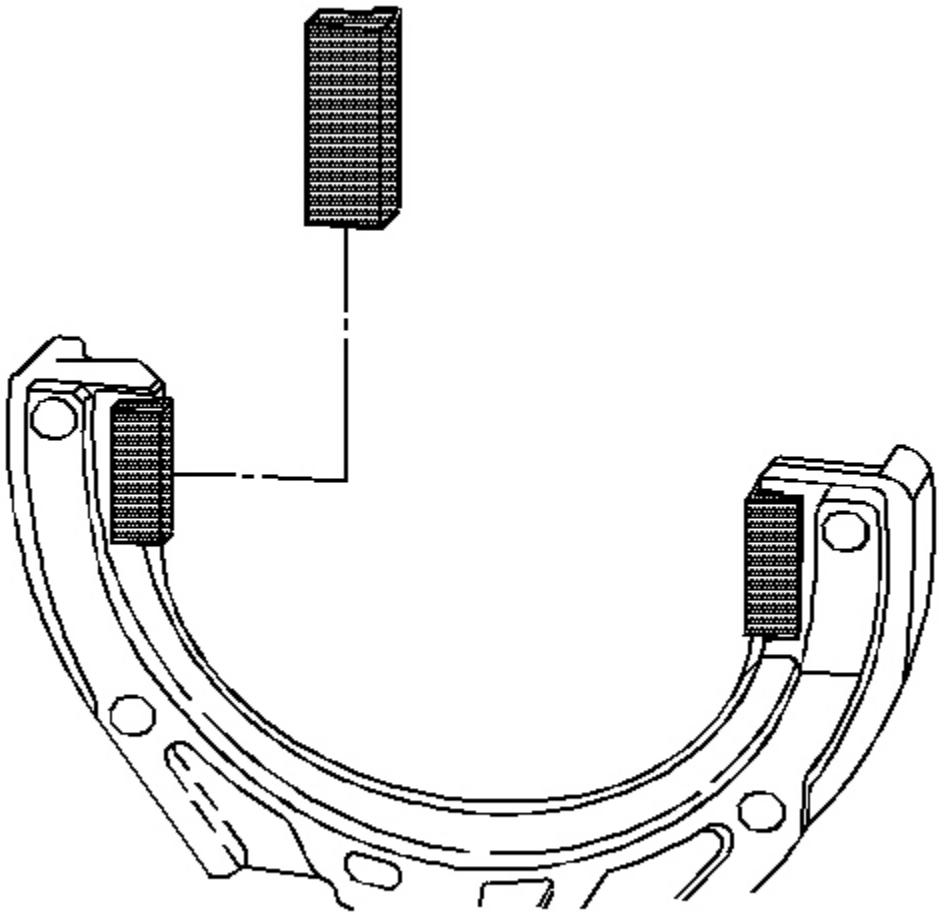

Fig. 158: Identifying Inspection Areas On Shift Fork Nylon Inserts
Courtesy of GENERAL MOTORS CORP.

4. Inspect the shift fork nylon inserts for wear.
5. Replace parts that are fractured, excessively worn, or distorted.
6. Replace an excessively worn or burred shift shaft.

SHIFT RAIL AND FORK ASSEMBLIES CLEANING AND INSPECTION (CTSV)

cardiagn.com

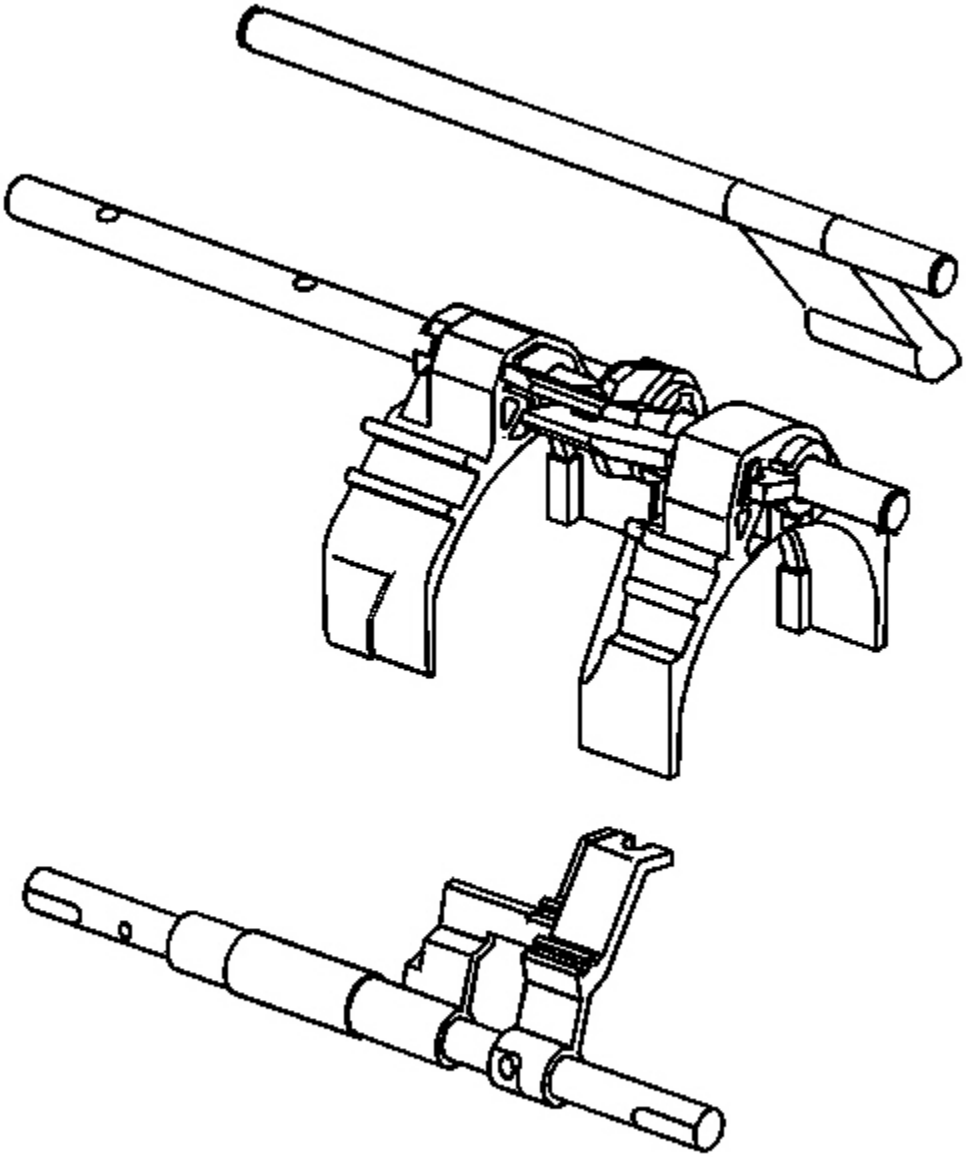

Fig. 159: Shift Shaft & Fork Assembly
Courtesy of GENERAL MOTORS CORP.

1. Clean the shift shaft and fork assembly parts with a suitable solvent. Air dry all the parts.

cardiagn.com

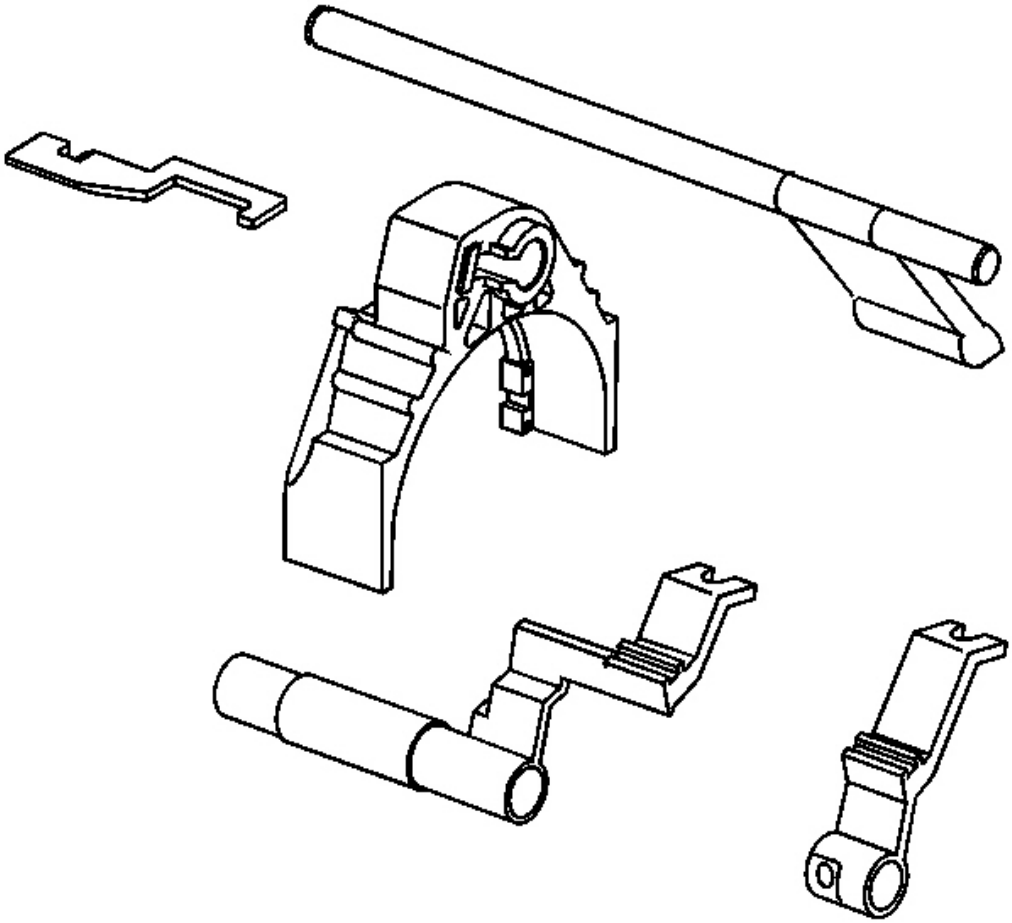

Fig. 160: Shift Forks & Shift Links
Courtesy of GENERAL MOTORS CORP.

2. Inspect the shift forks and the shift links for excessive wear, fractures or distortion.

cardiagn.com

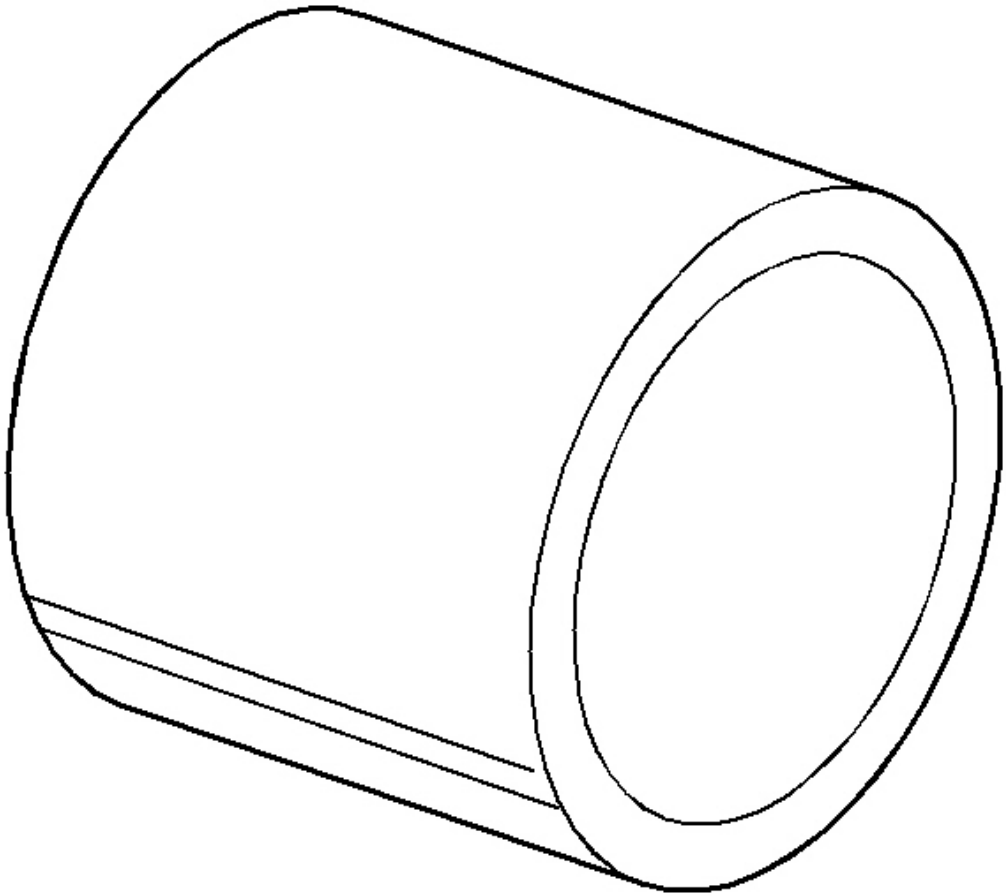

Fig. 161: View Of Shift Shaft Lever Bushing
Courtesy of GENERAL MOTORS CORP.

3. Inspect the shift shaft lever bushings for excessive wear.

cardiagn.com

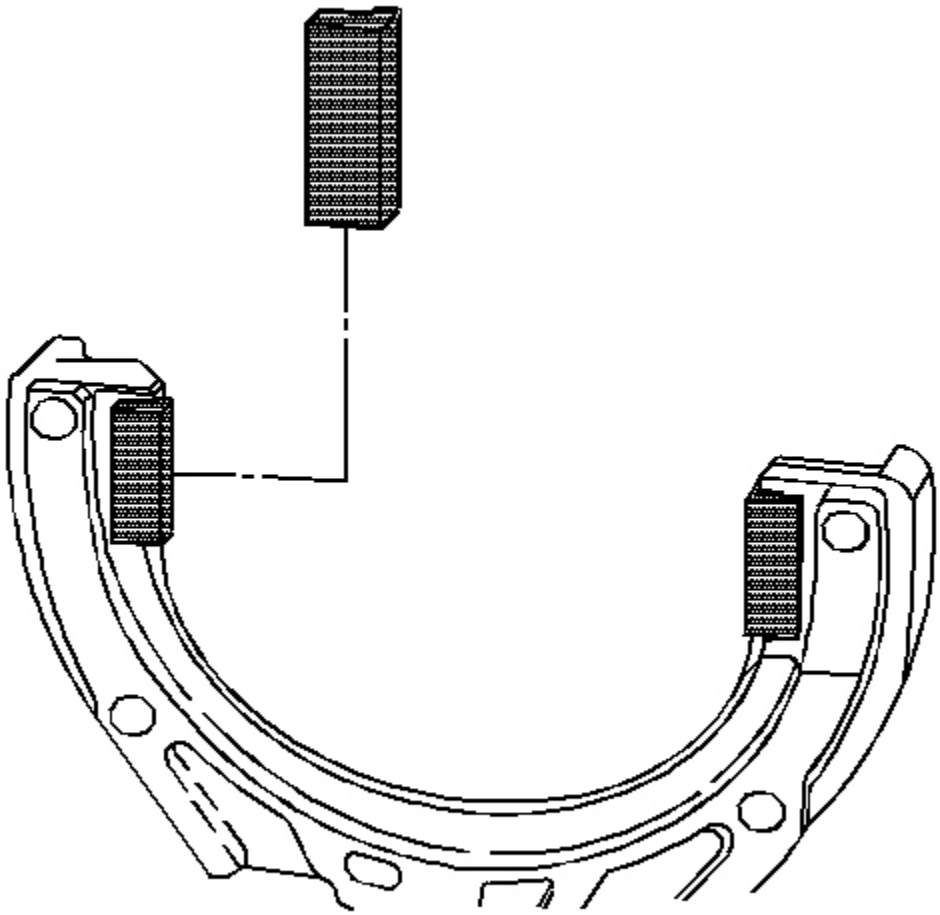

Fig. 162: Identifying Inspection Areas On Shift Fork Nylon Inserts
Courtesy of GENERAL MOTORS CORP.

4. Inspect the shift fork nylon inserts for wear.
5. Replace parts that are fractured, excessively worn, or distorted.
6. Replace an excessively worn or burred shift shaft.

SHIFT RAIL AND FORK ASSEMBLIES ASSEMBLE

Tools Required

J 36850 Transjel Lubricant. See **Special Tools** .

cardiagn.com

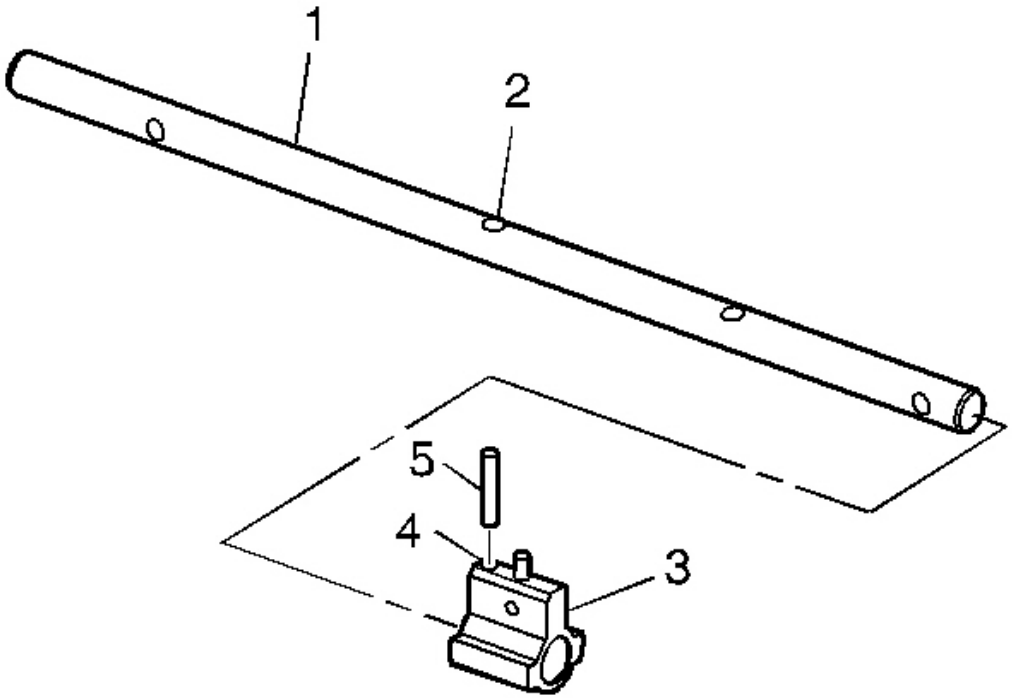

Fig. 163: Installing/Removing Selector Pin & Roll Pin On Shift Shaft
Courtesy of GENERAL MOTORS CORP.

1. Install the selector pin (3) on the shift shaft (4).
2. Align the roll pin hole on the selector pin (4) with the roll pin hole on the shift shaft (2).
3. Install the roll pin (5) through the selector pin (3) and the shift shaft (1).

cardiagn.com

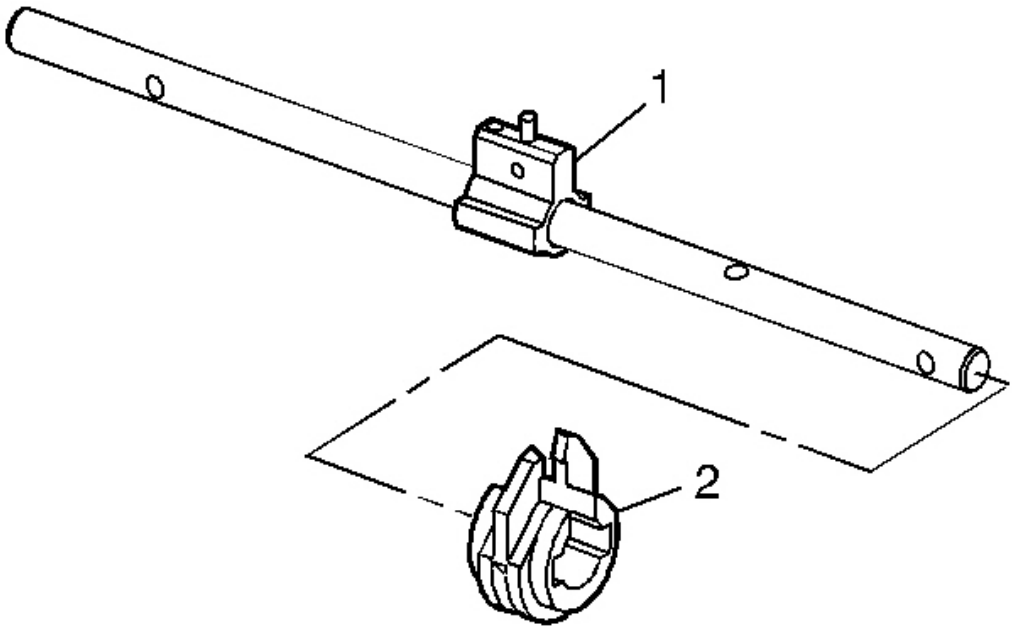

Fig. 164: Locating Interlocking Plate On Selector Pin
Courtesy of GENERAL MOTORS CORP.

4. Install the interlocking plate (2) on the selector pin (1).

cardiagn.com

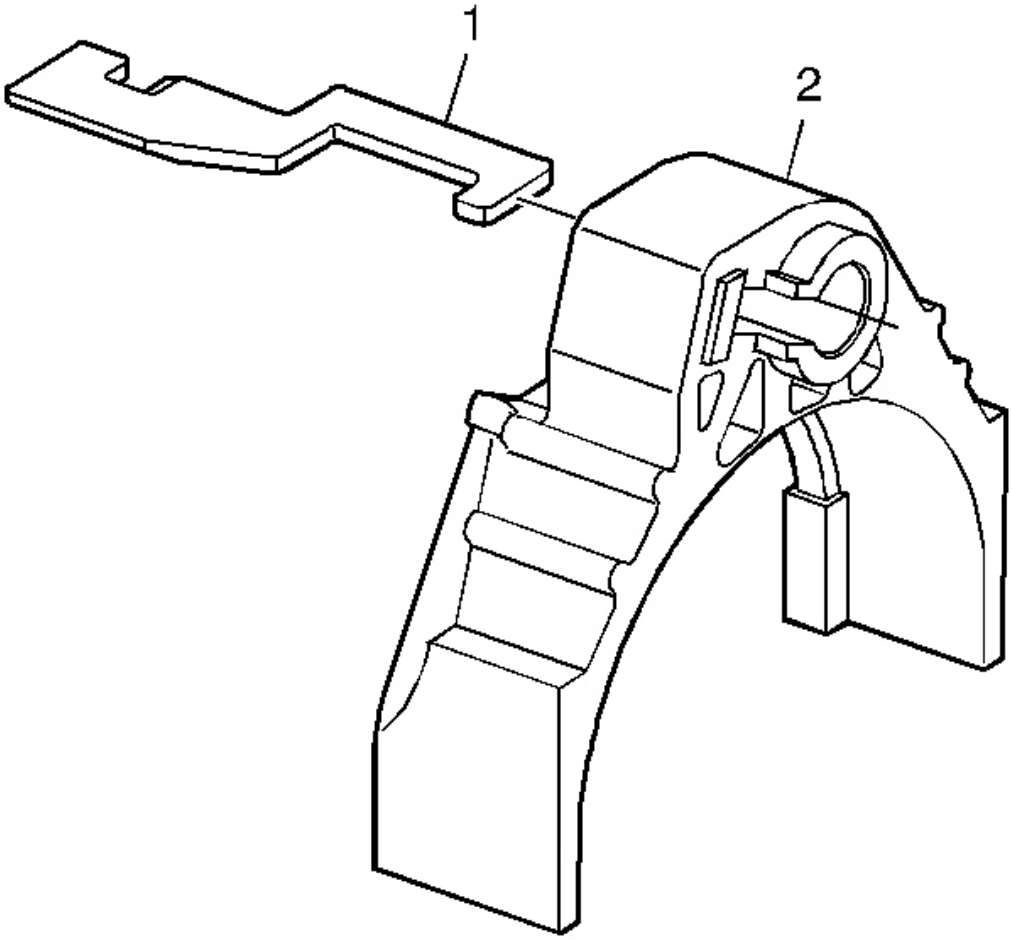

Fig. 165: View Of Shift Link In 3rd/4th Shift Fork
Courtesy of GENERAL MOTORS CORP.

5. Install the shift link (1) in the 3rd/4th shift fork (2).

cardiagn.com

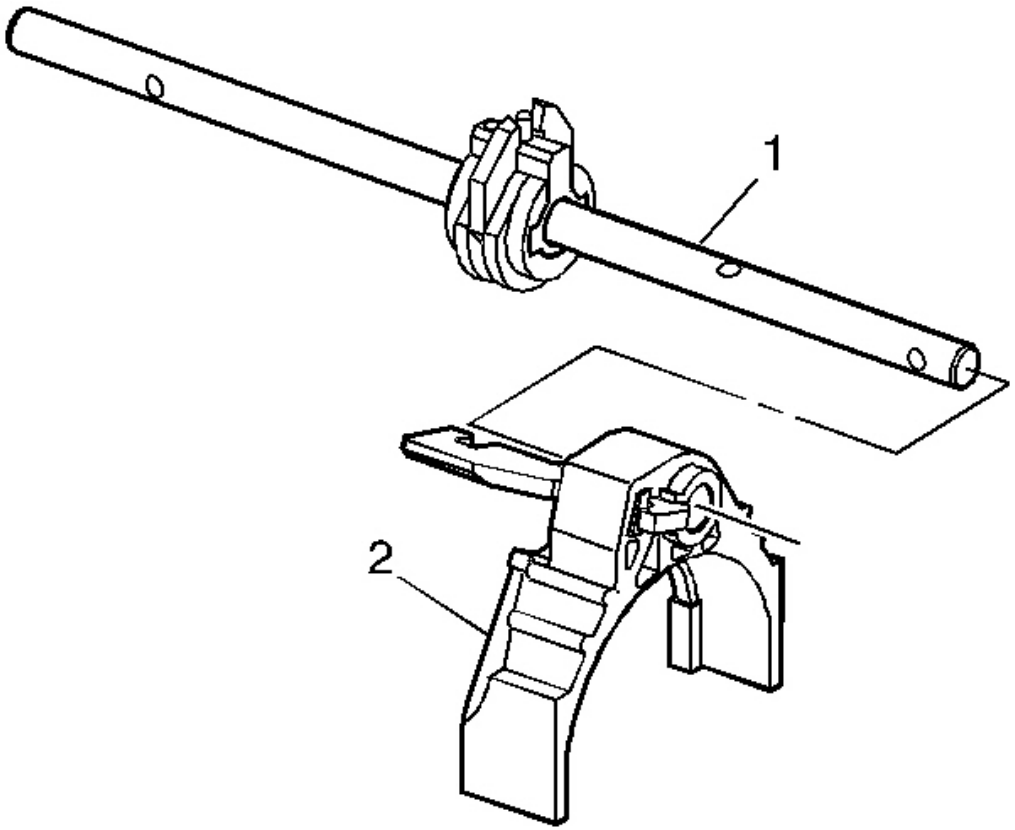

Fig. 166: Identifying 3rd/4th Shift Fork & Shift Shaft
Courtesy of GENERAL MOTORS CORP.

6. Install the 3rd/4th shift fork (2) on the shift shaft (1).

cardiagn.com

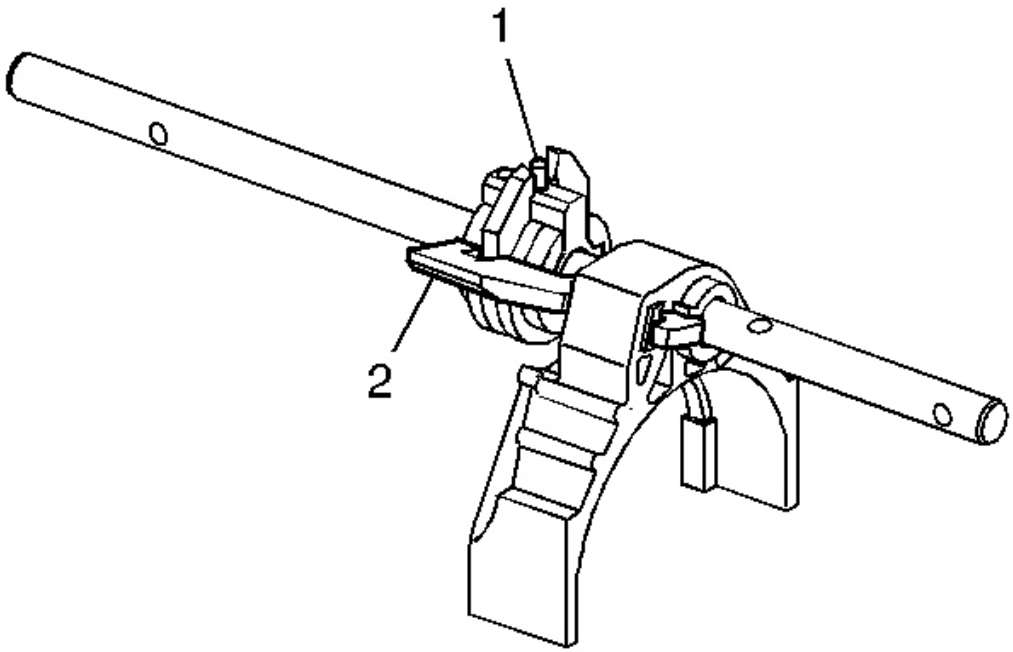

Fig. 167: Aligning Notch On Shift Link With Selector Roll Pin
Courtesy of GENERAL MOTORS CORP.

7. Align the notch on the shift link (2) with the selector roll pin (1).

cardiagn.com

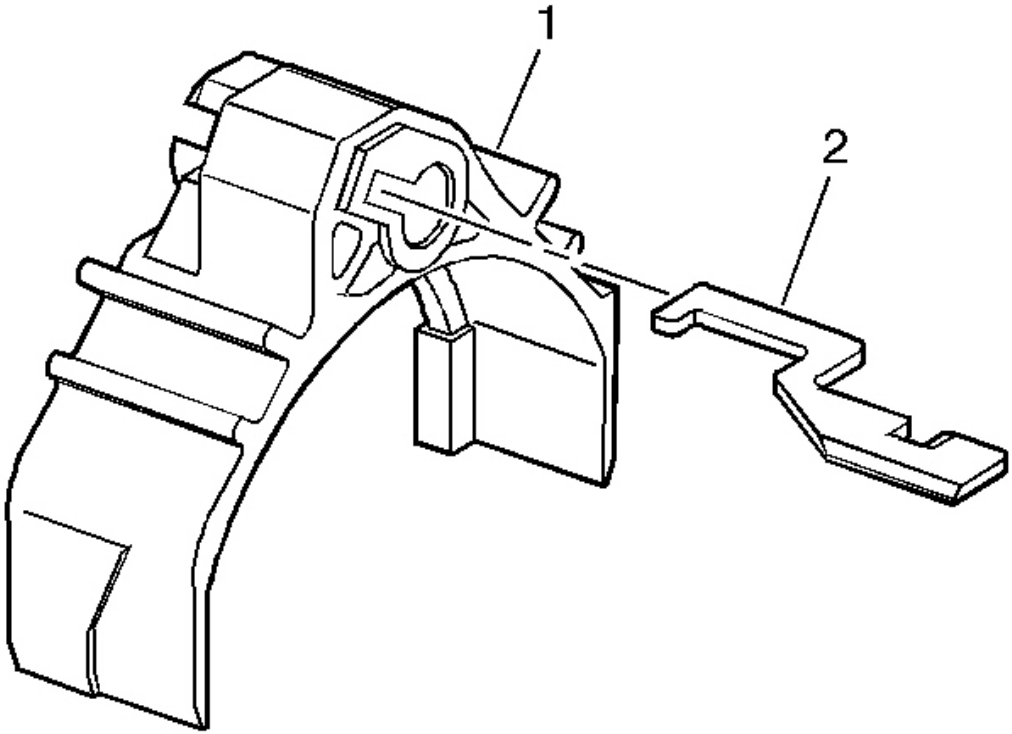

Fig. 168: Locating Shift Link & 1st/2nd Shift Fork
Courtesy of GENERAL MOTORS CORP.

8. Install the shift link (2) with the 1st/2nd shift fork (1).

cardiagn.com

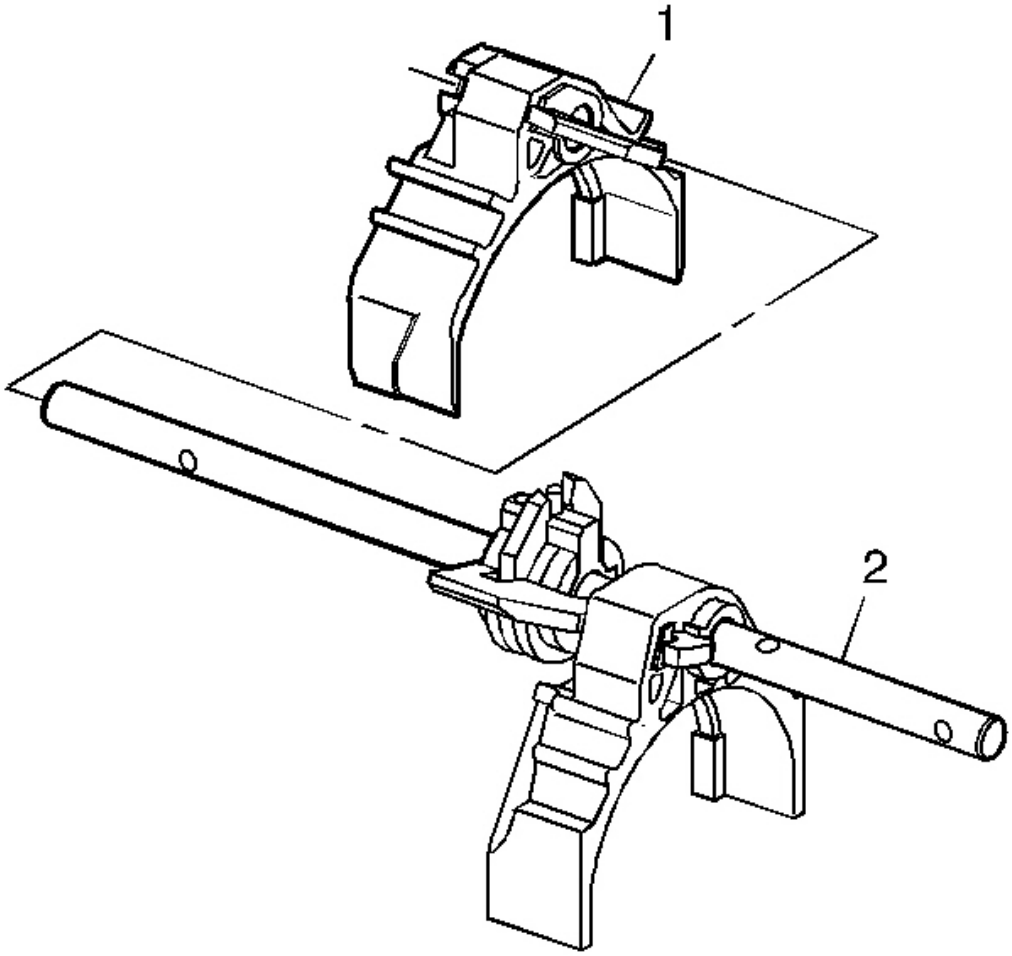

Fig. 169: View Of 1st/2nd Shift Fork On Shift Shaft
Courtesy of GENERAL MOTORS CORP.

9. Install the 1st/2nd shift fork (1) on the shift shaft (2).

cardiagn.com

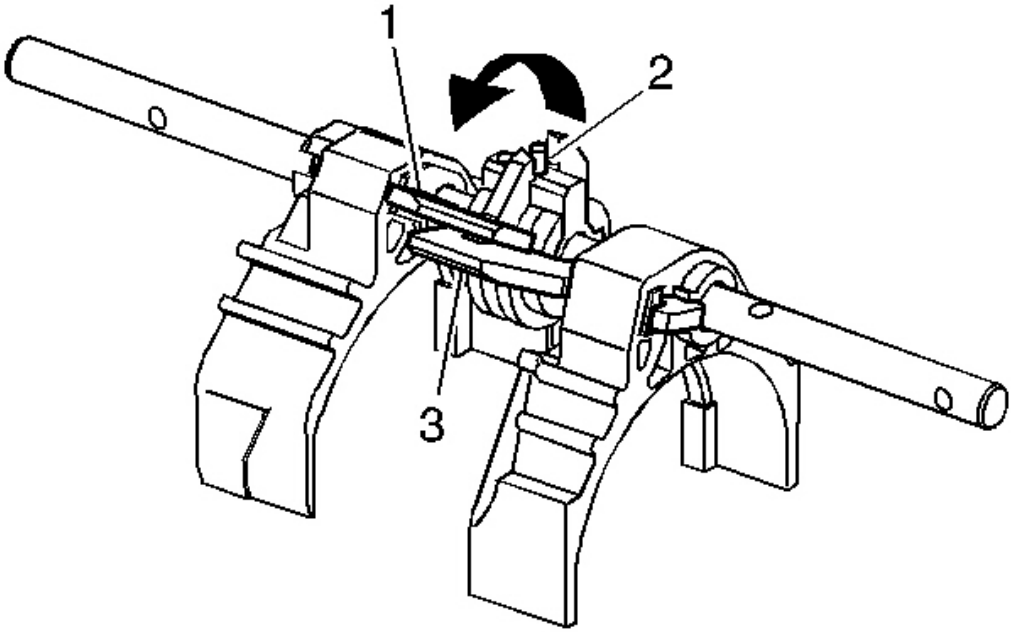

Fig. 170: Installing 1st/2nd Shift Shaft Link On Top Of 3rd/4th Shift Shaft Link
Courtesy of GENERAL MOTORS CORP.

10. Install the 1st/2nd shift shaft link (1) on top of the 3rd/4th shift shaft link (3) on the interlocking plate and the selector roll pin assembly (2).

cardiagn.com

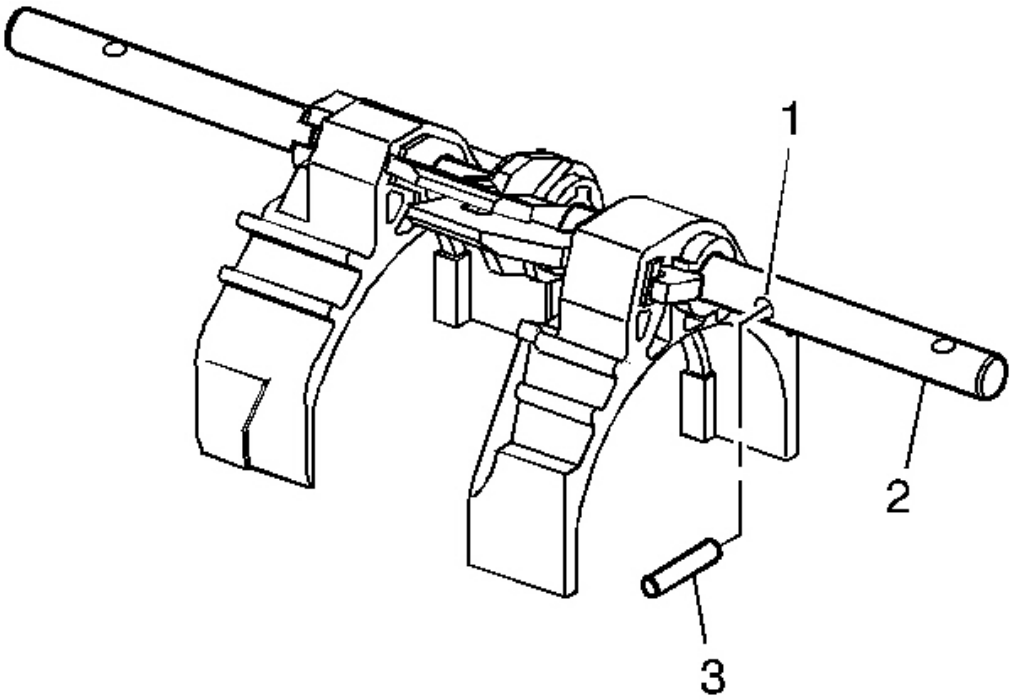

Fig. 171: View Of Neutral Return Cam Pin In Shift Shaft
Courtesy of GENERAL MOTORS CORP.

IMPORTANT: The neutral return cam pin fits loosely in the shift shaft. Use the J 36850 to hold the neutral return cam pin in place.

11. Install the neutral return cam pin (3) in the neutral return can pin hole (1) on the shift shaft (2).

Tools Required

J 39437 Bushing Installer. See **Special Tools** .

5th/6th, Reverse Shift Rail Assembly

cardiagn.com

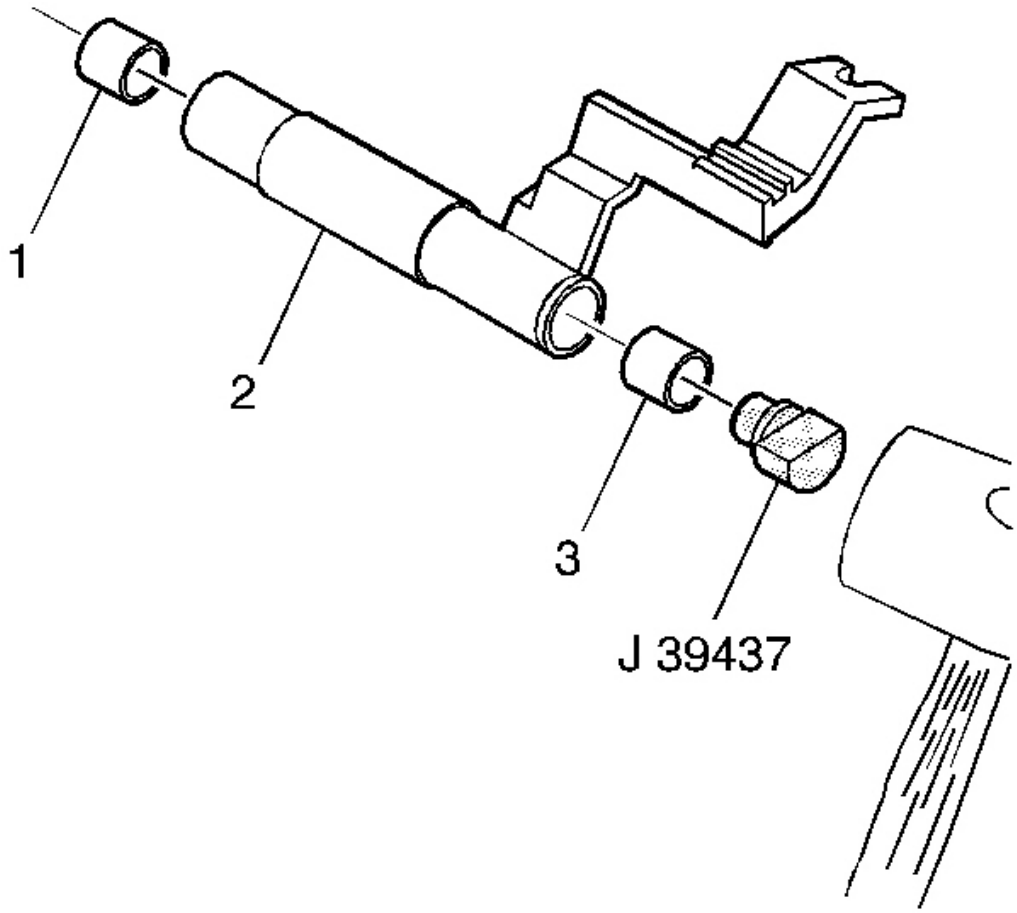

Fig. 172: Installing 5th/6th Shift Shaft Lever Bushings On 5th/6th Shift Lever
Courtesy of GENERAL MOTORS CORP.

1. Install the 5th/6th shift shaft lever bushings (1) and (3) in the 5th/6th shift lever (2) using the **J 39437** and a hammer.

cardiagn.com

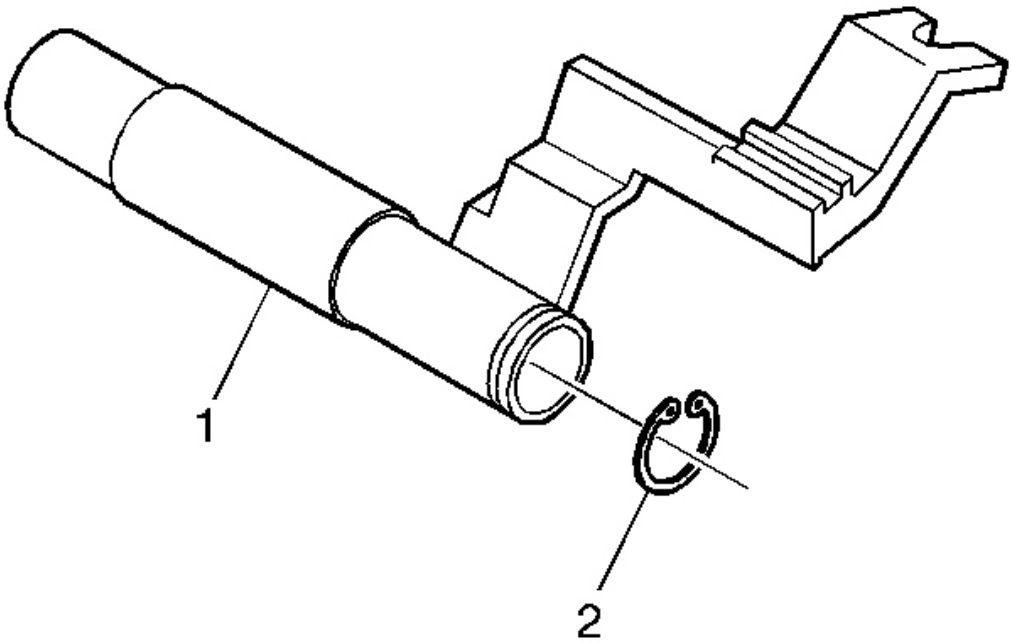

Fig. 173: Locating Retainer Ring On 5th/6th Shift Lever
Courtesy of GENERAL MOTORS CORP.

2. Install the retainer ring (1) on the 5th/6th shift lever (2).

cardiagn.com

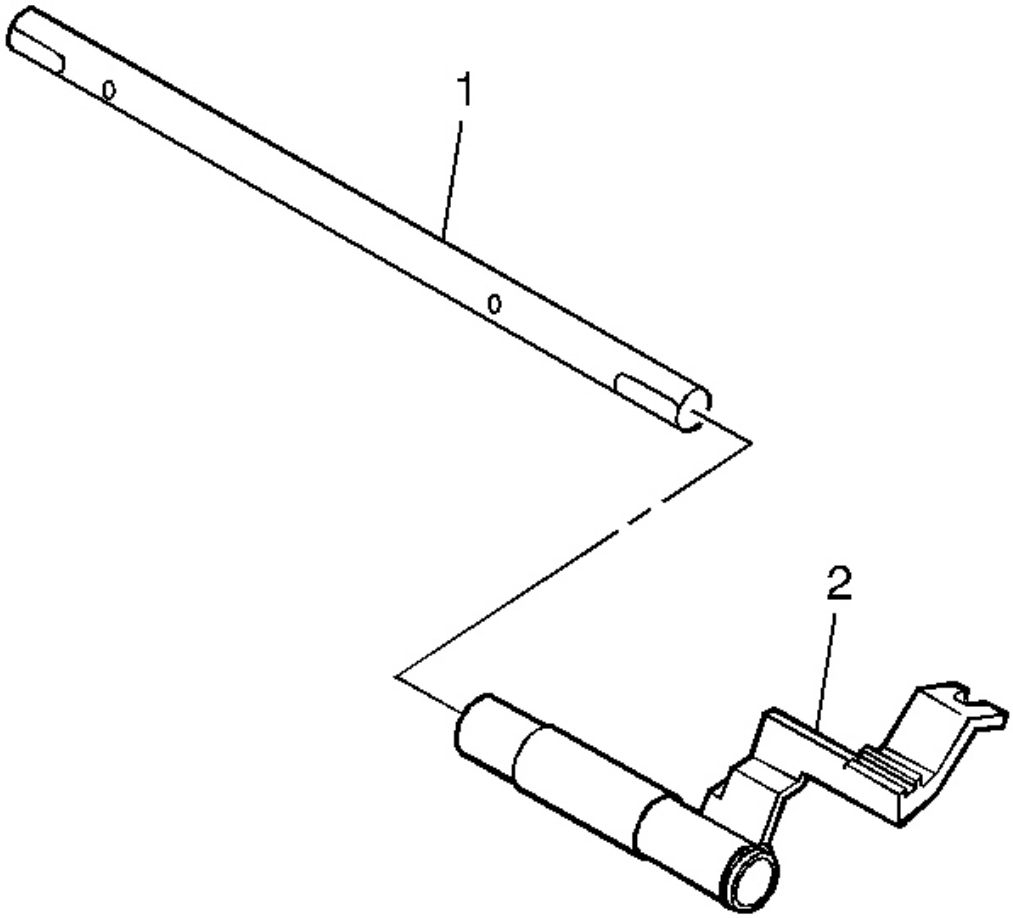

Fig. 174: Identifying 5th/6th Shift Lever
Courtesy of GENERAL MOTORS CORP.

3. Install the 5th/6th shift lever (2) on the shift shaft (1).

cardiagn.com

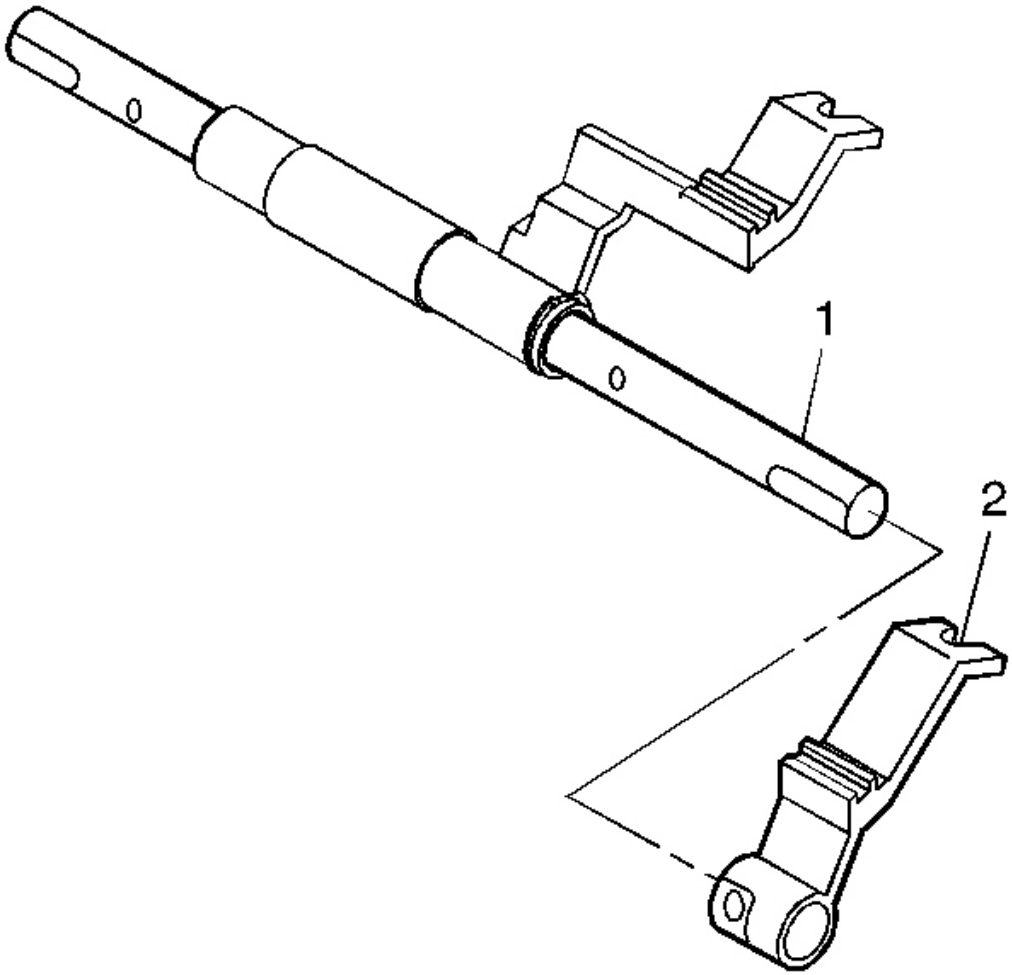

Fig. 175: Installing/Removing Reverse Shift Lever Onto Shift Shaft
Courtesy of GENERAL MOTORS CORP.

4. Install the reverse shift lever (2) on the shift shaft (1).

cardiagn.com

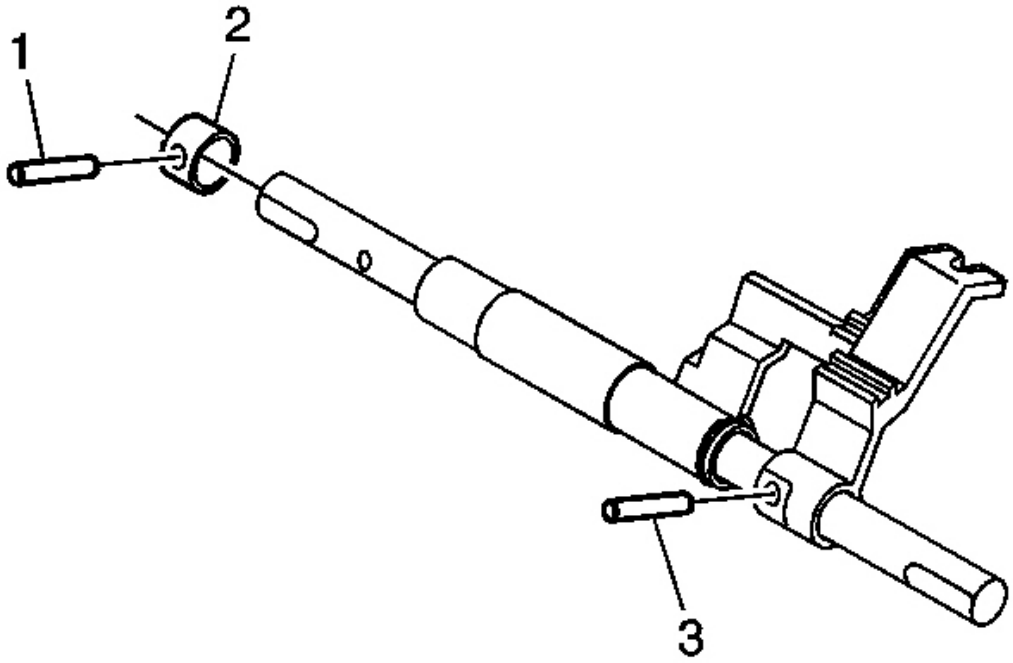

Fig. 176: View Of Reverse Lever Roll Pin, Reverse Collar & Reverse Collar Roll Pin
Courtesy of GENERAL MOTORS CORP.

5. Install the reverse lever roll pin (3).
6. Install the reverse collar (2).
7. Install the reverse collar roll pin (1).

TRANS CASE AND ADAPTER PLATE DISASSEMBLE (Y CAR)

Transmission Case

Tools Required

- **J 8092** Universal Driver Handle. See **Special Tools** .
- **J 23907** Slide Hammer. See **Special Tools** .
- **J 39439-2** Bushing Remover. See **Special Tools** .
- **J 39790** Mainshaft Bearing Race Remover. See **Special Tools** .
- **J 39791** Countershaft Bearing Race Remover. See **Special Tools** .

cardiagn.com

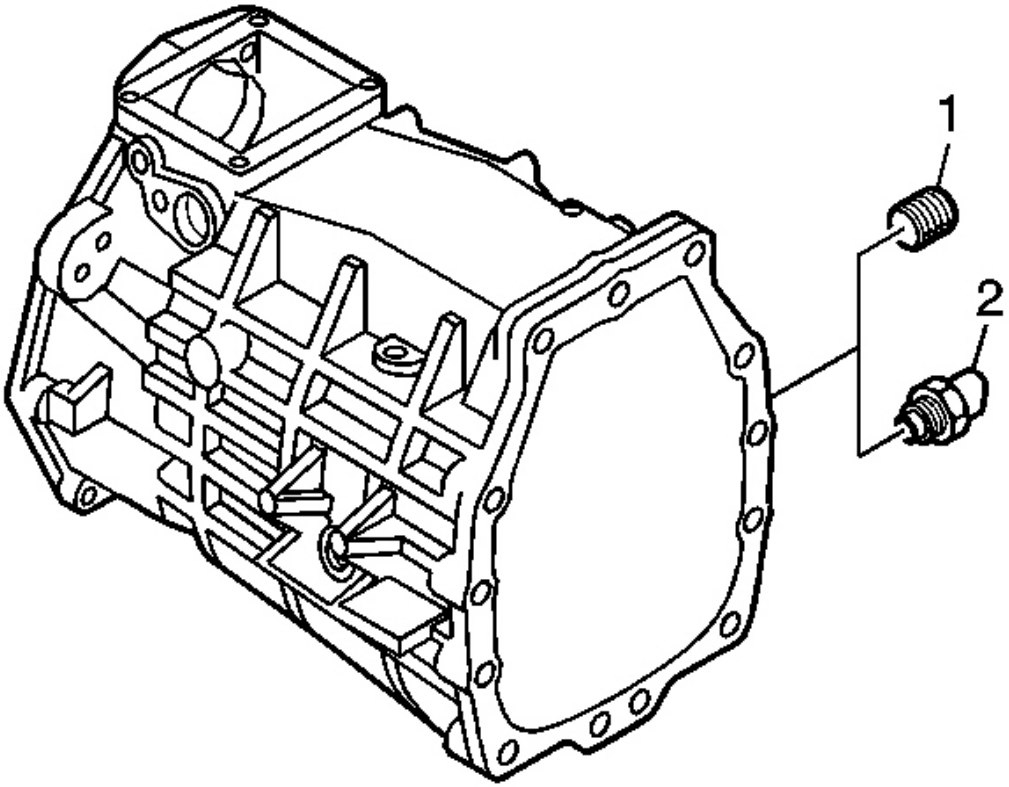

Fig. 177: View Of Transmission Case Fill Plug & Temperature Switch
Courtesy of GENERAL MOTORS CORP.

1. Remove the transmission case fill plug (1) (MM6 only).
2. Remove the temperature switch (2) (M12 only).

cardiagn.com

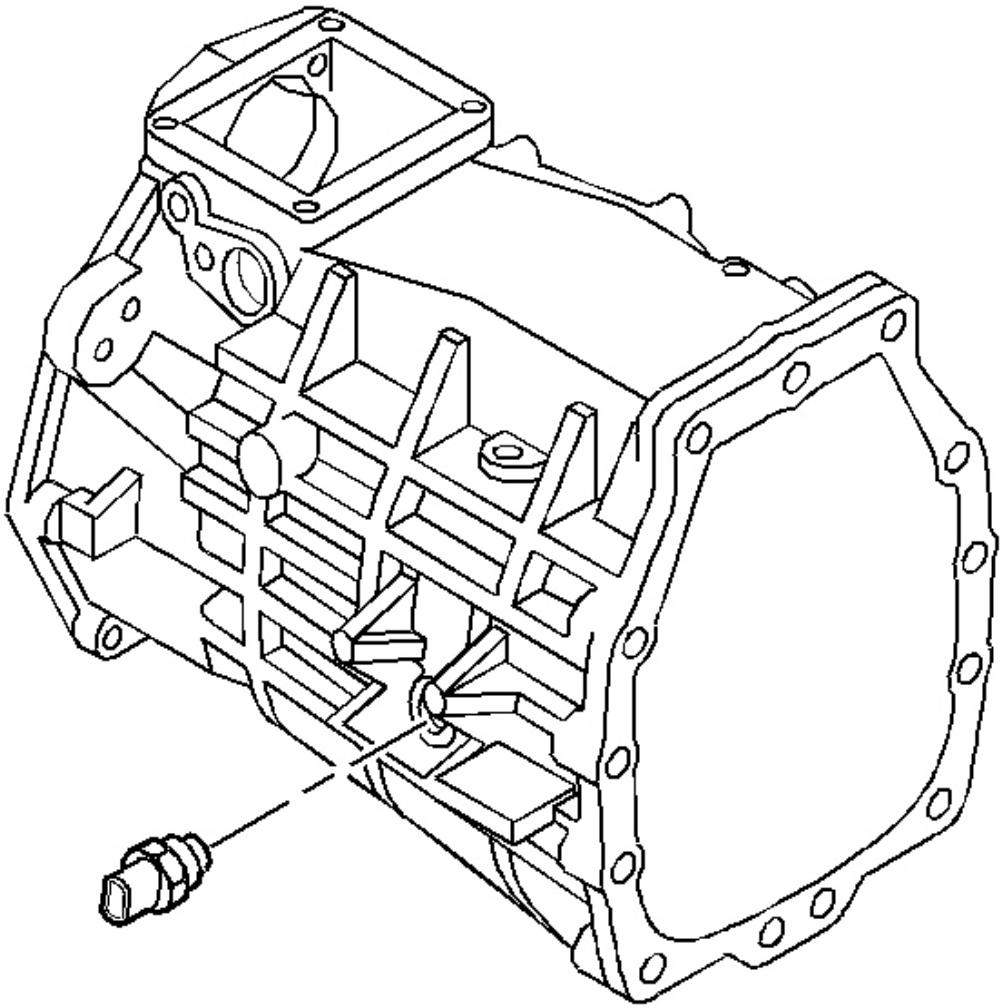

Fig. 178: Locating Reverse Lamp Switch
Courtesy of GENERAL MOTORS CORP.

3. Remove the reverse lamp switch.

cardiagn.com

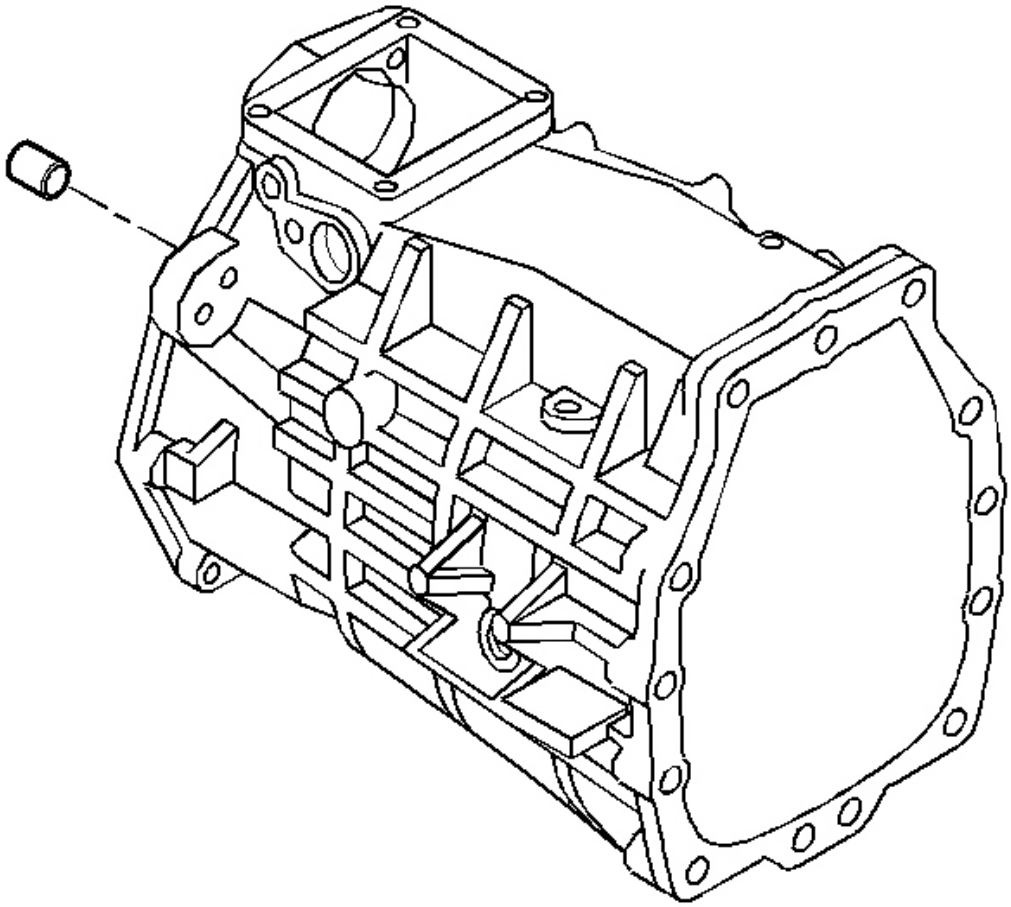

Fig. 179: Identifying Transfer Case Dowel Pins
Courtesy of GENERAL MOTORS CORP.

4. Remove the dowel pins.

IMPORTANT: Do not replace the bearing race unless inspection shows bearing race damage.

cardiagn.com

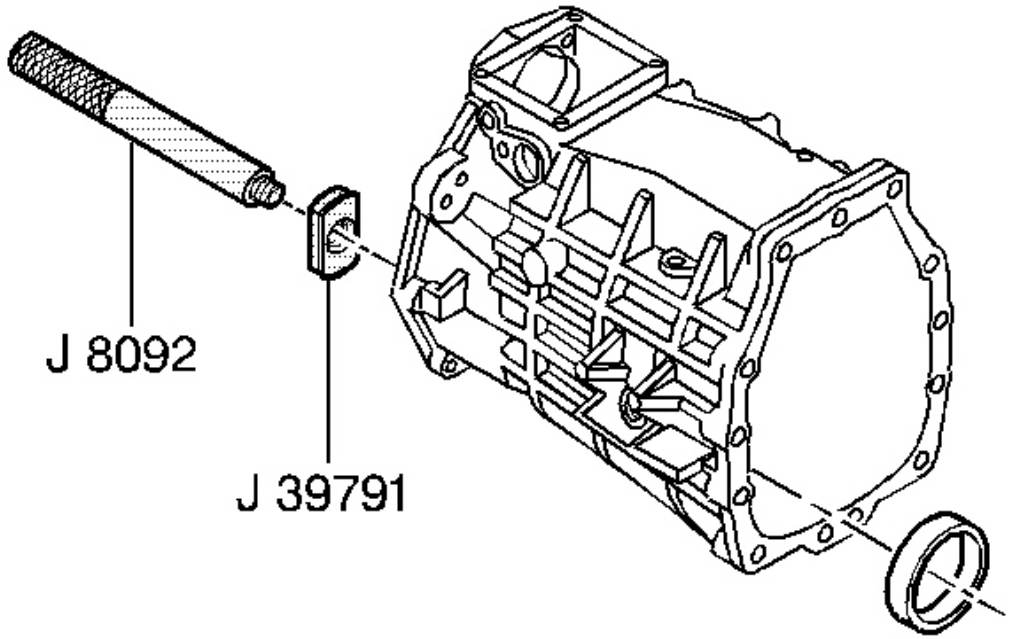

Fig. 180: Removing Countershaft Bearing Race Using J 8092 & J 39791
Courtesy of GENERAL MOTORS CORP.

5. Remove the countershaft bearing race, using the **J 8092** and the **J 39791** .

cardiagn.com

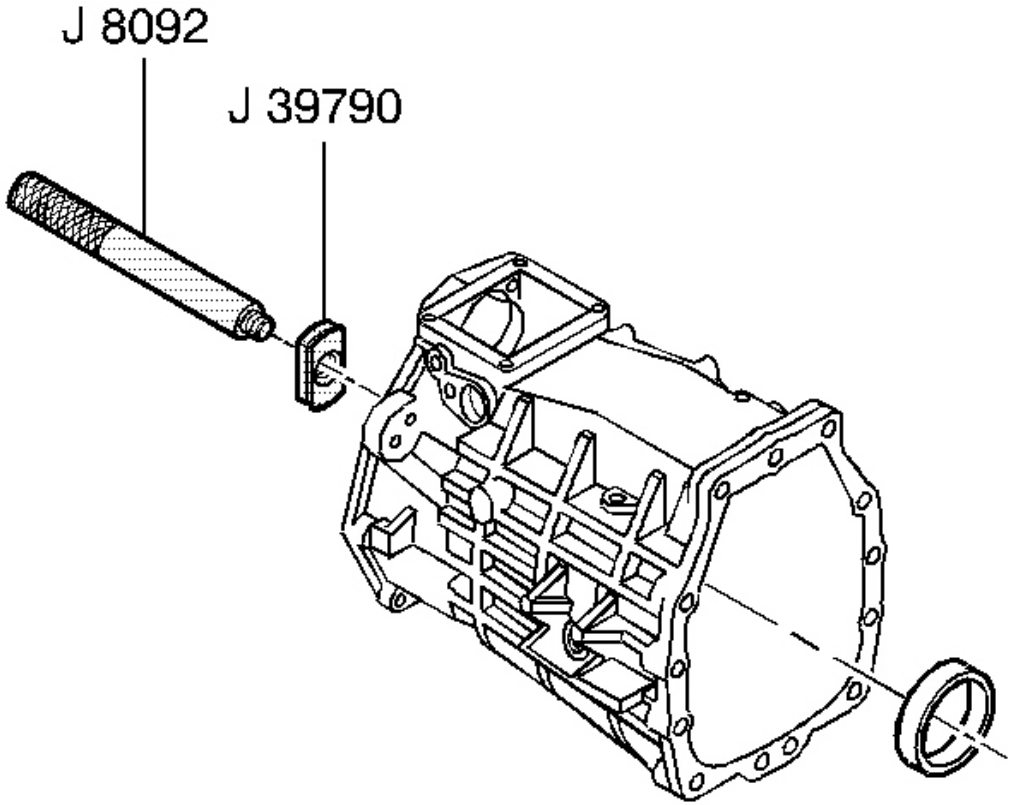

Fig. 181: Removing Mainshaft Bearing Race
Courtesy of GENERAL MOTORS CORP.

IMPORTANT: Do not replace the bearing race unless inspection shows bearing race damage.

6. Remove the mainshaft bearing race, using the **J 8092** and the **J 39790** .

cardiagn.com

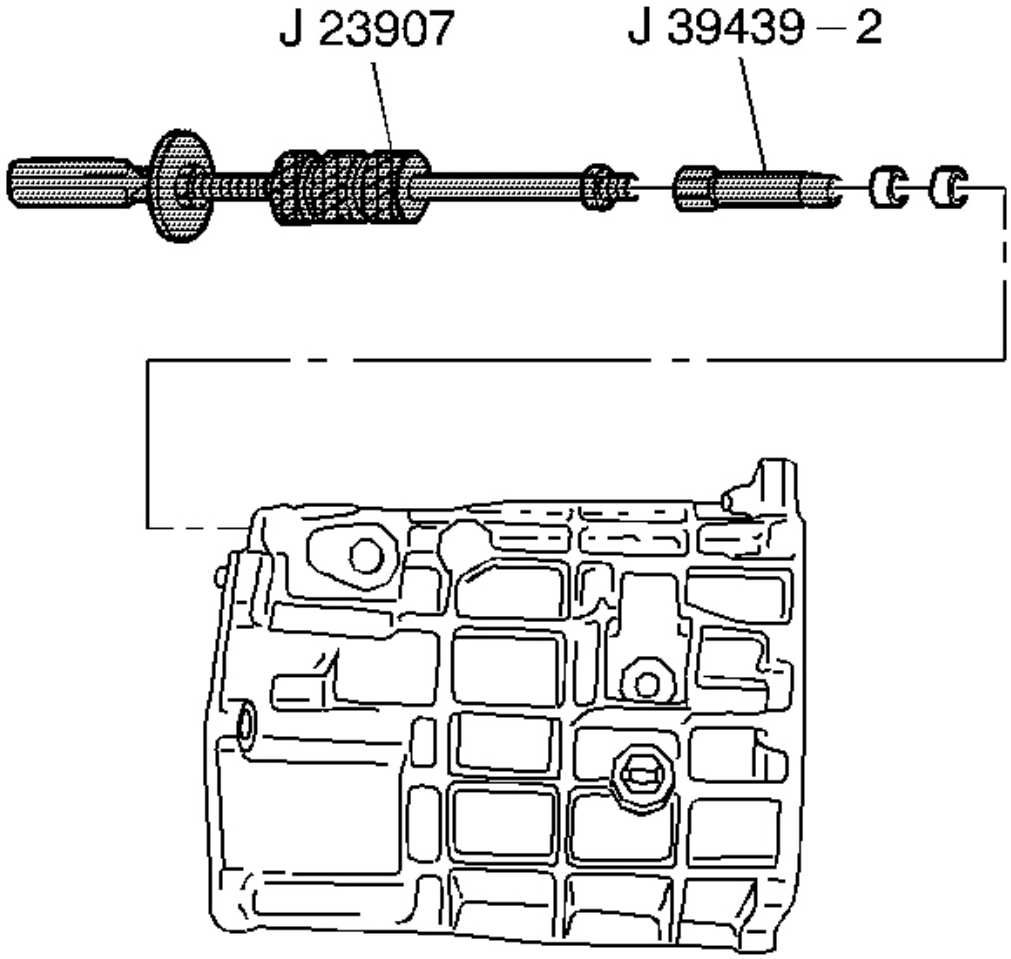

Fig. 182: Removing 1st/2nd & 3rd/4th Shift Shaft Bushings
Courtesy of GENERAL MOTORS CORP.

7. Remove the 1st/2nd and the 3rd/4th shift shaft bushings, using the **J 23907** and the **J 39439-2** .

Adapter Plate

Tools Required

- **J 23907** Slide Hammer. See **Special Tools** .
- **J 39439-2** Bushing Remover. See **Special Tools** .

1. Remove the neutral return cam.

cardiagn.com

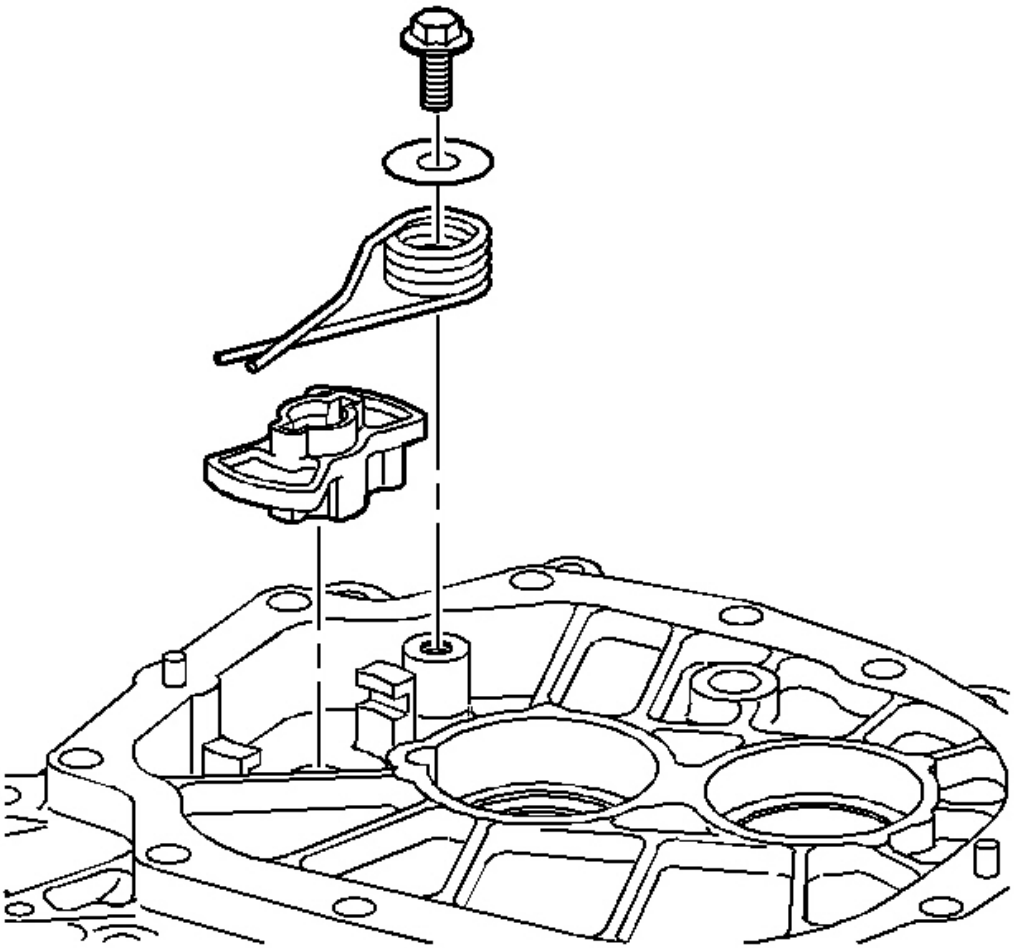

Fig. 183: View Of Neutral Return Cam Assembly
Courtesy of GENERAL MOTORS CORP.

2. Remove the neutral return cam spring retaining bolt and washer.
3. Remove the neutral return cam spring.

cardiagn.com

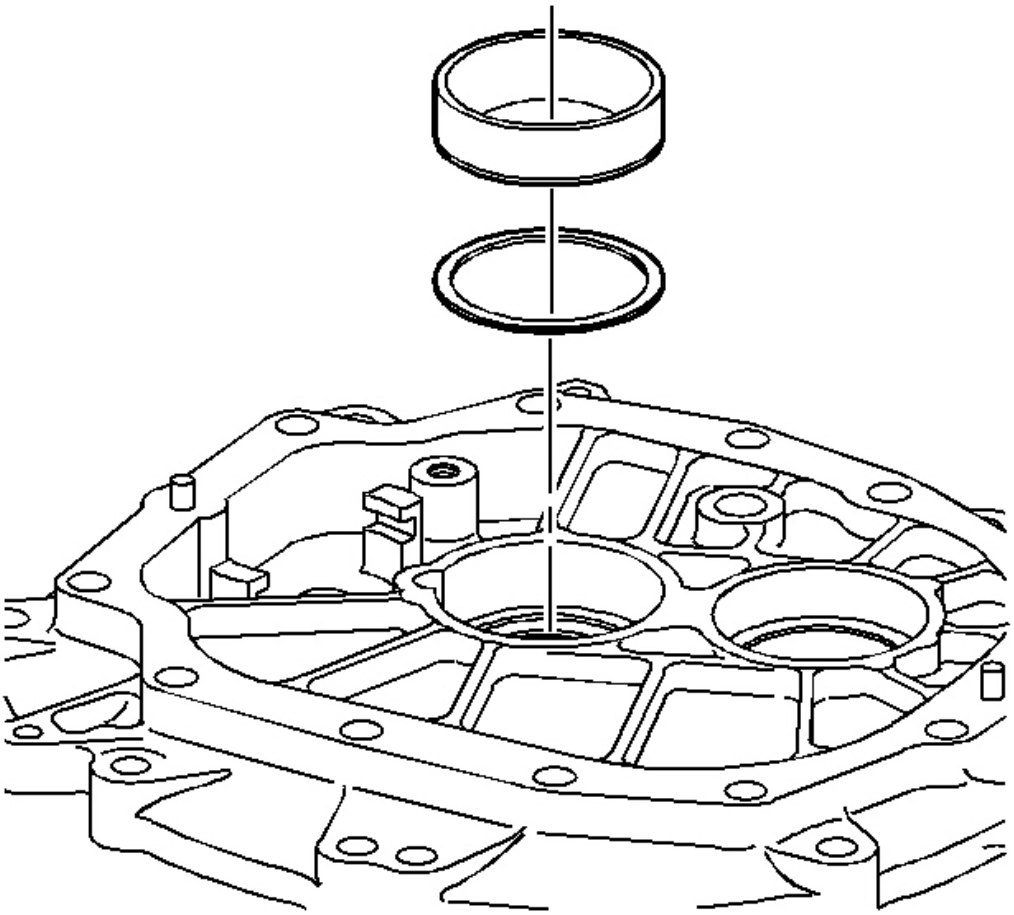

Fig. 184: Installing/Removing Input Shaft Bearing Shim And Bearing Race
Courtesy of GENERAL MOTORS CORP.

4. Remove the input shaft bearing race and the shim.

cardiagn.com

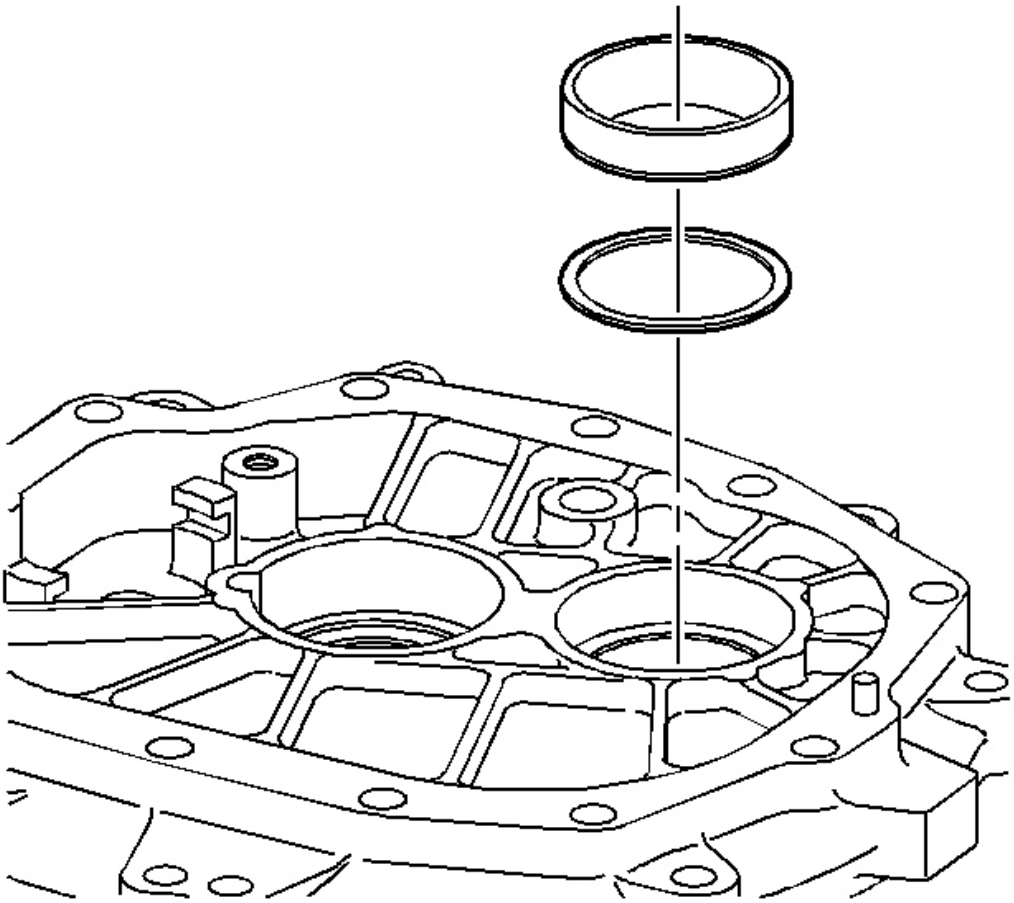

Fig. 185: Identifying Countershaft Bearing Shim & Bearing Race
Courtesy of GENERAL MOTORS CORP.

5. Remove the countershaft bearing race and the shim.

cardiagn.com

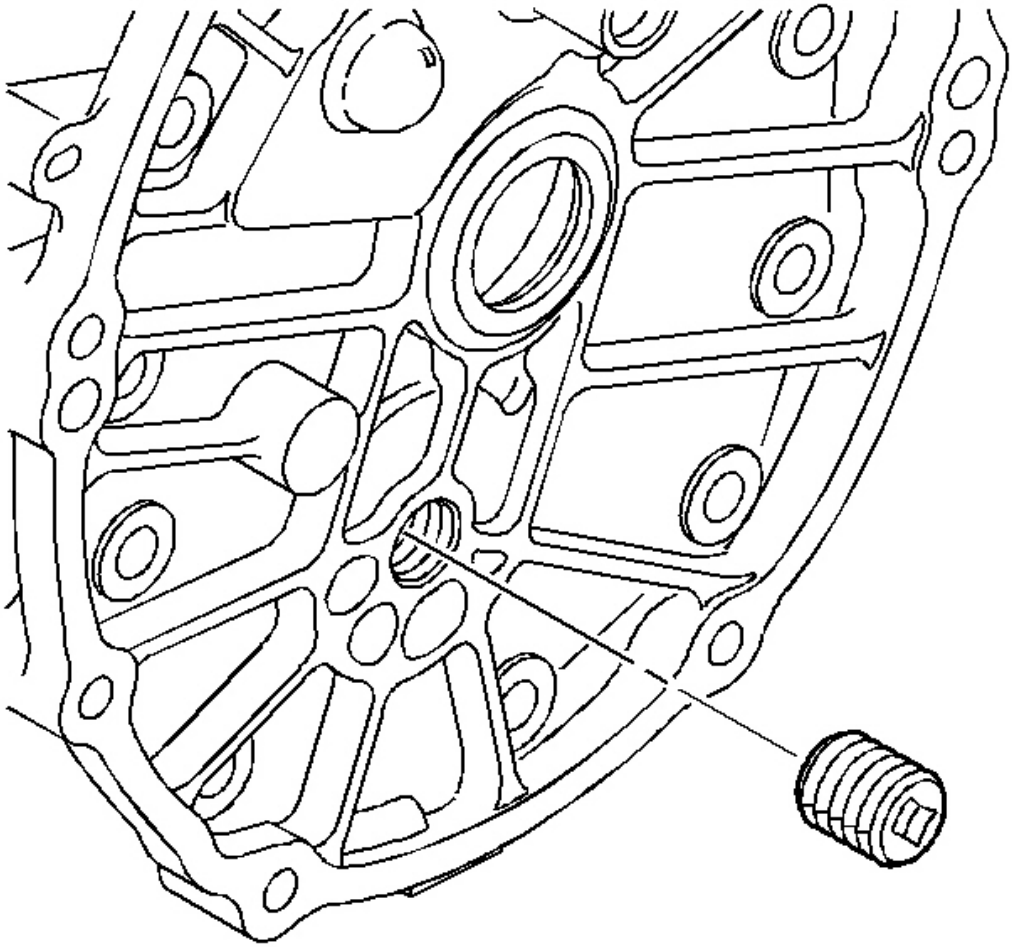

Fig. 186: Locating Adapter Plate Plug
Courtesy of GENERAL MOTORS CORP.

6. Remove the adapter plate plug.

cardiagn.com

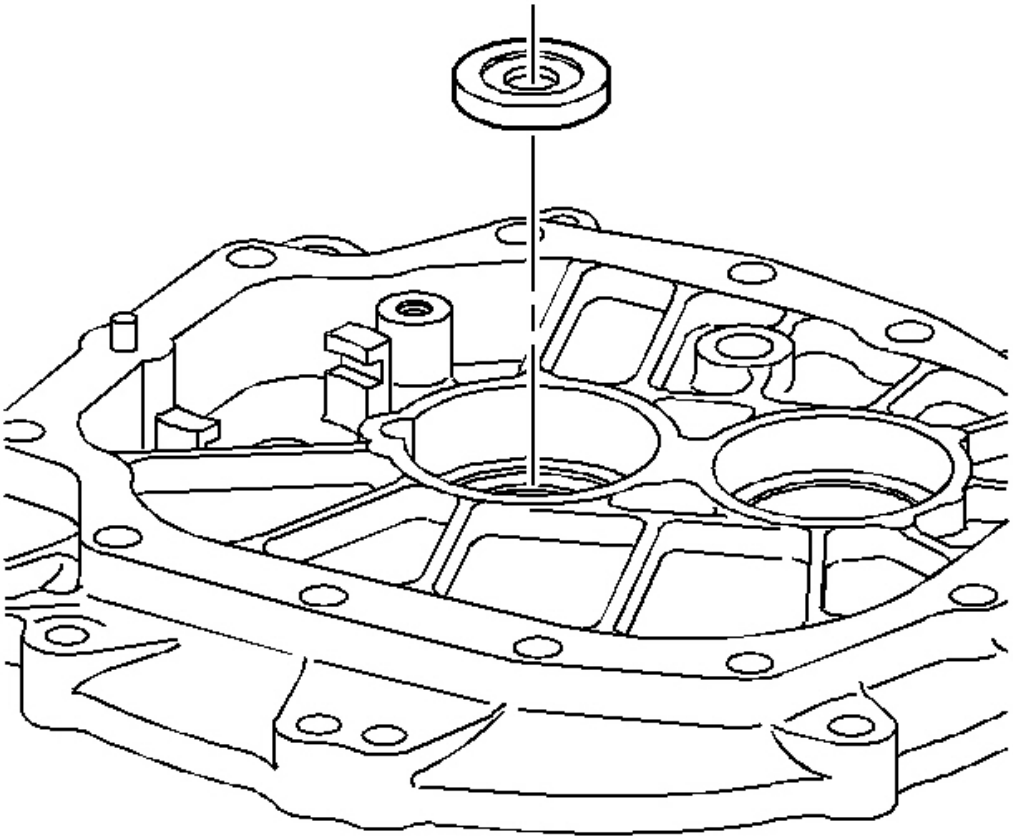

Fig. 187: Identifying Input Shaft Seal
Courtesy of GENERAL MOTORS CORP.

7. Remove the input shaft seal.

cardiagn.com

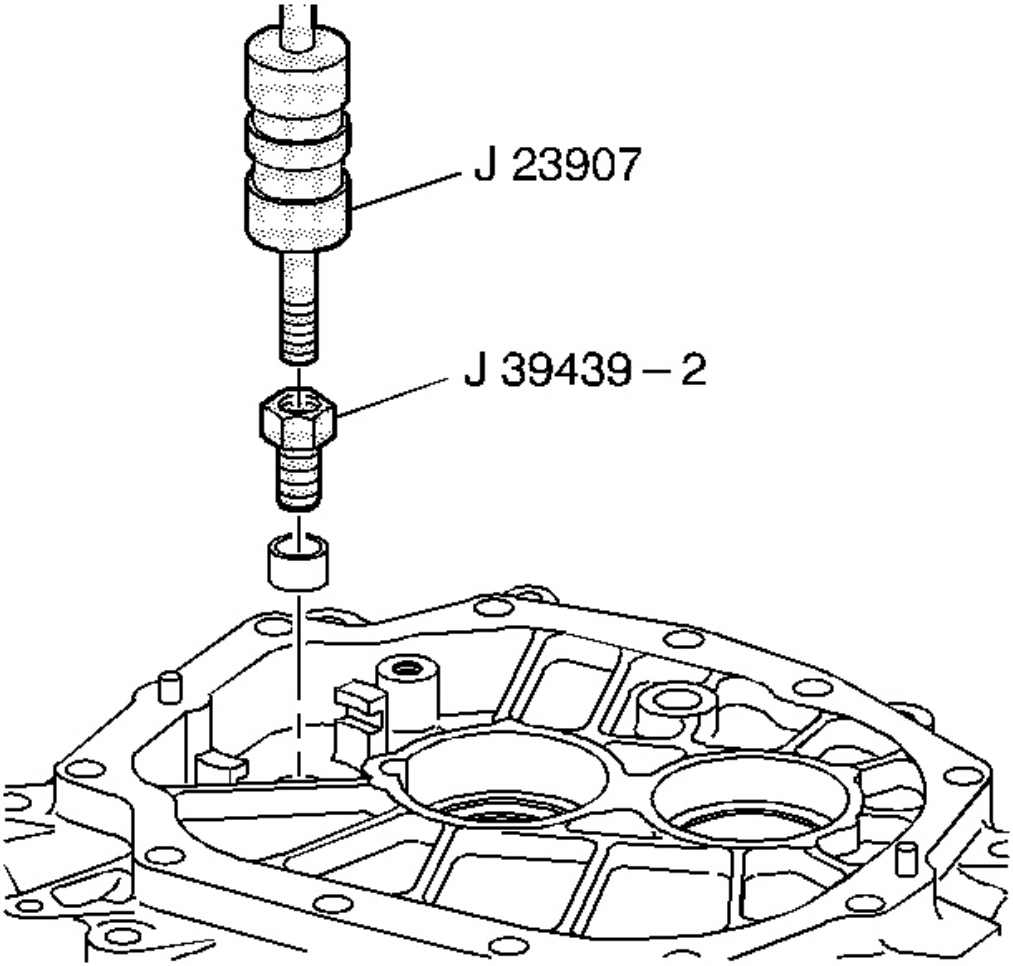

Fig. 188: Removing 1st/2nd & 3rd/4th Shift Shaft Bushing
Courtesy of GENERAL MOTORS CORP.

IMPORTANT: Do not replace the bushing unless inspection shows bushing damage.

8. Remove the 1st/2nd and the 3rd/4th shift shaft bushing, using the **J 23907** with the **J 39439-2** .

cardiagn.com

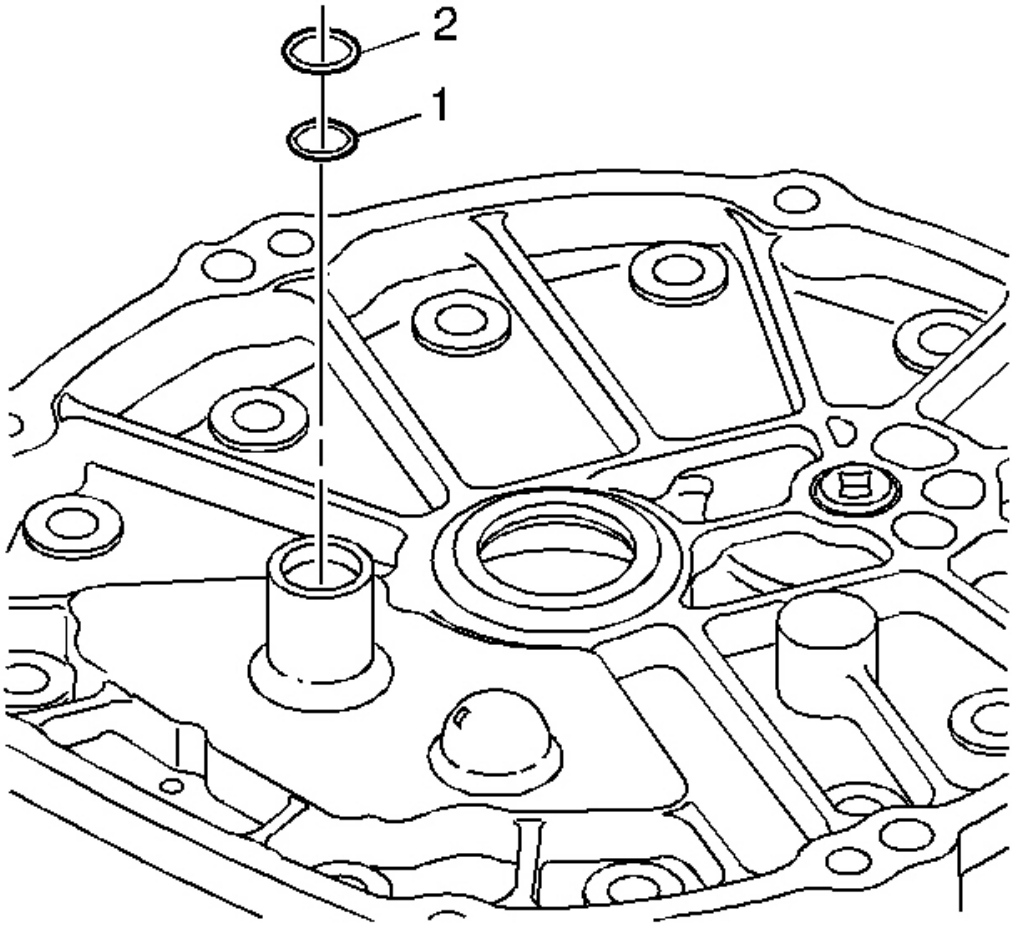

Fig. 189: Installing/Removing Inner Shift Rail Seal & Outer Shift Rail Seal
Courtesy of GENERAL MOTORS CORP.

9. Remove the 1st/2nd and the 3rd/4th shift shaft seals (1) and (2).

cardiagn.com

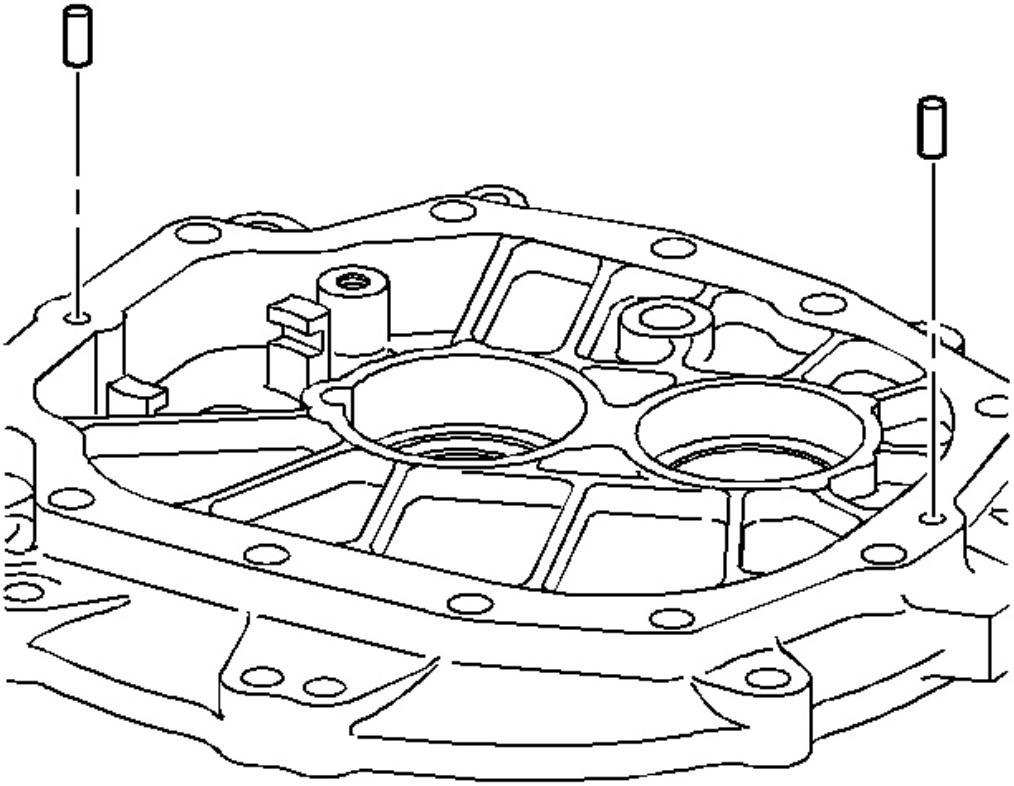

Fig. 190: Installing/Removing Transmission Dowel Pins
Courtesy of GENERAL MOTORS CORP.

10. Remove the dowel pins.

TRANS CASE AND ADAPTER PLATE DISASSEMBLE (CTSV)

Transmission Case

Tools Required

- **J 8092** Drive Handle. See **Special Tools** .
- **J 23907** Slide Hammer. See **Special Tools** .
- **J 39439-2** Bushing Remover. See **Special Tools** .
- **J 39790** Mainshaft Bearing Race Remover. See **Special Tools** .
- **J 39791** Countershaft Beating Race Remover. See **Special Tools** .

cardiagn.com

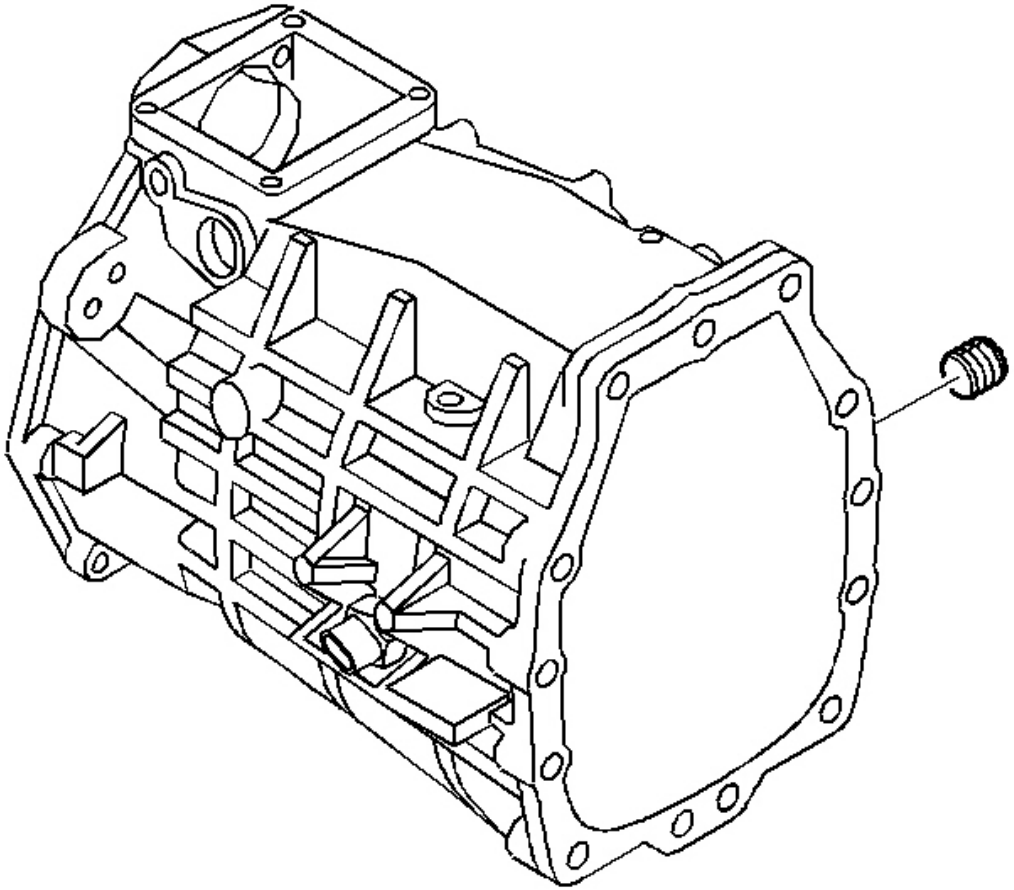

Fig. 191: View Of Transmission Case Fill Plug
Courtesy of GENERAL MOTORS CORP.

1. Remove the transmission case fill plug.

cardiagn.com

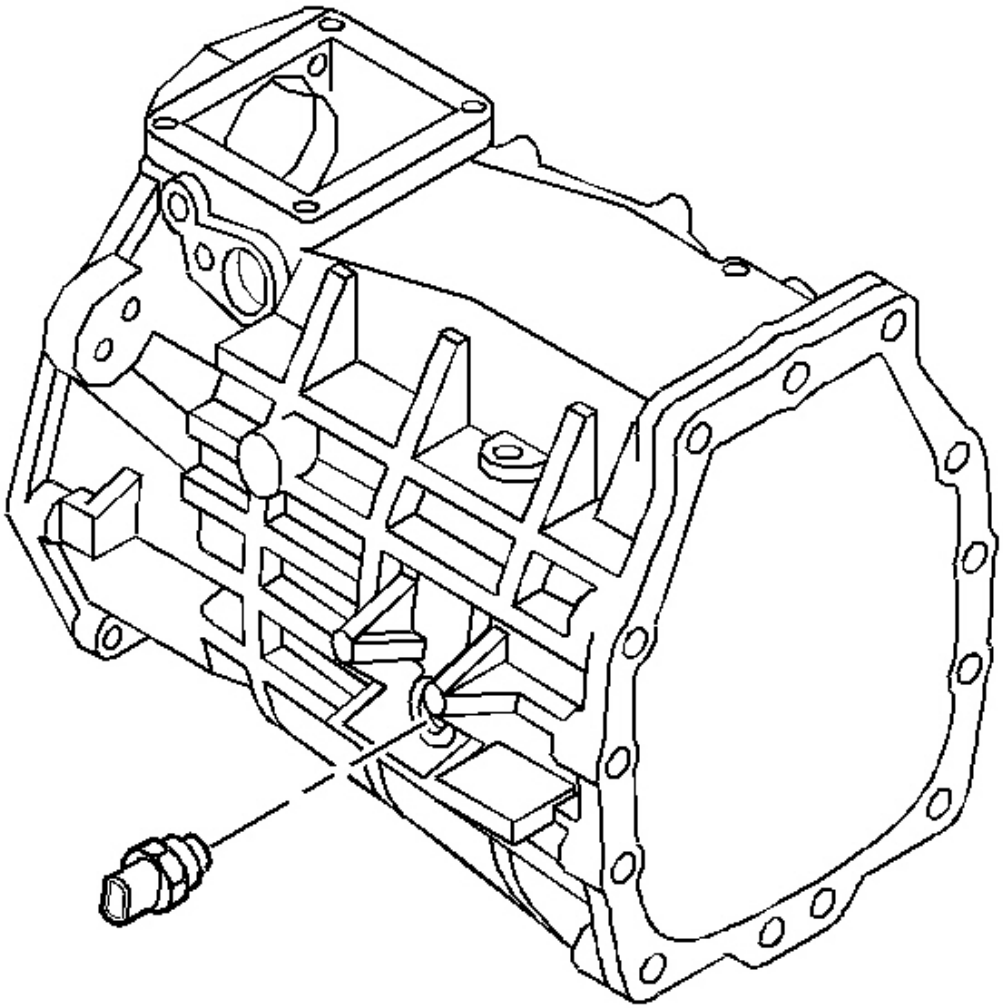

Fig. 192: Locating Reverse Lamp Switch
Courtesy of GENERAL MOTORS CORP.

2. Remove the reverse lamp switch.

cardiagn.com

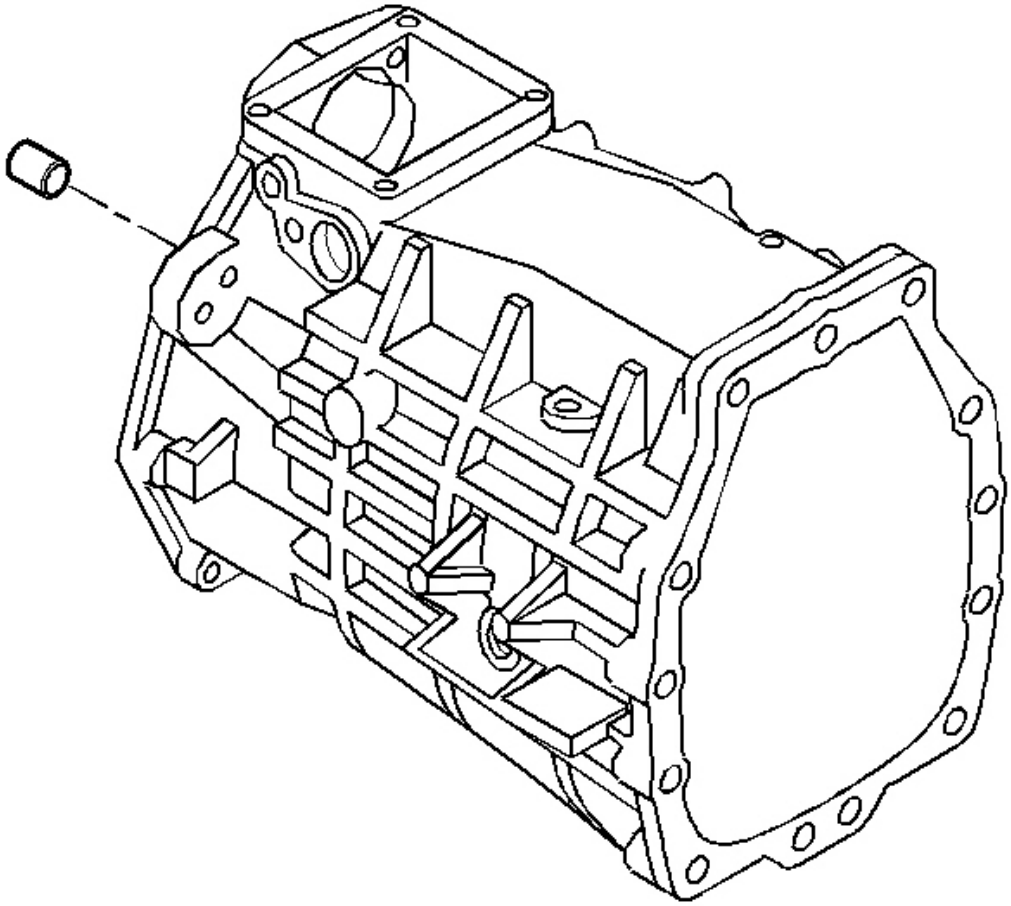

Fig. 193: Identifying Transfer Case Dowel Pins
Courtesy of GENERAL MOTORS CORP.

3. Remove the dowel pins.

cardiagn.com

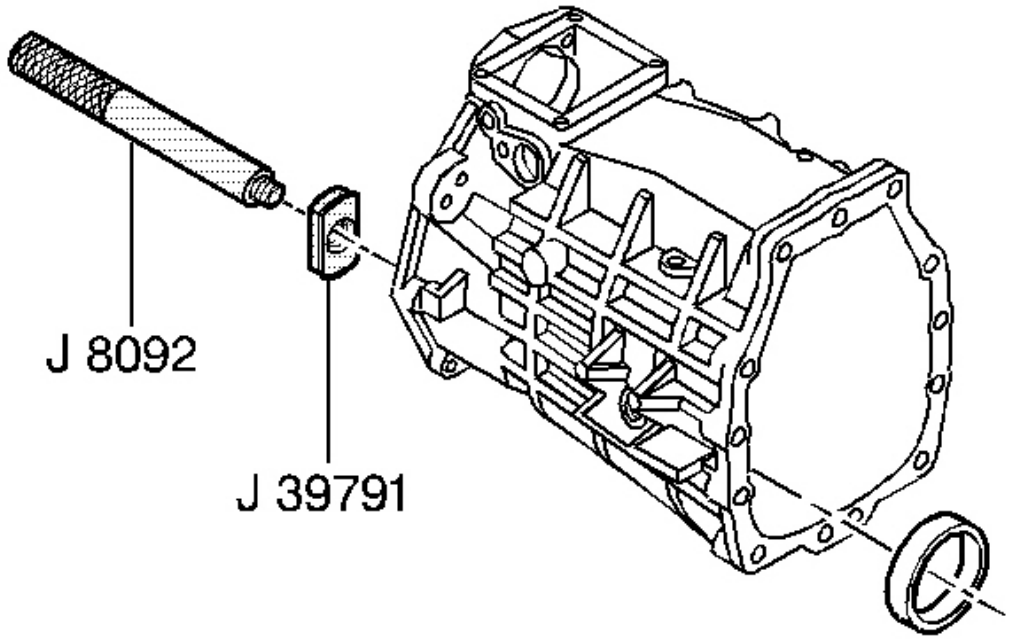

Fig. 194: Removing Countershaft Bearing Race Using J 8092 & J 39791
Courtesy of GENERAL MOTORS CORP.

IMPORTANT: Do not replace the bearing race unless inspection shows bearing race damage.

4. Remove the countershaft bearing race, using the **J 8092** and the **J 39791** .

cardiagn.com

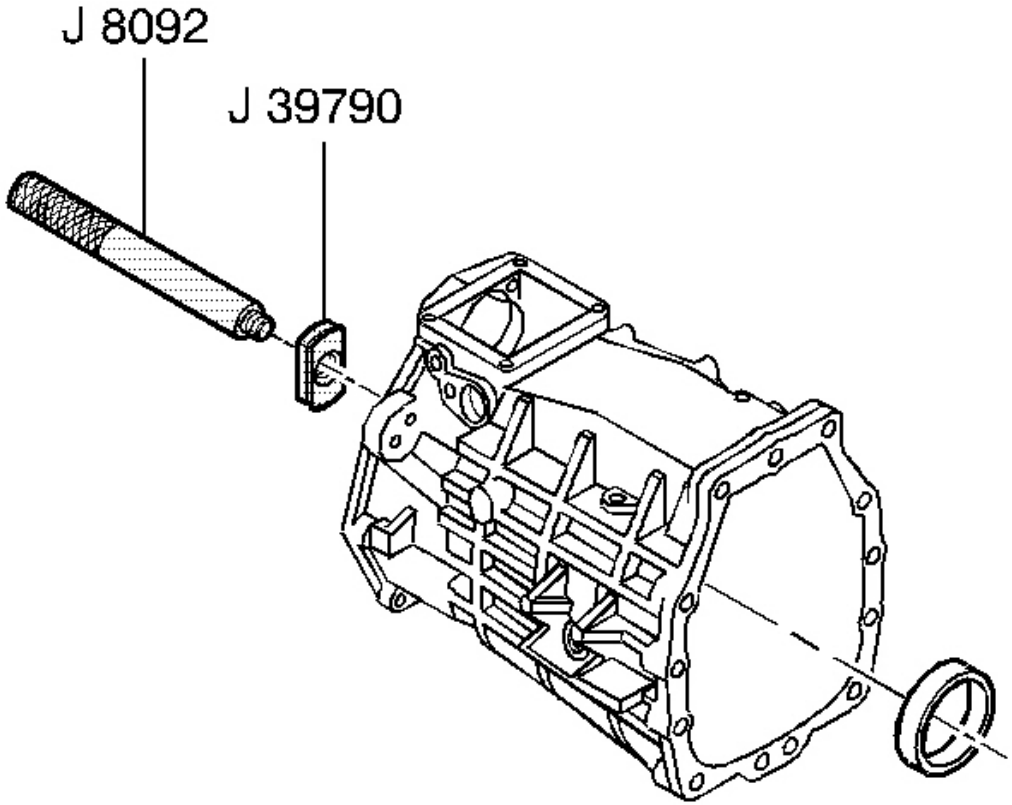

Fig. 195: Installing/Removing Mainshaft Bearing Race
Courtesy of GENERAL MOTORS CORP.

IMPORTANT: Do not replace the bearing race unless inspection shows bearing race damage.

5. Remove the mainshaft bearing race, using the **J 8092** and the **J 39790** .

cardiagn.com

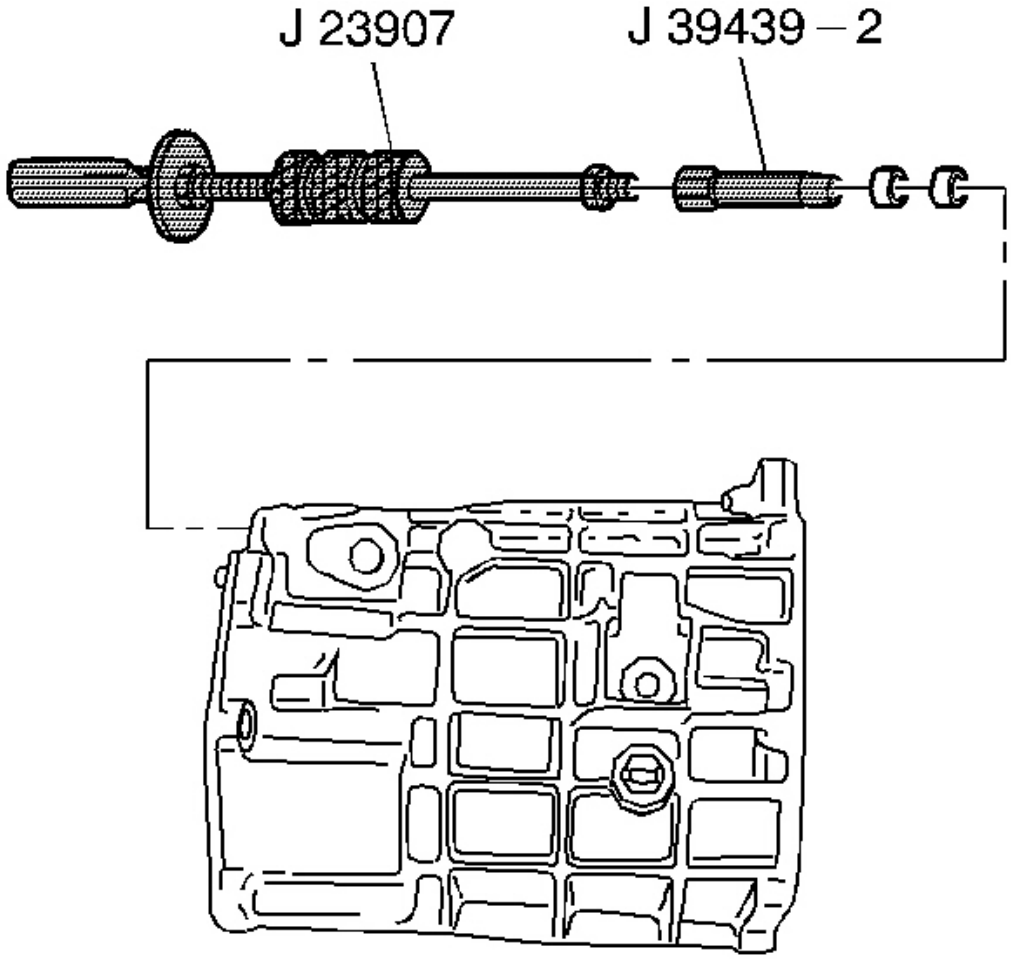

Fig. 196: Removing 1st/2nd & 3rd/4th Shift Shaft Bushings
Courtesy of GENERAL MOTORS CORP.

6. Remove the 1st/2nd and the 3rd/4th shift shaft bushings using the **J 23907** and the **J 39439-2** .

Adapter Plate

Tools Required

- **J 23907** Slide Hammer. See **Special Tools** .
- **J 39439-2** Bushing Remover. See **Special Tools** .

cardiagn.com

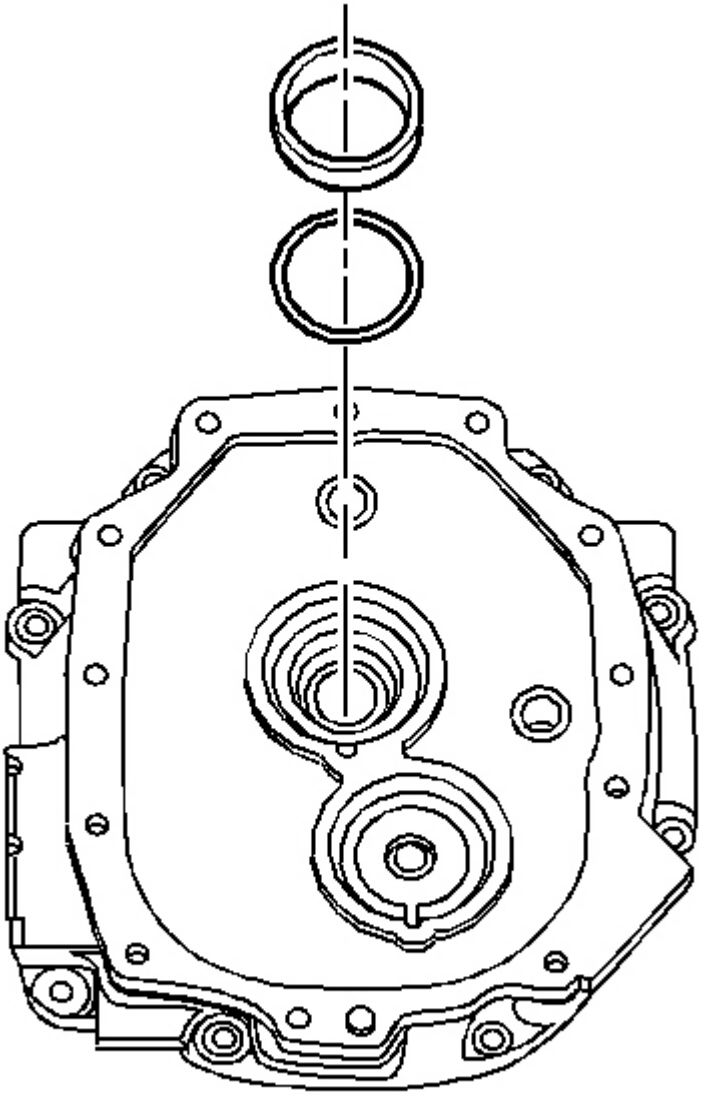

Fig. 197: Installing/Removing Input Shaft Bearing Shim And Bearing Race
Courtesy of GENERAL MOTORS CORP.

1. Remove the input shaft bearing race and the shim.

cardiagn.com

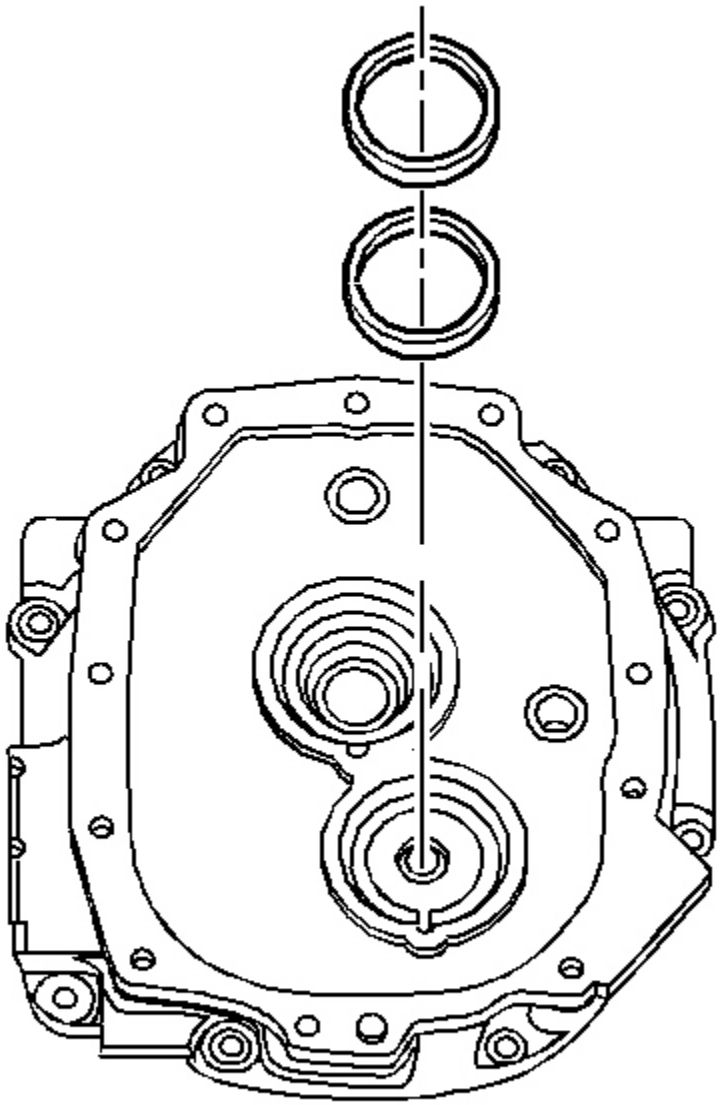

Fig. 198: View Of Countershaft Bearing Shim & Bearing Race
Courtesy of GENERAL MOTORS CORP.

2. Remove the countershaft bearing race and the shim.

cardiagn.com

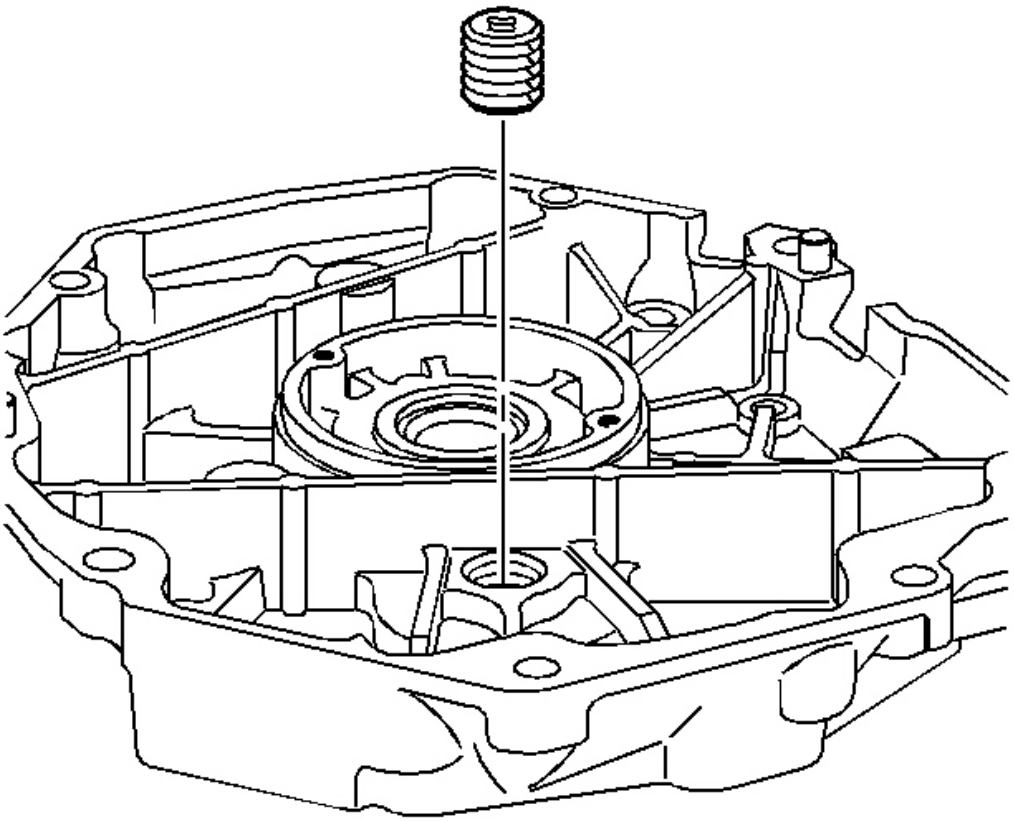

Fig. 199: Identifying Adapter Plate Plug
Courtesy of GENERAL MOTORS CORP.

3. Remove the adapter plate plug.

cardiagn.com

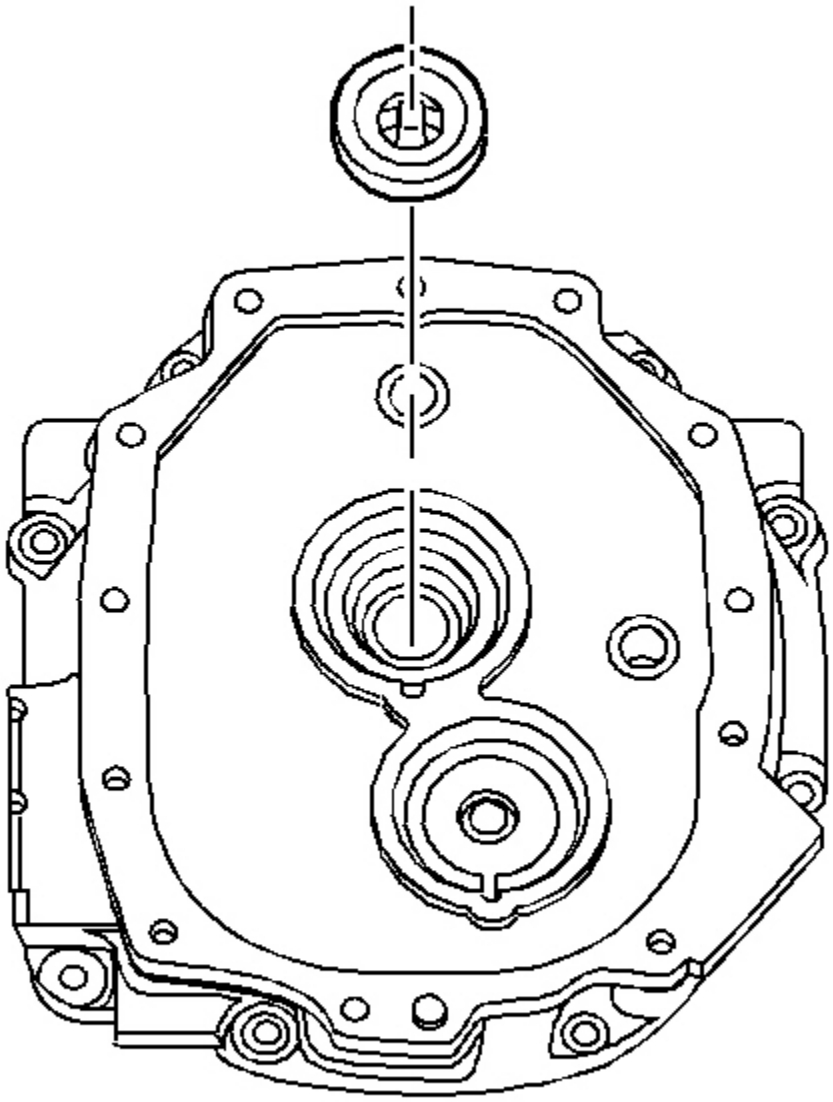

Fig. 200: Locating Input Shaft Seal
Courtesy of GENERAL MOTORS CORP.

4. Remove the input shaft seal.

IMPORTANT: Do not replace the bushing unless inspection shows bushing damage.

cardiagn.com

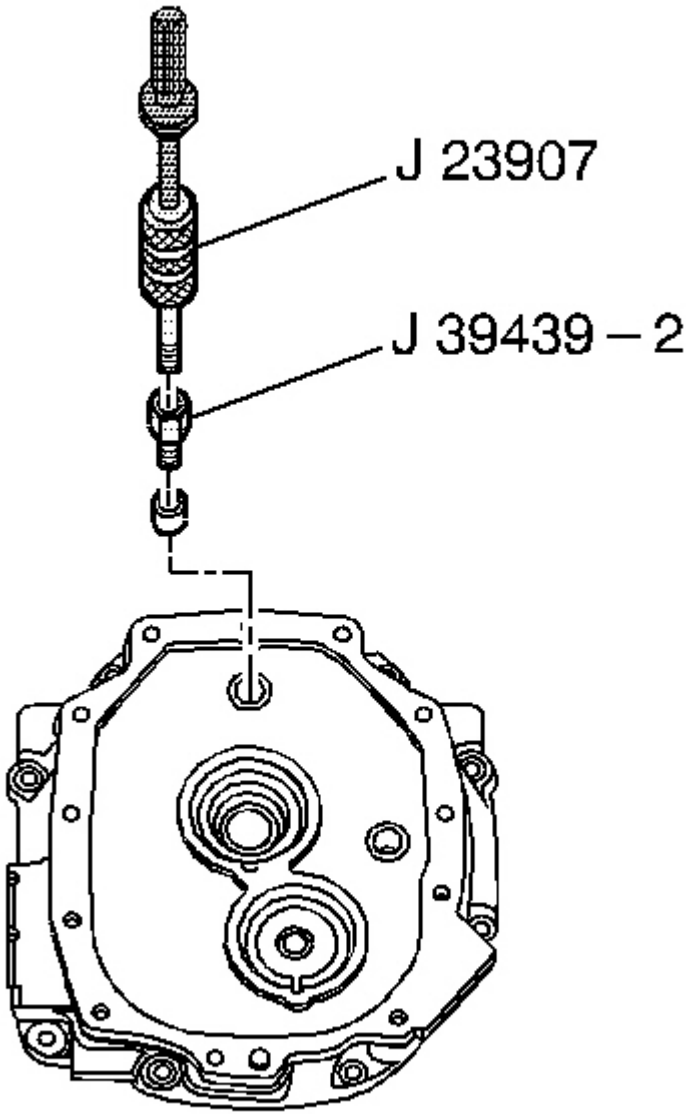

Fig. 201: Removing 1st/2nd And The 3rd/4th Shift Shaft Bushing Using J 39439-2 & J 23907
Courtesy of GENERAL MOTORS CORP.

5. Remove the 1st/2nd and the 3rd/4th shift shaft bushing, using the **J 23907** with the **J 39439-2** .

cardiagn.com

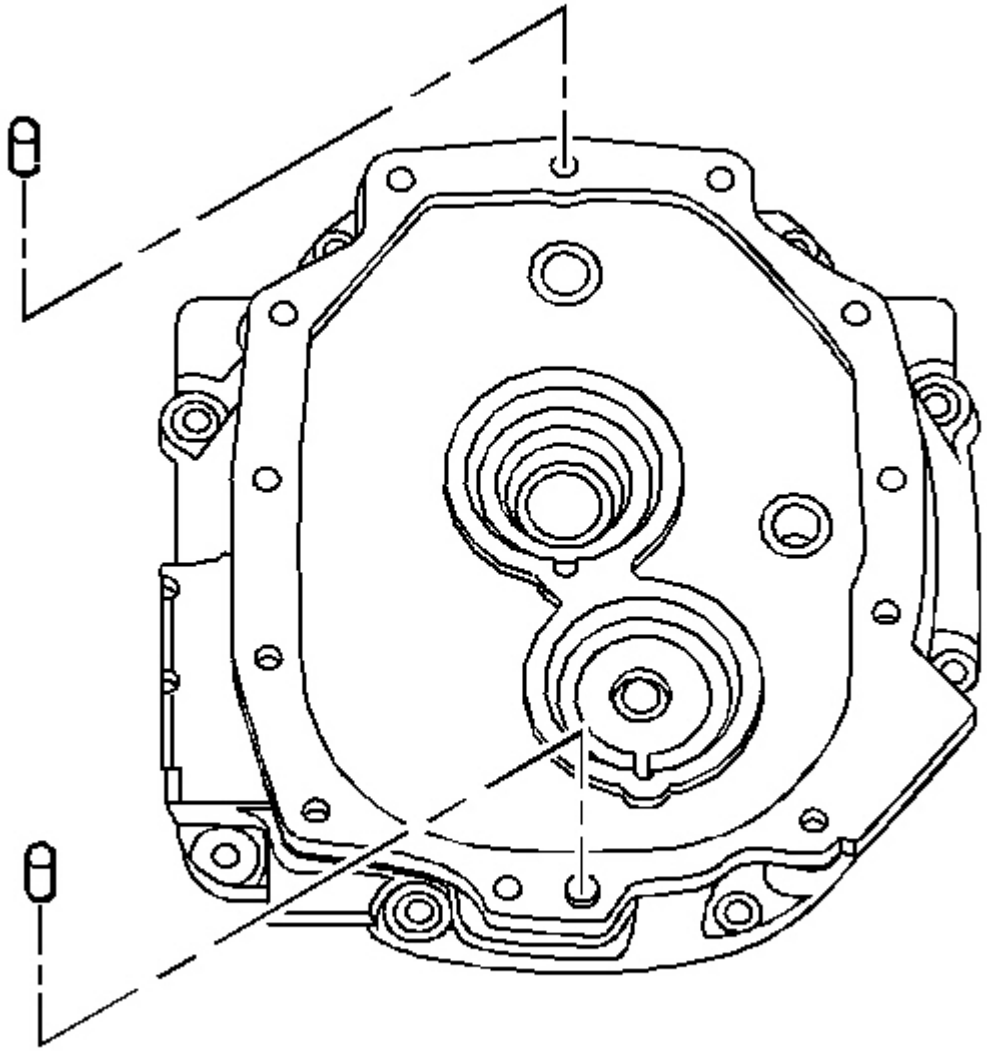

Fig. 202: Locating Extension Housing Dowel Pins
Courtesy of GENERAL MOTORS CORP.

6. Remove the dowel pins.

TRANS CASE AND ADAPTER PLATE DISASSEMBLE (GTO)

Transmission Case

cardiagn.com

Tools Required

- **J 8092** Drive Handle. See **Special Tools** .
- **J 23907** Slide Hammer. See **Special Tools** .
- **J 39439-2** Bushing Remover. See **Special Tools** .
- **J 39790** Mainshaft Bearing Race Remover. See **Special Tools** .
- **J 39791** Countershaft Beating Race Remover. See **Special Tools** .

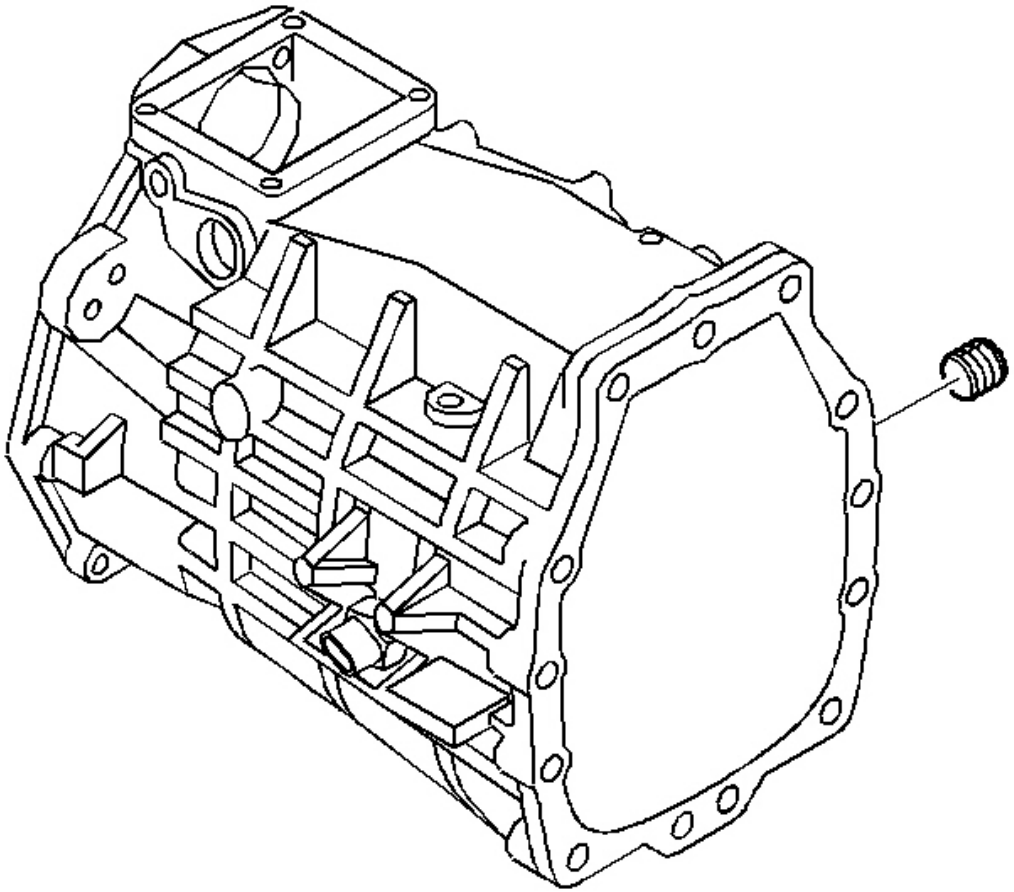

Fig. 203: View Of Transmission Case Fill Plug
Courtesy of GENERAL MOTORS CORP.

1. Remove the transmission case fill plug.

cardiagn.com

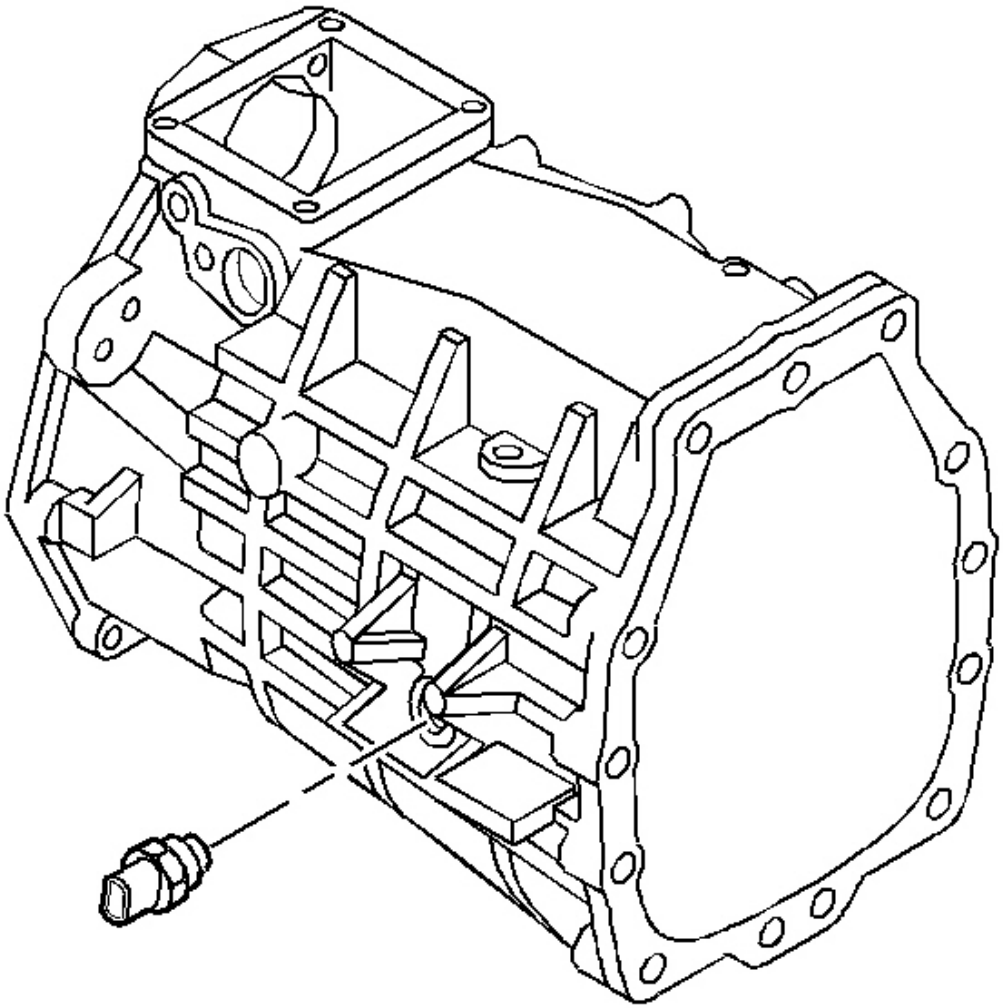

Fig. 204: Locating Reverse Lamp Switch
Courtesy of GENERAL MOTORS CORP.

2. Remove the reverse lamp switch.

cardiagn.com

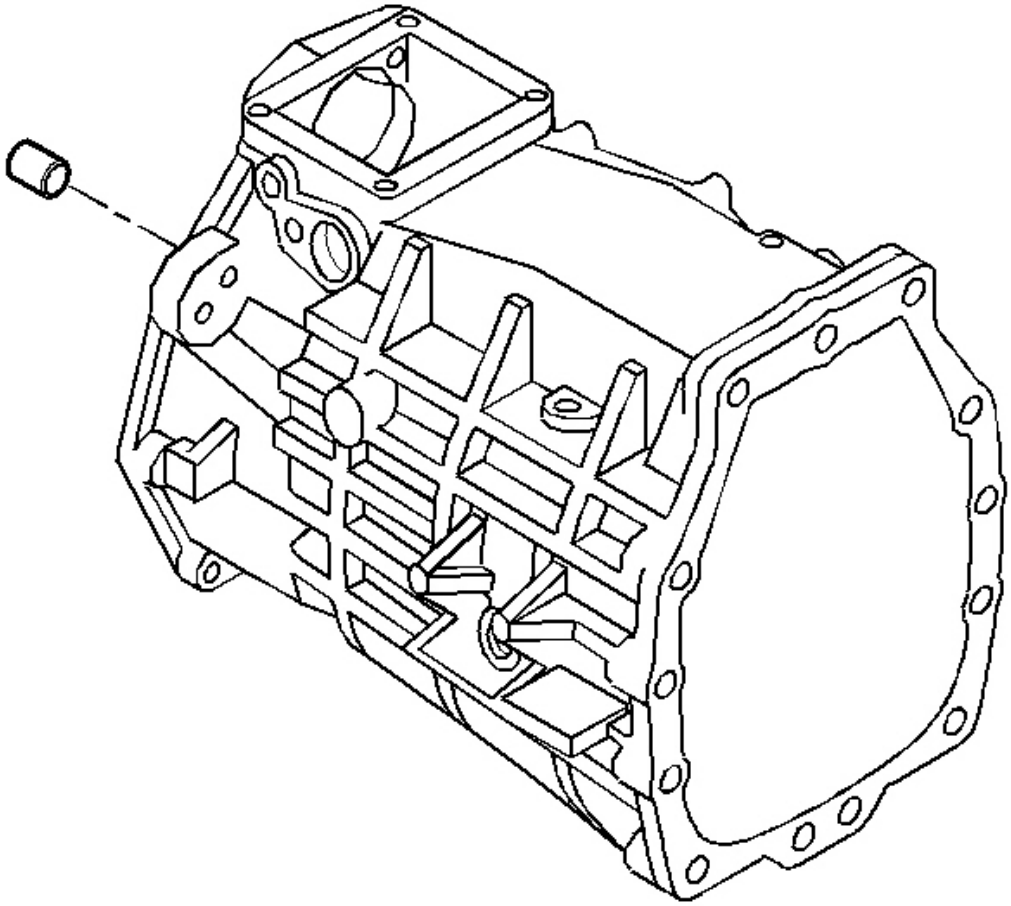

Fig. 205: Identifying Transfer Case Dowel Pins
Courtesy of GENERAL MOTORS CORP.

3. Remove the dowel pins.

cardiagn.com

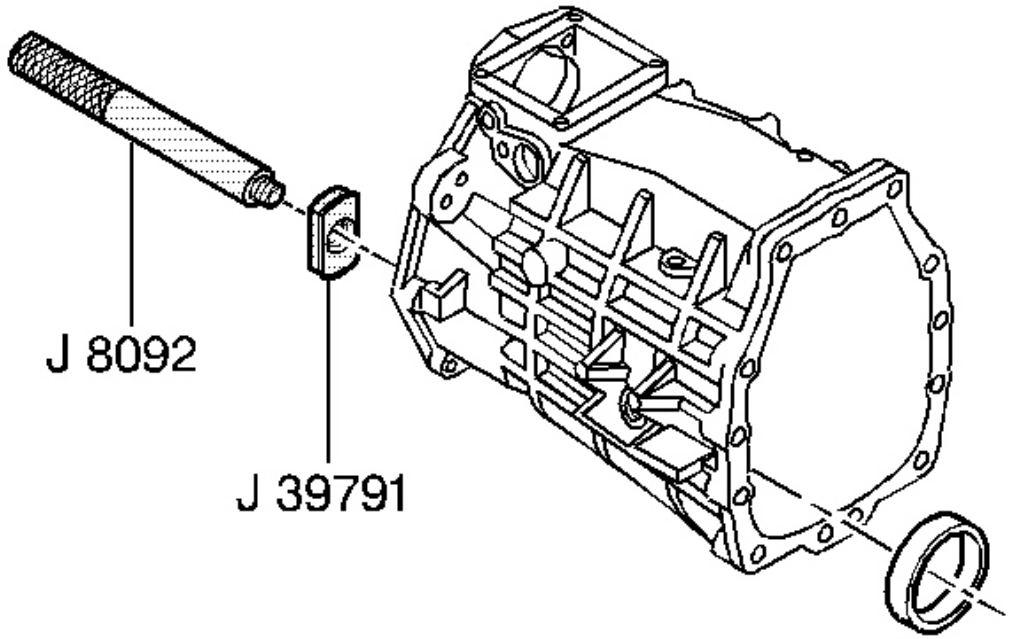

Fig. 206: Removing Countershaft Bearing Race Using J 8092 & J 39791
Courtesy of GENERAL MOTORS CORP.

IMPORTANT: Do not replace the bearing race unless inspection shows bearing race damage.

4. Remove the countershaft bearing race, using the **J 8092** and the **J 39791** .

IMPORTANT: Do not replace the bearing race unless inspection shows bearing race damage.

cardiagn.com

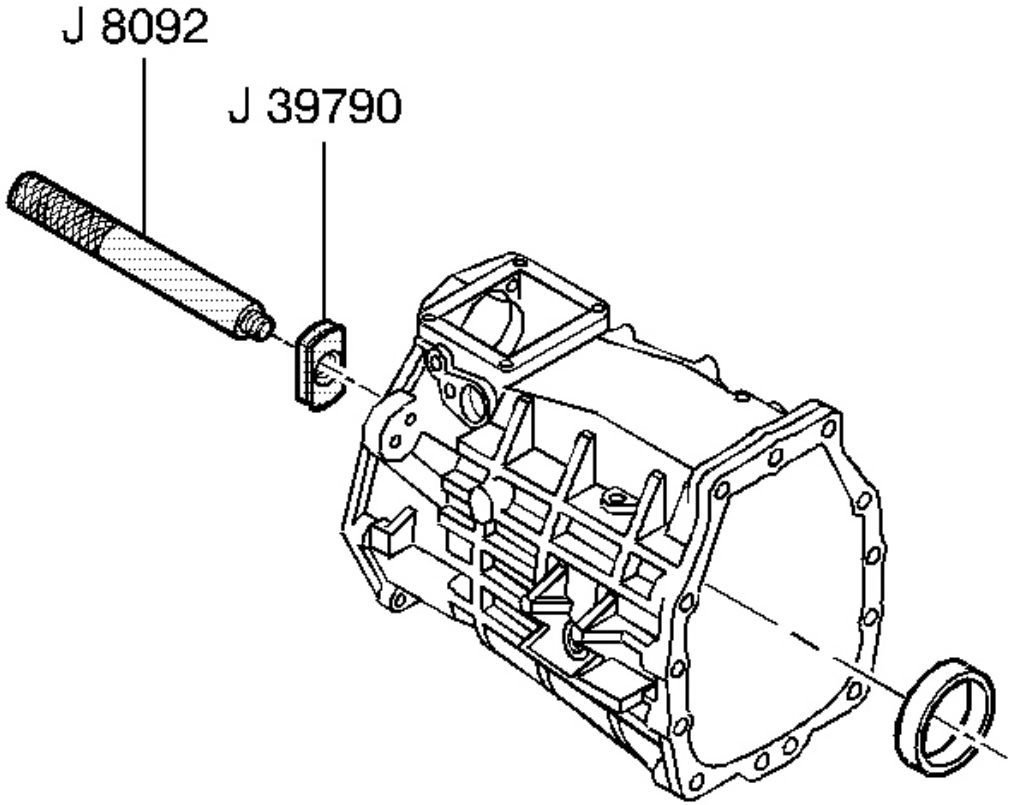

Fig. 207: Removing Mainshaft Bearing Race
Courtesy of GENERAL MOTORS CORP.

5. Remove the mainshaft bearing race, using the **J 8092** and the **J 39790** .

cardiagn.com

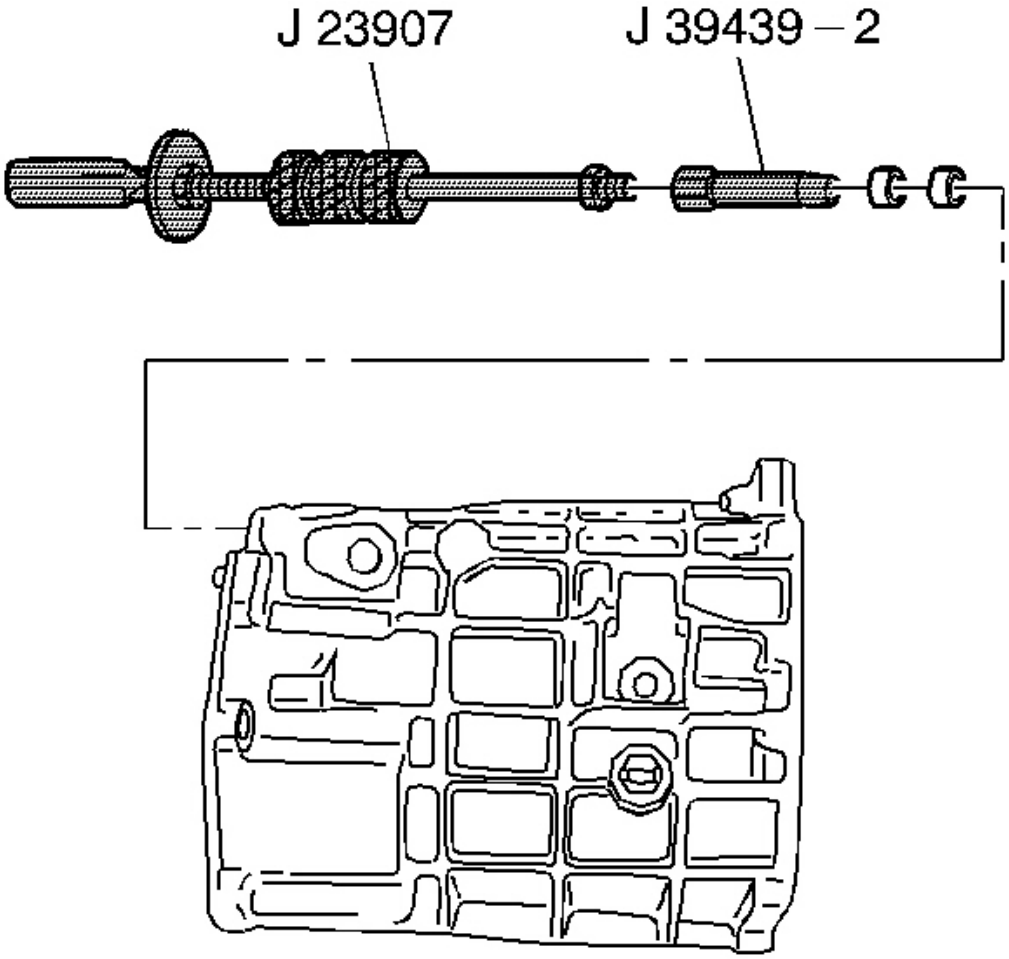

Fig. 208: Removing 1st/2nd & 3rd/4th Shift Shaft Bushings Using The J 23907
Courtesy of GENERAL MOTORS CORP.

6. Remove the 1st/2nd and the 3rd/4th shift shaft bushings, using the **J 23907** and the **J 39439-2** .

Adapter Plate

Tools Required

- **J 23907** Slide Hammer. See **Special Tools** .
- **J 39439-2** Bushing Remover. See **Special Tools** .

cardiagn.com

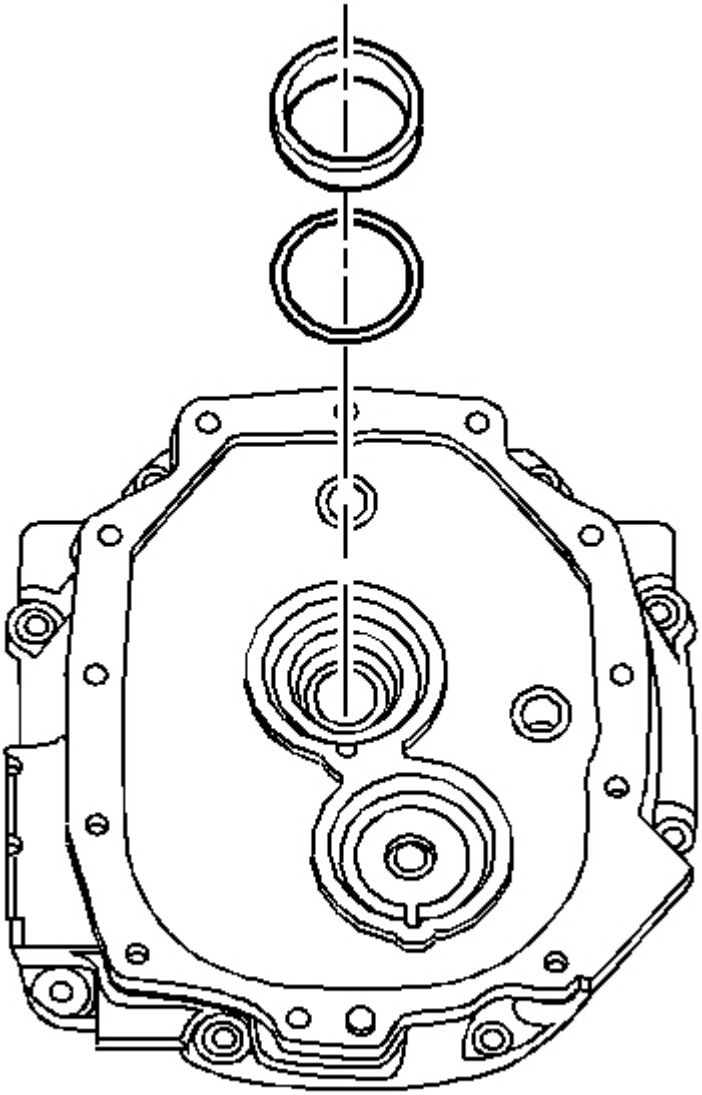

Fig. 209: Installing/Removing Input Shaft Bearing Shim And Bearing Race
Courtesy of GENERAL MOTORS CORP.

1. Remove the input shaft bearing race and the shim.

cardiagn.com

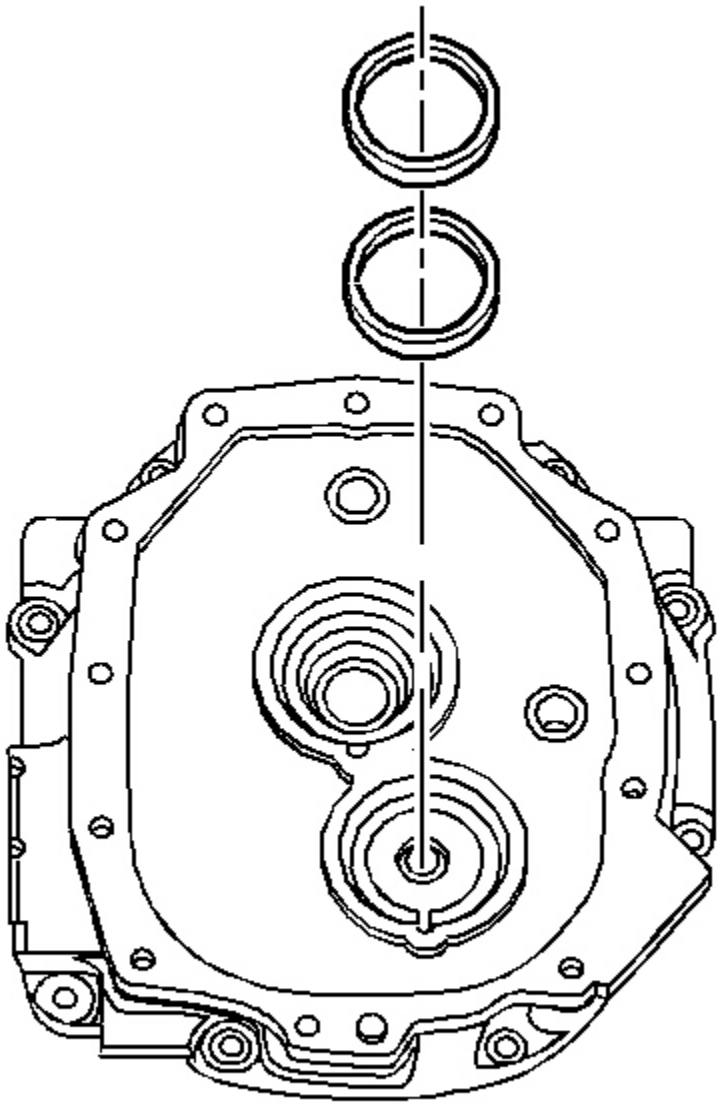

Fig. 210: View Of Countershaft Bearing Shim & Bearing Race
Courtesy of GENERAL MOTORS CORP.

2. Remove the countershaft bearing race and the shim.

cardiagn.com

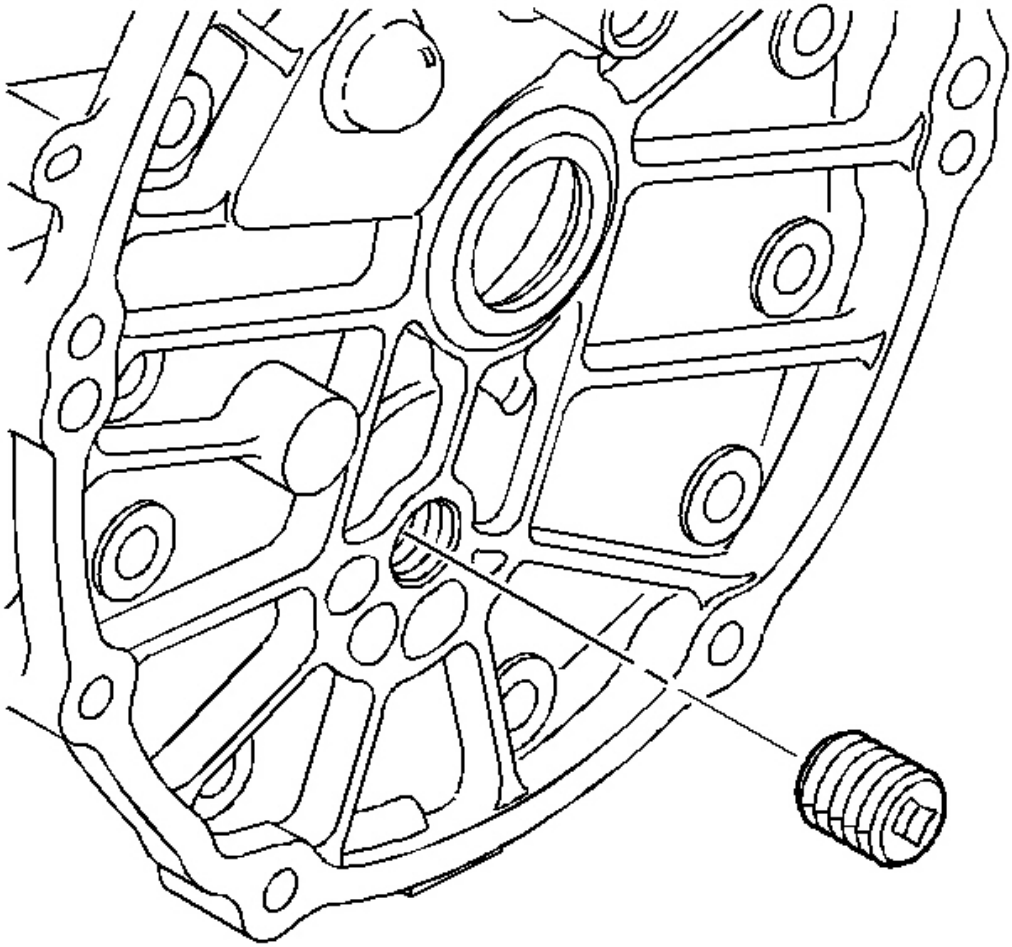

Fig. 211: Locating Adapter Plate Plug
Courtesy of GENERAL MOTORS CORP.

3. Remove the adapter plate plug.

cardiagn.com

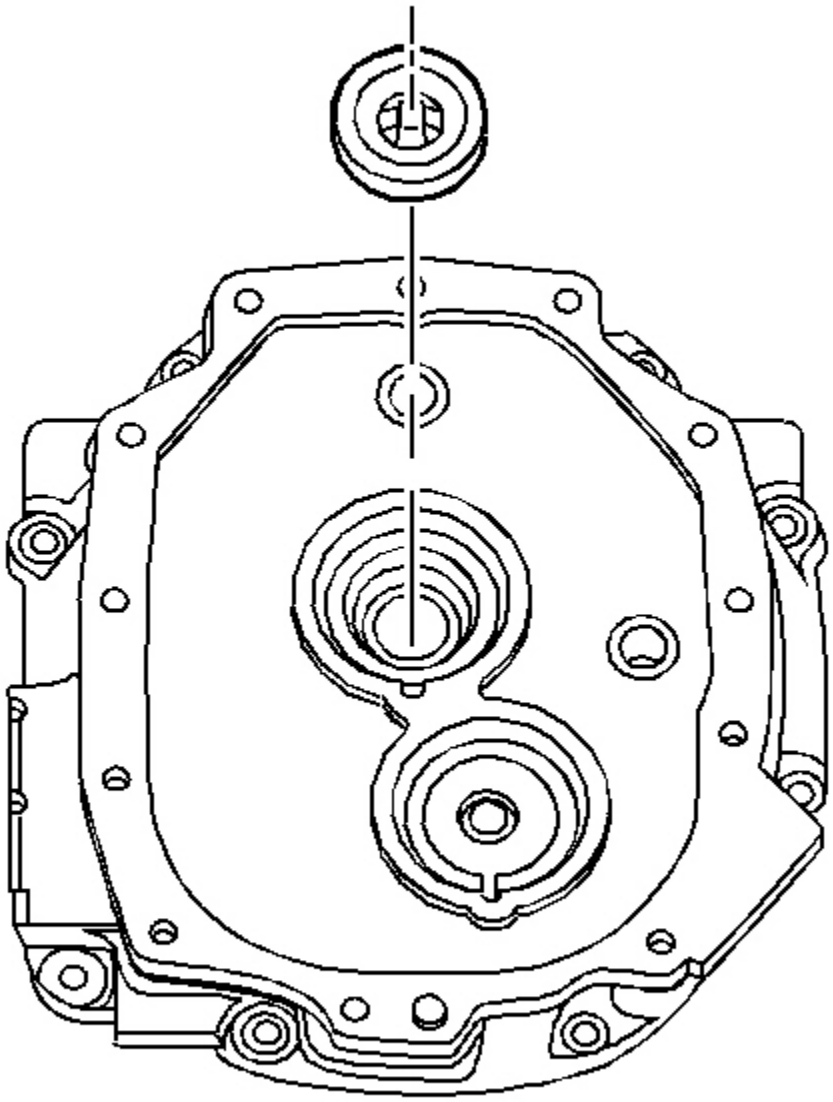

Fig. 212: Locating Input Shaft Seal
Courtesy of GENERAL MOTORS CORP.

4. Remove the input shaft seal.

IMPORTANT: Do not replace the bushing unless inspection shows bushing damage.

cardiagn.com

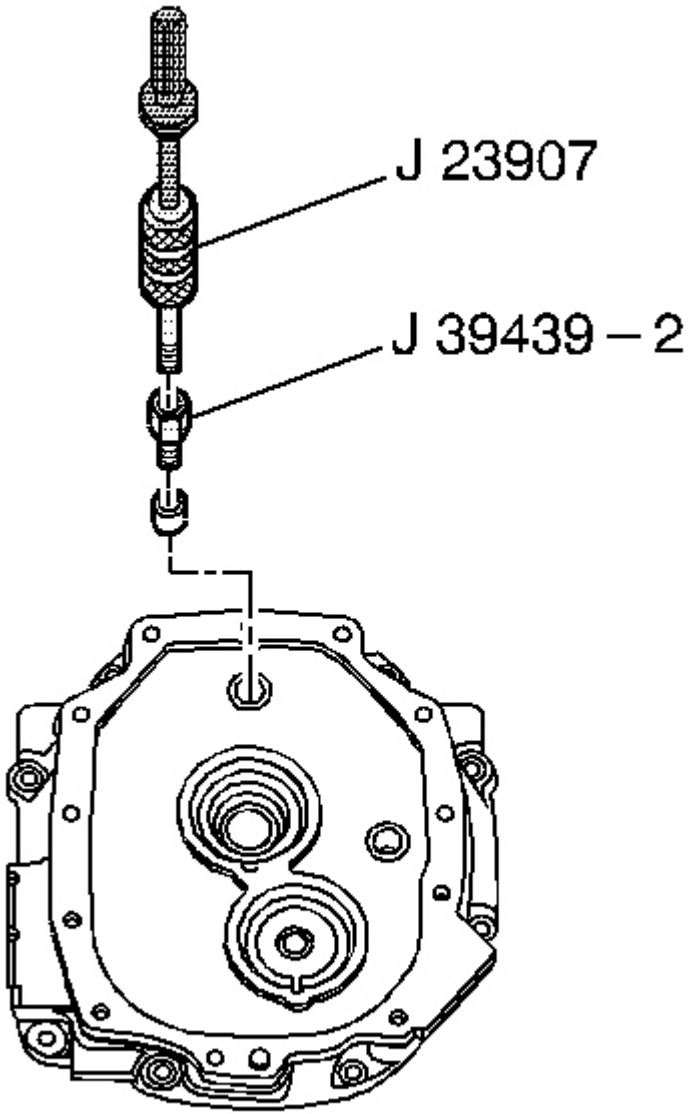

Fig. 213: Removing 1St/2Nd And The 3Rd/4Th Shift Shaft Bushing Using J 39439-2 & J 23907
Courtesy of GENERAL MOTORS CORP.

5. Remove the 1st/2nd and the 3rd/4th shift shaft bushing, using the **J 23907** with the **J 39439-2** .

cardiagn.com

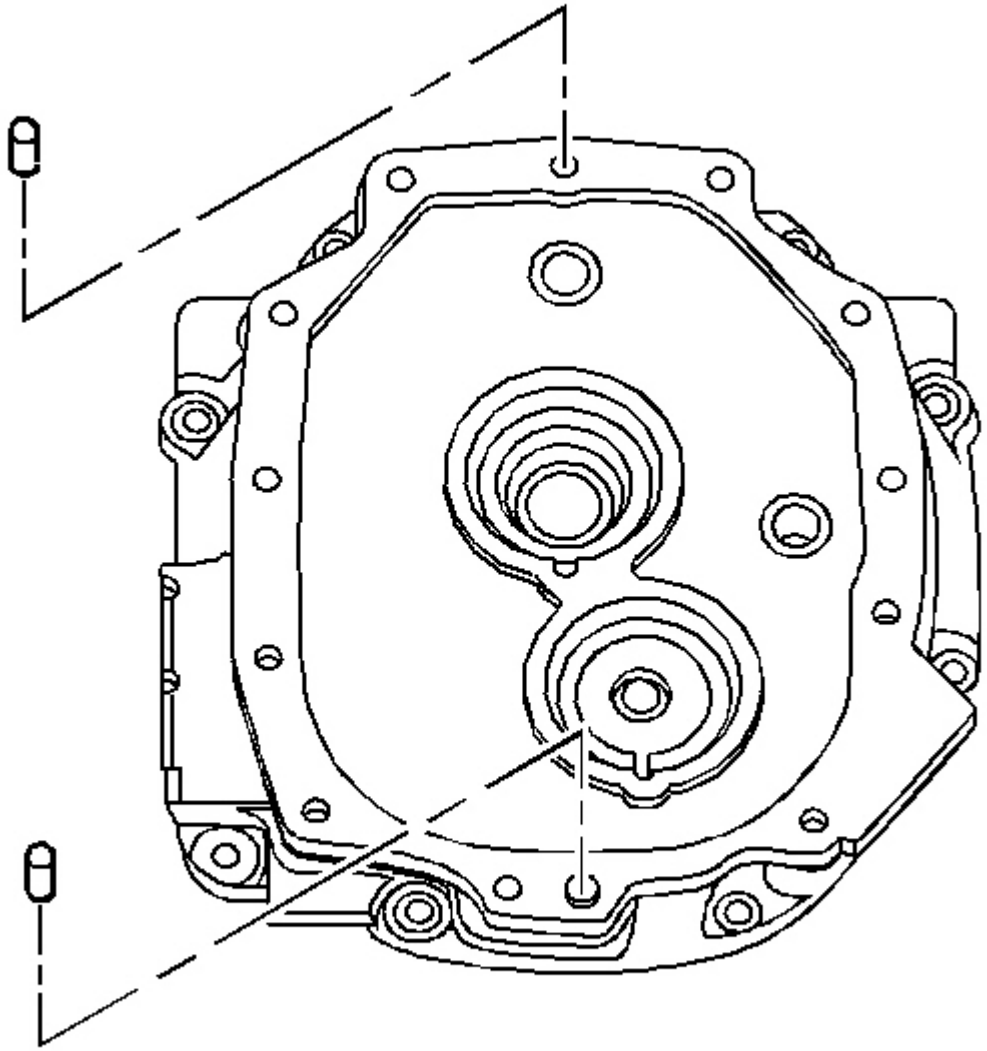

Fig. 214: Locating Extension Housing Dowel Pins
Courtesy of GENERAL MOTORS CORP.

6. Remove the dowel pins.

TRANS CASE AND ADAPTER PLATE CLEANING AND INSPECTION (Y CAR)

Transmission Case

cardiagn.com

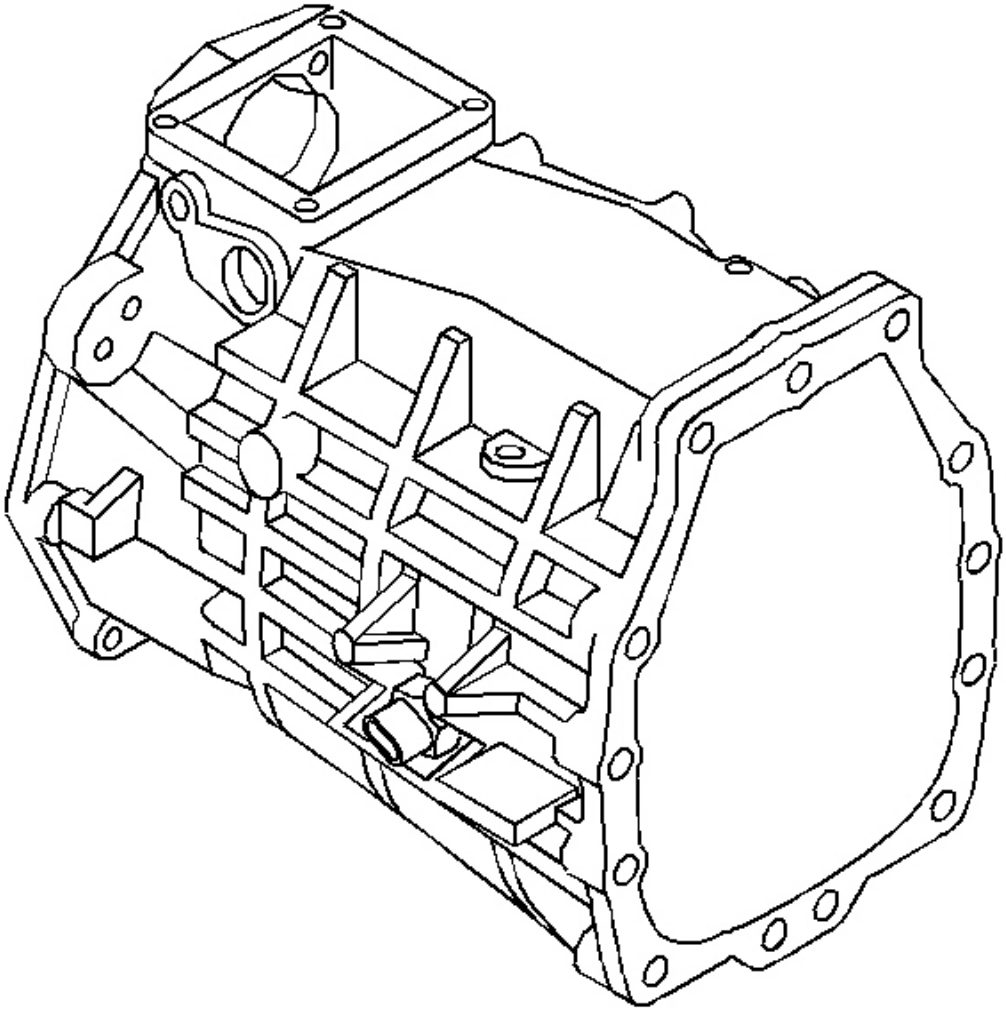

Fig. 215: Identifying Transmission Case
Courtesy of GENERAL MOTORS CORP.

1. Clean the transmission case in a suitable solvent. Air dry the transmission case.
2. Clean all sealant material from retainer bolt threads.
3. Inspect the transmission case for the following conditions:
    1. Cracks
    2. Scratches
    3. Damaged threads
    4. Burrs

cardiagn.com

5. Nicked mounting surfaces
6. Damaged sealing surfaces
7. Damaged front or rear bearing bores

4. Inspect the machined mating surfaces for flatness with a straight edge.
5. Inspect the bearing races and bores for wear, scratches or grooves.
6. Inspect the bushing for excessive wear.
7. Use a fine mill file to dress minor scratches or burrs.
8. If scratches, or grooves or scoring cannot be removed by hand with a soft stone or crocus cloth, replace the component.
9. Clean up damaged threads with the correct size tap.
10. Replace a cracked housing.
11. Replace worn bushings.

Adapter Plate

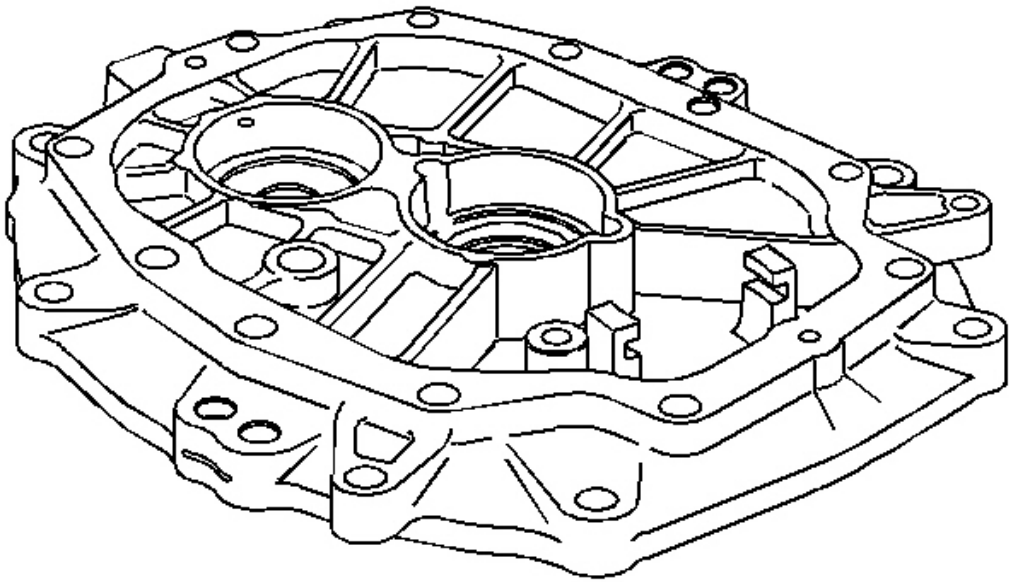

Fig. 216: View Of Adapter Plate
Courtesy of GENERAL MOTORS CORP.

1. Clean the adapter plate parts with a suitable solvent. Air dry all the parts.
2. Inspect the adapter plate parts for the following conditions:

cardiagn.com

    1. Cracks (replace a cracked adapter plate.)
    2. Scratches
    3. Burrs
    4. Nicked mounting surfaces
    5. Damaged sealing surfaces
    6. Damaged front or rear bearing bores
3. Inspect the machined mating surfaces for flatness. Check the mating surfaces with a straight edge.
4. Inspect the bearing races and bores for wear, scratches or grooves.
5. Inspect the bushing for excessive wear. Replace worn bushings.
6. Use a fine mill file to dress minor scratches or burrs.
7. If scratches, or grooves or scoring cannot be removed by hand with a soft stone or crocus cloth, replace the component.

TRANS CASE AND ADAPTER PLATE CLEANING AND INSPECTION (CTSV)

Transmission Case

cardiagn.com

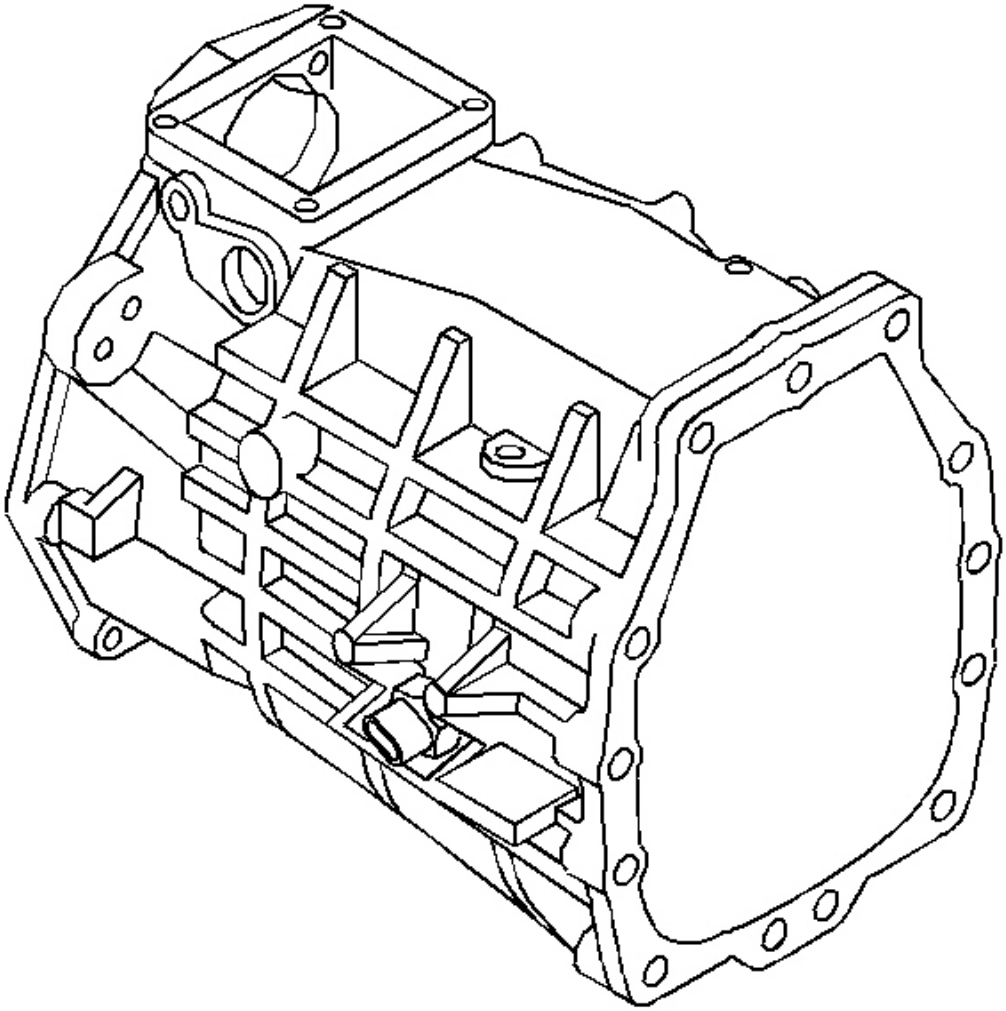

Fig. 217: Identifying Transmission Case
Courtesy of GENERAL MOTORS CORP.

1. Clean the transmission case in a suitable solvent. Air dry the transmission case.
2. Clean all sealant material from retainer bolt threads.
3. Inspect the transmission case for the following conditions:
    1. Cracks
    2. Scratches
    3. Damaged threads
    4. Burrs

cardiagn.com

5. Nicked mounting surfaces
6. Damaged sealing surfaces
7. Damaged front or rear bearing bores

4. Inspect the machined mating surfaces for flatness with a straight edge.
5. Inspect the bearing races and bores for wear, scratches or grooves.
6. Inspect the bushing for excessive wear.
7. Use a fine mill file to dress minor scratches or burrs.
8. If scratches, or grooves or scoring cannot be removed by hand with a soft stone or crocus cloth, replace the component.
9. Clean up damaged threads with the correct size tap.
10. Replace a cracked housing.
11. Replace worn bushings.

Adapter Plate

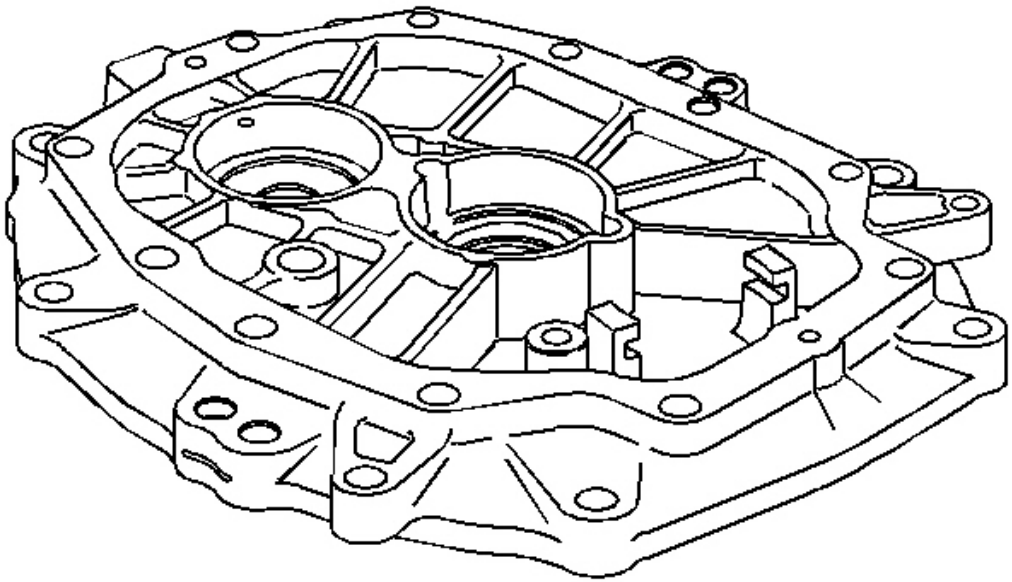

Fig. 218: View Of Adapter Plate
Courtesy of GENERAL MOTORS CORP.

1. Clean the adapter plate parts with a suitable solvent. Air dry all the parts.
2. Inspect the adapter plate parts for the following conditions:

cardiagn.com

    1. Cracks (replace a cracked adapter plate.)
    2. Scratches
    3. Burrs
    4. Nicked mounting surfaces
    5. Damaged sealing surfaces
    6. Damaged front or rear bearing bores
3. Inspect the machined mating surfaces for flatness. Check the mating surfaces with a straight edge.
4. Inspect the bearing races and bores for wear, scratches or grooves.
5. Inspect the bushing for excessive wear. Replace worn bushings.
6. Use a fine mill file to dress minor scratches or burrs.
7. If scratches, or grooves or scoring cannot be removed by hand with a soft stone or crocus cloth, replace the component.

TRANS CASE AND ADAPTER PLATE CLEANING AND INSPECTION (GTO)

Transmission Case

cardiagn.com

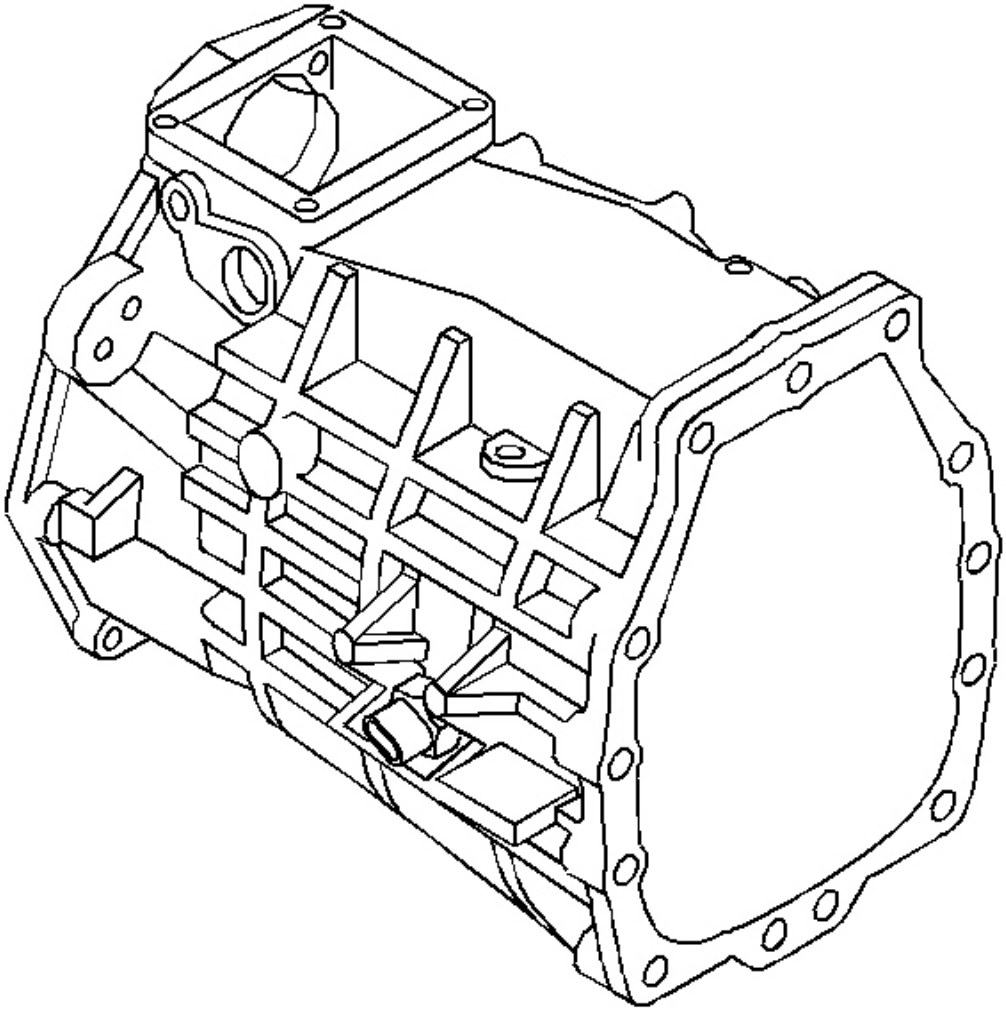

Fig. 219: Identifying Transmission Case
Courtesy of GENERAL MOTORS CORP.

1. Clean the transmission case in a suitable solvent. Air dry the transmission case.
2. Clean all sealant material from retainer bolt threads.
3. Inspect the transmission case for the following conditions:
    1. Cracks
    2. Scratches
    3. Damaged threads
    4. Burrs

cardiagn.com

5. Nicked mounting surfaces
6. Damaged sealing surfaces
7. Damaged front or rear bearing bores

4. Inspect the machined mating surfaces for flatness with a straight edge.
5. Inspect the bearing races and bores for wear, scratches or grooves.
6. Inspect the bushing for excessive wear.
7. Use a fine mill file to dress minor scratches or burrs.
8. If scratches, or grooves or scoring cannot be removed by hand with a soft stone or crocus cloth, replace the component.
9. Clean up damaged threads with the correct size tap.
10. Replace a cracked housing.
11. Replace worn bushings.

Adapter Plate

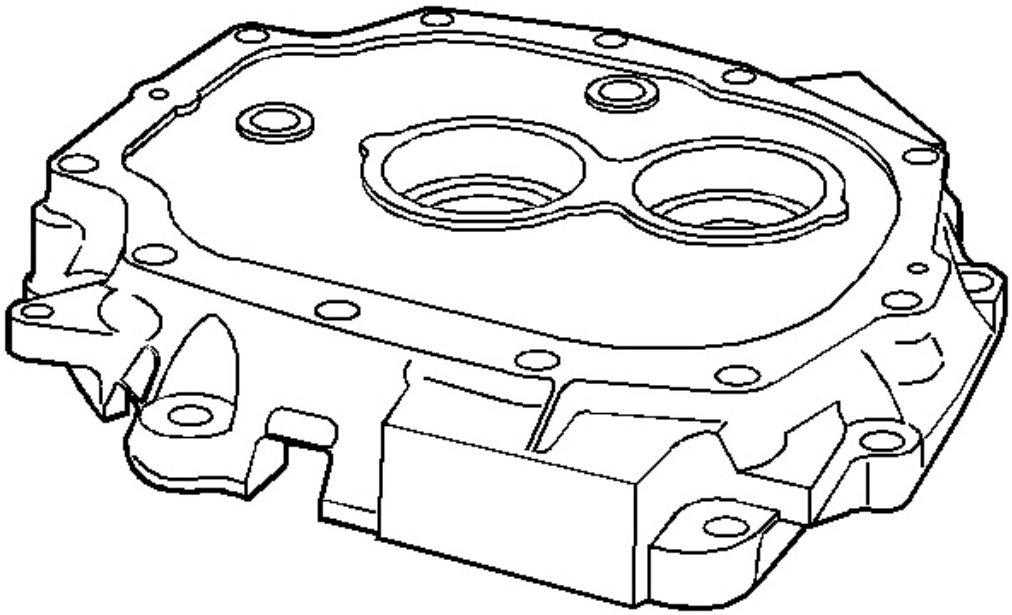

Fig. 220: View Of Adapter Plate
Courtesy of GENERAL MOTORS CORP.

1. Clean the adapter plate parts with a suitable solvent. Air dry all the parts.
2. Inspect the adapter plate parts for the following conditions:

cardiagn.com

1. Cracks

   (replace a cracked adapter plate.)

2. Scratches
3. Burrs
4. Nicked mounting surfaces
5. Damaged sealing surfaces
6. Damaged front or rear bearing bores

3. Inspect the machined mating surfaces for flatness. Check the mating surfaces with a straight edge.
4. Inspect the bearing races and bores for wear, scratches or grooves.
5. Inspect the bushing for excessive wear. Replace worn bushings.
6. Use a fine mill file to dress minor scratches or burrs.
7. If scratches, or grooves or scoring cannot be removed by hand with a soft stone or crocus cloth, replace the component.

TRANS CASE AND ADAPTER PLATE ASSEMBLE (Y CAR)

Transmission Case

Tools Required

- **J 8092** Universal Driver Handle. See **Special Tools** .
- **J 36190** Universal Driver Handle. See **Special Tools** .
- **J 39435** Bearing Race Installer. See **Special Tools** .
- **J 39439-4** Bushing Installer. See **Special Tools** .
- **J 39439-3** Bushing Installer. See **Special Tools** .

cardiagn.com

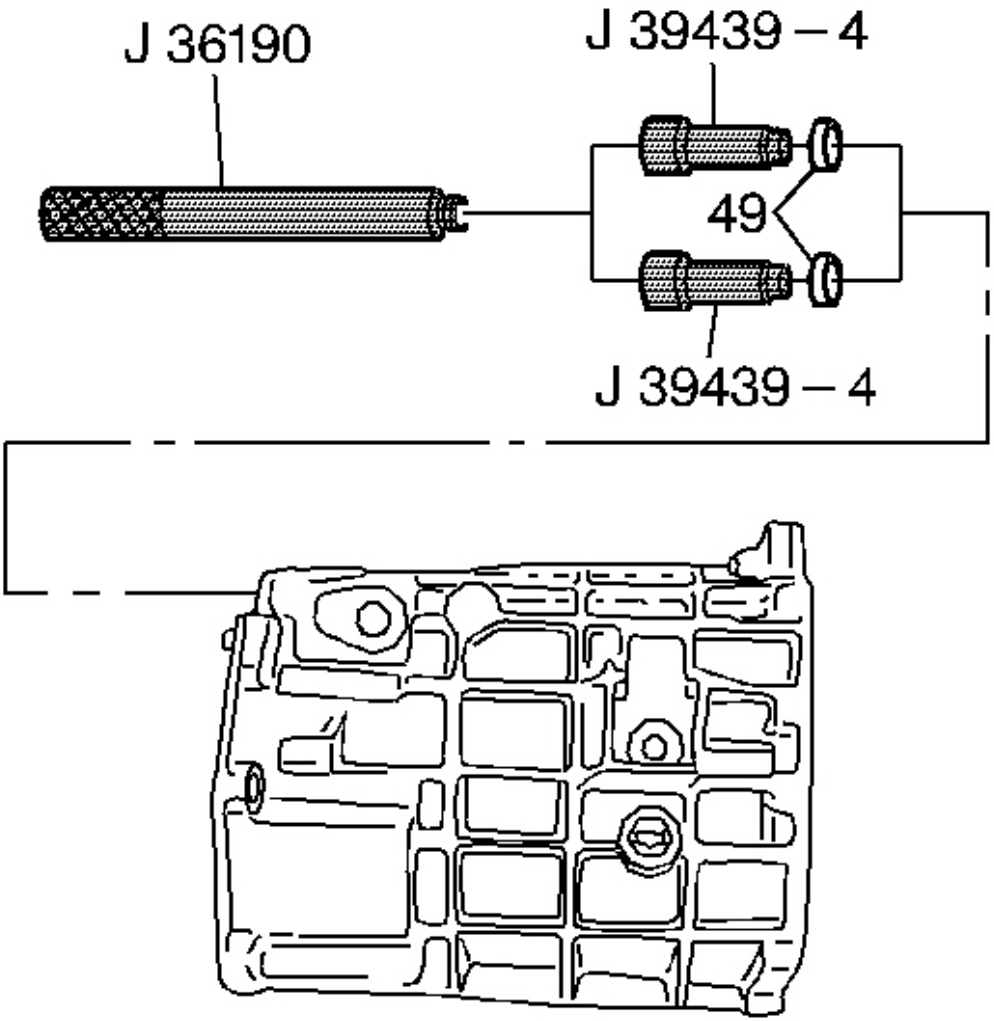

Fig. 221: Installing 1st/2nd & 3rd/4th Shift Shaft Bushings
Courtesy of GENERAL MOTORS CORP.

1. Install the 1st/2nd and the 3rd/4th shift shaft bushings. Use the **J 36190** , the **J 39439-4** , and the **J 39439-3** .

cardiagn.com

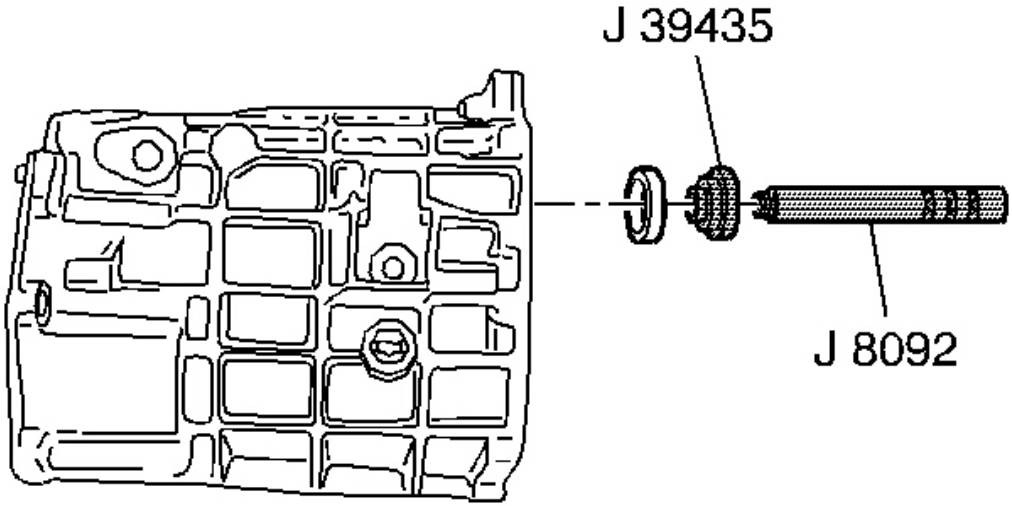

Fig. 222: Installing Mainshaft Bearing Race Using J 8092 & J 39435
Courtesy of GENERAL MOTORS CORP.

2. Install the mainshaft bearing race, using the **J 8092** and the **J 39435** .

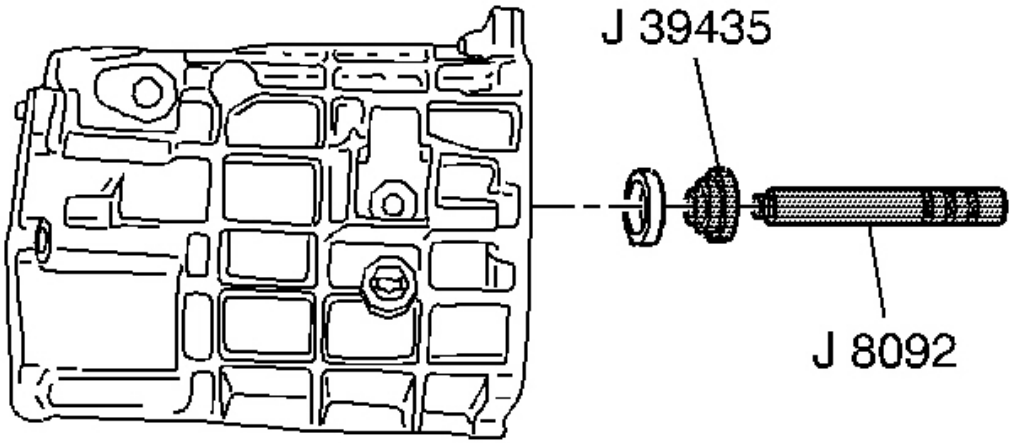

Fig. 223: Installing/Removing Countershaft Bearing Race Using J 8092 & J 39435
Courtesy of GENERAL MOTORS CORP.

cardiagn.com

3. Install the countershaft bearing race, using the **J 8092** and the **J 39435** .

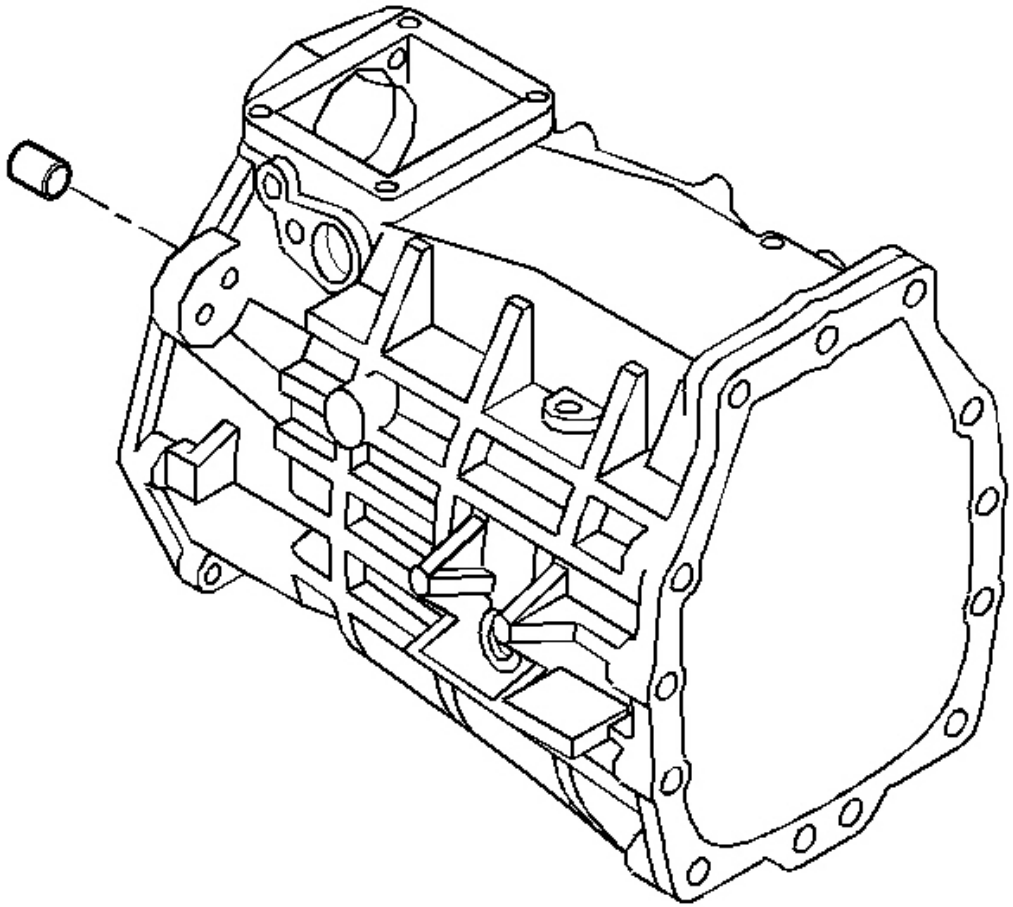

Fig. 224: Identifying Transfer Case Dowel Pins
Courtesy of GENERAL MOTORS CORP.

4. Install the dowel pins.

cardiagn.com

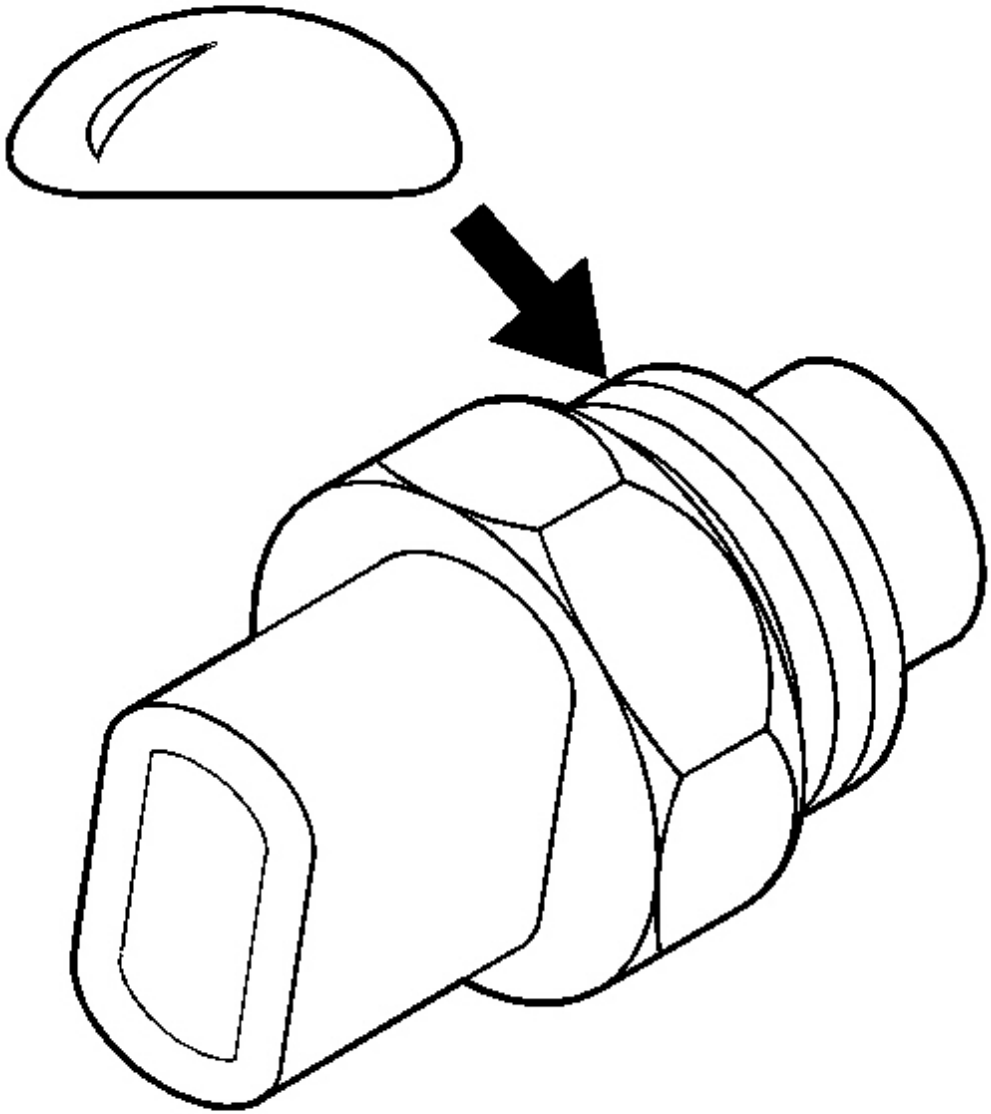

Fig. 225: Applying Sealant To Threads On Reverse Lamp Switch
Courtesy of GENERAL MOTORS CORP.

5. Apply sealant GM P/N United States 12346004, GM P/N Canada 10953480 or equivalent to the threads of the reverse lamp switch.

cardiagn.com

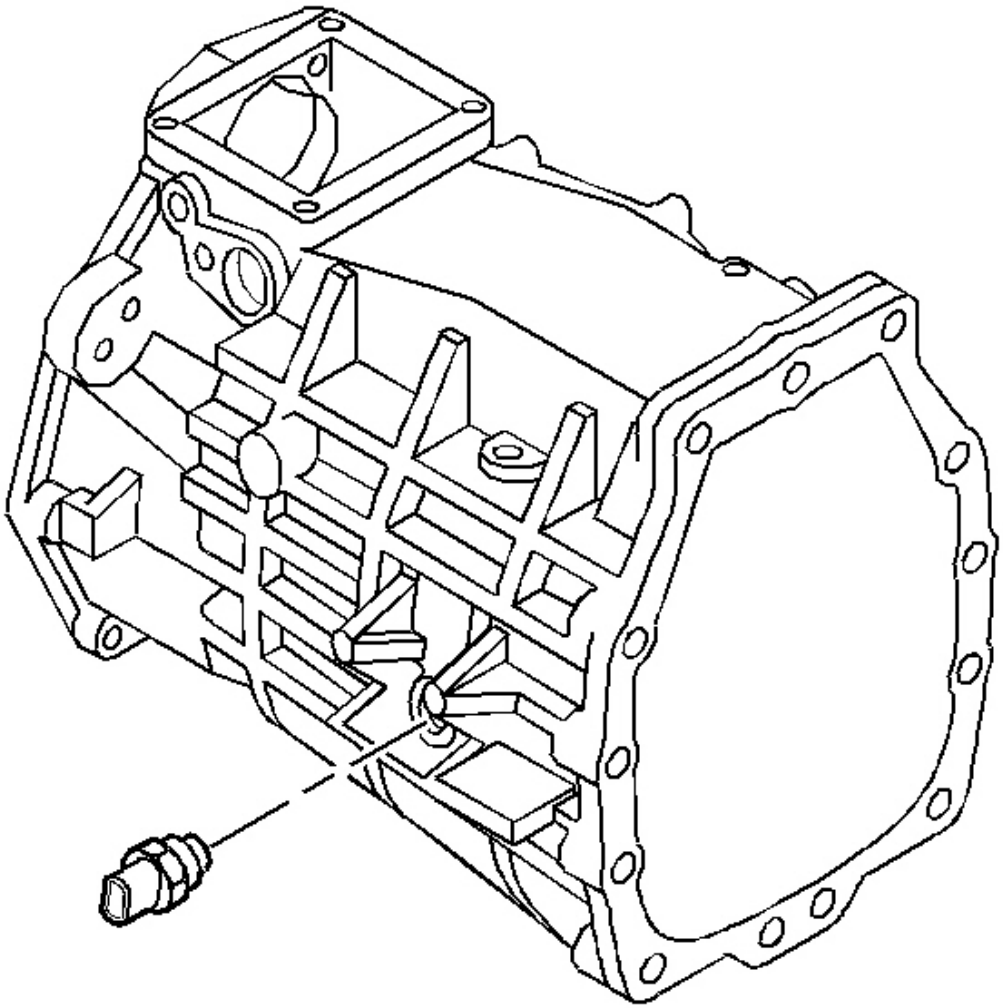

Fig. 226: Locating Reverse Lamp Switch
Courtesy of GENERAL MOTORS CORP.

NOTE: Refer to Fastener Notice in Cautions and Notices.

6. Install the reverse lamp switch.

   Tighten: Tighten the switch to 27 N.m (20 lb ft).

cardiagn.com

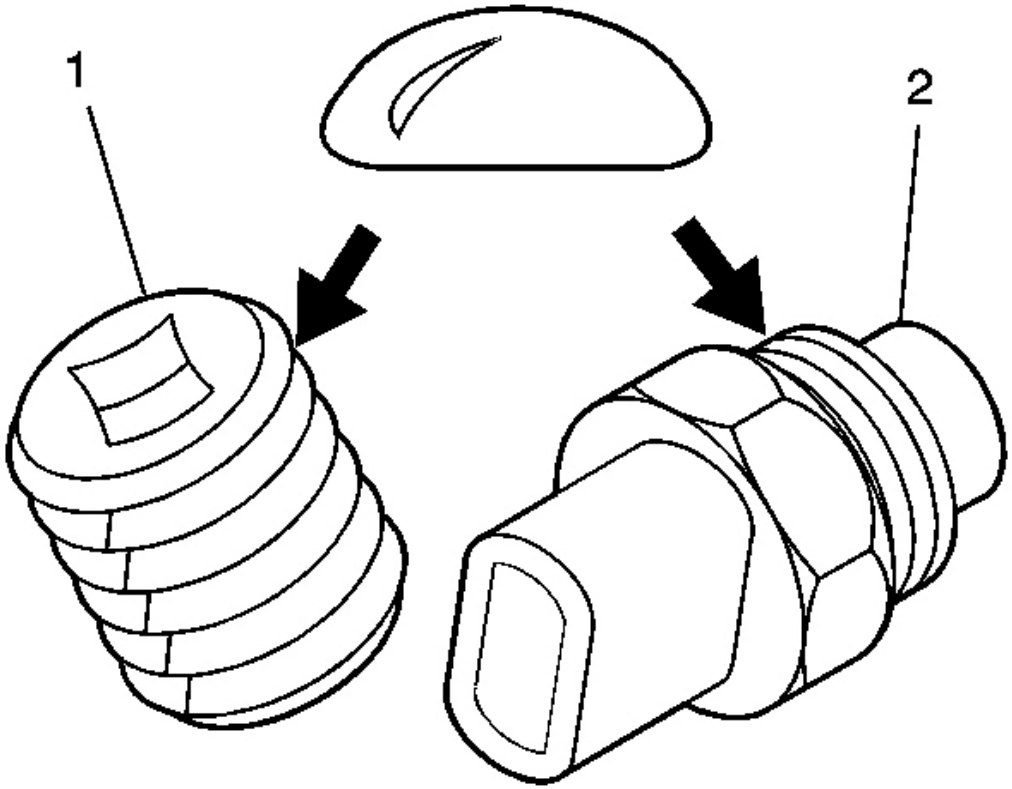

Fig. 227: Applying Sealant To Transmission Case Fill Plug & Temperature Switch
Courtesy of GENERAL MOTORS CORP.

7. Apply sealant GM P/N United States 12346004, GM P/N Canada 10953480 or equivalent to the threads of the transmission case fill plug (1), MM6 only.
8. Apply sealant GM P/N United States 12346004, GM P/N Canada 10953480 or equivalent to the threads of the temperature switch, M12 only.

cardiagn.com

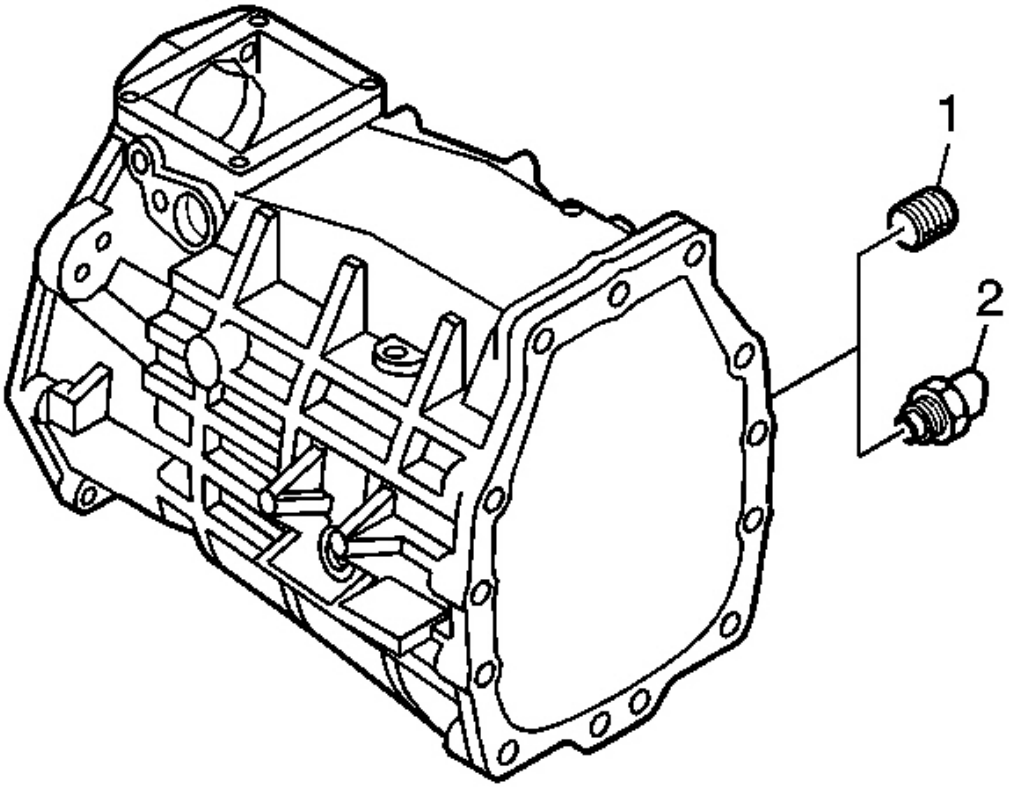

Fig. 228: View Of Transmission Case Fill Plug & Temperature Switch
Courtesy of GENERAL MOTORS CORP.

9. Install the transmission case fill plug (1), MM6 only.

   Tighten: Tighten the transmission case fill plug to 18 N.m (13 lb ft).

10. Install the temperature switch (2), M12 only.

    Tighten: Tighten the temperature switch to 41 N.m (30 lb ft).

cardiagn.com

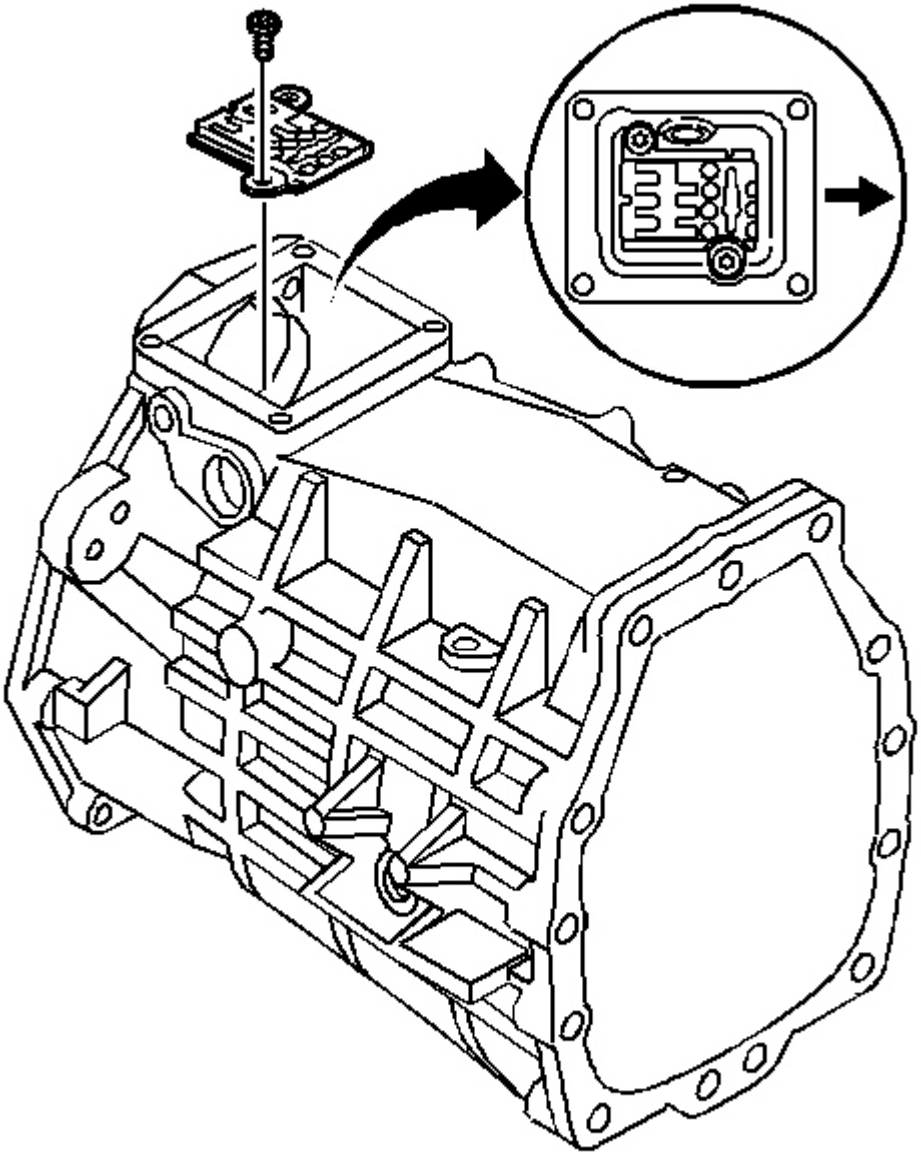

Fig. 229: Installing/Removing Guide Plate & Guide Plate Bolts
Courtesy of GENERAL MOTORS CORP.

NOTE: **The H-pattern on the guide plate must face the extension housing. If the guide plate is installed incorrectly, then damage will occur.**

cardiagn.com

11. Install the guide plate and the guide plate bolts.

    Tighten: Tighten the bolts to 22 N.m (16 1b ft).

Adapter Plate

Tools Required

- **J 39433** Input Shaft Seal Installer. See **Special Tools** .
- **J 39439-1** Shift Rail Bushing Remover/lnstaller. See **Special Tools** .
- **J 42464** Shift Shaft Seal lnstaller. See **Special Tools** .
- **J 42496** Inner Shift Rail Inner Seal lnstaller. See **Special Tools** .

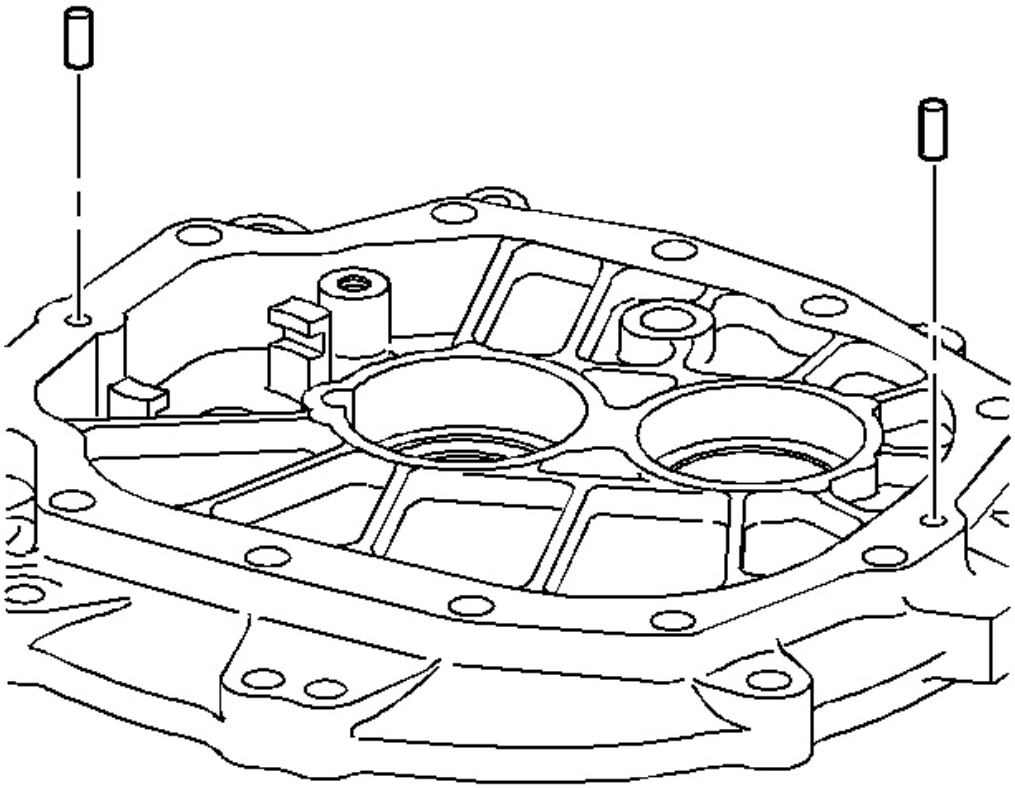

Fig. 230: Installing/Removing Transmission Dowel Pins
Courtesy of GENERAL MOTORS CORP.

1. Install the dowel pins.

cardiagn.com

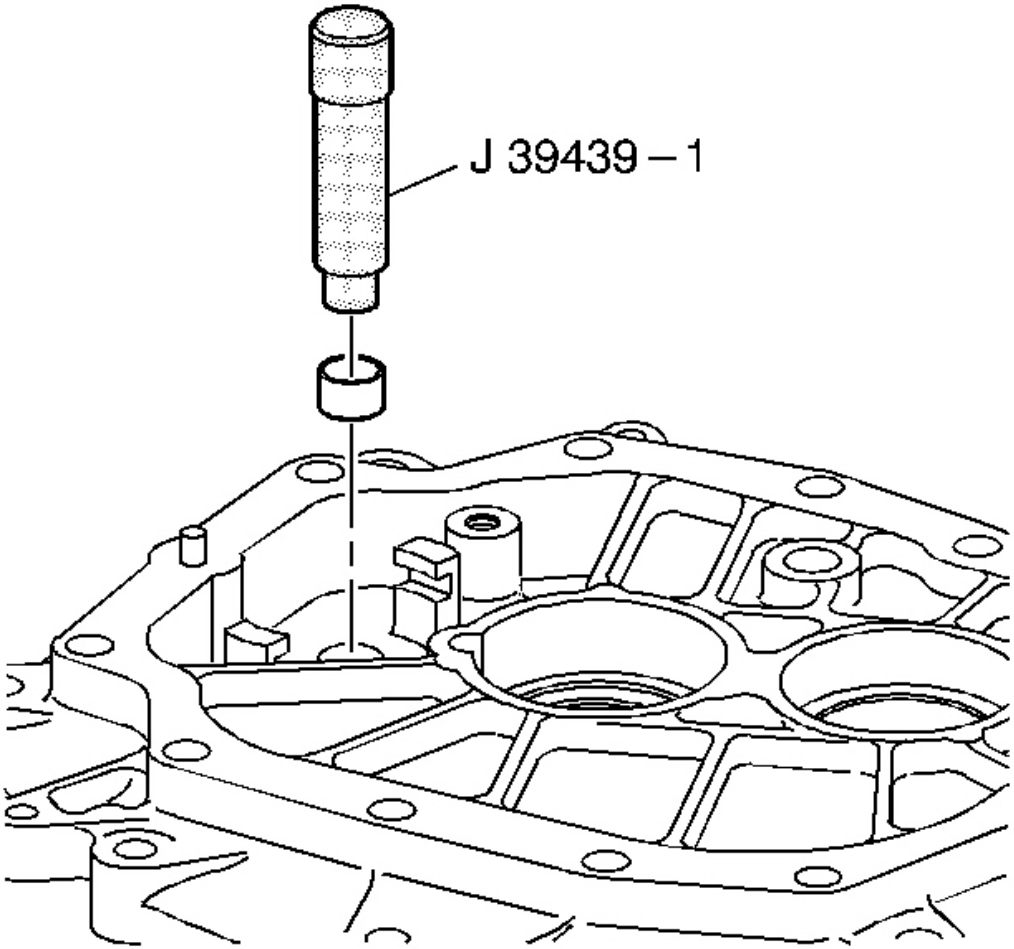

Fig. 231: Identifying 1st/2nd, 3rd/4th Speed Shift Shaft Bushing
Courtesy of GENERAL MOTORS CORP.

NOTE: **If the 1st/2nd, 3rd/4th speed shift shaft bushing is installed incorrectly it will interfere with the inner shift rail seal causing a leak.**

2. Install the 1st/2nd, 3rd/4th speed shift shaft bushing flush with adapter plate, using the **J 39439-1** .

cardiagn.com

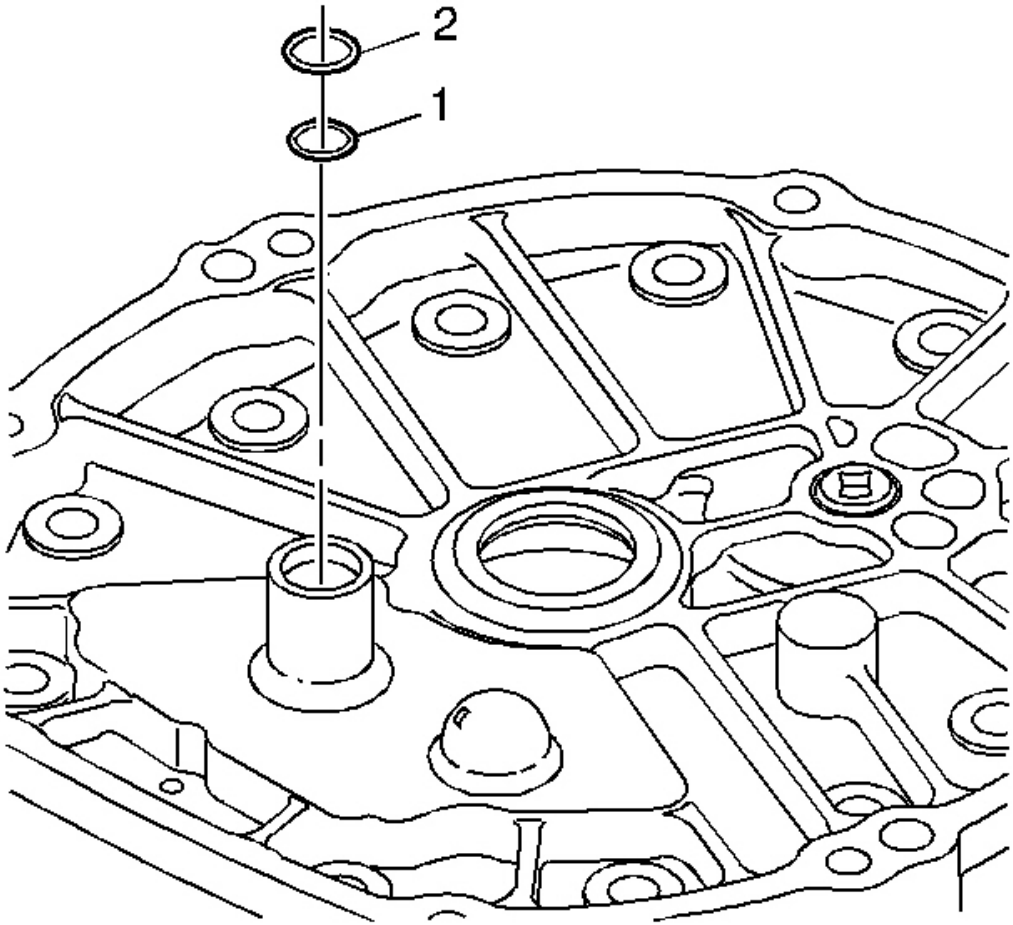

Fig. 232: Installing/Removing Inner Shift Rail Seal & Outer Shift Rail Seal
Courtesy of GENERAL MOTORS CORP.

3. Install the inner shift rail seal (1) using the **J 42496** . Garter spring should face inside of transmission.
4. Install the outer shift rail seal (2) using the **J 42464** .

cardiagn.com

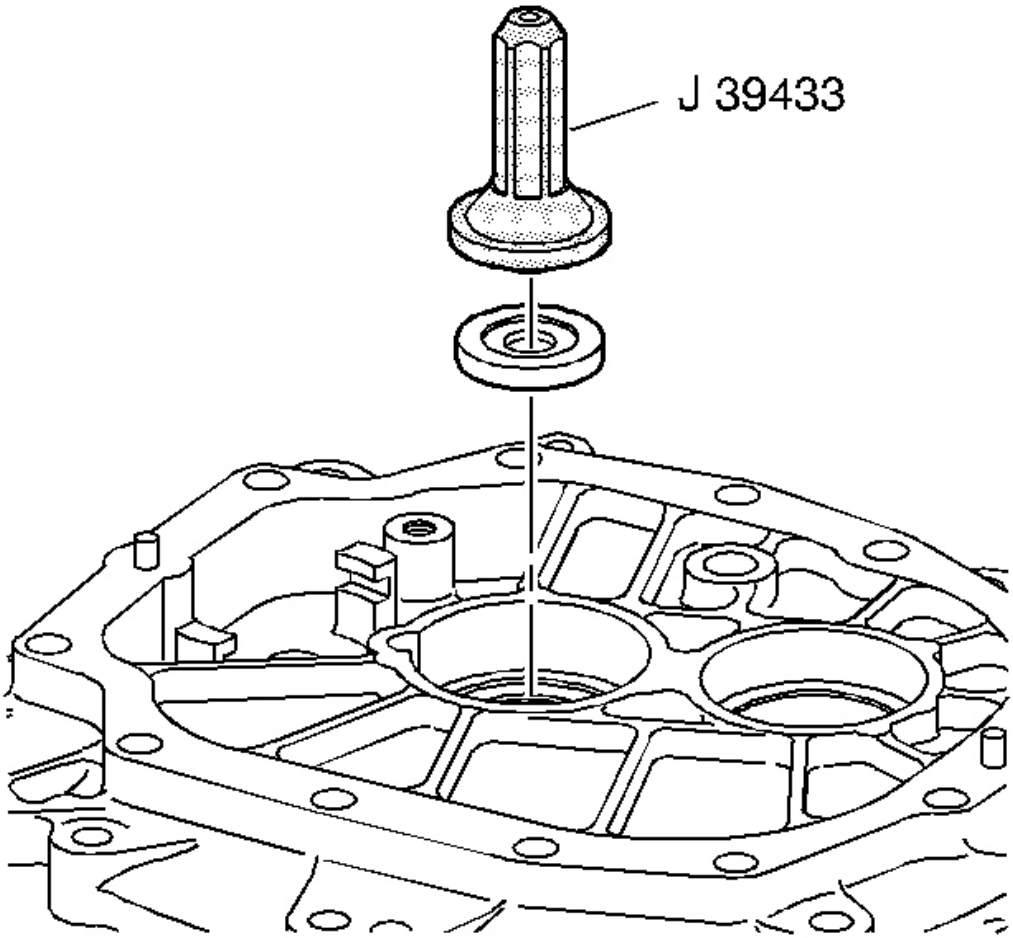

Fig. 233: Installing Input Shaft Seal Using J 39433
Courtesy of GENERAL MOTORS CORP.

5. Install the input shaft seal using the **J 39433** .

cardiagn.com

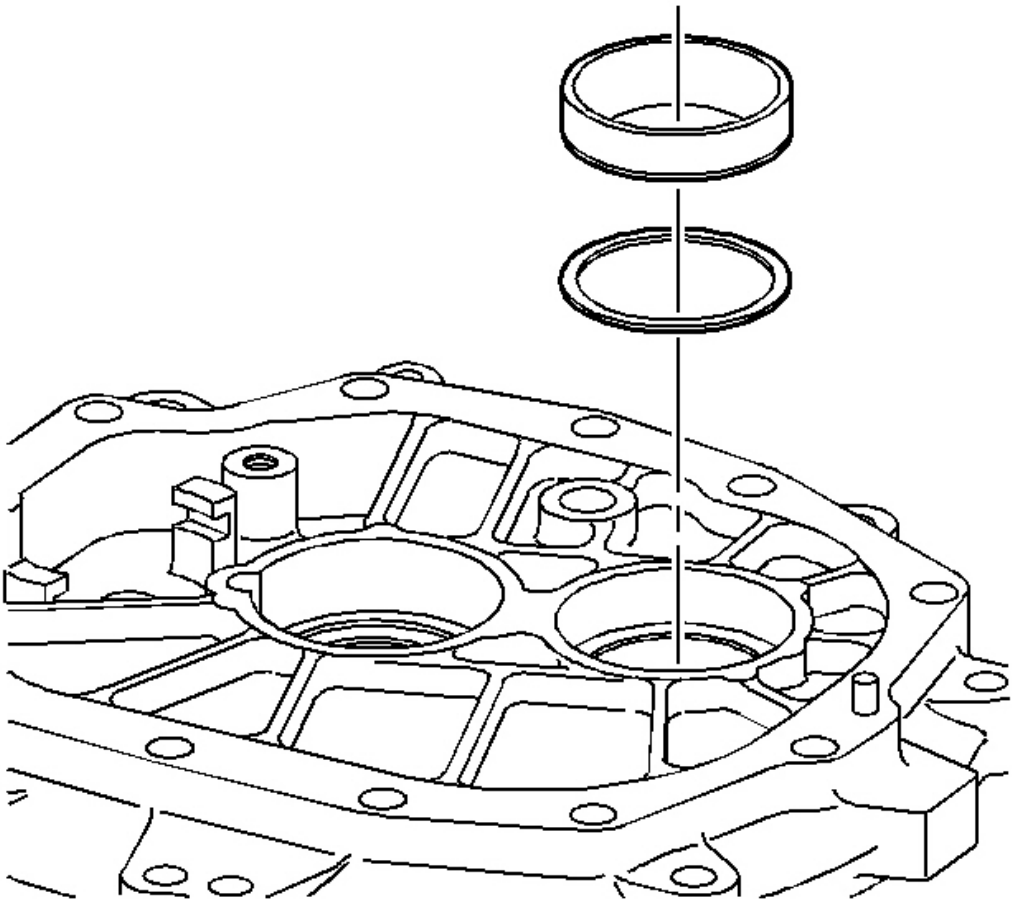

Fig. 234: Identifying Countershaft Bearing Shim & Bearing Race
Courtesy of GENERAL MOTORS CORP.

6. Install the countershaft bearing shim and bearing race. Refer to Input Shaft, Mainshaft and Countershaft in **Shimming Procedures (Y Car)** or **Shimming Procedures (CTSV)** or **Shimming Procedures (GTO)** .

cardiagn.com

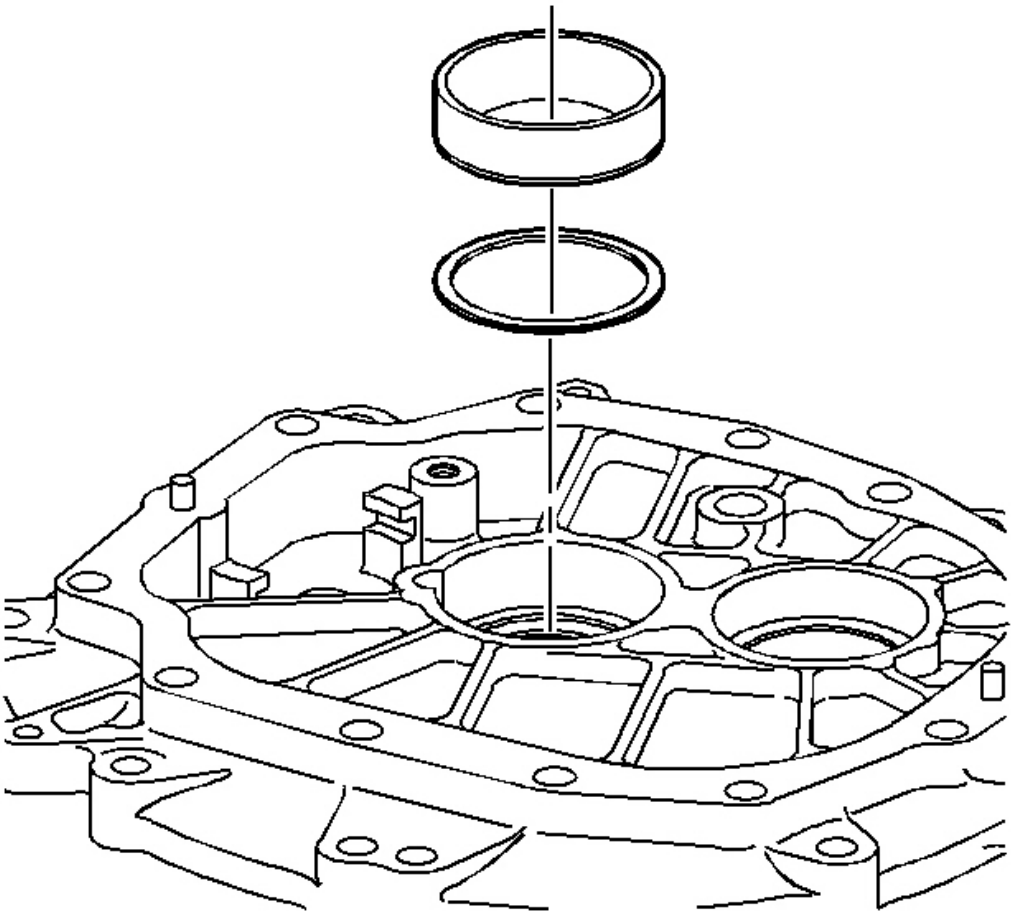

Fig. 235: Installing/Removing Input Shaft Bearing Shim And Bearing Race
Courtesy of GENERAL MOTORS CORP.

7. Install the input shaft bearing shim and bearing race. Refer to Input Shaft, Mainshaft and Countershaft in **Shimming Procedures (Y Car)** or **Shimming Procedures (CTSV)** or **Shimming Procedures (GTO)** .

cardiagn.com

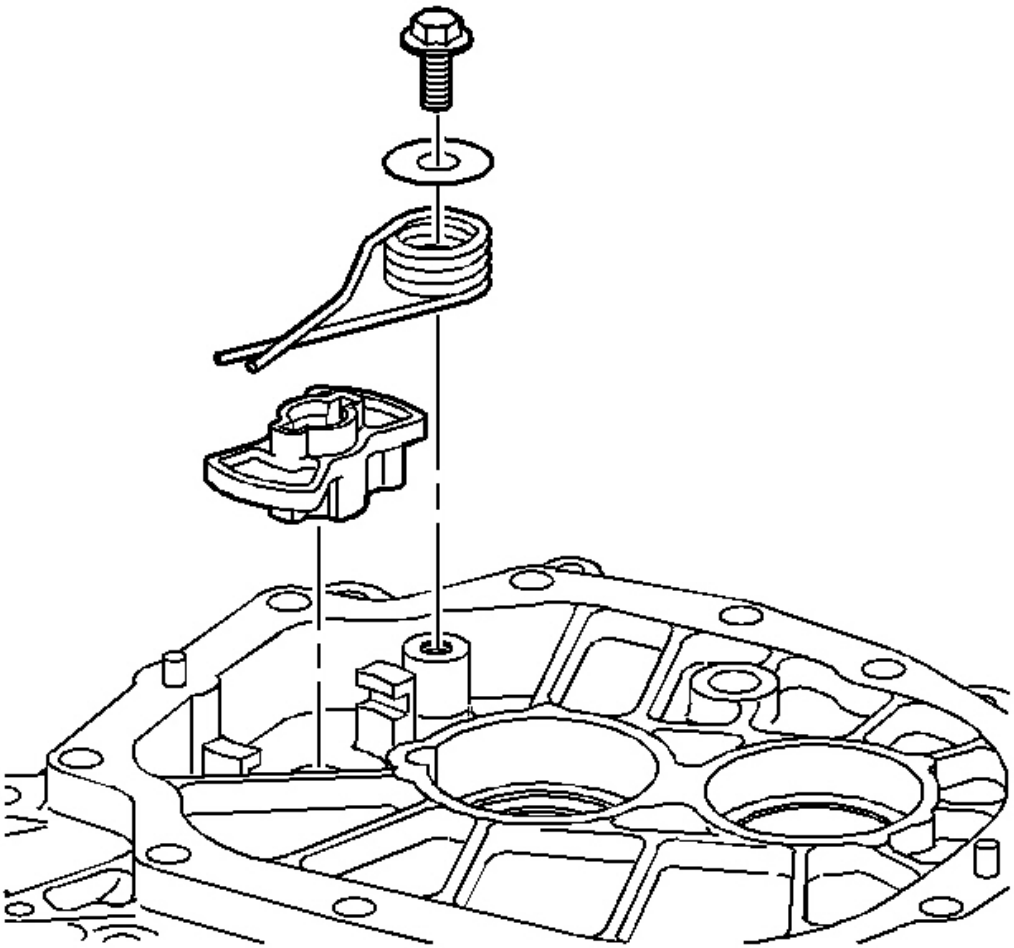

Fig. 236: View Of Neutral Return Cam Assembly
Courtesy of GENERAL MOTORS CORP.

8. Install the neutral return cam spring.
9. Install the neutral return cam spring retaining bolt and washer.
10. Install the neutral return cam.

Tighten: Tighten the bolt to 25 N.m (18 lb ft).

TRANS CASE AND ADAPTER PLATE ASSEMBLE (CTSV)

Transmission Case

cardiagn.com

Tools Required

- **J 36190** Drive Handle. See **Special Tools** .
- **J 39435** Mainshaft and Countershaft Bearing Race Installer. See **Special Tools** .
- **J 39439-4** Bushing Installer. See **Special Tools** .
- **J 39439-3** Bushing Installer. See **Special Tools** .

1. Install the 1st/2nd and the 3rd/4th shift shaft bushings. Use the **J 36190** , the **J 39439-4** , and the **J 39439-3** .

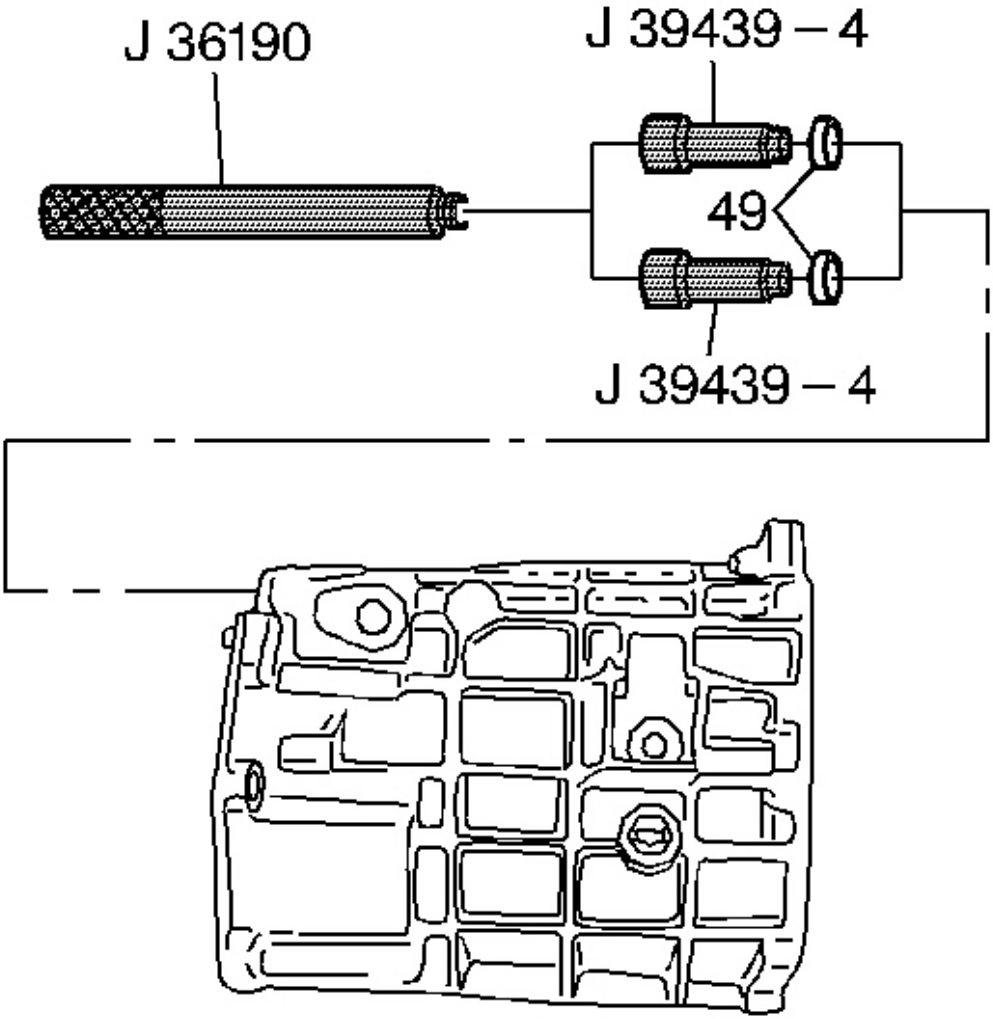

cardiagn.com

Fig. 237: Installing 1st/2nd & 3rd/4th Shift Shaft Bushings
Courtesy of GENERAL MOTORS CORP.

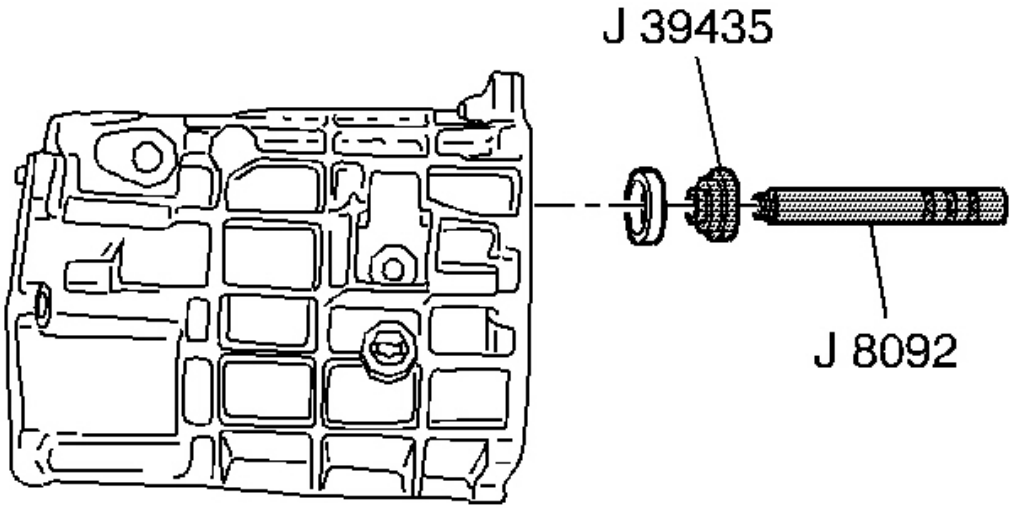

Fig. 238: Installing Mainshaft Bearing Race Using J 8092 & J 39435
Courtesy of GENERAL MOTORS CORP.

2. Install the mainshaft bearing race, using the **J 8092** and the **J 39435** .

cardiagn.com

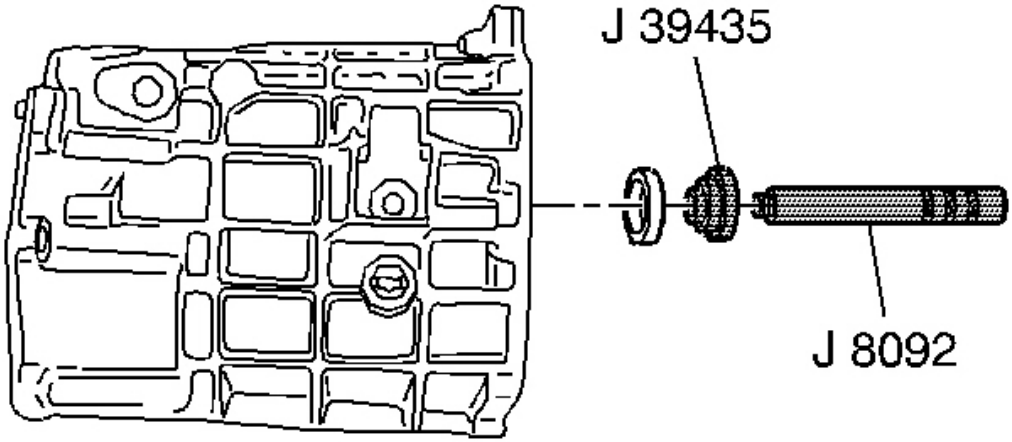

Fig. 239: Installing/Removing Countershaft Bearing Race Using J 8092 & J 39435
Courtesy of GENERAL MOTORS CORP.

3. Install the countershaft bearing race, using the **J 8092** and the **J 39435** .

cardiagn.com

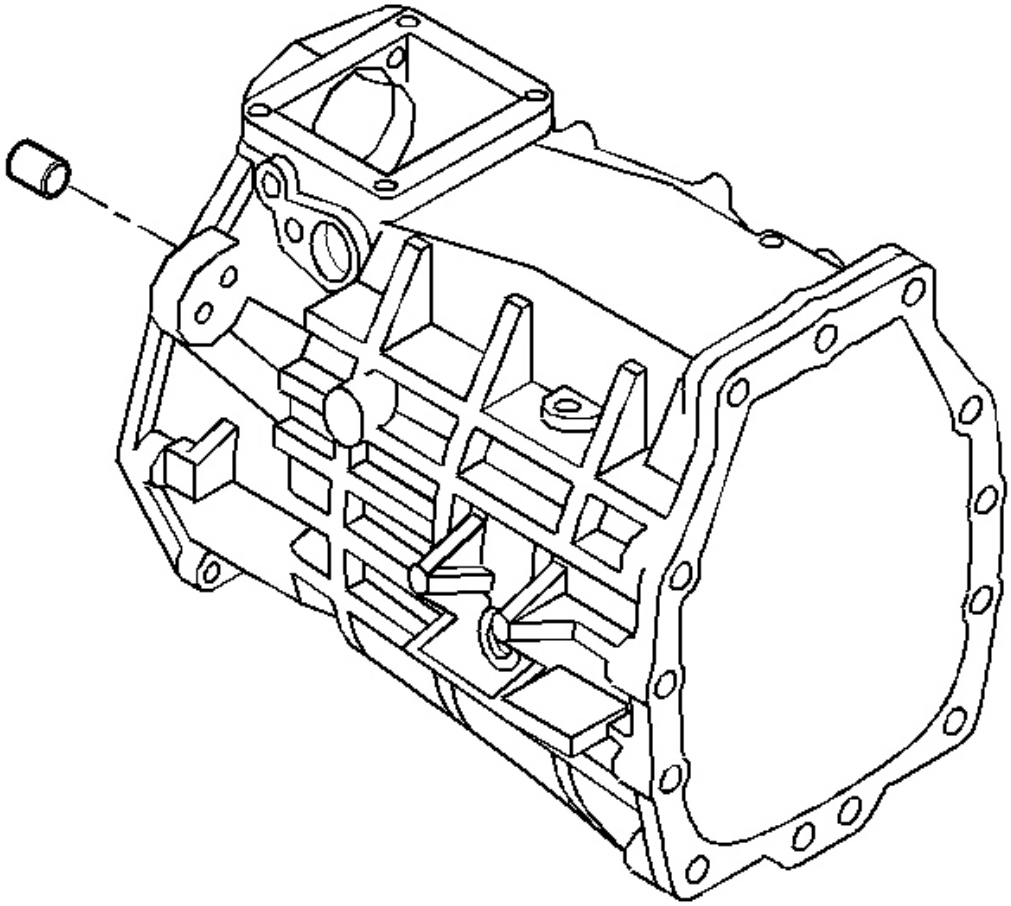

Fig. 240: Identifying Transfer Case Dowel Pins
Courtesy of GENERAL MOTORS CORP.

4. Install the dowel pins.

cardiagn.com

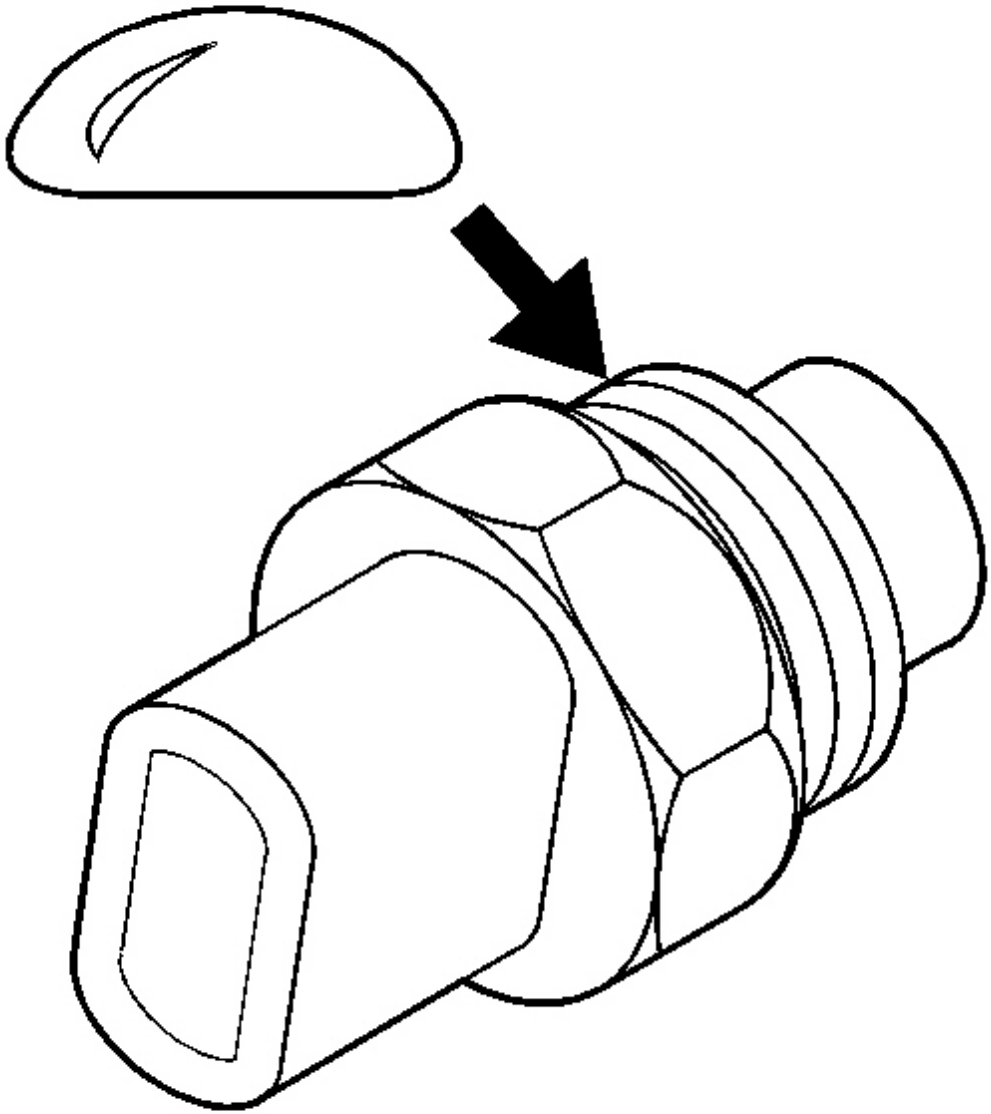

Fig. 241: Applying Sealant To Threads On Reverse Lamp Switch
Courtesy of GENERAL MOTORS CORP.

5. Apply sealant GM P/N United States 12346004, GM P/N Canada 10953480 or equivalent to the threads of the reverse lamp switch.

cardiagn.com

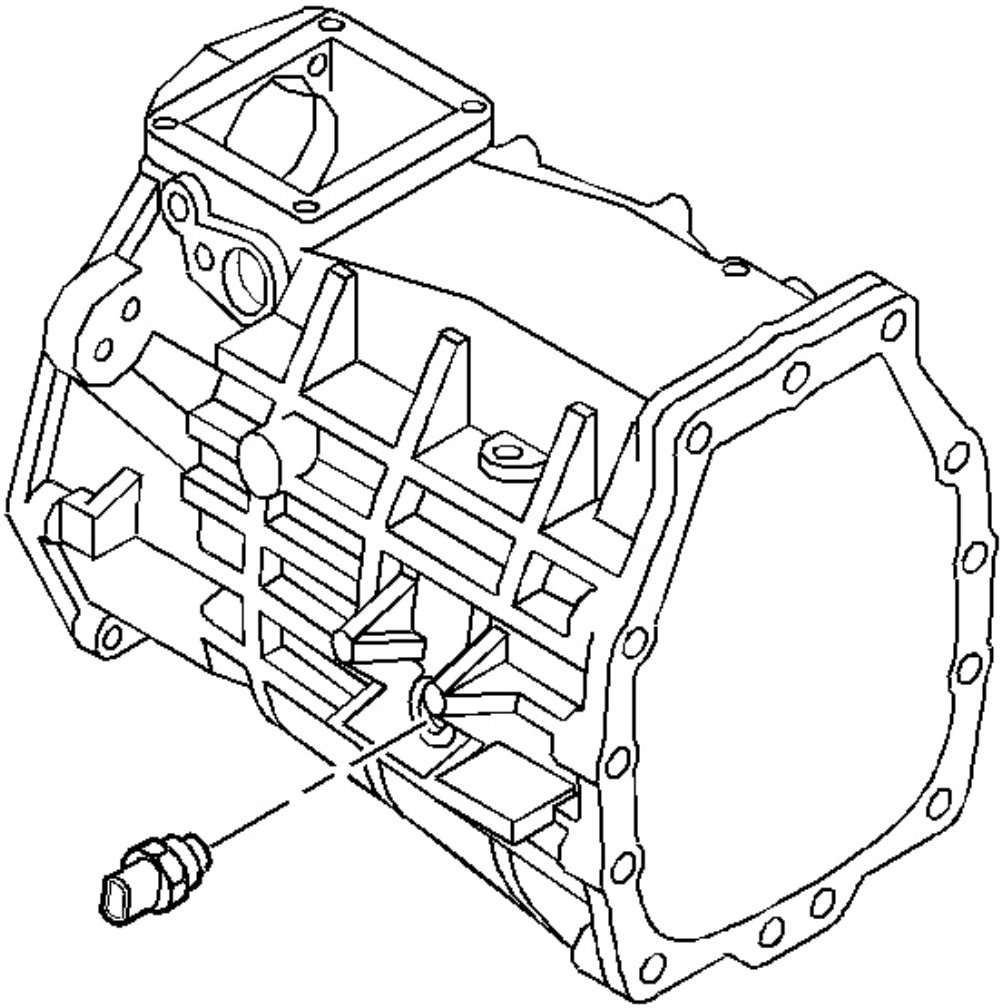

Fig. 242: Locating Reverse Lamp Switch
Courtesy of GENERAL MOTORS CORP.

NOTE: Refer to Fastener Notice in Cautions and Notices.

6. Install the reverse lamp switch.

   Tighten: Tighten the switch to 27 N.m (20 lb ft).

cardiagn.com

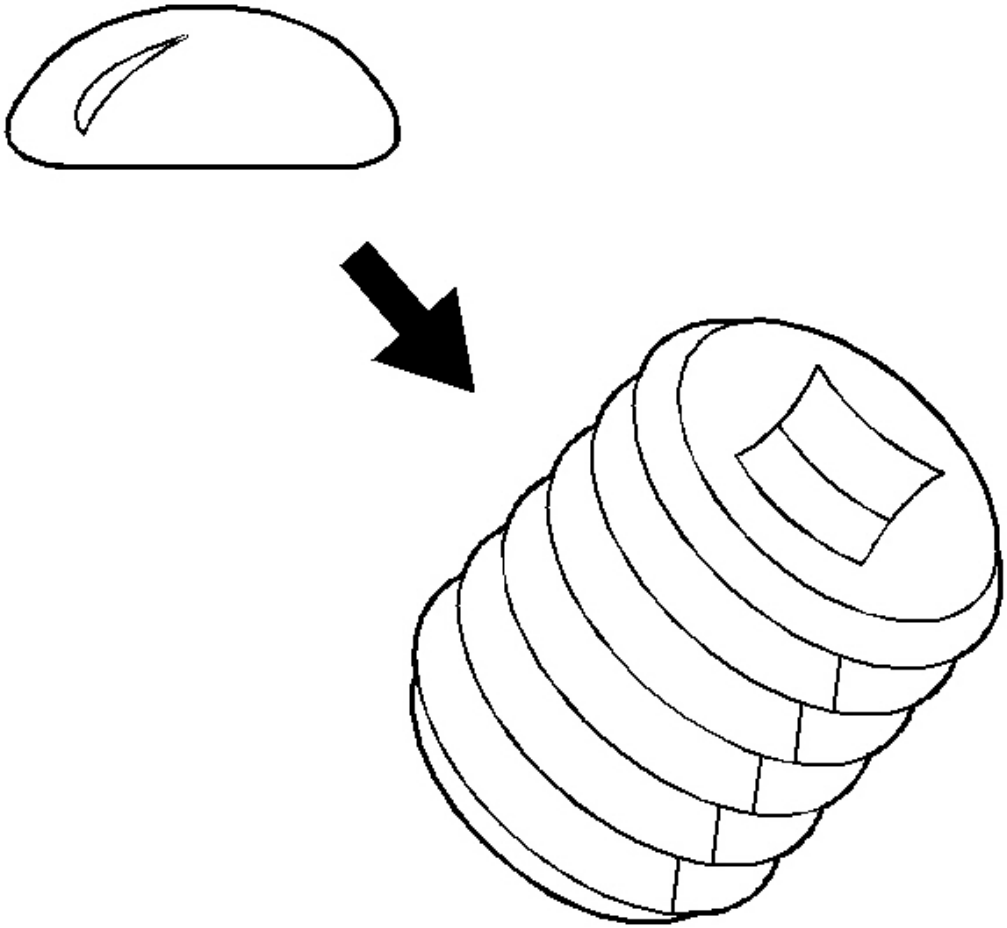

Fig. 243: Applying Sealant To Adapter Plate Plug Threads
Courtesy of GENERAL MOTORS CORP.

7. Apply sealant GM P/N United States 12346004, GM P/N Canada 10953480 or equivalent to the transmission case fill plug threads.

cardiagn.com

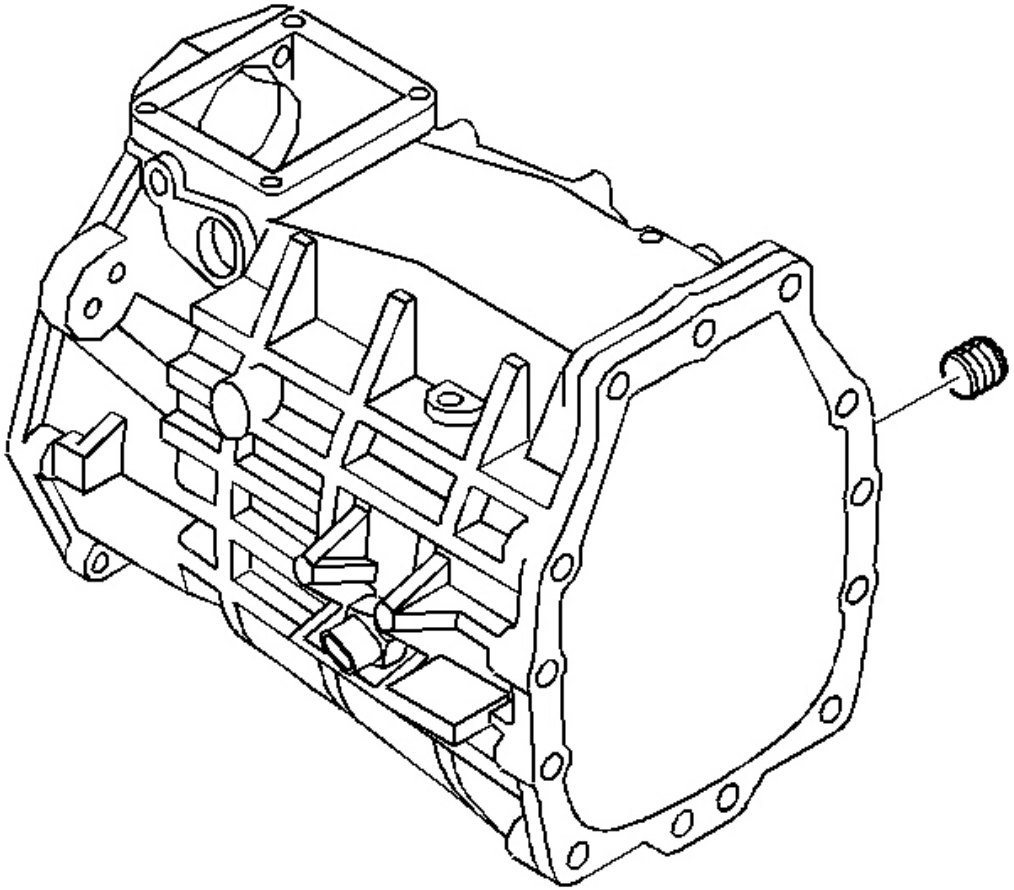

Fig. 244: View Of Transmission Case Fill Plug
Courtesy of GENERAL MOTORS CORP.

8. Install the transmission case fill plug.

   Tighten: Tighten the oil fill plug to 18 N.m (13 lb ft).

cardiagn.com

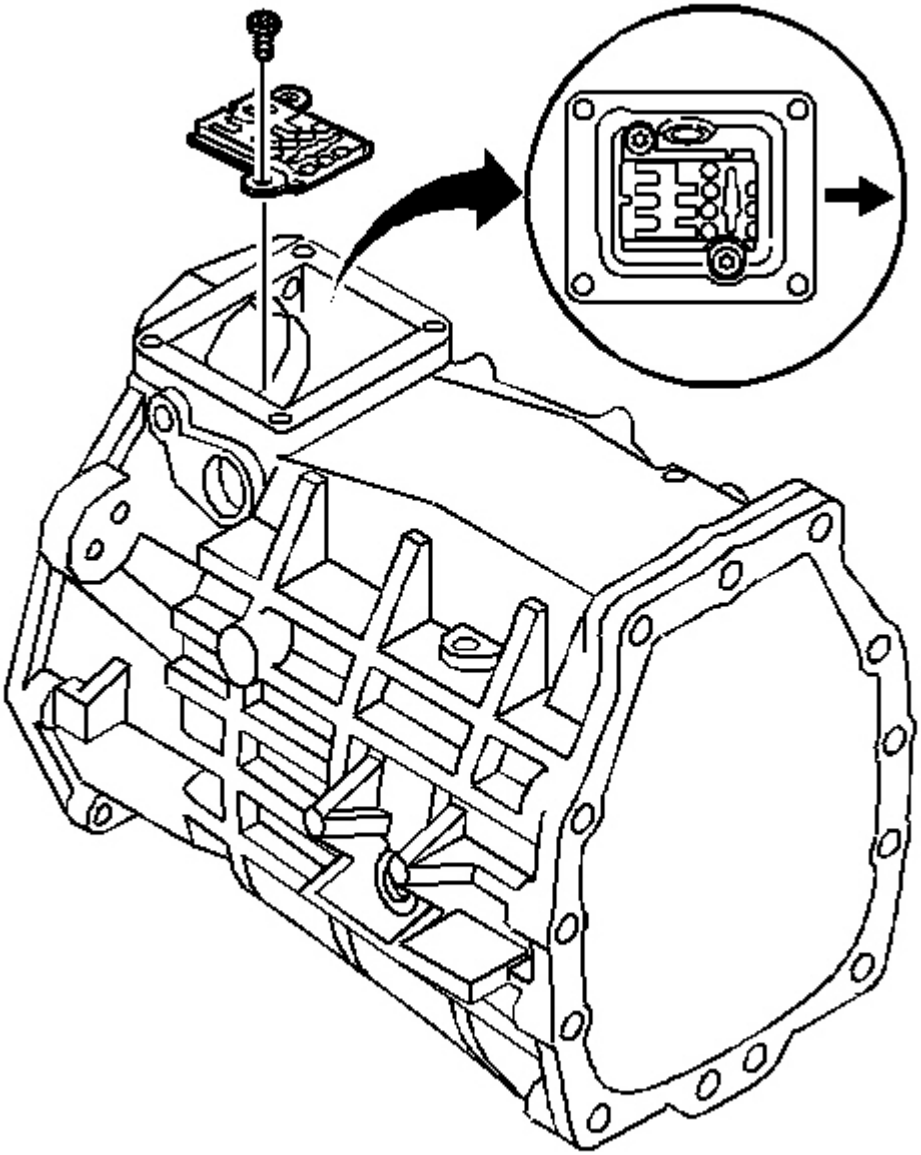

Fig. 245: Installing/Removing Guide Plate & Guide Plate Bolts
Courtesy of GENERAL MOTORS CORP.

NOTE: **The H-pattern on the guide plate must face the extension housing. If the guide plate is installed incorrectly, then damage will occur.**

cardiagn.com

9. Install the guide plate and the guide plate bolts.

   Tighten: Tighten the bolts to 22 N.m (16 Ib. ft).

Adapter Plate

Tools Required

- **J 39433** Input Shaft Seal Installer. See **Special Tools** .
- **J 39439-1** Bushing Remover/lnstaller. See **Special Tools** .

cardiagn.com

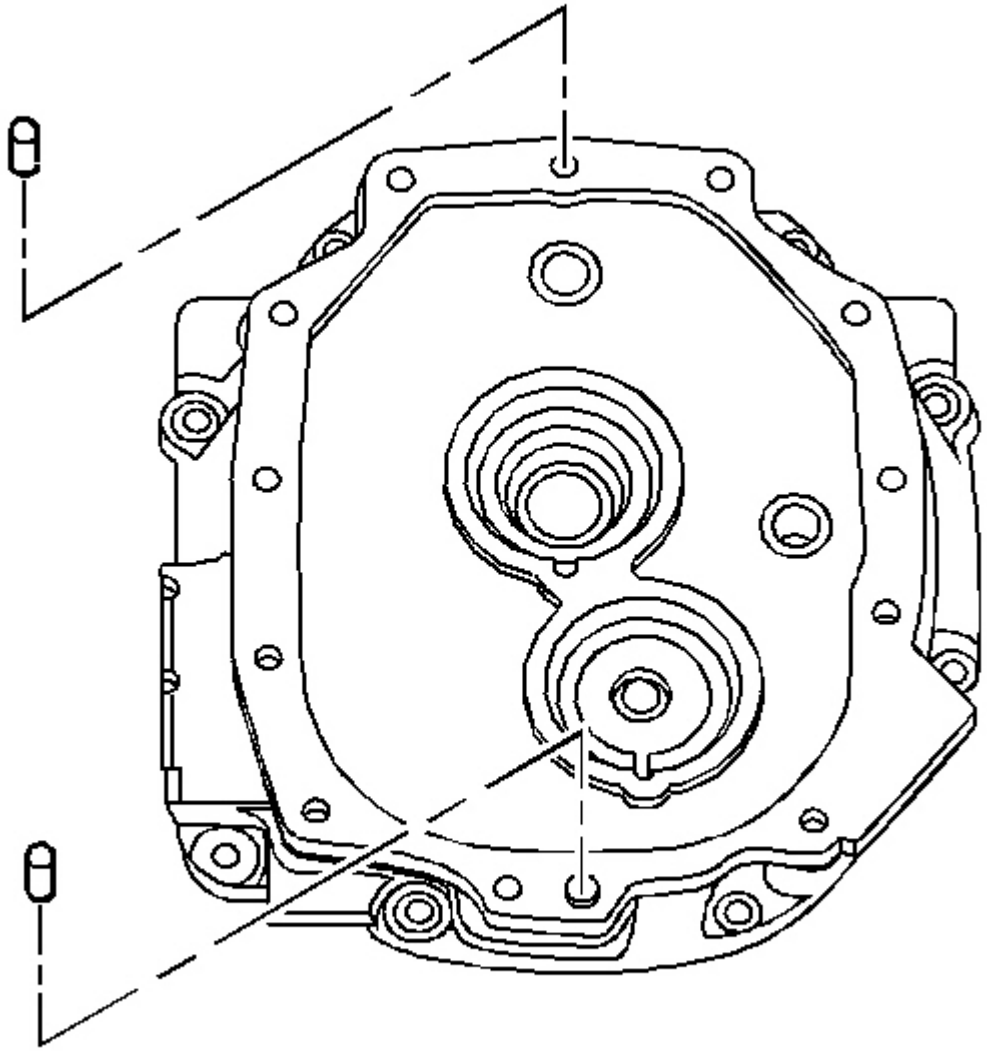

Fig. 246: Locating Extension Housing Dowel Pins
Courtesy of GENERAL MOTORS CORP.

1. Install the dowel pins.

cardiagn.com

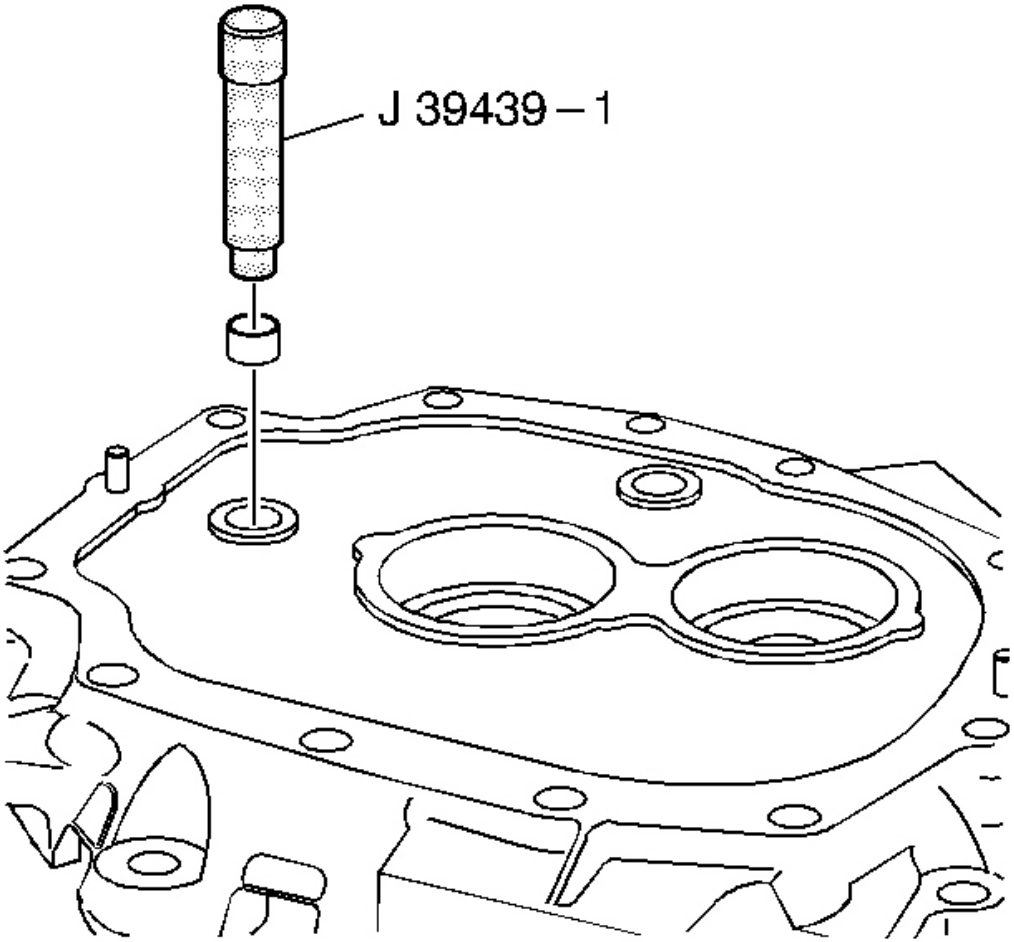

Fig. 247: Installing 1st/2nd, 3rd/4th Speed Shift Shaft Bushing
Courtesy of GENERAL MOTORS CORP.

2. Install the 1st/2nd, 3rd/4th speed shift shaft bushing, using the **J 39439-1** .

cardiagn.com

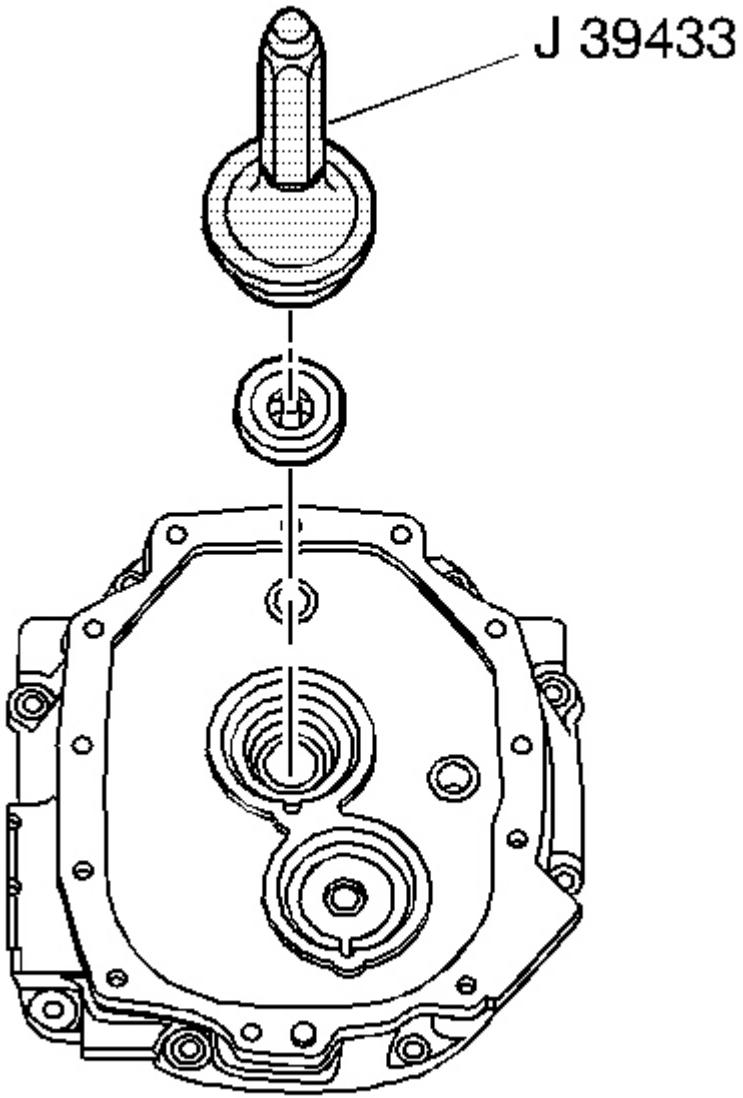

Fig. 248: Installing Input Shaft Seal Using J 39433
Courtesy of GENERAL MOTORS CORP.

3. Install the input shaft seal, using the **J 39433** .
4. Install the input shaft seal and the upper seal on the other side of the adapter plate, using the **J 39433** .

cardiagn.com

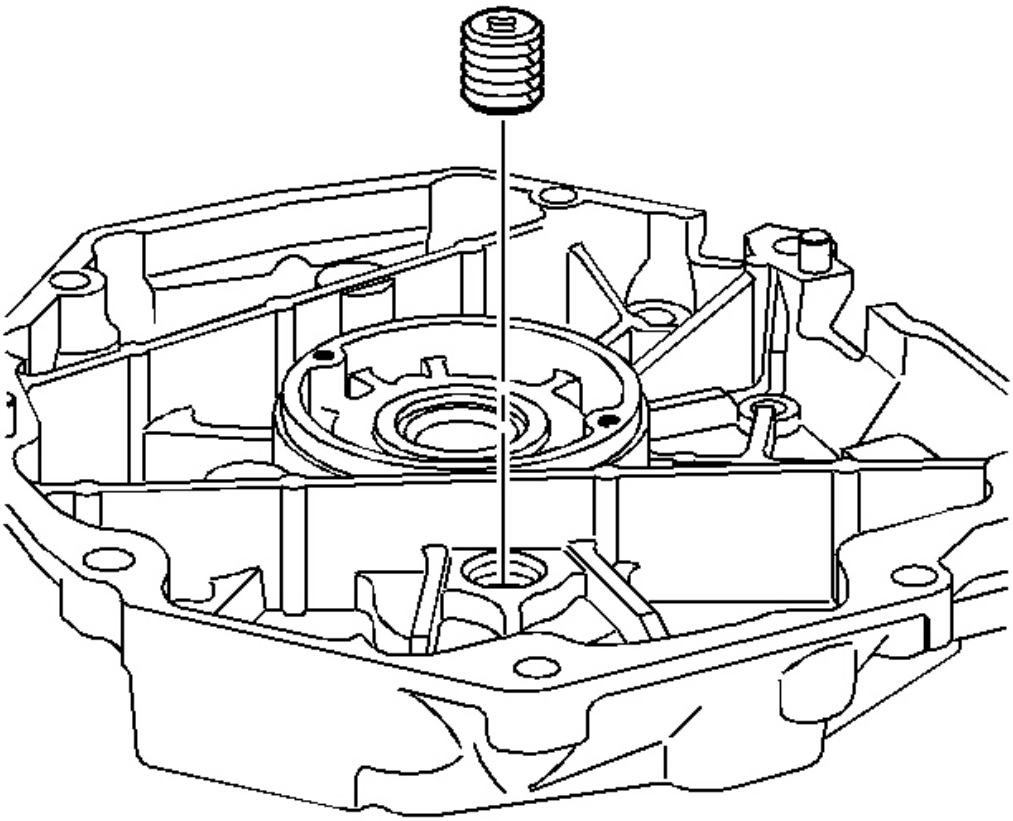

Fig. 249: Identifying Adapter Plate Plug
Courtesy of GENERAL MOTORS CORP.

5. Install adapter plate plug.

cardiagn.com

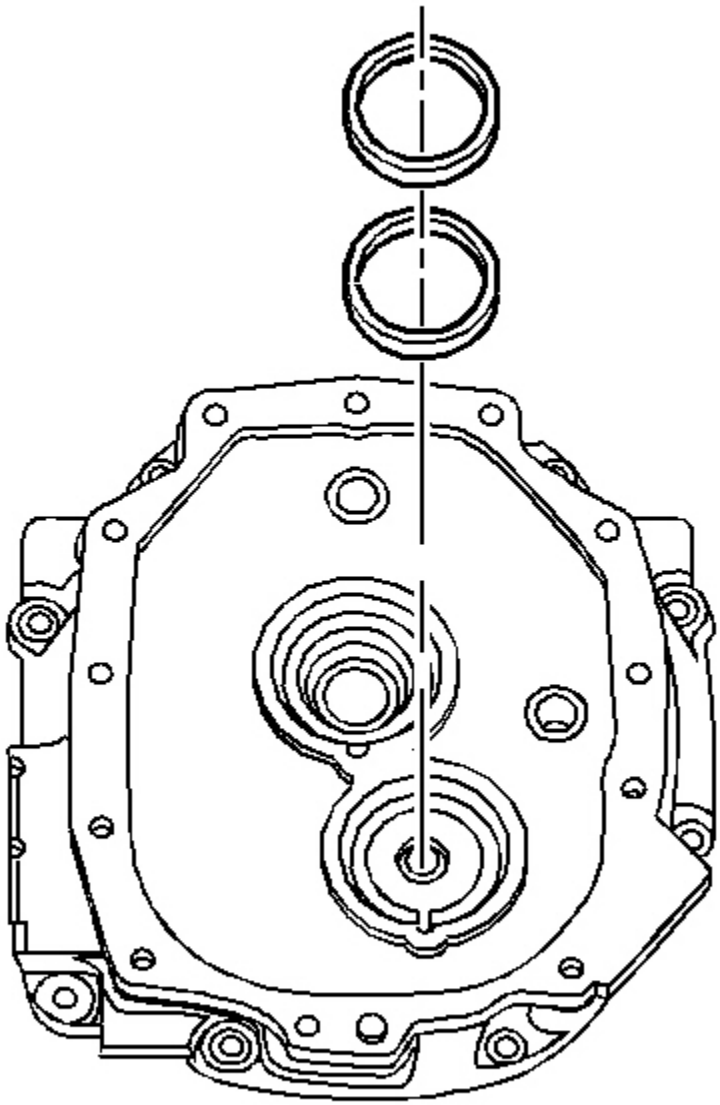

Fig. 250: View Of Countershaft Bearing Shim & Bearing Race
Courtesy of GENERAL MOTORS CORP.

6. Install countershaft bearing shim and bearing race.

cardiagn.com

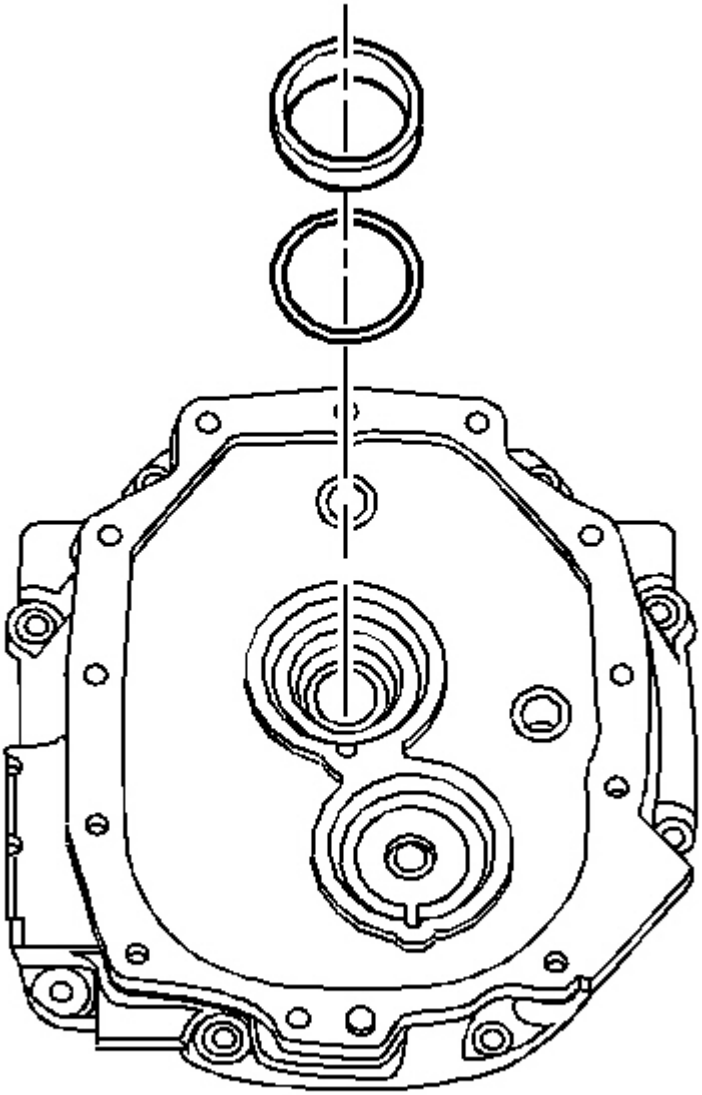

Fig. 251: Installing/Removing Input Shaft Bearing Shim And Bearing Race
Courtesy of GENERAL MOTORS CORP.

7. Install input shaft bearing shim and bearing race.

TRANS CASE AND ADAPTER PLATE ASSEMBLE (GTO)

Transmission Case

cardiagn.com

Tools Required

- **J 36190** Drive Handle. See **Special Tools** .
- **J 39435** Mainshaft and Countershaft Bearing Race Installer. See **Special Tools** .
- **J 39439-4** Bushing Installer. See **Special Tools** .
- **J 39439-3** Bushing Installer. See **Special Tools** .

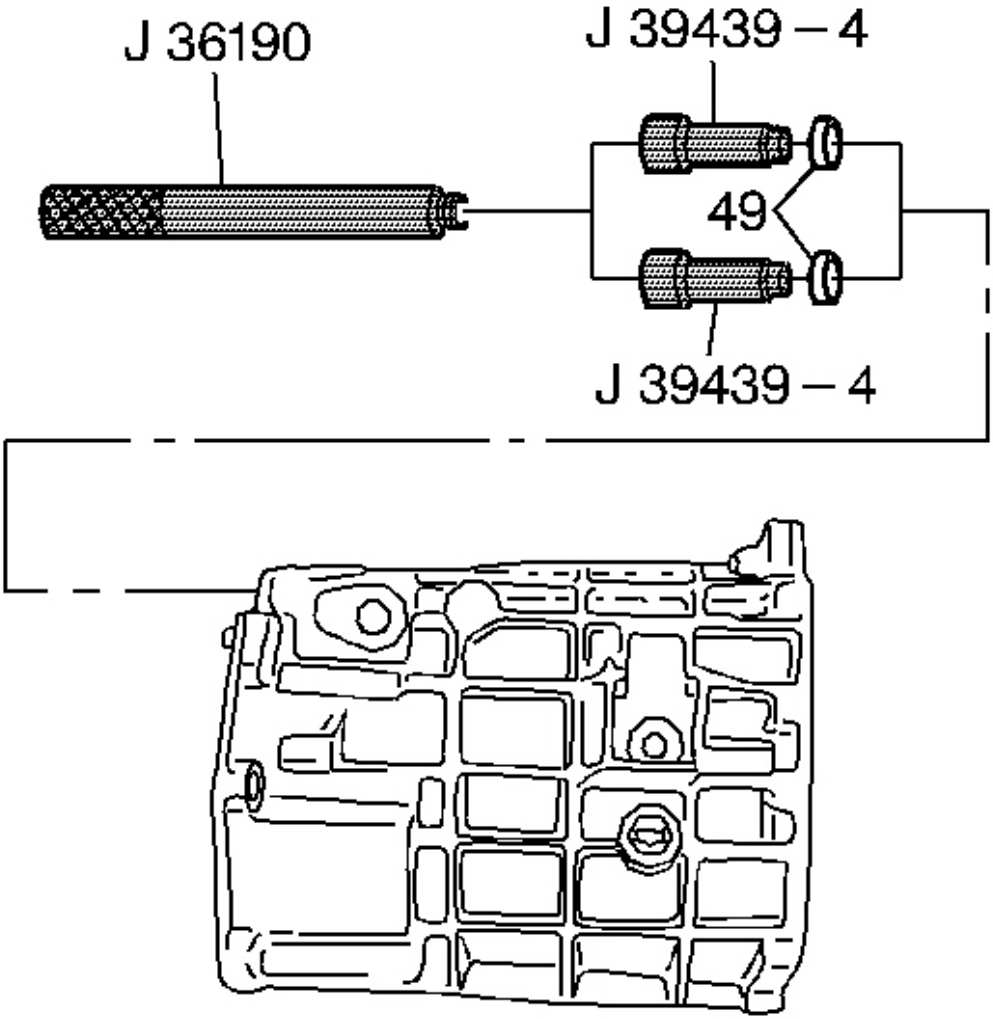

Fig. 252: Installing 1st/2nd & 3rd/4th Shift Shaft Bushings
Courtesy of GENERAL MOTORS CORP.

cardiagn.com

1. Install the 1st/2nd and the 3rd/4th shift shaft bushings. Use the **J 36190** , the **J 39439-4** , and the **J 39439-3** .

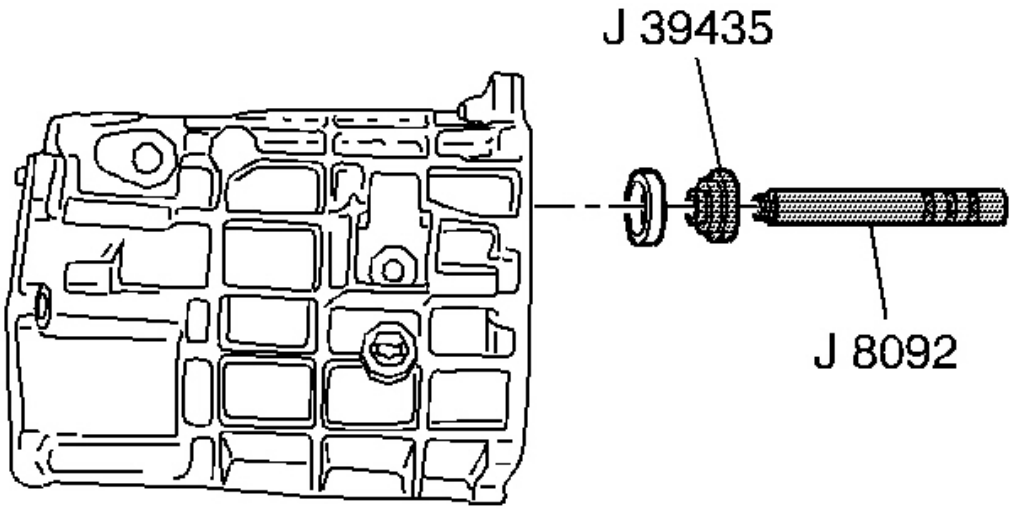

Fig. 253: Installing Mainshaft Bearing Race Using J 8092 & J 39435
Courtesy of GENERAL MOTORS CORP.

2. Install the mainshaft bearing race, using the **J 8092** and the **J 39435** .

cardiagn.com

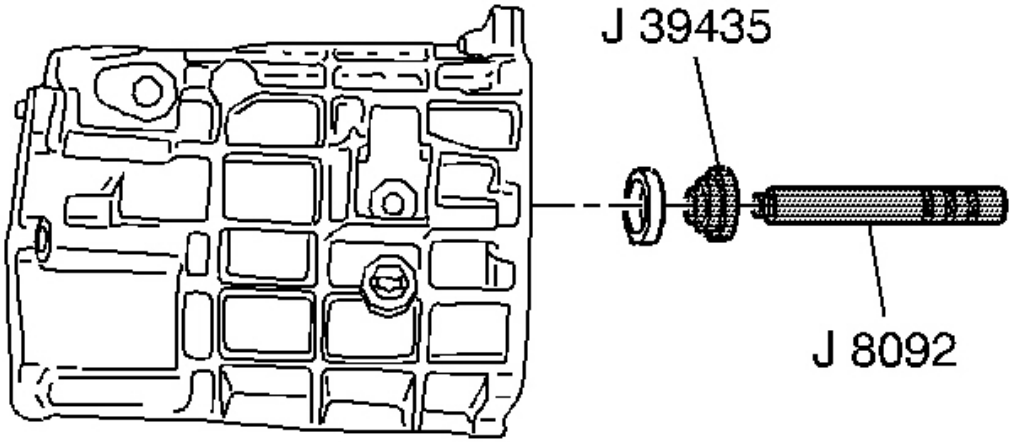

Fig. 254: Installing/Removing Countershaft Bearing Race Using J 8092 & J 39435
Courtesy of GENERAL MOTORS CORP.

3. Install the countershaft bearing race, using the **J 8092** and the **J 39435** .

cardiagn.com

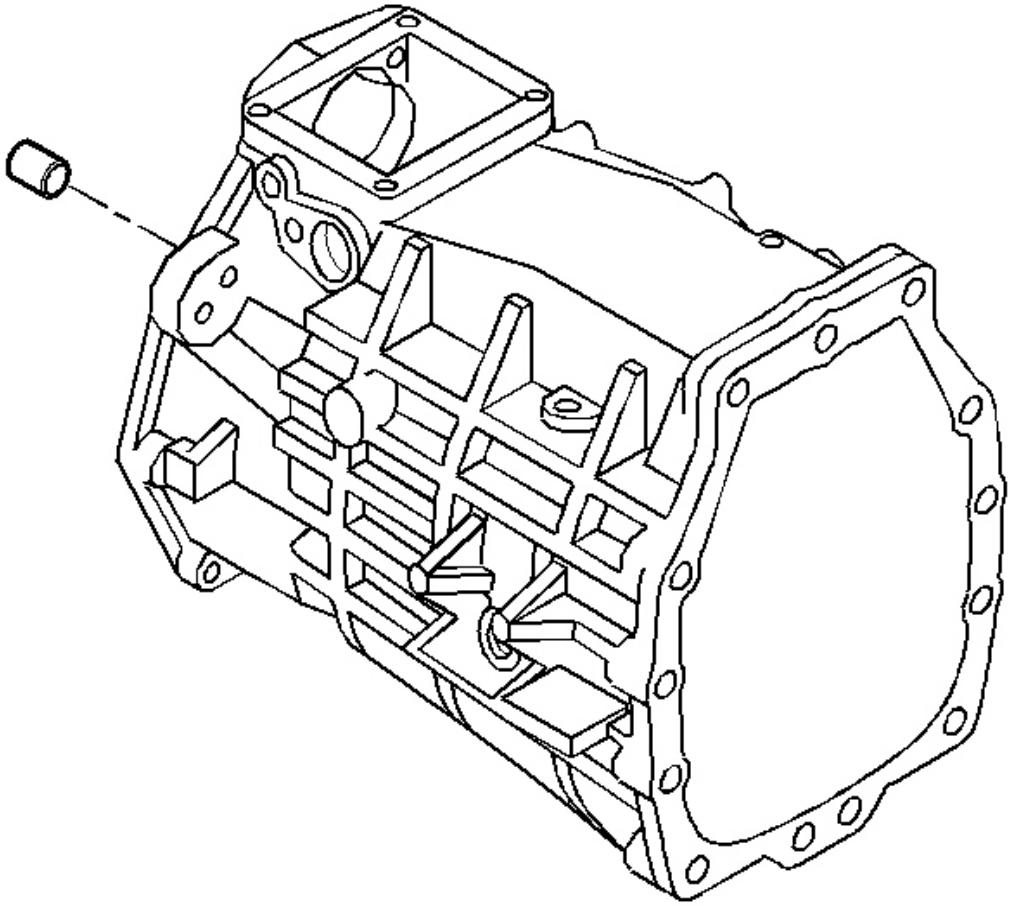

Fig. 255: Identifying Transfer Case Dowel Pins
Courtesy of GENERAL MOTORS CORP.

4. Install the dowel pins.

cardiagn.com

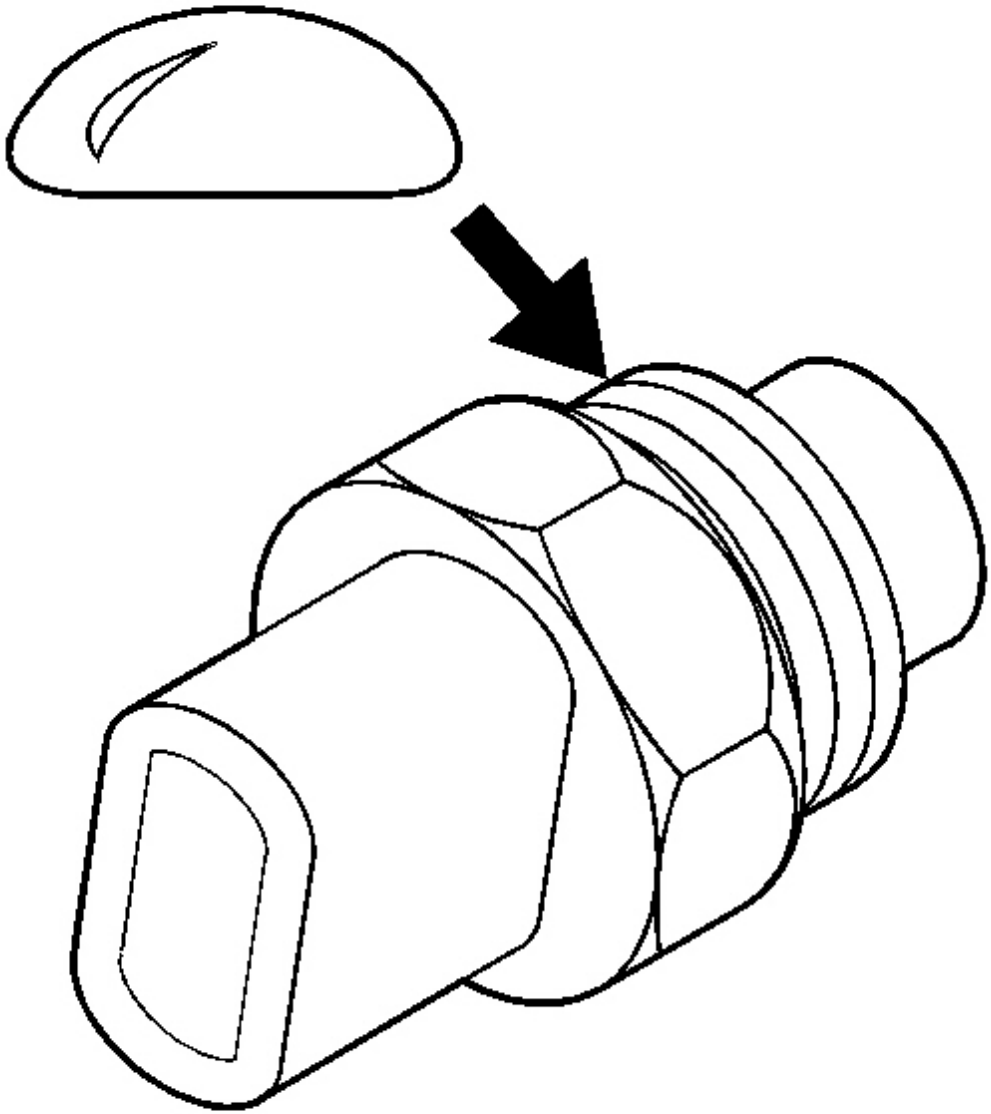

Fig. 256: Applying Sealant To Threads On Reverse Lamp Switch
Courtesy of GENERAL MOTORS CORP.

5. Apply sealant GM P/N 12346004 (Canadian P/N 10953480) or equivalent to the threads of the reverse lamp switch.

cardiagn.com

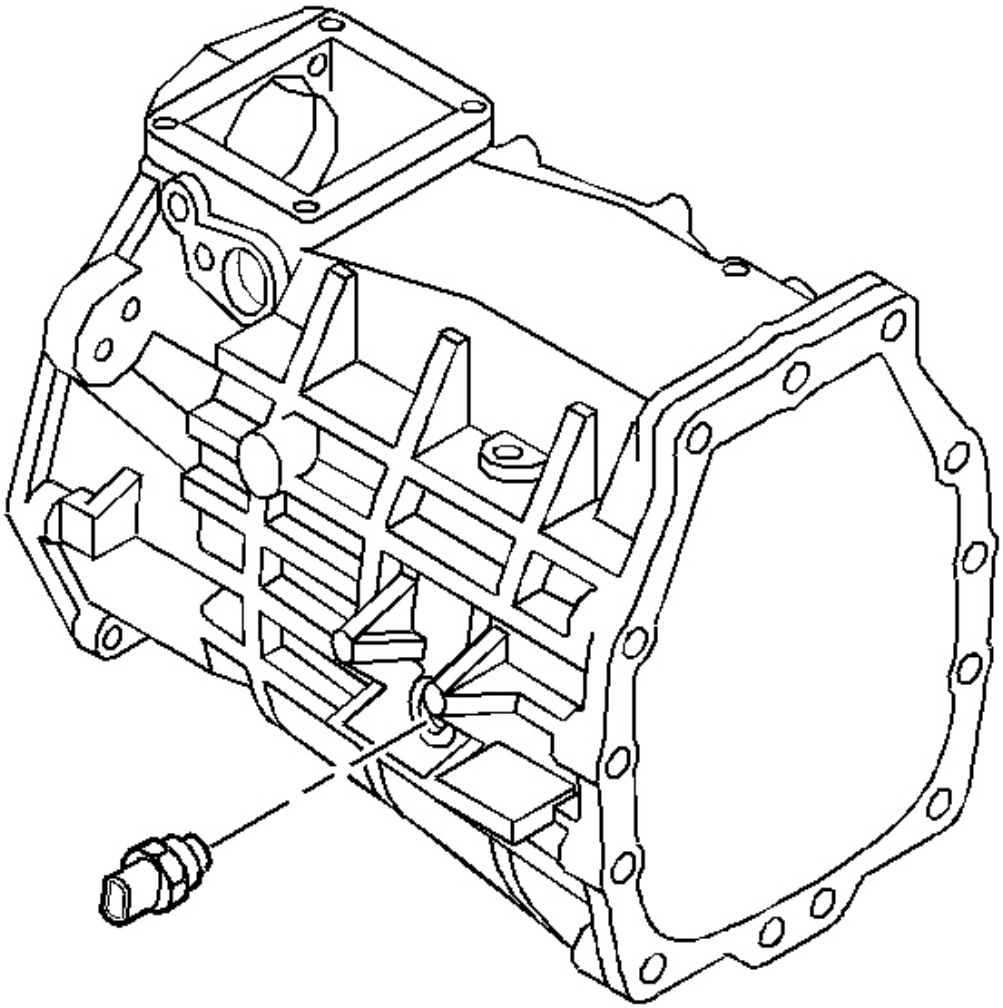

Fig. 257: Locating Reverse Lamp Switch
Courtesy of GENERAL MOTORS CORP.

NOTE: Refer to Fastener Notice in Cautions and Notices.

6. Install the reverse lamp switch.

   Tighten: Tighten the switch to 27 N.m (20 lb ft).

cardiagn.com

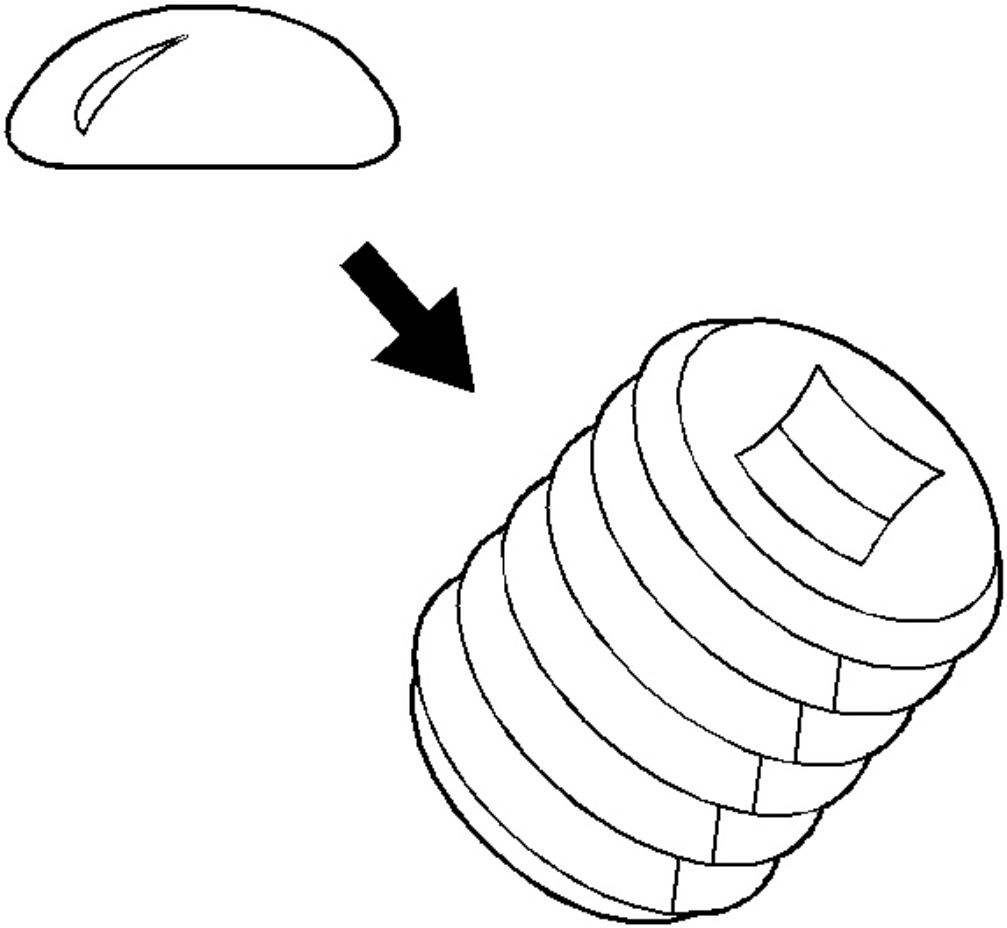

Fig. 258: Applying Sealant To Adapter Plate Plug Threads
Courtesy of GENERAL MOTORS CORP.

7. Apply sealant GM P/N 12346004 (Canadian P/N 10953480) or equivalent to the transmission case fill plug threads.

cardiagn.com

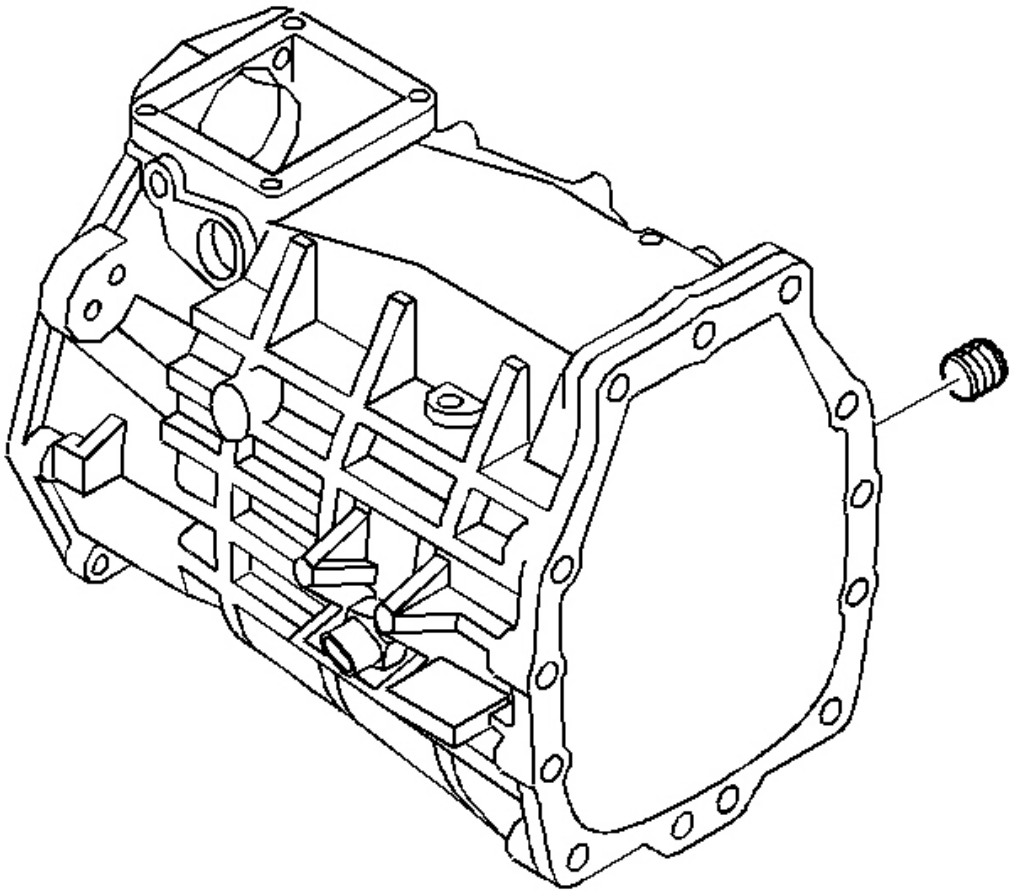

Fig. 259: View Of Transmission Case Fill Plug
Courtesy of GENERAL MOTORS CORP.

8. Install the transmission case fill plug.

   Tighten: Tighten the oil fill plug to 18 N.m (13 lb ft).

cardiagn.com

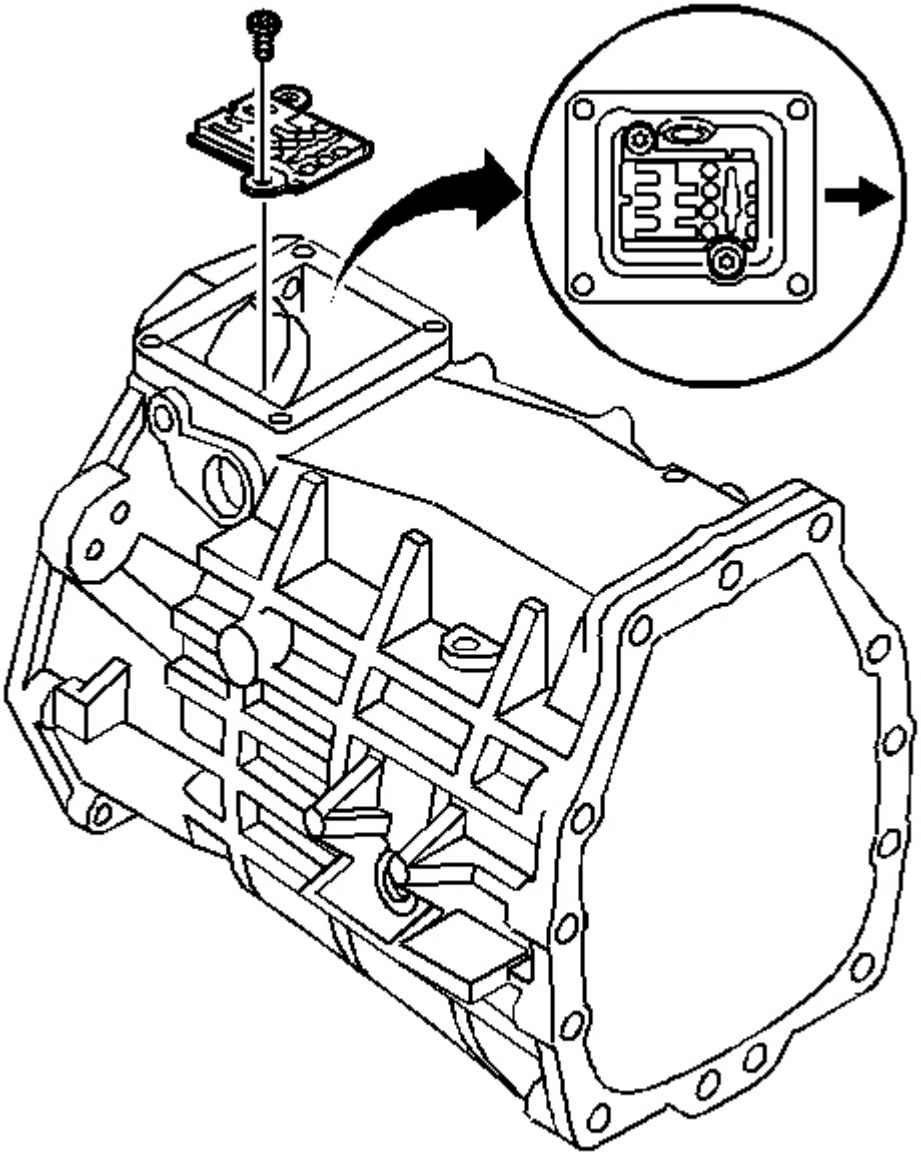

Fig. 260: Installing/Removing Guide Plate & Guide Plate Bolts
Courtesy of GENERAL MOTORS CORP.

NOTE: **The H-pattern on the guide plate must face the extension housing. If the guide plate is installed incorrectly, then damage will occur.**

cardiagn.com

9. Install the guide plate and the guide plate bolts.

   Tighten: Tighten the bolts to 22 N.m (16 Ib. ft).

Adapter Plate

Tools Required

- **J 39433** Input Shaft Seal Installer. See **Special Tools** .
- **J 39439-1** Bushing Remover/lnstaller. See **Special Tools** .

cardiagn.com

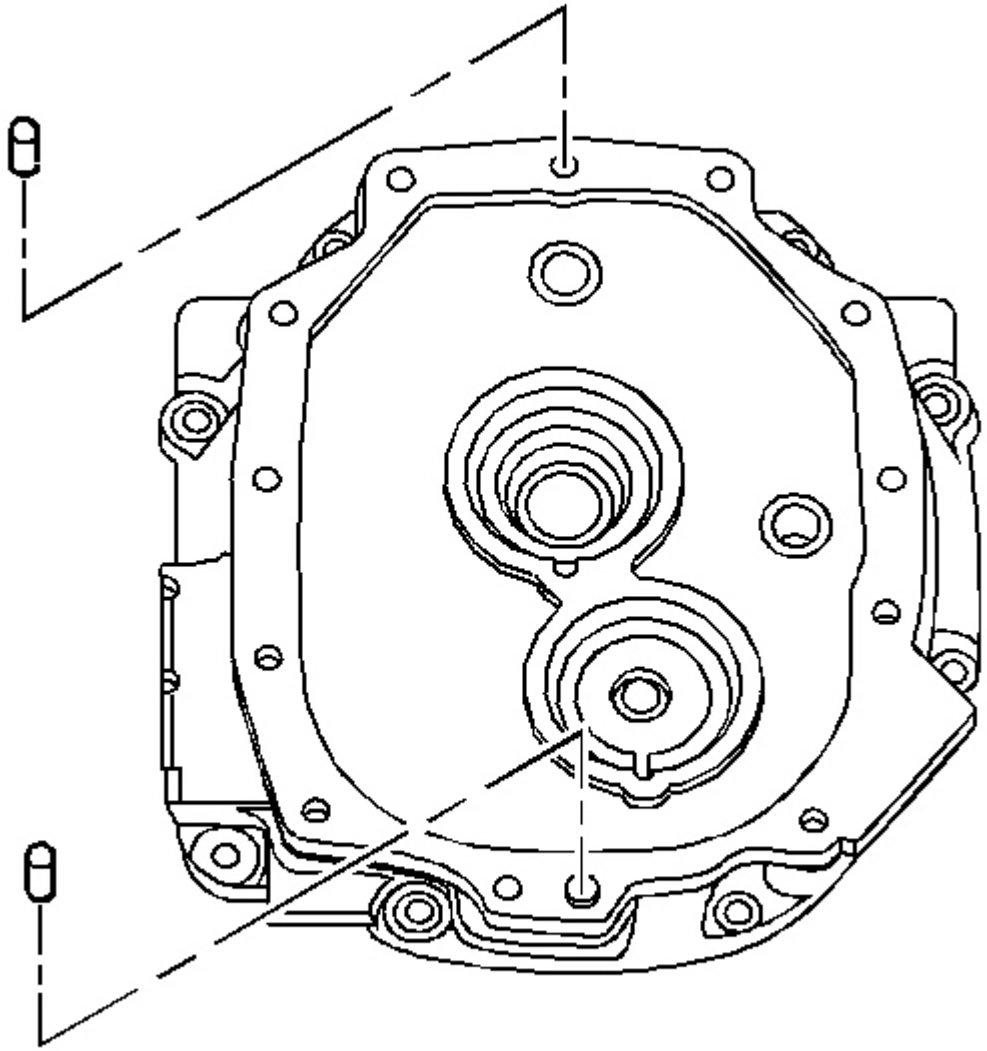

Fig. 261: Locating Extension Housing Dowel Pins
Courtesy of GENERAL MOTORS CORP.

1. Install the dowel pins.

cardiagn.com

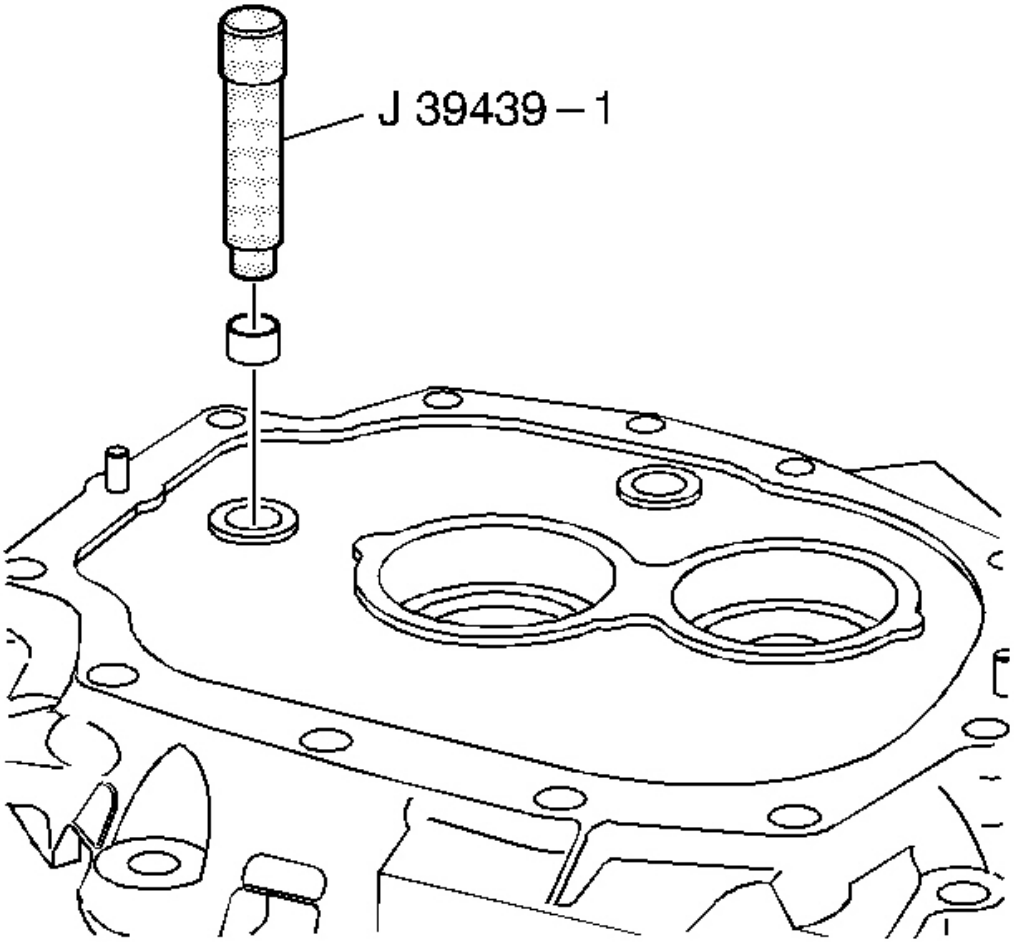

Fig. 262: Installing 1st/2nd, 3rd/4th Speed Shift Shaft Bushing
Courtesy of GENERAL MOTORS CORP.

2. Install the 1st/2nd, 3rd/4th speed shift shaft bushing, using the **J 39439-1** .

cardiagn.com

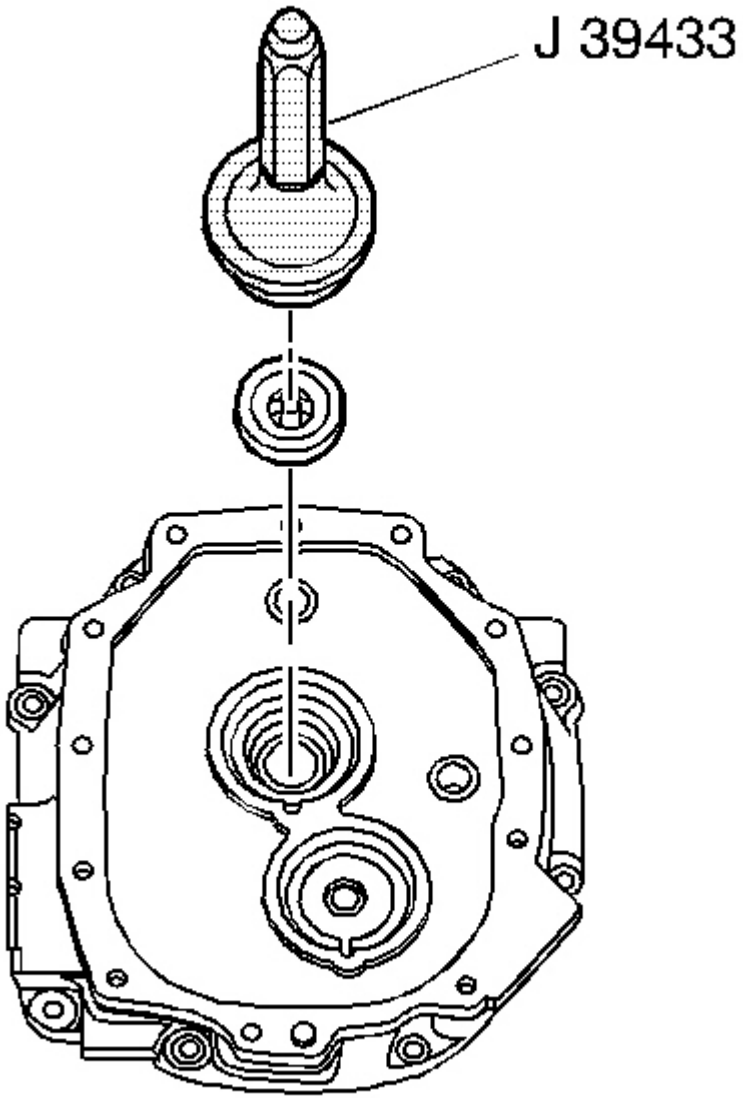

Fig. 263: Installing Input Shaft Seal Using J 39433
Courtesy of GENERAL MOTORS CORP.

3. Install the input shaft seal, using the **J 39433** .
4. Install the input shaft seal and the upper seal on the other side of the adapter plate, using the **J 39433** .

cardiagn.com

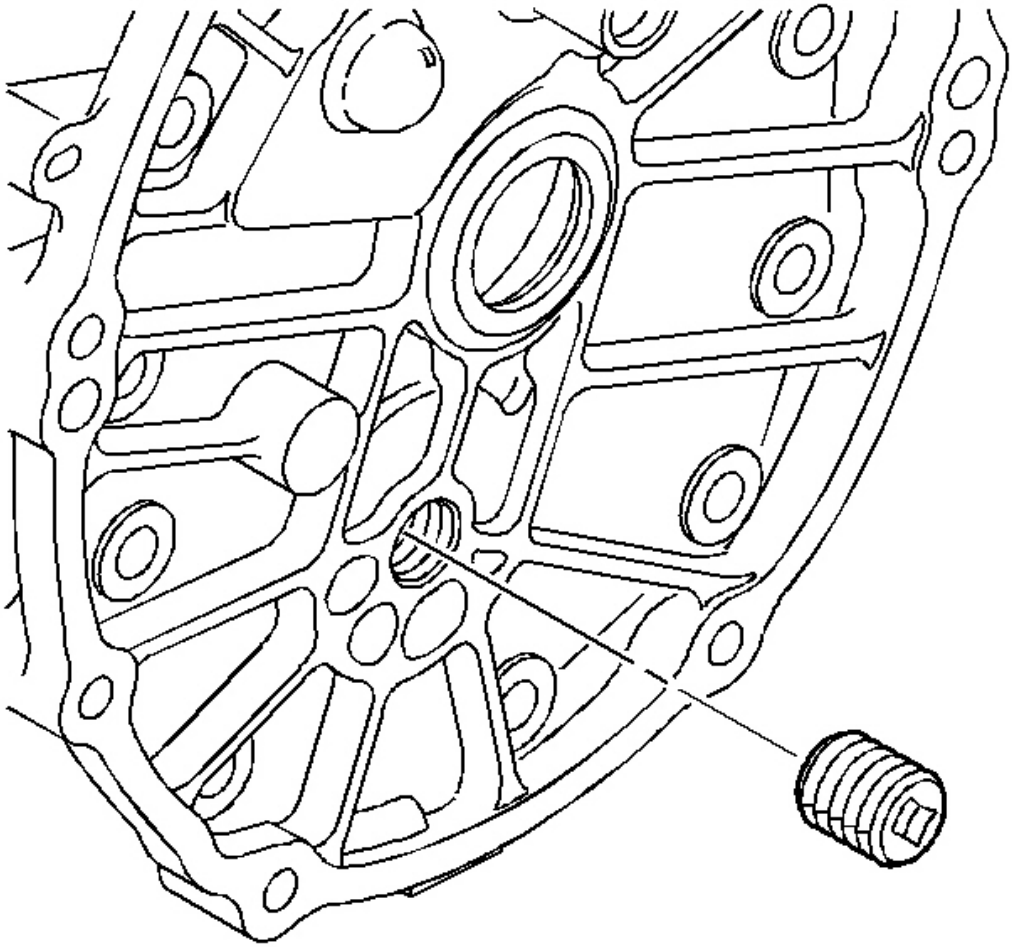

Fig. 264: Locating Adapter Plate Plug
Courtesy of GENERAL MOTORS CORP.

5. Install adapter plate plug.

cardiagn.com

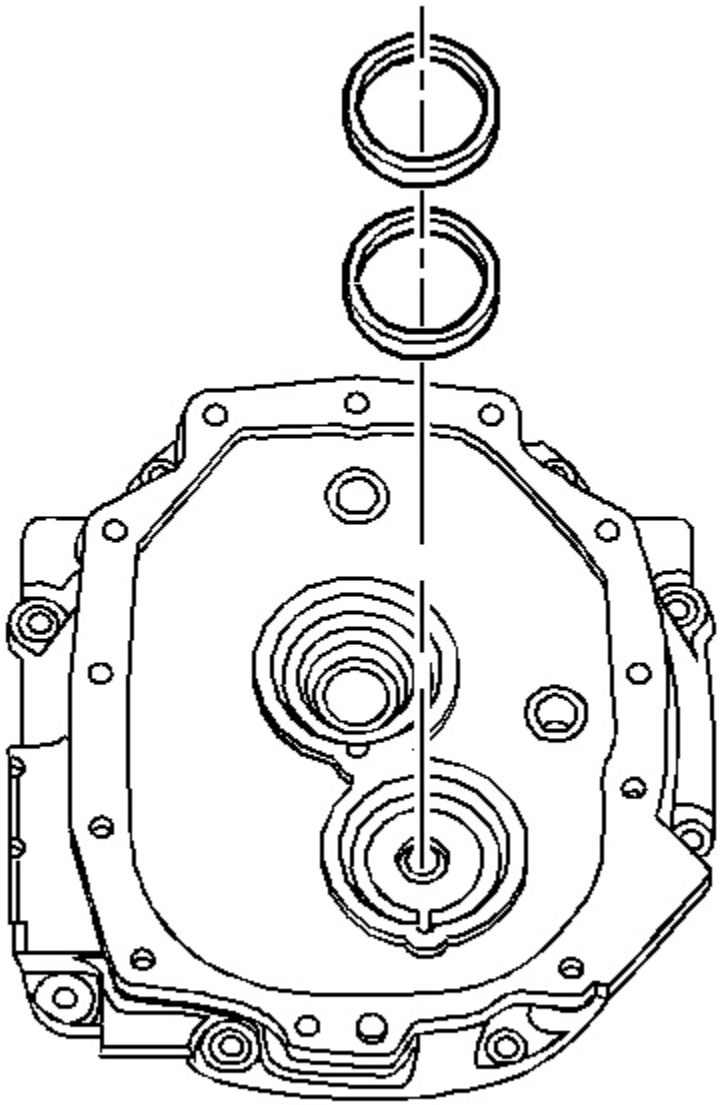

Fig. 265: View Of Countershaft Bearing Shim & Bearing Race
Courtesy of GENERAL MOTORS CORP.

6. Install countershaft bearing shim and bearing race.

cardiagn.com

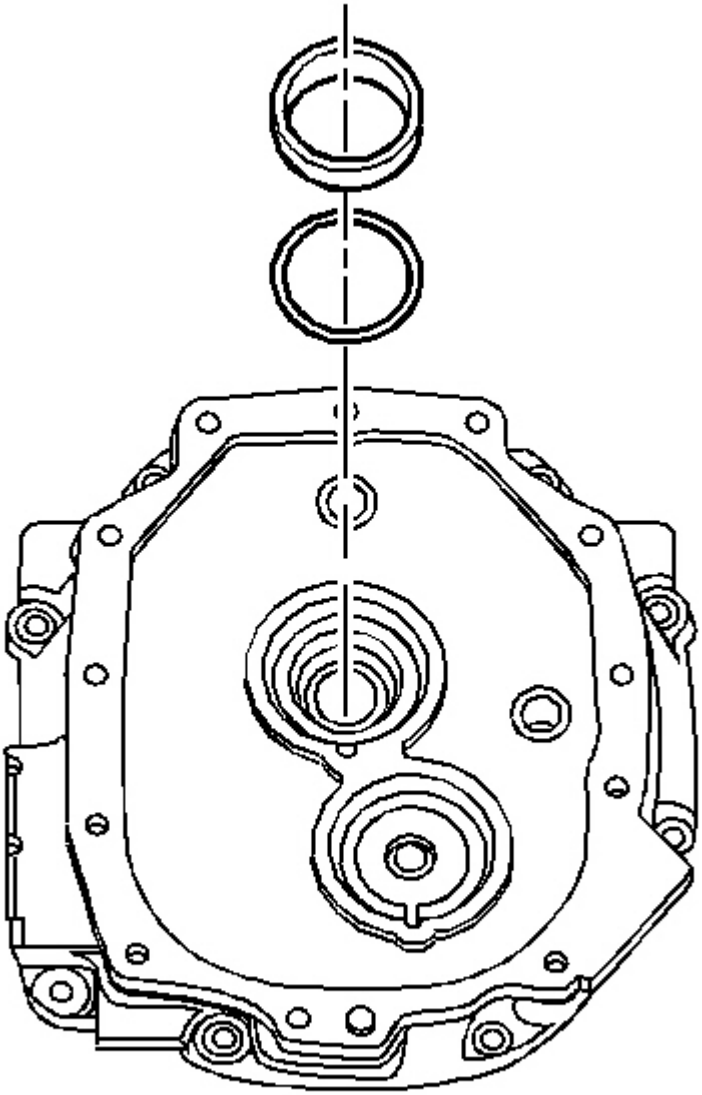

Fig. 266: Installing/Removing Input Shaft Bearing Shim And Bearing Race
Courtesy of GENERAL MOTORS CORP.

7. Install input shaft bearing shim and bearing race.

EXTENSION HOUSING DISASSEMBLE (Y CAR)

Tools Required

cardiagn.com

- **J 26941** Bearing Race Remover. See **Special Tools** .
- **J 23907** Slide Hammer. See **Special Tools** .

1. Remove the reverse idler shaft bracket bolts.

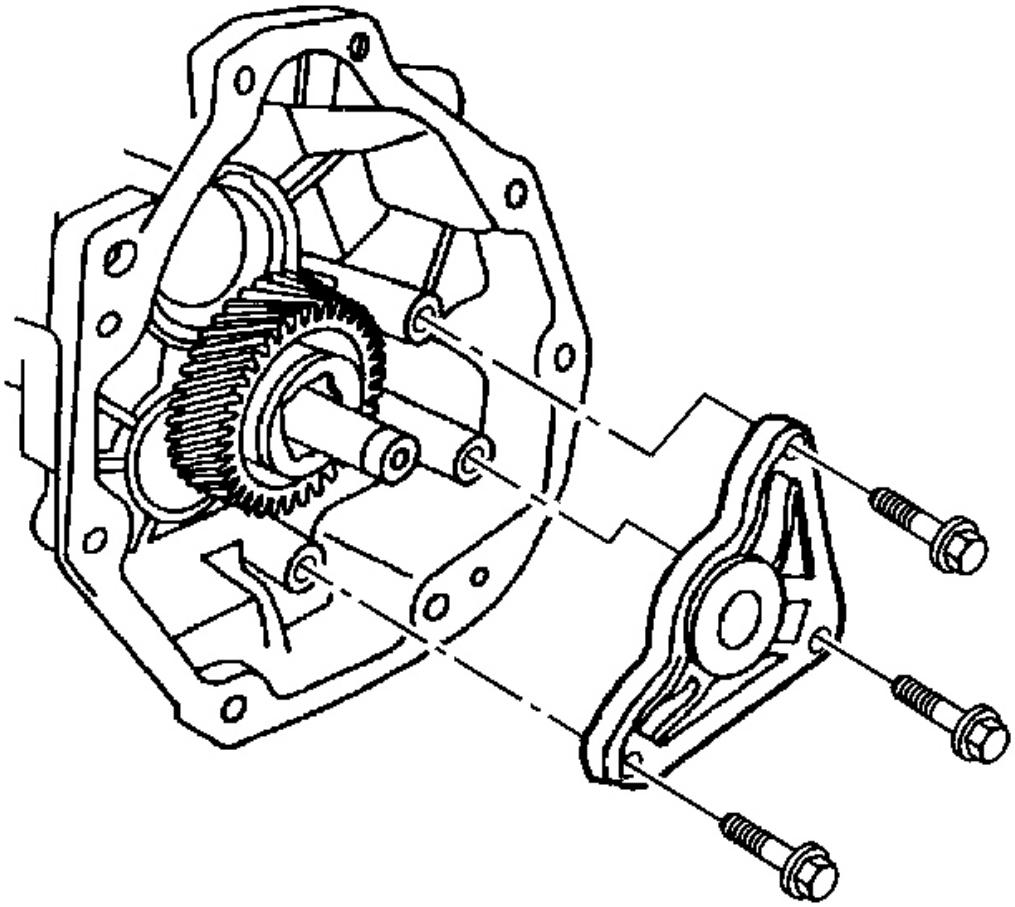

Fig. 267: View Of Reverse Idler Shaft Bracket & Mounting Bolts
Courtesy of GENERAL MOTORS CORP.

2. Remove the bracket.

cardiagn.com

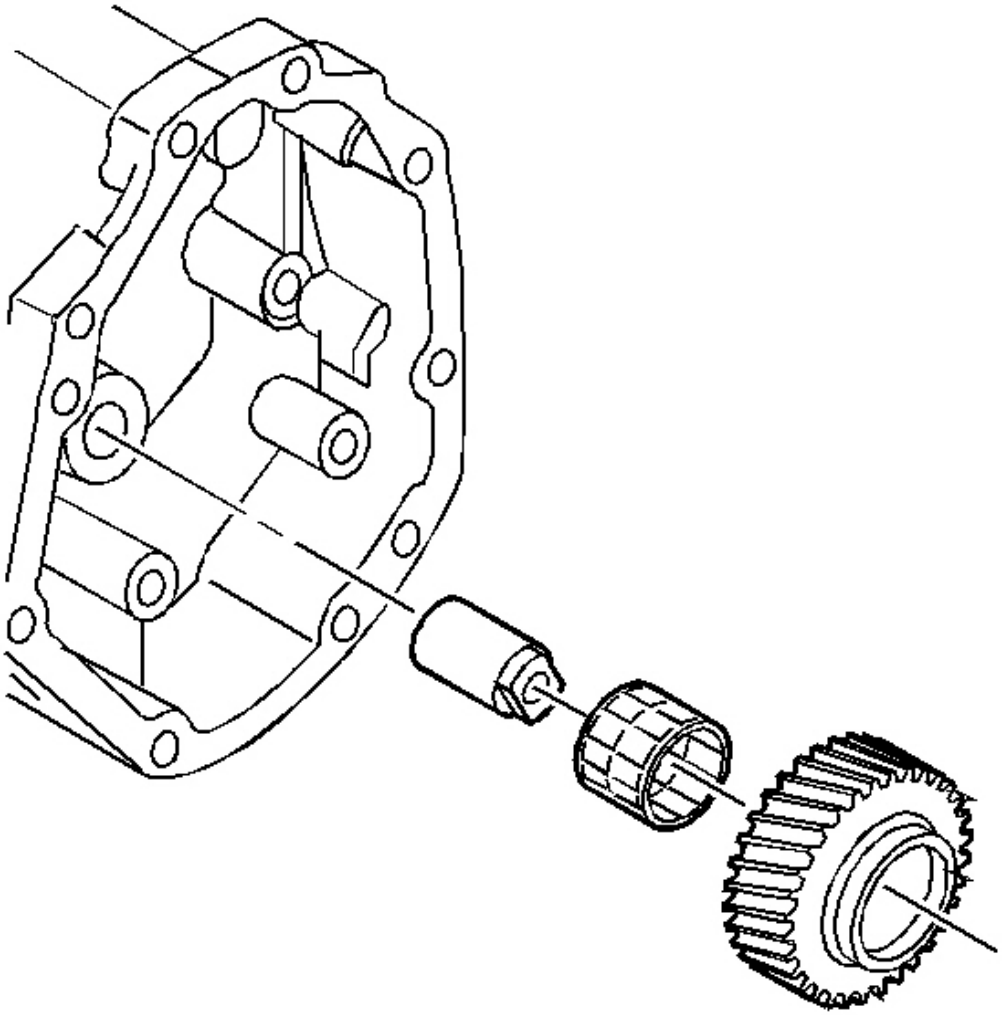

Fig. 268: Identifying Reverse Idler Shaft, Roller Bearing & Reverse Idler Gear
Courtesy of GENERAL MOTORS CORP.

3. Remove the following parts in order:
    1. The reverse idler gear
    2. The roller bearing
    3. The reverse idler shaft

cardiagn.com

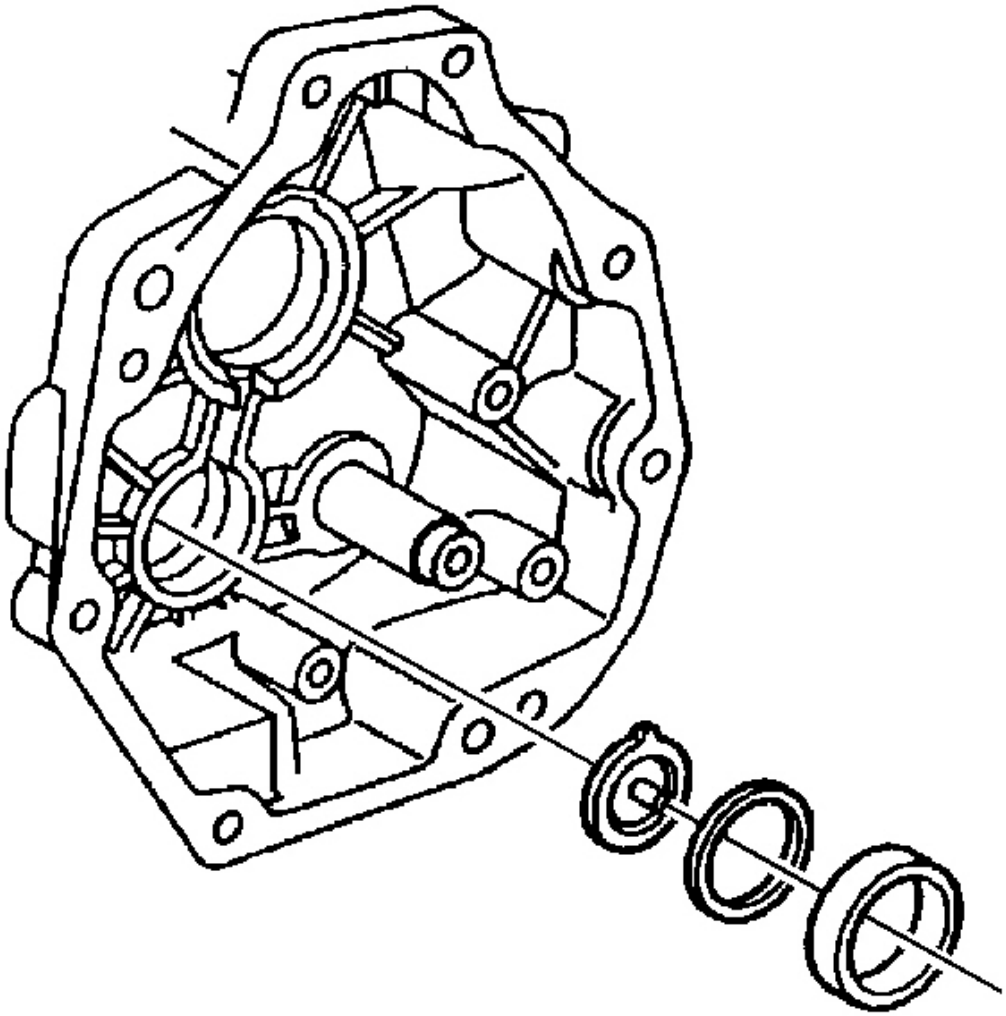

Fig. 269: View Of Countershaft Extension Bearing Race, Funnel & Shim
Courtesy of GENERAL MOTORS CORP.

4. Remove the following parts in order:
    1. The countershaft extension bearing race
    2. The shim
    3. The funnel
    4. Remove the outer and inner output shaft seals (pry out the seals with a suitable tool).

cardiagn.com

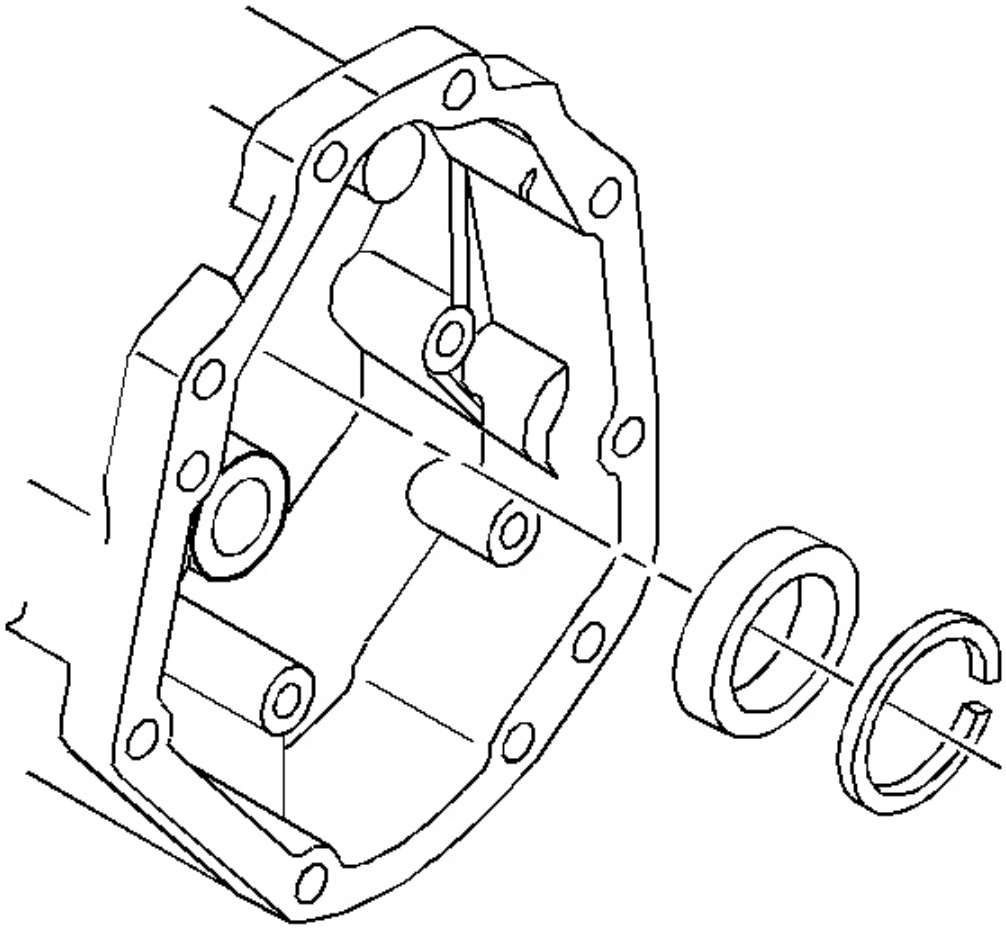

Fig. 270: Locating Mainshaft Bearing Race Retainer Ring & Race
Courtesy of GENERAL MOTORS CORP.

5. Remove the mainshaft bearing race retainer ring.

IMPORTANT: Do not replace the bearing race unless inspection shows bearing race damage.

6. Remove the mainshaft bearing race using the **J 26941** and the **J 23907** .

EXTENSION HOUSING DISASSEMBLE (CTSV)

Tools Required

cardiagn.com

- **J 26941** Bearing Race Remover. See **Special Tools** .
- **J 23907** Slide Hammer. See **Special Tools** .

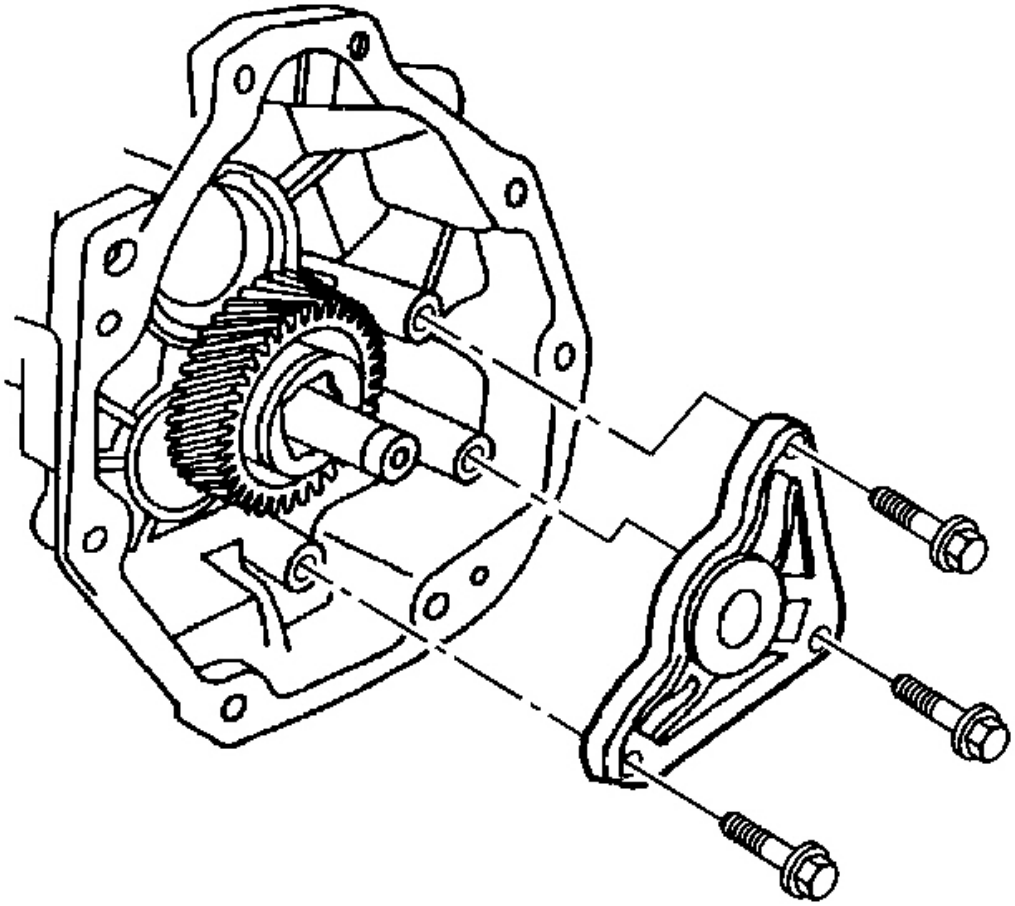

Fig. 271: View Of Reverse Idler Shaft Bracket & Mounting Bolts
Courtesy of GENERAL MOTORS CORP.

1. Remove the reverse idler shaft bracket bolts.

cardiagn.com

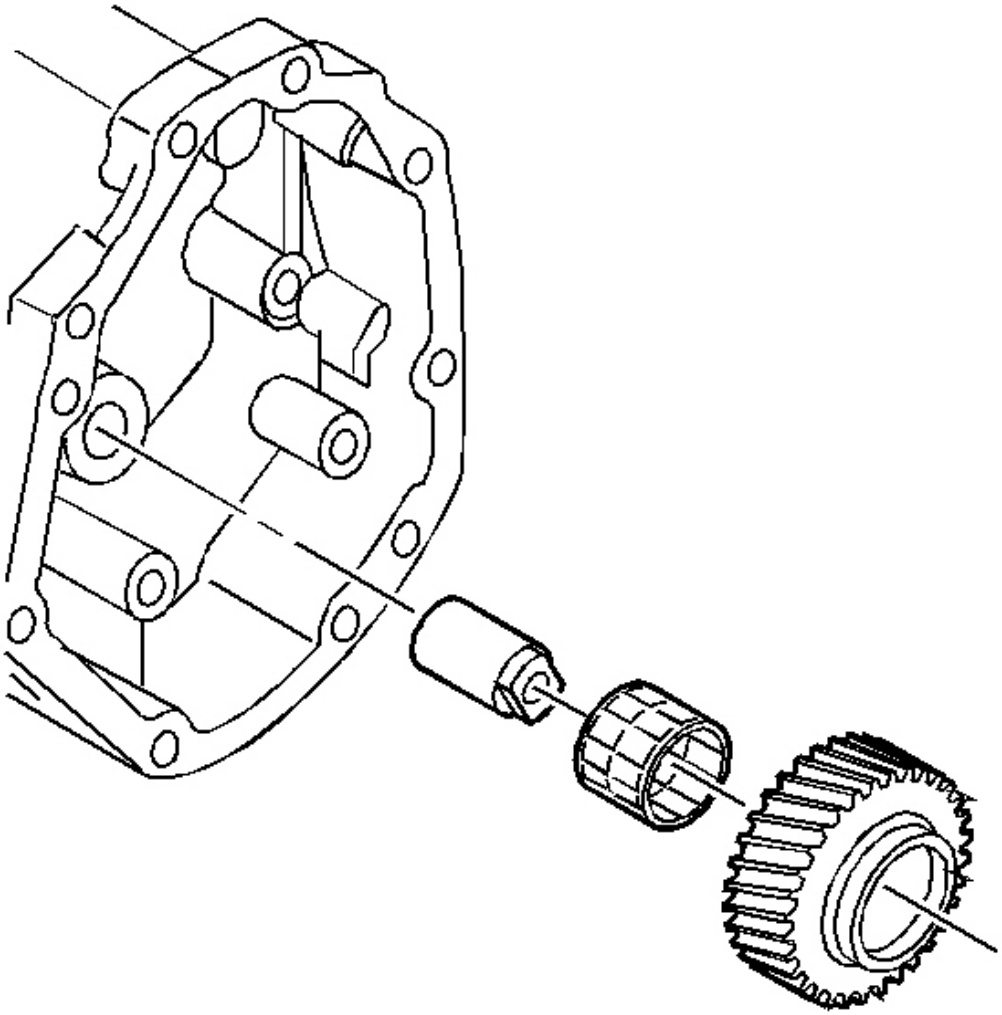

Fig. 272: Identifying Reverse Idler Shaft, Roller Bearing & Reverse Idler Gear
Courtesy of GENERAL MOTORS CORP.

2. Remove the reverse idler gear, the roller bearing, and the reverse idler shaft.

cardiagn.com

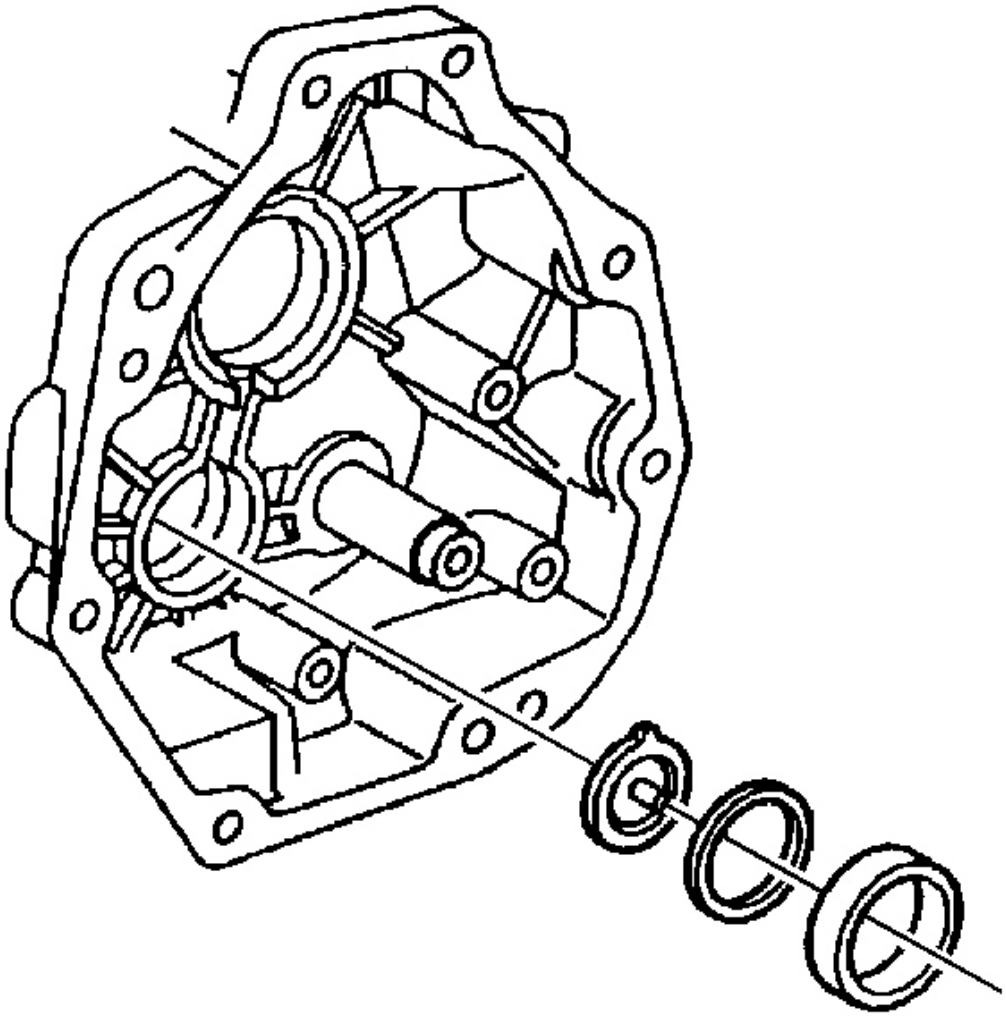

Fig. 273: View Of Countershaft Extension Bearing Race, Funnel & Shim
Courtesy of GENERAL MOTORS CORP.

3. Remove the countershaft extension bearing race, the shim, and the funnel.

cardiagn.com

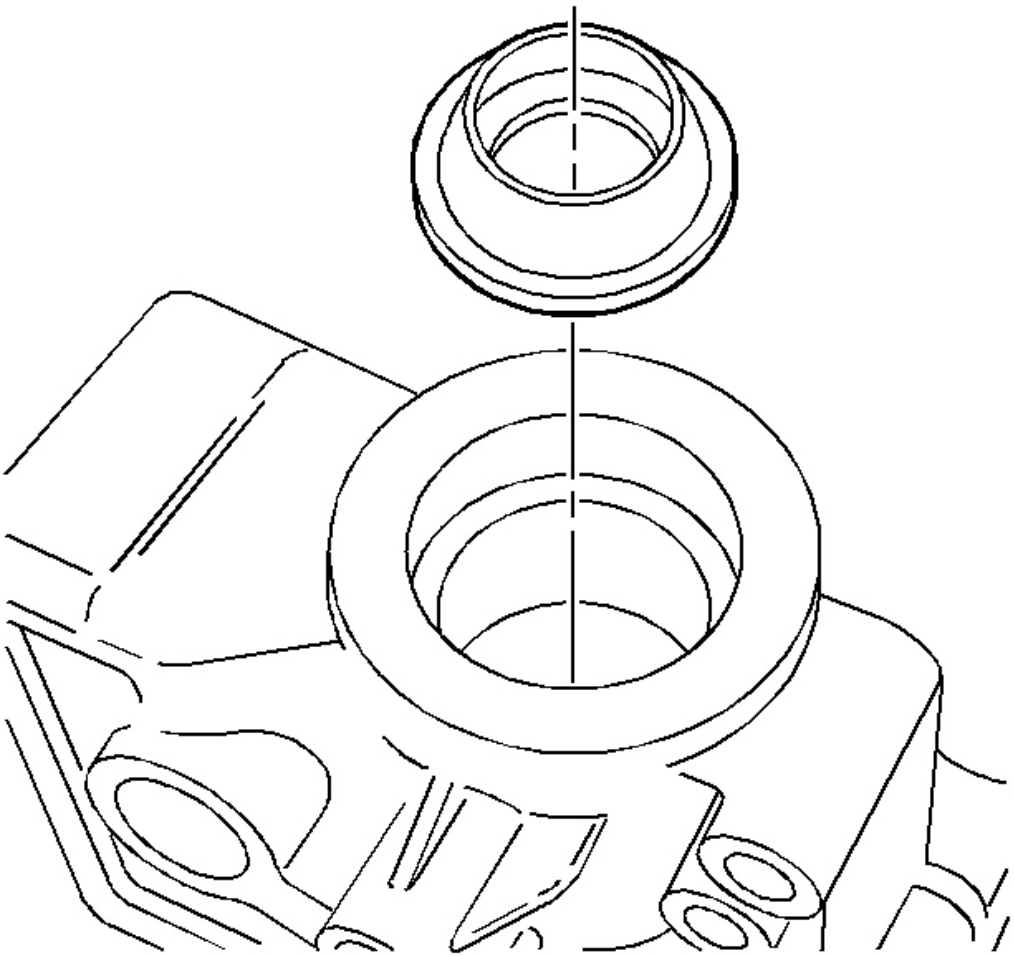

Fig. 274: View Of Output Shaft Seal
Courtesy of GENERAL MOTORS CORP.

4. Remove the output shaft seal.

   Pry out the seal with a suitable tool.

cardiagn.com

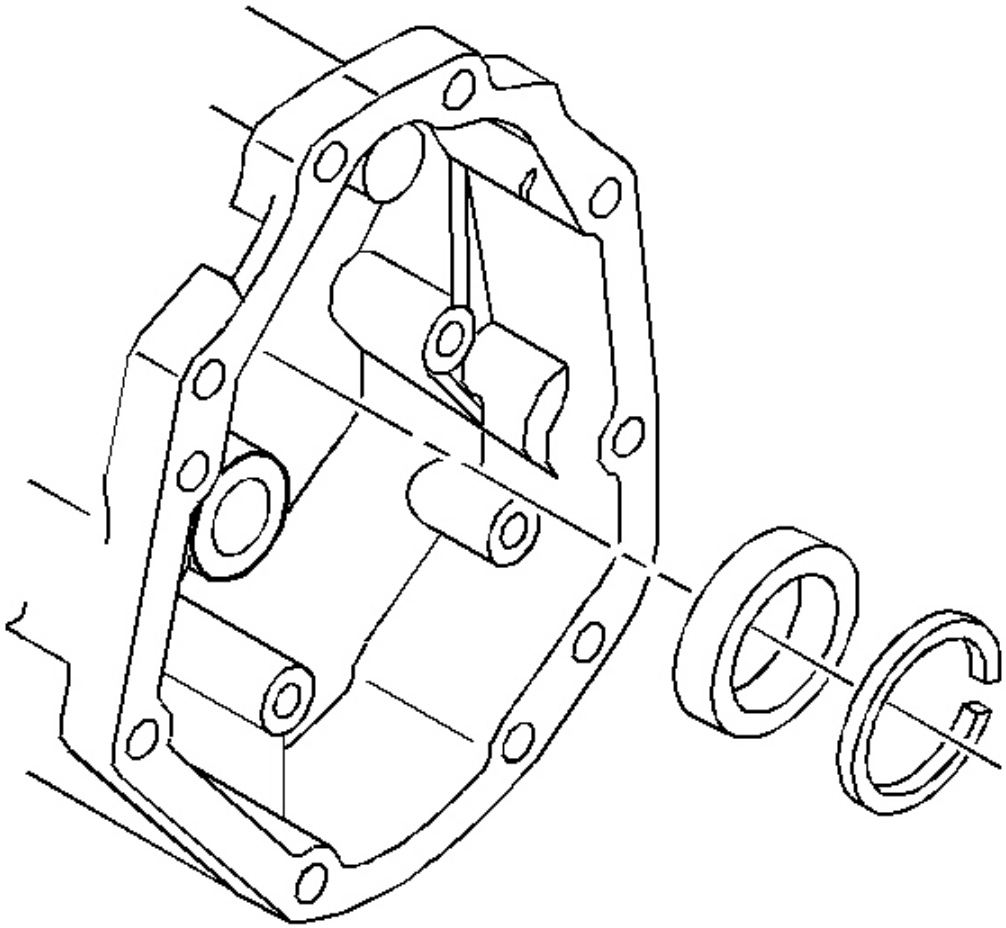

Fig. 275: Locating Mainshaft Bearing Race Retainer Ring & Race
Courtesy of GENERAL MOTORS CORP.

5. Remove the mainshaft bearing race retainer ring.

IMPORTANT: Do not replace the bearing race unless inspection shows bearing race damage.

6. Remove the mainshaft bearing race using **J 26941** and **J 23907** .

EXTENSION HOUSING CLEANING AND INSPECTION

cardiagn.com

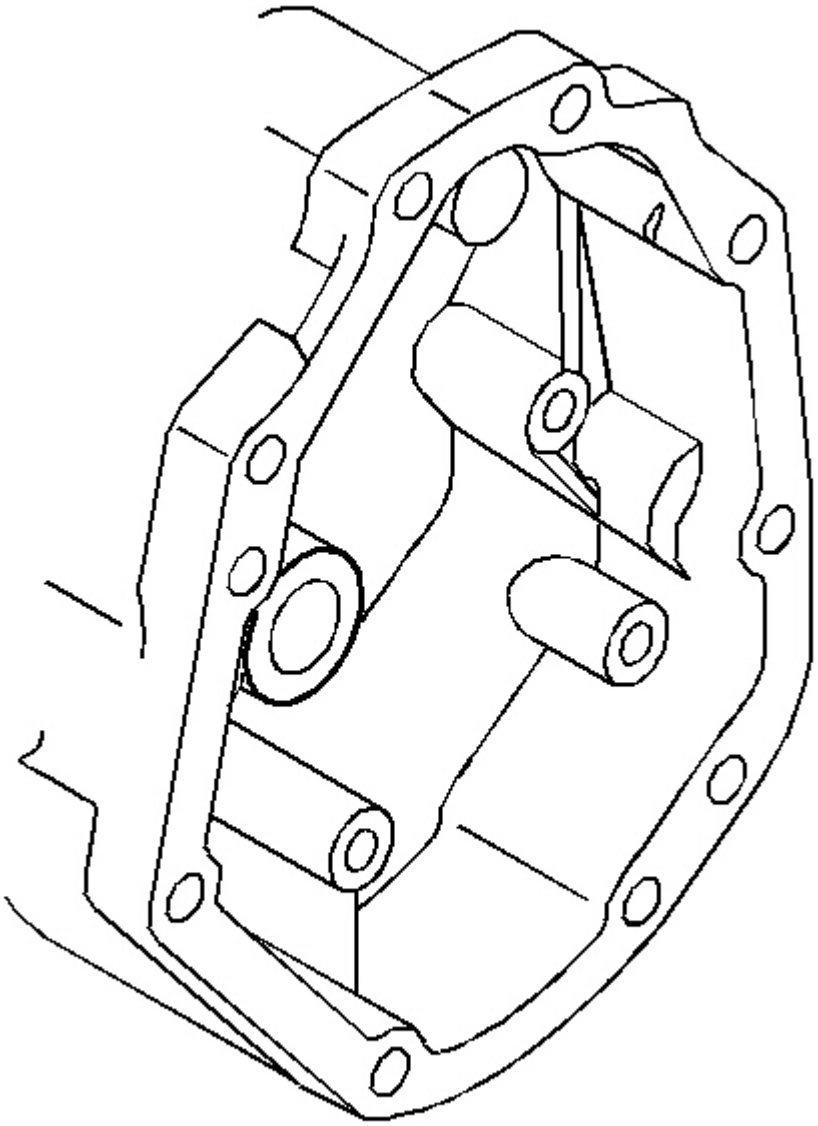

Fig. 276: View Of Rear Extension Housing
Courtesy of GENERAL MOTORS CORP.

1. Clean the rear extension housing in a suitable solvent. Air dry the housing.
2. Inspect the extension housing for the following:
    - Cracks
    - Scratches

cardiagn.com

    - Damaged threads
    - Burrs
    - Nicked mounting surfaces
    - Damaged sealing surfaces
    - Damaged front or rear bearing bores
3. Replace a cracked housing.
4. Clean up damaged threads with the correct size thread tap.
5. Inspect the machined mating surfaces for flatness (Check the mating surfaces with a straight edge).
6. Use a fine mill file to dress minor scratches or burrs.

EXTENSION HOUSING ASSEMBLE (Y CAR)

Tools Required

- **J 8092** Drive Handle. See **Special Tools** .
- **J 26508-A** Transmission Rear Seal Installer. See **Special Tools** .
- **J 39546** Bearing Race Installer. See **Special Tools** .
- **J 42198** Transmission Rear Seal Installer. See **Special Tools** .

cardiagn.com

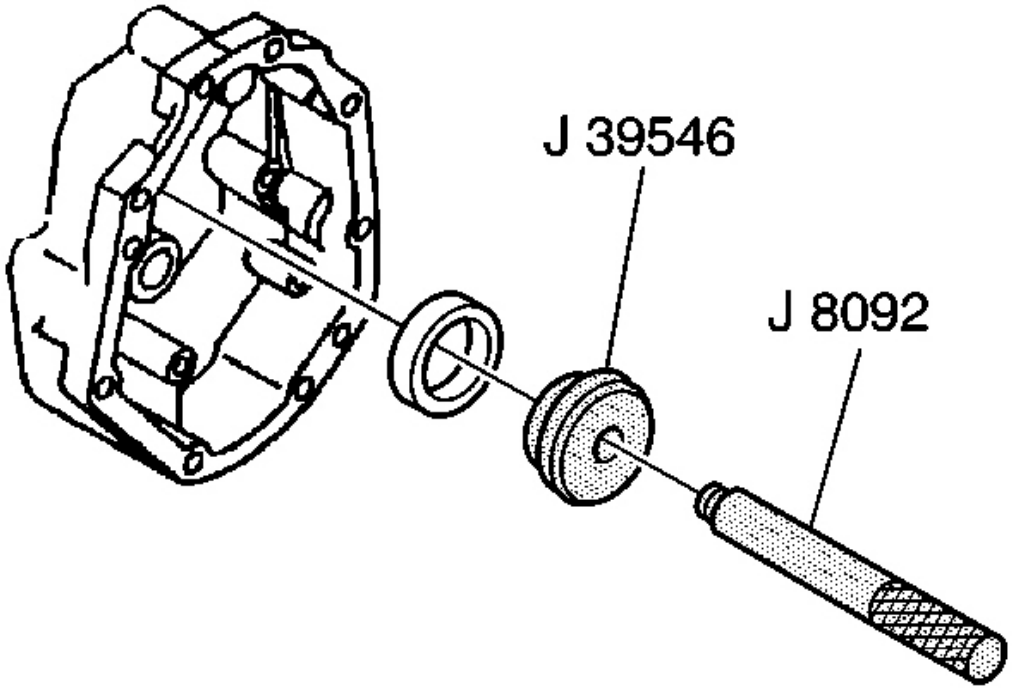

Fig. 277: Installing Mainshaft Bearing Race
Courtesy of GENERAL MOTORS CORP.

1. Install the mainshaft bearing race. Use the **J 39546** and the **J 8092** .

cardiagn.com

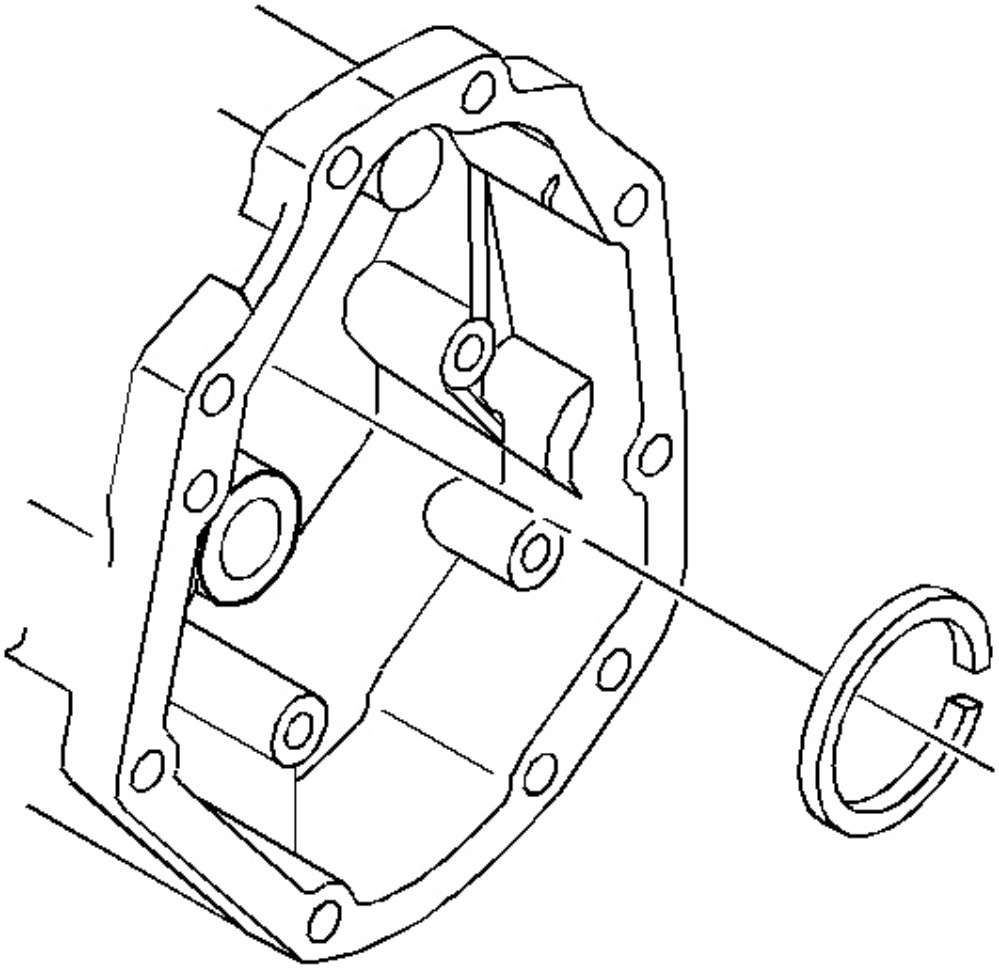

Fig. 278: Locating Mainshaft Bearing Race Retainer Ring
Courtesy of GENERAL MOTORS CORP.

2. Install the mainshaft bearing race retainer ring.

NOTE: **Failure to install the inner output shaft seal correctly will cause a leak.**

3. Install the inner output shaft seal with garter spring facing inward, using **J 26508-A** .

NOTE: **Failure to install the outer output shaft seal correctly will cause a leak.**

cardiagn.com

4. Install the outer output shaft seal with garter spring facing outward, using **J 42198** .

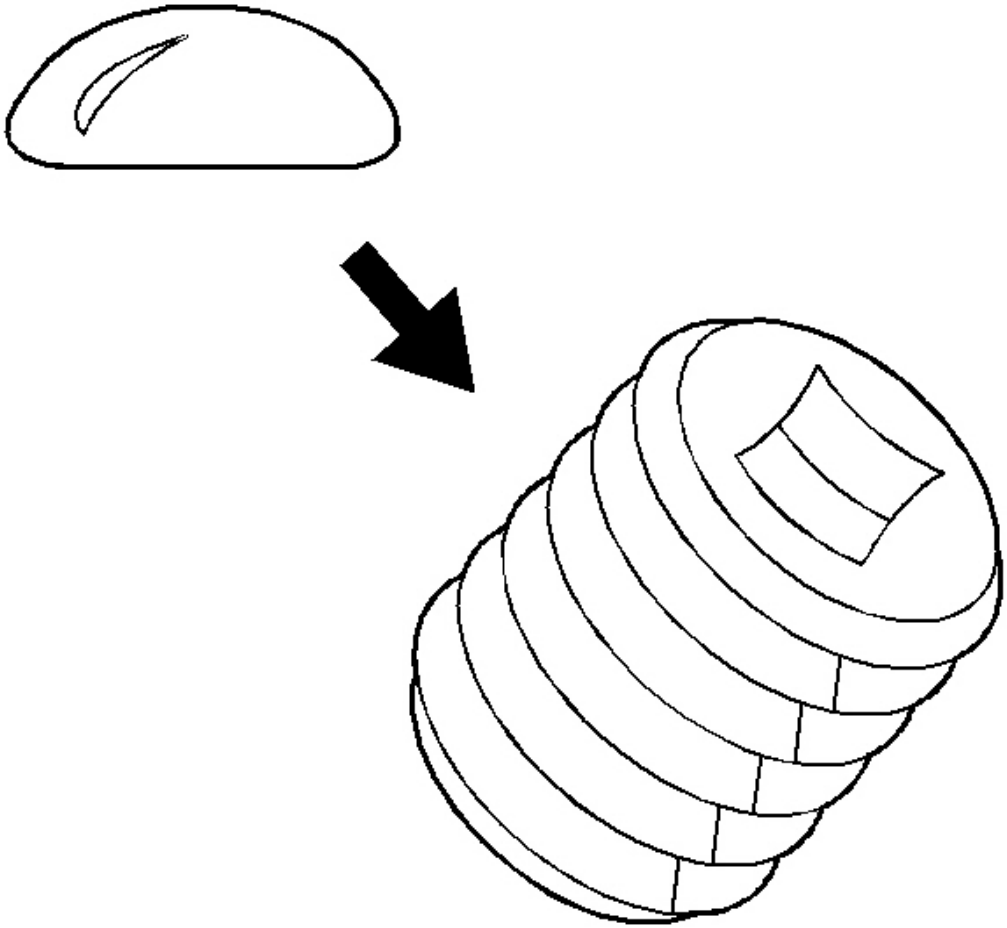

Fig. 279: Applying Sealant To Adapter Plate Plug Threads
Courtesy of GENERAL MOTORS CORP.

5. Apply thread sealer GM P/N 12346004 (Canadian P/N 10953480) to the transmission case drain plug.

NOTE: **Refer to Fastener Notice in Cautions and Notices.**

cardiagn.com

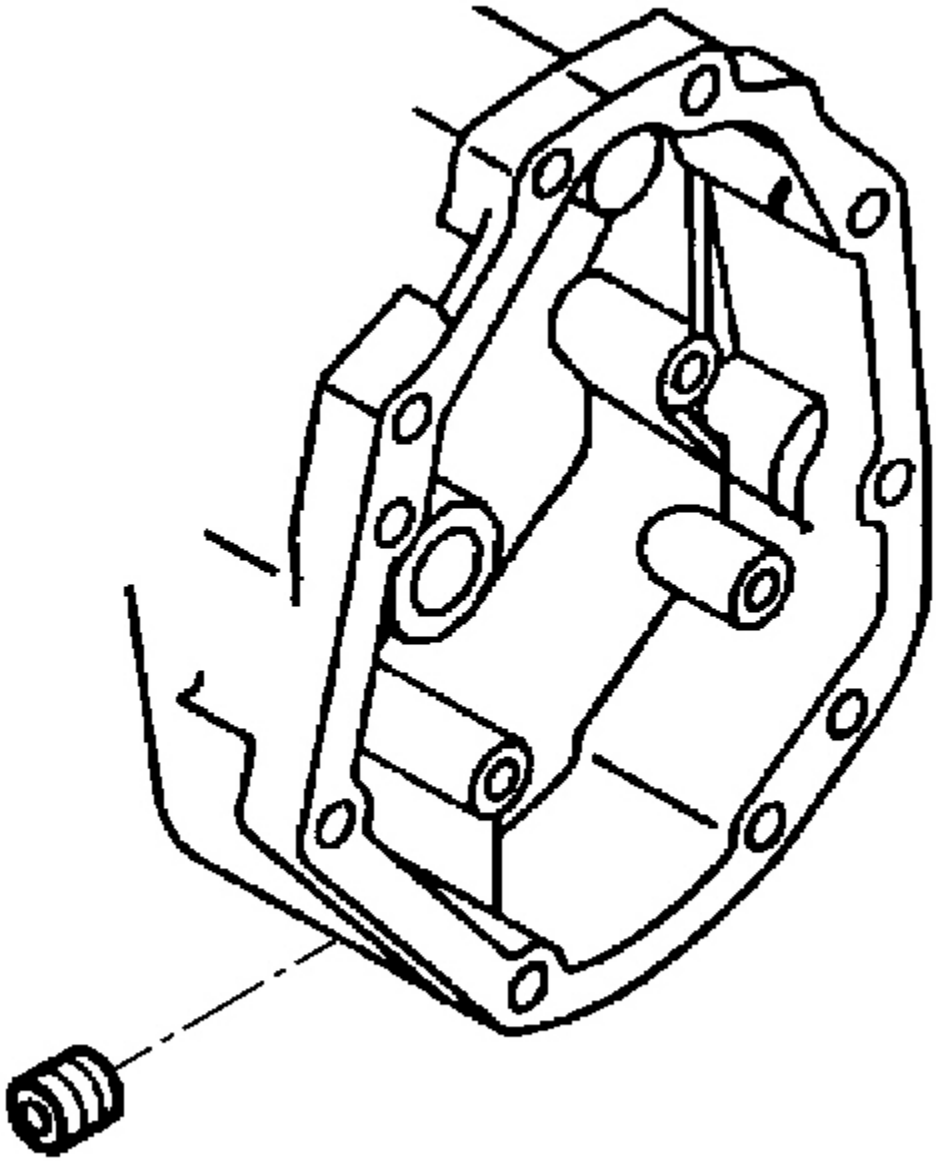

Fig. 280: Identifying Transmission Case Drain Plug
Courtesy of GENERAL MOTORS CORP.

6. Install the transmission case drain plug.

   Tighten: Tighten the plug to 18 N.m (13 Ib. ft).

cardiagn.com

EXTENSION HOUSING ASSEMBLE (CTSV)

Tools Required

- **J 8092** Drive Handle. See **Special Tools** .
- **J 26508-A** Transmission Rear Seal Installer. See **Special Tools** .
- **J 21426** Outer Output Shaft Seal Installer. See **Special Tools** .
- **J 39546** Bearing Race Installer. See **Special Tools** .
- **J 39437** Bushing Installer. See **Special Tools** .

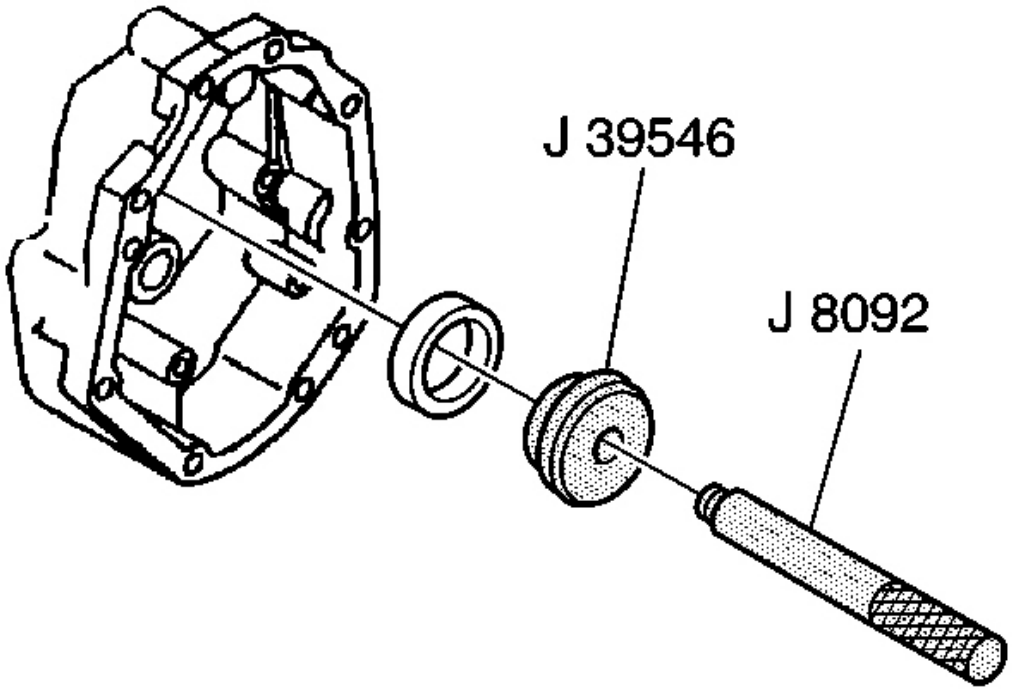

Fig. 281: Installing Mainshaft Bearing Race
Courtesy of GENERAL MOTORS CORP.

1. Install the mainshaft bearing race, using the **J 39546** and the **J 8092** .

cardiagn.com

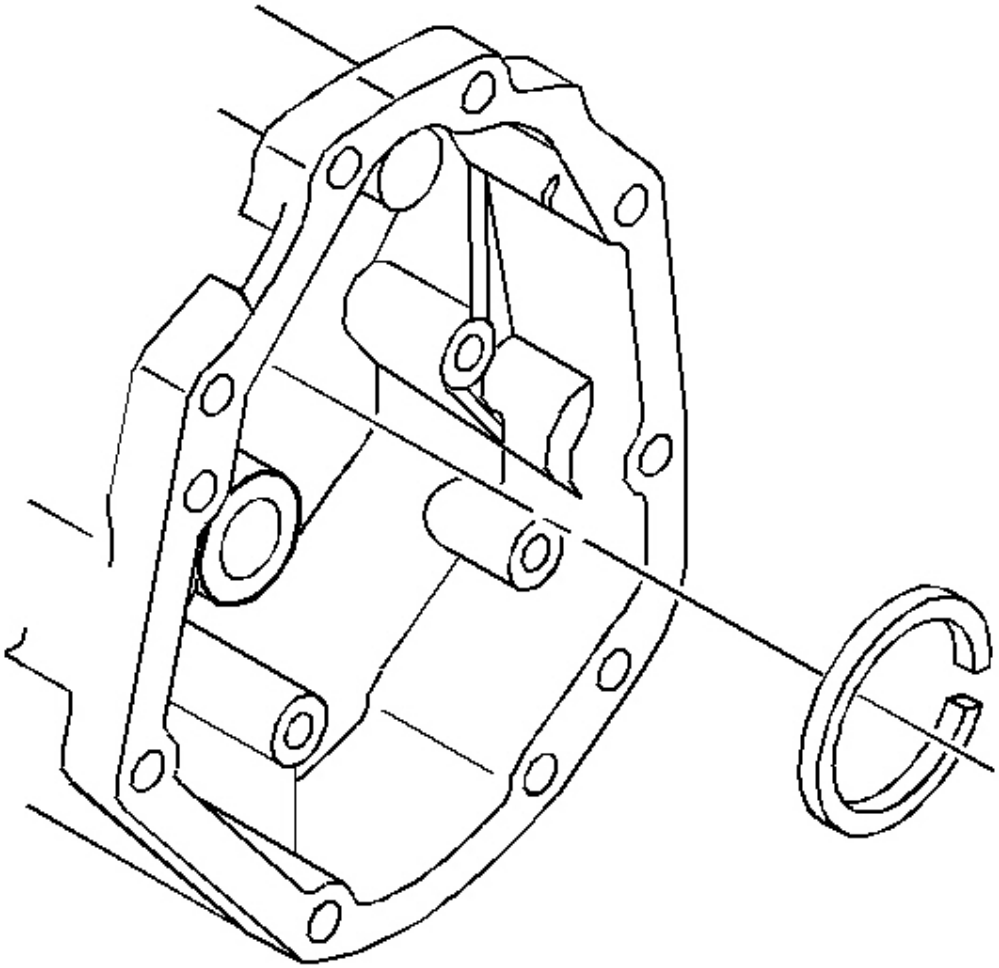

Fig. 282: Locating Mainshaft Bearing Race Retainer Ring
Courtesy of GENERAL MOTORS CORP.

2. Install the mainshaft bearing race retainer ring.

cardiagn.com

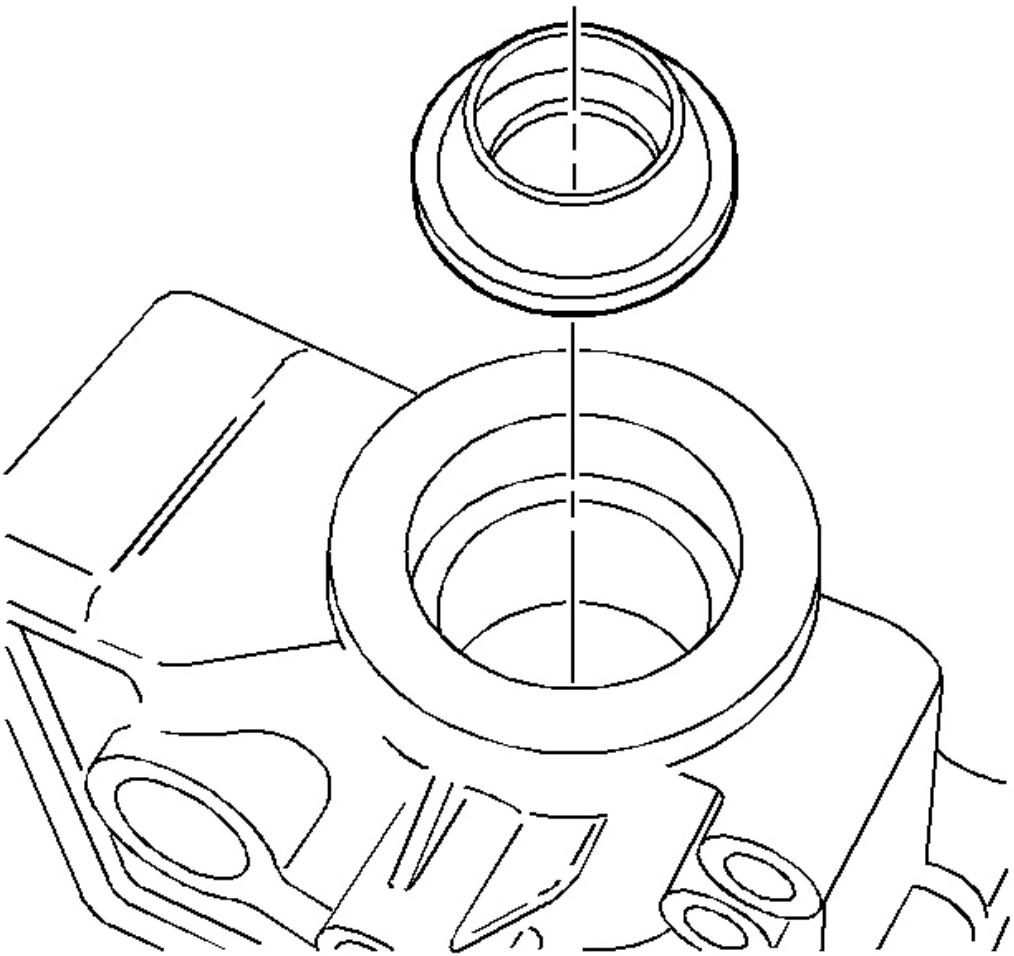

Fig. 283: Installing Output Shaft Seal
Courtesy of GENERAL MOTORS CORP.

3. Install the output shaft seal using the **J 21426** .

cardiagn.com

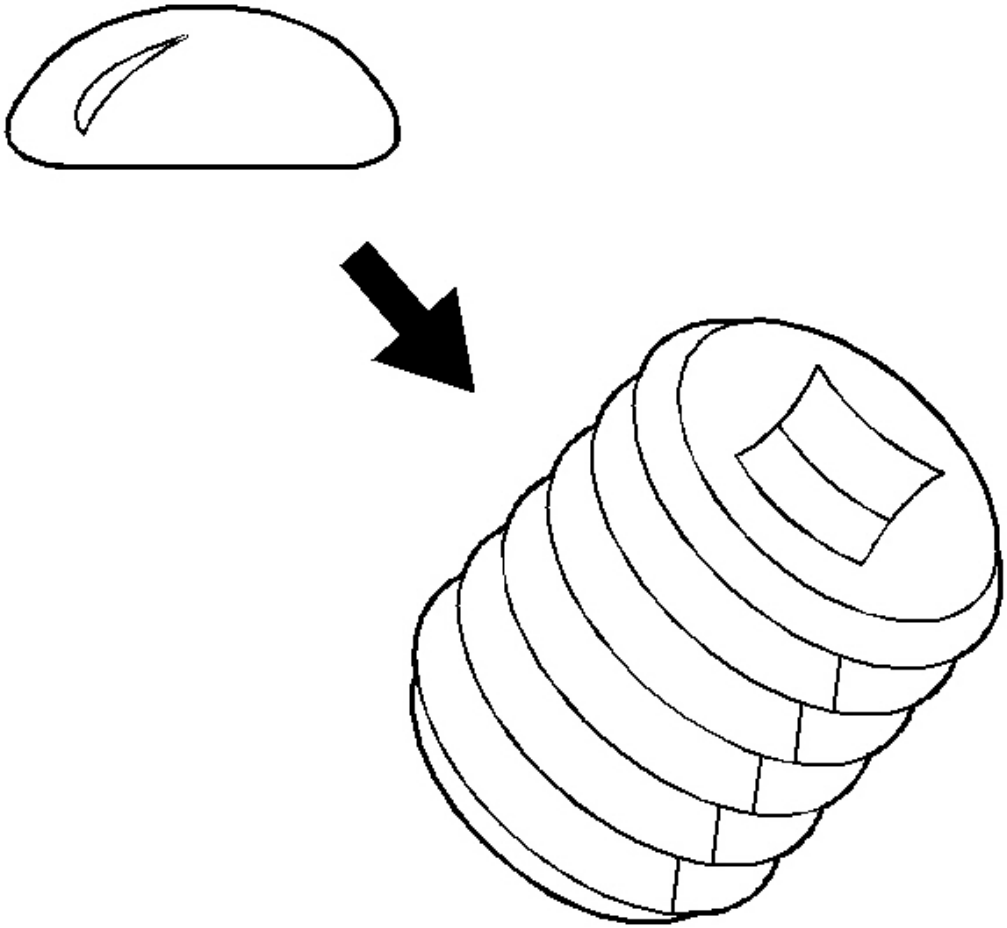

Fig. 284: Applying Sealant To Adapter Plate Plug Threads
Courtesy of GENERAL MOTORS CORP.

4. Apply sealer GM P/N 12346004 (Canadian P/N 10953480) or equivalent to the transmission case drain plug.

cardiagn.com

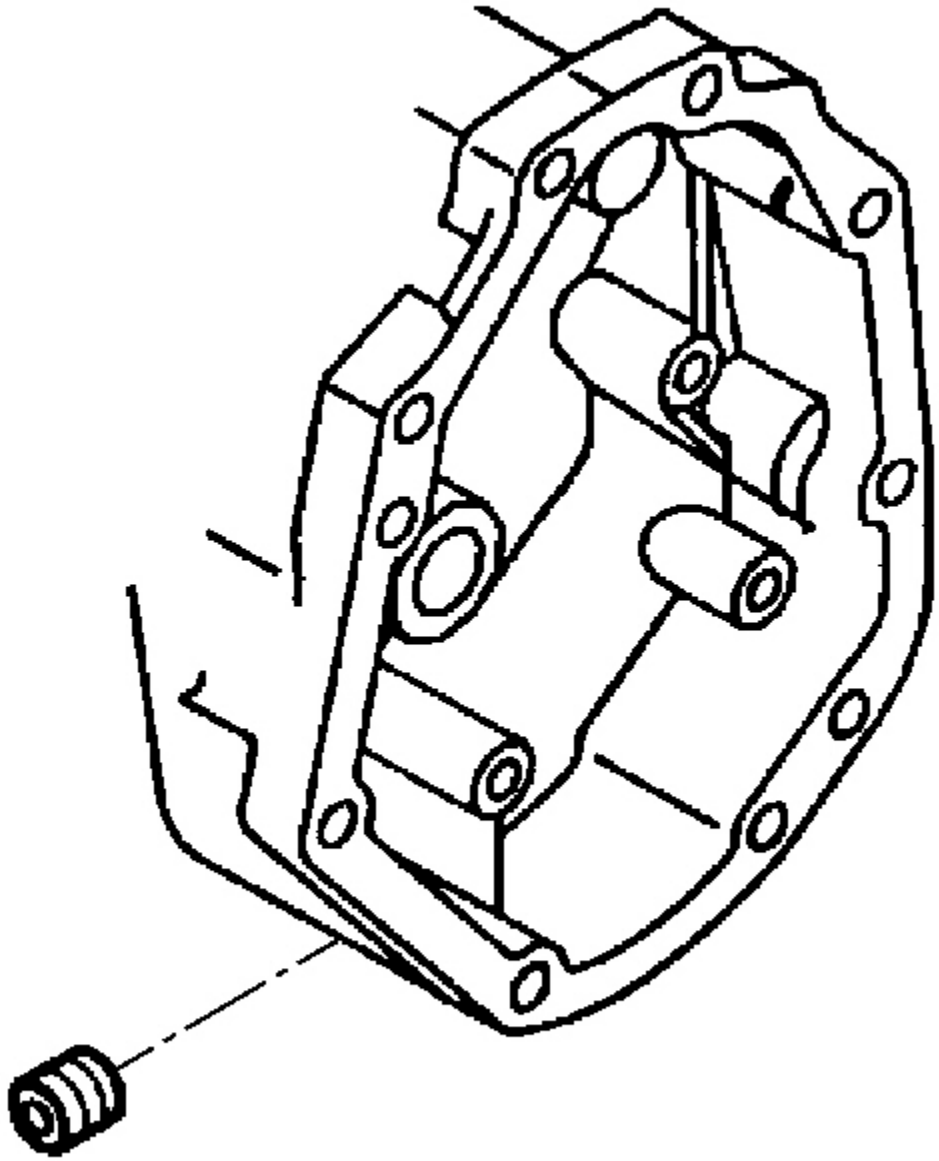

Fig. 285: Identifying Transmission Case Drain Plug
Courtesy of GENERAL MOTORS CORP.

NOTE: Refer to Fastener Notice in Cautions and Notices.

5. Install the transmission case drain plug.

cardiagn.com

Tighten: Tighten the plug to 18 N.m (13 Ib. ft).

BEARINGS AND SPACERS CLEANING AND INSPECTION

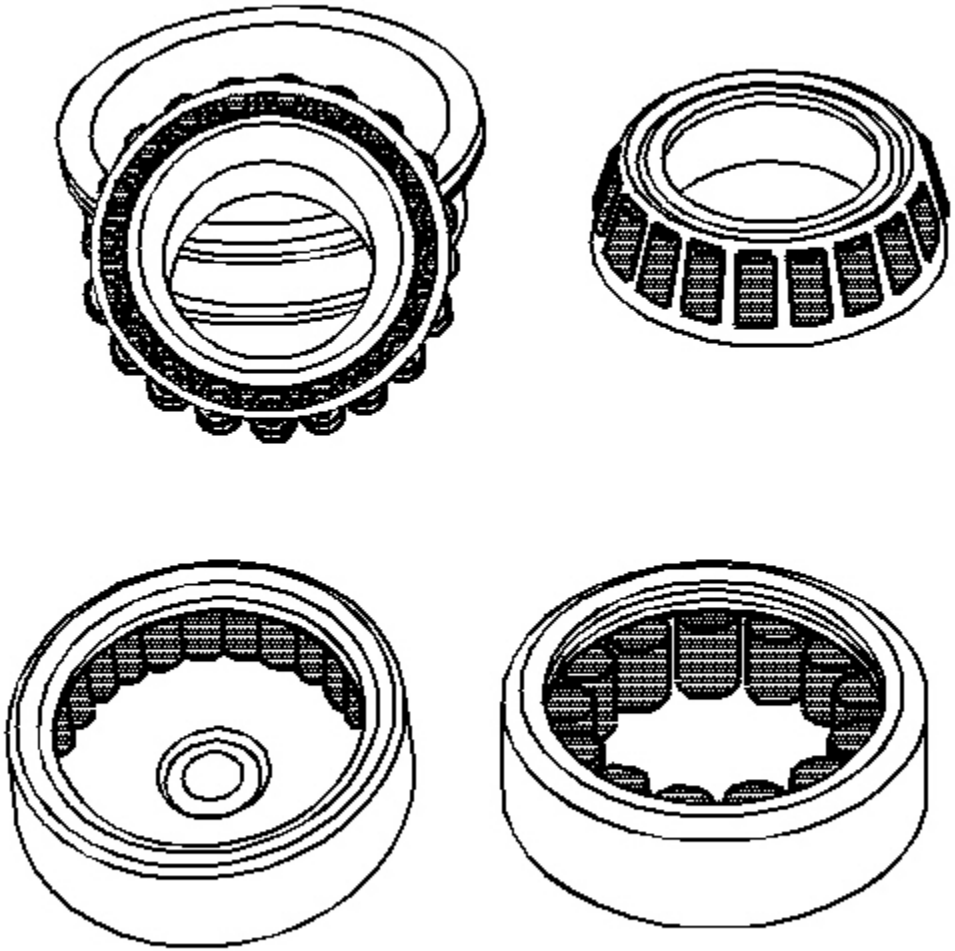

Fig. 286: View of Bearings & Spacers
Courtesy of GENERAL MOTORS CORP.

NOTE: **Do not allow the bearings to spin. Turn them slowly by hand. Spinning the bearings may damage the race and the rollers.**

1. Clean all the bearing parts in a suitable solvent. Air dry all the parts.

cardiagn.com

2. Lubricate the bearings. Use Dexron(R) III transmission lubricant.
3. Inspect the bearings and journals for roughness and unusual wear or damage.
4. Inspect the mainshaft bearing journals for wear.
5. Inspect the mainshaft speed gear bearings for wear.
6. Inspect the main drive gear pilot bearing rollers for wear.
7. Replace parts which show signs of excessive wear.
8. Do not file surfaces which have been hardened and precision ground.
9. Replace worn or damaged bearings.
10. Replace mated bearing parts when only one part is damaged.

GEARS CLEANING AND INSPECTION

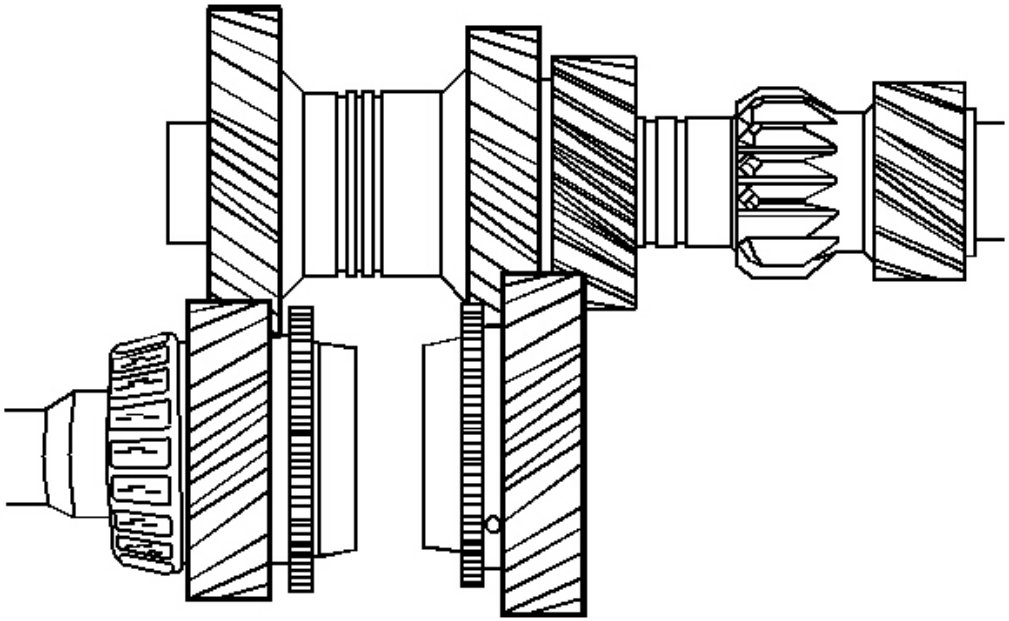

Fig. 287: View Of Gears
Courtesy of GENERAL MOTORS CORP.

1. Clean all the parts in a suitable solvent. Air dry all the parts.
2. Inspect the gear tooth surfaces on all the gear sets for the following conditions:
   - Cracks
   - Pitting

cardiagn.com

    - Nicks
    - Chipped gear teeth
    - High spots (Small-shiny spots on the gear teeth mating surface) that could cause gear noise
3. Inspect for damaged splines on the input shaft, mainshaft, and the countershaft extension.
4. Remove nicks and burrs with a soft stone or a crocus cloth.
5. Replace a burred or nicked part that cannot be reconditioned by hand.
6. Replace gears and gear assemblies that are worn or damaged.

COUNTERSHAFT EXTENSION ASSEMBLE

Tools Required

- **J 5590** Press Tube. See **Special Tools** .
- **J 39473** Mainshaft Bearing Installer. See **Special Tools** .

cardiagn.com

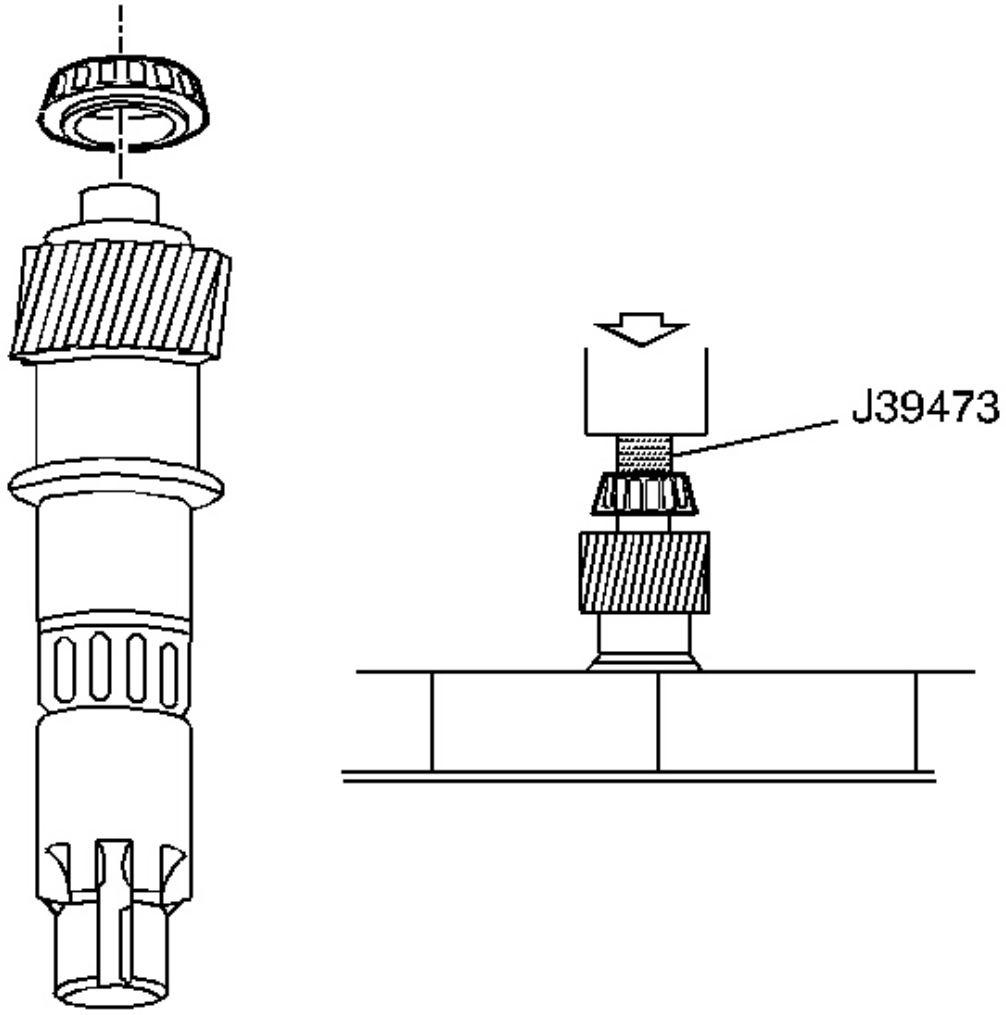

Fig. 288: Installing Small Tapered Bearing Using J 39473
Courtesy of GENERAL MOTORS CORP.

1. Install a new small tapered bearing, using the **J 39473** , V-blocks, and a hydraulic press.

cardiagn.com

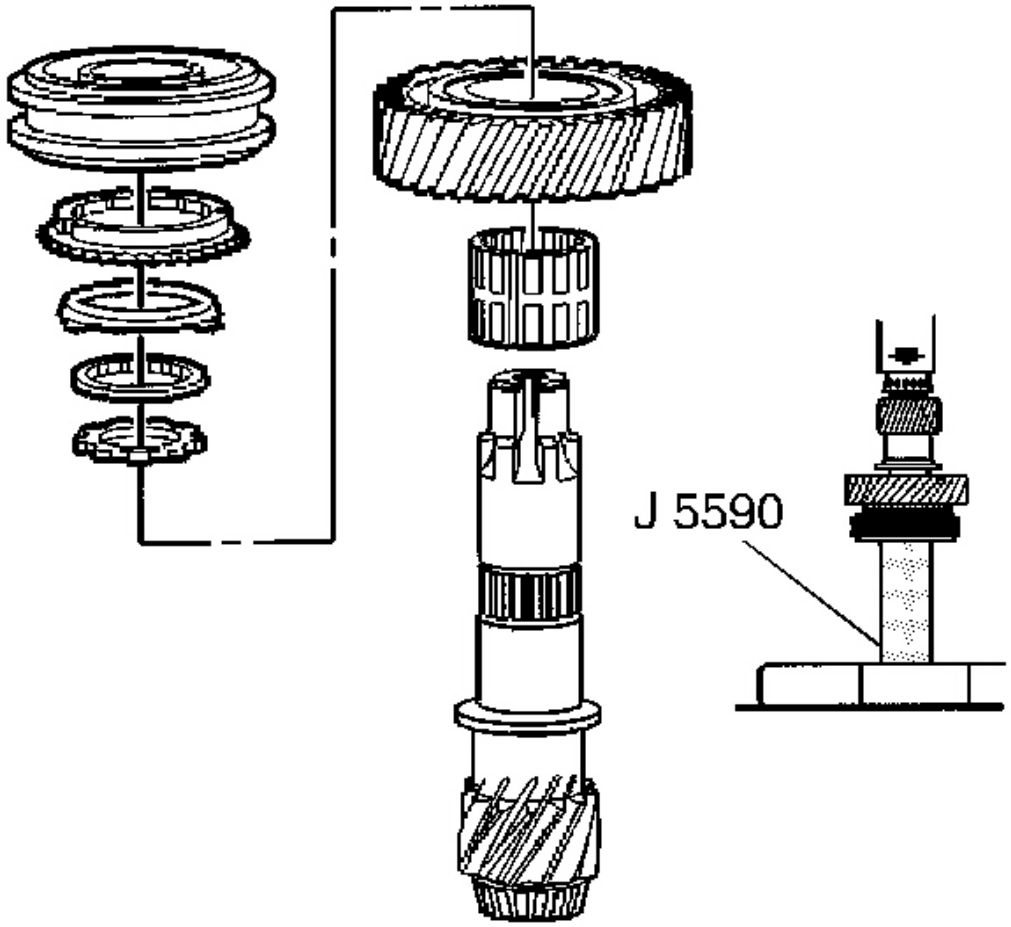

Fig. 289: Installing 5th/6th Speed Synchronizer Assembly
Courtesy of GENERAL MOTORS CORP.

2. Do the following when installing the 5th/6th speed synchronizer assembly:
    1. Start the press operation.
    2. Stop pressing before the keys engage the blocking ring slots.
    3. Lift and rotate the 5th speed gear in order to engage the keys with the blocking ring.
    4. Continue pressing until the synchronizer is seated.
3. Install the following parts in order:
    1. The 5th speed drive gear caged needle bearing
    2. The 5th speed drive gear
    3. The thrust washer

cardiagn.com

4. The 5th speed drive gear inner cone
5. The 5th speed drive gear friction cone
6. The 5th speed drive gear blocking ring
7. The 5th/6th speed synchronizer assembly (The inside diameter (ID) groove on the sleeve faces 5th speed gear.) Use the **J 5590** and a hydraulic press.

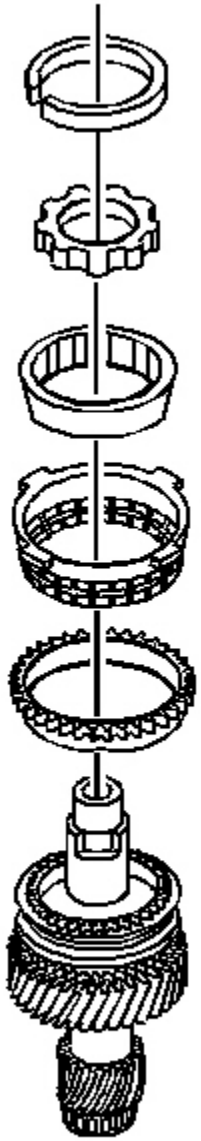

cardiagn.com

Fig. 290: Identifying 6th Speed Cones & Rings
Courtesy of GENERAL MOTORS CORP.

4. Install the following parts in order:
    1. The 6th speed drive gear blocking ring
    2. The 6th speed drive gear friction cone
    3. The 6th speed drive gear inner cone
    4. The thrust washer
    5. A new 5th/6th speed synchronizer retainer ring

cardiagn.com

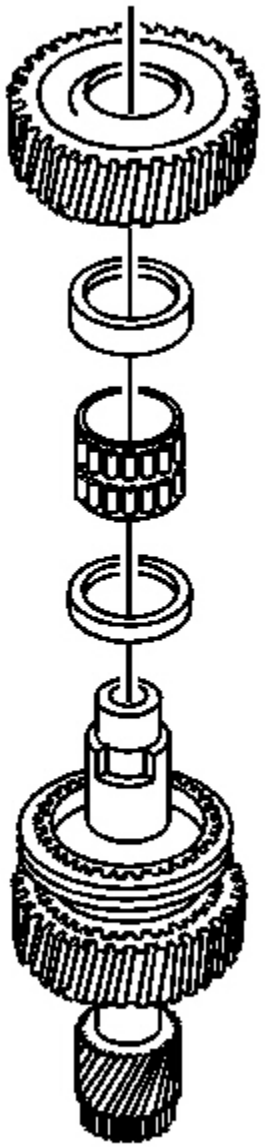

Fig. 291: View Of 6th Speed Assembly
Courtesy of GENERAL MOTORS CORP.

5. Install the following parts in order:
    1. The 6th speed drive gear spacer
    2. The 6th speed drive gear caged needle bearing

cardiagn.com

3. The 6th speed drive gear spacer
4. The 6th speed drive gear

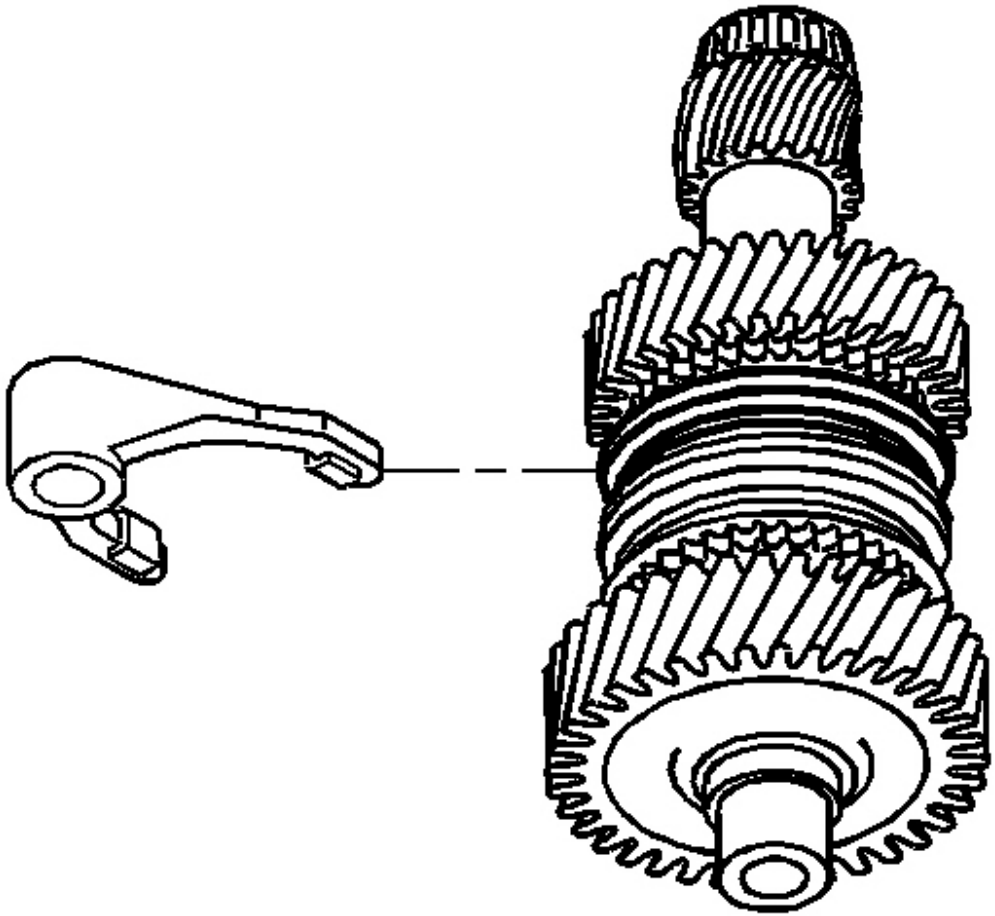

Fig. 292: View Of 5th/6th Speed Shift Fork
Courtesy of GENERAL MOTORS CORP.

6. Install the 5th/6th speed shift fork.

COUNTERSHAFT ASSEMBLE (MAIN SHAFT)

Tools Required

- **J 39438** Bearing Installer. See **Special Tools** .

cardiagn.com

- **J 5590** Press Tube. See **Special Tools** .

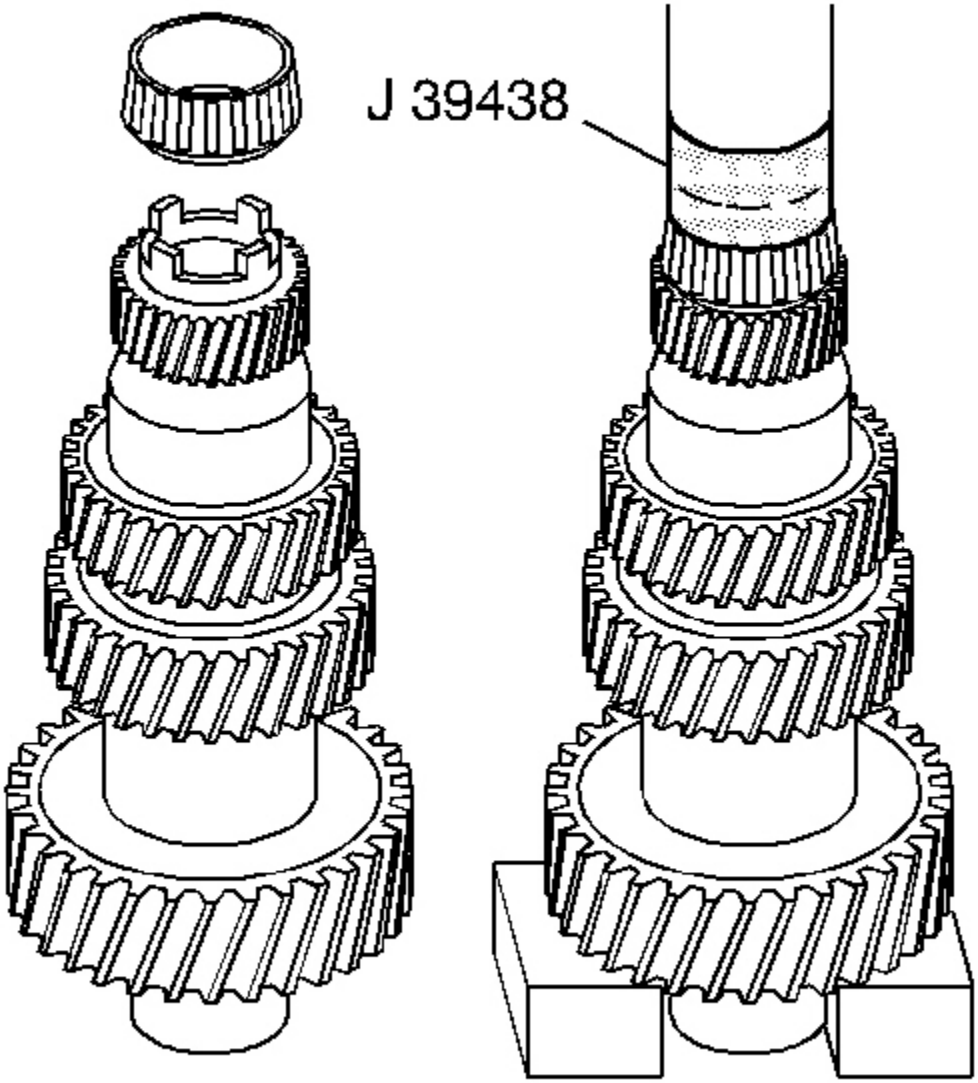

Fig. 293: Installing Large Tapered Countershaft Bearing
Courtesy of GENERAL MOTORS CORP.

1. Install a new large tapered bearing, using the **J 39438** , U-blocks and a hydraulic press.

cardiagn.com

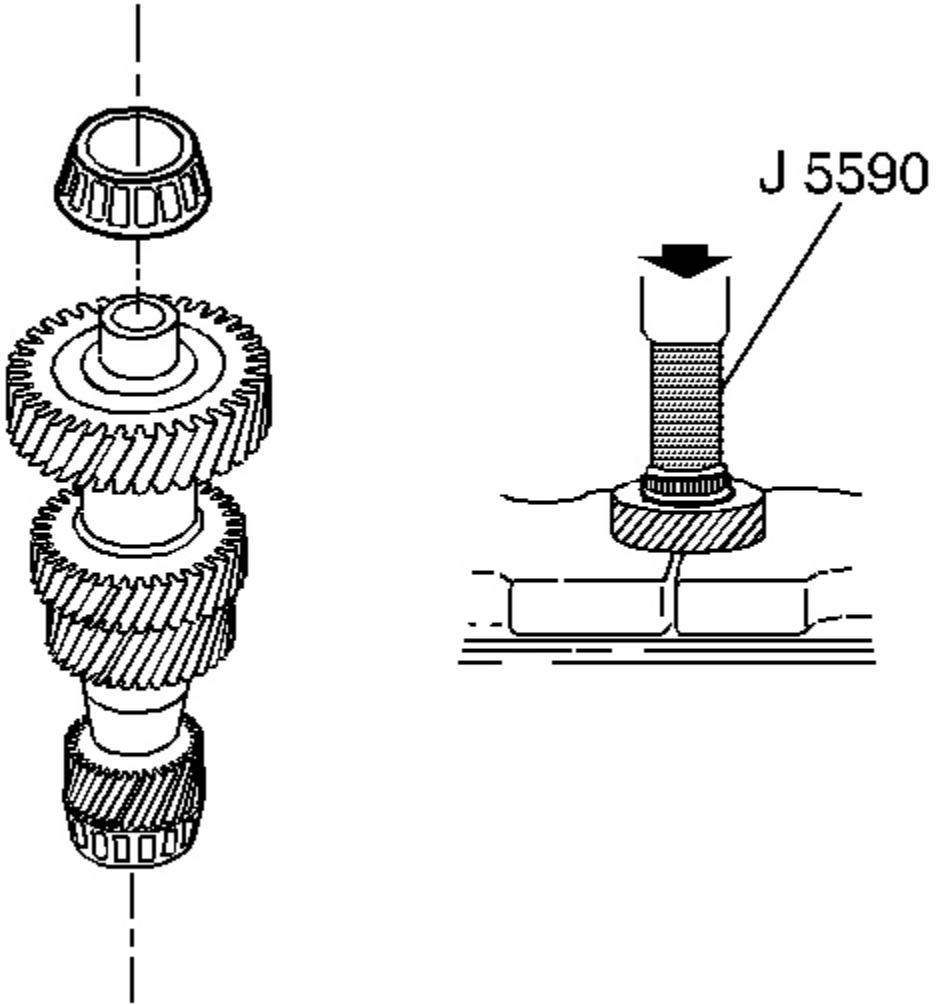

Fig. 294: Installing Countershaft Small Tapered Bearing
Courtesy of GENERAL MOTORS CORP.

2. Install a new small tapered bearing, using the **J 5590** and a hydraulic press.

MAINSHAFT AND INPUT SHAFT ASSEMBLE

Mainshaft

Tools Required

cardiagn.com

- **J 36183** Press Tube. See **Special Tools** .
- **J 36184** Press Tube Adapter. See **Special Tools** .
- **J 39371** 1st/2nd Synchronizer Installer. See **Special Tools** .
- **J 39473** Mainshaft Bearing Installer. See **Special Tools** .

1. Install the 3rd speed gear caged needle bearing and the spacer.

cardiagn.com

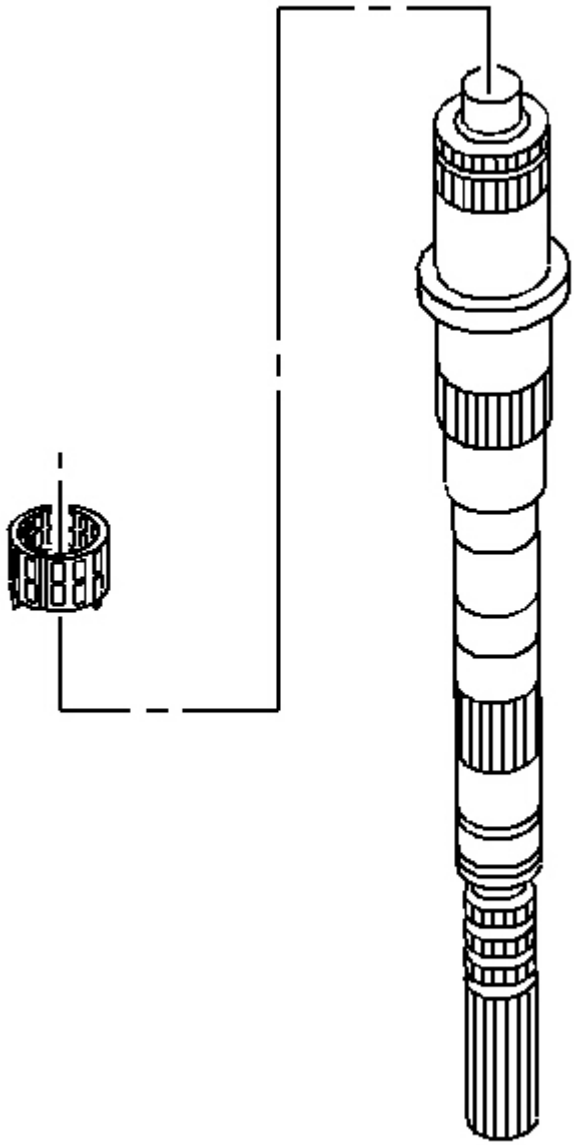

Fig. 295: View Of 3rd Speed Gear Caged Needle Bearing & Spacer
Courtesy of GENERAL MOTORS CORP.

2. Check the 3rd/4th speed gear synchronizer assembly scribe marks for correct positions.

cardiagn.com

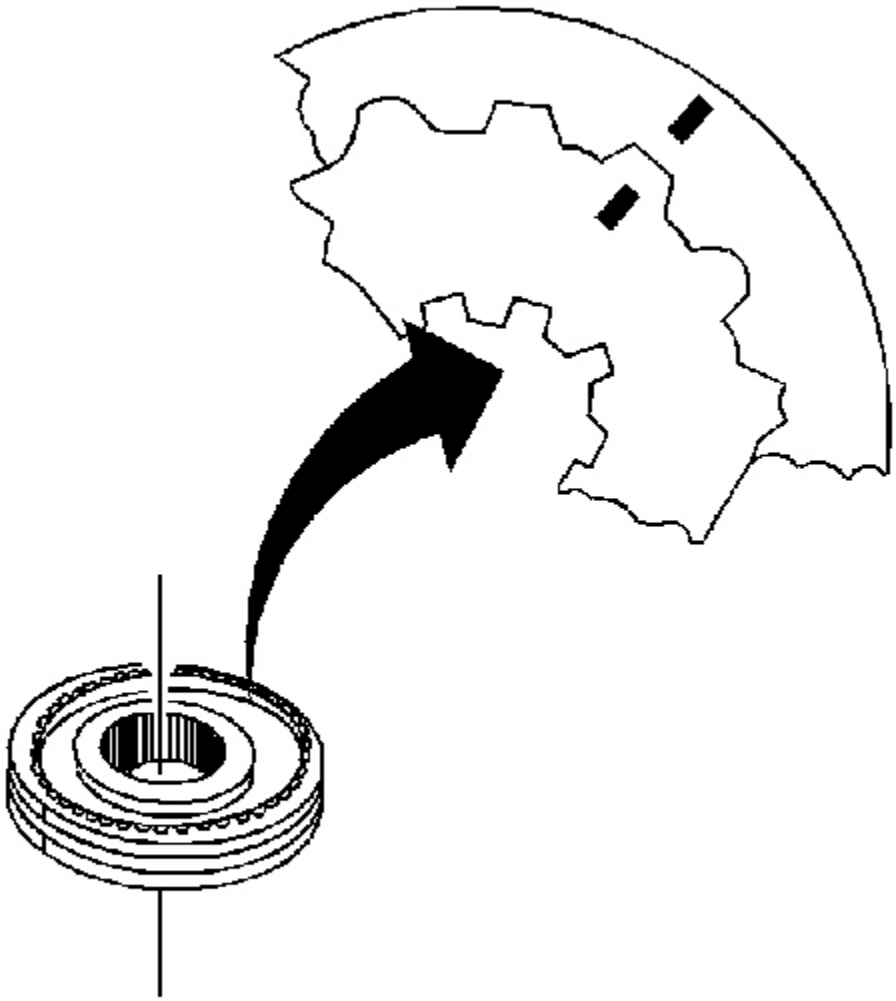

Fig. 296: Identifying Gear Synchronizer Assembly Scribe Marks
Courtesy of GENERAL MOTORS CORP.

cardiagn.com

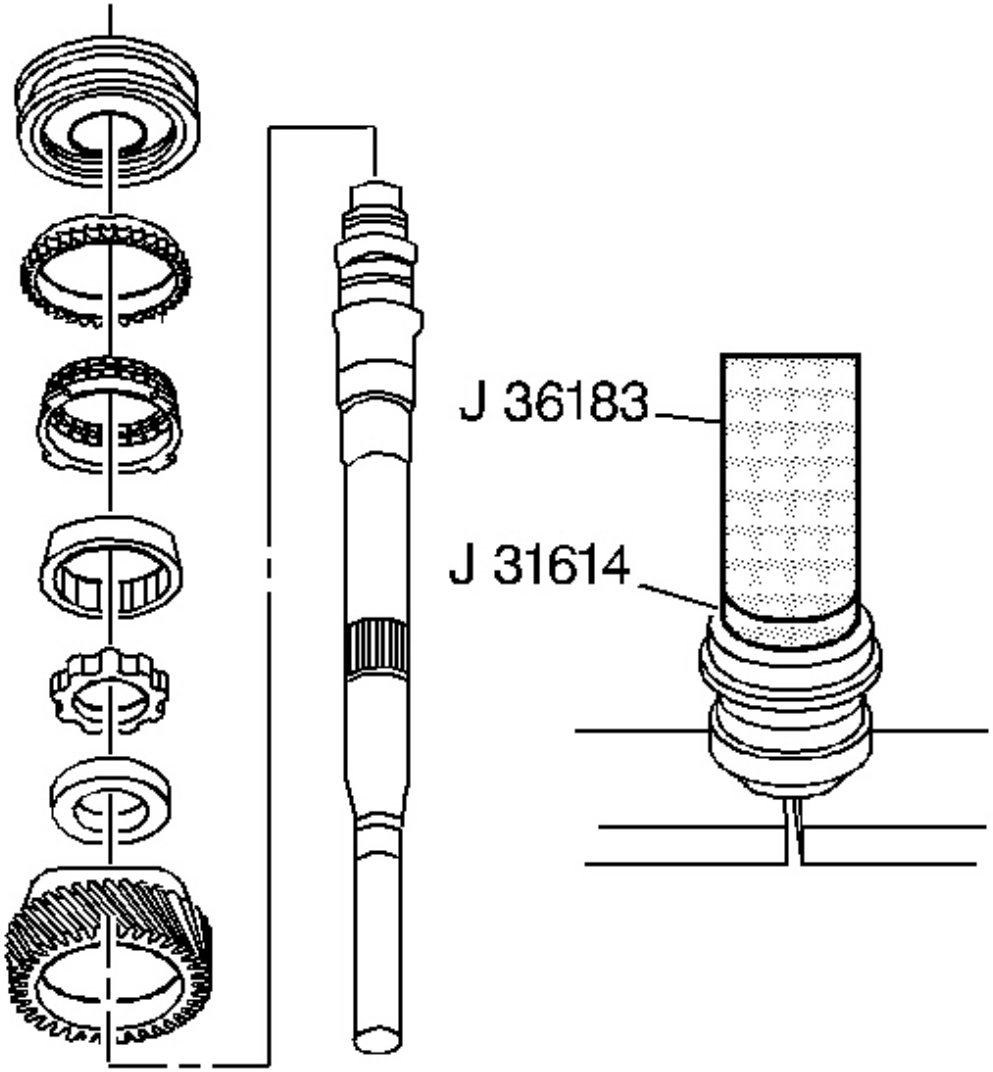

Fig. 297: Installing 3rd/4th Synchronizer Assembly
Courtesy of GENERAL MOTORS CORP.

3. Install the 3rd/4th synchronizer assembly as follows:
    1. Start the press operation.
    2. STOP pressing before the keys engage the blocking ring slots.
    3. Lift and rotate the 3rd speed gear in order to engage the keys with the blocking ring.
    4. Continue pressing until the synchronizer is seated.

cardiagn.com

4. Install the following parts in order, using the **J 36183** , the **J 36184** , and a hydraulic press:
    1. The 3rd speed gear
    2. The spacer
    3. The thrust washer
    4. The 3rd speed gear inner cone
    5. The 3rd speed gear friction cone
    6. The 3rd speed gear blocking ring
    7. The 3rd/4th speed gear synchronizer assembly (the groove on the sleeve faces the 3rd speed gear).

cardiagn.com

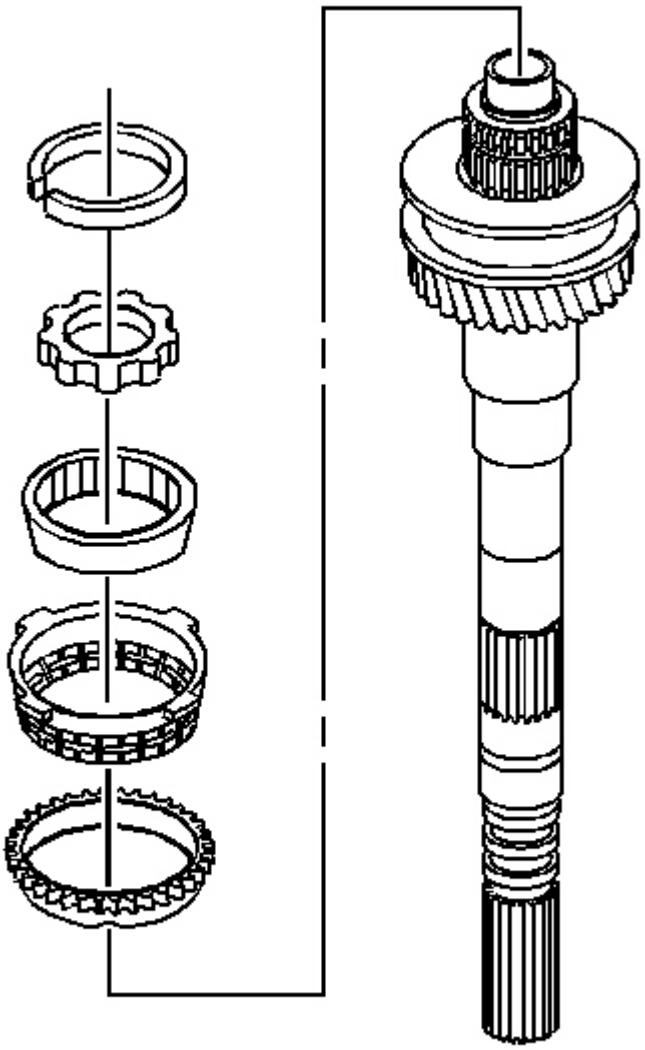

Fig. 298: Exploded View Of 4th Gear Assembly
Courtesy of GENERAL MOTORS CORP.

5. Install in the following order:
    1. 4th gear blocking ring
    2. 4th gear friction cone
    3. 4th gear inner cone
    4. 4th gear thrust washer

cardiagn.com

5. 3rd/4th synchronizer retainer ring

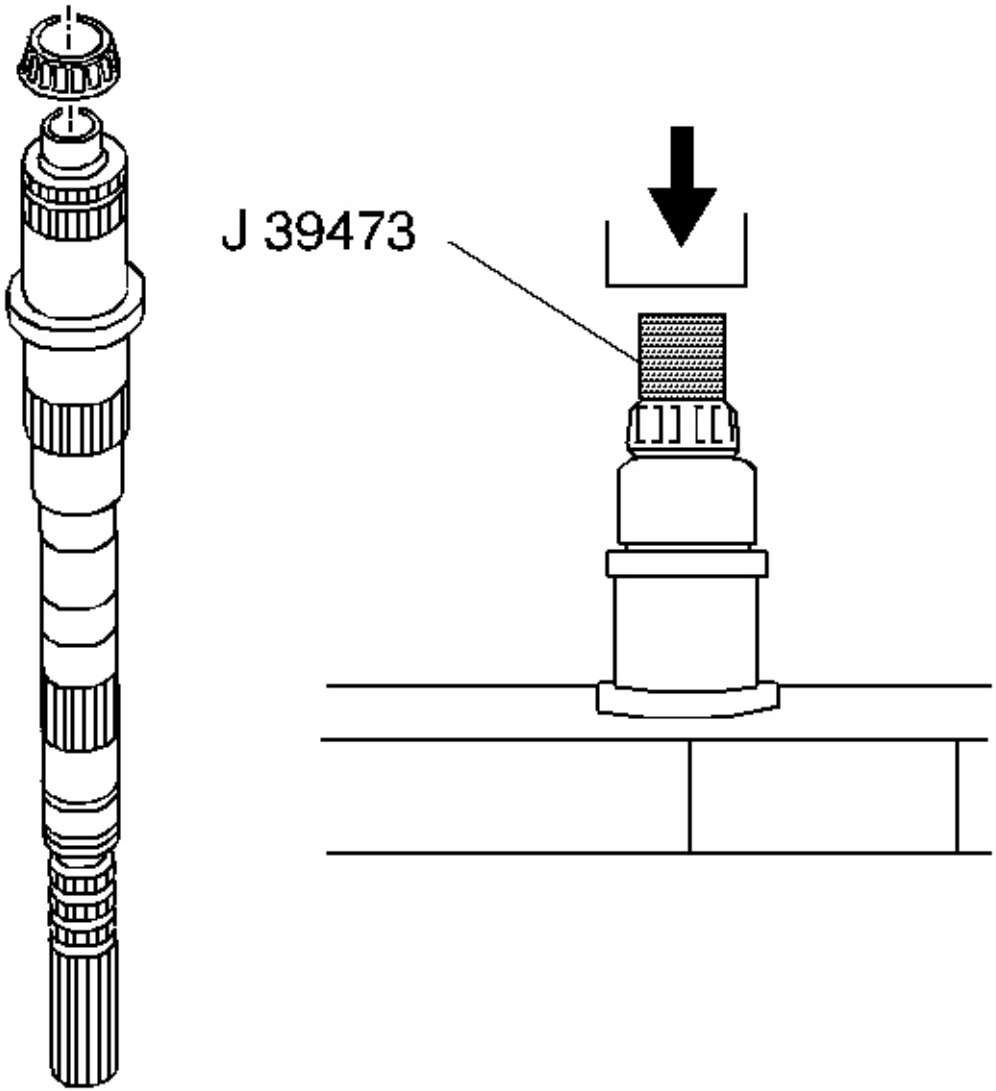

Fig. 299: Installing Mainshaft Small Tapered Bearing
Courtesy of GENERAL MOTORS CORP.

6. Install a new mainshaft small tapered bearing, using the **J 39473** , V-blocks, and a hydraulic press.

cardiagn.com

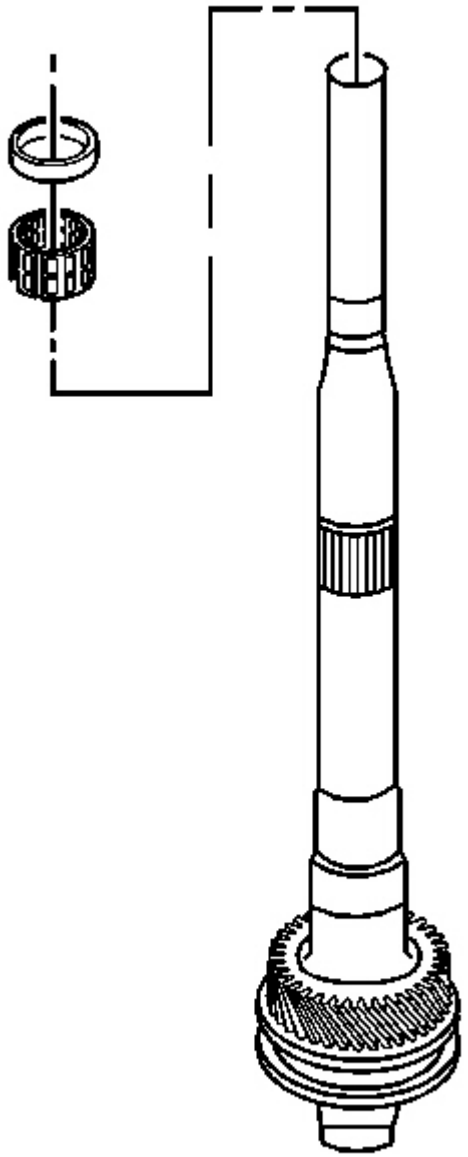

Fig. 300: View Of 2nd Speed Gear Caged Needle Bearing & Bearing Spacer
Courtesy of GENERAL MOTORS CORP.

7. Install the 2nd speed gear caged needle bearing and bearing spacer.
8. Do the following when installing the 1st/2nd synchronizer assembly:
    1. Start the press operation.

cardiagn.com

2. Stop pressing before the keys engage the blocking ring slots.
3. Lift and rotate the 2nd speed gear in order to engage the keys with the blocking ring.
4. Continue pressing until the synchronizer is seated.

9. Install the following parts in order using the **J 39371** and a hydraulic press:

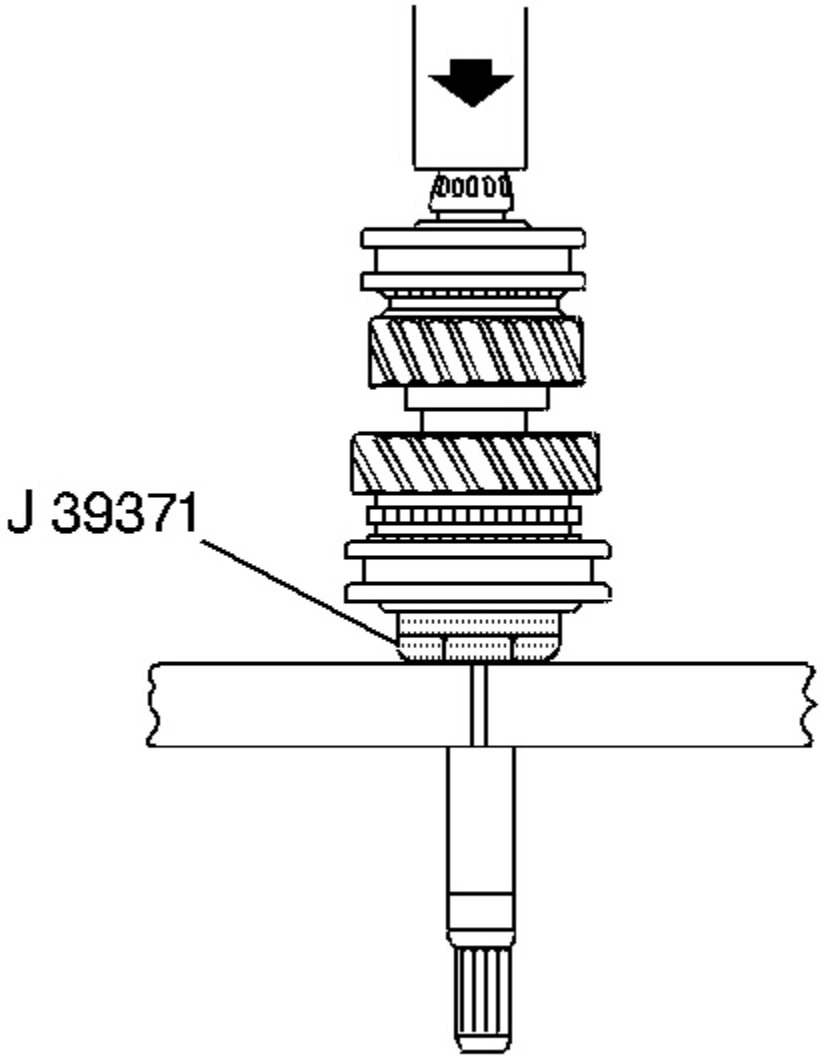

Fig. 301: Identifying J 39371
Courtesy of GENERAL MOTORS CORP.

cardiagn.com

1. The 2nd speed gear
2. The 2nd speed gear inner cone
3. The 2nd speed gear friction cone
4. The 2nd speed gear blocking ring
5. The 1st/2nd synchronizer assembly (The ID groove on the sleeve faces the 1st speed gear.)

cardiagn.com

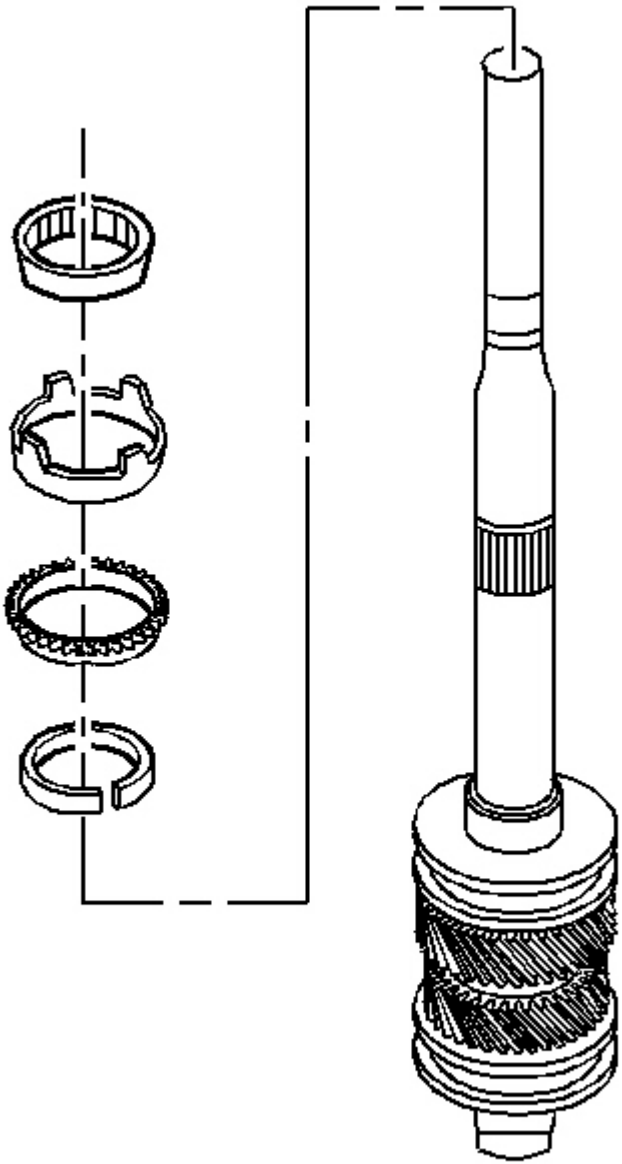

Fig. 302: View Of 1st Speed Gear Cones & Rings
Courtesy of GENERAL MOTORS CORP.

10. Install the following parts in order:
    1. The retainer ring
    2. The blocking ring

cardiagn.com

3. The friction cone
4. The inner cone

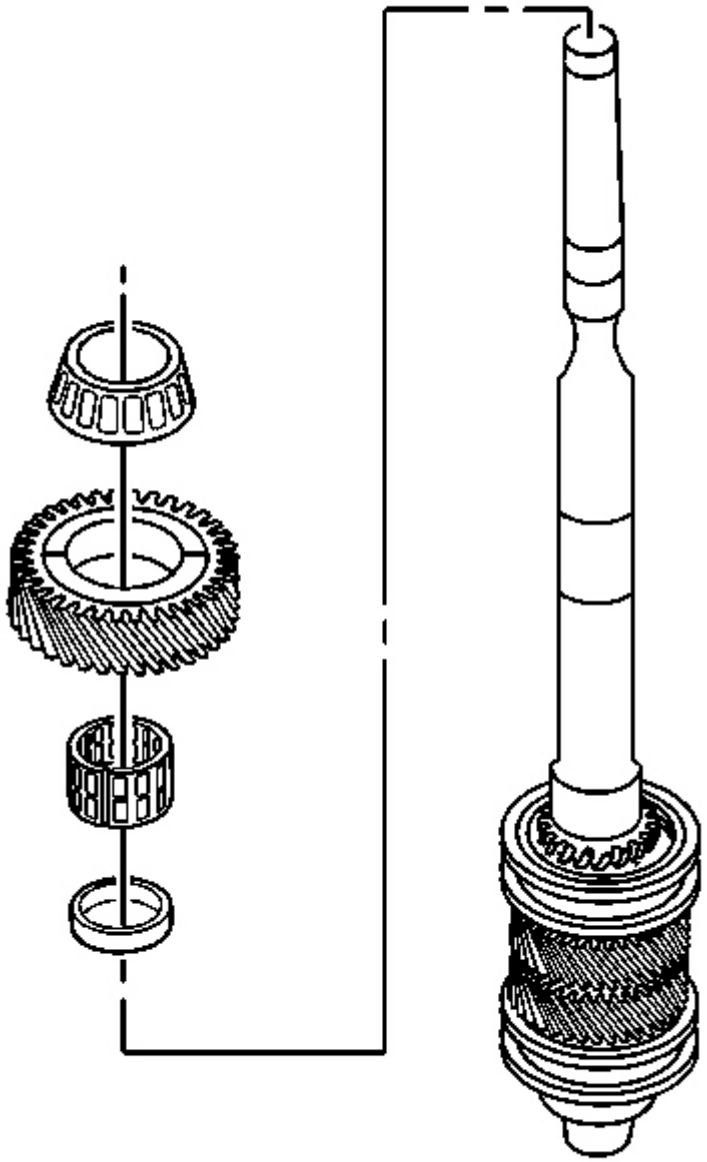

Fig. 303: View Of 1st Speed Gear Components
Courtesy of GENERAL MOTORS CORP.

cardiagn.com

11. Install the following parts in order:
    1. The 1st speed gear bearing spacer
    2. The 1st speed gear caged needle bearing
    3. The 1st speed gear
    4. The mainshaft large tapered bearing and the O-ring seal

Input Shaft

Tools Required

- **J 28537-17** Bearing Race Installer. See **Special Tools** .
- **J 25234** Press Tube. See **Special Tools** .

1. Install a new bearing race on the input shaft, using the **J 28537-17** and a hydraulic press.

cardiagn.com

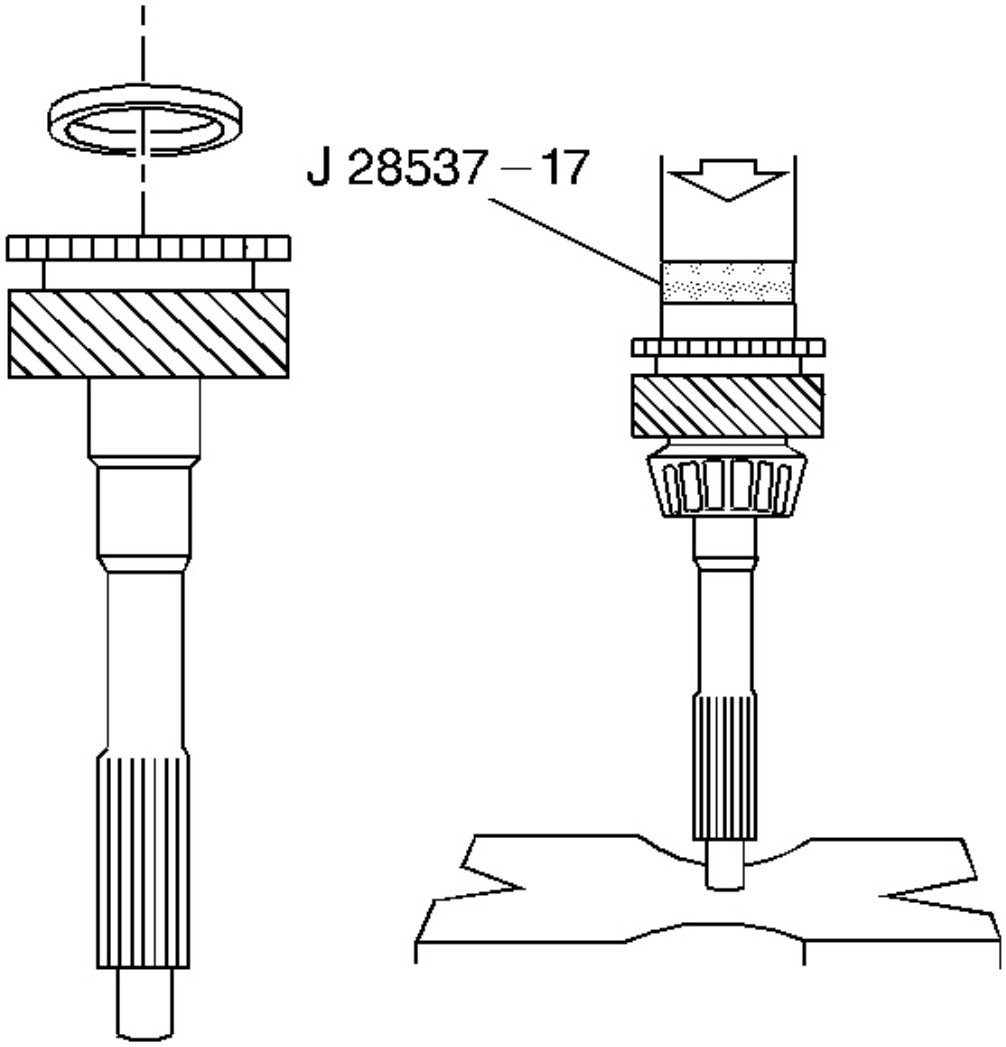

Fig. 304: Installing Input Shaft Bearing Race Using J 28537-17
Courtesy of GENERAL MOTORS CORP.

cardiagn.com

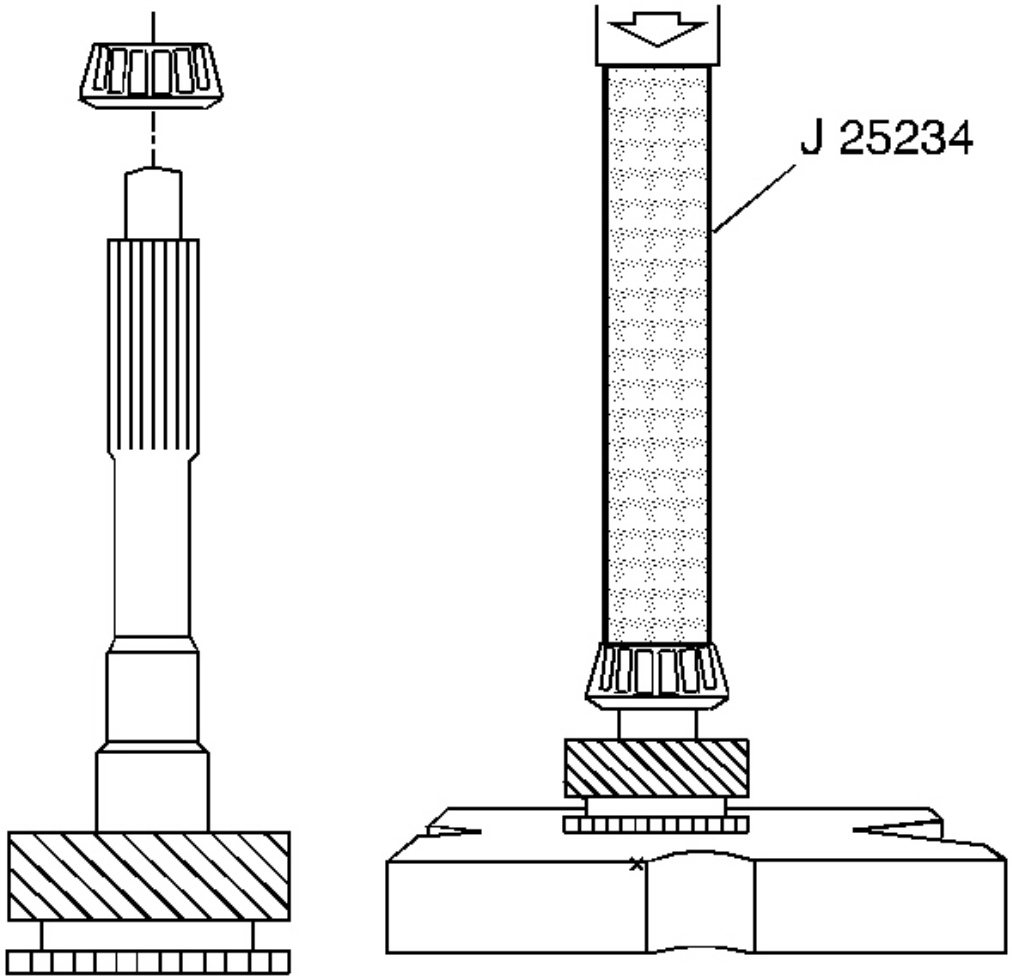

Fig. 305: Installing Tapered Bearing On Input Shaft Using J 25234
Courtesy of GENERAL MOTORS CORP.

2. Install a new tapered bearing on the input shaft. Use the **J 25234** and a hydraulic press.

TRANSMISSION ASSEMBLE (Y CAR)

Tools Required

J 36850 Transjel(R) Lubricant Assembly Lube. See **Special Tools** .

Shift Shaft Assemblies and Gear Clusters Installation

cardiagn.com

1. Lubricate all components as assembly progresses, using **J 36850** .

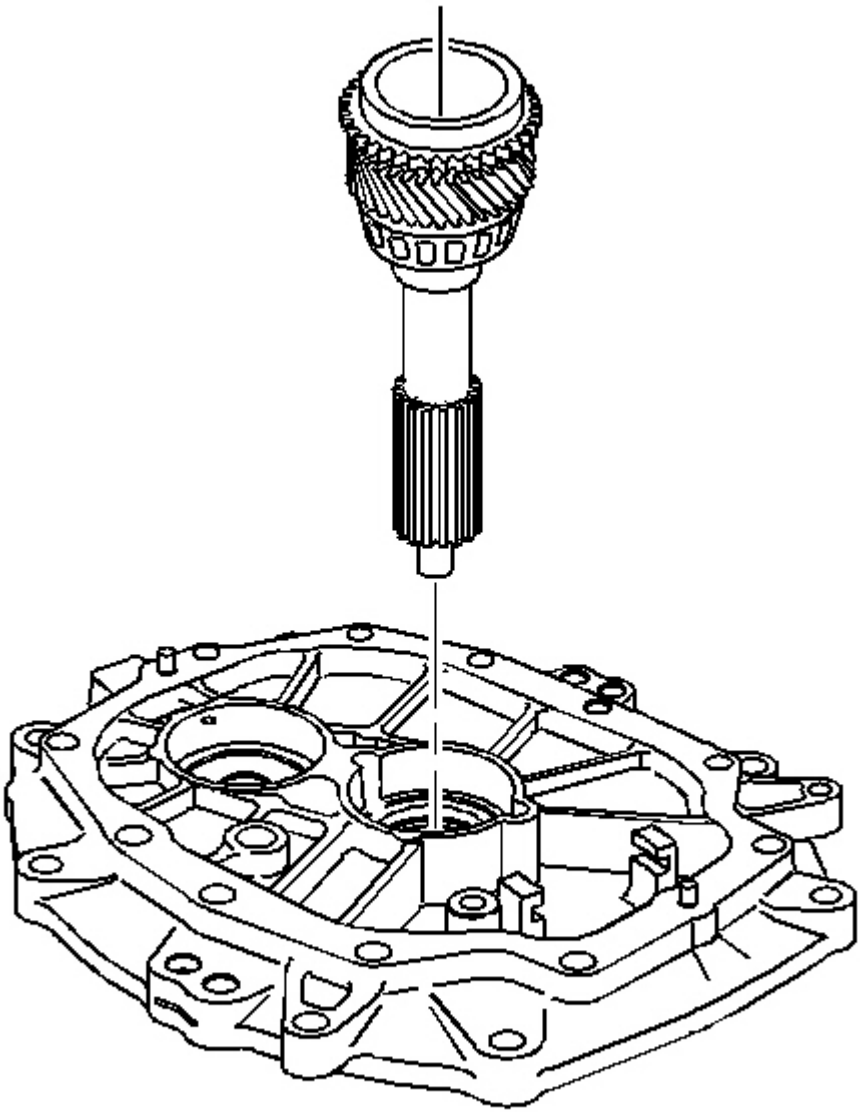

Fig. 306: View Of Input Shaft
Courtesy of GENERAL MOTORS CORP.

2. Install the input shaft in the adapter plate.

cardiagn.com

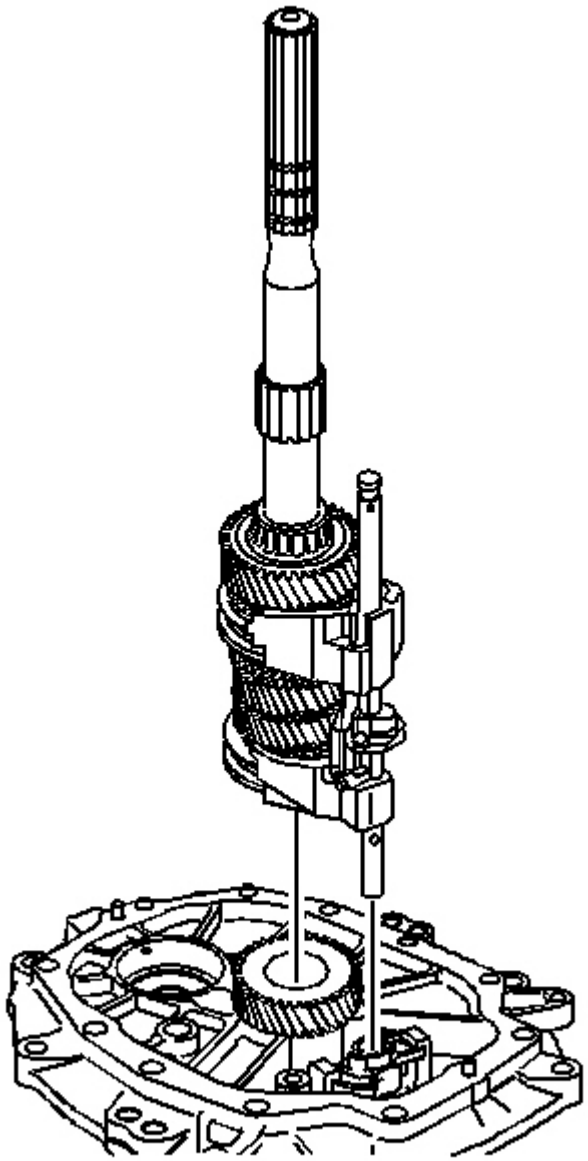

Fig. 307: Installing/Removing Mainshaft Assembly & Shift Shaft Components
Courtesy of GENERAL MOTORS CORP.

3. Assemble the shift shaft to the mainshaft.
4. Install the neutral return roll pin to the shift shaft.
5. Install the mainshaft and the shift shaft assembly into the adapter plate.

cardiagn.com

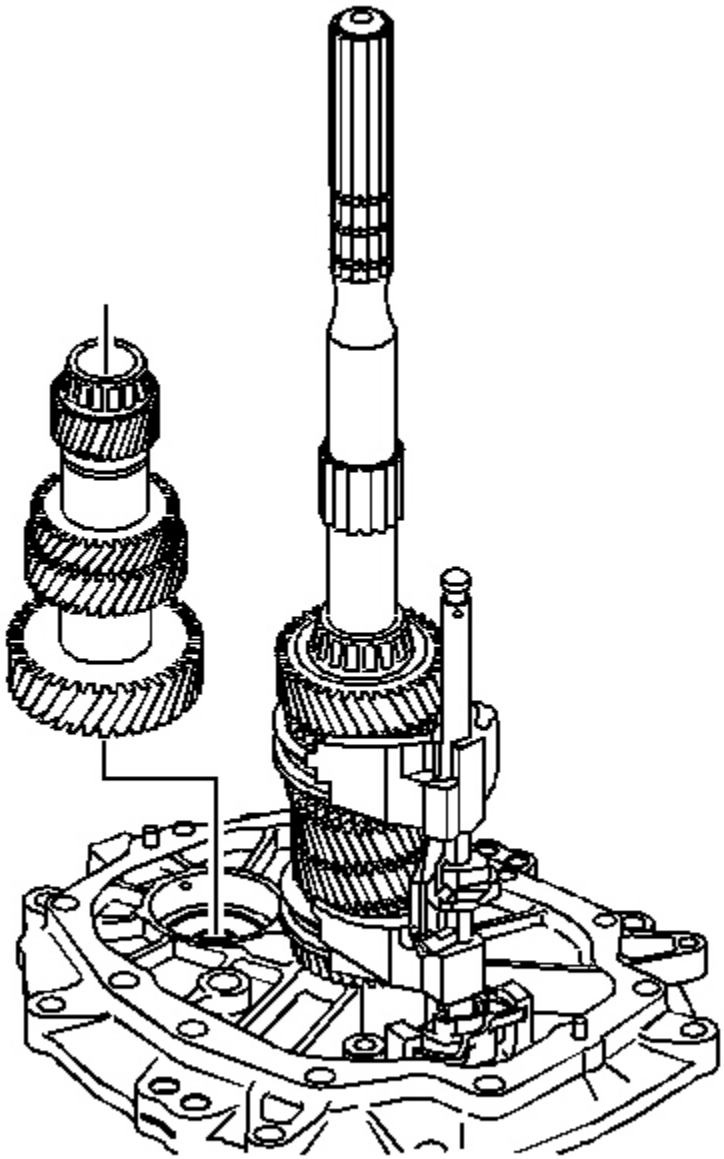

Fig. 308: Installing/Removing Countershaft Assembly
Courtesy of GENERAL MOTORS CORP.

6. Install the countershaft assembly using the following sequence:
    1. Lift up the mainshaft assembly enough in order to install the countershaft assembly.
    2. Install the countershaft assembly.

cardiagn.com

3. Lift the mainshaft assembly enough in order to rotate the input shaft to engage the synchronizer keys with 4th gear blocking ring.

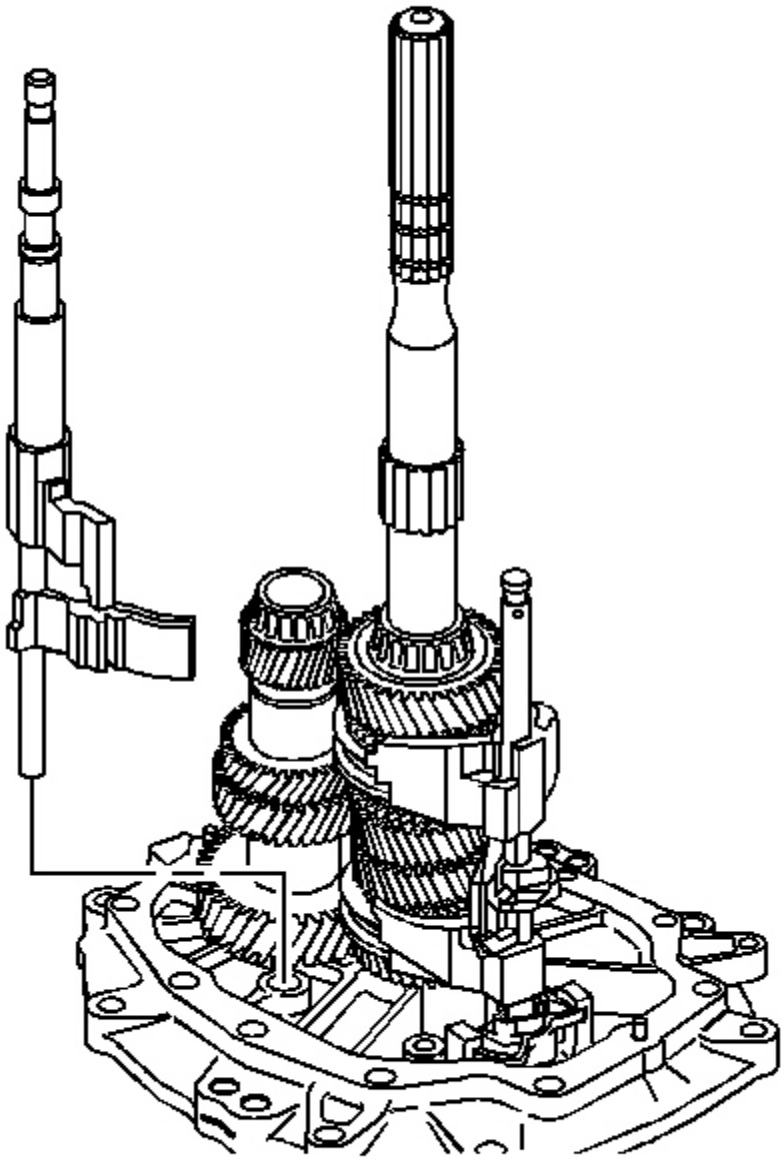

Fig. 309: View Of 5th/6th & Reverse Shift Shaft
Courtesy of GENERAL MOTORS CORP.

cardiagn.com

7. Install the 5th/6th and the reverse shift shaft.

   Align the slots of the shift shaft levers with the interlock plate.

Reverse Lockout Assembly Assemble

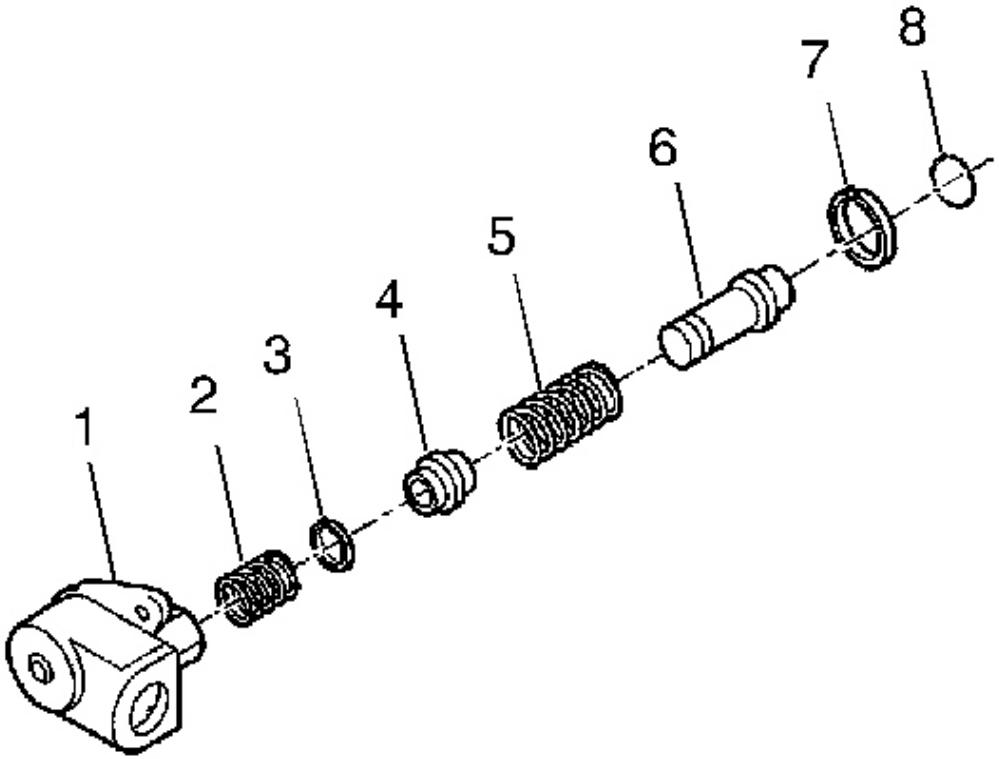

Fig. 310: Exploded View Of Reverse Lockout Assembly
Courtesy of GENERAL MOTORS CORP.

CAUTION: The reverse lockout assembly is under spring pressure. Exercise caution when removing the retainer ring, as bodily injury may result.

1. Install the reverse lockout plunger (6).
2. Install the reverse lockout outer spring (5).
3. Install the reverse lockout collar (4).
4. Compress the reverse lockout plunger and the collar (4) in a vise and Install the retainer ring (3).

cardiagn.com

5. Install the reverse lockout inner spring (2).
6. Install the reverse lockout components in the body (1).
7. Install the retainer ring (7).
8. Install the O-ring to body (8).

Transmission Case Installation

Tools Required

- **J 41099** Skip Shift Sensor Remover/Installer. See **Special Tools** .
- **J 36850** Transjel(R) Lubricant. See **Special Tools** .

IMPORTANT: Lubricate all components as the assembly progresses. Use J 36850 or the equivalent.

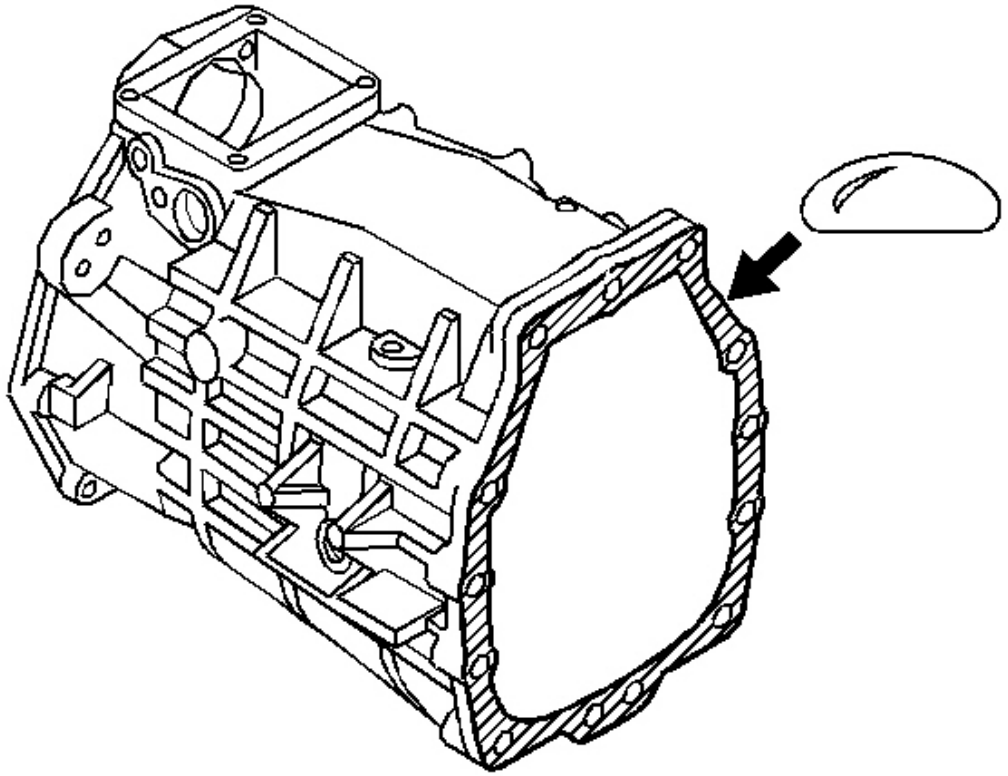

Fig. 311: Apply Sealer To Transmission Case To Adapter Plate Mating Surface

cardiagn.com

Courtesy of GENERAL MOTORS CORP.

1. Apply sealant GM P/N United States 12345739, GM P/N Canada 10953472 or equivalent to the transmission case to adapter plate mating surface.

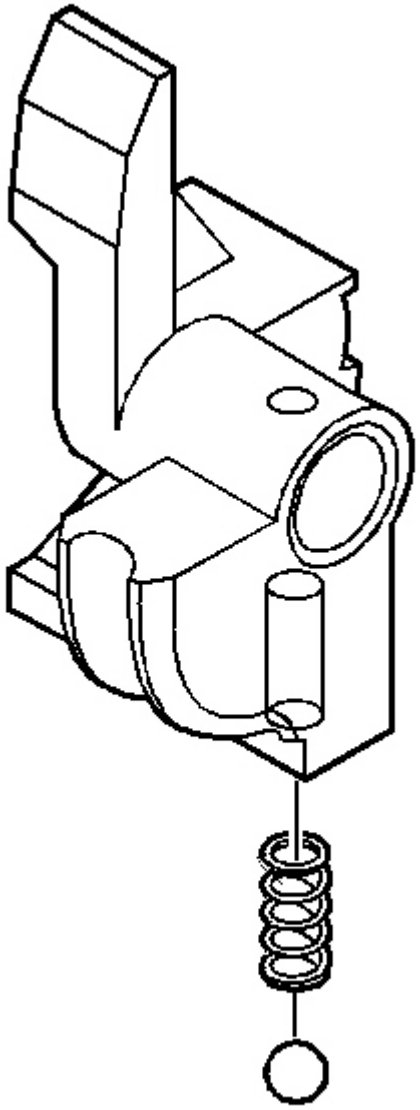

Fig. 312: Inserting Ball Detent & Spring Into Front Offset Lever
Courtesy of GENERAL MOTORS CORP.

cardiagn.com

2. Install the ball detent and the spring in the front offset lever.

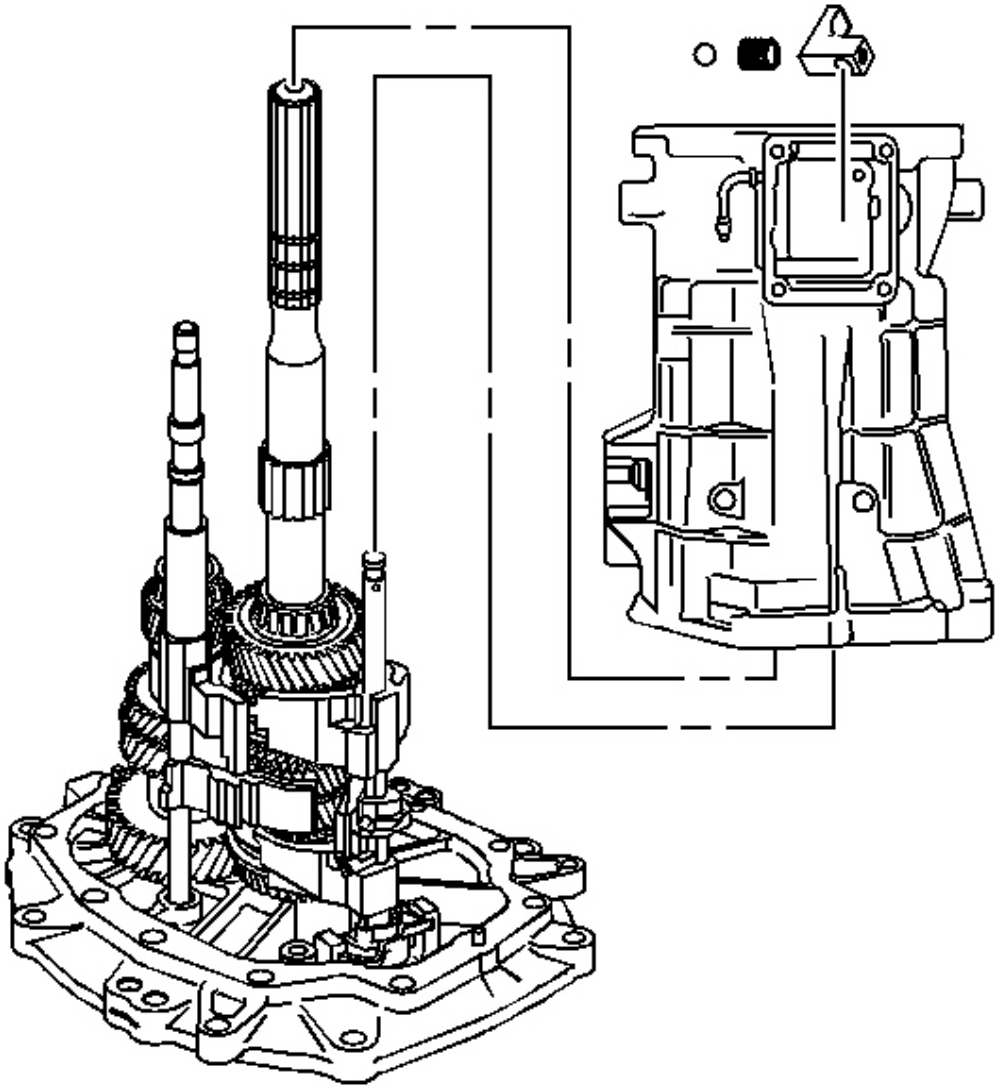

Fig. 313: View Of Front Offset Lever Components
Courtesy of GENERAL MOTORS CORP.

3. Do the following in order to install the transmission case and the offset lever:
    1. Shift the transmission into NEUTRAL in order to keep the 3rd/4th shift shaft from engaging.
    2. Install the offset lever.

cardiagn.com

3. Compress the front offset lever together while sliding it onto the shift shaft. This will prevent the spring release of the inner components.
4. Slide the transmission case onto the gear clusters and the shift rail components.

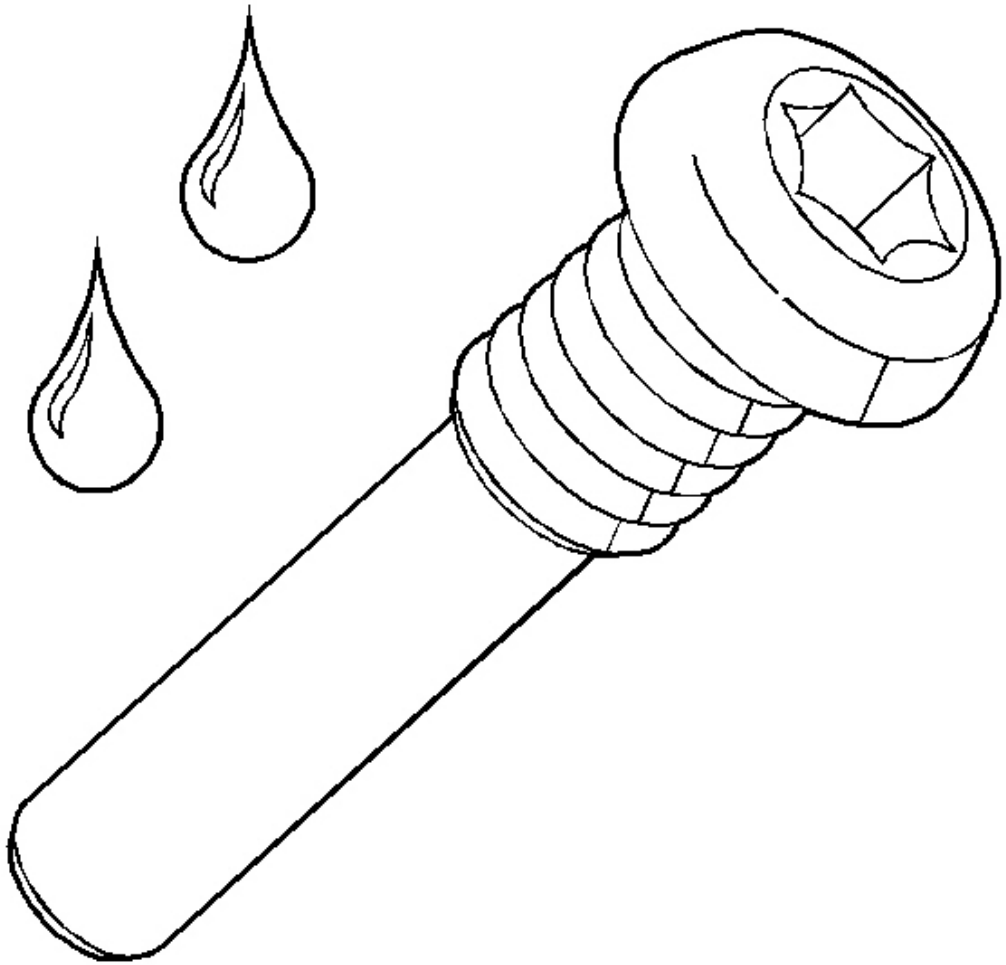

Fig. 314: Applying Sealer To Shift Lever Guide Bolts Threads
Courtesy of GENERAL MOTORS CORP.

4. Apply threadlock GM P/N United States 12346004, GM P/N Canada 10953480 or equivalent to the threads of the shift lever guide bolts.

NOTE: Refer to Fastener Notice in Cautions and Notices.

cardiagn.com

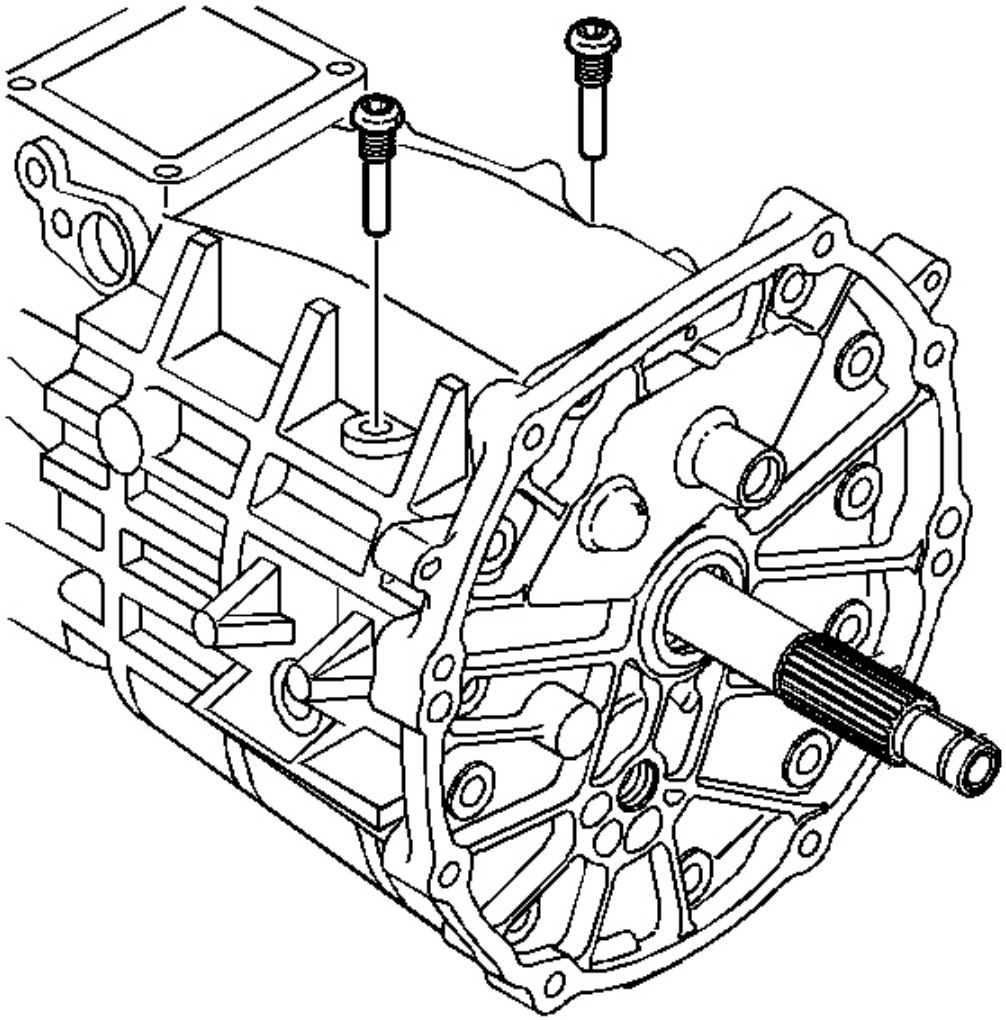

Fig. 315: Locating Shift Lever Guide Bolts
Courtesy of GENERAL MOTORS CORP.

5. Install the shift lever guide bolts and pull up on 5th/6th and reverse shift rail assembly. This will help align the slot of the shift interlock plate with the guide bolt hole.

   Tighten: Tighten the bolts to 27 N.m (20 Ib. ft).

cardiagn.com

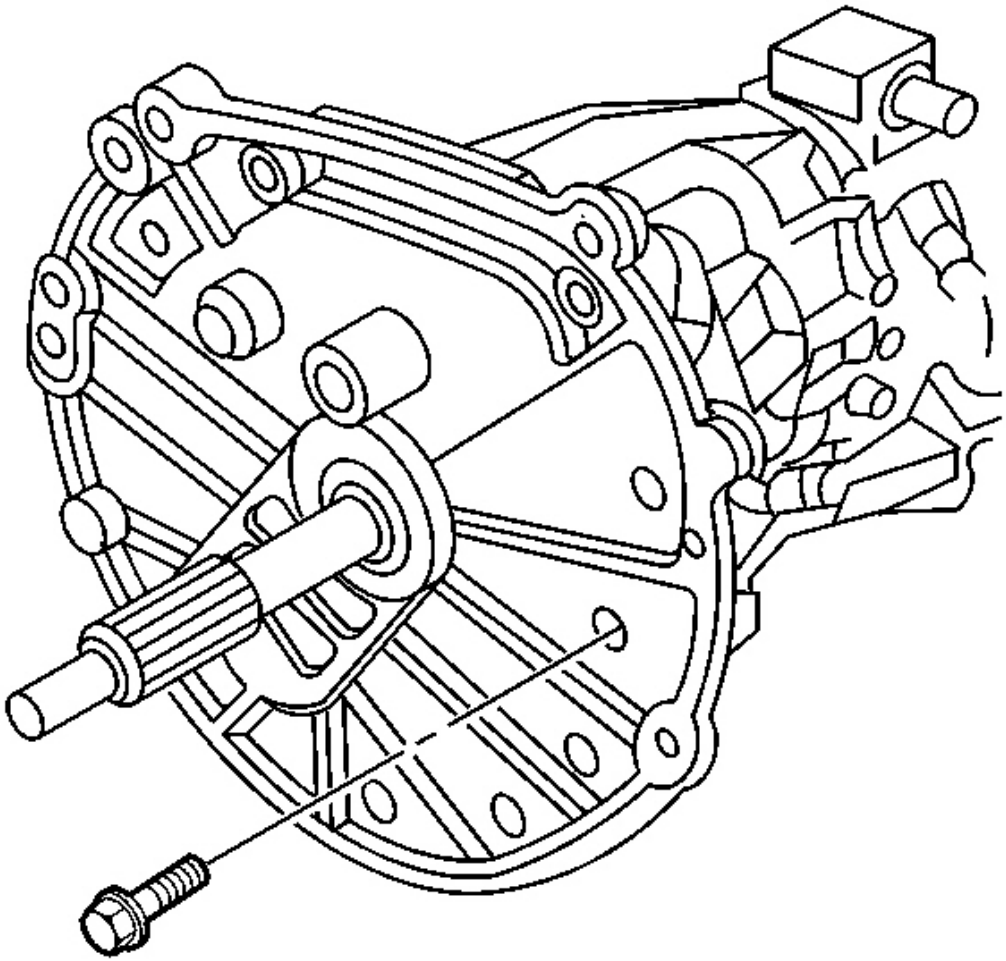

Fig. 316: View Of Adapter Plate & Transmission Case Bolts
Courtesy of GENERAL MOTORS CORP.

6. Install the adapter plate to transmission case bolts.

   Tighten: Tighten the bolts to 48 N.m (36 Ib. ft).

cardiagn.com

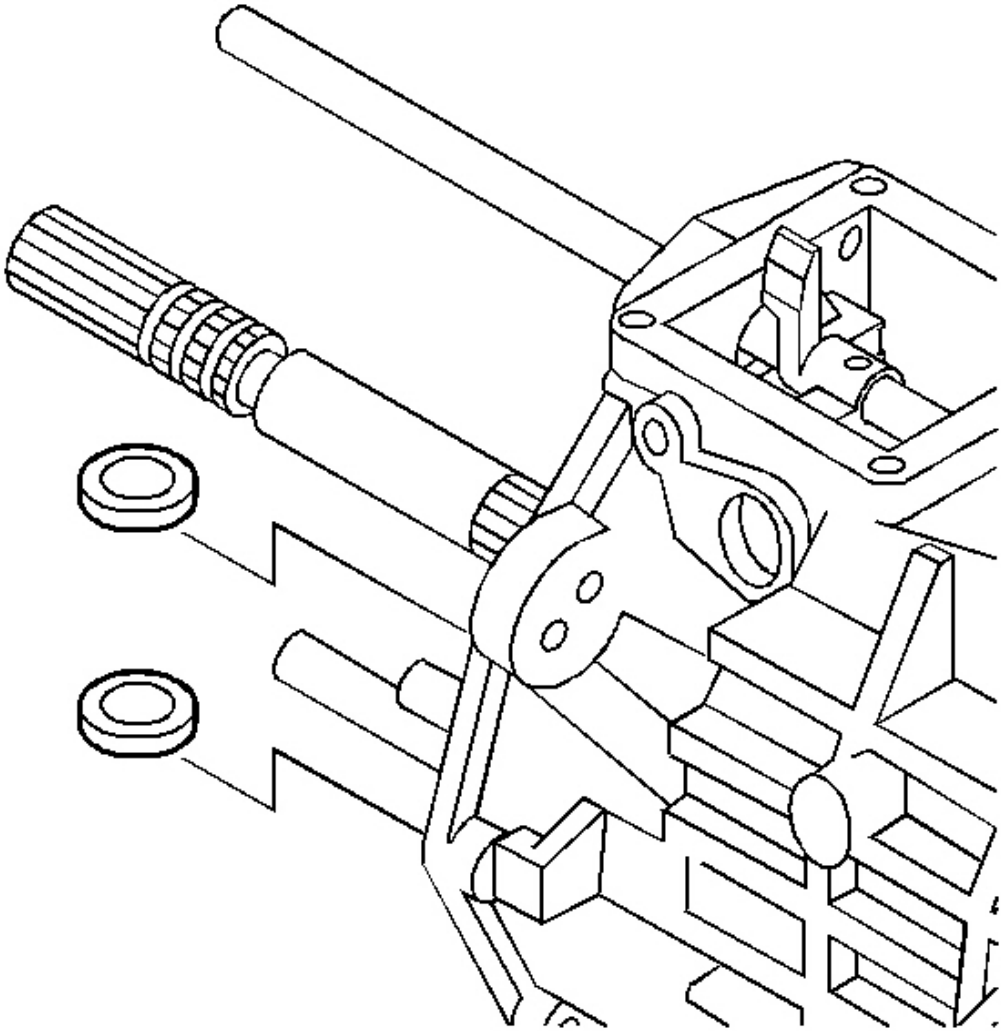

Fig. 317: View Of Transmission Magnets
Courtesy of GENERAL MOTORS CORP.

7. Install the magnets into the transmission case.

cardiagn.com

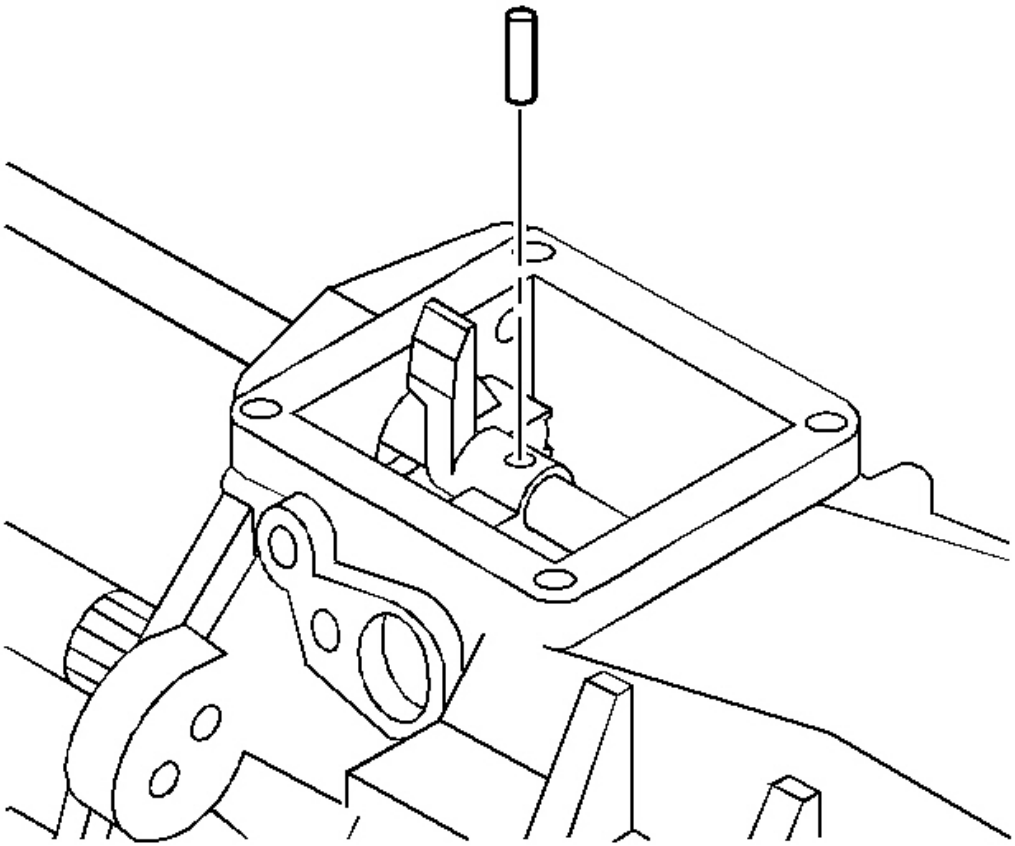

Fig. 318: Installing/Removing Offset Lever Roll Pin
Courtesy of GENERAL MOTORS CORP.

8. Install the offset lever roll pin.

cardiagn.com

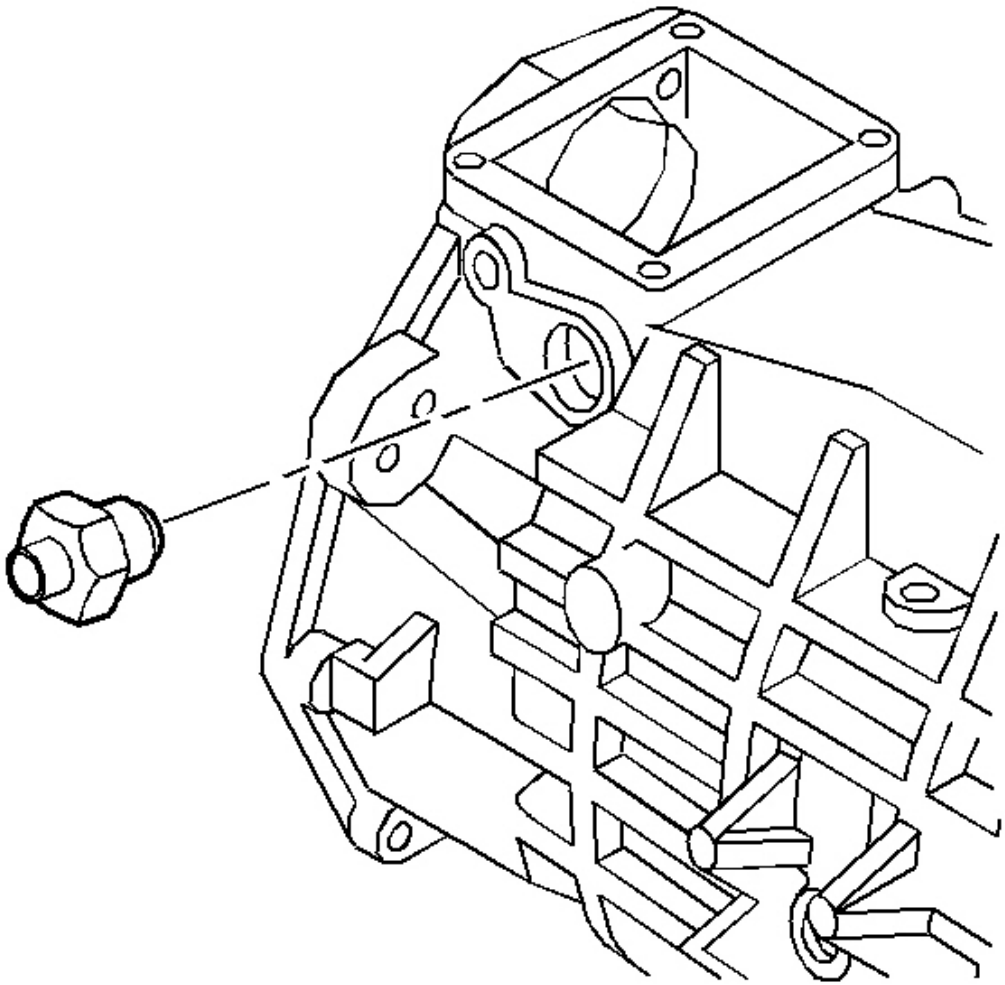

Fig. 319: View Of Shift Detent Assembly
Courtesy of GENERAL MOTORS CORP.

9. Install the shift detent assembly.

   Tighten: Tighten the detent assembly to 40 N.m (30 Ib. ft).

cardiagn.com

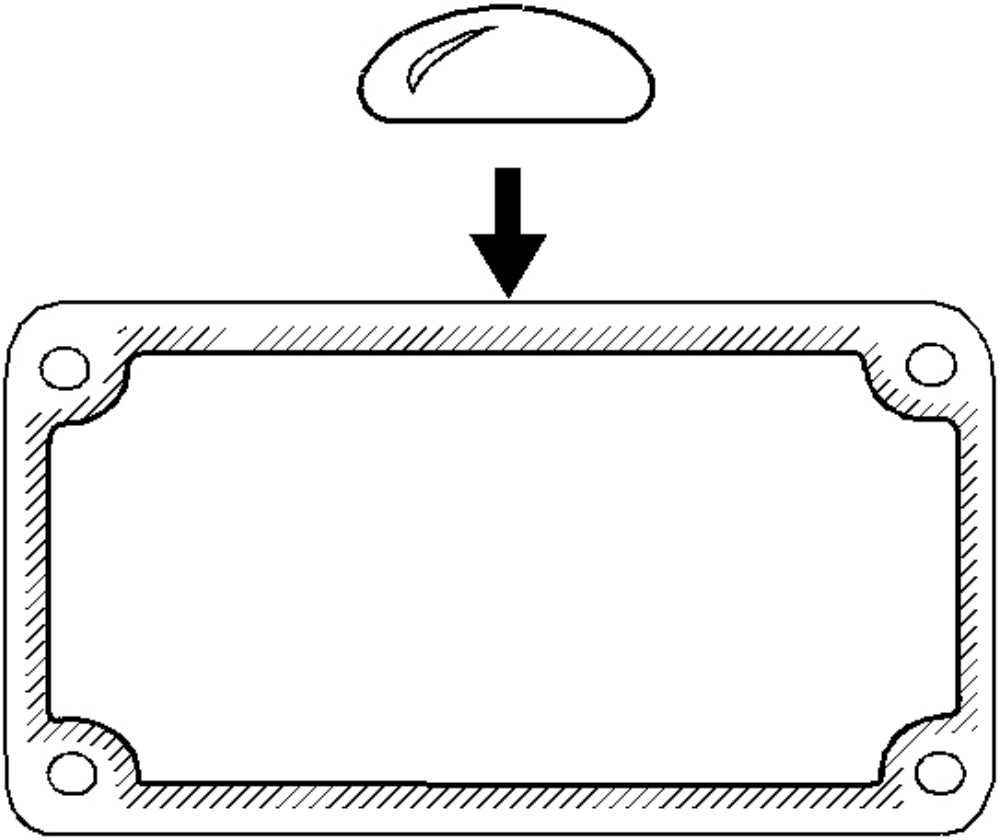

Fig. 320: Applying Sealer To Mating Surface Of Cover Plate
Courtesy of GENERAL MOTORS CORP.

10. Apply sealant GM P/N United States 12345739, GM P/N Canada 10953472 or the equivalent to the mating surface of the cover plate.

cardiagn.com

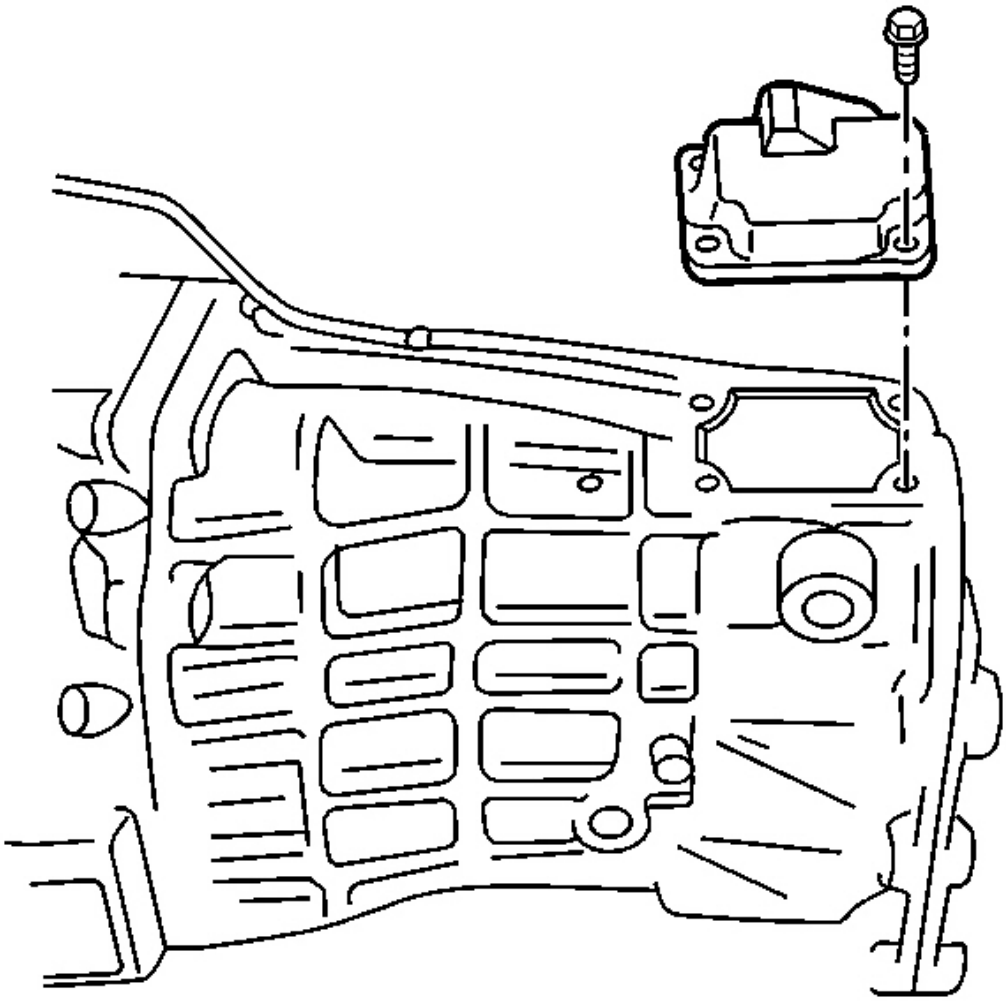

Fig. 321: View Of Transmission Case Cover & Case Cover Bolts
Courtesy of GENERAL MOTORS CORP.

11. Install the transmission case cover and the case cover bolts.

    Tighten: Tighten the bolts to 20 N.m (15 Ib. ft).

cardiagn.com

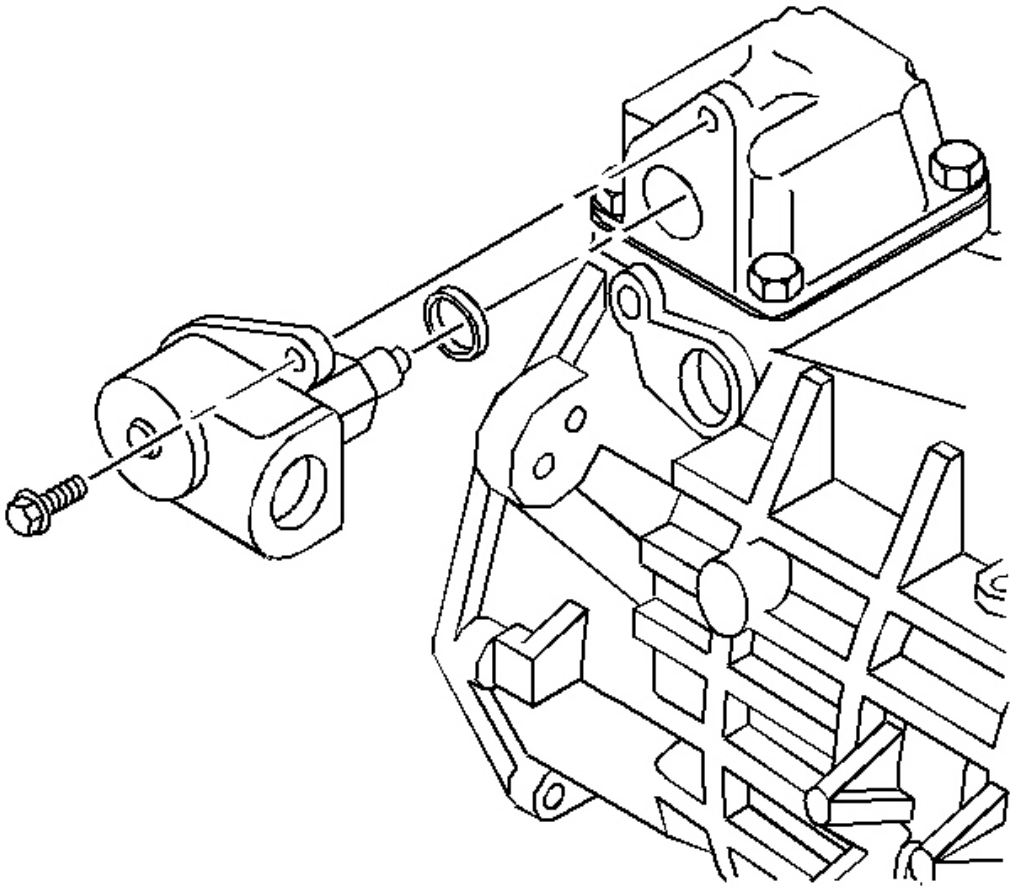

Fig. 322: Installing/Removing Reverse Lockout Body & Bolt
Courtesy of GENERAL MOTORS CORP.

12. Install the reverse lockout body and bolt in the cover plate.

    Tighten: Tighten the bolts to 18 N.m (13 Ib. ft).

cardiagn.com

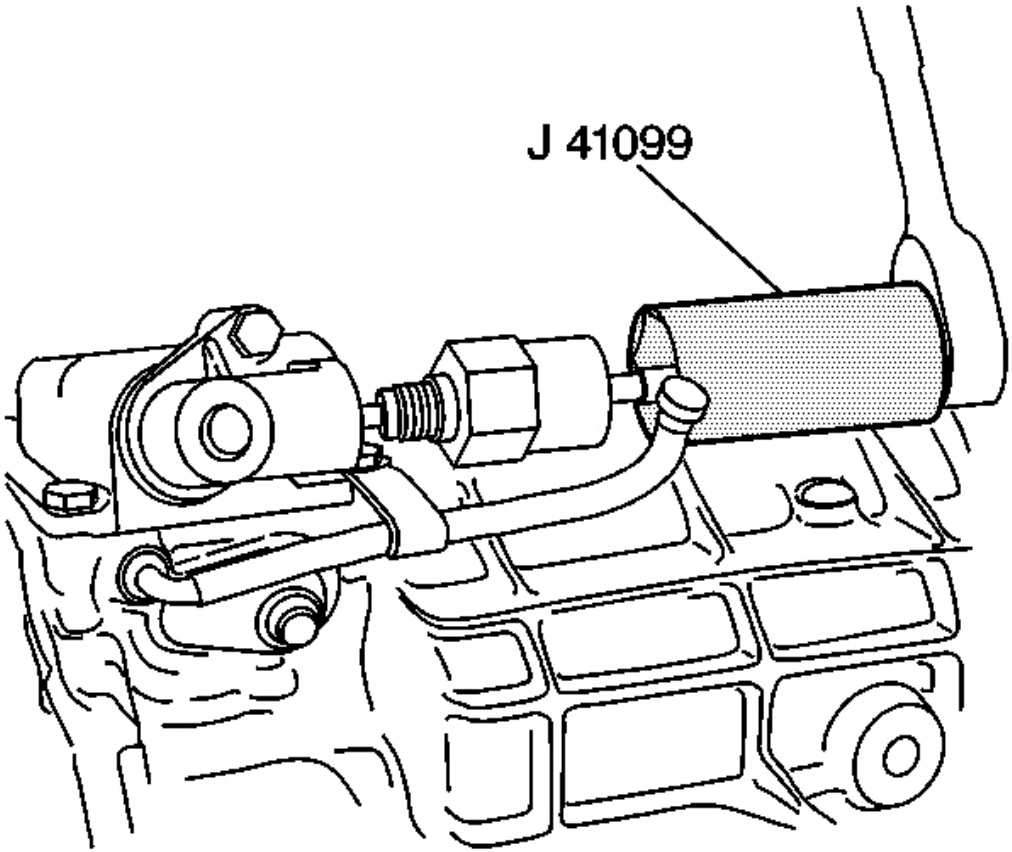

Fig. 323: Using J 41099 To Remove/Install Reverse Lockout Solenoid To Reverse Lockout Body Assembly
Courtesy of GENERAL MOTORS CORP.

13. Install the, using the **J 41099** .

    Tighten: Tighten the solenoid to 40 N.m (30 Ib. ft).

cardiagn.com

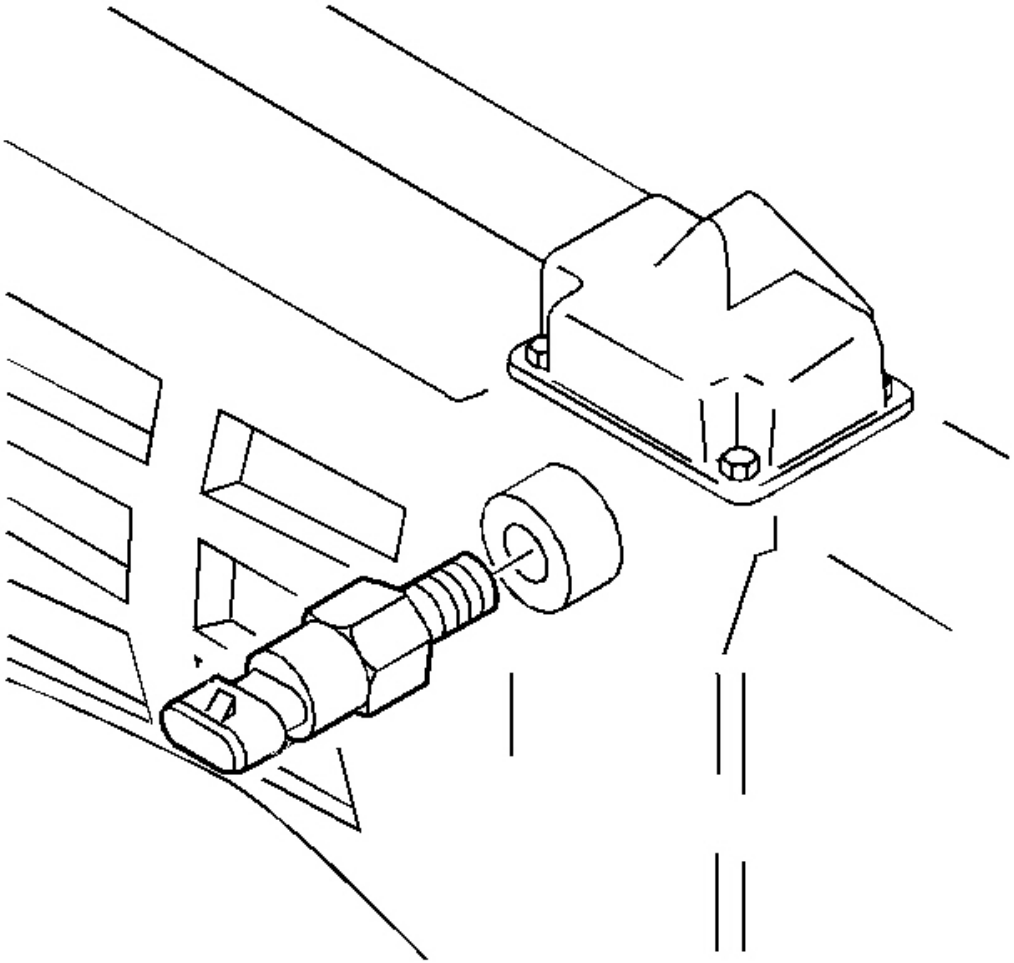

Fig. 324: Identifying Computer Aided Gear Select Solenoid
Courtesy of GENERAL MOTORS CORP.

14. Install the computer aided gear select solenoid.

    Tighten: Tighten the solenoid to 40 N.m (30 Ib. ft).

Countershaft Extension Installation

1. Position the transmission in the horizontal position.
2. Install the countershaft extension assembly and the 5th/6th shift fork. The splines of the countershaft extension must engage the splines of the countershaft.

cardiagn.com

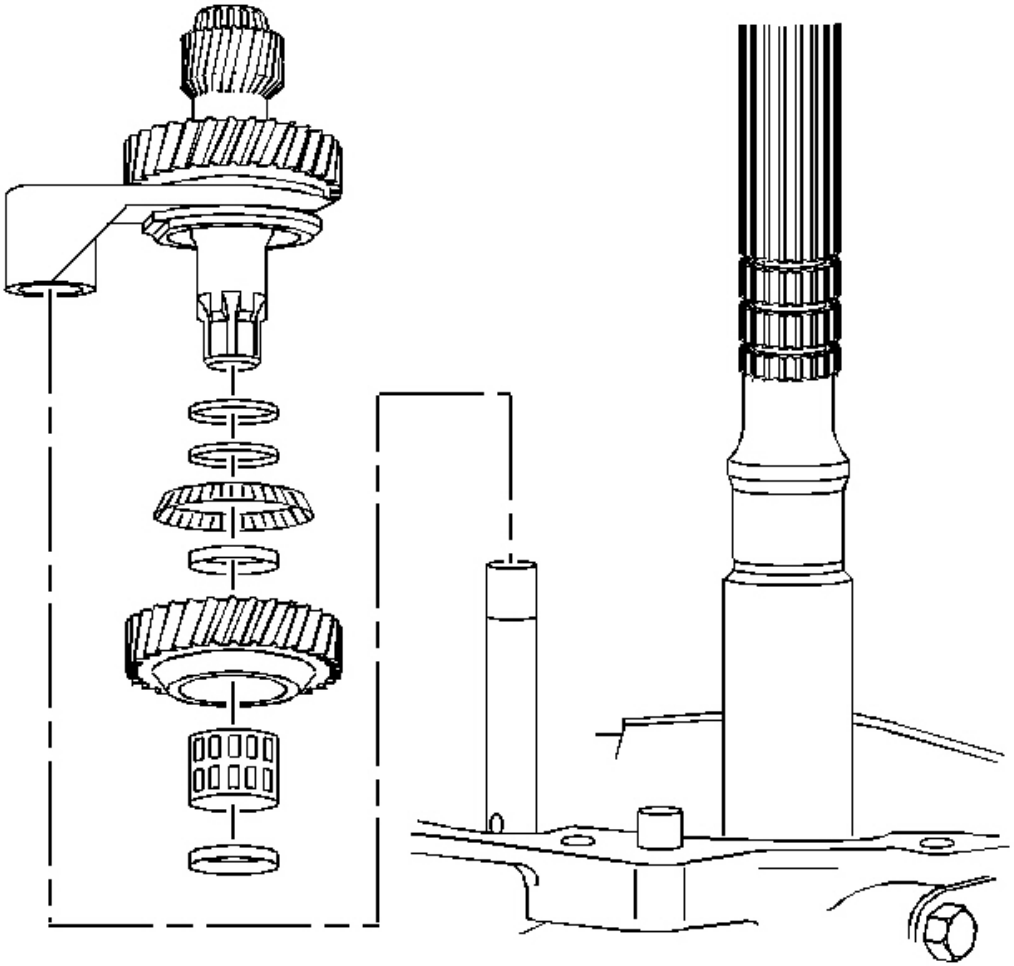

Fig. 325: Identifying Countershaft Extension Assembly & 5th/6th Shift Fork
Courtesy of GENERAL MOTORS CORP.

cardiagn.com

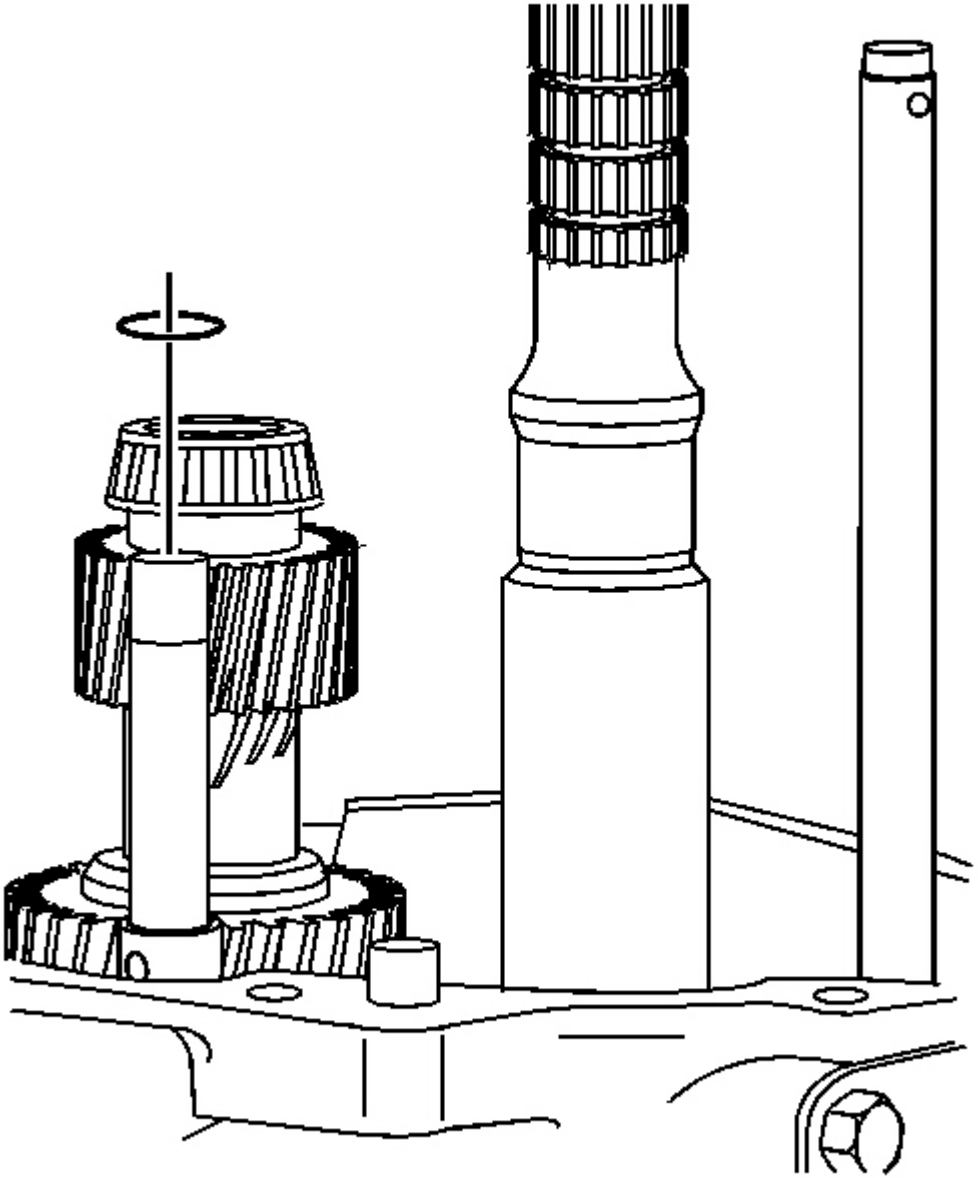

Fig. 326: View Of 5th/6th Shift Fork Retainer Ring
Courtesy of GENERAL MOTORS CORP.

3. Install the 5th/6th shift fork retainer ring.

5th/6th Speed Driven Gear Installation

cardiagn.com

Tools Required

- **J 39441** 5th/6th Driven Gear Installer. See **Special Tools** .
- **J 39441-10** 5th Gear Installer Adapter. See **Special Tools** .

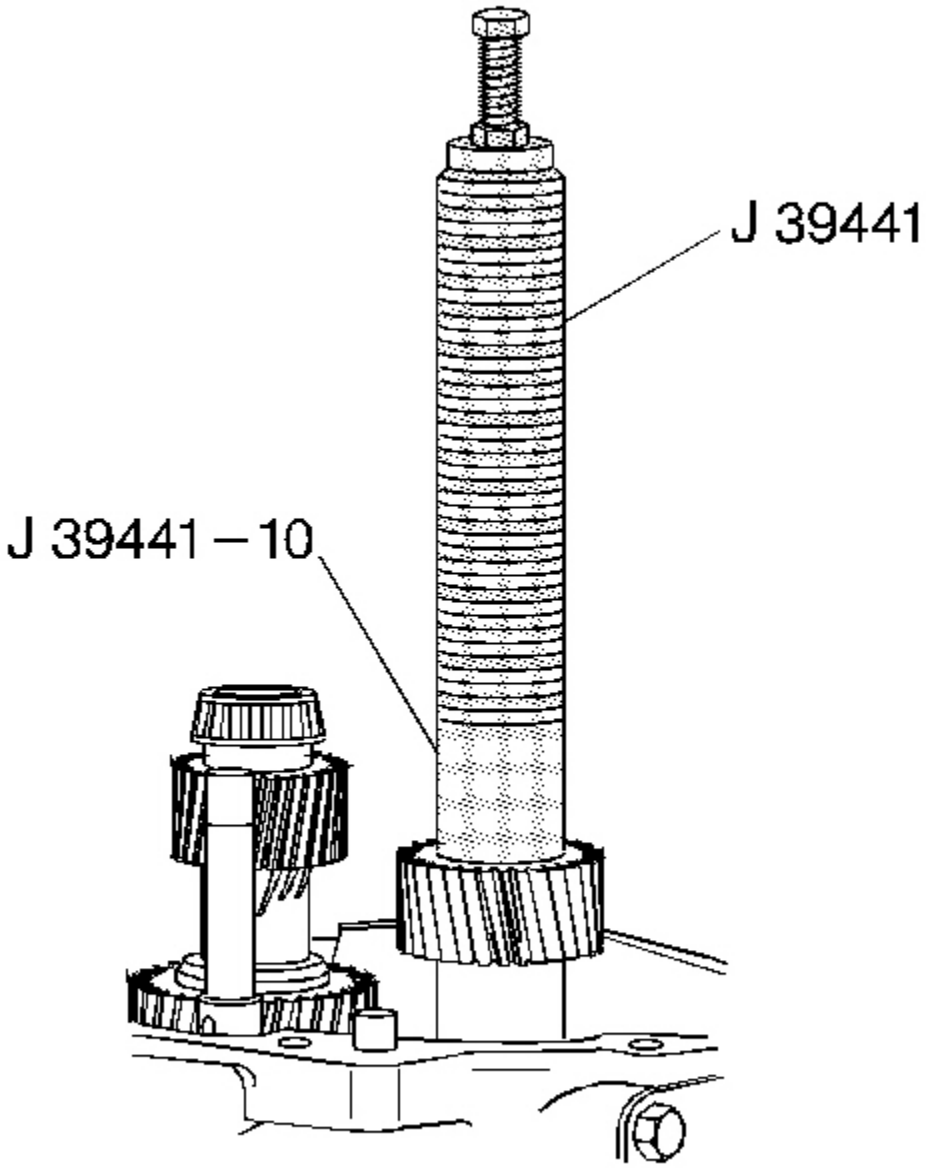

Fig. 327: Installing 5th/6th Speed Driven Gear Using J 39441 & J 39441-10

cardiagn.com

Courtesy of GENERAL MOTORS CORP.

Install the 5th/6th speed driven gear using the **J 39441** and **J 39441-10** . The smaller outside diameter (OD) of the gear faces down.

Reverse Shift Fork Installation

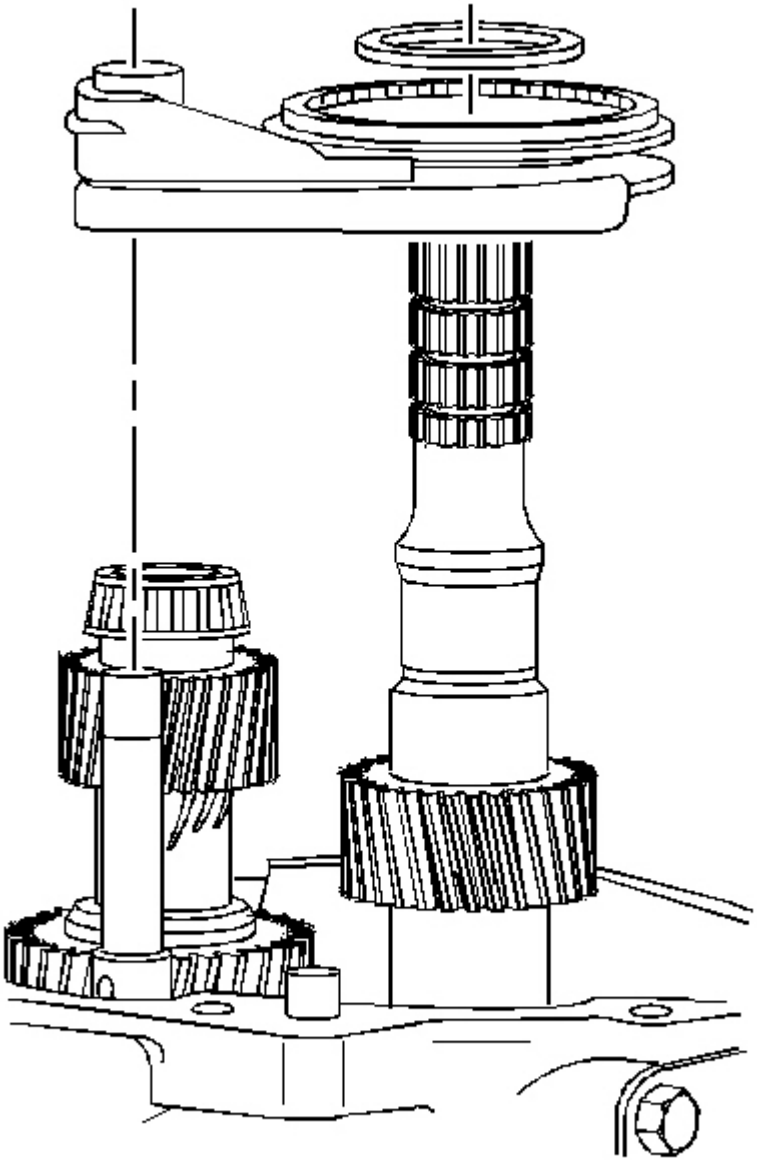

cardiagn.com

Fig. 328: Identifying Reverse Shift Fork, Synchronizer & Thrust Washer
Courtesy of GENERAL MOTORS CORP.

1. Install the reverse shift fork, the synchronizer and the thrust washer.

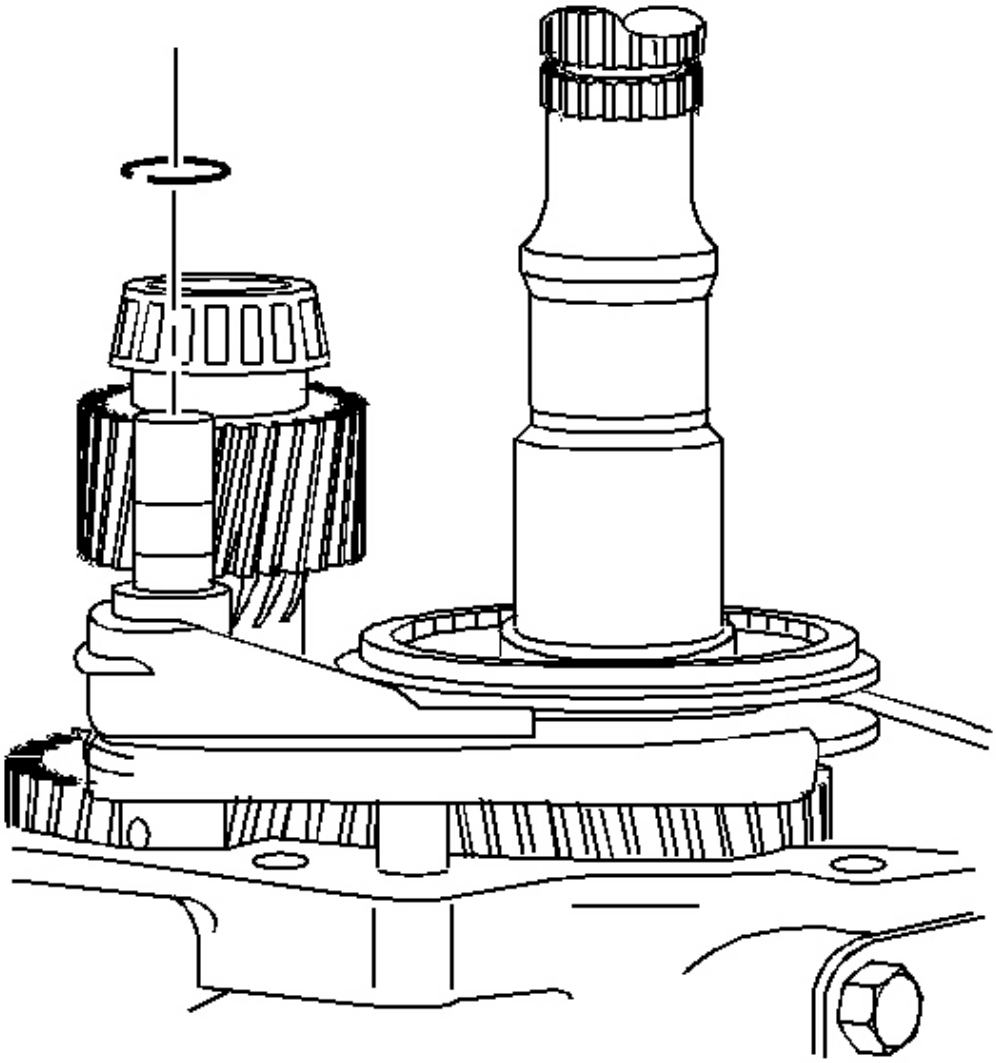

Fig. 329: Installing/Removing Shift Fork Retainer Ring
Courtesy of GENERAL MOTORS CORP.

2. Install a new shift fork retainer ring.

cardiagn.com

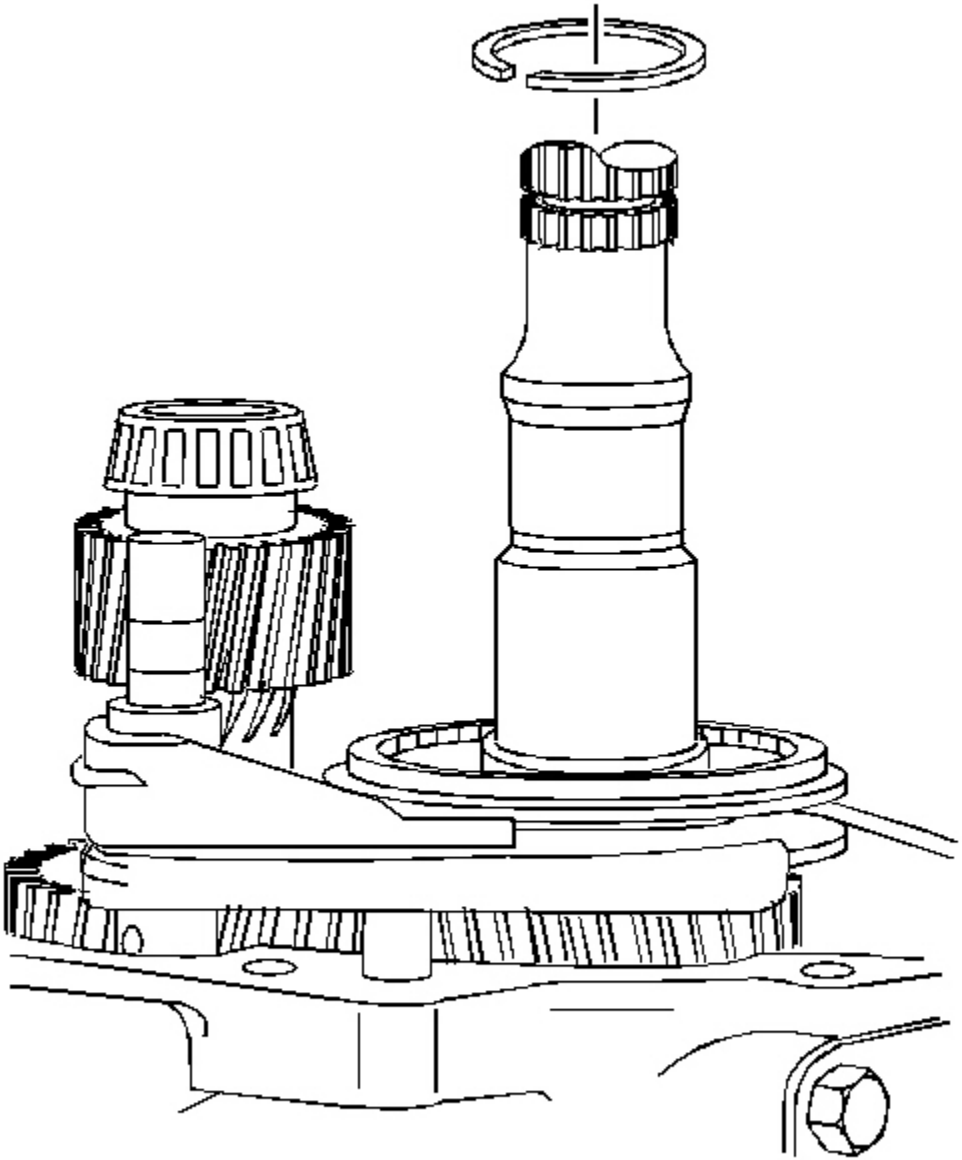

Fig. 330: View Of Reverse Synchronizer Retainer Ring
Courtesy of GENERAL MOTORS CORP.

3. Install the reverse synchronizer retainer ring.

Reverse Speed Gear Installation

cardiagn.com

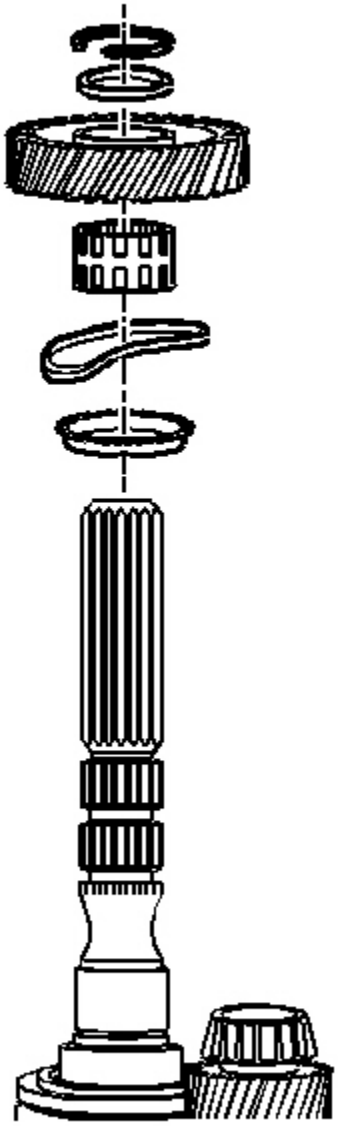

Fig. 331: Identifying Reverse Speed Gear Components
Courtesy of GENERAL MOTORS CORP.

1. Install the following parts in order:
    1. The blocking ring
    2. The wave washer
    3. The wave washer so the concave side faces the blocking ring

cardiagn.com

4. The caged needle bearing
5. The reverse speed gear
6. The thrust washer
7. The retainer ring

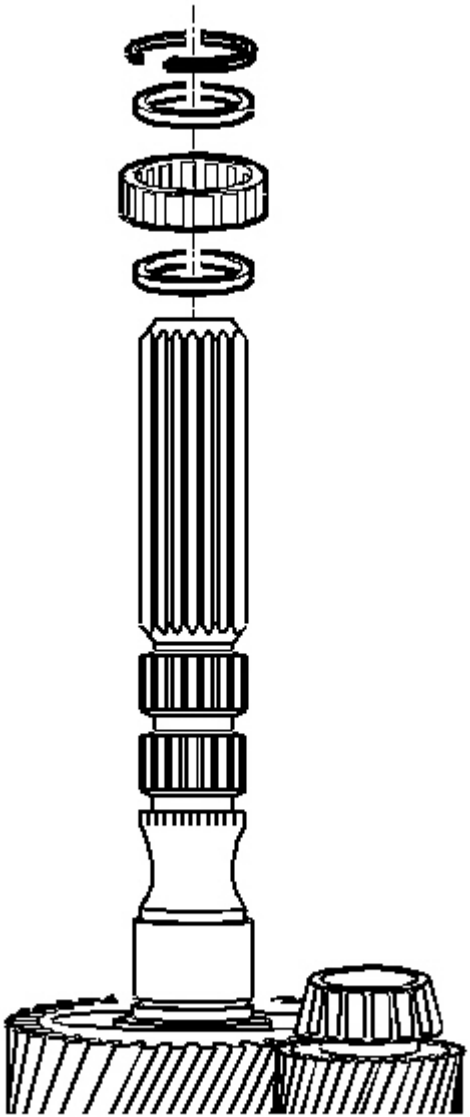

Fig. 332: View Of Mainshaft Rear Roller Bearing, Rear Bearing Retainer Ring & Spacers
Courtesy of GENERAL MOTORS CORP.

cardiagn.com

2. Install the following parts in order:
    1. The spacer
    2. The roller bearing
    3. The spacer
    4. The roller bearing retainer ring

Tools Required

J 44395 Transmission Holding Fixture. See **Special Tools** .

Extension Housing Assemble

cardiagn.com

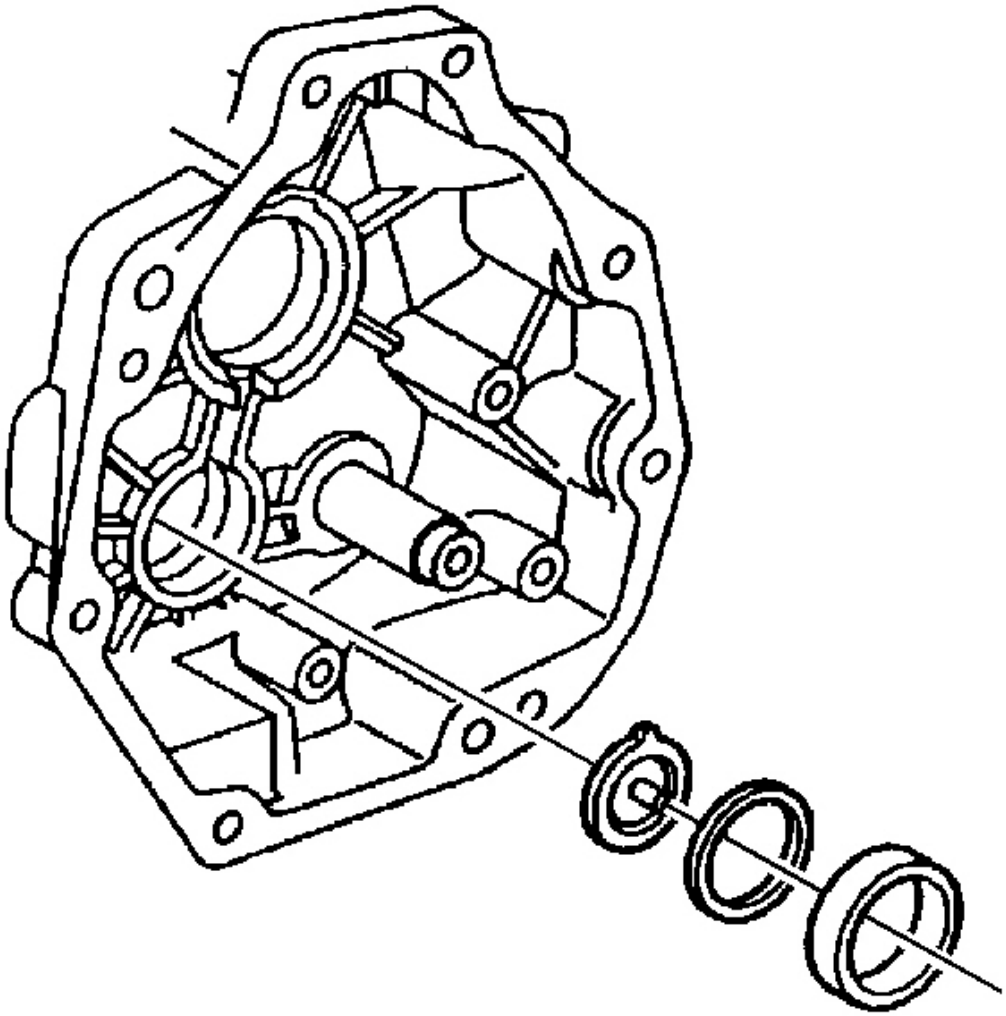

Fig. 333: View Of Countershaft Extension Bearing Race, Funnel & Shim
Courtesy of GENERAL MOTORS CORP.

1. Install the following parts in order:
    1. The funnel
    2. The selective shims. Refer to the Countershaft Extension in **Shimming Procedures (Y Car)** or **Shimming Procedures (CTSV)** or **Shimming Procedures (GTO)** .
    3. The countershaft extension bearing race

cardiagn.com

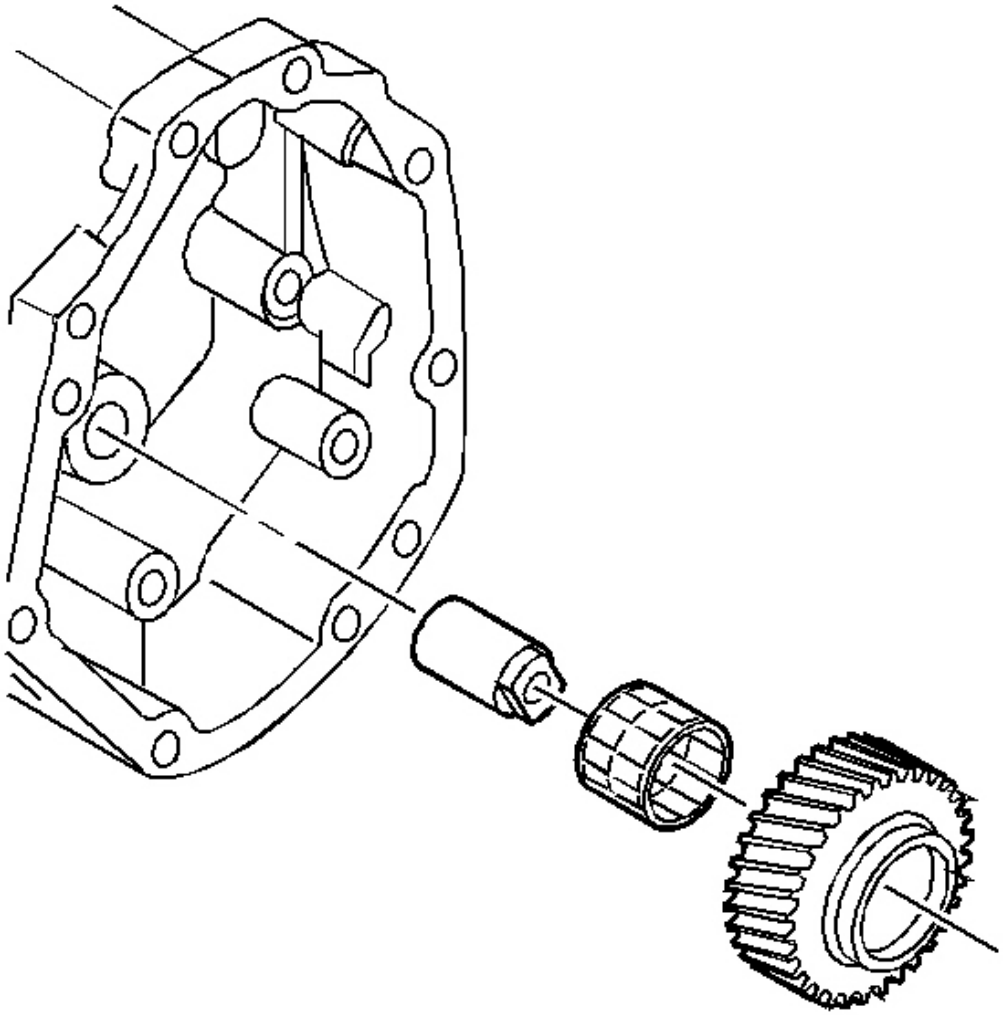

Fig. 334: Identifying Reverse Idler Shaft, Roller Bearing & Reverse Idler Gear
Courtesy of GENERAL MOTORS CORP.

2. Install the following parts in order:
    1. The reverse idler shaft
    2. The roller bearing
    3. The reverse idler gear

cardiagn.com

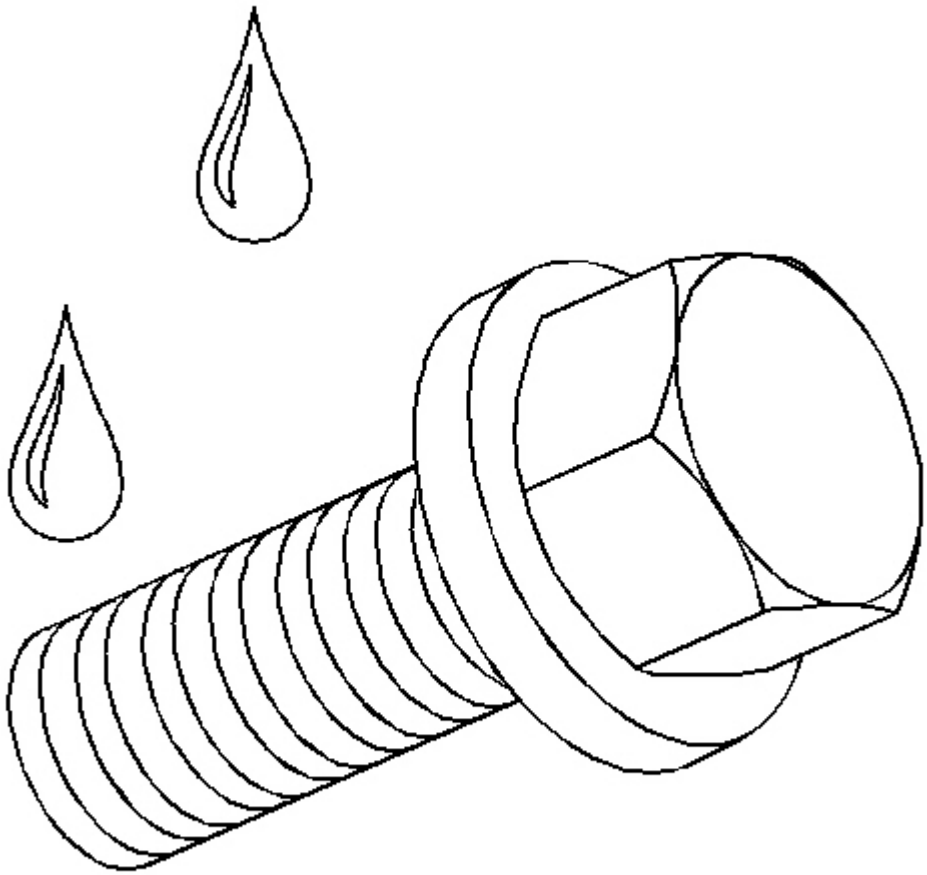

Fig. 335: Applying Sealant To Reverse Idler Shaft Brackets Bolt Threads
Courtesy of GENERAL MOTORS CORP.

3. Apply GM P/N United States 12345382, GM P/N Canada 10953489 or the equivalent to the reverse idler shaft brackets bolt threads.

cardiagn.com

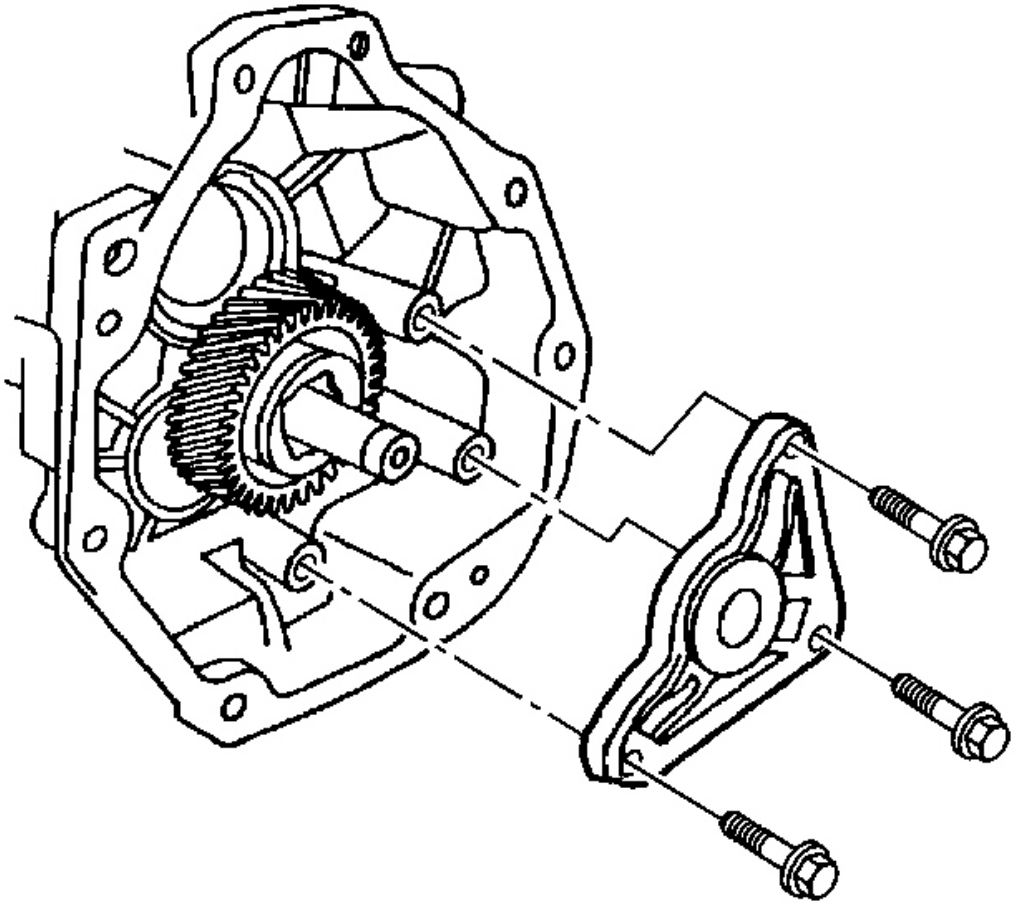

Fig. 336: View Of Reverse Idler Shaft Bracket & Mounting Bolts
Courtesy of GENERAL MOTORS CORP.

NOTE: Refer to Fastener Notice in Cautions and Notices.

4. Install the following parts in order:
    1. The reverse idler shaft bracket.
    2. The reverse idler shaft bracket bolts.

    Tighten: Tighten the bolts to 25 N.m (18 Ib. ft).

cardiagn.com

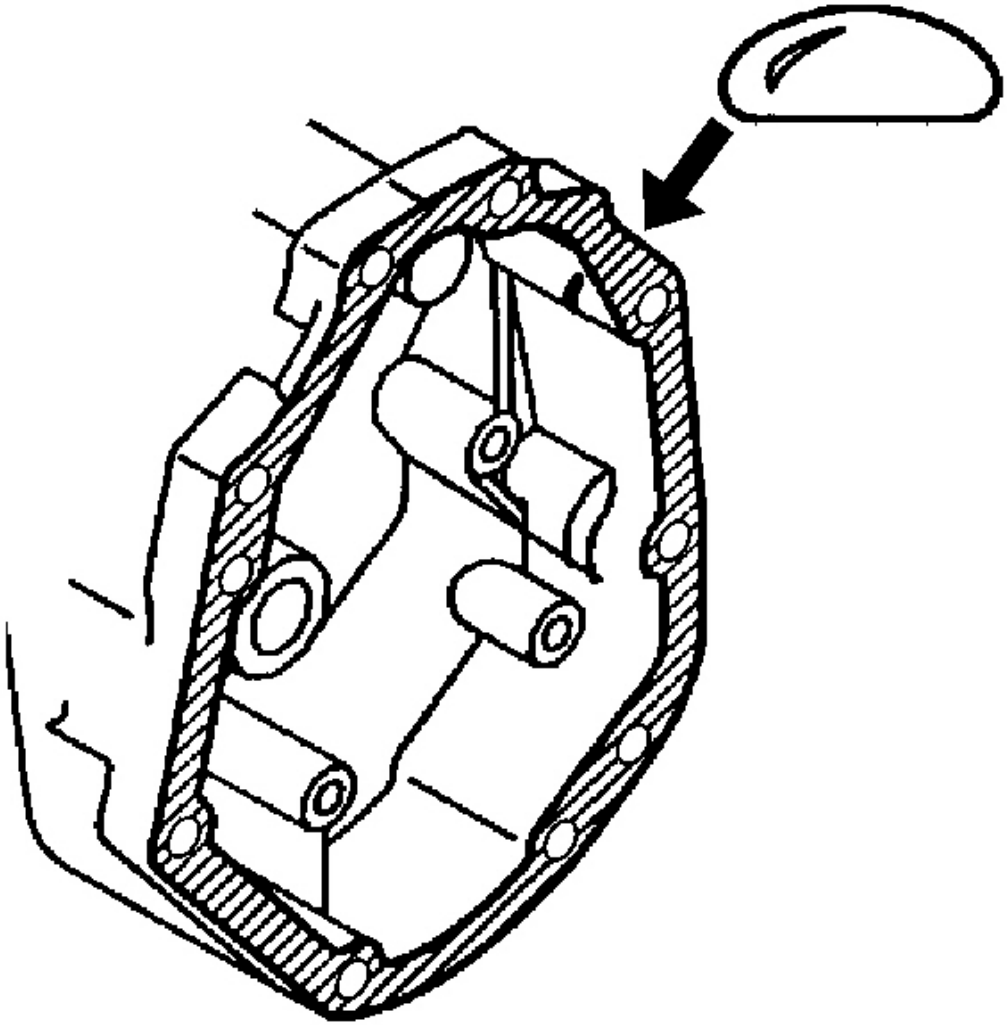

Fig. 337: Applying Sealant To Extension Housing To Transmission Case Mating Surface
Courtesy of GENERAL MOTORS CORP.

5. Apply sealant GM P/N United States 12345739, GM P/N Canada 10953472 or equivalent to the extension housing to the transmission case mating surface.

cardiagn.com

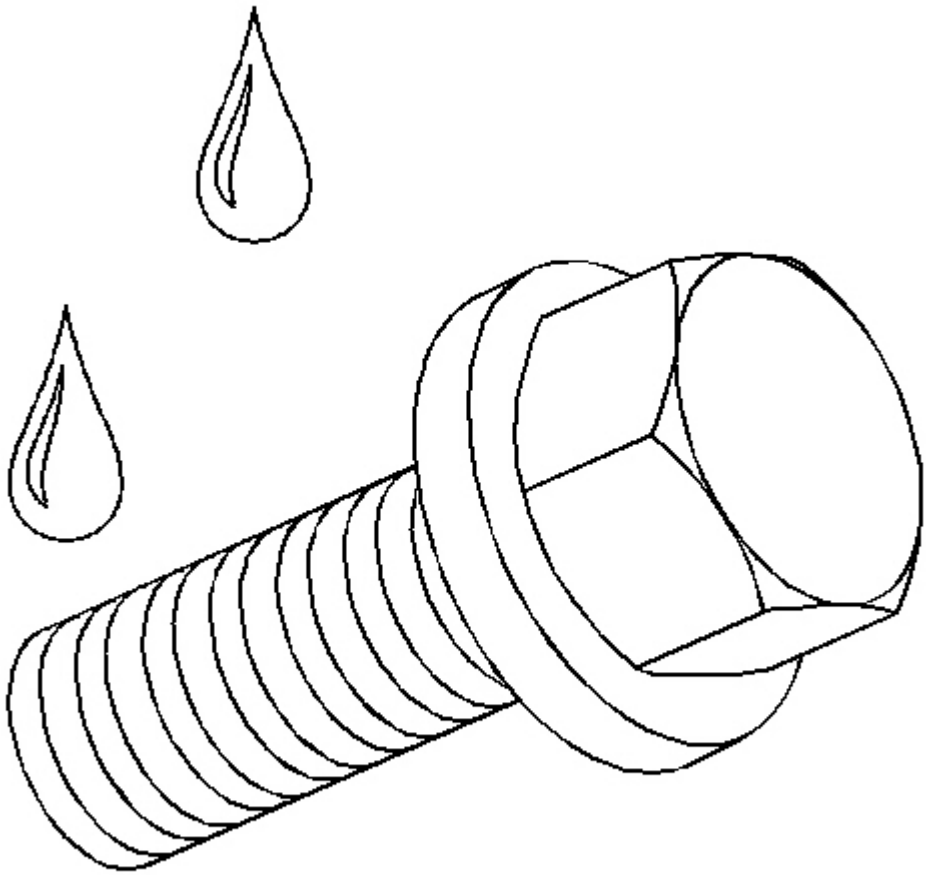

Fig. 338: Applying Sealant To Top Extension Housing Bolt
Courtesy of GENERAL MOTORS CORP.

6. Apply thread sealer GM P/N United States 12346004, GM P/N Canada 10953480 or equivalent to the top two extension housing bolts.

cardiagn.com

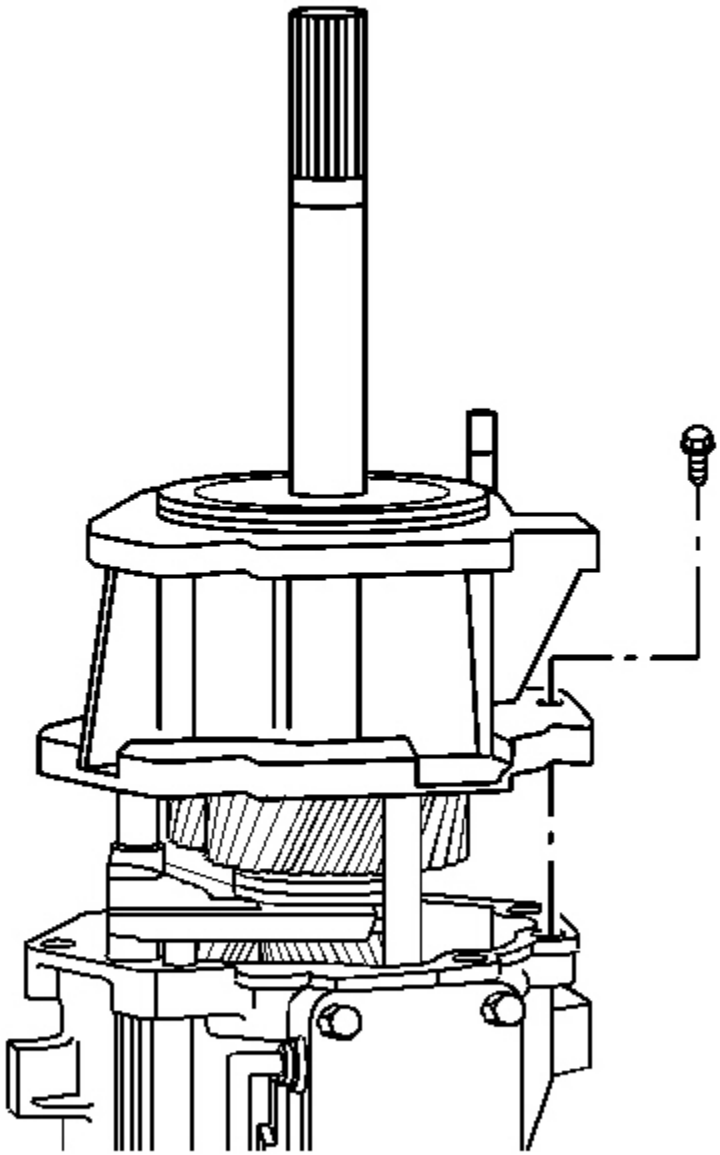

Fig. 339: View Of Extension Housing Bolts & Extension Housing
Courtesy of GENERAL MOTORS CORP.

IMPORTANT: Align the 5th/6th shift shaft to the extension housing bore in order to install the extension housing.

cardiagn.com

7. Install the extension housing.
8. Install the extension housing bolts.

   Tighten: Tighten the bolts to 48 N.m (36 lb ft).

9. Install the vent tube.

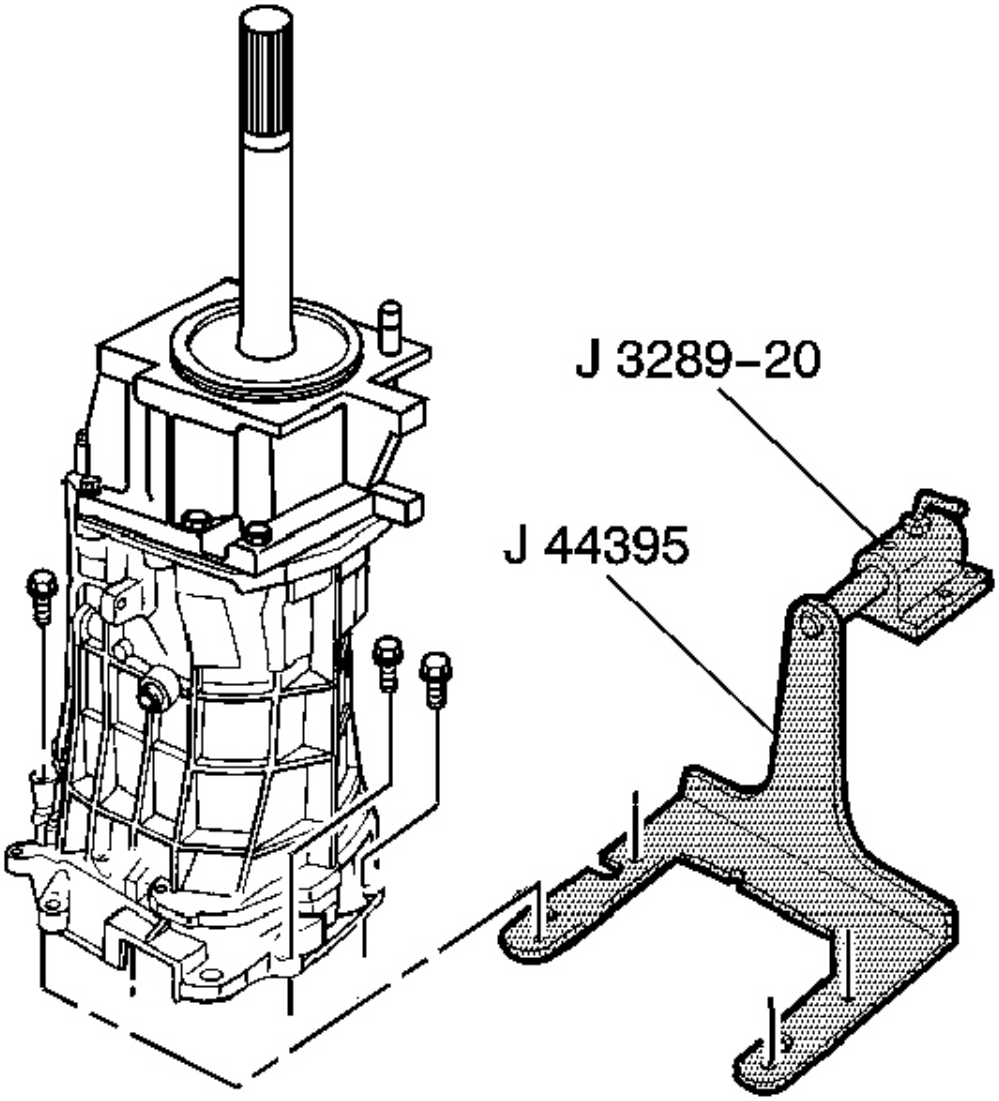

Fig. 340: Removing/Installing J 44395 On Transmission Case

cardiagn.com

Courtesy of GENERAL MOTORS CORP.

10. Remove the **J 44395** .

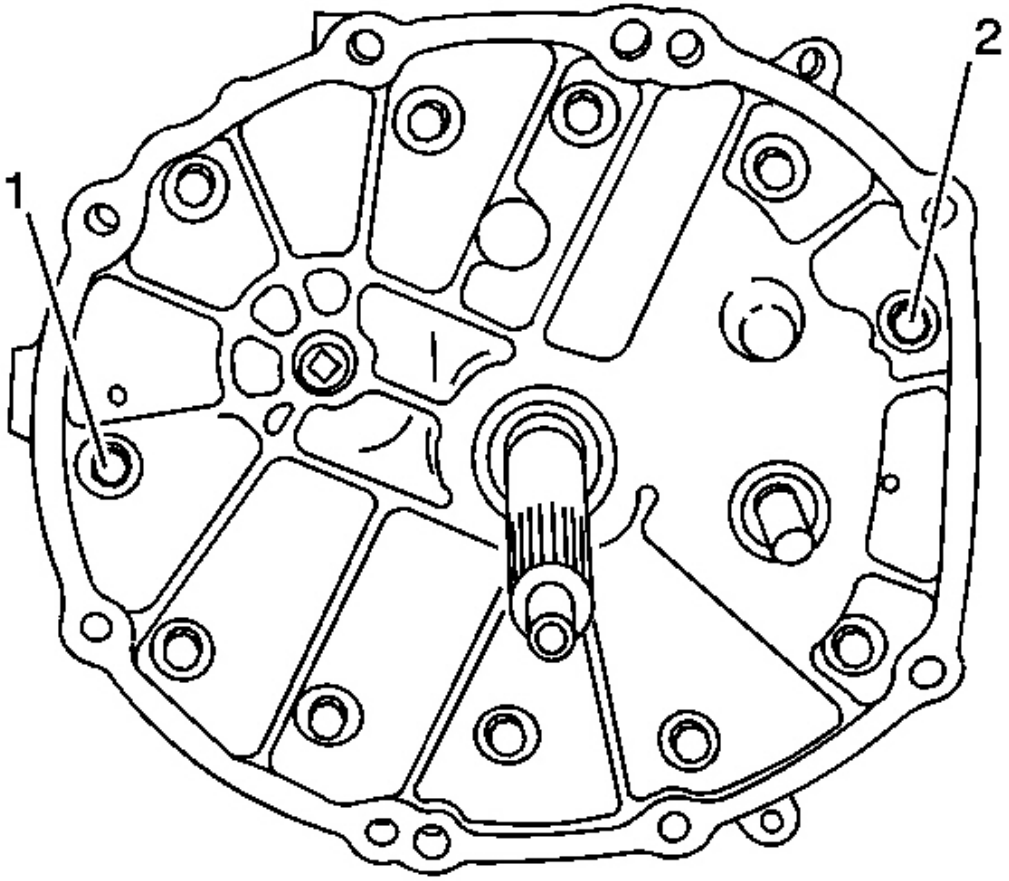

Fig. 341: Installing/Removing Two Adapter Plate Bolts
Courtesy of GENERAL MOTORS CORP.

11. Install the remaining two adapter plate bolts (1) and (2).

    Tighten: Tighten the adapter plate bolts to 48 N.m (36 lb ft).

TRANSMISSION ASSEMBLE (CTSV)

Tools Required

cardiagn.com

J 36850 Transjel(R) Lubricant Assembly Lube. See **Special Tools** .

Shift Shaft Assemblies and Gear Clusters Installation

1. Lubricate all components as assembly progresses, using **J 36850** .

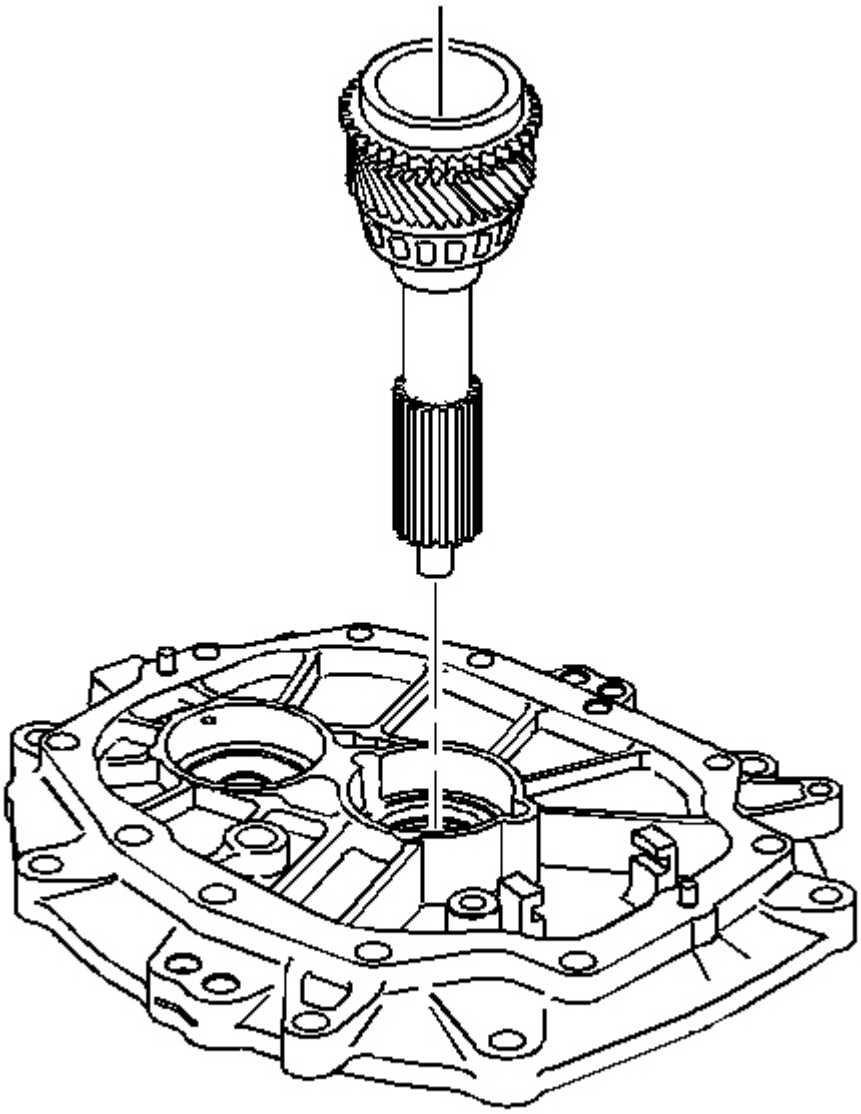

Fig. 342: View Of Input Shaft
Courtesy of GENERAL MOTORS CORP.

cardiagn.com

2. Install the input shaft in the adapter plate.

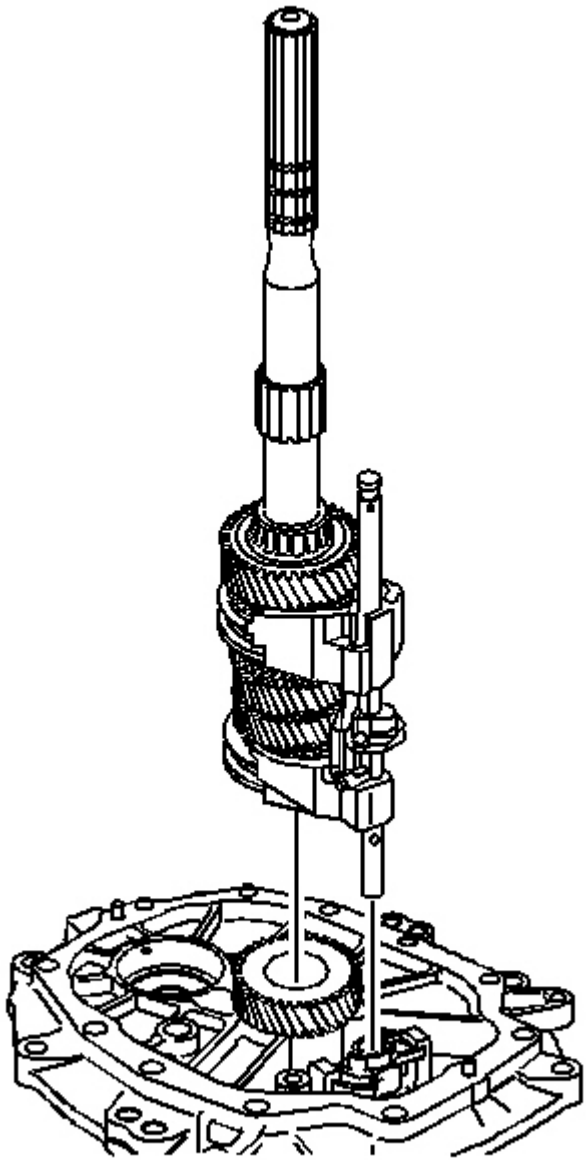

Fig. 343: Installing/Removing Mainshaft Assembly & Shift Shaft Components
Courtesy of GENERAL MOTORS CORP.

3. Assemble the shift shaft to the mainshaft.

cardiagn.com

4. Install the neutral return roll pin to the shift shaft.
5. Install the mainshaft and the shift shaft assembly into the adapter plate.

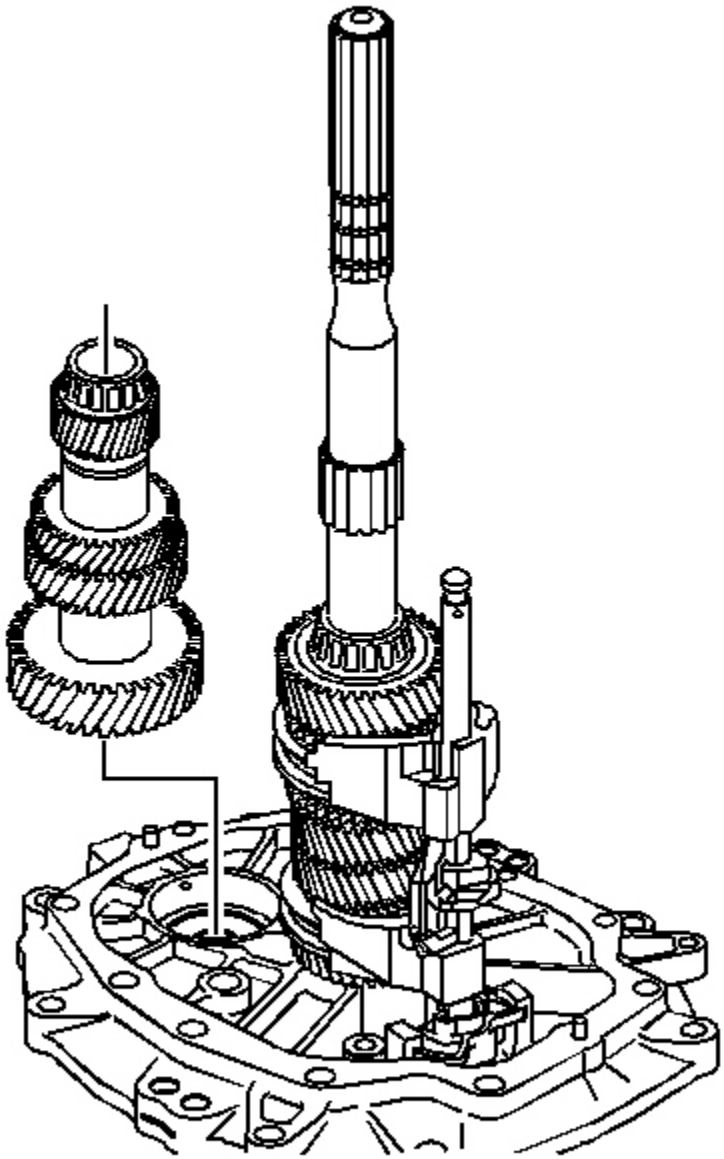

Fig. 344: Installing/Removing Countershaft Assembly
Courtesy of GENERAL MOTORS CORP.

cardiagn.com

6. Install the countershaft assembly using the following sequence:
    1. Lift up the mainshaft assembly enough in order to install the countershaft assembly.
    2. Install the countershaft assembly.
    3. Lift the mainshaft assembly enough in order to rotate the input shaft to engage the synchronizer keys with 4th gear blocking ring.

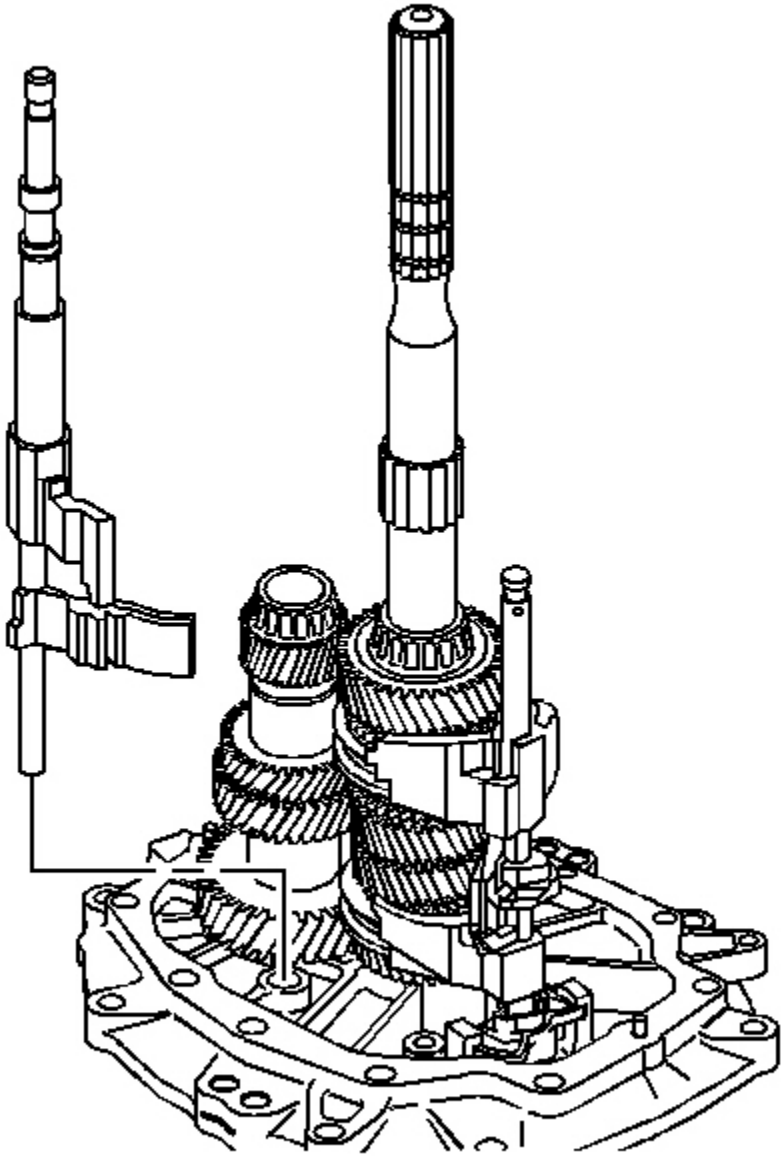

cardiagn.com

Fig. 345: View Of 5th/6th & Reverse Shift Shaft
Courtesy of GENERAL MOTORS CORP.

7. Install the 5th/6th and the reverse shift shaft.

   Align the slots of the shift shaft levers with the interlock plate.

Transmission Case Installation

Tools Required

- **J 41099** Skip Shift Sensor Remover/Installer. See **Special Tools** .
- **J 36850** Transjel(R) Lubricant. See **Special Tools** .

IMPORTANT: Lubricate all components as the assembly progresses. Use J 36850 or the equivalent.

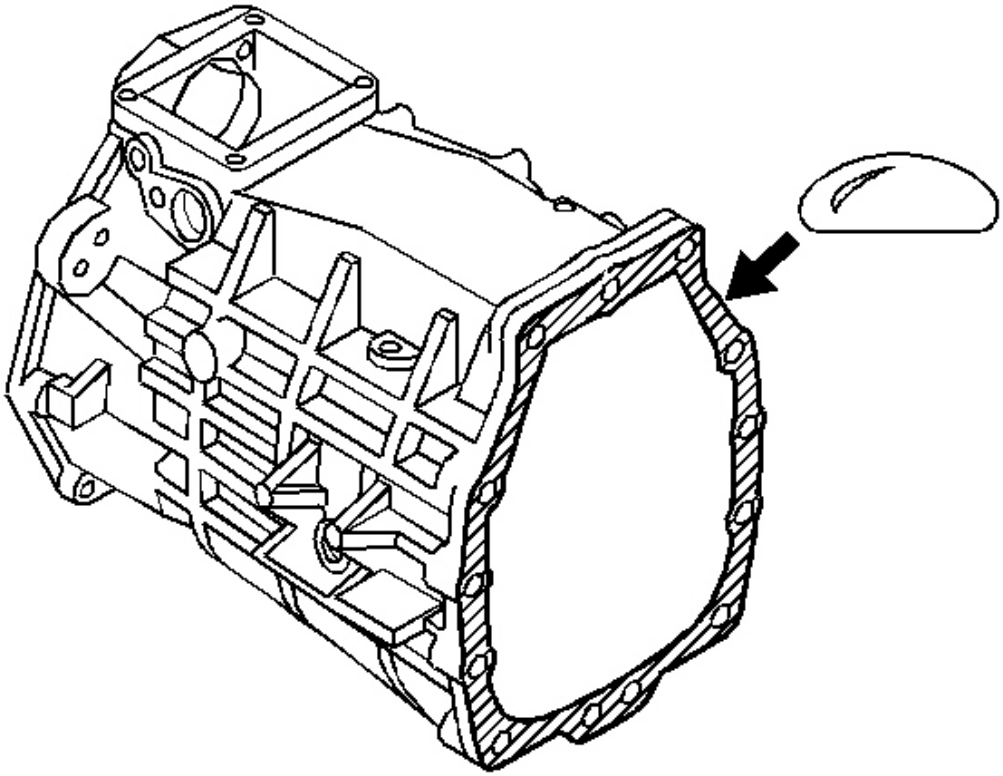

cardiagn.com

Fig. 346: Apply Sealer To Transmission Case To Adapter Plate Mating Surface
Courtesy of GENERAL MOTORS CORP.

1. Apply sealant GM P/N 12345739, (Canadian P/N 10953472) or equivalent to the transmission case to adapter plate mating surface.

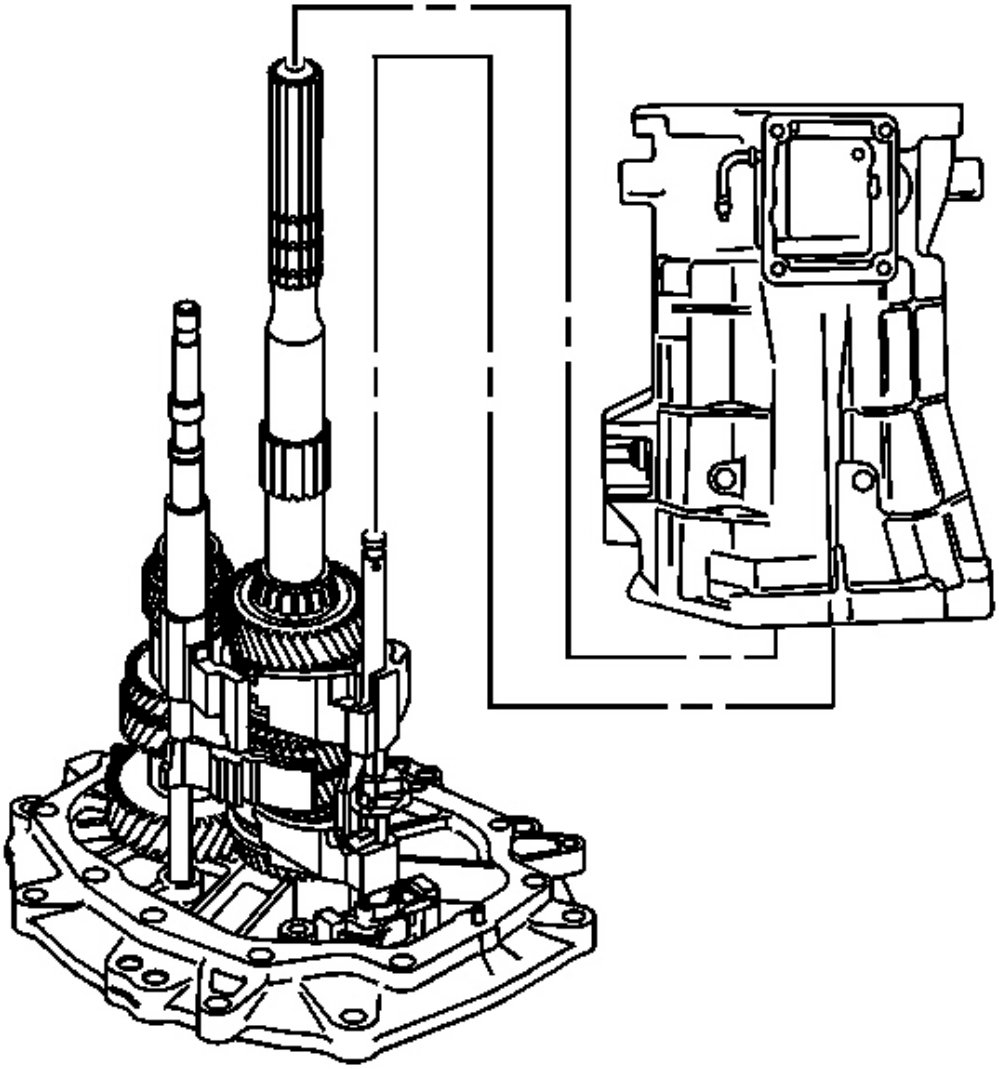

Fig. 347: Installing/Removing Transmission Case
Courtesy of GENERAL MOTORS CORP.

cardiagn.com

2. Do the following in order to install the transmission case and the offset lever:
    1. Shift the transmission into NEUTRAL in order to keep the 3rd/4th shift shaft from engaging.
    2. Install the offset lever.
    3. Slide the transmission case onto the gear clusters and the shift rail components.

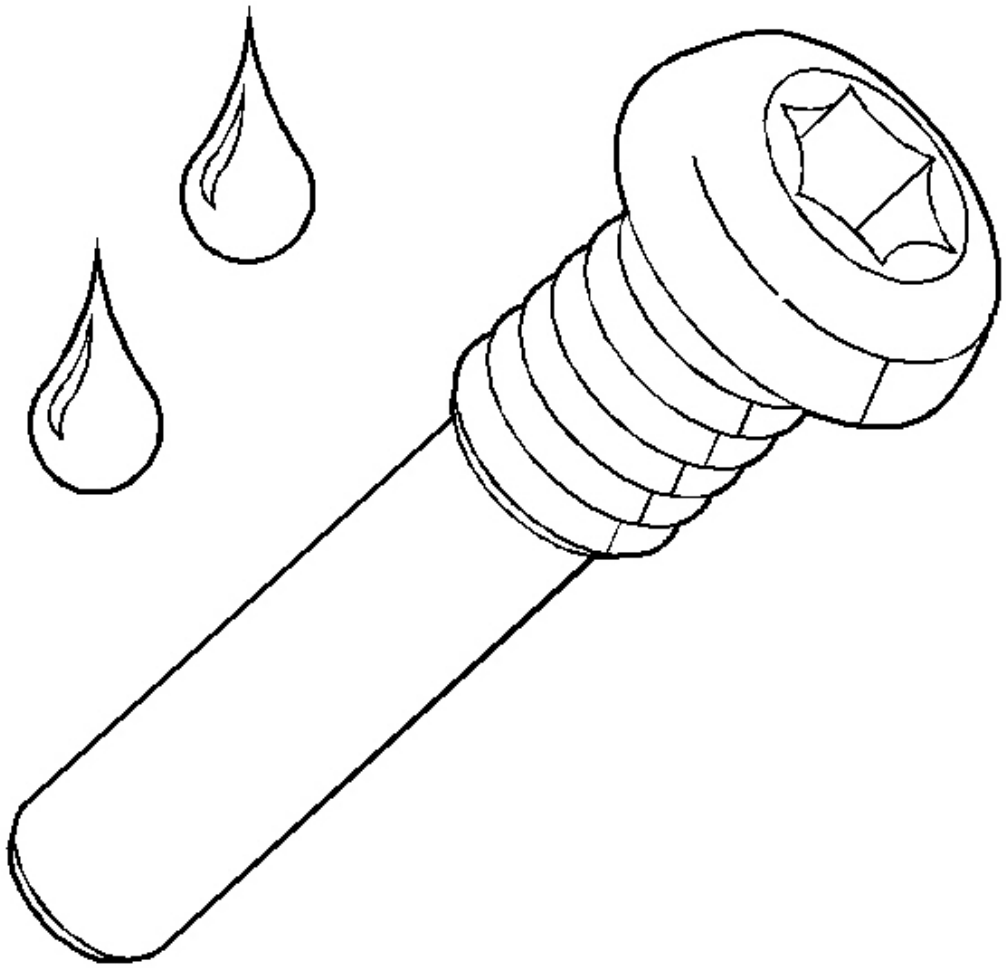

Fig. 348: Applying Sealer To Shift Lever Guide Bolts Threads
Courtesy of GENERAL MOTORS CORP.

3. Apply threadlock GM P/N 12346004, (Canadian P/N 10953480) or equivalent to the threads of the shift lever guide bolts.

cardiagn.com

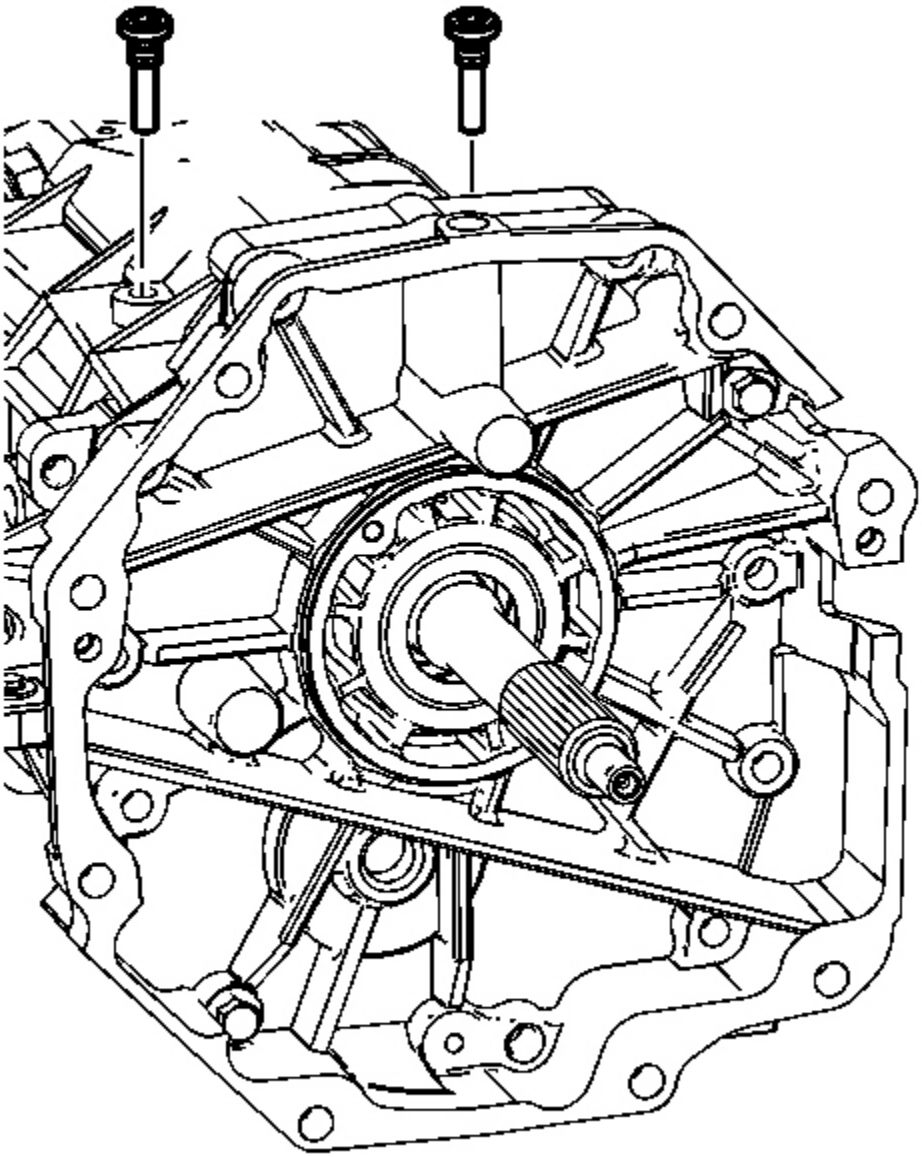

Fig. 349: View Of Shift Lever Guide Bolts
Courtesy of GENERAL MOTORS CORP.

NOTE: Refer to Fastener Notice in Cautions and Notices.

4. Install the shift lever guide bolts and pull up on 5th/6th and reverse shift rail assembly. This will help

cardiagn.com

align the slot of the shift interlock plate with the guide bolt hole.

Tighten: Tighten the bolts to 27 N.m (20 Ib. ft).

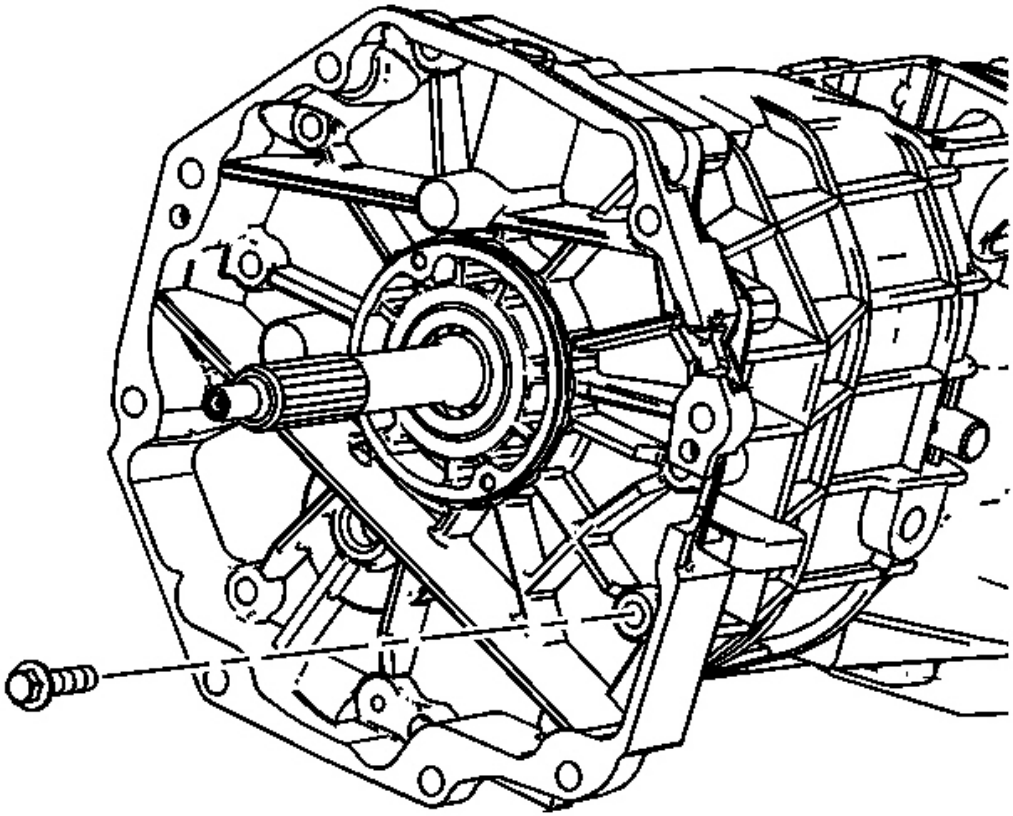

Fig. 350: Locating Adapter Plate To Transmission Case Bolts
Courtesy of GENERAL MOTORS CORP.

5. Install the adapter plate to transmission case bolts.

   Tighten: Tighten the bolts to 48 N.m (36 Ib. ft).

cardiagn.com

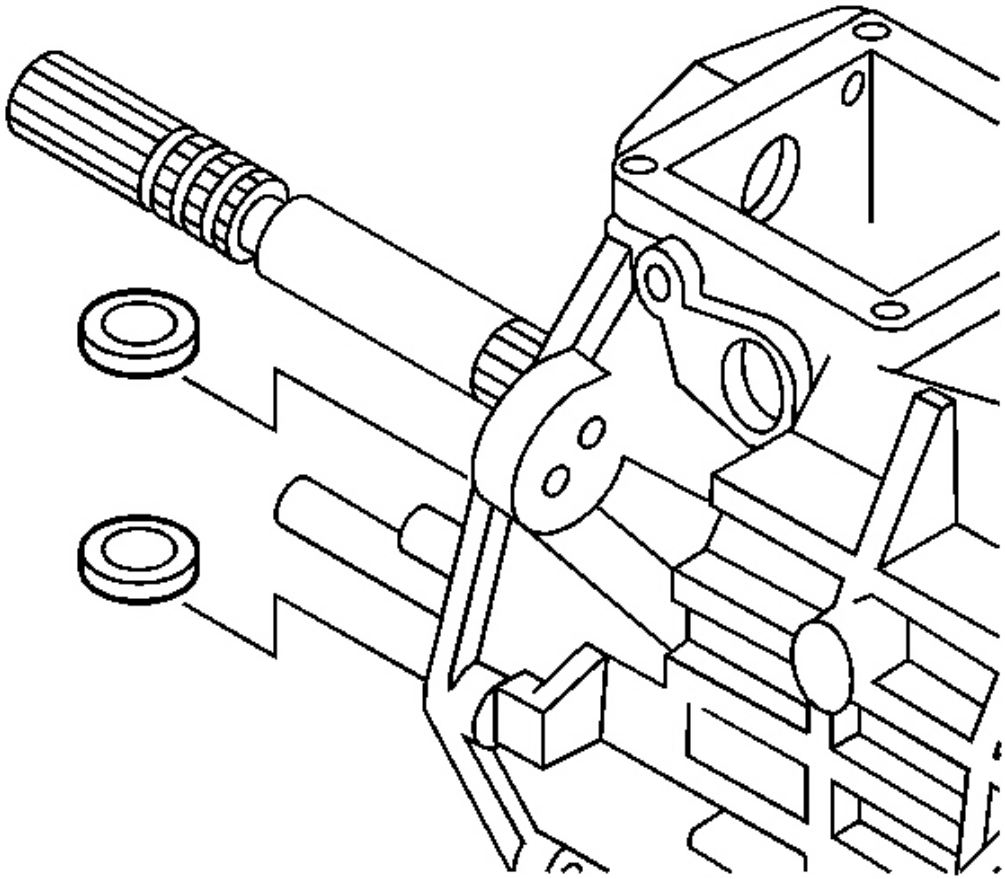

Fig. 351: Identifying Transmission Magnets
Courtesy of GENERAL MOTORS CORP.

6. Install the magnets into the transmission case.

cardiagn.com

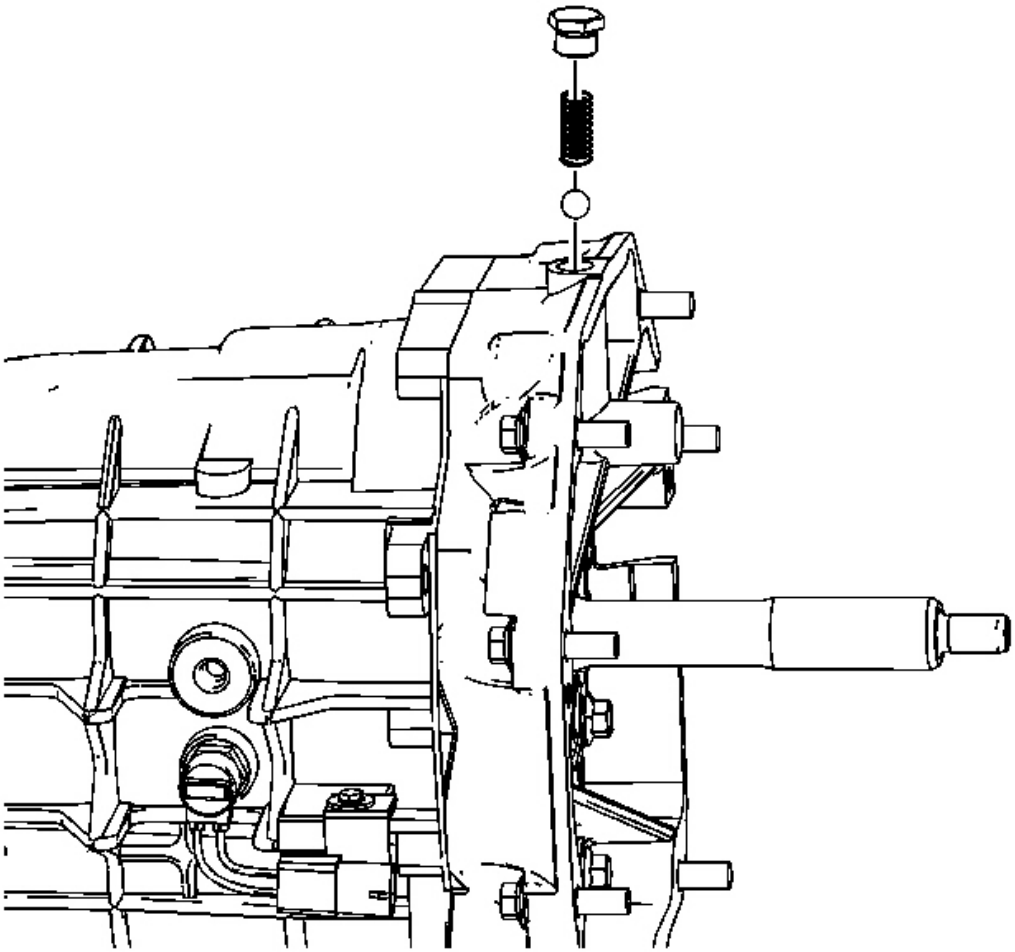

Fig. 352: Installing/Removing Shift Detent Plug, Spring And Ball
Courtesy of GENERAL MOTORS CORP.

7. Install the shift detent plug, spring and ball.

cardiagn.com

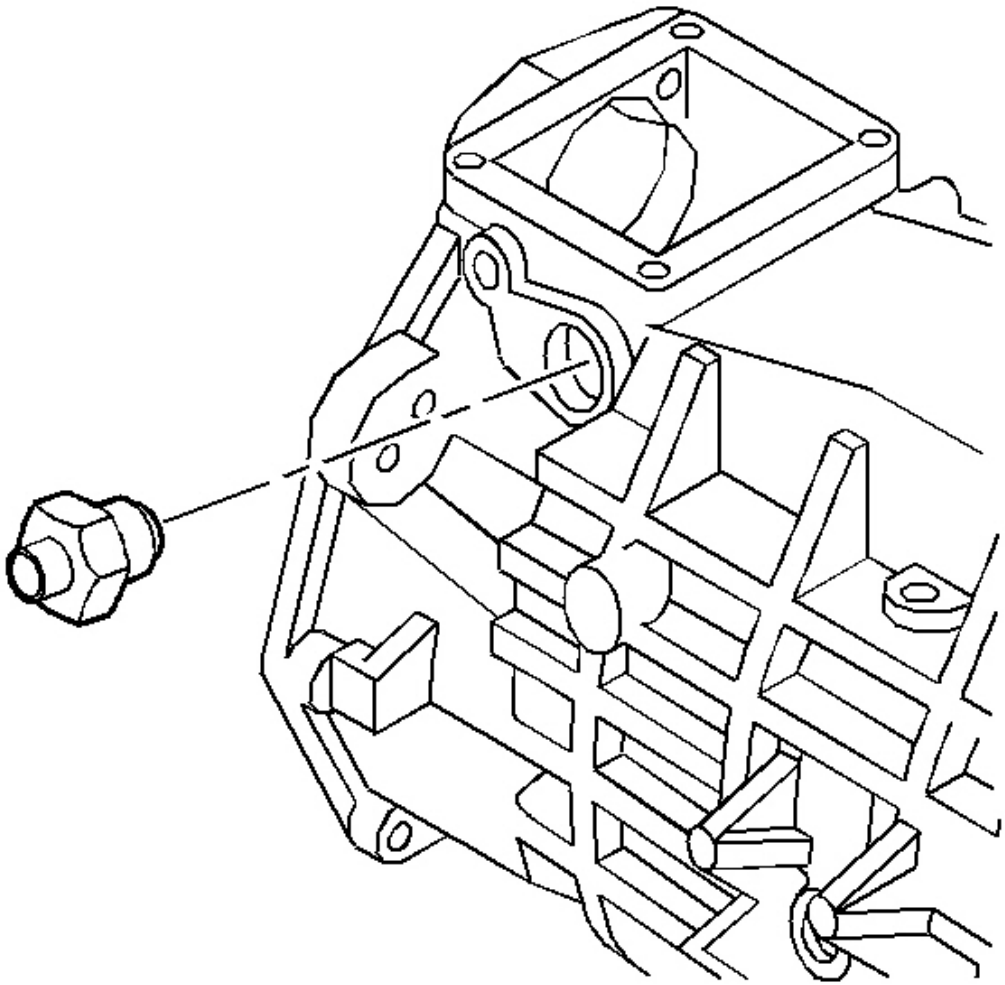

Fig. 353: View Of Shift Detent Assembly
Courtesy of GENERAL MOTORS CORP.

8. Install the shift detent assembly.

   Tighten: Tighten the detent assembly to 40 N.m (30 Ib. ft).

cardiagn.com

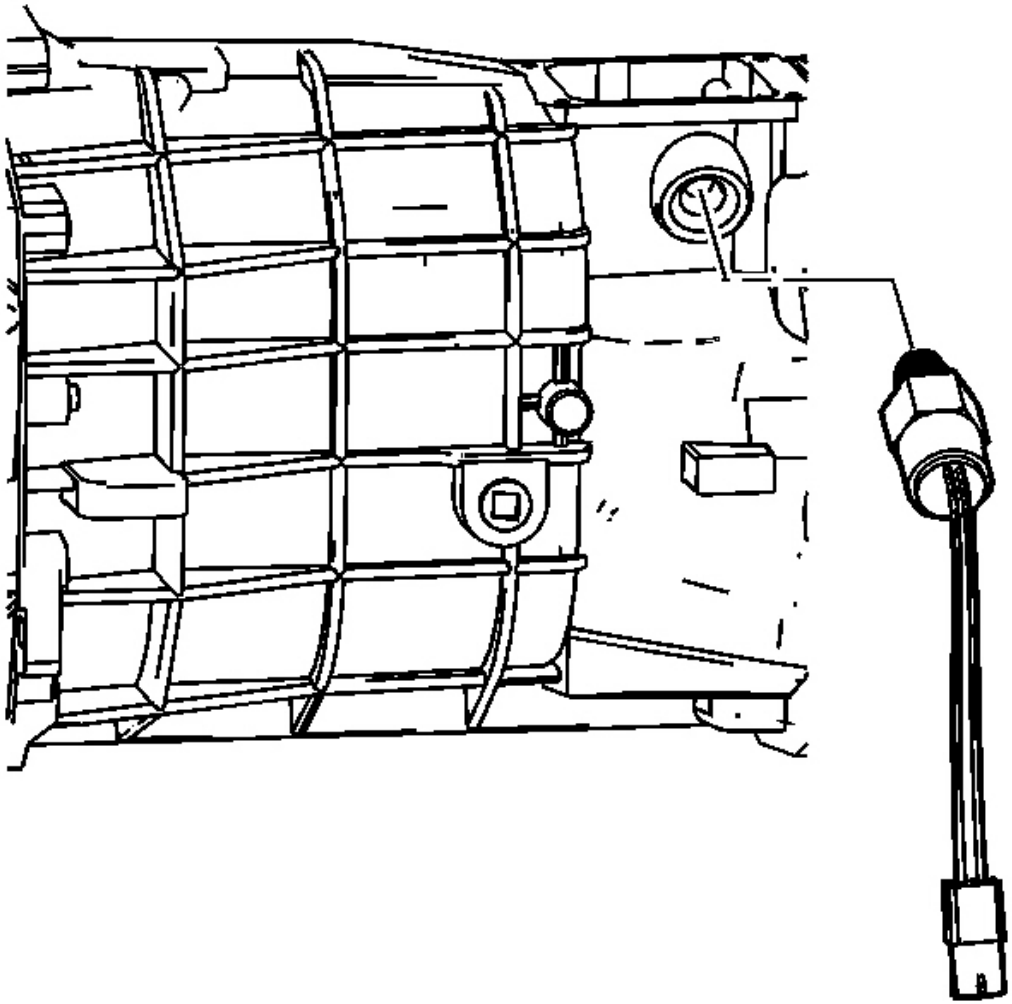

Fig. 354: Locating Computer Aided Gear Select Solenoid
Courtesy of GENERAL MOTORS CORP.

9. Install the computer aided gear select solenoid.

   Tighten: Tighten the solenoid to 40 N.m (30 Ib. ft).

Countershaft Extension Installation

cardiagn.com

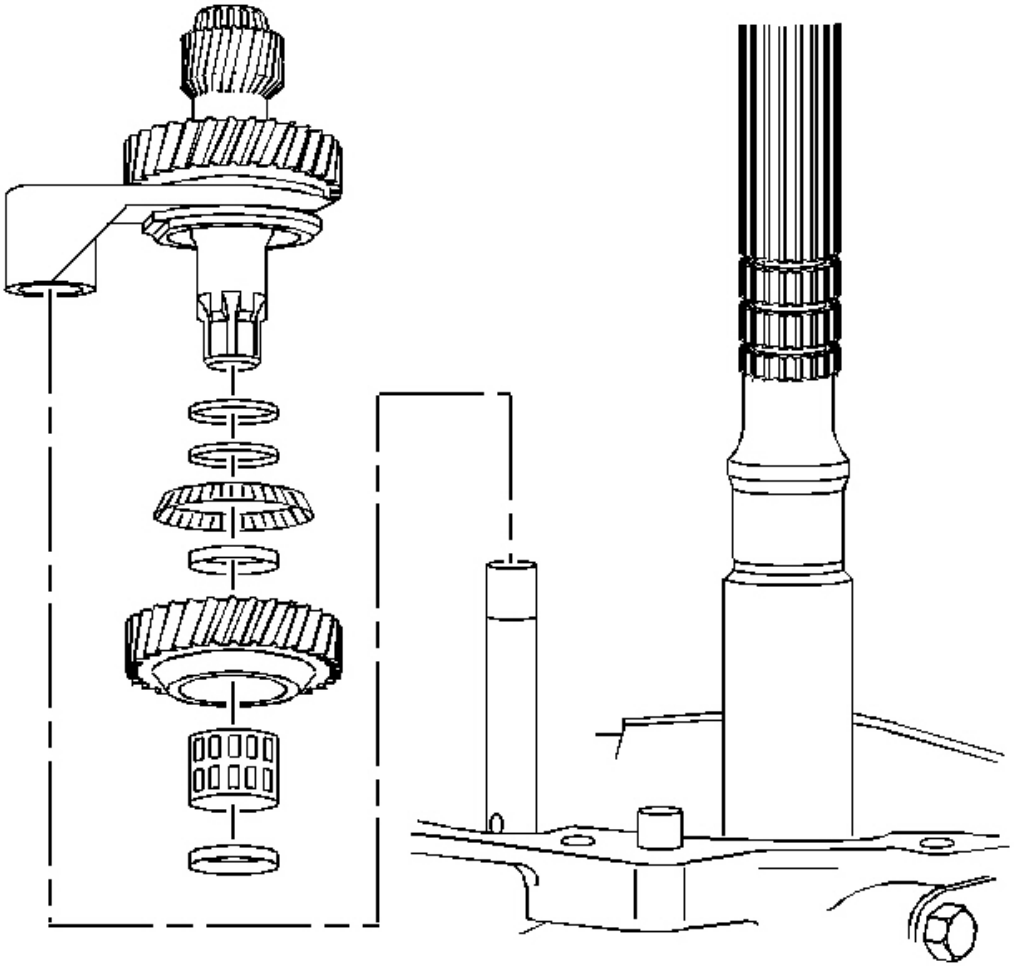

Fig. 355: Identifying Countershaft Extension Assembly & 5th/6th Shift Fork
Courtesy of GENERAL MOTORS CORP.

1. Position the transmission in the horizontal position.
2. Install the countershaft extension assembly and the 5th/6th shift fork. The splines of the countershaft extension must engage the splines of the countershaft.

cardiagn.com

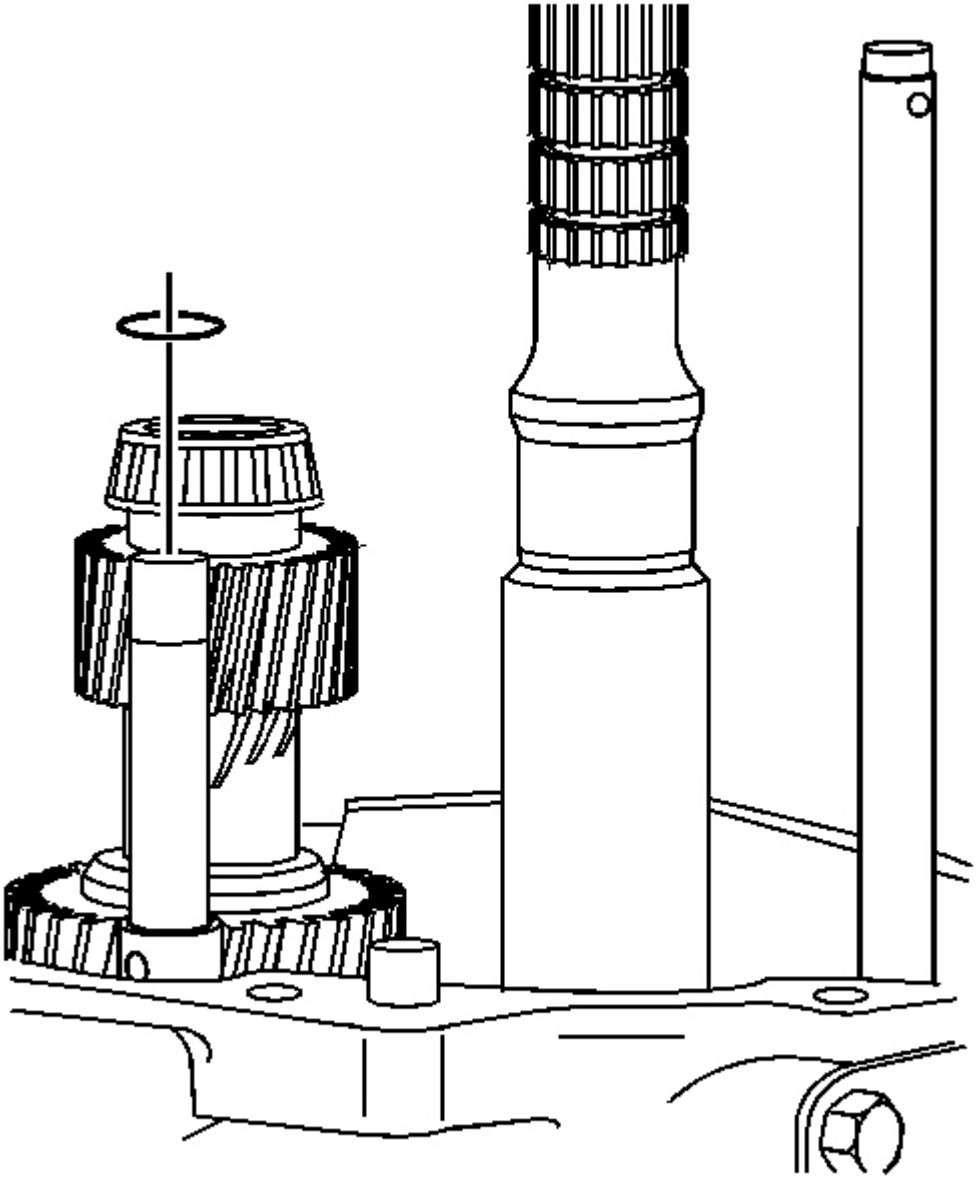

Fig. 356: View Of 5th/6th Shift Fork Retainer Ring
Courtesy of GENERAL MOTORS CORP.

3. Install the 5th/6th shift fork retainer ring.

5th/6th Speed Driven Gear Installation

cardiagn.com

Tools Required

- **J 39441** 5th/6th Driven Gear Installer. See **Special Tools** .
- **J 39441-10** 5th Gear Installer Adapter. See **Special Tools** .

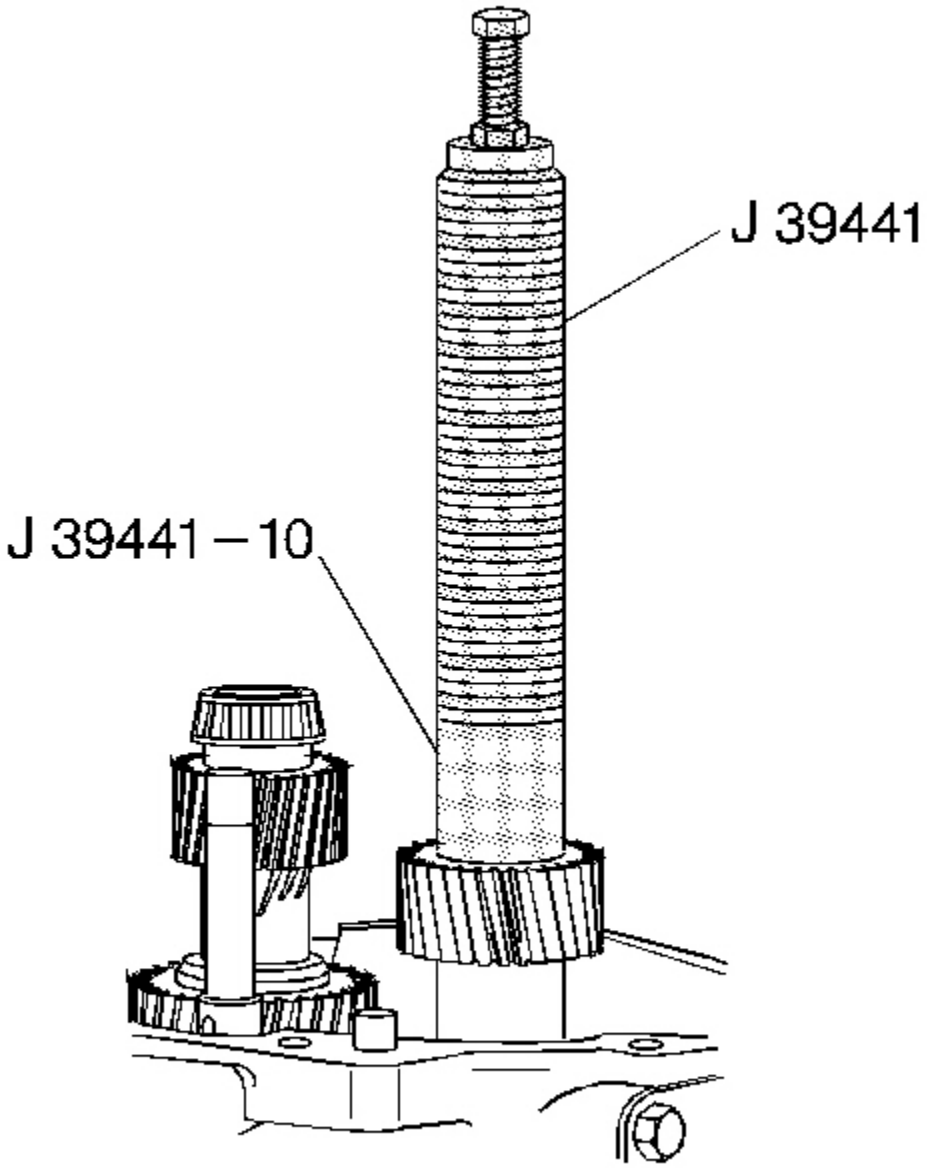

Fig. 357: Installing 5th/6th speed Driven Gear Using J 39441 & J 39441-10

cardiagn.com

Courtesy of GENERAL MOTORS CORP.

Install the 5th/6th speed driven gear using the **J 39441** and **J 39441-10** . The smaller outside diameter (OD) of the gear faces down.

Reverse Shift Fork Installation

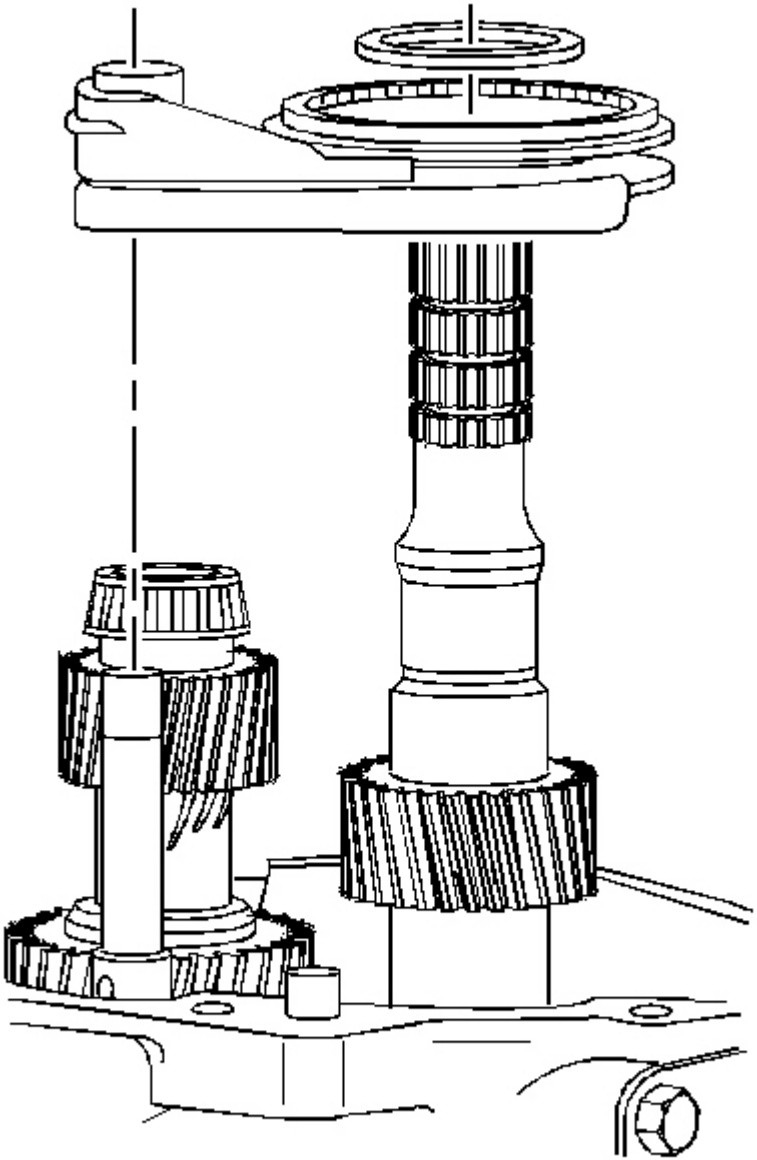

cardiagn.com

Fig. 358: Identifying Reverse Shift Fork, Synchronizer & Thrust Washer
Courtesy of GENERAL MOTORS CORP.

1. Install the reverse shift fork, the synchronizer and the thrust washer.

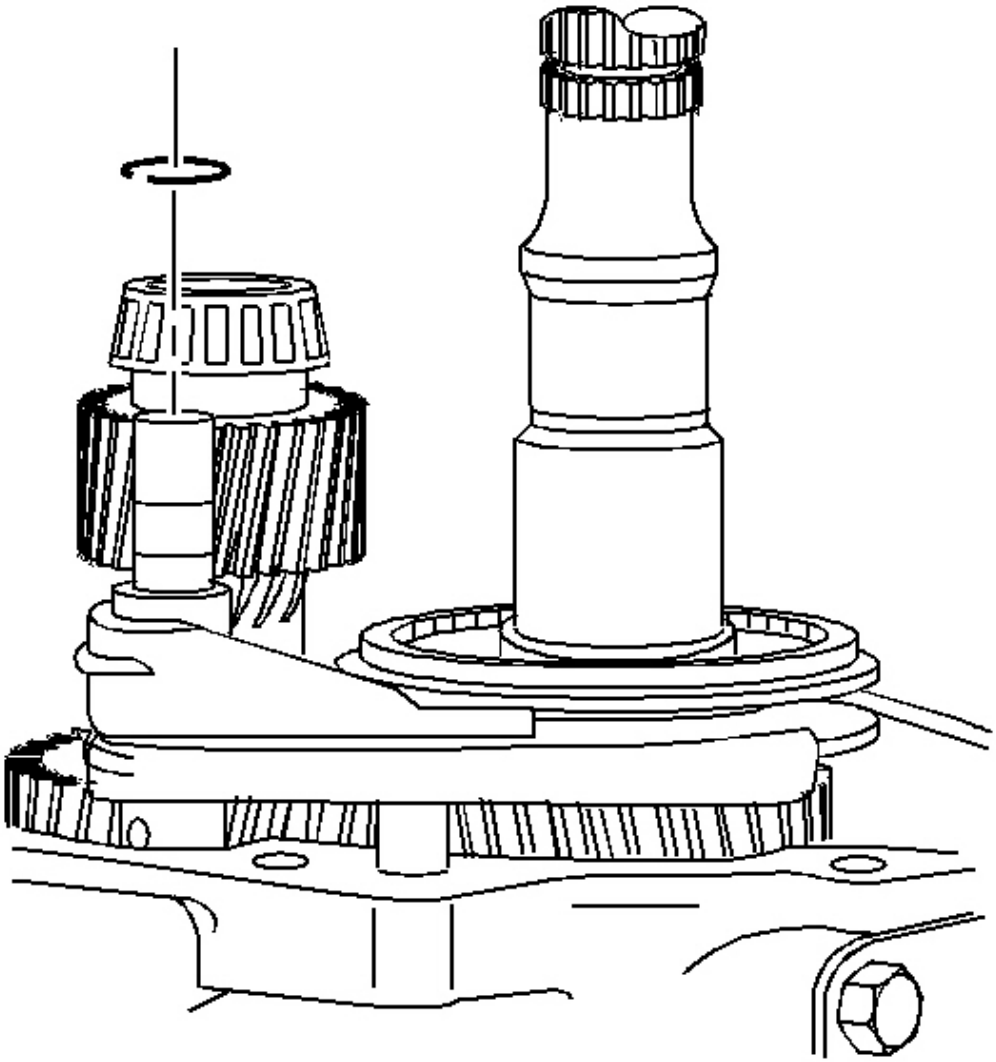

Fig. 359: Installing/Removing Shift Fork Retainer Ring
Courtesy of GENERAL MOTORS CORP.

2. Install a new shift fork retainer ring.

cardiagn.com

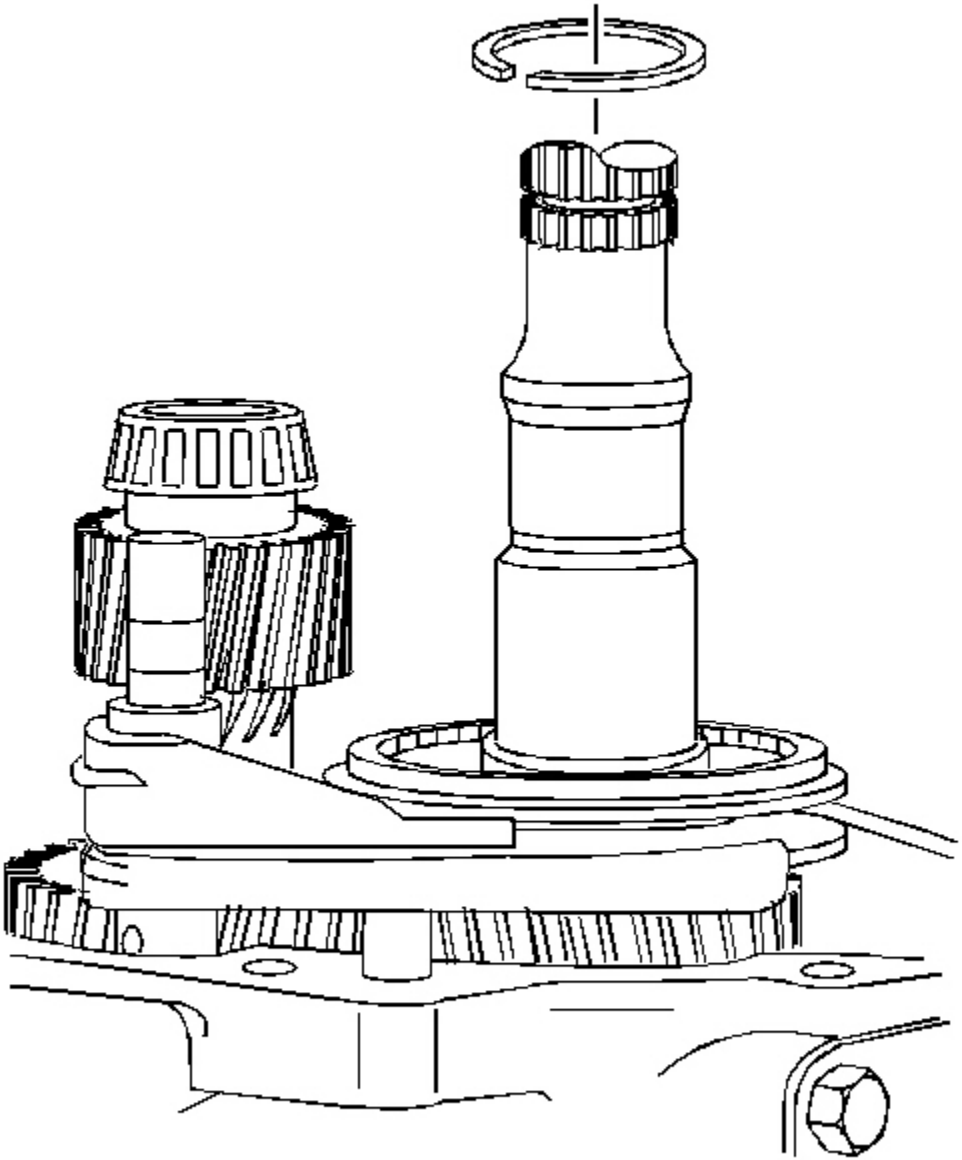

Fig. 360: View Of Reverse Synchronizer Retainer Ring
Courtesy of GENERAL MOTORS CORP.

3. Install the reverse synchronizer retainer ring.

Reverse Speed Gear Installation

cardiagn.com

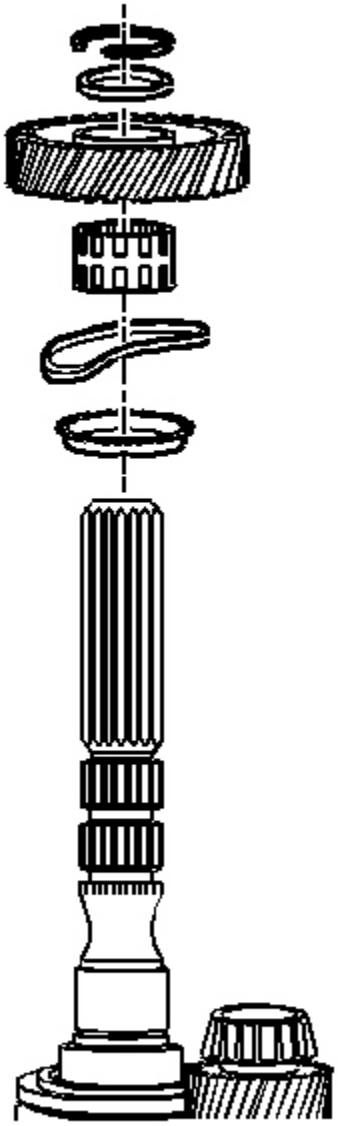

Fig. 361: Identifying Reverse Speed Gear Components
Courtesy of GENERAL MOTORS CORP.

1. Install the following parts in order:
    1. The blocking ring
    2. The wave washer
    3. The wave washer so the concave side faces the blocking ring

cardiagn.com

4. The caged needle bearing
5. The reverse speed gear
6. The thrust washer
7. The retainer ring

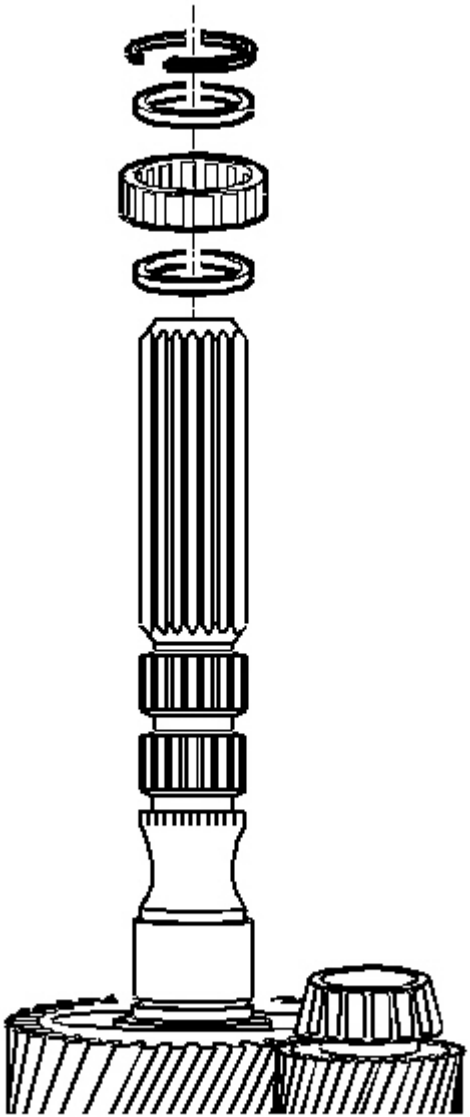

Fig. 362: View Of Mainshaft Rear Roller Bearing, Rear Bearing Retainer Ring & Spacers
Courtesy of GENERAL MOTORS CORP.

cardiagn.com

2. Install the following parts in order:
    1. The spacer
    2. The roller bearing
    3. The spacer
    4. The roller bearing retainer ring

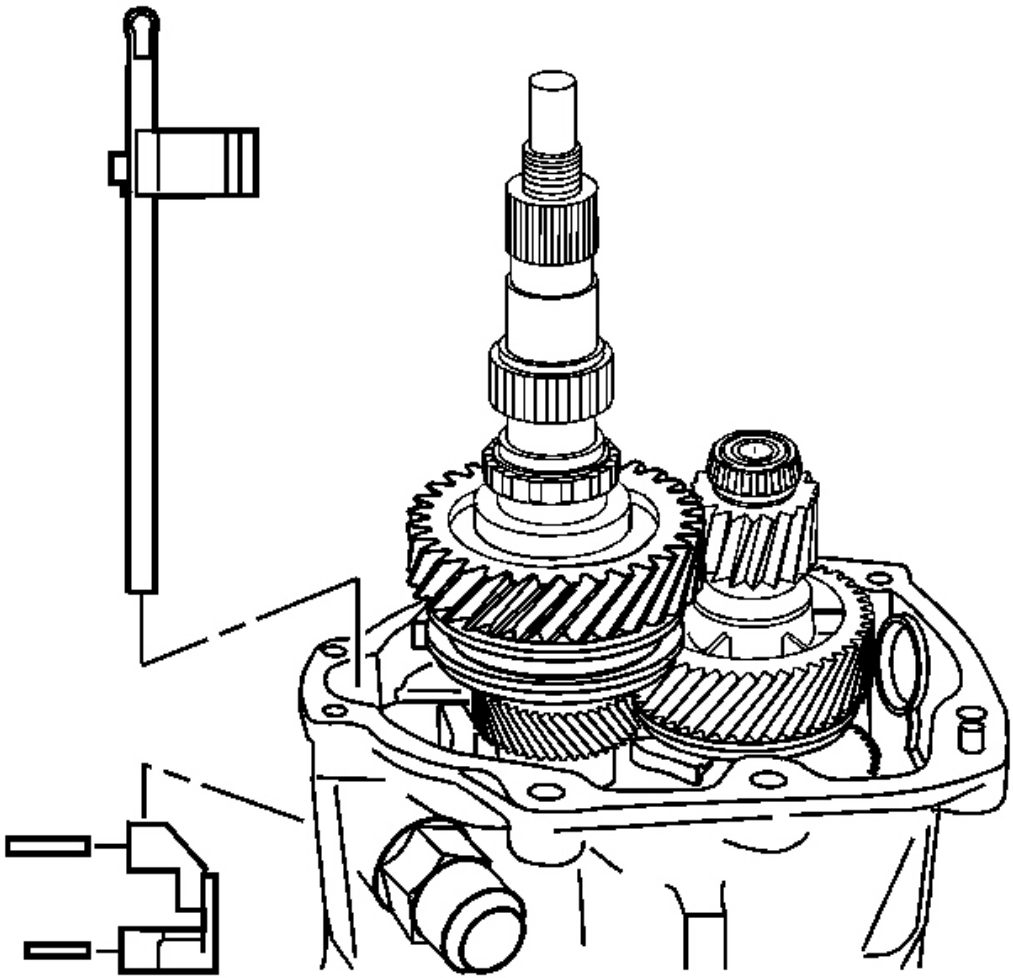

Fig. 363: Identifying Shift Guide, Rollpins & Shift Shaft Extension
Courtesy of GENERAL MOTORS CORP.

3. Install the shift shaft extension.
4. Install the shift guide.

cardiagn.com

5. Install NEW shift guide roll pins.

Tools Required

J 44395 Transmission Holding Fixture. See **Special Tools** .

Extension Housing Assemble

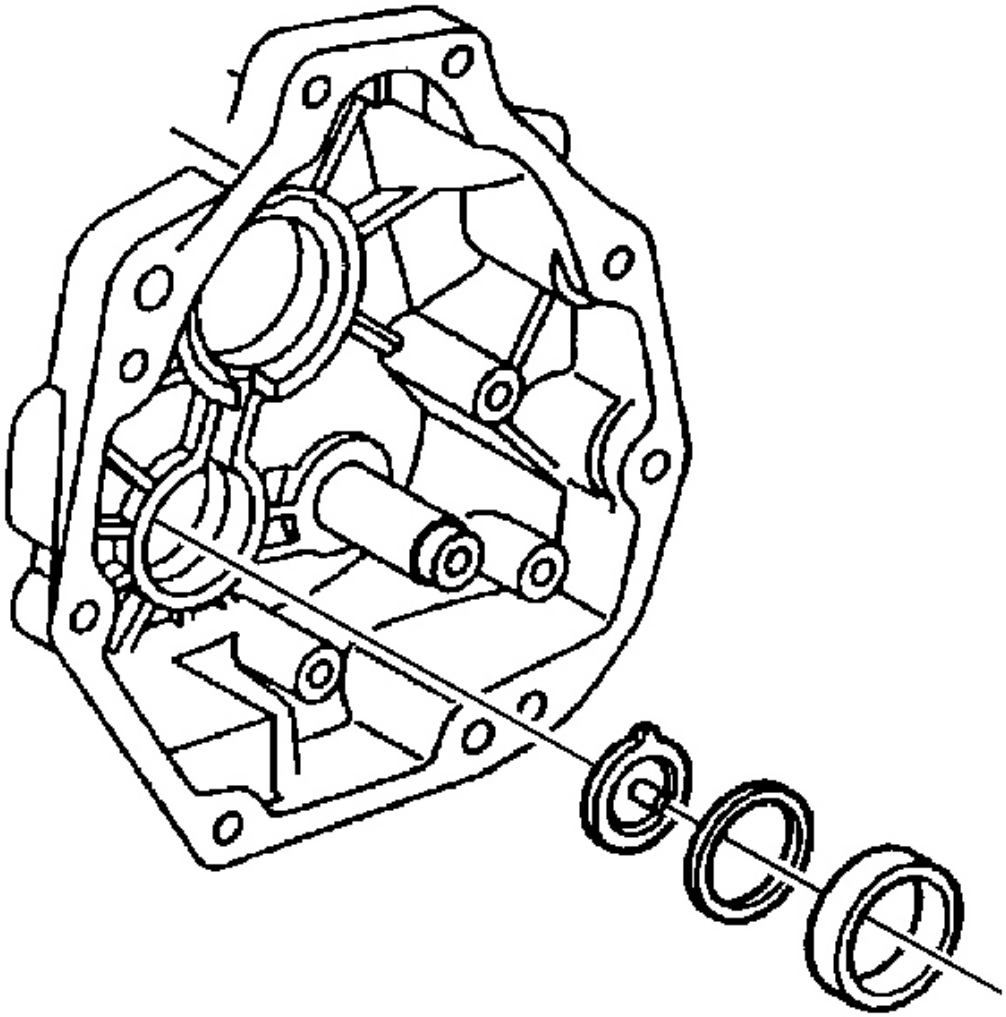

Fig. 364: View Of Countershaft Extension Bearing Race, Funnel & Shim
Courtesy of GENERAL MOTORS CORP.

cardiagn.com

1. Install the following parts in order:
    1. The funnel
    2. The selective shims. Refer to the Countershaft Extension in **Shimming Procedures (Y Car)** or **Shimming Procedures (CTSV)** or **Shimming Procedures (GTO)** .
    3. The countershaft extension bearing race

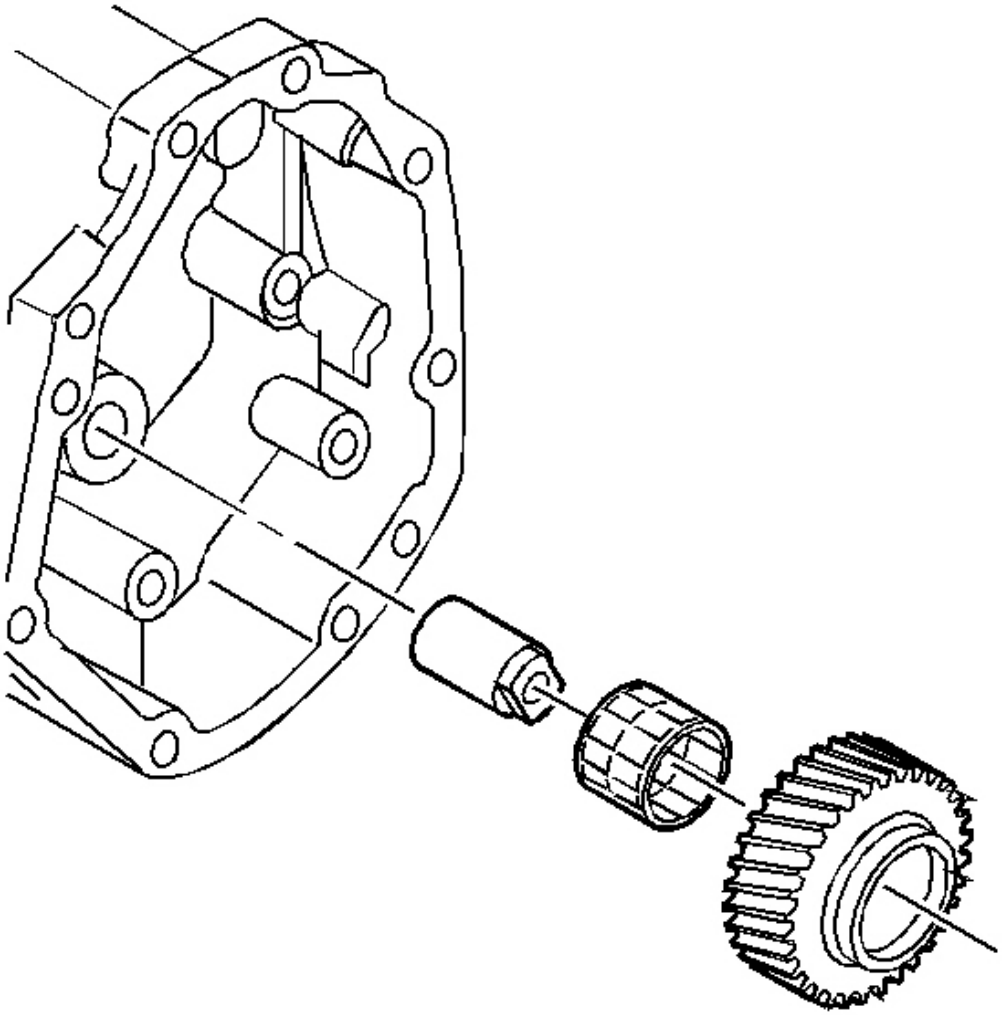

Fig. 365: Identifying Reverse Idler Shaft, Roller Bearing & Reverse Idler Gear
Courtesy of GENERAL MOTORS CORP.

2. Install the following parts in order:

cardiagn.com

1. The reverse idler shaft
2. The roller bearing
3. The reverse idler gear

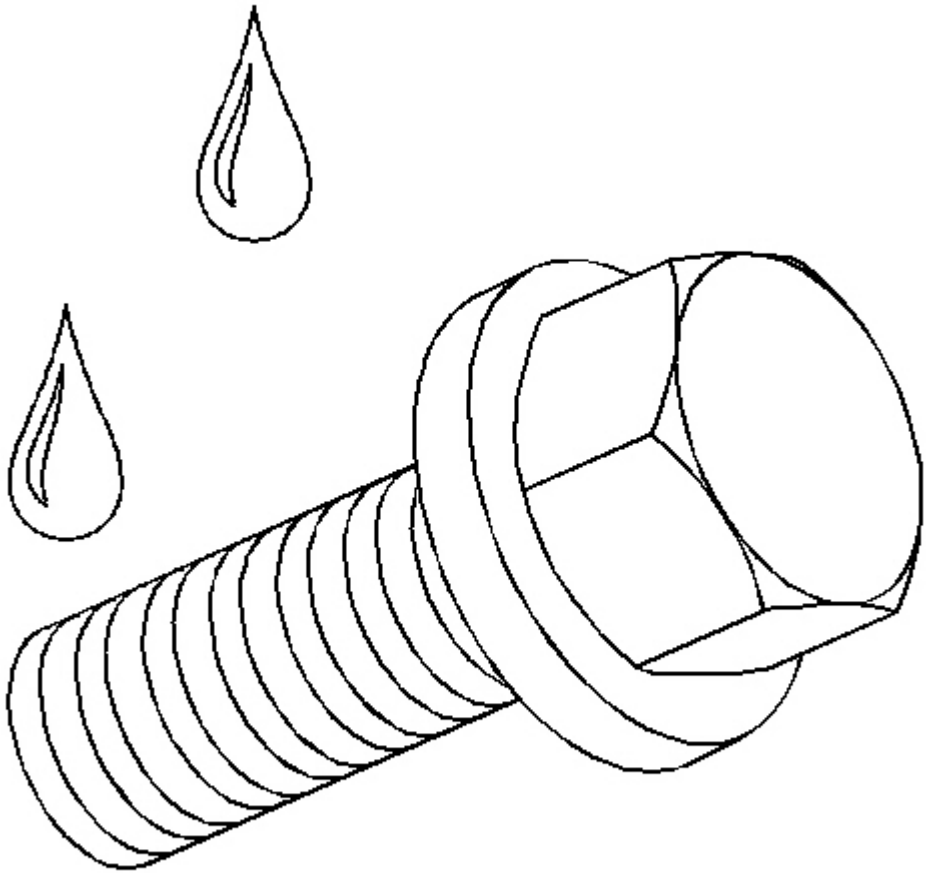

Fig. 366: Applying Sealant To Reverse Idler Shaft Brackets Bolt Threads
Courtesy of GENERAL MOTORS CORP.

3. Apply GM P/N 12345382, (Canadian P/N 10953489) or the equivalent to the reverse idler shaft brackets bolt threads.

NOTE: Refer to Fastener Notice in Cautions and Notices.

cardiagn.com

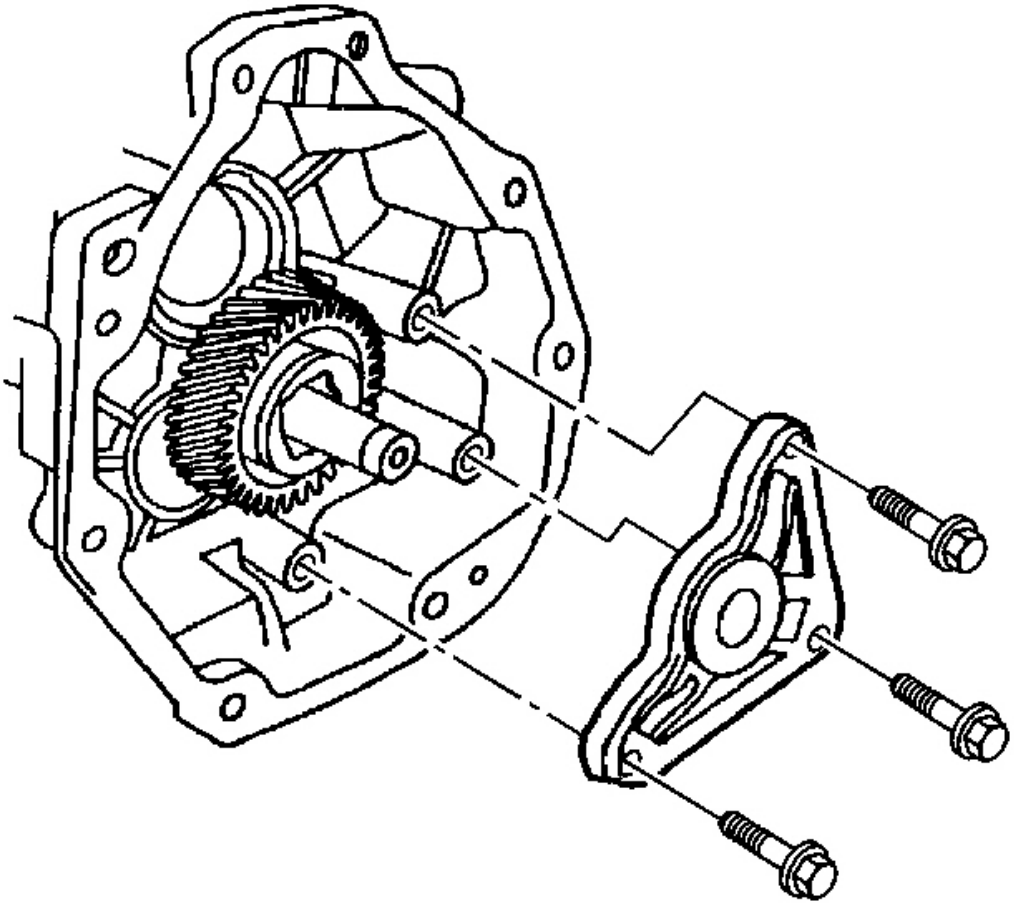

Fig. 367: View Of Reverse Idler Shaft Bracket & Mounting Bolts
Courtesy of GENERAL MOTORS CORP.

4. Install the following parts in order:
    1. The reverse idler shaft bracket.
    2. The reverse idler shaft bracket bolts.

    Tighten: Tighten the bolts to 25 N.m (18 Ib. ft).

cardiagn.com

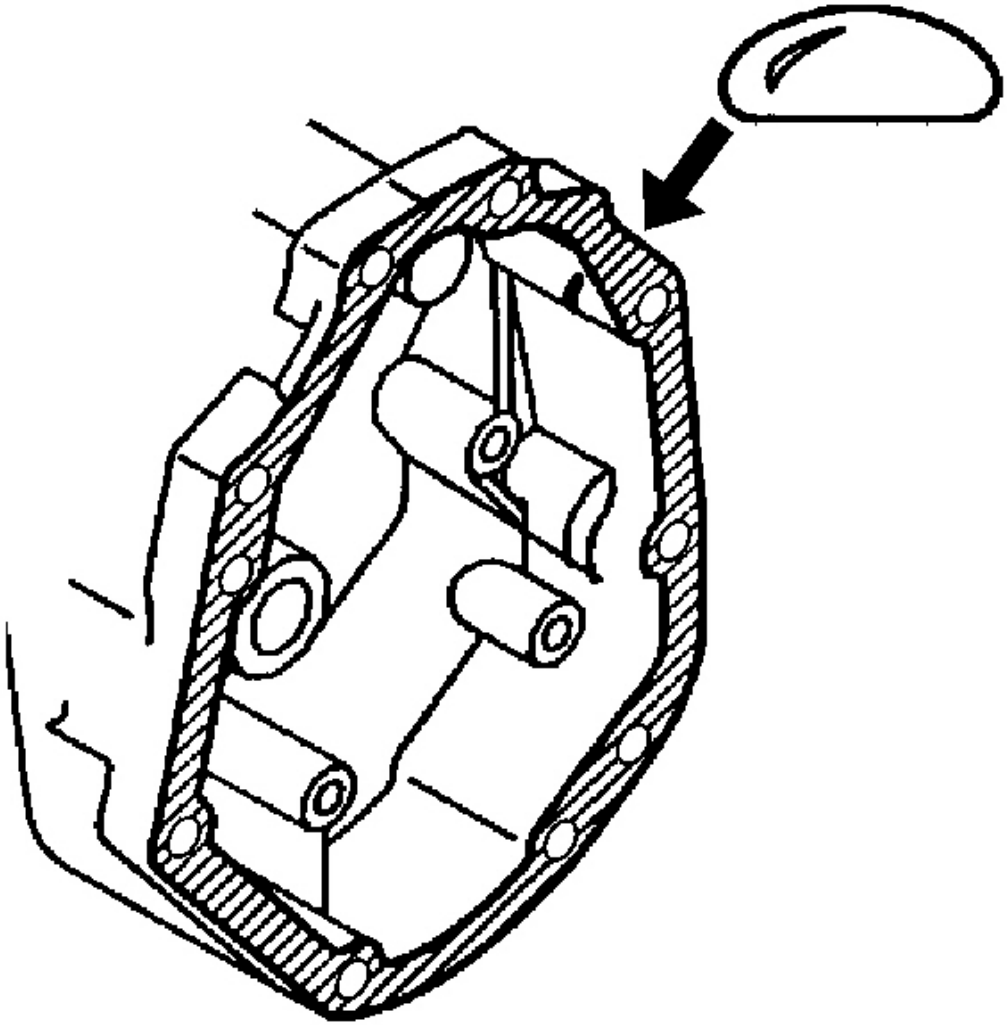

Fig. 368: Applying Sealant To Extension Housing To Transmission Case Mating Surface
Courtesy of GENERAL MOTORS CORP.

5. Apply sealant GM P/N 12345739, (Canadian P/N 10953472) or equivalent to the extension housing to the transmission case mating surface.

cardiagn.com

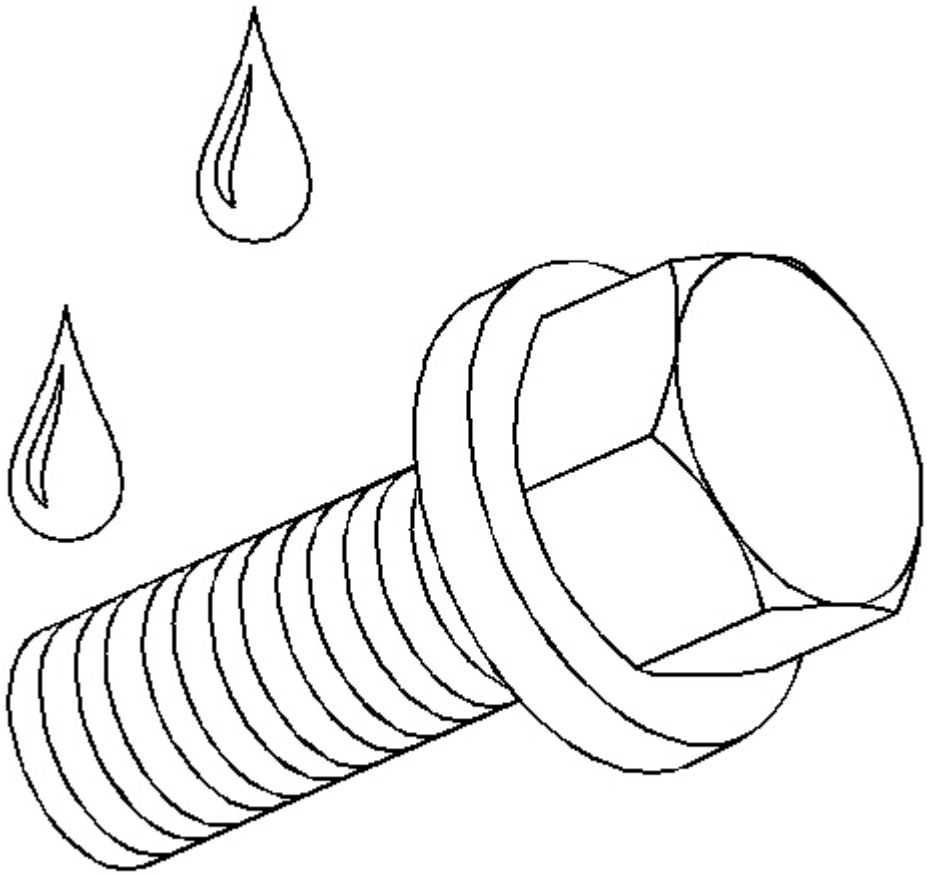

Fig. 369: Applying Sealant To Top Extension Housing Bolt
Courtesy of GENERAL MOTORS CORP.

6. Apply thread sealer GM P/N 12346004, (Canadian P/N 10953480) or equivalent to the top 2 extension housing bolts.

cardiagn.com

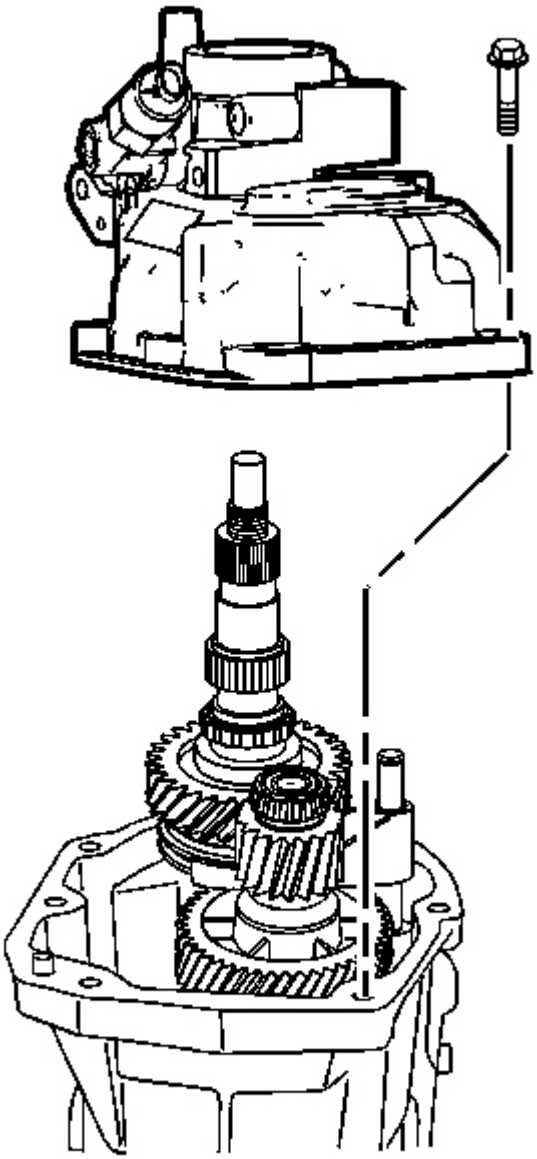

Fig. 370: View Of Rear Extension Housing Bolts & Rear Extension Housing
Courtesy of GENERAL MOTORS CORP.

IMPORTANT: Align the 5th/6th shift shaft to the extension housing bore in order to install the extension housing.

cardiagn.com

7. Install the extension housing.
8. Install the extension housing bolts.

   Tighten: Tighten the bolts to 48 N.m (36 lb ft).

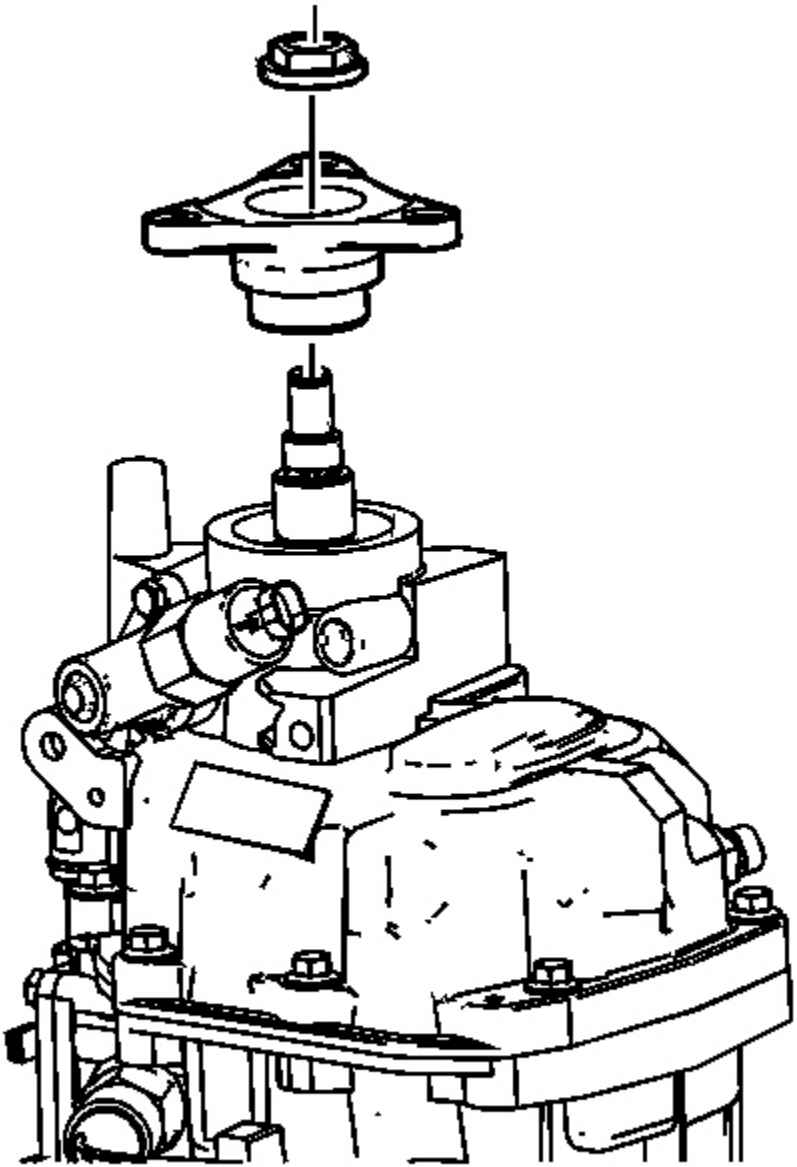

Fig. 371: Locating Propshaft Connector Bolt

cardiagn.com

Courtesy of GENERAL MOTORS CORP.

9. Install the propshaft connector.
10. Install the propshaft connector nut.

Tighten: Tighten the nut to 128-142 N.m (95-105 lb ft).

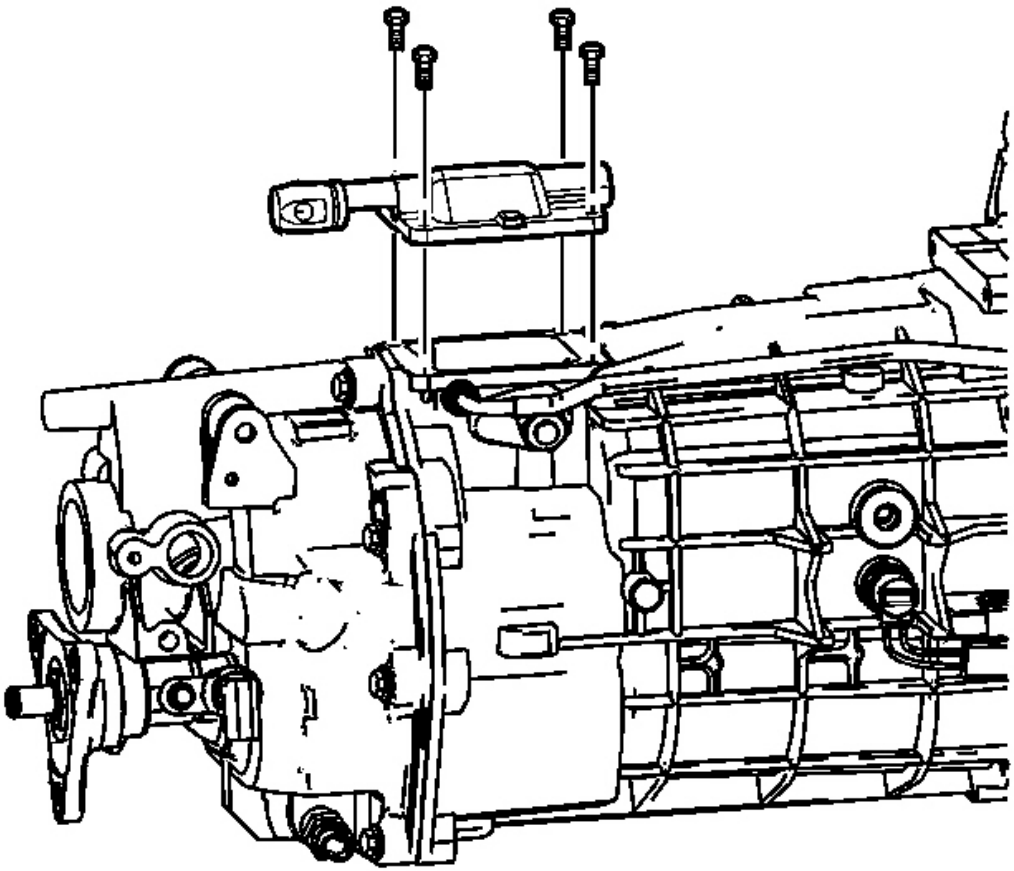

Fig. 372: Removing/Installing Shifter Cover Plate & Bolts
Courtesy of GENERAL MOTORS CORP.

11. Install the shifter cover plate.
12. Install the shifter cover plate bolts.

Tighten: Tighten the bolts to 20 N.m (15 lb ft).

cardiagn.com

13. Install the vent tube.

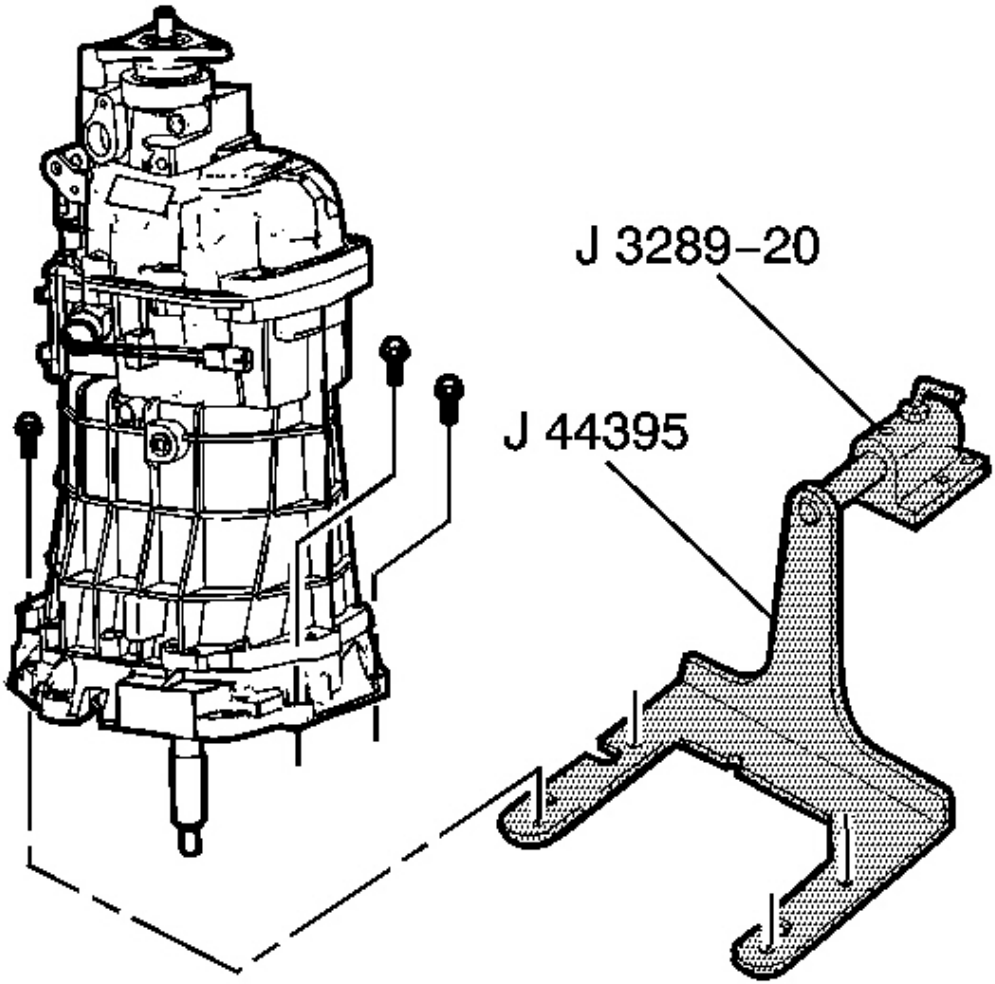

Fig. 373: Installing/Removing Transmission On J 44395 & J 3289-20
Courtesy of GENERAL MOTORS CORP.

14. Remove the **J 44395** .

cardiagn.com

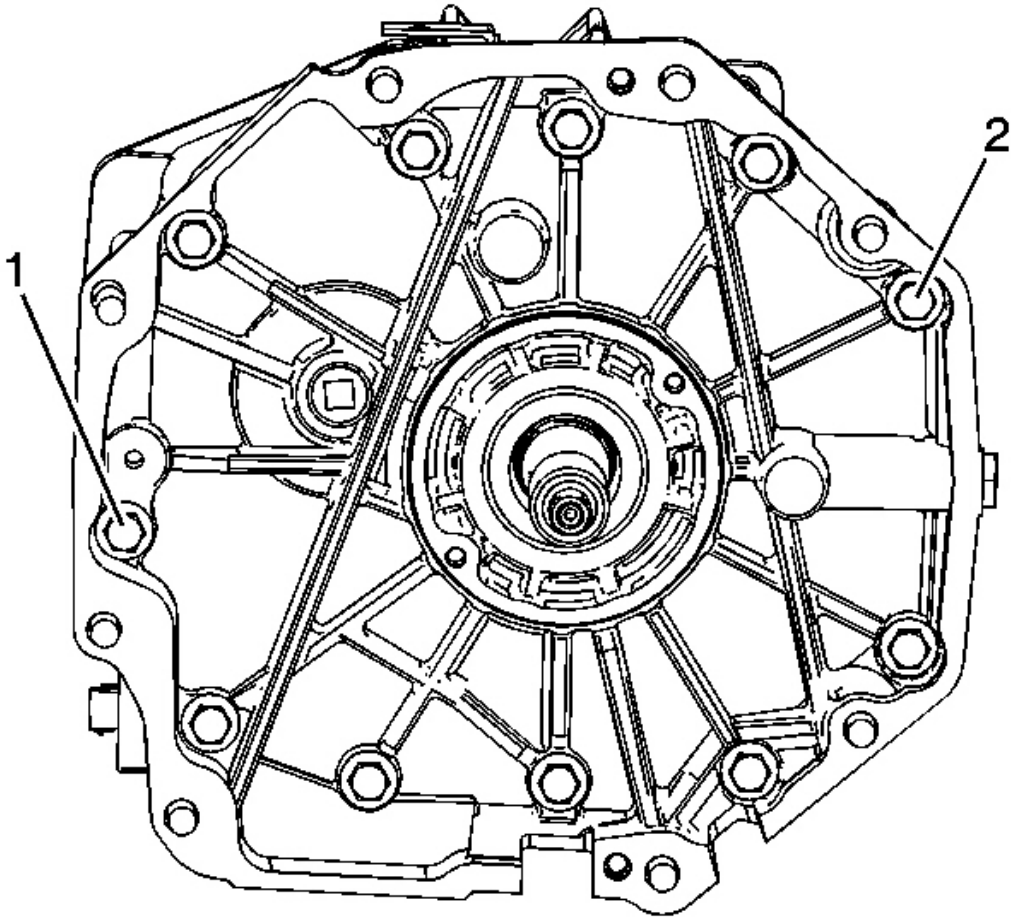

Fig. 374: Locating Adapter Plate Bolts
Courtesy of GENERAL MOTORS CORP.

15. Install the remaining 2 adapter plate bolts (1) and (2).

    Tighten: Tighten the adapter plate bolts to 48 N.m (36 lb ft).

TRANSMISSION ASSEMBLE (GTO)

Tools Required

J 36850 Transjel(R) Transmission Assembly Lube

Shift Shaft Assemblies and Gear Clusters Installation

cardiagn.com

1. Lubricate all components as assembly progresses, using the **J 36850** .
2. Install the input shaft in the adapter plate.
3. Install the 4th speed gear blocker ring.

cardiagn.com

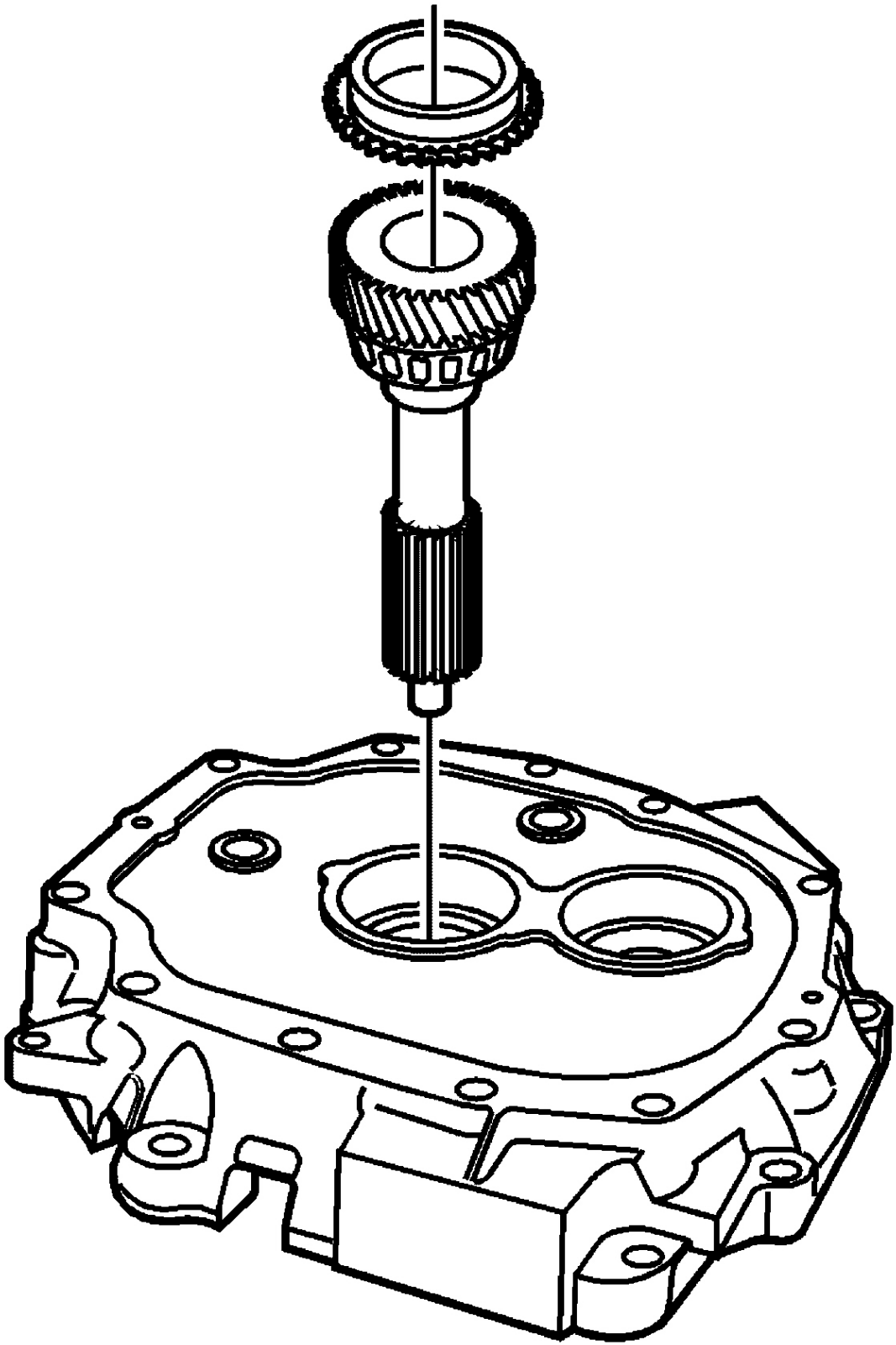

cardiagn.com

Fig. 375: View Of Input Shaft & 4th Speed Gear Blocker Ring
Courtesy of GENERAL MOTORS CORP.

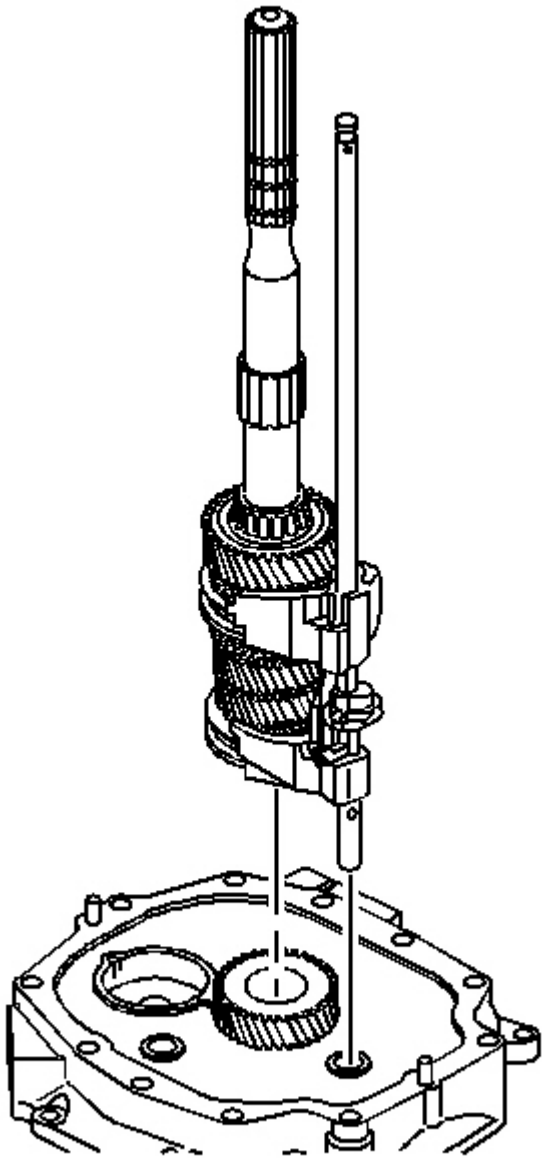

Fig. 376: Installing/Removing Mainshaft & Shift Shaft Assembly
Courtesy of GENERAL MOTORS CORP.

cardiagn.com

4. Assemble the shift shaft to the mainshaft.
5. Install the mainshaft and the shift shaft assembly.

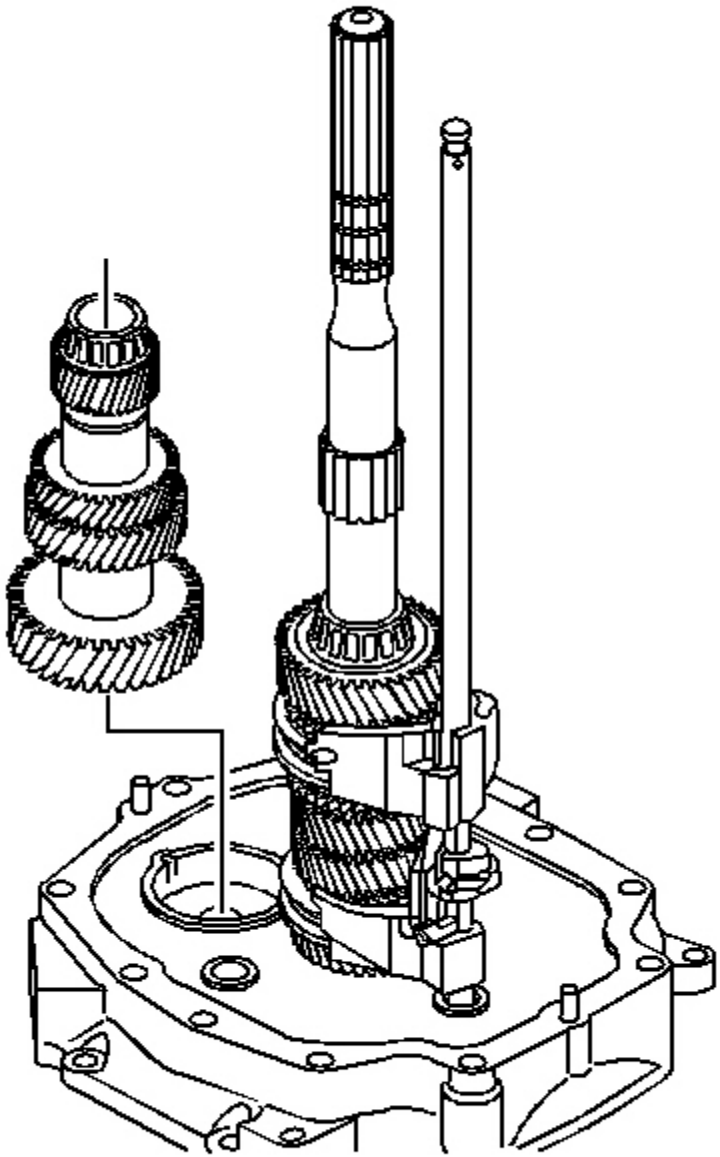

Fig. 377: Identifying Countershaft Assembly
Courtesy of GENERAL MOTORS CORP.

cardiagn.com

6. Install the countershaft assembly using the following sequence:
    1. Lift up the mainshaft assembly enough in order to install the countershaft assembly.
    2. Install the countershaft assembly.
    3. Lift the mainshaft assembly enough in order to rotate the input shaft to engage the synchronizer keys with 4th gear blocking ring.

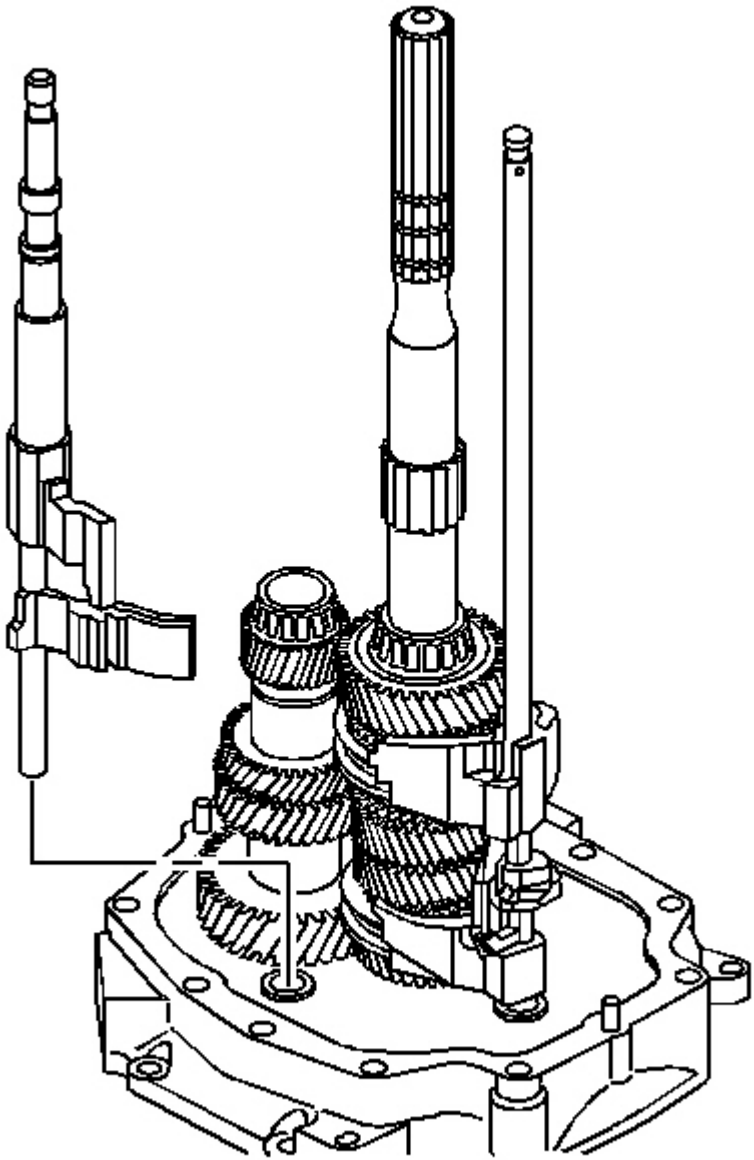

cardiagn.com

Fig. 378: View Of 5th/6th & Reverse Shift Shaft
Courtesy of GENERAL MOTORS CORP.

7. Install the 5th/6th and the reverse shift shaft.

   Align the slots of the shift shaft levers with the interlock plate.

Reverse Lockout Assembly Assemble

CAUTION: The reverse lockout assembly is under spring pressure. Exercise caution when removing the retainer ring, as bodily injury may result.

cardiagn.com

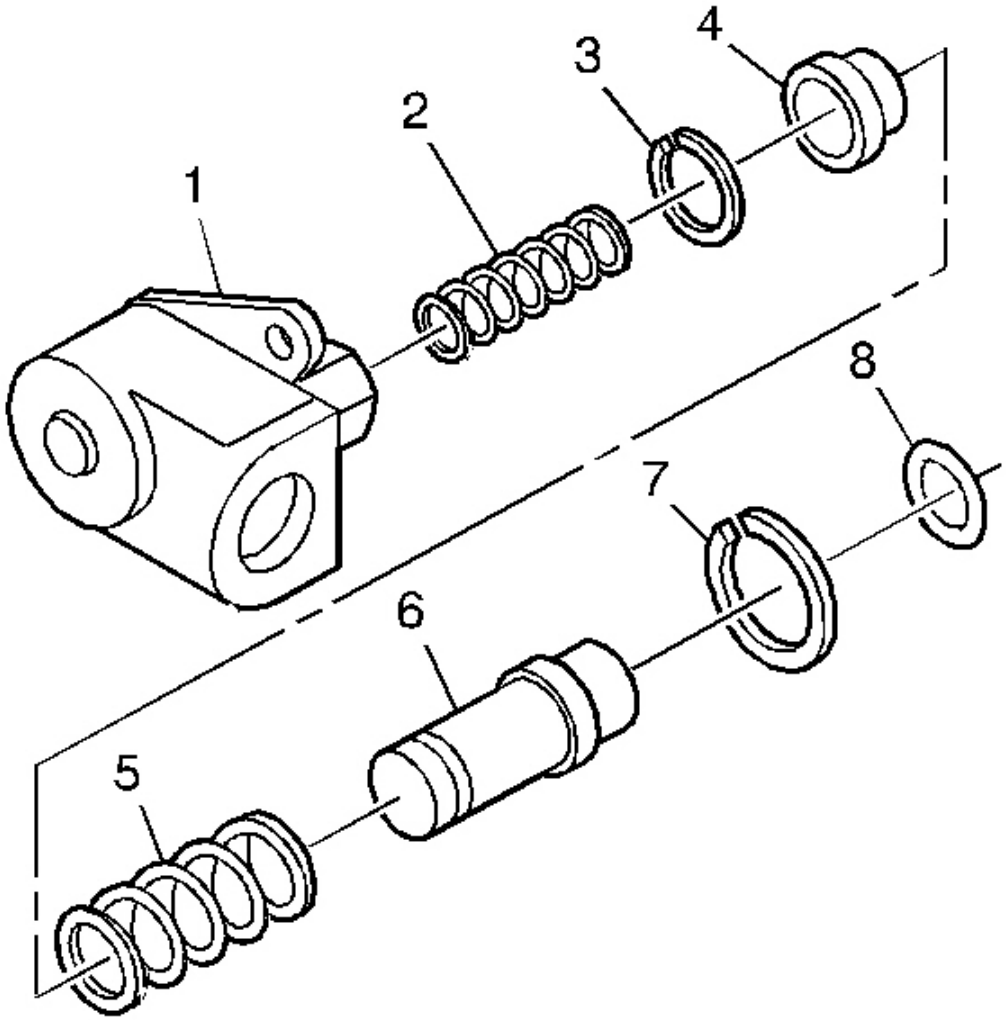

Fig. 379: Exploded View Of Reverse Lockout Assembly
Courtesy of GENERAL MOTORS CORP.

1. Install the reverse lockout plunger (6).
2. Install the reverse lockout outer spring (5).
3. Install the reverse lockout collar (4).
4. Compress the reverse lockout plunger and the collar (4) in a vise and Install the retainer ring (3).
5. Install the reverse lockout inner spring (2).
6. Install the reverse lockout components in the body (1).
7. Install the retainer ring (7).

cardiagn.com

8. Install the O-ring to body (8).

Transmission Case Installation

Tools Required

- **J 41099** Reverse Solenoid Socket. See **Special Tools** .
- **J 36850** Transmission Assembly Lubricant. See. See **Special Tools** .

IMPORTANT: Lubricate all components as the assembly progresses, using the J 36850 or the equivalent.

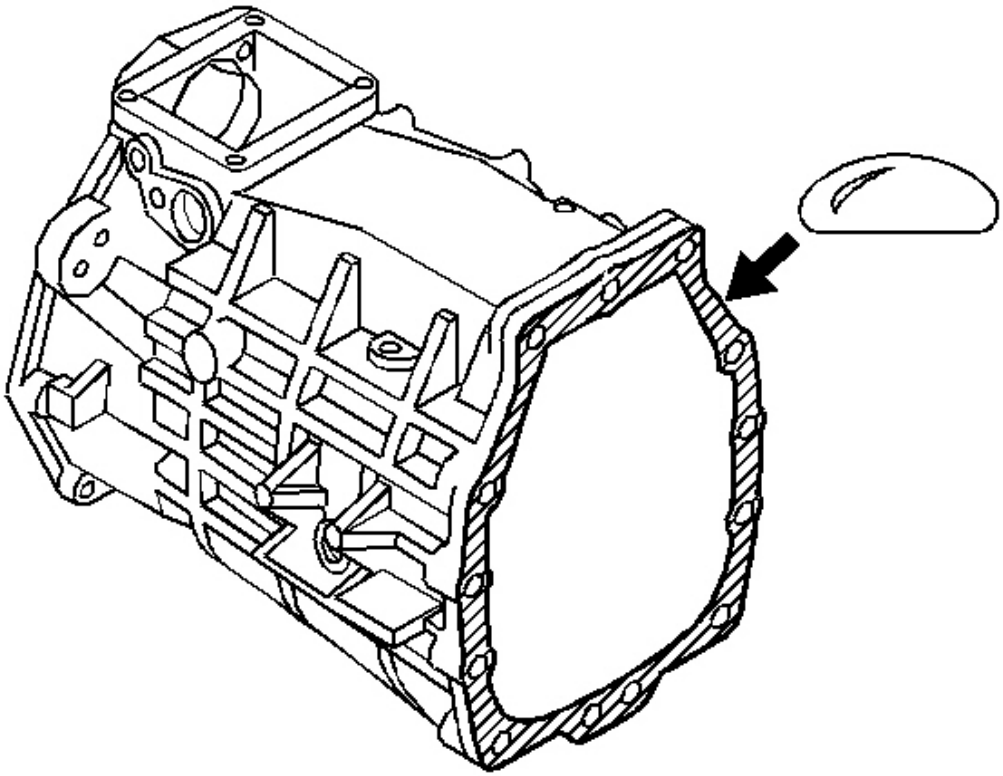

Fig. 380: Apply Sealer To Transmission Case To Adapter Plate Mating Surface
Courtesy of GENERAL MOTORS CORP.

1. Apply sealant GM P/N 12345739 (Canadian P/N 10953472) or the equivalent, to the transmission case to adapter plate mating surface.

cardiagn.com

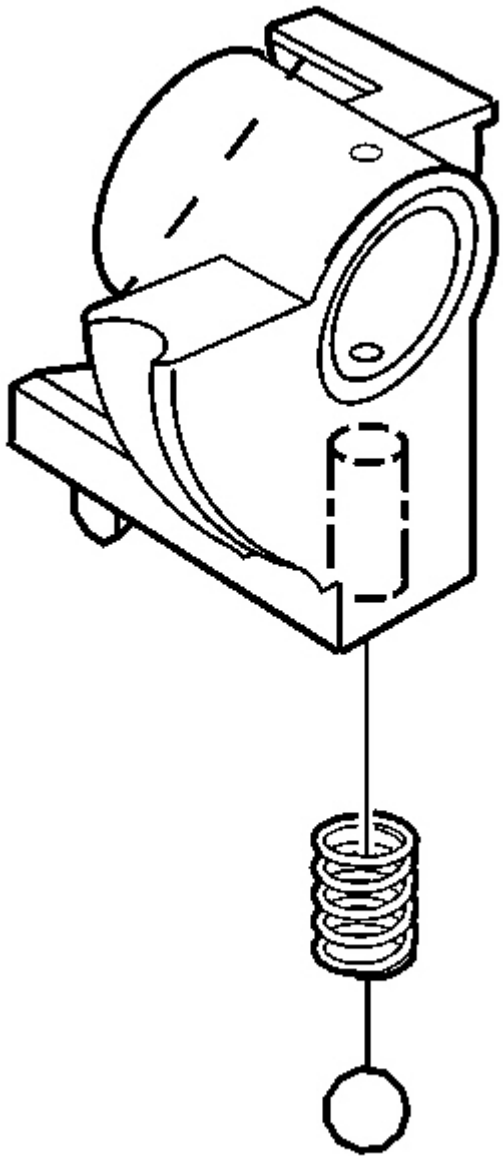

Fig. 381: Identifying Ball Detent & Spring In Front Offset Lever
Courtesy of GENERAL MOTORS CORP.

2. Install the ball detent and the spring in the front offset lever.

cardiagn.com

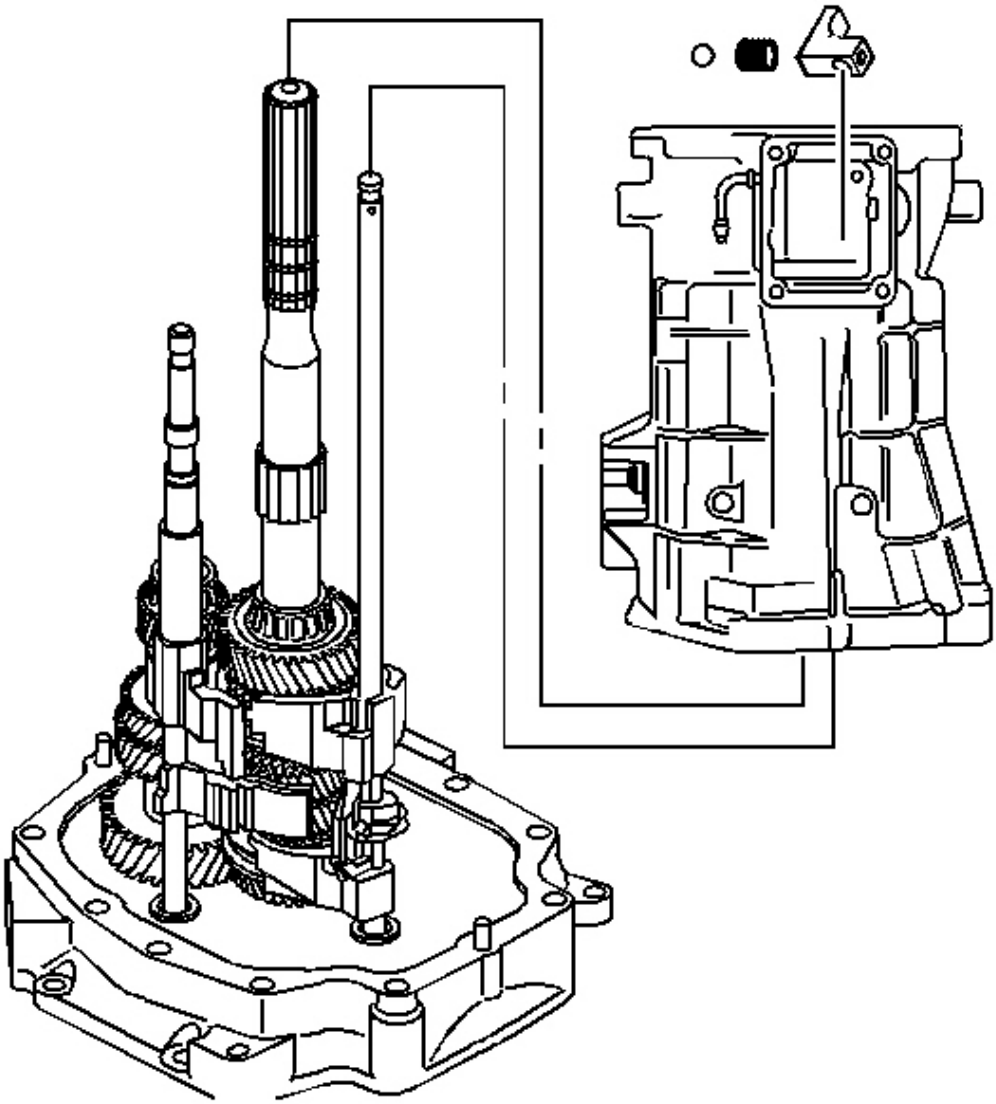

Fig. 382: View Of Offset Lever Components
Courtesy of GENERAL MOTORS CORP.

3. Do the following in order to install the transmission case and the offset lever:
    1. Shift the transmission into NEUTRAL in order to keep the 3rd/4th shift shaft from engaging.
    2. Install the offset lever.
    3. Compress the front offset lever together while sliding it onto the shift shaft. This will prevent the spring release of the inner components.

cardiagn.com

4. Slide the transmission case onto the gear clusters and the shift rail components.

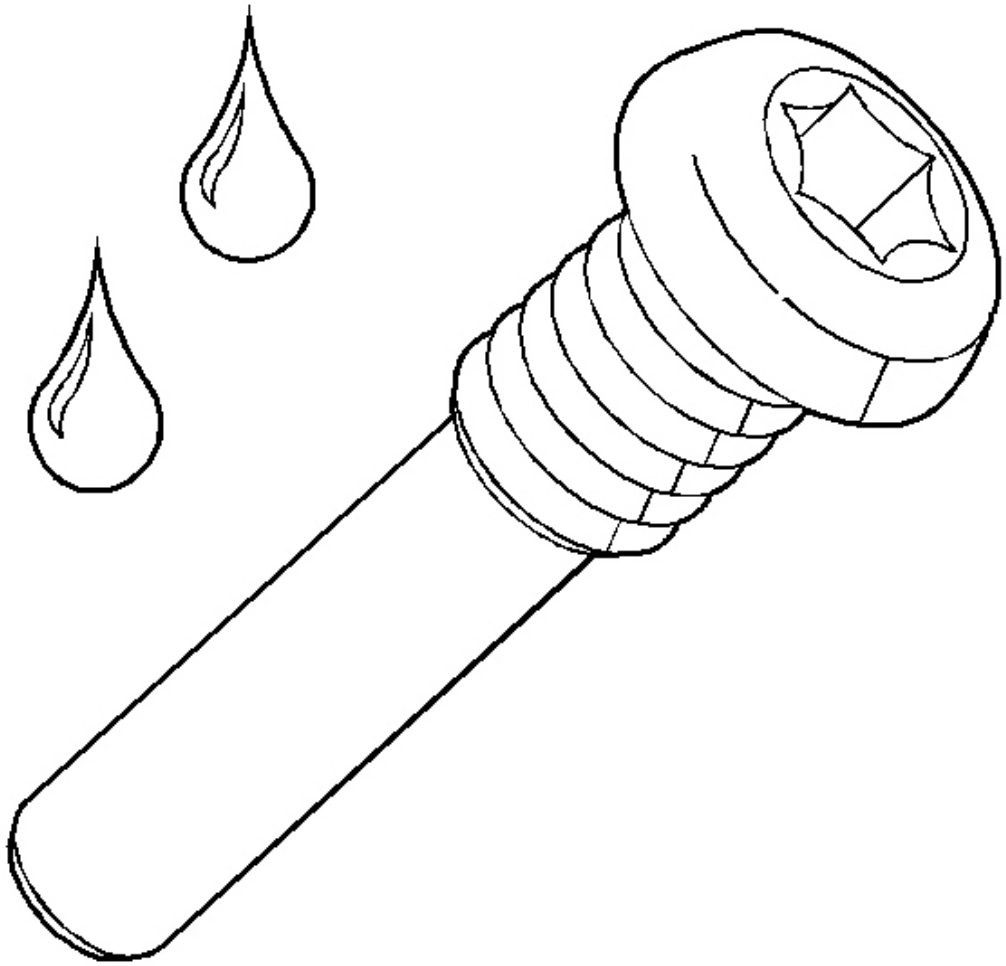

Fig. 383: Applying Sealer To Shift Lever Guide Bolts Threads
Courtesy of GENERAL MOTORS CORP.

4. Apply sealant GM P/N 12346004 (Canadian P/N 10953480) or the equivalent to the threads of the shift lever guide bolts.

NOTE: Refer to Fastener Notice in Cautions and Notices.

cardiagn.com

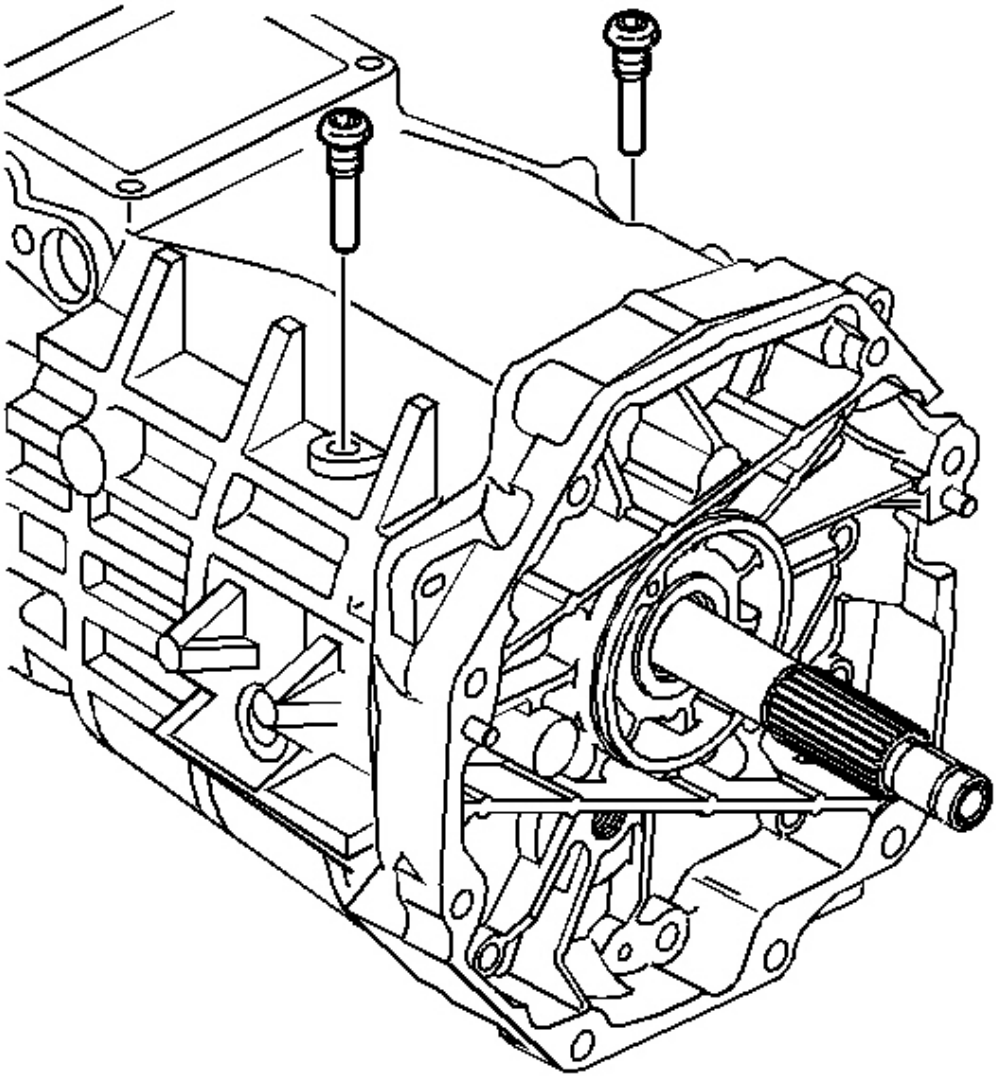

Fig. 384: View Of Shift Lever Guide Bolts
Courtesy of GENERAL MOTORS CORP.

5. Install the shift lever guide bolts and pull up on 5th/6th and reverse shift rail assembly. This will help align the slot of the shift interlock plate with the guide bolt hole.

   Tighten: Tighten the bolts to 27 N.m (20 Ib. ft).

6. Install the adapter plate to transmission case bolts.

cardiagn.com

Tighten: Tighten the bolts to 48 N.m (36 Ib. ft).

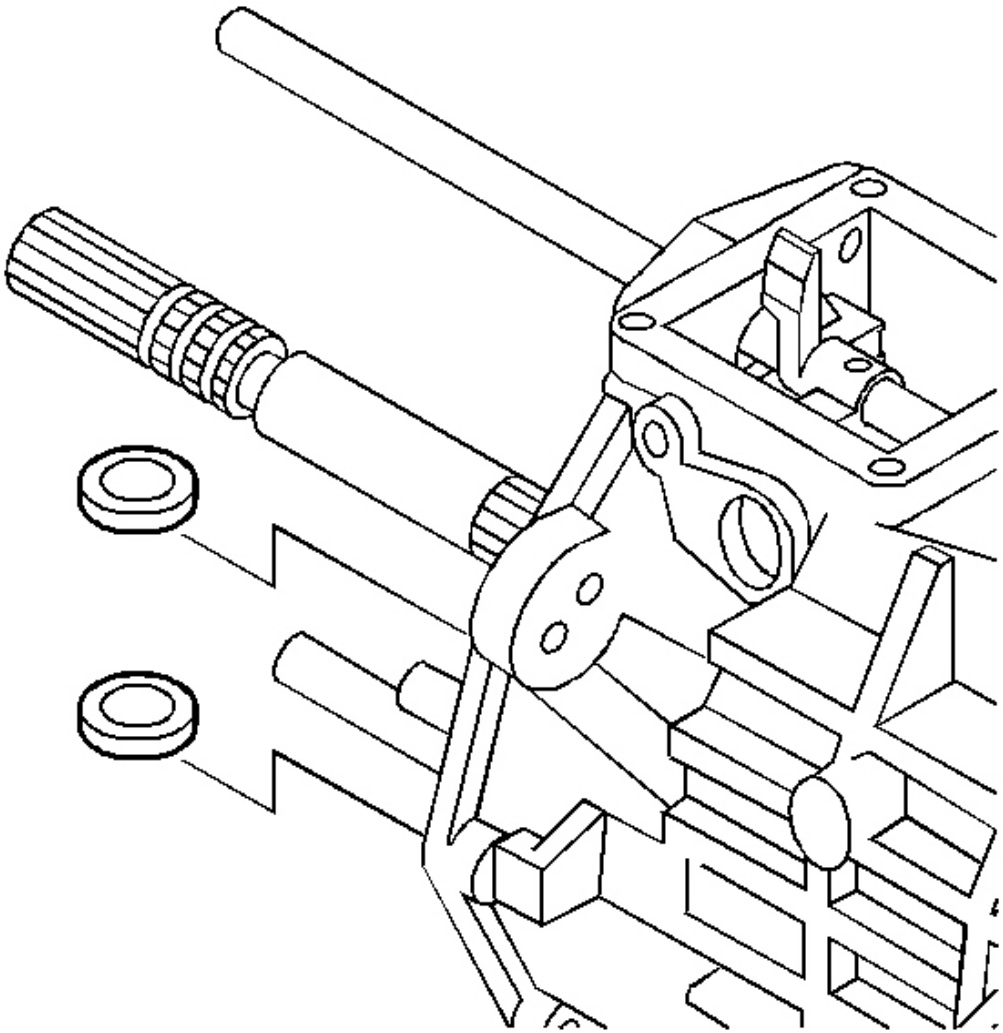

Fig. 385: View Of Transmission Magnets
Courtesy of GENERAL MOTORS CORP.

7. Install the magnets into the transmission case.

cardiagn.com

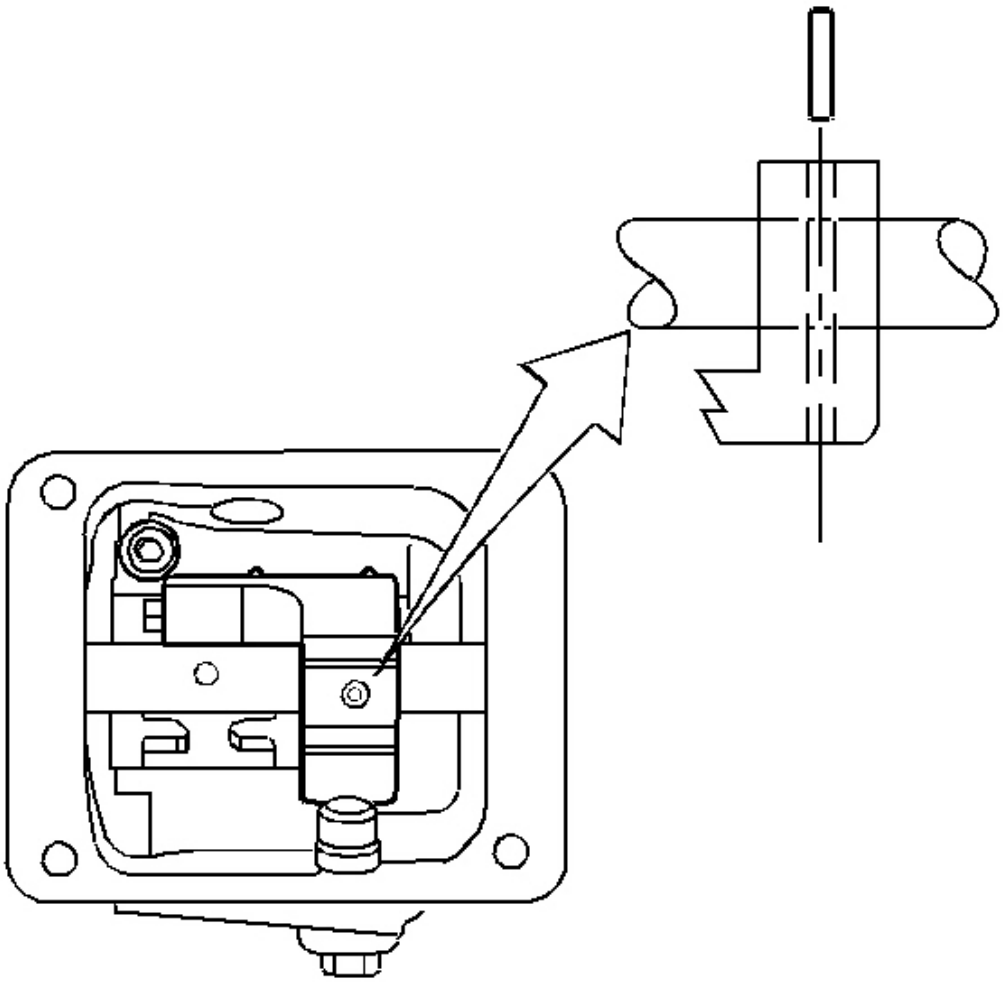

Fig. 386: Installing/Removing Offset Lever Roll Pin
Courtesy of GENERAL MOTORS CORP.

8. Install the offset lever roll pin.

cardiagn.com

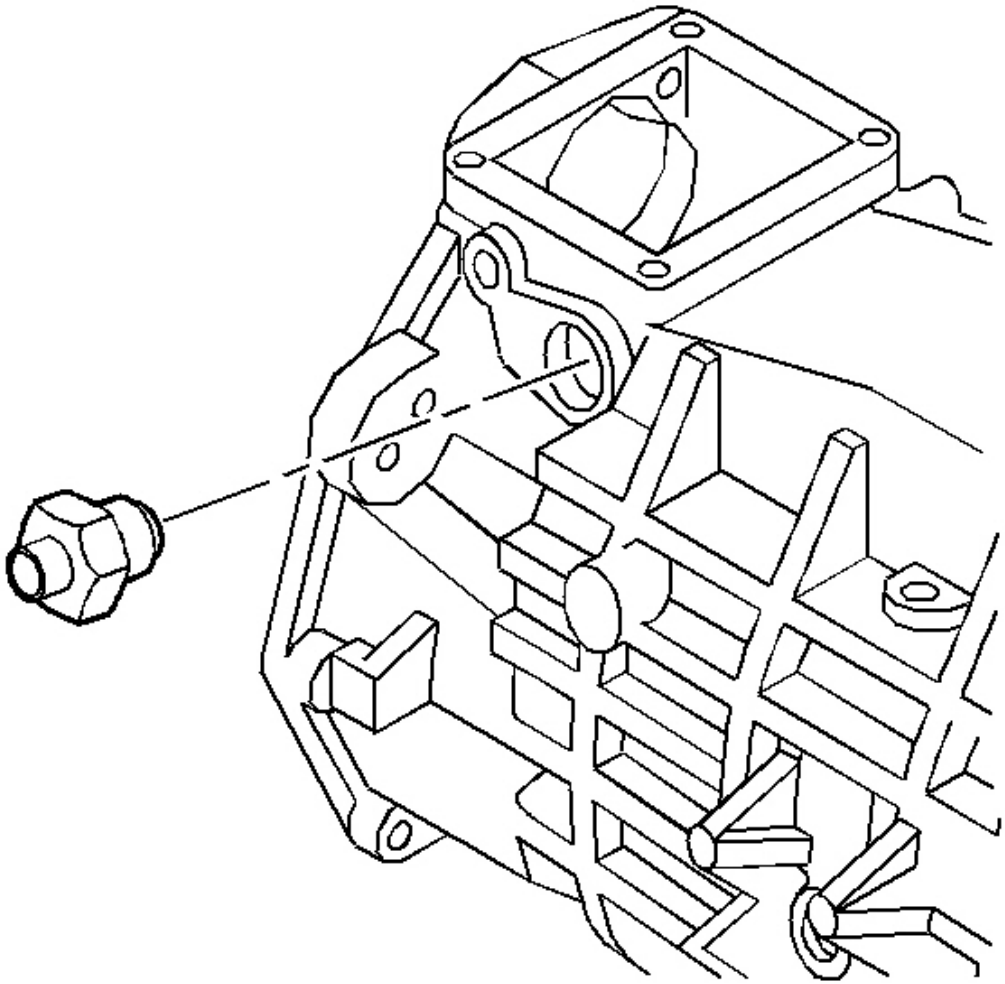

Fig. 387: View Of Shift Detent Assembly
Courtesy of GENERAL MOTORS CORP.

9. install the shift detent assembly.

   Tighten: Tighten the bolts to 40 N.m (30 Ib. ft).

cardiagn.com

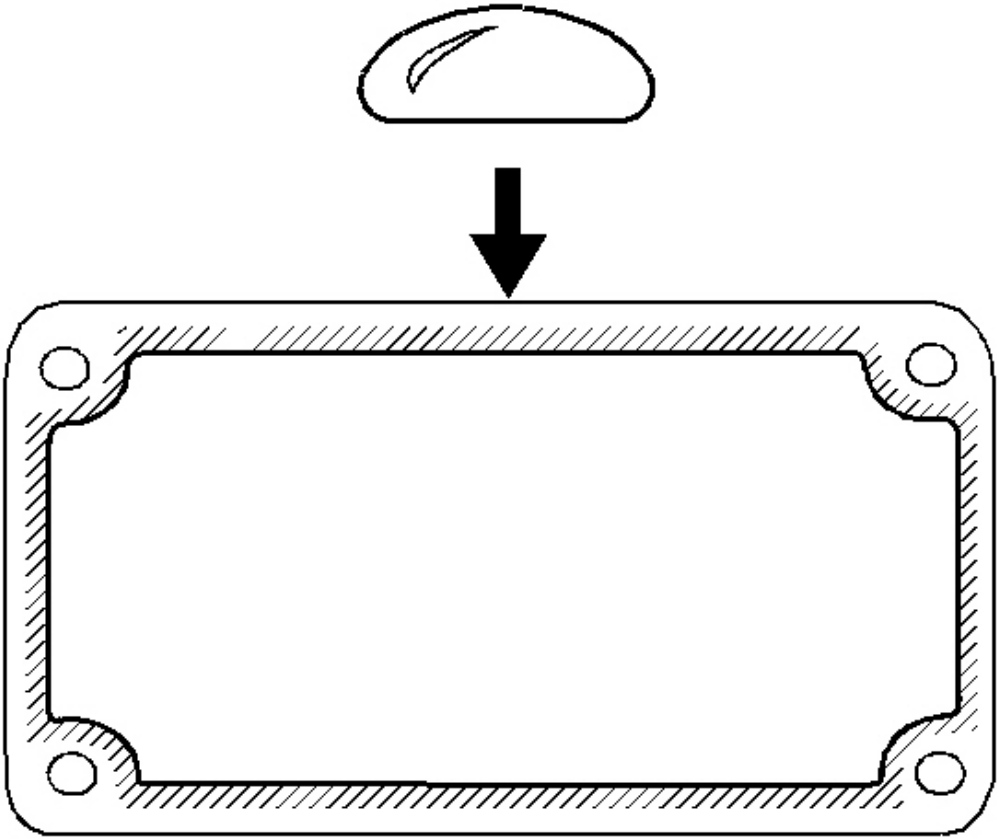

Fig. 388: Applying Sealer To Mating Surface Of Cover Plate
Courtesy of GENERAL MOTORS CORP.

10. Apply sealant GM P/N 12345739 (Canadian P/N 10953472) or equivalent to the mating surface of the cover plate.

cardiagn.com

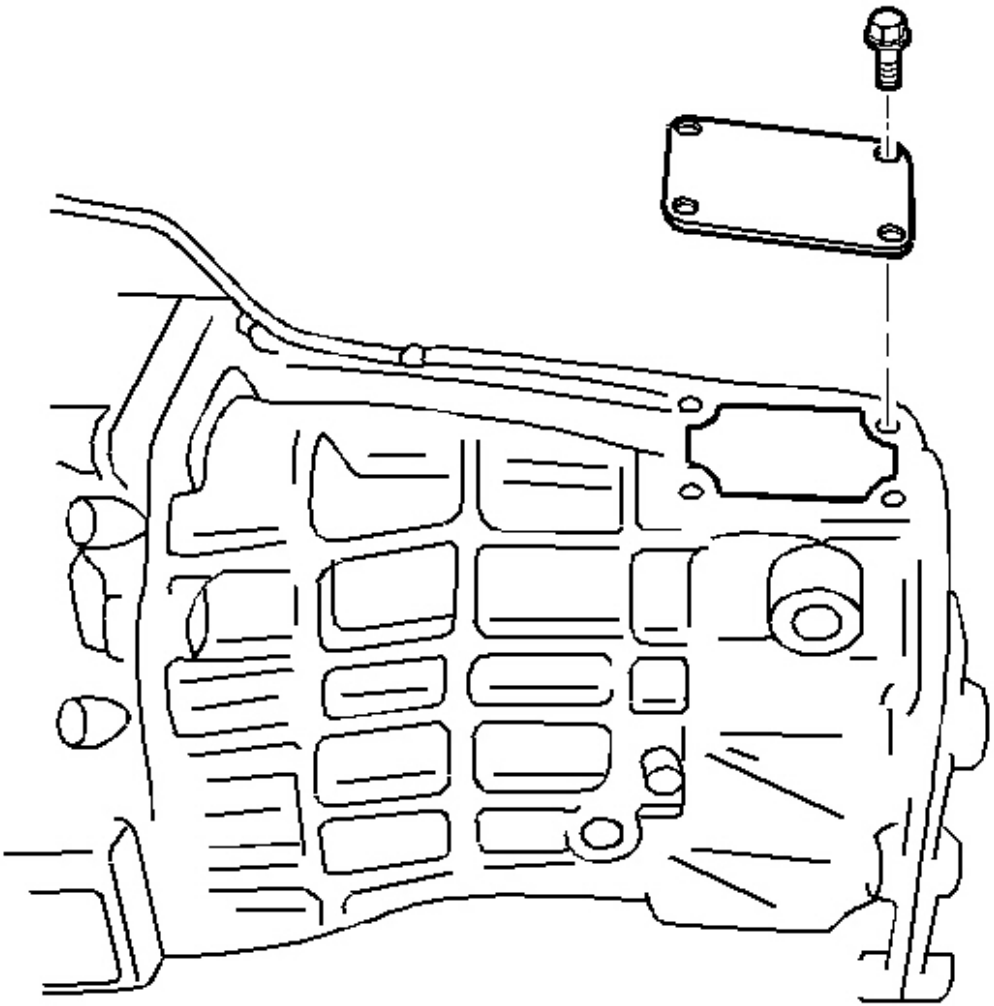

Fig. 389: Installing/Removing Cover Plate & Cover Plate Bolts
Courtesy of GENERAL MOTORS CORP.

11. Install the cover plate and the cover plate bolts.

    Tighten: Tighten the bolts to 20 N.m (15 Ib. ft).

cardiagn.com

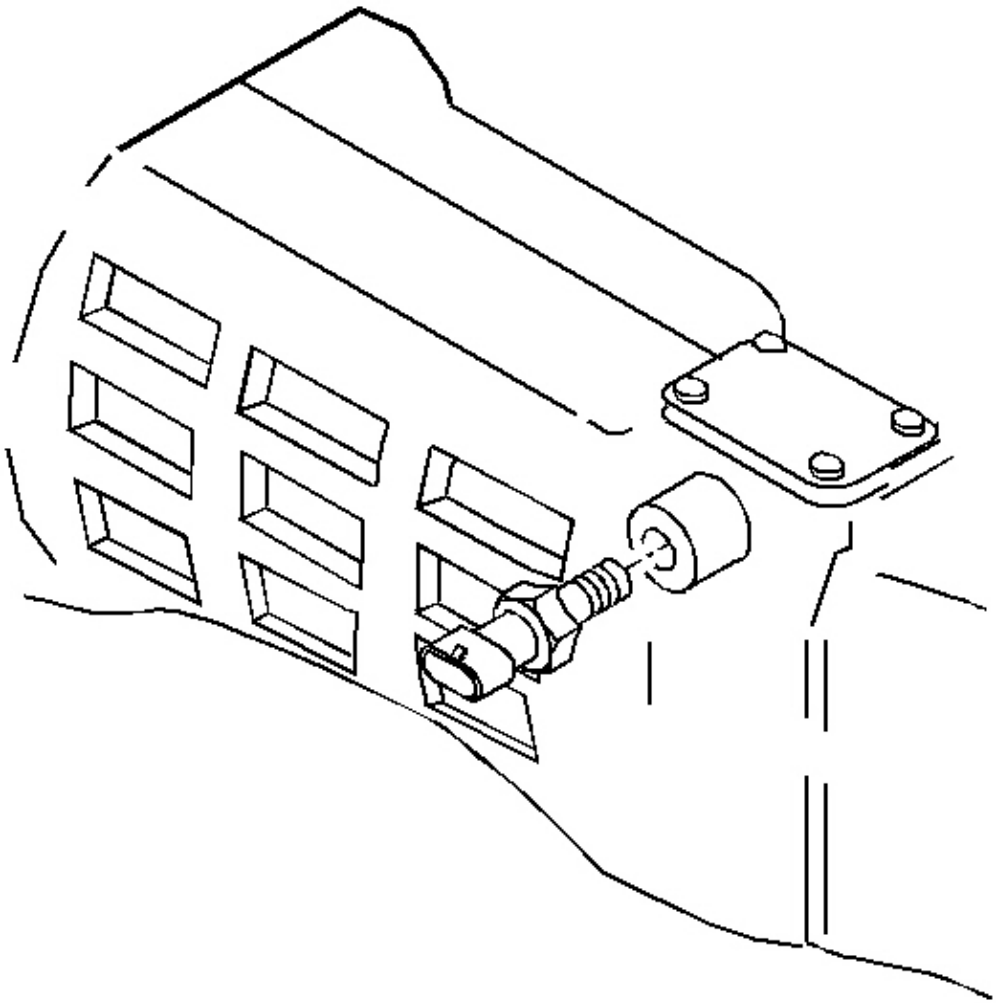

Fig. 390: View Of Computer Aided Gear Select Solenoid
Courtesy of GENERAL MOTORS CORP.

12. Install the computer aided gear select solenoid.

    Tighten: Tighten the solenoid to 40 N.m (30 Ib. ft).

Countershaft Extension Installation

1. Position the transmission in the horizontal position.
2. Install the countershaft extension assembly and the 5th/6th shift fork. The splines of the countershaft

cardiagn.com

extension must engage the splines of the countershaft.

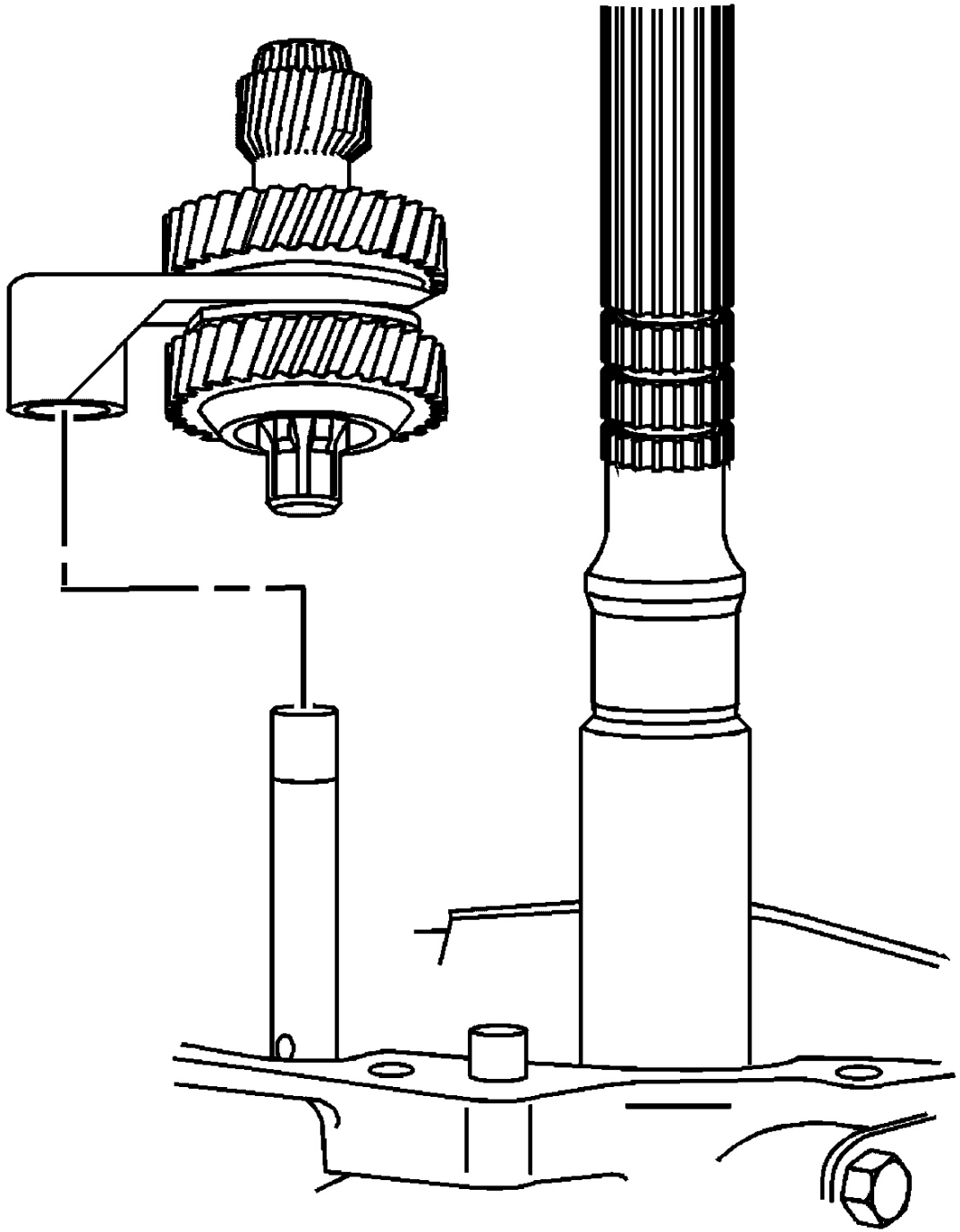

Fig. 391: Installing/Removing Countershaft Extension Assembly & 5th/6th Shift Fork
Courtesy of GENERAL MOTORS CORP.

cardiagn.com

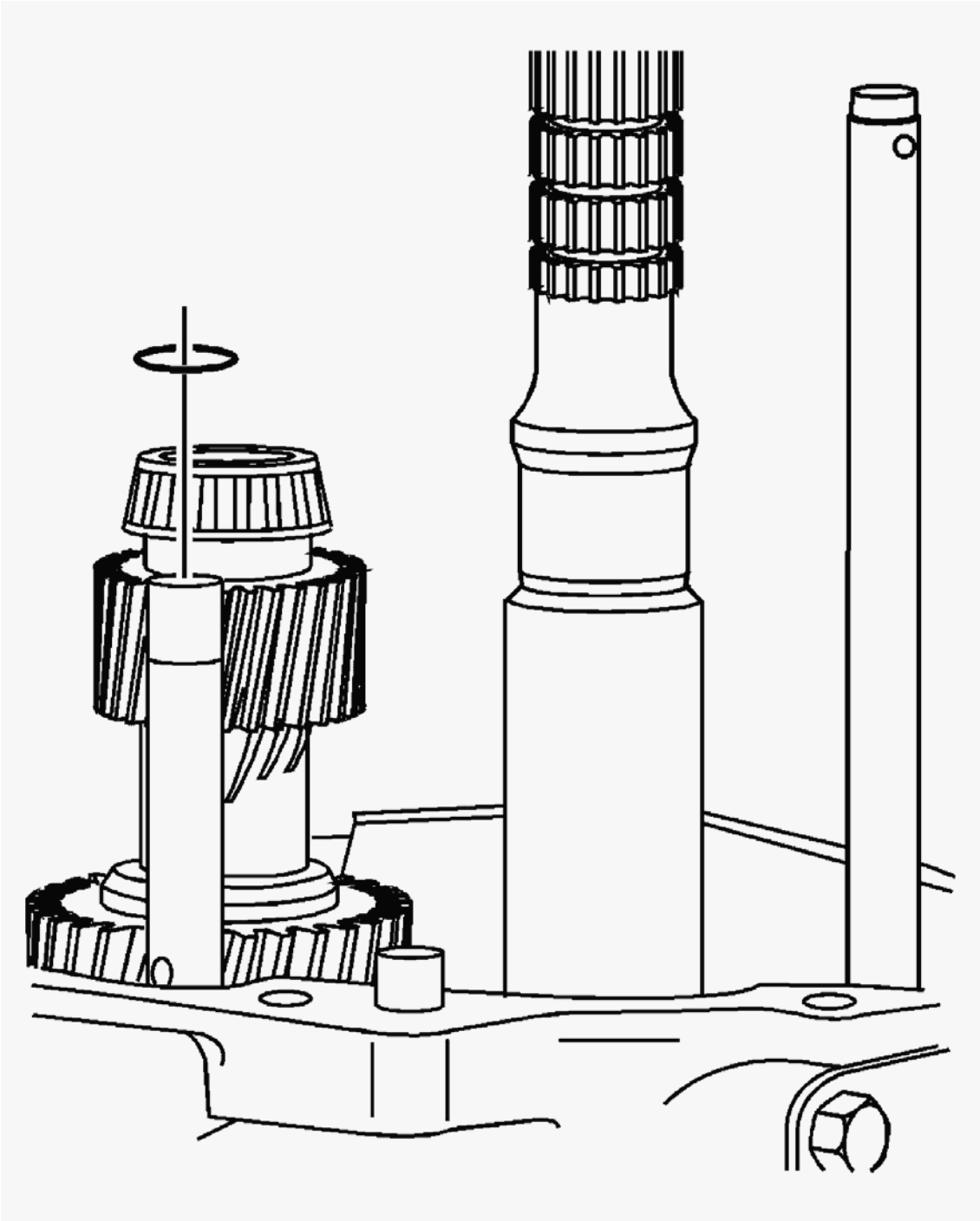

Fig. 392: View Of 5th/6th Shift Fork Retainer Ring
Courtesy of GENERAL MOTORS CORP.

3. Install the 5th/6th shift fork retainer ring.

5th/6th Speed Driven Gear Installation

Tools Required

cardiagn.com

- **J 39441** Gear Installer. See **Special Tools** .
- **J 39441-10** Gear Installer Adapter. See **Special Tools** .

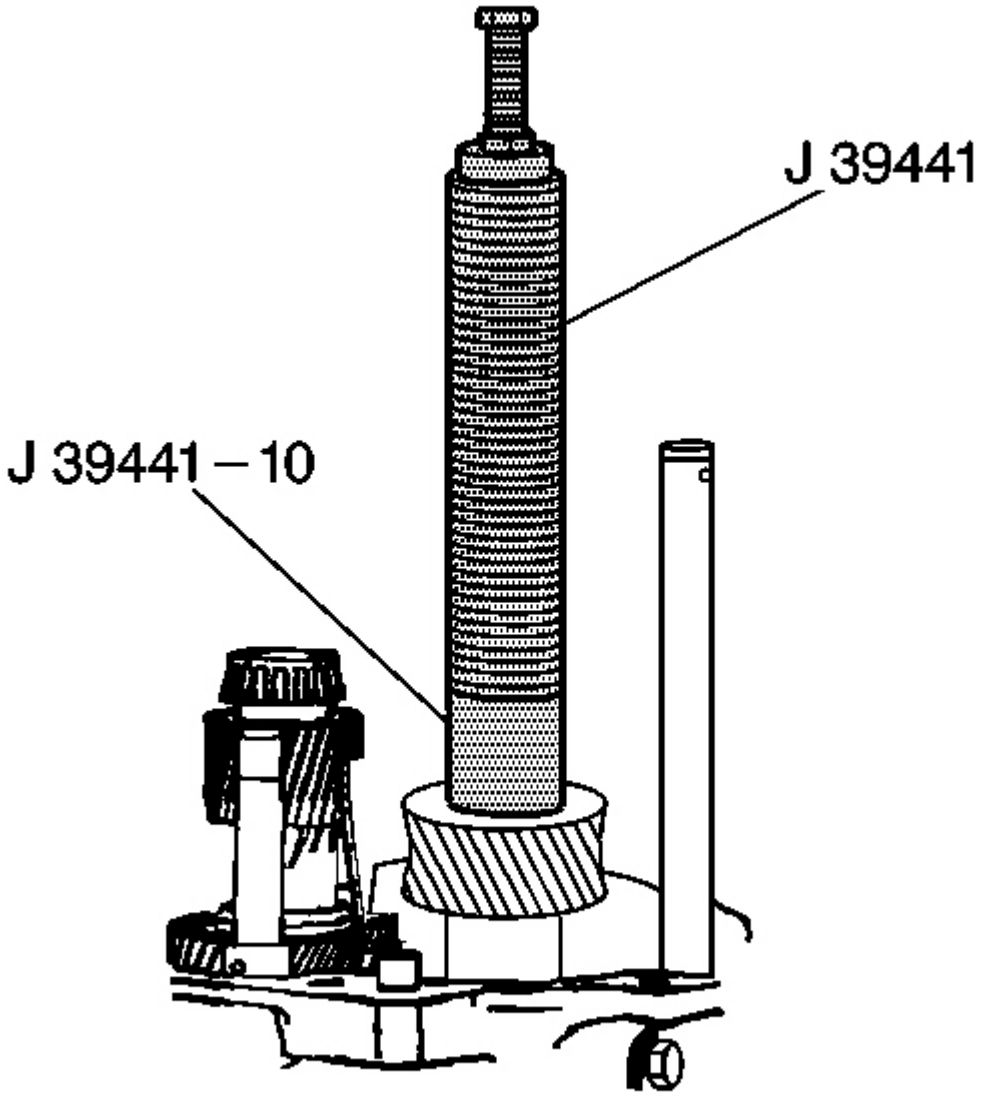

Fig. 393: Installing/Removing 5th/6th Speed Driven Gear
Courtesy of GENERAL MOTORS CORP.

Install the 5th/6th speed driven gear using the **J 39441** and the **J 39441-10** . The smaller outside diameter (OD) of the gear faces down.

cardiagn.com

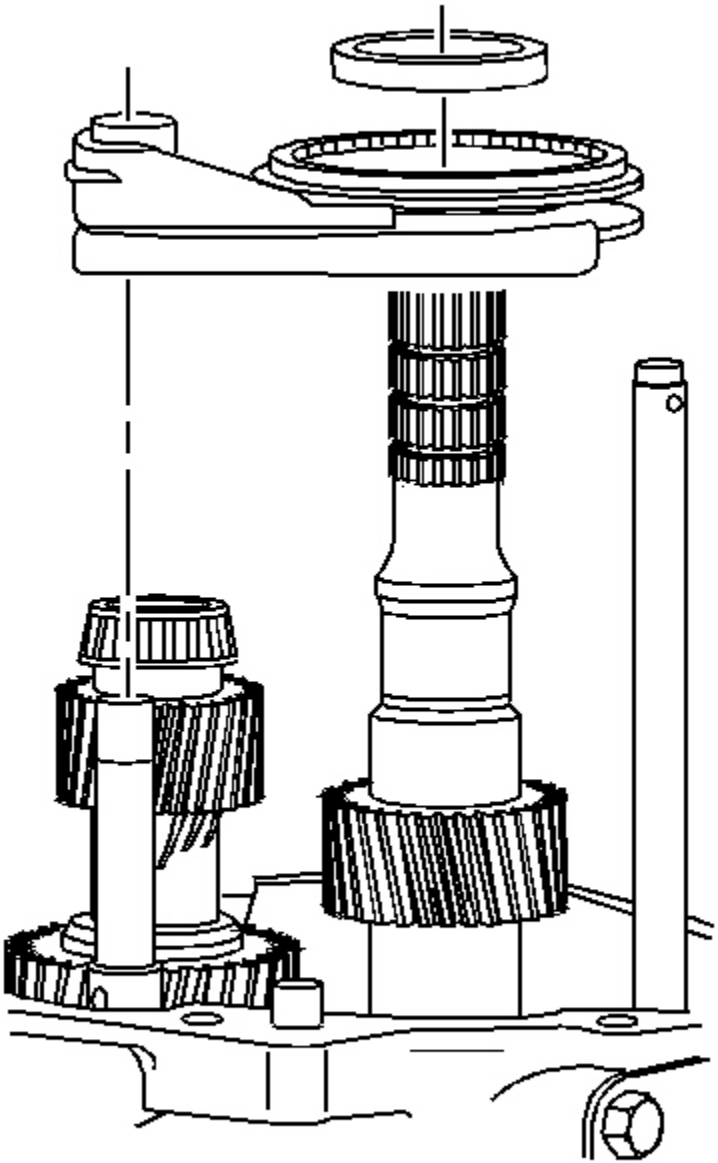

Fig. 394: Installing/Removing Reverse Shift Fork, Synchronizer & Thrust Washer
Courtesy of GENERAL MOTORS CORP.

1. Install the reverse shift fork, the synchronizer and the thrust washer.

cardiagn.com

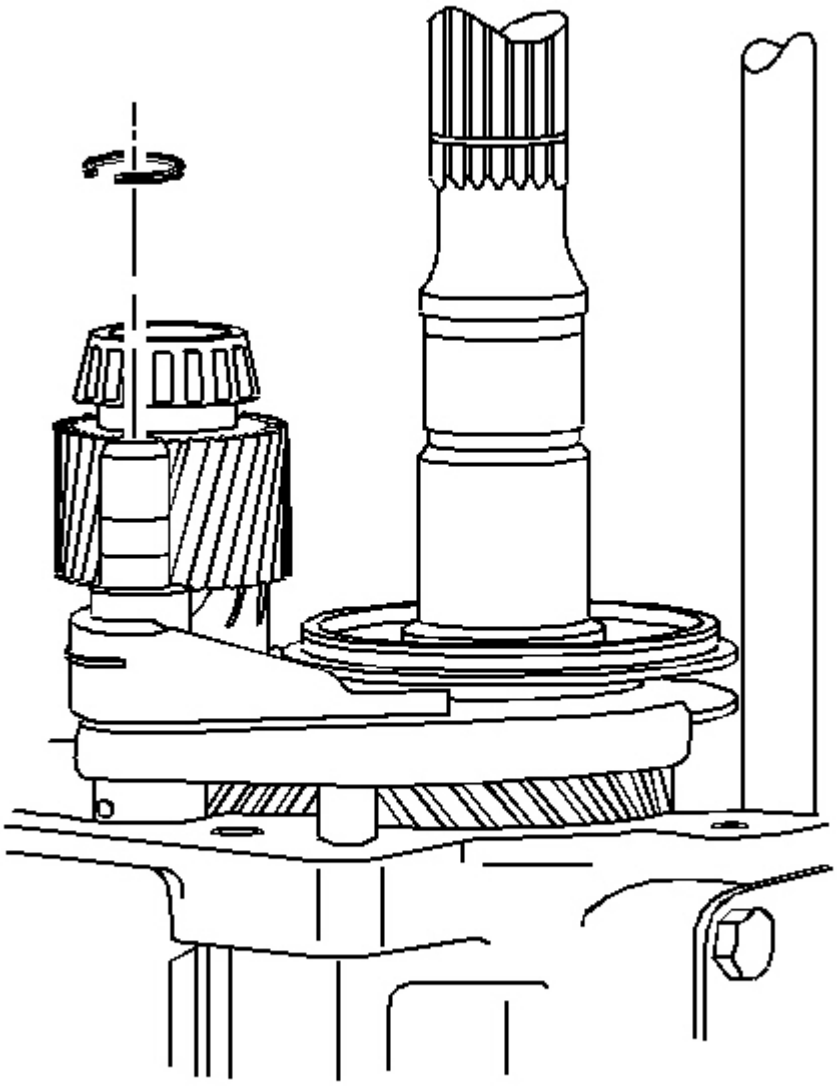

Fig. 395: Locating Shift Fork Retainer Ring
Courtesy of GENERAL MOTORS CORP.

2. Install a new shift fork retainer ring.

cardiagn.com

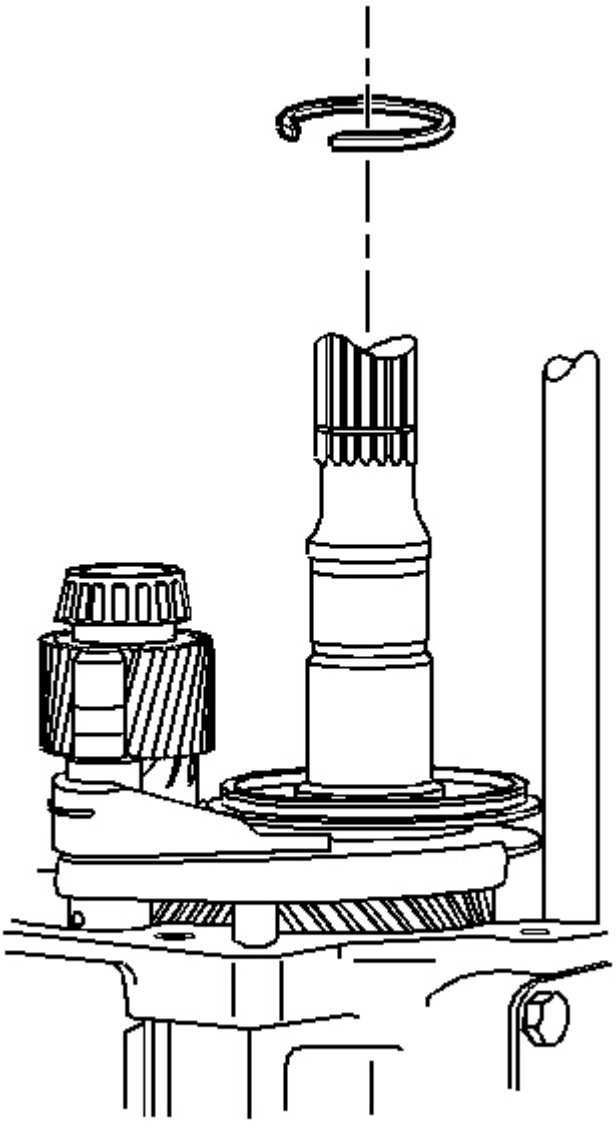

Fig. 396: View Of Reverse Synchronizer Retainer Ring
Courtesy of GENERAL MOTORS CORP.

3. Install the reverse synchronizer retainer ring.

Tools Required

J 5590 Crankshaft Gear Installer. See **Special Tools** .

cardiagn.com

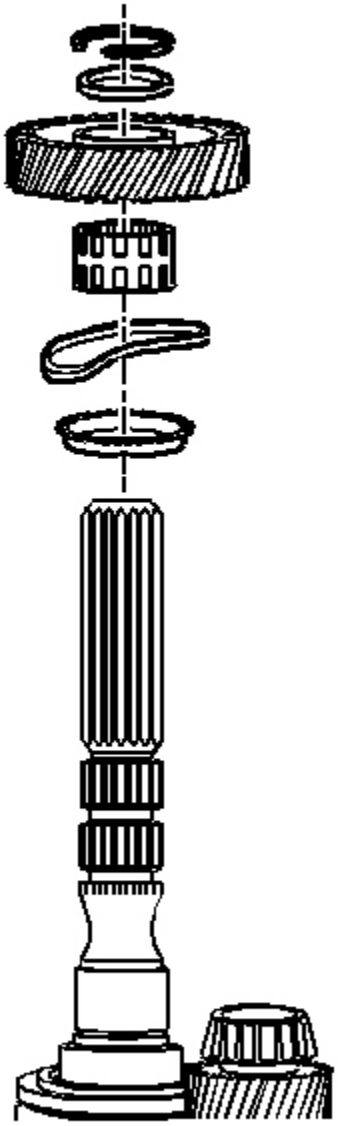

Fig. 397: Identifying Reverse Speed Gear Components
Courtesy of GENERAL MOTORS CORP.

1. Install the following parts in order:
    1. The blocking ring

cardiagn.com

2. The wave washer
3. The wave washer so the concave side faces the blocking ring
4. The caged needle bearing
5. The reverse speed gear
6. The thrust washer
7. The retainer ring

cardiagn.com

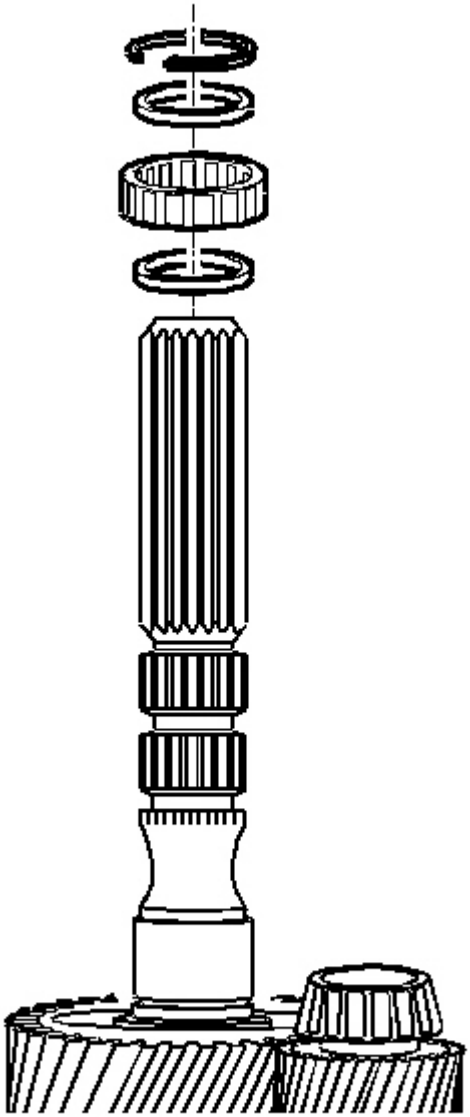

Fig. 398: View Of Mainshaft Rear Roller Bearing, Rear Bearing Retainer Ring & Spacers
Courtesy of GENERAL MOTORS CORP.

2. Install the following parts in order:
    1. The spacer
    2. The roller bearing
    3. The spacer

cardiagn.com

4. The roller bearing retainer ring

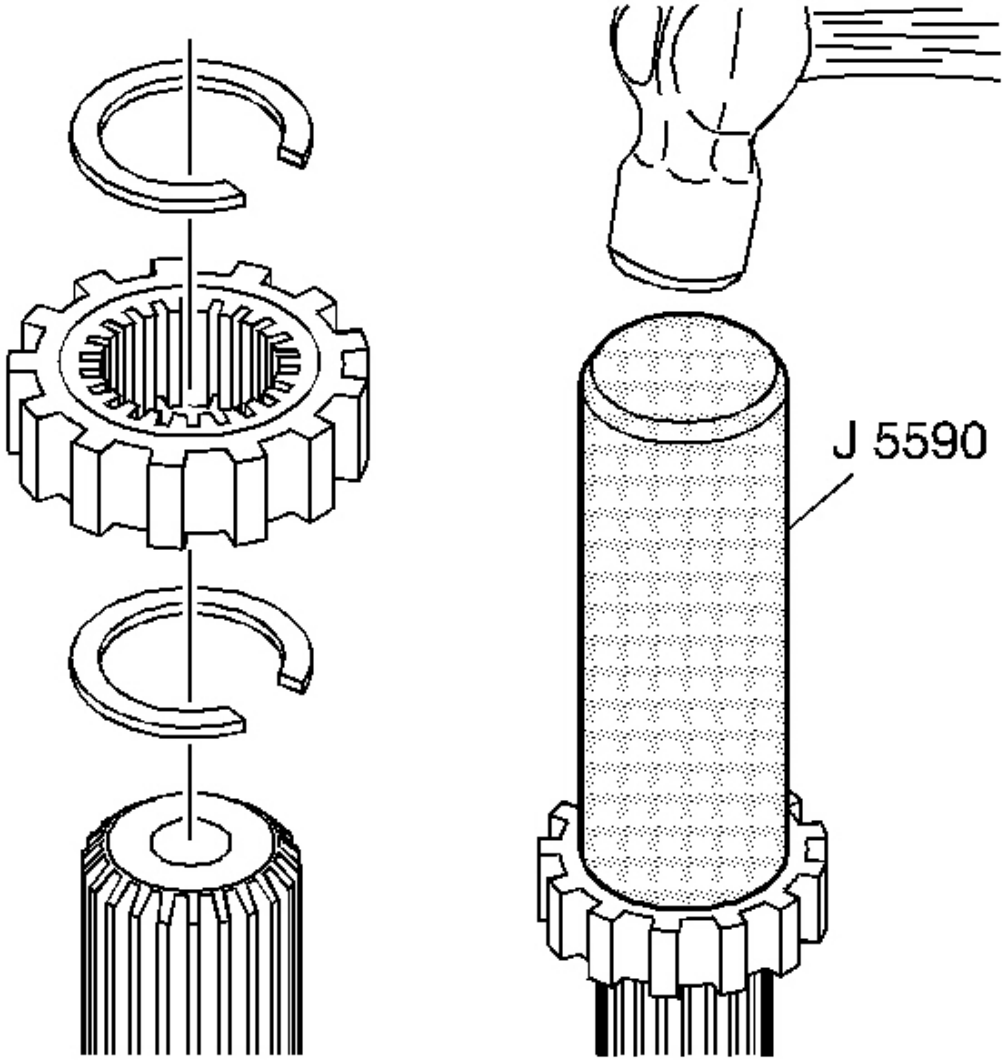

Fig. 399: Installing Speed Sensor Reluctor Wheel & Retainer Ring Using J 5590
Courtesy of GENERAL MOTORS CORP.

3. Install the retainer ring.
4. Install the speed sensor reluctor wheel using **J 5590** .
5. Install the retainer ring.

cardiagn.com

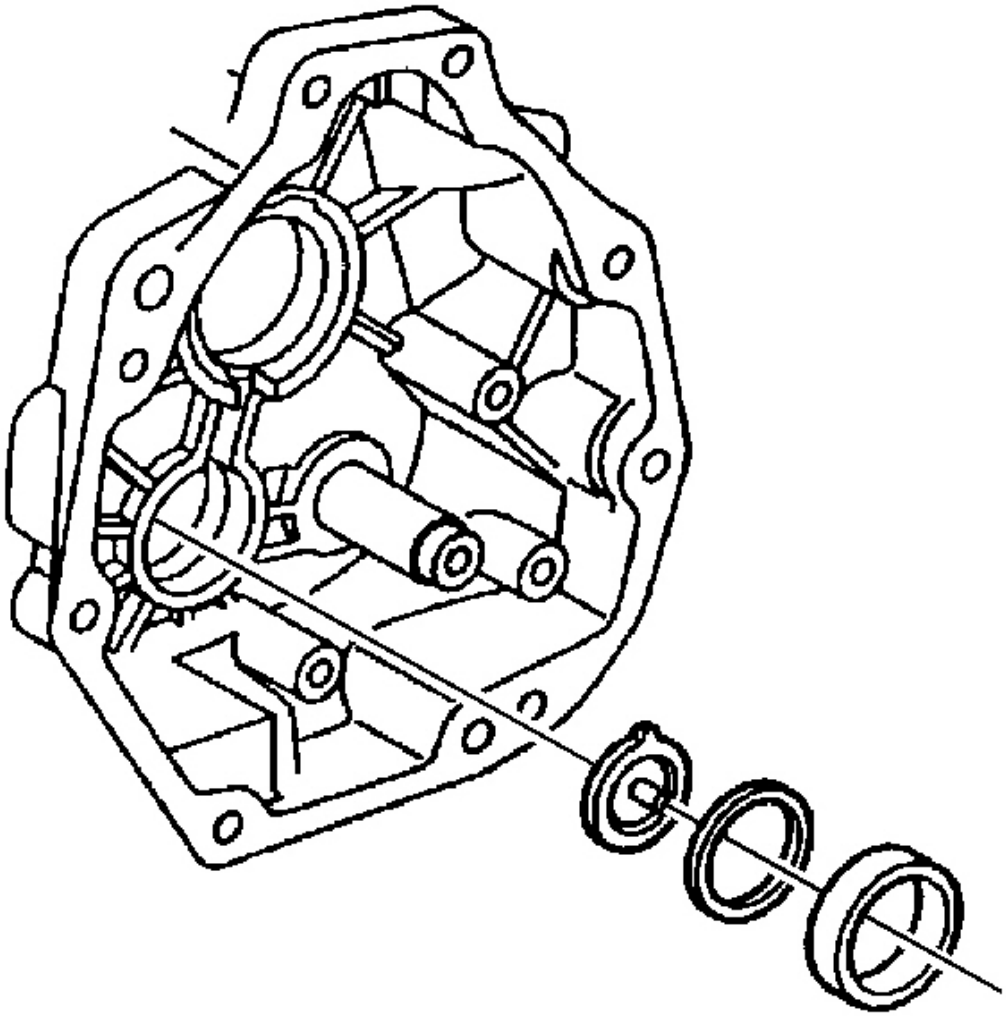

Fig. 400: View Of Countershaft Extension Bearing Race, Funnel & Shim
Courtesy of GENERAL MOTORS CORP.

1. Install the funnel.
2. Install the selective shims. Refer to the Countershaft Extension in **Shimming Procedures (Y Car)** or **Shimming Procedures (CTSV)** or **Shimming Procedures (GTO)** .
3. Install the countershaft extension bearing race.

cardiagn.com

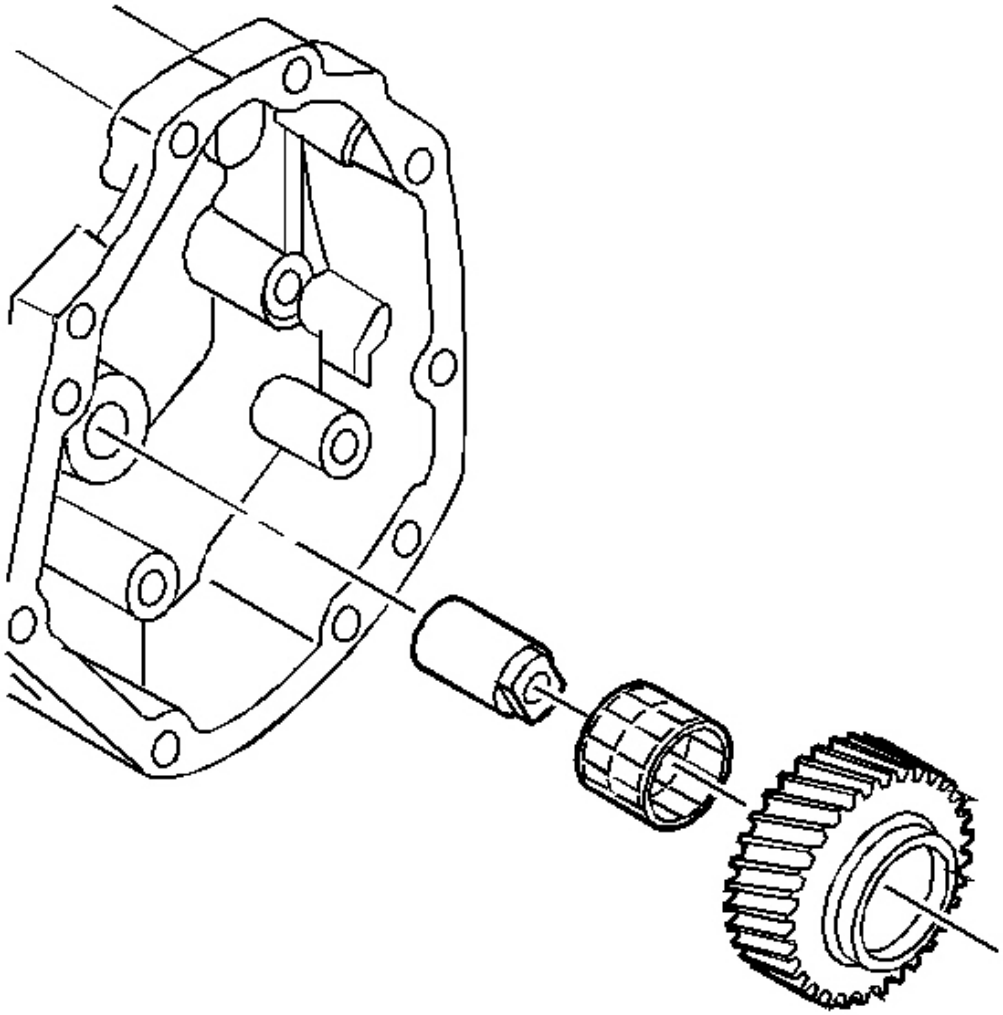

Fig. 401: Identifying Reverse Idler Shaft, Roller Bearing & Reverse Idler Gear
Courtesy of GENERAL MOTORS CORP.

4. Install the following parts in order:
    1. The reverse idler shaft
    2. The roller bearing
    3. The reverse idler gear

cardiagn.com

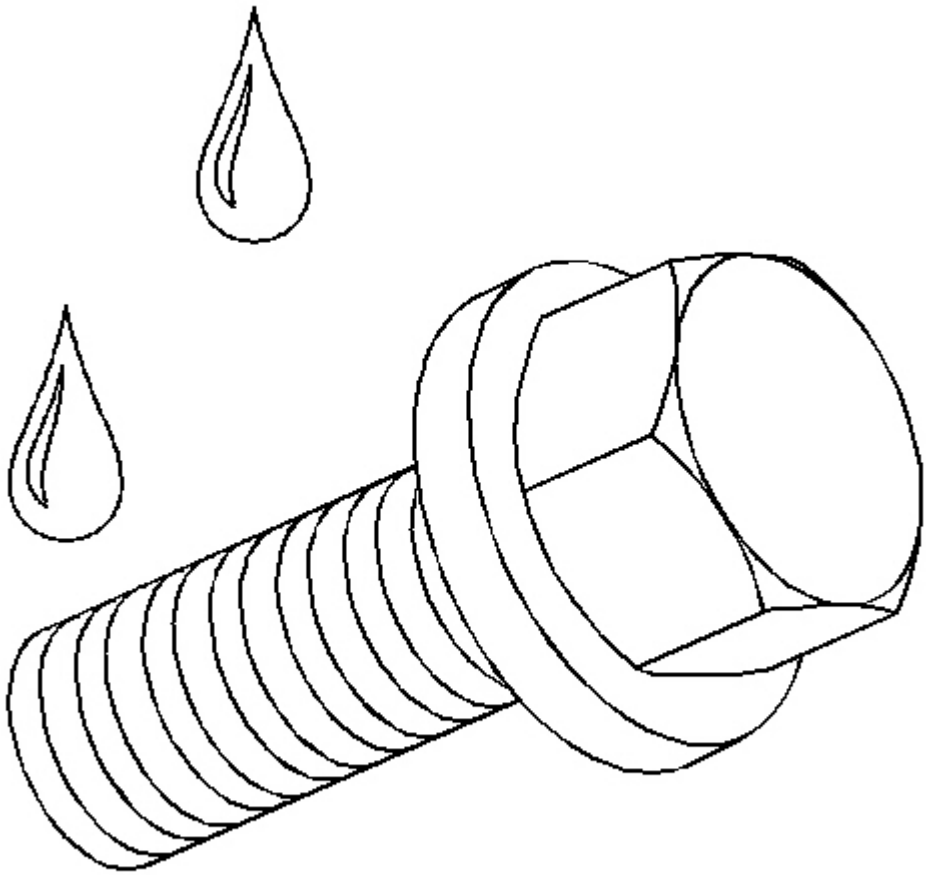

Fig. 402: Applying Sealant To Reverse Idler Shaft Brackets Bolt Threads
Courtesy of GENERAL MOTORS CORP.

5. Apply GM P/N 12345382 (Canadian P/N 10953489) or the equivalent to the reverse idler shaft brackets bolt threads.

NOTE: **Refer to Fastener Notice in Cautions and Notices.**

6. Install the reverse idler shaft bracket.
7. Install the reverse idler shaft bracket bolts.

Tighten: Tighten the bolts to 25 N.m (18 Ib. ft).

cardiagn.com

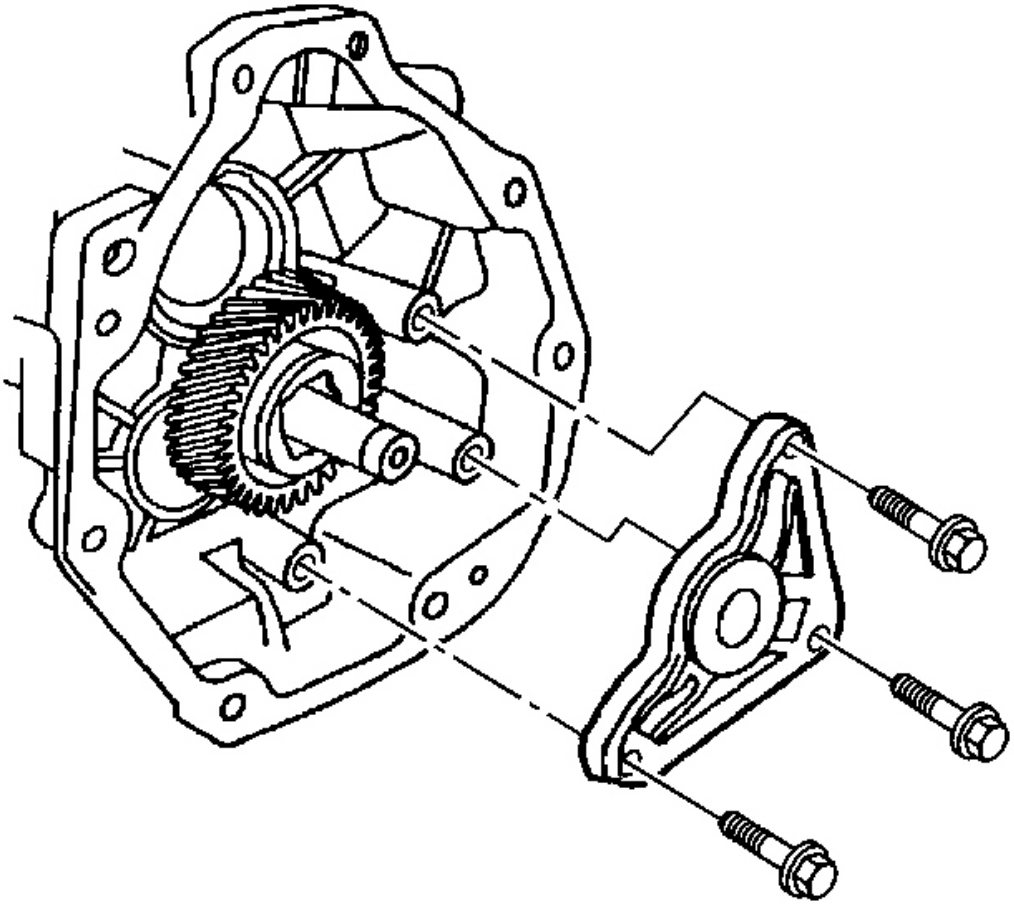

Fig. 403: View Of Reverse Idler Shaft Bracket & Mounting Bolts
Courtesy of GENERAL MOTORS CORP.

cardiagn.com

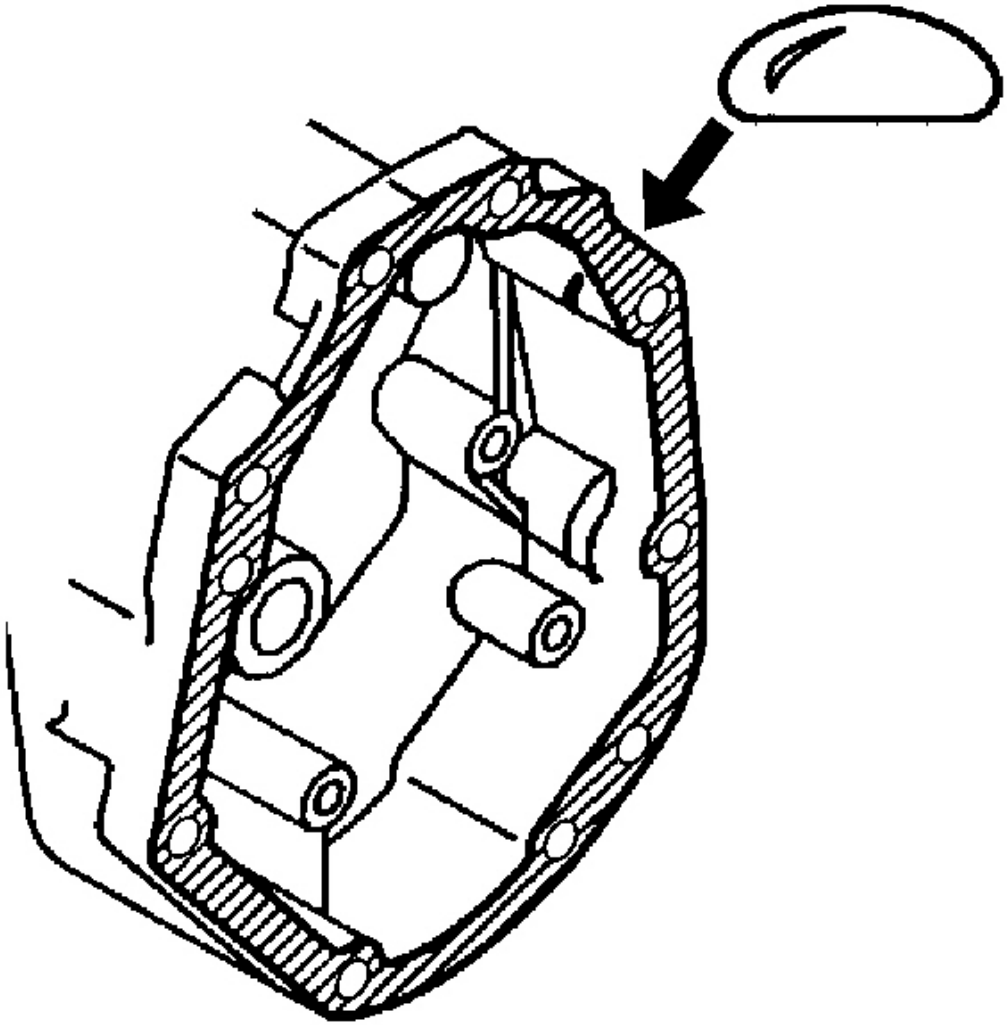

Fig. 404: Applying Sealant To Extension Housing To Transmission Case Mating Surface
Courtesy of GENERAL MOTORS CORP.

8. Apply sealant GM P/N 12345739 (Canadian P/N 10953472) or equivalent to the extension housing to the transmission case mating surface.

cardiagn.com

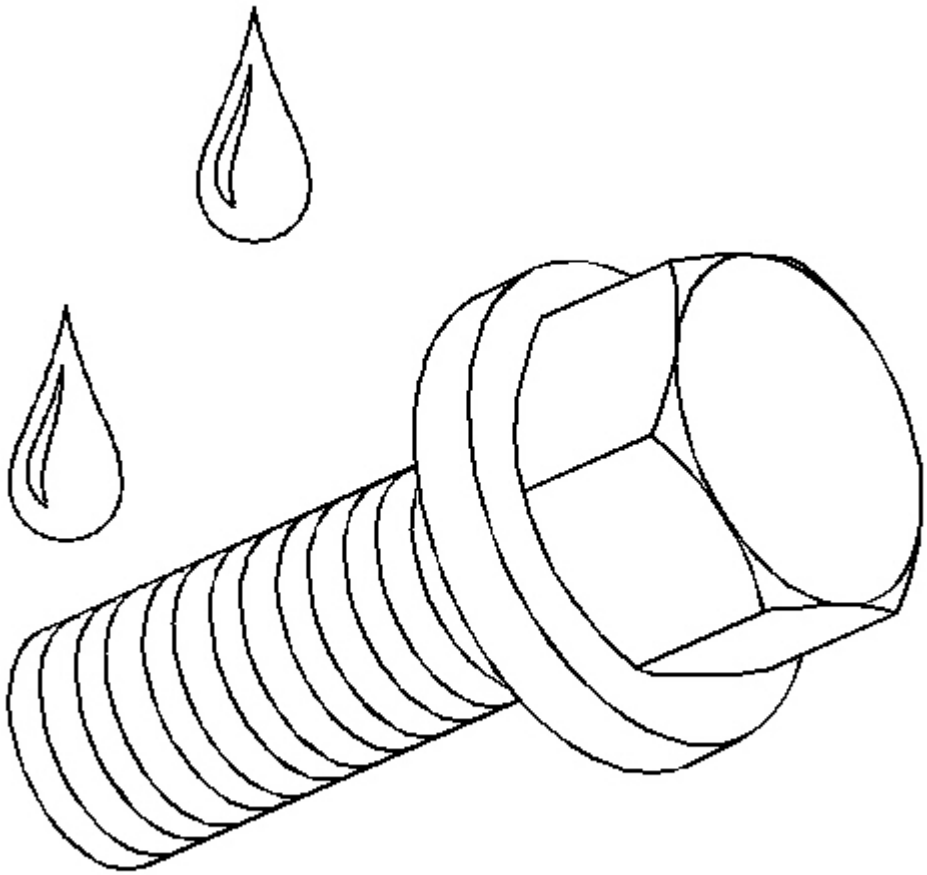

Fig. 405: Applying Sealant To Top Extension Housing Bolt
Courtesy of GENERAL MOTORS CORP.

9. Apply sealant GM P/N 12346004 (Canadian P/N 10953480) or equivalent to the top two extension housing bolts.

cardiagn.com

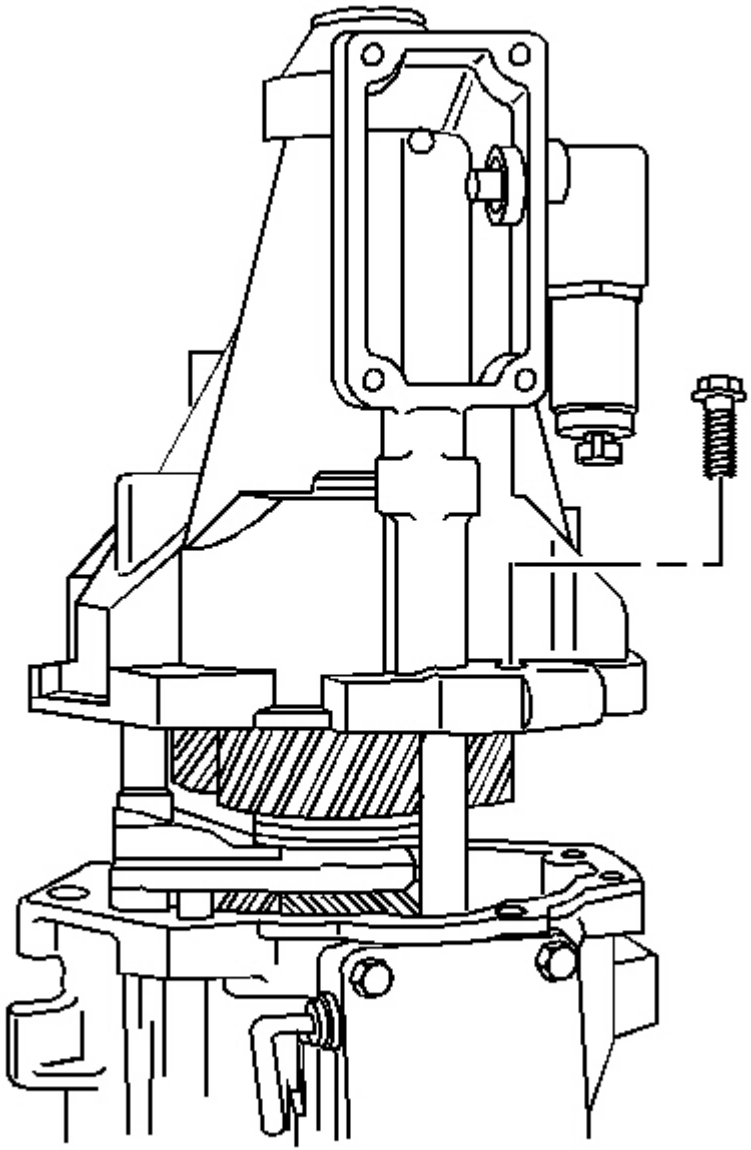

Fig. 406: View Of Extension Housing Bolts & Extension Housing
Courtesy of GENERAL MOTORS CORP.

10. Install the extension housing.
11. Install the extension housing bolts and the transmission bumper.

cardiagn.com

Tighten: Tighten the bolts to 48 N.m (36 lb ft).

12. Install the vent tube and bolt, if removed.

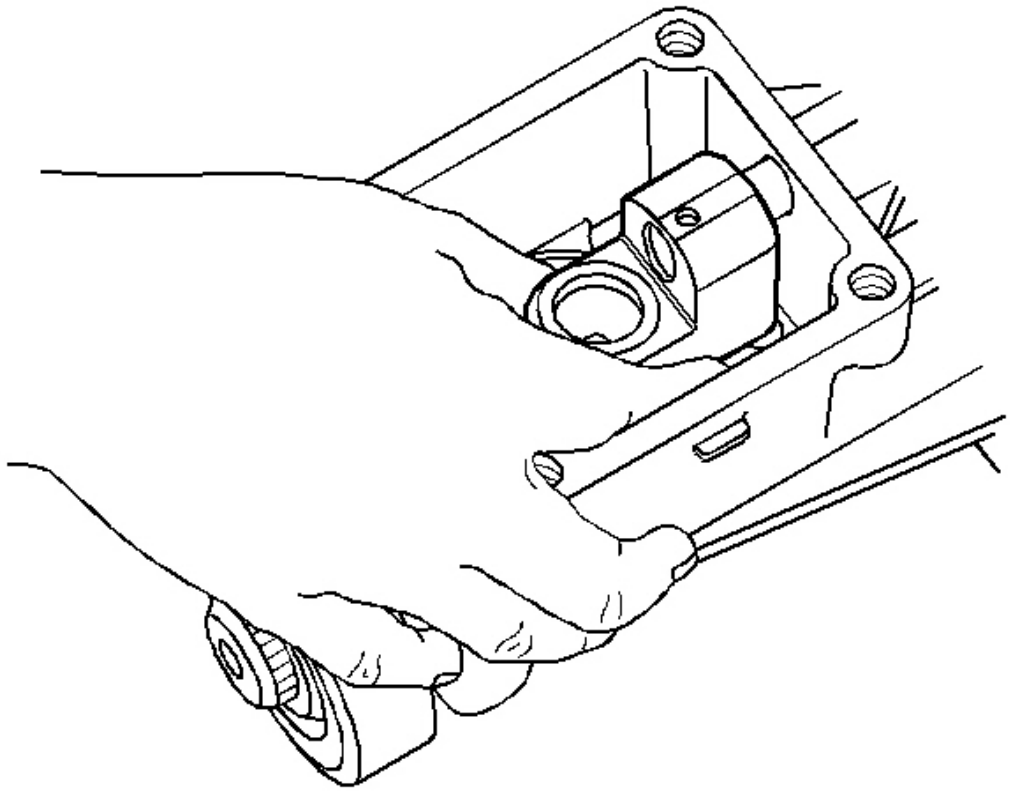

Fig. 407: View Of Rear Offset Shift Lever & Isolator Cup
Courtesy of GENERAL MOTORS CORP.

13. Install the rear offset shift lever and the isolator cup.

cardiagn.com

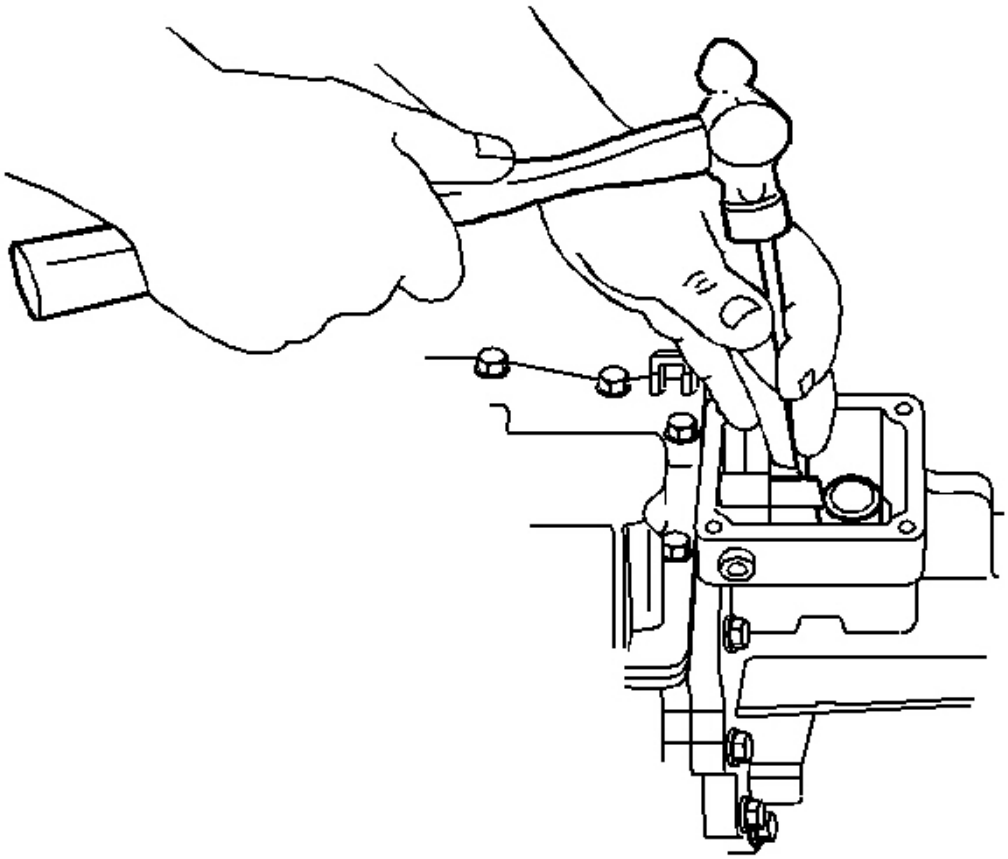

Fig. 408: Installing/Removing Rear Offset Shift Lever Roll Pin
Courtesy of GENERAL MOTORS CORP.

14. Install the rear offset shift lever roll pin.

cardiagn.com

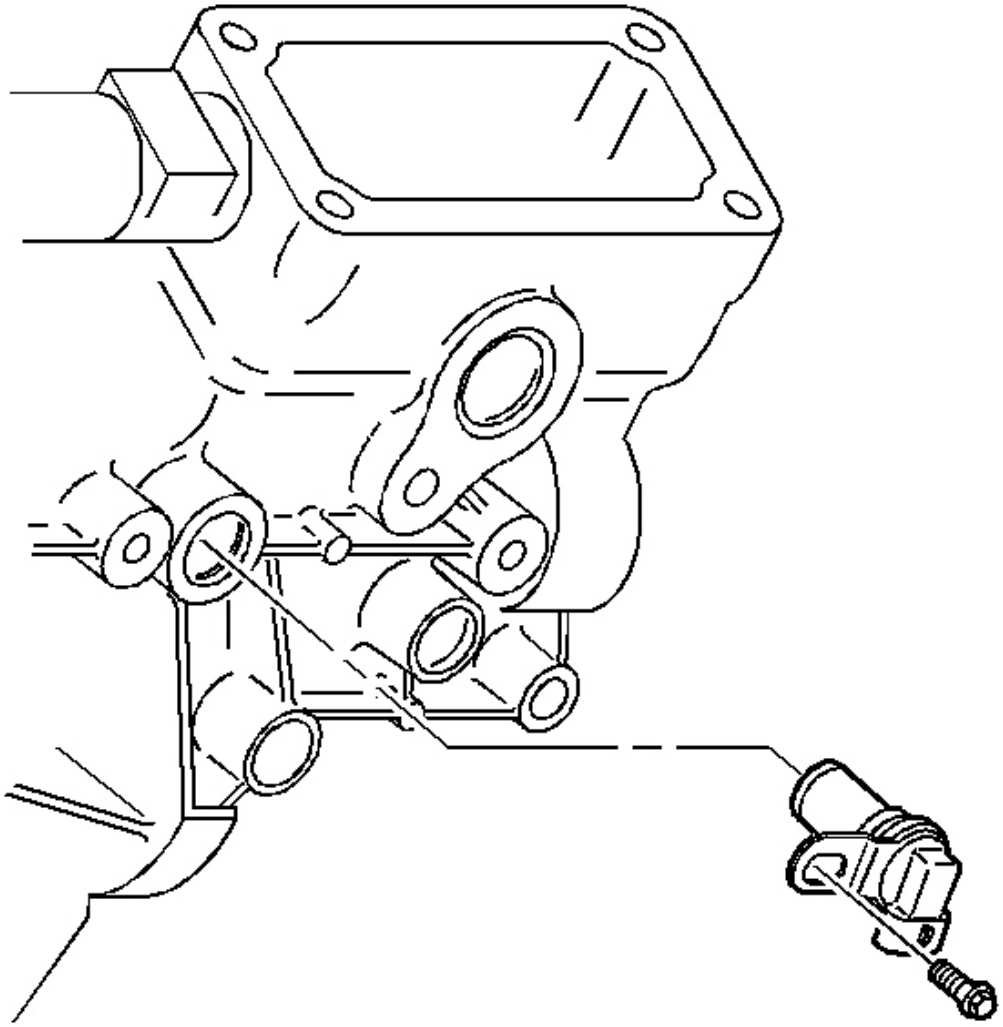

Fig. 409: View Of Vehicle Speed Sensor (VSS)
Courtesy of GENERAL MOTORS CORP.

15. Install the vehicle speed sensor.
16. Install the vehicle speed sensor bolt.

Tighten: Tighten the bolts to 10 N.m (89 lb in).

cardiagn.com

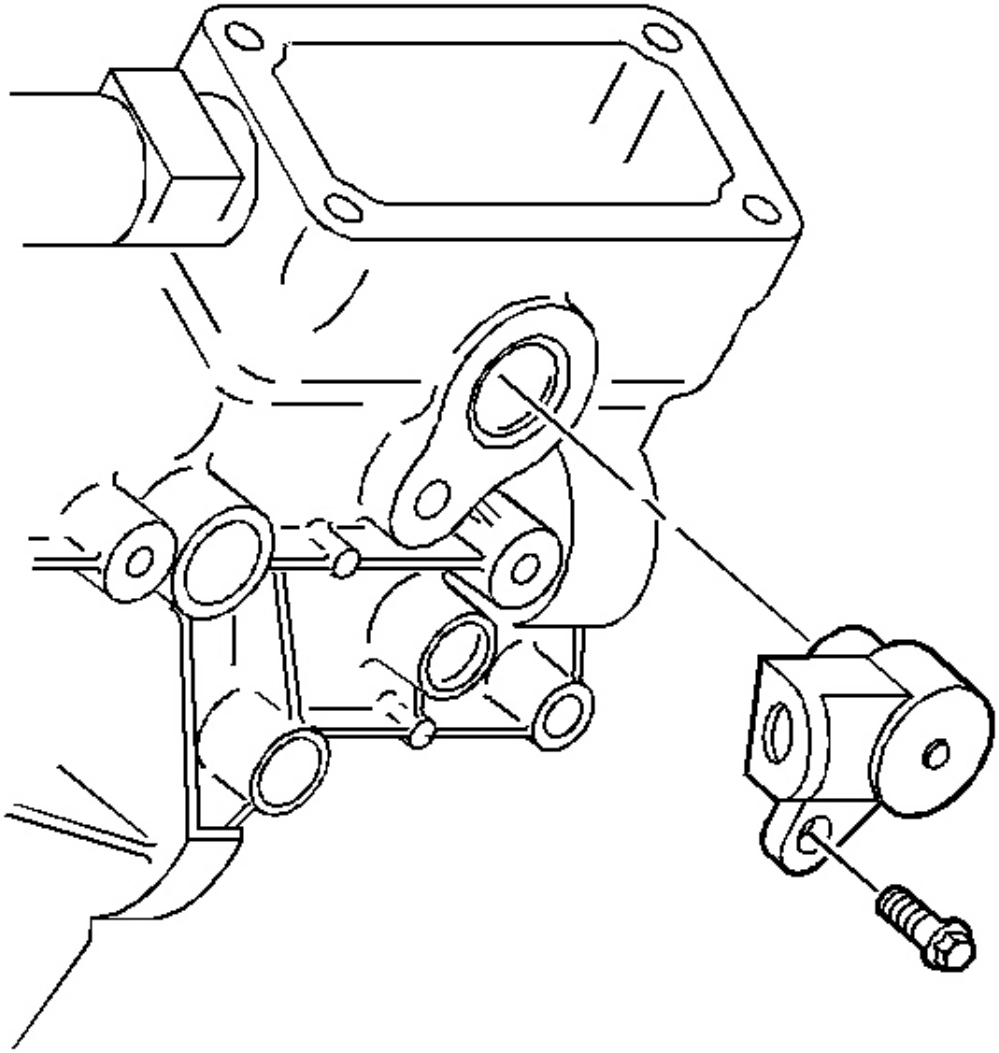

Fig. 410: Installing/Removing Reverse Lockout Body & Bolt To Extension Housing
Courtesy of GENERAL MOTORS CORP.

17. Install the reverse lockout body and bolt to the extension housing.

    Tighten: Tighten the bolts to 18 N.m (13 lb ft).

cardiagn.com

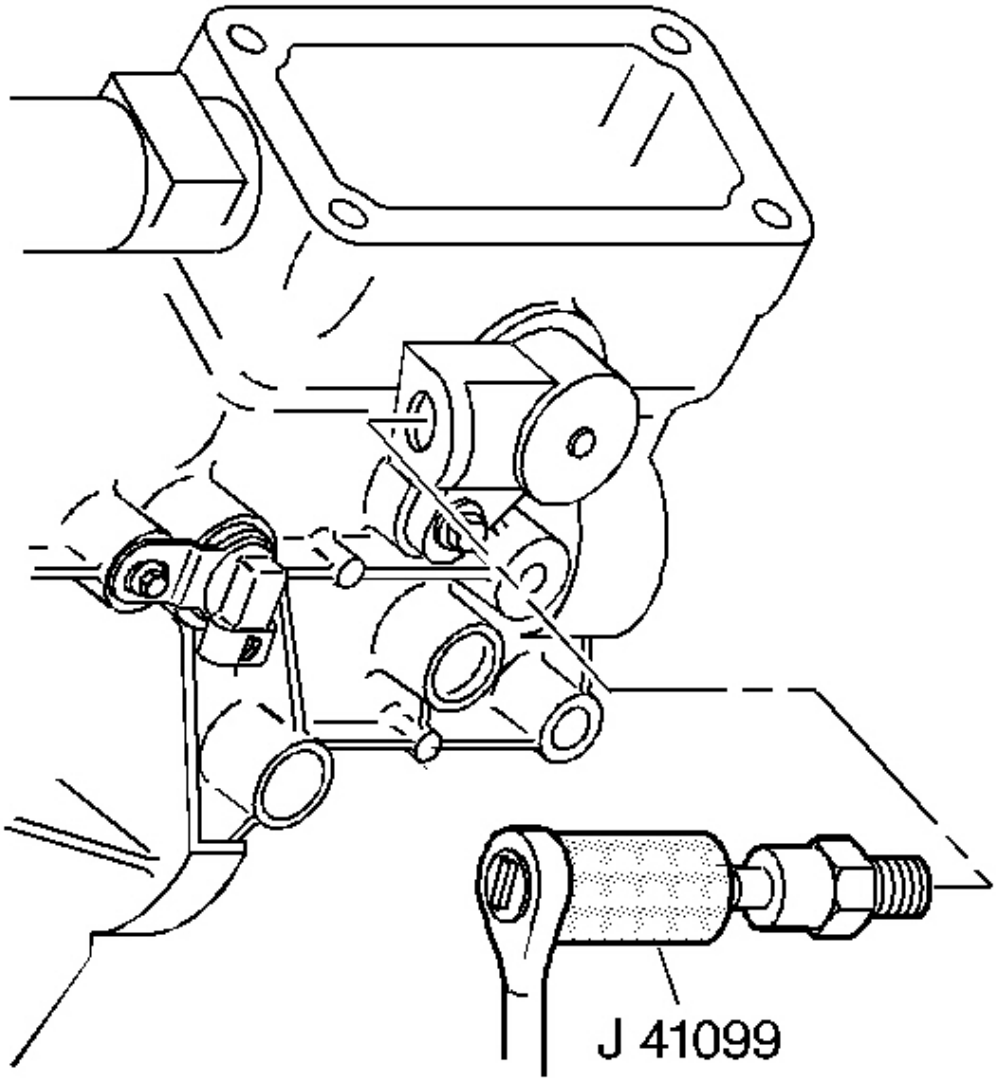

Fig. 411: Installing/Removing Reverse Lockout Solenoid Into Reverse Lockout Body Using J 41099
Courtesy of GENERAL MOTORS CORP.

18. Install the reverse lockout solenoid into the reverse lockout body using the **J 41099** .

    Tighten: Tighten the bolts to 40 N.m (30 lb ft).

cardiagn.com

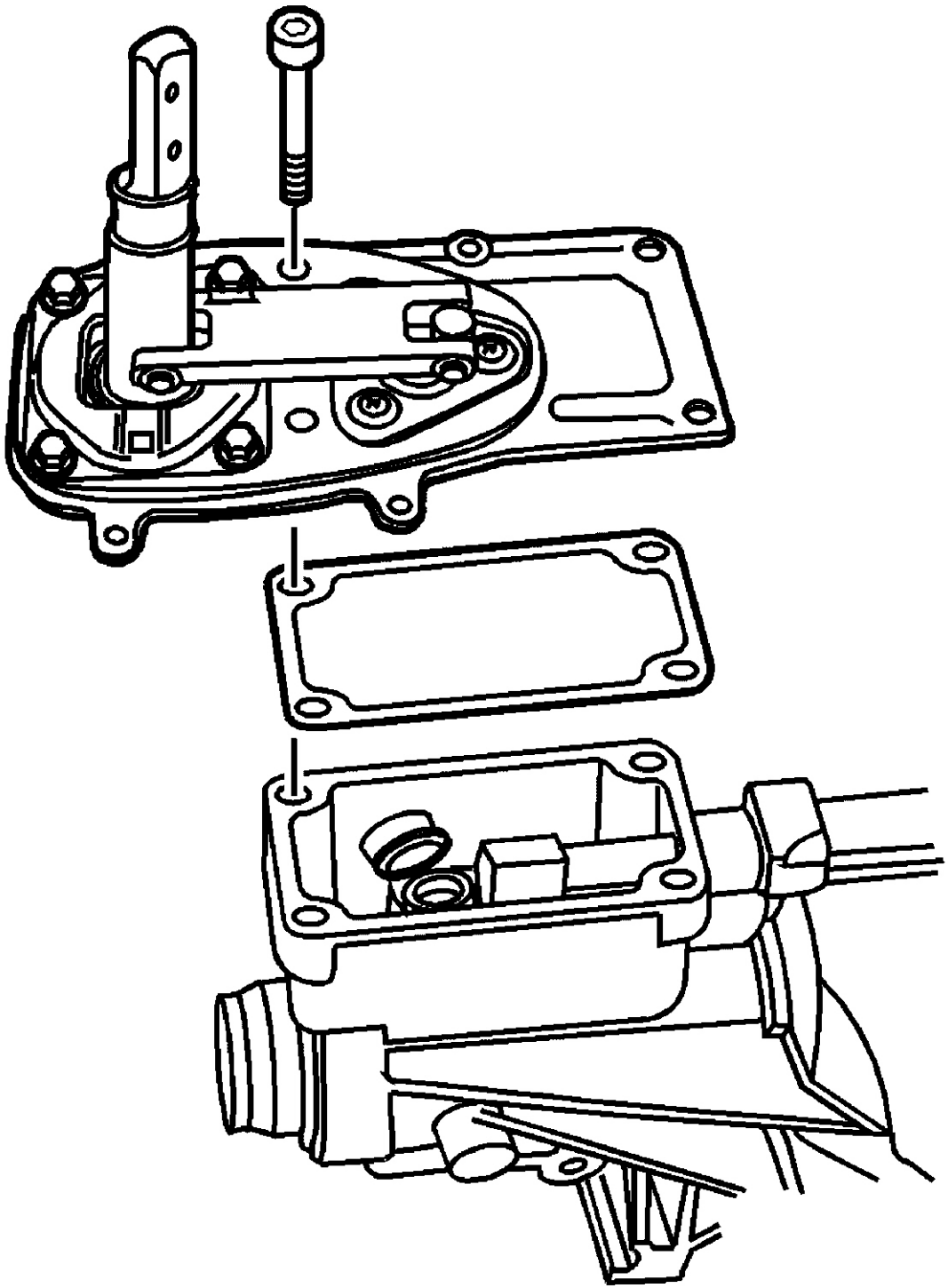

Fig. 412: Identifying Shifter, Gasket & Retaining Bolts
Courtesy of GENERAL MOTORS CORP.

cardiagn.com

19. Install the shifter gasket.
20. Install the shifter.
21. Install the shifter bolts.

    Tighten: Tighten the bolts to 22 N.m (16 lb ft).

cardiagn.com

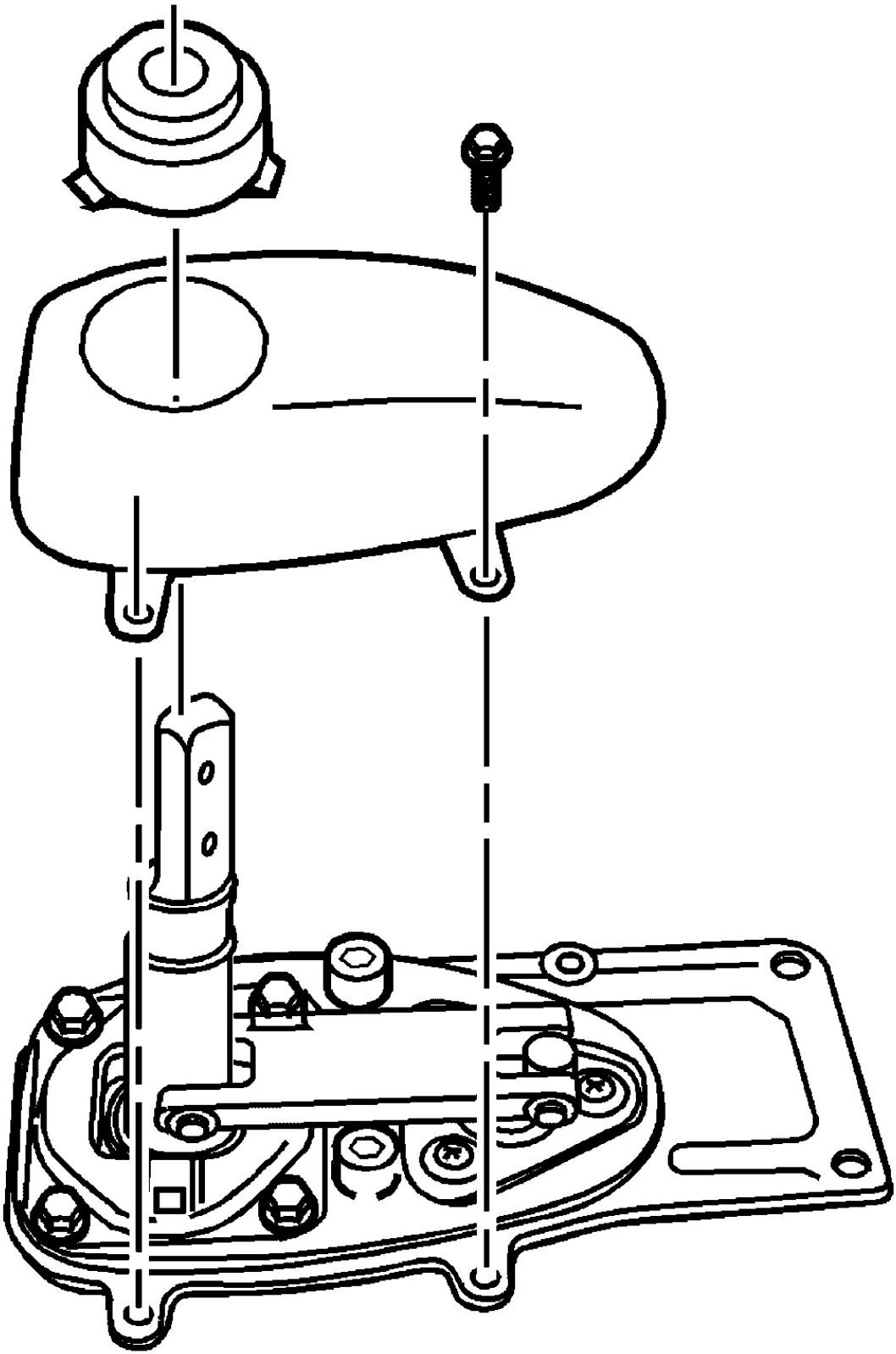

cardiagn.com

Fig. 413: View Of Shift Lever Cover & Retaining Screws
Courtesy of GENERAL MOTORS CORP.

22. Install the shift lever cover.
23. Install the shift lever cover screws.

    Tighten: Tighten the bolts to 4 N.m (35 lb in).

24. Install the shifter boot.

SHIMMING PROCEDURES (Y CAR)

Input Shaft, Mainshaft, and Countershaft

Tools Required

- **J 8001** Dial Indicator Set. See **Special Tools** .
- **J 39444-1** Countershaft End Play Rod. See **Special Tools** .

1. Rotate the transmission adapter plate to the vertical position.

cardiagn.com

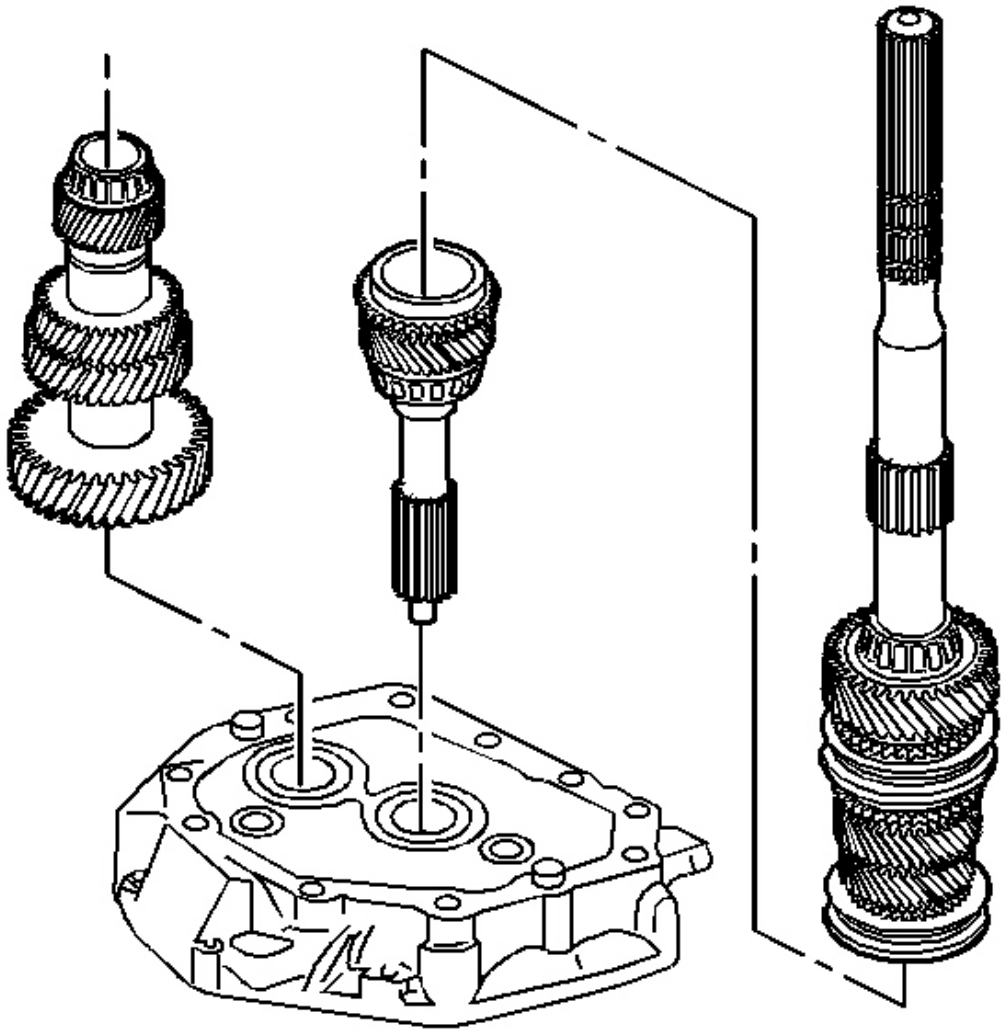

Fig. 414: View Of Transmission Components
Courtesy of GENERAL MOTORS CORP.

2. Install the following assemblies in order:
    1. The input shaft to the adapter plate
    2. Align the 4th speed gear blocking ring to the input shaft.
    3. The mainshaft assembly
    4. The countershaft (lift up the mainshaft enough to install the countershaft.)

cardiagn.com

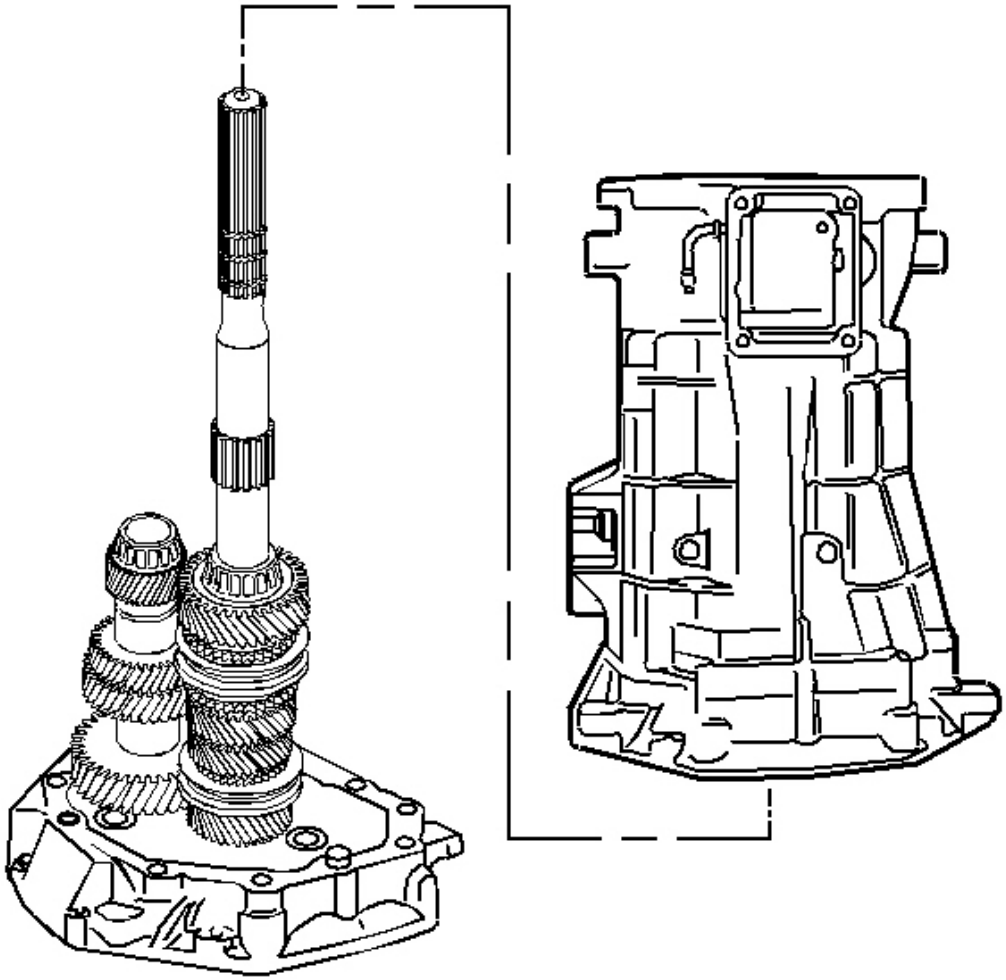

Fig. 415: Identifying Transmission Case
Courtesy of GENERAL MOTORS CORP.

3. Install the transmission case.

cardiagn.com

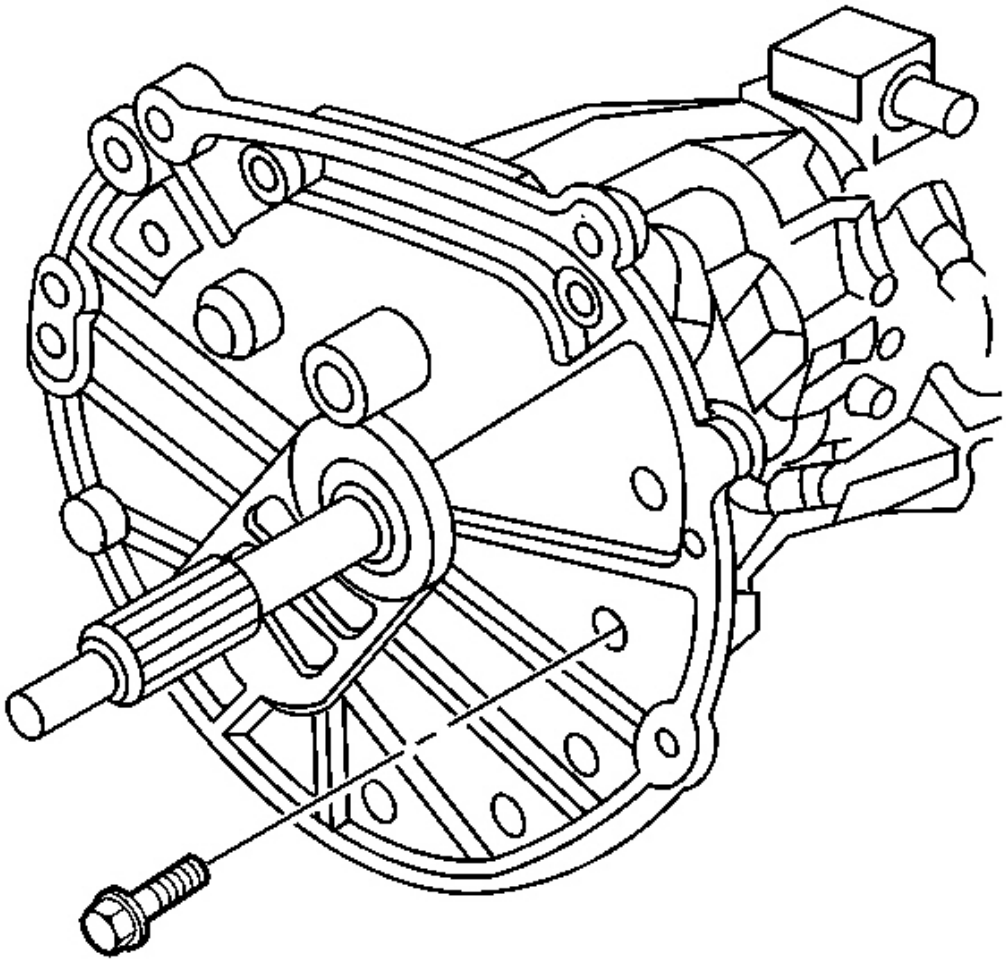

Fig. 416: View Of Adapter Plate & Transmission Case Bolts
Courtesy of GENERAL MOTORS CORP.

NOTE: Refer to Fastener Notice in Cautions and Notices.

4. Install the adapter plate to transmission case bolts.

   Tighten: Tighten the bolts to 35 N.m (26 Ib. ft).

cardiagn.com

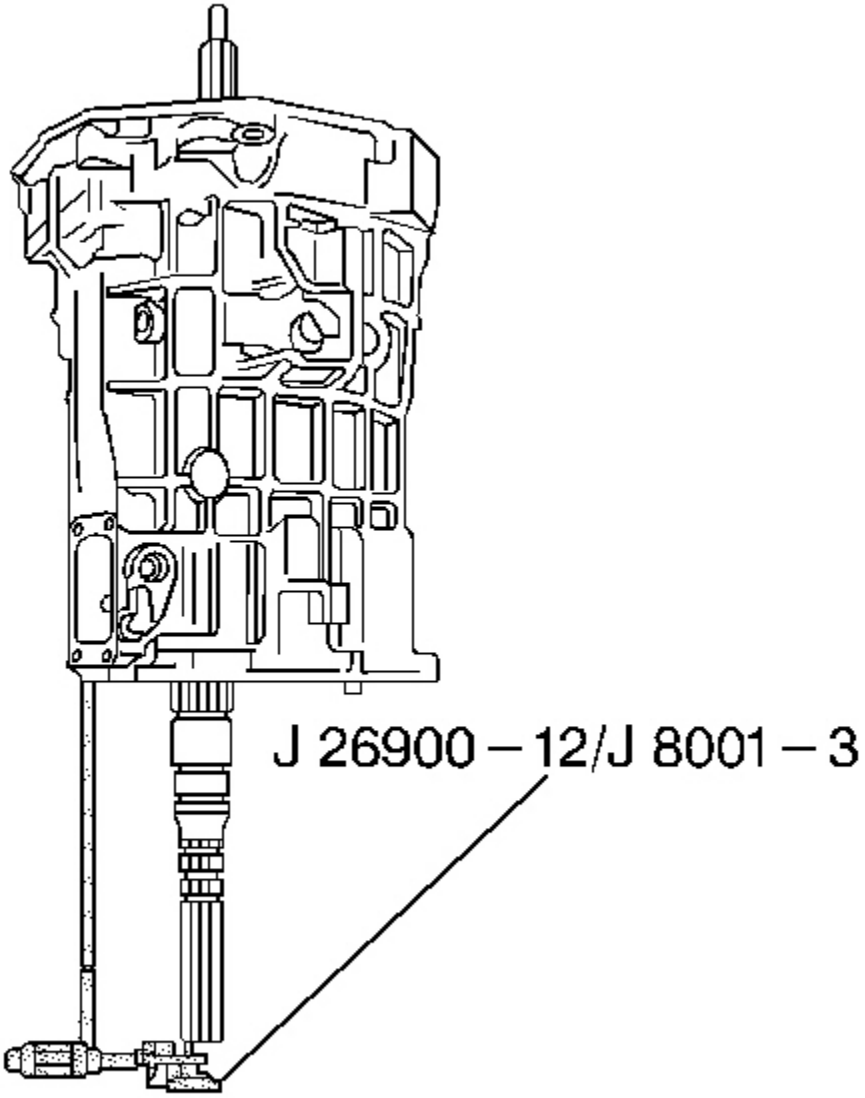

Fig. 417: Measuring Input Shaft/Mainshaft End Play Using J 8001-3
Courtesy of GENERAL MOTORS CORP.

5. Measure the input shaft/mainshaft end play using the following procedure:
    1. Place the tip of the **J 8001** -3 on the end of the mainshaft.
    2. Move the input shaft up and down.
    3. Record the measurement.

cardiagn.com

6. Select a shim to achieve 0.00-0.05 mm (0.000-0.002 in) preload.
7. Remove the **J 8001** -3.

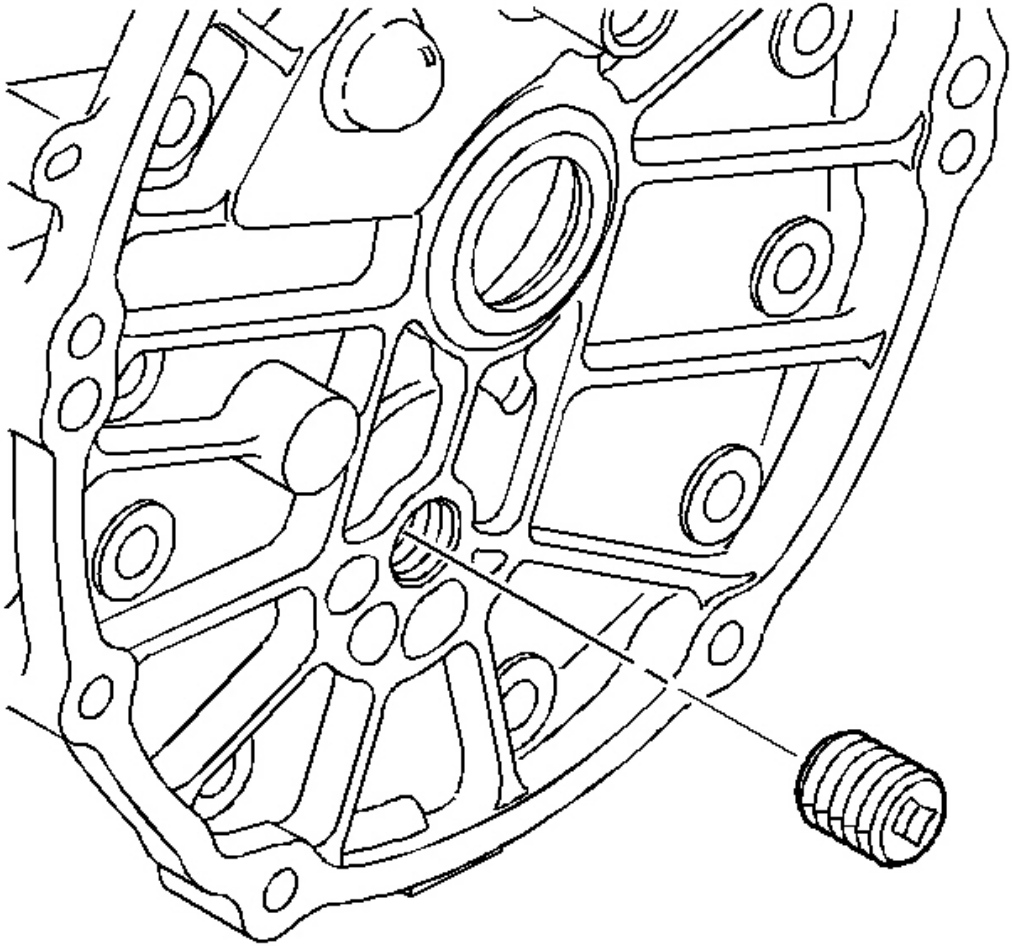

Fig. 418: Locating Adapter Plate Plug
Courtesy of GENERAL MOTORS CORP.

8. Remove the adapter plate plug.

cardiagn.com

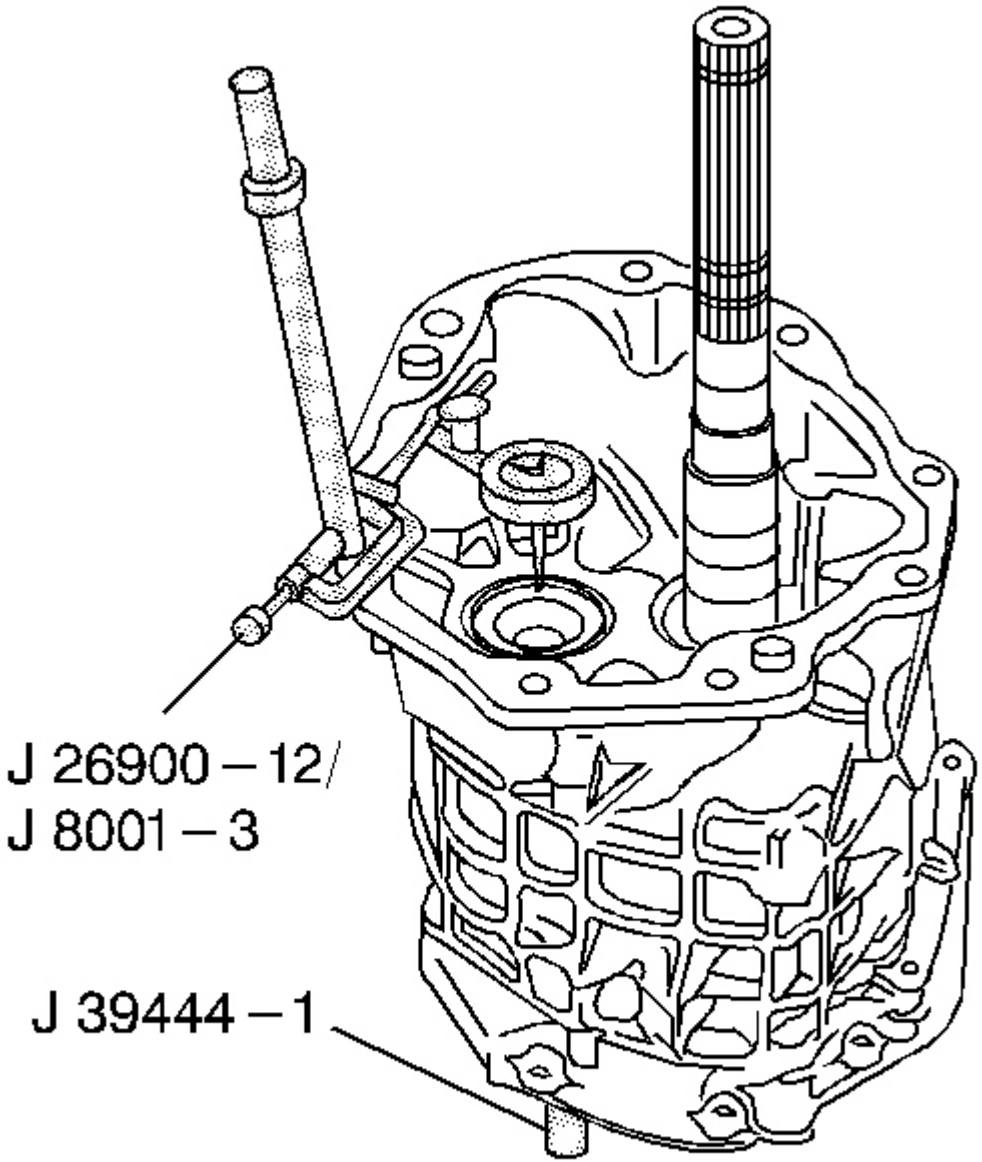

Fig. 419: Measuring Countershaft End Play With J 8001 & J 39444-1
Courtesy of GENERAL MOTORS CORP.

9. Place the tip of the **J 8001** -3 on the end of the countershaft.
10. Measure the countershaft end play using the following procedure:
    1. Install the **J 39444-1** through the adapter plate plug hole. Screw the **J 39444-1** into the

cardiagn.com

countershaft.

2. Move the countershaft up and down with the countershaft end play rod **J 39444-1** .
3. Record the measurement.

11. Select a shim to achieve 0.00-0.05 mm (0.000-0.002 in) preload.
12. Remove the **J 8001** -3.
13. Remove the **J 39444-1** .

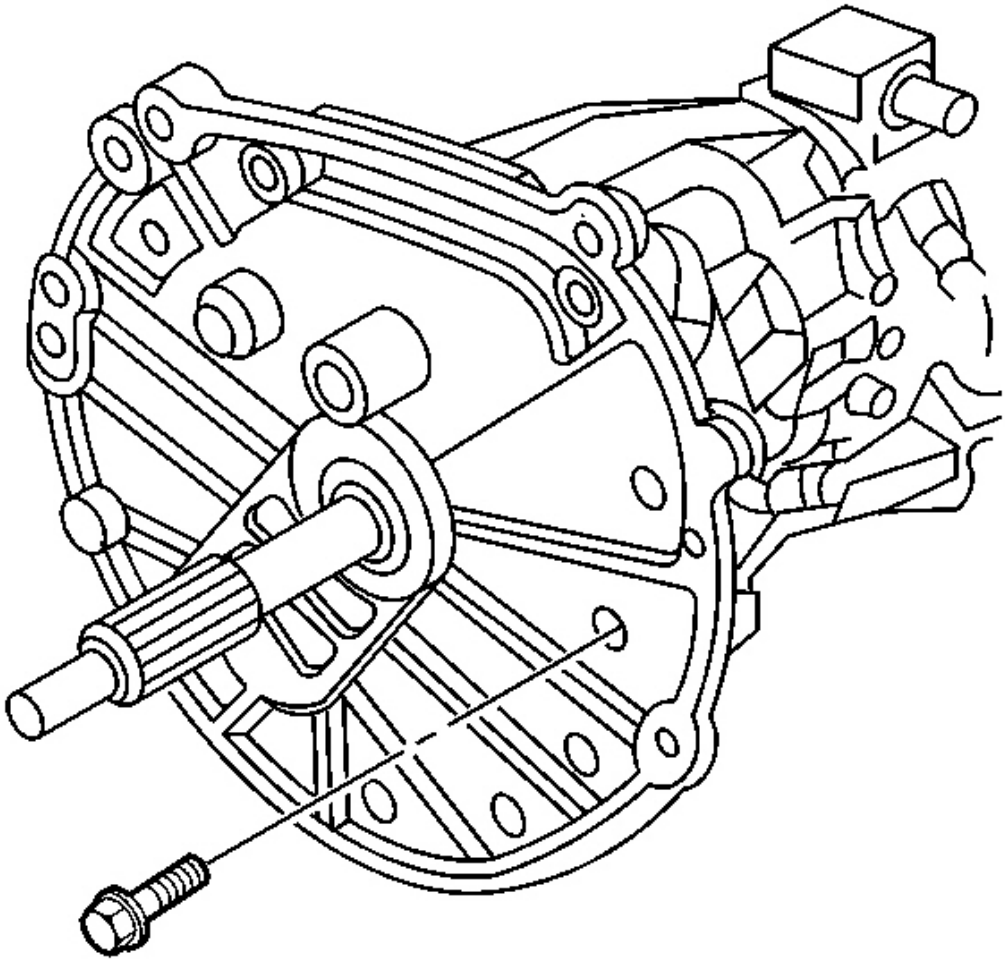

Fig. 420: View Of Adapter Plate & Transmission Case Bolts
Courtesy of GENERAL MOTORS CORP.

14. Remove the adapter plate to the transmission case bolts.

cardiagn.com

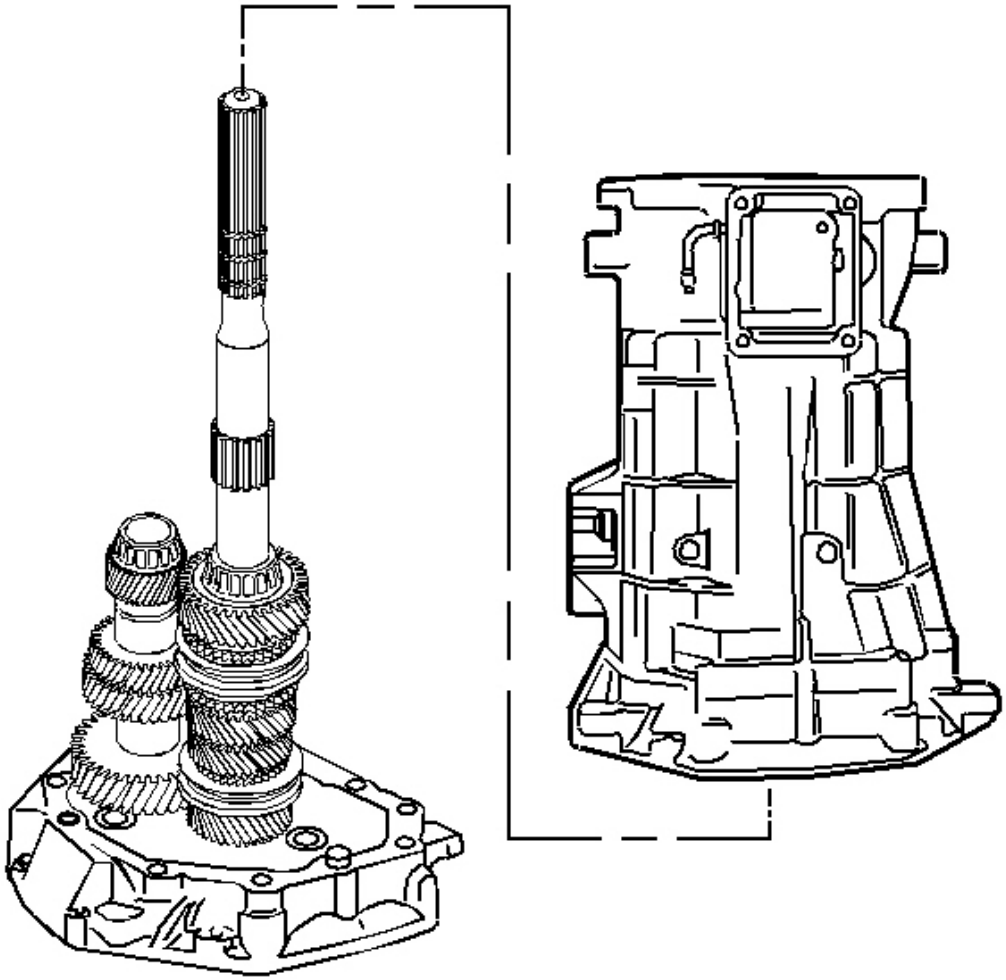

Fig. 421: Identifying Transmission Case
Courtesy of GENERAL MOTORS CORP.

15. Remove the transmission case.

cardiagn.com

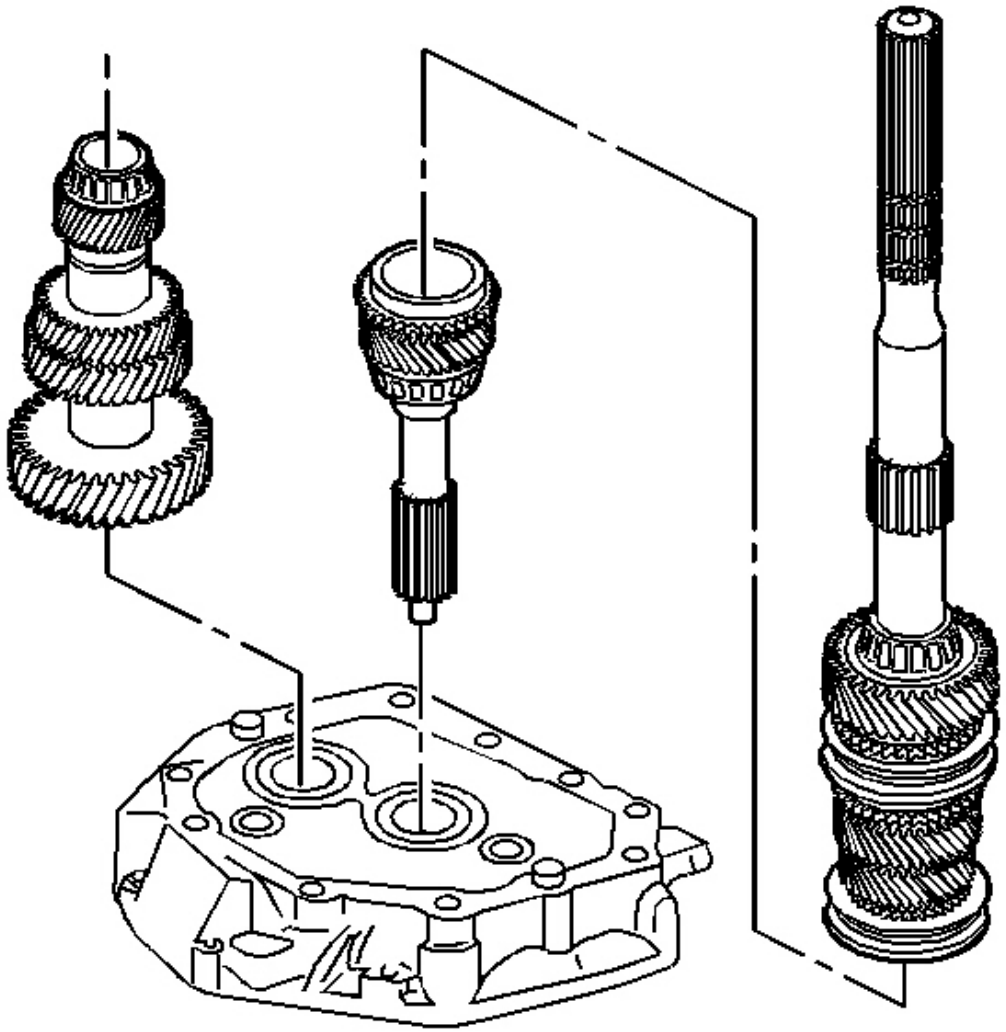

Fig. 422: View Of Transmission Components
Courtesy of GENERAL MOTORS CORP.

16. Remove the following parts in order:
    1. The countershaft (lift up the mainshaft enough to remove the countershaft).
    2. The mainshaft assembly
    3. The input shaft from the adapter plate
    4. The input shaft bearing race
    5. The countershaft bearing race

cardiagn.com

Countershaft Extension

Tools Required

- **J 8001** Dial Indicator Set. See **Special Tools** .
- **J 39444-2** Countershaft Extension End Play Rod. See **Special Tools** .

IMPORTANT: The following procedure cannot be performed accurately until the countershaft shimming procedure has been completed and the transmission has been assembled to the point of installing the countershaft extension.

1. Rotate the transmission in the horizontal position.
2. Install the countershaft extension to the countershaft. Make sure the splines fully engage.

cardiagn.com

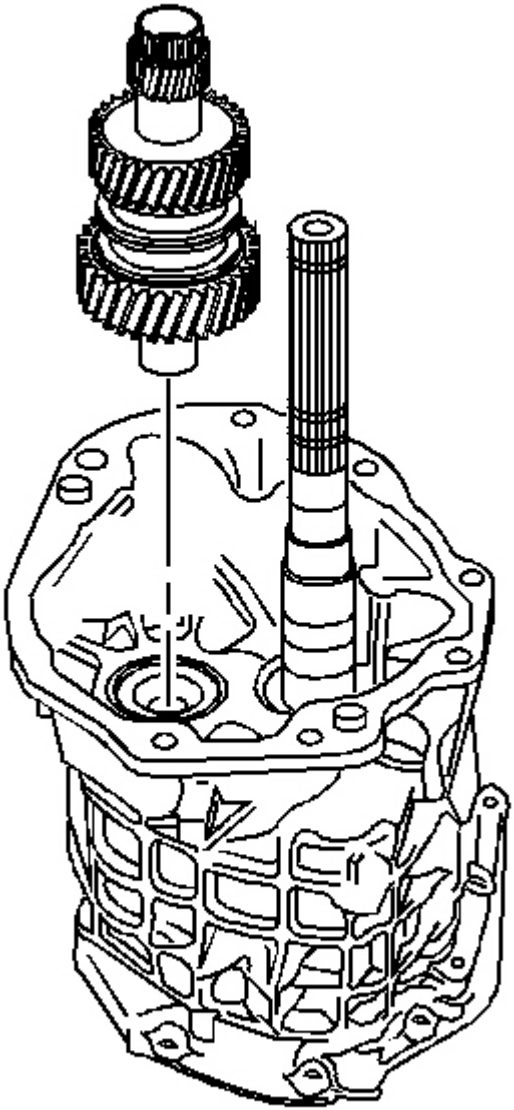

Fig. 423: Identifying Countershaft Extension
Courtesy of GENERAL MOTORS CORP.

cardiagn.com

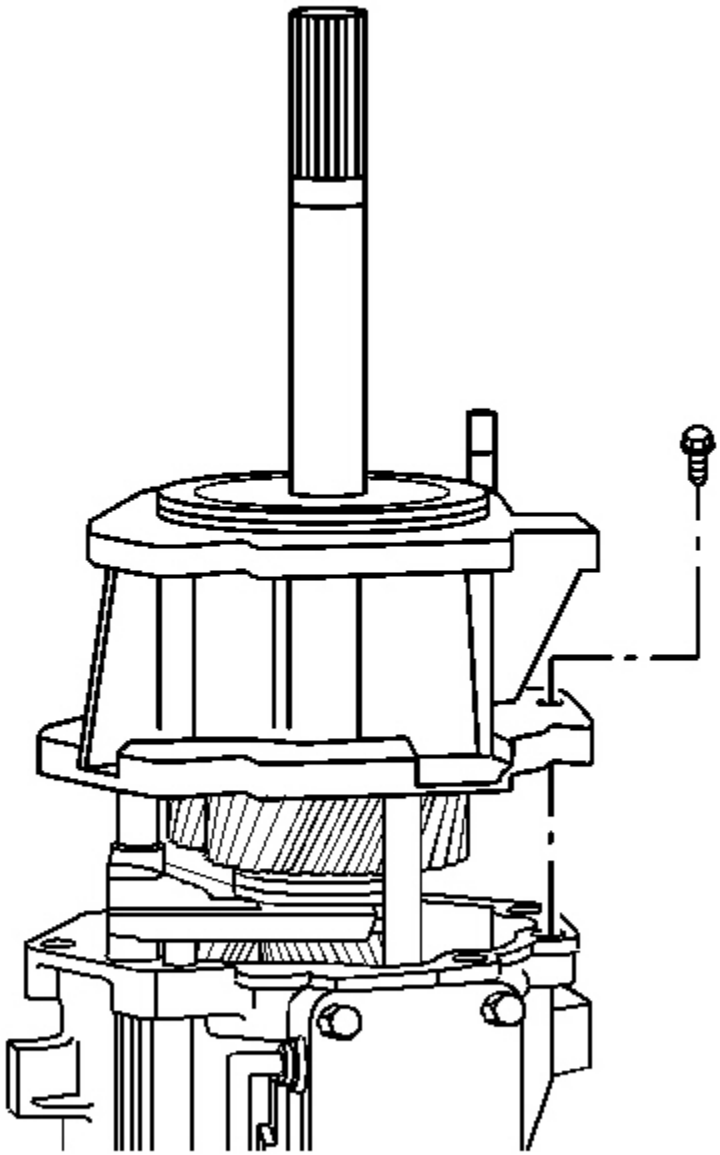

Fig. 424: View Of Extension Housing Bolts & Extension Housing
Courtesy of GENERAL MOTORS CORP.

NOTE: Refer to Fastener Notice in Cautions and Notices.

3. Install the extension housing and the extension housing retainer bolts.

cardiagn.com

Tighten: Tighten the bolts to 35 N.m (26 Ib. ft).

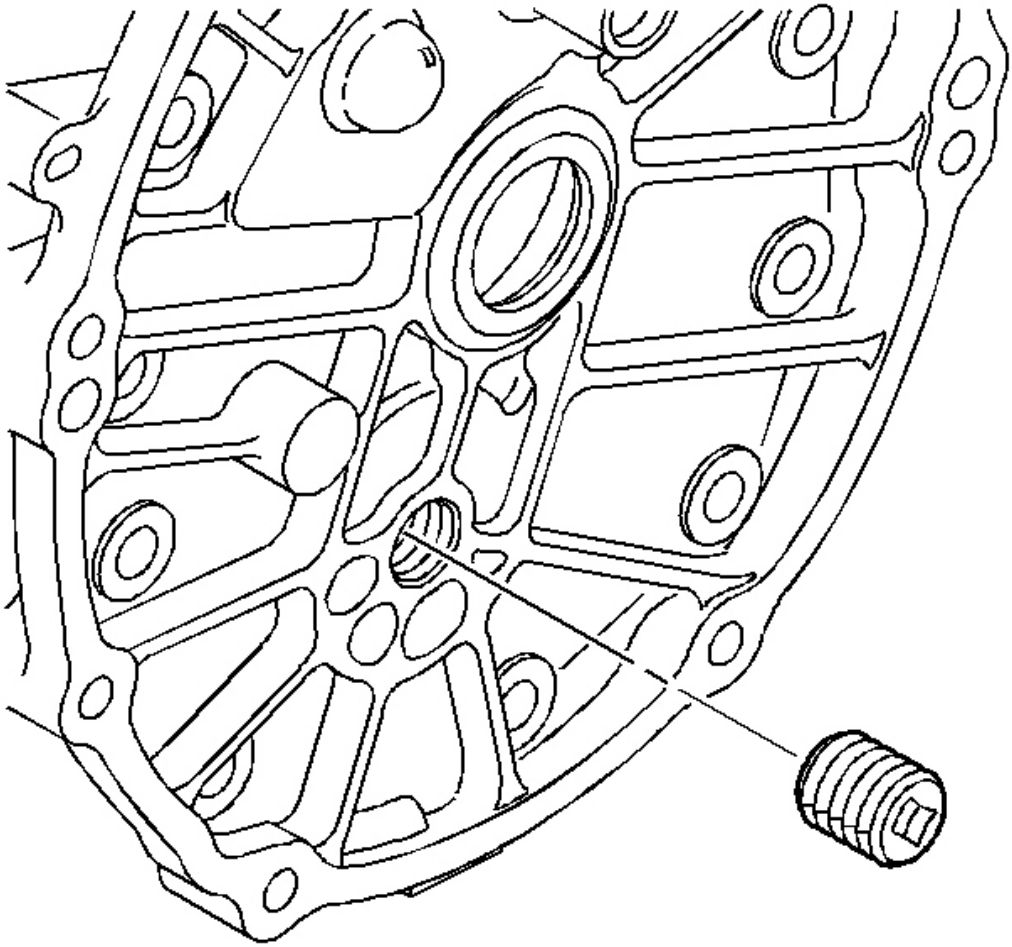

Fig. 425: Locating Adapter Plate Plug
Courtesy of GENERAL MOTORS CORP.

4. Remove the plug from the adapter plate.

cardiagn.com

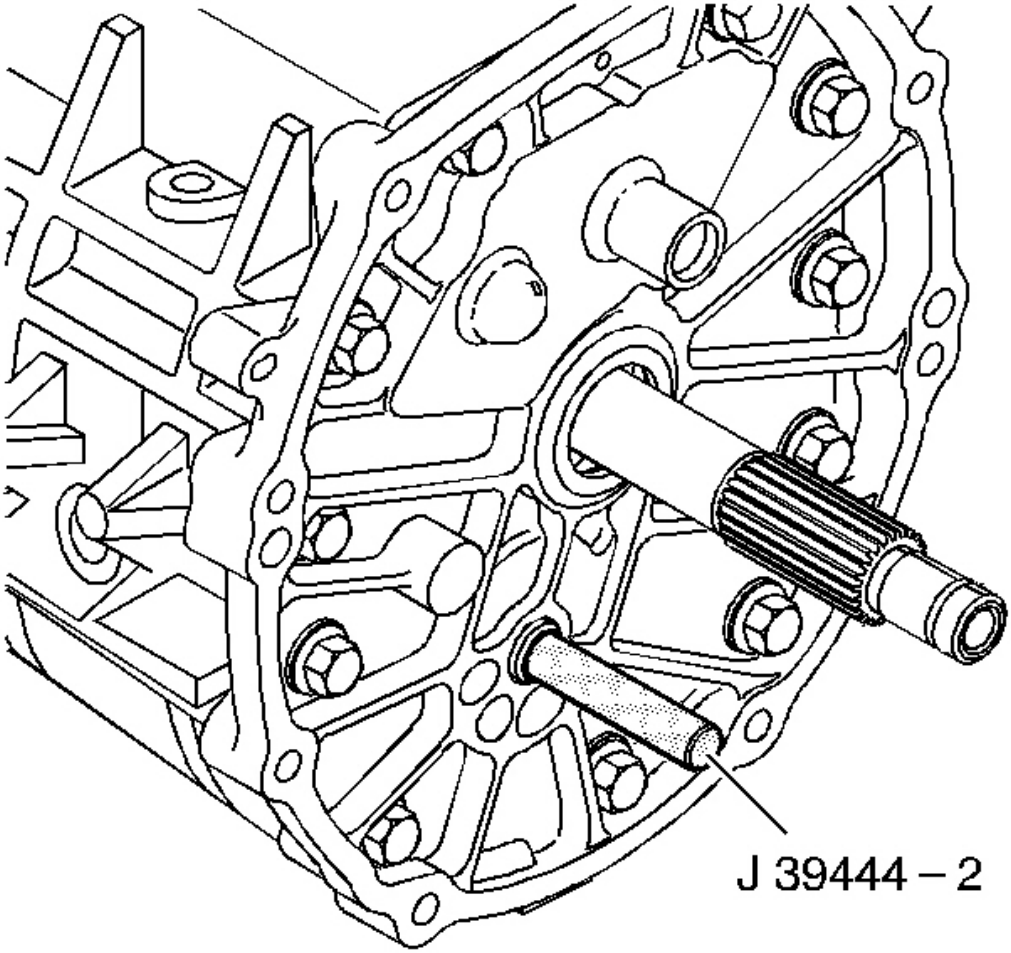

Fig. 426: Installing/Installing J 39444-2 In Adapter Plate Plug Hole
Courtesy of GENERAL MOTORS CORP.

5. Install the **J 39444-2** through the adapter plate plug hole.
6. Screw **J 39444-2** into the countershaft extension.

cardiagn.com

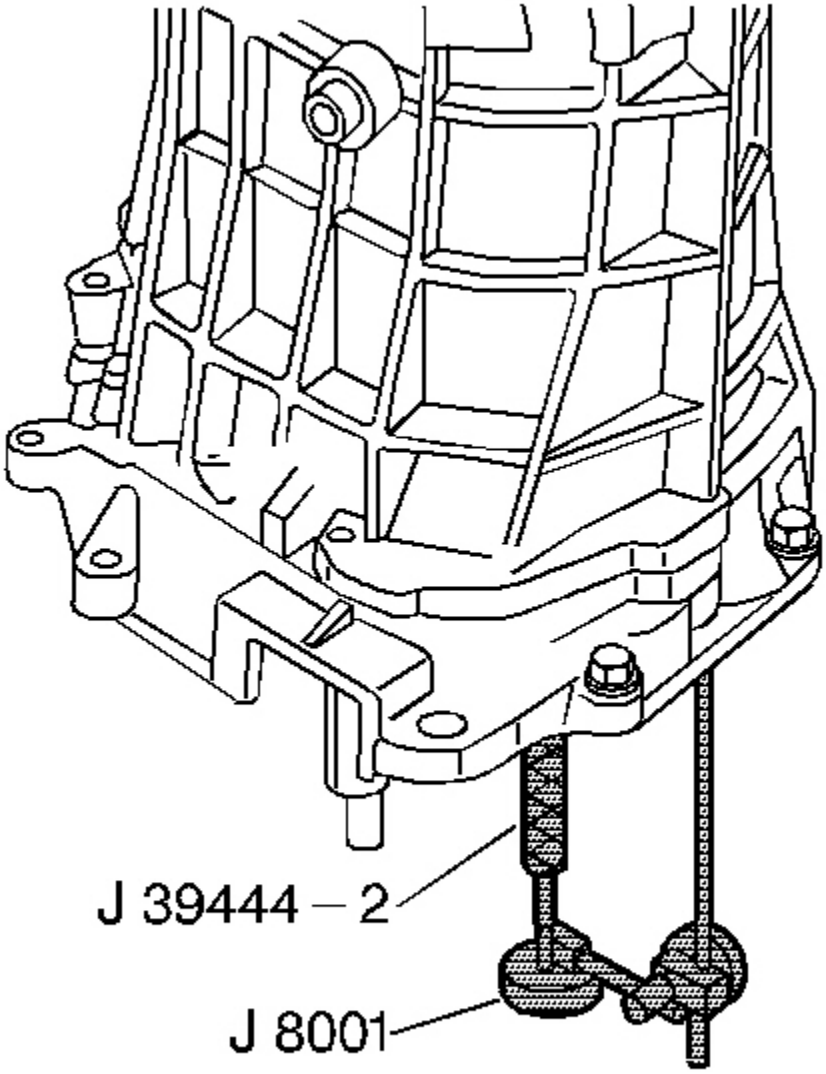

Fig. 427: Measure Countershaft Extension End Play Using J 8001 & J 39444-2
Courtesy of GENERAL MOTORS CORP.

7. Measure the countershaft extension end play using the following procedure:
    1. Install a **J 8001** so the tip is on the end of the countershaft extension end play rod.
    2. Rotate the transmission in the vertical position.
    3. Move the countershaft extension up and down using the **J 39444-2** .
    4. Record the measurement.

cardiagn.com

8. Select a shim to achieve 0.05-0.13 mm (0.002-0.005 in) axial play.
9. Remove the **J 8001** .
10. Remove the **J 39444-2** .

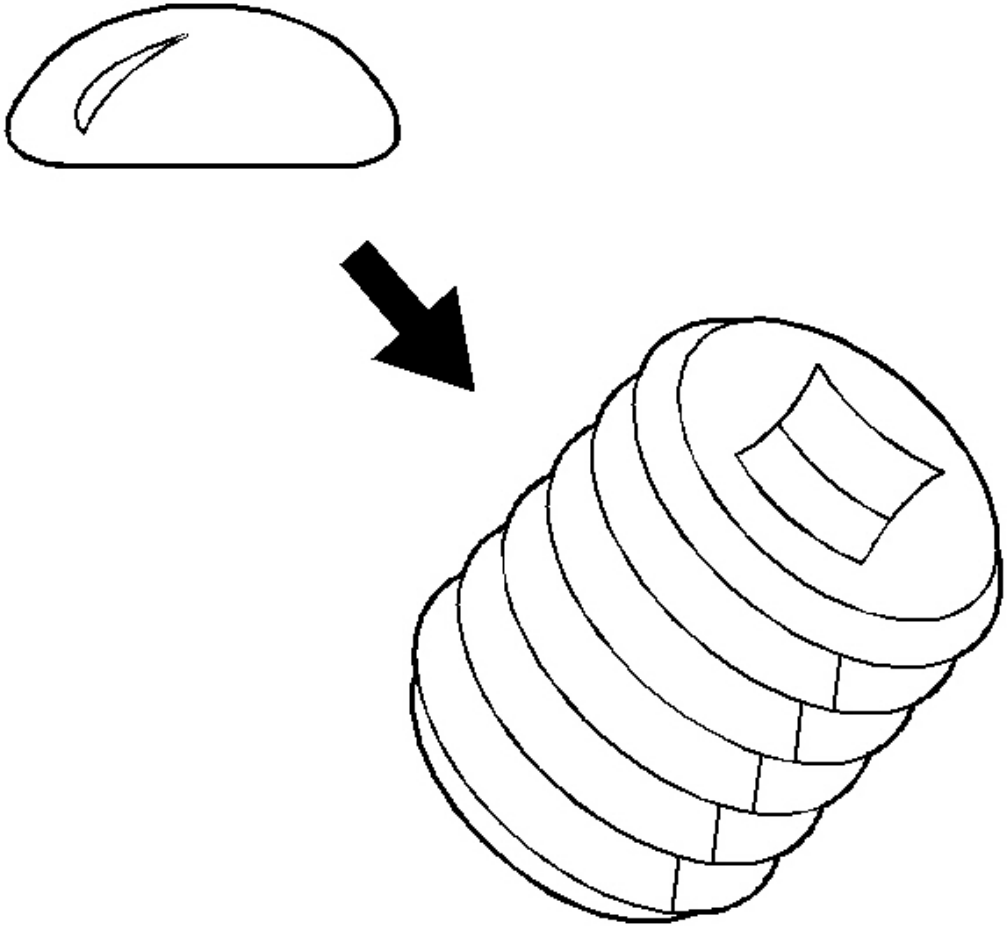

Fig. 428: Applying Sealant To Adapter Plate Plug Threads
Courtesy of GENERAL MOTORS CORP.

11. Apply sealant GM P/N United States 12346004, GM P/N Canada 10953480 or the equivalent to the plug threads.

cardiagn.com

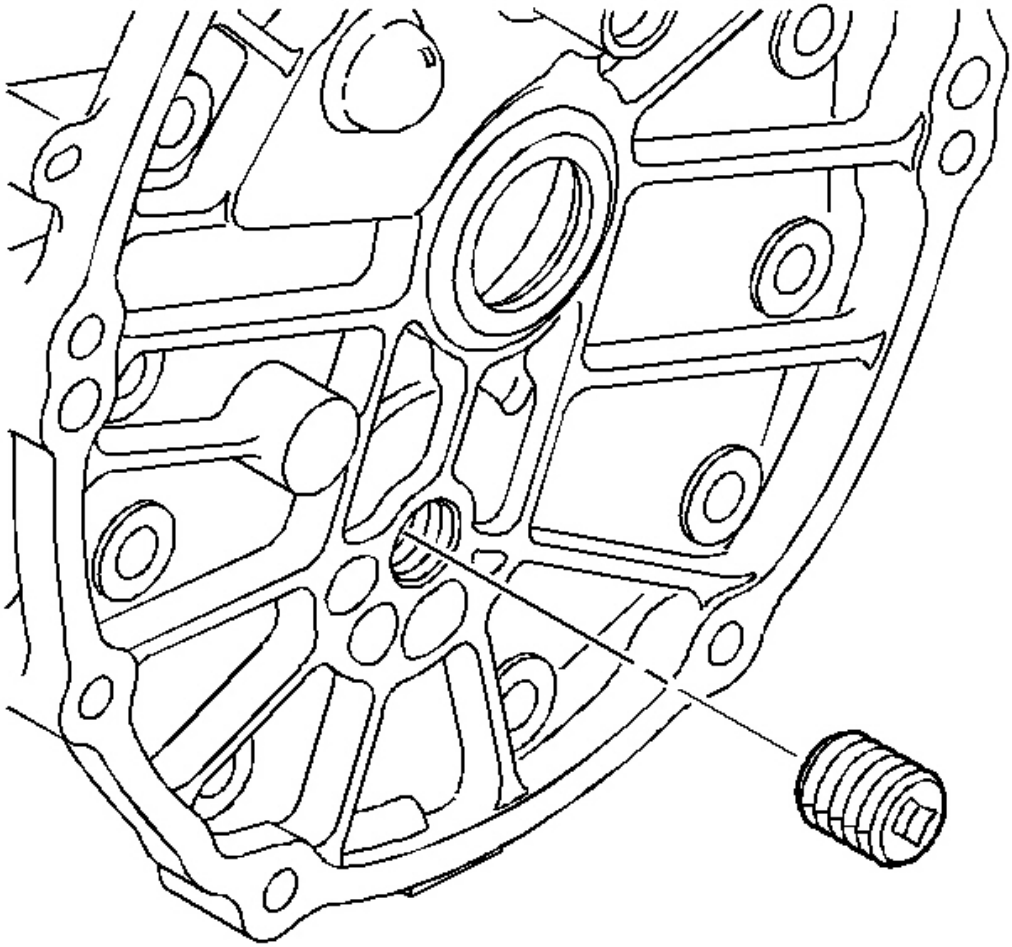

Fig. 429: Locating Adapter Plate Plug
Courtesy of GENERAL MOTORS CORP.

12. Install the adapter plate plug.

    Tighten: Tighten the plug to 27 N.m (20 Ib. ft).

cardiagn.com

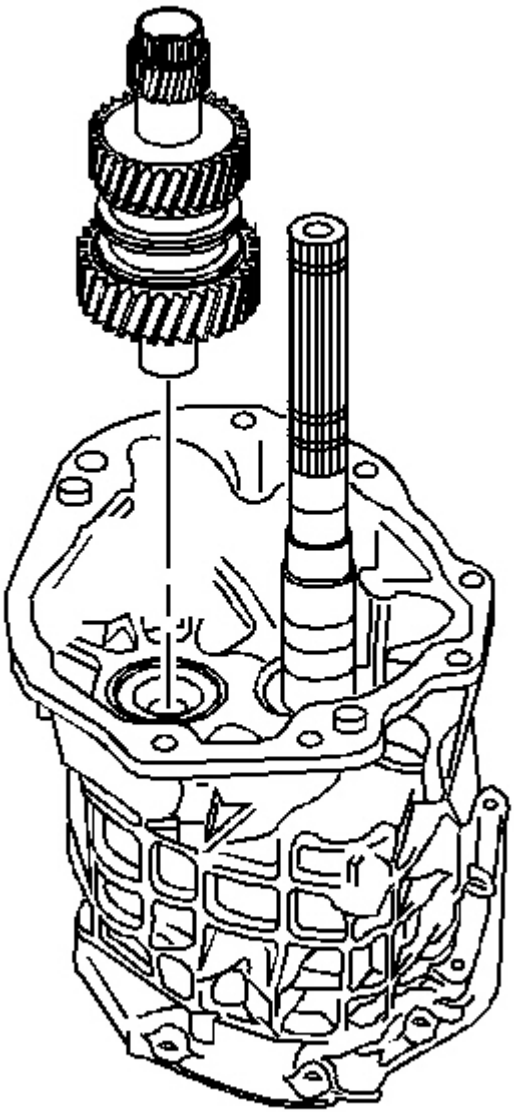

Fig. 430: Identifying Countershaft Extension
Courtesy of GENERAL MOTORS CORP.

13. Install the countershaft extension.
14. Install the countershaft extension bearing race.

cardiagn.com

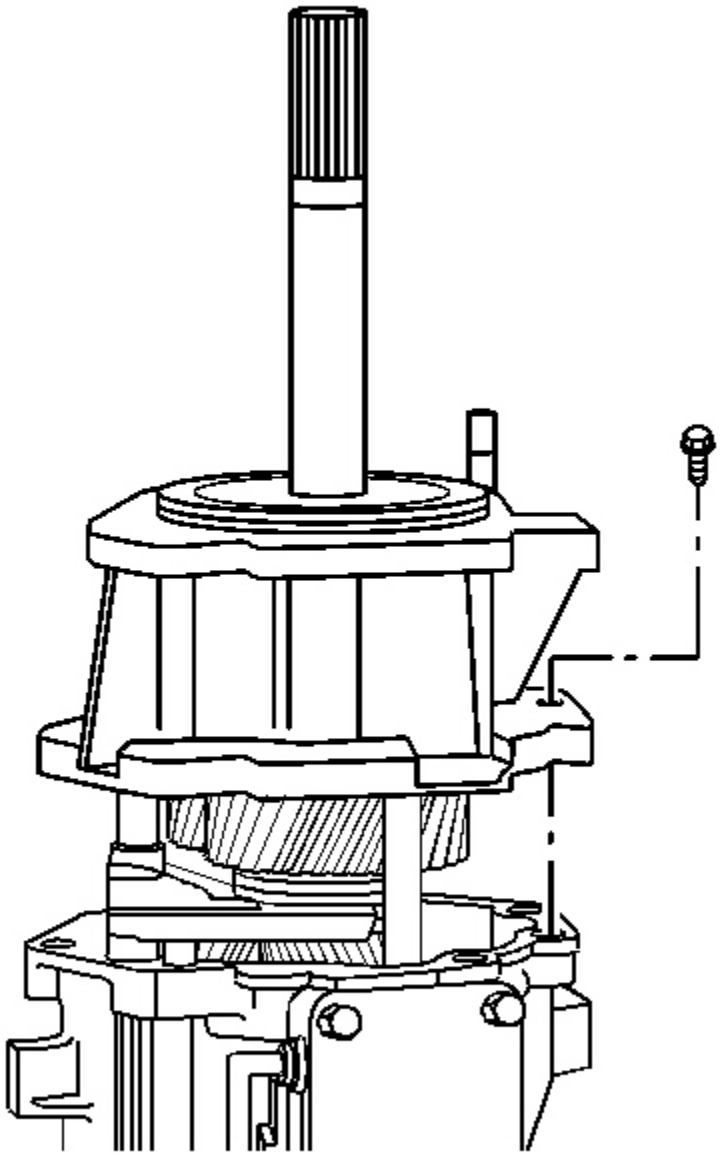

Fig. 431: View Of Extension Housing Bolts & Extension Housing
Courtesy of GENERAL MOTORS CORP.

15. Install the extension housing bolts and the extension housing.

SHIMMING PROCEDURES (CTSV)

cardiagn.com

Input Shaft, Mainshaft, and Countershaft

Tools Required

- **J 8001** Dial Indicator Set. See **Special Tools** .
- **J 39444-1** Countershaft End Play Rod. See **Special Tools** .

1. Rotate the transmission adapter plate to the vertical position.

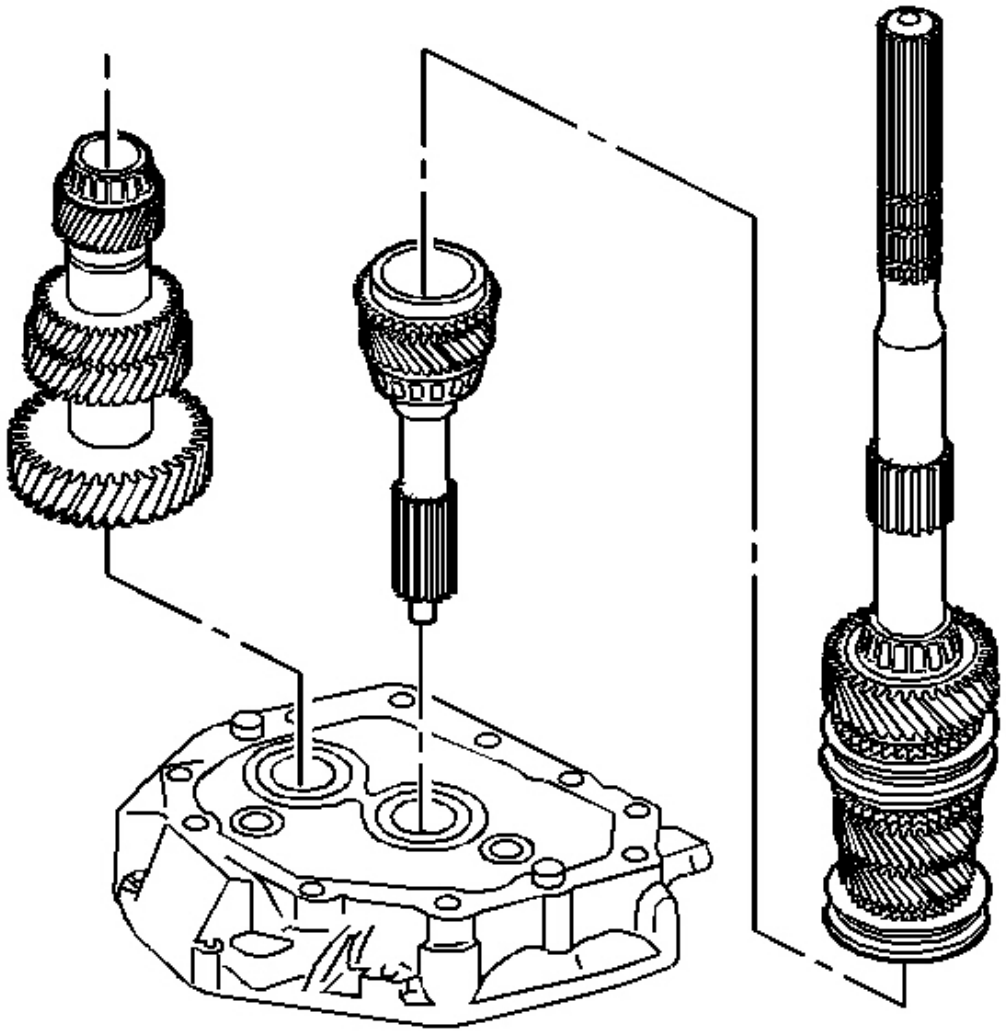

Fig. 432: View Of Transmission Components

cardiagn.com

Courtesy of GENERAL MOTORS CORP.

2. Install the following assemblies in order:
    1. The input shaft to the adapter plate
    2. The 4th speed gear blocking ring
    3. The mainshaft assembly
    4. The countershaft (Lift up the mainshaft enough to install the countershaft.)

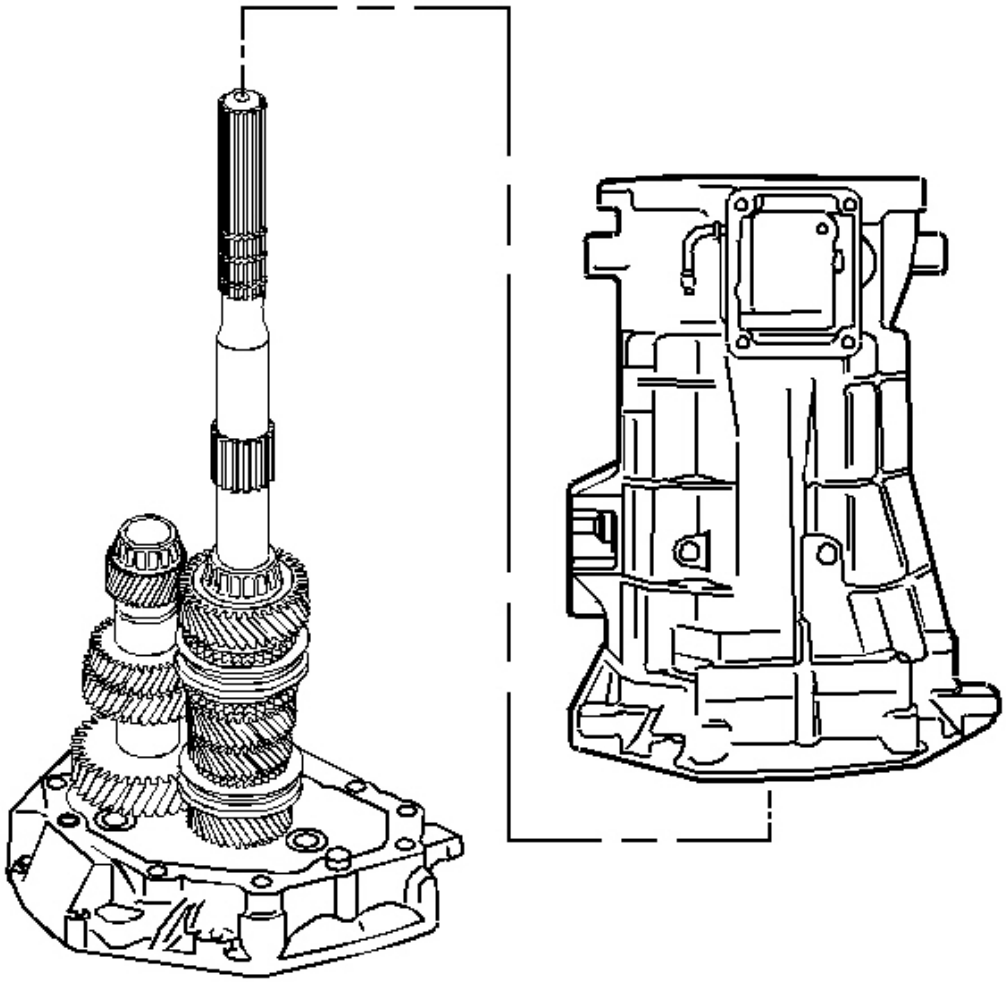

Fig. 433: Identifying Transmission Case
Courtesy of GENERAL MOTORS CORP.

cardiagn.com

3. Install the transmission case.

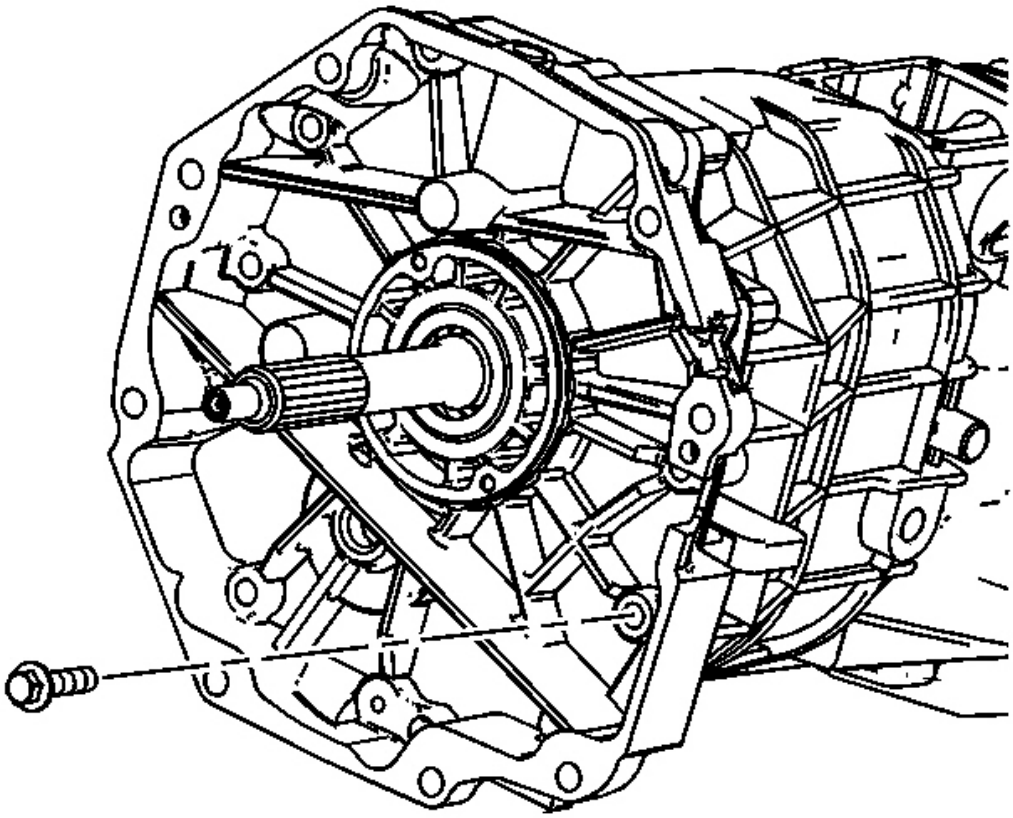

Fig. 434: Locating Adapter Plate To Transmission Case Bolts
Courtesy of GENERAL MOTORS CORP.

NOTE: Refer to Fastener Notice in Cautions and Notices.

4. Install the adapter plate to transmission case bolts.

   Tighten: Tighten the bolts to 35 N.m (26 Ib. ft).

cardiagn.com

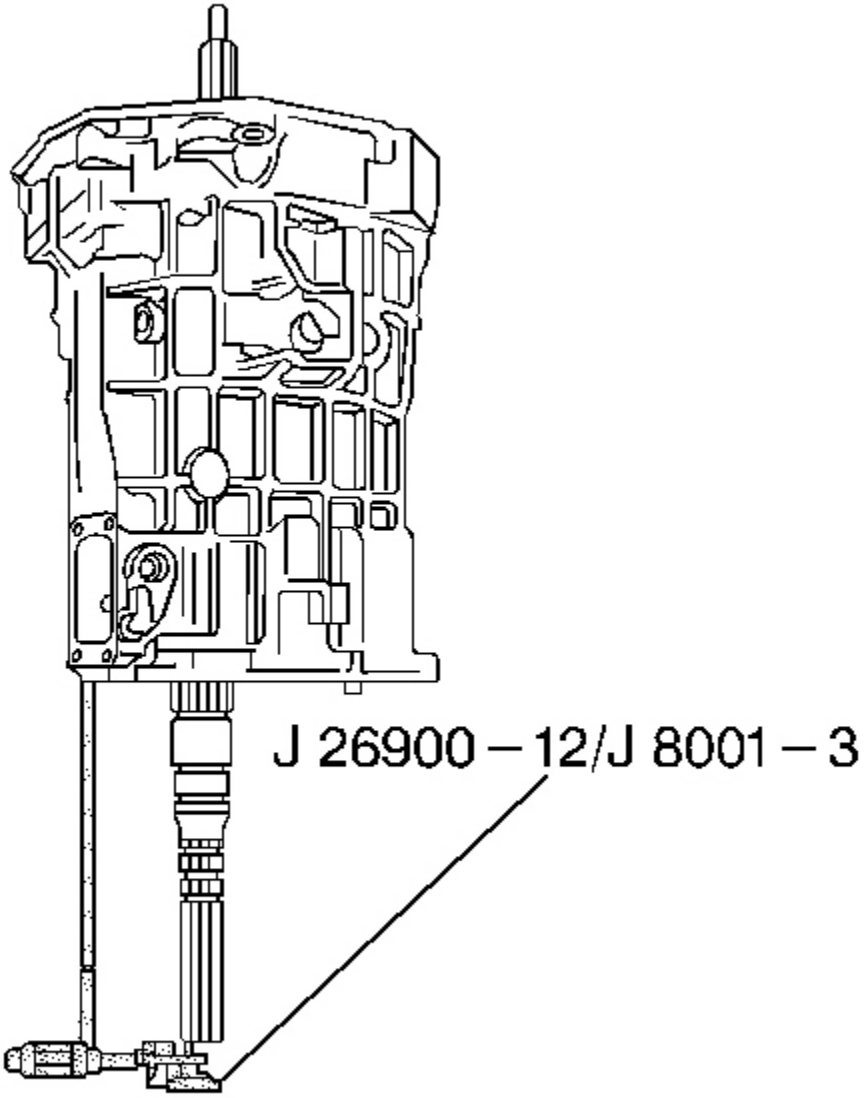

Fig. 435: Measuring Input Shaft/Mainshaft End Play Using J 8001-3
Courtesy of GENERAL MOTORS CORP.

5. Measure the input shaft/mainshaft end play using the following procedure:
    1. Place the tip of the **J 8001-3** on the end of the mainshaft.
    2. Move the input shaft up and down.
    3. Record the measurement.

cardiagn.com

6. Select a shim to achieve 0.00-0.05 mm (0.000-0.002 in) preload.
7. Remove the **J 8001-3** .

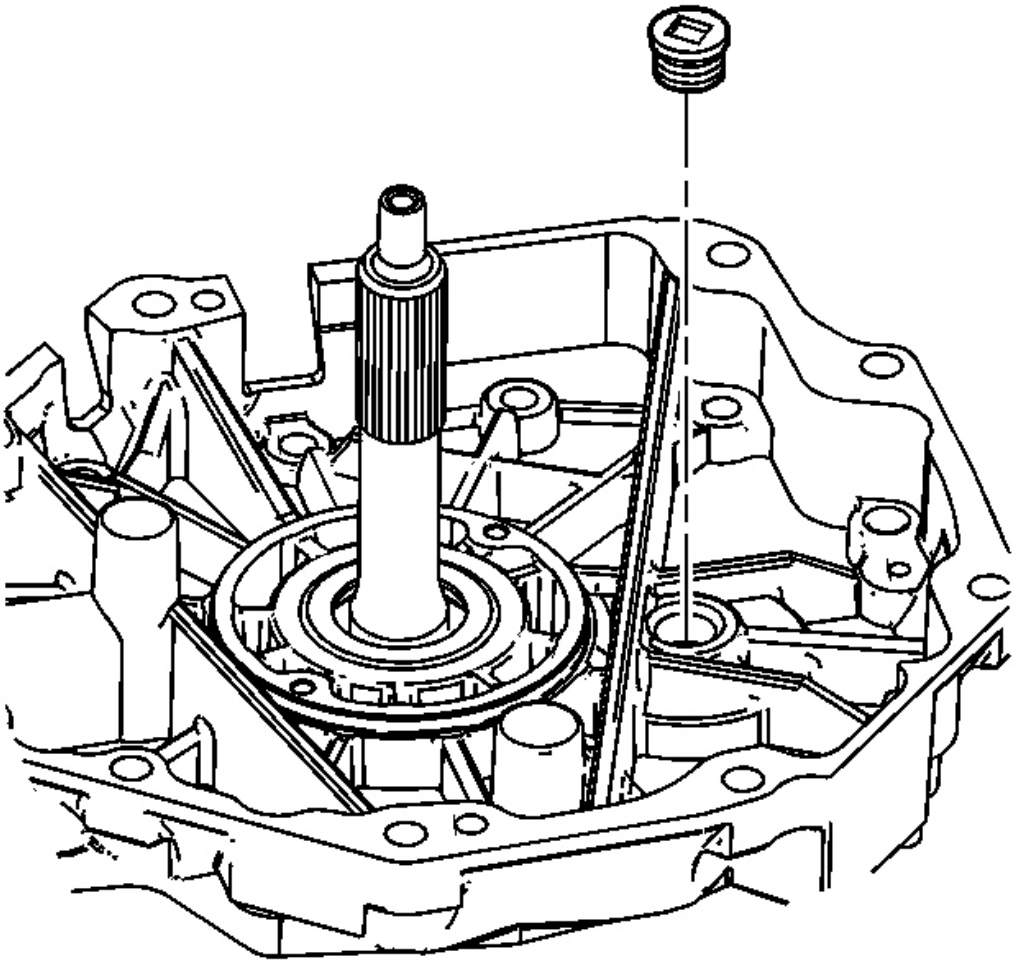

Fig. 436: View Of Adapter Plate Plug
Courtesy of GENERAL MOTORS CORP.

8. Remove the adapter plate plug.

cardiagn.com

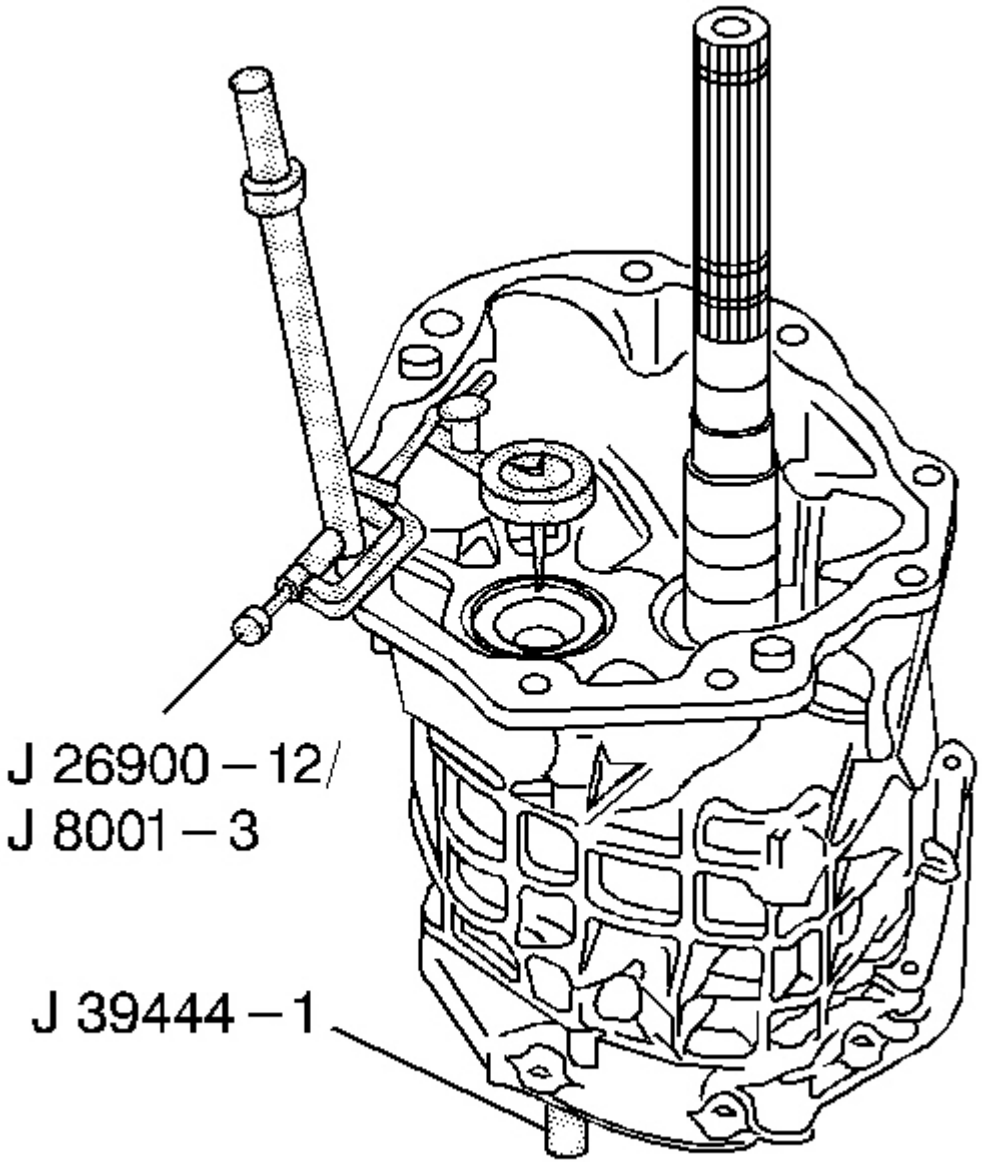

Fig. 437: Measuring Countershaft End Play With J 8001 & J 39444-1
Courtesy of GENERAL MOTORS CORP.

9. Place the tip of the **J 8001** -3 on the end of the countershaft.
10. Measure the countershaft end play using the following procedure:
    1. Install the **J 39444-1** through the adapter plate plug hole. Screw the **J 39444-1** into the

cardiagn.com

countershaft.

2. Move the countershaft up and down with the countershaft end play rod **J 39444-1** .
3. Record the measurement.

11. Select a shim to achieve 0.00-0.05 mm (0.000-0.002 in) preload.
12. Remove the **J 8001** -3.
13. Remove the **J 39444-1** .

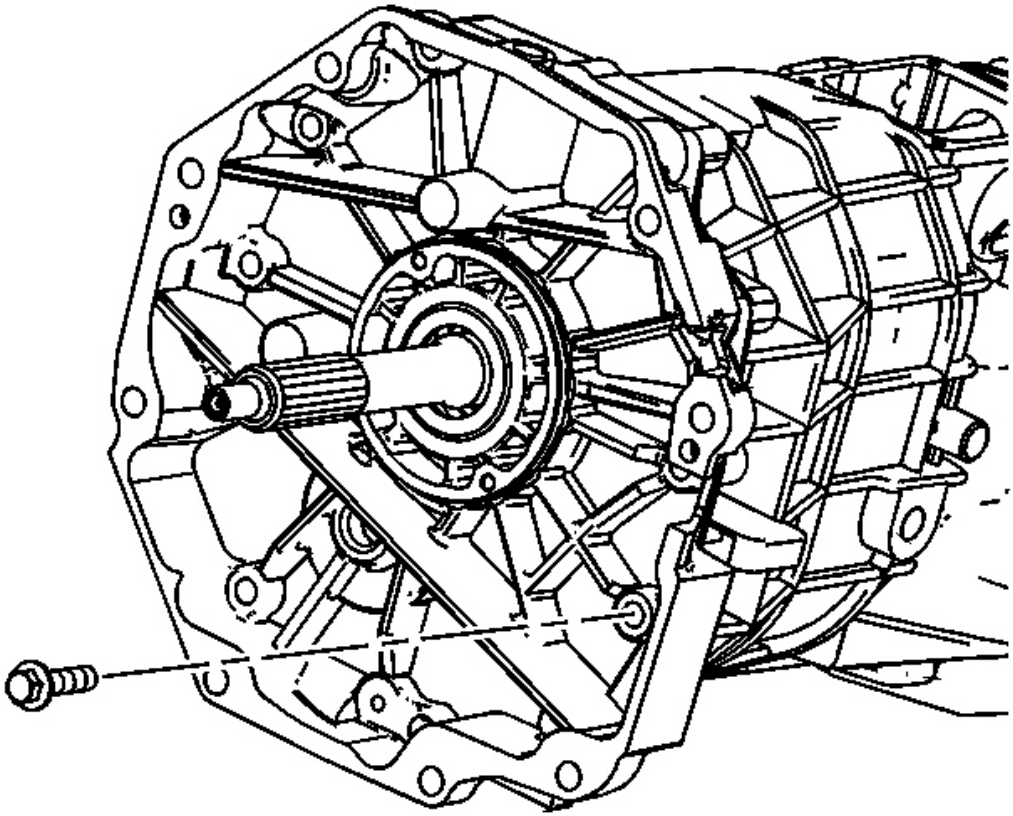

Fig. 438: Locating Adapter Plate To Transmission Case Bolts
Courtesy of GENERAL MOTORS CORP.

14. Remove the adapter plate to the transmission case bolts.

cardiagn.com

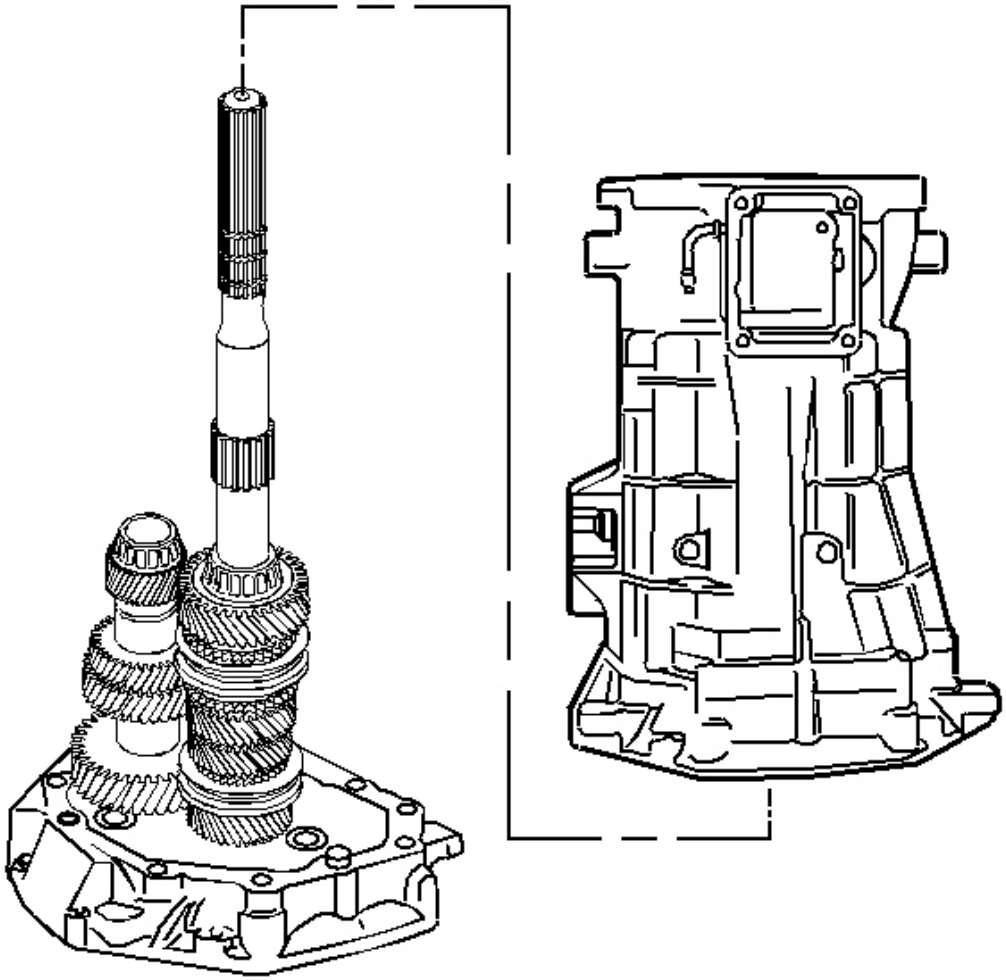

Fig. 439: Identifying Transmission Case
Courtesy of GENERAL MOTORS CORP.

15. Remove the transmission case.

cardiagn.com

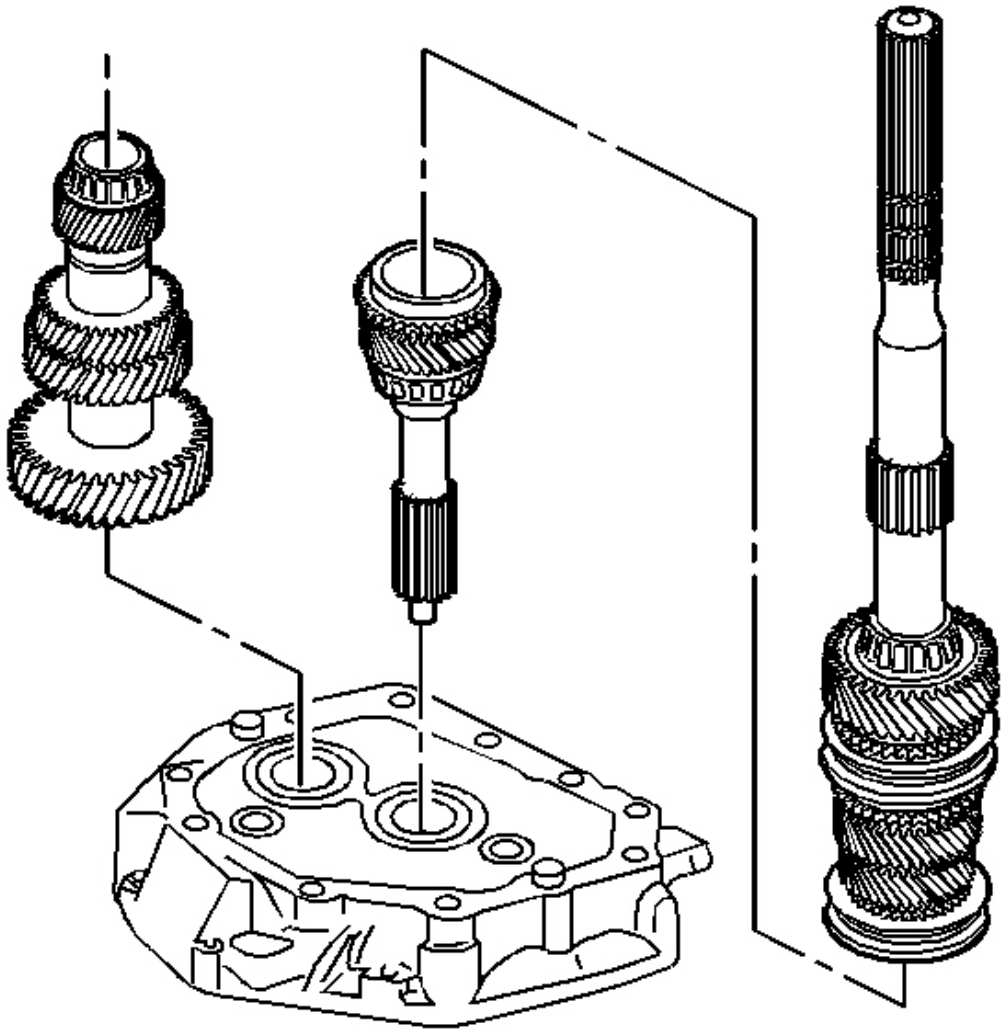

Fig. 440: View Of Transmission Components
Courtesy of GENERAL MOTORS CORP.

16. Remove the following parts in order:
    1. The countershaft (Lift up the mainshaft enough to remove the countershaft).
    2. The mainshaft assembly
    3. The 4th speed gear blocking ring and the input shaft from the adapter plate
    4. The input shaft bearing race
    5. The countershaft bearing race

cardiagn.com

Countershaft Extension

Tools Required

- **J 8001** Dial Indicator Set. See **Special Tools** .
- **J 39444-2** Countershaft Extension End Play Rod. See **Special Tools** .

IMPORTANT: The following procedure cannot be performed accurately until the countershaft shimming procedure has been completed and the transmission has been assembled to the point of installing the countershaft extension.

1. Rotate the transmission in the horizontal position.

cardiagn.com

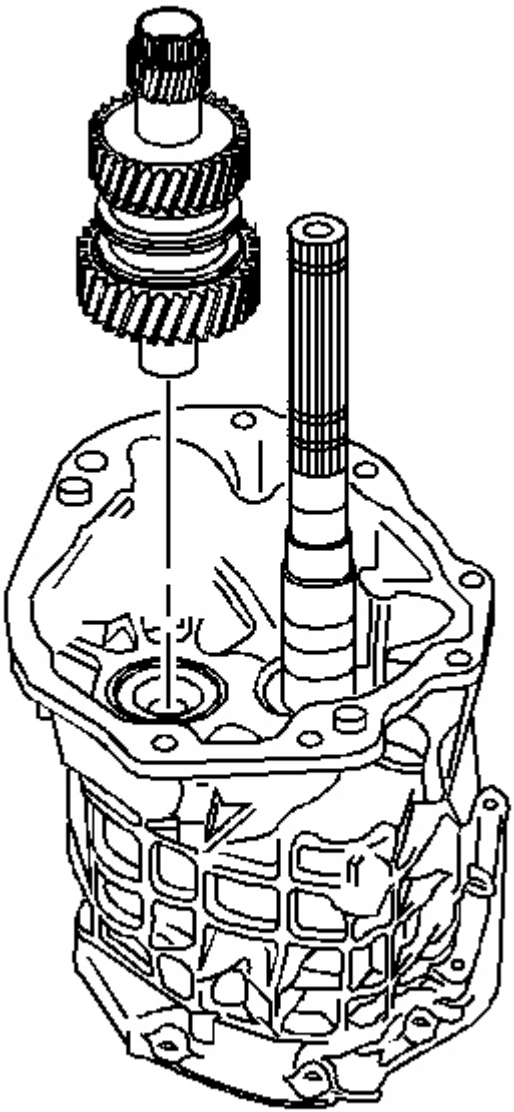

Fig. 441: Identifying Countershaft Extension
Courtesy of GENERAL MOTORS CORP.

2. Install the countershaft extension to the countershaft. Make sure the splines fully engage.

cardiagn.com

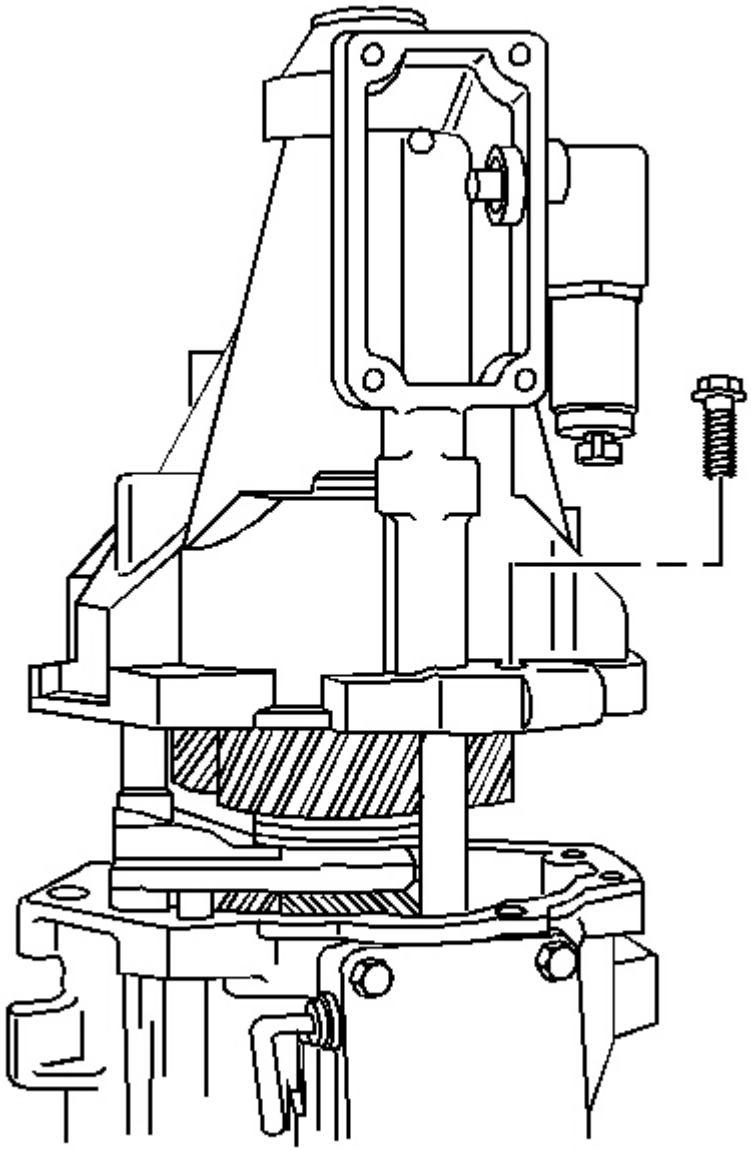

Fig. 442: View Of Extension Housing Bolts & Extension Housing
Courtesy of GENERAL MOTORS CORP.

NOTE: Refer to Fastener Notice in Cautions and Notices.

3. Install the extension housing and the extension housing retainer bolts.

cardiagn.com

Tighten: Tighten the bolts to 35 N.m (26 Ib. ft).

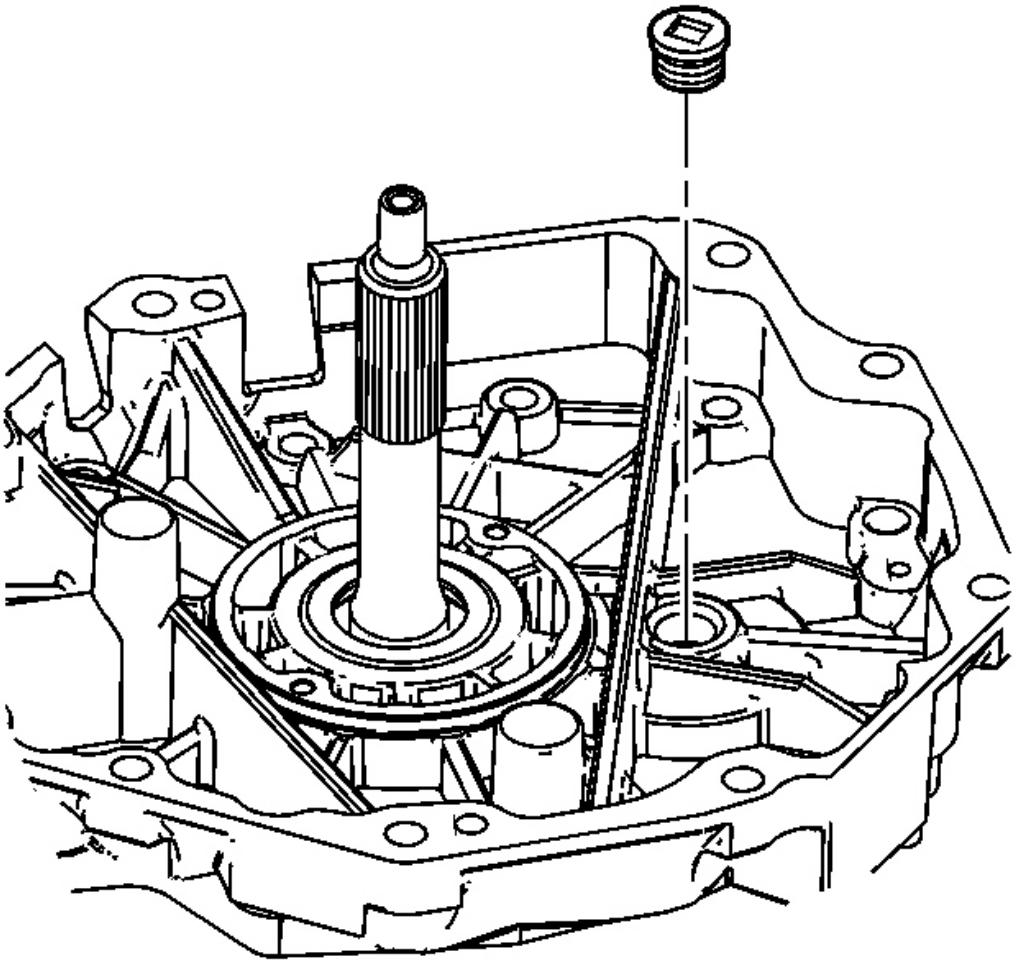

Fig. 443: View Of Adapter Plate Plug
Courtesy of GENERAL MOTORS CORP.

4. Remove the plug from the adapter plate.

cardiagn.com

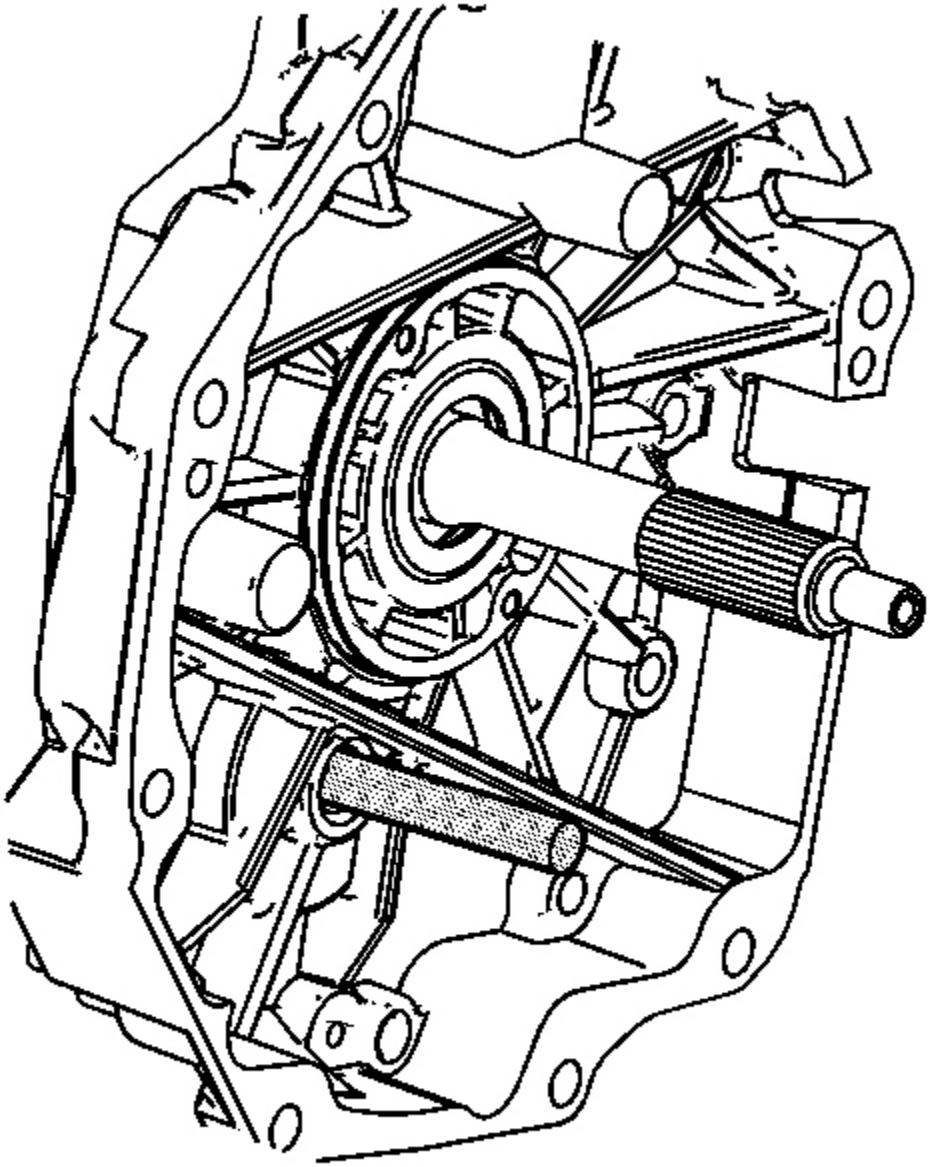

Fig. 444: Installing/Removing J 39444-2 Through Adapter Plate Plug Hole
Courtesy of GENERAL MOTORS CORP.

5. Install the **J 39444-2** through the adapter plate plug hole.
6. Screw **J 39444-2** into the countershaft extension.

cardiagn.com

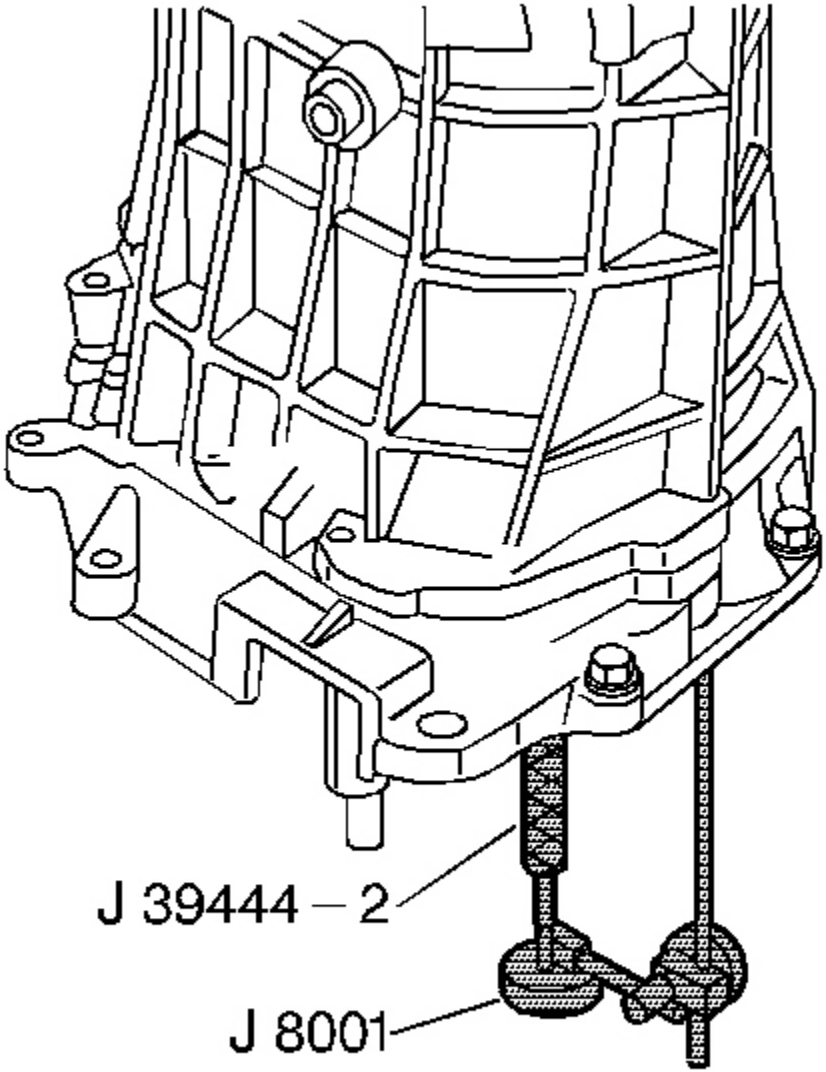

Fig. 445: Measuring Countershaft Extension End Play Using J 8001 & J 39444-2
Courtesy of GENERAL MOTORS CORP.

7. Measure the countershaft extension end play using the following procedure:
    1. Install a **J 8001** so the tip is on the end of the countershaft extension end play rod.
    2. Rotate the transmission in the vertical position.
    3. Move the countershaft extension up and down using the **J 39444-2** .
    4. Record the measurement.

cardiagn.com

8. Select a shim to achieve 0.05-0.13 mm (0.002-0.005 in) axial play.
9. Remove the **J 8001** .
10. Remove the **J 39444-2** .

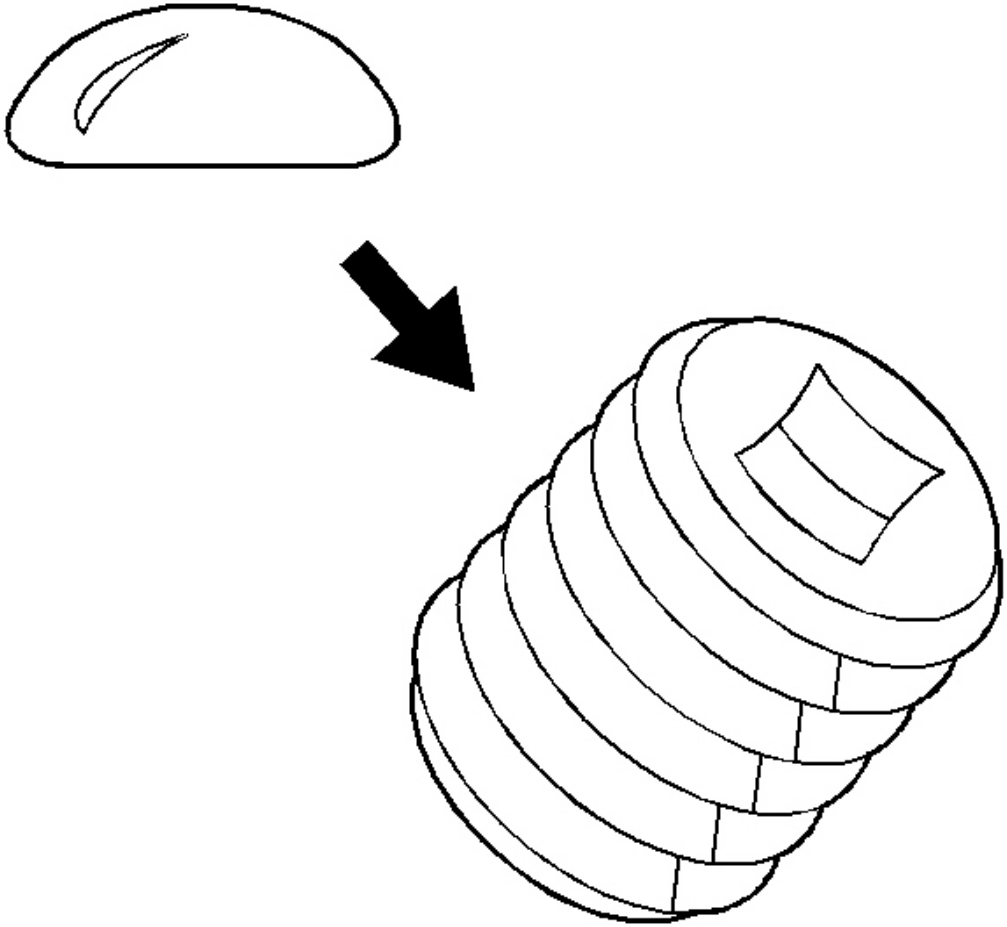

Fig. 446: Applying Sealant To Adapter Plate Plug Threads
Courtesy of GENERAL MOTORS CORP.

11. Apply sealant GM P/N 12346004 (Canadian P/N 10953480) or the equivalent to the plug threads.

cardiagn.com

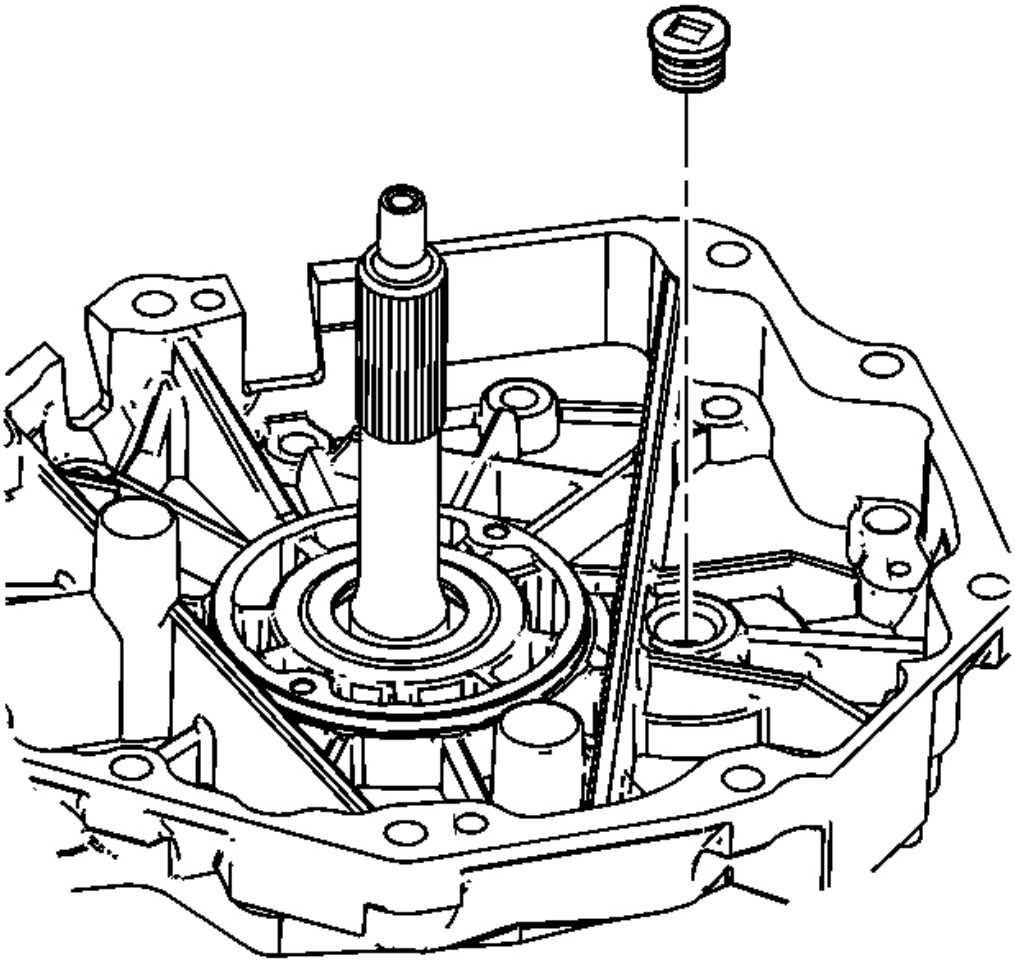

Fig. 447: View Of Adapter Plate Plug
Courtesy of GENERAL MOTORS CORP.

12. Install the adapter plate plug.

    Tighten: Tighten the plug to 27 N.m (20 Ib. ft).

cardiagn.com

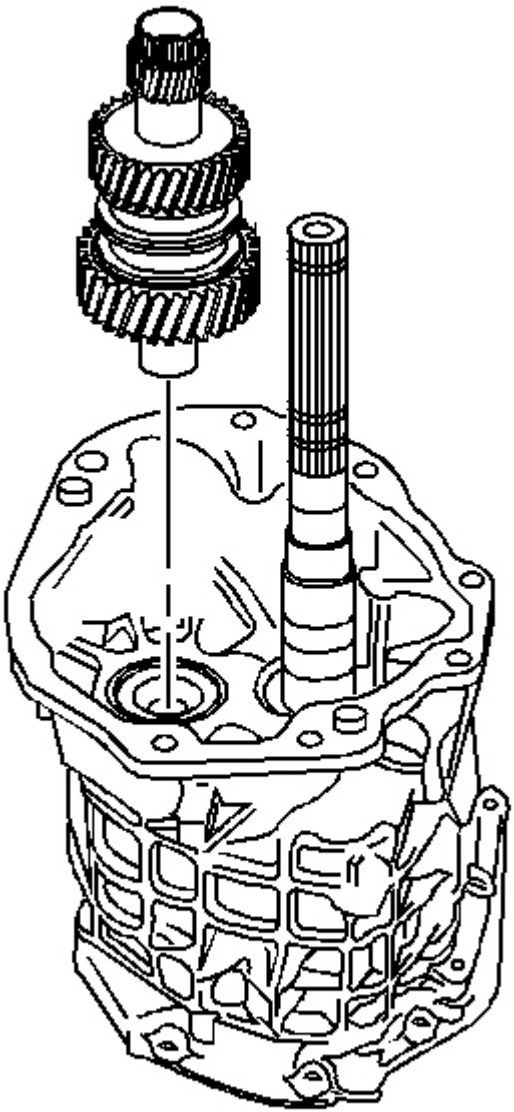

Fig. 448: Identifying Countershaft Extension
Courtesy of GENERAL MOTORS CORP.

13. Install the countershaft extension.
14. Install the countershaft extension bearing race.

cardiagn.com

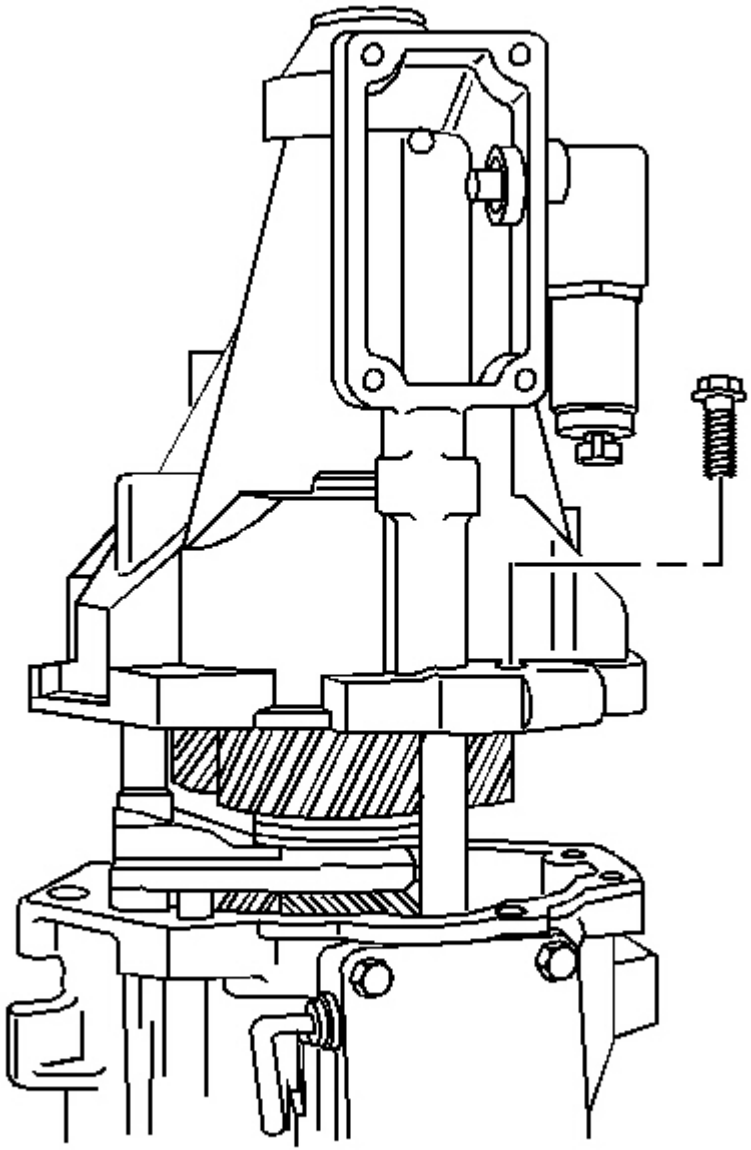

Fig. 449: View Of Extension Housing Bolts & Extension Housing
Courtesy of GENERAL MOTORS CORP.

15. Install the extension housing bolts and the extension housing.

SHIMMING PROCEDURES (GTO)

cardiagn.com

Input Shaft, Mainshaft, and Countershaft

Tools Required

- **J 8001** Dial Indicator Set. See **Special Tools** .
- **J 39444-1** Countershaft End Play Rod. See **Special Tools** .

1. Rotate the transmission adapter plate to the vertical position.

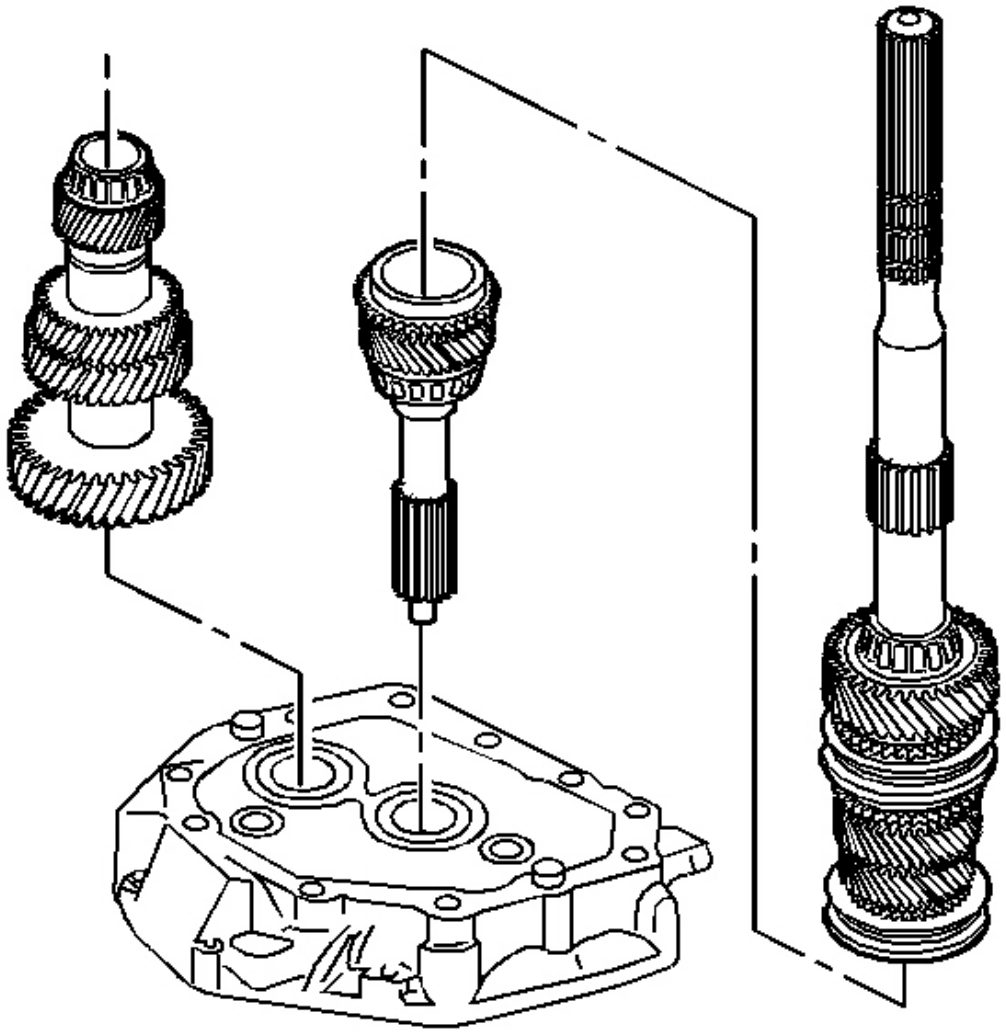

Fig. 450: View Of Transmission Components

cardiagn.com

Courtesy of GENERAL MOTORS CORP.

2. Install the following assemblies in order:
    1. The input shaft to the adapter plate
    2. The 4th speed gear blocking ring
    3. The mainshaft assembly
    4. The countershaft (Lift up the mainshaft enough to install the countershaft.)

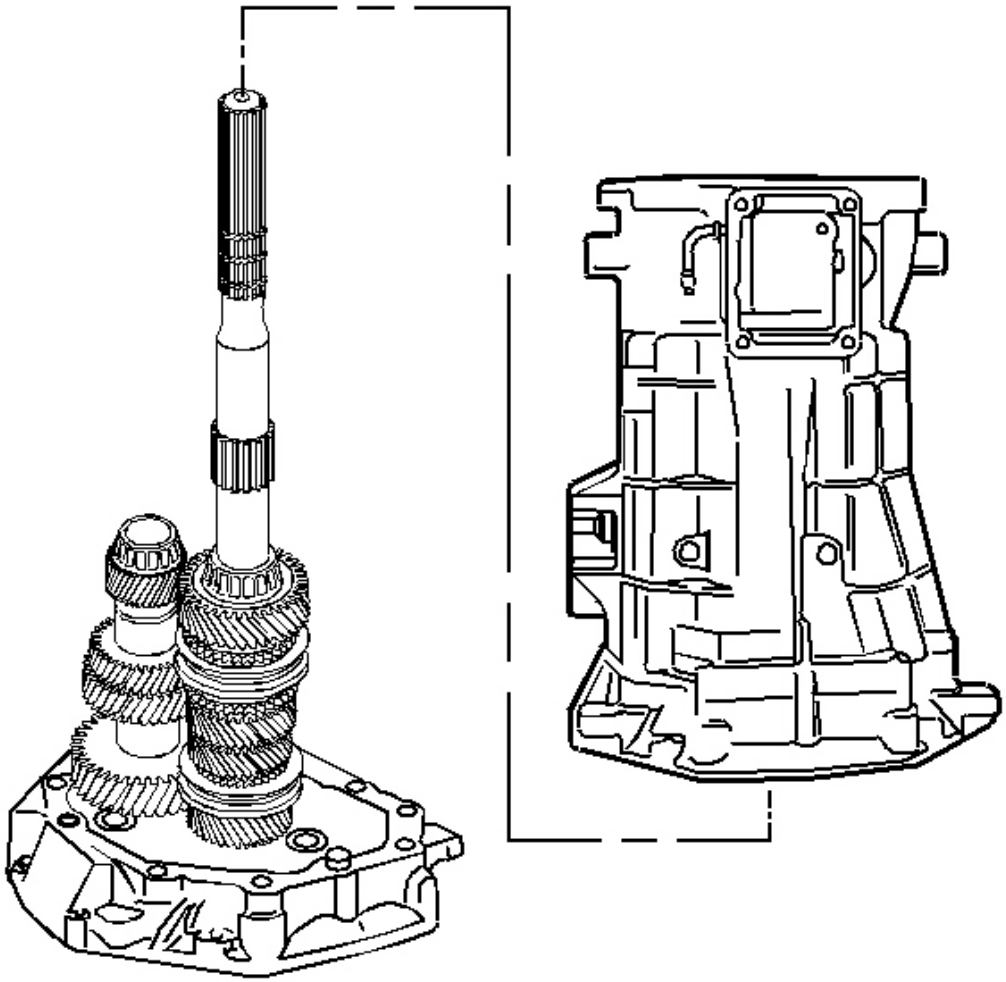

Fig. 451: Identifying Transmission Case
Courtesy of GENERAL MOTORS CORP.

cardiagn.com

3. Install the transmission case.

cardiagn.com

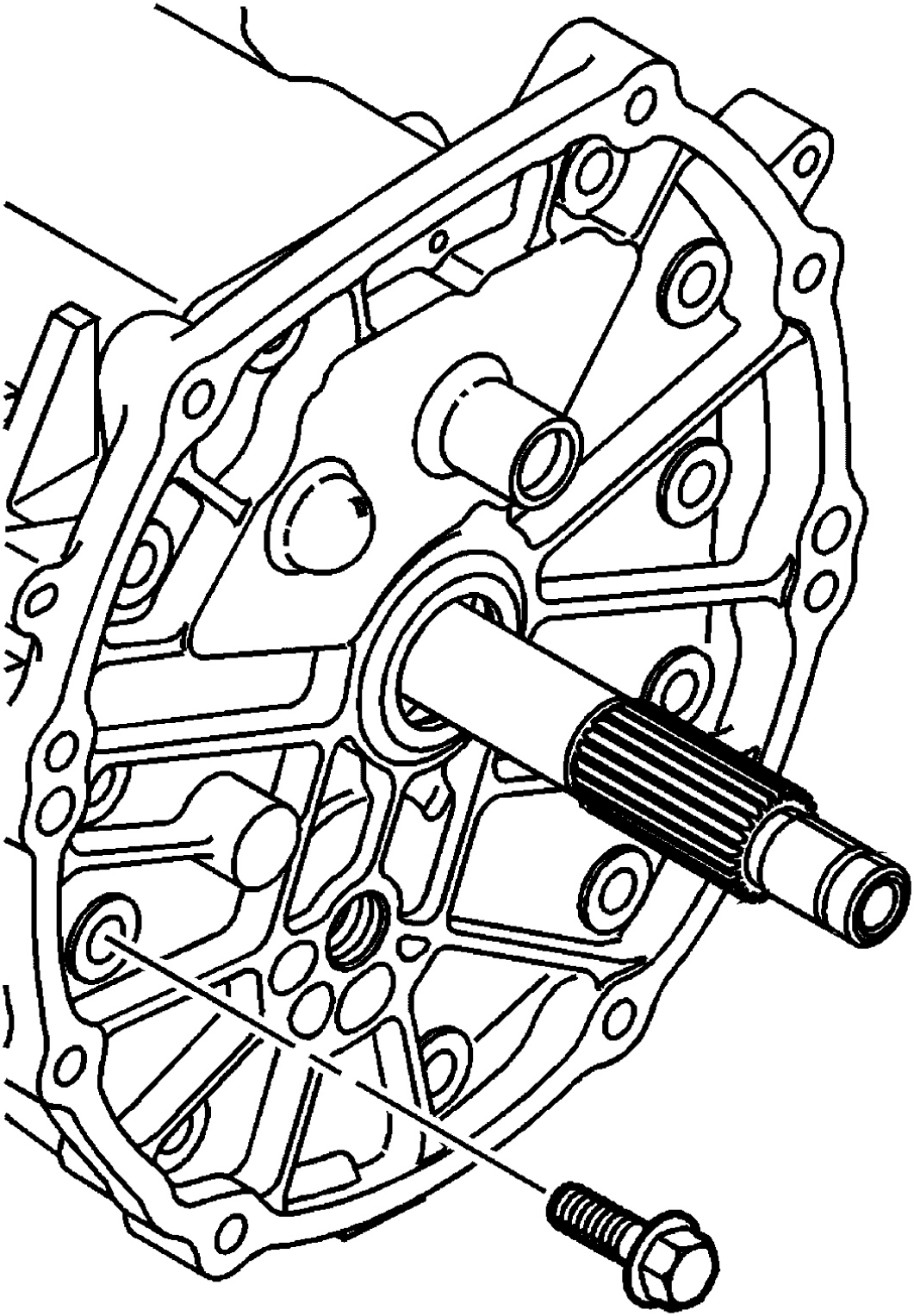

cardiagn.com

Fig. 452: Locating Adapter Plate To Transmission Case Bolts
Courtesy of GENERAL MOTORS CORP.

NOTE: Refer to Fastener Notice in Cautions and Notices.

4. Install the adapter plate to transmission case bolts.

   Tighten: Tighten the bolts to 35 N.m (26 Ib. ft).

cardiagn.com

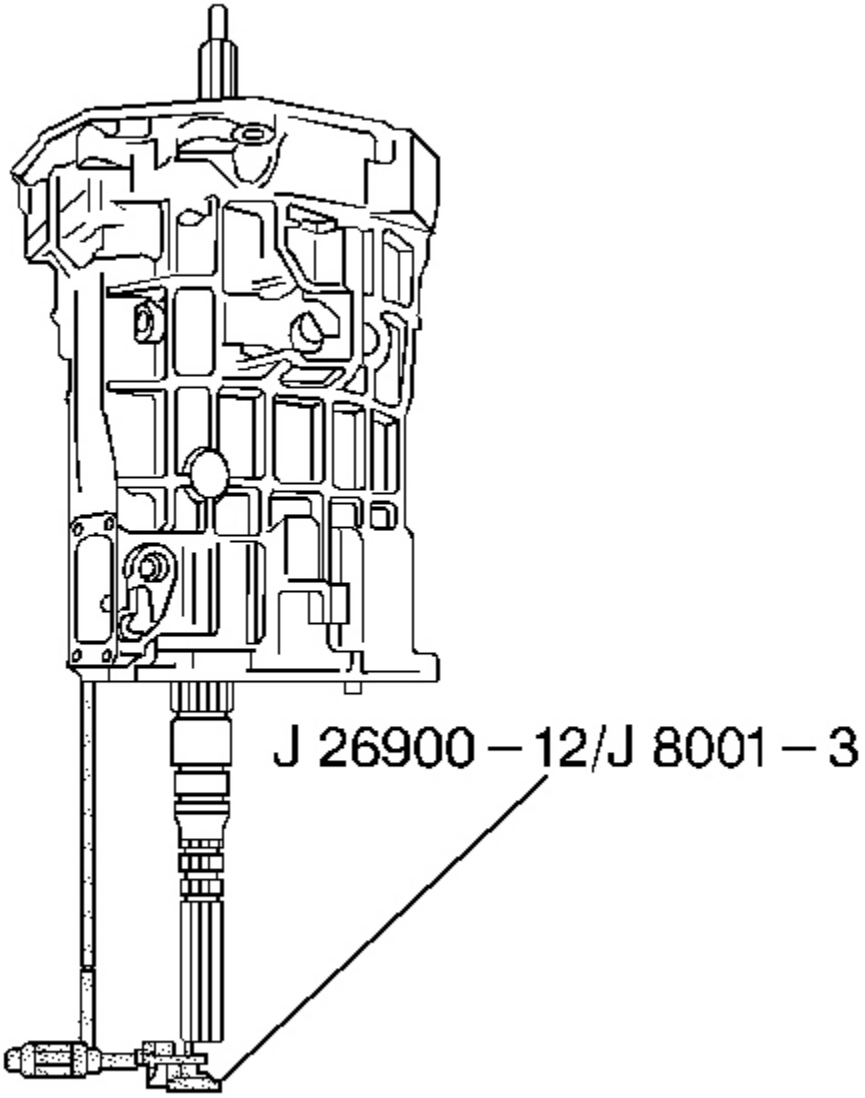

Fig. 453: Measuring Input Shaft/Mainshaft End Play Using J 8001-3
Courtesy of GENERAL MOTORS CORP.

5. Measure the input shaft/mainshaft end play using the following procedure:
    1. Place the tip of the **J 8001-3** on the end of the mainshaft.
    2. Move the input shaft up and down.
    3. Record the measurement.

cardiagn.com

6. Select a shim to achieve 0.00-0.05 mm (0.000-0.002 in) preload.
7. Remove the **J 8001-3** .

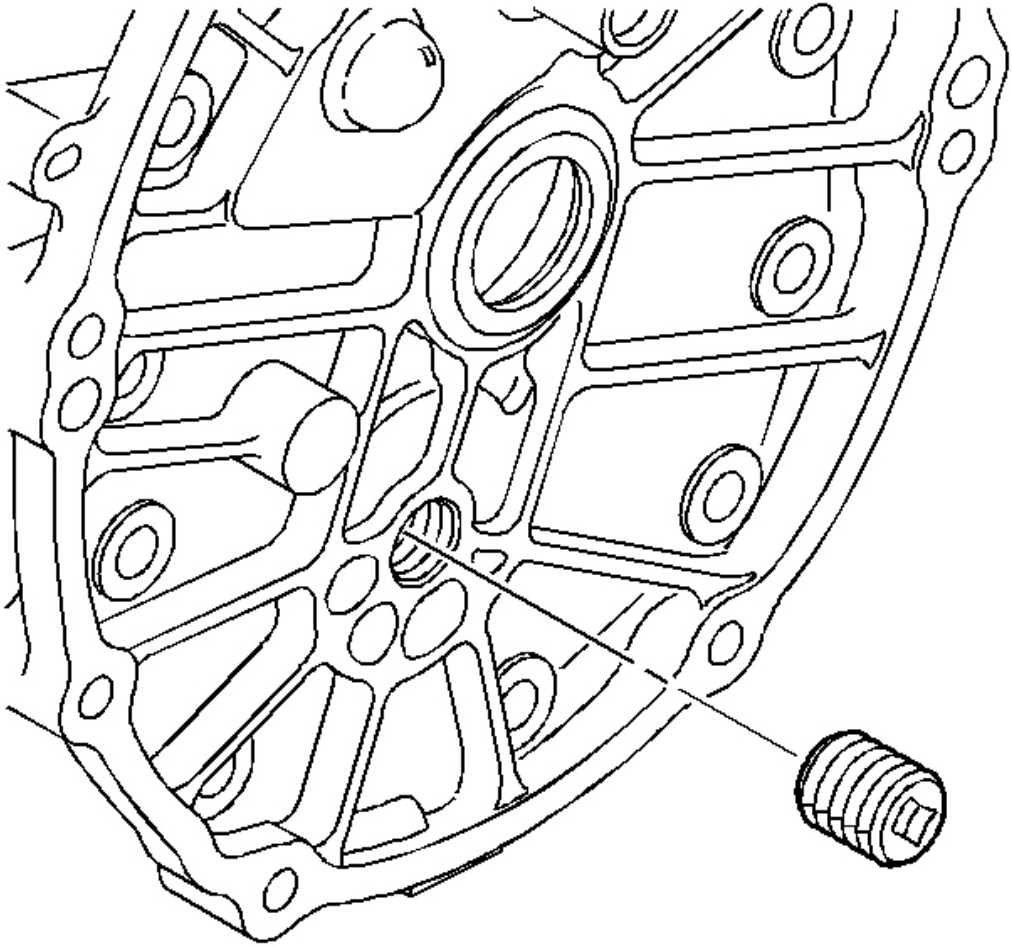

Fig. 454: Locating Adapter Plate Plug
Courtesy of GENERAL MOTORS CORP.

8. Remove the adapter plate plug.

cardiagn.com

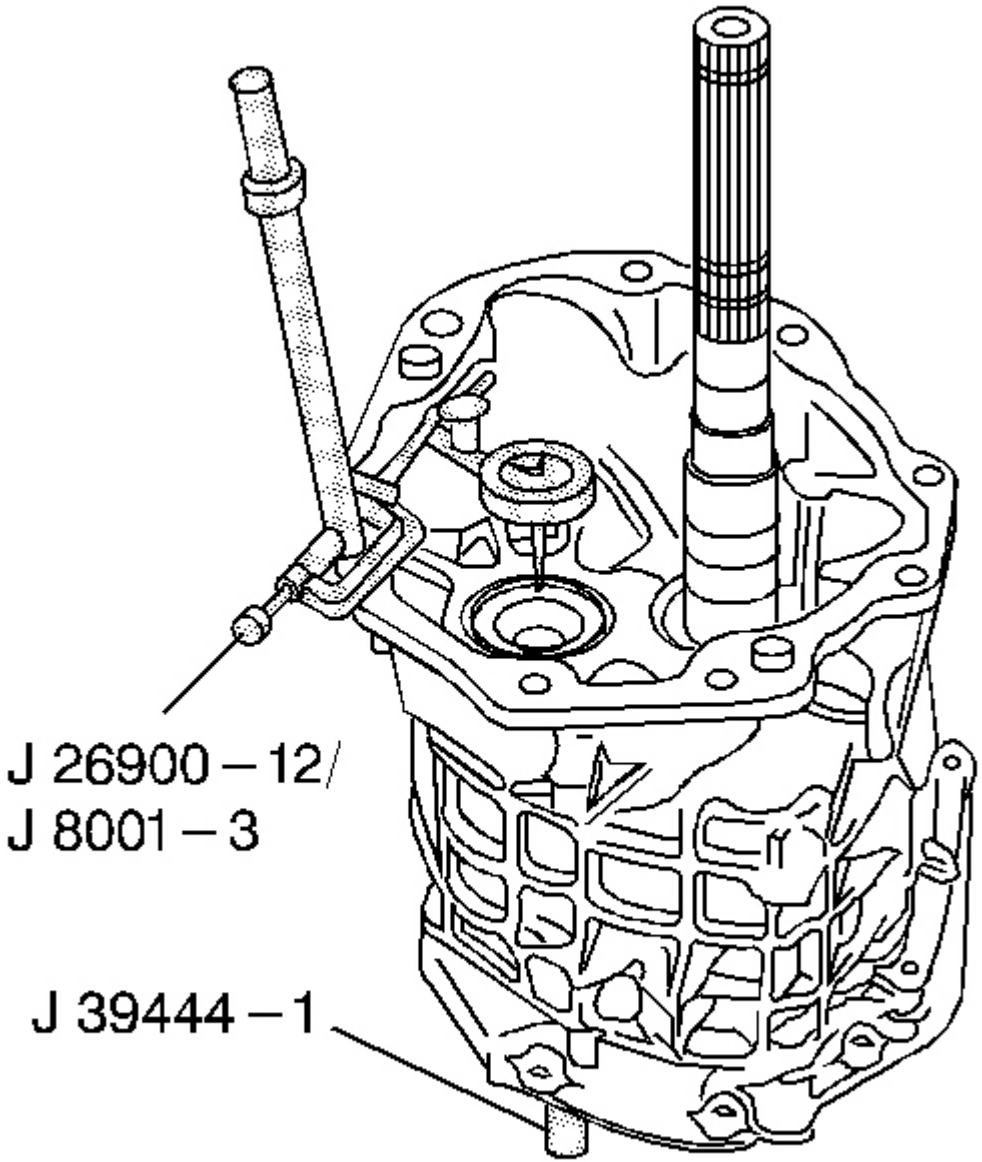

Fig. 455: Measuring Countershaft End Play With J 8001 & J 39444-1
Courtesy of GENERAL MOTORS CORP.

9. Place the tip of the **J 8001** -3 on the end of the countershaft.
10. Measure the countershaft end play using the following procedure:
    1. Install the **J 39444-1** through the adapter plate plug hole. Screw the **J 39444-1** into the

cardiagn.com

countershaft.

2. Move the countershaft up and down with the countershaft end play rod **J 39444-1** .
3. Record the measurement.

11. Select a shim to achieve 0.00-0.05 mm (0.000-0.002 in) preload.
12. Remove the **J 8001** -3.
13. Remove the **J 39444-1** .

cardiagn.com

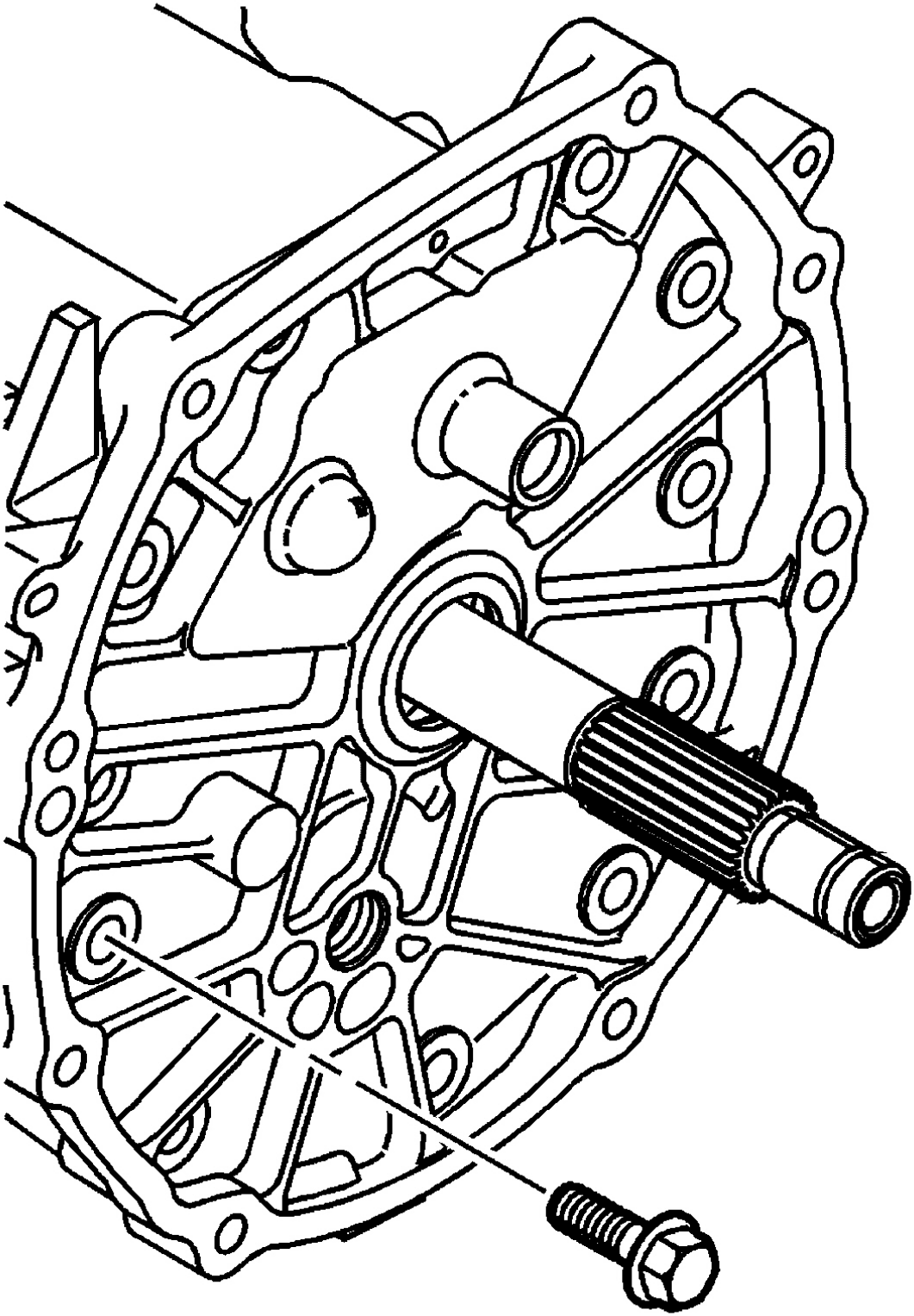

cardiagn.com

Fig. 456: Locating Adapter Plate To Transmission Case Bolts
Courtesy of GENERAL MOTORS CORP.

14. Remove the adapter plate to the transmission case bolts.

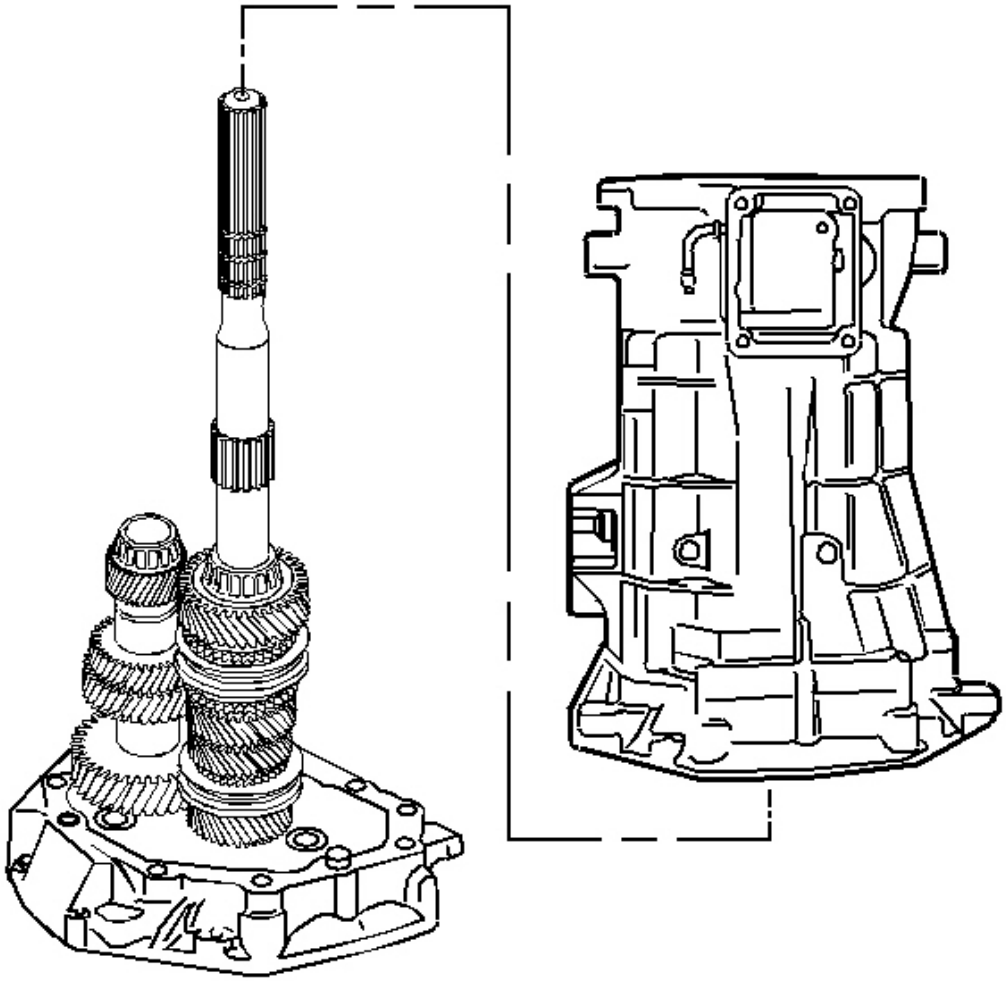

Fig. 457: Identifying Transmission Case
Courtesy of GENERAL MOTORS CORP.

15. Remove the transmission case.

cardiagn.com

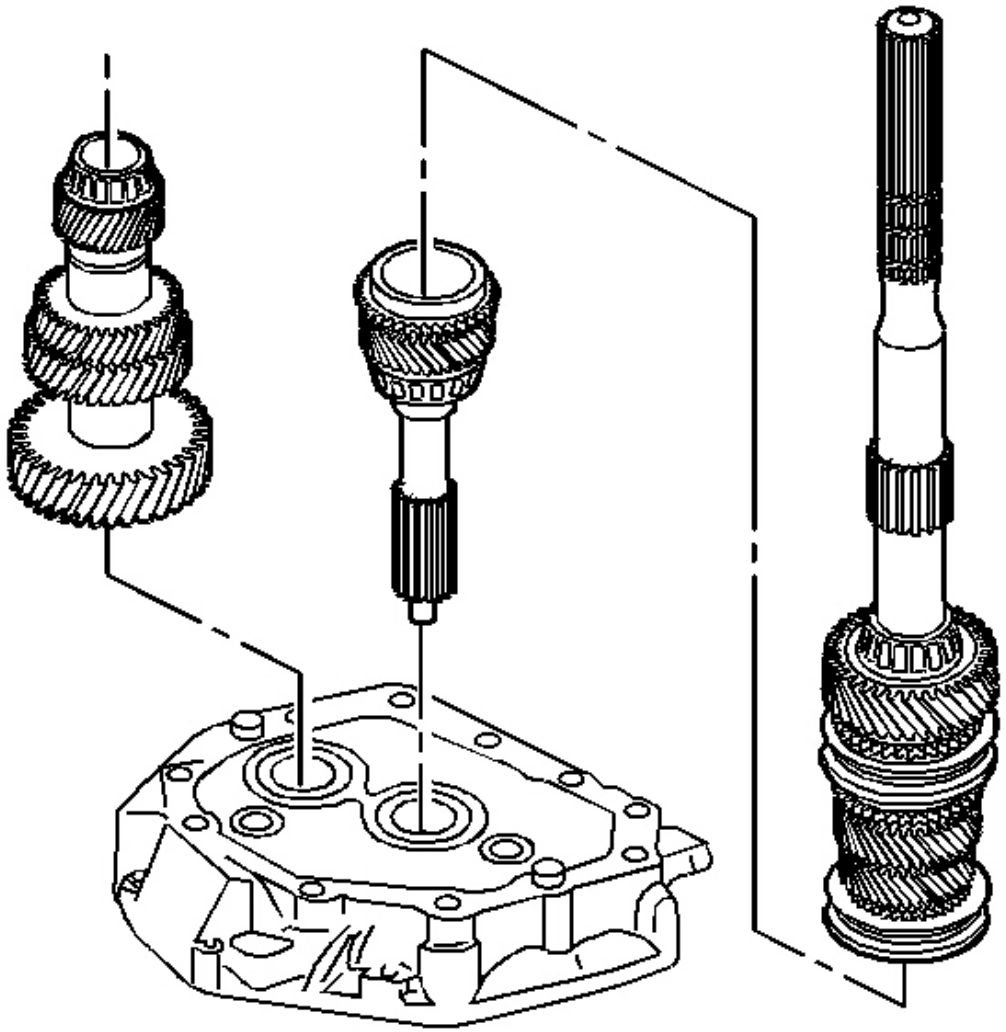

Fig. 458: View Of Transmission Components
Courtesy of GENERAL MOTORS CORP.

16. Remove the following parts in order:
    1. The countershaft (Lift up the mainshaft enough to remove the countershaft).
    2. The mainshaft assembly
    3. The 4th speed gear blocking ring and the input shaft from the adapter plate
    4. The input shaft bearing race
    5. The countershaft bearing race

cardiagn.com

Countershaft Extension

Tools Required

- **J 8001** Dial Indicator Set. See **Special Tools** .
- **J 39444-2** Countershaft Extension End Play Rod. See **Special Tools** .

IMPORTANT: The following procedure cannot be performed accurately until the countershaft shimming procedure has been completed and the transmission has been assembled to the point of installing the countershaft extension.

1. Rotate the transmission in the horizontal position.

cardiagn.com

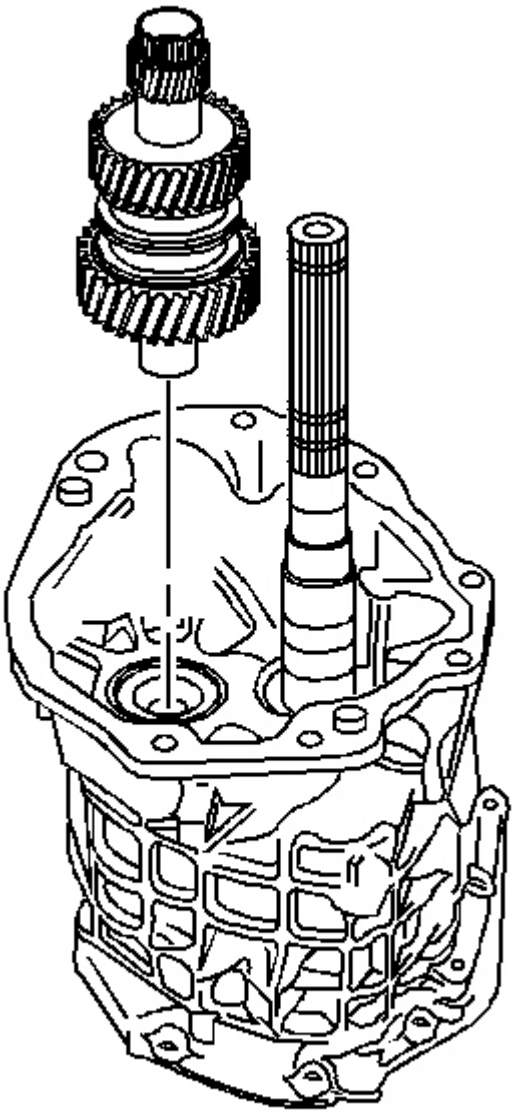

Fig. 459: Identifying Countershaft Extension
Courtesy of GENERAL MOTORS CORP.

2. Install the countershaft extension to the countershaft. Make sure the splines fully engage.

cardiagn.com

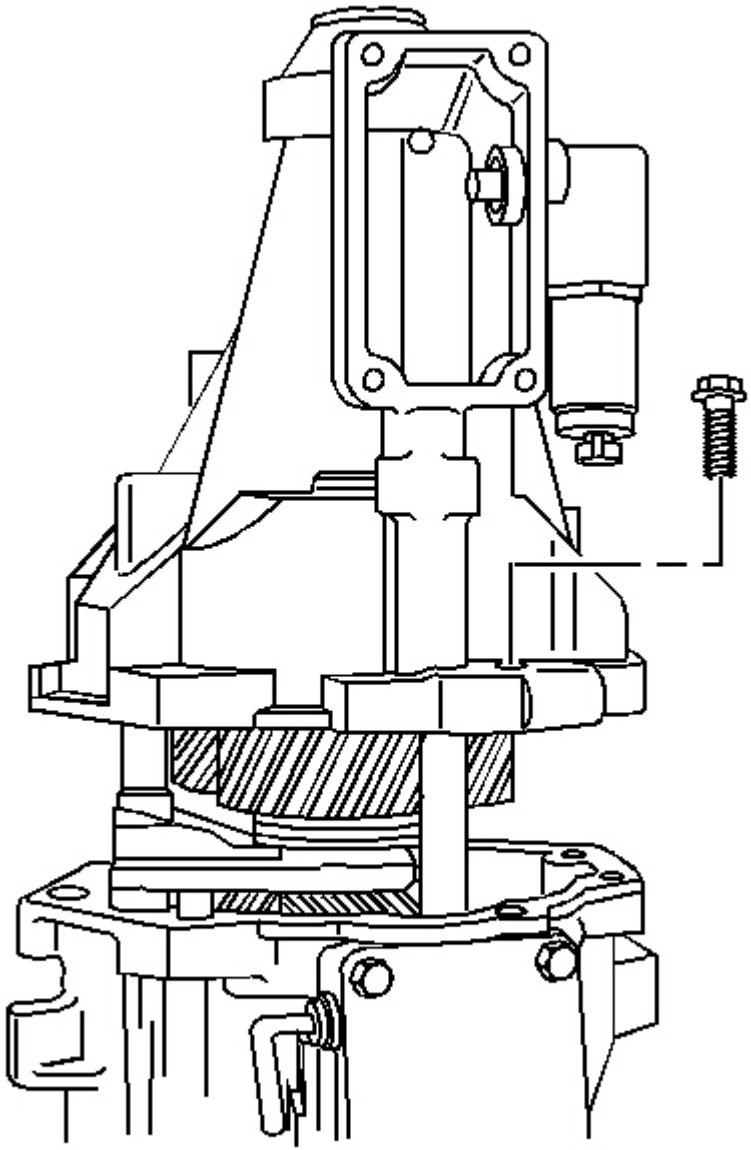

Fig. 460: View Of Extension Housing Bolts & Extension Housing
Courtesy of GENERAL MOTORS CORP.

NOTE: Refer to Fastener Notice in Cautions and Notices.

3. Install the extension housing and the extension housing retainer bolts.

cardiagn.com

Tighten: Tighten the bolts to 35 N.m (26 Ib. ft).

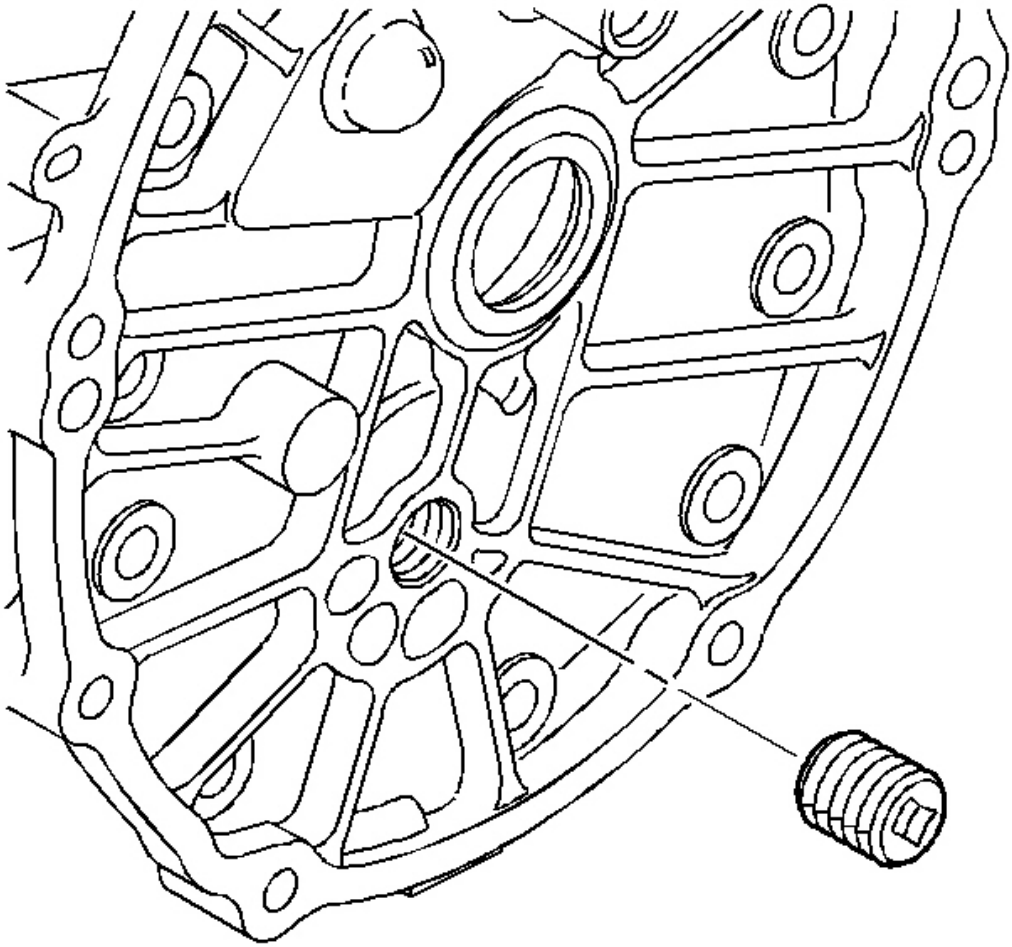

Fig. 461: Locating Adapter Plate Plug
Courtesy of GENERAL MOTORS CORP.

4. Remove the plug from the adapter plate.

cardiagn.com

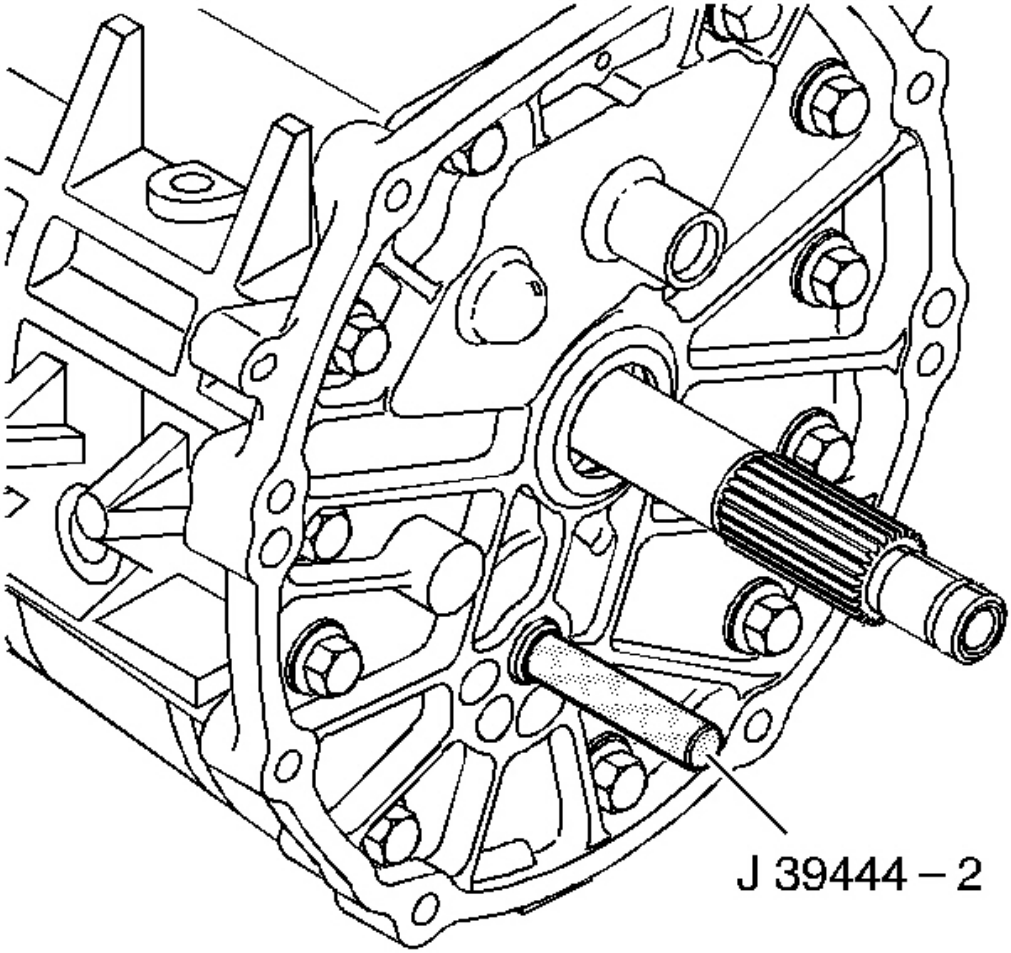

Fig. 462: Installing/Removing J 39444-2 In Adapter Plate Plug Hole
Courtesy of GENERAL MOTORS CORP.

5. Install the **J 39444-2** through the adapter plate plug hole.
6. Screw **J 39444-2** into the countershaft extension.

cardiagn.com

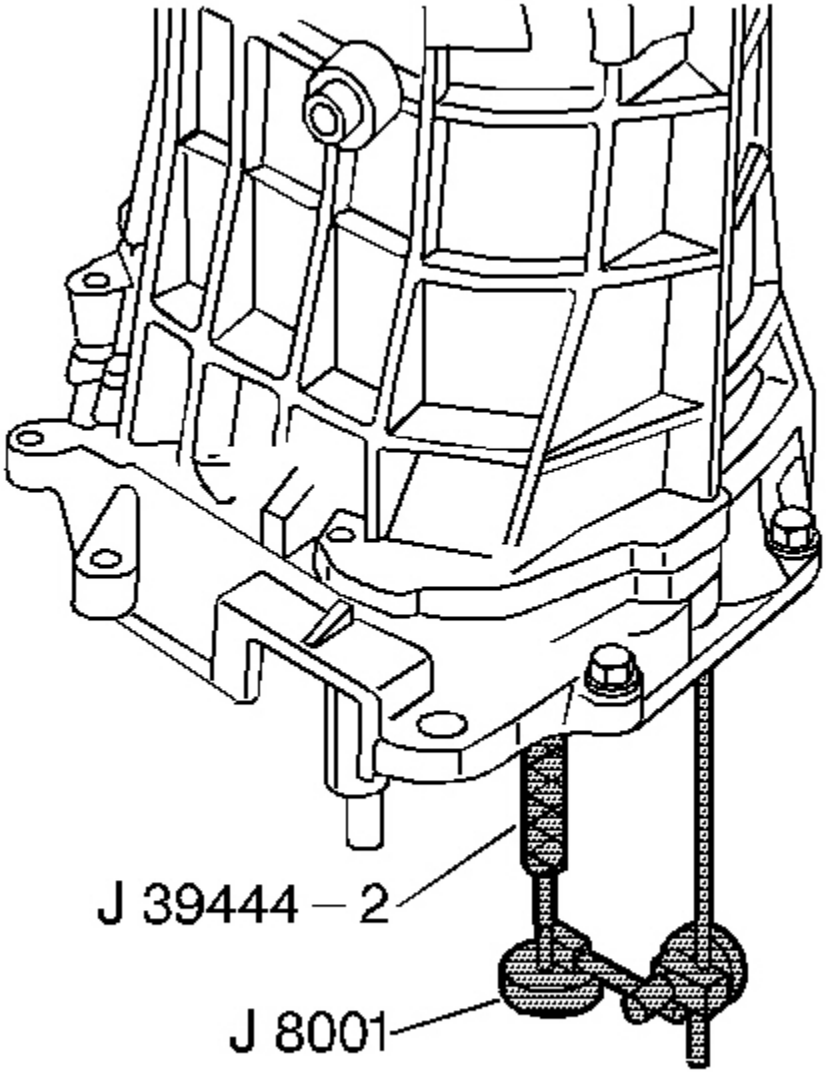

Fig. 463: Measuring Countershaft Extension End Play Using J 8001 & J 39444-2
Courtesy of GENERAL MOTORS CORP.

7. Measure the countershaft extension end play using the following procedure:
    1. Install a **J 8001** so the tip is on the end of the countershaft extension end play rod.
    2. Rotate the transmission in the vertical position.
    3. Move the countershaft extension up and down using the **J 39444-2** .
    4. Record the measurement.

cardiagn.com

8. Select a shim to achieve 0.05-0.13 mm (0.002-0.005 in) axial play.
9. Remove the **J 8001** .
10. Remove the **J 39444-2** .

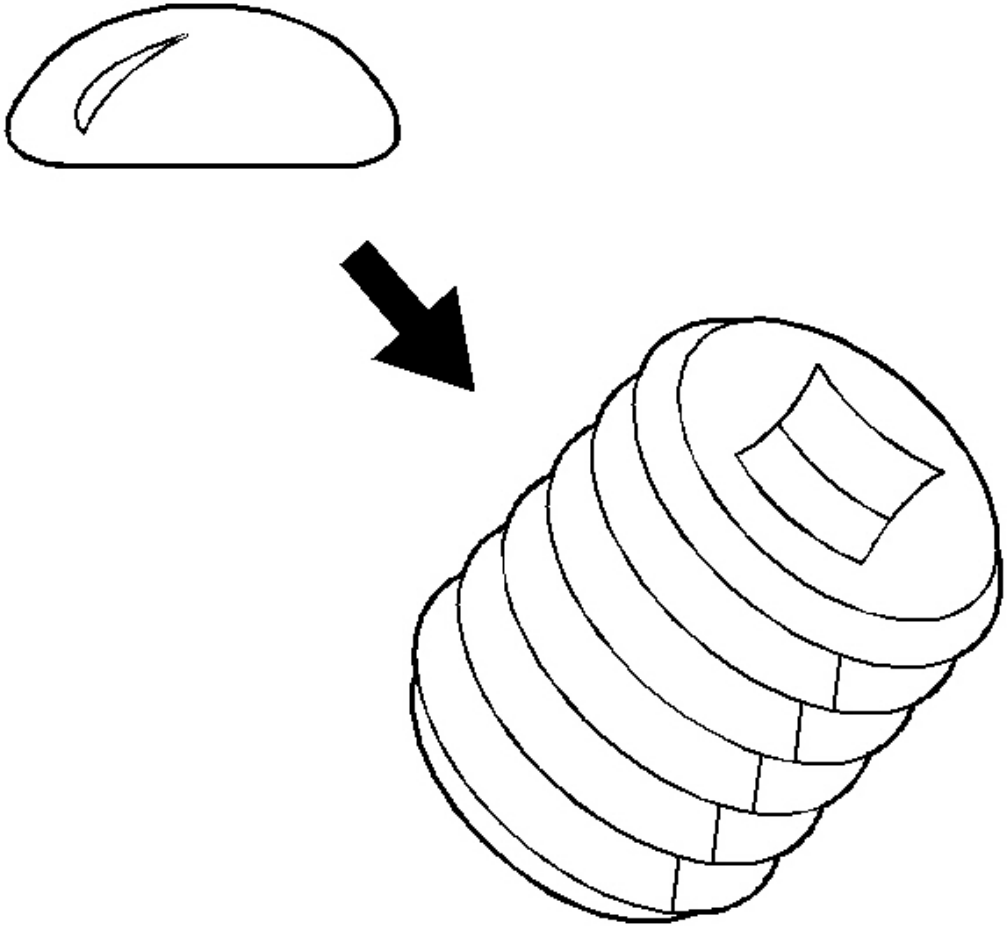

Fig. 464: Applying Sealant To Adapter Plate Plug Threads
Courtesy of GENERAL MOTORS CORP.

11. Apply sealant GM P/N 12346004 (Canadian P/N 10953480) or the equivalent to the plug threads.

cardiagn.com

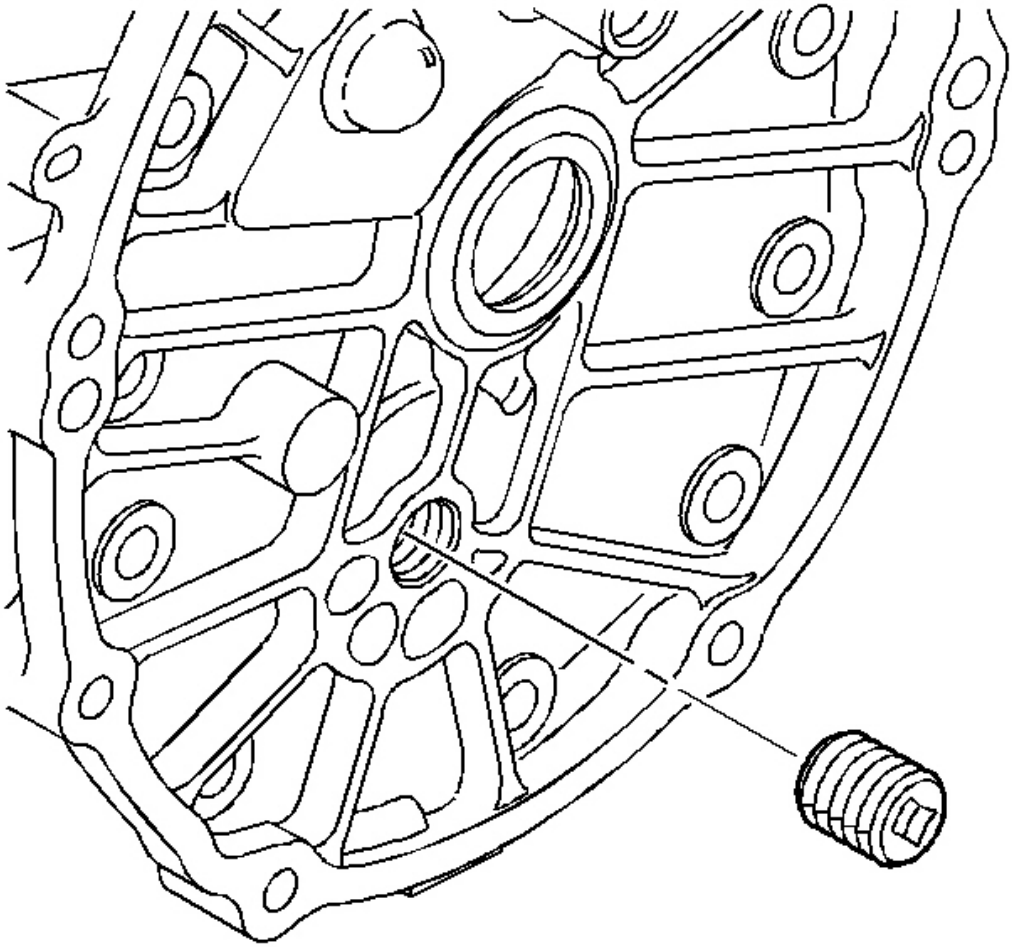

Fig. 465: Locating Adapter Plate Plug
Courtesy of GENERAL MOTORS CORP.

12. Install the adapter plate plug.

    Tighten: Tighten the plug to 27 N.m (20 Ib. ft).

cardiagn.com

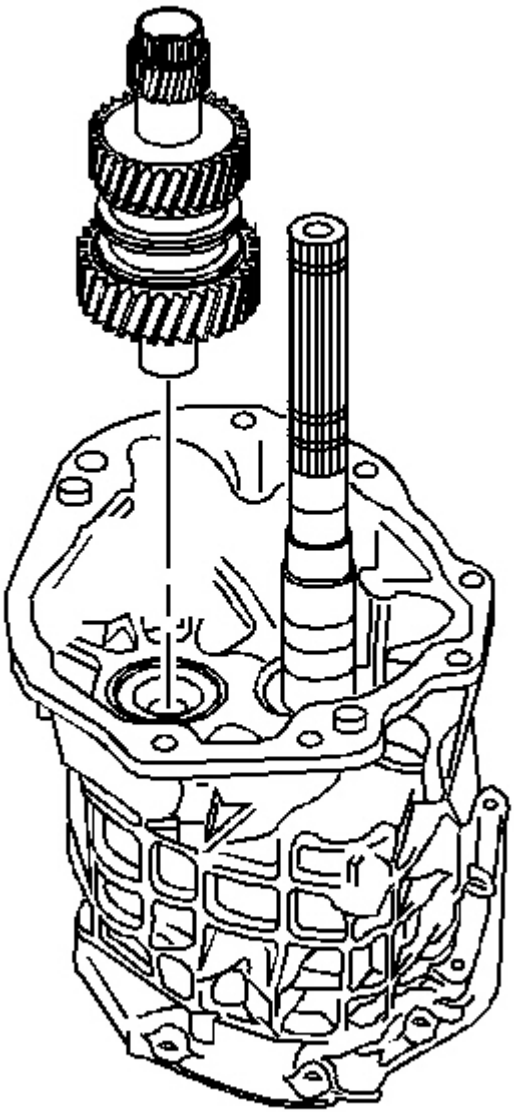

Fig. 466: Identifying Countershaft Extension
Courtesy of GENERAL MOTORS CORP.

13. Install the countershaft extension.
14. Install the countershaft extension bearing race.

cardiagn.com

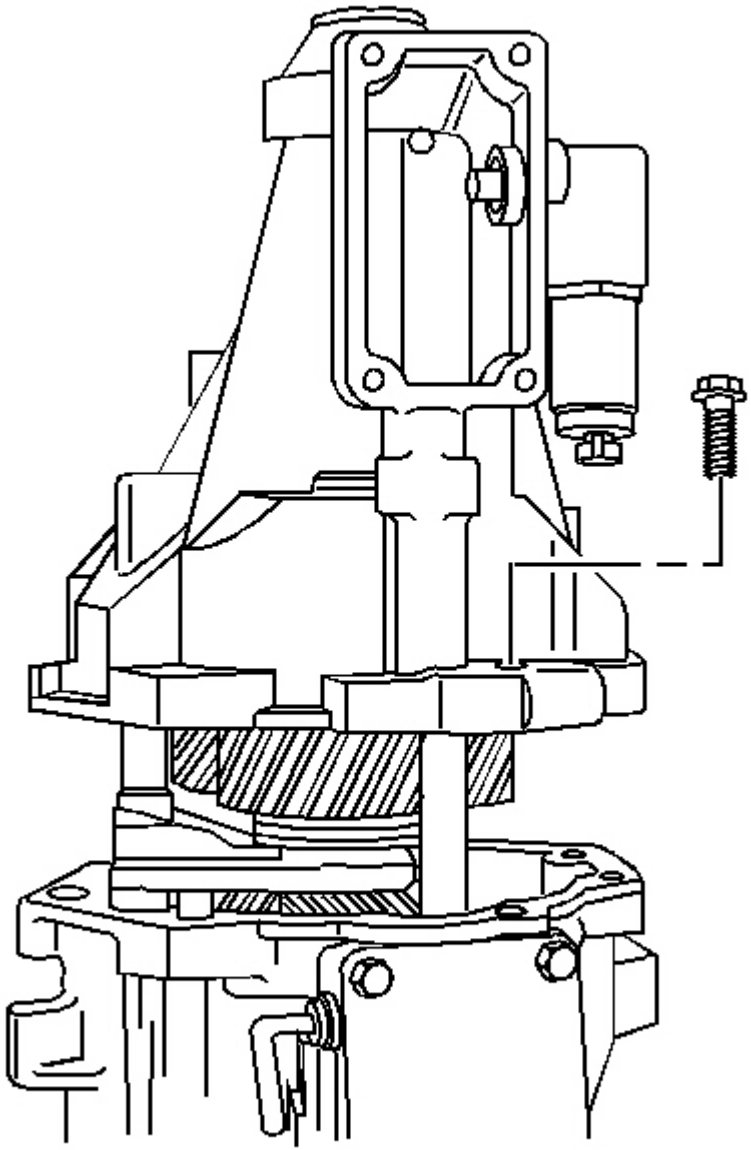

Fig. 467: View Of Extension Housing Bolts & Extension Housing
Courtesy of GENERAL MOTORS CORP.

15. Install the extension housing bolts and the extension housing.

DESCRIPTION AND OPERATION

cardiagn.com

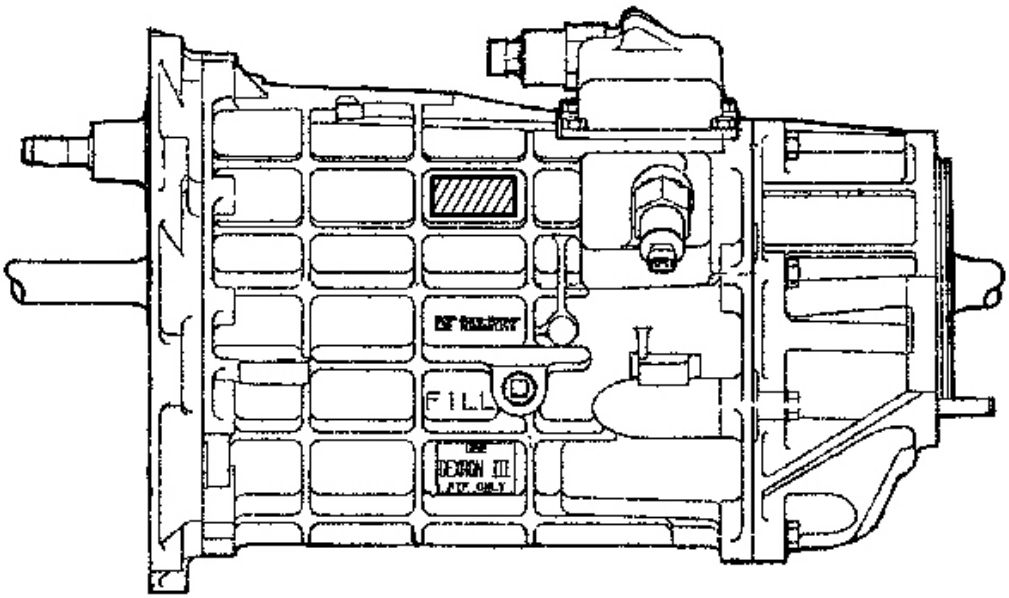

Fig. 468: 6-Speed Manual Transmission (RPO MM6/M12)
Courtesy of GENERAL MOTORS CORP.

Manual transmissions are identified by the number of forward gears and the measured distance between the centerline of the output shaft and the counter gear.

The 6-speed manual transmission (RPO MM6/M12) incorporates the following features:

- An aluminum case
- Fully synchronized gearing with an enhanced synchronizer cone arrangement:
  - Triple-cone: FIRST, SECOND
  - Double-cone: THIRD, FOURTH, FIFTH, SIXTH
  - Single-cone: REVERSE
- An internal shift rail mechanism
- A remote transmission shift control mounted forward of the transmission
- An external transmission shift rod enabling the forward mount location of the transmission shift control
- An extended-length transmission output shaft mating directly to the rear axle drive pinion, in the rear of the differential housing
- Tapered roller bearings supporting the mainshaft and countershaft

cardiagn.com

- Caged roller bearings under all speed gears
- Solenoid inhibit of SECOND and THIRD gears
- Solenoid inhibit of REVERSE gear during predefined forward motion

These features combine to yield a rugged, reliable system capable of handling input torques of up to 610 N.m (450 lb ft) for the MM6 and 540 N.m (400 lb ft) for the M12.

The gear ratios are as follows:

Manual Transmission Description and Operation

Gear	MM6 Ratio (:1)	M12 Ratio (:1)
FIRST	2.66	2.97
SECOND	1.78	2.07
THIRD	1.30	1.43
FOURTH	1.00	1.00
FIFTH	0.74	0.84
SIXTH	0.50	0.57
REVERSE	2.90	3.28

Shift Control and Shift Rod

cardiagn.com

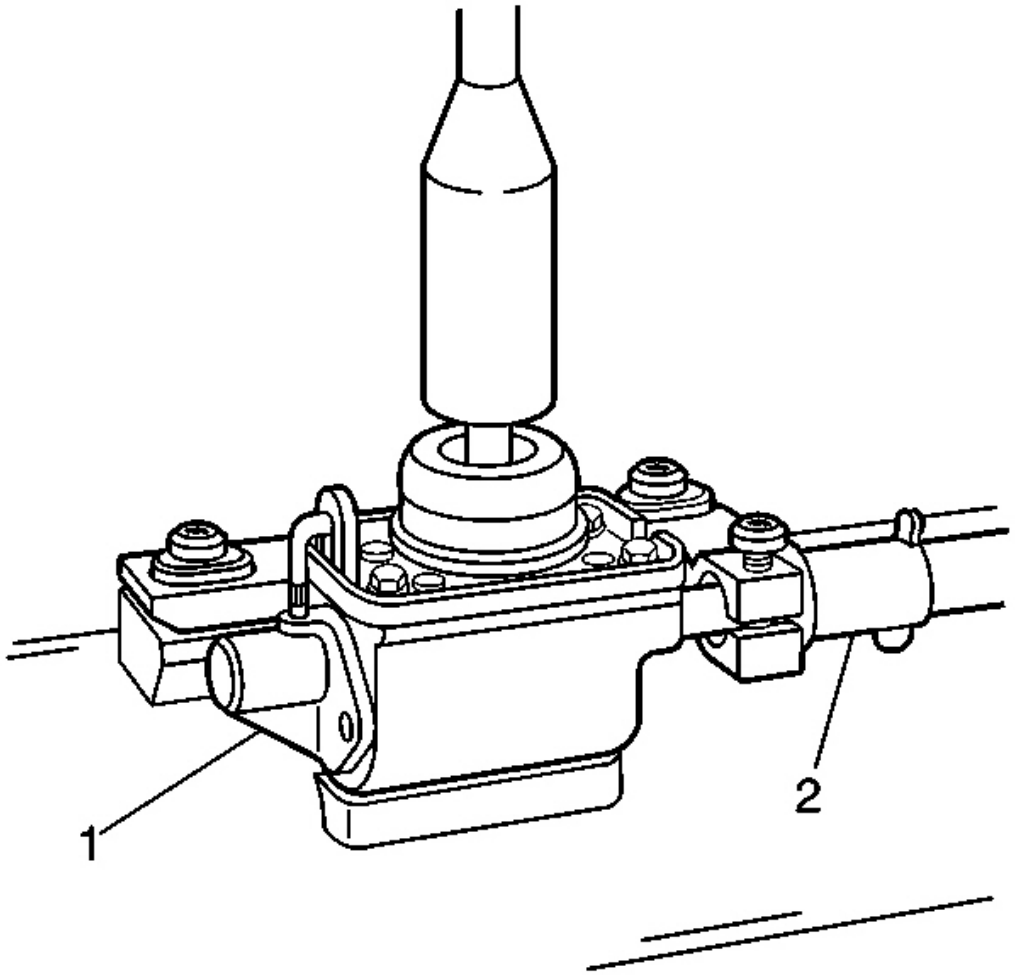

Fig. 469: Shift Control and Shift Rod
Courtesy of GENERAL MOTORS CORP.

To allow the rear-of-vehicle transmission location, the transmission shift shaft has been relocated to the front of the transmission. The shift shaft is connected to a transmission shift rod (2) which contains two sealed universal-style joints, enabling the range of motion necessary in order to shift gears. The shift rod (2) is connected to the transmission shift control (1) which is a lubricated and sealed unit, mounted to the driveline support assembly. The mounting system utilized for the shift control (1) incorporates rubber insulators. The cockpit of the vehicle is isolated from the driveline through the use of a shift control closeout boot which seals off the shift control and the driveline tunnel shift control opening.

Gear Select - Skip Shift

cardiagn.com

To ensure good fuel economy and compliance with federal fuel economy standards, SECOND and THIRD gears are inhibited when shifting out of FIRST gear under the following conditions:

- Coolant temperature is above 76°C (169°F).
- Vehicle speed is 24-31 km/h (15-19 mph).
- Throttle is opened 21 percent or less.

Reverse Lockout

A reverse lockout system, consisting of a reverse lockout solenoid which operates a reverse lockout mechanism, is utilized to prevent shifting into REVERSE gear when the vehicle is moving forward at a speed of 5 km/h (3 mph) or more.

SPECIAL TOOLS AND EQUIPMENT

SPECIAL TOOLS

Special Tools

Illustration	Tool Number/Description
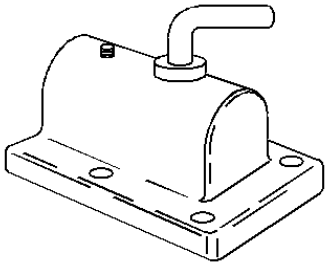	J 3289-20 Holding Fixture
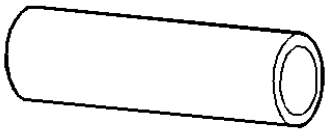	J 5590 Press Tube
	J 8001 Dial Indicator Set

cardiagn.com

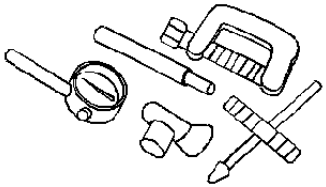

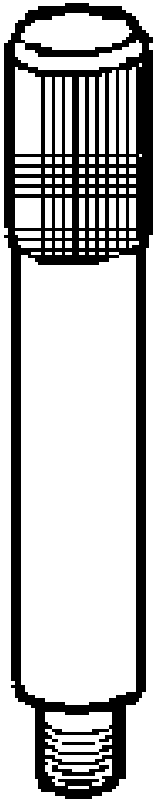

J 8092
Universal Driver Handle

cardiagn.com

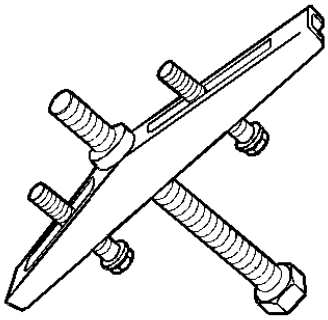	J 8433 Universal Bridge Puller
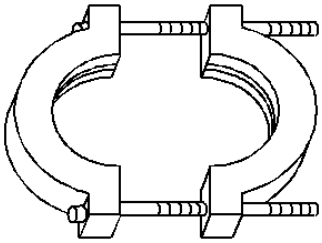	J 22910-01 Split Plate
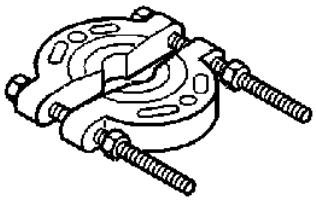	J 22912-01 Split Plate
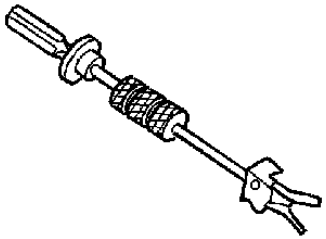	J 23907 Slide Hammer

cardiagn.com

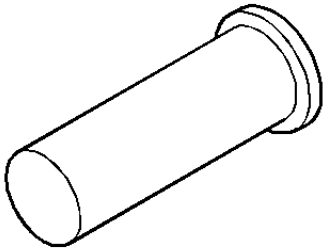	J 25234 Press Tube
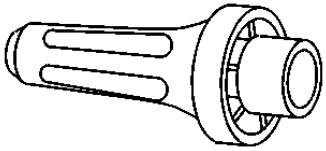	J 26508-A Transmission Rear Seal Installer
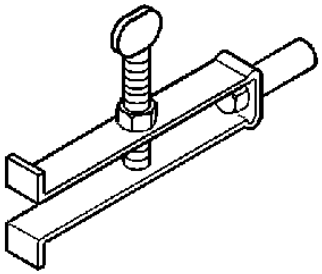	J 26941 Bearing Race Remover
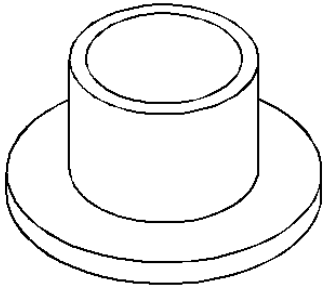	J 28537-17 Bearing Race Installer

cardiagn.com

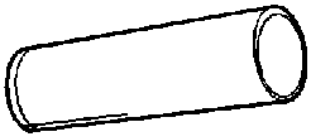	J 36183 Press Tube
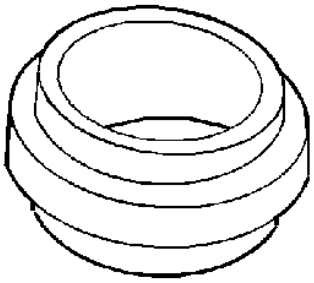	J 36184 Press Tube Adapter
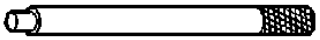	J 36190 Universal Driver Handle
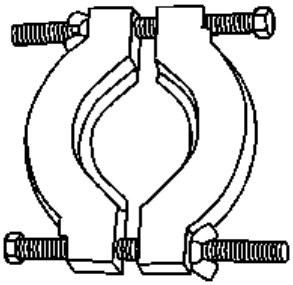	J 36513 Split Plate

cardiagn.com

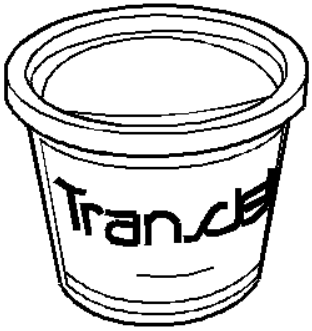	J 36850 Transjel(R) Lubricant
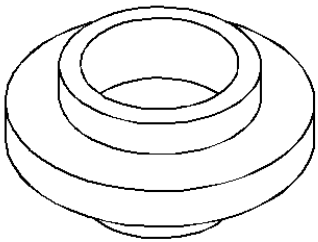	J 39371 1st/2nd Synchronizer Installer
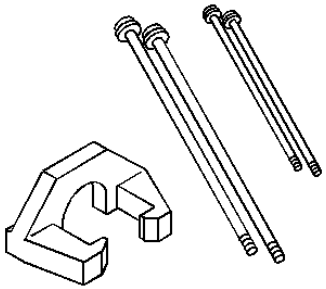	J 39431-1, -2, -4 Gear Remover and Bolts
	J 39433 Input Shaft Seal Installer

cardiagn.com

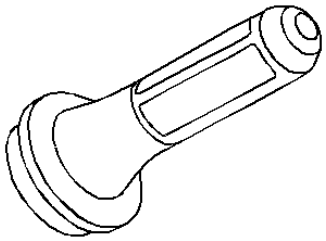	
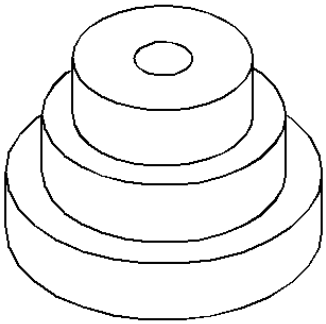	J 39435 Bearing Race Installer
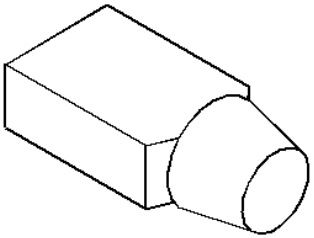	J 39437 Bushing Installer
	J 39438 Bearing Installer

cardiagn.com

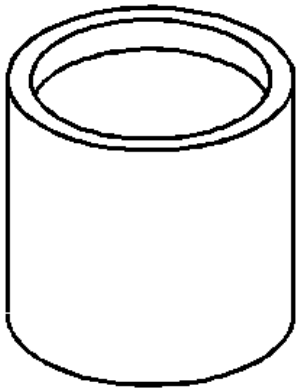	
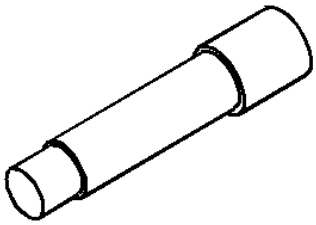	J 39439-1 Shift Rail Bushing Remover/Installer
	J 39439-2 Bushing Remover

cardiagn.com

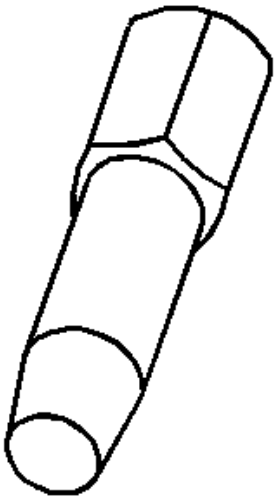	
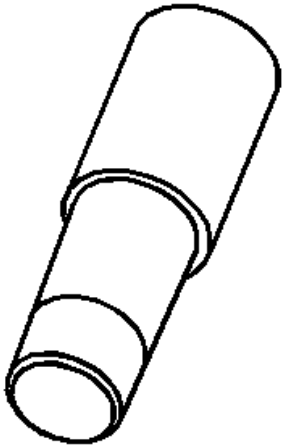	J 39439-3 Bushing Installer

cardiagn.com

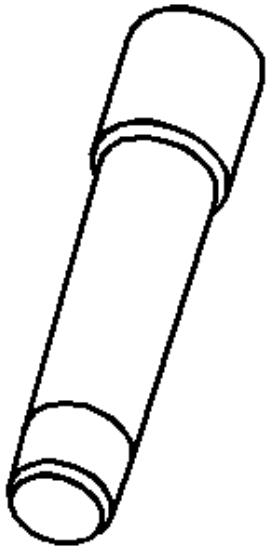	J 39439-4 Bushing Installer
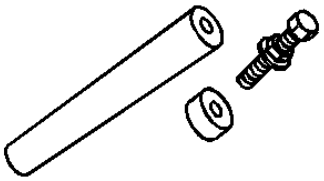	J 39441 5th/6th Driven Gear Installer
	J 39441-10 5th Gear Installer Adapter

cardiagn.com

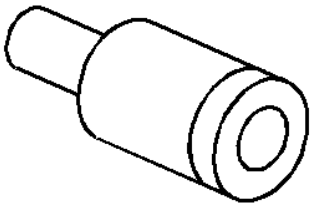	J 39442 Press Adapter
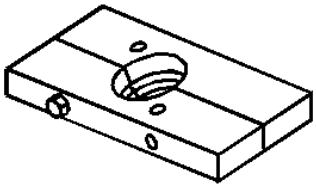	J 39443 Split Plate
	J 39444-1 Countershaft End Play Rod

cardiagn.com

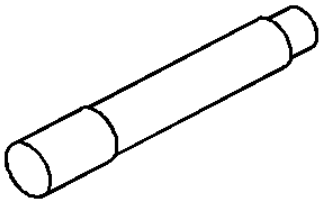	
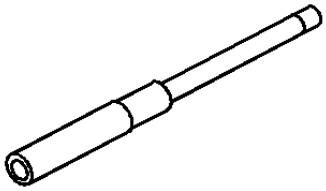	J 39444-2 Countershaft Extension End Play Rod
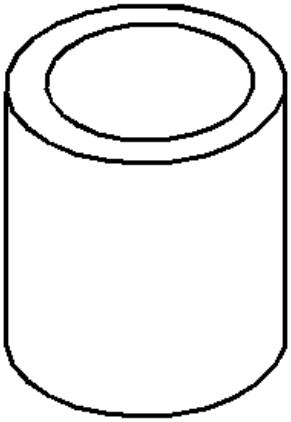	J 39473 Mainshaft Bearing Installer/Adapter
	J 39511 Split Plate

cardiagn.com

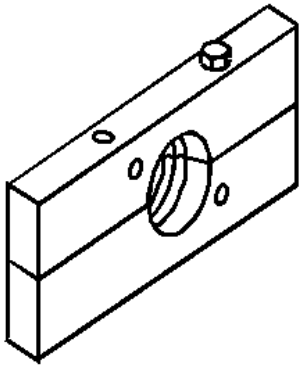	
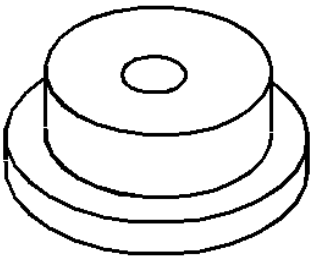	J 39546 Bearing Race Installer
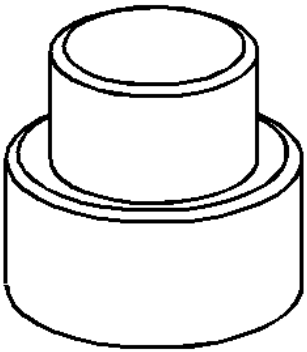	J 39547 Press Adapter

cardiagn.com

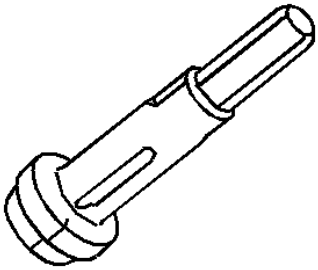	J 39594 Bearing Race Remover
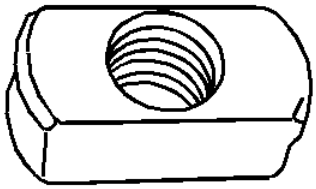	J 39790 Mainshaft Bearing Race Remover
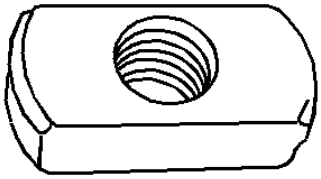	J 39791 Countershaft Bearing Race Remover
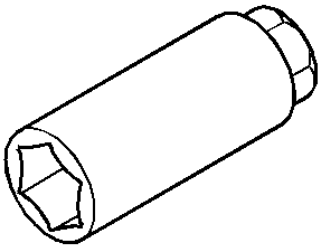	J 41099 Skip Shift Sensor Remover/Installer

cardiagn.com

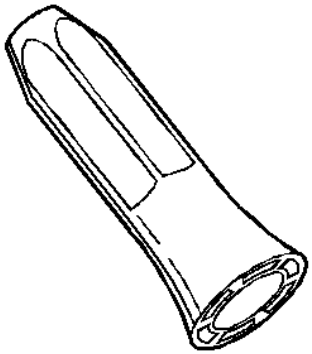	J 42198 Transmission Rear Seal Installer
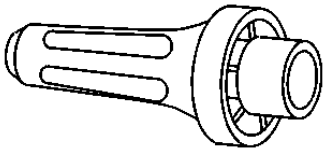	J 42464 Shift Shaft Seal Installer
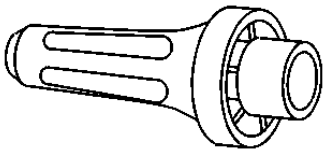	J 42496 Inner Shift Rail Seal Installer
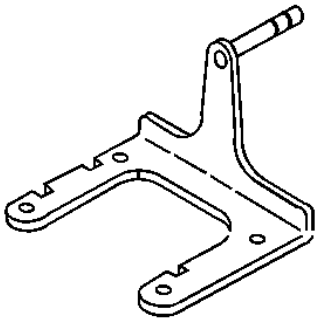	J 44395 Transmission Holding Fixture

cardiagn.com