Workshop Manual

Touareg 2003 ➤

8-cylinder injection engine									
Engine ID	AXQ	BHX							

Edition 11.2011

List of Workshop Manual Repair GroupsList of Workshop Manual Repair GroupsList of Workshop Manual Repair Groups

Repair Group

00 - Technical data
10 - Removing and installing engine
13 - Crankshaft group
15 - Cylinder head, valve gear
17 - Lubrication
19 - Cooling
20 - Fuel supply system
24 - Mixture preparation - injection
26 - Exhaust system
28 - Ignition system

Technical information should always be available to the foremen and mechanics, because their careful and constant adherence to the instructions is essential to ensure vehicle road-worthiness and safety. In addition, the normal basic safety precautions for working on motor vehicles must, as a matter of course, be observed.

Contents

00 - Technical data . . . 1
1 Technical data . . . 1
1.1 Engine data . . . 1

10 - Removing and installing engine . . . 2
1 Removing and installing engine . . . 2
1.1 Removing engine . . . 3

13 - Crankshaft group . . . 13
1 Dismantling and assembling engine . . . 13
1.1 Assembly overview - part I, toothed belt drive . . . 15
1.2 Assembly overview - part II, cylinder block . . . 17
1.3 Removing and installing poly V-belt . . . 18
1.4 Checking alignment of poly V-belt . . . 19
2 Removing and installing sealing flange and drive plate . . . 21
2.1 Assembly overview . . . 21
2.2 Removing and installing drive plate . . . 22
2.3 Removing and installing sealing flange at drive plate end . . . 24
2.4 Renewing crankshaft oil seal, vibration damper end . . . 26

15 - Cylinder head, valve gear . . . 28
1 Cylinder head . . . 28
1.1 Assembly overview . . . 29
1.2 Removing and installing right cylinder head cover . . . 30
1.3 Removing and installing left cylinder head cover . . . 32
1.4 Removing, installing and tensioning toothed belt . . . 34
1.5 Removing and installing left cylinder head . . . 40
1.6 Removing and installing right cylinder head . . . 44
1.7 Checking compression . . . 48
2 Repairing valve gear . . . 50
2.1 Camshafts, checking axial clearance . . . 53
2.2 Renewing camshaft oil seals . . . 54
2.3 Renewing Hall sender seals . . . 55
2.4 Removing and installing camshafts and variable camshaft timing adjusters . . . 56
2.5 Removing and installing roller rocker finger . . . 62
2.6 Renewing valve stem seals . . . 62
2.7 Checking valve guides . . . 65
2.8 Reworking valve seats . . . 66

17 - Lubrication . . . 68
1 Removing and installing parts of lubrication system . . . 68
1.1 Engine oil . . . 68
1.2 Oil capacities: . . . 68
1.3 Dismantling and assembling oil filter housing . . . 69
1.4 Removing and installing oil sump . . . 70
1.5 Checking oil pressure and oil pressure switch . . . 75

19 - Cooling . . . 77
1 Removing and installing parts of cooling system . . . 77
1.1 Assembly overview - radiator . . . 78
1.2 Assembly overview - radiator fan . . . 79
1.3 Removing and installing fan support with fan . . . 79
1.4 Assembly overview - parts of cooling system, engine side, front . . . 81

1.5 Assembly overview - parts of cooling system, engine side, rear . . . 81
1.6 Assembly overview - parts of cooling system, body side . . . 83
1.7 Coolant hose schematic diagram . . . 84
1.8 Checking water pump V36 . . . 85
1.9 Draining and filling coolant . . . 86
1.10 Removing and installing radiator . . . 88
1.11 Removing and installing coolant pump and thermostat . . . 89
1.12 Checking cooling system for leaks . . . 91

20 - Fuel supply system . . . 93
1 Parts of fuel supply system . . . 93
1.1 Assembly overview - fuel tank with attachments . . . 94
1.2 Assembly overview - fuel filter . . . 96
1.3 Renewing fuel filter . . . 96
1.4 Schematic diagram of fuel lines and components in fuel tank . . . 98
1.5 Safety precautions when working on fuel supply system . . . 99
1.6 Rules for cleanliness . . . 99
1.7 Emptying fuel tank . . . 100
1.8 Removing and installing fuel delivery unit, fuel gauge sender and suction-jet pumps . . . 102
1.9 Removing and installing fuel tank with attached components . . . 104
1.10 Checking fuel pumps . . . 107
1.11 Checking delivery rate of pumps . . . 108
1.12 Checking non-return valve of right pump . . . 111
1.13 Checking non-return valve of left pump . . . 113
2 Electronic power control (EPC) . . . 115
3 Activated charcoal filter system . . . 117
3.1 Assembly overview - activated charcoal filter system . . . 118
3.2 Checking fuel system for leaks . . . 118
4 Activated charcoal filter system (vehicles for USA and Canada) . . . 122
4.1 Assembly overview - activated charcoal filter system . . . 123
4.2 Checking fuel system for leaks . . . 124

24 - Mixture preparation - injection . . . 131
1 Repairing injection system . . . 131
1.1 Assembly overview - intake manifold . . . 132
1.2 Assembly overview - fuel rail . . . 133
1.3 Assembly overview - air filter . . . 133
1.4 Assembly overview - vacuum hose assembly on intake manifold . . . 136
1.5 Safety precautions . . . 137
1.6 Rules for cleanliness . . . 137
1.7 Technical data . . . 137
2 Checking components . . . 139
2.1 Checking injectors . . . 139
2.2 Checking fuel pressure regulator and holding pressure . . . 142
3 Engine control unit . . . 145
3.1 Removing and installing engine control unit . . . 145
3.2 Reading and erasing engine control unit fault memory . . . 145

26 - Exhaust system . . . 147
1 Removing and installing parts of exhaust system . . . 147
1.1 Assembly overview - exhaust manifold with starter catalytic converters and attachments . . . 148
1.2 Removing and installing Lambda probes . . . 149
1.3 Assembly overview - silencers with mountings . . . 153
2 Secondary air system . . . 155

2.1 Assembly overview - removing and installing parts of secondary air system 155

28 - Ignition system 157

1 Repairing ignition system 157
1.1 Assembly overview - parts of ignition system 157
1.2 Safety precautions 158
1.3 Removing and installing ignition coils with output stage 158
1.4 Test data, spark plugs 159

00 – Technical data

1 Technical data

Engine data ⇒ page 1

Engine number

The engine number („engine code“ and „serial number“) is stamped on the right side of the cylinder block.

Additionally there is a sticker on the toothed belt guard with „engine code“ and „serial number“.

The engine code is also included on the vehicle data sticker.

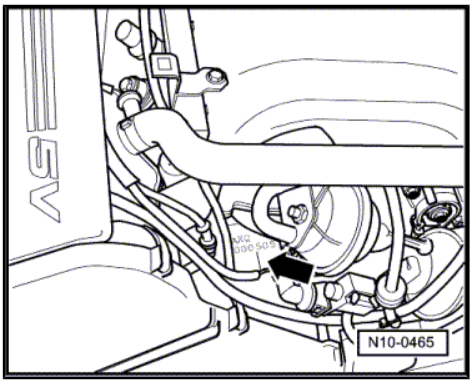

1.1 Engine data

Issued 11.2011; Version 6.0

Engine code		AXQ	BHX
Manufactured		03.03 ►	03.03 ►
Cylinder arrangement		V-engine	V-engine
Cylinder angle		90°	90°
Capacity	l	4.2	4.2
Output	kW at rpm	228/6200	228/6200
Torque	Nm at rpm	410/3200	410/3200
Bore	∅ mm	84.5	84.5
Stroke	mm	93.0	93.0
Compression ratio		11.0	11.0
Valves per cylinder		5	5
Injection, ignition		Motronic ME 7.1	Motronic ME 7.1
Firing order		1-5-4-8-6-3-7-2	1-5-4-8-6-3-7-2
Knock control		2 knock sensors	2 knock sensors
Lambda control		4 probes	4 probes
Leak diagnosis system		Only vehicles for USA and Canada	yes
Catalytic converter		yes	yes
Exhaust gas recirculation		no	no
Turbocharging/supercharging		no	no
Secondary air system		yes	yes
Electronic power control		yes	yes
Variable intake manifold		yes	yes
Camshaft timing control		yes	yes
RON	min.	98 unleaded[1)]	98 unleaded[1)]

Volkswagen Technical Site: http://vwts.ru http://vwts.info

1) In exceptional circumstances min. 95 RON, however with reduced performance.

10 – Removing and installing engine

1 Removing and installing engine

Removing engine ⇒ page 3 .

Securing engine on engine and gearbox support -VAS 6095- ⇒ page 9 .

Notes on installing ⇒ page 10 .

Special tools and workshop equipment required

- Lifting tackle -VAS 3033-
- Drip tray -V.A.G 1306-
- Engine and gearbox support -VAS 6095-
- Workshop hoist -VAS 6100-
- Scissor-type assembly platform -VAS 6131-
- Engine and gearbox jack -V.A.G 1383 A-

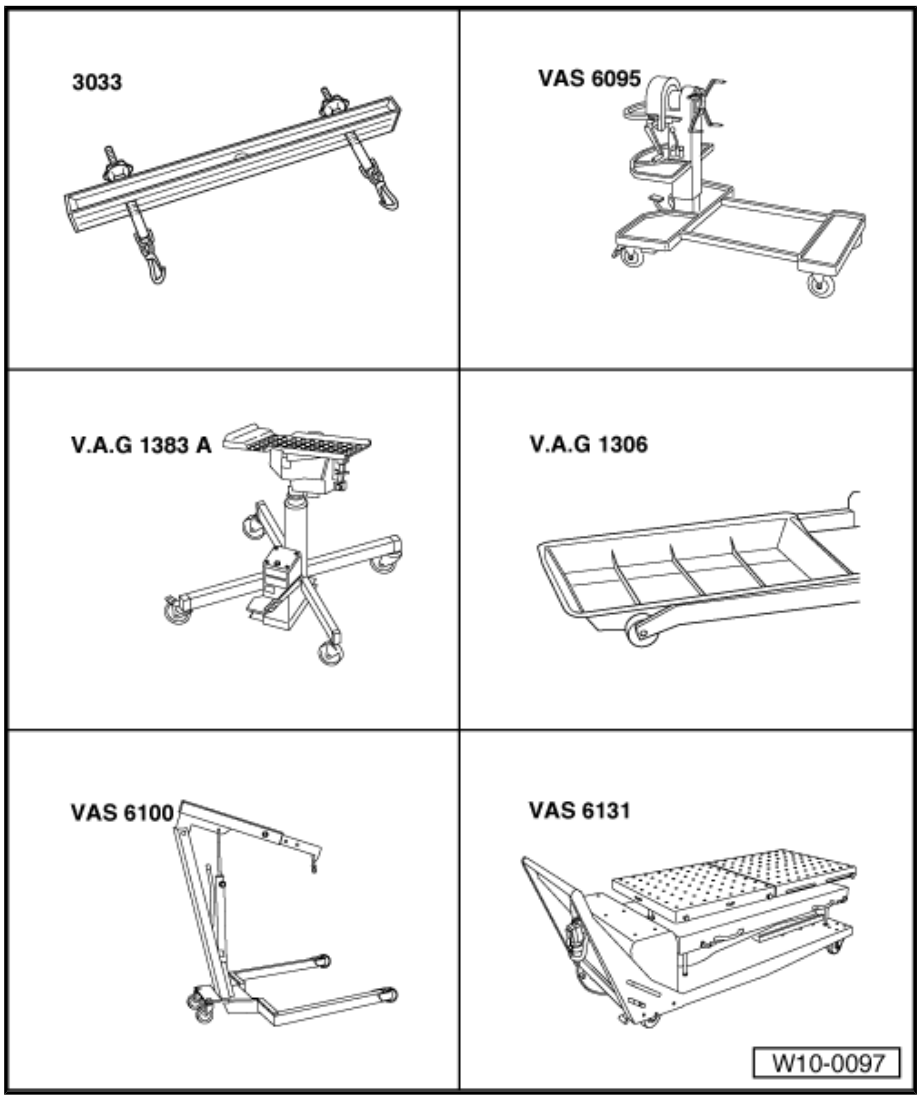

Not illustrated:

- Left support -VAS 6131/6-1-
- Right support -VAS 6131/6-2-
- Left running gear support -VAS 6131/6-3-
- Right running gear support -VAS 6131/6-4-
- Support (Qty. 2) -VAS 6131/6-5-
- Support (Qty. 2) -VAS 6131/6-6-
- Support -VAS 6131/8-

- Stepladder -VAS 5085-
- Torque wrench (5…50 Nm) -V.A.G 1331-

1.1 Removing engine

The engine is removed from below with the gearbox

– Read fault memories of all control units before removal: ⇒ Diagnostic tester VAS 5051; Guided fault finding; Vehicle system test or VAS 5052; Vehicle self-diagnosis .

Note

- *To enable the propshaft to rotate freely, move selector lever to the „N“ position.*
- *Leave key in ignition to prevent steering wheel lock from engaging.*
- *It is advisable to remove the front wheels before beginning engine removal. The vehicle can then be lowered on hoist until the brake disc splash plates are just above the floor. This provides the most ergonomic working position regarding accessibility of engine compartment components.*
- *Some components cannot be removed, or removed only with difficulty, with the engine installed. Therefore, you should determine all defective components before removing engine and renew them while engine is removed.*
- *To prevent damage to removed components, place them in the container for removed parts -V.A.G 1698- .*
- *All cable ties which are opened or cut through when engine is removed must be replaced in the same position when engine is installed.*

Disconnecting battery

The procedure must be strictly followed!

– Switch off ignition and all electrical consumers.

– First disconnect battery under driver seat ⇒ Electrical system; Rep. gr. 27 ; Disconnecting and reconnecting batteries .

Procedure

– Remove left and right wiper arms: ⇒ Electrical system; Rep. gr. 29 ; Removing and installing wiper system .

– Pull engine compartment seal off bulkhead.

– Remove covers -A-, -B- and -C- from engine compartment.

WARNING

Fuel supply lines are under pressure! Wear eye protection and gloves to avoid injuries and skin contact. Before loosening hose connections, wrap a cloth around the connection. Then release pressure by carefully pulling hose off connection.

– Wrap a cloth around the joint to catch fuel which flows out.

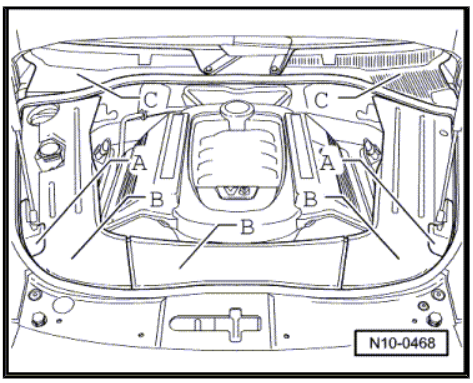

– Disconnect fuel supply line -arrow-.

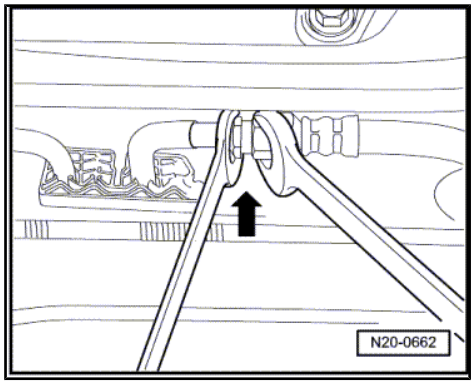

– Disconnect breather line -arrow- to solenoid valve in engine compartment.

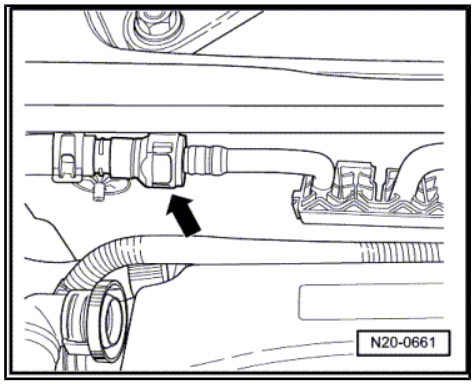

– Disconnect small connector -A- from engine control unit -1- and disconnect earth connection -arrow- of wiring harness.

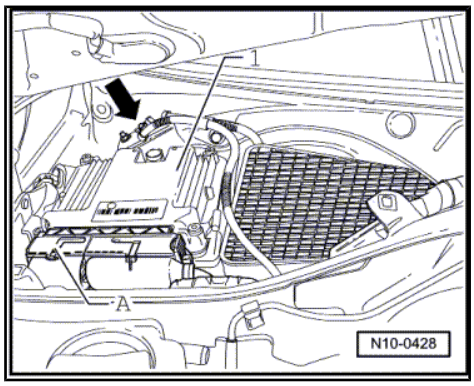

– Open fuse box cover in plenum chamber on left and separate connectors -A-, -B- and -C-.

– Remove wiring harness from plenum chamber and lay it on engine.

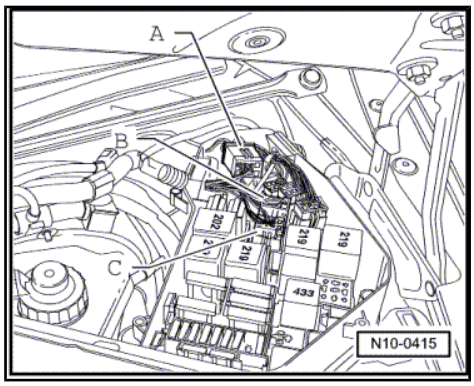

– Disconnect starter wire -1- and and lay it on engine.

– Disconnect connector from air mass meter on left and remove intake hose and air filter housing on left.

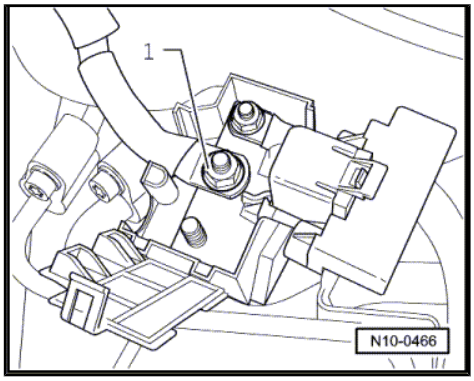

– Separate connectors -1- to -4- for Lambda probes and lay connectors on engine.

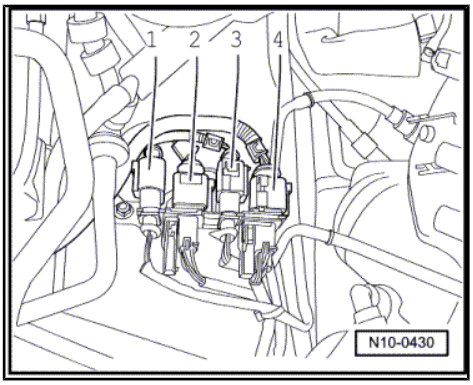

Note

Connector for cylinder bank 1 = black, connector for cylinder bank 2 = brown

– Remove intake hose on right leading to throttle valve module.

– Pull intake hose leading to secondary air pump motor -V101- off upper part of air filter and remove upper part of air filter.

– Remove air filter element.

– Then pull connecting line -arrow- to air suspension compressor off right air filter housing downwards ⇒ page 135 .

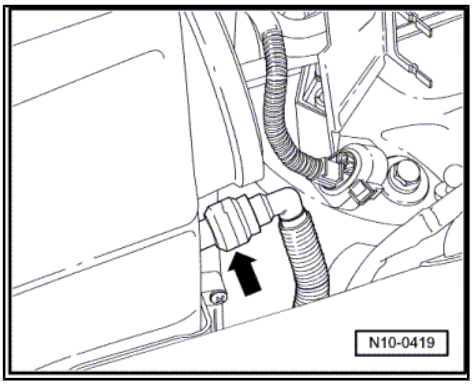

– Unclip gearbox breather hose from air filter housing.

– Remove bracket for engine cover on right ⇒ page 134 .

– Pull lower part of air filter from air duct ⇒ Item 10 (page 134) on right and remove it.

– Extract refrigerant from air conditioning system: ⇒ Heating, air conditioning; Rep. gr. 87

– Remove insulation tray: ⇒ General body repairs, exterior; Rep. gr. 50 ; Body - front; Assembly overview - noise insulation

– Loosen double clamp between catalytic converter and centre silencer and slide clamp forward.

– Support exhaust system between rear silencer and centre silencer using engine and gearbox jack -V.A.G 1383 A- , unscrew mountings and lower exhaust system.

– Remove rear propshaft tube ⇒ Transfer box and final drive; Rep. gr. 39 ; Removing and installing propshaft .

– Remove front wheels.

– Remove front wheel housing liners ⇒ General body repairs, exterior; Rep. gr. 66 ; Exterior equipment; Removing and installing wheel housing liner; Front wheel housing liner

– Disconnect hose connection to vacuum reservoir in front left wheel housing.

– Remove heat shield -A- from steering box and separate universal joint -B-. ⇒ Running gear, axles, steering; Rep. gr. 48 ; Repairing steering, power-assisted steering

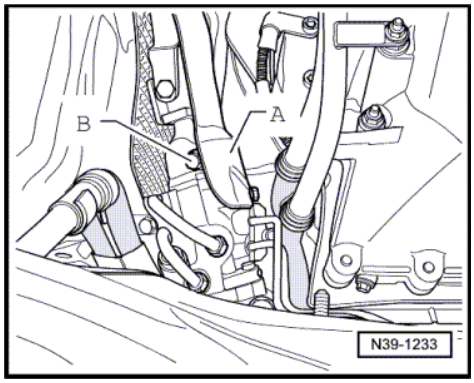

– Separate connectors -A- on gearbox as well as transfer box -B- and separate selector lever cable ⇒ Automatic gearbox; Rep. gr. 37 ; Controls, housing .

– Separate brake lines at brake hoses in wheel housings and collect brake fluid which runs out. ⇒ Brake system; Rep. gr. 46 ; Repairing front wheel brake

– Separate all connectors between body and front axle in wheel housings.

– Unbolt connecting lines of air suspension at suspension strut.

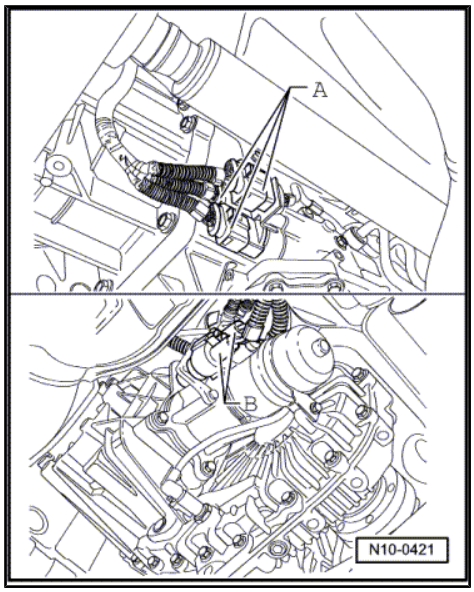

– Remove gearbox transverse support -A-.

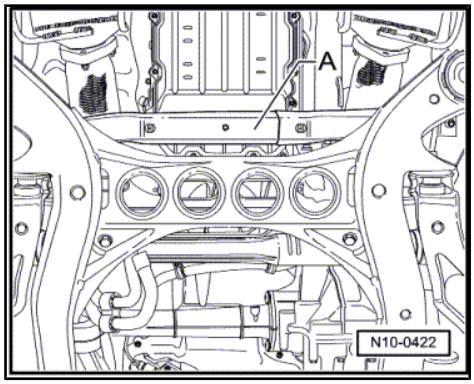

> ⚠ **WARNING**
>
> ***Steam may escape when expansion tank is opened. Wear eye protection and protective clothing to avoid eye injuries and scalding. Cover cap with cloth and open carefully.***

– Open and close expansion tank cap to release pressure in cooling system.

– Drain coolant ⇒ page 86 .

– Disconnect hose connection to heat exchanger working from left wheel housing side and collect escaping coolant.

– Disconnect upper coolant hose from radiator and lower coolant hose from coolant pipe.

– Disconnect lines on lower right of radiator -arrow- for gearbox oil. Collect escaping oil.

– Now disconnect line from power steering oil cooler on bottom left. Collect escaping oil.

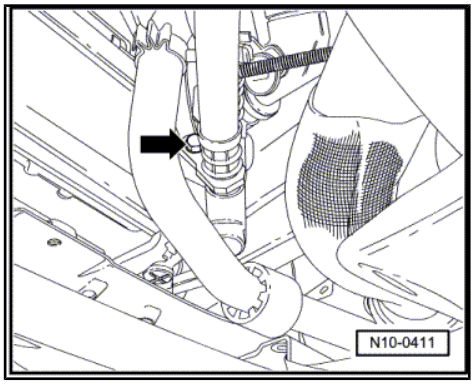

– Unscrew earth cable -1- from longitudinal member on front right.

– Disconnect coolant hose -3- and unscrew coolant pump with bracket -2-.

– Now unscrew one of the rear securing bolts -3-.

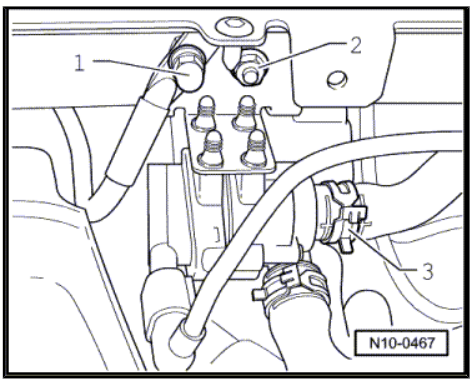

– Secure subframe to body ⇒ Running gear, axles, steering; Rep. gr. 40 ; I - Assembly overview - subframe, lower suspension links, anti-roll bar .

– Then proceed with other securing bolt -3- in the same way.

– On each side of vehicle, remove the two hard-to-access suspension strut bolts working from plenum chamber side ⇒ Running gear, axles, steering; Rep. gr. 40 ; Front suspension .

Preparing scissor-type assembly platform -VAS 6131- for further procedure:

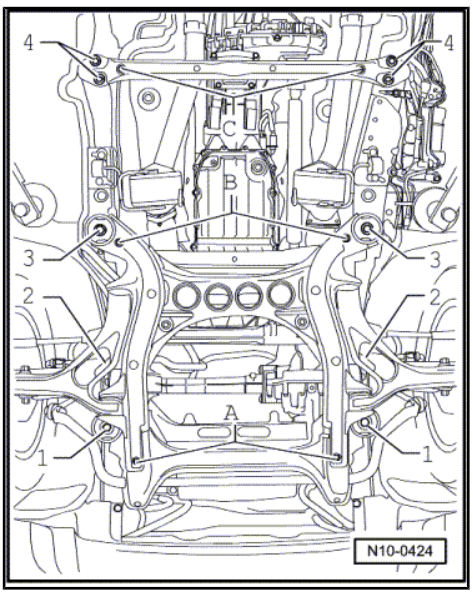

– Install front supports -VAS 6131/6-1- left -1-, as well as -VAS 6131/6-2- right -2- on the assembly platform. Arrows on the supports point forwards. Secure the bolts in the following positions: left support -1-: A5, B4 and B5. Right support -2-: G4, H4 and H5

– Bolt both suspension supports -3- -VAS 6131/6-3- and 6131/6-4 to the assembly platform in the following positions: left suspension support -3-: A6 and C6. Right running gear support -3-: F6 and H6

– Screw the suspension support turntables down.

– Place supports -4- (VAS 6131/6-5) for subframe and -5- (VAS 6131/6-6) for gearbox console in appropriate positions on assembly platform.

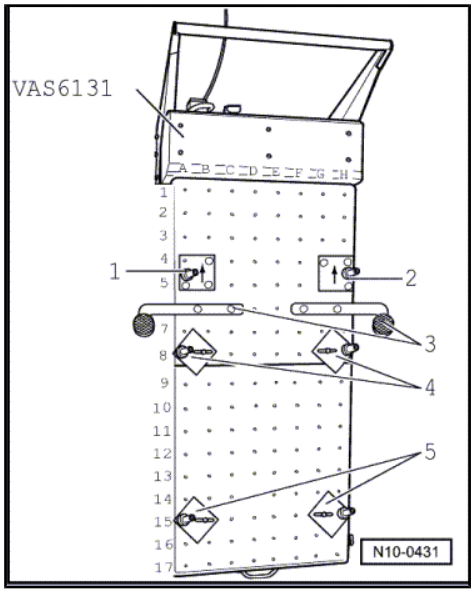

– Position assembly platform horizontal under engine/gearbox assembly. Supports -1- must be guided into corresponding receptacles on left and right -arrow-.

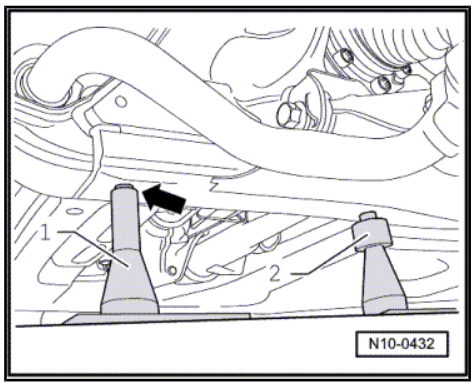

– At the same time, guide right and left mountings for gearbox bracket into corresponding holes -arrow-. When all four supports are in the receptacle holes without pressure:

– Screw the two rotating plates of running gear supports under the suspension links applying a small amount of pre-tension.

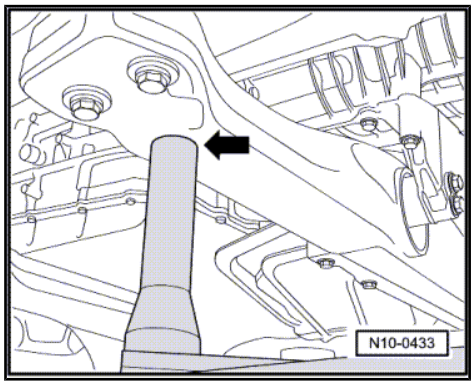

– Guide supports -2- into their respective receptacles in subframe, correcting support height as necessary with knurled nuts.

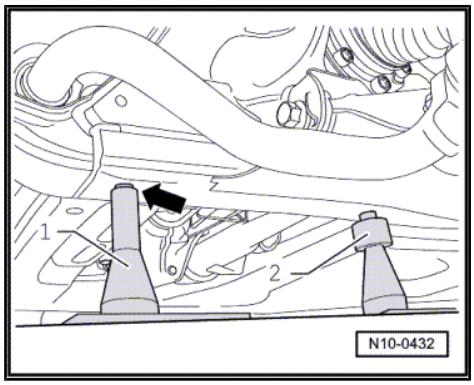

– Loosen subframe bolts -1- and -2- as well as gearbox transverse support -4-.
– Unscrew the third bolt of each suspension strut using stepladder -VAS 5085- .
– Now slowly lower engine/gearbox assembly, constantly observing the clearance.

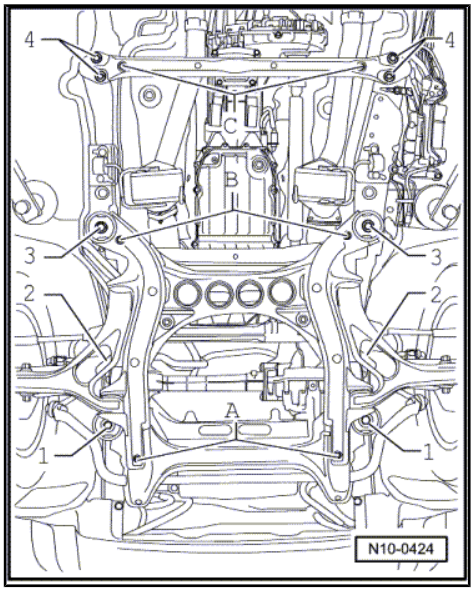

Procedure

– Support gearbox on assembly platform using -VAS 6131/7-6- .
– Unscrew one of the lower gearbox securing bolts.
– Insert angled guide pin of -VAS 6131/8- into threaded hole from engine side.
– Bolt supports stress free to assembly platform.
– Now remove all gearbox securing bolts.

Note

Separating engine and gearbox: ⇒ Operating instructions for scissor-type assembly platform VAS 6131 .

1.1.1 Securing engine on engine and gearbox support -VAS 6095-

Special tools and workshop equipment required

♦ Shackle -10 - 222 A /12-

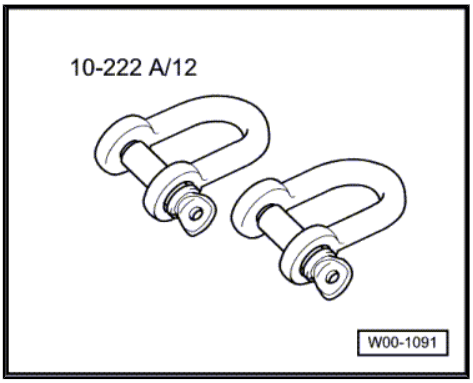

Secure engine to engine and gearbox support -VAS 6095- to carry out repairs.

Note

To prevent damage to engine when lifting down, additionally use shackles -10 - 222 A /12- .

Vehicles with automatic gearbox

– Secure torque converter against „falling out“ after separating engine from gearbox.

Continuation for all vehicles

– Bolt shackles -10 - 222 A /12- to each lifting eye of engine.

– Attach lifting tackle -3033- as shown in illustration and lift engine from scissor-type assembly platform using workshop crane -VAS 6100- .

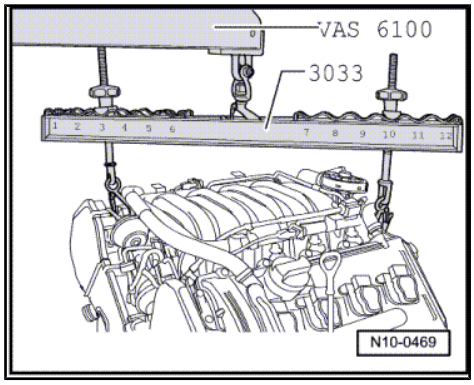

– Lift engine using workshop crane -VAS 6100- until the centre of the flywheel is at the same height as the assembly plate of the engine and gearbox support -VAS 6095- . Then bolt support to cylinder block as shown in the illustration using universal fastening elements.

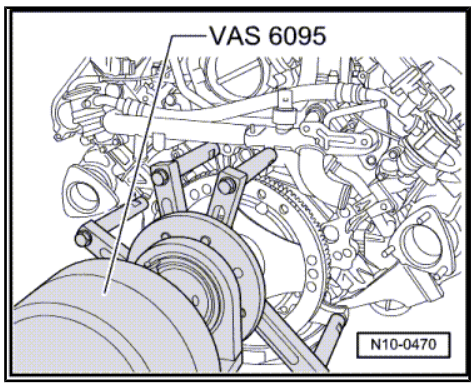

1.1.2 Notes on installing

Note

When fitting engine and gearbox to body, it is essential to position engine carrier against body with the aid of scissor-type assembly platform -VAS 6131- . »Pulling up« engine carrier with securing bolts will damage threads.

Procedure

Install in reverse order. In the process, note the following:

When the engine has been separated from the gearbox:

– Check whether dowel sleeves for centring engine/gearbox are in cylinder block and install if necessary ⇒ 5-speed automatic gearbox 09D, four-wheel drive; Rep. gr. 37 ; Removing and installing gearbox .

If subframe with engine carrier has been removed from assembly platform:

– Reposition subframe with engine carrier onto prepared assembly platform.

– Set engine on subframe.

If gearbox is not yet bolted on:

– Support engine from below using support -VAS 6131/8- .

– Before installing assembly, install exhaust manifold with catalytic converters to engine.

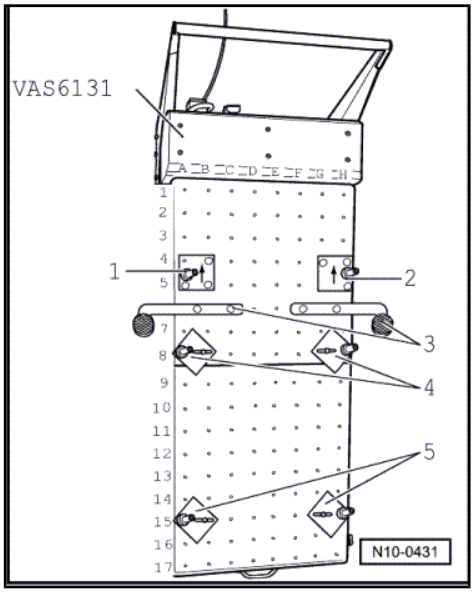

Caution

When doing any repair work, especially in the engine compartment, pay attention to the following due to the cramped conditions:

- *Route all the various lines (e.g. for fuel, hydraulics, activated charcoal filter system, coolant, refrigerant, brake fluid and vacuum) and electrical wiring in their original positions.*
- *To avoid damage to lines, ensure sufficient clearance to all moving or hot components.*

Vehicles with automatic gearbox

– When installing engine, first raise scissor-type assembly platform only sufficiently to clip selector lever cable in position.

– Reconnect all electrical connections, lines, hoses and connectors which were separated during removal.

– Top up ATF level ⇒ 5-speed automatic gearbox 09D, four-wheel drive; Rep. gr. 37 ; Checking ATF level and topping-up .

– Reconnect air conditioning lines: ⇒ Heating, air conditioning system; Rep. gr. 87 ; Repairing components of refrigerant circuit .

– Recharge air conditioning system with refrigerant: ⇒ Heating, air conditioning system; Rep. gr. 87 ; Repairing components of refrigerant circuit .

– Replenish oil in power-assisted steering: ⇒ Running gear, axles, steering, front and four-wheel drive; Rep. gr. 48 ; Checking power-assisted steering system oil level .

– Replenish coolant ⇒ page 86 .

– Replenish engine oil if necessary.

– Connect battery.

Note

Perform wheel alignment after the installation of subframe ⇒ Running gear, axles, steering, front and four-wheel drive; Rep. gr. 44 ; Wheel alignment .

– Connect Vehicle diagnosis, testing and information system -VAS 5052- .

– Carry out vehicle system test ⇒ Vehicle diagnostic tester „Guided fault finding“.

– Finish the vehicle system test so that any fault entries stored during assembly can be deleted automatically.

– Generate the readiness code in combination with a road test.

Observe applicable safety precautions during road test.

– Carry out road test.

– Then carry out vehicle system test again and rectify any faults which may have occurred.

Specified torques

Threaded connection		Specified torque
Bolts, nuts	M6	10 Nm
	M7	15 Nm
	M8	25 Nm
	M10	40 Nm
	M12	60 Nm
Deviations		
Engine bracket to engine mounting (nut)	M10	75 Nm
Engine mounting to engine carrier (bolt)	M10	60 Nm
Engine carrier to body (bolt)	M12	100 Nm + $^{1}/_{2}$ turn (180°).
Drive shafts to gearbox		⇒ Running gear, axles, steering - front and four-wheel drive; Rep. gr. 40 ; Repairing drive shaft
Gearbox carrier to body		⇒ Differential and final drive; Rep. gr. 34 ; Installing gearbox carrier and console .
Drive shafts to gearbox		⇒ Running gear, axles, steering; Rep. gr. 40 ; Front wheel suspension

13 – Crankshaft group

1 Dismantling and assembling engine

Assembly overview

Part I: toothed belt drive ⇒ page 15

Part II: cylinder block ⇒ page 17

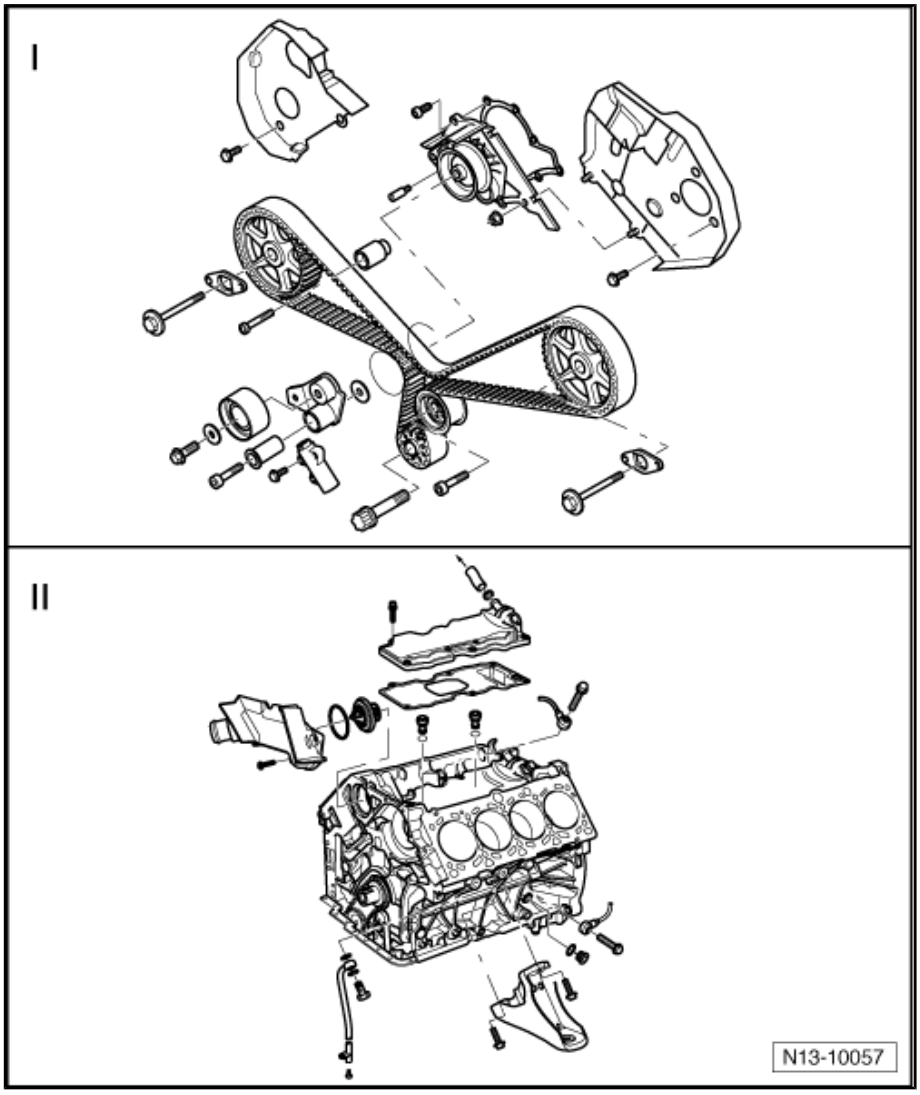

Caution

Warning, aluminium cylinder block! The crankshaft and pistons must not be removed. Just loosening the main bearing caps will cause deformation of the cylinder block bearing pedestals. This deformation will cause a reduction of the bearing clearance. Even if the bearing shells are not renewed bearing damage could occur due to a different bearing clearance. If the bearing cap bolts are loosened, the cylinder block must be replaced complete with the crankshaft and pistons. Measuring the main bearing clearance is not possible with normal workshop equipment.

Note

- *Secure engine to engine and gearbox support -VAS 6095- to carry out repairs.*
- *Engine must not be set down on oil sump, as this will damage the liquid gasket between the upper and lower sump.*
- *Finding metal shavings or a large quantity of small metal particles during engine repair could indicate that the crankshaft bearings or conrod bearings are damaged. To prevent this from causing further damage, perform the following repairs:*
- *Thoroughly clean oil passages,*
- *Renew oil return valve,*
- *Renew oil spray jets,*
- *Renew oil cooler,*
- *Renew oil filter.*

1.1 Assembly overview - part I, toothed belt drive

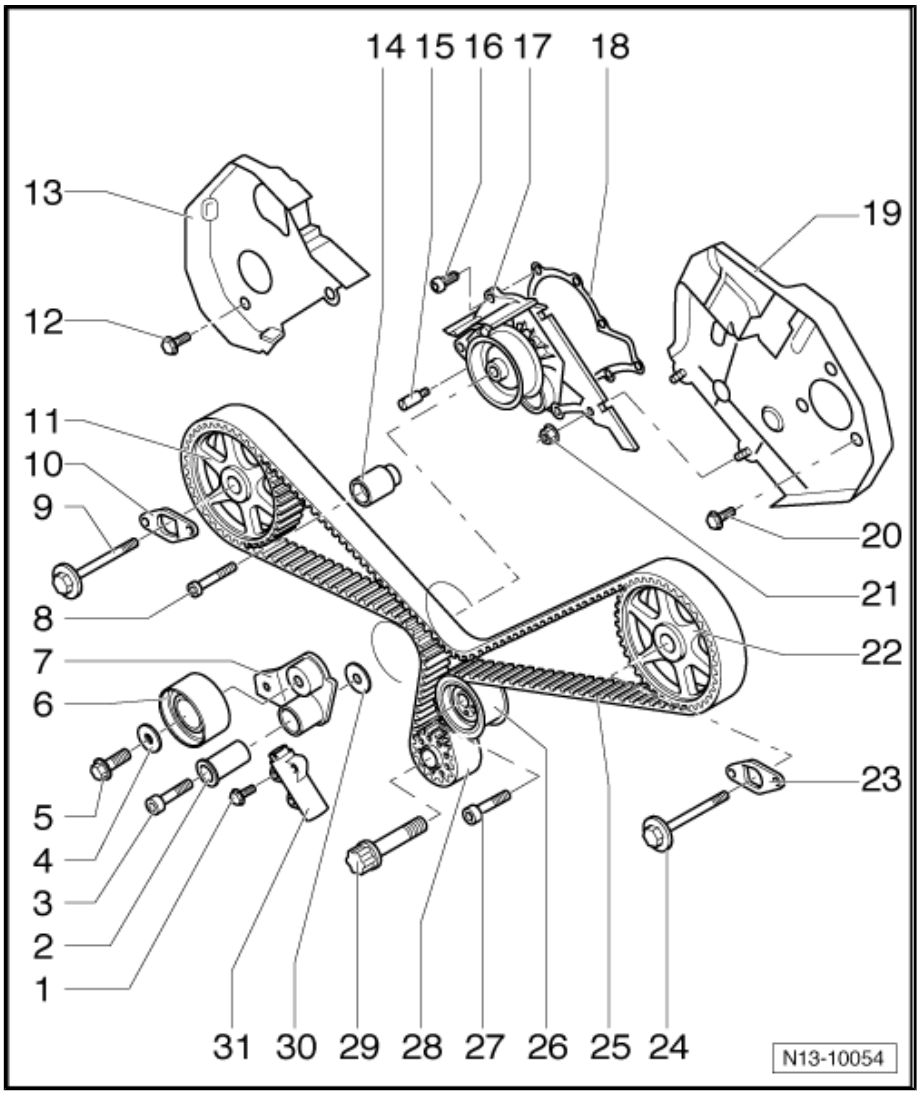

Volkswagen Technical Site: http://vwts.ru http://vwts.info

1 - 10 Nm

2 - Bearing sleeve

3 - 20 Nm + 1/4 turn (90°) further

- ❑ Renew.

4 - Washer

- ❑ For tensioning roller.

5 - 40 Nm

6 - Tensioning roller

7 - Tensioning lever

8 - 22 Nm

9 - 55 Nm

- ❑ Renew.
- ❑ Oil threads and bolt head contact surface.

10 - Securing plate

- ❑ Renew.
- ❑ Observe installation position: side with lettering faces to rear.

11 - Right camshaft pulley

- ❑ Pull off camshaft with two arm puller -T40001- and claw -T40001/2- .
- ❑ Removing and installing ⇒ page 34 Removing, installing and tensioning toothed belt.

12 - 10 Nm

- ❑ Insert with locking fluid -D 000 600 A2- .

13 - Toothed belt guard, rear right

14 - Idler roller

15 - Pin, 6 Nm

16 - 15 Nm

17 - Coolant pump

- ❑ Removing and installing ⇒ page 89

18 - Gasket

- ❑ Renew.

19 - Toothed belt guard, rear left

20 - 10 Nm

- ❑ Insert with locking fluid -D 000 600 A2- .

21 - 10 Nm

22 - Left camshaft pulley

- ❑ Pull off camshaft with two arm puller -T40001- and claw -T40001/2- .

- ❑ Removing and installing ⇒ page 34 Removing, installing and tensioning toothed belt.

23 - Securing plate

- ❑ Renew.
- ❑ Observe installation position: side with lettering faces to rear.

24 - 55 Nm

- ❑ Renew.
- ❑ Oil threads and bolt head contact surface.

25 - Toothed belt

- ❑ Mark direction of rotation before removing.
- ❑ Check for wear.
- ❑ Do not kink.
- ❑ Removing, installing and tensioning ⇒ page 34 .

26 - Eccentric roller

27 - 45 Nm

28 - Crankshaft toothed belt pulley

- ❑ Fitting possible in one position only.
- ❑ For removal lock crankshaft using locking pin -3242- ⇒ page 22 ; Removing and installing drive plate.

29 - 200 Nm + $^{1}/_{2}$ turn (180°) further

- ❑ Renew.
- ❑ Do not oil.
- ❑ Turning further can be done in several stages.

30 - Washer

- ❑ For tensioning lever

31 - Tensioning element

1.2 Assembly overview - part II, cylinder block

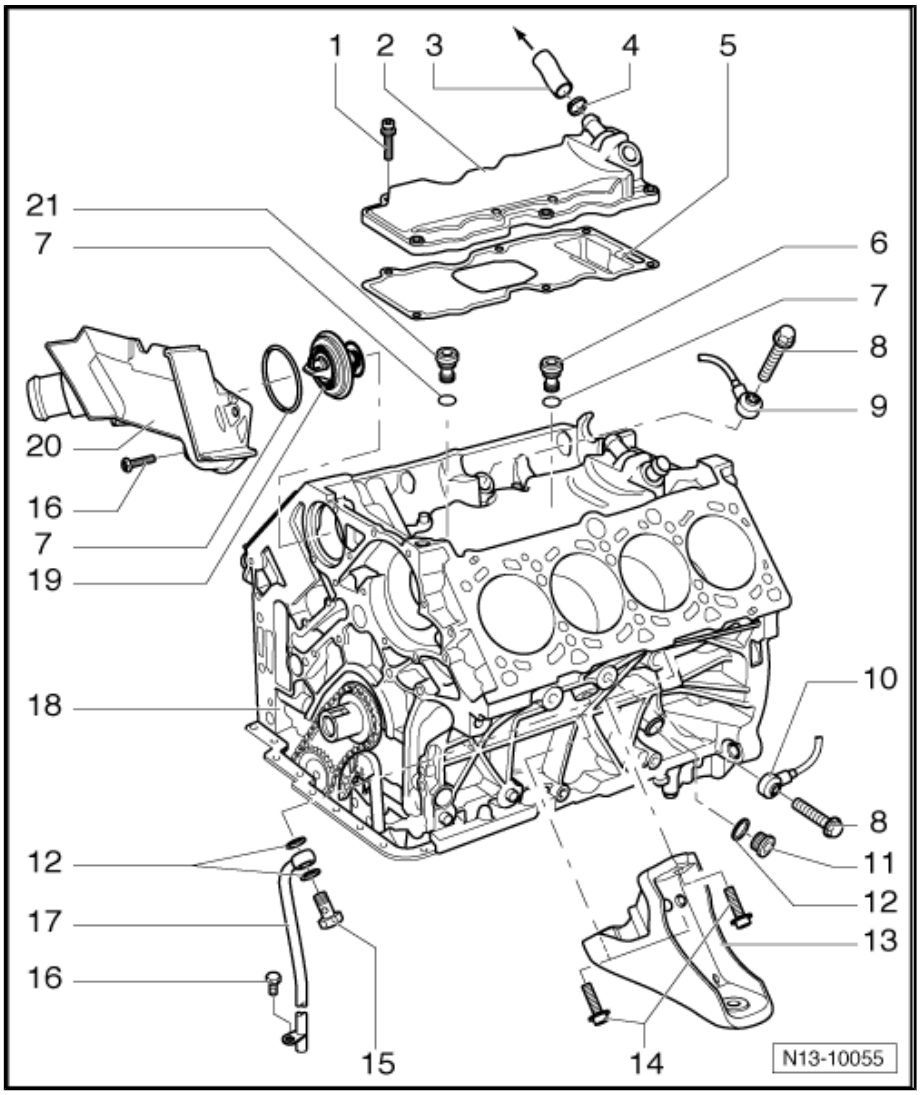

1 - 10 Nm

2 - Cover

- ❑ With connection for crankcase breather

3 - Connecting hose

- ❑ For crankcase ventilation.

4 - Clip

5 - Baffle plate

- ❑ With seal.
- ❑ Renew.

6 - Oil return supply valve

- ❑ For cylinder head, right

7 - O-ring

- ❑ Renew.

8 - 20 Nm

- ❑ The specified torque influences the function of the knock sensor.

9 - Knock sensor 1 (G61)

10 - Knock sensor 2 (G66)

11 - Plug, 35 Nm

12 - Seal

- ❑ Renew.

13 - Engine bracket

- ❑ Engine bracket and specified torques ⇒ page 18

14 - 40 Nm + 1/4 turn (90°) further

- ❑ Renew.

15 - Banjo bolt, 30 Nm

16 - 10 Nm

17 - Coolant drain pipe

18 - Cylinder block

19 - Thermostat

- ❑ Removing and installing ⇒ page 89

20 - Thermostat housing

21 - Oil return supply valve

- ❑ For cylinder head, left

Specified torque for engine bracket

Specified torque for securing bolt -1-: 60 Nm.

Specified torque for securing nut -2-: 75 Nm.

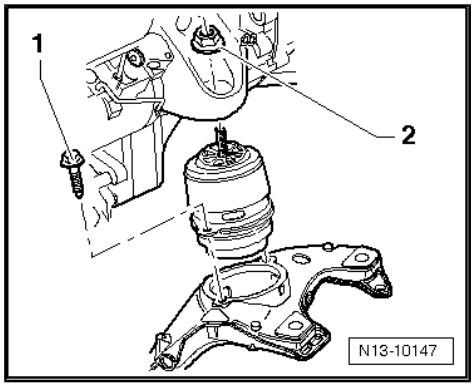

1.3 Removing and installing poly V-belt

Special tools and workshop equipment required

- Locking pin -T10060 A-

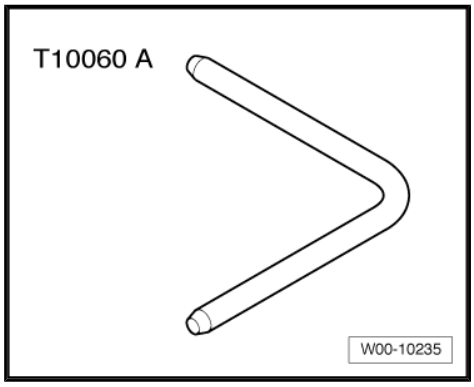

Removing poly V-belt

– Remove noise insulation tray.

– Mark direction of rotation of poly V-belt.

– Turn spanner clockwise until tensioning element can be locked using locking pin -T10060 A- .

– Remove poly V-belt.

Installing poly V-belt

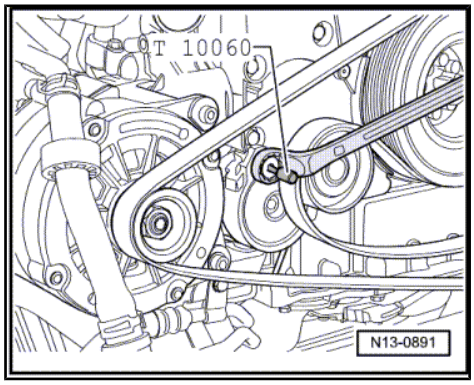

Note

- *Before installing poly V-belt, ensure that all ancillary assemblies (alternator, air conditioner compressor, vane pump) are secured tightly.*
- *Check that idler roller turns easily.*
- *When installing poly V-belt, check direction of belt rotation and proper seating of belt in pulleys.*

– Fit poly V-belt as illustrated.

After completing repairs always:

– Start engine and check that belt runs properly.

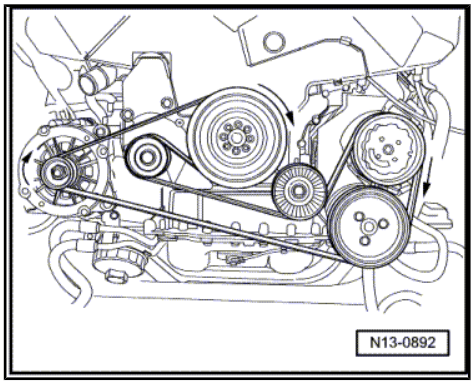

1.4 Checking alignment of poly V-belt

Note

Alignment of poly V-belt must always be checked to prevent damage if power-assisted steering vane pump, air conditioning system compressor or the respective brackets for power-assisted steering or air conditioning system compressor have been renewed.

Special tools and workshop equipment required

♦ Aligning gauge -3201-

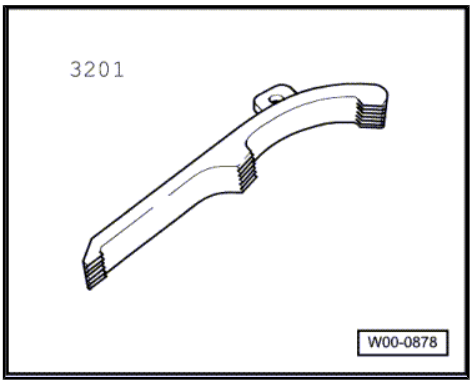

♦ Torque wrench (5…50 Nm) -V.A.G 1331-

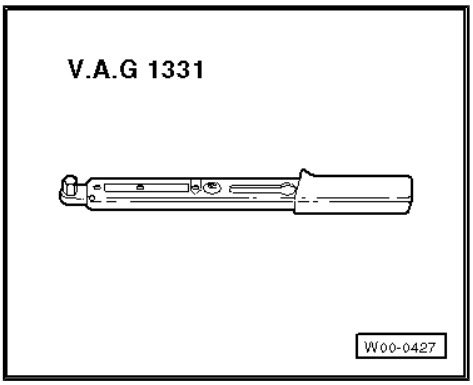

Procedure

– Remove power-assisted steering vane pump pulley.

– Remove poly V-belt ⇒ page 18 .

– Remove idler roller -1-.
– Position aligning gauge -3201- on air conditioning system compressor belt pulley.

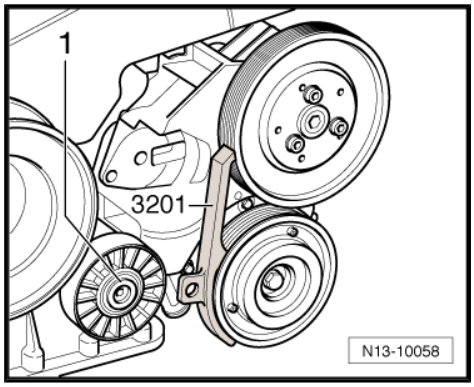

Note

The air conditioning system compressor pulley must align with the power-assisted steering vane pump pulley.

If belt pulleys do not align

– Compensate misalignment of pulleys using shims with thicknesses of 0.6, 0.8, 1.0, 1.2, and 1.4 mm.
– Check alignment of belt pulleys again with aligning gauge -3201-
– Install idler roller. Specified torque: 25 Nm
– Install poly V-belt ⇒ page 18 .
– Tighten power-assisted steering belt pulley securing bolts to 22 Nm.

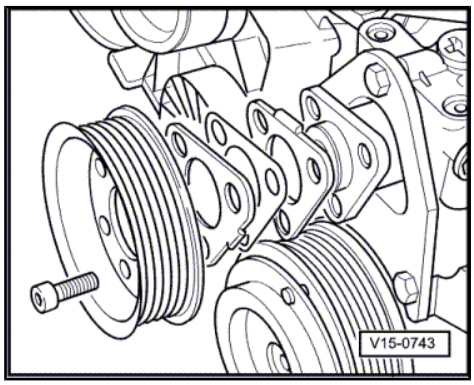

2 Removing and installing sealing flange and drive plate

Note

Secure engine to engine and gearbox support -VAS 6095- to carry out repairs.

Assembly overview ⇒ page 21 .

Removing and installing drive plate ⇒ page 22 .

Removing and installing sealing flange at drive plate end ⇒ page 24

Renewing crankshaft oil seal, vibration damper end ⇒ page 26

2.1 Assembly overview

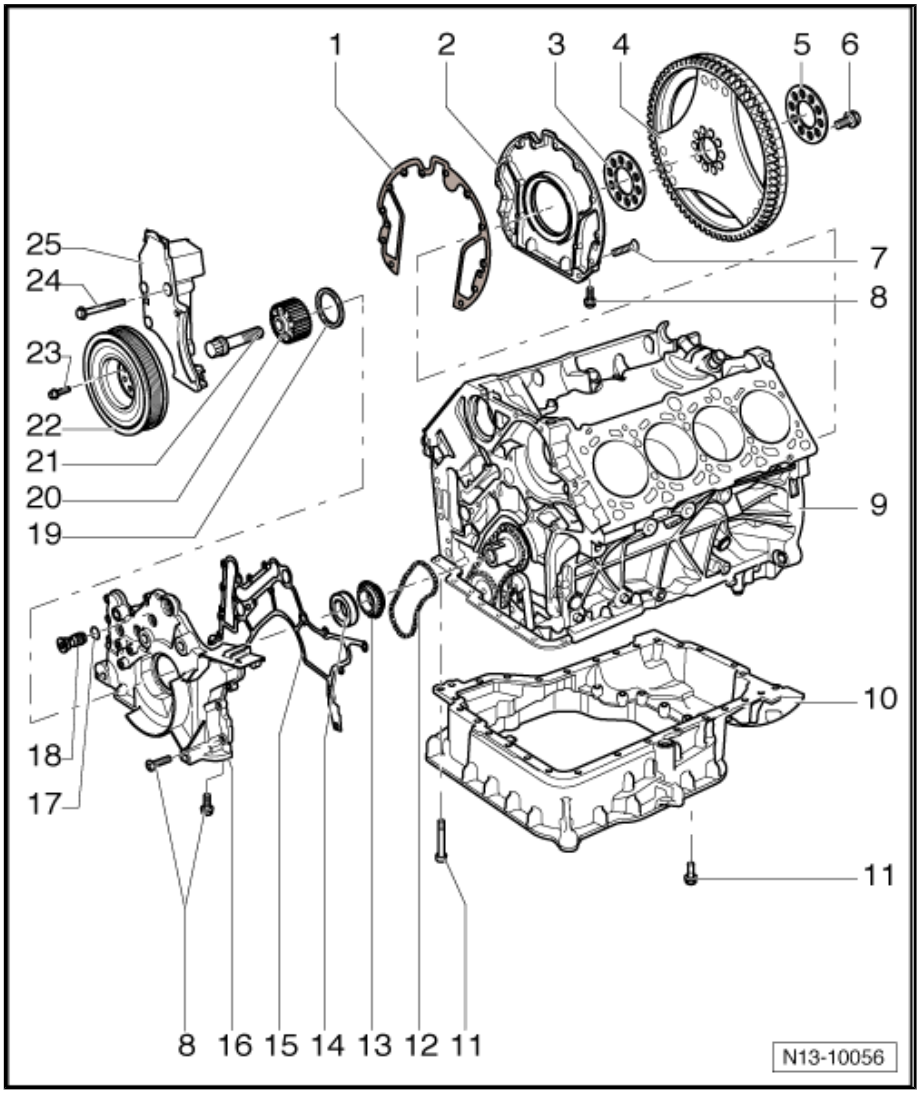

1 - Gasket

- ❑ Renew.

2 - Sealing flange

- ❑ With seal.
- ❑ Remove sump in order to remove and install ⇒ page 70 .
- ❑ Must seat on dowel sleeves.
- ❑ Before installing, remove oil residue from crankshaft journal using a clean cloth.
- ❑ Do not additionally oil or grease the oil seal sealing lip.
- ❑ Use support sleeve supplied when installing.
- ❑ Only remove supporting sleeve after sealing flange has been slid onto crankshaft journal.
- ❑ If the sealing flange has not been renewed use fitting tool -T10122- for installing ⇒ page 26 , Removing and installing sealing flange at drive plate end.
- ❑ Removing and installing ⇒ page 24 .

3 - Shim

- ❑ 2 mm thick

4 - Drive plate

- ❑ Use locking pin -3242- to loosen and tighten ⇒ page 22 ; Removing and installing drive plate.

5 - Washer

- ❑ 3.4 mm thick

6 - 30 Nm + 1/4 turn (90°) further

- ❑ Renew.

7 - 10 Nm

8 - 15 Nm

9 - Cylinder block

10 - Oil sump

- ❑ Removing and installing ⇒ page 70

11 - Securing bolt

- ❑ M7 = 15 Nm
- ❑ M8 = 22 Nm

12 - Timing chain

- ❑ Mark with arrow pointing in direction of rotation before removing (e.g. using paint).
- ❑ Do not mark with a centre punch mark, notch or anything similar!

13 - Chain sprocket

- ❑ For crankshaft.

14 - Thrust washer

- ❑ In case of signs of abnormal wear remove and reverse or renew.

15 - Gasket

- ❑ Renew.

16 - Sealing flange at belt pulley end

- ❑ Remove sump in order to remove and install ⇒ page 70 .
- ❑ Must seat on dowel sleeves.
- ❑ Before installing, remove oil residue from crankshaft journal using a clean cloth.

17 - O-ring

- ❑ Renew.

18 - Spray nozzle valve, 35 Nm

19 - Seal

- ❑ Renew. ⇒ page 26 .

20 - Crankshaft toothed belt pulley

- ❑ Fitting possible in one position only.
- ❑ For removal lock crankshaft using locking pin -3242- ⇒ page 22 ; Removing and installing drive plate.

21 - 200 Nm + 1/2 turn (180°) further

- ❑ Renew.
- ❑ Do not oil.
- ❑ Turning further can be done in several stages.

22 - Vibration damper/belt pulley

- ❑ For poly V-belt.
- ❑ For removal lock crankshaft using locking pin -3242- ⇒ page 22 ; Removing and installing drive plate.

23 - 22 Nm

24 - 25 Nm

25 - Cover

2.2 Removing and installing drive plate

Special tools and workshop equipment required

♦ Locking pin -3242-

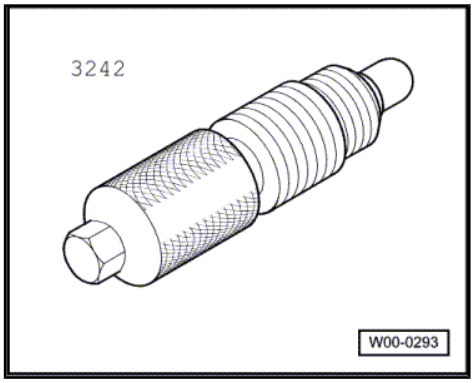

♦ Torque wrench (5…50 Nm) -V.A.G 1331-

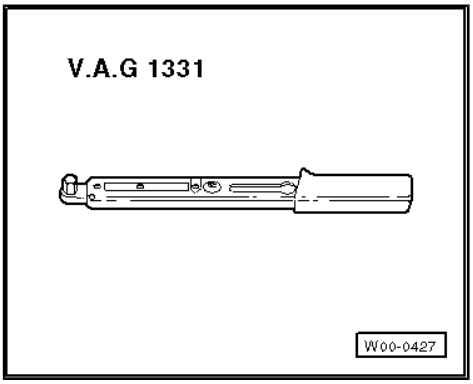

Removing

– Remove engine ⇒ page 3 .
– Separate engine from gearbox.
– Set engine to TDC. For this, notches -A- and -B- must align.

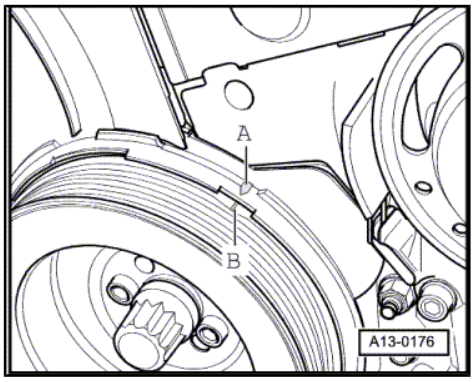

Note

♦ *The engine is cranked by turning crankshaft centre bolt.*
♦ *The engine must only be cranked in clockwise direction.*

– Remove screw plug -arrow-.

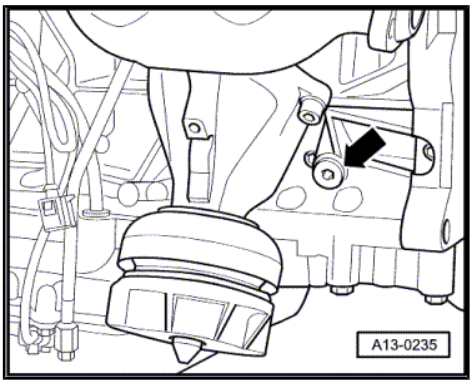

Note

There is a TDC drilling in the crankshaft directly behind the plug (it is possible to feel the hole).

– Screw locking pin -3242- into crankshaft.
– Loosen drive plate securing bolts diagonally and remove.
– Remove drive plate together with washer and shim.

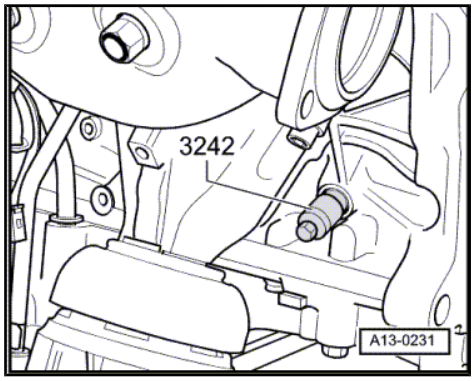

Installing

Installation is carried out in the reverse order. When installing, note the following:

– Fit shim -1- of „2.0 mm thickness“ onto crankshaft journal.
– Then, install drive plate and washer -2- of „3.4 mm thickness“.
– Insert new securing bolts and tighten by hand.
– Tighten securing bolt to 30 Nm + $^{1}/_{4}$ turn (The additional turn may be performed in several steps.)
– Unscrew locking pin -3242- .
– Install sealing plug with a new seal. Specified torque: 35 Nm

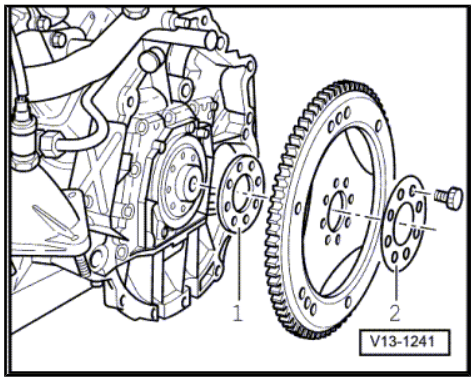

2.3 Removing and installing sealing flange at drive plate end

Removing ⇒ page 25 .

Installing ⇒ page 25 .

Special tools and workshop equipment required

♦ Fitting tool -T10122-

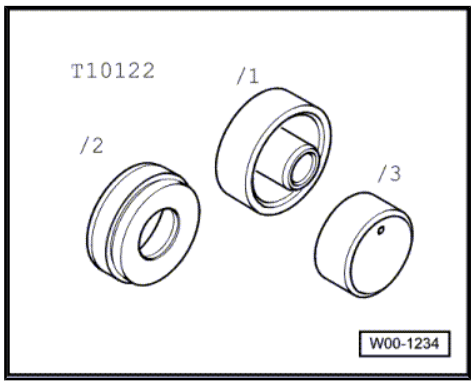

♦ Torque wrench (5…50 Nm) -V.A.G 1331-

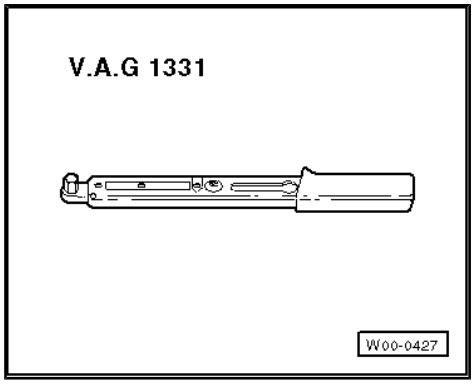

2.3.1 Removing

– Remove engine ⇒ page 3 .
– Separate engine from gearbox.
– Remove drive plate ⇒ page 22 .
– Remove sump ⇒ page 70 .
– Remove sealing flange -arrow- from cylinder block.
– Remove existing gasket.

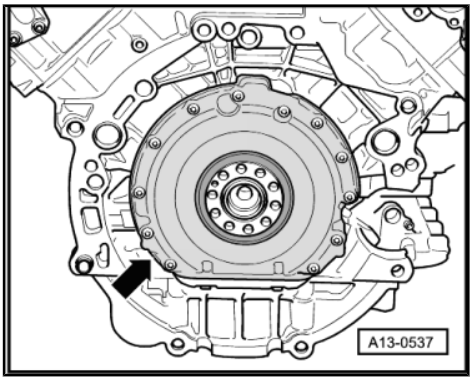

2.3.2 Installing

Note

♦ *In the following work procedure the seal is illustrated without sealing flange.*

♦ *If repair is required, sealing flange and seal must be renewed completely. Use protective sleeve supplied when installing.*

– Clean sealing surfaces on sealing flange and cylinder block. They must be free of oil and grease.
– Remove oil residue from crankshaft journal using clean cloth.
– Fit new gasket -1- onto dowel sleeves on cylinder block.

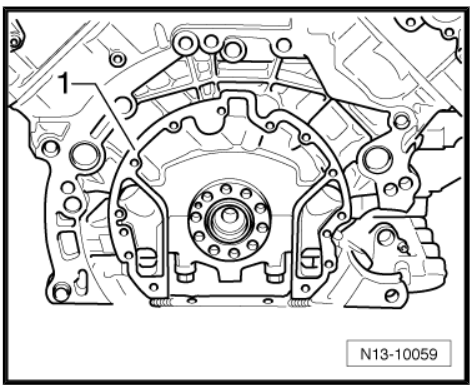

– Pull oil seal with sealing flange -A- by the outside over sleeve -T10122/1- onto pulling sleeve -T10122/2- .
– Separate the two fitting sleeves.
– Then set pulling sleeve -T10122/2- with dry seal and sealing flange onto crankshaft journal.
– Bolt sealing flange to cylinder block. Specified torque: 10 Nm
– Install sump ⇒ page 70 .
– Install drive plate ⇒ page 22 .
– Install engine ⇒ page 3 .

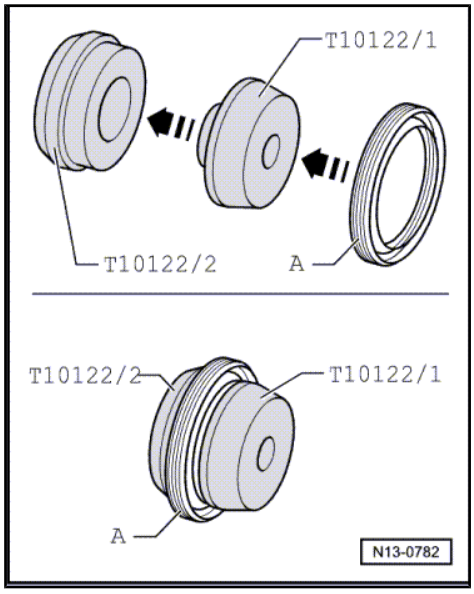

2.4 Renewing crankshaft oil seal, vibration damper end

Special tools and workshop equipment required

♦ Thrust piece -T40007-

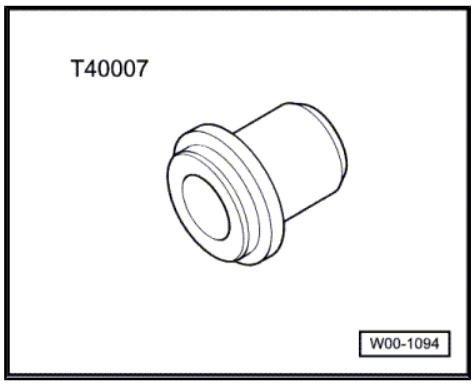

♦ Torque wrench (150…800 Nm) -V.A.G 1601-

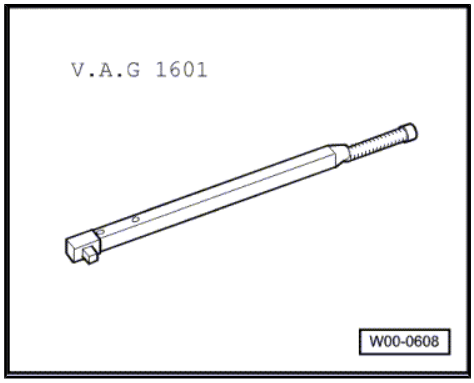

Removing

– Remove noise insulation tray.
– Remove toothed belt ⇒ page 34 .
– Unscrew centre bolt -2- from crankshaft toothed belt pulley -1- and remove crankshaft toothed belt pulley from crankshaft journal.
– Then remove seal using extractor hook -T20143/1- .

– Remove thrust washer from crankshaft journal and mark thrust washer front face -arrow- using a waterproof felt-tip marker.

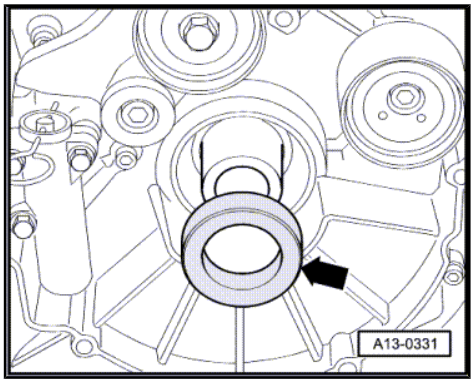

Installing

– Remove oil residue from crankshaft journal and thrust washer using a clean cloth.

– Press new seal in to stop using thrust piece -T40007- .

– Reverse thrust washer and fit it on crankshaft journal with marked front face towards engine.

– Install crankshaft toothed belt pulley using a new centre bolt. Specified torque: 200 Nm + $^{1}/_{2}$ turn (180°) further.

– Install toothed belt. ⇒ page 34

– Install poly V-belt ⇒ page 18 .

– Install noise insulation tray.

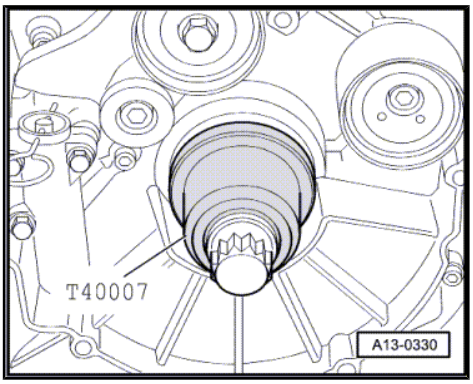

15 – Cylinder head, valve gear

1 Cylinder head

Assembly overview ⇒ page 29 .

Removing and installing right cylinder head cover ⇒ page 30 .

Removing and installing left cylinder head cover ⇒ page 32 .

Removing, installing and tensioning toothed belt ⇒ page 34 .

Removing and installing left cylinder head ⇒ page 40 .

Removing and installing right cylinder head ⇒ page 44 .

Checking compression ⇒ page 48 .

Note

- *To remove cylinder head, engine must first be removed ⇒ page 3 .*
- *If an exchange cylinder head is installed, all the contact surfaces between the support elements, roller rocker fingers and the running surfaces of the cam shafts must be oiled before the cylinder head cover is installed.*
- *The plastic protectors fitted to protect the open valves must be removed only immediately before the cylinder head is fitted.*
- *When cylinder head or cylinder head gasket is renewed, the complete coolant must be renewed.*
- *Removing and installing intake manifold ⇒ page 132 ; Removing and installing cylinder head cover.*
- *Checking compression ⇒ page 48 .*

1.1 Assembly overview

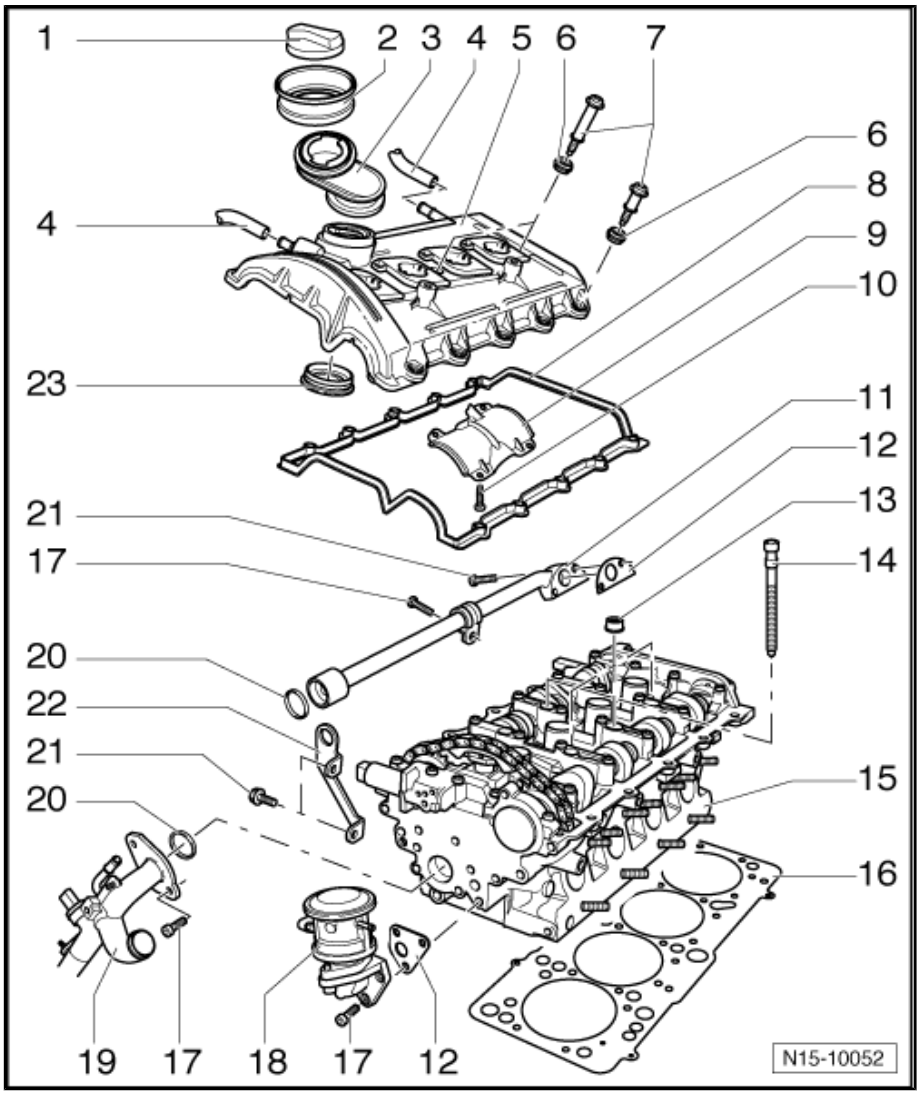

1 - Cap
- ❑ Renew seal if damaged.

2 - Boot
- ❑ Renew if damaged.

3 - Oil filler neck
- ❑ Renew seal if damaged.

4 - Connecting hose
- ❑ For crankcase ventilation.

5 - Cylinder head cover
- ❑ Removing and installing left cylinder head cover ⇒ page 32 .
- ❑ Removing and installing right cylinder head cover ⇒ page 30 .
- ❑ Renew if damaged.

6 - Gasket
- ❑ Note installation position.
- ❑ Renew if damaged or leaking.

7 - 10 Nm
- ❑ Observe tightening sequence.
- ❑ Removing and installing left cylinder head cover ⇒ page 32 .
- ❑ Removing and installing right cylinder head cover ⇒ page 30 .

8 - Cylinder head cover gasket
- ❑ Ensure proper seating of lugs in cylinder head cover.
- ❑ Renew if damaged or leaking.
- ❑ Note installation position.
- ❑ Removing and installing left cylinder head cover ⇒ page 32 .
- ❑ Removing and installing right cylinder head cover ⇒ page 30 .

9 - Baffle plate

10 - 5 Nm

11 - Coolant pipe

12 - Gasket
- ❑ Renew.

13 - Sealing grommet
- ❑ Insert in cylinder head cover.
- ❑ Renew if damaged or leaking.

14 - Cylinder head bolt
- ❑ Renew.
- ❑ Follow installation instructions and sequence when loosening and tightening.

- ❑ Removing and installing right cylinder head ⇒ page 44 .
- ❑ Removing and installing left cylinder head ⇒ page 40 .

15 - Cylinder head

- ❑ Check for distortion ⇒ page 30 .
- ❑ Removing and installing right cylinder head ⇒ page 44 .
- ❑ Removing and installing left cylinder head ⇒ page 40 .
- ❑ After renewing, renew entire coolant.

16 - Cylinder head gasket

- ❑ Metal gasket.
- ❑ Renew.
- ❑ Must seat on dowel pins.
- ❑ After renewing, renew entire coolant.

17 - 10 Nm

18 - Combination valve

- ❑ For secondary air system

19 - Coolant pipe

20 - O-ring

- ❑ Renew.

21 - 20 Nm

22 - Lifting eye

23 - Seal

- ❑ Renew if damaged or leaking.

Checking cylinder head for distortion

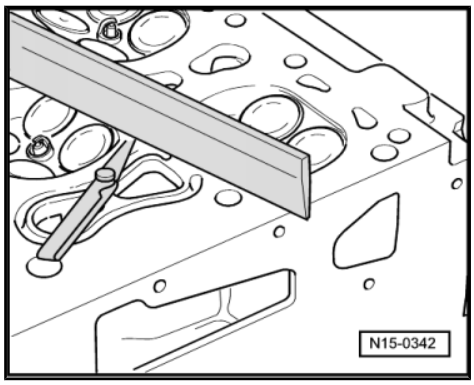

Special tools and workshop equipment required

- ♦ Straight edge
- ♦ Feeler gauges

Max. permissible distortion: 0.1 mm.

1.2 Removing and installing right cylinder head cover

Special tools and workshop equipment required

- Torque wrench (5…50 Nm) -V.A.G 1331-

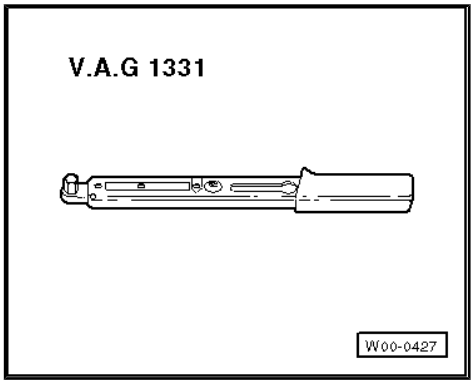

- Not illustrated:
- Cable ties
- Sealant -D 454 300 A2-

Removing

> ⚠ Caution
>
> *When doing any repair work, especially in the engine compartment, pay attention to the following due to the cramped conditions:*
>
> - *Route all the various lines (e.g. for fuel, hydraulics, activated charcoal filter system, coolant, refrigerant, brake fluid and vacuum) and electrical wiring in their original positions.*
> - *To avoid damage to lines, ensure sufficient clearance to all moving or hot components.*

– All cable ties which are opened or cut open when engine is removed must be replaced in the same position when engine is installed.

– Remove intake hose between air filter and throttle valve control module.

– Disconnect connectors -1- from ignition coils.

– Remove ignition coils -2- ⇒ page 158 .

– Detach line -3- for secondary air system from cylinder head cover.

– Disconnect crankcase breather hose.

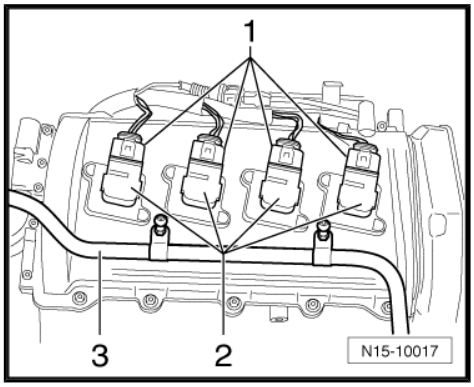

– Loosen securing bolts in the sequence -12- to -1- and remove cylinder head cover.

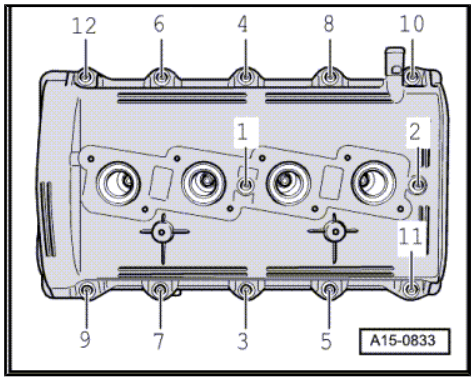

Installing

Installation is carried out in the reverse order. When installing, note the following:

Note

- *Renew gasket if damaged or leaking.*
- *Before installing ensure that all seals between cylinder head cover and cylinder head are installed correctly and not damaged.*

– Lightly coat transitions -arrows- on sealing surface of cylinder head with sealant -D 454 300 A2- .

– Carefully install cylinder head cover.

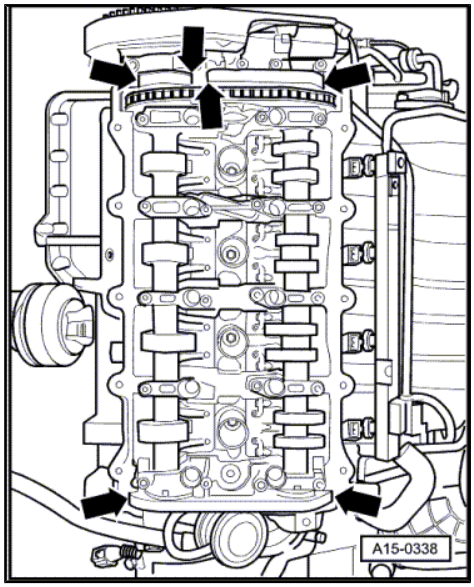

– Tighten securing bolts in the sequence -1- to -12-. Specified torque: 10 Nm

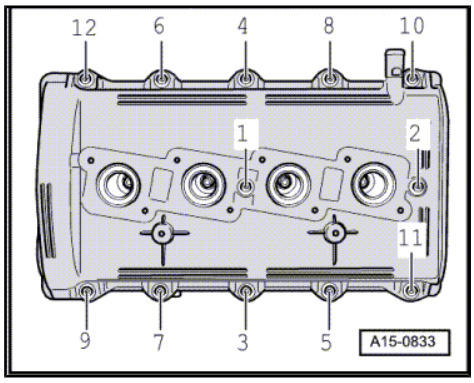

1.3 Removing and installing left cylinder head cover

Special tools and workshop equipment required

- Torque wrench (5…50 Nm) -V.A.G 1331-

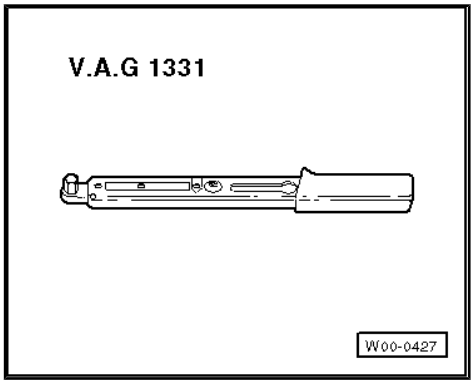

- Not illustrated:
- Cable ties
- Sealant -D 454 300 A2-

Removing

> ⚠ Caution
>
> *When doing any repair work, especially in the engine compartment, pay attention to the following due to the cramped conditions:*
>
> - *Route all the various lines (e.g. for fuel, hydraulics, activated charcoal filter system, coolant, refrigerant, brake fluid and vacuum) and electrical wiring in their original positions.*
> - *To avoid damage to lines, ensure sufficient clearance to all moving or hot components.*

– All cable ties which are opened or cut open when engine is removed must be replaced in the same position when engine is installed.

– Remove intake hose between air filter and throttle valve control module.

– Remove bracket -3-.

– Disconnect connectors -4- from ignition coils.

– Remove ignition coils ⇒ page 158 .

– Disconnect crankcase breather hoses -1- and -2-.

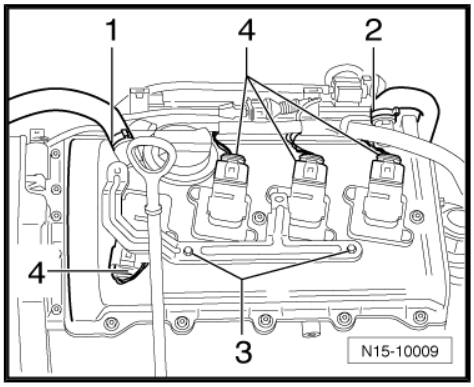

– Loosen securing bolts in the sequence -12- to -1- and remove cylinder head cover.

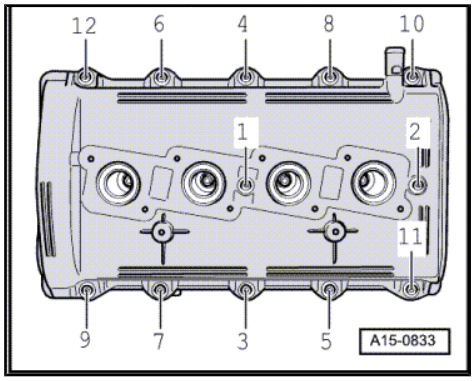

Installing

Installation is carried out in the reverse order. When installing, note the following:

Note

- *Renew gasket if damaged or leaking.*
- *Before installing ensure that all seals between cylinder head cover and cylinder head are installed correctly and not damaged.*

– Lightly coat transitions -arrows- on sealing surface of cylinder head with sealant -D 454 300 A2- .

– Carefully install cylinder head cover.

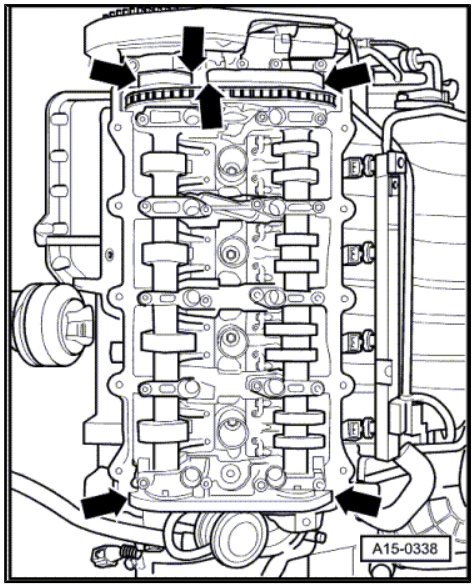

– Tighten securing bolts in the sequence -1- to -12-. Specified torque: 10 Nm

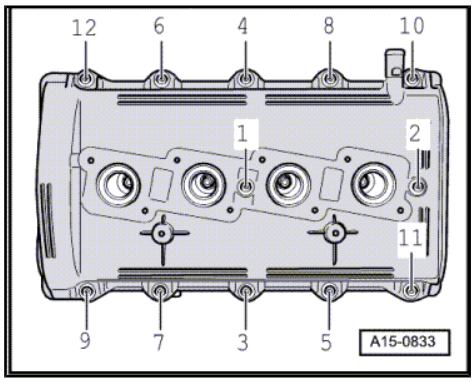

1.4 Removing, installing and tensioning toothed belt

Removing ⇒ page 35 .

Installing and tensioning ⇒ page 38

Special tools and workshop equipment required

- Locking pin -3242-
- Two-arm puller -T40001-
- Camshaft clamp -T40005-
- Tensioner wrench -T40009-
- Locking pin -T40011-
- Reversible ratchet -VAS 5122-
- Torque wrench -V.A.G 1410-
- Torque wrench -V.A.G 1331-

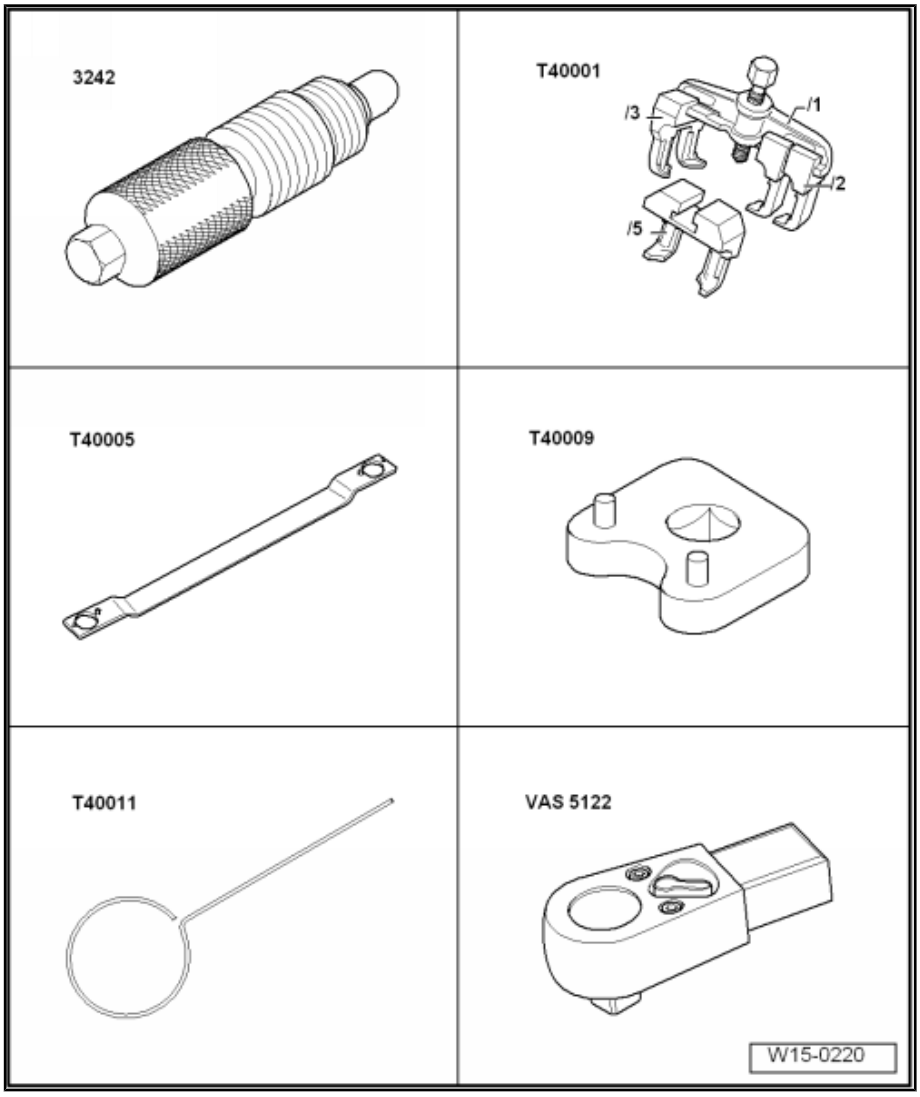

1.4.1 Removing

Caution

When doing any repair work, especially in the engine compartment, pay attention to the following due to the cramped conditions:

- *Route all the various lines (e.g. for fuel, hydraulics, activated charcoal filter system, coolant, refrigerant, brake fluid and vacuum) and electrical wiring in their original positions.*
- *To avoid damage to lines, ensure sufficient clearance to all moving or hot components.*

– Remove insulation tray ⇒ General body repairs, exterior; Rep. gr. 50 ; Noise insulation

– Remove radiator fans with radiator fan support ⇒ page 79 .

– Bring lock carrier into service position ⇒ General body repairs, exterior; Rep. gr. 50 ; Body - front; Lock carrier service position .

– Mark and remove poly V-belt. ⇒ page 18

– Remove toothed belt guards on left and right.

– Mark direction of rotation of toothed belt using a coloured felt-tip marker.

– Turn crankshaft to TDC. Mark on toothed belt guard -A- must align with mark on V-belt pulley -B-.

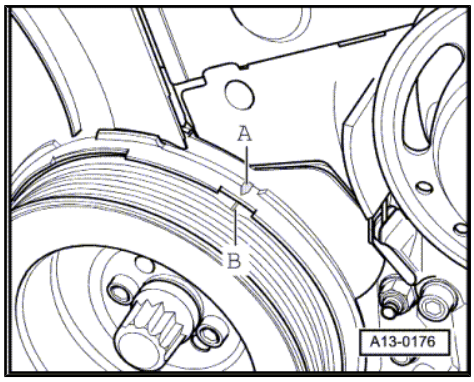

– Check position of camshaft sprockets. The larger holes in securing plates -arrows- must be positioned to the inside and must be aligned with the horizontal camshaft centre line.

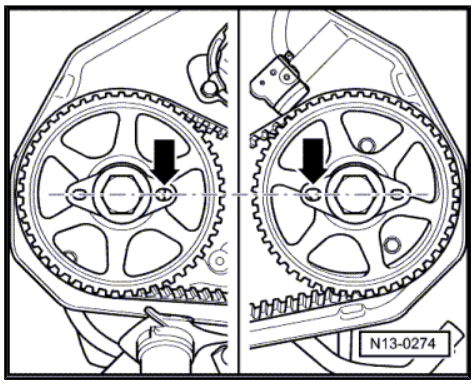

Note

If the larger holes in the securing plates are positioned to the outside of the camshaft sprockets, the crankshaft must be turned one revolution further in direction of engine rotation.

– Remove sealing plug -arrow- from left side of cylinder block. The TDC drilling in the crankshaft must be visible (or able to be felt) in the sealing plug hole.

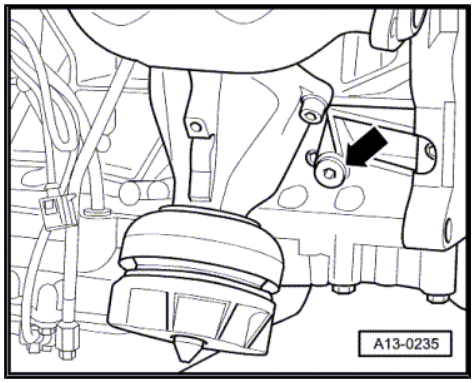

– Carefully screw locking pin -3242- into drilling to stop in order prevent crankshaft from turning.

– Remove middle part of toothed belt guard.

– Remove vibration damper.

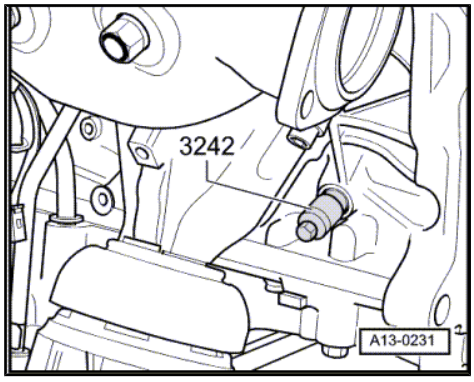

Note

The vibration damper is secured to the crankshaft with 8 securing bolts.

– Remove securing bolts -arrows- for alternator. Move alternator aside slightly.

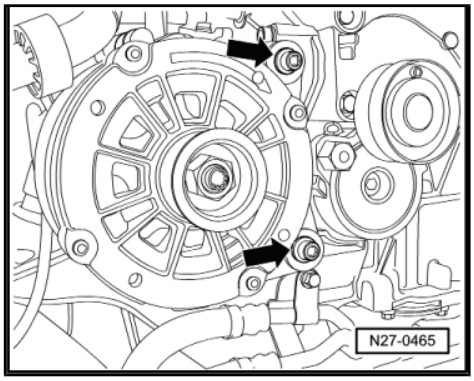

– First unscrew bolt -1- from oil filter housing. Then unscrew bolts -2- from cover for toothed belt tensioning element.

– Remove cover.

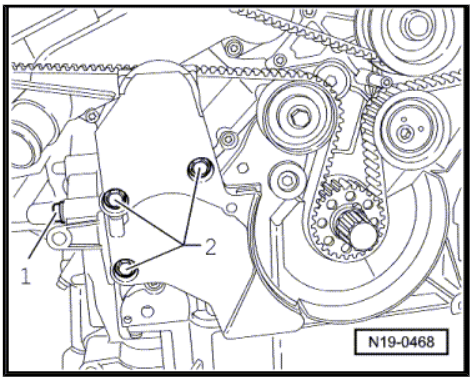

Note

♦ *The toothed belt tensioning element is provided with oil damping. It can therefore only be pushed back slowly.*

♦ *Use locking pin -T40011- for securing the tensioning element.*

– If necessary, before tensioning align holes in housing and in piston of tensioning element using long nose pliers or thin wire.

– Turn tensioning lever of toothed belt tensioning roller -1- in -direction of arrow- using hexagon key.

– Secure tensioning element with locking pin -T40011- when the tensioning lever of the toothed belt tensioning element -2- has been pushed back so that the holes in the housing and the pistons align.

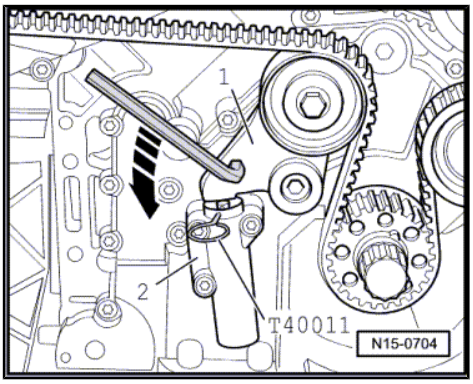

– Insert camshaft clamp -T40005- into camshaft securing plates and loosen securing bolts by approx. 5 turns.

– Remove camshaft clamp -T40005- again.

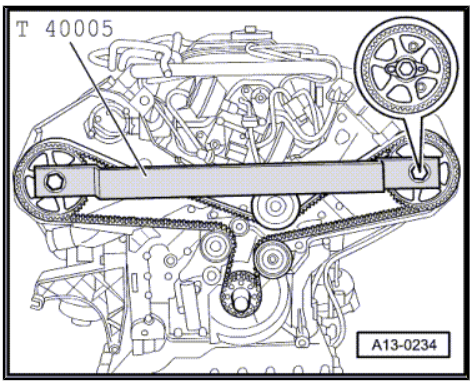

– Now pull camshaft sprockets off camshaft tapers using two-arm puller -T40001- and hook -T40001/2- .

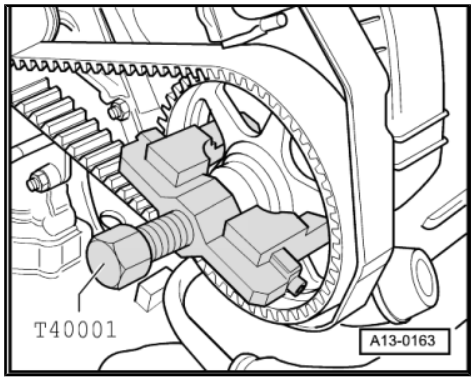

– Loosen tensioning roller -arrow- and remove toothed belt.

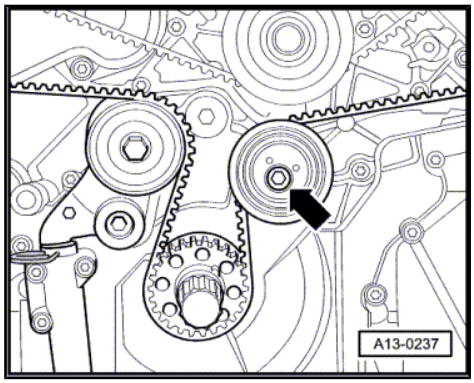

1.4.2 Installing and tensioning

– Note marking for direction of rotation when reinstalling the existing toothed belt.

– First, fit toothed belt to crankshaft toothed belt pulley -1-, then to idler roller of toothed belt tensioner -2- and then to tensioning roller -3-. After that, fit toothed belt to camshaft sprockets and coolant pump pulley as shown in the illustration.

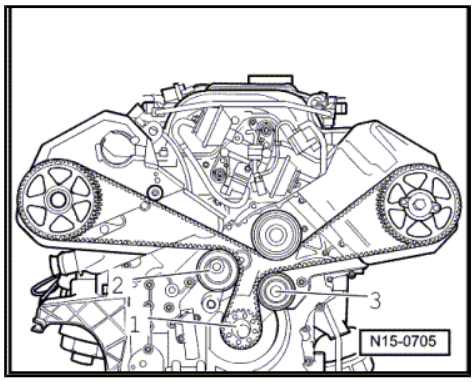

Note

It should just be possible to turn the camshaft sprockets on the camshaft tapers.

– Fit camshaft clamp -T40005- onto camshaft pulleys again.

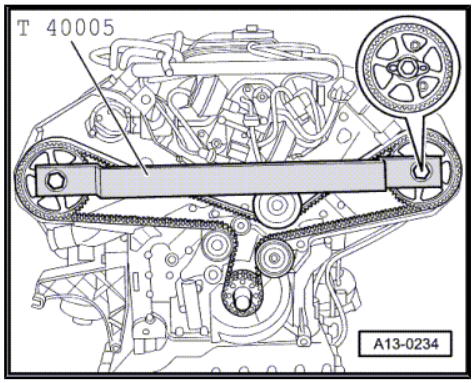

– Insert a 5 mm drill bit between the tensioning lever and the tensioning element piston -arrow-.

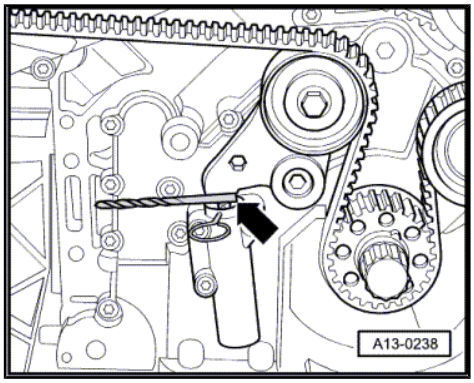

– Now pre-tension tensioning roller (still in loosened condition) using torque wrench -V.A.G 1410- with attached reversible ratchet -VAS 5122- and tensioner wrench -T40009- in anti-clockwise direction -arrow- to 4 Nm.
– Tighten bolt -1- to 45 Nm in this position.
– Then remove 5 mm drill.
– Turn tensioning lever of toothed belt tensioning roller -1- in -direction of arrow- using hexagon key.

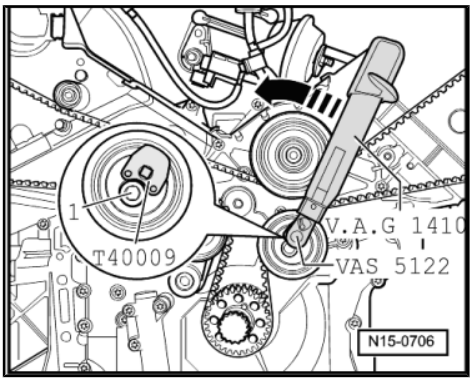

– When piston of toothed belt tensioning element -2- has been pushed back by tensioning lever, pull out locking pin -T40011- .

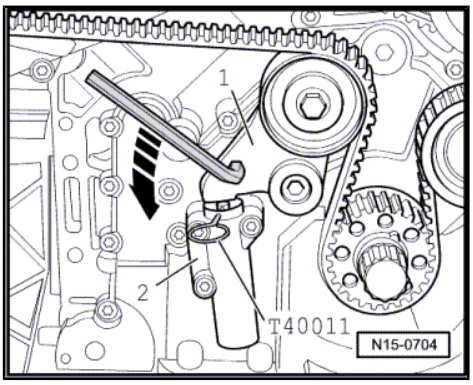

– Turn tensioning lever of toothed belt tensioning roller -1- in direction of -arrow-, using hexagon key and place a 7 mm drill between housing and tensioning lever.
– Tighten camshaft sprockets to 55 Nm.
– Remove camshaft clamp -T40005- again.
– Pull out drill inserted between housing and tensioning lever.

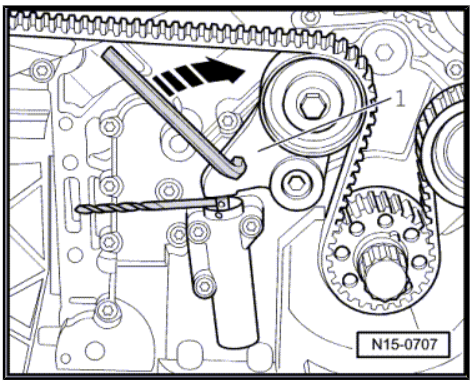

– Remove clamping bolt -3242- from hole, install sealing plug -arrow- and tighten to 30 Nm.

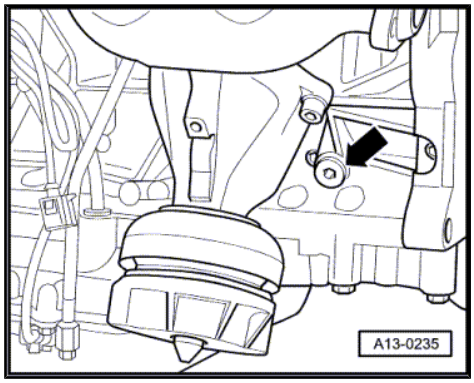

– Turn crankshaft two full turns in direction of engine rotation and check setting dimension -a-: specification 5 mm.

Further assembly is basically the reverse of the dismantling sequence.

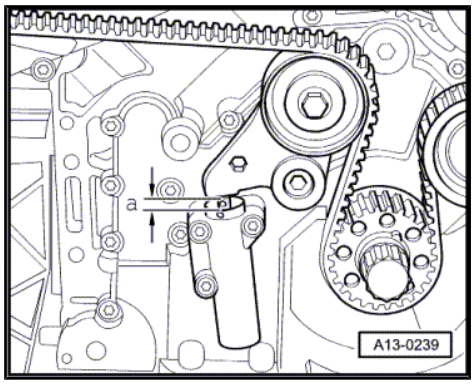

1.5 Removing and installing left cylinder head

Removing ⇒ page 41 .

Installing ⇒ page 43 .

Special tools and workshop equipment required

- Drip tray -V.A.G 1306-
- Torque wrench (5…50 Nm) -V.A.G 1331-
- Torque wrench (40…200 Nm) -V.A.G 1332-
- Spring-type clip pliers -VAS 5024A-

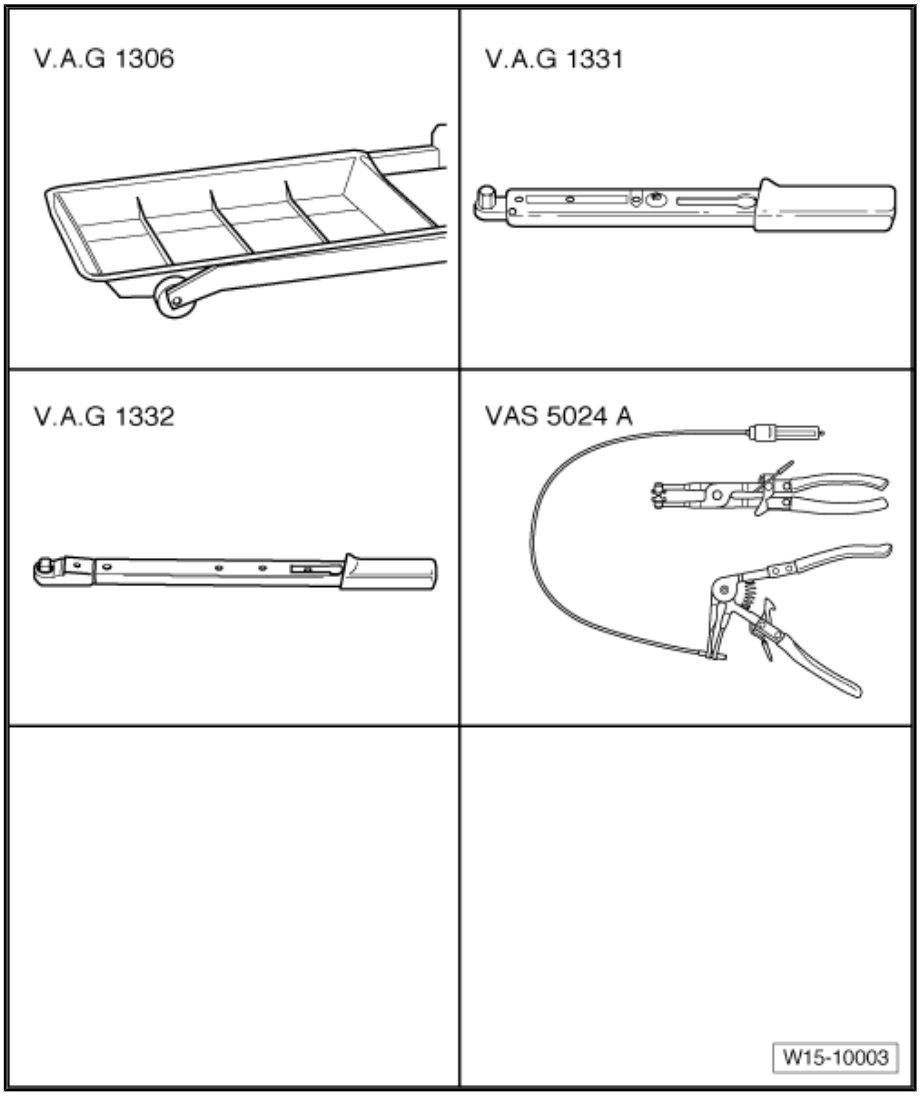

Not illustrated:

- Cable ties

Prerequisite

- The engine must be no more than warm to touch.

1.5.1 Removing

– Remove engine ⇒ page 2 .

Caution

When doing any repair work, especially in the engine compartment, pay attention to the following due to the cramped conditions:

- *Route all the various lines (e.g. for fuel, hydraulics, activated charcoal filter system, coolant, refrigerant, brake fluid and vacuum) and electrical wiring in their original positions.*
- *To avoid damage to lines, ensure sufficient clearance to all moving or hot components.*

– All cable ties which are opened or cut open when engine is removed must be replaced in the same position when engine is installed.

– Remove front exhaust pipe from exhaust manifold ⇒ page 148 .

– Unbolt guide tube for oil dipstick -arrow- from cylinder head.

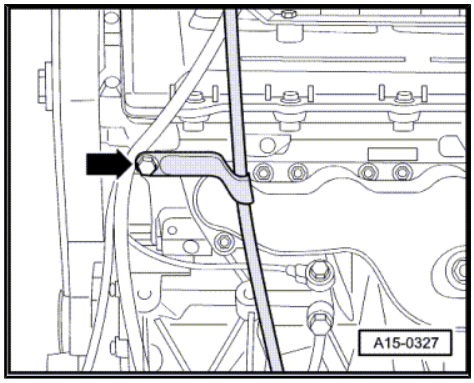

– Disconnect connectors -2- and -3-.

– Remove toothed belt ⇒ page 34 .

– Remove camshaft pulley ⇒ page 34 , Removing, installing and tensioning toothed belt.

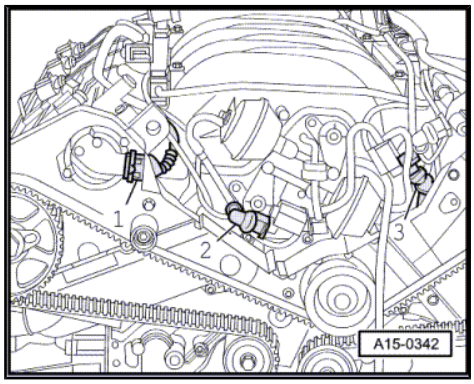

– Loosen securing bolts -1- and -2- and remove rear toothed belt guard.

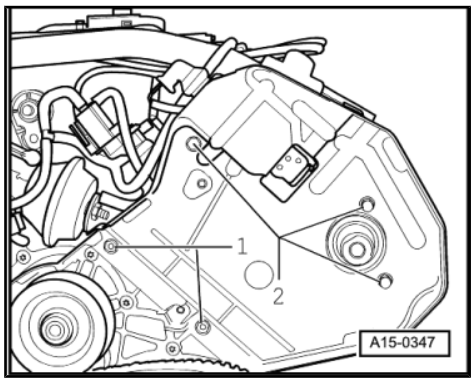

– Disconnect vacuum hose -1- from combination valve.

– Remove bolts -2-.

– Disconnect connector -3-.

– Unscrew bolts -4- and remove oil pipe.

– Remove bolts -5- and remove combination valve.

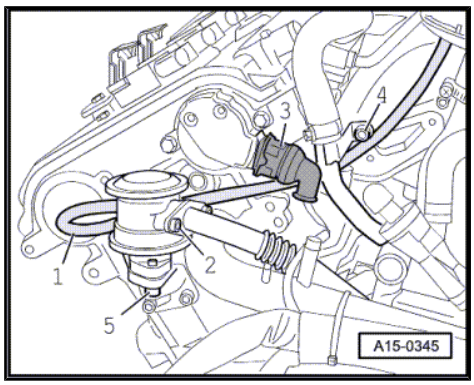

– Remove bolts securing coolant pipe -arrow-.
– Disconnect connectors from knock sensors.
– Pull connectors off all injectors.

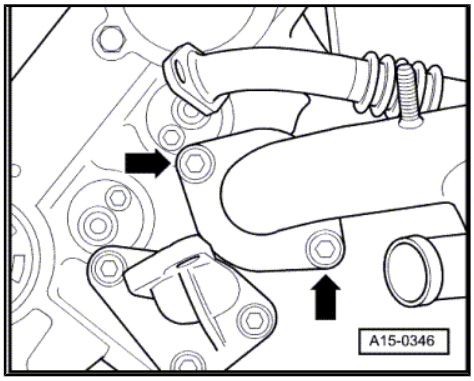

– Disconnect connector -1-.
– Disconnect hose -2-.
– Remove bolts -8-.
– Disconnect connector -9-.
– Remove coolant pipe.
– Remove intake manifold ⇒ page 132 .
– Remove cylinder head cover ⇒ page 32 .

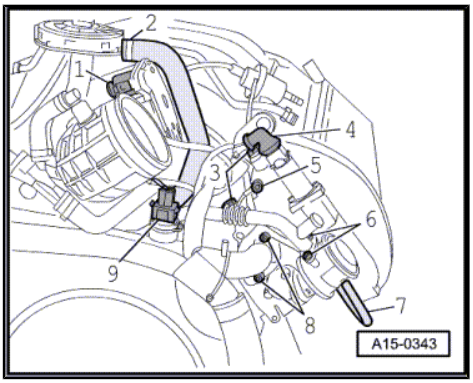

– Loosen cylinder head bolts in the sequence given starting at the outside and working inwards and then remove completely.
– Carefully remove cylinder head.
– Place clean cloths in cylinders so that no dirt or emery cloth particles can get in between cylinder wall and piston.
– Also prevent dirt and emery cloth particles from getting into coolant.
– Now carefully clean sealing surfaces of cylinder head and cylinder block. When doing this, ensure that surfaces are not scored or scratched (if abrasive paper is used, grade must not be less than 100).

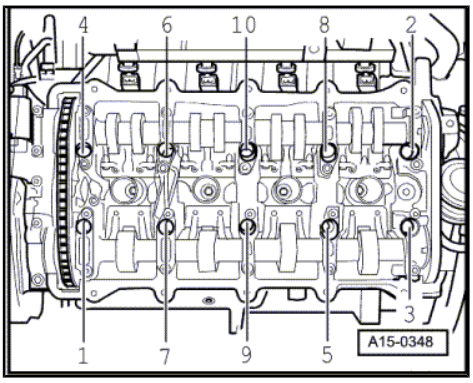

1.5.2 Installing

– Carefully remove metal particles, emery residue and cloths.

Note

- *Do not remove new cylinder head gasket from its packing until immediately before installing.*
- *Handle new gasket with extreme care. Damage will cause leakage.*

– Fit new cylinder head gasket. Inscription (Part No.) must be readable.

– Ensure dowel sleeves -arrows- are inserted into cylinder block holes and the cylinder head gasket is located.
– Fit cylinder head, screw in new cylinder head bolts and tighten hand tight.

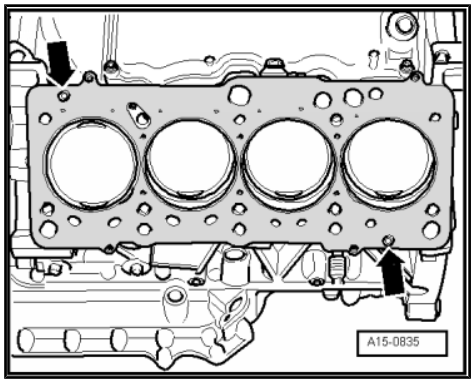

– Tighten cylinder head bolts in tightening sequence shown working from inside to outside.
– Pre-tighten all bolts to 35 Nm.
– Then tighten all bolts to 60 Nm.
– Then tighten all bolts $^{1}/_{4}$ turn (90°) further using a rigid wrench.
– Then tighten all bolts again $^{1}/_{4}$ turn (90°) further.

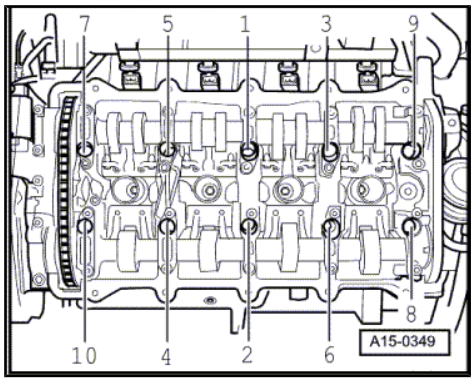

Adjusting valve timing ⇒ page 34 .
– Installing cylinder head cover ⇒ page 32 .
– Install intake manifold ⇒ page 132 .

Further assembly is basically the reverse of the dismantling sequence.

Note

It is not necessary to retighten cylinder head bolts after repairs.

1.6 Removing and installing right cylinder head

Removing ⇒ page 45 .

Installing ⇒ page 47 .

Special tools and workshop equipment required

- Drip tray -V.A.G 1306-
- Torque wrench (5…50 Nm) -V.A.G 1331-
- Torque wrench (40…200 Nm) -V.A.G 1332-
- Spring-type clip pliers -VAS 5024A-

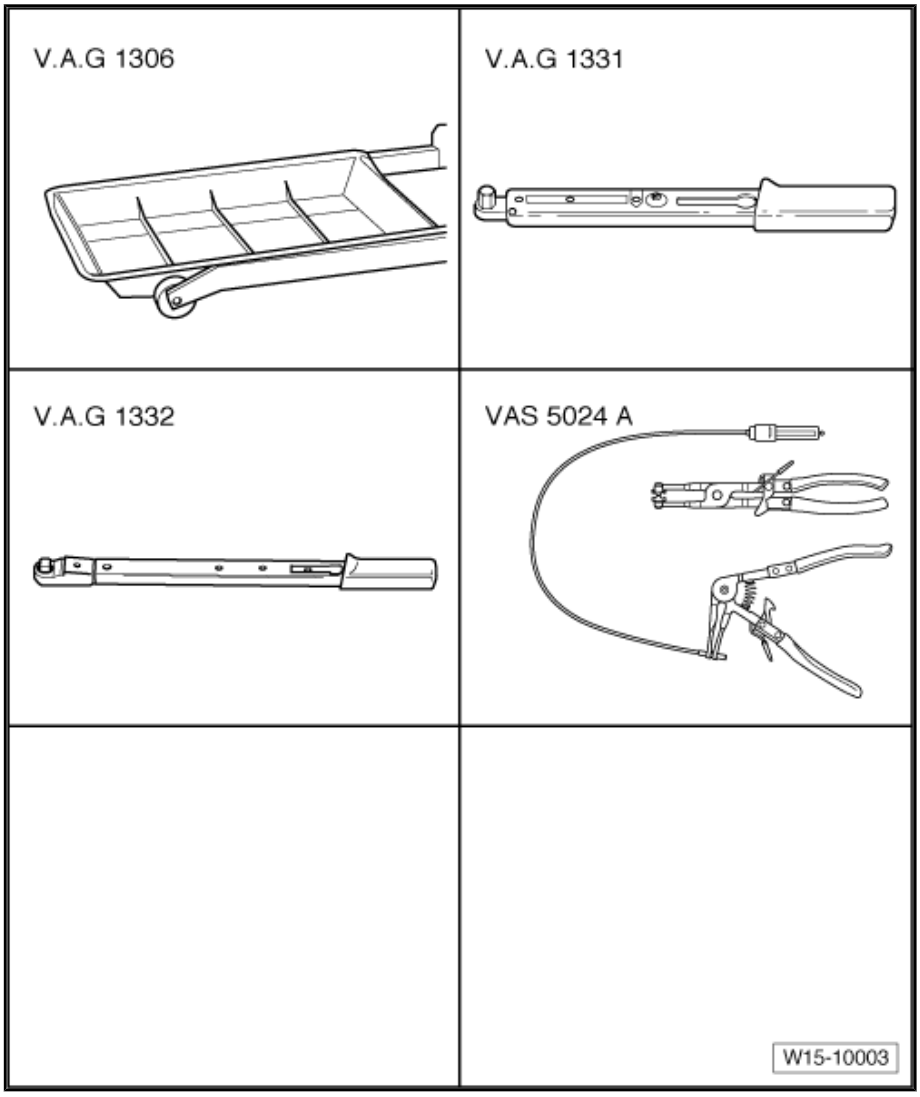

Not illustrated:

- Cable ties

Prerequisite

- The engine must be no more than warm to touch.

1.6.1 Removing

– Remove engine ⇒ page 2 .

Caution

When doing any repair work, especially in the engine compartment, pay attention to the following due to the cramped conditions:

- *Route all the various lines (e.g. for fuel, hydraulics, activated charcoal filter system, coolant, refrigerant, brake fluid and vacuum) and electrical wiring in their original positions.*
- *To avoid damage to lines, ensure sufficient clearance to all moving or hot components.*

– All cable ties which are opened or cut open when engine is removed must be replaced in the same position when engine is installed.

– Remove front exhaust pipe from exhaust manifold ⇒ page 148 .

– Disconnect connectors -1-, -2- and -3-.

– Remove toothed belt ⇒ page 34 .

– Remove camshaft pulley ⇒ page 34 , Removing, installing and tensioning toothed belt.

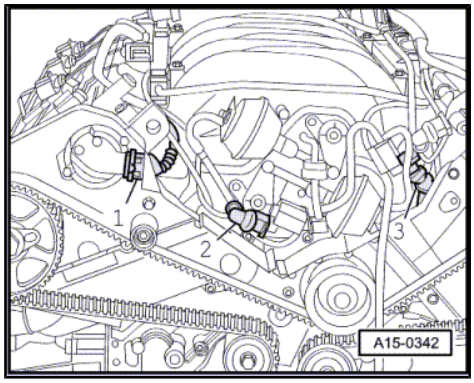

– Remove idler roller -1-.

– Loosen securing bolts -arrows- and remove rear toothed belt guard.

– Disconnect connectors from knock sensors.

– Pull connectors off all injectors.

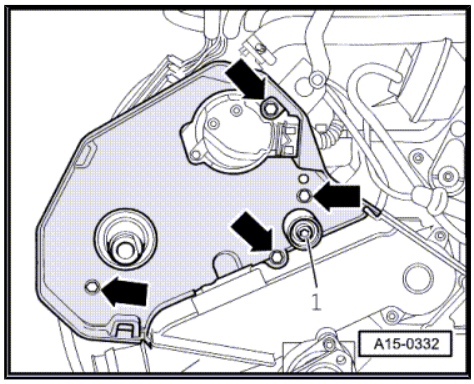

– Remove bolts securing coolant pipe -arrow-.

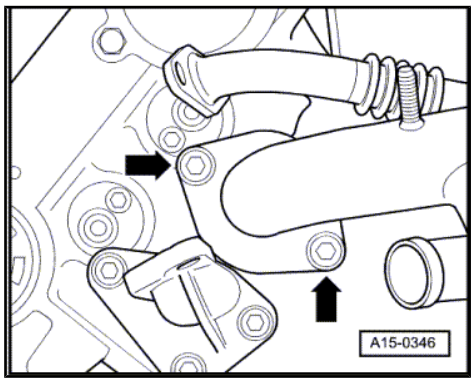

– Disconnect connector -1-.

– Disconnect hose -2-.

– Disconnect connector -4-.

– Remove bolts -6-.

– Disconnect vacuum hose -7- from combination valve.

– Remove bolts -8-.

– Disconnect connector -9-.

– Remove coolant pipe.

– Remove intake manifold ⇒ page 132 .

– Remove cylinder head cover ⇒ page 30 .

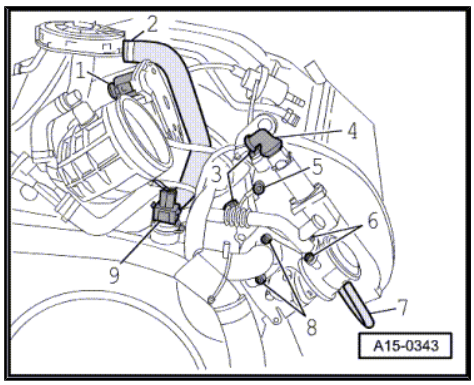

– Loosen cylinder head bolts in the sequence given starting at the outside and working inwards and then remove completely.
– Carefully remove cylinder head.
– Place clean cloths in cylinders so that no dirt or emery cloth particles can get in between cylinder wall and piston.
– Also prevent dirt and emery cloth particles from getting into coolant.
– Now carefully clean sealing surfaces of cylinder head and cylinder block. When doing this, ensure that surfaces are not scored or scratched (if abrasive paper is used, grade must not be less than 100).

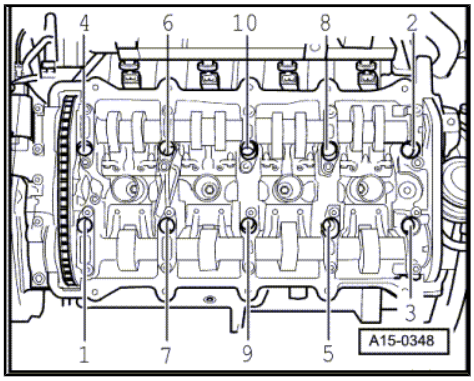

1.6.2 Installing

– Carefully remove metal particles, emery residue and cloths.

Note

♦ *Do not remove new cylinder head gasket from its packing until immediately before installing.*

♦ *Handle new gasket with extreme care. Damage will cause leakage.*

– Fit new cylinder head gasket. Inscription (Part No.) must be readable.
– Ensure dowel sleeves -arrows- are inserted into cylinder block holes and the cylinder head gasket is located.
– Fit cylinder head, screw in new cylinder head bolts and tighten hand tight.

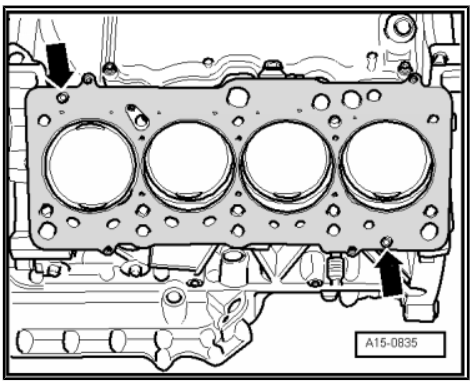

– Tighten cylinder head bolts in tightening sequence shown working from inside to outside.
– Pre-tighten all bolts to 35 Nm.
– Then tighten all bolts to 60 Nm.
– Then tighten all bolts $^1/_4$ turn (90°) further using a rigid wrench.
– Then tighten all bolts again $^1/_4$ turn (90°) further.

Adjusting valve timing ⇒ page 34 .

– Installing cylinder head cover ⇒ page 30 .
– Install intake manifold ⇒ page 132 .

Further assembly is basically the reverse of the dismantling sequence.

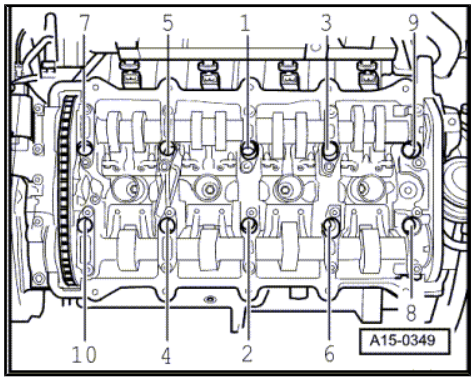

Note

It is not necessary to retighten cylinder head bolts after repairs.

1.7 Checking compression

Special tools and workshop equipment required

- Spark plug socket and extension -3122 B-
- Torque wrench (5…50 Nm) -V.A.G 1331-
- Compression tester - V.A.G 1763-

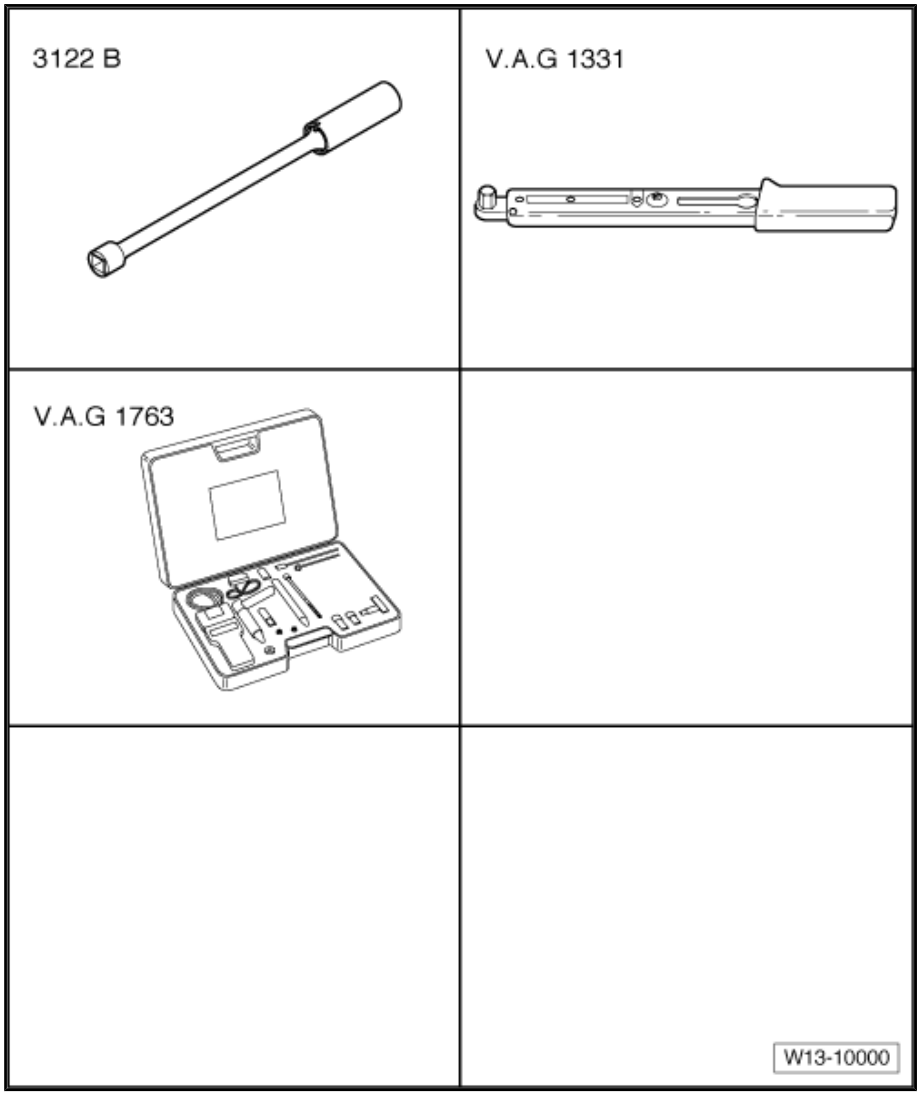

Test prerequisites

- Engine oil temperature must be at least 30°C.
- The battery voltage must be at least 11.5 V.
- All electrical consumers, e.g. lights and rear window heating, must be switched off.
- If the vehicle is equipped with an air conditioner, it must be switched off.
- The selector lever of the must be in „P“or „N“ position.

Test procedure

– Remove ignition coils with output stages ⇒ page 158 .

– Disconnect all connectors from injectors.

– Remove spark plugs using spark plug socket and extension -3122B- .

– Check compression using compression tester -V.A.G 1763- .

Note

Using compression tester ⇒ operating instructions .

– Have a second mechanic fully depress accelerator and crank engine.

– Operate starter until tester shows no further pressure increase.

Compression pressures:

New: 10…15 bar

Wear limit: 7.0 bar.

Maximum permissible difference between all cylinders: 3 bar

– Insert spark plugs using spark plug socket and extension -3122B- and tighten to 30 Nm.

After the test has been completed:

– Connect Vehicle diagnosis, testing and information system - VAS 5052- .

– Carry out vehicle system test ⇒ Vehicle diagnostic tester „Guided fault finding“.

– Finish the vehicle system test so that any fault entries stored during assembly can be deleted automatically.

– Generate the readiness code in combination with a road test.

Observe applicable safety precautions during road test.

– Carry out road test.

– Then carry out vehicle system test again and rectify any faults which may have occurred.

2 Repairing valve gear

Assembly overview

Camshafts, checking axial clearance ⇒ page 53

Renewing camshaft oil seal ⇒ page 54 .

Renewing Hall sender seals ⇒ page 55

Removing and installing camshafts and variable camshaft timing adjusters ⇒ page 56

Removing and installing roller rocker finger ⇒ page 62 .

Renewing valve stem seals ⇒ page 62 .

Checking valve guides ⇒ page 65 .

Reworking valve seats ⇒ page 66 .

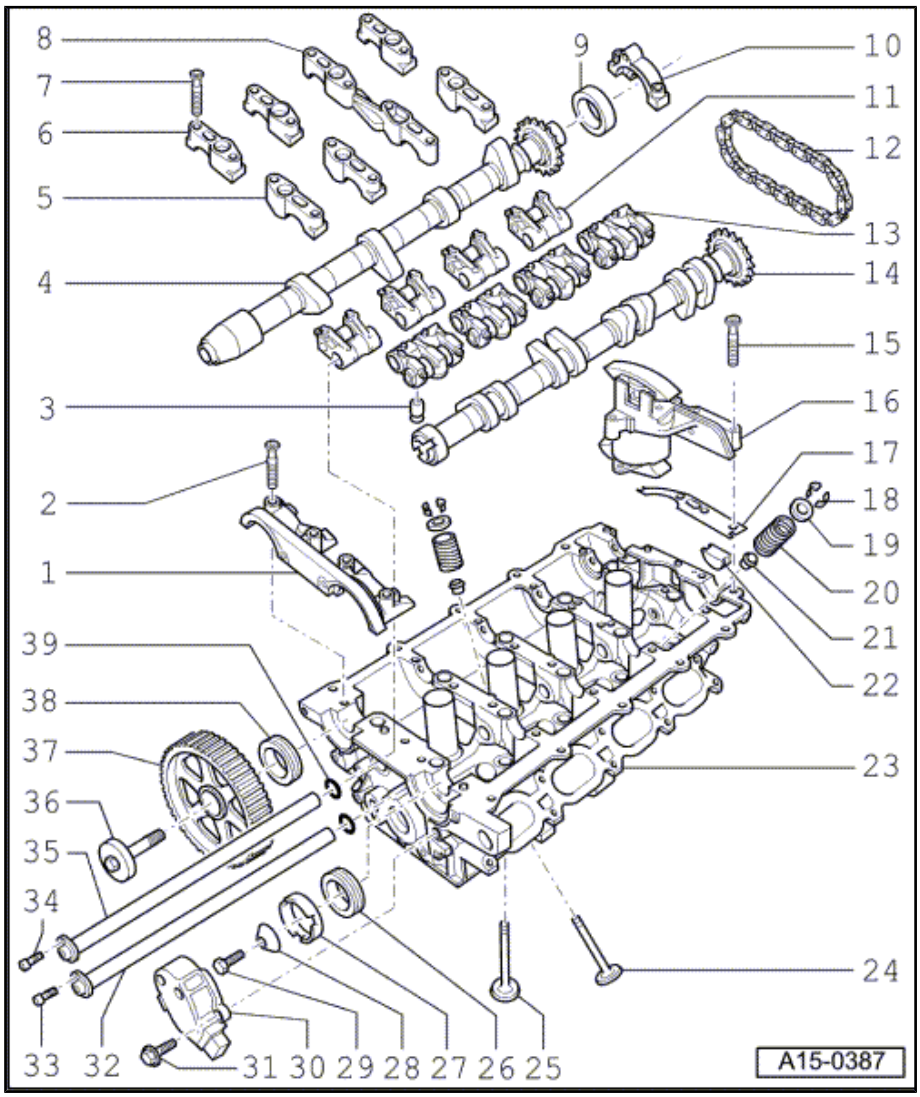

1 - Double bearing cap

- ❑ When installing, seal parting surfaces of outer bearing caps with sealant -AMV 188 001 02- ⇒ page 61 .

2 - 5 Nm + 1/4 turn (90°) further

- ❑ Renew.

3 - Support element

- ❑ Before installing, check camshaft axial clearance ⇒ page 53 .
- ❑ Do not interchange.
- ❑ With hydraulic valve clearance compensation.

4 - Exhaust camshaft

- ❑ Checking radial clearance with Plastigage; wear limit: 0.1 mm.
- ❑ Runout: max. 0.01 mm.
- ❑ Checking axial clearance ⇒ page 53 .
- ❑ Removing and installing ⇒ page 56

5 - Inlet camshaft bearing cap

- ❑ Removing and installing ⇒ page 56 , Removing and installing camshafts and variable camshaft timing adjuster.

6 - Exhaust camshaft bearing cap

- ❑ Removing and installing ⇒ page 56 , Removing and installing camshafts and variable camshaft timing adjuster.

7 - 5 Nm + 1/4 turn (90°) further

- ❑ Renew.

8 - Double bearing cap

9 - Cap

- ❑ Renew.
- ❑ Punch through using a screwdriver and lever out for removal.
- ❑ Install using tool 3202.

10 - Bearing cap

When installing, seal parting surfaces of outer bearing caps with sealant -AMV 188 001 02- ⇒ page 61 .

11 - Roller rocker finger

- ❑ For exhaust camshaft.
- ❑ Before installing, check camshaft axial clearance ⇒ page 53 .
- ❑ Do not interchange.
- ❑ Check roller bearing for ease of movement.
- ❑ Oil contact surface.
- ❑ Removing and installing ⇒ page 62

12 - Camshaft timing chain

- ❑ Before removing, mark direction of rotation (installation position) ⇒ page 56 ; Removing and installing camshafts and variable camshaft timing adjusters.

13 - Roller rocker finger

- ❑ For inlet camshaft.
- ❑ Before installing, check camshaft axial clearance ⇒ page 53 .
- ❑ Do not interchange.
- ❑ Check roller bearing for ease of movement.
- ❑ Oil contact surface.
- ❑ Removing and installing ⇒ page 62

14 - Inlet camshaft

- ❑ Checking radial clearance with Plastigage; wear limit: 0.1 mm.
- ❑ Runout: max. 0.01 mm.
- ❑ Checking axial clearance ⇒ page 53 .
- ❑ Removing and installing ⇒ page 56

15 - 5 Nm + $^{1}/_{4}$ turn (90°) further

- ❑ Renew.

16 - Camshaft adjuster

- ❑ Rotate engine only with camshaft adjuster installed.
- ❑ Removing and installing ⇒ page 56 , Removing and installing camshafts and variable camshaft timing adjuster.

17 - Gasket

- ❑ Renew.

18 - Valve cotters

19 - Valve spring plate

20 - Valve spring

- ❑ Note installation position.
- ❑ Removing and installing ⇒ page 62 , Renewing valve stem seals.

21 - Valve stem seal

- ❑ Renew. ⇒ page 62 .

22 - Gasket

- ❑ Renew.

23 - Cylinder head

- ❑ Check for distortion ⇒ page 30 .

- ❑ Removing and installing right cylinder head ⇒ page 44 .
- ❑ Removing and installing left cylinder head ⇒ page 40 .
- ❑ After renewing, renew entire coolant.

24 - Exhaust valve

- ❑ Do not rework, only lapping-in is permitted.
- ❑ Valve dimensions ⇒ page 53

25 - Inlet valve

- ❑ Do not rework, only lapping-in is permitted.
- ❑ Valve dimensions ⇒ page 53

26 - Seal

- ❑ For Hall sender.
- ❑ Removing and installing ⇒ page 55

27 - Hall sender screen

- ❑ Note installation position.

28 - Washer

- ❑ Conical.

29 - 23 Nm

30 - Hall sender

31 - 10 Nm

32 - Shaft

- ❑ For roller rocker finger, inlet side
- ❑ Removing and installing ⇒ page 62 , Removing and installing roller rocker finger.

33 - 10 Nm

34 - 10 Nm

35 - Shaft

- ❑ For roller rocker finger, exhaust side
- ❑ Removing and installing ⇒ page 62 , Removing and installing roller rocker finger.

36 - 55 Nm

37 - Camshaft pulley

- ❑ Removing and installing ⇒ page 34 Removing, installing and tensioning toothed belt.

38 - Seal

- ❑ For camshaft.
- ❑ Removing and installing ⇒ page 54 .

39 - O-ring

- ❑ Renew.

Valve dimensions

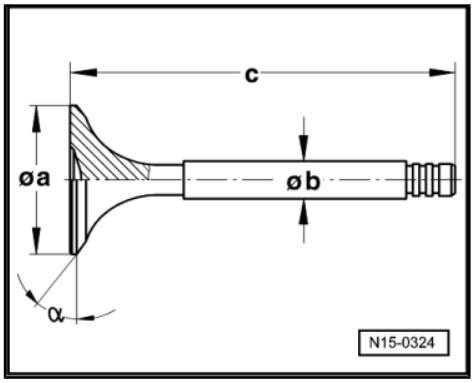

Note

Valves must not be reworked. Only lapping-in is permitted.

Valve dimensions

Dimension		Inlet valve	Exhaust valve
-∅ a-	mm	26.8...27.0	29.8...30.0
-∅ b-	mm	5.96...5.97	5.94...5.95
-c-	mm	104.84...105.34	103.64...104.14
-α-	∠°	45	45

Note

Worn sodium filled exhaust valves must not be disposed of without first preparing the valves.

WARNING

Wear eye protection and protective clothing to avoid eye injuries and chemical burns!

– They must be cut through in the centre of the stem with a hacksaw. When doing this they must not come in contact with water!
– When valves have been prepared as described, throw a maximum of ten valves into a bucket filled with water and step back!
– Due to the contact with water a sudden chemical reaction will be initiated and the sodium fill will be burnt.
– After this treatment, the valves can be scrapped as normal scrap.

2.1 Camshafts, checking axial clearance

Special tools and workshop equipment required

♦ Universal dial gauge bracket -VW 387-
♦ Dial gauge

Test procedure

Perform measurements with support elements and roller rocker fingers removed.

– Insert camshaft and secure with bearing caps -3-, -5- and -7-.

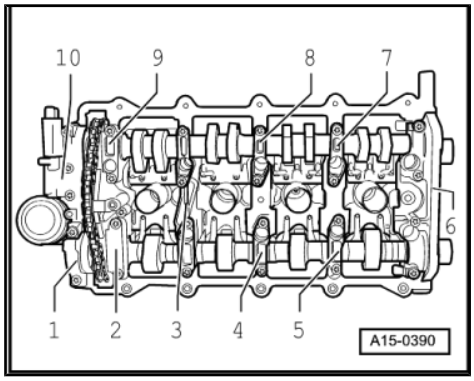

Inlet camshaft

– Attach dial gauge with universal dial gauge bracket to cylinder head, as shown.

Wear limit for axial clearance: max. 0.20 mm.

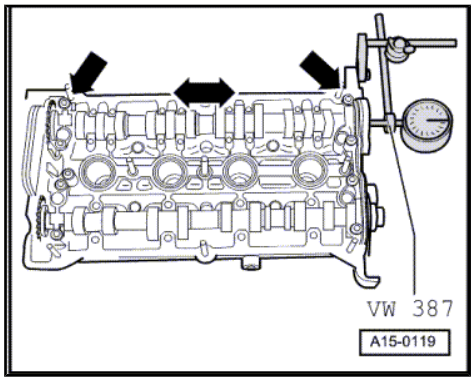

Exhaust camshaft

– Attach dial gauge with universal dial gauge bracket to cylinder head, as shown.

Wear limit for axial clearance: max. 0.20 mm.

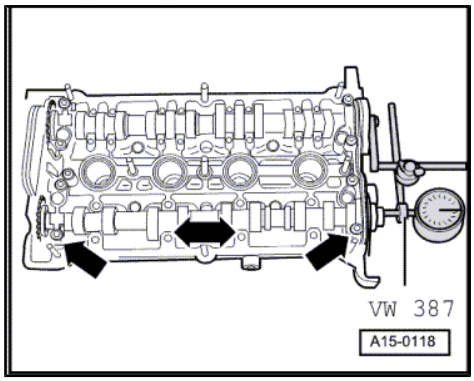

2.2 Renewing camshaft oil seals

Special tools and workshop equipment required

♦ Oil seal extractor -3240-

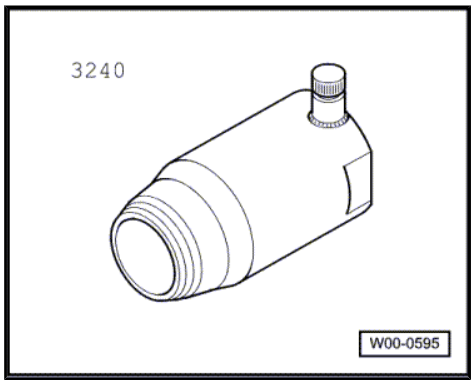

♦ Fitting tool -3241-

Removing

– Remove toothed belt and camshaft sprockets ⇒ page 34 .

– Unscrew inner part of oil seal extractor -3240- several turns out of the outer part and lock with knurled screw.
– Lubricate threaded head of oil seal extractor, place it in position and, exerting firm pressure, screw it into oil seal as far as possible.
– Loosen knurled screw and turn inner part against camshaft until oil seal is pulled out.
– Clamp flats of oil seal extractor in vice. Remove oil seal with pliers.

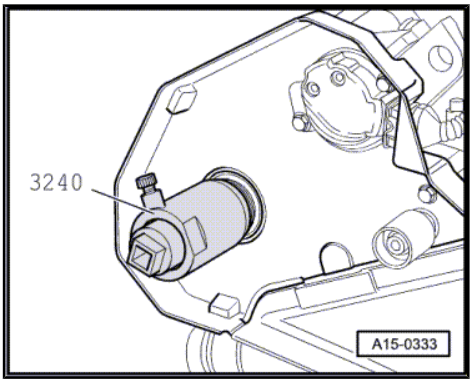

Installing

– Fit seal and press it in to stop using pressure sleeve -3241/1- and bolt -3241/6- .
– Install toothed belt and camshaft sprockets ⇒ page 34 .

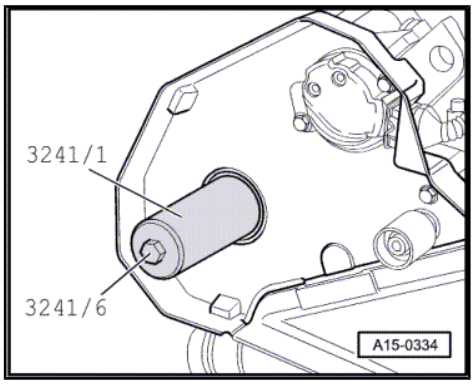

2.3 Renewing Hall sender seals

Special tools and workshop equipment required

♦ Oil seal extractor -2085-

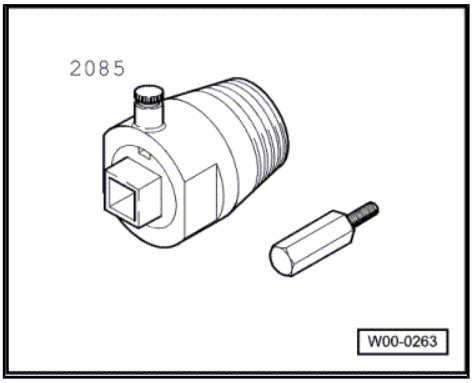

♦ Fitting sleeves -3241-

Procedure

Left cylinder head

– Disconnect connectors from ignition coils and injectors and lay wiring harness to side.
– Pull connector off Hall sender.
– Remove Hall sender housing with Hall sender screen and taper.

Right cylinder head

– Remove right toothed belt guard.
– Pull connector off Hall sender.

– Unscrew bolts -1- from Hall sender.
– Unscrew bolt -2- from rear of toothed belt guard.
– Slightly pull rear of toothed belt guard towards front and remove Hall sender housing with Hall sender screen and taper.

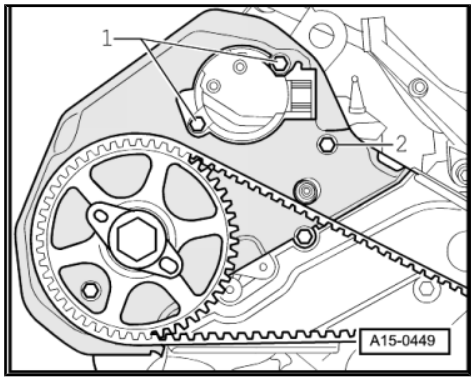

Continuation for both cylinder heads

– Screw in pin -2085/1- as shown in the illustration.

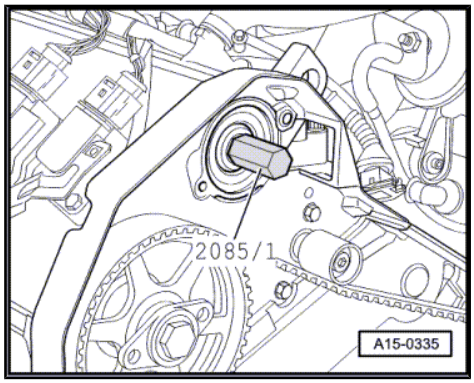

– Unscrew inner part of oil seal extractor -2085- several turns out of the outer part and lock with knurled screw.
– Lubricate threaded head of oil seal extractor, place it in position and, exerting firm pressure, screw it into oil seal as far as possible.
– Loosen knurled screw and turn inner part against pin -2085/1- until seal is pulled out.
– Clamp flats of oil seal extractor in vice. Remove oil seal with pliers.

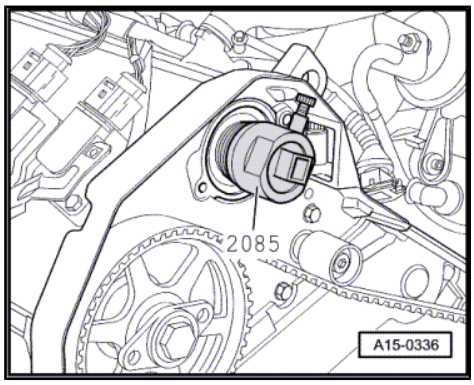

– Then press in new seal to stop until it is flush using fitting sleeve -3241/1- and bolt -3241/3- .

Further assembly is basically the reverse of the dismantling sequence.

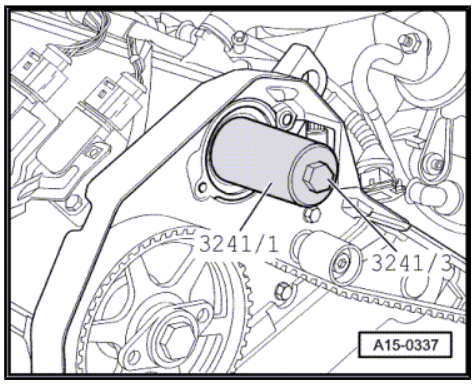

2.4 Removing and installing camshafts and variable camshaft timing adjusters

Removing ⇒ page 57 .

Installing ⇒ page 59 .

Special tools and workshop equipment required

♦ Chain tensioner retainer -3366-

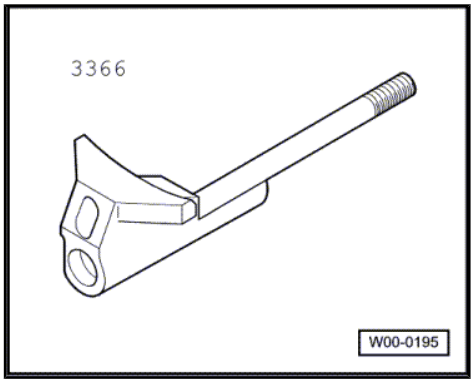

♦ Torque wrench (5…50 Nm) -V.A.G 1331-

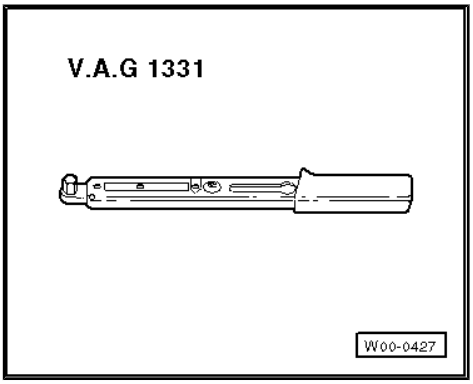

♦ Sealant -AMV 188 001 02-

2.4.1 Removing

– Set engine to TDC ⇒ page 34 .

– Remove toothed belt and camshaft sprocket ⇒ page 34 ; Removing, installing and tensioning toothed belt.

Left cylinder head

– Remove cylinder head cover ⇒ page 32 .

– Loosen securing bolts -1- and -2- and remove rear toothed belt guard.

Right cylinder head

– Remove cylinder head cover ⇒ page 30 .

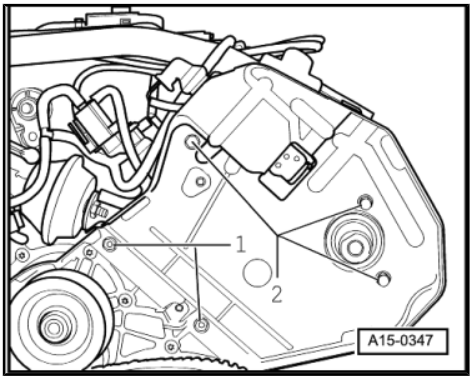

– Remove idler roller -1-.

– Loosen securing bolts -arrows- and remove rear toothed belt guard.

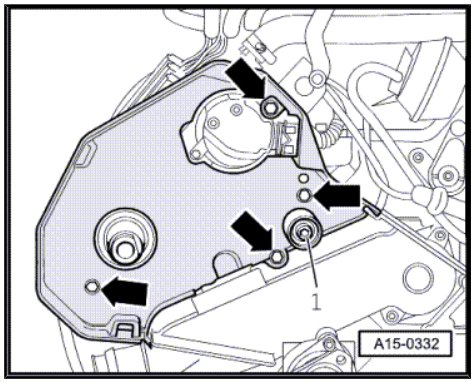

Continuation for both cylinder heads

– Disconnect connector from Hall sender and remove Hall sender housing with Hall sender screen and taper.

– Check TDC position of camshafts. The markings on the camshafts must be in line with the arrow on both bearing caps -arrows-.

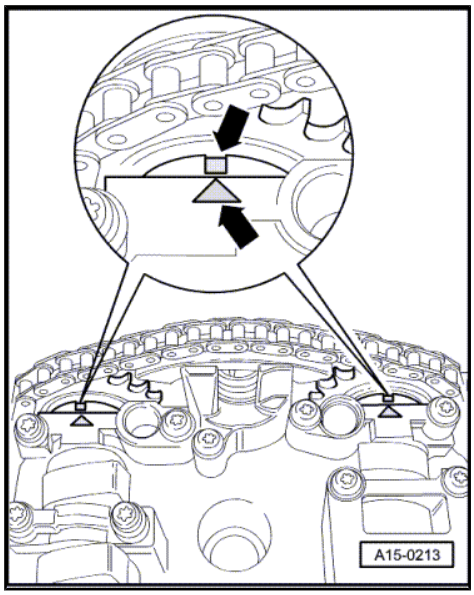

When reusing existing camshaft timing chain

– Mark camshaft timing chain -arrows- before removing (e.g. with paint, arrow pointing in direction of rotation).

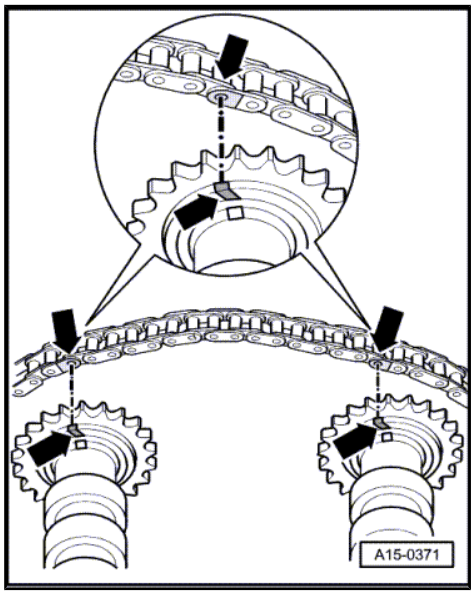

Note

Do not mark chain by way of centre punch, notch or the like.

– Hold camshaft adjuster in position using retainer for chain tensioner -3366- .

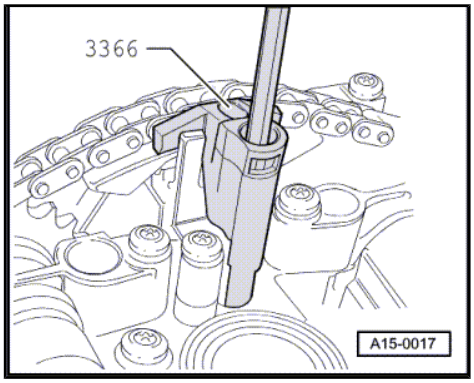

Note

Camshaft adjuster can be damaged if chain tensioner is tightened too far.

– Mark installation position of all bearing caps (e.g. using a waterproof felt-tip marker) with numbers as shown in the illustration regardless of the existing markings on the bearing caps.
– Unscrew securing bolts for camshaft adjuster.
– Remove bearing cap -1-.
– Remove bearing caps -2-, -4-, -6-, -8- and -9- and place them on a clean surface in sequence given.
– Loosen bearing caps -3-, -5- and -7- alternately and diagonally and then remove.
– Carefully remove camshafts with camshaft adjusters and place them on a clean surface.

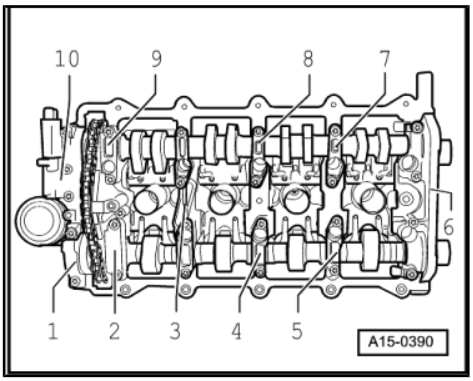

2.4.2 Installing

– Renew half-round sealing plug.
– Renew gasket for camshaft adjuster.
– Coat hatched area lightly with sealant -AMV 188 001 02- .
– Fit camshaft timing chain onto camshaft drive gears as described below.

When reusing existing camshaft timing chain

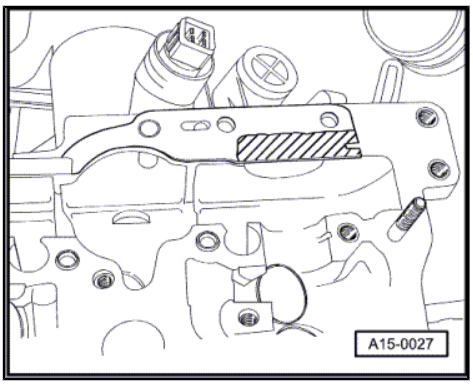

– Align coloured markings -arrows-.

When using new camshaft timing chain

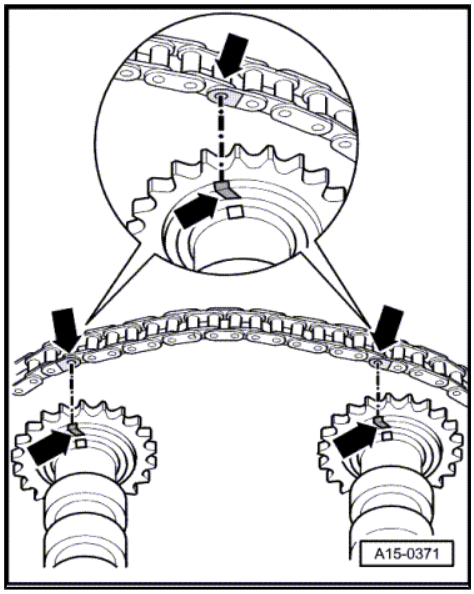

The distance between tooth -A- and tooth -B- of the camshaft adjuster must be exactly 16 rollers of the camshaft roller chain. The illustration shows the exact positions of the -1st- and -16th- rollers on the chain sprockets. Chain rollers -1- and -16- are offset from notches -A- and -B- by $^1/_2$ the width of one tooth towards left.

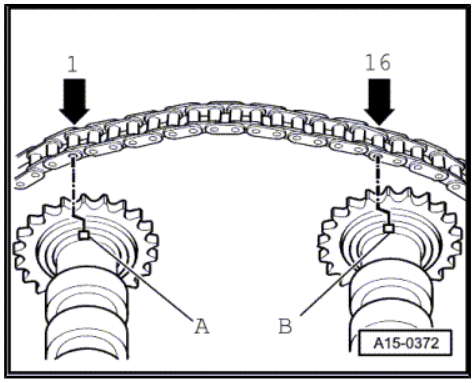

Continuation

– Fit camshaft adjuster to camshaft timing chain.

– Carefully position camshafts with camshaft timing chain and camshaft adjuster in cylinder head.

– Oil the camshaft running surfaces.

Note

Dowel sleeves for bearing caps and camshaft adjuster must be fitted in cylinder head.

– Install bearing caps -3-, -5- and -7- to locations as marked and tighten new bolts alternately and diagonally. Specified torque: 5 Nm + $^1/_4$ turn (90°) further.

– Tighten camshaft adjuster -10-. Specified torque: 5 Nm + $^1/_4$ turn (90°) further.

– Install chain tensioner.

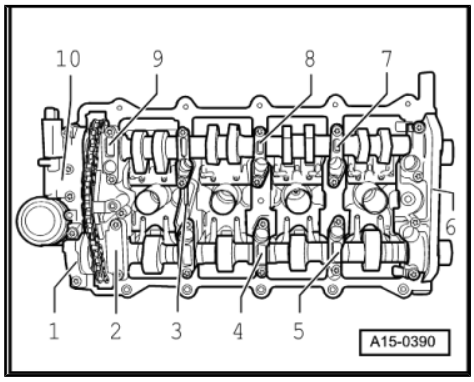

– Check TDC position of camshafts. The markings on the camshafts must be in line with the arrow on both bearing caps -arrows-.

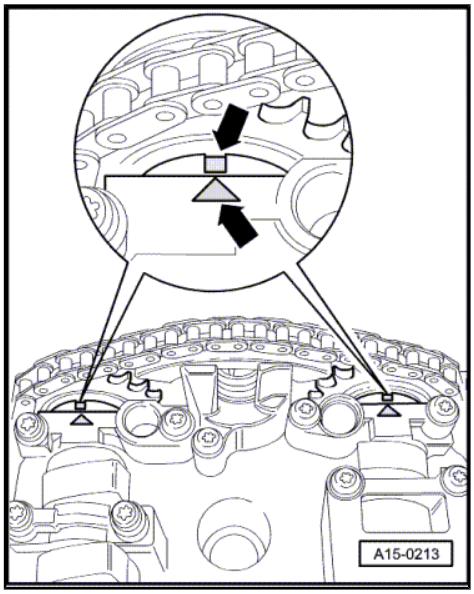

Note

If necessary, slightly turn camshaft back and forth in order to ensure correct alignment of markings.

– Lightly coat double bearing cap -6- and bearing cap -1- with sealant -AMV 188 001 02- ⇒ page 61 and install bearing caps. Specified torque: 5 Nm + $^{1}/_{4}$ turn (90°) further.

– Install remaining bearing caps. Specified torque: 5 Nm + $^{1}/_{4}$ turn (90°) further.

– Renew camshaft seals ⇒ page 54 .

– Renew Hall sender seals ⇒ page 55 .

– Carefully drive in cap ⇒ Item 9 (page 50) using thrust piece of fitting sleeves -3202- .

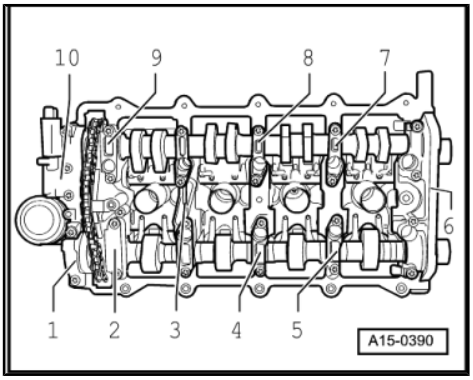

Further assembly is basically the reverse of the dismantling sequence.

Note

- *After installing camshafts wait for approx. 30 minutes before starting engine. Hydraulic compensating elements must settle. (Valves will otherwise contact piston).*
- *After working on valve mechanism, carefully turn engine by hand to ensure that no valve strikes piston when engine is started.*

Lightly coat parting surfaces of front and rear bearing caps with sealant -AMV 188 001 02- before installing.

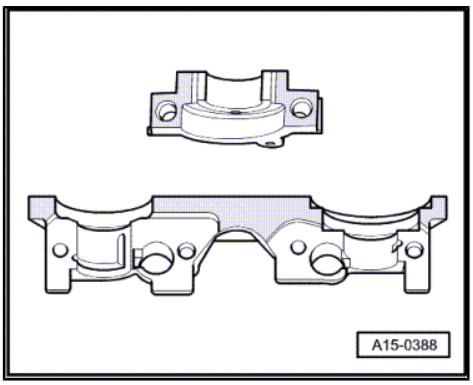

2.5 Removing and installing roller rocker finger

Special tools and workshop equipment required

- Torque wrench (5…50 Nm) -V.A.G 1331-

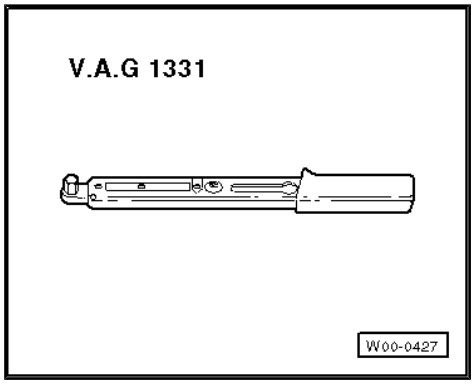

Procedure

– Remove engine ⇒ page 2 .

– Remove camshafts with camshaft adjuster ⇒ page 56 .

– Mark allocation of roller rocker fingers and roller rocker finger shafts in order to ensure correct reinstallation.

– Remove securing bolts -arrows-.

– Then, screw in M6 bolts into shaft holes and pull shafts out of cylinder head.

– Remove roller rocker fingers.

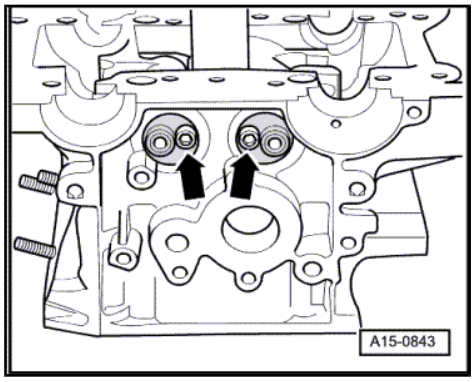

Note

- *O-rings for shafts must always be renewed.*
- *Oil bearing points of roller rocker fingers.*

– When installing, tighten shaft securing bolts to 10 Nm.

Further assembly is basically the reverse of the dismantling sequence.

2.6 Renewing valve stem seals

Removing ⇒ page 63 .

Installing ⇒ page 65 .

Special tools and workshop equipment required

- Spark plug socket and extension -3122 B-
- Valve stem seal puller -3364-
- Valve stem seal fitting tool -3365-
- Adapter -T40012-
- Torque wrench (5…50 Nm) -V.A.G 1331-
- Dismantling and assembling device for valve cotters -VAS 5161-

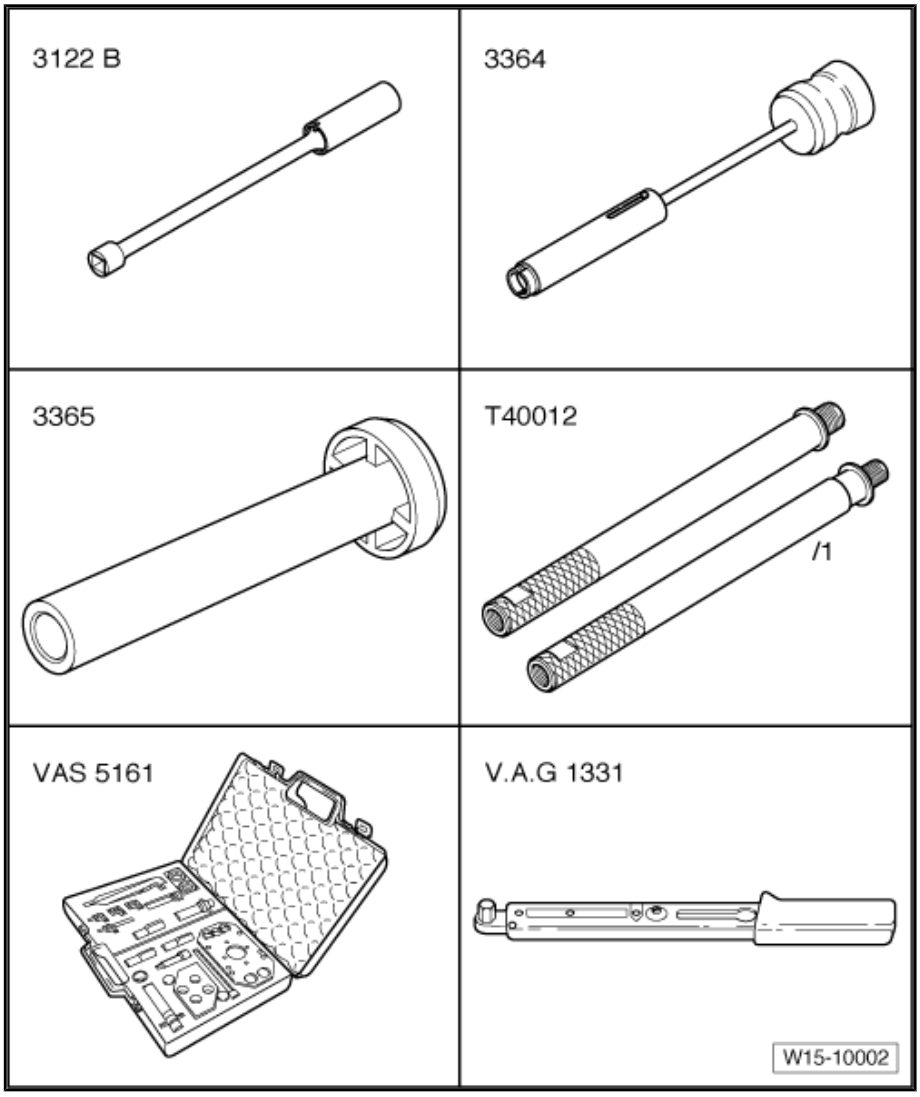

2.6.1 Removing

– Remove engine ⇒ page 2 .

– Remove camshafts with camshaft adjuster ⇒ page 56 .

– Remove spark plugs using spark plug socket and extension -3122B- .

– Swivel roller rocker fingers upwards and secure them with a rubber strap.

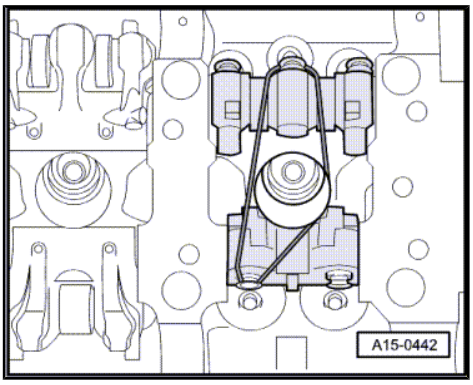

– Fit guide plate -VAS 5161/7- onto cylinder head as shown in illustration.
– Secure guide plate using the knurled screws -VAS 5161/12- .
– Insert drift -VAS 5161/3- into guide plate and knock valve cotters loose using a plastic hammer.

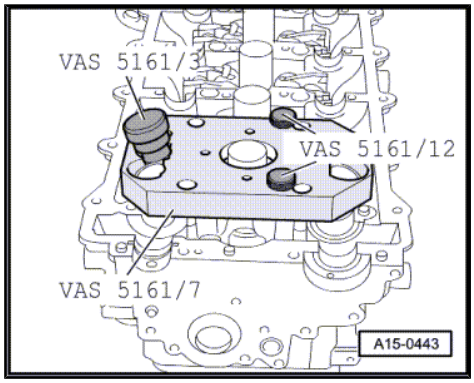

– Screw toothed piece -VAS 5161/6- with -VAS 5161/5- into guide plate -VAS 5161/7- .
– Insert assembly cartridge -VAS 5161/8- into guide plate -VAS 5161/7- .
– Screw adapter -T40012- into spark plug thread, connect to compressed air line with commercially available adapter and apply constant pressure (at least 6 bar).
– Attach pressure fork -VAS 5161/2- to snap-in device -VAS 5161/6- and push assembly cartridge down.
– At the same time, turn knurled screw of assembly cartridge clockwise until tips engage in valve cotters.
– Move knurled screw back and forth lightly to press apart valve cotters and to capture them in the assembly cartridge.
– Release pressure fork and remove assembly cartridge from guide plate.
– Remove guide plate from cylinder head.

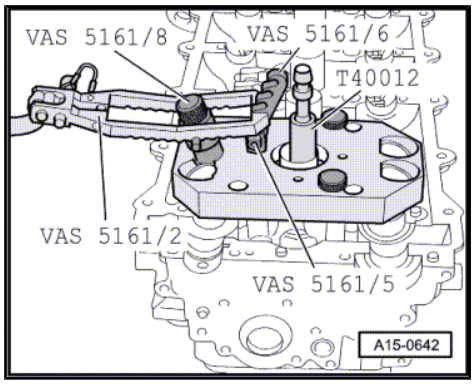

Note

The compressed air line remains connected.

– Pull off valve stem seals using valve stem seal puller -3364- .

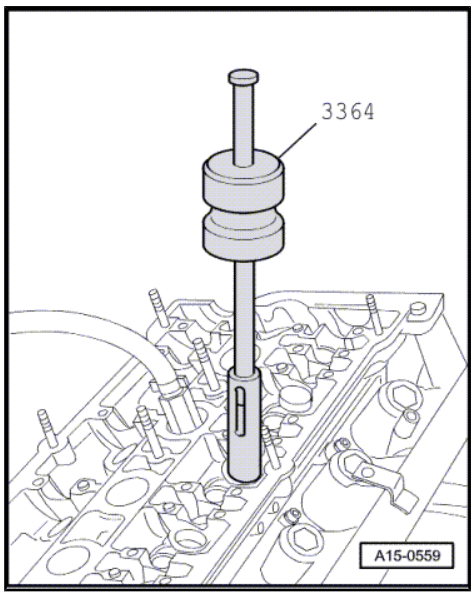

2.6.2 Installing

– To prevent damage to new valve stem seals, place plastic sleeve -A- on valve stem.

– Lubricate sealing lip of valve stem seal -B-, place it in the valve stem oil seal fitting tool -3365- and push carefully onto valve guide.

– Remove plastic sleeve -A-.

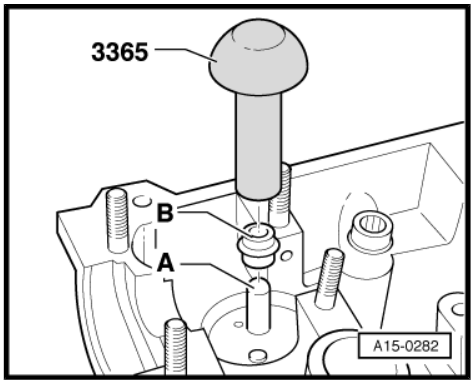

If the valve cotters have been removed from the assembly item then they must be inserted into the insertion device -VAS 5161/18- .

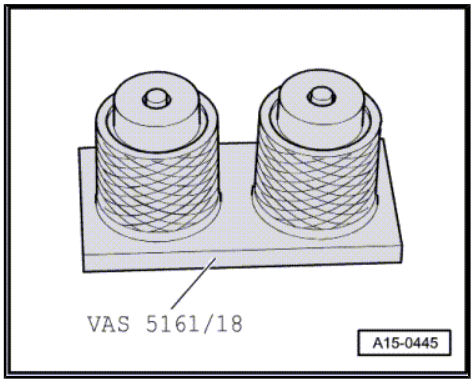

Note

Larger diameter faces upwards.

– Insert valve spring and valve spring plate.

– Secure guide plate -VAS 5161/7- back to cylinder head.

– Insert assembly cartridge -VAS 5161/8- into guide plate.

– Press pressure fork down and pull knurled screw upwards. This causes the valve cotters to be inserted.

– Release pressure fork with knurled screw still in pulled position.

– Install camshafts with camshaft adjuster ⇒ page 56 .

Adjusting valve timing ⇒ page 34 .

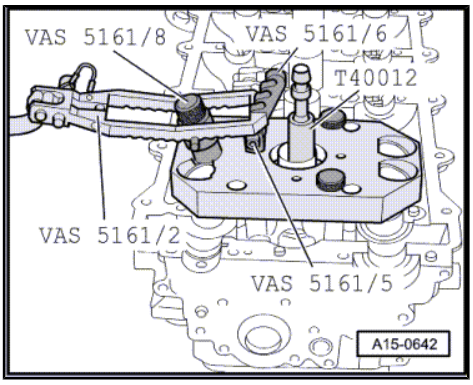

Note

- *After installing camshafts wait for approx. 30 minutes before starting engine. Hydraulic compensating elements must settle. (Valves will otherwise contact piston).*
- *After working on valve mechanism, carefully turn engine by hand to ensure that no valve strikes piston when engine is started.*

2.7 Checking valve guides

Special tools and workshop equipment required

- Universal dial gauge bracket -VW 387-

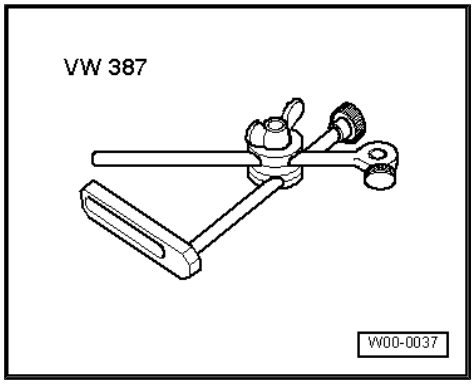

- Dial gauge

Test procedure

– Insert new valve into guide. The end of the valve stem must be flush with the guide. On account of differing stem diameters, only use inlet valve in inlet guide and exhaust valve in exhaust guide.

– Determine rock. Wear limit: 0.8 mm

If rock tolerance is exceeded:

– Renew cylinder head.

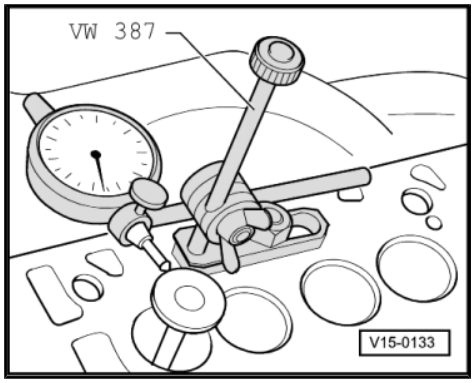

2.8 Reworking valve seats

Special tools and workshop equipment required

- Depth gauge
- Valve seat refacing tool

Procedure

Note

- *When repairing engines with leaking valves, it is not sufficient to rework or renew valve seats and valves. Particularly on high mileage engines, it is necessary also to check valve guides for wear* ⇒ page 65 *.*
- *Valve seats are only to be reworked to the extent required to yield a proper surface appearance. Before beginning to rework valve seats, calculate the maximum permissible reworking dimensions. If the reworking dimension is exceeded, the hydraulic valve clearance compensation can no longer be guaranteed and the cylinder head must be renewed.*

– Remove camshafts ⇒ page 56 .

The max. permissible reworking dimension is calculated as follows:

– Insert valve and press firmly against seat.

Note

If the valve is to be renewed as part of a repair, use a new valve for the calculation.

– Measure distance -a- between end of valve stem and upper edge of cylinder head.
– Calculate maximum permissible reworking dimension from measured distance -a- and minimum dimension.

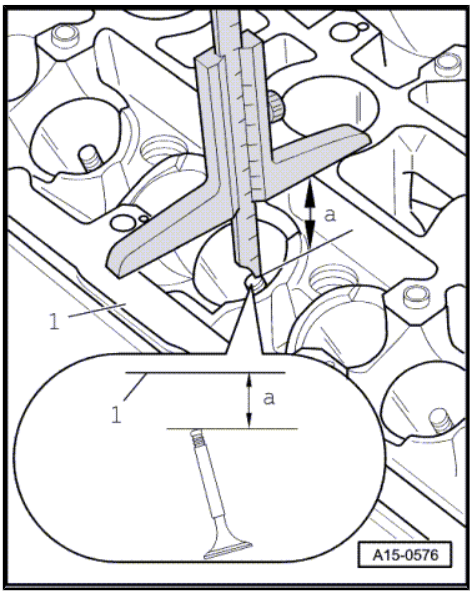

Minimum dimension:

Inlet valves (outer)	mm	34.0
Inlet valve (centre)	mm	33.7
Exhaust valves	mm	34.4

Measured distance -a- minus minimum dimension = maximum permissible reworking dimension.

Example:

	Measured distance	34.4 mm
—	Minimum dimension	34.0 mm
=	Max. permissible reworking dimension	0.4 mm

Note

If the max. permissible reworking dimension is 0 mm or below 0 mm, repeat measurement using new valves. If the result does not change renew cylinder head.

Reworking valve seats

Reworking inlet valve seat

a - = ∅ 26.2 mm

b - = 1.5…1.8 mm

Z - = bottom surface of cylinder head

α - 45° valve seat angle

β - 30° upper correction angle

γ - 60° lower correction angle

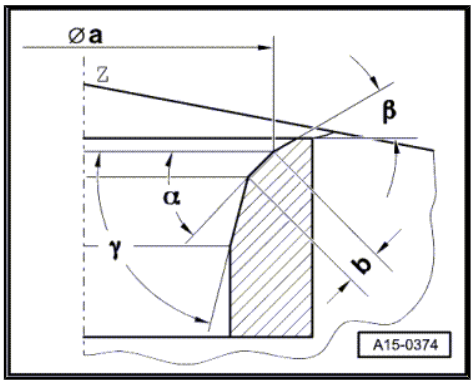

Reworking exhaust valve seat

a - = ∅ 29.0 mm

b - = approx. 1.8 mm

Z - = bottom surface of cylinder head

α - 45° valve seat angle

β - 30° upper correction angle

γ - 60° lower correction angle

17 – Lubrication

1 Removing and installing parts of lubrication system

Dismantling and assembling oil filter housing ⇒ page 69

Removing and installing sump ⇒ page 70 .

Removing and installing oil pump ⇒ page 71 .

Removing and installing drive chain for oil pump ⇒ page 74

Checking oil pressure and oil pressure switch ⇒ page 75

Note

If large quantities of metal shavings or particles are found when repairing the engine, the oil passages must be cleaned, and the oil cooler renewed in order to prevent further damage occurring later ⇒ page 69 .

Removing and installing oil return valves ⇒ Item 6 (page 17) , and ⇒ Item 21 (page 17) .

1.1 Engine oil

Engine oil specifications:

Use „long-life engine oil“ conforming to VW standard „503 00“ or „504 00“.

Note

- *The engine is factory-filled with oil which is designed for long service intervals.*
- *Engine oils conforming to VW standard 501 01 or 502 00 can continue to be used. These oils must be changed every 12 months or 15,000 kilometres. The service interval display must be programmed accordingly. Procedure: ⇒ Maintenance ; Booklet 17.1*
- *Engine oil „ILSAC GF3 with viscosity class SAE5W-40“ may be used to change or top up oil.*
- *Engine oil „ILSAC GF3 with viscosity class SAE5W-30“ may be used only to top up oil.*

1.2 Oil capacities:

With oil filter 7.5 l

Markings on oil dipstick

1 - Max. mark

2 - Min. mark

a - Area above hatched field up to max. mark: Do not top up with engine oil!

b - Engine oil level within hatched zone: Engine oil can be topped-up.

c - Area from min. mark up to hatched field: Must be topped up, max. 0.5 l of engine oil!

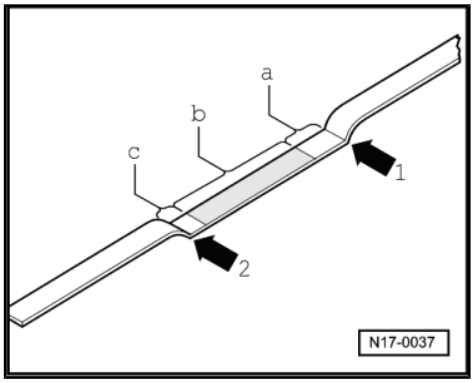

1.3 Dismantling and assembling oil filter housing

Assembly overview

Note

The oil filter housing can be removed or installed only with the engine removed ⇒ page 2 .

1 - Dowel sleeve

2 - Gasket
- ❑ For oil passage
- ❑ Renew.

3 - 10 Nm

4 - Oil cooler seal
- ❑ For oil passage

5 - 20 Nm
- ❑ Renew.

6 - Oil cooler

7 - Oil filter element
- ❑ Observe change intervals ⇒ Maintenance ; Booklet 17.1

8 - Oil filter lower part, 25 Nm

9 - Oil drain plug, 10 Nm

10 - Seal

11 - Oil cooler seal
- ❑ For coolant passage

12 - Oil filter housing

13 - 25 Nm

14 - Coolant drain plug, 10 Nm

15 - Coolant pipe

16 - 1.4 bar oil pressure switch -F1- , 20 Nm
- ❑ Checking ⇒ page 75 .

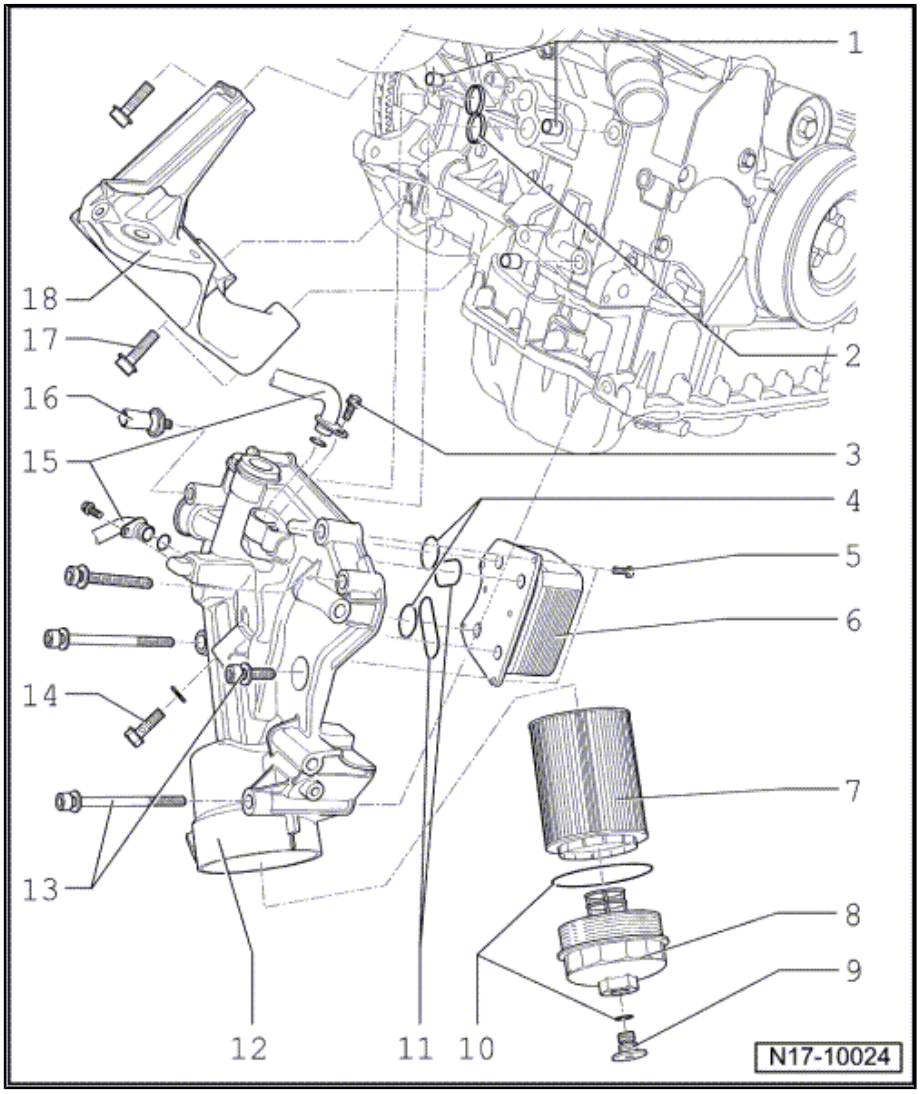

17 - 50 Nm + 1/4 turn (90°) further

- ❑ Renew.

18 - Engine mounting

1.4 Removing and installing oil sump

Note

The sump (upper and lower parts) can be removed or installed only with the oil filter housing removed ⇒ page 69 .

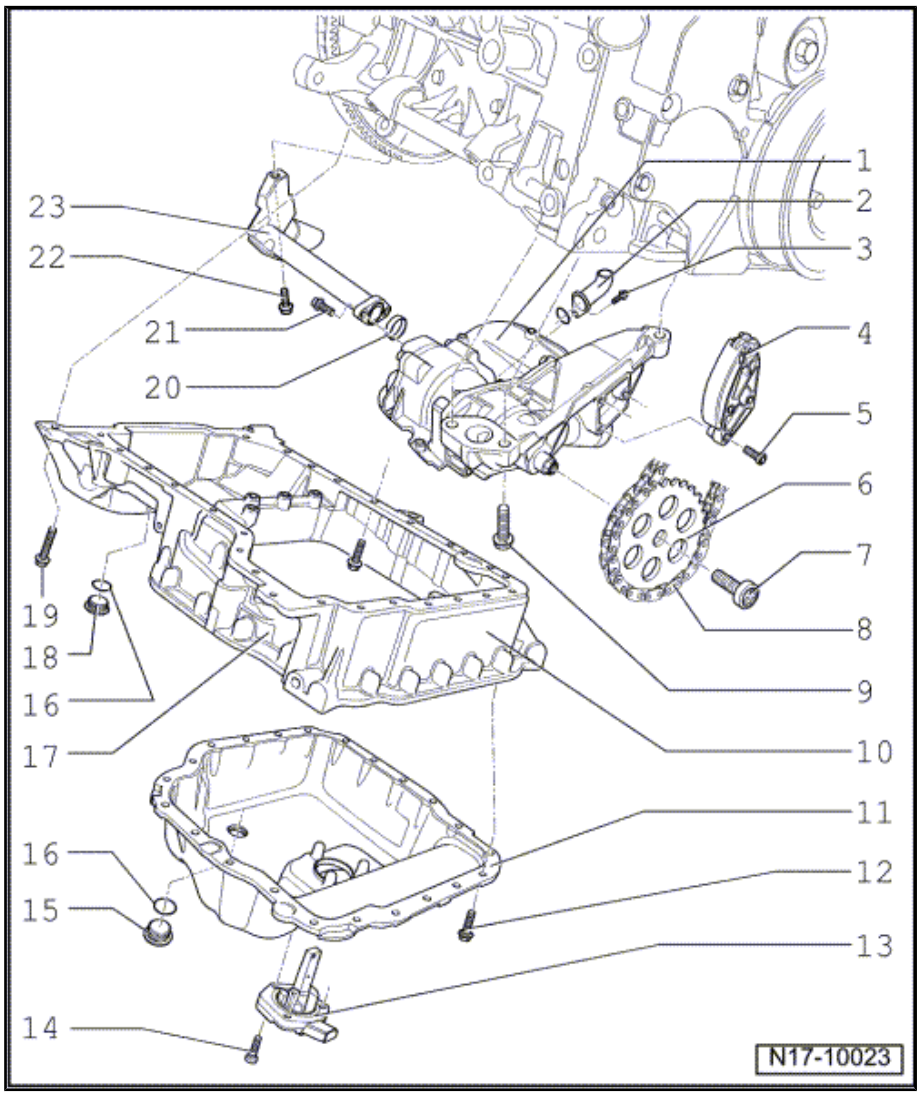

1 - Oil pump

- ❑ Removing and installing ⇒ page 71

2 - Pipe connection

3 - 10 Nm

4 - Chain tensioner

- ❑ Secure with locking pin - T40011- before removal.

5 - 10 Nm

6 - Chain sprocket

- ❑ Note installation position ⇒ page 71 .

7 - 34 Nm

8 - Drive chain

- ❑ For oil pump.
- ❑ Removing drive chain ⇒ page 74 .

9 - 30 Nm

10 - Sump, upper part

11 - Sump, lower part

12 - 10 Nm

13 - Oil level and oil temperature sender -G266-

14 - 10 Nm

15 - Oil drain plug, 50 Nm

- ❑ For sump, lower part

16 - Seal

- ❑ Renew.

17 - 15 Nm

18 - Oil drain plug, 50 Nm

- ❑ For sump, upper part

19 - 22 Nm

20 - Seal

- ❑ Renew.

21 - 10 Nm

22 - 25 Nm

23 - Oil suction pipe

❑ For sump, upper part

Installation position of oil pump chain drive sprocket

– Fit chain sprocket onto oil pump shaft. The flattened side -arrow- faces oil pump shaft and the inscription on the chain sprocket faces towards front.

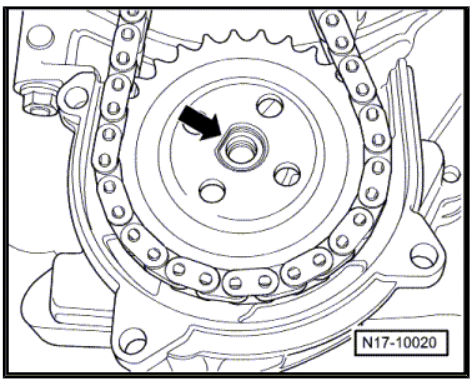

1.4.1 Removing and installing oil pump

Special tools and workshop equipment required

♦ Engine and gearbox support -VAS 6095-

♦ Locking pin -T40011-

♦ Silicone sealant D176 501A1

♦ Eye protection

Prerequisites

• Engine removed

• Engine is secured on engine and gearbox support -VAS 6095- .

Removing

– Drain engine oil from lower part and upper part of sump.

Note

Observe environmental regulations for disposal.

– Remove engine mounting on right ⇒ Item 18 (page 70) .

– Now the oil filter housing can be removed ⇒ Item 12 (page 69) .

– Unscrew bracket for dipstick guide tube -1- from cylinder head and pull out guide tube.

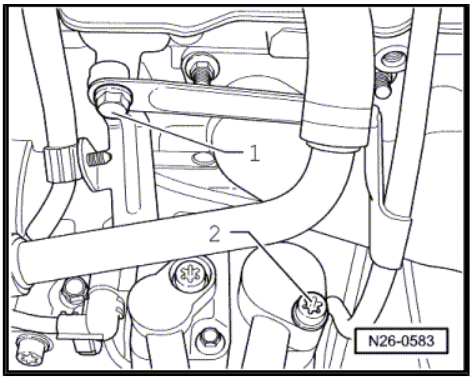

– Unscrew bracket for coolant drain pipe -from- upper part of sump. If necessary, slightly loosen banjo bolt -1-.

– Now unscrew lower part and upper part of sump.

– Loosen sump with light blows of a rubber headed hammer or light leverage with a lever, if necessary.

– Press chain tensioner together -in direction of arrow- and secure it with pin -T40011- -1-.

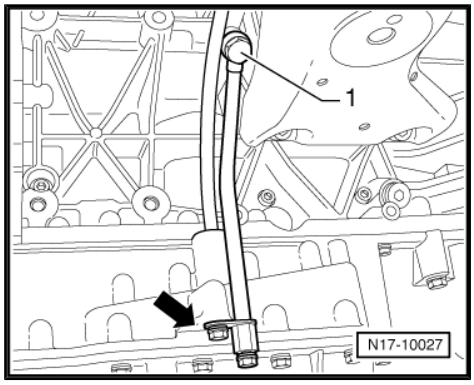

– Now unscrew chain sprocket -2- from oil pump.

– Unscrew the three oil pump securing bolts ⇒ Item 9 (page 70) and the oil suction pipe securing bolts ⇒ Item 22 (page 71) .

– Now oil pump can be removed.

– Remove sealant residue from cylinder block.

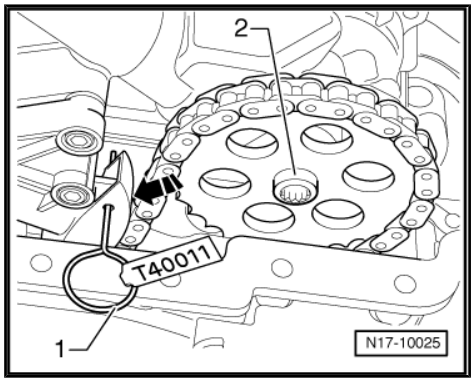

– Remove sealant residue on lower part and upper part of sump using a rotating brush, e.g. an electric drill with a plastic brush attachment (wear safety goggles).

– Clean sealing surfaces. They must be free of oil and grease.

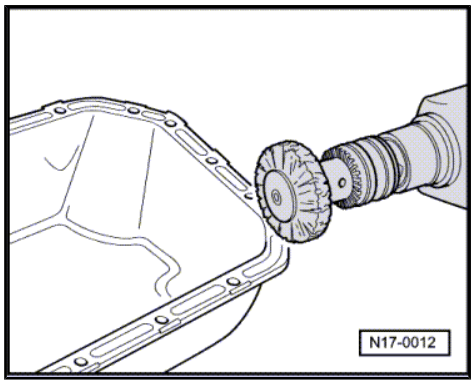

Installing

– Reinstall oil pump.

– Bolt chain sprocket to oil pump ⇒ page 71 .

– Remove locking pin -T40011- from chain tensioner.

– Now install upper part of sump as follows:

Note

♦ *Observe expiry date of sealing compound.*

♦ *The sump must be installed within 5 minutes of applying silicone sealing compound.*

– Cut off tube nozzle at front marking (∅ of nozzle approx. 1 mm).

– Coat clean sealing surface on upper part of sump with silicone sealant as shown in the illustration. The sealant bead must be 1.5 mm thick

Run bead along inner side of bolt holes -arrows-.

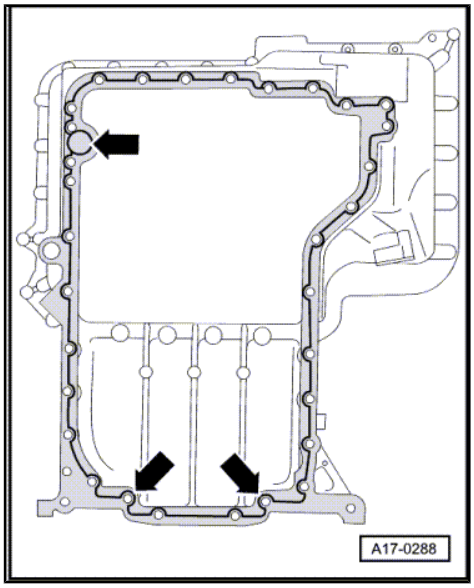

Note

The sealant bead must not be thicker, otherwise excess sealing compound will enter the oil sump and may block the oil suction line strainer.

– Fit upper part of sump immediately and lightly tighten all sump bolts „diagonally“.

– Then „diagonally“ tighten sump bolts -1- to 15 Nm and bolts -2- to 22 Nm.

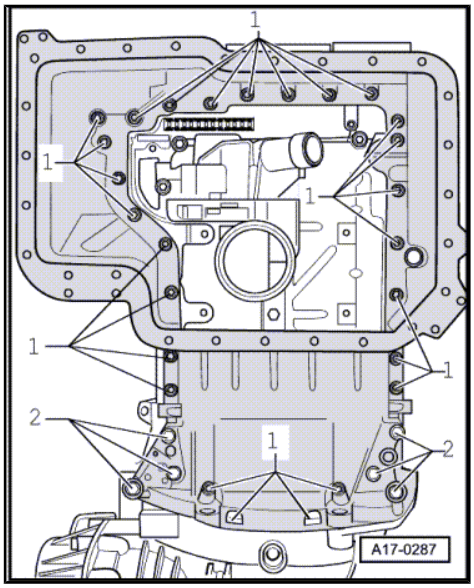

Now apply an approx. 1.5 mm bead of sealing compound -arrow- onto the clean sealing flange of the lower part of the oil sump as shown on illustration.

– Fit lower part of sump immediately and lightly tighten all sump bolts „diagonally“.

– Then „diagonally“ tighten oil sump bolts to 10 Nm.

– Insert dipstick guide tube.

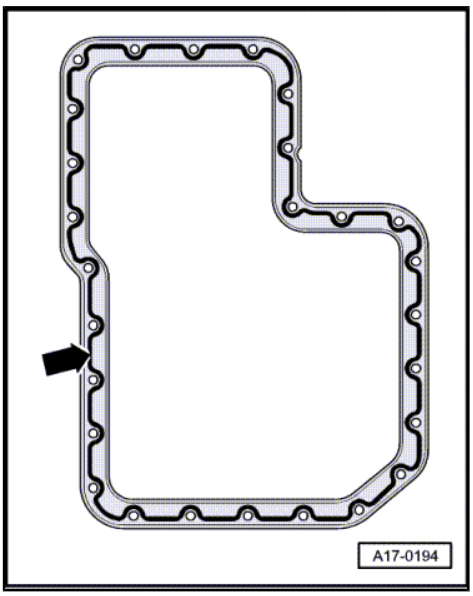

– Bolt coolant drain pipe to sump upper part -arrow- to 10 Nm and then bolt to cylinder block -1- to 30 Nm.

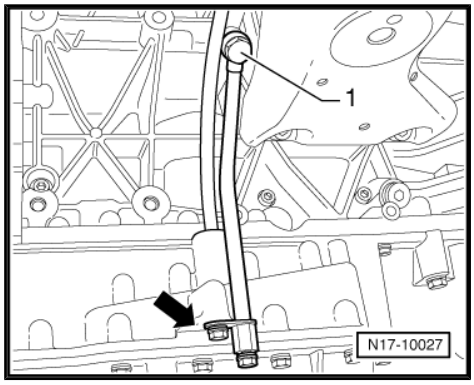

Note

Let sealing compound dry for approx. 30 minutes after installing oil sump. Only then fill with engine oil.

Further assembly is basically the reverse of the dismantling sequence.

1.4.2 Removing and installing drive chain for oil pump

- ♦ Engine removed
- ♦ Engine is secured on engine and gearbox support -VAS 6095- .

– Remove toothed belt ⇒ page 34 .

– Drain engine oil from lower part and upper part of sump.

Note

Observe environmental regulations for disposal.

– Remove lower part and upper part of sump.

– Remove front sealing flange ⇒ page 21 .

– Mark front face of thrust washer ⇒ Item 14 (page 22) using a coloured felt-tip marker.

– Remove oil pump ⇒ page 71 .

– Remove thrust washer from crankshaft journal.

– Mark direction of rotation of drive chain using a coloured felt-tip marker.

– Remove drive chain for oil pump.

The assembly is basically a reverse of the dismantling sequence.

When doing this note installation position of chain sprocket ⇒ page 71 .

1.5 Checking oil pressure and oil pressure switch

Special tools and workshop equipment required

- Oil pressure tester -V.A.G 1342-
- Adapter -V.A.G 1342/14-
- Voltage tester -V.A.G 1527B-
- Auxiliary measuring set -V.A.G 1594C-

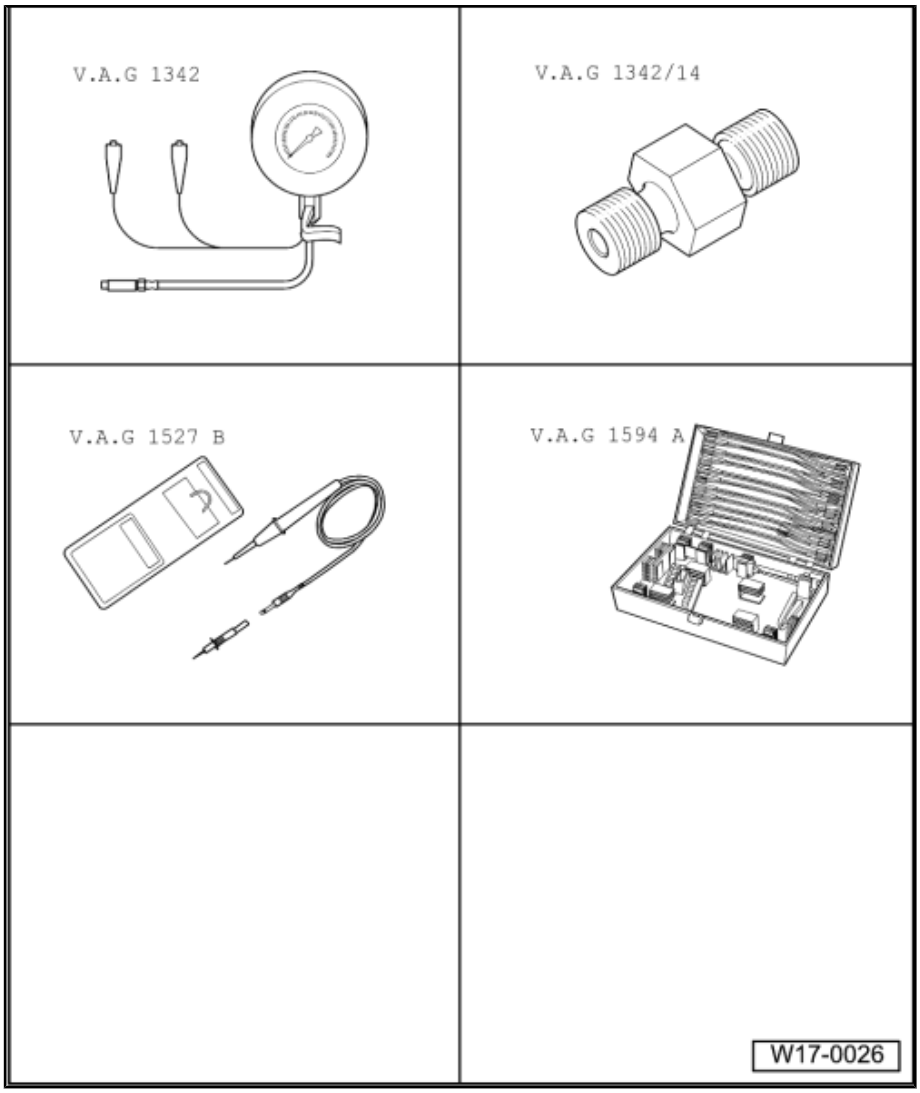

Test prerequisites

- Engine oil level OK.
- Oil pressure warning lamp -K3- must light up for approx. 3 seconds when ignition is switched on
- Engine oil temperature at least 80 °C (radiator fan must have run once)

Checking oil pressure

– Check oil pressure at different revolutions: 2000 rpm: 3.0…5.5 bar, above 2000 rpm: maximal 7.0 bar.

If the specifications are not obtained

– Rectify mechanical damage, e.g. bearing damage.

At higher engine speeds, the oil pressure must not exceed 7.0 bar.

If the specification is exceeded:

– Renew oil pump, if necessary ⇒ page 71 .

Checking oil pressure switch

– Remove oil pressure switch -F1- and screw into tester.

– Screw oil pressure tester -V.A.G 1342- with adapter -V.A.G 1342/14- into oil filter housing in place of oil pressure switch. ⇒ Item 16 (page 69) .

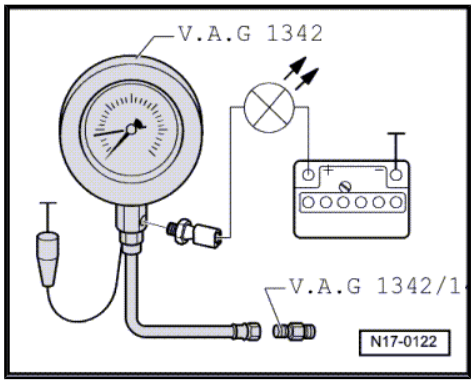

Note

Observe installation position of adapter: the conical connecting piece of adapter must be screwed into pressure hose of tester.

– Connect brown wire of tester to earth (-).

– Connect voltage tester -V.A.G 1527B- using test cables from -V.A.G 1594 C- to battery positive (+) and oil pressure switch. LED must not light up.

If the LED lights up:

– Renew oil pressure switch -F1- .

If LED does not light up:

– Start engine and run at idling speed. At 1.2…1.6 bar the LED must light up, otherwise renew oil pressure switch -F1- .

19 – Cooling

1 Removing and installing parts of cooling system

Caution

When doing any repair work, especially in the engine compartment, pay attention to the following due to the cramped conditions:

- *Route all the various lines (e.g. for fuel, hydraulics, activated charcoal filter system, coolant, refrigerant, brake fluid and vacuum) and electrical wiring in their original positions.*
- *To avoid damage to lines, ensure sufficient clearance to all moving or hot components.*

Note

- *When the engine is warm, the cooling system is under pressure. If necessary, release pressure before beginning repair work.*
- *Hoses are secured with spring-type clips. In case of repair, only use spring-type clips.*
- *Spring-type clip pliers -VAS 6340- are recommended for installation of spring-type clips.*
- *When installing coolant hoses, route stress-free so that they do not come into contact with other components (observe markings on coolant connection and hose).*

Test for leaks in cooling system using cooling system tester -V.A.G 1274- and adapter for cooling system tester -V.A.G 1274/8- and adapter for cooling system tester -V.A.G 1274/9- .

Assembly overview - radiator ⇒ page 78

Assembly overview - radiator fan ⇒ page 79 .

Removing and installing fan support with fan ⇒ page 79 .

Assembly overview - parts of cooling system, engine side, front ⇒ page 81 .

Assembly overview - parts of cooling system, engine side, rear ⇒ page 81 .

Assembly overview - parts of cooling system, body side ⇒ page 83 .

Draining and filling with coolant ⇒ page 86 .

Coolant hose schematic diagram ⇒ page 84

Coolant mixture ratios ⇒ page 86 , draining and filling with coolant.

Removing and installing coolant pump and thermostat ⇒ page 89 .

1.1 Assembly overview - radiator

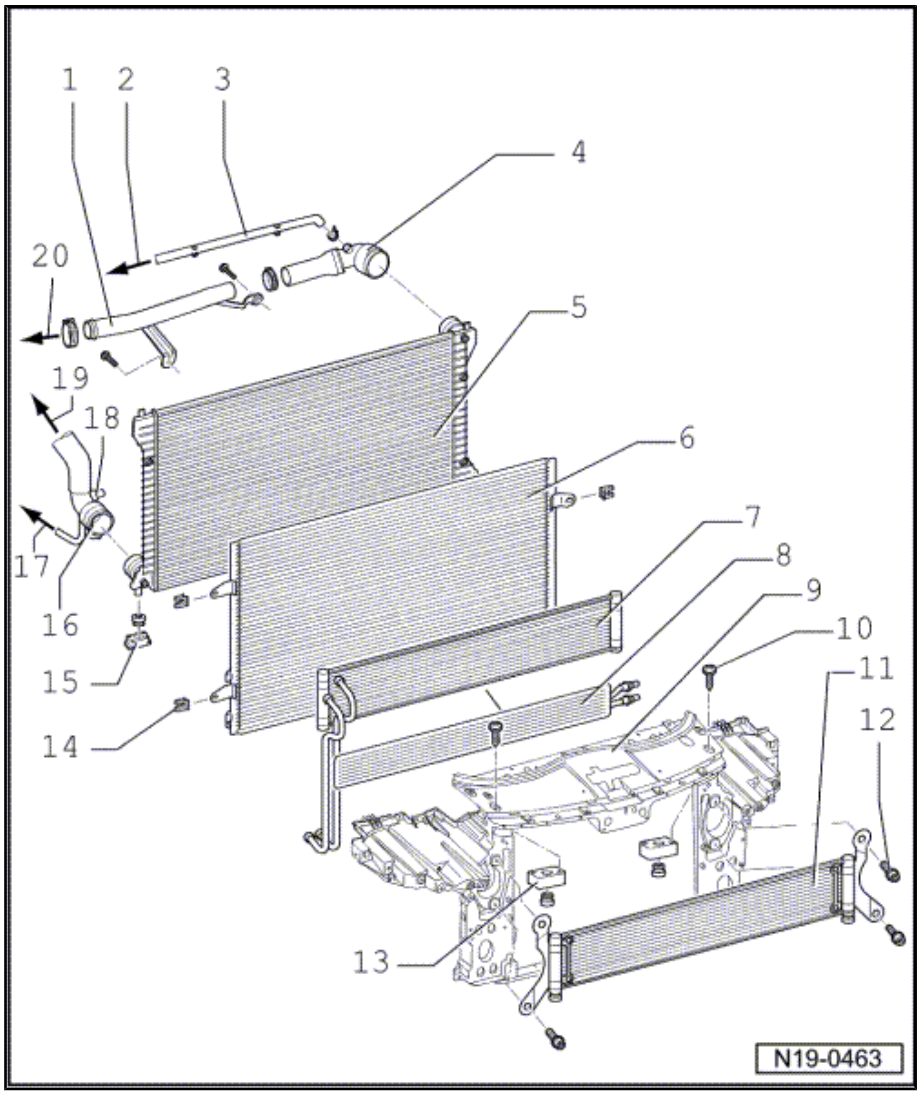

1 - Coolant pipe
- ❑ Secured to fan support with spacers.

2 - To expansion tank

3 - Coolant hose
- ❑ Secured to top of front end with retaining clips.

4 - Upper coolant hose
- ❑ Secured to radiator with quick-release coupling.
- ❑ Check for secure seating.
- ❑ With junction for coolant hose leading to expansion tank.

5 - Radiator/cooler
- ❑ Removing and installing ⇒ page 88
- ❑ After renewing, renew entire coolant.

6 - Condenser

7 - Oil cooler
- ❑ For gear oil

8 - Oil cooler
- ❑ For power-assisted steering

9 - Lock carrier

10 - 10 Nm

11 - Low-temperature cooler
- ❑ For fuel cooling
- ❑ Only with certain equipment

12 - 10 Nm

13 - Rubber bush
- ❑ For lock carrier

14 - Retaining clip
- ❑ Check for secure seating.

15 - Rubber bush

16 - Lower coolant hose
- ❑ Secured to radiator with quick-release coupling.
- ❑ Check for secure seating.

17 - To coolant pump -V36-

18 - Coolant outlet temperature sender -G83-

19 - To coolant pump.

20 - To coolant pipe on top/side.
- ❑ Bolted to cylinder head bank 1.

1.2 Assembly overview - radiator fan

1 - Radiator fan -V7-

2 - Fan support
- ❑ Clipped onto radiator.
- ❑ Check for secure seating.

3 - 10 Nm

4 - 10 Nm

5 - Radiator fan 2 -V177-

6 - Radiator fan control unit -J293-

7 - 10 Nm

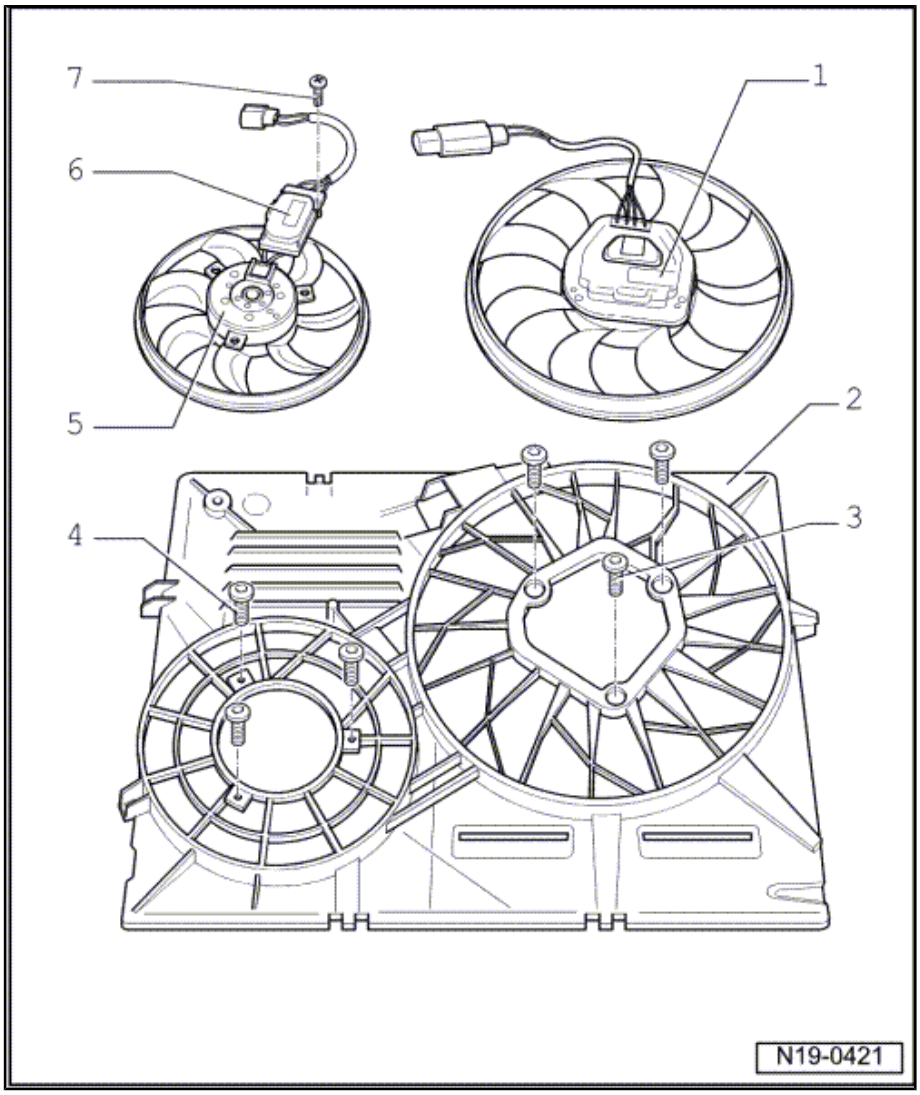

1.3 Removing and installing fan support with fan

Special tools and workshop equipment required

♦ Spring-type clip pliers -VAS 5024A-

Removing

> ⚠ WARNING
>
> *Steam may escape when expansion tank is opened. Wear eye protection and protective clothing to avoid eye injuries and scalding. Cover cap with cloth and open carefully.*

– Open and close cap on coolant expansion tank.

– Release coolant hose retaining clips from front end using a screwdriver.

– Unscrew coolant pipe from fan support -arrow-.
– Loosen spring-type clips on coolant pipe and swivel it upwards together with spacers.
– Disconnect connectors from radiator, loosen cable clamps on fan support and lay wiring harness to side.

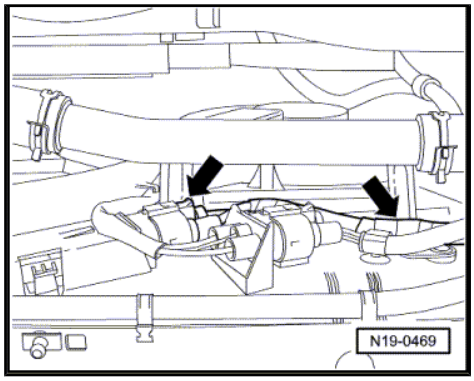

– Pull retaining ring -1- of rubber mounting on left and right in direction of arrow off brake vacuum pump -V192- and lay pump to side.
– Then release locking mechanisms on left and right of radiator using a screwdriver -arrows- and lift out complete fan support upwards.

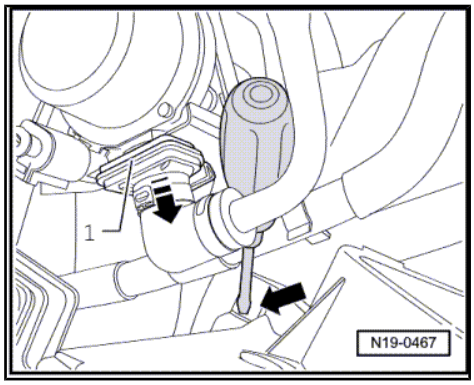

1.4 Assembly overview - parts of cooling system, engine side, front

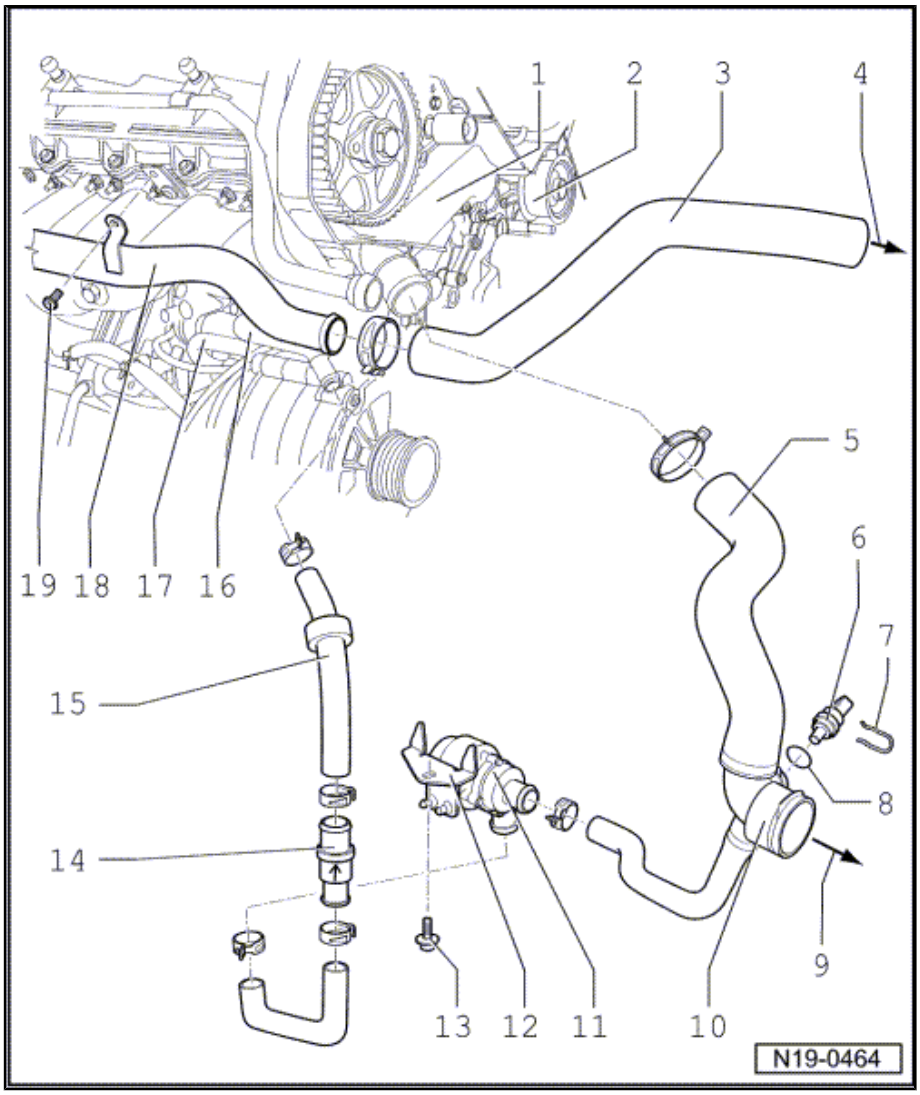

1 - Thermostat housing

2 - Coolant pump
- ❑ Check for ease of movement.
- ❑ Removing and installing ⇒ page 89

3 - Upper coolant hose

4 - To radiator

5 - Lower coolant hose

6 - Radiator outlet coolant temperature sender -G83-
- ❑ Before removing, release pressure in cooling system if necessary.

7 - Retaining clip
- ❑ Check for secure seating.

8 - O-ring
- ❑ Renew if damaged.

9 - To bottom of radiator

10 - Connection
- ❑ Secured to radiator with quick-release coupling.
- ❑ Check for secure seating.

11 - Coolant pump -V36-
- ❑ Checking ⇒ page 85 .
- ❑ Fitting location of pump: bolted to longitudinal member on right.

12 - Bracket

13 - 23 Nm

14 - Non-return valve
- ❑ Note installation position.
- ❑ Arrow points towards engine.

15 - Coolant hose

16 - Coolant pipe

17 - Coolant pipe

18 - Coolant pipe, on side

19 - 10 Nm

1.5 Assembly overview - parts of cooling system, engine side, rear

Assembly overview

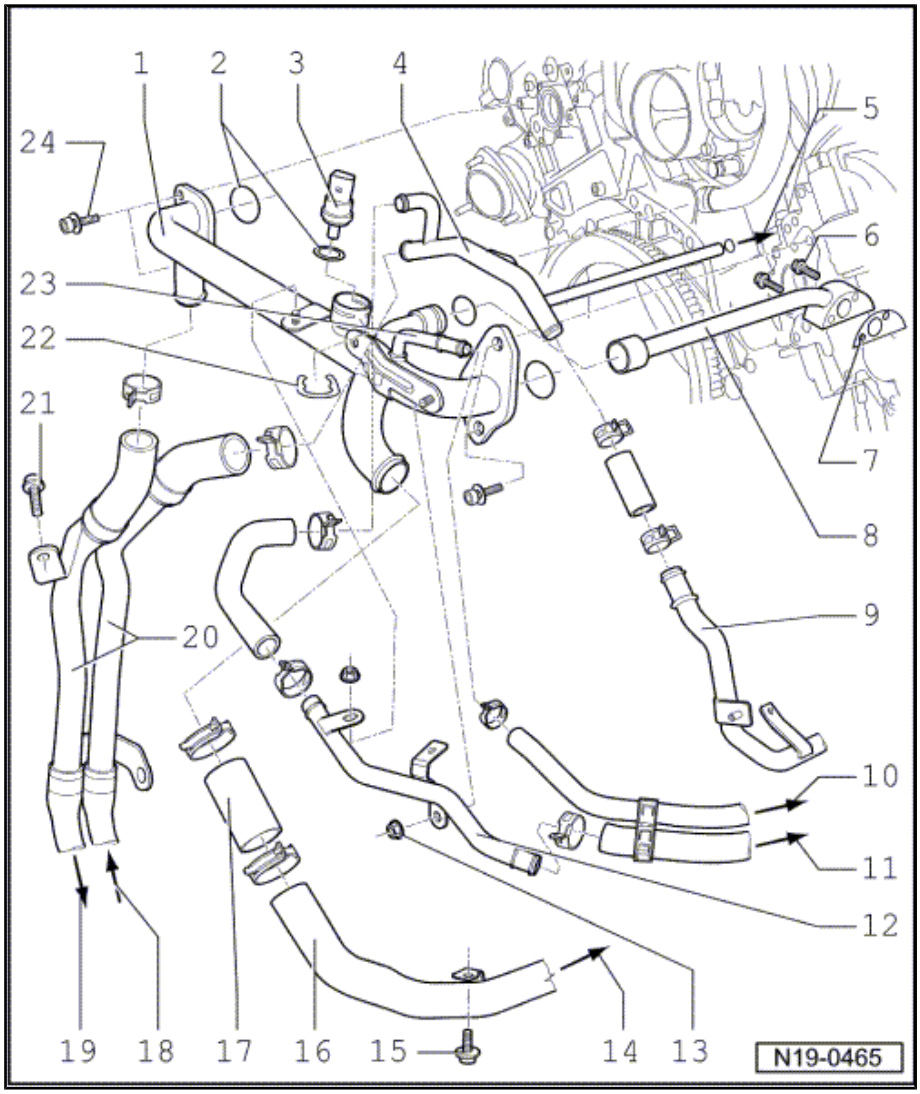

1 - Coolant pipe

- ❑ Between left and right cylinder head
- ❑ With junction to heat exchanger for heating, expansion tank and upper coolant hose.

2 - O-ring

- ❑ Renew.

3 - Coolant temperature sender -G62-

- ❑ With coolant temperature display sender -G2- .
- ❑ For engine control unit.
- ❑ Before removing, release pressure in cooling system if necessary.

4 - Coolant pipe

5 - To thermostat.

6 - 20 Nm

7 - Gasket

8 - Coolant pipe

- ❑ From cylinder head bank 1

9 - Coolant pipe

- ❑ To oil filter housing

10 - To expansion tank

11 - To expansion tank

12 - Coolant pipe

13 - 10 Nm

14 - To upper coolant hose

15 - 10 Nm

16 - Coolant pipe, on side

- ❑ On cylinder head bank 1

17 - Coolant hose

18 - From heat exchanger for heater unit

19 - To heat exchanger for heater unit.

20 - Coolant pipe

21 - 10 Nm

22 - Retaining clip

- ❑ Check for secure seating.

23 - Connection

- ❑ To expansion tank

24 - 10 Nm

1.6 Assembly overview - parts of cooling system, body side

1 - Expansion tank

- ❑ Test cooling system for leaks using cooling system tester -V.A.G 1274- and adapter for cooling system tester -V.A.G 1274/8- .

2 - Cap

- ❑ Check using cooling system tester -V.A.G 1274- and adapter for cooling system tester -V.A.G 1274/9- .
- ❑ Test pressure: 1.4…1.6 bar.

3 - Connector

- ❑ For coolant shortage indicator

4 - Spring-type clip

- ❑ Check for secure seating.

5 - Coolant hose

6 - To connection

7 - To coolant pipe

8 - Overflow hose

9 - 10 Nm

10 - Coolant pipe

11 - To upper coolant hose

12 - 8 Nm

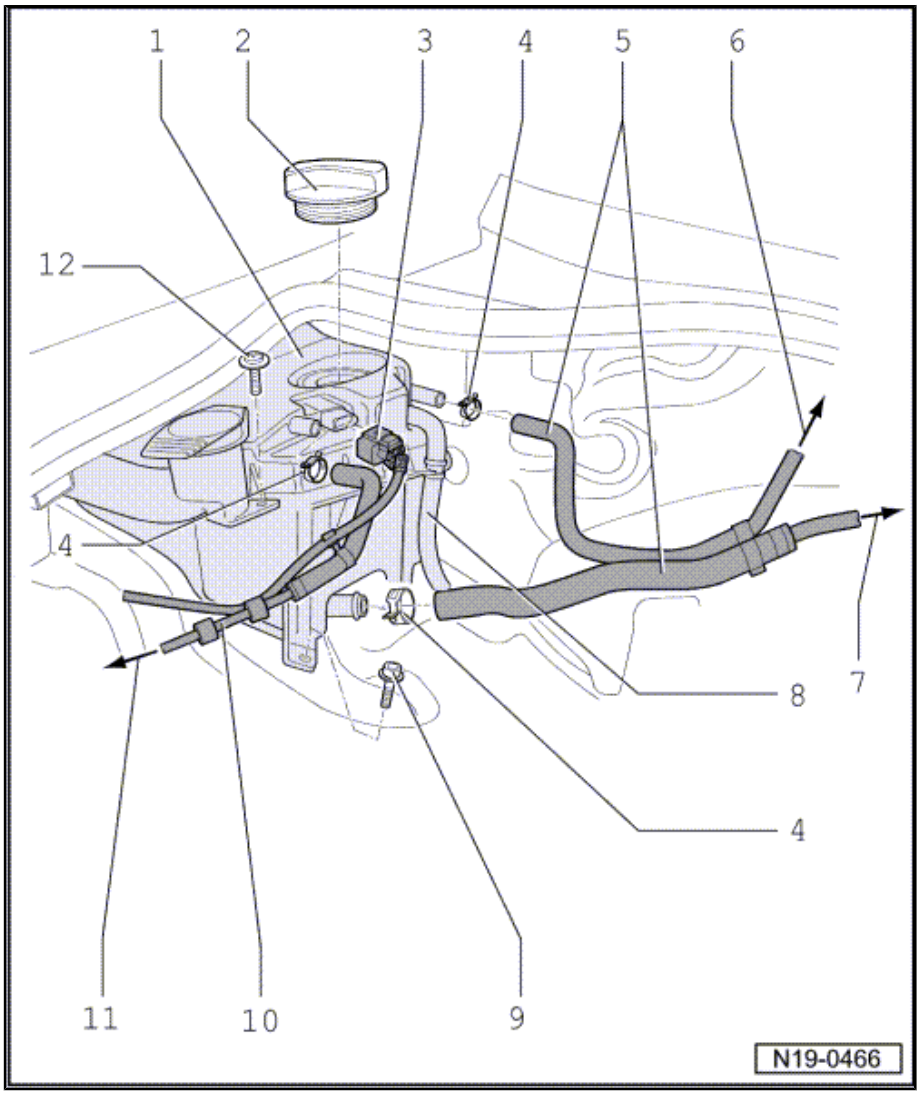

1.7 Coolant hose schematic diagram

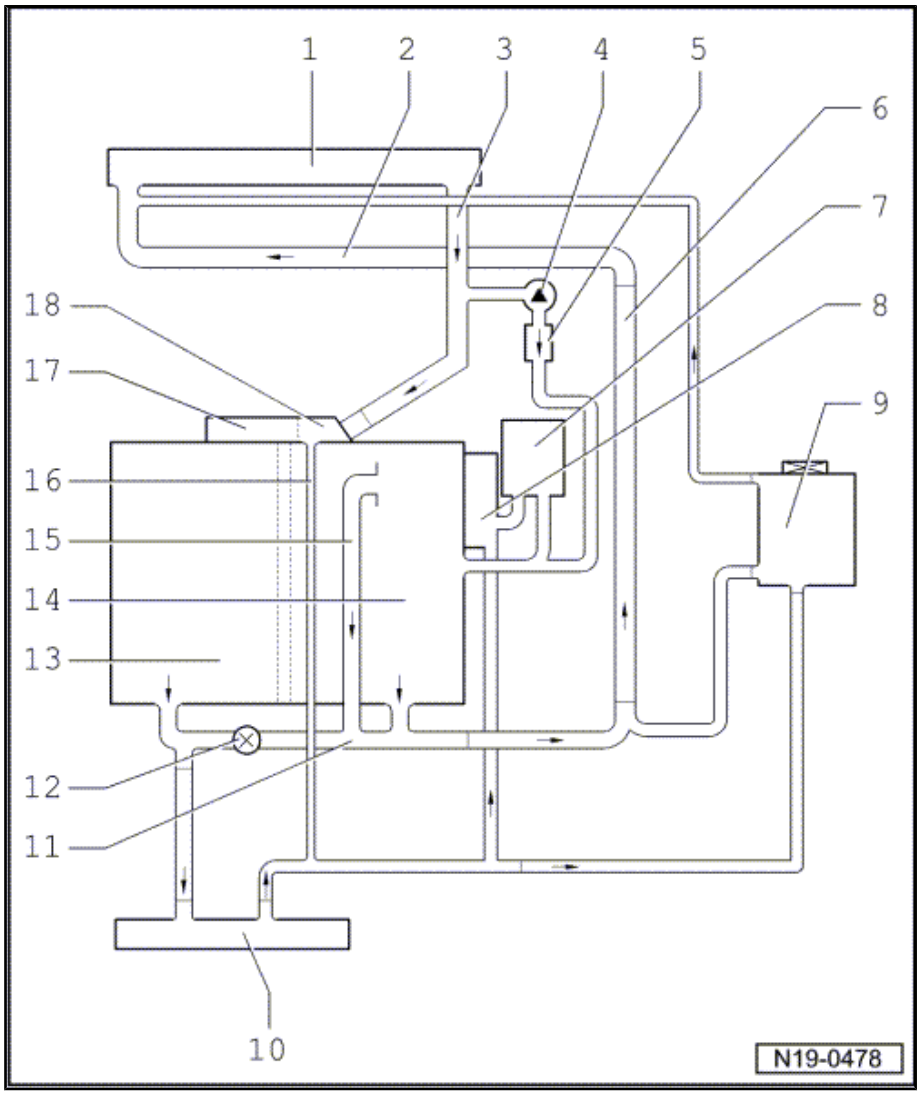

1 - Radiator/cooler

2 - Upper coolant hose

3 - Lower coolant hose

4 - Coolant pump -V36-

5 - Non-return valve

- ❑ Note installation position.
- ❑ Arrow points in direction of flow.

6 - Coolant pipe

- ❑ Secured to cylinder head bank 1.

7 - Alternator

8 - Oil cooler

- ❑ For engine oil.

9 - Expansion tank

10 - Heat exchanger for heater unit

11 - Coolant pipe

- ❑ Secured between cylinder head bank 1 and cylinder head bank 2.

12 - Coolant temperature sender -G62-

13 - Cylinder bank 2.

14 - Cylinder bank 1.

15 - Coolant pipe

- ❑ Connected to cylinder head bank 1.

16 - Coolant pipe

- ❑ To thermostat housing

17 - Coolant pump

18 - Thermostat housing

Fitting location of water pump -V36-

The water pump -V36- -2- is clipped to the bracket with damping rings and is bolted to the longitudinal member on right together with the bracket.

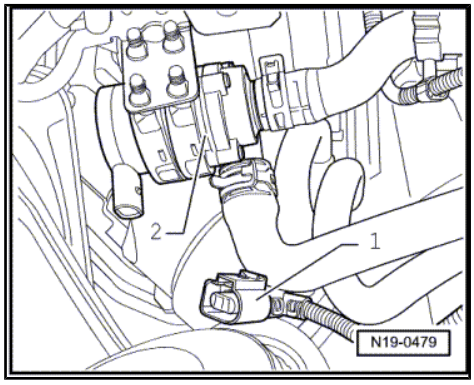

1.8 Checking water pump -V36-

Special tools and workshop equipment required

♦ Voltage tester -V.A.G 1527/B-

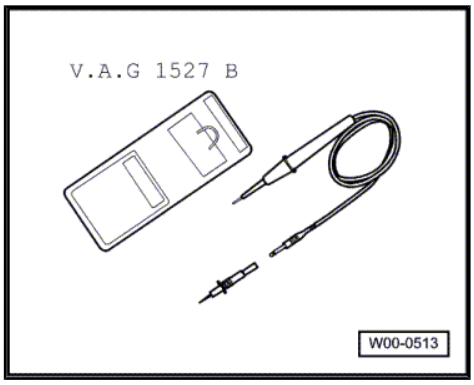

♦ Auxiliary measuring set -V.A.G 1594/C-

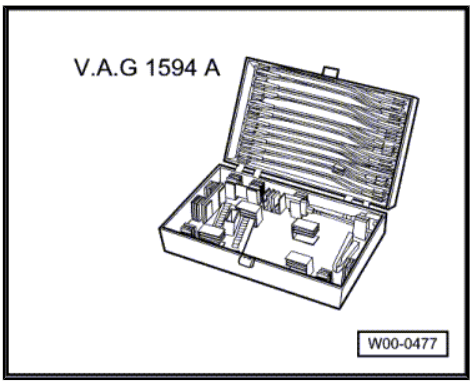

♦ Current flow diagram

Test prerequisite

- Fuse -16- -arrow- must be OK.

Test procedure

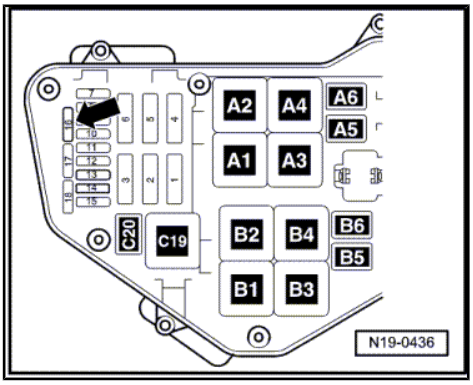

– Pull 2-pin connector -1- off coolant pump -V36- -2-.

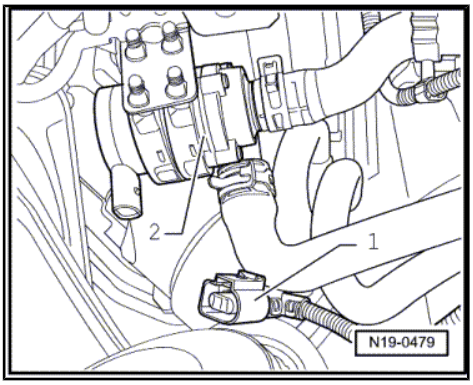

– Connect contact -1- of water pump -V36- to battery positive (+) and contact -2- to earth (-) using auxiliary cables from auxiliary measuring set -V.A.G 1594C- . Pump must run.

If the pump does not start operating:

– Renew water pump -V36- .

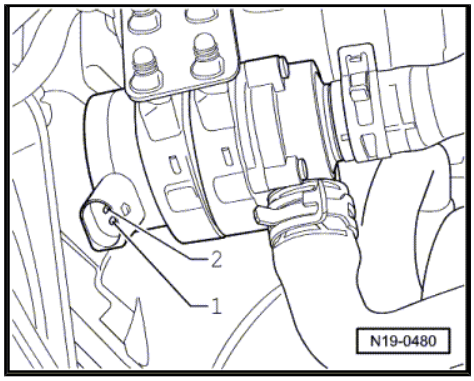

1.9 Draining and filling coolant

Special tools and workshop equipment required

- Refractometer -T10007-
- Drip tray -V.A.G 1306-
- Spring-type clip pliers -VAS 5024A-
- Adapter for cooling system tester -V.A.G 1274/8-
- Torque wrench -V.A.G 1331-
- Cooling system charge unit -VAS 6096-

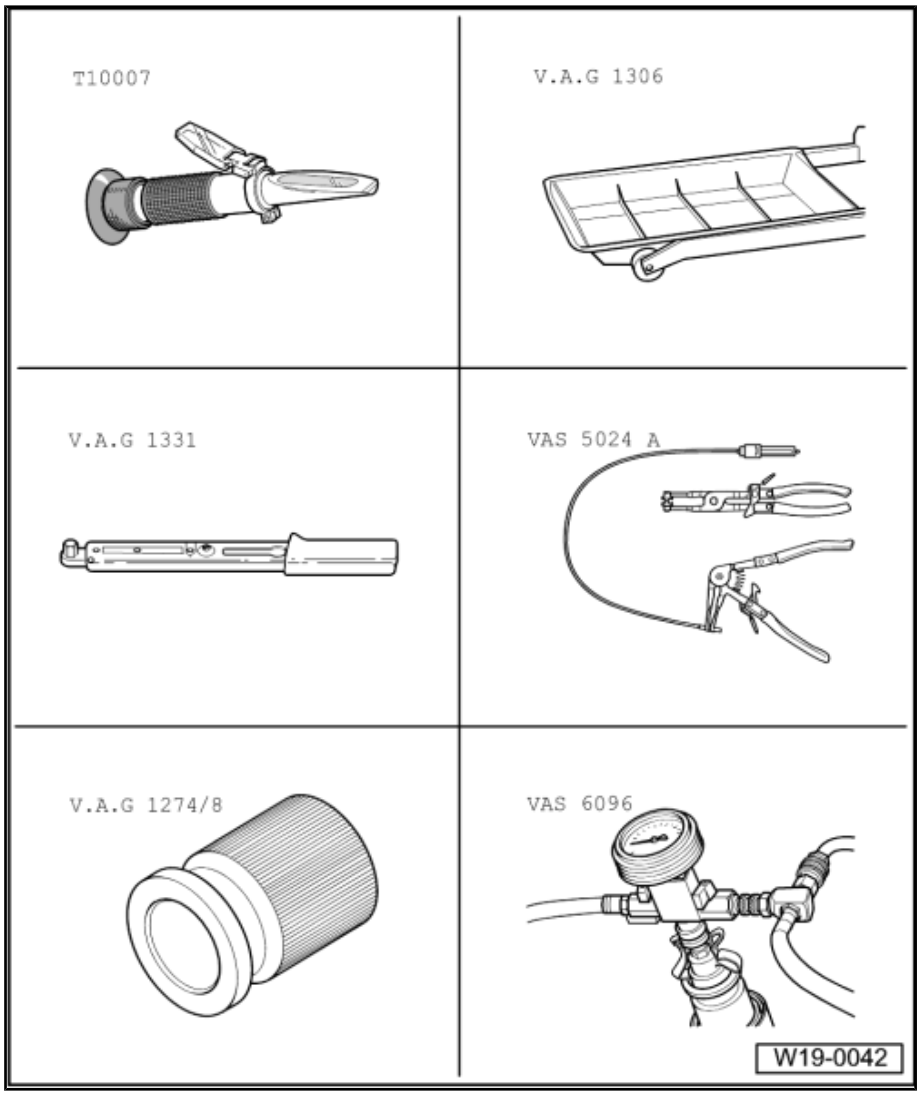

Draining

WARNING

Steam may escape when expansion tank is opened. Wear eye protection and protective clothing to avoid eye injuries and scalding. Cover cap with cloth and open carefully.

– Open cap on coolant expansion tank.
– Remove noise insulation. ⇒ General body repairs, exterior; Rep. gr. 50 ; Body - front; Assembly overview - noise insulation .
– Place drip tray -V.A.G 1306- under vehicle.
– Disconnect coolant hoses -1- from water pump -V36- .

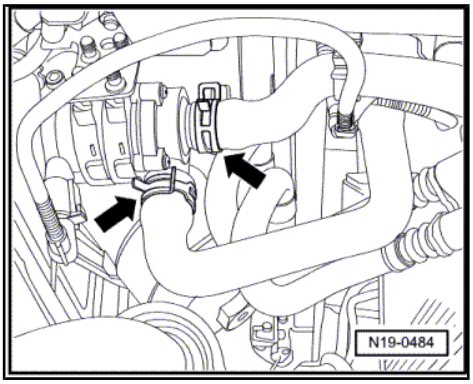

Note

Follow disposal regulations for coolant!

Filling

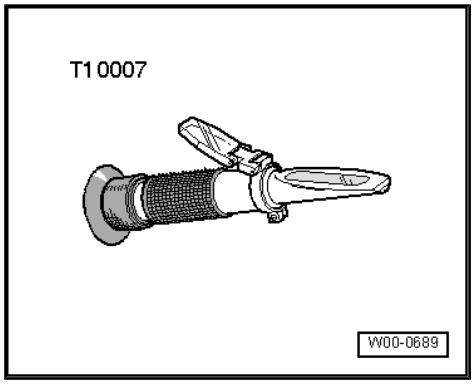

Note

- *Use only coolant additive G12 plus in accordance with „TL VW 774 F“. Identification: purple colour.*
- *G 12 plus and coolant additives marked „Conforming to TL VW 774 F“ prevent frost and corrosion damage and scaling and also raise boiling point of coolant. Therefore, the cooling system must be filled all year round with frost and corrosion protection additives.*
- *Because of its higher boiling point, the coolant improves engine reliability under heavy loads, particularly in countries with tropical climates.*
- *Frost protection is required down to about -25°C (in countries with arctic climates: down to about -35°C).*
- *The coolant concentration must not be reduced by adding water even in warmer seasons and in warmer countries. The coolant additive concentration must be at least 40%.*
- *If for climatic reasons greater frost protection is required, the amount of G 12 can be increased, but only up to 60 % (frost protection to about -40 °C). Otherwise frost protection and cooling effectiveness are reduced again.*
- *If radiator, heat exchanger, cylinder head or cylinder head gasket is renewed, do not reuse old coolant.*
- *The Refractometer -T10007- is recommended for determining the current anti-freeze density.*

Recommended mixture ratios:

Frost protection to	Anti-freeze quantity	G 12[2)]	Water[2)]
-25 °C -35 °C	4.0 l 4.5 l	4.0 l 4.5 l	5.0 l 4.5 l

2) The quantity of coolant can vary depending upon vehicle equipment.

– Install coolant hoses and secure.

– Screw adapter for cooling system tester -V.A.G 1274/8- onto expansion tank.

– Fill coolant circuit using cooling system charge unit -VAS 6096- ⇒ Operating instructions for cooling system charge unit VAS 6096 .

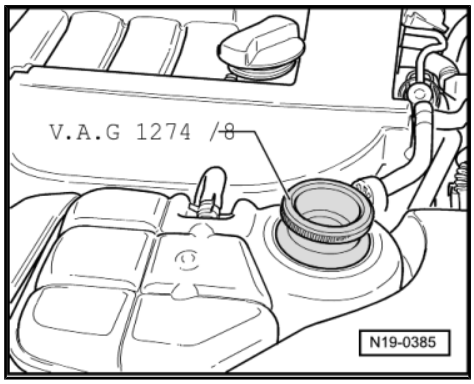

1.10 Removing and installing radiator

Special tools and workshop equipment required

- Drip tray -V.A.G 1306-

♦ Torque wrench -V.A.G 1331-

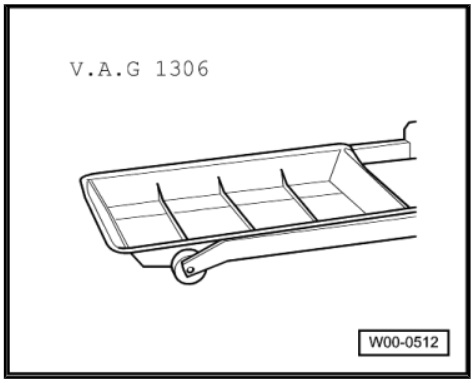

Removing

– Drain coolant ⇒ page 86 .

– Pull out retaining clips from quick-release coupling for coolant hose at top and bottom and detach coolant hoses from radiator.

– Remove front bumper ⇒ General body repairs, exterior; Rep. gr. 63 ; Assembly overview - front bumper

– Remove fans with fan support ⇒ page 79 .

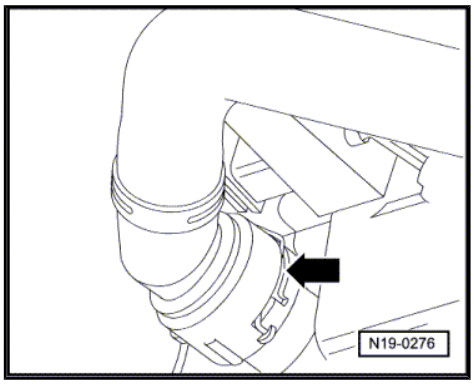

– Loosen securing clips for condenser and ATF cooler.

– Remove upper securing bolts for radiator and remove radiator upwards.

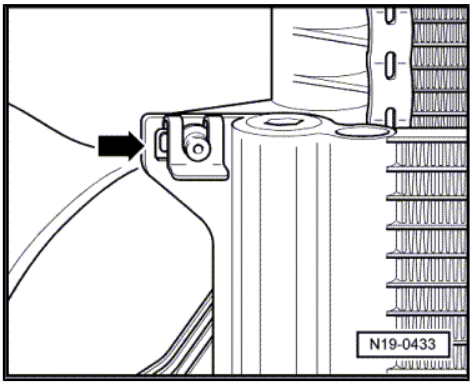

Installing

Installation is carried out in the reverse order. When installing, note the following:

– Replenish coolant ⇒ page 86 .

– Electrical connections and routing ⇒ Current flow diagrams, Electrical fault finding and Fitting locations.

– Install front bumper: ⇒ General body repairs, exterior; Rep. gr. 63 ; Assembly overview - front bumper

– Check headlight adjustment and correct if necessary ⇒ Maintenance ; Booklet 17.1 .

1.11 Removing and installing coolant pump and thermostat

Special tools and workshop equipment required

♦ Drip tray -V.A.G 1306-

♦ Torque wrench -V.A.G 1331-

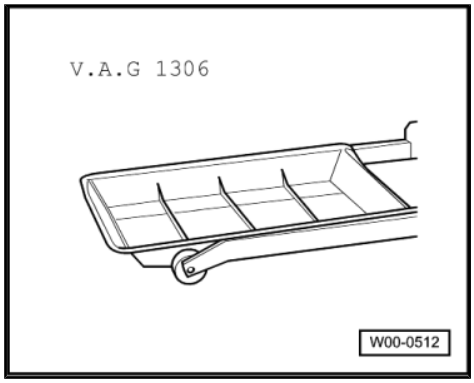

Removing

– Drain coolant ⇒ page 86 .
– Remove upper coolant hose from thermostat housing.
– Remove radiator fans with radiator fan support ⇒ page 79 .
– Remove poly V-belt ⇒ page 18 .
– Remove toothed belt ⇒ page 34 .

If thermostat must be renewed:

– Unscrew securing bolts of thermostat housing -arrows-.
– First remove seal and then thermostat.

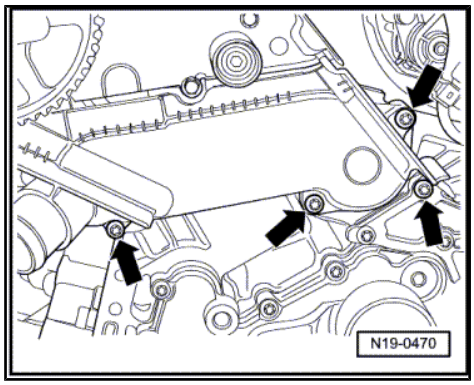

Installing

– Insert thermostat with bleeder valve -arrow- facing upwards.
– Moisten new O-ring with coolant and install it.
– Install thermostat housing by first screwing in all securing bolts by hand and then tightening all bolts to specified torque of 10 Nm.

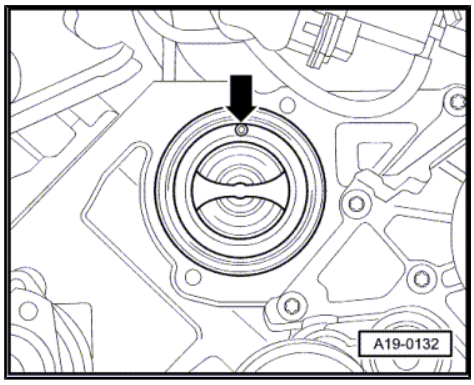

If coolant pump must be renewed:

– Remove toothed belt guard securing nuts -1-.

– Then unscrew all coolant pump securing bolts -arrows-.

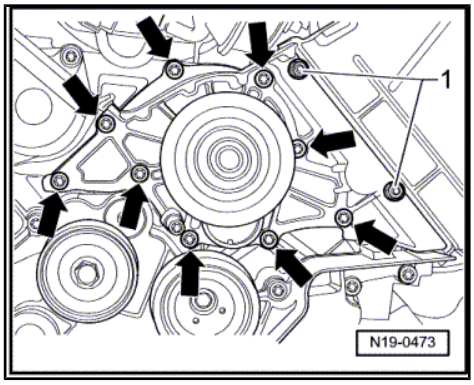

Installation is carried out in the reverse order. When installing, note the following:

– Insert coolant pump with gasket.

– Screw in all securing bolts by hand and tighten to specified torque. Specified torque: 15 Nm

– Reinstall toothed belt ⇒ page 34 .

– Install poly V-belt ⇒ page 18 .

– Replenish coolant ⇒ page 86 .

1.12 Checking cooling system for leaks

Special tools and workshop equipment required

♦ Cooling system tester -V.A.G 1274-

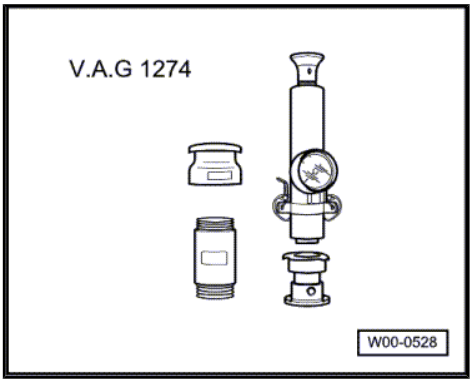

♦ Adapter for cooling system tester -V.A.G 1274/8-

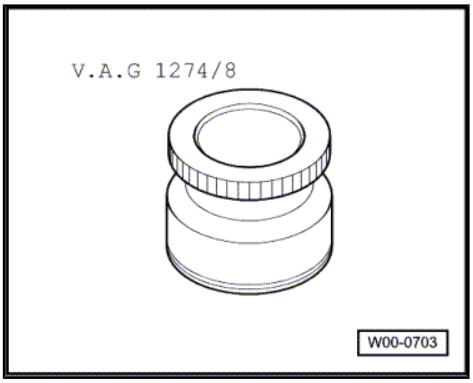

♦ Adapter for cooling system tester -V.A.G 1274/9-

– Screw cooling system tester -V.A.G 1274- with adapter -V.A.G 1274/8- onto expansion tank.

– Operate pump on tester and build-up pressure of between 1.4 and 1.6 bar.

– Check cooling system tester for leaks.

– In addition, check sealing cap.

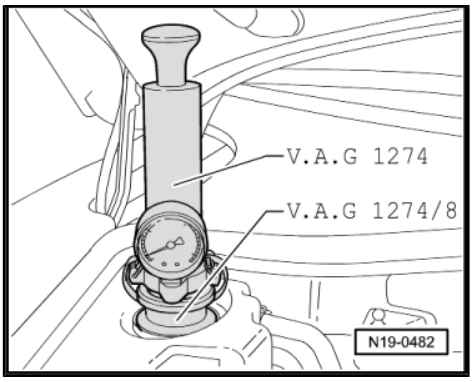

– To do this screw the cooling system tester -V.A.G 1274- and the adapter for cooling system tester -V.A.G 1274/9- on sealing cap as shown.
– Operate pump on tester and create a pressure of between 1.6 bar.
– The pressure relief valve in the sealing cap must remain closed for the time being.
– If valve opens before test is complete, renew sealing cap.

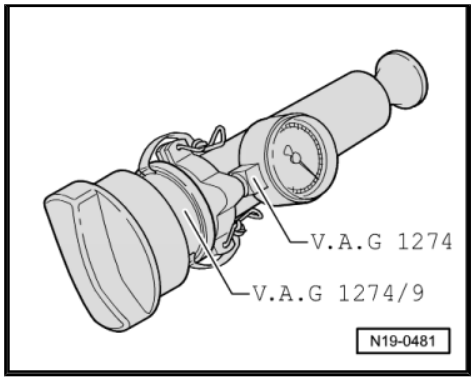

20 – Fuel supply system

1 Parts of fuel supply system

Caution

When doing any repair work, especially in the engine compartment, pay attention to the following due to the cramped conditions:

- *Route all the various lines (e.g. for fuel, hydraulics, activated charcoal filter system, coolant, refrigerant, brake fluid and vacuum) and electrical wiring in their original positions.*
- *To avoid damage to lines, ensure sufficient clearance to all moving or hot components.*

Note

- *Hose connections are secured with couplings or spring-type or clamp-type clips.*
- *Always renew clamp-type clips with spring-type clips.*
- *Fuel hoses on engine must be secured with spring-type clips only. The use of clamp or screw-type clips is not permissible.*
- *Spring-type clip pliers -VAS 6340- or spring-type clip pliers -VAS 5024 A- are recommended for installation of spring-type clips.*

Observe safety precautions ⇒ page 99 .

Observe rules for cleanliness ⇒ page 99 .

Assembly overview - fuel tank with attachments ⇒ page 94 .

Assembly overview - fuel filter ⇒ page 96 .

Renewing fuel filter ⇒ page 96

Schematic diagram of fuel lines and components in fuel tank ⇒ page 98 .

Draining fuel tank ⇒ page 100

Removing and installing fuel delivery unit, fuel gauge sender and suction-jet pumps ⇒ page 102

Removing and installing fuel tank with attachments ⇒ page 104 .

Checking fuel pumps ⇒ page 107

1.1 Assembly overview - fuel tank with attachments

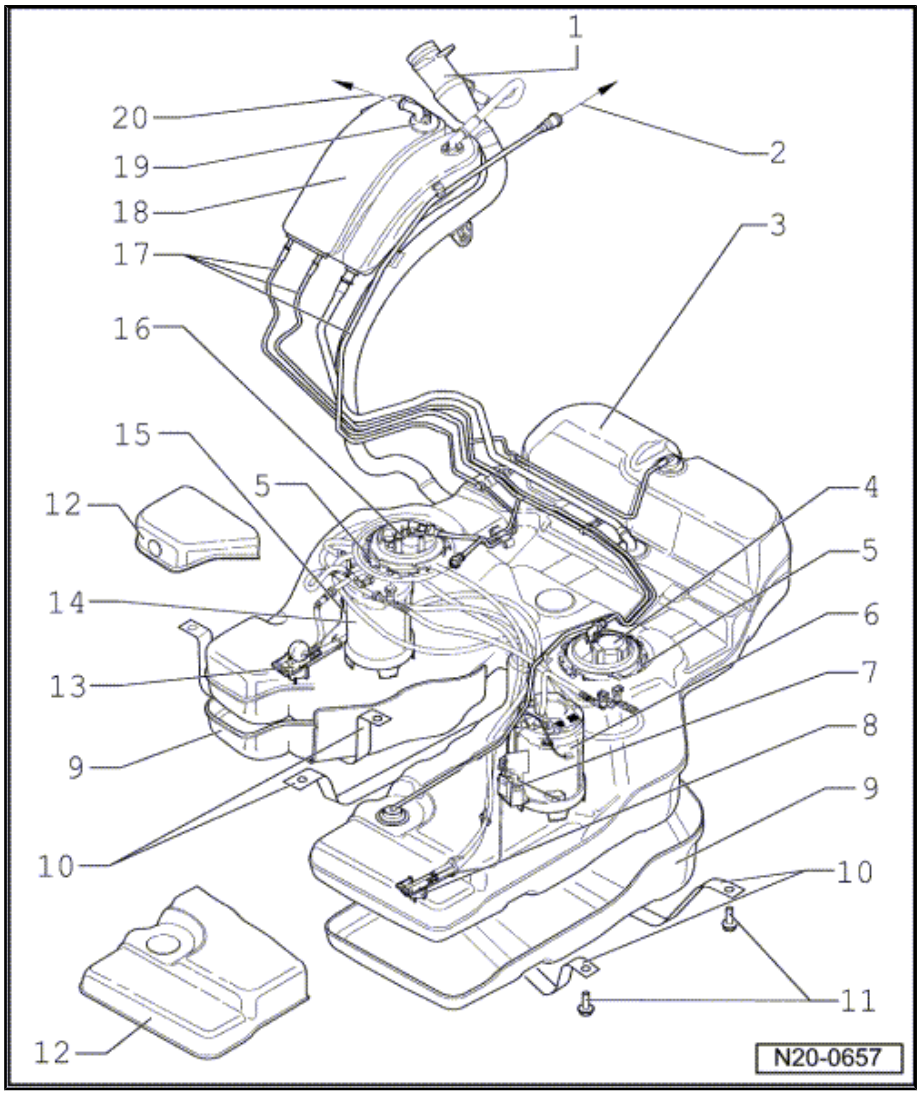

Volkswagen Technical Site: http://vwts.ru http://vwts.info

1 - Fuel filler neck

2 - To activated charcoal filter.

3 - Fuel tank

- ❑ When removing, support using engine and gearbox jack -V.A.G 1383 A- .

4 - Flange

- ❑ Left side.
- ❑ With fuel filter
- ❑ The fuel tank must not be more than $^1/_2$ full when removing.

5 - Locking ring, 110 Nm

- ❑ Remove and install using wrench -T10202- .
- ❑ Check for secure seating.

6 - Fuel delivery unit

- ❑ Left side.
- ❑ Checking fuel pump ⇒ page 107 .

7 - Fuel gauge sender 3 - G237-

- ❑ Left side.
- ❑ Flat, square float
- ❑ Clipped into bottom of tank.
- ❑ Checking: ⇒ Current flow diagrams, Electrical fault finding and Fitting locations.

8 - Suction-jet pump

- ❑ Left side.
- ❑ Clipped into bottom of tank.

9 - Protective cover

- ❑ For bottom of fuel tank.

10 - Securing strap

- ❑ Note installation position.
- ❑ Check for secure seating.

11 - 20 Nm + $^1/_4$ turn (90°) further

12 - Protective cover

- ❑ For top of fuel tank

13 - Suction-jet pump

- ❑ Right side.
- ❑ Checking fuel pump ⇒ page 107 .

14 - Fuel delivery unit

- ❑ Right side.

- ❑ Checking fuel pump ⇒ page 107 .

15 - Fuel gauge sender -G-

- ❑ Right side.
- ❑ Round, ball float
- ❑ Checking: ⇒ Current flow diagrams, Electrical fault finding and Fitting locations.

16 - Flange

- ❑ Right side.
- ❑ The fuel tank must not be more than $^{1}/_{2}$ full when removing.
- ❑ With fuel pressure regulator
- ❑ With gravity valve
- ❑ Individual parts ⇒ page 98
- ❑ Note installation position on fuel tank ⇒ page 99 .

17 - Breather line

- ❑ Check for secure seating.

18 - Expansion tank

19 - Gravity valve

20 - To pressure retention valve

1.2 Assembly overview - fuel filter

1 - Connection
- ❑ For breather line.

2 - Flange
- ❑ Left side.
- ❑ With fuel filter housing
- ❑ Note installation position on fuel tank ⇒ page 99 .

3 - Filter element

4 - Seal
- ❑ Renew.

5 - Earth wire

6 - 10 Nm

7 - Supply line
- ❑ To fuel pressure regulator.

8 - Connection
- ❑ Filter feed from left fuel delivery unit

9 - Connection
- ❑ Filter feed from right fuel delivery unit

10 - Earth connection

11 - Cap
- ❑ For filter housing

12 - Locating pin

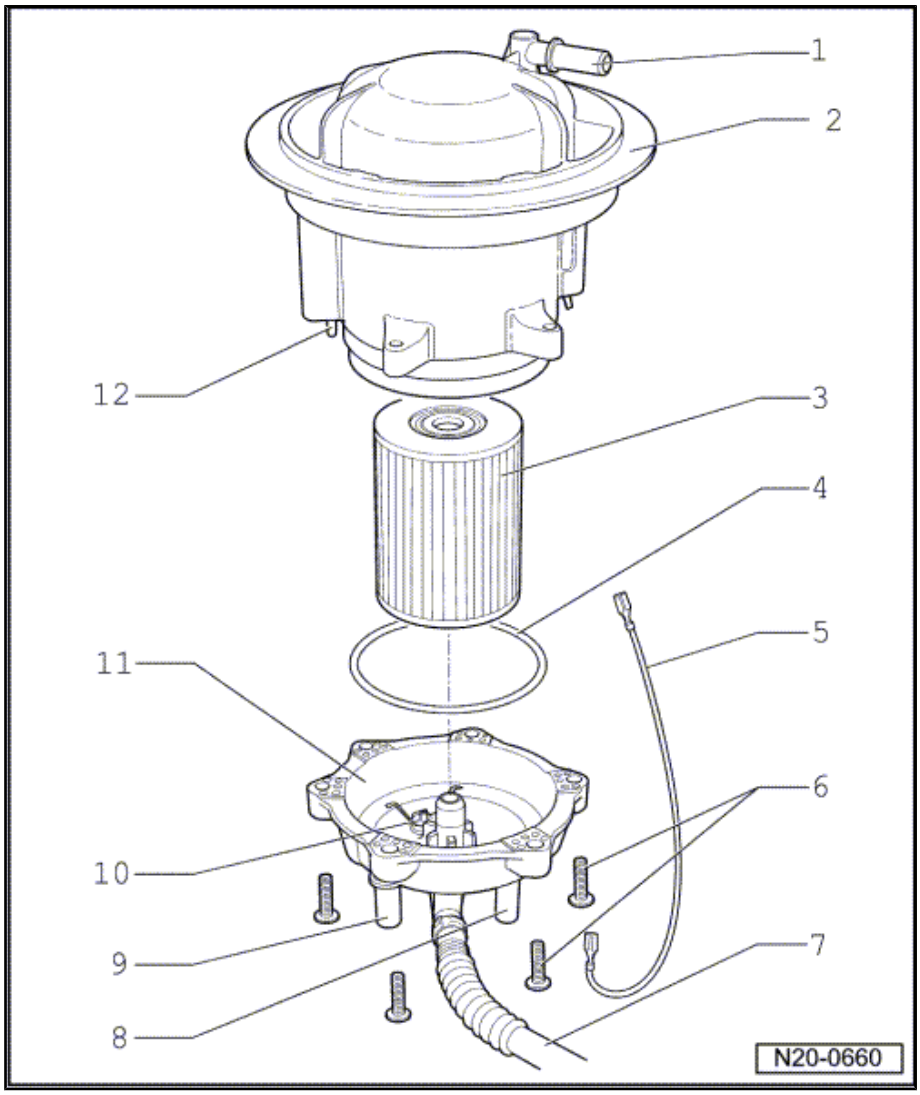

1.3 Renewing fuel filter

Note

The fuel filter is located in the left opening of fuel tank, as seen from direction of travel.

Prerequisites

- Fuel tank must be emptied ⇒ page 100 , Emptying fuel tank.
- Fuses -13- and -14- -arrow- must be removed from their sockets.

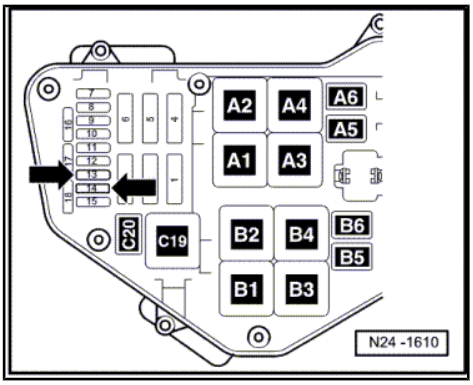

Procedure

> **WARNING**
>
> *Fuel supply lines are under pressure! Wear eye protection and gloves to avoid injuries and skin contact. Before loosening hose connections, wrap a cloth around the connection. Then release pressure by carefully pulling hose off connection.*

Observe safety precautions ⇒ page 99 .

Observe rules for cleanliness ⇒ page 99 .

– Cut open carpet on left side from point -A- to -B- in the pre-cut area -arrows-.

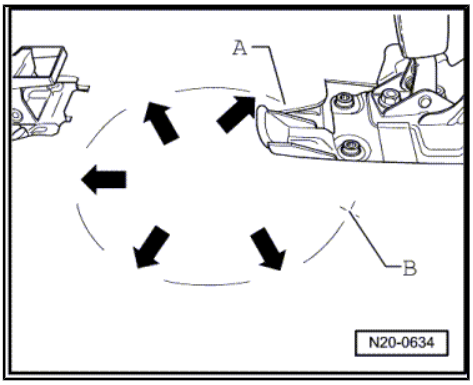

– Remove nuts -1- from cover. If necessary, unscrew backrest mounting -2- or support mounting ⇒ General body repairs, interior; Rep. gr. 72 ; Rear seats .
– Unscrew locking ring from left flange using wrench -T10202- .
– Completely remove flange on left side of tank.
– Empty fuel filter housing.

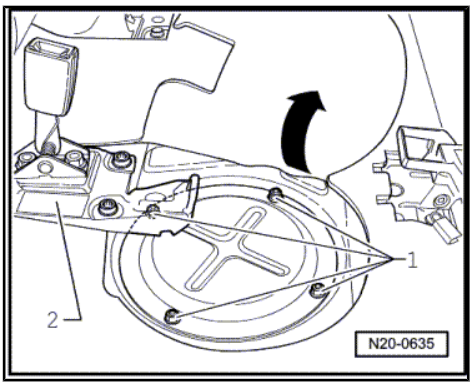

– Mark installation position of filter cover -2- using coloured felt tip marker pen.
– Pull off earth wire -1- and unscrew filter cover -arrows- from housing.

If filter element is changed, ensure that earth connection contacts are not bent and have sufficient preloading.

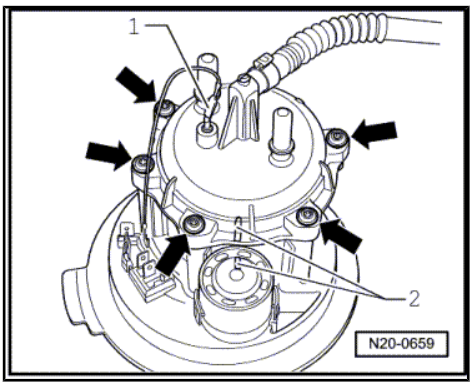

Individual parts of flange, right side

1 - Connectors for fuel pump and fuel gauge sender

2 - Fuel pressure regulator (4 bar)

3 - Earth wire

4 - Pressure regulator inlet (from fuel filter)

5 - Connection to left and right fuel delivery units (no pressure)

6 - Gravity valve

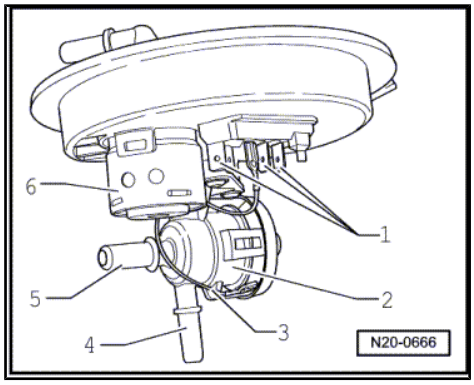

1.4 Schematic diagram of fuel lines and components in fuel tank

-A- left side of fuel tank

-Arrow- points in direction of travel

-B- Right side of tank

1 - Gravity valve
- ❑ Left side.

2 - Flange
- ❑ Left side.

3 - Fuel filter

4 - Gravity valve
- ❑ Right side.

5 - Supply line
- ❑ To fuel rail.

6 - Supply line for auxiliary heater

7 - Flange
- ❑ Right side.

8 - Fuel pressure regulator

9 - Return line
- ❑ From fuel pressure regulator
- ❑ To fuel delivery unit on left and right sides

10 - Supply line for suction-jet pumps

11 - Fuel delivery unit
- ❑ Right side.

12 - Suction-jet pump
- ❑ Right side.

13 - Delivery line
- ❑ Black
- ❑ To fuel delivery unit on left side.

14 - Delivery line
- ❑ Black

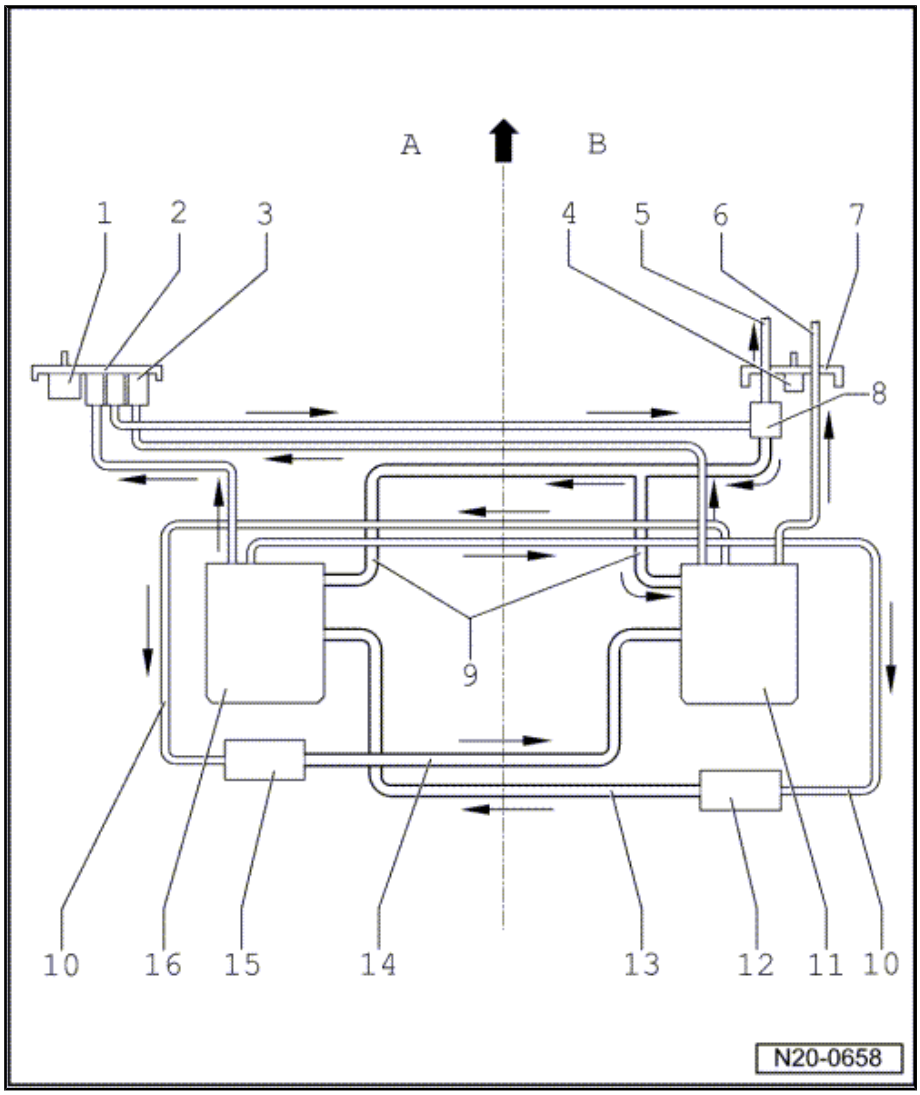

❑ To fuel delivery unit on right side

15 - Suction-jet pump

❑ Left side.

16 - Fuel delivery unit

❑ Left side.

Installation position of fuel delivery unit flange

Insert left or right flange with marking -arrow- in direction of travel.

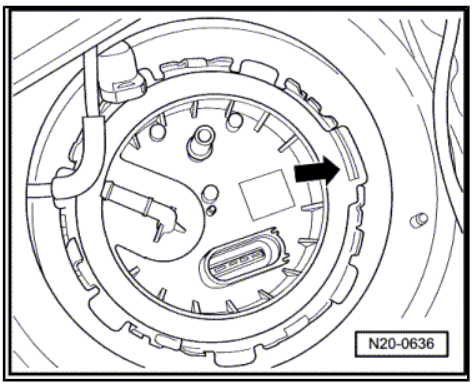

1.5 Safety precautions when working on fuel supply system

Caution

When doing any repair work, especially in the engine compartment, pay attention to the following due to the cramped conditions:

- *Route all the various lines (e.g. for fuel, hydraulics, activated charcoal filter system, coolant, refrigerant, brake fluid and vacuum) and electrical wiring in their original positions.*
- *To avoid damage to lines, ensure sufficient clearance to all moving or hot components.*

- For safety reasons, fuse nos. -13- and -14- -arrows- must be removed from the fuse holder before opening the fuel system. Otherwise, the fuel pump could be activated by the driver's door contact switch.
- Fuse nos. 13 and 14 are located in the E-box fuse holder in the left plenum chamber.

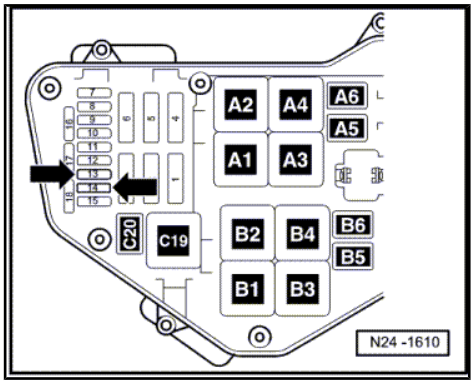

When removing and installing fuel gauge sender or fuel pump (fuel delivery unit) from a full or partly full fuel tank, observe the following:

- Even before work commences, the extraction hose of an activated fume extraction system has to be placed in the vicinity of the assembly opening of the fuel tank to trap any escaping fumes. If no exhaust gas extraction system is available, a radial fan with a displacement greater than 15 m^3/h can be used providing that motor is not in air flow.
- Prevent skin contact with fuel! Wear fuel-resistant gloves!

1.6 Rules for cleanliness

When working on the fuel supply and injection system, pay careful attention to the following „5 rules“ for cleanliness:

- Thoroughly clean all unions and surrounding areas before disconnecting.
- Place removed parts on a clean surface and cover. Use only lint-free cloths.
- Carefully cover opened components or seal if repairs cannot be carried out immediately.
- Install clean components only. Do not remove replacement parts from packing until immediately before installing. Do not use parts that have not been stored in their packing (e.g. in tool boxes etc.).
- When system is open: do not work with compressed air if this can be avoided. Do not move vehicle unless absolutely necessary.

1.7 Emptying fuel tank

Special tools and workshop equipment required

- Fuel extractor -VAS 5190-

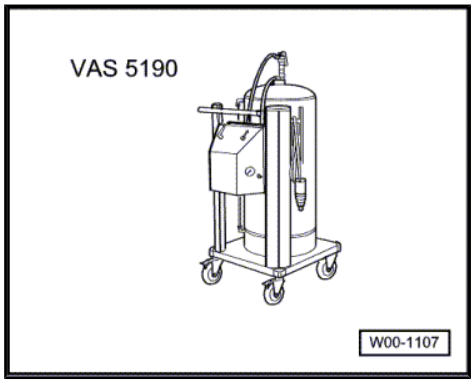

- Special wrench -T10202-

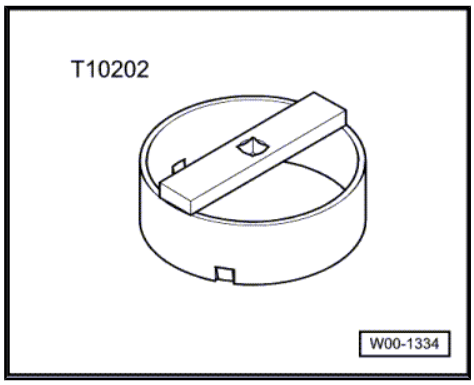

> ⚠ WARNING
>
> *Fuel supply lines are under pressure! Wear eye protection and gloves to avoid injuries and skin contact. Before loosening hose connections, wrap a cloth around the connection. Then release pressure by carefully pulling hose off connection.*

Procedure

– Note safety precautions before beginning work ⇒ page 99 .

– Open fuel tank filler flap.

– Push suction hose -arrow- of fuel extractor -VAS 5190- about 170...180 cm into fuel filler neck and extract fuel.

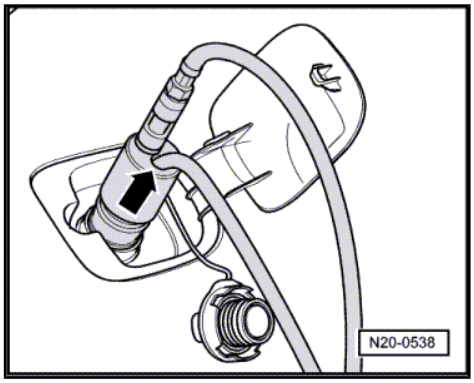

Note

When no more fuel is extracted, the tank is emptied just enough for the flanges to be opened without danger. The tank may be removed while containing remaining fuel. If work must be performed on fuel pumps or fuel tank senders, proceed as follows:

– Cut carpet open from point -A- to point -B- in the pre-cut area -arrows-.

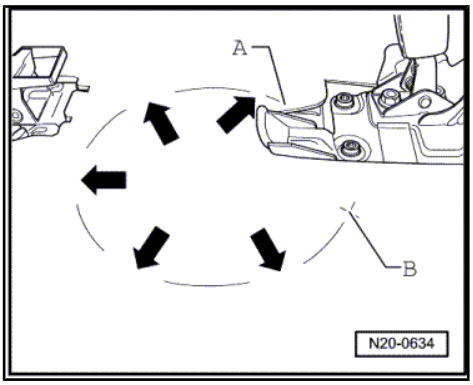

– Remove nuts -1- from cover. If necessary, unscrew backrest mounting -2- or support mounting ⇒ General body repairs, interior; Rep. gr. 72 ; Rear seats .

– Hold a cloth on connections for fuel supply line and auxiliary heater and pull off hose couplings.

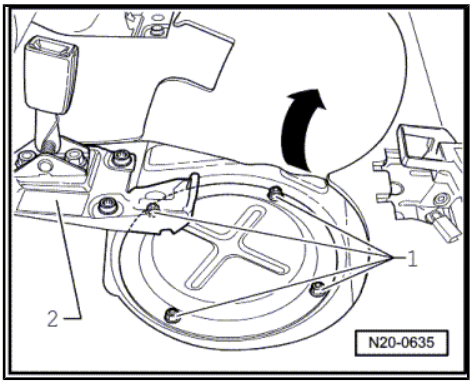

Note

Release connection by pressing button on hose coupling.

– Disconnect connector for fuel pump and fuel tank sender.

– Now remove locking ring from flange using fuel tank sender unit tool -T10202- .

– Carefully lever out flange and raise it slightly.

– Insert suction hose of fuel extractor -VAS 5190- as deeply as possible into right and then left side of fuel tank and extract fuel.

– For work on left side of fuel tank, proceed as described above.

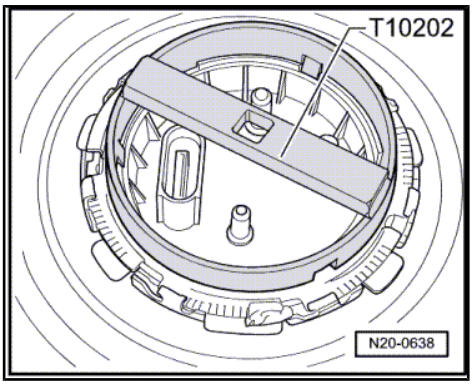

– When breather lines are pulled off, buttons of hose couplings sometimes cannot be pressed in. Use assembly tool -T10118- -arrow- to press in button.

For further work on inside of fuel tank, flanges may remain removed.

If fuel tank needed only to be emptied, install flanges again.

– First check that flange seals are properly seated.

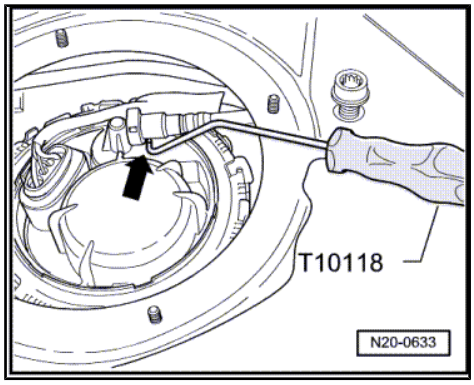

Note

Always renew seals if the fuel has caused them to swell.

– Insert flange with locating tab facing forwards -arrow-.

– Tighten locking rings on left and right to specified torque using wrench -T10202- .

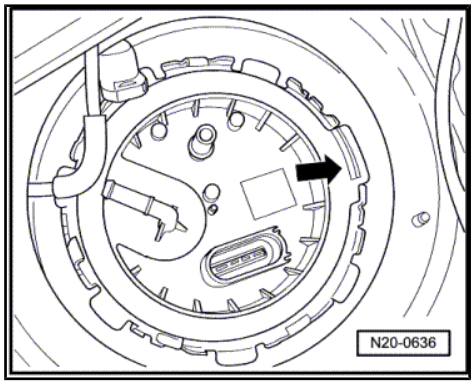

1.8 Removing and installing fuel delivery unit, fuel gauge sender and suction-jet pumps

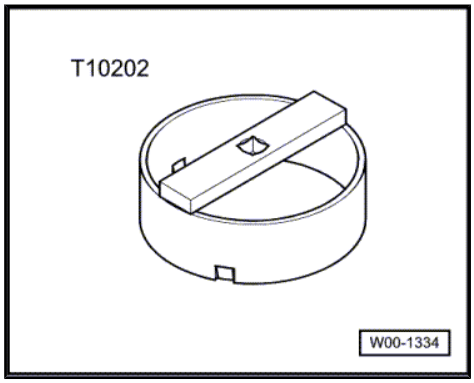

Special tools and workshop equipment required

♦ Special wrench -T10202-

Test prerequisites

- Fuel tank must be empty ⇒ page 100 .
- Fuses -13- and -14- -arrow- must be removed from their sockets.
- Connectors and wires for left and right flanges have been removed.
- Locking rings for left and right flanges have been unscrewed.

Procedure

– Note safety precautions before beginning work ⇒ page 99 .

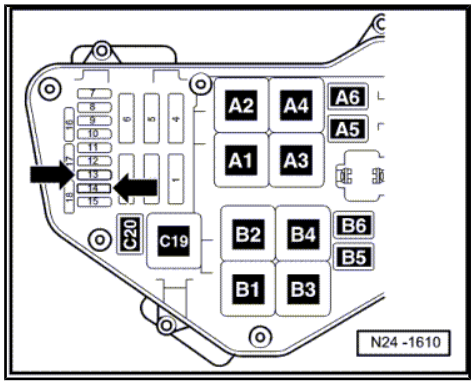

– Pull off connectors -1- and -2- as well as hose couplings -3- and -4- below right flange.

– Remove flange with pressure regulator.

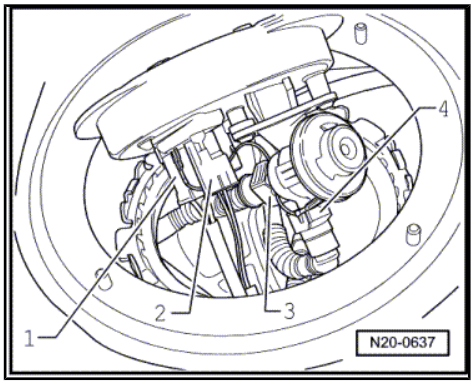

– Unclip black filler hose -arrow- from fuel delivery unit housing on left and right sides of fuel tank.

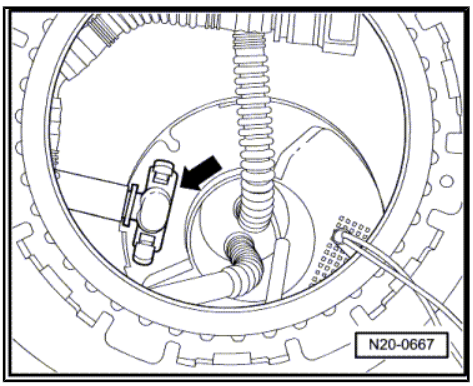

– Detach fuel supply line to suction-jet pumps from fuel delivery unit -arrow- on left and right sides of fuel tank.

– Unscrew fuel delivery unit in bottom of fuel tank by turning about 90° to left.

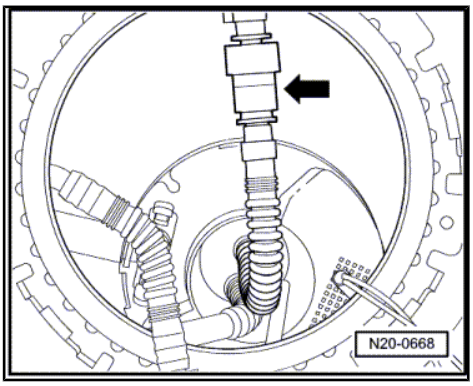

Note

The fuel delivery unit housing is filled with fuel. Fuel may run out if housing is tipped or canted.

– Now unclip fuel gauge senders on each side of fuel tank and pull them out.

– Now unclip suction-jet pumps from bottom on each side and remove with a slight turn.

– Pull out hose ends through left and right sender openings.

1.9 Removing and installing fuel tank with attached components

Special tools and workshop equipment required

- Fuel extractor -VAS 5190-
- Special wrench -T10202-
- Torque wrench -V.A.G 1331-
- Torque wrench -V.A.G 1332-
- Engine and gearbox jack -V.A.G 1383 A-

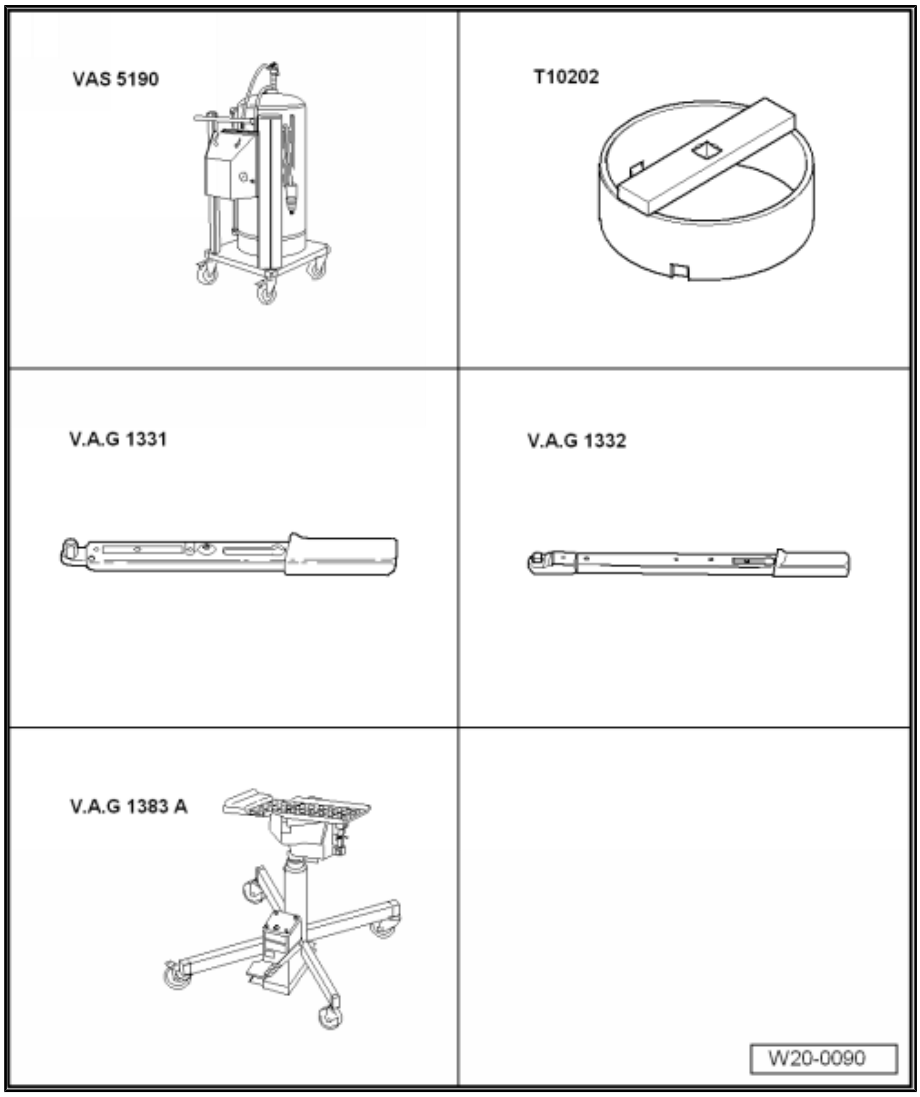

Prerequisites

- Fuel tank must be empty ⇒ page 100 .
- Fuses -13- and -14- -arrow- must be removed from their sockets.

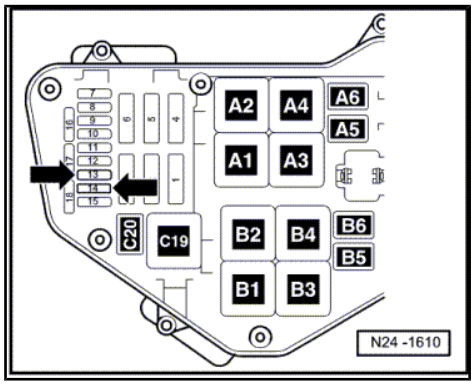

Removing

– Note safety precautions before beginning work ⇒ page 99 .

> **WARNING**
>
> *Fuel supply lines are under pressure! Wear eye protection and gloves to avoid injuries and skin contact. Before loosening hose connections, wrap a cloth around the connection. Then release pressure by carefully pulling hose off connection.*

First, reduce the fuel pressure as follows:

– Wrap a cloth around the joint to catch fuel which flows out.

– Disconnect fuel supply line -arrow- in engine compartment.

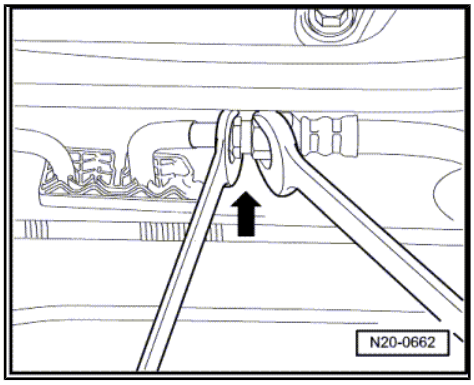

Once the fuel pressure has been reduced:

– Remove silencers and mountings .

– Remove rear propshaft tube ⇒ Transfer box and final drive; Rep. gr. 39 ; Removing and installing propshaft .

– Remove rear axle ⇒ Running gear, axles, steering; Rep. gr. 42 ; Repairing rear axle; Removing and installing rear axle .

– Open fuel flap and remove fuel tank cap.

– Pull rubber gasket off filler neck.

– Remove securing bolts -1- on filler neck and pull off earth wire -2-.

– Remove rear right wheel housing liner: ⇒ General body repairs, exterior; Rep. gr. 66 ; Removing and installing wheel housing liner .

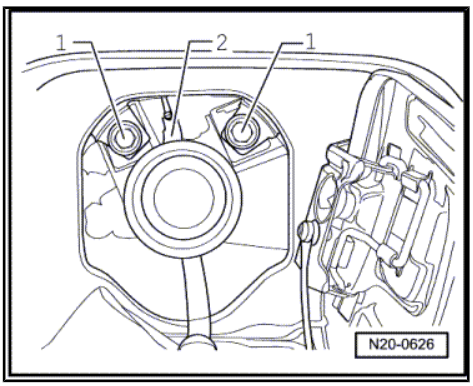

– Unbolt cover plate -arrows-.

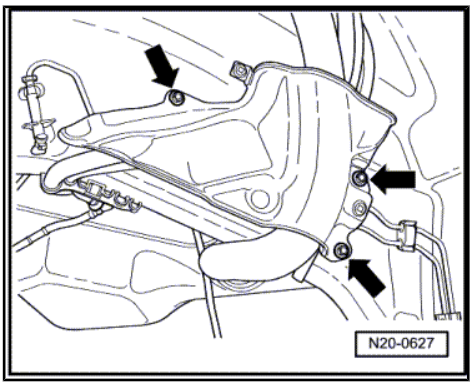

– Fuel tank breather lines are attached to longitudinal member. Unclip them at securing clip.

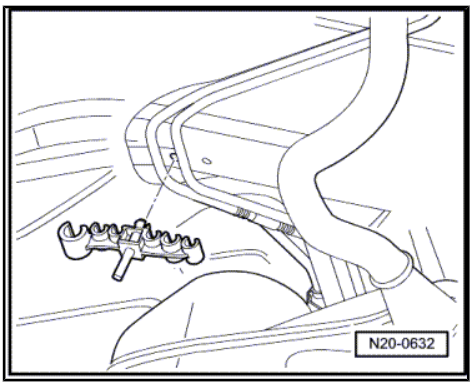

– Remove securing bolts for filler neck -1- and activated charcoal filter -2- in wheel housing.

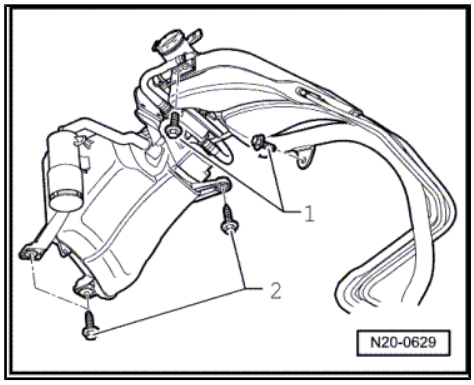

– Now bend filler neck slightly downwards and pull off breather line connections to activated charcoal filter.

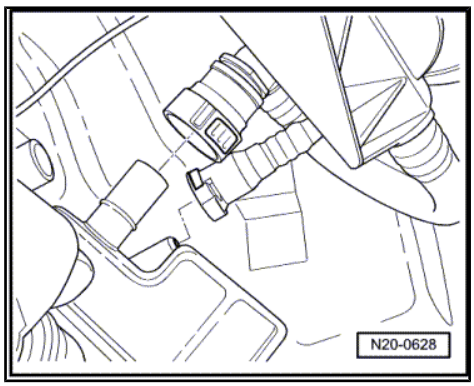

Note

Release connection by pressing button on hose coupling.

– Pull off earth wire clipped to activated charcoal filter and remove activated charcoal filter.

– Disconnect connector to fuel pumps on left next to fuel tank.

– Now remove securing straps to left and right with cover below fuel tank.

– Support fuel tank using engine and gearbox jack -V.A.G 1383 A- and remove securing strap at middle of fuel tank.

– Carefully lower fuel tank about 30 cm.

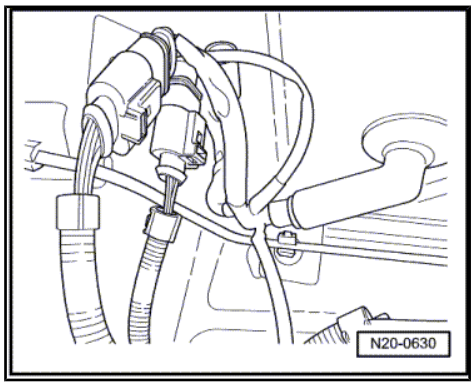

WARNING

Fuel supply lines are under pressure! Wear eye protection and gloves to avoid injuries and skin contact. Before loosening hose connections, wrap a cloth around the connection. Then release pressure by carefully pulling hose off connection.

– Reach through between fuel tank and vehicle floor and hold a cloth above fuel supply hose. Now disconnect fuel supply line and breather line from flange.

Note

This step saves cutting carpet in vehicle interior in vicinity of flange cover.

– Lower fuel tank.

Installing

Installation is carried out in the reverse order. When installing, note the following:

- Connections for breather and fuel lines must engage audibly when joined.
- Install breather and fuel hoses free of kinks.
- Secure fuel hoses with spring-type clips.
- Ensure that fuel hose connections are tight.
- Ensure earth cable -2- is secured tight to body.

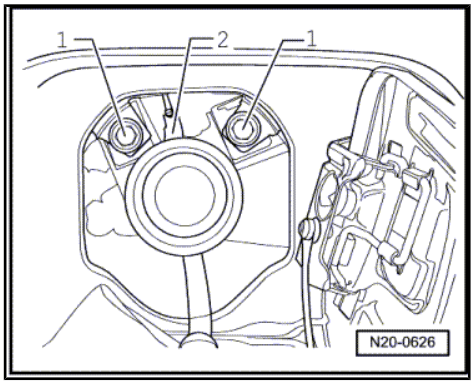

Note

Before bolting on fuel tank, check that supply and breather lines are still clipped onto fuel tank.

1.10 Checking fuel pumps

Checking delivery rate of pumps ⇒ page 108

Checking current draw of pumps ⇒ page 109 .

Checking non-return valve of right pump ⇒ page 111

Checking non-return valve of left pump ⇒ page 113

Special tools and workshop equipment required

- Diesel extractor -VAS 5226-
- Pressure gauge -V.A.G 1318-
- Adapter -V.A.G 1318/9-
- Adapter -V.A.G 1318/10-
- Adapter -V.A.G 1318/24-
- Remote control for V.A.G 1348 -V.A.G 1348/3 A-
- Multimeter -V.A.G 1715- or hand-held multimeter -V.A.G 1526D- with pickup clamp -V.A.G 1526B/2-
- Spring-type clip pliers -VAS 5024 A-
- Current flow diagram
- Measuring container

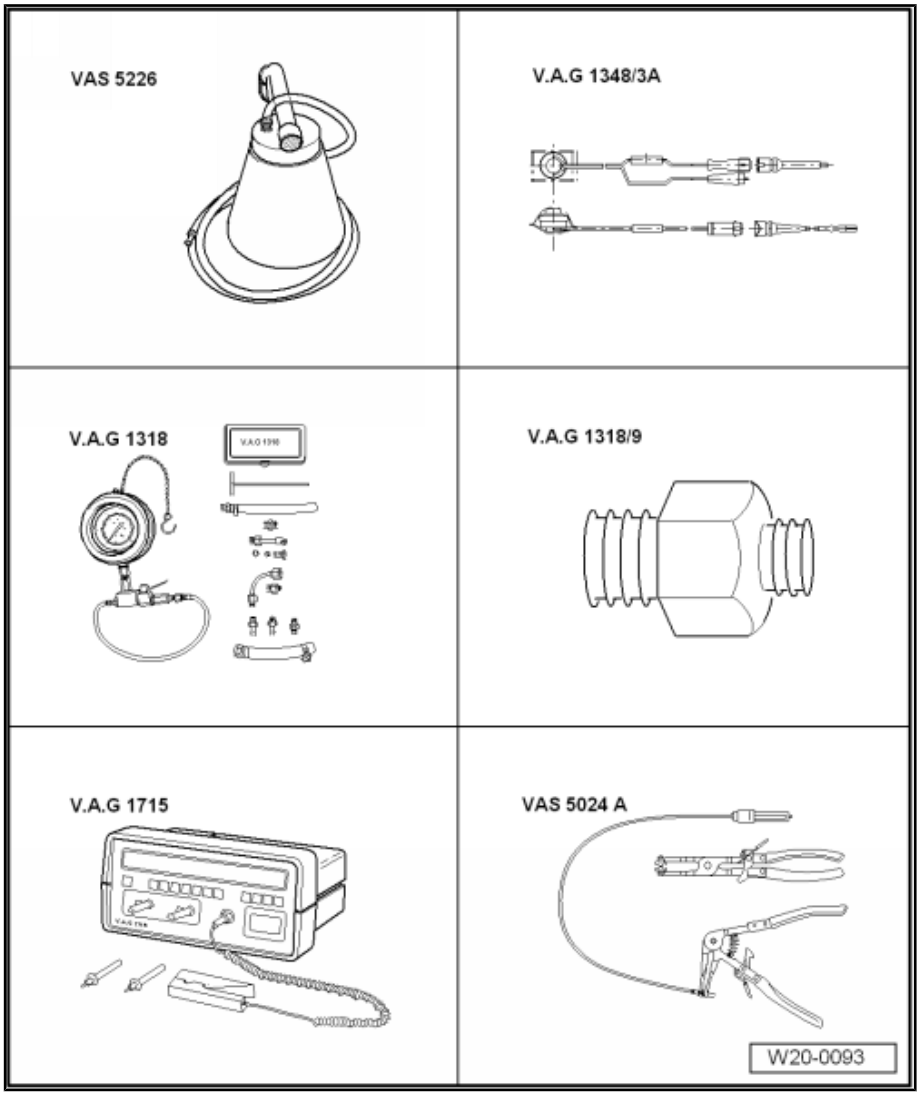

1.11 Checking delivery rate of pumps

Checking delivery rate of right pump ⇒ page 109

Checking delivery rate of left pump ⇒ page 109

Test prerequisites

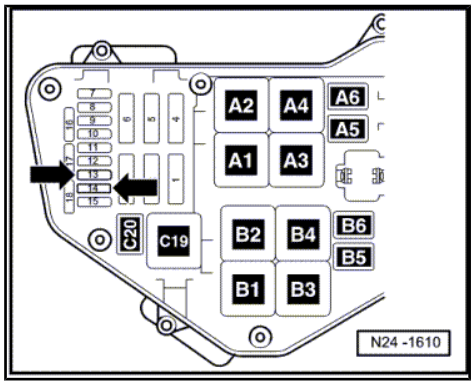

- Fuses -13- and -14- -arrow- must be removed from their sockets.
- Battery voltage at least 11.5 V
- Fuel pump relays -1- for right fuel delivery unit and -2- for left fuel delivery unit must be removed from their sockets.

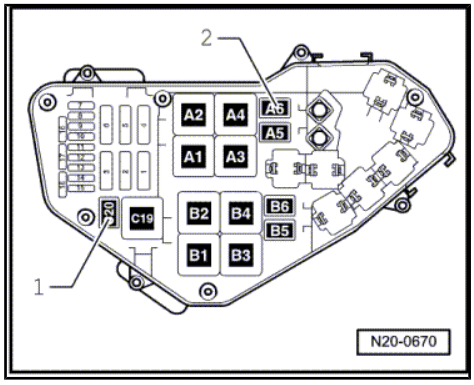

Test procedure

– Note safety precautions before beginning work ⇒ page 99 .

– Remove filler cap from fuel tank filler neck.

– First, reduce the fuel pressure as follows:

> ⚠ **WARNING**
>
> ***Fuel supply lines are under pressure! Wear eye protection and gloves to avoid injuries and skin contact. Before loosening hose connections, wrap a cloth around the connection. Then release pressure by carefully pulling hose off connection.***

– Wrap a cloth around the joint to catch fuel which flows out and disconnect fuel supply line -arrow-.

Once the fuel pressure has been reduced:

– Retighten threaded connection.

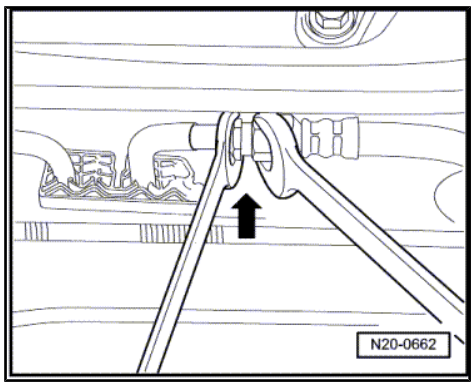

1.11.1 Checking delivery quantity of right pump

– Connect remote control -V.A.G 1348/3 A- with adapter cable - Phaeton -V.A.G 1348/3-3- to connection -arrow- of fuel pump relay for right fuel delivery unit.

– Connect positive terminal of remote control to positive pole in engine compartment.

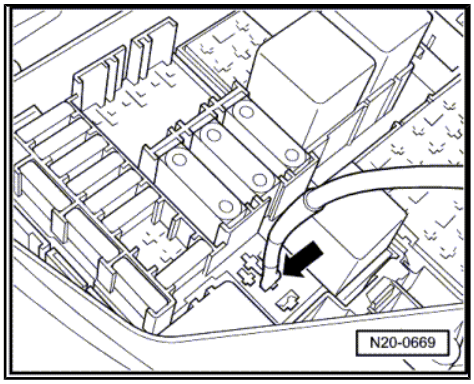

– Disconnect fuel supply hose -1- from fuel rail.

– Hold hose in measuring container -2- with minimum capacity of 1000 cm^3.

– Empty measuring container before making measurement.

– Operate remote control for 15 seconds. At least 800 cm^3 fuel per 15 seconds must be delivered.

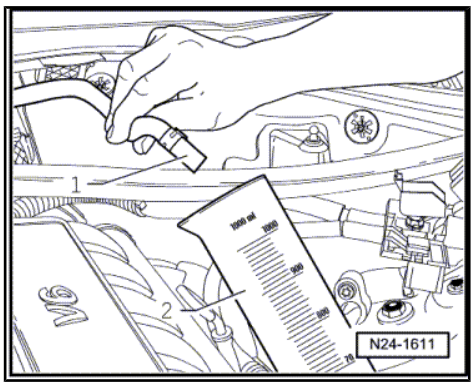

1.11.2 Checking delivery quantity of left pump

– Connect remote control -V.A.G 1348/3 A- with adapter cable - Phaeton -V.A.G 1348/3-3- to connection -arrow- of fuel pump relay for left fuel delivery unit.

– Empty measuring container before making measurement.

– Operate remote control 15 seconds again. At least 800 cm^3 fuel per 15 seconds must be delivered.

– In addition, check both fuel delivery units.

– To do so, connect adapter cable - Phaeton -V.A.G 1348/3-3- to connections of relays for left and right fuel delivery units.

– Empty measuring container before making measurement.

– Operate remote control 10 seconds. At least 800 cm^3 fuel per 10 seconds must be delivered.

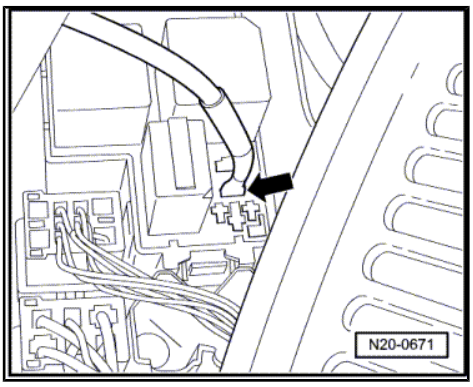

If the minimum delivery rate is not attained during one of the tests:

– Check fuel lines for possible restrictions (kinks) or blockages.

If fuel lines are ok:

– Renew fuel filter.

If delivery rate has been attained, but nevertheless you suspect a fuel supply system fault (e.g. intermittent failure of fuel supply system):

– Check current draw of fuel pumps ⇒ page 109 .

1.11.3 Checking current draw of pumps

– Check current draw of each fuel pump separately as follows:

– Reconnect all disconnected fuel lines.

– Cut carpet open from point -A- to point -B- in the pre-cut area -arrows-.

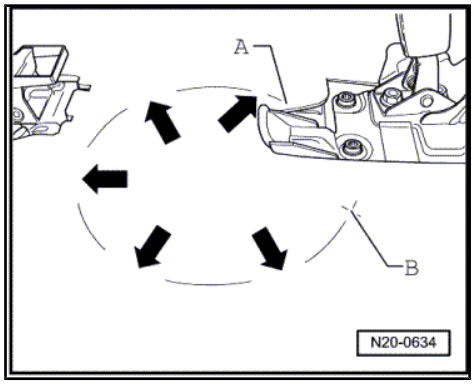

– Remove nuts -1- from cover. If necessary, unscrew backrest mounting -2- or support mounting ⇒ General body repairs, interior; Rep. gr. 72 ; Rear seats .

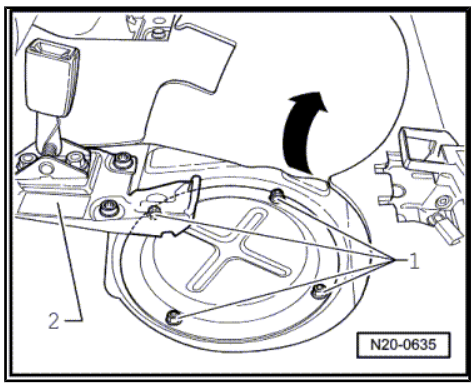

– Connect multimeter -V.A.G 1715- pick-up clamp to wiring of 4-pin connector contact -1- -arrow- of wiring harness to right fuel delivery unit.

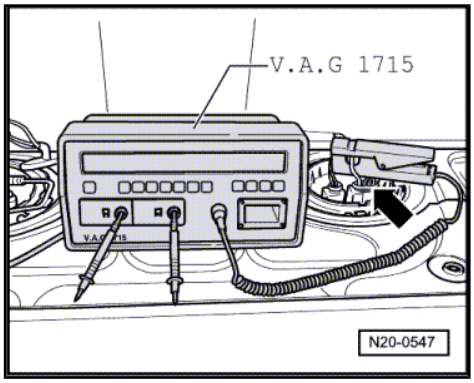

Note

The hand-held multimeter -V.A.G 1526D- with pickup clamp -V.A.G 1526B/2- can also be used.

– Start engine and run at idling speed.

– Measure current draw of fuel pump. Specification: max. 11 amps.

If current draw is exceeded:

– Right fuel pump is defective. Renew fuel delivery unit ⇒ page 102 .

– Repeat test on left fuel delivery unit.

If current draw is exceeded:

WARNING

Fuel supply lines are under pressure! Wear eye protection and gloves to avoid injuries and skin contact. Before loosening hose connections, wrap a cloth around the connection. Then release pressure by carefully pulling hose off connection.

– Left fuel pump is defective. Renew fuel delivery unit.

Note

If the fuel system malfunction is intermittent, you can perform the check during a road test, but a 2nd person is necessary.

1.12 Checking non-return valve of right pump

Test prerequisites

• Fuel pump relays -1- for right fuel delivery unit and -2- for left fuel delivery unit must be removed from their sockets.

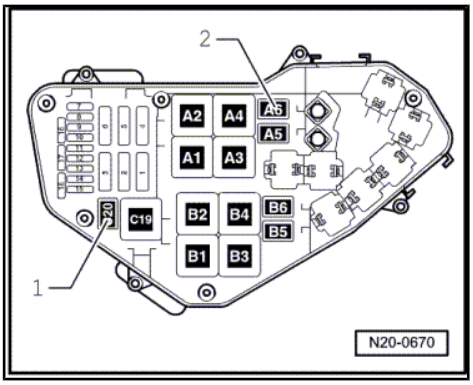

– Now unscrew locking ring from flange (fuel filter) using wrench -T10202- .
– Carefully lever flange and raise it slightly.
– Disconnect connectors next to fuel filter.

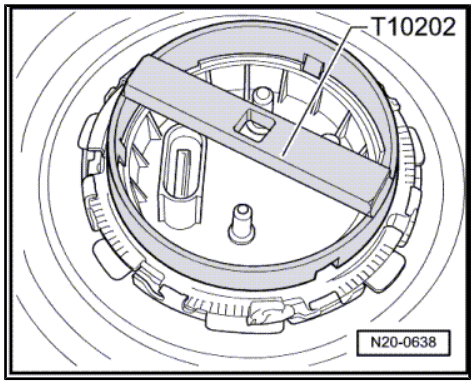

– Then detach fuel supply hose -2- leading from right fuel delivery unit from fuel filter -1-.
– Allow fuel from connection -1- to flow back into fuel tank.

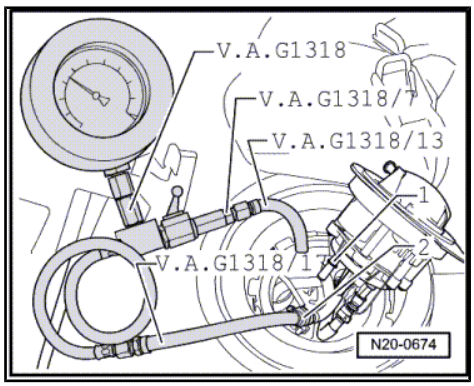

– Close pressure gauge shut-off tap (lever at right angles to direction of flow).

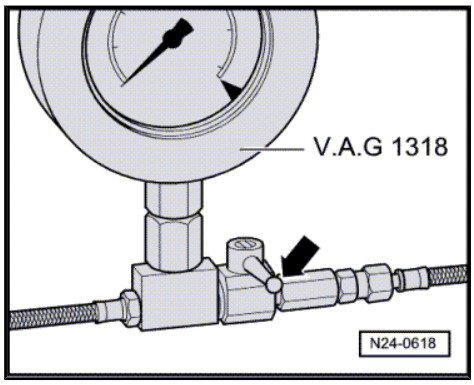

– Connect pressure tester -V.A.G 1318- with adapter -V.A.G 1318/7- , adapter -V.A.G 1318/13- and adapter -V.A.G 1318/17- as shown.

Note

Ensure that fuel supply line connection engages audibly when joined.

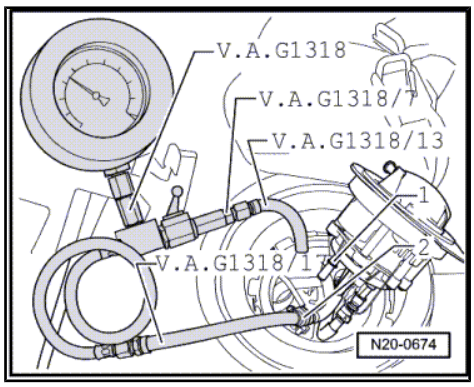

– Now connect remote control -V.A.G 1348/3A- with adapter -V.A.G 1348/3-3- to connection -arrow- of fuel pump relay for right fuel delivery unit.

– Operate remote control at short intervals until a pressure of approx. 4 bar has built up.

– Watch pressure drop on pressure gauge. After 10 minutes, pressure must not drop below 3.0 bar.

If pressure drops:

– Right fuel pump is defective. Renew right fuel delivery unit ⇒ page 102 .

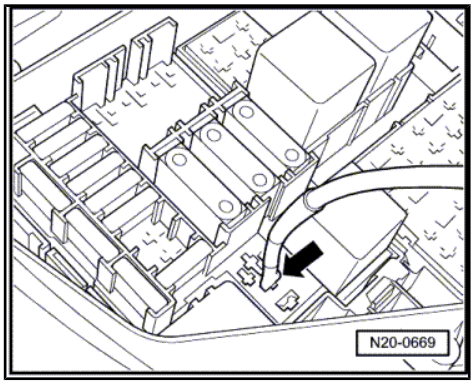

To convert the pressure tester for the left fuel pump:

– Open lever of pressure tester and let fuel flow back to fuel tank through hose -V.A.G 1318/13- .

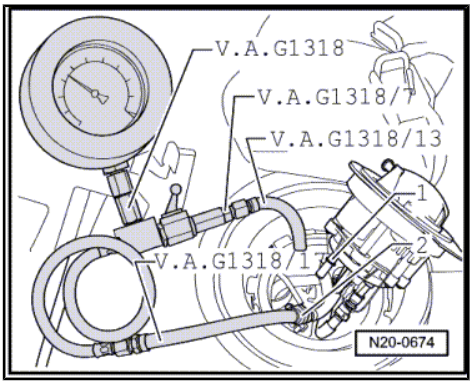

1.13 Checking non-return valve of left pump

Test prerequisites

- Remote control -V.A.G 1348/3 A- is still connected.

Note

At the same time, this test checks for leaks in the fuel supply line connections from the fuel delivery units to the point at which the pressure tester -V.A.G 1318- is connected.

– Then detach fuel supply hose -2- leading from left fuel delivery unit from fuel filter -1-.

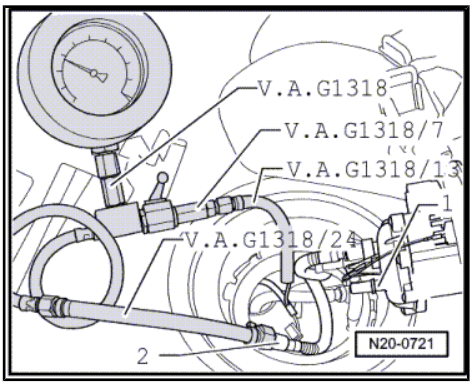

– Close pressure gauge shut-off tap -arrow- (lever at right angles to direction of flow).

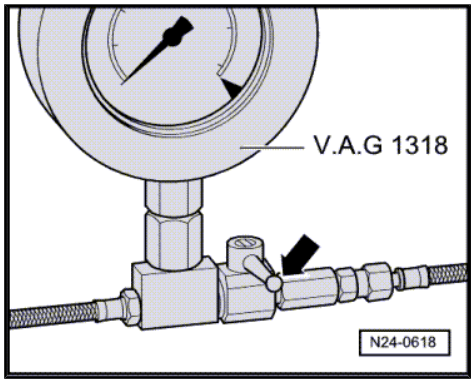

– Connect pressure tester -V.A.G 1318- with adapter -V.A.G 1318/7- , adapter -V.A.G 1318/13- and adapter -V.A.G 1318/24- as shown.

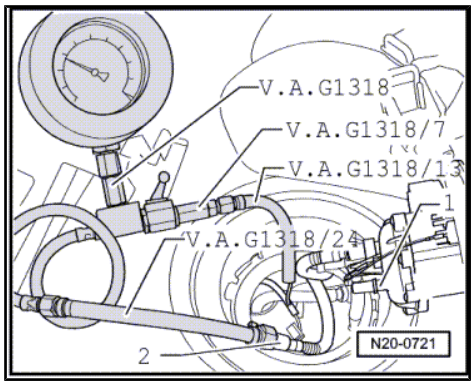

Note

Ensure that fuel supply line connection engages audibly when joined.

– Connect remote control -V.A.G 1348/3 A- with adapter -V.A.G 1348/3-3- to connection -arrow- of fuel pump relay for left fuel delivery unit.

– Operate remote control at short intervals until a pressure of approx. 4 bar has built up.

– Watch pressure drop on pressure gauge. After 10 minutes, pressure must not drop below 3.0 bar.

If pressure drops:

– Left fuel pump is defective. Renew left fuel delivery unit ⇒ page 102 .

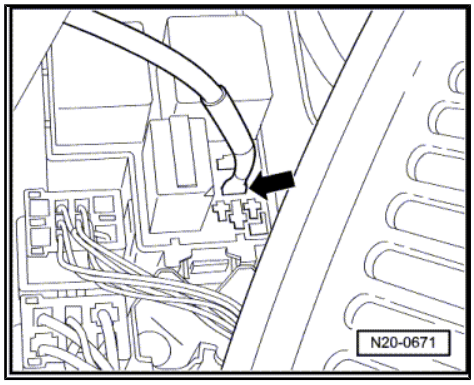

– Open lever of pressure tester and let fuel flow back to fuel tank through hose -V.A.G 1318/13- .

– Remove pressure tester -V.A.G 1318- with adapters.

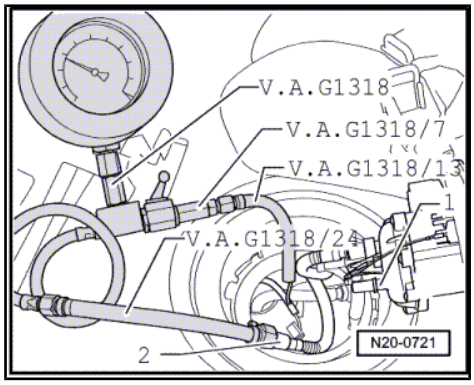

2 Electronic power control (EPC)

1 - Bearing bracket

- ❑ Removing and installing: ⇒ Brake systems; Rep. gr. 46 ; Assembly overview - brake pedal (LHD) .

2 - Connector

- ❑ Black, 6-pin.

3 - 10 Nm

4 - Accelerator position sender -G79- and accelerator position sender 2 -G185-

- ❑ Not adjustable.
- ❑ Remove footwell cover to remove sender.

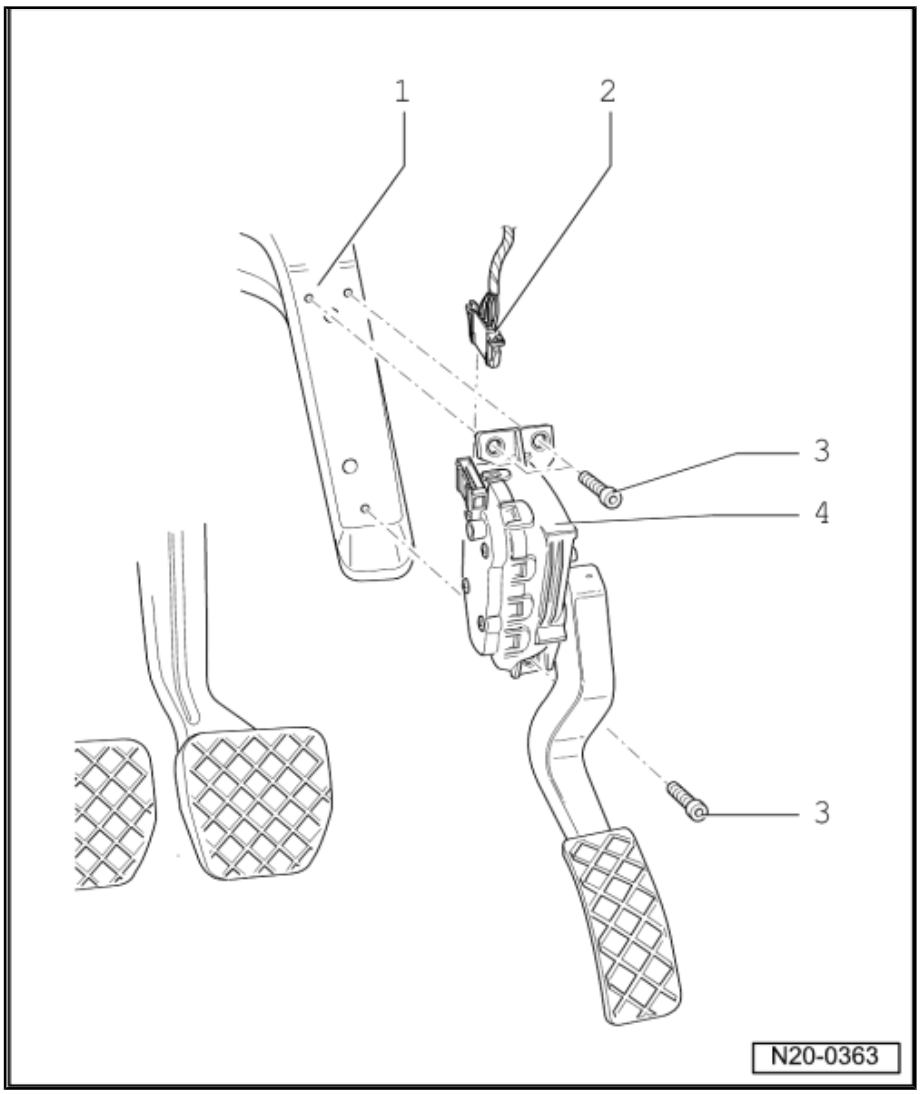

Function of EPC system

The position of the accelerator is transmitted to the engine control unit by two accelerator position senders (variable resistors together in one housing) connected to the accelerator.

The position of the accelerator (driver's requirement) is a main input value for the engine control unit.

The throttle valve is operated over the complete engine speed and load range by an electric motor (throttle valve positioner) in the throttle valve module.

The throttle valve is operated by the throttle valve positioner which is controlled by the engine control unit.

When the engine is not running and the ignition is switched on, the engine control unit moves the throttle valve exactly as prescribed by the accelerator position sender. That is, when the accelerator is depressed halfway, the throttle valve positioner opens the throttle valve by the same amount. The throttle is then approximately half open.

When the engine is running (under load), the engine control unit can open or close the throttle valve independently of the accelerator position sender.

This means that the throttle valve can already be completely open even though the accelerator is only depressed half way. This has the advantage of preventing throttling losses at the throttle valve.

This also results in significantly improved consumption and exhaust emission values under certain load conditions.

The torque required by the engine can be produced by the engine control unit by optimising the combination of throttle valve cross-section and charge pressure.

After evaluating the torque requirements of various components (e.g. air conditioning system, automatic gearbox, ABS/ESP and so on), the engine control unit calculates the optimal throttle valve opening angle for the respective situation.

Observe safety precautions.

Observe rules for cleanliness.

3 Activated charcoal filter system

Function

Depending on the air pressure and ambient temperature, fuel vapour will form above the level of fuel in the tank.

The activated charcoal filter system prevents these HC emissions escaping to the atmosphere.

Fuel vapours pass from the highest point in the tank (on filler neck) through the expansion tank and into the activated charcoal filter.

The activated charcoal stores these vapours like a sponge.

When the car is being driven and the Lambda control is active (engine warm), the activated charcoal filter solenoid valve 1 -N80- is activated (pulsed) by the engine control unit depending upon load and engine speed. The opening period depends on the input signals.

During the purging procedure (regeneration of activated charcoal), the intake manifold vacuum draws fresh air through the vent of the activated charcoal filter. The fuel vapours stored in the activated charcoal and fresh air are fed to combustion in metered quantities.

The activated charcoal filter solenoid valve 1 -N80- is closed when it is not supplied with current (e.g. open circuit). The activated charcoal filter will not be purged.

Note

- *Hose connections are secured with either spring-type or clamp-type clips.*
- *Spring-type clip pliers -VAS 6340- or spring-type clip pliers -VAS 5024 A- are recommended for installation of spring-type clips.*

Observe safety precautions ⇒ page 99 .

Observe rules for cleanliness ⇒ page 99 .

Assembly overview - activated charcoal filter system ⇒ page 118 .

Function of pressure retention valve ⇒ page 118

Checking fuel system for leaks ⇒ page 118 .

3.1 Assembly overview - activated charcoal filter system

1 - Expansion tank

2 - Gravity valve

3 - To gravity valve

4 - Pressure retention valve
- ❑ Function ⇒ page 118 .

5 - 9 Nm

6 - Connecting hose

7 - Air filter
- ❑ Clean if soiled.

8 - Connector
- ❑ For breather line.

9 - Activated charcoal filter

10 - 9 Nm

11 - Connector

12 - Activated charcoal filter solenoid valve 1 -N80-

13 - Rubber bracket

14 - To connection
- ❑ On intake manifold

15 - Breather line

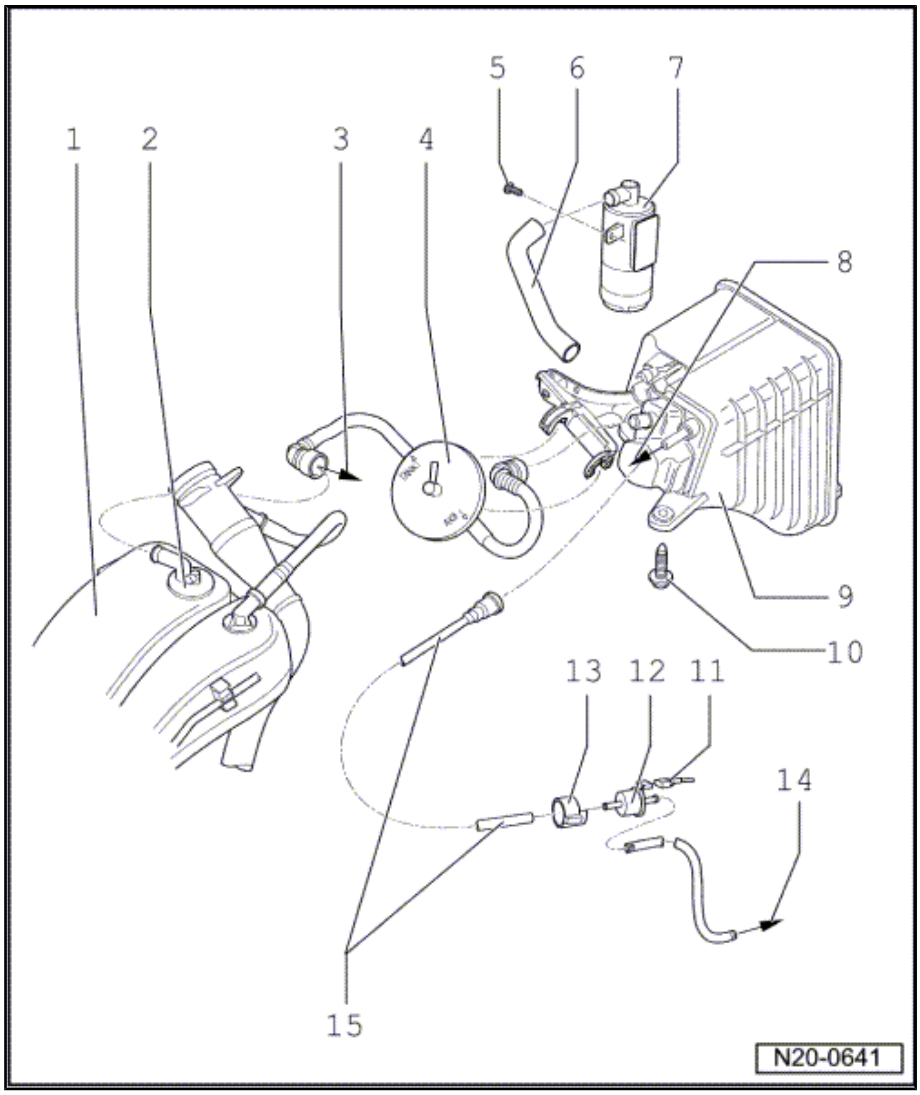

Function of pressure retention valve

From gravity valve (on expansion tank) the pressure retention valve is open in both directions of flow. -Arrow 1- is the side to expansion tank.

On the other side it is only open for flow in one direction. -Arrow 2- is the side to activated charcoal filter.

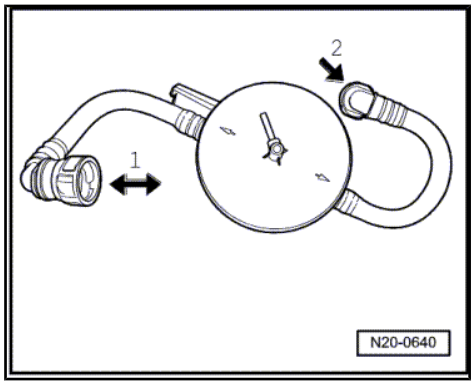

3.2 Checking fuel system for leaks

Special tools and workshop equipment required

♦ Hose clips up to 25 mm Ø -3094-

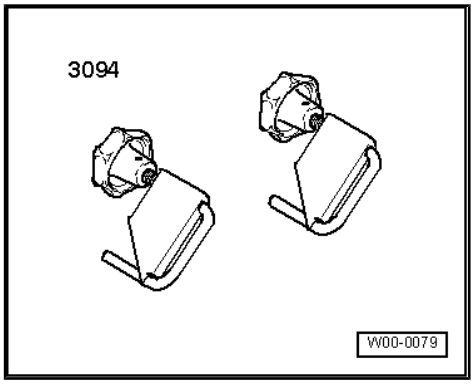

♦ Tester -V.A.G 1371-

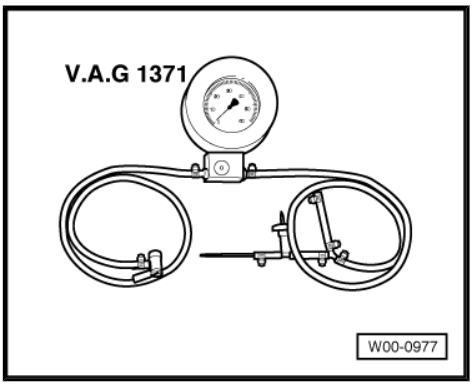

Procedure:

– Remove rear right wheel and wheel housing liner.

– Clamp off hose -arrow- between activated charcoal filter and air filter using a hose clamp -3094- .

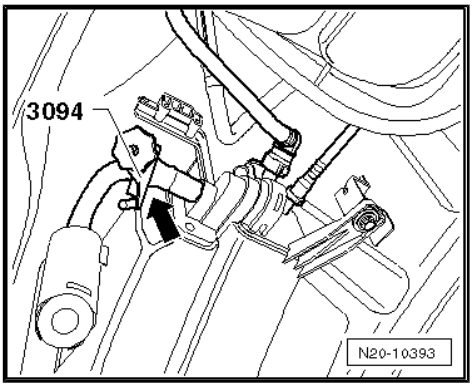

– Disconnect breather line -arrow- to solenoid valve in engine compartment.

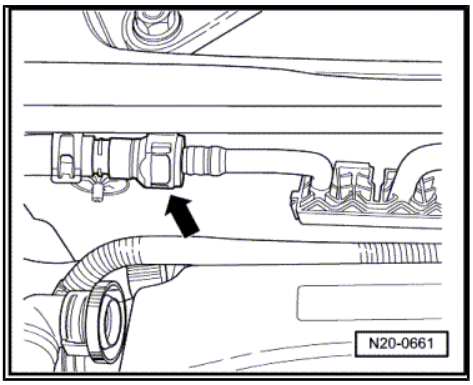

– Connect tester -V.A.G 1371- to breather line -arrow- as shown in illustration.

– Connect valve adapter of tester -V.A.G 1371- to tyre valve.

– Regulate the pressure to 35 mbar with valve -A-. When the pressure has stabilised, it must not drop below 30 mbar after 5 minutes.

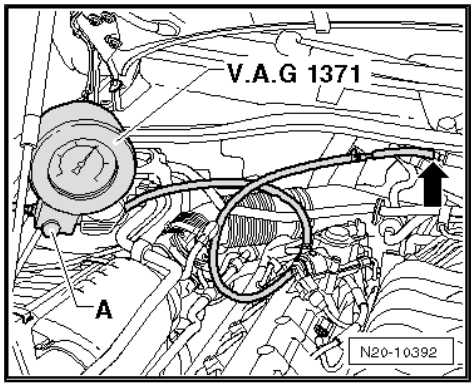

If no pressure builds up or the pressure is not held for at least 5 minutes, localise leak as follows:

– Perform visual check on all components and hoses of the fuel system.

Note

Also check fuel tank cap for leaks.

Only if still no fault has been detected:

– Check breather line and activated charcoal filter for leaks. To do this, disconnect breather line -A- from activated charcoal filter and seal connection with a plug -B-.

– Repeat pressure test.

If pressure still drops, the leakage can be found on the activated charcoal filter or breather line:

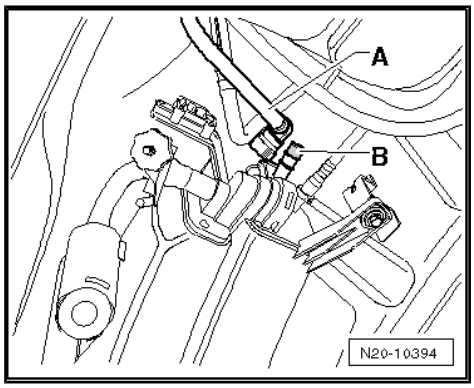

– When valve is open -A-, check the following lines and components for leaks by hearing, touching, with commercially available leak detector spray or using ultrasonic tester -V.A.G 1842- .

♦ Line from engine compartment to activated charcoal filter.

♦ Activated charcoal filter

If the pressure does not drop again, the leakage can be found on fuel tank:

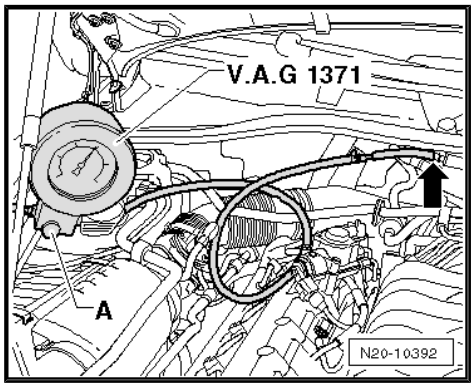

– To do this, reconnect breather line -A- to activated charcoal filter.

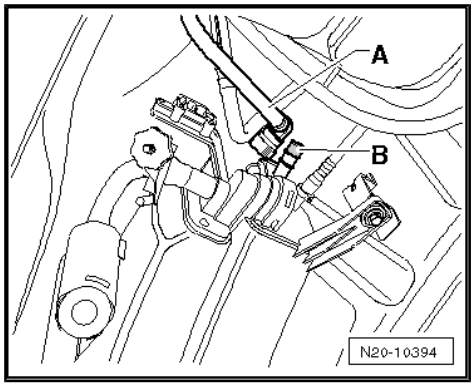

– With valve -A- is open, check fuel tank for leaks by hearing, touching, with commercially available leak detector spray or ultrasonic tester -V.A.G 1842- .

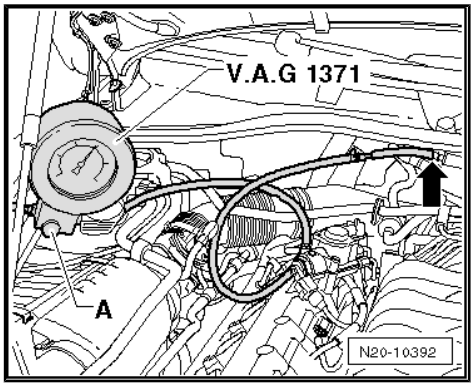

Caution

After completing work check tyre pressure!

4 Activated charcoal filter system (vehicles for USA and Canada)

Assembly overview - activated charcoal filter system ⇒ page 123 .

Checking fuel system for leaks ⇒ page 124 .

Function

Fuel vapour forms above the surface of the fuel in the fuel tank; the quantity depends upon the air pressure and ambient temperature.

The activated charcoal filter system prevents these HC emissions escaping to the atmosphere.

Fuel vapours pass from the highest point in the tank (on filler neck) through the expansion tank and into the activated charcoal filter.

The activated charcoal stores these vapours like a sponge.

When the vehicle is being operated and the Lambda control is active (engine warm), the activated charcoal filter system solenoid valve 1 -N80- is activated (pulsed) by the engine control unit -J623- depending on load and engine speed. The opening period depends on the input signals.

During the purging procedure (regeneration of activated charcoal), the intake manifold vacuum draws fresh air through the vent of the activated charcoal filter. The fuel vapours stored in the activated charcoal and fresh air are fed to combustion in metered quantities.

The activated charcoal filter solenoid valve 1 -N80- is closed when it is not supplied with current (e.g. open circuit). The activated charcoal filter will not be purged.

Description of leakage diagnosis

The activated charcoal filter system, including fuel tank, is equipped with leakage diagnosis which can detect if there is a leak in the system.

The diagnosis is based on a pressure method and indicates leaks with a diameter greater than 0.5 mm.

During the diagnosis, the fuel system diagnostic pump -V144- builds up pressure in the activated charcoal system. For this, the activated charcoal filter solenoid valve 2 -N115- is closed. Once the pressure is attained, the pump switches off. If the pressure drops below a certain value, the pump switches on again. Self-diagnosis monitors the intervals at which the pump is switched on or off and if the intervals are too short, writes a fault to the fault memory.

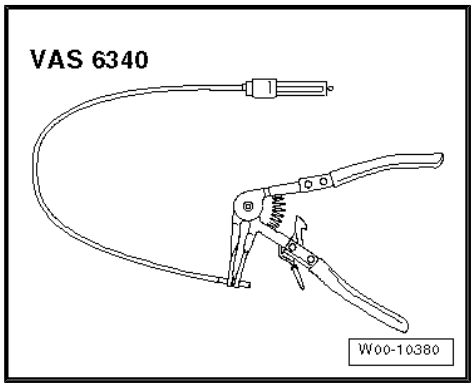

Note

- *Hose connections are secured with either spring-type or clamp-type clips.*
- *Use spring-type clip pliers -VAS 6340- for installation of spring-type clips*
- *or space-saving hose clip pliers -VAS 6362- .*

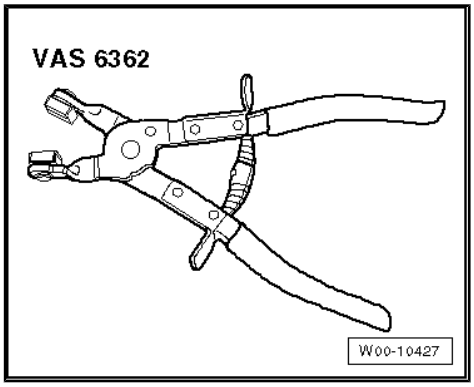

Observe safety precautions ⇒ page 99 .

Observe rules for cleanliness ⇒ page 99 .

4.1 Assembly overview - activated charcoal filter system

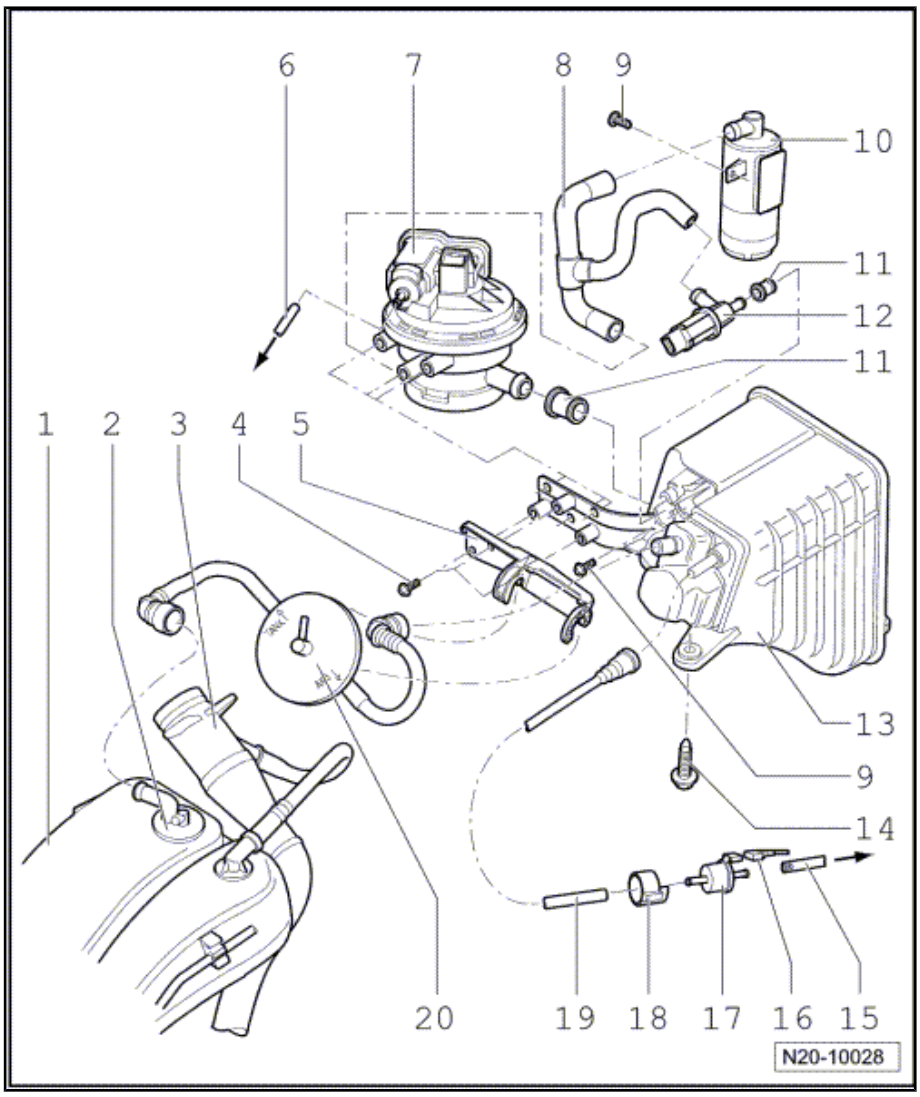

1 - Expansion tank
- ❑ Right side.

2 - Gravity valve

3 - Fuel filler neck

4 - 5 Nm

5 - Bracket

6 - Vacuum line
- ❑ For vacuum supply of fuel system diagnostic pump -V144-
- ❑ To vacuum connection on intake manifold
- ❑ Check for secure seating.

7 - Fuel system diagnostic pump -V144-
- ❑ Checking fuel system for leaks ⇒ page 124 .
- ❑ Black connector, 3-pin

8 - Connecting hose
- ❑ Between air filter, fuel system diagnostic pump -V144- and activated charcoal filter solenoid valve 2 -N115-
- ❑ Check for secure seating.

9 - 5 Nm

10 - Air filter
- ❑ Clean if soiled.

11 - Rubber bush
- ❑ Note installation position.
- ❑ Renew if damaged.

12 - Activated charcoal filter solenoid valve 2 -N115-
- ❑ Black connector, 2-pin

13 - Activated charcoal filter
- ❑ Location: in rear right wheel housing.

14 - Securing bolts

- ❑ Qty. 3
- ❑ 9 Nm

15 - Breather line

- ❑ To vacuum connection on intake manifold
- ❑ Check for secure seating.

16 - Connector

- ❑ Black, 2-pin.

17 - Activated charcoal filter solenoid valve 1 -N80-

- ❑ Note installation position.

18 - Rubber bracket

- ❑ Note installation position.

19 - Breather line

- ❑ Check for secure seating.

20 - Pressure retention valve

- ❑ Function ⇒ page 124 .

Function of pressure retention valve

From gravity valve (on expansion tank) the pressure retention valve is open in both directions of flow. -Arrow 1- is the side to expansion tank.

On the other side it is only open for flow in one direction. -Arrow 2- is the side to activated charcoal filter.

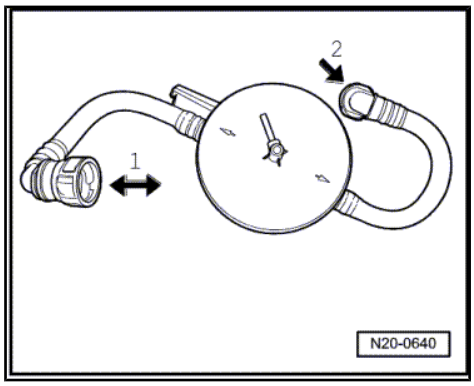

4.2 Checking fuel system for leaks

Special tools and workshop equipment required

- ♦ Fuel system tester (so-called smoke tester) -KLI 9210-
- ♦ Adapter hose -KLI 9210/55-2-
- ♦ Vehicle diagnosis tester -VAS 5051B- , -VAS 5052- or -VAS 5053-
- ♦ Hose clamps up to 25 mm -3094-

Test prerequisite:

- A leak has been detected by the fuel system diagnostic pump -V144- .
- Guided fault finding has been performed with the vehicle diagnosis tester .

Preparation of fuel system tester -KLI 9210- :

Note

The fuel system tester -KLI 9210- may differ in appearance depending on the version.

– Check on fuel system tester -KLI 9210- if there is enough fluid in smoke generator.
– Set valve -D- to „Hold“.
– Open nitrogen bottle -H-.
– Connect test hose -G- to self-test connection -B-.
– Set valve -D- to „Test“.
– Regulate pressure to 25 mbar (10 in. H2O) with pressure reducer -J-.
– Set valve -D- to „Hold“.
– Now pressure must be maintained for at least 2 minutes. Check tester if pressure is not maintained.

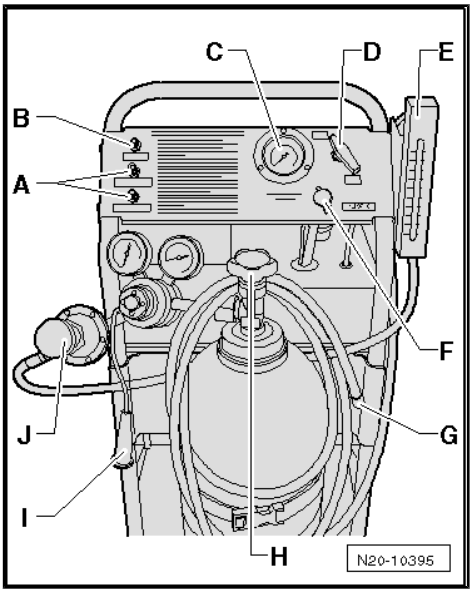

Checking fuel system for leaks:

– Pull off rear engine cover -arrows-.

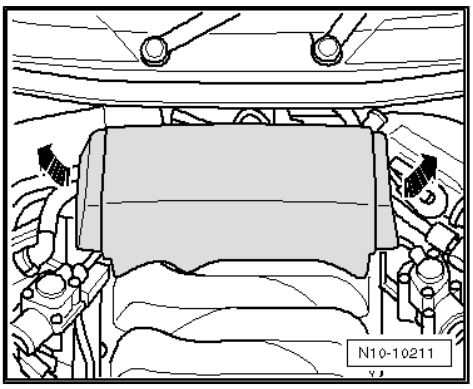

– In engine compartment, disconnect breather line -arrow- to activated charcoal filter solenoid valve 1 -N80- .

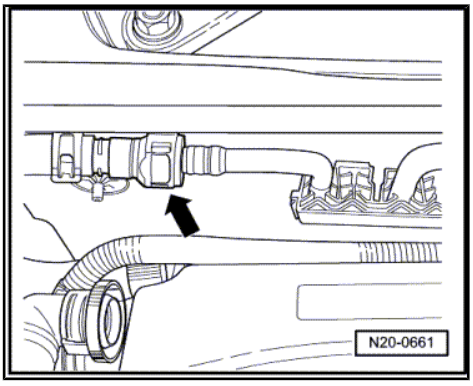

– Connect adapter hose -KLI 9210/55-2- between activated charcoal filter solenoid valve 1 -N80- and breather line -A- as shown in illustration.
– Connect measuring hose -G- from fuel system tester -KLI 9210- to adapter hose -KLI 9210/55-2- .
– Connect fuel system tester -KLI 9210- to vehicle battery.

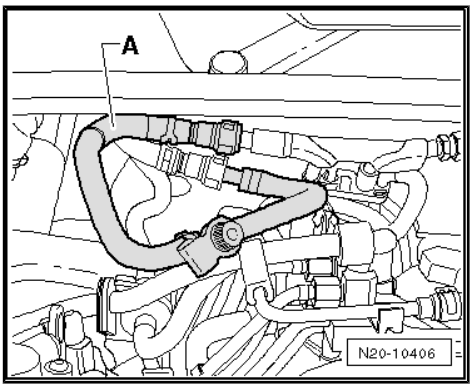

– Connect vehicle system tester to vehicle.
– Start engine and run at idling speed.
– On vehicle system tester, select operating mode OBD.
– Now select diagnostic mode 8 „Tank leak test“.
– Select entry „Tank leak test“ and press right arrow button ▶ to initiate test.

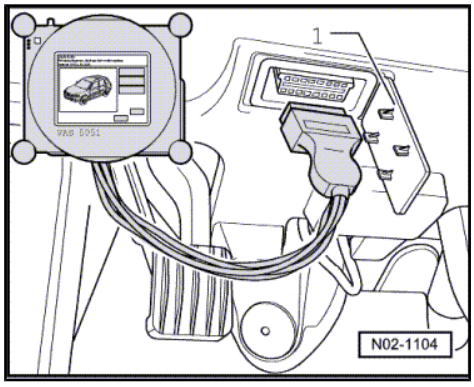

Note

- *Once the diagnostic mode 8 „Tank leak test“ has been activated, the leak diagnostic pump and the activated charcoal filter solenoid valve 2 -N115- are closed for max. 1,000 seconds. The activated charcoal filter solenoid valve 1 -N80- is not activated. Now the entire system is closed.*
- *If the engine control unit cancels the test, it is possible to initiate it again by switching off and restarting the engine.*

– Set valve -D- to „Test“. The fuel system will now be filled with nitrogen.
– Observe pressure gauge -C- and flow meter -E-. When the throughput quantity decreases and the pressure increases to 25 mbar (10 in. H2O), the fuel system is filled.

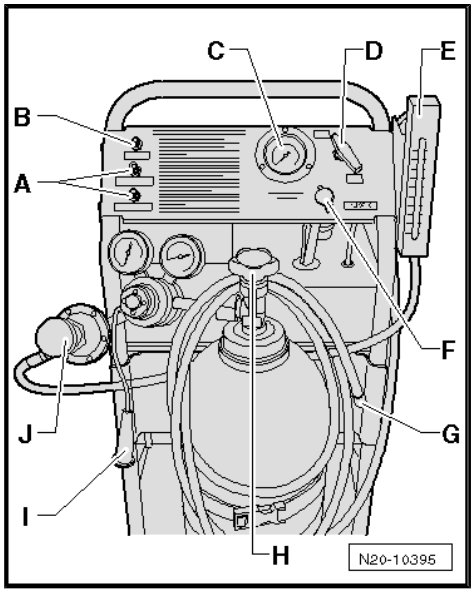

Note

Depending on the filling level of the fuel tank, this process can take up to 3 minutes.

– Once pressure has stabilised, set valve -D- to „Hold“.
• After 5 minutes the pressure must not drop below 20 mbar (8 in. H2O).

If pressure does not drop, exit from diagnostic mode 8 and check if fuel system diagnostic pump -V144- can build up pressure ⇒ page 129 .

If no pressure builds up or the pressure is not held for at least 5 minutes, localise leak as follows:

Leave engine running at idling speed for at least 8 minutes with activated diagnostic mode 8.

– First check activated charcoal filter solenoid valve 1 -N80- for leaks. To do this, clamp off hose to activated charcoal filter solenoid valve 1 -N80- using a hose clip -arrow-. Also refer to ⇒ Item A (page 128) .

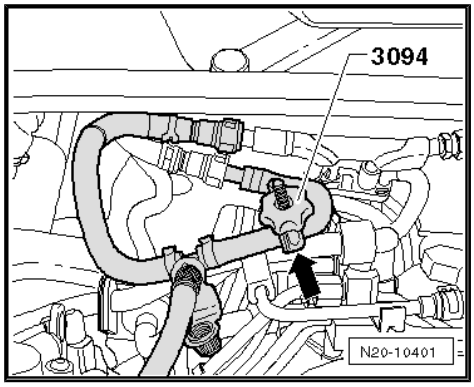

– Repeat pressure test by setting valve -D- again to „Test“.

– Observe pressure gauge and flow meter. When the through-put quantity decreases and the pressure increases to 25 mbar (10 in. H2O), the fuel system is filled.

– Once pressure has stabilised, set valve -D- to „Hold“.

– If the pressure does not drop again, renew activated charcoal filter solenoid valve 1 -N80- .

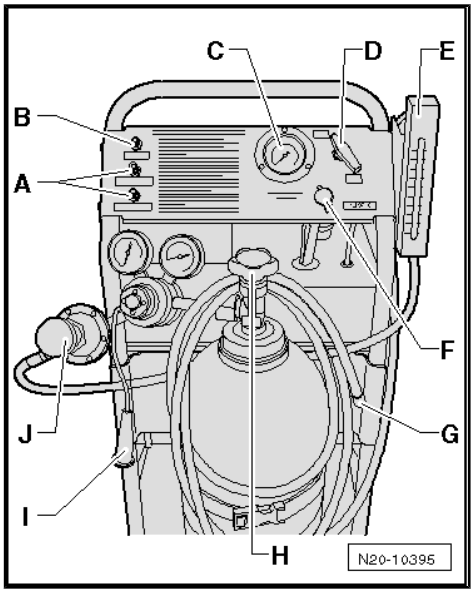

If pressure still drops:

– Set valve -D- again to „Test“.

– While fuel system is being filled, press button -I- for smoke generator for approx. one minute.

The fuel system is now pressurised and filled with smoke.

– Check whether smoke escapes from any visible fuel system line or hose. Also check fuel tank cap.

Note

- *Light up the components and hoses with a strong floodlight. In the floodlight, smoke is more visible.*
- *For leak detection in accessible areas, also use ultrasonic detector or commercially available leak detecting spray.*
- *Depending on how long the fault finding takes, it may be necessary to press the smoke generator button from time to time. This ensures that sufficient smoke is present in the fuel system.*

If no fault is found:

– Remove rear right wheel housing liner.

If smoke escapes from air filter ⇒ Item 7 (page 128) **:**

– Clamp off hose between activated charcoal filter solenoid valve 2 -N115- and air filter -arrow-. Also refer to ⇒ Item B (page 128) .

– Observe air filter. If smoke no longer escapes, activated charcoal filter solenoid valve 2 -N115- is leaking. Renew activated charcoal filter system solenoid valve 2 -N115- .

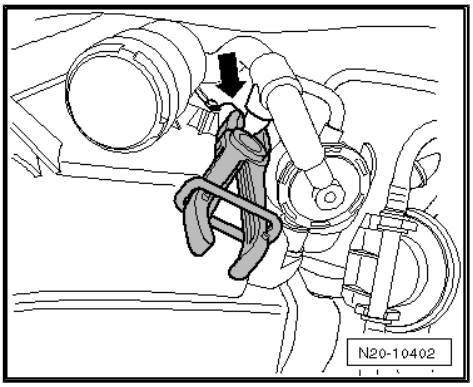

If smoke still escapes from air filter:

– Clamp off hose between fuel system diagnostic pump -V144- and air filter -arrow-. Also refer to ⇒ Item C (page 128) .

– Observe air filter. If smoke no longer escapes, shut-off valve in fuel system diagnostic pump -V144- is leaking. Renew fuel system diagnostic pump -V144- .

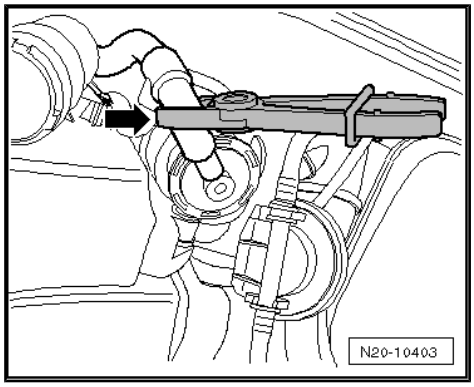

If no smoke escapes from air filter ⇒ Item 7 (page 128) :

– Check whether smoke escapes from any fuel system component or hose.

To inspect flanges for fuel pump and fuel filter, open assembly openings in vehicle interior.

– Renew leaking hoses or components.

After completing work, perform guided function „checking fuel tank breather system for leaks“ using ⇒ Vehicle diagnostic tester.

4.2.1 Overview of activated charcoal filter system

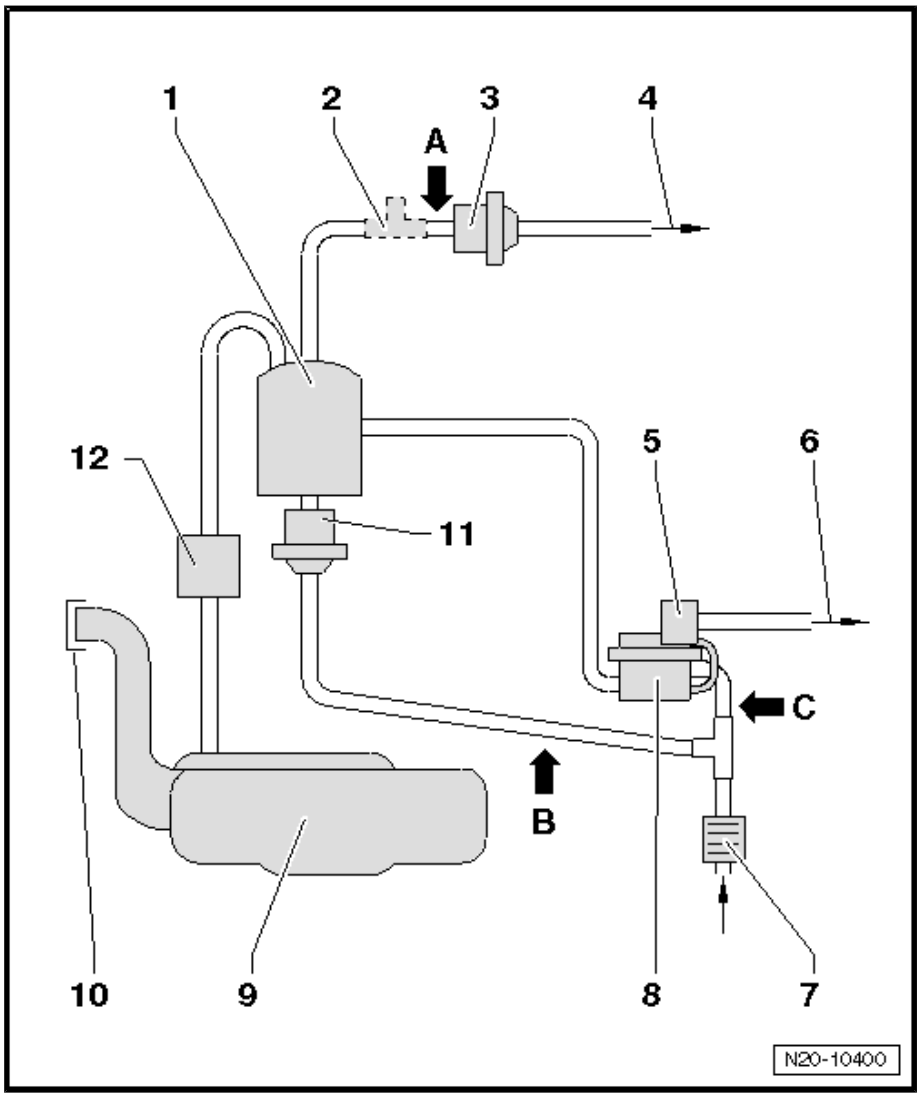

1 - Activated charcoal filter

2 - Location of adapter hose - KLI 9210/55-2-

- ❑ For leak detection in fuel system

3 - Activated charcoal filter solenoid valve 1 -N80-

4 - Breather line

- ❑ To intake manifold.

5 - Solenoid valve

- ❑ For fuel system diagnostic pump -V144-

6 - Vacuum line

- ❑ To intake manifold.

7 - Air filter

- ❑ For fuel system diagnostic pump -V144-

8 - Fuel system diagnostic pump -V144-

9 - Fuel tank

10 - Cap

11 - Activated charcoal filter solenoid valve 2 -N115-

12 - Pressure retention valve

A - Clamp off in this area

- ❑ For leak detection in fuel system
- ❑ For checking activated charcoal filter solenoid valve 1 -N80- .

B - Clamp off in this area

- ❑ For leak detection in fuel system
- ❑ For checking activated charcoal filter solenoid valve 2 -N115- .

C - Clamp off in this area

- ❑ For leak detection in fuel system
- ❑ For checking fuel system diagnosis pump -V144- .

4.2.2 Checking build-up of pressure of fuel system diagnostic pump -V144-

Test prerequisite:

- Fuel system tester -KLI 9210- is connected to vehicle via adapter hose -KLI 9210/55-2- .
- Valve -D- is set to „Hold“.
- Diagnostic mode 8 is completed and engine is running at idling speed.

Fuel system must not be under pressure for test. Proceed as follows to reduce residual pressure:

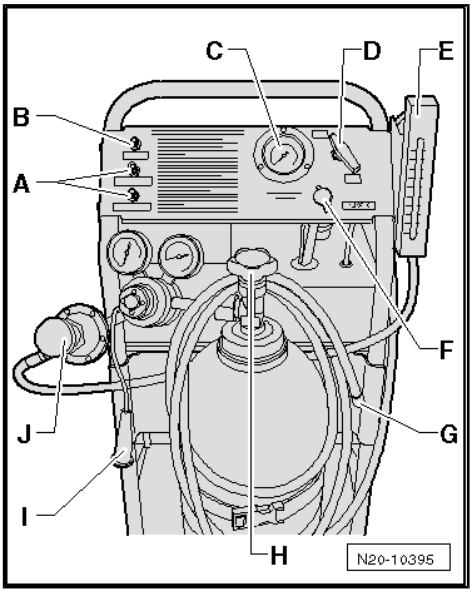

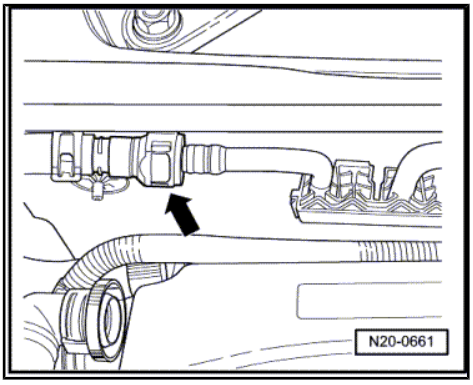

– Briefly open quick-release coupling -arrow- for adapter hose -KLI 9210/55-2- to release pressure in fuel system. Pressure gauge -D- must drop to 0 in. H2O.

– On vehicle system tester, select operating mode Guided functions.

– Select guided function „Checking tank ventilation system for leaks“.

– Initiate test.

– Observe pressure gauge while test is running.

– Fuel system diagnostic pump -V144- must pump up pressure in fuel system at least to 18 mbar (7 in. H2O).

– If pressure is not reached, check vacuum supply of fuel system diagnostic pump -V144- ⇒ page 129 .

– If fuel system is free of leaks and vacuum supply of fuel system diagnostic pump -V144- is OK, renew fuel system diagnostic pump -V144- .

4.2.3 Checking vacuum supply of fuel system diagnostic pump -V144-

Special tools and workshop equipment required

- Turbocharger tester -V.A.G 1397A-

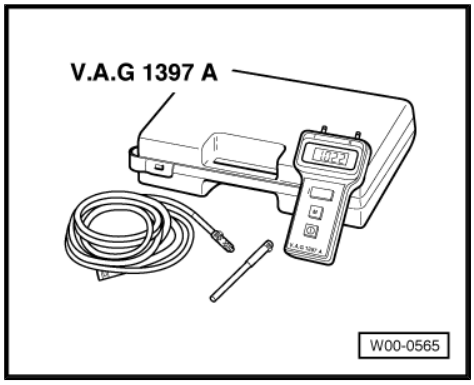

- T piece -251 201 346-
- Hose ∅ 6 mm

Note

Fitting location of fuel system diagnosis pump -V144- : in rear right wheel housing under wheel housing liner.

– Remove rear right wheel and wheel housing liner.

– Remove securing bolts ⇒ Item 14 (page 123) of activated charcoal filter and lower filter to have better access to vacuum line.

Caution

Support activated charcoal filter to prevent its hanging down from hoses and lines. This prevents damages.

– Disconnect vacuum line -1- from fuel system diagnostic pump -V144- .

– Connect turbocharger tester -V.A.G 1397A- with T-piece and hose ∅ 6mm, between vacuum line -1- and fuel system diagnostic pump -V144- -2-.

– Switch on measuring range I (absolute pressure measurement).

– Connect vehicle diagnosis tester and start engine.

– On vehicle diagnosis tester, select operating mode `Guided functions`.

– Select guided function „Checking tank ventilation system for leaks“.

– Observe display on turbocharger tester -V.A.G 1397A- while test is running.

• Pressure must pulsate and must not exceed 0.700 bar during test.

– If pressure exceeds 0.7 bar during test, vacuum supply is too low. Check vacuum line to intake manifold for possible kinks or blockages.

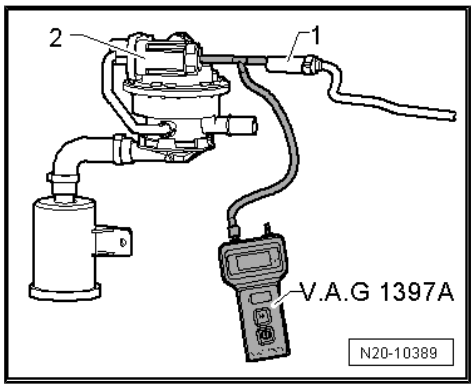

24 – Mixture preparation - injection

1 Repairing injection system

General notes on injection

- Fuel hoses in engine compartment must be secured only with spring-type clips. The use of clamp or screw-type clips is not permissible.
- For trouble-free operation of electrical components, a voltage of at least 11.5 V is necessary.

Safety precautions ⇒ page 137 .

Rules for cleanliness ⇒ page 137 .

Technical data ⇒ page 137 .

Assembly overview - intake manifold ⇒ page 132 .

Assembly overview - fuel rail ⇒ page 133

Assembly overview - air filter ⇒ page 133 .

Assembly overview - vacuum hose assembly on intake manifold ⇒ page 136 .

1.1 Assembly overview - intake manifold

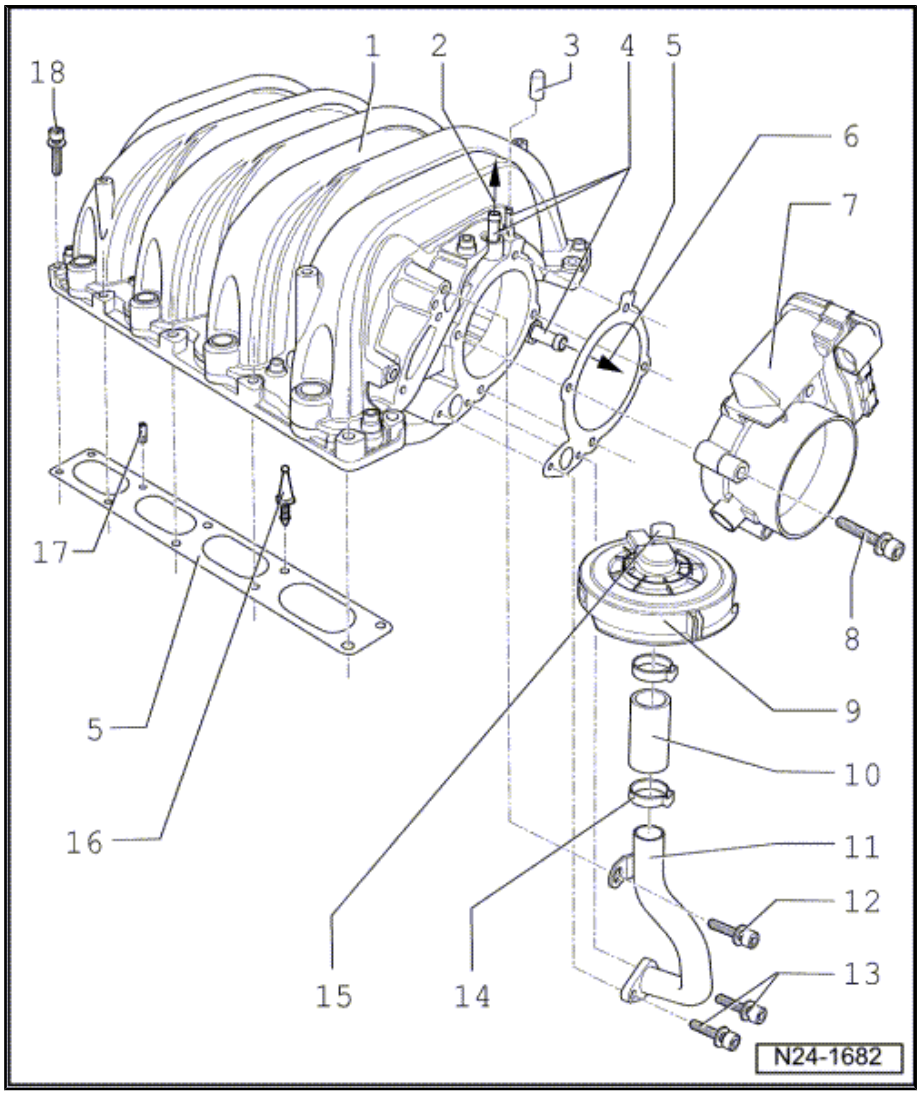

1 - Variable intake manifold

2 - To activated charcoal filter solenoid valve 1 -N80-

3 - Sealing cap

4 - Vacuum connection

5 - Gasket

6 - To brake servo.

7 - Throttle valve module - J338-

- ❑ Gold-plated connector contacts
- ❑ If renewed, adapt engine control unit to throttle valve module ⇒ Vehicle diagnostic tester; ; „Guided functions“ .

8 - 10 Nm

9 - Crankcase breather valve

10 - Connecting hose

11 - Connecting pipe

12 - 10 Nm

13 - 10 Nm

14 - Clip

15 - Connection

- ❑ For crankcase ventilation.

16 - Dowel cone

- ❑ Fit gasket before installation.

17 - Dowel pin, 3 Nm

18 - 10 Nm

- ❑ To secure intake manifold.
- ❑ 7 securing bolts on each side

1.2 Assembly overview - fuel rail

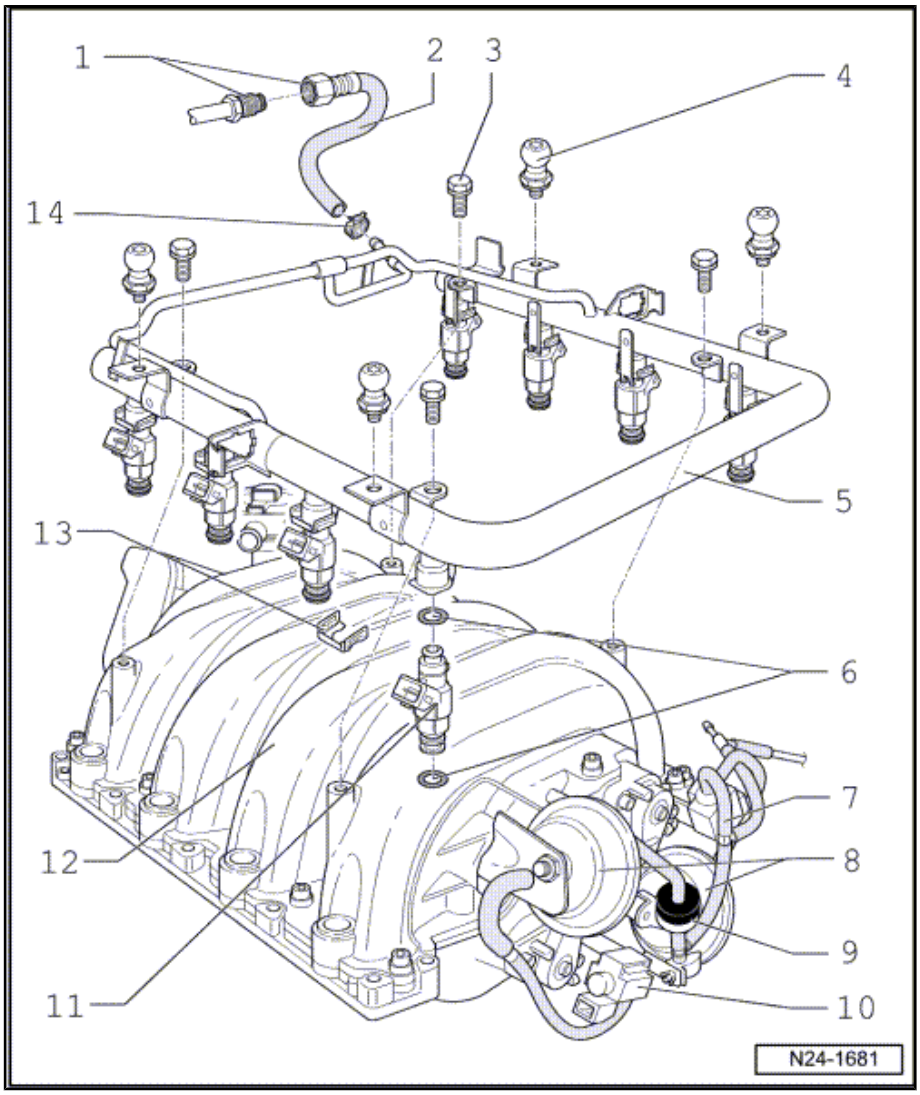

1 - Threaded connection, 22 Nm

- ❑ Counterhold when tightening.
- ❑ For fuel supply.

2 - Fuel supply hose

- ❑ Check for secure seating.
- ❑ Secure with spring-type clip.

3 - 10 Nm

4 - Ball stud, 3 Nm

- ❑ For engine cover

5 - Fuel rail

- ❑ With retaining tabs for knock sensor connectors.

6 - Seal

- ❑ Renew.
- ❑ Before installing, moisten lightly with clean engine oil.

7 - Valve 2 for variable intake manifold changeover. -N261-

8 - Vacuum actuator

- ❑ For intake manifold change-over.

9 - Non-return valve

- ❑ Black side of valve faces intake manifold connection

10 - Variable intake manifold changeover valve -N156-

11 - Injector (N30...N33, N83...N86)

- ❑ Checking ⇒ page 139 .

12 - Variable intake manifold

13 - Retaining clip

- ❑ Check for secure seating.

14 - Spring-type clip

1.3 Assembly overview - air filter

Separating connecting line to air suspension compressor
⇒ page 135 .

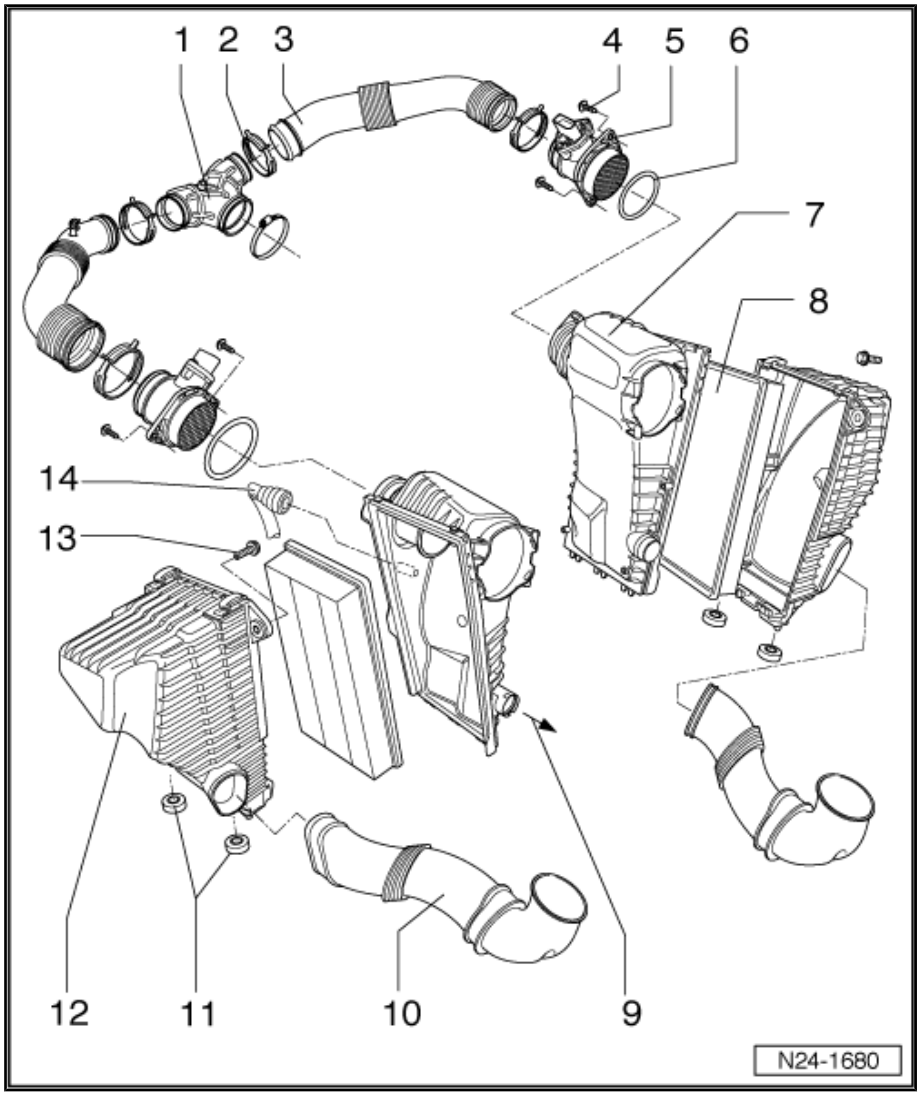

1 - Intake hose

2 - Spring-type clip

3 - Intake hose

4 - 6 Nm

5 - Air mass meter -G70- with intake air temperature sender -G42-

6 - Seal

- ❑ Renew if damaged.

7 - Air filter upper part

- ❑ On the right side with connection to secondary air pump motor -V101- .

8 - Filter element

9 - To secondary air pump motor -V101-

10 - Air duct

- ❑ Secured to lock carrier.

11 - Rubber bush

- ❑ Clipped to longitudinal member.

12 - Air filter lower part

- ❑ To remove lower part of air filter on right, right engine cover retainer must be removed ⇒ page 134 .

13 - 10 Nm

14 - Connection from air suspension compressor

- ❑ Removing ⇒ page 135

Removing bracket for right engine cover

– Press in lug -1- from below and pull bracket out in -direction of arrow-.

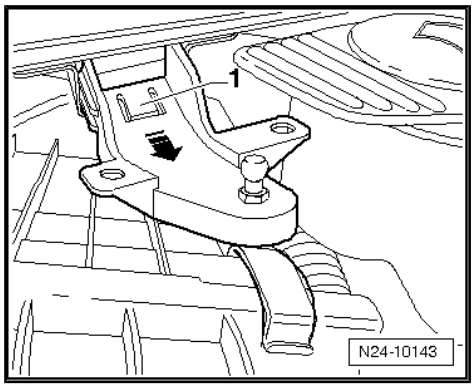

1.3.1 Disconnecting connecting line to air suspension compressor

– Disconnect connecting line on right air filter -arrow- as follows:

– Carefully lever off green securing ring -1- using a screwdriver. Then press clamping ring -2- in direction of -arrow-.

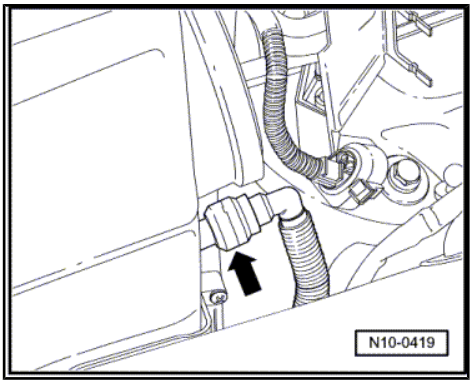

– Now pull loosened line -B- off connection -A- on air filter.

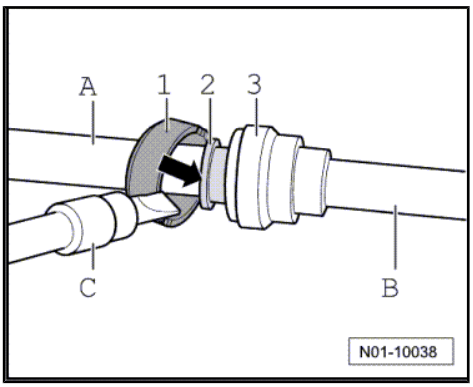

1.4 Assembly overview - vacuum hose assembly on intake manifold

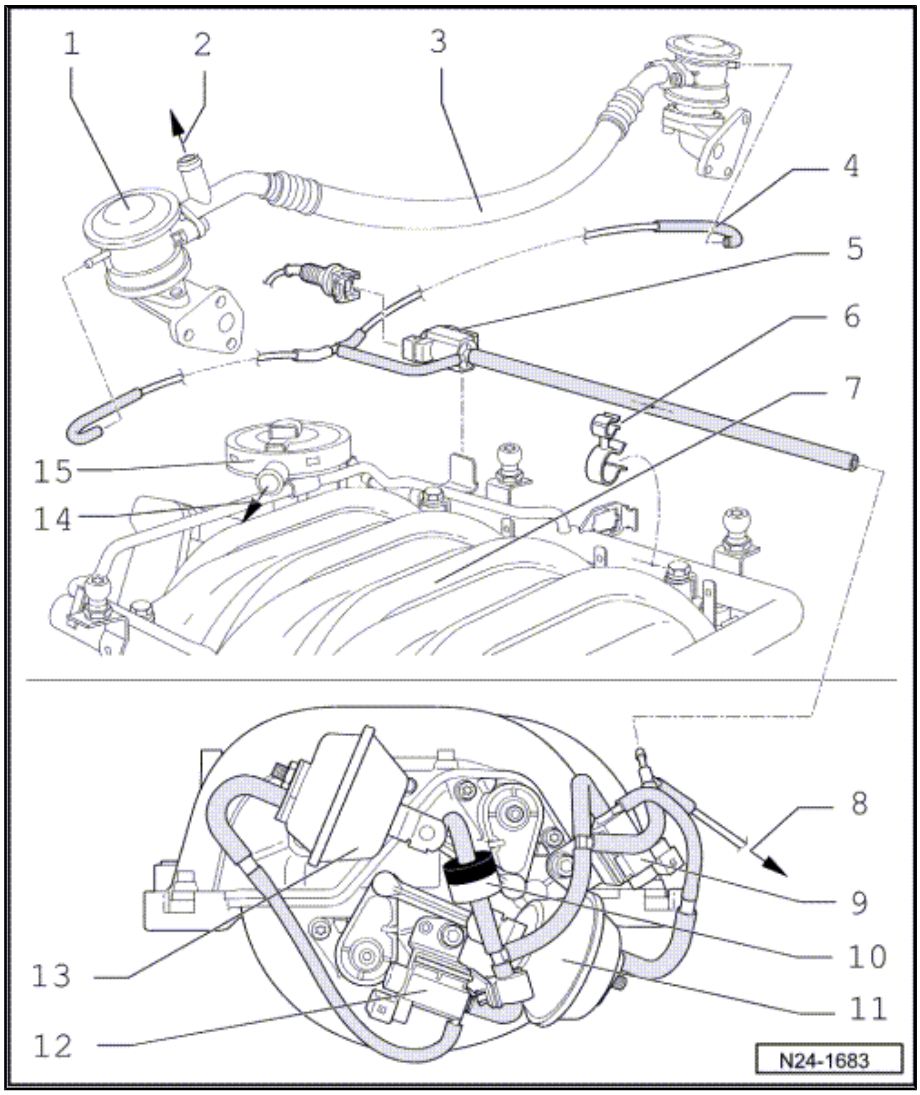

1 - Combination valve

- ❑ For injection of secondary air

2 - To secondary air pump motor -V101-

3 - Connecting hose

- ❑ Route without tension.

4 - Vacuum connection

- ❑ For combination valve.

5 - Secondary air inlet valve -N112-

- ❑ Secured to fuel rail.

6 - Bracket

- ❑ Secured to fuel rail.

7 - Variable intake manifold

8 - To vacuum reservoir

- ❑ ⇒ Item 10 (page 156)

9 - Valve 2 for variable intake manifold changeover. -N261-

10 - Non-return valve

- ❑ Black side of valve faces intake manifold connection

11 - Vacuum actuator

- ❑ For intake manifold change-over.

12 - Variable intake manifold changeover valve -N156-

13 - Vacuum actuator

- ❑ For intake manifold change-over.

14 - To cylinder block.

- ❑ ⇒ Item 3 (page 17)

15 - Crankcase breather valve

1.5 Safety precautions

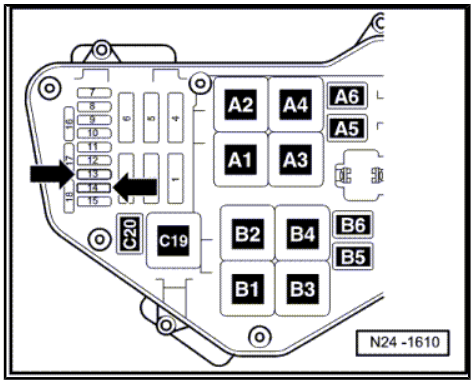

- For safety reasons, fuse nos. -13- and -14- -arrows- must be removed from the fuse holder before opening the fuel system. Otherwise, the fuel pump could be activated by the driver's door contact switch.
- Fuse nos. 13 and 14 are located in the E-box fuse holder in the left plenum chamber.

> ⚠ WARNING
>
> *Fuel supply lines are under pressure! Wear eye protection and gloves to avoid injuries and skin contact. Before loosening hose connections, wrap a cloth around the connection. Then release pressure by carefully pulling hose off connection.*

To prevent injuries to persons and/or damage to the injection and ignition system, the following must be observed:

- Do not touch or disconnect ignition cables when the engine is running or being turned at starter speed.
- Switch off ignition before connecting or disconnecting injection and ignition system wiring as well as test instrument cables.

Note the following if testers and measuring instruments have to be used during a road test:

- Test and measuring instruments must always be secured to rear seat and operated by a second person from this location.

If test and measuring instruments are operated from front passenger seat and the vehicle is involved in an accident, there is a possibility that the person sitting in this seat may receive serious injuries when the airbag is triggered.

- If the engine is to be turned at starter speed without starting:

– Pull connectors off ignition coils with output stage (cylinders 1…8).

1.6 Rules for cleanliness

When working on the fuel supply and injection system, pay careful attention to the following „5 rules“ for cleanliness:

- Thoroughly clean all unions and surrounding areas before disconnecting.
- Place removed parts on a clean surface and cover. Use only lint-free cloths.
- Carefully cover opened components or seal if repairs cannot be carried out immediately.
- Install clean components only. Do not remove replacement parts from packing until immediately before installing. Do not use parts that have not been stored in their packing (e.g. in tool boxes etc.).
- When system is open: do not work with compressed air if this can be avoided. Do not move vehicle unless absolutely necessary.

1.7 Technical data

Engine codes	AXQ	BHX
Idling check		
Idling speed[3)] rpm	670...730	670...730

Engine codes		AXQ	BHX
Engine control unit			
System designation		Motronic ME 7.1	Motronic ME 7.1
Part number		⇒ Spare parts catalogue	⇒ Spare parts catalogue
Governed speed	rpm	from approx. 6500	from approx. 6500

3) Not adjustable.

2 Checking components

Checking injectors ⇒ page 139 .

Checking fuel pressure regulator and holding pressure ⇒ page 142 .

2.1 Checking injectors

Checking injectors for leaks and quantity injected ⇒ page 139

Special tools and workshop equipment required

- Remote control for V.A.G 1348 -V.A.G 1348/3A- with adapter cable - Phaeton - V.A.G 1348/3-3- .
- Injection rate tester -V.A.G 1602-
- Adapter cable -V.A.G 1348/3-2-

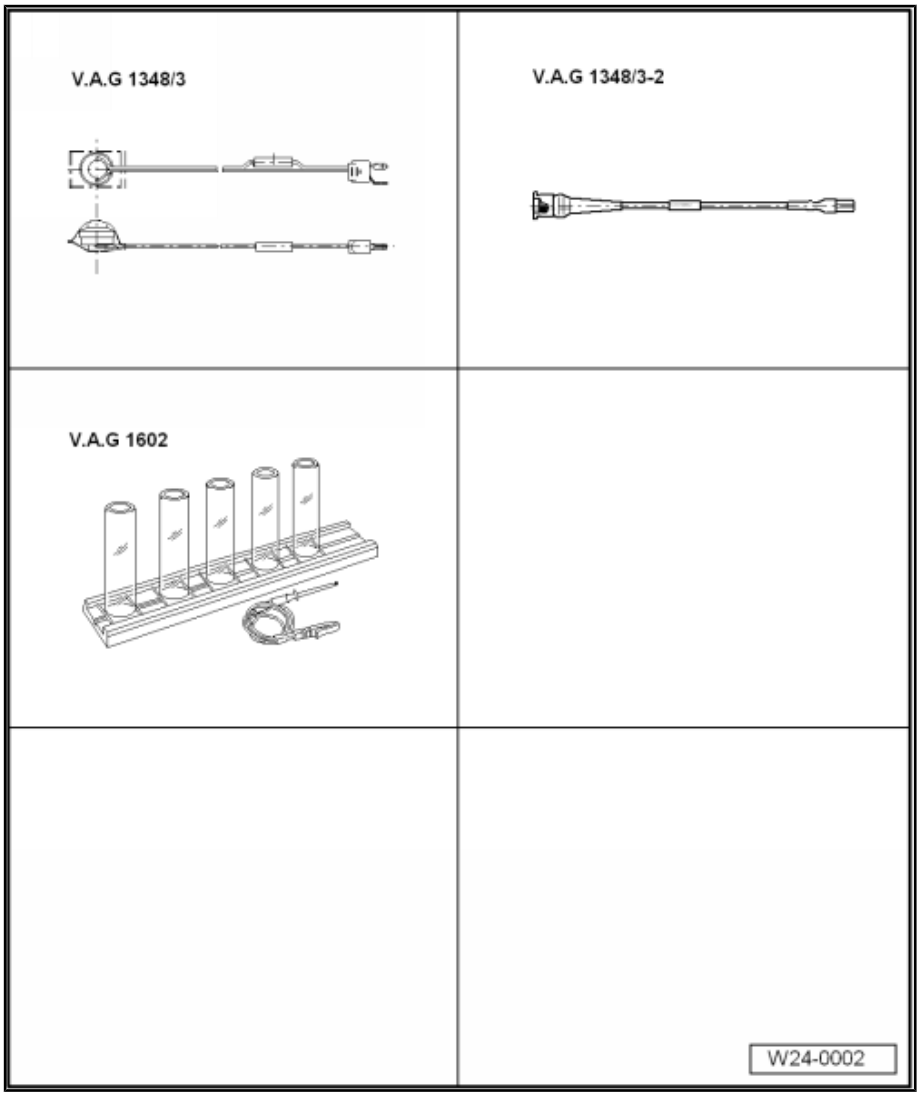

2.1.1 Checking injectors for leaks and quantity injected

- The fuel pressure must be in order, checking ⇒ page 142 .

Checking for leaks

WARNING

Fuel supply lines are under pressure! Wear eye protection and gloves to avoid injuries and skin contact. Before loosening hose connections, wrap a cloth around the connection. Then release pressure by carefully pulling hose off connection.

– Remove complete fuel rail (fuel supply line remains connected) ⇒ page 133 .

– Remove fuse holder cover.

– Pull fuel pump relays -1- and -2- from their sockets.

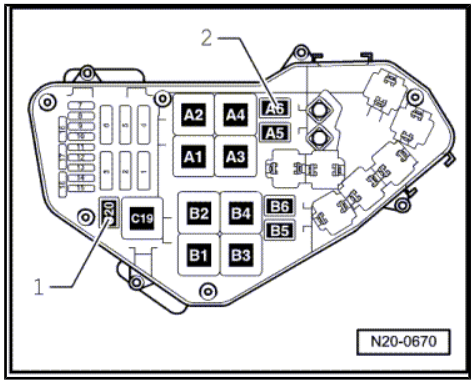

– Connect remote control -V.A.G 1348/3- with adapter line -V.A.G 1348/3-3- -arrow- to connection of fuel pump relay for right fuel delivery unit.

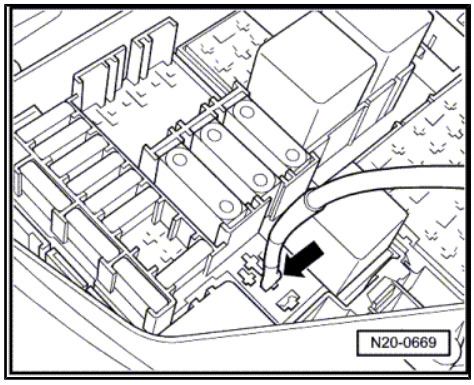

– Now connect second connection of adapter cable -V.A.G 1348/3-3- to connector connection -arrow- for fuel pump relay for left fuel delivery unit.

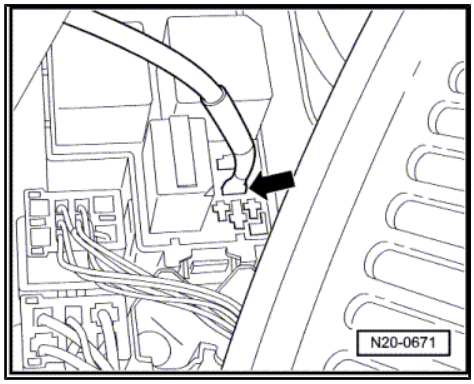

– Connect crocodile clip of remote control -V.A.G 1348/3- to positive connection -1-.

– Operate remote control -V.A.G 1348/3- .

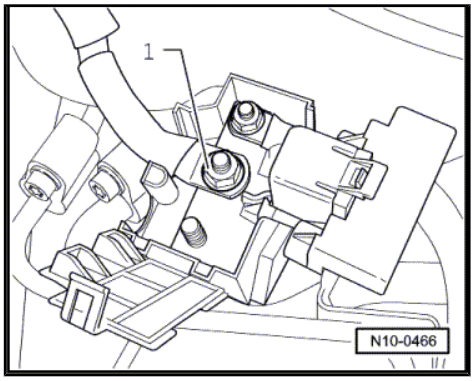

If fuel pump runs:

– Check injectors for leaks (visual check). No more than 1 to 2 drops per minute must escape from each valve when fuel pump is running.

If the fuel loss is greater:

– Renew defective injector.

Pay attention to the following when installing the injectors:

♦ Renew O-rings on all injectors and lightly moisten with clean engine oil.

♦ Insert injectors vertically and in the correct position into the fuel rail and secure with retaining clips.

♦ Fit fuel rail with secured injectors onto intake manifold and press in evenly.

Checking quantity injected

• Fuel pump relays and fuses 13 and 14 are fitted in their sockets.

– Connect test box -V.A.G 1598/31- to engine control unit.

– Bridge test box sockets 1 and 65 using adapter cable from auxiliary measuring set -V.A.G 1594- .

– Insert the injector to be checked into injection rate tester measuring glass -V.A.G 1602- .

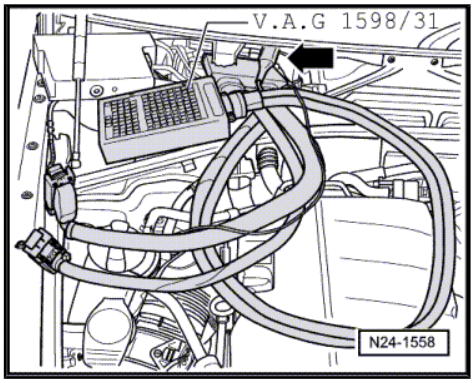

– Connect a contact of injector to be tested to engine earth using auxiliary cables from auxiliary measuring set -V.A.G 1594- .

– Connect second injector contact to remote control - V.A.G 1348/3- using adapter cable -V.A.G 1348/3-2- .

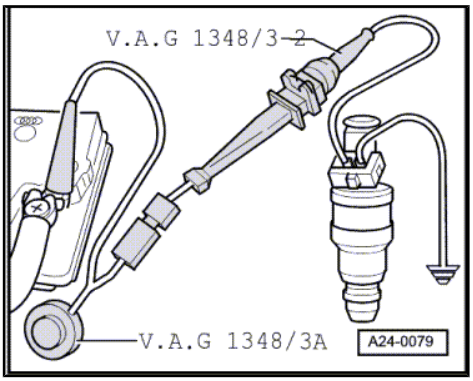

– Connect crocodile clip of remote control -V.A.G 1348/3- to battery positive (+) -1- in engine compartment.

– Switch on ignition.

– Operate remote control -V.A.G 1348/3- for 30 seconds.

– Repeat check on other injectors. Use new measuring beakers.

– Switch off ignition.

– After all injectors have been activated, place measuring beakers on a level surface and compare the quantity injected. Specification: 95..0.115 ml per injector

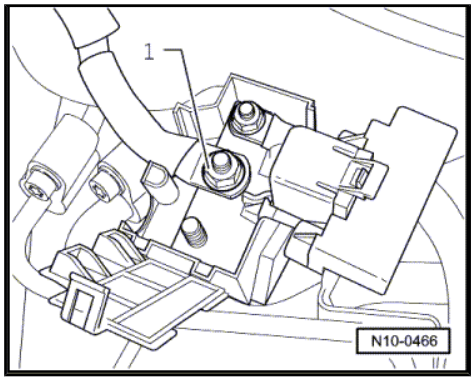

If the measured values of one or more injectors are above or below the prescribed specifications:

– Renew defective injector.

Install injectors in reverse order. In the process, note the following:

♦ Renew O-rings on all injectors and lightly moisten with clean engine oil.

♦ Insert injectors vertically and in the correct position into the fuel rail and secure with retaining clips.

♦ Fit fuel rail with secured injectors onto intake manifold and press in evenly.

2.2 Checking fuel pressure regulator and holding pressure

Special tools and workshop equipment required

♦ Pressure gauge -V.A.G 1318-

♦ Adapter set -V.A.G 1318/7-

♦ Adapter set -V.A.G 1318/10-

♦ Adapter set -V.A.G 1318/13-

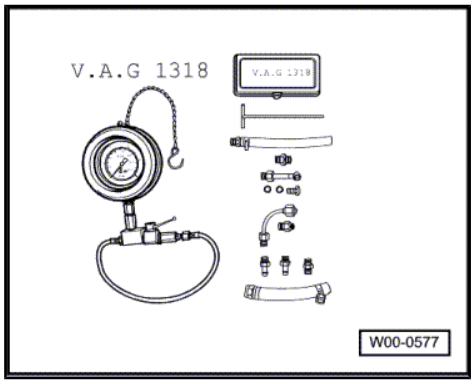

♦ Spring-type clip pliers -VAS 6340-

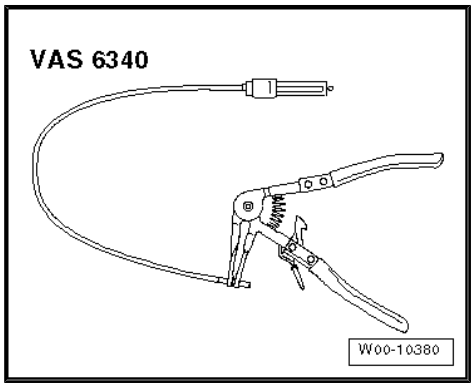

Test procedure

The fuel pressure regulator maintains the fuel pressure at a constant 4.0 bar.

- Fuel pump delivery is OK.

> ⚠ **WARNING**
>
> *Fuel supply lines are under pressure! Wear eye protection and gloves to avoid injuries and skin contact. Before loosening hose connections, wrap a cloth around the connection. Then release pressure by carefully pulling hose off connection.*

– Wrap a cloth around the threaded connection -arrow- and release fuel pressure by quickly opening and closing connection.

– Loosen spring-type clip and disconnect fuel hose from connection on fuel rail ⇒ Item 14 (page 133) .

– Now connect pressure tester -V.A.G 1318- using adapters -V.A.G 1318/7- , -V.A.G 1318/10- and -V.A.G 1318/13- as shown in the illustration.

– The lever on pressure tester -V.A.G 1318- -1- points in direction of flow.

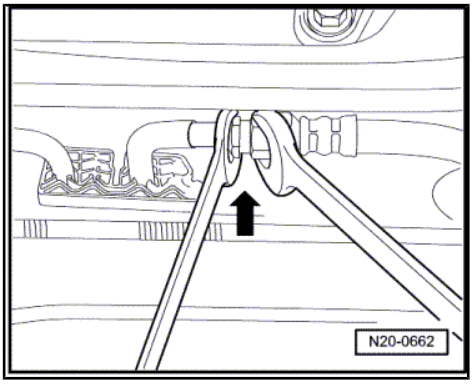

– Always secure both hose ends with clips -2-.

– Start engine and run at idling speed.

– Measure fuel pressure. Specification: approx. 4.0 bar.

If the specification is not attained:

– Check delivery rate of fuel pumps ⇒ page 107 .

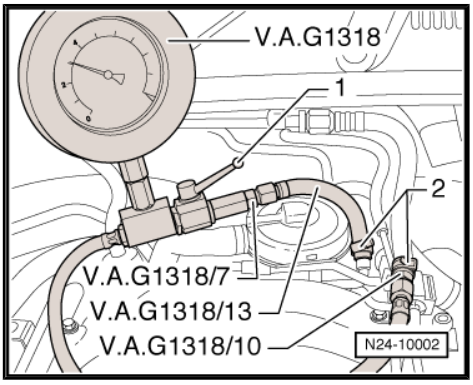

– Renew fuel pressure regulator -2-, if necessary.

If specification is attained:

– Switch off ignition.

– Now check for leaks and holding pressure. Do this by observing pressure drop on gauge. After 10 minutes, there must be a residual pressure of at least 3.0 bar.

If the holding pressure drops below 3 bar:

– Check pressure tester for leaks.

– Check non-return valves of left and right fuel pumps ⇒ page 111 and ⇒ page 113 .

– Switch off ignition.

When the pressure tester is removed after the test has been completed:

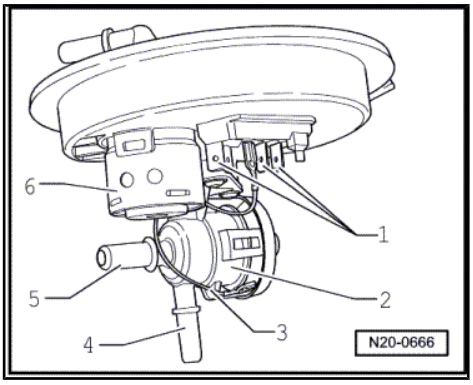

– Wrap a cloth around the threaded connection -arrow- and release fuel pressure by quickly opening and closing connection.
– Remove pressure tester -V.A.G 1318- with adapters.
– Reconnect fuel hose to fuel rail and secure with spring-type clip ⇒ Item 14 (page 133) .

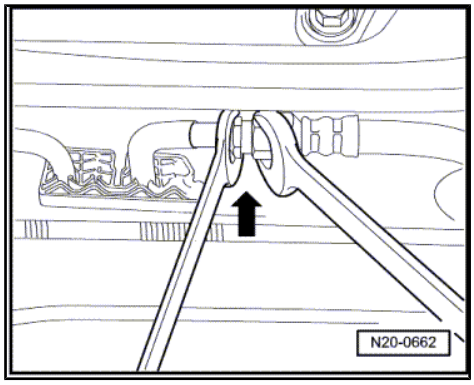

3 Engine control unit

Removing and installing engine control unit ⇒ page 145 .

Reading and clearing engine control unit fault memory ⇒ page 145 .

3.1 Removing and installing engine control unit

If you wish to replace the engine control unit, connect the vehicle diagnosis, testing and information system -VAS 5051B- and carry out the guided function „Renew control unit“.

Removing

– Switch off ignition.

– Remove windscreen wiper motor on right side: ⇒ Electrical system; Rep. gr. 92 ; Removing and installing windscreen wiper system .

– Release both connectors from control unit and pull off.

– Control unit can now be removed.

Installing

– Place control unit into retaining frame.

– Fit connector and lock in position.

– Install windscreen wiper motor on right side: ⇒ Electrical system; Rep. gr. 92 ; Windscreen wiper system .

– Install plenum chamber cover.

– Adapt new engine control unit: ⇒ Vehicle diagnostic tester; „Guided functions“ .

3.2 Reading and erasing engine control unit fault memory

Special tools and workshop equipment required

♦ Vehicle diagnosis, testing and information system -VAS 5051-

♦ Diagnosis cable -VAS 5051/1- or -VAS 5051/3-

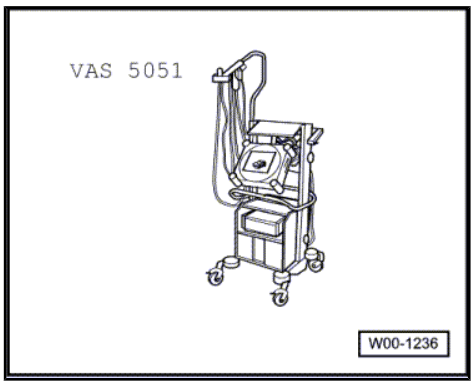

Procedure

– Connect vehicle diagnosis, testing and information system -VAS 5051- as follows:

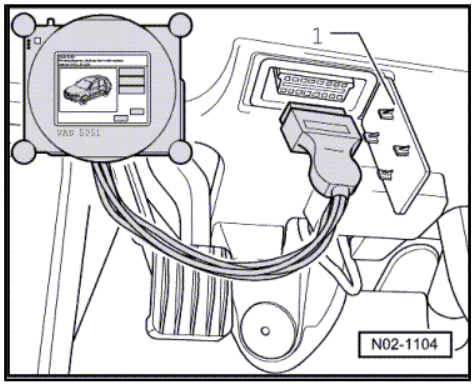

– Connect connector of diagnosis cable -VAS 5051/1- or -VAS 5051/3- to diagnostic connection.
– Start engine and run at idling speed.

Only when engine does not start:

– Switch on ignition.

Selecting operating mode:

– Press button on display for „Vehicle self-diagnosis“.

Selecting vehicle system:

– Press „01 - Engine electronics“ button on display.

The control unit identification with code as well as chassis number and immobilizer identification number will be indicated on the display.

Note

A print-out can be made if required. Tghen press the `Print` *button.*

– Press → button.

Select diagnostic function:

– Press „02 - Read fault memory“ button on display.
– If no fault is stored in engine control unit „0 fault detected“ is displayed.
– If faults are stored in the engine control unit, these are shown one below the other on the display.
– Press ← button.
– Press „05 - Clear fault memory“ button on display.
– Select „06-End output“ function.

26 – Exhaust system

1 Removing and installing parts of exhaust system

Assembly overview - exhaust manifold with starter catalytic converters and attachments ⇒ page 148

Assembly overview - silencers with mountings ⇒ page 153

Note

After working on the exhaust system, ensure that the system has sufficient clearance to the bodywork. If necessary, loosen flange on catalytic converter and realign silencers and exhaust pipes *⇒ page 154* *.*

Special tools and workshop equipment required

- Lambda probe open ring spanner set -3337-

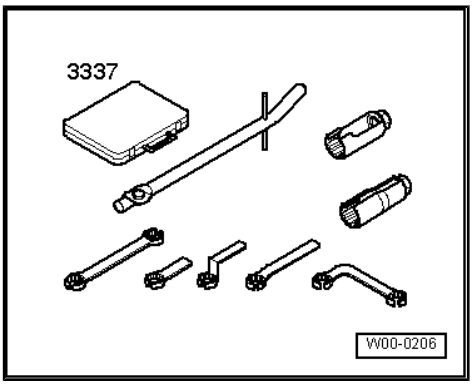

- Torque wrench -V.A.G 1332-

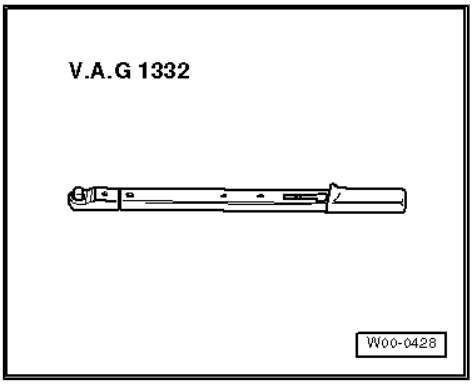

1.1 Assembly overview - exhaust manifold with starter catalytic converters and attachments

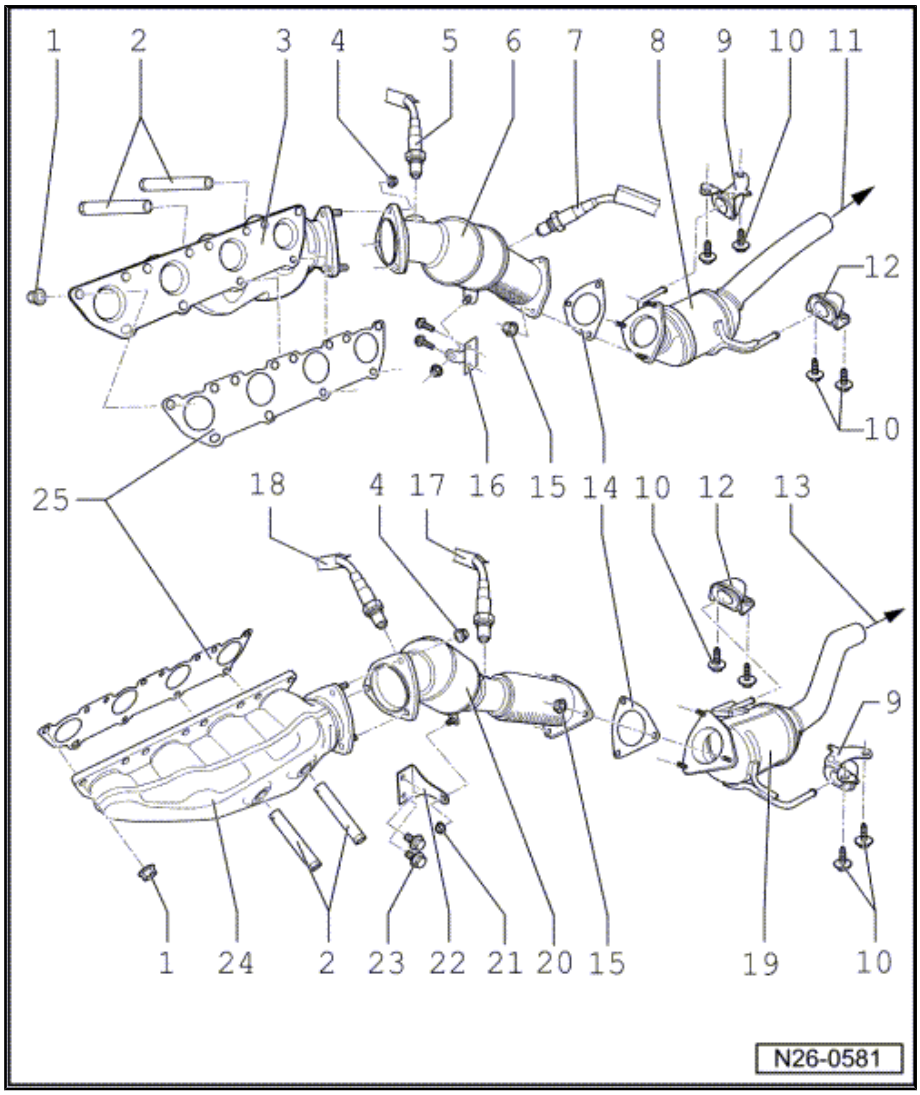

1 - Nut, 25 Nm

2 - Nut, 25 Nm

3 - Exhaust manifold

- ❑ For cylinder bank 1.
- ❑ Removal only possible with engine removed.

4 - M8 25 Nm, M10 40 Nm

5 - Lambda probe -G39- 50 Nm

- ❑ Bank 1, probe 1.
- ❑ Installed in exhaust gas stream of cylinders 1, 2, 3 and 4.
- ❑ Removing and installing ⇒ page 149

6 - Starter catalytic converter

- ❑ Installed in exhaust gas stream of cylinder bank 1.

7 - Lambda probe after catalytic converter -G130- 50 Nm

- ❑ Bank 1, probe 2.
- ❑ Removing and installing ⇒ page 149

8 - Catalytic converter

9 - Mounting

- ❑ Installation position ⇒ page 154 .

10 - 25 Nm

11 - To centre silencer

12 - Mounting

13 - To centre silencer

14 - Gasket

- ❑ Renew.

15 - M8 25 Nm, M10 40 Nm

16 - Bracket

- ❑ For supporting gearbox on right.

17 - Lambda probe 2 after catalytic converter -G131- , 50 Nm

- ❑ Bank 2, probe 2.
- ❑ Removing and installing ⇒ page 149

18 - Lambda probe 2 -G108- 50 Nm

- ❑ Bank 2, probe 1
- ❑ Installed in exhaust gas stream of cylinders 5, 6, 7 and 8.
- ❑ Removing and installing ⇒ page 149

19 - Catalytic converter

20 - Starter catalytic converter

- ❑ Installed in exhaust gas stream of cylinder bank 2.

21 - 25 Nm

22 - Bracket

- ❑ For supporting gearbox on left.

23 - 25 Nm

24 - Exhaust manifold

- ❑ For cylinder bank 2.
- ❑ Removal only possible with engine removed.
- ❑ Removing ⇒ page 149

25 - Gasket

- ❑ Renew.
- ❑ Note installation position.

Removing and installing exhaust manifold

– Oil dipstick guide tube retainer -1- must be removed to enable removal of cylinder bank 2 exhaust manifold.

– Then disconnect refrigerant line -2- and seal connections with a clean cloth.

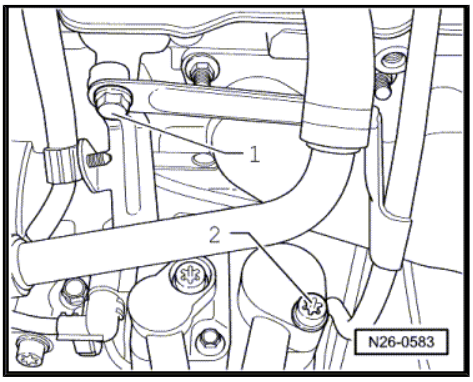

– Now unscrew securing nuts -arrows-.

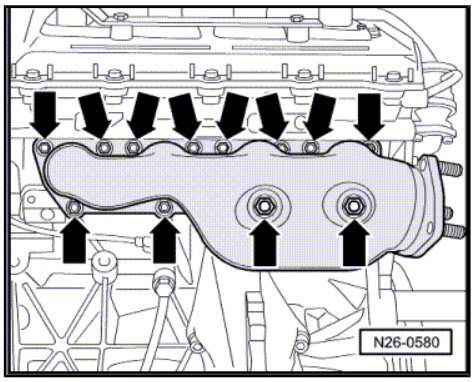

1.2 Removing and installing Lambda probes

Special tools and workshop equipment required

♦ Open ring spanner with 3/8" drive (flared spanner)

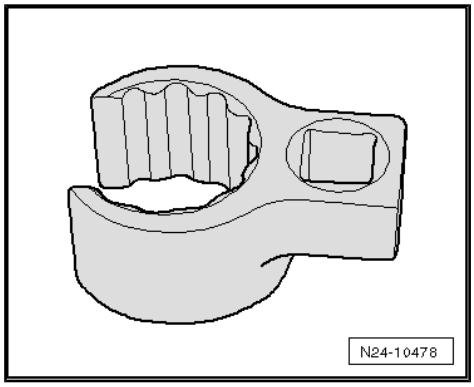

♦ Lambda probe open ring spanner set -3337-

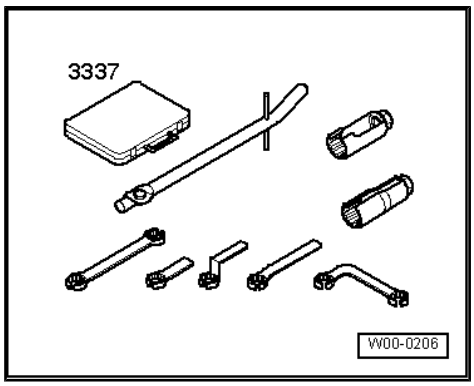

Removing:

– Remove cover for engine and intake manifold.

– Remove intake hoses -1- and -2-. Loosen hose clip for crankcase breather valve -3- and pull crankcase breather valve off hose connection.

– Remove intake air duct to throttle valve module -J338- .

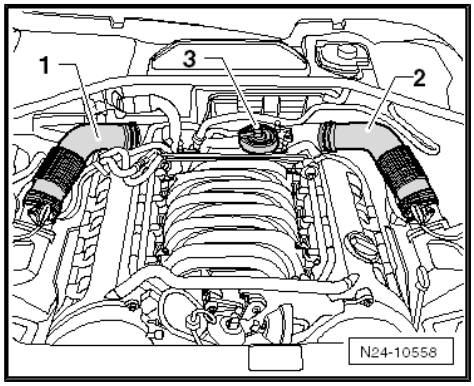

– Disconnect connector for respective Lambda probe and lay cable to Lambda probe aside.

1 - Lambda probe after catalytic converter -G130-

2 - Lambda probe -G39-

3 - Lambda probe 2 after catalytic converter -G131-

4 - Lambda probe 2 -G108-

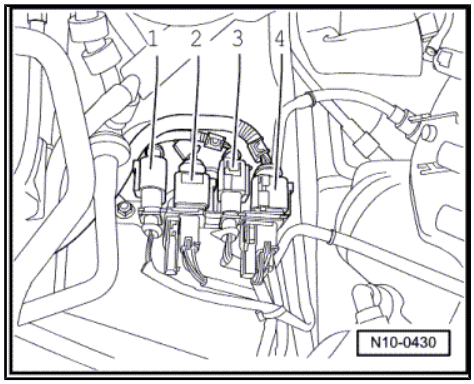

Note

Connector for cylinder bank 1 = black, connector for cylinder bank 2 = brown

Lambda probe 2 -G108- (bank 2, probe 1):

– Unscrew Lambda probe 2 -G108- -item 1-.

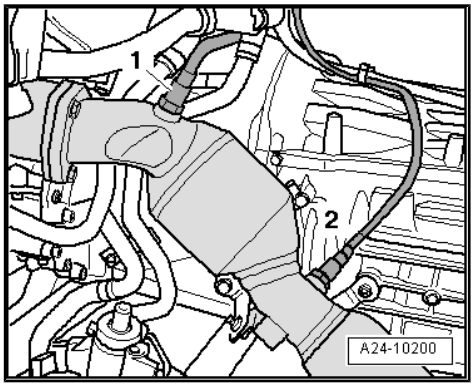

Lambda probe -G39- (bank 1, probe 1):

– Unscrew Lambda probe -G39- -item 2-.

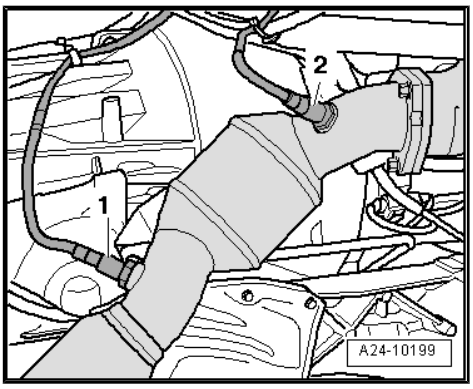

Lambda probe 2 after catalytic converter -G131- (bank 2, probe 2) and Lambda probe after catalytic converter -G130- (bank 1, probe 2):

– Unscrew bolts and remove rear noise insulation tray -2-.

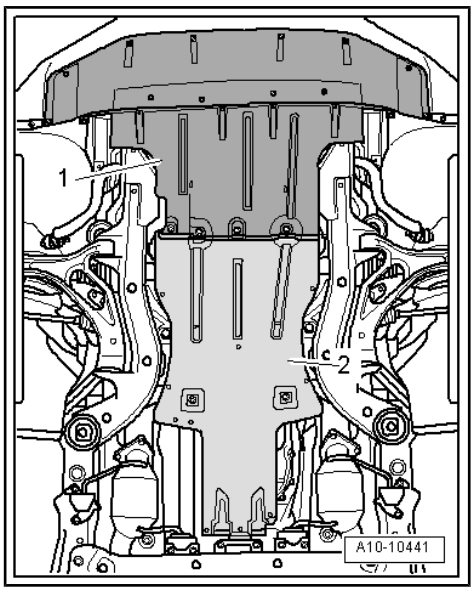

Lambda probe 2 after catalytic converter -G131- (bank 2, probe 2):

– Unscrew Lambda probe 2 after catalytic converter -G131- -item 2-.

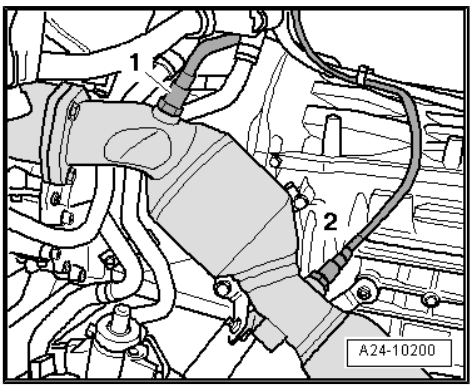

Lambda probe after catalytic converter -G130- (bank 1, probe 2):

– Unbolt heat shield for front propshaft -arrows-.

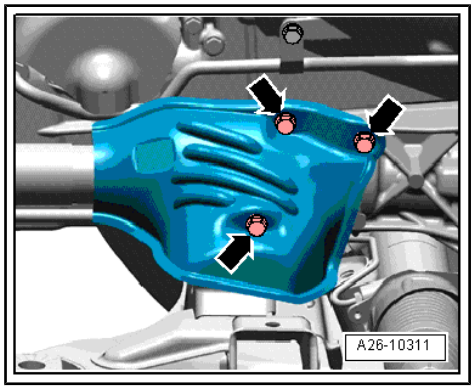

– Unscrew Lambda probe after catalytic converter -G130- -item 1-.

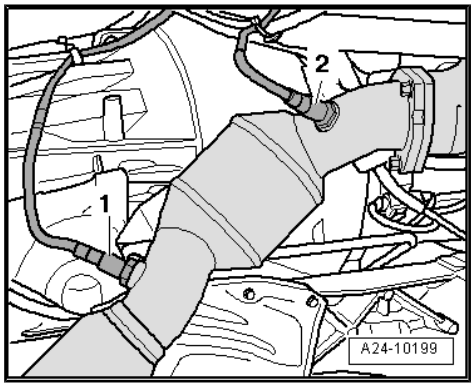

Installing:

– If reusing Lambda probe, lubricate threads with high temperature paste -G 052 112 A3- . Paste may not come into contact with slots on probe body.

– Restore wiring to original position.

Further installation is carried out in the reverse order.

Note

- *Threads of new Lambda probes are already coated with assembly paste; the paste must not get into the slots on the probe body.*
- *When installing, the Lambda probe electrical wiring must always be reattached at the same locations to prevent the Lambda probe wiring from coming into contact with the exhaust pipe.*
- *Fit all cable ties in the original position when installing.*

Specified torques

Component	Nm
Lambda probe in exhaust pipe	50
Heat shield to final drive	9
Air pipe to bracket	9

1.3 Assembly overview - silencers with mountings

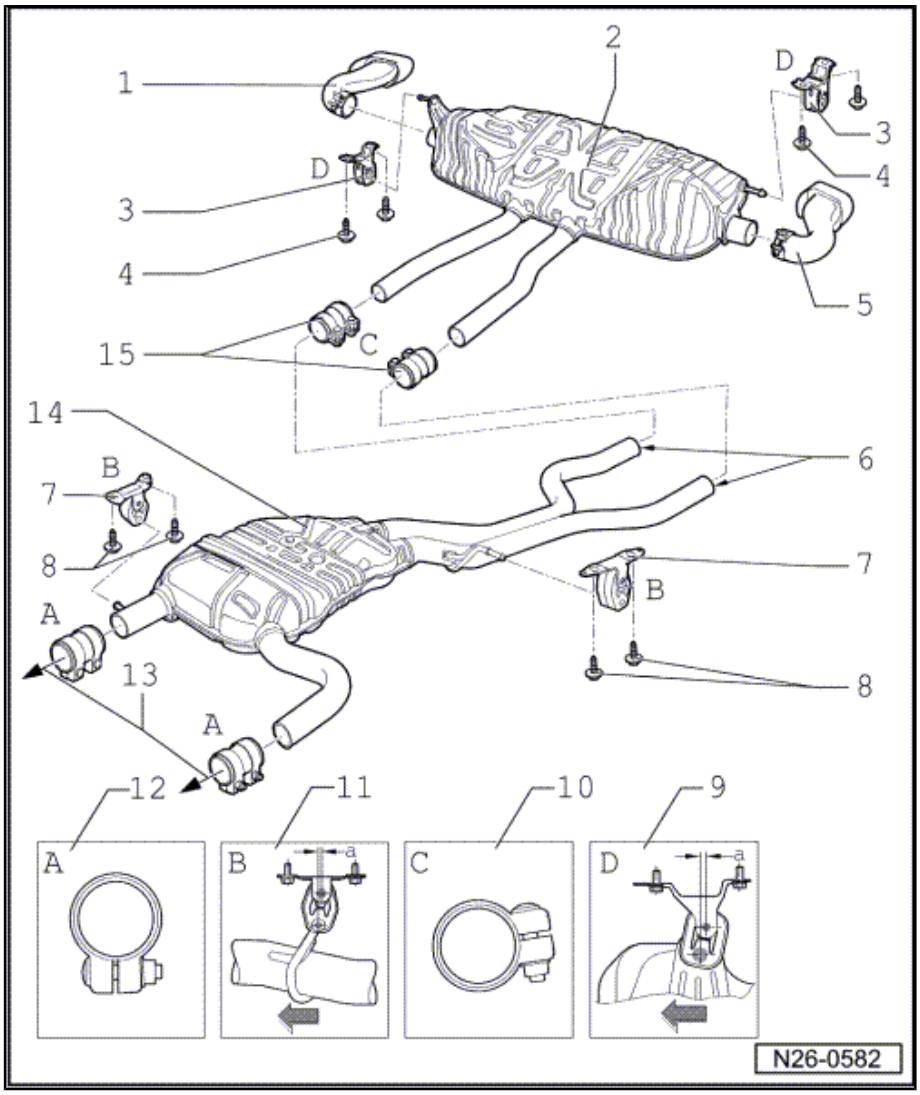

1 - Exhaust tailpipe

2 - Rear silencer

- ❑ Centre and rear silencers are installed as a single component during production. In case of repair, the centre and rear silencers are supplied separately, with a double repair clamp for connecting.
- ❑ In case of repair, align rear silencer free of stress.

3 - Mounting

- ❑ Installation position ⇒ page 154 .
- ❑ Renew if damaged.

4 - 25 Nm

5 - Exhaust tailpipe

6 - Separating point

- ❑ For repair cases
- ❑ Marked by impressions on exhaust pipe.
- ❑ Centre and rear silencers are installed as a single component during production. In case of repair, the centre and rear silencers are supplied separately, with a double repair clamp for connecting.
- ❑ Cut through connecting pipe at right angles at separating point using e.g. pneumatic sabre saw -V.A.G 1523A- .
- ❑ The notches to the left and right of the separating points must be visible following the installation of the double clamp.

7 - Mounting

- ❑ Installation position ⇒ page 154 .
- ❑ Renew if damaged.

8 - 25 Nm

9 - Mounting

- ❑ Installation position ⇒ page 154 .

10 - Double clamp

- ❑ Must be slid to its mid-point on forward exhaust pipe.
- ❑ Note installation position: Securing bolt ends must not project beyond lower edge of clamp.

11 - Mounting

- ❑ Installation position ⇒ page 154 .

12 - Double clamp, 40 Nm

- ❑ Must be slid to its mid-point on forward exhaust pipe.

13 - To exhaust manifold

14 - Centre silencer

- ❑ Centre and rear silencers are installed as a single component during production. In case of repair, the centre and rear silencers are supplied separately, with a double repair clamp for connecting.

15 - Double clamp

- ❑ For repair cases
- ❑ Installation position ⇒ page 154 .

Installation position, double repair clamp in direction of travel

– The end of bolt -1- must not project beyond lower edge of double clamp.

– The angle -2- must be 10° + 5°.

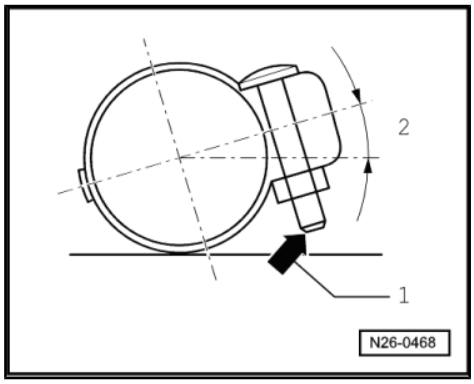

Aligning exhaust system

• Exhaust system cold

– Push exhaust system in direction of travel -1- and tighten double clamps until dimension -a- is attained at the mountings. Centre silencer: dimension a = 10 mm; Rear silencer: dimension a = 15 mm

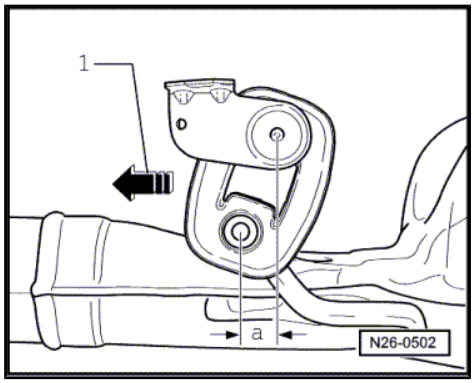

2 Secondary air system

Function

The secondary air system blows air in behind the exhaust valves for max. 65 seconds after a cold start (+15°C … +35°C coolant temperature). This produces an oxygen rich exhaust gas, causing afterburning and reducing the heat-up phase of the catalytic converter. The engine control unit activates the system via the secondary air pump relay -J299- to the secondary air inlet valve -N112- and combination valve. Additionally, after each subsequent engine start (up to max. 80 C engine temperature), the secondary air system will, after a 20 second delay, switch in for 5 seconds during idling and will be checked by the self-diagnosis.

Assembly overview - removing and installing parts of secondary air system ⇒ page 155

2.1 Assembly overview - removing and installing parts of secondary air system

Note

Secondary air pump relay -J299- *⇒ page 156*

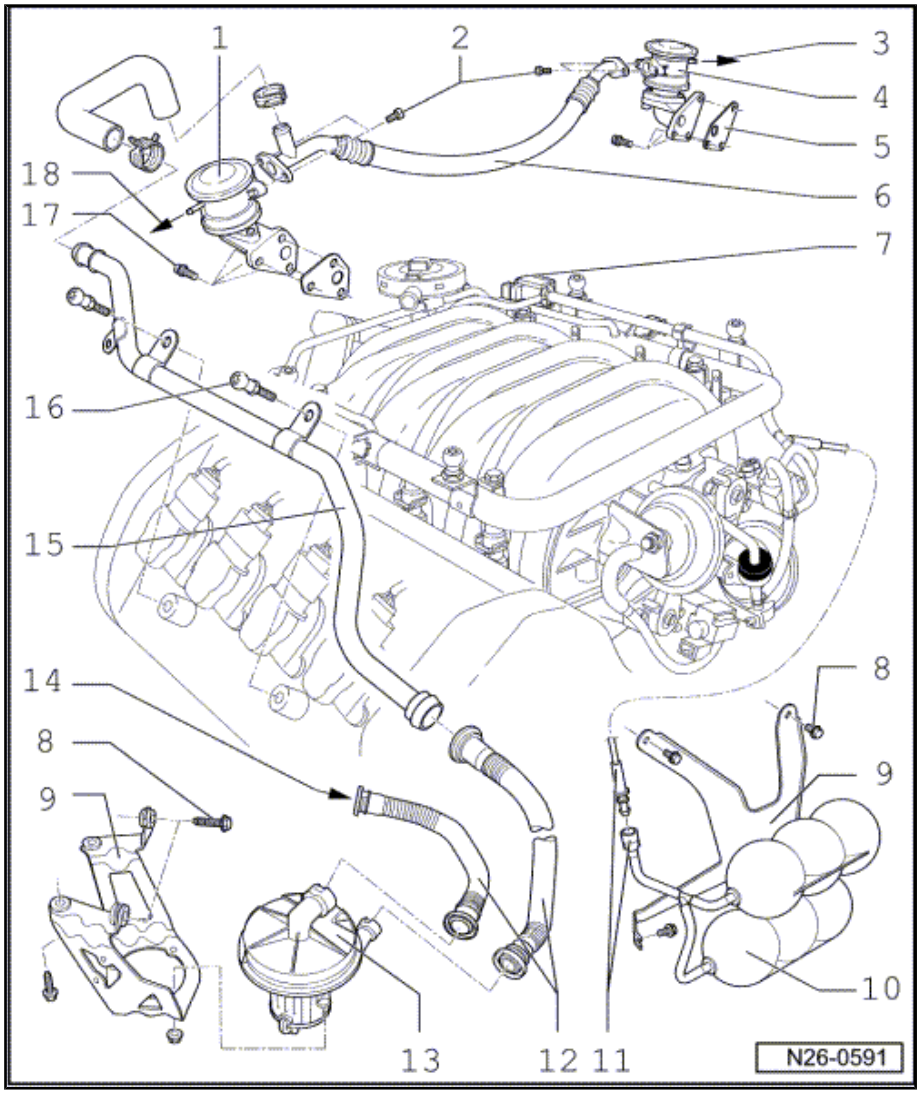

1 - Combination valve
- ❑ For cylinder bank 1.

2 - 10 Nm

3 - To secondary air inlet valve -N112-

4 - Combination valve
- ❑ For cylinder bank 2.

5 - Gasket

6 - Connecting hose
- ❑ From cylinder bank 1 to cylinder bank 2.

7 - Secondary air inlet valve -N112-

8 - 10 Nm

9 - Bracket

10 - Vacuum reservoir

11 - Hose coupling
- ❑ Press together at front to release.

12 - Pressure hose
- ❑ Check for secure seating.
- ❑ Press together at front to release.

13 - Secondary air pump motor -V101-

14 - From air filter.

15 - Pressure pipe
- ❑ Bolted to cylinder head cover.

16 - 8 Nm

17 - 10 Nm

18 - To secondary air inlet valve -N112-

Secondary air pump relay -J299-

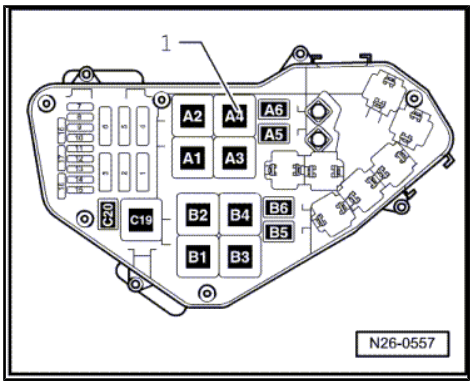

Note

- *The secondary air pump relay -1- is in socket A4.*
- *If tools are necessary to pull relays or control units out of the relay plate, first disconnect battery earth strap ⇒ Electrical system; Rep. gr. 27 ; Disconnecting and reconnecting batteries.*

28 – Ignition system

1 Repairing ignition system

General notes on ignition system

- For trouble-free operation of electrical components, a voltage of at least 11.5 V is necessary.
- Certain tests may lead to a fault being detected by the control unit and stored. Therefore after completing all checks and repairs the fault memory must be read and if necessary cleared.

Assembly overview - parts of ignition system ⇒ page 157

Safety precautions ⇒ page 158 .

Spark plug test data ⇒ page 159 .

Removing and installing ignition coils with output stage ⇒ page 158 .

1.1 Assembly overview - parts of ignition system

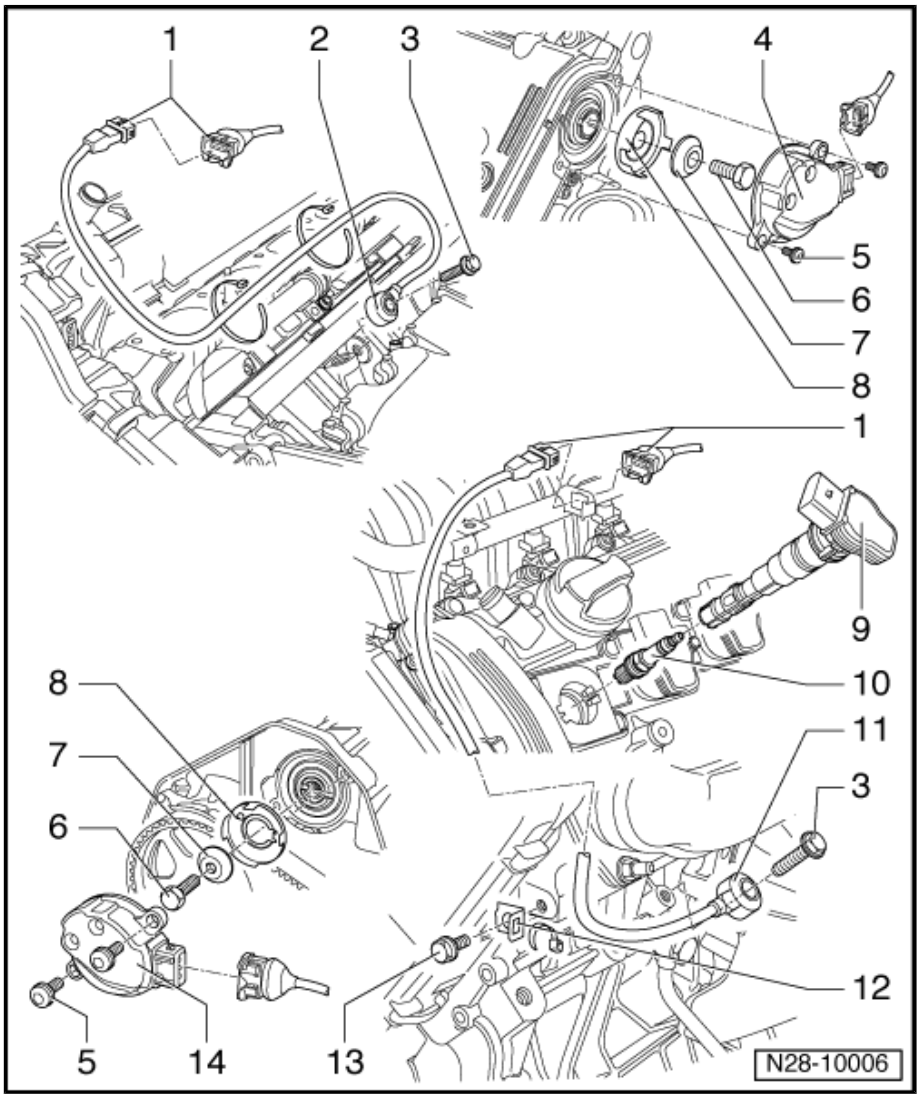

1 - Connector for knock sensor

- ❑ Secured to fuel rail with retaining tab.

2 - Knock sensor 1 -G61-

- ❑ Gold-plated contacts on sensor and connector.
- ❑ Line to knock sensor secured to coolant pipe.

3 - 20 Nm

- ❑ The specified torque influences the function of the knock sensor.

4 - Hall sender 2 -G163-

- ❑ For inlet camshaft bank 2.
- ❑ Gold-plated contacts on sensor and connector.

5 - 10 Nm

6 - 25 Nm

7 - Washer

- ❑ Conical.
- ❑ Note installation position.

8 - Screen

- ❑ For Hall sender.
- ❑ When installing note fixing arrangement.

9 - Ignition coil with output stage -(N70, N127, N291, N292, N323, N324, N325, N326)-

- ❑ Remove and install only with puller -T40039- .

10 - Spark plug, 30 Nm

- ❑ Remove and install with spark plug socket and extension 3122 B.
- ❑ Type and electrode gap ⇒ page 159 , test data, spark plugs

11 - Knock sensor 2 -G66-

- ❑ Line to knock sensor secured to bracket ⇒ Item 12 (page 158) .

12 - Bracket

13 - 10 Nm

14 - Hall sender -G40-

- ❑ For inlet camshaft bank 1.
- ❑ Gold-plated contacts on sensor and connector.

1.2 Safety precautions

To prevent injuries to persons and/or damage to the injection and ignition system, the following must be observed:

- ♦ Switch off ignition before connecting or disconnecting injection and ignition system wiring as well as test instrument cables.
- ♦ If the engine is to be turned at starter speed without starting:
- – Pull connectors off ignition coils with output stage (cylinders 1…8).

Note the following if testers and measuring instruments have to be used during a road test:

- ♦ Test and measuring instruments must always be secured to rear seat and operated by a second person from this location.

If test and measuring instruments are operated from front passenger seat and the vehicle is involved in an accident, there is a possibility that the person sitting in this seat may receive serious injuries when the airbag is triggered.

1.3 Removing and installing ignition coils with output stage

Special tools and workshop equipment required

- ♦ Puller -T40039-

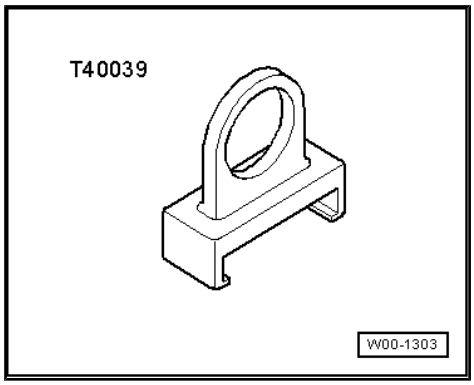

– Press in catch of respective connector -A- to be removed in -direction of arrow- and disconnect connector.

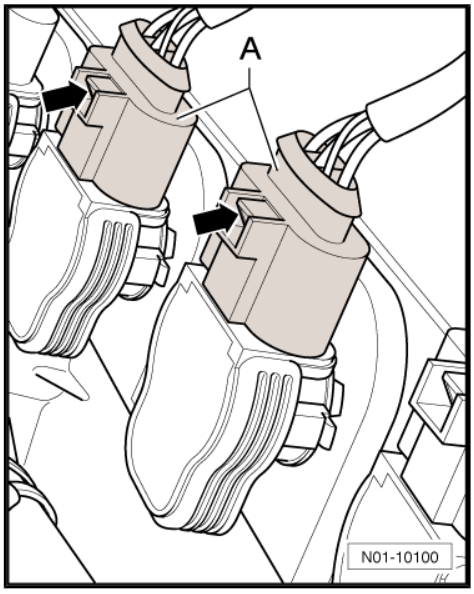

– Before disconnecting connectors of cylinders 5 to 8 remove bracket -1- by unscrewing bolts -arrows-.

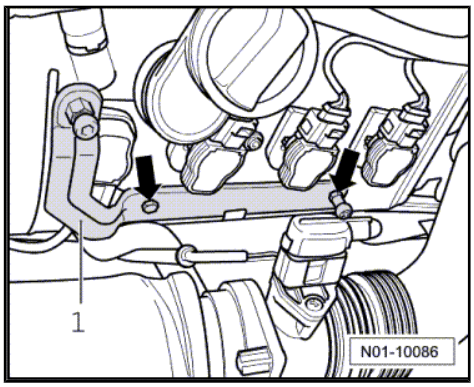

– Fit puller -T40039- onto ignition coil with output stage and pull off ignition coil with output stage in -direction of arrow-.
– To install, insert ignition coil with output stage in correct position into respective spark plug recess and push ignition coil with output stage by hand onto spark plug to stop.

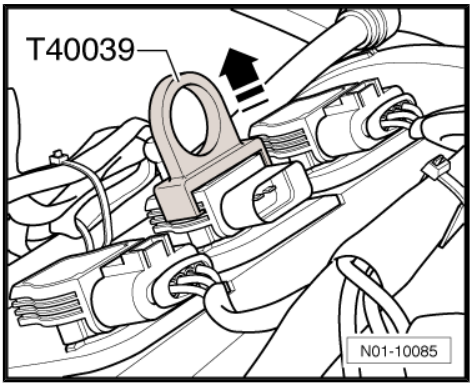

1.4 Test data, spark plugs

Engine code	AXQ / BHX
Firing order	1-5-4-8-6-3-7-2
Spark plugs	
VW/Audi	101,905,615 A
Manufacturer's designation	FGR 7 KQE 0
Electrode gap	max. 1.1 mm
Specified torque [4].	30 Nm

Volkswagen Technical Site: http://vwts.ru http://vwts.info

4) Remove and install spark plugs with spark plug socket and extension 3122 B.