DIAGNOSTIC INFORMATION & PROCEDURES

DIAGNOSTIC STARTING POINT - AUTOMATIC TRANSMISSION

Begin the system diagnosis with **Diagnostic System Check - Engine Controls** in Engine Controls. The Diagnostic System Check provides the following information:

- The identification of the control module(s) which commands the system.
- The ability of the control module(s) to communicate through the serial data circuit.
- The identification and status of stored diagnostic trouble codes (DTCs).

The use of **Diagnostic System Check - Engine Controls** in Engine Controls identifies the correct procedure for diagnosing the system and where the procedure is located.

Symptoms

When it has been determined through **Diagnostic System Check - Engine Controls** in Engine Controls that no DTCs are present, begin symptom diagnosis by reviewing the **Transmission Component and System Description** . Reviewing **Transmission Component and System Description** information enables you to understand the operation of the system. This helps you determine if the condition described by the customer is normal or if a malfunction exists. If it is determined that a malfunction exists, identify the concern by referring to the **Symptoms - Automatic Transmission** table. The **Symptoms - Automatic Transmission** table provides common diagnostic categories which relate directly to diagnostic information or procedures.

DIAGNOSTIC SYSTEM CHECK - AUTOMATIC TRANSMISSION

Circuit Description

The Automatic Transmission Diagnostic System Check is an organized approach to identify a problem created by an automatic transmission. The **Diagnostic System Check - Engine Controls** in Engine Controls is the diagnostic starting point for an automatic transmission complaint. The **Diagnostic System Check - Engine Controls** in Engine Controls directs you to the next logical step for diagnosing a transmission concern. Perform this check only if there is a driveability complaint or if you have been directed here from another service information section.

Follow the table to help reduce diagnostic time and help prevent unnecessary replacement of good parts.

Diagnostic Aids

IMPORTANT:

- **Do not clear the DTC unless directed by a diagnostic procedure. Clearing the DTCs will erase all Freeze Frame and Failure Records stored in PCM memory.**

cardiagn.com

- **Poor engine performance can sometimes be diagnosed as a transmission driveability condition. In order to avoid mis-diagnosis of the automatic transmission, always perform Diagnostic System Check - Engine Controls in Engine Controls.**

- Use a scan tool that is known to function correctly. If necessary, test the scan tool on another vehicle.
- Ensure the scan tool contains the most current file available.
- The scan tool will display a loss of communication error message under the following conditions:
  - PCM power is interrupted
  - The ignition switch is turned OFF
  - The battery voltage level is very low
  - A poor connection at the diagnostic link connector (DLC)

Test Description

The numbers below refer to the step numbers on the diagnostic table.

1: This step determines if the scan tool is receiving power through the DLC connector.

2: The MIL should illuminate whenever the ignition is ON and the engine is not running.

3: This step determines if the PCM is transmitting Class 2 serial data to the DLC and that the Class 2 data circuit is not open or shorted.

4: This step determines if a DTC is current or stored in history.

Diagnostic System Check - Automatic Transmission

Step	Action	Value (s)	Yes	No
1	1. Install a scan tool. **IMPORTANT:** **Check for applicable service bulletins before proceeding with this test. Perform this test only if there is a driveability complaint or if you have been directed to this table from another section in the service information.** **IMPORTANT:** **Do not turn the ignition OFF when performing this diagnostic procedure. Do not clear the DTCs unless instructed by this diagnostic procedure.**	-		

cardiagn.com

	2. Turn ON the ignition, with the engine OFF. Does the scan tool turn ON?		Go to **Step 2**	Go to **Diagnostic Starting Point - Data Link Communications** in Data Link Communications
2	Is the MIL ON?	-	Go to **Step 3**	Go to **Malfunction Indicator Lamp (MIL) Inoperative** in Engine Controls
3	Attempt to establish communication with the PCM. Does the scan tool communicate with the PCM?	-	Go to **Step 4**	Go to **Diagnostic Starting Point - Data Link Communications** in Data Link Communications
4	**IMPORTANT:** **Diagnostic Trouble Codes (DTCs), engine performance, and transmission default actions can greatly affect the transmission performance. Ensure that these items are not the cause of a transmission concern.** Use the scan tool Capture Info function in order to save or capture (Store Info) any DTC Information.Are there any DTCs present?	-	Go to **Diagnostic Trouble Code (DTC) List/Type**	Go to **Symptoms - Automatic Transmission**

SCAN TOOL OUTPUT CONTROLS

Scan Tool Output Controls

Scan Tool Output Control	Additional Menu Selection(s)	Description
		• The PCM commands the 1-2 shift solenoid valve ON and OFF. The scan tool 1-2 Sol. Parameter should match the commanded state. The scan tool Commanded Gear parameter should correspond with the shift solenoid combination. Refer to **Shift Solenoid Valve State and Gear Ratio** table. • When the ignition is ON, and the engine is OFF, there are no limits to this control. The solenoid remains ON until commanded OFF, and vice versa. When the output control is exited, the solenoid state is determined by the PCM. • When the engine is running, the following control limits apply: ○ Only sequential gear changes are allowed. For example, 1st to 3rd is not allowed. If a non-sequential gear change is attempted, the message "Non-sequential gear changes not allowed. Gear changes must be in order" appears on the scan tool display.

cardiagn.com

1-2 Solenoid	-	○ The vehicle speed must be below a calibrated value. If the vehicle speed is too high, the message "Vehicle speed too high" appears on the scan tool display. ○ The engine speed must be below a calibrated value. If the engine speed is too high, the message "Engine speed too high" appears on the scan tool display. ○ Downshifts are allowed only when the vehicle speed is below a calibrated value. If the vehicle speed is too high, the message "Eng. is on and veh. speed too hi for 3-2 or 2-1 downshift" appears on the scan tool display. ○ The gear requested may not be greater than the current selected transmission range (PRNDL). For example, 3rd gear is not allowed if the transmission range is D2. If the gear requested is greater than the current selected transmission range, the message "Eng. running and gear request is greater than the current TR" appears on the scan tool display. ○ The solenoid remains ON until commanded OFF, and vice versa. When the output control is exited, the solenoid state is determined by the PCM.
2-3 Solenoid	-	• The PCM commands the 2-3 shift solenoid valve ON and OFF. The scan tool 2-3 Sol. Parameter should match the commanded state. The scan tool Commanded Gear parameter should correspond with the shift solenoid combination. Refer to **Shift Solenoid Valve State and Gear Ratio** table. • When the ignition is ON, and the engine is OFF, there are no limits to this control. The solenoid will remain ON until commanded OFF, and vice versa. When the output control is exited, the solenoid state is determined by the PCM. • When the engine is running, the following control limits apply: ○ Only sequential gear changes are allowed. For example, 1st to 3rd is not allowed. If a non-sequential gear change is attempted, the message "Non-sequential gear changes not allowed. Gear changes must be in order" appears on the scan tool display. ○ The vehicle speed must be below a calibrated value. If the vehicle speed is too high, the message "Vehicle speed too high" appears on the scan tool display. ○ The engine speed must be below a calibrated value. If the engine speed is too high, the message "Engine speed too high" appears on the scan tool display. ○ Downshifts are allowed only when the vehicle speed is below a calibrated value. If the vehicle speed is too high, the message "Eng. is on and veh. speed too hi for 3-2 or 2-1

cardiagn.com

		downshift" appears on the scan tool display. ○ The gear requested may not be greater than the current selected transmission range (PRNDL). For example, 3rd gear is not allowed if the transmission range is D2. If the gear requested is greater than the current selected transmission range, the message "Eng. running and gear request is greater than the current TR" appears on the scan tool display. ○ The solenoid remains ON until commanded OFF, and vice versa. When the output control is exited, the solenoid state is determined by the PCM.
3-2 Downshift Solenoid	-	• The PCM commands the 3-2 shift solenoid valve ON and OFF. The scan tool 3-2 Downshift Sol. Parameter should match the commanded state. • When the ignition is ON, and the engine is OFF, there are no limits to this control. The solenoid remains ON until commanded OFF, and vice versa. When the output control is exited, the solenoid state is determined by the PCM. • When the engine is running, the following control limits apply: ○ The transmission range (PRNDL) must be in Park or Neutral. If the transmission range is not in Park or Neutral, the message "Engine running and transmission range is not Park/Neutral" appears on the scan tool display. ○ The solenoid remains ON until commanded OFF, and vice versa. When the output control is exited, the solenoid state is determined by the PCM.
Clear TAPS (Transmission Adaptive Pressures)	-	• The PCM clears (or resets) the TAP cells to the original base value. • There are no limits to using this output control. It may be performed with the engine running or when the ignition is ON, and the engine is OFF. -
		• The PCM commands the amperage (current) to the pressure control solenoid in order to control transmission line pressure. As the amperage increases, the line pressure decreases. As the amperage decreases, the line pressure increases. The amperage range is 0.00-1.10 and may be commanded in one-tenth amp increments. • When the ignition is ON, and the engine is OFF, the reference (commanded) amperage may be controlled within calibrated limits. The scan tool parameter "PC Sol. Ref. Current" changes but the parameter "PC Sol. Actual Current" does not change. The reference current remains until commanded otherwise.

cardiagn.com

PC Solenoid	-	• When the engine is running, the following control limits apply: ○ When the transmission range is Park or Neutral, the reference (commanded) amperage may be controlled within calibrated limits. The engine speed must be less than 1,500 RPM. If the engine speed is greater than 1,500 RPM, the message "TR in park/neutral and engine speed over 1,500 RPM" appears on the scan tool display. Both the scan tool parameters "PC Sol. Ref. Current" and "PC Sol. Actual Current" change. Both current readings remain until commanded otherwise. ○ When the transmission range is not in Park or Neutral, the reference amperage can only be controlled less than the current determined by the PCM. The PCM does not allow a value to be selected that may cause damage to the transmission. If the requested amperage is more than allowed by the PCM, the message "Requested current for the PC Solenoid is too high" appears on the scan tool display. ○ Transmission range DTCs must not be active. If a transmission range DTC is active, the message "Engine running with transmission DTC present" appears on the scan tool display.
Shift Transmission	-	• The PCM commands upshifts and downshifts. The scan tool Commanded Gear parameter should correspond with the shift solenoid combination. Refer to **Shift Solenoid Valve State and Gear Ratio** table. • When the ignition is ON, and the engine is OFF, there are no limits to this control. The scan tool shift solenoid states change to match the Commanded Gear selected. • When the engine is running, the following control limits apply: ○ The PCM does not allow a shift if it causes the engine RPM to exceed a calibrated limit. If a gear is requested and the engine speed is too high, the message "Engine speed too high" appears on the scan tool display. ○ The PCM does not allow a 3-2 or 2-1 downshift if the vehicle speed exceeds a calibrated limit. If either downshift is requested and the vehicle speed is too high, the message "Eng. is on and veh. speed too hi for 3-2 or 2-1 downshift" appears on the scan tool display. ○ The PCM does not allow a 4-3 downshift if the vehicle speed exceeds a calibrated limit. If a 4-3 downshift is requested and the vehicle speed is too high, the message "Vehicle speed too high" appears on the scan tool display. ○ The PCM does not allow an upshift if the vehicle speed

cardiagn.com

		exceeds a calibrated limit. If an upshift is requested and the vehicle speed is too high, the message "Vehicle speed too high" appears on the scan tool display. ○ The PCM does not allow an upshift that is greater than the current selected transmission range (PRNDL). For example 3rd gear is not allowed if the transmission range is D2. If an upshift is requested that is greater than the current selected transmission range, the message "Eng. running and gear request is greater than the current TR" appears on the scan tool display.
TCC Control Solenoid	-	• The PCM commands the duty cycle of the TCC PWM solenoid. The duty cycle is represented by a percentage of ON (energized) time. Approximately 90-100 percent duty cycle represents an ON (energized) commanded state. Zero percent represents an OFF (non-energized) commanded state. The scan tool TCC Duty Cycle parameter should match the commanded state. • When the ignition is ON, and the engine is OFF, there are no limits to this control. The solenoid remains ON (90-100 percent duty cycle) until commanded OFF (zero percent duty cycle), and vice versa. When the output control is exited, the solenoid duty cycle is determined by the PCM. • When the engine is running, the following control limits apply: ○ If the transmission range is Park, and the transmission is in hot mode, the TCC control solenoid may not be commanded OFF. If the solenoid is requested OFF, the message "TCC OFF command disabled in Hot Mode" appears on the scan tool display. ○ The TCC control solenoid may not be commanded OFF for more than a calibrated amount of time. If the solenoid is commanded OFF for a certain amount of time, the message "TCC OFF time has been exceeded" appears on the scan tool display.
		• The PCM commands the TCC enable solenoid valve ON and OFF. The scan tool TCC Enable parameter should match the commanded state. • When the ignition is ON, and the engine is OFF, there are no limits to this control. The solenoid remains ON until commanded OFF, and vice versa. When the output control is exited, the solenoid state is determined by the PCM. • When the engine is running, the following control limits apply: ○ If the transmission range is Park or Neutral, the TCC enable solenoid may not be commanded OFF for more than a calibrated amount of time. If the solenoid is commanded OFF for a certain amount of time, the message "TCC OFF

cardiagn.com

TCC Enable	-	time has been exceeded" appears on the scan tool display. ○ If the transmission range is Park or Neutral and the TCC control solenoid duty cycle is less than maximum capacity, the TCC enable solenoid may not be commanded ON. If the solenoid is requested ON during these conditions, the message "TCC Control Solenoid is not set to maximum Pressure" appears on the scan tool display. ○ If the TCC control solenoid duty cycle is less than maximum capacity, the TCC enable solenoid may not be commanded ON. If the solenoid is commanded ON during these conditions the message "TCC Control Solenoid is not set to maximum Pressure" appears on the scan tool display. ○ If the transmission is in hot mode, the TCC enable solenoid may not be commanded OFF. If the solenoid is requested OFF the message "TCC OFF command disabled in Hot Mode" appears on the scan tool display.

SCAN TOOL DATA LIST

Use the scan tool data list under the following conditions:

- The Diagnostic System Check - Automatic Transmission is complete.
- The on-board diagnostics are functioning properly.
- No DTCs are present.

The values below represent a typical display recorded from a properly functioning system.

IMPORTANT: Do not use a scan tool that displays faulty data. Report the condition to the scan tool manufacturer. The use of a faulty scan tool can result in misdiagnosis and the unnecessary replacement of parts.

Only the parameters listed below are used in this manual for diagnosing. If a scan tool displays other parameters, the values are not recommended by General Motors for use in diagnosis.

Scan tool values below were recorded under the following conditions:

- Engine at Idle
- Upper radiator hose hot
- Closed throttle
- Transmission in Park
- Closed Loop operation
- Accessories OFF
- Brake pedal not applied

cardiagn.com

Transmission Scan Tool Data List (2004 Y-Car)

Scan Tool Parameter	Data List*	Units Displayed	Typical Data Value
1-2 Shift Error	F2, F7/F0	Seconds	Varies
1-2 Shift Time	F0, F2, F7/F0	Seconds	Varies
1-2 Sol.	F0, F2, F3, F4	On/Off	On
1-2 Sol. Open/Short to GND	F2	Yes/No	No
1-2 Sol. Short to Volts	F2	Yes/No	No
1-2 TAP Cell (4-16)	F7/F0	kPa/Psi	Varies
2-3 Shift Error	F3, F7/F1	Seconds	Varies
2-3 Shift Time	F0, F3, F7/F1	Seconds	Varies
2-3 Sol.	F0, F2, F3, F4	On/Off	On
2-3 Sol. Open/Short to GND	F3	Yes/No	No
2-3 Sol. Short to Volts	F3	Yes/No	No
2-3 TAP Cell (4-16)	F7/F1	kPa/Psi	Varies
3-2 Downshift Sol.	F0, F5	On/Off	On
3-2 Sol. Open/Short to GND	F5	Yes/No	No
3-2 Sol. Short to Volts	F5	Yes/No	No
3-4 Shift Error	F4	Seconds	Varies
3-4 Shift Time	F0, F4	Seconds	Varies
A/C Clutch	F0	On/Off	Off
Commanded Gear	F0, F1, F2, F3, F4, F5, F6	1,2,3,4	1
Cruise	F0	Enabled/Disabled	Disabled
Current TAP Cell	F7/F0, F7/F1	4-16	Varies
ECT	F0, F1	°C (°F)	Varies
Engine Run Time	F0	Hr/Min/Sec	Varies
Engine Speed	F0, F1, F2, F3, F4, F5, F6	RPM	Varies
Engine Torque	F0, F1	N.m (lb ft)	Varies
Estimated Gear Ratio	F0, F1, F2, F3, F4	Ratio	8.00:1
Ignition Voltage	F0	Volts	12-14 Volts
Last Shift Time	F0	Seconds	Varies
PC Sol. Actual Current	F0, F6	Amps	Varies (0.1-1.1 amps)
PC Solenoid Duty Cycle	F0, F6	Percent	Varies
PC Sol. Ref. Current	F0, F6	Amps	Varies (0.1-1.1 amps)
Speed Ratio	F0, F1, F2, F3, F4, F5	Ratio	8.00:1

cardiagn.com

TCC Brake Switch	F0, F1	Open/Closed	Closed
TCC Duty Cycle	F0, F1	Percent	0%
TCC Duty Cycle Open/Short to GND	F1	Yes/No	No
TCC Duty Cycle Short to Volts	F1	Yes/No	No
TCC Enable Sol.	F0, F1	Yes/No	No
TCC Enable Open/Short to GND	F1	Yes/No	No
TCC Enable Short to Volts	F1	Yes/No	No
TCC Slip Speed	F0, F1	RPM	+/-50 RPM from Engine Speed
TFP Sw.	F0	Park/Neutral, Reverse, Drive4, Drive3, Drive2, Drive1 or Invalid	Park/Neutral
TFP Sw. A/B/C	F0	HI/LOW	HI/LOW/HI
TFT Sensor	F0, F1, F6	Volts	Varies
Torque Converter Efficiency	F0, F1, F2, F3, F4	Ratio	.00:1
TP Indicated Angle	F0, F1, F2, F3, F4, F5, F6	Percent	0-10%
TR Sw.	F0	Park/Neutral, Reverse, Drive4, Drive3, Drive2, Drive1 or Invalid	Park/Neutral
TR Sw. A/B/C/P	F0	HI/LOW	LOW/HI/HI/LOW
Trans. Fluid Temp.	F0, F1, F5, F6	°C (°F)	Varies
Trans. Slip Counter	F0, F1	0, 1, 2	0
Transmission Hot Mode	F0, F1	On/Off	Off
Transmission OSS	F0, F1, F2, F3, F4, F5	RPM	0
Vehicle Speed	F0, F1, F2, F3, F4, F5	km/h (mph)	0

***Data List Legend**

- F0: Transmission Data
- F1: TCC Data
- F2: 1-2 Shift Data
- F3: 2-3 Shift Data
- F4: 3-4 Shift Data
- F5: 3-2 Down Shift Data
- F6: PC Solenoid Data
- F7: Transmission Adapts
- F7/F0: 1-2 Adapt. Data

cardiagn.com

- F7/F1: 2-3 Adapt. Data

SCAN TOOL DATA DEFINITIONS

1-2 Shift Error

This parameter displays the difference between the desired 1-2 shift time and the actual 1-2 shift time. A positive number indicates a firm or fast shift, the actual shift time was shorter than the desired shift time. A negative number indicates a soft or slow shift, the actual shift time was longer than the desired shift time. This value is only accurate if the shift was adaptable.

1-2 Shift Time

This parameter displays the actual time of the last 1-2 shift. The shift time is based on the engine RPM drop after the commanded 1-2 shift. This value is only accurate if the shift was adaptable.

1-2 Sol.

This parameter displays the commanded state of the 1-2 shift solenoid valve. When the transmission is in FIRST and FOURTH gear, the display should indicate ON, current is flowing through the solenoid. When the transmission is in SECOND and THIRD gear, the display should indicate OFF, current is not flowing through the solenoid.

1-2 Sol. Open/Short to GND

This parameter displays whether an open or a short to ground exists in the 1-2 shift solenoid valve feedback signal and displays Yes or No. The 1-2 shift solenoid valve must be commanded OFF for this parameter to be valid.

1-2 Sol. Short to Volts

This parameter displays if a short to voltage exists in the 1-2 shift solenoid valve feedback signal. This parameter is valid only when the 1-2 shift solenoid valve is commanded ON. The scan tool will display YES or NO.

1-2 Tap Cell (4-16)

This parameter displays the amount of transmission adaptive pressure (TAP), based on 17 N.m (12.5 lb ft) of engine torque increment per cell, added to or subtracted from shift pressure during a 1-2 up shift. A positive number indicates that long shifts have been detected and PC solenoid pressure has been added in order to decrease shift time. A negative number indicates that short shifts have been detected and PC solenoid pressure has been subtracted in order to increase shift time.

2-3 Shift Error

This parameter displays the difference between the desired 2-3 shift time and the actual 2-3 shift time. A

cardiagn.com

positive number indicates a firm or fast shift, the actual shift time was shorter than the desired shift time. A negative number indicates a soft or slow shift, the actual shift time was longer than the desired shift time. This value is only accurate if the shift was adaptable.

2-3 Shift Time

This parameter displays the actual time of the last 2-3 shift. The shift time is based on the engine RPM drop after the commanded 2-3 shift. This value is only accurate if the shift was adaptable.

2-3 Sol.

This parameter displays the commanded state of the 2-3 shift solenoid valve. When the transmission is in FIRST and SECOND gear the display should indicate ON, current is not flowing through the solenoid. When the transmission is in THIRD and FOURTH gear, the display should indicate OFF, current is flowing through the solenoid.

2-3 Sol. Open/Short to GND

This parameter displays whether an open or a short to ground exists in the 2-3 shift solenoid valve feedback signal and displays Yes or No. The 2-3 shift solenoid valve must be commanded OFF for this parameter to be valid.

2-3 Sol. Short to Volts

This parameter displays if a short to voltage exists in the 2-3 shift solenoid valve feedback signal. This parameter is valid only when the 2-3 shift solenoid valve is commanded ON. The scan tool will display YES or NO.

2-3 Tap Cell (4-16)

This parameter displays the amount of transmission adaptive pressure (TAP), based on 17 N.m (12.5 lb ft) of engine torque increment per cell, added to or subtracted from shift pressure during a 2-3 up shift. A positive number indicates that long shifts have been detected and PC solenoid pressure has been added in order to decrease shift time. A negative number indicates that short shifts have been detected and PC solenoid pressure has been subtracted in order to increase shift time.

3-2 Downshift Sol.

This parameter displays if the 3-2 shift solenoid valve assembly is currently commanded ON or OFF. The solenoid commanded state is based on the transmission temperature. The solenoid will change states during a 3-2 downshift to regulate the appropriate pressure. The commanded state of the solenoid occurs at approximately 30 mph with a throttle increase. The scan tool displays ON or OFF.

3-2 Sol. Open/Short to GND

This parameter displays whether an open or a short to ground exists in the 3-2 shift solenoid valve feedback signal and displays Yes or No. The 3-2 shift solenoid valve must be commanded OFF for this

cardiagn.com

parameter to be valid.

3-2 Sol. Short to Volts

This parameter displays if a short to voltage exists in the 3-2 shift solenoid valve feedback signal. This parameter is valid only when the 3-2 shift solenoid valve is commanded ON. The scan tool will display YES or NO.

3-4 Shift Error

This parameter displays the difference between the desired 3-4 shift time and the actual 3-4 shift time. A positive number indicates a firm or fast shift, the actual shift time was shorter than the desired shift time. A negative number indicates a soft or slow shift, the actual shift time was longer than the desired shift time. This value is only accurate if the shift was adaptable.

3-4 Shift Time

This parameter displays the actual time of the last 3-4 shift. The shift time is based on the engine RPM drop after the commanded 3-4 shift. This value is only accurate if the shift was adaptable.

A/C Clutch

This parameter displays the commanded state of the air conditioning (A/C) compressor clutch relay driver circuit and displays ON or OFF. The A/C compressor clutch should be engaged when ON displays. When the display indicates ON, the line pressure and the shift times will be adjusted for the additional engine load.

Commanded Gear

This parameter displays the current commanded state of the shift solenoid valves. The scan tool displays 1, 2, 3, 4 or 5.

Cruise

This parameter displays the commanded state of the cruise control system. The scan tool display ENABLED or DISABLED. When the display indicates ENABLED, the PCM is allowing cruise control operation. When the display indicates DISABLED, the PCM has disabled cruise control operation. When the cruise control display is ENABLED, shift patterns will be altered for 2-3 and 3-4 up shifts or 4-3 and 3-2 downshifts.

Current TAP Cell

This parameter displays the current transmission adaptive pressure (TAP) cell in use for transmission line pressure adaptation. The cells are based on 17 N.m (12.5 lb ft) of engine torque. The higher the engine torque, the higher the current TAP cell. The last cell used will remain displayed until the next adaptable up shift occurs.

cardiagn.com

ECT

This parameter displays the input signal from the ECT sensor. Engine coolant temperature is high at 151° C (304°F) when the signal voltage is low (0 V). Engine coolant temperature is low at -40°C (-40°F) when the signal voltage is high (5 V).

Engine Run Time

This parameter displays a measure in Hr:Min:Sec of how long the engine has been operating. When the ignition is cycled to OFF, the value is reset to zero.

Engine Speed

This parameter displays the rotational speed of the engine expressed as revolutions per minute.

Engine Torque

This parameter displays a calculated value based on engine load, throttle position, mass air flow, and other engine inputs. This parameter is accurate to within 15 ft/lb of actual measured engine torque.

Estimated Gear Ratio

This parameter displays the estimated turbine speed divided by the transmission output speed. Estimated turbine speed is calculated from engine speed and engine torque.

Ignition Voltage

This parameter displays the system voltage measured at the ignition feed.

Last Shift Time

This parameter displays the actual time of the last up shift. This value is only accurate if the shift was adaptable.

PC Sol. Actual Current

This parameter displays the actual current flow through the pressure control solenoid circuit which is measured by the control module. High current flow results in low line pressure. Low current flow results in high line pressure.

PC Sol. Duty Cycle

This parameter displays the commanded state of the pressure control solenoid expressed as a percentage of energized ON time. A reading of low percent indicates zero ON time, non energized, or no current flow. A high percent at idle indicates maximum ON time, energized, or high current flow.

cardiagn.com

PC Sol. Ref. Current

This parameter displays the commanded current of the pressure control solenoid circuit. High current results in low line pressure. Low current results in high line pressure.

Speed Ratio

This parameter displays the calculated speed ratio of the transmission. The ratio is calculated by dividing the output speed sensor signal by the input speed sensor signal. Gear ratio in a step-gear transmission is calculated in the opposite manner.

TCC Brake Switch

This parameter displays the status of the TCC brake switch circuit input. OPEN indicates a zero voltage input, brake pedal applied. CLOSED indicates a voltage input, brake pedal released. The scan tool display OPEN or CLOSED.

TCC Duty Cycle

This parameter displays the commanded percentage of ON time of the TCC PWM solenoid. A high percentage represents an ON, energized, commanded state. Zero percent represents an OFF, non-energized, commanded state.

TCC Duty Cycle Open/Short to GND

This parameter displays whether an open or a short to ground exists in the TCC PWM solenoid valve feedback signal and displays Yes or No. The TCC PWM solenoid valve must be commanded OFF for this parameter to be valid. The scan tool will display Yes only while the TCC PWM solenoid valve is OFF. The display will pulsate.

TCC Duty Cycle Short to Volts

This parameter displays whether a short to voltage, exists in the TCC PWM solenoid valve feedback signal and displays Yes or No. The TCC PWM solenoid valve must be commanded ON for this parameter to be valid. The scan tool will display Yes only while the TCC PWM solenoid valve is ON. The display will pulsate.

TCC Enable Sol.

This parameter displays the commanded state of the TCC solenoid. Yes indicates a commanded energized state, current is flowing through the solenoid. No indicates a commanded non-energized state, current is not flowing through the solenoid. This commanded state occurs at various vehicle speeds between applications. The scan tool displays Yes or No.

TCC Enable Open/Short to GND

This parameter displays whether an open or a short to ground exists in the TCC solenoid valve feedback

cardiagn.com

signal. This parameter is valid only when the TCC solenoid is commanded OFF. The scan tool displays Yes or No.

TCC Enable Short to Volts

This parameter displays whether a short to voltage exists in the TCC solenoid valve feedback signal. This parameter is valid only when the TCC solenoid is commanded ON. The scan tool displays Yes or No.

TCC Slip Speed

This parameter displays the difference between transmission output speed and engine speed. A negative value indicates that the engine speed is less than the output speed, deceleration. A positive value indicates that the engine speed is greater than the output speed, acceleration. A value of zero indicates that the engine speed is equal to the output speed, TCC applied.

TFT Sensor

This parameter displays the voltage drop across the transmission fluid temperature (TFT) sensor circuit. Five volts is applied to the TFT sensor circuit. The sensor is a thermistor which changes internal resistance based on temperature. When the sensor is cold, the internal resistance is high, resulting in a high signal voltage. As the sensor warms, the internal resistance decreases, the signal voltage will also decrease. A low signal voltage indicates a warm TFT, and a high signal voltage indicates a cold TFT.

TFP Sw.

This parameter displays Park/Neutral, Reverse, Drive4, Drive3, Drive2, Drive1 or Invalid. This parameter is the decoded status of the three A/B/C inputs from the automatic transmission fluid pressure manual valve position switch. If a valid combination of inputs is not detected, invalid will be displayed.

TFP Sw. A/B/C

This parameter displays HI/LOW, HI/LOW, HI/LOW. This parameter indicates the status of the three inputs from the Automatic Transmission Fluid Pressure Manual Valve Position Switch Assembly. LOW represents a zero voltage signal. HI represents an ignition voltage signal.

Torque Converter Efficiency

This parameter displays a ratio of .00:1 to 2:1. The ratio is calculated by multiplying the speed ratio by a value related to the "K factor" of the torque converter. The "K factor" is the looseness or tightness of the torque converter for a given torque. The nearer the torque converter is to full coupling, i.e. 1:1, the closer the torque converter efficiency number will be to 1.

TP Indicated Angle

This parameter displays the desired throttle angle for operating conditions present at the time.

TR Sw.

cardiagn.com

This parameter displays the decoded status of the four A/B/C/P inputs from the transmission range switch. The scan tool displays Park, Reverse, Neutral Drive, Intermediate, Low, and Invalid. If a valid combination of inputs is not detected, invalid will be displayed.

TR Sw. A/B/C/P

This parameter displays the status of the four inputs from the transmission range switch. The scan tool displays HI/LOW. HI indicates an ignition voltage input to the control module. LOW indicates a zero voltage input to the control module.

Trans. Fluid Temp.

This parameter displays the input signal of the transmission fluid temperature sensor. Transmission fluid temperature is high 151°C (304°F) when signal voltage is low, 0 V, and transmission fluid temperature is low -40°C (-40°F) when signal voltage is high, 5 V.

Trans. Slip Counter

This parameter displays the number of times the P0894 Diagnostic test has identified a slipping condition. This diagnostic test is required to identify a slipping condition three times in a row in order to set the DTC P0894 Transmission Component Slipping Diagnostic code. The scan tool displays 0, 1 or 2.

Transmission Hot Mode

This parameter displays the automatic transmission fluid temperature (TFT) and displays ON or OFF. OFF indicates that the TFT has not exceeded 130°C (266°F). ON indicates that the TFT has exceeded 130°C (266°F) and has not cooled to 120°C (248°F) for more that 5 seconds. Note: these numbers are approximate. They differ with transmissions.

Transmission OSS

This parameter displays the rotational speed of the transmission output shaft expressed as revolutions per minute.

Vehicle Speed

This parameter displays the speed at which the vehicle is traveling. The scan tool displays vehicle speed as kilometers per hour (km/h), (miles per hour (MPH)). The vehicle speed is calculated based on the input signal from the vehicle speed sensor.

DIAGNOSTIC TROUBLE CODE (DTC) TYPE DEFINITIONS

The DTC Type Definitions contain the characteristics for all types of DTCs. Each DTC type may or may not be found in this section. The DTC type is based on the action that the PCM takes when storing DTC information and whether or not the PCM illuminates a service lamp or displays a message on a driver information center (DIC). The DTC descriptions in the Diagnostic Trouble Code List/Type are listed in numeric order and indicate the DTC types for domestic and export vehicle applications. Each DTC is categorized into one of the following

cardiagn.com

types:

Type A

This DTC is emissions related. The PCM stores the DTC in History, Freeze Frame and Failure Records during the first trip in which the conditions for setting the DTC are met. The PCM also illuminates the malfunction indicator lamp (MIL) during the first trip in which the conditions for setting the DTC are met.

Type B

This DTC is emissions related. The PCM stores the DTC in Failure Records during the first trip in which the conditions for setting the DTC are met. The PCM stores the DTC in History and Freeze Frame during the second consecutive trip in which the conditions for setting the DTC are met. The PCM also illuminates the MIL during the second consecutive trip in which the conditions for setting the DTC are met.

Type C

This DTC is non-emissions related. The PCM stores the DTC in History and Failure Records during the first trip in which the conditions for setting the DTC are met. The PCM does not store the DTC in Freeze Frame and does not illuminate the MIL. For some type C DTCs, a message may be displayed on a DIC, if equipped. For other type C DTCs, a separate service lamp, other than the MIL, may be illuminated. Type C DTCs that do not display a message on the DIC or illuminate a separate service lamp were formerly referred to as type D.

Type X

This DTC is available in the PCM software, but has been disabled, or turned off. In this case, the diagnostic does not run, DTCs are not stored, and the MIL does not illuminate. Type X DTCs are used primarily for export vehicles that do not require MIL illumination or DTC storing.

The service information contained in this manual refers to the domestic, federal, calibration package. Domestic calibrations apply to vehicles sold in the United States, Canada and Japan. Export calibrations exist for both leaded and unleaded vehicles. DTC types may change for some export vehicles, and some DTCs may be turned off for leaded export vehicles. Differences between domestic and export calibrations are not reflected on DTC support information pages. DTC types for export calibrations are referenced only in the Diagnostic Trouble Code List/Type.

DIAGNOSTIC TROUBLE CODE (DTC) LIST/TYPE

DTC List

DTC	Domestic	Unleaded Export	Leaded Export
DTC P0218	C	C	C
DTC P0502	B	B	C
DTC P0503	B	B	C
DTC P0706	C	C	C
DTC P0711	C	C	C
DTC P0712	C	C	C

cardiagn.com

DTC P0713	C	C	C
DTC P0719	C	C	C
DTC P0724	C	C	C
DTC P0740	B	B	C
DTC P0742	B	B	C
DTC P0748	C	C	C
DTC P0751	B	B	C
DTC P0752	B	B	C
DTC P0753	B	B	C
DTC P0756	A	A	C
DTC P0757	A	A	C
DTC P0758	A	A	C
DTC P0785	B	B	C
DTC P0894	B	B	C
DTC P1810	B	B	C
DTC P2761	B	B	C

cardiagn.com

TROUBLESHOOTING

SYMPTOMS - AUTOMATIC TRANSMISSION

Symptoms - Automatic Transmission

Diagnostic Category	Diagnostic Information
This table consists of nine diagnostic categories that are located in the left column. Using this column, choose the appropriate category based on the operating conditions of the vehicle or transmission. After selecting a category, use the right column to locate the specific symptom diagnostic information.	
Fluid Diagnosis: This category contains the following topics: • Fluid condition - appearance, contaminants, smell, overheating • Line pressure - high or low • Fluid leaks	• Refer to **Transmission Fluid Checking Procedure** . • Refer to **Oil Pressure High or Low** . • Refer to **Fluid Leak Diagnosis** . • Refer to **Oil Out the Vent** .
Noise and Vibration Diagnosis: This category contains the following topics: • Reattaching noise • Noise - drive gear, final drive, whine, growl, rattle, buzz, popping • Vibration	• Refer to **Reattaching Noise** . • Refer to **Vibration in Reverse and Whining Noise in Park** . • Refer to **Popping Noise** . • Refer to **Whine Noise Varying with RPM or Fluid Pressure** . • Refer to **Buzz Noise or High Frequency Rattle Sound** . • Refer to **Noise in Random Ranges** .
Range Performance Diagnosis: This category contains the following topics: • Drives in Neutral • No Park • No Reverse • No Drive • No engine braking • Lack of Power or Hesitation	• Refer to **Drives in Neutral** . • Refer to **No Park** . • Refer to **No Reverse or Slips in Reverse** . • Refer to **No Drive in All Ranges** . • Refer to **No Drive in Drive Range** . • Refer to **No Overrun Braking - Manual 3-2-1** . • Refer to **Lack of Power or Hesitation** .
Shift Quality (Feel) Diagnosis: This category contains the following topic: • Harsh, soft or slipping shifts	• Refer to **Harsh Shifts** . • Refer to **Slipping or Harsh 1-2 Shift** . • Refer to **No 2-3 Shift or 2-3 Shift Slips,**

cardiagn.com

• Harsh, soft or delayed engagement • Shift shudder, flare or tie-up	**Rough or Hunting** . • Refer to **No 3-4 Shift, Slips or Rough 3-4 Shift** . • Refer to **Harsh Garage Shift** . • Refer to **Delay in Drive and Reverse** . • Refer to **3-2 Flare or Tie-Up** .
Shift Pattern: This category contains the following topics: • One forward gear only • Two forward gears only • Gear missing or slipping • No upshift or slipping upshift • No downshifts • Non-First gear start	• Refer to **First Gear Range Only - No Upshift** . • Refer to **Third Gear Only** . • Refer to **Second/Third Gear Only or First/Fourth Gears Only** . • Refer to **Slips in First Gear** . • Refer to **Slipping or Harsh 1-2 Shift** . • Refer to **No 2-3 Shift or 2-3 Shift Slips, Rough or Hunting** . • Refer to **No 3-4 Shift, Slips or Rough 3-4 Shift** . • Refer to **No Part Throttle or Delayed Downshifts** . • Refer to **Second Gear Start** .
Shift Speed Diagnosis: This category contains the following topic: Inaccurate or inconsistent shift points	Refer to **Inaccurate Shift Points** .
Torque Converter Diagnosis: This category contains the following topics: • Torque converter diagnosis • TCC does not apply • TCC does not release • TCC apply/release quality	• Refer to **Torque Converter Diagnosis Procedure** . • Refer to **No Torque Converter Clutch (TCC) Apply (300 RPM Slip)** . • Refer to **No Torque Converter Clutch (TCC) Release** .
Indicator On or Message Center Displays Message: This category contains the following topics: High Trans Temp light does illuminate	Refer to **DTC P0218** .
If Symptom Not Found	• Refer to **Transmission Fluid Checking Procedure** . • Refer to **Road Test Procedure** . • Refer to **Line Pressure Check Procedure** .

TRANSMISSION FLUID CHECKING PROCEDURE

cardiagn.com

Transmission Fluid Checking Procedure

Step	Action	Values	Yes	No
1	1. Start the engine and allow the engine to idle until the transmission fluid temperature has reached the value specified. 2. Depress the brake pedal and move the shift lever through the gear ranges, pausing a few seconds in each range. Return the shift lever to the PARK range. 3. Raise the vehicle on a hoist. The vehicle must be level with the engine running and the shift lever in the PARK range. Refer to **Lifting and Jacking the Vehicle** in General Information. **CAUTION:** **Refer to Checking Hot Transmission Fluid Through Drain Plug Hole Caution in Cautions and Notices.** 4. Remove the transmission plug. **IMPORTANT:** **The transmission fluid may darken with normal use and does not always indicate contamination or oxidation.** 5. Check the fluid color. If necessary, use a small screwdriver as a dipstick. Is the fluid color clear red or light brown with no burnt odor?	30-50° C (86-122°F)	Go to **Step 4**	Go to **Step 2**
2	Does the fluid have a burnt odor or a dark brown color?	-	Go to **Step 8**	Go to **Step 3**
3	Does the fluid have a cloudy or milky appearance?	-	Go to **Step 7**	Go to **Step 8**
4	Check the fluid level. The fluid level should be even with the bottom of the threaded plug hole. Is the fluid level low?	-	**Go to Step 5**	Go to **Step 11**
5	Add DEXRON III automatic transmission fluid in increments of 0.5 L until the fluid drains from the plug hole. Did you add more than 1.5 L to the transmission?	-	Go to **Step 6**	Go to **Step 11**
6	The transmission may have a leak. Refer to **Fluid Leak Diagnosis** . Was a transmission fluid leak found?	-	Go to **Step 9**	Go to **Step 11**
7	The transmission fluid is contaminated with engine coolant. Repair or replace the transmission cooler in the radiator. Is the transmission cooler repair complete?	-	Go to **Step 9**	-
	1. Drain the fluid by removing the bottom pan.			

cardiagn.com

8	**IMPORTANT:** **A very small amount of material in the bottom of the bottom pan is a normal condition.** 2. Check the bottom pan for any excessive debris. Was excessive debris found?	-	Go to **Step 9**	Go to **Step 10**
9	1. Repair the transmission if required, in some cases, overhaul may be required. 2. Flush the transmission oil cooler and pipes and check flow. Refer to **Automatic Transmission Oil Cooler Flushing and Flow Test (J 45096)** or **Automatic Transmission Oil Cooler Flushing and Flow Test (J 35944-A)** . 3. Add enough DEXRON III automatic transmission fluid to bring the fluid level to the bottom of the threaded plug hole. 4. If equipped, reset the oil life monitor to 100%. 5. Start the engine and allow the engine to idle until the transmission fluid temperature has reached the value specified. 6. Depress the brake pedal and move the shift lever through the gear ranges, pausing a few seconds in each range. Return the shift lever to the PARK range. 7. Raise the vehicle on a hoist. The vehicle must be level with the engine running and the shift lever in the PARK range. Refer to **Lifting and Jacking the Vehicle** in General Information. **CAUTION:** **Refer to Checking Hot Transmission Fluid Through Drain Plug Hole Caution in Cautions and Notices.** 8. Remove the transmission plug. 9. If needed, add DEXRON III automatic transmission fluid in increments of 0.5 L until the fluid drains from the threaded plug hole. **NOTE:** **Refer to Fastener Notice in Cautions and Notices.** 10. Allow fluid to finish draining out of the plug hole. Install the plug and tighten to specified value. 11. Wipe any excess fluid from the transmission with a rag or shop towel.	30- 50° C (86-122°F) 30 N.m (22 lb ft)	Go to **Road**	

cardiagn.com

	Is repair complete?		**Test Procedure**	-
10	1. Change the fluid and the fluid filter. Refer to **Automatic Transmission Fluid/Filter Replacement** . 2. Start the engine and allow the engine to idle until the transmission fluid temperature has reached the value specified. 3. Depress the brake pedal and move the shift lever through the gear ranges, pausing a few seconds in each range. Return the shift lever to the PARK range. 4. Raise the vehicle on a hoist. The vehicle must be level with the engine running and the shift lever in the PARK range. Refer to **Lifting and Jacking the Vehicle** in General Information. **CAUTION:** **Refer to Checking Hot Transmission Fluid Through Drain Plug Hole Caution in Cautions and Notices.** 5. Remove the transmission plug. 6. If needed, add DEXRON III automatic transmission fluid in increments of 0.5 L until the fluid drains from the threaded plug hole. **NOTE:** **Refer to Fastener Notice in Cautions and Notices.** 7. Allow fluid to finish draining out of the plug hole. Install the plug and tighten to specified value. 8. Wipe any excess fluid from the transmission with a rag or shop towel. 9. If equipped, reset the oil life monitor to 100%. Is repair complete?	30 N.m (22 lb ft)	Go to **Road Test Procedure**	-
11	**NOTE:** **Refer to Fastener Notice in Cautions and Notices.** 1. Allow fluid to finish draining out of the plug hole. Install the plug and tighten to specified value. 2. Wipe any excess fluid from the transmission with a rag or shop towel. Is repair complete?	30 N.m (22 lb ft)	Go to **Road Test Procedure**	-

cardiagn.com

LINE PRESSURE CHECK PROCEDURE

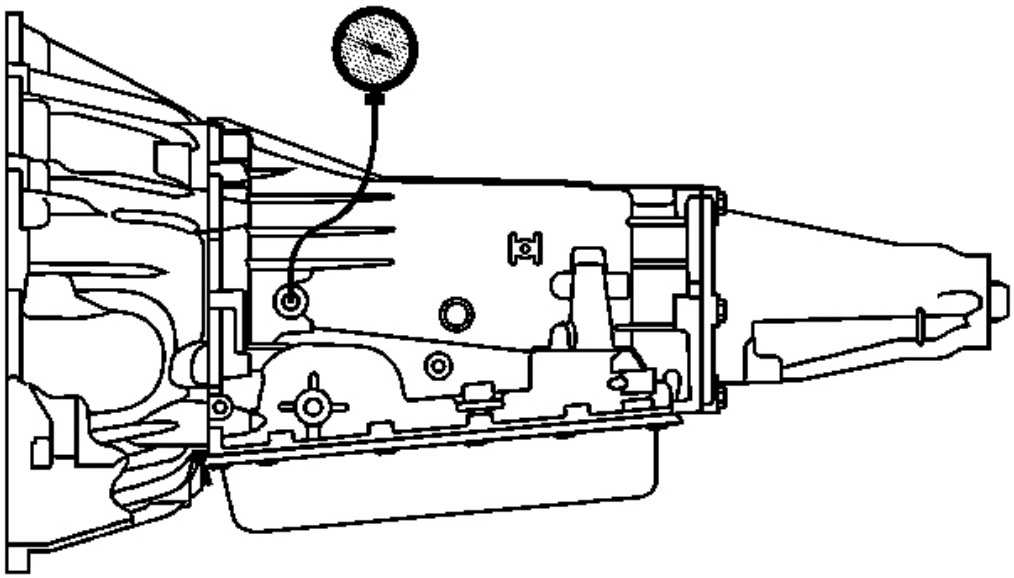

Fig. 1: J 21867 Pressure Gage
Courtesy of GENERAL MOTORS CORP.

Tools Required

J 21867 Pressure Gage

CAUTION: Keep the brakes applied at all times in order to prevent unexpected vehicle motion. Personal injury may result if the vehicle moves unexpectedly.

IMPORTANT: Before performing the line pressure check, verify that the transmission pressure control (PC) solenoid is operating correctly.

1. Install a scan tool.
2. Start the engine.
3. Inspect the transmission for the proper fluid levels. Refer to **Transmission Fluid Checking Procedure** .
4. Use the scan tool to inspect for any active or stored diagnostic trouble codes.
5. Inspect the manual linkage at the transmission for proper function.
6. Turn the engine OFF.

cardiagn.com

IMPORTANT: It may be necessary to remove or disconnect components in order to gain access to the transmission line pressure test port/plug.

7. Remove the pressure plug.
8. Install the **J 21867** .
9. Access the Scan Tool Output Control for the PC Solenoid.
10. Start the engine.

IMPORTANT: In order to achieve accurate line pressure readings, the following procedure must be performed at least three times in order to gather uniform pressure readings.
The scan tool is only able to control the PC solenoid in PARK and NEUTRAL with engine speeds below 1500 RPM. This protects the clutches from extreme high or low line pressures.

11. Begin commanding PC Solenoid at 1.0 amp and lower the amperage in one-tenth increments (0.01) until maximum line pressure is achieved.
12. Allow the pressure to stabilize between increments.
13. Compare your pressure readings to the Line Pressure table. Refer to **Line Pressure** .
14. If the pressure readings vary greatly from the line pressure table, refer to **Oil Pressure High or Low** .
15. Turn the engine OFF.
16. Remove the **J 21867** .

NOTE: Refer to Fastener Notice in Cautions and Notices.

17. Install the pressure plug.

Tighten: Tighten the pressure plug to 8-14 N.m (6-10 lb ft).

ROAD TEST PROCEDURE

IMPORTANT: The Road Test Procedure should be performed only as part of the Symptom Diagnosis. Refer to Symptoms - Automatic Transmission .

The following test provides a method of evaluating the condition of the automatic transmission. The test is structured so that most driving conditions would be achieved. The test is divided into the following parts:

- Electrical Function Check
- Upshift Control and Torque Converter Clutch (TCC) Apply
- Part Throttle Detent Downshifts
- Full Throttle Detent Downshifts
- Manual Downshifts

cardiagn.com

- Coasting Downshifts
- Manual Gear Range Selection
  - REVERSE
  - Manual FIRST
  - Manual SECOND
  - Manual THIRD

IMPORTANT: Complete the test in the sequence given. Incomplete testing cannot guarantee an accurate evaluation.

Before the road test, ensure the following:

- The engine is performing properly.
- Transmission fluid level is correct. Refer to the **Transmission Fluid Checking Procedure** .
- Tire pressure is correct.

During the road test:

- Perform the test only when traffic conditions permit.
- Operate the vehicle in a controlled, safe manner.
- Observe all traffic regulations.
- View the scan tool data while conducting this test.

  Take along qualified help in order to operate the vehicle safely.

- Observe any unusual sounds or smells.

After the road test, check the following:

- Transmission fluid level. Refer to the **Transmission Fluid Checking Procedure** .
- Diagnostic trouble codes (DTCs) that may have set during the testing. Refer to the applicable DTC.
- Scan tool data for any abnormal readings or data.

Electrical Function Check

Perform this check first, in order to ensure the electronic transmission components are connected and functioning properly. If these components are not checked, a simple electrical condition could be mis-diagnosed.

1. Connect the scan tool.
2. Ensure the gear selector is in PARK and set the parking brake.
3. Start the engine.

cardiagn.com

4. Verify that the following scan tool data can be obtained and is functioning properly.

   Refer to **Scan Tool Data List** for typical data values. Data that is questionable may indicate a concern.

   - Engine speed
   - Transmission output speed
   - Vehicle speed
   - TFP manual valve position switch
   - Transmission range, engine list
   - Commanded gear, current gear
   - PC solenoid reference current
   - PC solenoid actual current
   - PC solenoid duty cycle
   - Brake switch
   - Engine coolant temperature
   - Transmission fluid temperature
   - Throttle angle
   - Ignition voltage
   - 1-2 shift solenoid
   - 2-3 shift solenoid
   - TCC solenoid duty cycle
   - TCC slip speed
5. Monitor the brake switch signal while depressing and releasing the brake pedal. The scan tool should display:
   - Closed when the brake pedal is released.
   - Open when the brake pedal is depressed.
6. Check the garage shifts.
   1. Apply the brake pedal and ensure that the parking brake is set.
   2. Move the gear selector through the following ranges:
      1. PARK to REVERSE
      2. REVERSE to NEUTRAL
      3. NEUTRAL to DRIVE
   3. Pause 2 to 3 seconds in each gear position.
   4. Verify the gear engagements are immediate and not harsh.

IMPORTANT: Harsh engagement may be caused by any of the following conditions:

- **High idle speed. Compare engine idle speed to desired idle speed.**
- **Commanded low PC solenoid current. Compare PC solenoid**

cardiagn.com

reference current to PC solenoid actual current.

- **A default condition caused by certain DTCs that result in maximum line pressure to prevent slippage.**

IMPORTANT: Soft or delayed engagement may be caused by any of the following conditions:

- **Low idle speed. Compare engine idle speed to desired idle speed.**
- **Low fluid level**
- **Commanded high PC solenoid current. Compare PC solenoid reference current to PC solenoid actual current.**
- **Cold transmission fluid. Check for low transmission fluid temperature.**

7. Monitor transmission range on the scan tool, engine list.
    1. Apply the brake pedal and ensure the parking brake is set.
    2. Move the gear selector through all ranges.
    3. Pause 2-3 seconds in each range.
    4. Return gear selector to PARK.
    5. Verify that all selector positions match the scan tool display.
8. Check throttle angle input.
    1. Apply the brake pedal and ensure that the parking brake is set.
    2. Ensure the gear selector is in PARK.
    3. Monitor throttle angle while increasing and decreasing engine speed with the throttle pedal. The scan tool throttle angle should increase and decrease with engine speed.

If any of the above checks do not perform properly, record the result for reference after completion of the road test.

Upshift Control and Torque Converter Clutch (TCC) Apply

The PCM calculates the upshift points based primarily on two inputs: throttle angle and vehicle speed. When the PCM determines that conditions are met for a shift to occur, the PCM commands the shift by closing or opening the ground circuit for the appropriate solenoid.

Perform the following steps:

1. Refer to the **Shift Speed** table in this section and choose a throttle position of 12 percent, 25 percent or 50 percent. All throttle angles shown should be tested to cover the normal driving range.
2. Monitor the following scan tool parameters:
    - Throttle angle
    - Vehicle speed

cardiagn.com

- Engine speed
- Output shaft speed
- Commanded gear
- Slip speed
- Solenoid states

3. Place the gear selector in the OVERDRIVE position.
4. Accelerate the vehicle using the chosen throttle angle. Hold the throttle steady.
5. As the transmission upshifts, note the vehicle speed when the shift occurs for each gear change. There should be a noticeable shift feel or engine speed change within 1-2 seconds of the commanded gear change.
6. Compare the shift speeds to the Shift Speed table. Refer to **Shift Speed** . Shift speeds may vary slightly due to transmission fluid temperature or hydraulic delays in responding to electronic controls.
   - Note any harsh, soft or delayed shifts or slipping.
   - Note any noise or vibration.
7. Repeat steps 1 through 6 to complete all throttle angles.

IMPORTANT: This transmission is equipped with an electronically controlled capacity clutch (ECCC). The pressure plate does not fully lock to the torque converter cover. Instead, the pressure plate maintains a small amount of slippage, about 20 RPM, in SECOND, THIRD and FOURTH gears, depending on the vehicle application. ECCC was developed to reduce the possibility of noise, vibration or chuggle caused by TCC apply. Typical apply speeds are 49-52 km/h (30-32 mph) in THIRD gear and 65-73 km/h (40-45 mph) in FOURTH gear. Full lockup is available at highway speeds on some applications.

IMPORTANT: The TCC will not engage until the engine is in closed loop operation and the vehicle speed is as shown in the Shift Speed table. Refer to Shift Speed . The vehicle must be in a near-cruise condition, not accelerating or coasting, and on a level road surface.

8. Check for TCC apply in THIRD and FOURTH gear.
   - Note the TCC apply point. When the TCC applies there should be a noticeable drop in engine speed and a drop in slip speed to below 100 RPM. If the TCC apply can not be detected:
     - Check for DTCs.
     - Refer to **Torque Converter Diagnosis Procedure** .
   - Refer to the **Shift Speed** table for the correct apply speeds.
   - Lightly tap and release the brake pedal. The TCC will release on most applications.

Part Throttle Detent Downshift

1. Place the gear selector in the OVERDRIVE position.

cardiagn.com

2. Accelerate the vehicle to 64-88 km/h (40-55 mph) in FOURTH gear.
3. Quickly increase throttle angle to greater than 50 percent.
4. Verify the following:
    - The TCC releases
    - The transmission downshifts immediately to THIRD gear

Full Throttle Detent Downshift

1. Place the gear selector in the OVERDRIVE position.
2. Accelerate the vehicle to speeds of 64-88 km/h (40-55 mph) in FOURTH gear.
3. Quickly increase throttle angle to 100 percent wide open throttle (WOT).
4. Verify the following:
    - The TCC releases
    - The transmission downshifts immediately to SECOND gear

Manual Downshifts

The shift solenoid valves do not control the initial downshift for the 4-3 or the 3-2 manual downshifts. The 4-3 and the 3-2 manual downshifts are hydraulic. The 2-1 manual downshift is electronic. The solenoid states should change during or shortly after a manual downshift is selected.

Manual 4-3 Downshift

1. Place the gear selector in the OVERDRIVE position.
2. Accelerate the vehicle to 64-88 km/h (40-55 mph) in FOURTH gear.
3. Release the throttle while moving the gear selector to THIRD.
4. Verify the following:
    - The TCC releases
    - The transmission downshifts immediately to THIRD gear
    - The engine slows the vehicle

Manual 4-2 Downshift

1. Place the gear selector in the OVERDRIVE position.
2. Accelerate the vehicle to 64-72 km/h (40-45 mph).
3. Release the throttle while moving the gear selector to SECOND.
4. Verify the following:
    - The TCC releases
    - The transmission downshifts immediately to SECOND gear
    - The engine slows the vehicle

cardiagn.com

Manual 4-1 Downshift

1. Place the gear selector in the OVERDRIVE position.
2. Accelerate the vehicle to 48 km/h (30 mph).
3. Release the throttle while moving the gear selector to FIRST.
4. Verify the following:
    - The TCC releases.
    - The transmission downshifts immediately to FIRST gear.
    - The engine slows the vehicle.

Coasting Downshifts

1. Place the gear selector in the OVERDRIVE position.
2. Accelerate the vehicle to FOURTH gear with the TCC applied.
3. Release the throttle and lightly apply the brakes.
4. Verify the following:
    - The TCC releases
    - Downshifts occur at speeds shown in the Shift Speed table. Refer to **Shift Speed** .

Manual Gear Range Selection

The shift solenoids control the upshifts in the manual gear ranges.

Perform the following tests using 10-15 percent throttle angle.

Reverse

1. With the vehicle stopped, move the gear selector to REVERSE.
2. Slowly accelerate the vehicle.
3. Verify that there is no noticeable slip, noise or vibration.

Manual First

1. With the vehicle stopped, move the gear selector to FIRST.
2. Accelerate the vehicle to 32 km/h (20 mph).
3. Verify the following:
    - No upshifts occur
    - The TCC does not apply
    - There is no noticeable slip, noise, or vibration

Manual Second

cardiagn.com

1. With the vehicle stopped, move the gear selector to SECOND.
2. Accelerate the vehicle to 57 km/h (35 mph).
3. Verify the following:
    - The 1-2 shift occurs
    - The 2-3 shift does not occur
    - There is no noticeable slip, noise or vibration

Manual Third

1. With the vehicle stopped, move the gear selector to THIRD.
2. Accelerate the vehicle to 64 km/h (40 mph).
3. Verify the following:
    - The 1-2 shift occurs
    - The 2-3 shift occurs
    - There is no noticeable slip, noise or vibration

TORQUE CONVERTER DIAGNOSIS PROCEDURE

The Torque Converter Clutch (TCC) is applied by fluid pressure, which is controlled by a PWM solenoid valve. This solenoid valve is located inside of the automatic transmission assembly. The solenoid valve is controlled through a combination of computer controlled switches and sensors.

Torque Converter Stator

The torque converter stator roller clutch can have two different malfunctions.

- The stator assembly freewheels in both directions.
- The stator assembly remains locked up at all times.

Poor Acceleration at Low Speed

If the stator is freewheeling at all times, the vehicle tends to have poor acceleration from a standstill. At speeds above 50-55 km/h (30-35 mph), the vehicle may act normally. For poor acceleration, you should first determine that the exhaust system is not blocked, and the transmission is in First gear when starting out.

If the engine freely accelerates to high RPM in NEUTRAL, you can assume that the engine and the exhaust system are normal. Check for poor performance in DRIVE and REVERSE to help determine if the stator is freewheeling at all times.

Poor Acceleration at High Speed

If the stator is locked up at all times, performance is normal when accelerating from a standstill. Engine RPM and vehicle speed are limited or restricted at high speeds. Visual examination of the converter may reveal a blue color from overheating.

cardiagn.com

If the converter has been removed, you can check the stator roller clutch by inserting a finger into the splined inner race of the roller clutch and trying to turn the race in both directions. You should be able to freely turn the inner race clockwise, but you should have difficulty in moving the inner race counterclockwise or you may be unable to move the race at all.

Noise

IMPORTANT: Do not confuse this noise with pump whine noise, which is usually noticeable in PARK, NEUTRAL and all other gear ranges. Pump whine will vary with line pressure.

You may notice a torque converter whine when the vehicle is stopped and the transmission is in DRIVE or REVERSE. This noise will increase as you increase the engine RPM. The noise will stop when the vehicle is moving or when you apply the torque converter clutch, because both halves of the converter are turning at the same speed.

Perform a stall test to make sure the noise is actually coming from the converter:

1. Place your foot on the brake.
2. Put the gear selector in DRIVE.

   NOTE: You may damage the transmission if you depress the accelerator for more than 6 seconds.

3. Depress the accelerator to approximately 1,200 RPM for no more than six seconds.

A torque converter noise will increase under this load.

Torque Converter Clutch Shudder

The key to diagnosing Torque Converter Clutch (TCC) shudder is to note when it happens and under what conditions.

TCC shudder which is caused by the transmission should only occur during the apply or the release of the converter clutch. Shudder should never occur after the TCC plate is fully applied.

If Shudder Occurs During TCC Apply or Release

If the shudder occurs while the TCC is applying, the problem can be within the transmission or the torque converter. Something is causing one of the following conditions to occur:

- Something is not allowing the clutch to become fully engaged.
- Something is not allowing the clutch to release.
- The clutch is releasing and applying at the same time.

cardiagn.com

One of the following conditions may be causing the problem to occur:

- Leaking turbine shaft seals
- A restricted release orifice
- A distorted clutch or housing surface due to long converter bolts
- Defective friction material on the TCC plate

If Shudder Occurs After TCC has Applied

If shudder occurs after the TCC has applied, most of the time there is nothing wrong with the transmission.

The TCC is not likely to slip after the TCC has been applied. Engine problems may go unnoticed under light throttle and load, but they become noticeable after the TCC apply when going up a hill or accelerating. This is due to the mechanical coupling between the engine and the transmission.

Once TCC is applied, there is no torque converter (fluid coupling) assistance. Engine or driveline vibrations could be unnoticeable before TCC engagement.

Inspect the following components in order to avoid misdiagnosis of TCC shudder. An inspection will also avoid the unnecessary disassembly of a transmission or the unnecessary replacement of a torque converter.

- Spark plugs - Inspect for cracks, high resistance or a broken insulator.
- Plug wires - Look in each end. If there is red dust (ozone) or a black substance (carbon) present, then the wires are bad. Also look for a white discoloration of the wire. This indicates arcing during hard acceleration.
- Coil - Look for a black discoloration on the bottom of the coil. This indicates arcing while the engine is misfiring.
- Fuel injector - The filter may be plugged.
- Vacuum leak - The engine will not get a correct amount of fuel. The mixture may run rich or lean depending on where the leak occurs.
- EGR valve - The valve may let in too much or too little unburnable exhaust gas and could cause the engine to run rich or lean.
- MAP/MAF sensor - Like a vacuum leak, the engine will not get the correct amount of fuel for proper engine operation.
- Carbon on the intake valves - Carbon restricts the proper flow of air/fuel mixture into the cylinders.
- Flat cam - Valves do not open enough to let the proper fuel/air mixture into the cylinders.
- Oxygen sensor - This sensor may command the engine too rich or too lean for too long.
- Fuel pressure - This may be too low.
- Engine mounts - Vibration of the mounts can be multiplied by TCC engagement.
- Axle joints - Check for vibration.
- TP Sensor - The TCC apply and release depends on the TP Sensor in many engines. If the TP Sensor is out of specification, TCC may remain applied during initial engine loading.
- Cylinder balance - Bad piston rings or poorly sealing valves can cause low power in a cylinder.

cardiagn.com

- Fuel contamination - This causes poor engine performance.

Replace the torque converter if any of the following conditions exist:

- External leaks appear in the hub weld area.
- The converter hub is scored or damaged.
- The converter pilot is broken, damaged, or fits poorly into the crankshaft.
- You discover steel particles after flushing the cooler and the cooler lines.
- The pump is damaged, or you discover steel particles in the converter.
- The vehicle has TCC shudder and/or no TCC apply. Replace the torque converter only after all hydraulic and electrical diagnoses have been made. The converter clutch material may be glazed.
- The converter has an imbalance which cannot be corrected. Refer to **Flexplate/Torque Converter Vibration Test** .
- The converter is contaminated with engine coolant which contains antifreeze or water.
- An internal failure occurs in the stator roller clutch.
- You notice excessive end play.
- Overheating produces heavy debris in the clutch or converter ballooning.
- You discover steel particles or clutch lining material in the fluid filter or on the magnet, when no internal parts in the unit are worn or damaged. This condition indicates that lining material came from the converter.

Do not replace the torque converter if you discover any of the following symptoms:

- The oil has an odor or the oil is discolored, even though metal or clutch facing particles are not present.
- The threads in one or more of the converter bolt holds are damaged. Correct the condition with a new thread inset.
- Transmission failure did not display evidence of damaged or worn internal parts, steel particles or clutch plate lining material in the unit and inside the fluid filter.
- The vehicle has been exposed to high mileage only. An exception may exist where the lining of the torque converter clutch dampener plate has seen excess wear by vehicles operated in heavy and/or constant traffic, such as taxi, delivery, or police use.

FLEXPLATE/TORQUE CONVERTER VIBRATION TEST

Isolating Vibration

NOTE: **Some engine/transaxle combinations cannot be balanced in this manner due to restricted access or limited clearances between the torque converter bolts and the engine. Ensure that the bolts do not bottom out in the lug nuts or the torque converter cover could be dented and cause internal damage.**

To isolate and correct a flywheel or torque converter vibration, separate the torque converter from the flywheel to determine if vibration is in the engine or transmission.

cardiagn.com

1. With the engine at idle speed and the transmission in PARK or NEUTRAL, observe the vibration.
2. Turn the engine OFF.
3. Raise and suitably support the vehicle. Refer to **Lifting and Jacking the Vehicle** in General Information.
4. Remove the transmission converter cover bolts and the cover.
5. Mark the relationship of the converter to the flywheel.
6. Remove the bolts attaching the converter to the flywheel.
7. Slide the torque converter away from the flywheel.
8. Rotate the flywheel and torque converter to inspect for defects or missing balance weights. Refer to **Engine Flywheel Cleaning and Inspection** in Engine Mechanical - 5.7L.
9. Lower the vehicle.
10. With the engine at idle speed and the transmission in PARK or NEUTRAL, observe the vibration. Refer to **Diagnostic Starting Point - Vibration Diagnosis and Correction** in Vibration Diagnosis and Correction.
11. Turn the engine OFF.

Indexing Torque Converter

To determine and correct a torque converter vibration, the following procedure may have to be performed several times to achieve the best possible torque converter to flywheel balance.

1. Raise and suitably support the vehicle. Refer to **Lifting and Jacking the Vehicle** in General Information.
2. Rotate the torque converter one bolt position.

cardiagn.com

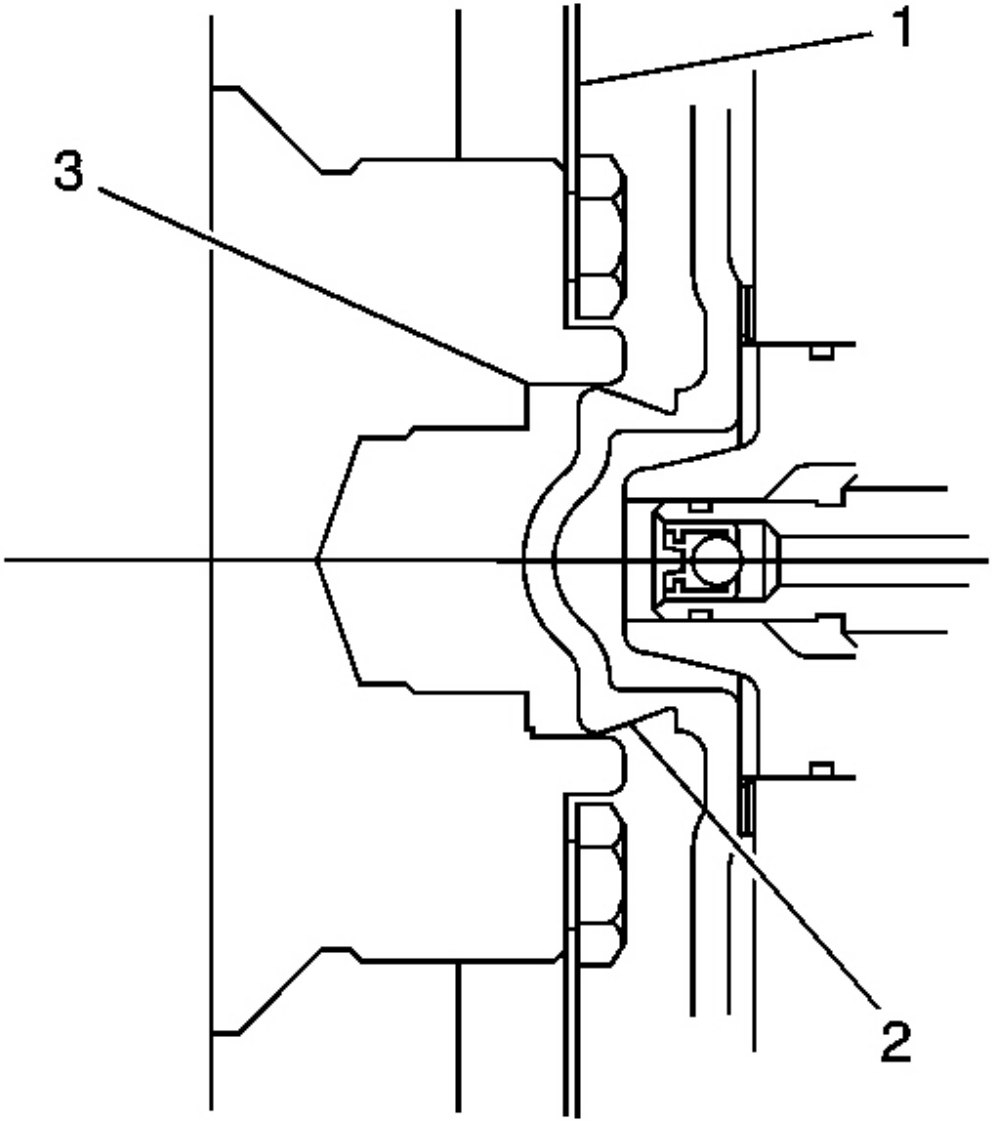

Fig. 2: Aligning The Torque Converter Hub In The Engine Crankshaft
Courtesy of GENERAL MOTORS CORP.

3. Align the torque converter hub (2) in the engine crankshaft (3) and install the torque converter to flywheel bolts.
4. Lower the vehicle.
5. With the engine at idle speed and the transmission in PARK or NEUTRAL, observe the vibration. Refer

cardiagn.com

to **Noise and Vibration Analysis** .

Repeat this procedure until you obtain the best possible balance.

6. Install the transmission converter cover bolts and the cover.

NOISE AND VIBRATION ANALYSIS

A noise or vibration that is noticeable when the vehicle is in motion MAY NOT be the result of the transmission.

If noise or vibration is noticeable in PARK and NEUTRAL with the engine at idle, but is less noticeable as RPM increases, the cause may be from poor engine performance.

- Vibration may also be caused by a small amount of water inside the converter.
- Inspect the tires for the following conditions:
  - Uneven wear
  - Imbalance
  - Mixed sizes
  - Mixed radial and bias ply
- Inspect the suspension components for the following conditions:
  - Alignment and wear
  - Loose fasteners
  - Driveline damage or wear
- Inspect the engine and transmission mounts for damage and loose bolts.
- Inspect the transmission case mounting holes for the following conditions:
  - Missing bolts, nuts, and studs
  - Stripped threads
  - Cracks
- Inspect the flywheel for the following conditions:
  - Missing or loose bolts
  - Cracks
  - Imbalance
- Inspect the torque converter for the following conditions:
  - Missing or loose bolts or lugs
  - Missing or loose balance weights
  - Imbalance caused by heat distortion or fluid contamination

CLUTCH PLATE DIAGNOSIS

Composition Plates

cardiagn.com

Dry the plates and inspect the plates for the following conditions:

- Pitting
- Flaking
- Delamination - splitting or separation of bonded clutch material
- Wear
- Glazing
- Cracking
- Charring
- Chips or metal particles embedded in the lining

Replace a composition plate which shows any of these conditions.

Steel Plates

Wipe the plates dry and check the plates for heat discoloration. If the surfaces are smooth, even if color smear is indicated, you can reuse the plate. If the plate is discolored with heat spots or if the surface is scuffed, replace the plate.

Causes of Burned Clutch Plates

The following conditions can result in a burned clutch plate:

- Incorrect usage of clutch or apply plates
- Engine coolant or water in the transmission fluid
- A cracked clutch piston
- Damaged or missing seals
- Low line pressure
- Valve body conditions
    - The valve body face is not flat.
    - Porosity is between channels.
    - The valve bushing clips are improperly installed.
    - The checkballs are misplaced.
- The Teflon(R) seal rings are worn or damaged.

ENGINE COOLANT/WATER IN TRANSMISSION

NOTE: **The antifreeze or water will deteriorate the seals, gaskets and the glue that bonds the clutch material to the pressure plate. Both conditions may cause damage to the transmission.**

If antifreeze or water has entered the transmission, perform the following:

cardiagn.com

1. Disassemble the transmission.
2. Replace all of the rubber type seals (the coolant will attack the seal material which will cause leakage).
3. Replace the composition-faced clutch plate assemblies (the facing material may separate from the steel center portion).
4. Replace all of the nylon parts (washers).
5. Replace the torque converter.
6. Thoroughly clean and rebuild the transmission, using new gaskets and oil filter.
7. Flush the cooler lines after the transmission cooler has been properly repaired or replaced.

FLUID LEAK DIAGNOSIS

General Method

1. Verify that the leak is transmission fluid.
2. Thoroughly clean the suspected leak area.
3. Operate the vehicle for 24 km (15 mi), or until normal operating temperatures are reached.
4. Park the vehicle over clean paper or cardboard.
5. Shut OFF the engine.
6. Look for fluid spots on the paper.
7. Make the necessary repairs.

Powder Method

1. Thoroughly clean the suspected leak area with solvent.
2. Apply an aerosol type powder, such as foot powder, to the suspected leak area.
3. Operate the vehicle for 24 km (15 mi), or until normal operating temperatures are reached.
4. Shut OFF the engine.
5. Inspect the suspected leak area.
6. Trace the leak path through the powder in order to find the source of the leak.
7. Make the necessary repairs.

Dye and Black Light Method

A fluid dye and black light kit is available from various tool manufacturers.

1. Follow the manufacturer's instructions in order to determine the amount of dye to use.
2. Detect the leak with the black light.
3. Make the necessary repairs.

Find the Cause of the Leak

Pinpoint the leak and trace the leak back to the source. You must determine the cause of the leak in order to

cardiagn.com

repair the leak properly. For example, if you replace a gasket, but the sealing flange is bent, the new gasket will not repair the leak. You must also repair the bent flange. Before you attempt to repair a leak, check for the following conditions, and make repairs as necessary:

Gaskets

- Fluid level/pressure is too high
- Plugged vent or drain-back holes
- Improperly tightened fasteners
- Dirty or damaged threads
- Warped flanges or sealing surface
- Scratches, burrs, or other damage to the sealing surface
- Damaged or worn gasket
- Cracking or porosity of the component
- Improper sealant used, where applicable
- Incorrect gasket

Seals

- Fluid level/pressure is too high
- Plugged vent or drain-back holes
- Damaged seal bore
- Damaged or worn seal
- Improper installation
- Cracks in component
- Manual or output shaft surface is scratched, nicked, or damaged
- Loose or worn bearing causing excess seal wear

Possible Points of Fluid Leaks

Transmission Oil Pan

- Incorrectly tightened oil pan bolts
- Improperly installed or damaged oil pan gasket
- Damaged oil pan or mounting face
- Incorrect oil pan gasket

Case Leak

- Damaged or missing fill tube seal
- Mislocated fill tube bracket

cardiagn.com

- Damaged vehicle speed sensor seal
- Damaged manual shaft seal
- Loose or damaged oil cooler connector fittings
- Worn or damaged propeller shaft oil seal
- Loose line pressure pipe plug
- Porous casting warped torque converter housing

Leak at the Torque Converter End

- Converter leak in the weld area
- Converter seal lip cut. Check the converter hub for damage
- Converter seal bushing moved forward and damaged
- Converter seal garter spring missing from the seal
- Porous casting of the transmission case or the oil pump

Leak at the Vent Pipe or the Fluid Fill Tube

- Overfilled system
- Water or coolant in the fluid. The fluid will appear milky
- Transmission case porous
- Incorrect fluid level indicator
- Plugged vent
- Drain-back holes plugged
- Mispositioned oil pump to case gasket, if equipped

cardiagn.com

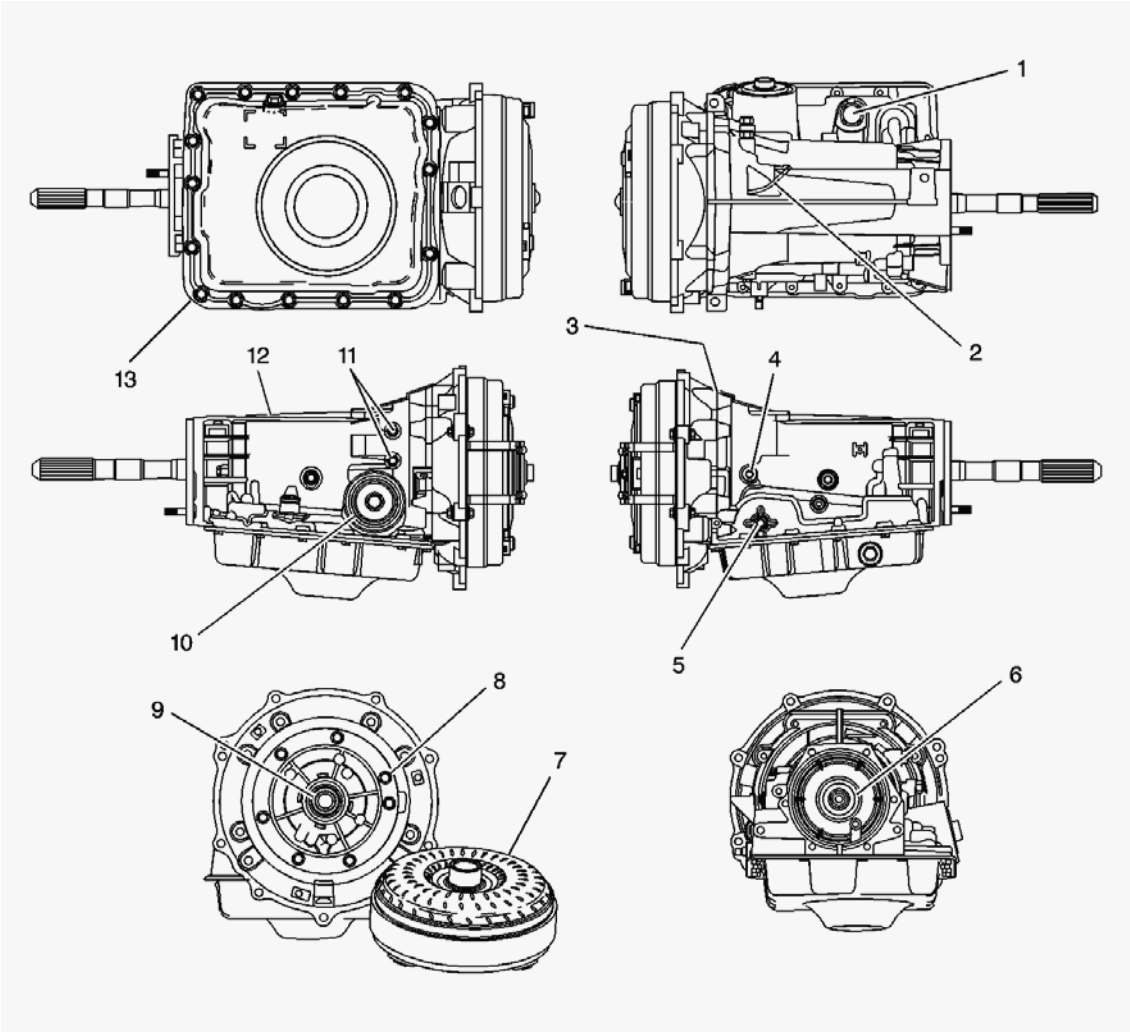

Fig. 3: Leak Inspection Points
Courtesy of GENERAL MOTORS CORP.

Callouts For Fig. 44

Callout	Component Name
1	Wiring Harness Pass-through Connector O-Ring Seal
2	Transmission Vent Assembly
3	Converter Housing to Case Joint (Pump to Case Oil Seal)
4	Line Pressure Plug
5	Manual Shaft Seal
6	Case Rear Oil Seal Assembly
7	Torque Converter Assembly
8	Pump to Case Oil Seal
9	Pump Oil Seal Assembly
10	2-4 Servo Cover O-Ring Seal
11	Oil Cooler Pipe Connectors

cardiagn.com

12	Transmission Case
13	Transmission Oil Pan Gasket

CASE POROSITY REPAIR

Some external leaks are caused by case porosity in non-pressurized areas. You can usually repair these leaks with the transmission in the vehicle.

1. Thoroughly clean the area to be repaired with a cleaning solvent. Air dry the area.

CAUTION: Epoxy adhesive may cause skin irritations and eye damage. Read and follow all information on the container label as provided by the manufacturer.

2. Using instructions from the manufacturer, mix a sufficient amount of an epoxy to make the repair.
3. While the transmission case is still hot, apply the epoxy. You can use a clean, dry soldering acid brush to clean the area and also to apply the epoxy cement. Make certain that the area to be repaired is fully covered.
4. Allow the epoxy cement to cure for three hours before starting the engine.
5. Repeat the fluid leak diagnosis procedures.

SHIFT SOLENOID LEAK TEST

Tools Required

- **J 35616** GM Terminal Test Kit
- **J 44246** Solenoid Testing Kit

Leak Test Procedure

IMPORTANT:

- **This procedure tests On/Off type solenoid valves.**
- **Visually inspect the physical condition of the solenoid before testing. Inspect the O-rings before and after the test to be sure that they are not cut or damaged.**

1. Remove the shift solenoid valve from the control valve body or the torque converter clutch (TCC) solenoid valve from the transmission case. Refer to **Control and Shift Solenoids Replacement** or **Torque Converter Clutch Pulse Width Modulation (TCC PWM) Solenoid, TCC Solenoid, and Wiring Harness** .

cardiagn.com

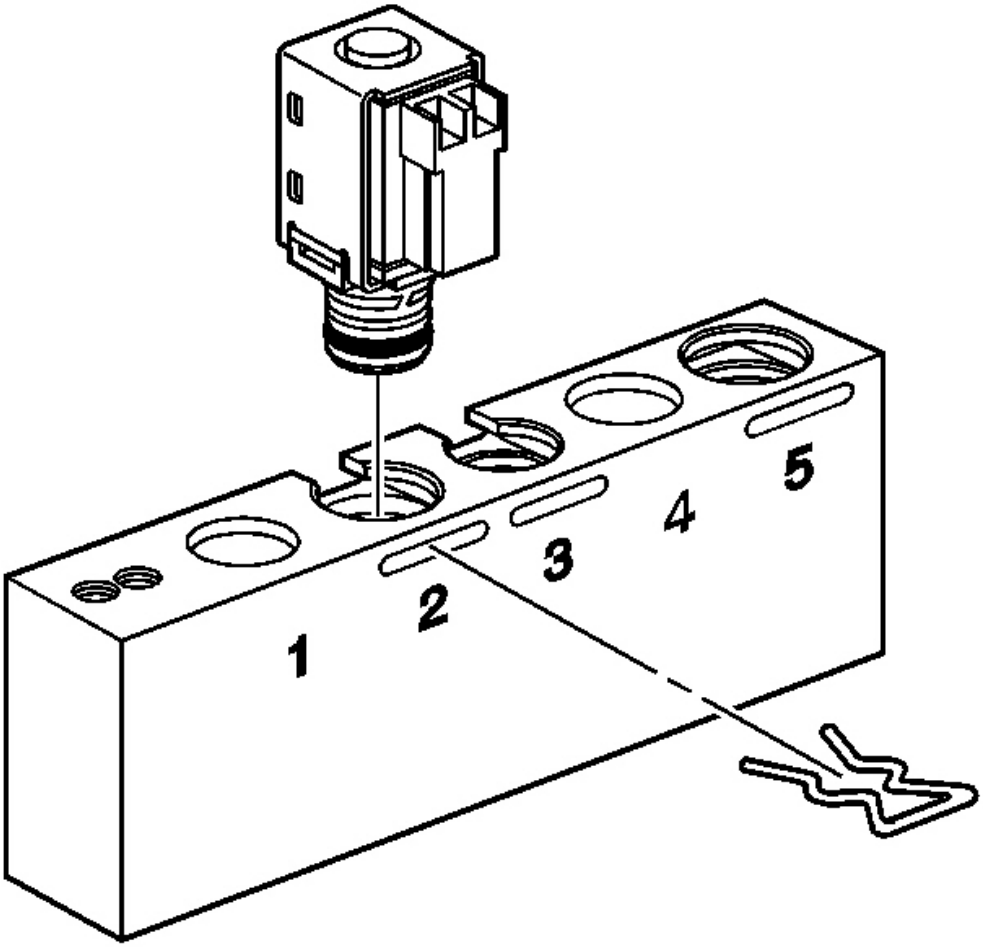

Fig. 4: Installing Valve Into J 44246
Courtesy of GENERAL MOTORS CORP.

2. Install the TCC solenoid valve, the 1-2 shift solenoid valve or the 2-3 shift solenoid valve into bore number 2 of the **J 44246** and install the factory retainer clip to retain the solenoid.

cardiagn.com

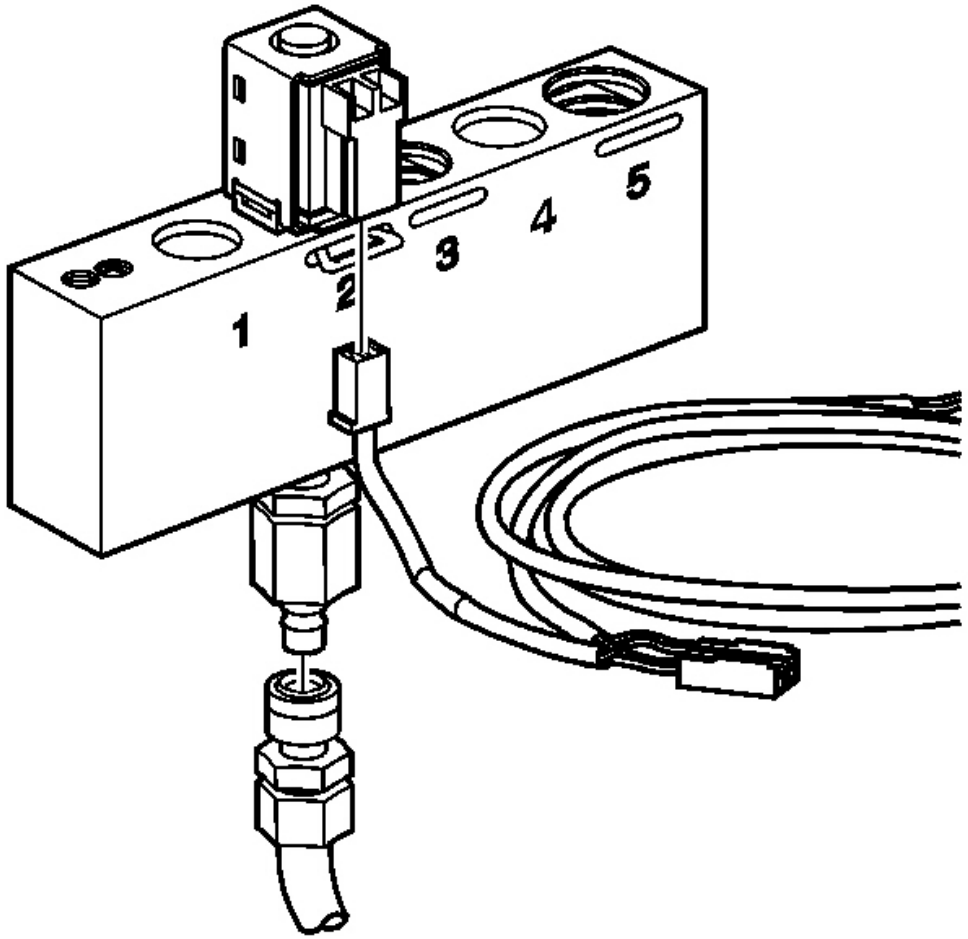

Fig. 5: Connecting The Solenoid Testing Harness To The Solenoid
Courtesy of GENERAL MOTORS CORP.

IMPORTANT: The supplied solenoid testing harness will not power the 4L60-E TCC On/Off solenoid. To energize this solenoid, apply battery, 12-volt, positive (+) and negative (-) to the TCC On/Off solenoid wiring harness using connector test adapter kit J 35616 . Use terminal E, Red, Power, and terminal T, Black, Ground. Refer to the Automatic Transmission Inline 20-Way Connector End View .

3. Connect the solenoid testing harness supplied with the **J 44246** to the solenoid.

cardiagn.com

IMPORTANT: Do not use air pressure in excess of 827.4 kPa (120 psi). Excessive pressure will not allow the solenoid ball check valve to seat properly. Recommended air pressure is 344.75 kPa (50 psi).

4. Apply compressed air to the **J 44246** .
5. Air should flow through the solenoid. If air does not flow through the solenoid, replace the solenoid. Refer to **Control and Shift Solenoids Replacement** .
6. Connect the solenoid testing harness to the 12-volt positive (+) and negative (-) battery terminals.
7. Observe if the solenoid is operating electrically. An audible clicking noise can be heard when connecting or disconnecting power.

IMPORTANT:

- **All solenoids need to be energized to seal.**
- **A small amount of air leakage is normal +/- 21 kPa (+/- 3 psi).**

8. Observe the air flow through the solenoid. The flow will completely or nearly completely stop. Replace the solenoid if there continues to be an obvious air leak when the solenoid is energized.

IMPORTANT: Inspect the O-rings after the test to be sure that they are not cut or damaged.

9. Install the shift solenoid valve into the control valve body or the TCC solenoid valve into the transmission case. Refer to **Control and Shift Solenoids Replacement** or **Torque Converter Clutch Pulse Width Modulation (TCC PWM) Solenoid, TCC Solenoid, and Wiring Harness** .

AUTOMATIC TRANSMISSION OIL COOLER FLUSHING AND FLOW TEST (J 45096)

GM studies indicate that plugged or restricted transmission oil coolers and pipes cause insufficient transmission lubrication and elevated operating temperatures which can lead to premature transmission failure. Many repeat repair cases could have been prevented by following published procedures for transmission oil cooler flushing and flow checking. This procedure includes flow checking and flushing the auxiliary transmission oil cooler, if equipped.

IMPORTANT: Use the J 45096 or equivalent to flush and flow test the transmission oil cooler and the oil cooler pipes after the transaxle is removed for repairs.

Only GM Goodwrench DEXRON(R)III automatic transmission fluid should be used when doing a repair on a GM transmission.

Time allowance for performing the cooler flow checking and flushing procedure has been included in the appropriate labor time guide operations since the 1987 model year. The service procedure steps for oil cooler flushing and flow testing are as follows:

Cooler Flow Check and Flushing Steps

cardiagn.com

1. Machine Set-up
2. Determine Minimum Flow Rate
3. Back Flush
4. Forward Flush
5. Flow Test
6. Code Recording Procedure
7. Clean-up

Tools Required

- **J 35944-200** Cooler Flushing Adapter
- **J 45096** Transmission Oil Cooling System Flush and Flow Test Tool
- Shop air supply with water/oil filters, regulator and pressure gage - minimum 90 psi
- Eye protection
- Rubber gloves

Machine Set-up

cardiagn.com

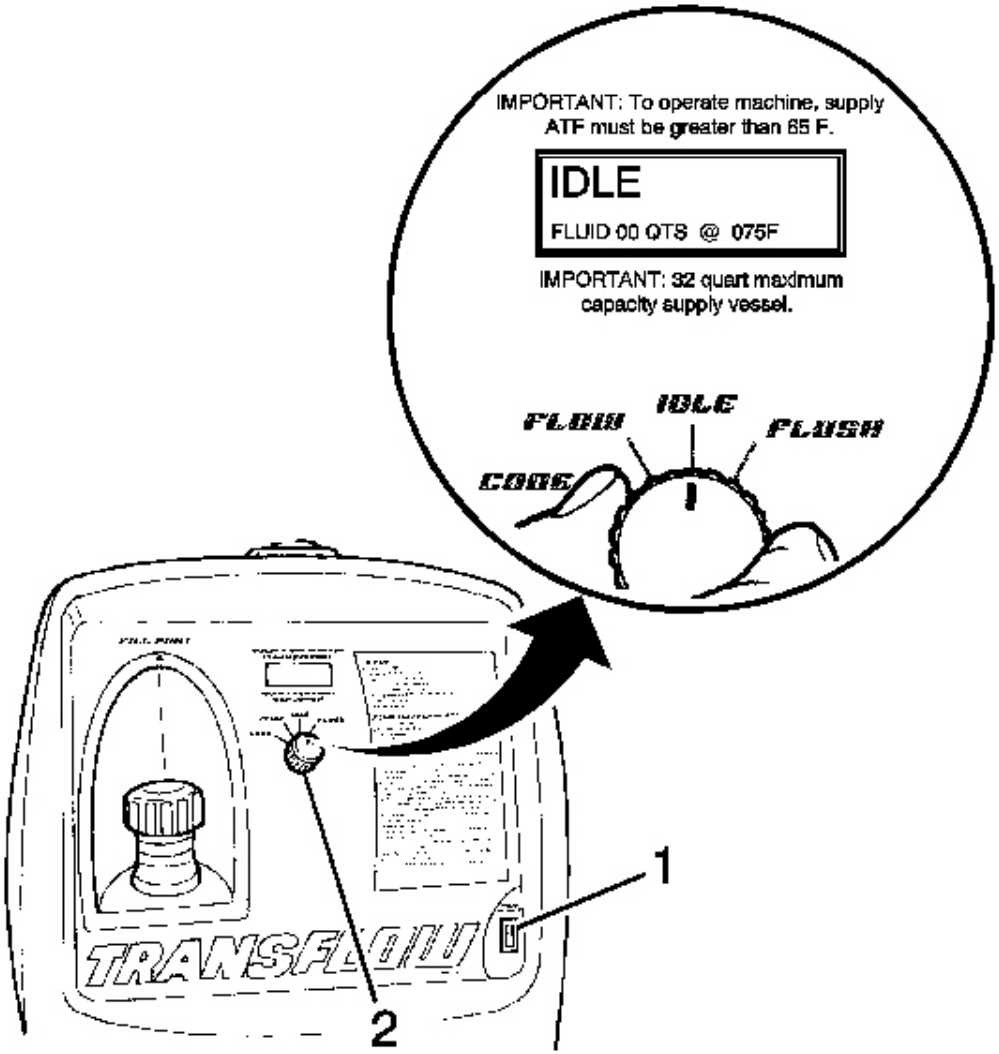

Fig. 6: Turning The Main Function Switch To The IDLE Position
Courtesy of GENERAL MOTORS CORP.

1. Verify that the main power switch (1) is in the OFF position.
2. Place the main function switch (2) in the IDLE position.

cardiagn.com

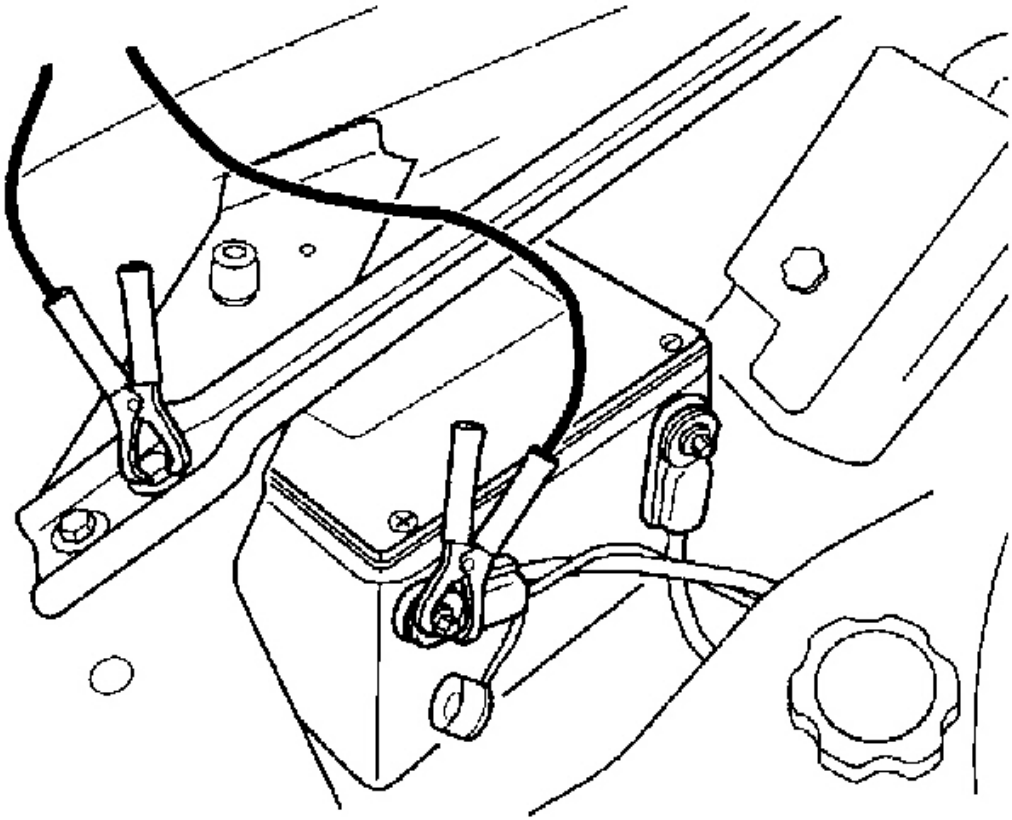

Fig. 7: Connecting J 45096 To The Vehicle 12-Volt DC Power Source
Courtesy of GENERAL MOTORS CORP.

3. Connect **J 45096** to the vehicle 12-volt DC power source by connecting the red battery clip to the positive (+) battery post on the vehicle and connect the negative (-) lead to a known good chassis ground.
4. Turn the main power switch to the ON position.

cardiagn.com

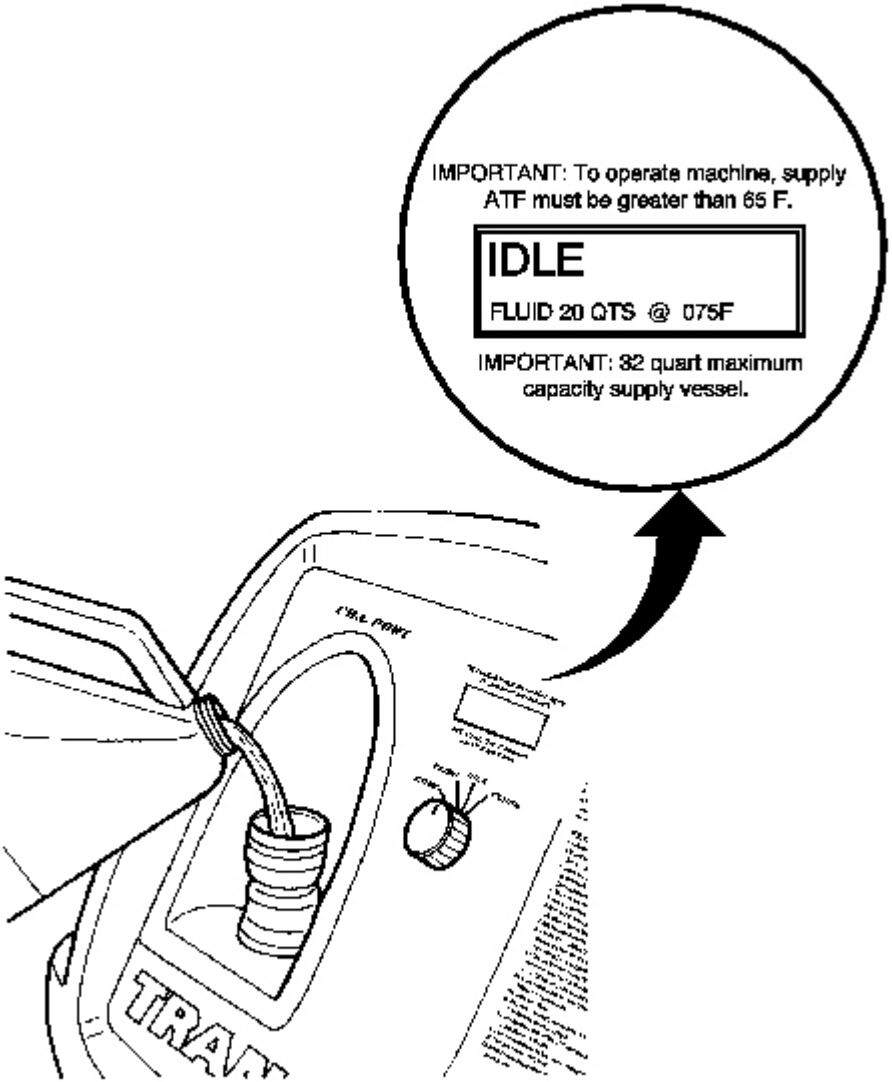

Fig. 8: Filling The Supply Tank With DexronIII/Mercon
Courtesy of GENERAL MOTORS CORP.

NOTE: **Do not overfill the supply vessel. Damage to the unit may result. To verify the fluid level, view the LCD screen display while filling the unit, to ensure the fluid level does not exceed 30 L (32 qt).**

5. Fill the supply tank with Dexron(R)III/Mercon(R), or equivalent, through the fill port.

cardiagn.com

6. Install and tighten the fill cap.

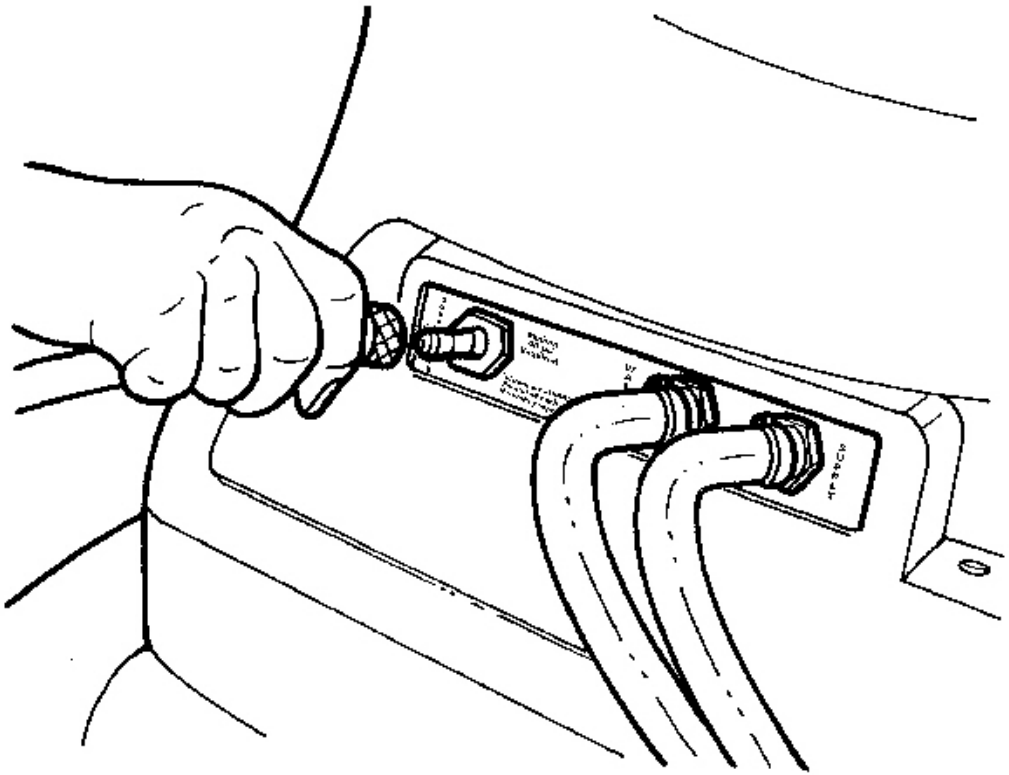

Fig. 9: Connecting A Shop Air Supply Hose To The Quick-Disconnect
Courtesy of GENERAL MOTORS CORP.

7. Connect a shop air supply hose to the quick-disconnect on the rear panel marked SUPPLY AIR.

Determine Minimum Flow Rate

cardiagn.com

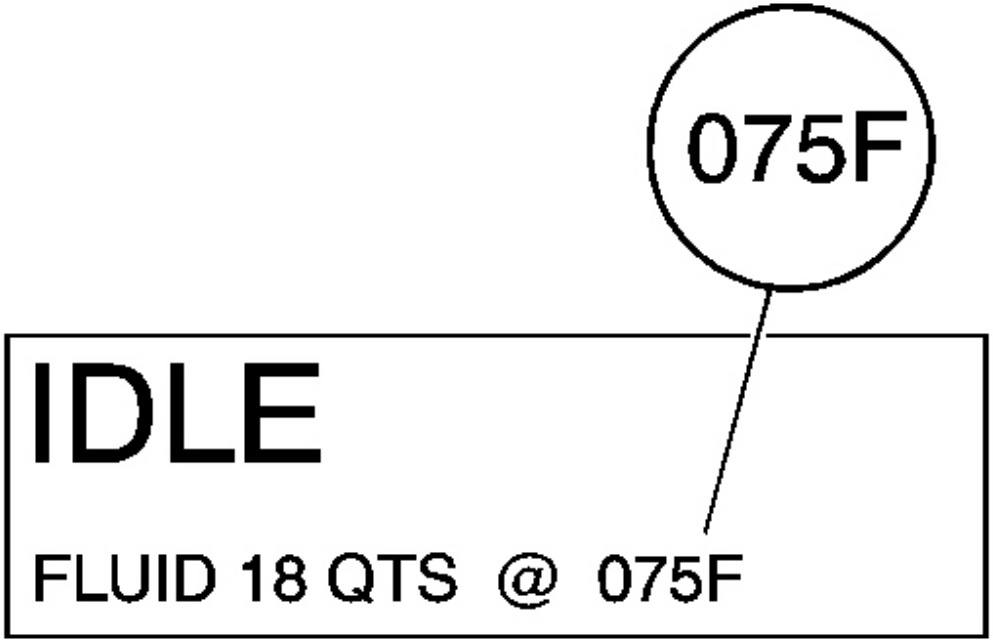

Fig. 10: Identifying The Temperature Of The Automatic Transmission Fluid
Courtesy of GENERAL MOTORS CORP.

1. From the machine display, identify the temperature of the automatic transmission fluid that is stored in the supply vessel of **J 45096** .

cardiagn.com

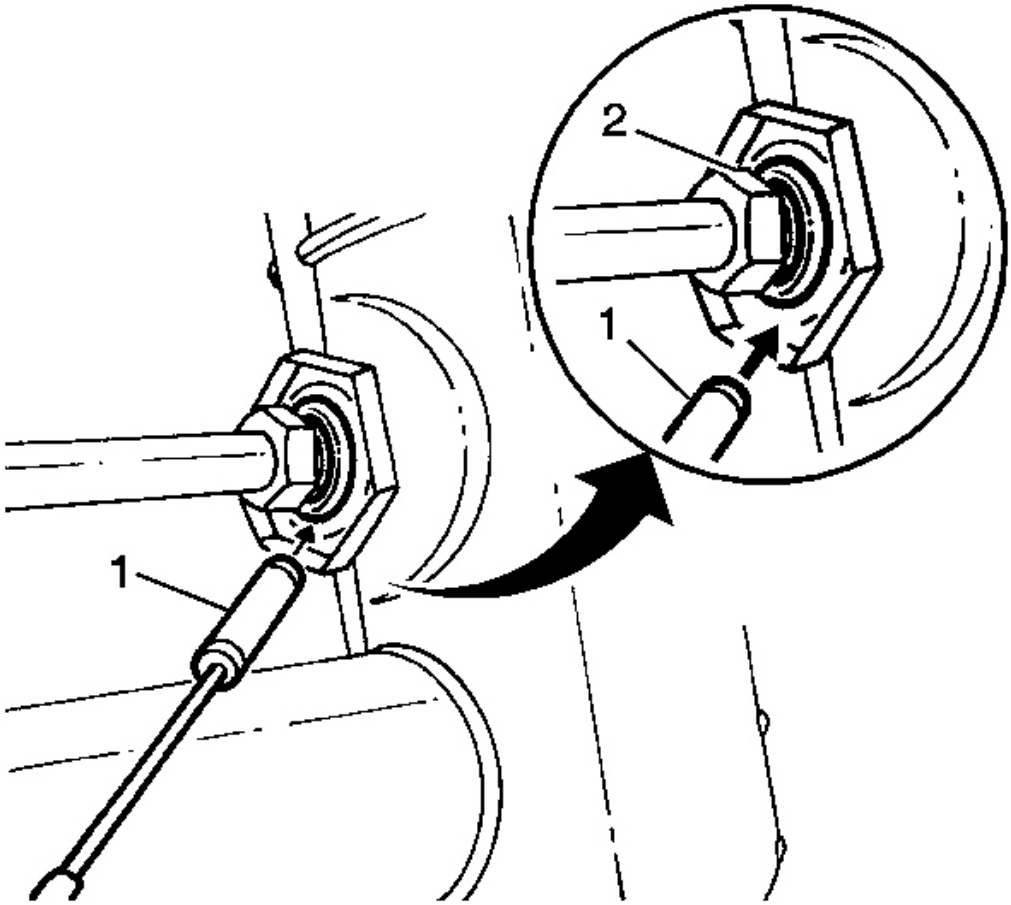

Fig. 11: Determining Whether The Transmission Oil Cooler Is Steel Or Aluminum
Courtesy of GENERAL MOTORS CORP.

2. Determine whether the transmission oil cooler is steel or aluminum by using a magnet (1) at the cooler flange (2) at the radiator.
3. Refer to the table below. Using the temperature from step 1, locate on either the Steel MINIMUM Flow Rate table or the Aluminum MINIMUM Flow Rate table the minimum flow rate in gallons per minutes (GPM). Record the minimum flow rate in GPMs and the supply fluid temperature for further reference.

   Example:

   - Fluid temperature: 24°C (75°F)
   - Cooler type: Steel

     The MINIMUM flow rate for this example would be 0.8 GPM.

cardiagn.com

4. Inspect transmission oil cooler lines for damage or kinks that could cause restricted oil flow. Repair as needed and refer to the appropriate GM service manual procedures.

Minimum Flow Rate in Gallons Per Minute (GPM)

Temperature Range	Steel	Aluminum
65-66°F	0.6 gpm	0.5 gpm
67-70°F	0.7 gpm	0.6 gpm
71-75°F	0.8 gpm	0.7 gpm
76-80°F	0.9 gpm	0.8 gpm
81-84°F	1.0 gpm	0.9 gpm
85-89°F	1.1 gpm	1.0 gpm
90-94°F	1.2 gpm	1.1 gpm
95-98°F	1.3 gpm	1.2 gpm
99-103°F	1.4 gpm	1.3 gpm
104-108°F	1.5 gpm	1.4 gpm
109-112°F	1.6 gpm	1.5 gpm
113-117°F	1.7 gpm	1.6 gpm
118-120°F	1.8 gpm	1.7 gpm

Back Flush Procedure

cardiagn.com

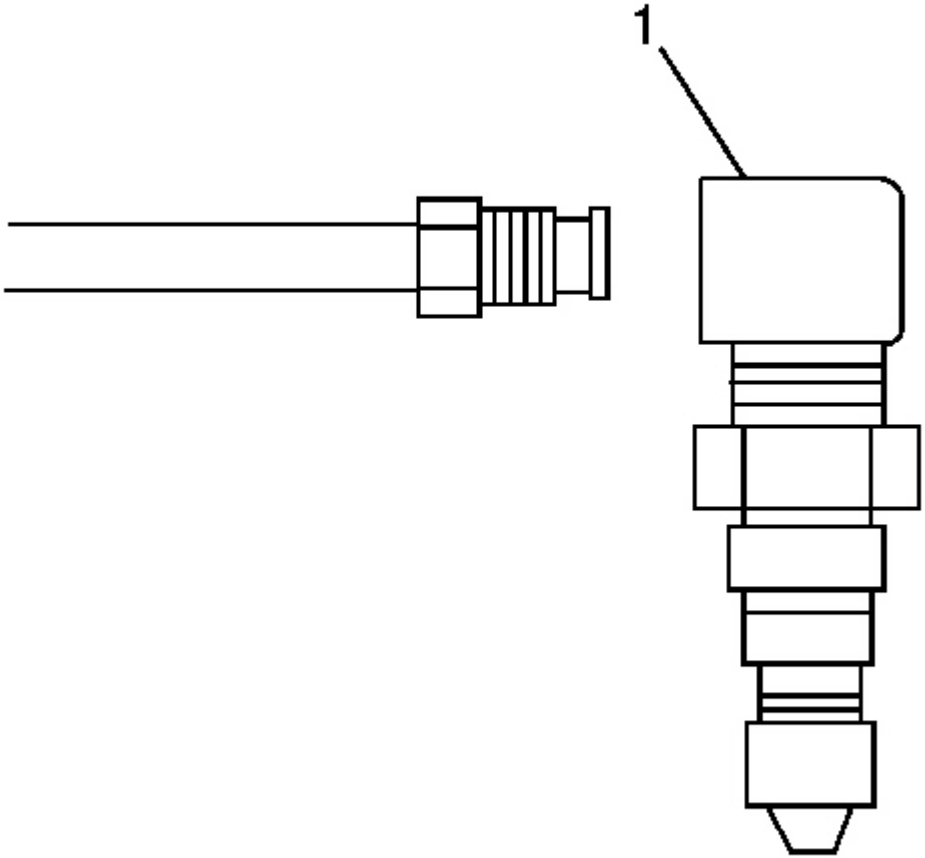

Fig. 12: Connecting The J 45096 Adapters To The Vehicle's Transmission Oil Cooler Supply And Return Lines
Courtesy of GENERAL MOTORS CORP.

1. Connect the **J 45096** adapters (1) to the vehicle's transmission oil cooler supply and return lines at the transmission, may require **J 35944-200** .

cardiagn.com

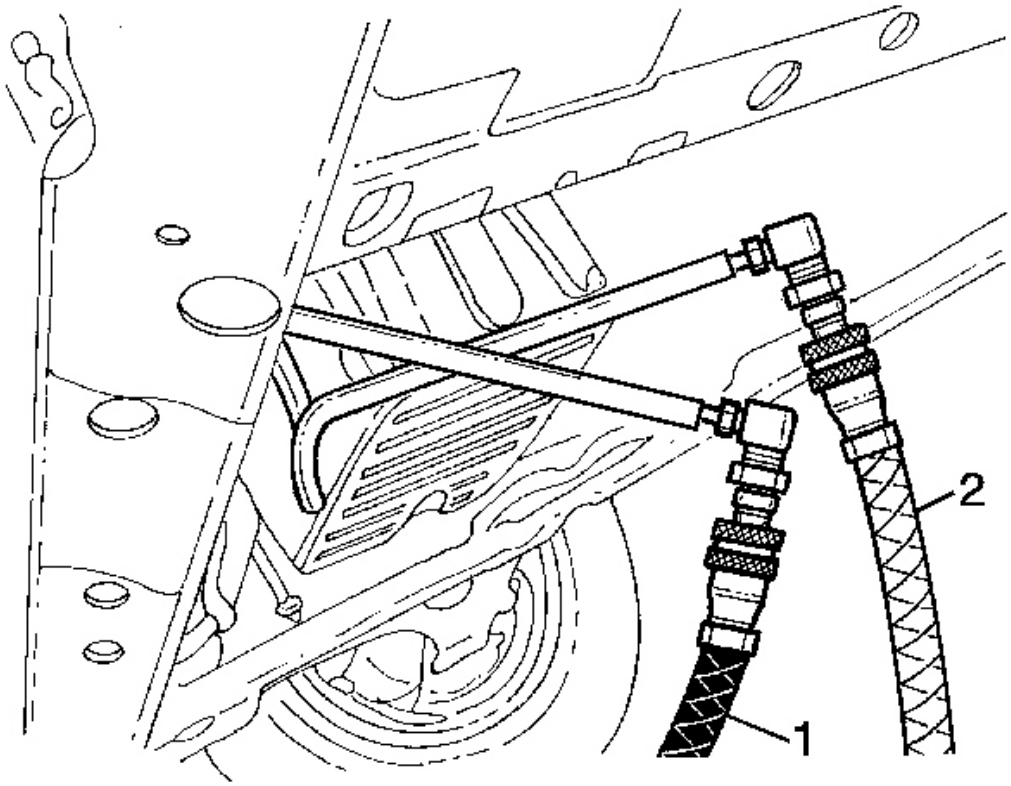

Fig. 13: Connecting Black Supply Hose And Clear Waste Hose
Courtesy of GENERAL MOTORS CORP.

2. Connect the black supply hose (1) to the return line, top connector of the transmission, and the clear waste hose (2) to the feed line, bottom connector of the transmission, to the vehicle cooler lines. This is the reverse flow-backflush direction.

cardiagn.com

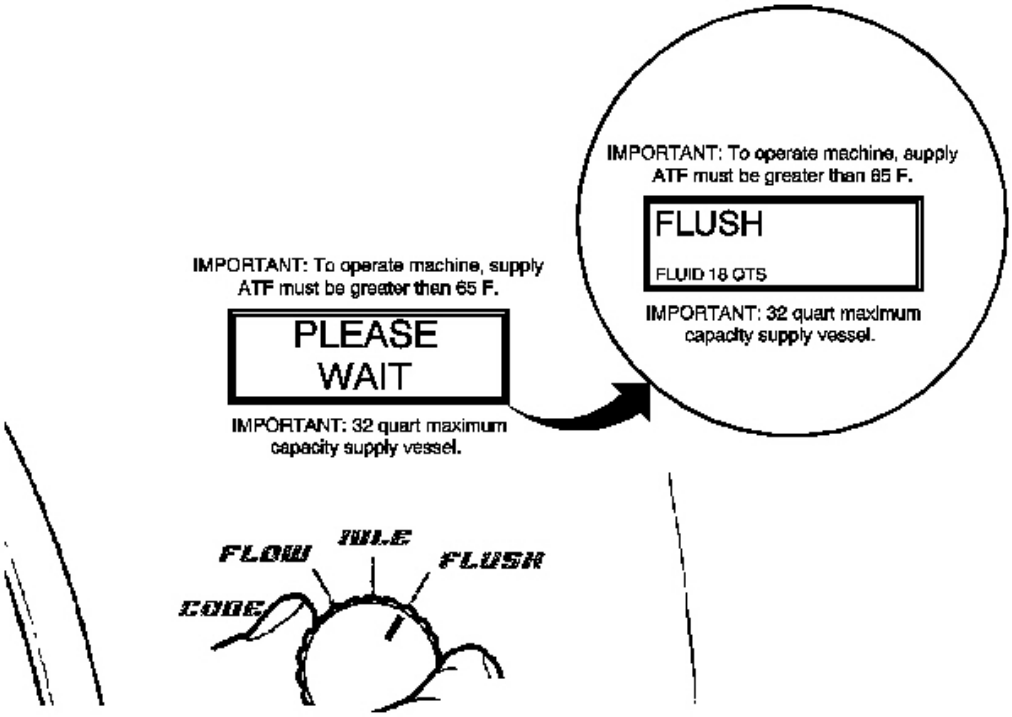

Fig. 14: Turning The Main Function Switch To The FLUSH Position
Courtesy of GENERAL MOTORS CORP.

3. Turn the main function switch to the FLUSH position. Allow the machine to operate for 30 seconds.

cardiagn.com

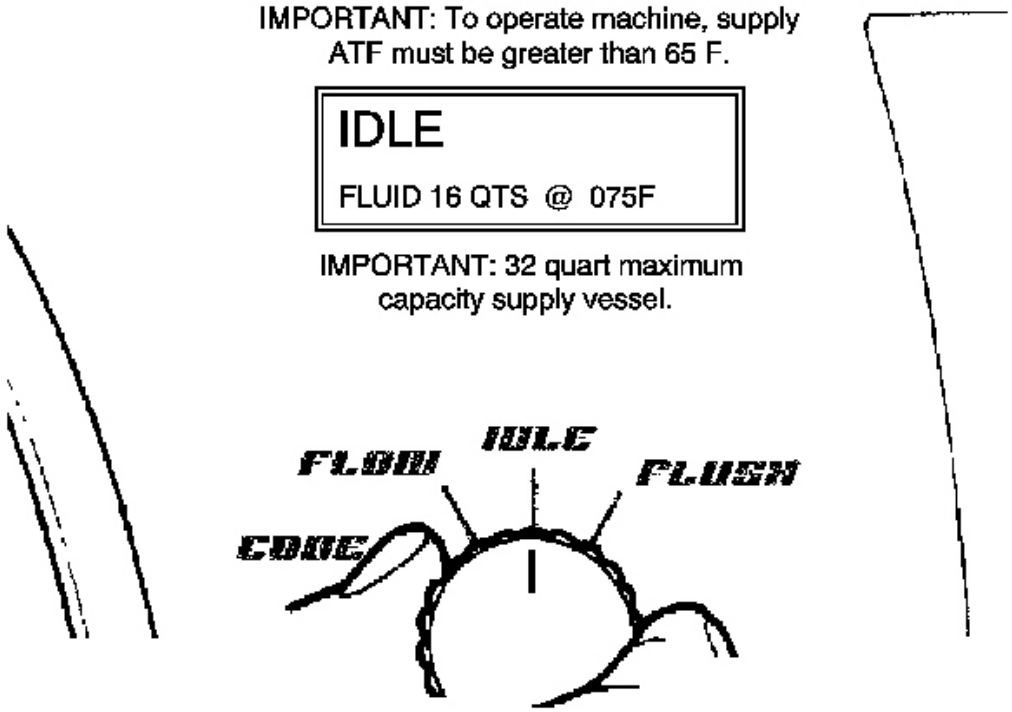

Fig. 15: Turning The Main Function Switch To The IDLE Position
Courtesy of GENERAL MOTORS CORP.

4. Turn the main function switch to the IDLE position and allow the supply vessel pressure to dissipate.

Forward Flush

cardiagn.com

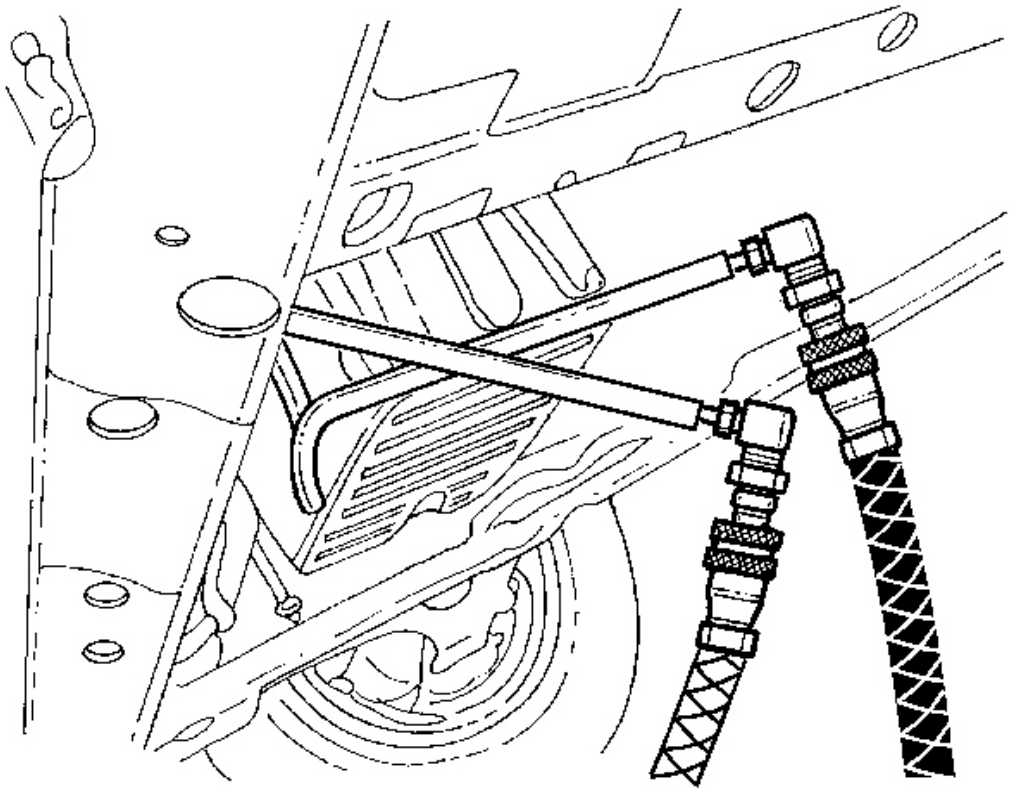

Fig. 16: Disconnecting The Supply And Waste Hoses From The Vehicle Cooler Lines
Courtesy of GENERAL MOTORS CORP.

1. Disconnect the supply and waste hoses from the vehicle cooler lines. Reverse the supply and waste hoses to provide a normal flow direction.

cardiagn.com

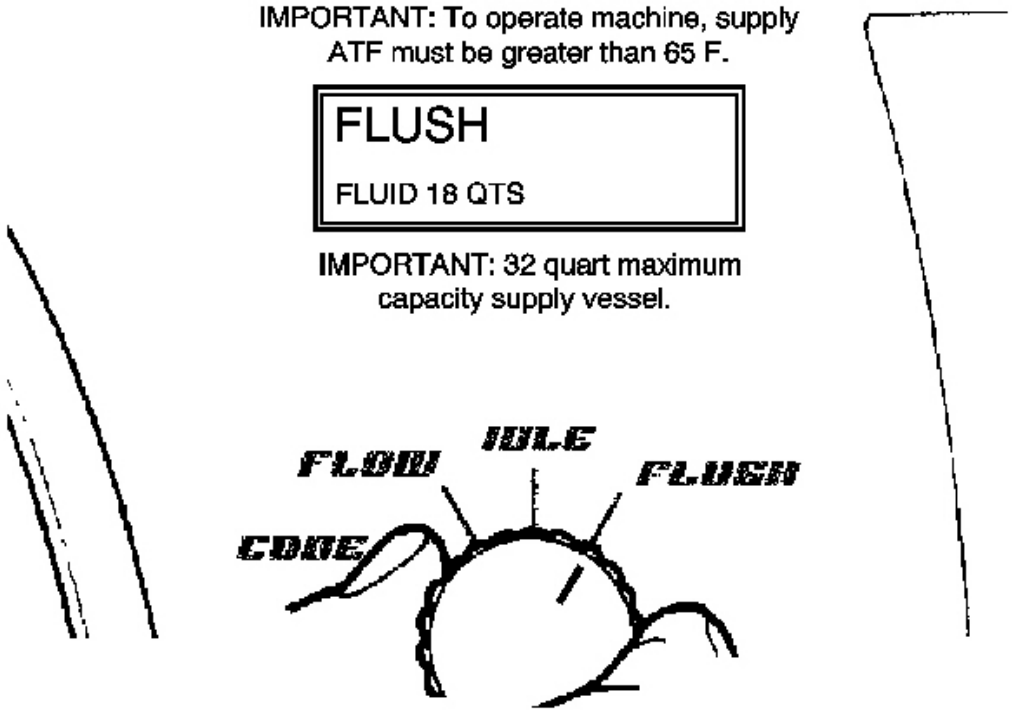

Fig. 17: Turning The Main Function Switch To The FLUSH Position
Courtesy of GENERAL MOTORS CORP.

2. Turn the main function switch to the FLUSH position and allow the machine to operate for 30 seconds.

Flow Test

cardiagn.com

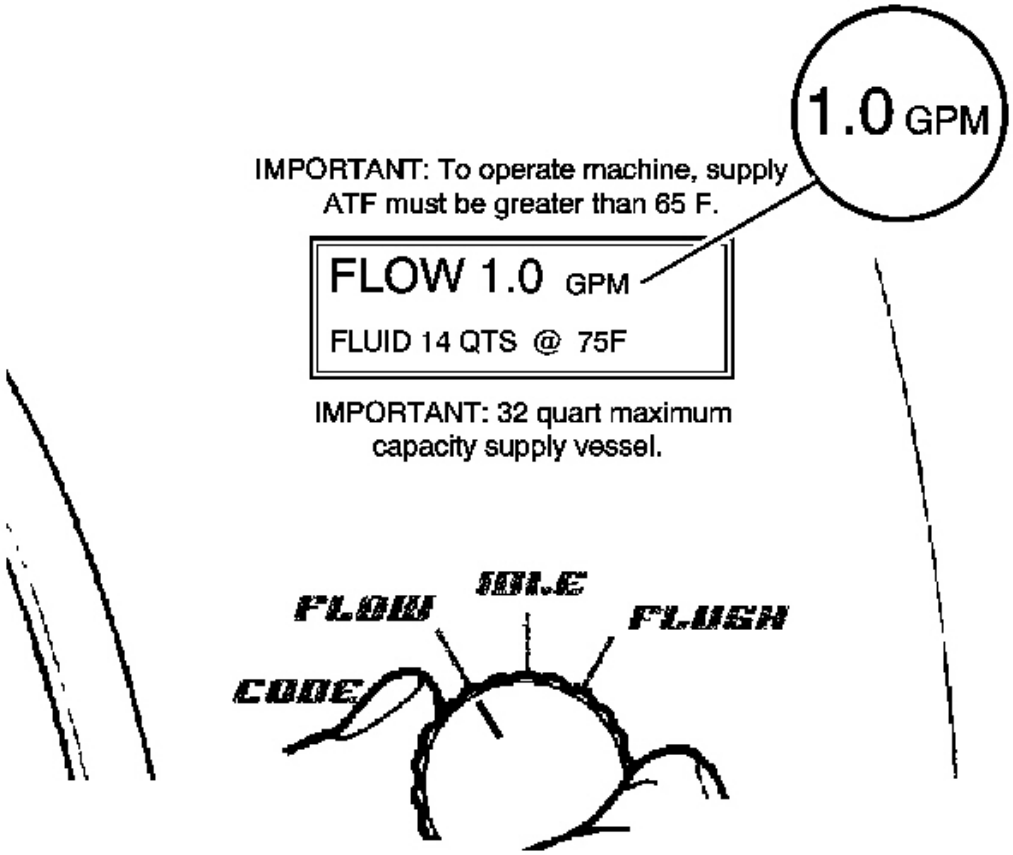

Fig. 18: Turning The Main Function Switch To The FLOW Position
Courtesy of GENERAL MOTORS CORP.

IMPORTANT: If the flow rate is less than 0.5 gpm, the LCD displays an error message. Refer to the Troubleshooting section of the operation manual.

1. Turn the main function switch to the FLOW position and allow the oil to flow for 15 seconds. Observe and note the flow rate. This is the TESTED flow rate.
2. Compare the TESTED flow rate to the MINIMUM flow rate information previously recorded.
   - If the TESTED flow rate is equal to or greater than the MINIMUM flow rate recorded, the oil cooling system is functioning properly. Perform Code Recording Procedure.
   - If the TESTED flow rate is less than the MINIMUM flow rate previously recorded, repeat the back flush and forward flush procedures.
3. If the TESTED flow rate is less than the MINIMUM flow rate after the second test, perform the Code Recording Procedure.

cardiagn.com

1. Replace the transmission oil cooler.
2. Connect the supply and waste hoses to the cooler lines in the normal flow direction. Perform the Flow Test.
3. Perform the Code Recording Procedure.

Code Recording Procedure

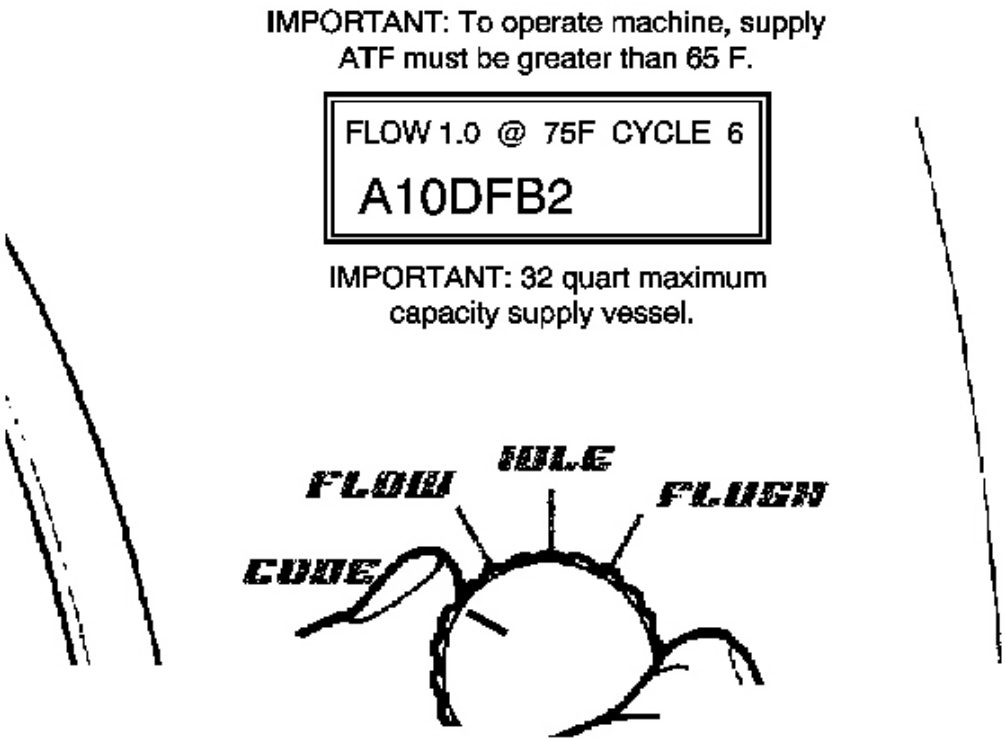

Fig. 19: Turning The Main Function Switch To The CODE Position
Courtesy of GENERAL MOTORS CORP.

1. Turn the main function switch to the CODE position.

IMPORTANT:

- **If power is interrupted prior to the recording of the 7-character code, the code will be lost and the flow rate test will need to be repeated.**
- **The flow test must run for a minimum of 8-10 seconds and be above 0.5 gpm for a code to be generated.**

cardiagn.com

2. Record TESTED flow rate, temperature, cycle and seven-character flow code information on the repair order.

Clean-Up

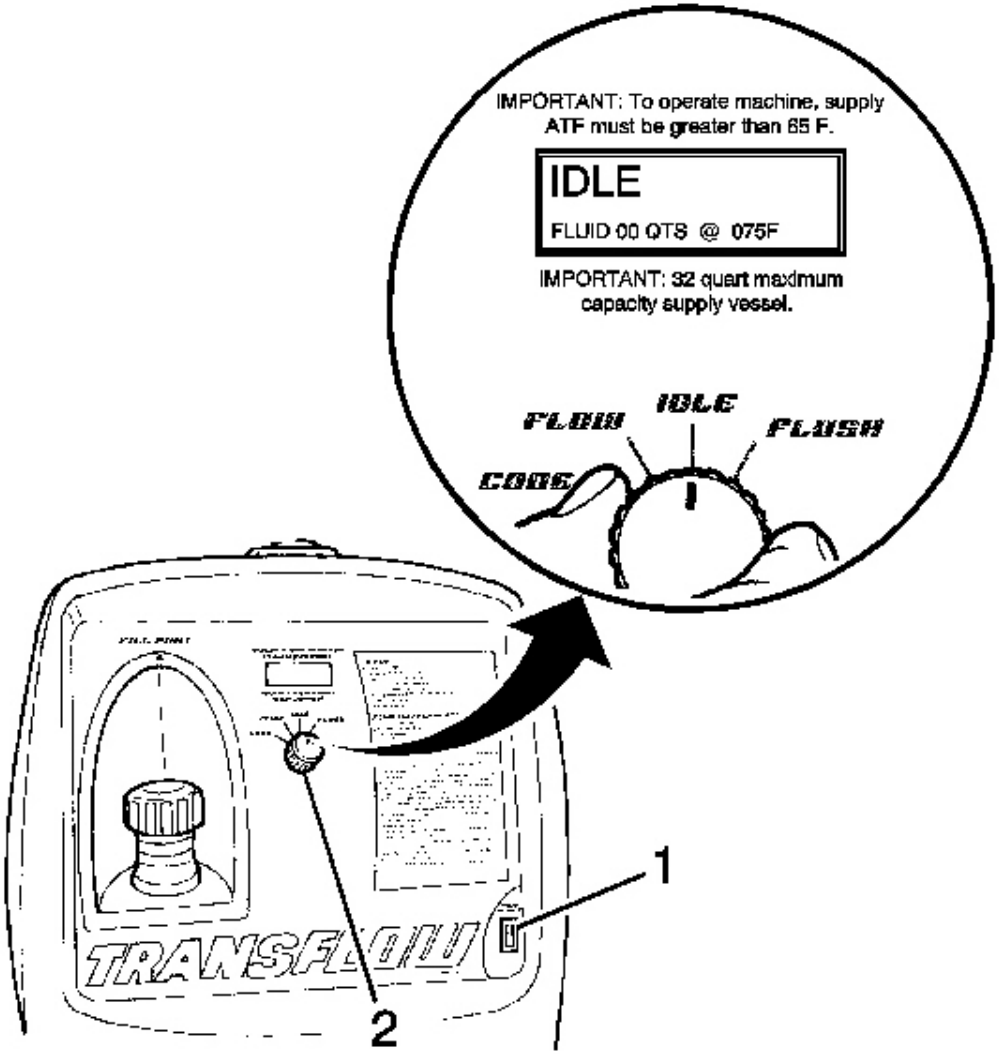

Fig. 20: Turning The Main Function Switch To The IDLE Position
Courtesy of GENERAL MOTORS CORP.

1. Turn the main function switch to the IDLE position and allow the supply vessel pressure to dissipate.

cardiagn.com

2. Turn the main power switch to the OFF position.

IMPORTANT: A small amount of water may drain from the bottom of the unit when the air supply is disconnected. This is a normal operation of the built-in water separator.

3. Disconnect the supply and waste hoses and the 12-volt power source from the vehicle.

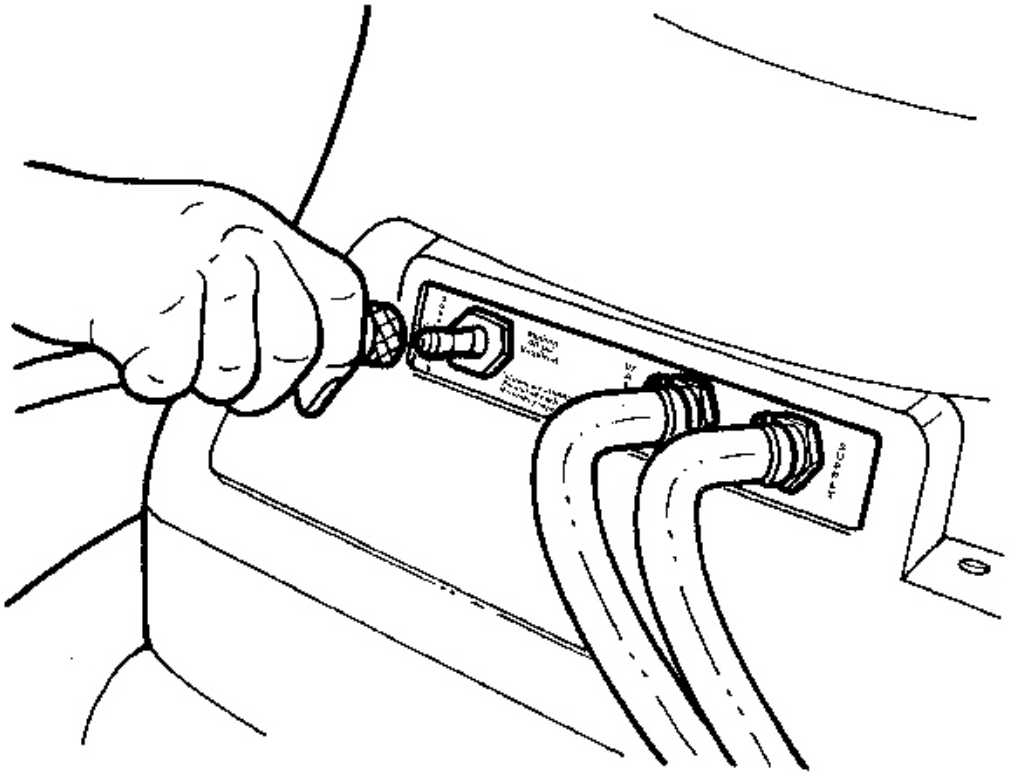

Fig. 21: Connecting A Shop Air Supply Hose To The Quick-Disconnect
Courtesy of GENERAL MOTORS CORP.

4. Disconnect the air supply hose from **J 45096** .
5. Dispose of the waste ATF in accordance with all applicable federal, state, and local requirements.

AUTOMATIC TRANSMISSION OIL COOLER FLUSHING AND FLOW TEST (J 35944-A)

GM studies indicate that plugged or restricted transmission oil coolers and pipes cause insufficient transmission

cardiagn.com

lubrication and elevated operating temperatures which can lead to premature transmission wear-out. Many repeat repair cases could have been prevented by following published procedures for transmission oil cooler flushing and flow checking. This procedure includes flow checking and flushing the auxiliary transmission oil cooler, if equipped.

IMPORTANT: Use the J 35944-A or equivalent to flush the transmission oil cooler and the oil cooler pipes whenever the transaxle is removed for the following repairs:

- **Torque converter**
- **Oil pump**
- **Oil pump drive shaft**
- **Drive sprocket support**
- **Transaxle overhaul complete**
- **Transaxle assembly replacement**

IMPORTANT: Use the J 35944-A or equivalent to flush the transmission oil cooler and the oil cooler pipes whenever the transmission is removed for the following repairs:

- **Torque converter**
- **Oil pump**
- **Turbine shaft**
- **Transmission overhaul complete**
- **Transmission assembly replacement**

Only GM Goodwrench DEXRON(R)III automatic transmission fluid should be used when doing a repair on a GM transmission.

Time allowance for performing the cooler flow checking and flushing procedure has been included in the appropriate labor time guide operations since the 1987 model year. The service procedure steps for oil cooler flushing are as follows:

Cooler Flow Check and Flushing Steps

1. Tools Required
2. Preparation
3. Back Flush
4. Forward Flush
5. Flow Check
6. Clean-up

Tools Required

cardiagn.com

- **J 35944-A** Transmission Oil Cooler Flusher
- **J 35944-22** Transmission Oil Cooler Flushing Fluid
- **J 35944-600** Transmission Cooler Flush Adapter
- Measuring cup
- Funnel
- Water supply - hot water recommended
- Water hose, at least 16 mm (5/8 in) ID
- Shop air supply with water/oil filters, regulator and pressure gage
- Air chuck with clip, if available
- Oil drain container
- Pail with lid 19 L (5 gallon)
- Eye protection
- Rubber gloves

Preparation

1. During the installation of the repaired or replacement transmission, do not connect the oil cooler pipes.

cardiagn.com

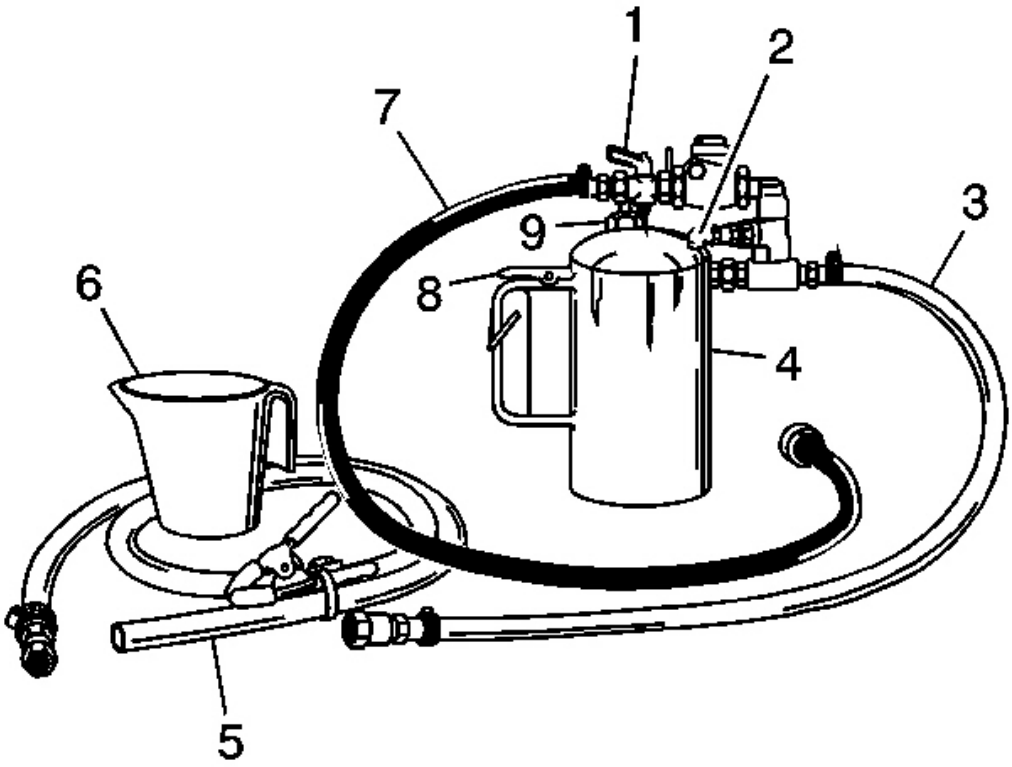

Fig. 22: J 35944 Flusher Tank
Courtesy of GENERAL MOTORS CORP.

NOTE: **Do not use solutions that contain alcohol or glycol. Use of solutions that contain alcohol or glycol may damage the oil cooler line flusher, oil cooler components and/or transmission components.**

IMPORTANT: **The J 35944-22 is environmentally safe, yet powerful enough to cut through transmission fluid to dislodge any contaminants from the cooler. The safety precautions on the label, regarding potential skin and eye irritations associated with prolonged exposure, are typical precautions that apply to many similar cleaning solutions. It should be noted that according to GM, use of other non-approved fluids for cooler flushing can have an adverse reaction to the seals inside the transmission.**

2. Remove the fill cap (9) on the **J 35944-A** and fill the flusher tank (4) with 0.6 L (20-21 oz) of **J 35944-22** , using the measuring cup (6). Do not overfill.
3. Install the fill cap (9) on the **J 35944-A** and pressurize the flusher tank (4) to 550-700 kPa (80-100 psi),

cardiagn.com

using the shop air supply at the tank air valve (2).

4. With the water supply valve (1) on the **J 35944-A** in the OFF position, connect the water supply hose from the **J 35944-A** to the water supply at the faucet.
5. Turn ON the water supply at the faucet.

Back Flush

1. Inspect the transmission oil cooler pipes for kinks or damage. Repair as necessary.

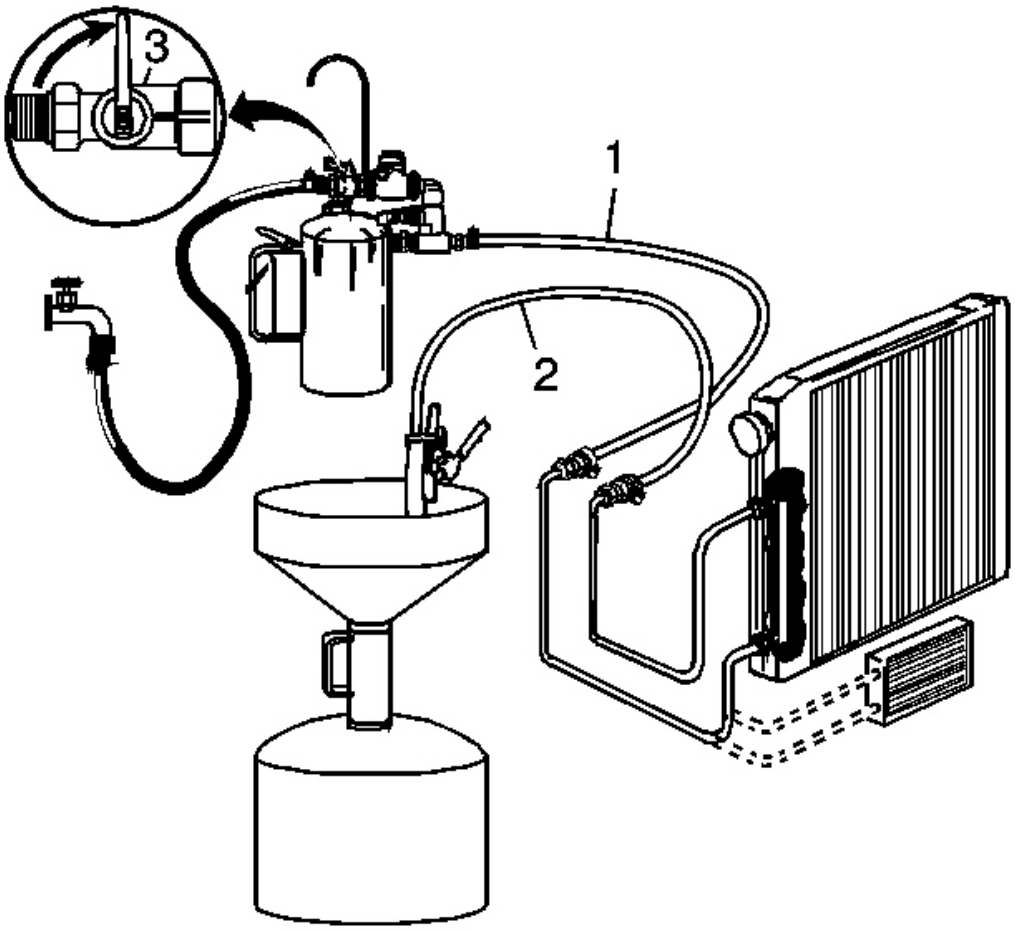

Fig. 23: Flushing The Oil Cooler & Lines
Courtesy of GENERAL MOTORS CORP.

2. Connect the **J 35944-A** to the oil cooler feed bottom connector. Use the **J 35944-600** , if required.
3. Clip the discharge hose (2) onto the oil drain container.

cardiagn.com

4. Attach the **J 35944-A** to the undercarriage of the vehicle with the hook provided and connect the flushing system feed supply hose (1) from the **J 35944-A** to the top connector oil cooler return pipe. Use the **J 35944-600** , if required.
5. Turn the **J 35944-A** water supply valve (3) to the ON position and allow water to flow through the oil cooler and pipes for 10 seconds to remove any remaining transmission fluid. If water does not flow through the oil cooler and pipes, the cause of the blockage must be diagnosed and the plugged component must be repaired or replaced. Continue with the cooler flushing and flow check procedure once the blockage is corrected.
6. Turn the **J 35944-A** water supply valve (3) to the OFF position and clip the discharge hose onto a 19 liter (5 gallon) pail with a lid, to avoid splashback.

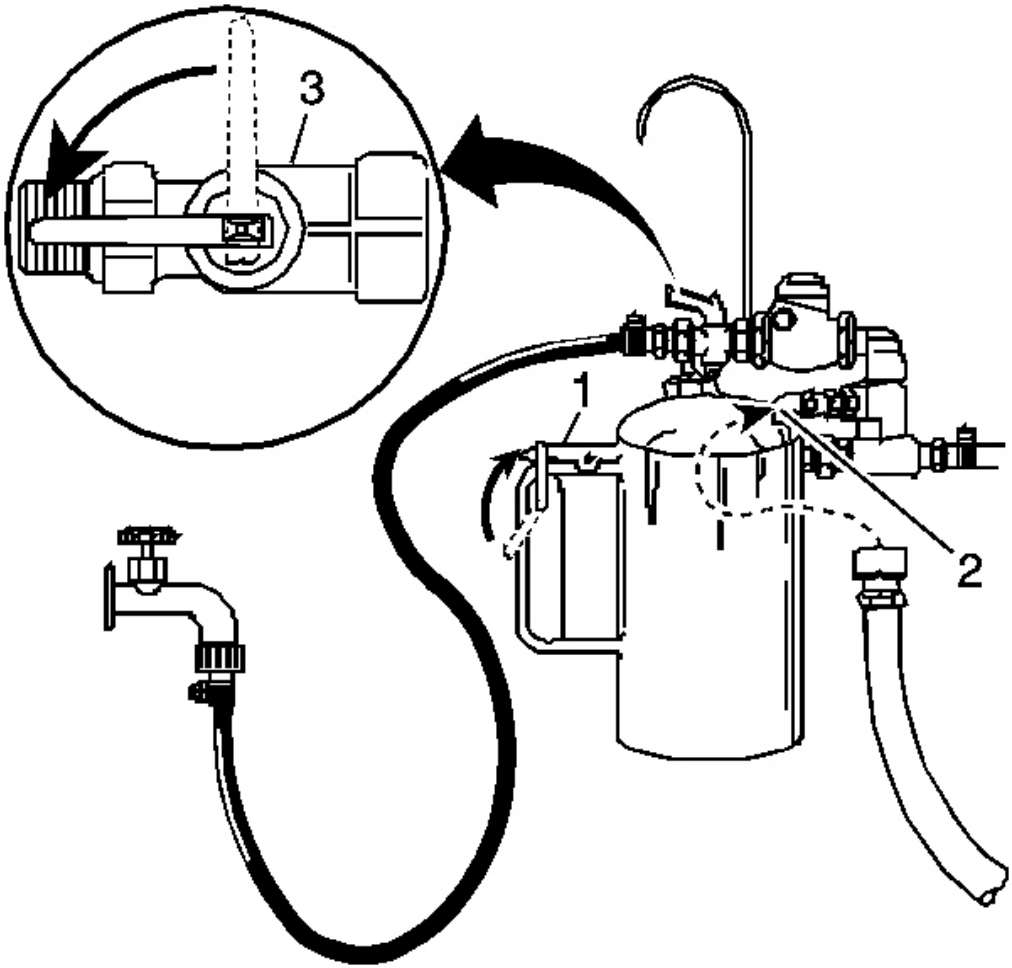

Fig. 24: Turning The J 35944-A Water Supply Valve To The ON Position

cardiagn.com

Courtesy of GENERAL MOTORS CORP.

IMPORTANT: Flushing for approximately 2 minutes in each cooler line direction will result in a total of about 8-10 gallons of waste fluid. This mixture of water and flushing fluid is to be captured in a bucket or similar container.

7. Turn the **J 35944-A** water supply valve (3) to the ON position and depress the trigger (1) to mix cooler flushing solution into the water flow. Use the clip provided on the handle to hold the trigger (1) down. The discharge will foam vigorously when the solution is introduced into the water stream.
8. Flush the oil cooler and pipes with water and solution for 2 minutes. During this flush, attach the shop air supply 825 kPa (120 psi) to the flushing system feed air valve (2) located on the **J 35944-A** , for 3-5 seconds at the end of every 15-20 second interval to create a surging action.
9. Release the trigger (1) and turn the **J 35944-A** water supply valve (3) to the OFF position.

Forward Flush

cardiagn.com

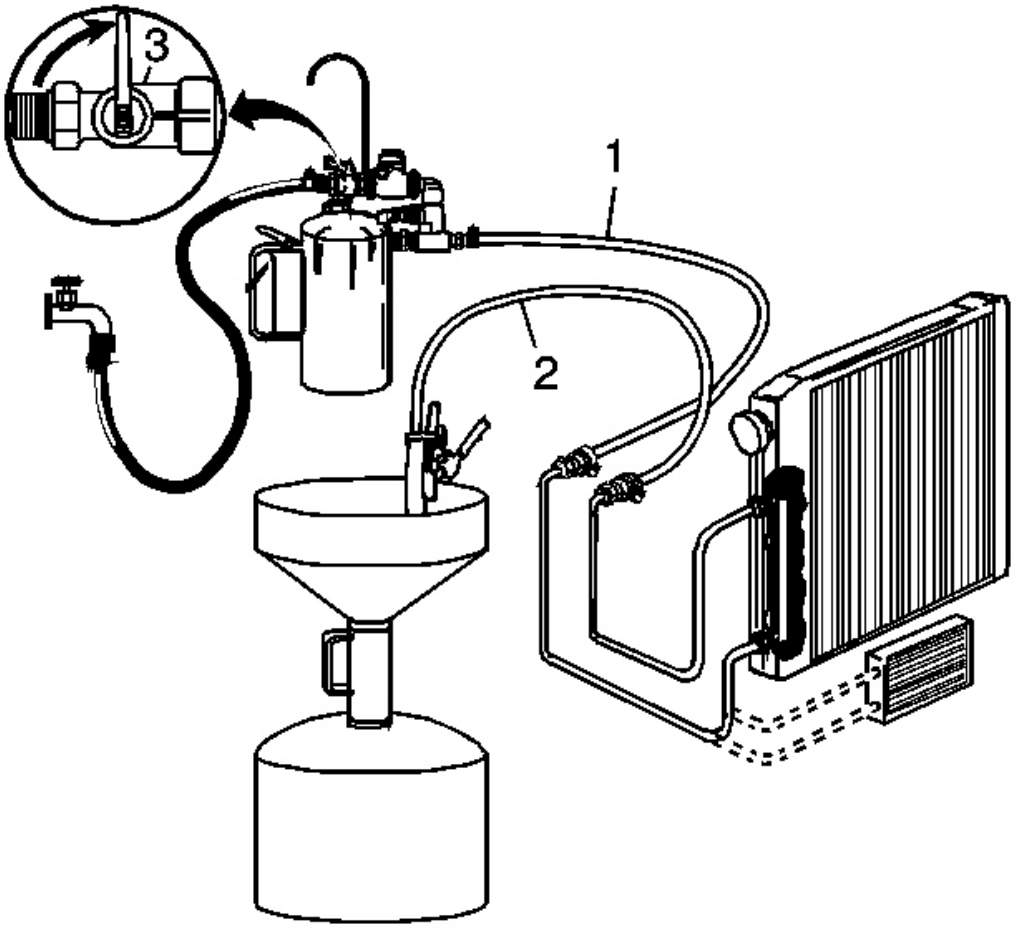

Fig. 25: Flushing The Oil Cooler & Lines
Courtesy of GENERAL MOTORS CORP.

1. Disconnect both hoses (1 and 2) from the oil cooler pipes and connect them to the opposite oil cooler pipe. This will allow the oil cooler and pipes to be flushed in the normal flow direction.
2. Repeat Step 6 and 7 of the Back Flush.

cardiagn.com

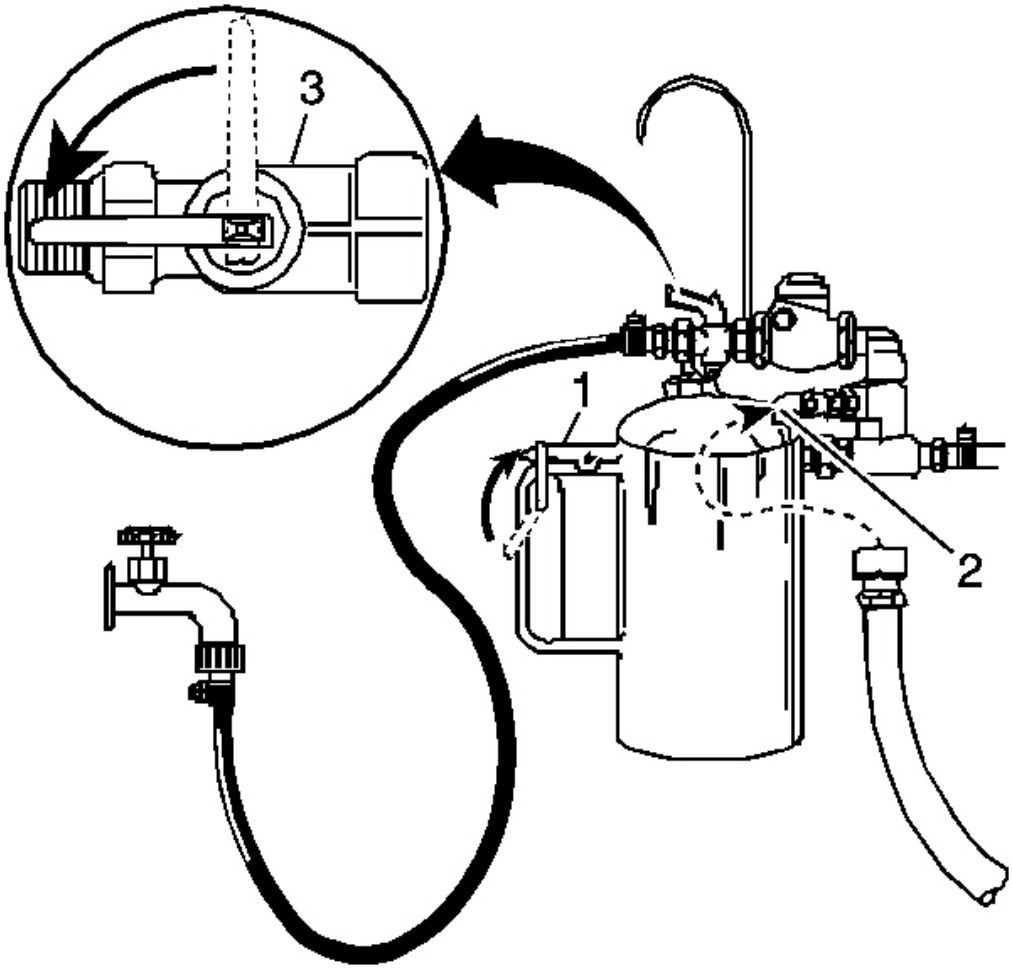

Fig. 26: Turning The J 35944-A Water Supply Valve To The ON Position
Courtesy of GENERAL MOTORS CORP.

3. Release the trigger (1) of the **J 35944-A** and allow water only to rinse the oil cooler and pipes for 1 minute.
4. Turn the **J 35944-A** water supply valve (3) to the OFF position and turn OFF the water supply at the faucet.
5. Attach the shop air supply to the flushing system feed air valve (2) on the **J 35944-A** and blow out the water from the oil cooler and pipes. Continue, until no water comes out of the discharge hose.

Flow Test

cardiagn.com

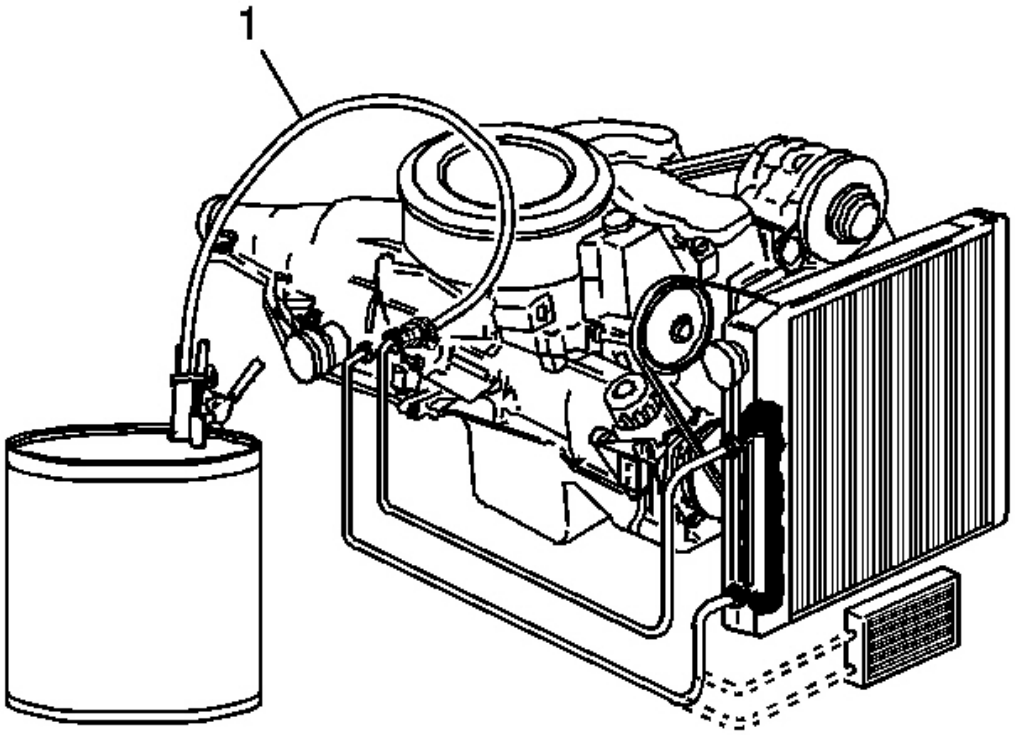

Fig. 27: Clipping The Discharge Hose To An Empty Oil Container
Courtesy of GENERAL MOTORS CORP.

IMPORTANT: The Flow Test must be performed after the flush to ensure that all flushing solution and water is removed from the oil cooling system.

1. Disconnect the hose from the oil cooler pipe. Connect the oil cooler feed pipe, bottom connector, to the transmission for normal flow.
2. Clip the discharge hose (1) to an empty oil container.
3. Confirm the transmission is filled with automatic transmission fluid. Refer to **Fluid Capacity Specifications** for the correct automatic transmission fluid capacity.
4. Start the engine with the transmission in PARK range and run for 30 seconds after fluid begins to flow from the discharge hose (1). A minimum of 1.9 L (2 quarts) must be discharged during this 30 second run time.
5. If the fluid flow meets or exceeds 1.9 L (2 quarts) in 30 seconds, connect the oil cooler feed pipe to the bottom connector on the transmission.
6. If fluid flow is less than 1.9 L (2 qt) in 30 seconds, perform the following diagnosis:
    1. Disconnect the **J 35944-A** discharge hose (1) from the oil cooler return pipe.

cardiagn.com

2. Disconnect the oil cooler feed pipe at the radiator.
3. Connect the **J 35944-A** discharge hose (1) to the oil cooler feed pipe, radiator end.
4. Clip the discharge hose (1) onto the oil drain container.
5. Start the engine with the transmission in PARK range and run for 30 seconds after fluid begins to flow from the discharge hose (1). A minimum of 1.9 L (2 qt) must be discharged during this 30 second run time.

7. If the amount of transmission fluid flow remains less than 1.9 L (2 qt) in 30 seconds, inspect the oil cooler feed pipe, bottom connector, for restrictions or damage. If no condition is found with the feed pipe, bottom connector, inspect the transmission.

Clean-up

1. Disconnect the water supply hose from the **J 35944-A** and bleed any remaining air pressure from the flusher tank.
2. Remove the fill cap from the **J 35944-A** and return any unused flushing solution to its container. Rinse the **J 35944-A** with water. Do not store the **J 35944-A** with flushing solution in it.
3. After every third use, clean the **J 35944-A** as described in the instructions included with the tool.
4. Dispose of any waste water/solution and transmission fluid in accordance with local regulations.

TRANSMISSION OVERHEATS

Transmission Overheats

Checks	Causes
TCC Circuit	Blockage during apply or release
Pump Cover (215)	Cross channel leakage
Pressure Regulator Valve (216)	The valve is stuck in a high demand position
Oil Cooler	The cooler or the cooler lines are blocked
Oil Pan Gasket (73)	The gasket is damaged
Turbine Shaft O-ring (618)	The O-ring is damaged
Turbine Shaft Seals (619)	The seals are damaged
Stator Shaft Bushings (234/241)	The bushing is worn or damaged
Fluid	The fluid level is low
Radiator	Air flow is restricted or internal blockage

OIL PRESSURE HIGH OR LOW

Oil Pressure High or Low

Checks	Causes
Oil Pump Assembly (4)	• Pressure regulator valve stuck • Pressure regulator valve spring • Rotor guide omitted or misassembled

cardiagn.com

	• Rotor cracked or broken • Reverse boost valve or sleeve stuck, damaged or incorrectly assembled • Orifice hole in pressure regulator valve plugged • Sticking slide or excessive rotor clearance • Pressure relief ball not seated or damaged • Porosity in pump cover or body • Wrong pump cover • Pump faces not flat • Excessive rotor clearance
Oil Filter (72)	• Intake pipe restricted by casting flash • Cracks in filter body or intake pipe • O-ring seal missing, cut or damaged • Wrong grease used on rebuild
Control Valve Body (60)	• Manual valve scored or damaged • Spacer plate or gaskets incorrect, misassembled or damaged • Face not flat • 2-3 Shift valve stuck • Checkballs omitted or misassembled
Pressure Control Solenoid (377)	Damage to electrical terminals
Transmission Fluid Pressure Manual Valve Position Switch (69)	• Contamination • Damaged seals
Case (103)	Case to control valve body face not flat
System Voltage	• 12 volts not supplied to transmission • Electrical short (pinched solenoid wire) • Solenoid not grounded

HARSH SHIFTS

Harsh Shifts

Checks	Causes
Throttle Position Sensor	Open or shorted circuit
Vehicle Speed Sensor (36)	Open or shorted circuit
Automatic Transmission Fluid Pressure (TFP) (69)	• Contamination • Damaged seals
Trans Fluid Temperature Sensor (Part of 69)	Open or shorted circuit
Engine Coolant Temperature Sensor	Open or shorted circuit

cardiagn.com

Pressure Control Solenoid (377)	• Damage to electrical terminals • Contamination

INACCURATE SHIFT POINTS

Inaccurate Shift Points

Checks	Causes
Oil Pump Assembly (4)	• Stuck pressure regulator valve • Sticking pump slide
Valve Body Assembly (60)	Spacer plate or gaskets misassembled, damaged or incorrect

Case (103)	• Porous or damaged valve body pad
	• 2-4 Servo Assembly
	  ○ 2-4 accumulator porosity
	  ○ Damaged servo piston seals
	  ○ Apply pin damaged or improper length
	• 2-4 Band Assembly
	  ○ Burned
	  ○ Anchor pin not engaged

Throttle Position Sensor	• Disconnected • Damage
Vehicle Speed Sensor (36)	• Disconnected • Damaged • Bolt not tightened
4WD Low Switch	• Disconnected • Damaged

FIRST GEAR RANGE ONLY - NO UPSHIFT

1st Gear Range Only - No Upshift

Checks	Causes
Control Valve Body (60)	• The 1-2 Shift valve is sticking • The spacer plate or gaskets are mispositioned or damaged
Case (103)	The case to valve body face is damaged or is not flat
Shift Solenoid Valves (366/368)	• Stuck or damaged • Faulty electrical connection
2-4 Servo Assembly (13-28)	• The apply passage case is restricted or blocked • Nicks or burrs on the servo pin or on the pin bore in the case

cardiagn.com

	• Fourth servo piston is installed backwards
2-4 Band Assembly (602)	• The 2-4 band is worn or damaged • The band anchor pin is not engaged

SLIPS IN FIRST GEAR

Slips in 1st Gear

Checks	Causes
Forward Clutch Assembly (646-651)	• Clutch plates worn • Porosity or damage in forward clutch piston • Forward clutch piston inner and outer seals missing, cut or damaged • Damaged forward clutch housing • Forward clutch housing retainer and ball assembly not sealing or damaged
Forward Clutch Accumulator (353-358)	• Piston seal missing, cut or damaged • Piston out of its bore • Porosity in the piston or valve body • Stuck abuse valve
Input Housing and Shaft Assembly (621)	Turbine shaft seals missing, cut or damaged
Valve Body (60)	• 1-2 Accumulator valve stuck • Face not flat, damaged lands or interconnected passages • Spacer plate or gaskets incorrect, mispositioned or damaged
Low Roller Clutch (678)	• Damage to lugs to inner ramps • Rollers not free moving • Inadequate spring tension • Damage to inner splines • Lube passage plugged
Torque Converter (1)	Stator roller clutch not holding
1-2 Accumulator Assembly (55-57, 104)	• Porosity in piston or 1-2 Accumulator cover and pin assembly • Damaged ring grooves on piston • Piston seal missing, cut or damaged • Valve body to spacer plate gasket at 1-2 Accumulator cover, missing or damaged • Leak between piston and pin • Broken 1-2 Accumulator spring
Line Pressure	Refer to **Oil Pressure High or Low** .

cardiagn.com

2-4 Servo Assembly (13-28)	4th Servo piston in backward

SLIPPING OR HARSH 1-2 SHIFT

Slipping or Rough 1-2 Shift

Checks	Causes
Valve Body Assembly (60)	• Mislocated valve body to spacer plate checkball or checkballs. • 1-2 Shift valve train stuck due to sediment • Gaskets or spacer plate incorrect, mispositioned or damaged • 1-2 Accumulator valve stuck or damaged • Face not flat • 4-3 sequence valve stuck or damaged • #1 or #8 checkball missing or mis-located • 1-2 accumulator valve bushing rotated 180°
2-4 Servo Assembly (13-28)	• Apply pin too long or too short • 2nd servo apply piston seal missing, cut or damaged • Restricted or missing oil passages • Servo bore in case damaged
2nd Accumulator (55-57, 104)	• Porosity in 1-2 accumulator cover or piston • Piston seal or groove damaged • Nicks or burrs in 1-2 accumulator housing • Missing or restricted oil passage • 1-2 accumulator piston spring not seated • Rough finish in 1-2 accumulator bore in case • A cracked 1-2 accumulator piston - allowing fluid to leak by
2-4 Band (602)	Worn or mispositioned
Oil Pump Assembly (4) or Case (103)	Faces not flat

NO 2-3 SHIFT OR 2-3 SHIFT SLIPS, ROUGH OR HUNTING

No 2-3 Shift or 2-3 Shift slipping, Rough or Hunting

Checks	Causes
Oil Pump (4)	Stator shaft bushings scored or off location
Valve Body Assembly (60)	• 2-3 Shift valve train stuck • Gaskets or spacer plate incorrect, mispositioned or damaged • 2-3 Accumulator valve stuck

cardiagn.com

	• Face not flat • Chips in servo feed oil, orifice #7 in spacer plate • Mislocated valve body to spacer plate checkball or checkballs
Input Housing Assembly (620-621, 646-655)	• 3-4 clutch or forward clutch plates worn • Excessive clutch plate travel • Cut or damaged 3-4 clutch or forward clutch piston seals • Porosity in input clutch housing or piston • 3-4 clutch piston checkball stuck, damaged or not sealing • Restricted apply passages • Forward clutch piston retainer and ball assembly not seating • Sealing balls loose or missing • Input housing (621) cracked or broken
Case (103)	3rd accumulator retainer and ball assembly not seating
2-4 Servo Assembly (13-28)	2nd apply piston seals missing, cut or damaged

SECOND/THIRD GEAR ONLY OR FIRST/FOURTH GEARS ONLY

Second/Third Gears Only or First/Fourth Gears Only

Checks	Causes
1-2 Shift Solenoid Valve (367A)	• Sediment is in the valves • The electrical connection is faulty • Damaged seal

NO FIRST OR SECOND GEAR/NO THIRD OR FOURTH GEAR

No 1st or 2nd/No 3rd or 4th

Checks	Causes
2-3 Shift Solenoid Valve (367B)	• Sediment is in the valves • The electrical connection is faulty • Damaged seal

NO SECOND GEAR, NO FOURTH GEAR, AND NO REVERSE GEAR

No Second Gear, No Fourth Gear and No Reverse Gear

Checks	Causes
Reaction Sun Shell (670)	Broken spline on reaction sun shell/replace shell.

cardiagn.com

THIRD GEAR ONLY

Third Gear Only

Checks	Causes
System Voltage	• 12 volts not supplied to transmission • Electrical short (pinched solenoid wire) • Solenoid not grounded

3-2 FLARE OR TIE-UP

3-2 Flare or Tie-Up

Checks	Causes
3-2 Shift Solenoid Valve Assembly (394)	• Shorted or damaged • Contamination • Damaged Seal • Check ball not seating

NO 3-4 SHIFT, SLIPS OR ROUGH 3-4 SHIFT

No 3-4 Shift/Slipping or Rough 3-4 Shift

Checks	Causes
Oil Pump Assembly (4)	• Pump cover retainer and ball assembly omitted or damaged • Faces not flat

Valve Body Assembly (60)	• Valves stuck
	  ○ 2-3 Shift valve train
	  ○ Accumulator valve
	  ○ 1-2 Shift valve train
	  ○ 3-2 Shift solenoid valve assembly
	• Spacer plate or gaskets incorrect, mispositioned or damaged

2-4 Servo Assembly (13-28)	• Incorrect band apply pin • Missing or damaged servo seals • Porosity in piston, cover or case • Damaged piston seal grooves • Plugged or missing orifice cup plug
Case (103)	• 3rd Accumulator retainer and ball assembly leaking • Porosity in 3-4 accumulator piston or bore • 3-4 Accumulator piston seal or seal grooves damaged • Plugged or missing orifice cup plug

cardiagn.com

	• Restricted oil passage
Input Housing Assembly (621)	Refer to **No 2-3 Shift or 2-3 Shift Slips, Rough or Hunting** .
2-4 Band Assembly (602)	Worn or misassembled

NO REVERSE OR SLIPS IN REVERSE

No Reverse or Slips in Reverse

Checks	Causes
Input Housing Assembly (602)	• 3-4 Apply ring stuck in applied position • Forward clutch not releasing • Turbine shaft seals missing, cut or damaged
Manual Valve Link (89)	Disconnected
Valve Body Assembly (60)	• 2-3 Shift valve stuck • Manual linkage not adjusted • Spacer plate and gaskets incorrect, mispositioned or damaged • Lo overrun valve stuck • Orificed cup plug restricted, missing or damaged
Reverse Input Clutch Assembly (605-614)	• Clutch plate worn • Reverse input housing and drum assembly cracked at weld • Clutch plate retaining ring out of groove • Return spring assembly retaining ring out of groove • Seals cut or damaged • Restricted apply passage • Porosity in piston • Belleville plate installed incorrectly • Excessive clutch plate travel • Oversized housing
Lo and Reverse Clutch (694-696)	• Clutch plates worn • Porosity in piston • Seals damaged • Return spring assembly retaining ring mispositioned • Restricted apply passage
Reaction Sun Shell (670)	Broken spline on reaction sun shell/replace shell

NO PART THROTTLE OR DELAYED DOWNSHIFTS

No Part Throttle or Delayed Downshifts

cardiagn.com

Checks	Causes
Input Housing Assembly (621)	• 3-4 Apply ring stuck in applied position • Forward clutch not releasing • Turbine shaft seals missing, cut or damaged
Manual Valve Link (89)	Disconnected
Valve Body Assembly (60)	• 2-3 Shift valve stuck • Manual linkage not adjusted • Spacer plate and gaskets incorrect, mispositioned or damaged • Lo overrun valve stuck • Orificed cup plug restricted, missing or damaged
Reverse Input Clutch Assembly (606-614)	• Clutch plate worn • Reverse input housing and drum assembly cracked at weld • Clutch plate retaining ring out of groove • Return spring assembly retaining ring out of groove • Seals cut or damaged • Restricted apply passage • Porosity in piston • Belleville plate installed incorrectly • Excessive clutch plate travel • Oversized housing
Lo and Reverse Clutch (694-696)	• Clutch plates worn • Porosity in piston • Seals damaged • Return spring assembly retaining ring mispositioned • Restricted apply passage

HARSH GARAGE SHIFT

Harsh Garage Shift

Checks	Causes
Valve Body Assembly (60)	• Orifice cup plug missing • Checkball missing

NO OVERRUN BRAKING - MANUAL 3-2-1

No Overrun Braking - Manual 3-2-1

cardiagn.com

Checks	Causes
External Linkage	Not adjusted properly
Valve Body Assembly (60)	• 4-3 Sequence valve stuck • Checkball mispositioned • Spacer plate and gaskets incorrect, damaged or mispositioned
Overrun and Forward Clutch Assembly (644-651)	• Turbine shaft oil passages plugged or not drilled • Turbine shaft seal rings damaged • Turbine shaft sealing balls loose or missing • Porosity in forward or overrun clutch piston • Overrun piston seals cut or damaged • Overrun piston checkball not sealing

NO TORQUE CONVERTER CLUTCH (TCC) APPLY (300 RPM SLIP)

No Torque Converter Clutch (TCC) Apply

Checks	Causes
Valve Body Assembly (60)	• Regulator apply valve side loading • Stuck converter clutch valve • TCC apply valve stuck closed (debris in bore) • TCC/PWM solenoid broken/cracked • Turbine shaft O-ring omitted • TCC/PWM solenoid leaking
Input Housing and Turbine Shaft Assembly (621)	• Turbine shaft hole not drilled to full depth • Scratched turbine shaft journals • Turbine shaft O-ring omitted/damaged • Turbine shaft retainer and ball assembly restricted or damaged
Electrical	• 12 volts not supplied to transmission • Outside electrical connector damaged • Inside electrical connector damaged • Wire harness damaged • TCC solenoid damaged • Electrical short (pinched wire) • TCC solenoid not grounded
Torque Converter Clutch (1)	Internal damage (blue or distorted)
Oil Pump Assembly (4)	• TCC spring cocked • Orifice cup plug restricted or damaged

cardiagn.com

	• Pump to case gasket mispositioned • Converter clutch valve retaining ring mispositioned • Converter clutch valve stuck or assembled backward
Transmission Fluid Pressure Manual Valve Position Switch (69)	• Contamination • Damaged seals
Solenoid Screen (367A/367B)	Blocked
TCC Solenoid Valve (Part of 66)	Internal damage
Engine Speed Sensor	Internal damage
Engine Coolant Temperature Sensor	Internal damage
Automatic Transmission Fluid Temperature Sensor (Part of 69)	Internal damage
Brake Switch	Internal damage
PCM	Internal damage
TCC PWM Solenoid (Part of 66)	Internal damage

TORQUE CONVERTER CLUTCH (TCC) SHUDDER

No Torque Converter Clutch Shudder

Checks	Causes
Miscellaneous	• Low oil presure • Engine not tuned properly • Contaminated transmission oil
Oil Filter (72)	• Crack in filter body • Flash restricting filter neck • O-ring seal (71) cut or damaged
Torque Converter Assembly (1)	• Internal damage • Broken weld or missing weight
Oil Pump Assembly (4)	• Converter clutch valve (224) stuck • Restricted oil passage
Input Housing and Shaft Assembly (621)	• Turbin shaft O-ring (618) cut or damaged • Turbin shaft retainer and ball assembly (617) restricted or damaged

NO TORQUE CONVERTER CLUTCH (TCC) RELEASE

No TCC Release

Checks	Causes

cardiagn.com

TCC Solenoid Valve (Part of 66)	• External ground • Clogged exhaust orifice
Converter (1)	Internal damage
Valve Body Assembly (60)	The converter clutch apply valve is stuck in the apply position
Oil Pump Assembly (4)	The converter clutch valve is stuck
PCM	External ground

TORQUE CONVERTER CLUTCH (TCC) SLIP - 100 RPM SLIP

TCC Slip (100 RPM)

Checks	Causes
Valve Body Assembly (60)	• TCC/PWM solenoid leaks • Regulator apply valve or converter clutch shift valve sticking or side loading
Oil Pump Assembly (4)	• Stator shaft bushings worn, due to scratched turbine shaft journal (replace bushings and input housing assembly) • TCC apply valve is stuck open • TCC solenoid leaking
Input Housing and Turbine Shaft Assembly (621)	• Scratched journal on turbine shaft • Turbine shaft O-ring cut • Turbine shaft hole not drilled to full depth

TORQUE CONVERTER CLUTCH (TCC) SLIP WITH STALL/STUMBLE

TCC Slip with Stall/Stumble

Checks	Causes
TCC Apply Valve (Part of 66)	Stuck open

TORQUE CONVERTER CLUTCH (TCC) INTERMITTENT - OK COLD/SLIPS HOT

Intermittent TCC OK Cold/Slips Hot

Checks	Causes
TCC PWM Solenoid (396)	Leaks
Regulator Apply Valve (216)	Sticking valve
Converter Clutch Shift Valve (224)	Sticking valve

NO FOURTH GEAR, OR SLIPS IN FOURTH GEAR

No 4th or Slipping 4th

Checks	Causes
Checkball #2, 4,	Valve body checkball in wrong location or an additional checkball is installed. Refer to

cardiagn.com

8 or 12	Control Valve Body Installation in Transmission Unit Repair article-4L60-E.
Orificed Cup Plug (240)	Not fully pressed into pump cover. Refer to Oil Pump Stator Shaft Bushing Replacement in Transmission Unit Repair article-4L60-E.

SLIP/FLARE IN ANY GEAR

Slip/Flare in any Gear

Checks	Causes
Pump Slide Inner/Outer Spring (206/207)	Omitted

NO THIRD GEAR

No 3rd

Checks	Causes
Orificed Cup Plug (698)	Missing or blown out

DRIVES IN NEUTRAL

Drives in Neutral

Checks	Causes
Forward Clutch (446-451)	The clutch does not release
Manual Valve Link (89)	Disconnected
Case (103)	• The face is not flat • Internal leakage exists

SECOND GEAR START

Second Gear Start

Checks	Causes
Signal Noise on VSS Circuit	Chassis vibrations, incorrect harness routing, owner installed electronic components.
Diagnostic Trouble Code (DTC)	• Electrical or mechanical 1-2 Shift Solenoid Valve (367) malfunction. • Sediment in the valve body may cause improper TFP operation.
Leaking AFL Circuit	Spacer plate (48), spacer plate gaskets (47 or 52), control valve body (60), mispositioned, damaged or poor sealing/mating surface exist.
Blocked or restricted Valve Body Spacer Plate (48) Spacer Plate to Case Gasket (47) or Spacer Plate to Valve Body Gasket (52)	Trapped sediment or metal particles.
Stuck 1-2 Shift Valve (366)	• Trapped sediment or metal particles.

cardiagn.com

	• Binding shift valve or worn valve body bore.
TFP manual valve position switch (69)	TFP manual valve position switch (69) erratic operation.

NO PARK

No Park

Checks	Causes
Parking Lock Actuator Linkage (85-90)	• Actuator rod assembly bent or damaged • Actuator rod spring binding or improperly crimped • Actuator rod not attached to inside detent lever • Parking lock bracket damaged or not torqued properly • Inside detent lever not torqued properly • Parking pawl binding or damaged

OIL OUT THE VENT

Oil Out the Vent

Checks	Causes
Oil Pump (4)	Chamber in pump body rotor pocket
Miscellaneous	Fluid level-overfilled

VIBRATION IN REVERSE AND WHINING NOISE IN PARK

Vibration in Reverse and Whining Noise in Park

Checks	Causes
Oil Pump (4)	Chamber in pump body rotor pocket
Miscellaneous	Fluid level-overfilled

REATTACHING NOISE

Reattaching Noise

Checks	Causes
Parking Brake Pawl (50-81)	The parking pawl return spring is weak, damaged, or misassembled

POPPING NOISE

Popping Noise

Checks	Action
DEFINITION: A popping noise, similar to popcorn popping	
Oil Pump	• Check fluid level.

cardiagn.com

System	• Inspect for pump cavitation, indicated by bubbles in fluid. • Inspect the transmission fluid filter for a leaky seam. • Inspect the transmission fluid filter seal for improper positioning or for a cut seal.

WHINE NOISE VARYING WITH RPM OR FLUID PRESSURE

Whine Noise Varying with RPM or Fluid Pressure

Checks	Action
DEFINITION: In all ranges, a whine which may be sensitive to RPM load, or which ceases when the TCC engages, or which is sensitive to the oil pressure	
Torque Converter (1)	Verify that the noise is internal to the torque converter by placing your left foot on the brake with the gear or selector in Drive. Momentarily stall the engine. Torque Converter noise increases under load.
Oil Pump System	Verify that the noise is internal to the oil pump during a preliminary oil pressure check. An increase in line pressure will vary an oil pump noise.

BUZZ NOISE OR HIGH FREQUENCY RATTLE SOUND

Buzz Noise or High Frequency Rattle Sound

Checks	Action
DEFINITION: A buzz or high frequency rattle	
• Trace Cooler Pipes • Check for binding or contact at the Radiator, other than at the Cooler Pipe connectors	Verify a pressure buzz by watching for a needle vibration of the pressure gage. A road test may be necessary. Refer to **Road Test Procedure** .

NOISE IN RANDOM RANGES

Noise in Random Ranges

Checks	Action
DEFINITION: Noise only in certain gear ranges	
Refer to **Range Reference** . Determine the power flow and the applicable components that may be causing this noise.	

NO DRIVE IN ALL RANGES

No Drive in All Ranges

Checks	Causes
Low Transmission Fluid Level	Transmission or cooler line leak
Oil Pump (4)	Damaged oil pump rotor (212)
Torque Converter (1)	• Damaged pump drive

cardiagn.com

	• The converter to flex plate bolts are missing

NO DRIVE IN DRIVE RANGE

No Drive in Drive Range

Checks	Causes
Torque Converter (1)	• The stator roller clutch is not holding • The converter is not bolted to the flex plate

SHIFT LEVER INDICATES WRONG GEAR

Shift Lever Indicates Wrong Gear

Checks	Causes
Manual Valve (340)	Not engaged to detent lever
Detent Roller Pin (63)	Missing or damaged
Detent Roller (63)	Broken or disconnected
Detent Spring (63)	Broken or disconnected
Manual Valve Link (89)	Loose or missing
Manual Shaft (84)	Flats not parallel
Indicator Linkage	Misadjusted

NO GEAR SELECTION

No Gear Selection

Checks	Causes
Detent Lever (63)	Nut loose or missing
Manual Valve (84)	Stuck
Spacer Plate/Gaskets (47, 48, 52)	Blocked holes
Control Valve Body to Case (60/103)	Blocked channels

ENGINE STARTS IN GEAR

Engine Starts in Gear

Checks	Causes
Manual Valve (24)	Not engaged to detent lever
Transmission Range Switch	Not working or mispositioned

DELAY IN DRIVE AND REVERSE

Delay in Drive and Reverse

Checks	Causes
Forward Clutch Piston (630)	Cut or damaged piston seals

cardiagn.com

Low and Reverse Clutch Piston (695)	Cut or damaged inner, outer or center clutch seals
Reverse Input Clutch Piston Assembly (607)	Cut or damaged inner or outer clutch seals
Pump Cover (215)	Cut or damaged oil seal rings - stator shaft

LACK OF POWER OR HESITATION

Lack of Power or Hesitation

Checks	Causes
Automatic Transmission Fluid Pressure (TFP) Manual Valve Position Switch (69)	Incorrect TFP signal logic for current gear position. Refer to **Transmission Fluid Pressure (TFP) Manual Valve Position Switch Logic** .

cardiagn.com

DIAGNOSIS

DTC P0218

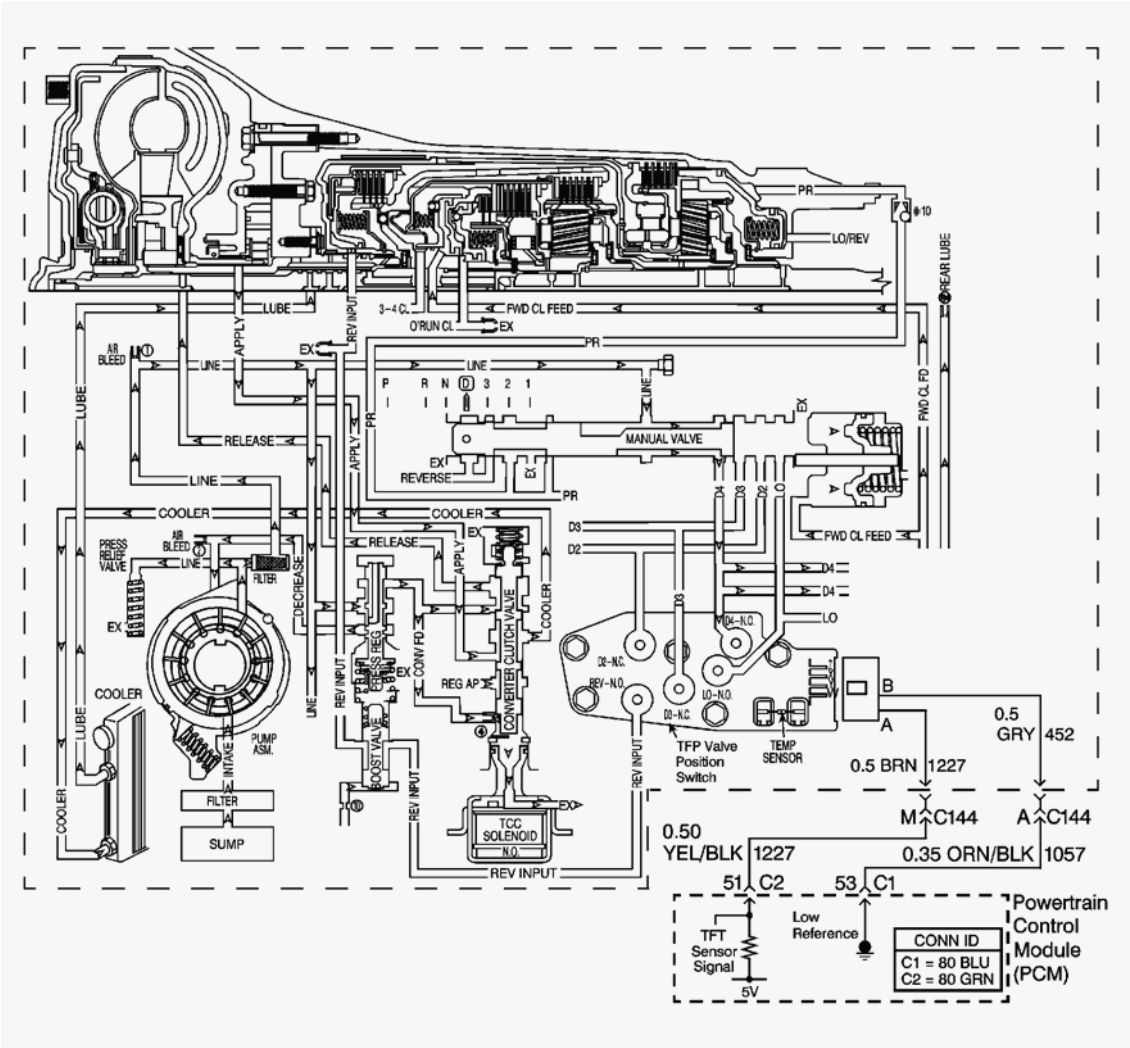

Fig. 1: DTC P0218 Schematics
Courtesy of GENERAL MOTORS CORP.

Circuit Description

The flow of transmission fluid starts in the bottom pan and is drawn through the filter, control valve body assembly, transmission case and into the oil pump assembly. The oil pump assembly pressurizes the fluid and directs it to the pressure regulator valve where it becomes the main supply of fluid to the various components and hydraulic circuits in the transmission. Hot fluid exiting the torque converter flows through the converter

cardiagn.com

clutch apply valve and into the transmission cooler lines to the oil cooler located in the vehicle radiator, and auxiliary cooler if equipped. From the cooler, fluid returns to cool and lubricate the front of the transmission. In forward drive ranges, D4 fluid from the manual valve is routed through an orificed cup plug in the rear of the transmission case to feed the rear lube fluid circuit.

When the powertrain control module (PCM) detects a high transmission fluid temperature (TFT) for a long period of time, then DTC P0218 sets. DTC P0218 is a type C DTC.

Conditions for Running the DTC

- No TFT sensor DTCs P0711, P0712 or P0713.
- The ignition switch is ON for 5 seconds.

Conditions for Setting the DTC

The TFT is greater than 130°C (266°F) for 600 seconds (10 minutes).

Action Taken When the DTC Sets

- The PCM does not illuminate the malfunction indicator lamp (MIL).
- HIGH TRANS TEMP message displays on the driver information center (DIC).
- The PCM freezes transmission adapt functions.
- The PCM records the operating conditions when the Conditions for Setting the DTC are met. The PCM stores this information as Failure Records.
- The PCM stores DTC P0218 in PCM history.

Conditions for Clearing the DIC/DTC

- The PCM clears the DIC message when the condition no longer exits.
- A scan tool can clear the DTC.
- The PCM clears the DTC from PCM history if the vehicle completes 40 warm-up cycles without a non-emission-related diagnostic fault occurring.
- The PCM cancels the DTC default actions when the fault no longer exists and/or the ignition switch is OFF long enough in order to power down the PCM.

Diagnostic Aids

- The scan tool Trans. Fluid Temp. Should rise steadily to a normal operating temperature, then stabilize.
- Ask about the customer's driving habits, trailer towing, etc. Trailer towing should occur in D3.
- Refer to **Symptoms - Automatic Transmission** .

Test Description

The numbers below refer to the step numbers on the diagnostic table.

cardiagn.com

3: This step inspects for air flow restrictions or damage which may result in the transmission overheating.

DTC P0218

Step	Action	Value (s)	Yes	No
1	Did you perform the Diagnostic System Check - Engine Controls?	-	Go to **Step 2**	Go to **Diagnostic System Check - Engine Controls** in Engine Controls
2	1. Install a scan tool. 2. Turn ON the ignition, with the engine OFF. **IMPORTANT:** **Before clearing the DTC, use the scan tool in order to record the Failure Records. Using the Clear Info function erases the Failure Records from the PCM.** 3. Record the DTC Failure Records. 4. Clear the DTC. 5. Inspect for correct transmission fluid level. Refer to **Transmission Fluid Checking Procedure** . Did you perform the fluid checking procedure?	-	Go to **Step 3**	Go to **Transmission Fluid Checking Procedure**
3	1. Inspect the engine cooling system and transmission cooling system for the following conditions: • Air flow restrictions • Air flow blockage • Debris 2. Inspect the transmission cooling system for damaged cooler lines. 3. Test the oil cooler flow. Refer to **Automatic Transmission Oil Cooler Flushing and Flow Test (J 45096)** or **Automatic Transmission Oil Cooler Flushing and Flow Test (J**	-		

cardiagn.com

	35944-A) . Did you find and correct the condition?		Go to **Step 6**	Go to **Step 4**
4	Test for correct line pressure. Refer to **Line Pressure Check Procedure** . Did you find and correct the condition?	-	Go to **Step 6**	Go to **Step 5**
5	Test the torque converter stator. Refer to **Torque Converter Diagnosis Procedure** . Did you find and correct the condition?	-	Go to **Step 6**	Go to **Intermittent Conditions** in Engine Controls
6	Perform the following procedure in order to verify the repair: 1. Install a scan tool. 2. Select DTC. 3. Select Clear Info. 4. Start and idle the engine until it reaches normal operating temperature. 5. Monitor Engine Run Time and Trans. Fluid Temp. On the scan tool. 6. Drive the vehicle for 10 minutes. 7. Ensure that the transmission fluid temperature has stabilized and is less than 129°C (264°F). 8. Select Specific DTC. 9. Enter DTC P0218. Has the test run and passed?	-	Go to **Step 7**	Go to **Step 2**
7	With the scan tool, observe the stored information, capture info, and DTC Info. Does the scan tool display any DTCs that you have not diagnosed?	-	Go to **Diagnostic Trouble Code (DTC) List** in Engine Controls	System OK

DTC P0502

cardiagn.com

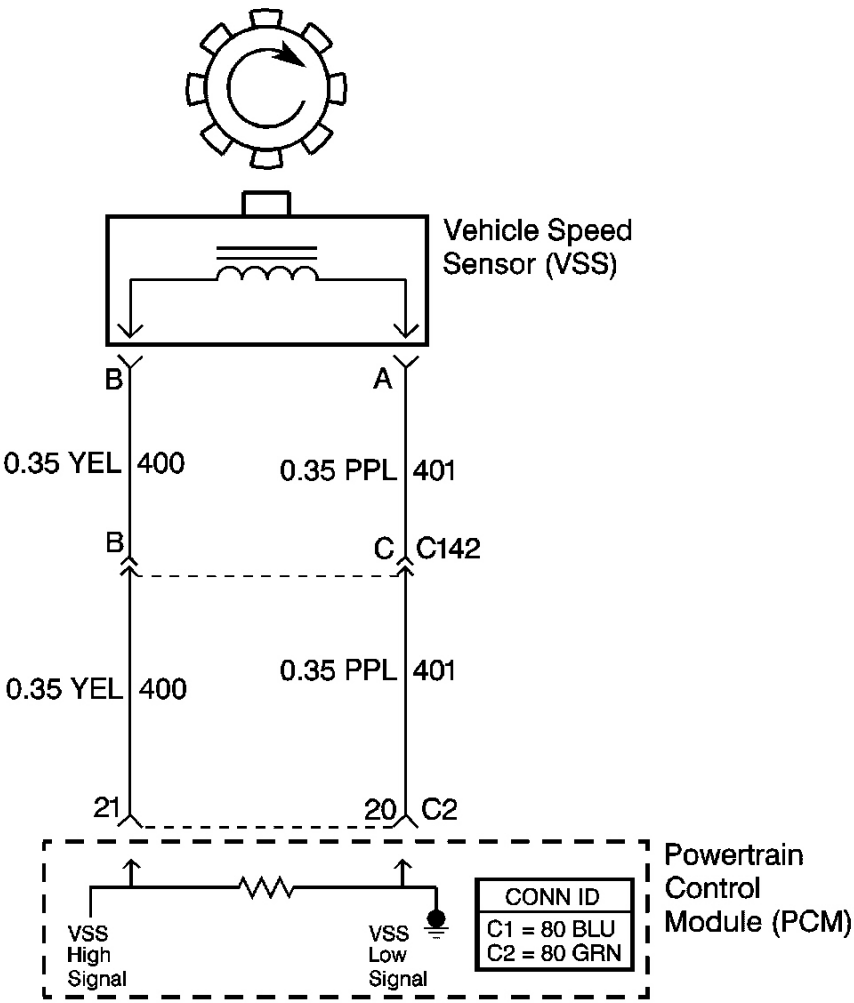

Fig. 2: DTC P0502 Schematics
Courtesy of GENERAL MOTORS CORP.

Circuit Description

The vehicle speed sensor (VSS) assembly provides vehicle speed information to the powertrain control module (PCM). The VSS assembly is a permanent magnet generator. The VSS produces an AC voltage as rotor teeth on the differential ring gear pass through the sensor's magnetic field. The AC voltage level and the number of pulses increase as the speed of the vehicle increases. The PCM converts the AC voltage to vehicle speed. The PCM uses the vehicle speed signal to determine shift timing and torque converter clutch (TCC) scheduling.

If the PCM detects a low vehicle speed when there is a high engine speed in a drive gear range, then DTC P0502 sets. DTC P0502 is a type B DTC.

Conditions for Running the DTC

cardiagn.com

- No MAP sensor DTCs P0106, P0107 or P0108.
- No TP sensor DTCs P1120 or P1220.
- No TFP manual valve position switch DTC P1810.
- The engine vacuum is 0-105 kPa (0-15 psi).
- The engine torque is 54-542 N.m (40-400 lb ft).
- The TP angle is greater than 12 percent.
- The engine speed is greater than 3,000 RPM.
- The transmission is not in PARK or NEUTRAL.

Conditions for Setting the DTC

The transmission output speed is less than 150 RPM for 3 seconds.

Action Taken When the DTC Sets

- The PCM illuminates the malfunction indicator lamp (MIL) during the second consecutive trip in which the Conditions for Setting the DTC are met.
- The PCM commands second gear only.
- The PCM commands maximum line pressure.
- The PCM inhibits TCC engagement.
- The PCM freezes transmission adapt functions.
- The PCM records the operating conditions when the Conditions for Setting the DTC are met. The PCM stores this information as Freeze Frame and Failure Records.
- The PCM stores DTC P0502 in PCM history during the second consecutive trip in which the Conditions for Setting the DTC are met.

Conditions for Clearing the MIL/DTC

- The PCM turns OFF the MIL during the third consecutive trip in which the diagnostic test runs and passes.
- A scan tool can clear the MIL/DTC.
- The PCM clears the DTC from PCM history if the vehicle completes 40 warm-up cycles without an emission-related diagnostic fault occurring.
- The PCM cancels the DTC default actions when the fault no longer exists and/or the ignition switch is OFF long enough in order to power down the PCM.

Diagnostic Aids

Inspect the rotor teeth on the differential ring gear for damage.

Test Description

The numbers below refer to the step numbers on the diagnostic table.

cardiagn.com

2: Disable the traction control system when performing this step. When the ignition key is cycled to the OFF position and then cycled back ON, the traction control system defaults to ON.

3: This step tests the VSS assembly.

5: This step tests the integrity of the VSS assembly.

DTC P0502

Step	Action	Value (s)	Yes	No
1	Did you perform the Diagnostic System Check - Engine Controls?	-	Go to **Step 2**	Go to **Diagnostic System Check - Engine Controls** in Engine Controls
2	1. Install a scan tool. 2. Turn ON the ignition, with the engine OFF. **IMPORTANT:** **Before clearing the DTC, use the scan tool in order to record the Freeze Frame and Failure Records. Using the Clear Info function erases the Freeze Frame and Failure Records from the PCM.** 3. Record the Freeze Frame and Failure Records. 4. Clear the DTC. 5. Raise and support the rear axle assembly. 6. Start the engine. 7. Disable the traction control system. 8. Place the transmission in any drive range. With the drive wheels rotating, does the scan tool Transmission OSS increase with the drive wheel speed?	-	Go to **Intermittent Conditions** in Engine Controls	Go to **Step 3**
3	1. Turn OFF the ignition. 2. Disconnect the engine wiring harness from the VSS assembly. 3. Using the DMM and the **J 35616** GM Terminal Test Kit, measure the resistance of the VSS assembly. Does the resistance measure within the specified range?	976-2354 ohm	Go to **Step 4**	Go to **Step 13**

cardiagn.com

4	Measure the resistance from terminal B of the VSS assembly to ground. Does the resistance measure greater than the specified range?	50 K ohm	Go to **Step 5**	Go to **Step 13**
5	1. Place the transmission in NEUTRAL. 2. Select AC volts on the DMM. 3. Hold one rear wheel from turning. 4. Rotate the other wheel by hand. 5. Measure the AC voltage from terminal A and B of the VSS assembly. Does the voltage measure greater than the specified value?	0.3 V AC	Go to **Step 6**	Go to **Step 13**
6	1. Reconnect the engine wiring harness to the VSS assembly. 2. Disconnect the PCM connector C2. 3. Measure the resistance between PCM connector terminals C2-20 and C2-21. Does the resistance measure within the specified range?	976-2354 ohm	Go to **Step 7**	Go to **Step 8**
7	Measure the resistance from terminal C2-21 to ground. Does the resistance measure greater than the specified range?	50 K ohm	Go to **Step 9**	Go to **Step 10**
8	Does the resistance measure greater than the specified value?	2354 ohm	Go to **Step 11**	Go to **Step 12**
9	1. Reconnect the PCM connector C2. 2. Disconnect the engine wiring harness from the VSS assembly. 3. Turn ON the ignition, with the engine OFF. 4. Test the high circuit of the VSS assembly for a short to power. 5. Test the low circuit of the VSS assembly for a short to power. Refer to **Testing for a Short to Voltage** and **Wiring Repairs** in Wiring Systems. Did you find and correct the condition?	-	Go to **Step 15**	Go to **Step 14**
	1. Test the high circuit of the VSS assembly			

cardiagn.com

10	for a short to ground. 2. Test the low circuit of the VSS assembly for a short to ground. Refer to **Testing for Short to Ground** and **Wiring Repairs** in Wiring Systems. Did you find and correct the condition?	-	Go to **Step 15**	-
11	1. Test the high circuit of the VSS assembly for an open. 2. Test the low circuit of the VSS assembly for an open. Refer to **Testing for Continuity** and **Wiring Repairs** in Wiring Systems. Did you find and correct the condition?	-	Go to **Step 15**	-
12	Test the high circuit and the ground circuit of the VSS assembly for a short together. Refer to **Circuit Testing** and **Wiring Repairs** in Wiring Systems. Did you find and correct the condition?	-	Go to **Step 15**	-
13	Replace the VSS assembly. Refer to **Vehicle Speed Sensor (VSS) Replacement** in Rear Drive Axle. Did you complete the replacement?	-	Go to **Step 15**	-
14	Replace the PCM. Refer to **Powertrain Control Module (PCM) Replacement** in Engine Controls. Did you complete the replacement?	-	Go to **Step 15**	-
15	Perform the following procedure in order to verify the repair: 1. Select DTC. 2. Select Clear Info. 3. Operate the vehicle so that the transmission output speed is greater than 500 RPM for 3 seconds. 4. Select Specific DTC. 5. Enter DTC P0502. Has the test run and passed?	-	Go to **Step 16**	Go to **Step 2**
	With the scan tool, observe the stored		Go to **Diagnostic**	

cardiagn.com

16	information, capture info, and DTC Info. Does the scan tool display any DTCs that you have not diagnosed?	-	**Trouble Code (DTC) List** in Engine Controls	System OK

DTC P0503

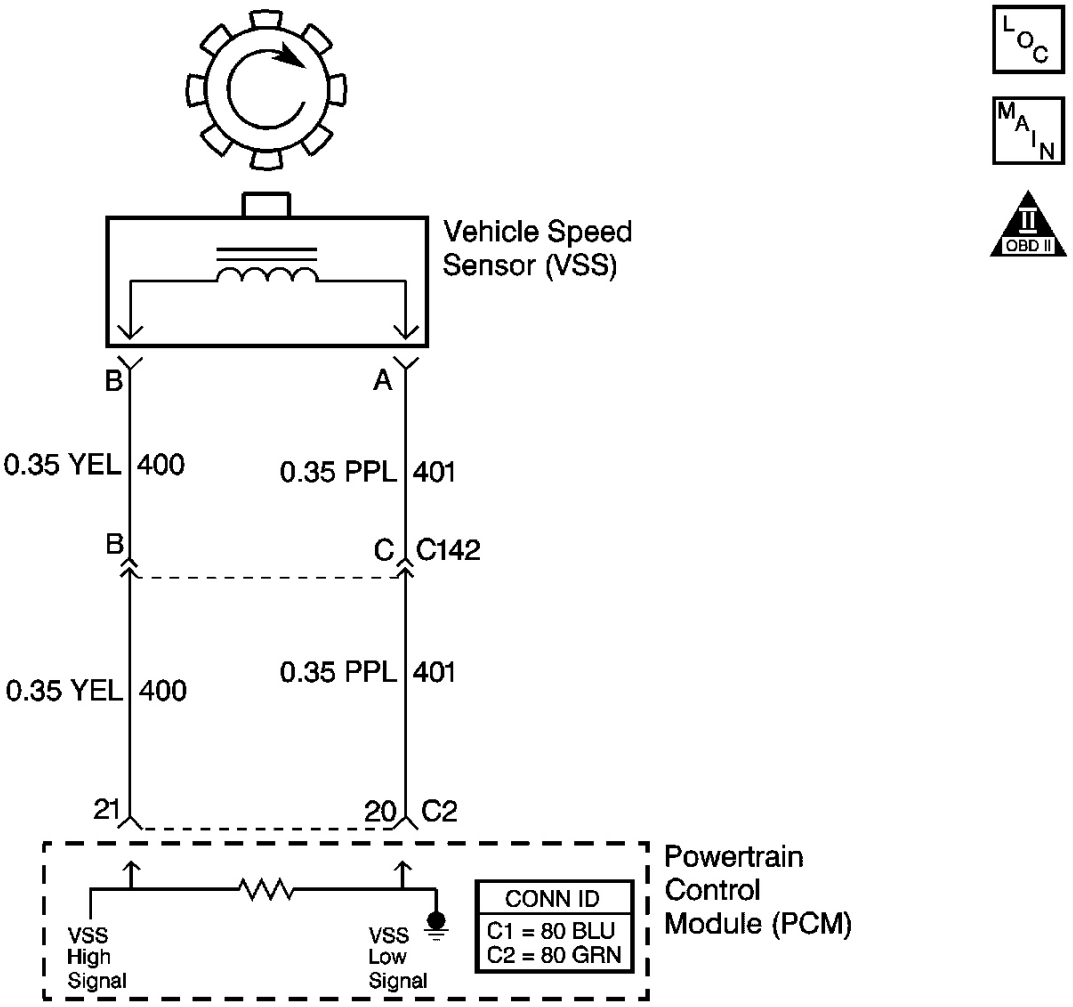

Fig. 3: DTC P0503 Schematics
Courtesy of GENERAL MOTORS CORP.

Circuit Description

The vehicle speed sensor (VSS) assembly provides vehicle speed information to the powertrain control module (PCM). The VSS assembly is a permanent magnet generator. The VSS produces an AC voltage as rotor teeth on the differential ring gear pass through the sensor's magnetic field. The AC voltage level and the number of pulses increase as the speed of the vehicle increases. The PCM converts the AC voltage to vehicle speed. The

cardiagn.com

PCM uses the vehicle speed signal to determine shift timing and torque converter clutch (TCC) scheduling.

When the PCM detects an unrealistically large drop in vehicle speed, then DTC P0503 sets. DTC P0503 is a type B DTC.

Conditions for Running the DTC

- No TFP manual valve position switch DTC P1810.
- The time since the last gear range change is greater than 6 seconds.
- The engine speed is greater than 450 RPM.
- The transmission output speed rise does not exceed 600 RPM within 2 seconds.

Conditions for Setting the DTC

The transmission output speed drop is greater than 1,300 RPM, for 3 seconds, when the transmission is not in PARK or NEUTRAL.

Action Taken When the DTC Sets

- The PCM illuminates the malfunction indicator lamp (MIL) during the second consecutive trip in which the Conditions for Setting the DTC are met.
- The PCM commands a soft landing to second gear.
- The PCM commands maximum line pressure.
- The PCM inhibits TCC engagement.
- The PCM inhibits 4th gear if the transmission is in hot mode.
- The PCM freezes transmission adapt functions.
- The PCM records the operating conditions when the Conditions for Setting the DTC are met. The PCM stores this information as Freeze Frame and Failure Records.
- The PCM stores DTC P0503 in PCM history during the second consecutive trip in which the Conditions for Setting the DTC are met.

Conditions for Clearing the MIL/DTC

- The PCM turns OFF the MIL during the third consecutive trip in which the diagnostic test runs and passes.
- A scan tool can clear the MIL/DTC.
- The PCM clears the DTC from PCM history if the vehicle completes 40 warm-up cycles without an emission-related diagnostic fault occurring.
- The PCM cancels the DTC default actions when the fault no longer exists and/or the ignition switch is OFF long enough in order to power down the PCM.

Diagnostic Aids

Inspect the rotor teeth on the differential ring gear for damage.

cardiagn.com

Test Description

The numbers below refer to the step numbers on the diagnostic table.

2: Disable the traction control system when performing this step. When the ignition switch is cycled OFF and then back ON, the traction control system defaults to ON.

3: This step tests the VSS assembly.

5: This step tests the integrity of the VSS assembly.

DTC P0503

Step	Action	Value (s)	Yes	No
1	Did you perform the Diagnostic System Check - Engine Controls?	-	Go to **Step 2**	Go to **Diagnostic System Check - Engine Controls** in Engine Controls
2	1. Install a scan tool. 2. Turn ON the ignition, with the engine OFF. **IMPORTANT:** **Before clearing the DTC, use the scan tool in order to record the Freeze Frame and Failure Records. Using the Clear Info function erases the Freeze Frame and Failure Records from the PCM.** 3. Record the Freeze Frame and Failure Records. 4. Clear the DTC. 5. Raise and support the rear axle assembly. 6. Start the engine. 7. Disable the traction control system. 8. Place the transmission in D3 range. 9. With the drive wheels rotating, slowly accelerate to 2,000 RPM and hold, road test the vehicle if necessary. Does the scan tool Transmission OSS drop or fluctuate more than the specified value?	1,300 RPM	Go to **Step 3**	Go to **Intermittent Conditions** in Engine Controls
	1. Turn OFF the ignition. 2. Disconnect the engine wiring harness from the VSS assembly.			

cardiagn.com

3	3. Using the DMM and the **J 35616** GM Terminal Test Kit, measure the resistance of the VSS assembly. Does the resistance measure within the specified range?	976-2354 ohm	Go to **Step 4**	Go to **Step 13**
4	Measure the resistance from terminal B of the VSS assembly to ground. Does the resistance measure greater than the specified range?	50 K ohm	Go to **Step 5**	Go to **Step 13**
5	1. Place the transmission in NEUTRAL. 2. Select AC volts on the DMM. 3. Hold one rear wheel from turning. 4. Rotate the other wheel by hand. 5. Measure the AC voltage from terminal A and B of the VSS assembly. Does the voltage measure greater than the specified value?	0.3 V	Go to **Step 6**	Go to **Step 13**
6	1. Reconnect the engine wiring harness to the VSS assembly. 2. Disconnect the PCM connector C2. 3. Measure the resistance between PCM connector terminals C2-20 and C2-21. Does the resistance measure within the specified range?	976-2354 ohm	Go to **Step 7**	Go to **Step 8**
7	Measure the resistance from terminal C2-21 to ground. Does the resistance measure greater than the specified range?	50 K ohm	Go to **Step 9**	Go to **Step 10**
8	Does the resistance measure greater than the specified value?	2354 ohm	Go to **Step 11**	Go to **Step 12**
9	1. Reconnect the PCM connector C2. 2. Disconnect the engine wiring harness from the VSS assembly. 3. Turn ON the ignition, with the engine OFF. 4. Test the high circuit of the VSS assembly for a short to power. 5. Test the low circuit of the VSS assembly for a short to power.	-		

cardiagn.com

	Refer to **Testing for a Short to Voltage** and **Wiring Repairs** in Wiring Systems. Did you find and correct the condition?		Go to **Step 15**	Go to **Step 14**
10	1. Test the high circuit of the VSS assembly for a short to ground. 2. Test the low circuit of the VSS assembly for a short to ground. Refer to **Testing for Short to Ground** and **Wiring Repairs** in Wiring Systems. Did you find and correct the condition?	-	Go to **Step 15**	-
11	1. Test the high circuit of the VSS assembly for an open. 2. Test the low circuit of the VSS assembly for an open. Refer to **Testing for Continuity** and **Wiring Repairs** in Wiring Systems. Did you find and correct the condition?	-	Go to **Step 15**	-
12	Test the high circuit and the low circuit of the VSS assembly for a short together. Refer to **Circuit Testing** and **Wiring Repairs** in Wiring Systems. Did you find and correct the condition?	-	Go to **Step 15**	-
13	Replace the VSS assembly. Refer to **Vehicle Speed Sensor (VSS) Replacement** in Rear Drive Axle. Did you complete the replacement?	-	Go to **Step 15**	-
14	Replace the PCM. Refer to **Powertrain Control Module (PCM) Replacement** in Engine Controls. Did you complete the replacement?	-	Go to **Step 15**	-
15	Perform the following procedure in order to verify the repair: 1. Select DTC. 2. Select Clear Info. 3. Operate the vehicle ensuring that the transmission output speed drop is less than 500 RPM for 2 seconds and output speed is greater than 500 RPM.	-		

cardiagn.com

	4. Select Specific DTC. 5. Enter DTC P0503. Has the test run and passed?		Go to **Step 16**	Go to **Step 2**
16	With the scan tool, observe the stored information, capture info, and DTC Info. Does the scan tool display any DTCs that you have not diagnosed?	-	Go to **Diagnostic Trouble Code (DTC) List** in Engine Controls	System OK

DTC P0706

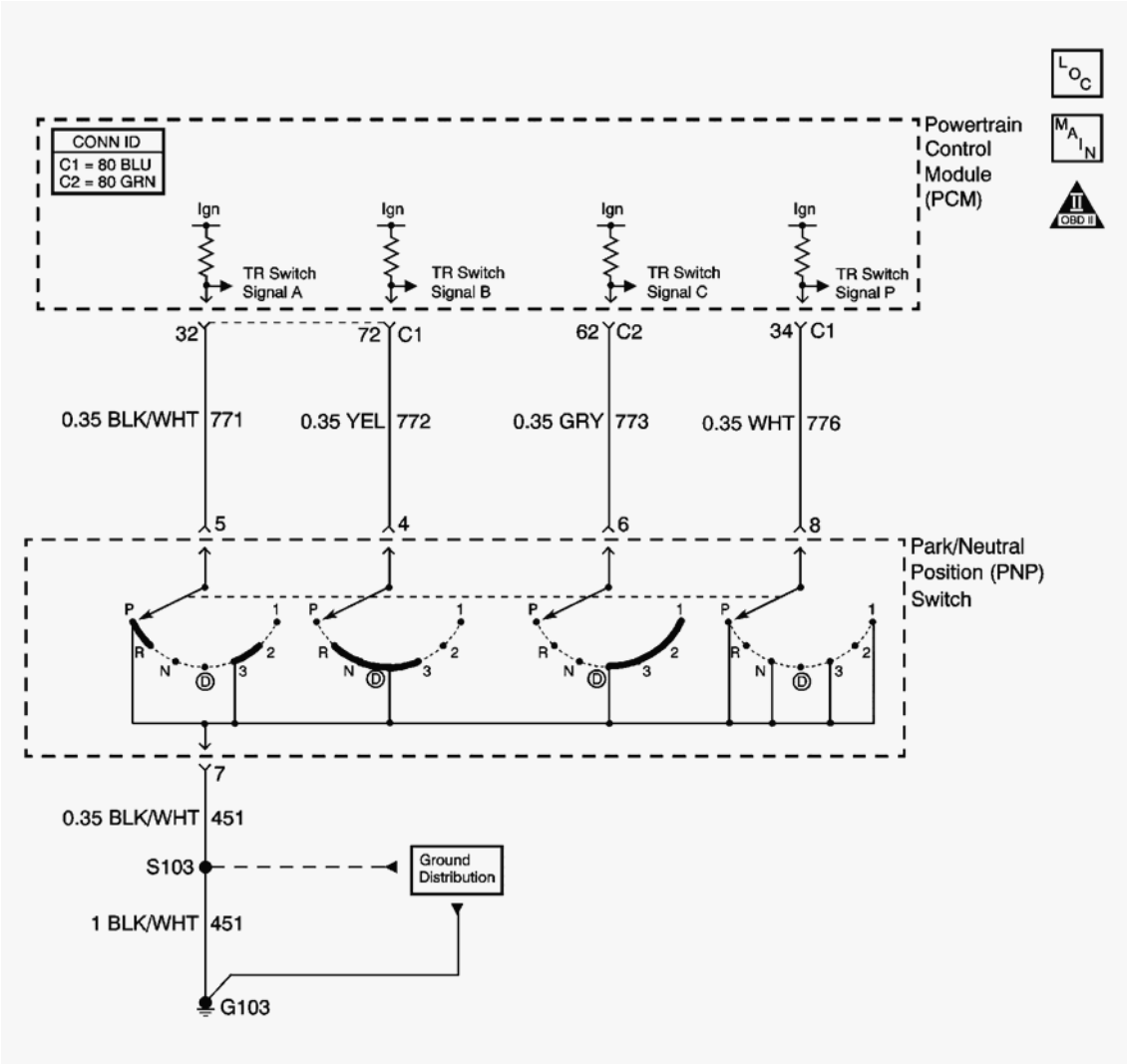

Fig. 4: DTC P0706 Schematics
Courtesy of GENERAL MOTORS CORP.

Circuit Description

cardiagn.com

The transmission range (TR) switch is part of the park/neutral position and back-up lamp switch assembly and is externally mounted on the transmission manual shaft. The TR switch is a multi-signal switch. The PCM supplies ignition voltage to the TR switch on four signal circuits, A, B, C, and P. Each gear selector lever position grounds one or more of the switch circuits. In order to determine the gear range selected by the driver, the PCM compares the voltage combinations on the signal circuits to a look up table stored in the PCM memory. PCM detects the selected gear range by the state change of the switch input. Refer to **Transmission Range Switch Logic** table.

Switch input to the PCM is represented on the scan tool as HI and Low. HI indicates an ignition voltage signal. Low indicates a zero voltage signal. The four parameters represent transmission range switch signal A, B, C and Parity.

DTC P0706 will set if the PCM detects start-up in a drive range or vehicle speed in the PARK or NEUTRAL range. DTC P0706 is a type C DTC.

Conditions for Running the DTC

- Transmission is in D4.
- System voltage is 6-18 volts.

Conditions for Setting the DTC

Condition 1

The PCM detects DRIVE or REVERSE at vehicle start-up.

Condition 2

The PCM detects PARK or NEUTRAL and the following conditions occur for 10 seconds:

- TP is 5 percent or greater.
- Engine torque is greater than 68 N.m (50 lb ft).
- VSS is 32 km/h (20 mph) or greater.

Action Taken When the DTC Sets

- The PCM will use TFP Switch to determine gear range.
- The PCM does not illuminate the malfunction indicator lamp (MIL).
- The PCM records the operating conditions when the Conditions for Setting the DTC are met. The PCM stores this information as Failure Records.
- The PCM stores DTC P0706 in PCM history.

Conditions for Clearing the DTC

- A scan tool can clear the DTC.
- The PCM clears the DTC from PCM history if the vehicle completes 40 warm-up cycles without a non-

cardiagn.com

emission related diagnostic fault occurring.

- The PCM cancels the DTC default actions when the fault no longer exists and the DTC passes.

Test Description

The numbers below refer to the step numbers on the diagnostic table.

5: By disconnecting the transmission range switch, the ground path of all TR switch circuits would be removed and the PCM would recognize all circuits as open. The scan tool will display HI for all range signals.

6: This step tests TR switch wiring for an open or the lack of the signal voltage from the PCM.

7: This step tests TR switch wiring and the PCM by providing a ground path through a fused jumper wire. When grounded, the scan tool range signal A should change to LOW.

8: This step tests TR switch wiring and the PCM by providing a ground path through a fused jumper wire. When grounded, the scan tool range signal B should change to LOW.

9: This step tests TR switch wiring and the PCM by providing a ground path through a fused jumper wire. When grounded, the scan tool range signal C should change to LOW.

DTC P0706

Step	Action	Value (s)	Yes	No
1	Did you perform the Diagnostic System Check - Engine Controls?	-	Go to **Step 2**	Go to **Diagnostic System Check - Engine Controls** in Engine Controls
2	1. Install a scan tool. 2. Turn ON the ignition, with the engine OFF. 3. Select TR Sw. On the scan tool. 4. With the scan tool, observe the TR Sw. Display while selecting each transmission range: P, R, N, D3, D2 and D1. Does each selected transmission range match the scan tool TR Sw. display?	-	Go to **Intermittent Conditions** in Engine Controls	Go to **Step 3**
	1. Inspect the PNP switch assembly for the following: • Damage • Loose or missing mounting hardware • Proper adjustment Refer to **Park/Neutral Position**			

cardiagn.com

3	**Switch Replacement** . 2. Inspect the shift cable for the following: • Damaged or stretched cable • Proper adjustment Refer to **Automatic Transmission Range Selector Cable Replacement** . Did you find and correct a condition?	-	Go to **Step 16**	Go to **Step 4**
4	With the scan tool, observe the TR Sw. A/B/C/P display. Does the scan tool TR Sw. A/B/C/P parameter indicate HI for all range, signal states?	-	Go to **Step 13**	Go to **Step 5**
5	1. Turn OFF the ignition. 2. Disconnect the TR switch connector. 3. Turn ON the ignition, with the engine OFF. Does the scan tool TR Sw. A/B/C/P parameter indicate HI for all range signal states?	-	Go to **Step 6**	Go to **Step 10**
6	1. Using the DMM and the **J 35616** GM Terminal Test Kit, measure the voltage from terminal 8 of the TR switch connector to ground. 2. Measure the voltage from terminal 4 of the TR switch connector to ground. 3. Measure the voltage from terminal 6 of the TR switch connector to ground. 4. Measure the voltage from terminal 5 of the TR switch connector to ground. Does the voltage measure within the specified value at all four terminals?	10-12 V	Go to **Step 7**	Go to **Step 11**
7	Connect a fused jumper wire from terminal 5 of the TR switch connector, signal A circuit, to ground while monitoring the scan tool TR Sw. A/B/C/P parameter. When the signal A circuit is grounded, do any other signal circuits indicate LOW?	-	Go to **Step 12**	Go to **Step 8**
	Connect a fused jumper wire from terminal 4 of the TR switch connector, signal B circuit, to ground while monitoring the scan tool TR Sw.			

cardiagn.com

8	A/B/C/P parameter. When the signal B circuit is grounded, do any other signal circuits indicate LOW?	-	Go to **Step 12**	Go to **Step 9**
9	Connect a fused jumper wire from terminal 6 of the TR switch connector, signal C circuit, to ground while monitoring the scan tool TR Sw. A/B/C/P parameter. When the signal C circuit is grounded, do any other signal circuits indicate LOW?	-	Go to **Step 12**	Go to **Step 14**
10	Test the signal circuit or circuits of the TR switch that did not indicate HI for a short to ground. Refer to **Testing for Short to Ground** and **Wiring Repairs** in Wiring Systems. Did you find and correct the condition?	-	Go to **Step 16**	Go to **Step 15**
11	Test the signal circuit or circuits of the TR switch that did not indicate proper voltage for an open. Refer to **Testing for Continuity** and **Wiring Repairs** in Wiring Systems. Did you find and correct the condition?	-	Go to **Step 16**	Go to **Step 15**
12	Test the affected signal circuits of the TR switch for a shorted together condition. Refer to **Circuit Testing** and **Wiring Repairs** in Wiring Systems. Did you find and correct the condition?	-	Go to **Step 16**	Go to **Step 15**
13	Test the ground circuit of the TR switch for an open. Refer to **Testing for Continuity** and **Wiring Repairs** in Wiring Systems. Did you find and correct the condition?	-	Go to **Step 16**	Go to **Step 14**
14	Replace the TR switch, this switch is part of the park/neutral position (PNP) switch. Refer to **Park/Neutral Position Switch Replacement** . Did you complete the replacement?	-	Go to **Step 16**	-
15	Replace the PCM. Refer to **Powertrain Control Module (PCM) Replacement** in Engine Controls. Did you complete the replacement?	-	Go to **Step 16**	-
	Perform the following procedures in order to verify the repair: 1. Select DTC. 2. Select Clear Info.			

cardiagn.com

16	3. Drive the vehicle greater than 8 km/h (5 mph) for a short distance, then stop the vehicle. 4. Select each transmission range: P, R, N, D3, D2 and D1. 5. Place the transmission in PARK. 6. Select Specific DTC. Enter DTC P0706. Has the test run and passed?	-	Go to **Step 17**	Go to **Step 2**
17	With the scan tool, observe the stored information, capture info, and DTC Info. Does the scan tool display any DTCs that you have not diagnosed?	-	Go to **Diagnostic Trouble Code (DTC) List** in Engine Controls	System OK

DTC P0711

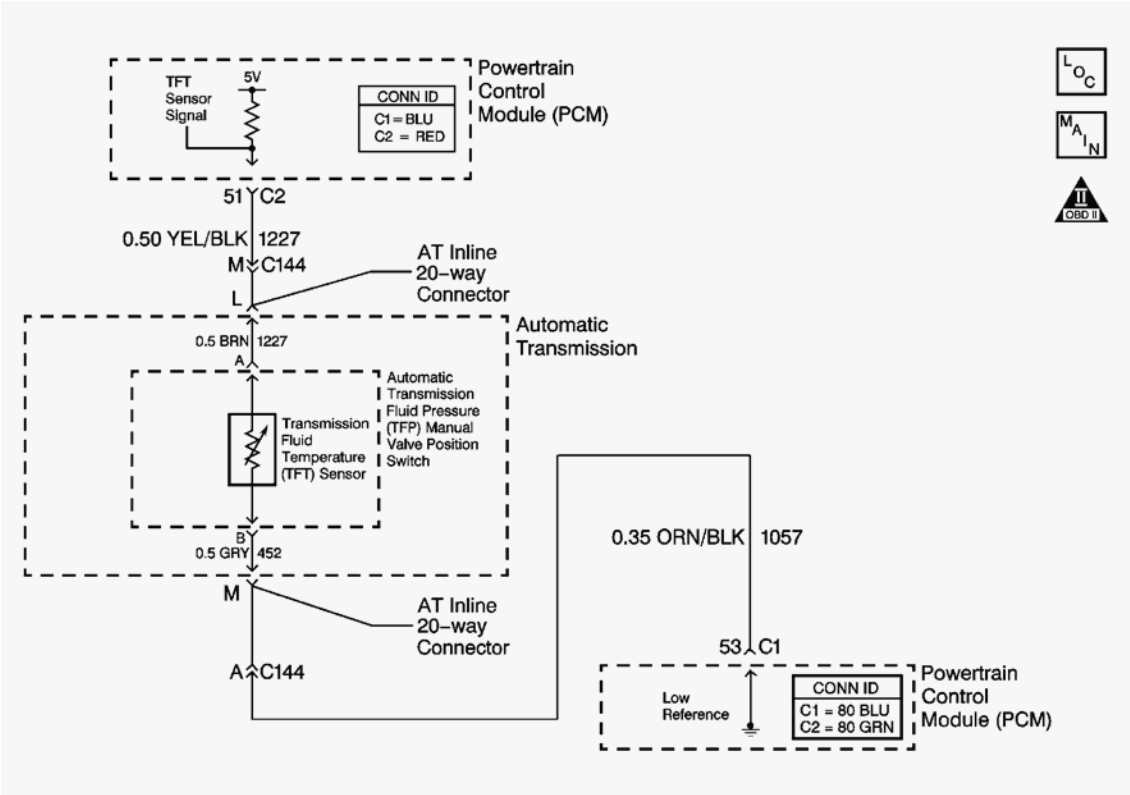

Fig. 5: DTC P0711 Schematics
Courtesy of GENERAL MOTORS CORP.

Circuit Description

The automatic transmission fluid temperature (TFT) sensor is part of the automatic transmission fluid pressure

cardiagn.com

(TFP) manual valve position switch. The TFT sensor is a resistor, or thermistor, which changes value based on temperature. The sensor has a negative-temperature coefficient. This means that as the temperature increases, the resistance decreases, and as the temperature decreases, the resistance increases. The powertrain control module (PCM) supplies a 5-volt reference signal to the sensor on the TFT sensor signal circuit and measures the voltage drop in the circuit. When the transmission fluid is cold, the sensor resistance is high and the PCM detects high signal voltage. As the fluid temperature warms to a normal operating temperature, the resistance becomes less and the signal voltage decreases. The PCM uses this information to control shift quality and torque converter clutch apply.

When the PCM detects one of the following unusual conditions, then DTC P0711 sets.

- An unrealistically large change in transmission temperature
- A transmission temperature which remains constant for a period of time in which a measurable amount of change is expected

DTC P0711 is a type C DTC.

Conditions for Running the DTC

- No VSS assembly DTCs P0502 or P0503.
- No Transmission Component Slipping DTC P0894.
- The system voltage is 10-18 volts.
- The engine is running for 409 seconds.
- The engine coolant temperature (ECT) is greater than 70°C (158°F) and the temperature has changed by 50°C (90°F) since startup.
- The vehicle speed is greater than 8 km/h (5 mph) for 409 seconds cumulative during the current ignition cycle.
- The TFT at startup is between -40 and +21°C (-40 and +70°F).
- The TFT is between -38 and +151°C (-36 and +304°F).
- The TCC slip speed is greater than 120 RPM for 409 seconds cumulative during the current ignition cycle.

Conditions for Setting the DTC

DTC P0711 sets if one of the following conditions occurs:

Condition 1

The TFT does not change more than 2.25°C (4°F) for 409 seconds since startup.

Condition 2

The TFT changes more than 20°C (36°F) in 200 milliseconds 14 times within 7 seconds.

Action Taken When the DTC Sets

cardiagn.com

- The PCM does not illuminate the malfunction indicator lamp (MIL).
- The PCM calculates a default transmission fluid temperature based on engine coolant temperature, intake air temperature and engine run time.
- The PCM freezes transmission adapt functions.
- The PCM records the operating conditions when the Conditions for Setting the DTC are met. The PCM stores this information as Failure Records.
- The PCM stores DTC P0711 in PCM history.

Conditions for Clearing the DTC

- A scan tool can clear the DTC.
- The PCM clears the DTC from PCM history if the vehicle completes 40 warm-up cycles without a non-emission-related diagnostic fault occurring.
- The PCM cancels the DTC default actions when the fault no longer exists and/or the ignition switch is OFF long enough in order to power down the PCM.

Test Description

The numbers below refer to the step numbers on the diagnostic table.

5: This step tests for an intermittent short or open condition in the engine wiring harness. The test lamp is used as a resistor in the circuit.

6: This step determines if the PCM or the TFT sensor is causing a steady, unchanging TFT reading.

DTC P0711

Step	Action	Value (s)	Yes	No
1	Did you perform the Diagnostic System Check - Engine Controls?	-	Go to **Step 2**	Go to **Diagnostic System Check - Engine Controls** in Engine Controls
2	Inspect for correct transmission fluid level. Refer to **Transmission Fluid Checking Procedure** . Did you perform the fluid checking procedure?	-	Go to **Step 3**	Go to **Transmission Fluid Checking Procedure**
	1. Install a scan tool. 2. Turn ON the ignition, with the engine OFF. **IMPORTANT:** **Before clearing the DTC, use the scan tool in order to record the Failure Records. Using the Clear Info function erases the Failure Records from the**			

cardiagn.com

3	**PCM.** 3. Record the DTC Failure Records. 4. Clear the DTC. 5. Select Trans. Fluid Temp. On the scan tool. 6. Drive the vehicle and observe the scan tool for either of the following conditions: • The Trans. Fluid Temp. Does not change more than 2.25°C (4°F) in 409 seconds since startup • The Trans. Fluid Temp. Changes more than 20°C (36°F) in 200 milliseconds 14 times within 7 seconds Did either of the conditions occur?	-	Go to **Step 4**	Go to **Intermittent Conditions** in Engine Controls
4	Did the scan tool display a condition in which the Trans. Fluid Temp. Does not change by more than the specified value in 409 seconds since startup?	2.25°C (4°F)	Go to **Step 6**	Go to **Step 5**
5	1. Turn OFF the ignition. 2. Disconnect the AT inline 20-way connector, additional DTCs may set. 3. Install the **J 44152** Jumper Harness (20 pins) on the engine side of the AT inline 20-way connector. 4. Using the **J 35616** GM Terminal Test Kit, connect a test lamp from terminal L to terminal M of the **J 44152** . Refer to **Automatic Transmission Inline 20-Way Connector End View** . 5. Turn ON the ignition, with the engine OFF. 6. While observing the scan tool display, move or wiggle the engine wiring harness from PCM connectors C1 and C2 to the AT inline 20-way connector. Does the scan tool Trans. Fluid Temp. Change by more than the specified value?	20°C (36°F)	Go to **Step 7**	Go to **Step 8**

cardiagn.com

6	1. Turn OFF the ignition. 2. Disconnect the AT inline 20-way connector. 3. Turn ON the ignition, with the engine OFF. Does the scan tool display the same condition as in Step 4?	-	Go to **Step 11**	Go to **Step 10**
7	1. Test the TFT sensor signal circuit of the TFT sensor for an intermittent open or short condition between the PCM connector C2 and the AT inline 20-way connector. 2. Test the low reference circuit of the TFT sensor for an intermittent open or short condition. Refer to **Circuit Testing** and **Wiring Repairs** in Wiring Systems. Did you find and correct the condition?	-	Go to **Step 12**	Go to **Step 11**
8	1. Test the TFT sensor signal circuit of the TFT sensor for an intermittent open or short condition between the AT inline 20-way connector and the TFT sensor. 2. Test the low reference circuit of the TFT sensor for an intermittent open or short condition. Refer to **Circuit Testing** in Wiring Systems.Did you find an intermittent open or short condition?	-	Go to **Step 9**	Go to **Step 10**
9	Replace the AT wiring harness assembly. Refer to **Torque Converter Clutch Pulse Width Modulation (TCC PWM) Solenoid, TCC Solenoid, and Wiring Harness** . Did you complete the replacement?	-	Go to **Step 12**	-
10	Replace the TFT sensor, this sensor is part of the TFP manual valve position switch. Refer to **Valve Body and Pressure Switch Replacement** . Did you complete the replacement?	-	Go to **Step 12**	-
11	Replace the PCM. Refer to **Powertrain Control Module (PCM)**	-		-

cardiagn.com

	Replacement in Engine Controls. Did you complete the replacement?		Go to **Step 12**	
12	Perform the following procedure in order to verify the repair: 1. Select DTC. 2. Select Clear Info. 3. Drive the vehicle and ensure the following conditions are met: • The Trans. Fluid Temp. Changes by more than 3°C (5.4°F) for 11 seconds since startup • The Trans. Fluid Temp. Does not change by more than 20°C (36°F) within 200 milliseconds for a period of at least 11 seconds 4. Select Specific DTC. 5. Enter DTC P0711. Has the test run and passed?	-	Go to **Step 13**	Go to **Step 2**
13	With the scan tool, observe the stored information, capture info, and DTC Info. Does the scan tool display any DTCs that you have not diagnosed?	-	Go to **Diagnostic Trouble Code (DTC) List** in Engine Controls	System OK

DTC P0712

cardiagn.com

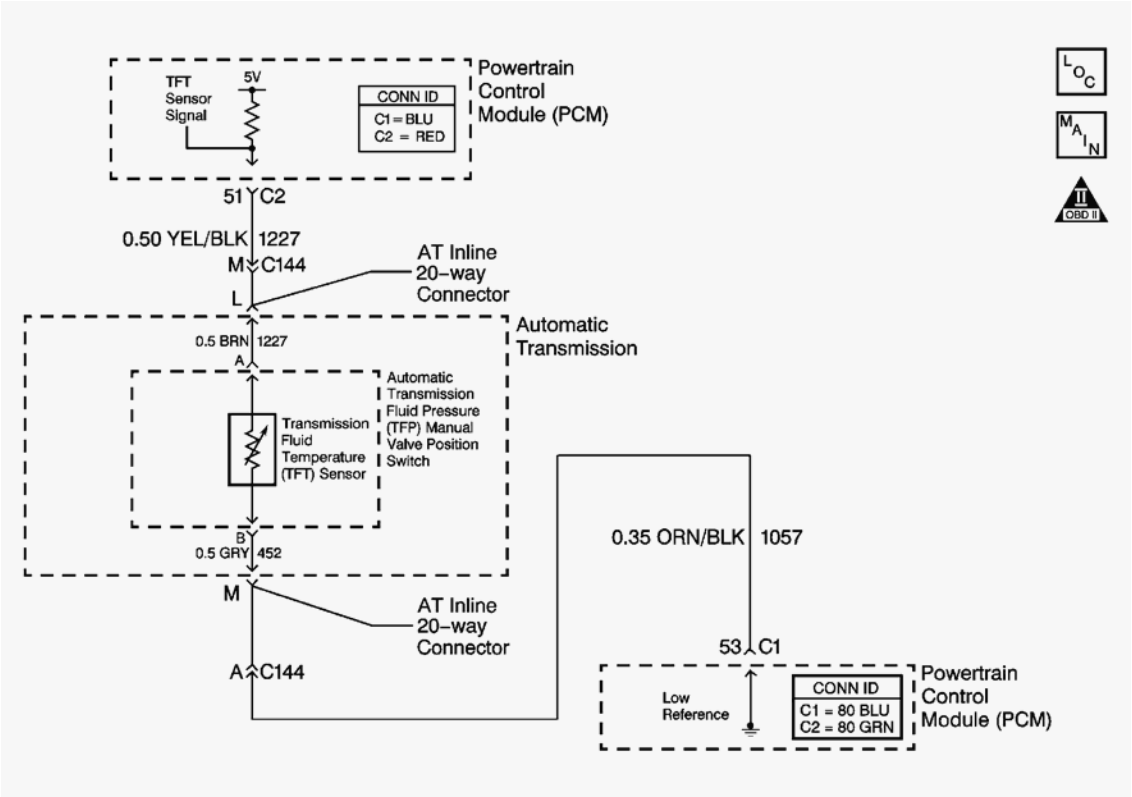

Fig. 6: DTC P0712 Schematics
Courtesy of GENERAL MOTORS CORP.

Circuit Description

The automatic transmission fluid temperature (TFT) sensor is part of the automatic transmission fluid pressure (TFP) manual valve position switch. The TFT sensor is a resistor, or thermistor, which changes value based on temperature. The sensor has a negative-temperature coefficient. This means that as the temperature increases, the resistance decreases, and as the temperature decreases, the resistance increases. The powertrain control module (PCM) supplies a 5-volt reference signal to the sensor on the TFT sensor signal circuit and measures the voltage drop in the circuit. When the transmission fluid is cold, the sensor resistance is high and the PCM detects high signal voltage. As the fluid temperature warms to a normal operating temperature, the resistance becomes less and the signal voltage decreases. The PCM uses this information to control shift quality and torque converter clutch apply.

When the PCM detects a continuous short to ground in the TFT signal circuit or in the TFT sensor, then DTC P0712 sets. DTC P0712 is a type C DTC.

Conditions for Running the DTC

- The system voltage is 10-18 volts.
- The ignition is ON.

Conditions for Setting the DTC

cardiagn.com

The TFT sensor indicates a signal voltage less than 0.25-5 volts for 10 seconds.

Action Taken When the DTC Sets

- The PCM does not illuminate the malfunction indicator lamp (MIL).
- The PCM calculates a default transmission fluid temperature based on engine coolant temperature, intake air temperature and engine run time.
- The PCM freezes transmission adapt functions.
- The PCM records the operating conditions when the Conditions for Setting the DTC are met. The PCM stores this information as Failure Records.
- The PCM stores DTC P0712 in PCM history.

Conditions for Clearing the DTC

- A scan tool can clear the DTC.
- The PCM clears the DTC from PCM history if the vehicle completes 40 warm-up cycles without a non-emission-related diagnostic fault occurring.
- The PCM cancels the DTC default actions when the fault no longer exists and/or the ignition switch is OFF long enough in order to power down the PCM.

Diagnostic Aids

- The scan tool displays the transmission fluid temperature in degrees. After the transmission is operating, the fluid temperature should rise steadily to a normal operating temperature, then stabilize.
- Verify the customer's driving habits, trailer towing, etc. Trailer towing should occur in D3.

Test Description

The numbers below refer to the step numbers on the diagnostic table.

3: This step tests for a short to ground condition.

4: This step tests for an internal fault within the transmission by creating an open.

DTC P0712

Step	Action	Value(s)	Yes	No
1	Did you perform the Diagnostic System Check - Engine Controls?	-	Go to **Step 2**	Go to **Diagnostic System Check - Engine Controls** in Engine Controls
2	Inspect for correct transmission fluid level. Refer to **Transmission Fluid Checking Procedure** . Did you perform the fluid checking procedure?	-	Go to **Step 3**	Go to **Transmission Fluid Checking Procedure**

cardiagn.com

3	1. Install a scan tool. 2. Turn ON the ignition, with the engine OFF. **IMPORTANT:** **Before clearing the DTC, use the scan tool in order to record the Failure Records. Using the Clear Info function erases the Failure Records from the PCM.** 3. Record the DTC Failure Records. 4. Clear the DTC. Does the scan tool displays a TFT Sensor signal voltage greater than the specified value?	0.2 V	Go to **Intermittent Conditions** in Engine Controls	Go to **Step 4**
4	1. Turn OFF the ignition. 2. Disconnect the AT inline 20-way connector, additional DTCs may set. 3. Turn ON the ignition, with the engine OFF. Does the scan tool display a TFT Sensor signal voltage greater than the specified value?	4.92 V	Go to **Step 5**	Go to **Step 7**
5	1. Install the **J 44152** Jumper Harness (20 pins) on the transmission side of the AT inline 20-way connector. 2. Using the DMM and the **J 35616** GM Terminal Test Kit, measure the resistance between terminals L and M of the **J 44152** . Refer to **Automatic Transmission Inline 20-Way Connector End View** . Does the resistance measure within the specified range?	3088-3942 ohm at 20°C (68°F) 159-198 ohm at 100°C (212°F)	Go to **Intermittent Conditions** in Engine Controls	Go to **Step 6**
6	Test the signal circuit of the TFT sensor for a short to ground between the AT inline 20-way connector and the TFT sensor.	-		

cardiagn.com

	Refer to **Testing for Short to Ground** in Wiring Systems. Did you find a short to ground condition?		Go to **Step 9**	Go to **Step 8**
7	Test the signal circuit of the TFT sensor for a short to ground between the PCM connector C2 and the AT inline 20-way connector. Refer to **Testing for Short to Ground** and **Wiring Repairs** in Wiring Systems. Did you find and correct the condition?	-	Go to **Step 11**	Go to **Step 10**
8	Replace the TFT sensor, this sensor is part of the TFP manual valve position switch. Refer to **Valve Body and Pressure Switch Replacement** . Did you complete the replacement?	-	Go to **Step 11**	-
9	Replace the AT wiring harness assembly. Refer to **Valve Body and Pressure Switch Replacement** . Did you complete the replacement?	-	Go to **Step 11**	-
10	Replace the PCM. Refer to **Powertrain Control Module (PCM) Replacement** in Engine Controls. Did you complete the replacement?	-	Go to **Step 11**	-
11	Perform the following procedure in order to verify the repair: 1. Select DTC. 2. Select Clear Info. 3. Turn ON the ignition, with the engine OFF. 4. Verify that the scan tool indicates a TFT Sensor signal voltage greater than 0.2 volts for 10 seconds. 5. Select Specific DTC. 6. Enter DTC P0712. Has the test run and passed?	-	Go to **Step 12**	Go to **Step 2**
12	With the scan tool, observe the stored information, capture info, and DTC Info. Does the scan tool display any DTCs that you have not diagnosed?	-	Go to **Diagnostic Trouble Code (DTC) List** in Engine Controls	System OK

DTC P0713

cardiagn.com

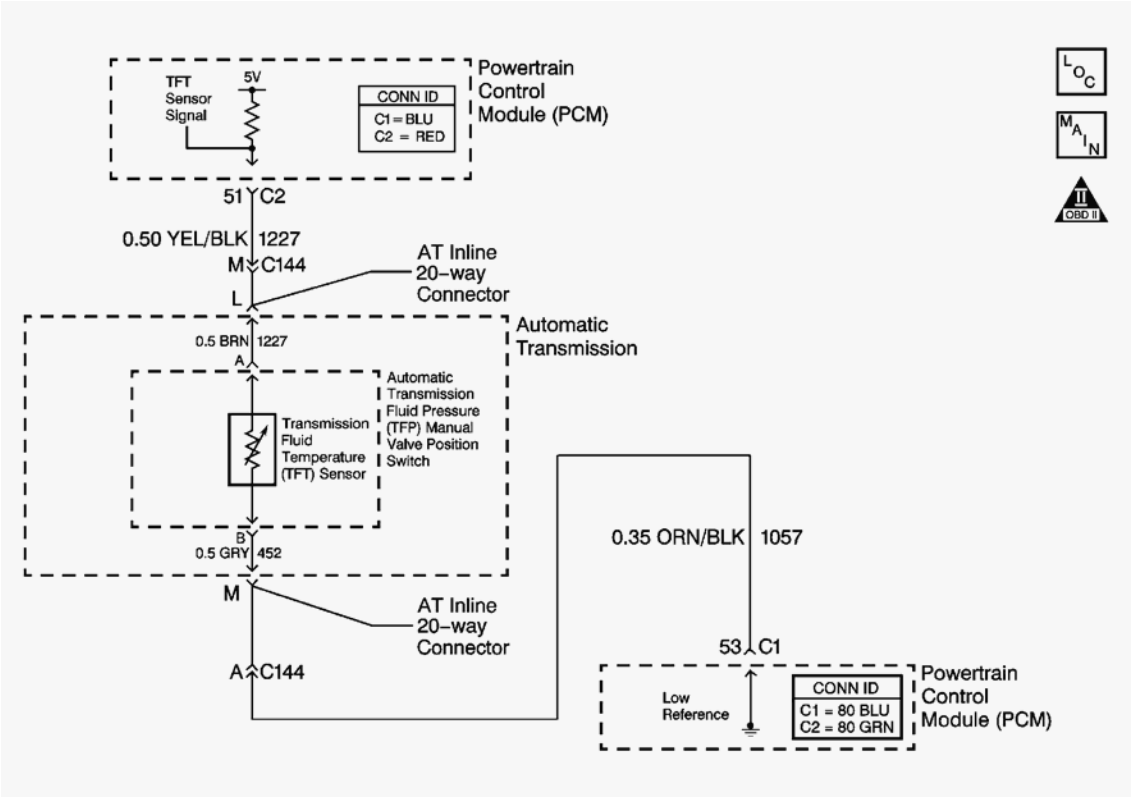

Fig. 7: DTC P0713 Schematics
Courtesy of GENERAL MOTORS CORP.

Circuit Description

The automatic transmission fluid temperature (TFT) sensor is part of the automatic transmission fluid pressure (TFP) manual valve position switch. The TFT sensor is a resistor, or thermistor, which changes value based on temperature. The sensor has a negative-temperature coefficient. This means that as the temperature increases, the resistance decreases, and as the temperature decreases, the resistance increases. The powertrain control module (PCM) supplies a 5-volt reference signal to the sensor on the TFT sensor signal circuit and measures the voltage drop in the circuit. When the transmission fluid is cold, the sensor resistance is high and the PCM detects high signal voltage. As the fluid temperature warms to a normal operating temperature, the resistance becomes less and the signal voltage decreases. The PCM uses this information to control shift quality and torque converter clutch apply.

When the PCM detects a continuous open or short to power in the TFT signal circuit or the TFT sensor, then DTC P0713 sets. DTC P0713 is a type C DTC.

Conditions for Running the DTC

- The system voltage is 10-18 volts.
- The ignition is ON.

Conditions for Setting the DTC

cardiagn.com

The TFT sensor indicates a signal voltage greater than 4.92 volts for 400 seconds (6.7 minutes).

Action Taken When the DTC Sets

- The PCM does not illuminate the malfunction indicator lamp (MIL).
- The PCM calculates a default transmission fluid temperature based on engine coolant temperature, intake air temperature and engine run time.
- The PCM freezes transmission adapt functions.
- The PCM records the operating conditions when the Conditions for Setting the DTC are met. The PCM stores this information as Failure Records.
- The PCM stores DTC P0713 in PCM history.

Conditions for Clearing the DTC

- A scan tool can clear the DTC.
- The PCM clears the DTC from PCM history if the vehicle completes 40 warm-up cycles without a non-emission-related diagnostic fault occurring.
- The PCM cancels the DTC default actions when the fault no longer exists and/or the ignition switch is OFF long enough in order to power down the PCM.

Test Description

The numbers below refer to the step numbers on the diagnostic table.

5: This step tests the TFT sensor signal circuit for being shorted to another circuit within the transmission. If the TFT sensor signal circuit shorts to another circuit, which is carrying voltage greater than five volts, the TFT sensor would become open.

6: This step tests the TFT sensor signal circuit for being shorted to voltage, which would be the cause for the open in the TFT sensor.

DTC P0713

Step	Action	Value (s)	Yes	No
1	Did you perform the Diagnostic System Check - Engine Controls?	-	Go to **Step 2**	Go to **Diagnostic System Check - Engine Controls** in Engine Controls
	1. Install a scan tool. 2. Turn ON the ignition, with the engine OFF. **IMPORTANT:** **Before clearing the DTC, use the scan tool in order to record the DTC**			

cardiagn.com

2	**Failure Records. Using the Clear Info function erases the Failure Records from the PCM.** 3. Record the DTC Failure Records. 4. Clear the DTC. 5. Select Trans. Fluid Temp. On the scan tool. Does the scan tool display a Trans. Fluid Temp. Less than the specified value?	-39°C (-38°F)	Go to **Step 3**	Go to **Intermittent Conditions** in Engine Controls
3	1. Turn OFF the ignition. 2. Disconnect the AT inline 20-way connector. Additional DTCs may set. 3. Install the **J 44152** Jumper Harness (20 pins) on the transmission side of the AT inline 20-way connector. 4. Using the DMM and the **J 35616** GM Terminal Test Kit, measure the resistance between terminals L and M of the **J 44152** . Refer to **Automatic Transmission Inline 20-Way Connector End View** .Does the resistance measure less than the specified value?	100 K ohm	Go to **Step 7**	Go to **Step 4**
4	1. Test the signal circuit of the TFT sensor for an open between the AT inline 20-way connector and the TFT sensor. 2. Test the low reference circuit of the TFT sensor for an open between the AT inline 20-way connector and the TFT sensor. Refer to **Testing for Continuity** in Wiring Systems.Did you find an open condition?	-	Go to **Step 8**	Go to **Step 5**
5	Measure the resistance between terminal L and all other terminals of the **J 44152** . Does the resistance measure less than the specified value?	1000 ohm	Go to **Step 10**	Go to **Step 6**
6	Test the signal circuit of the TFT sensor for a short to voltage between the PCM connector and the AT inline 20-way connector. Refer to **Testing for a Short to Voltage** and	-		

cardiagn.com

	Wiring Repairs in Wiring Systems. Did you find and correct the condition?		Go to **Step 9**	Go to **Step 9**
7	1. Test the signal circuit of the TFT sensor for an open between the PCM connector and the AT inline 20-way connector. 2. Test the low reference circuit of the TFT sensor for an open between the PCM connector and the AT inline 20-way connector. Refer to **Testing for Continuity** and**Wiring Repairs** in Wiring Systems.Did you find and correct an open condition?	-	Go to **Step 12**	Go to **Step 11**
8	Replace the automatic transmission wiring harness. Refer to **Valve Body and Pressure Switch Replacement** . Did you complete the replacement?	-	Go to **Step 12**	-
9	Replace the TFT sensor. Refer to **Valve Body and Pressure Switch Replacement** . Did you complete the replacement?	-	Go to **Step 12**	-
10	1. Replace the automatic transmission wiring harness. 2. Replace the TFT sensor. Refer to **Valve Body and Pressure Switch Replacement** .Did you complete the replacements?	-	Go to **Step 12**	-
11	Replace the PCM. Refer to **Powertrain Control Module (PCM) Replacement** in Engine Controls. Did you complete the replacement?	-	Go to **Step 12**	-
12	Perform the following procedure in order to verify the repair: 1. Select DTC. 2. Select Clear Info. 3. Operate the vehicle under the following conditions: • Turn ON the ignition, with the engine OFF. • The Trans. Fluid Temp. Must be greater than -40°C (-40°F) for 6	-		

cardiagn.com

	seconds. 4. Select Specific DTC. 5. Enter DTC P0713. Has the test run and passed?		Go to **Step 13**	Go to **Step 2**
13	With the scan tool, observe the stored information, capture info, and DTC Info. Does the scan tool display any DTCs that you have not diagnosed?	-	Go to **Diagnostic Trouble Code (DTC) List** in Engine Controls	System OK

DTC P0719

cardiagn.com

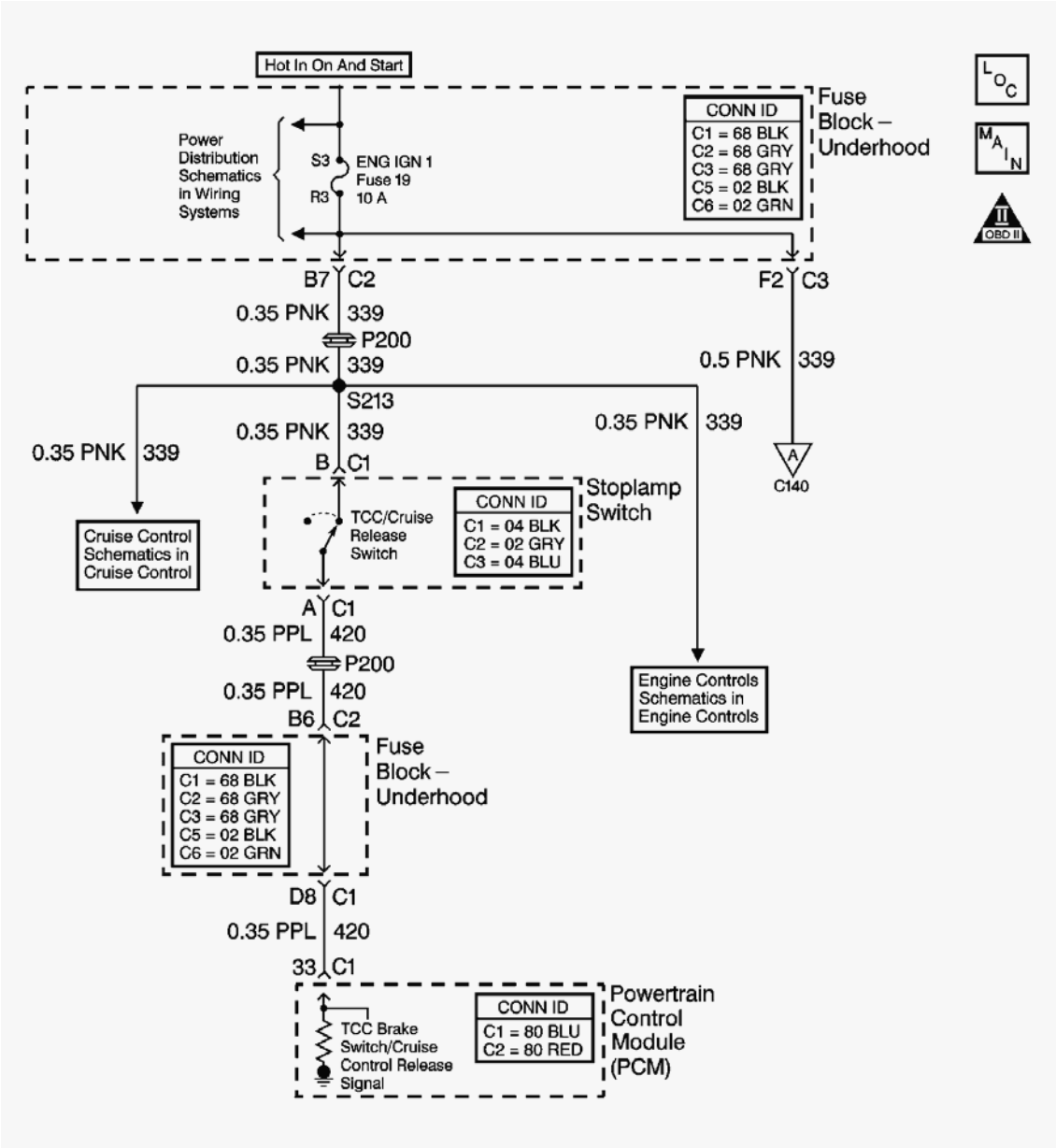

Fig. 8: DTC P0719 Schematics
Courtesy of GENERAL MOTORS CORP.

Circuit Description

The brake switch indicates brake pedal status to the powertrain control module (PCM). The brake switch is a normally-closed switch that supplies ignition voltage on the TCC brake switch signal circuit to the PCM. Applying the brake pedal opens the switch, interrupting voltage to the PCM. When the brake pedal is released, the PCM receives a constant ignition voltage. If the PCM receives a zero ignition voltage at the brake switch signal, and the torque converter clutch (TCC) is engaged, the PCM de-energizes the TCC solenoid valve.

When the PCM detects an open brake switch circuit, 0 volts, low input, during accelerations, then DTC P0719 sets. DTC P0719 is a type C DTC.

cardiagn.com

Conditions for Running the DTC

- No VSS assembly DTCs P0502 or P0503.
- The ignition is ON.
- DTC P0719 has not passed.

Conditions for Setting the DTC

The PCM detects an open brake switch or circuit, 0 volts, for 15 minutes without changing for 2 seconds, and the following events occur eight times:

- The vehicle speed is less than 8 km/h (5 mph);
- then the vehicle speed is 8-32 km/h (5-20 mph) for 4 seconds;
- then the vehicle speed is greater than 32 km/h (20 mph) for 6 seconds.

Action Taken When the DTC Sets

- The PCM does not illuminate the malfunction indicator lamp (MIL).
- The PCM disregards the brake switch input for TCC scheduling. The PCM then uses throttle position and vehicle speed inputs to determine TCC application and release. Use of these inputs may result in a noticeable harsh apply or abrupt release of the TCC.
- The PCM records the operating conditions when the Conditions for Setting the DTC are met. The PCM stores this information as Failure Records.
- The PCM stores DTC P0719 in PCM history.

Conditions for Clearing the DTC

- A scan tool can clear the DTC.
- The PCM clears the DTC from PCM history if the vehicle completes 40 warm-up cycles without a non-emission-related diagnostic fault occurring.
- The PCM cancels the DTC default actions when the fault no longer exists and/or the ignition switch is OFF long enough in order to power down the PCM.

Diagnostic Aids

Inspect for ABS DTCs. A faulty ABS condition may contribute to setting DTC P0719.

Test Description

The number below refers to the step number on the diagnostic table.

3: This step isolates the brake switch as a source for setting the DTC.

DTC P0719

		Value		

cardiagn.com

Step	Action	(s)	Yes	No
1	Did you perform the Diagnostic System Check - Engine Controls?	-	Go to **Step 2**	Go to **Diagnostic System Check - Engine Controls** in Engine Controls
2	1. Install a scan tool. 2. Turn ON the ignition, with the engine OFF. **IMPORTANT:** **Before clearing the DTC, use the scan tool in order to record the Failure Records. Using the Clear Info function erases the Failure Records from the PCM.** 3. Record the DTC Failure Records. 4. Clear the DTC. 5. Select TCC Brake Switch on the scan tool. **CAUTION:** **Refer to SIR Caution in Cautions and Notices.** 6. Disconnect the brake switch connector from the brake switch. 7. Connect a test lamp from terminal B of the brake switch connector to ground. Does the test lamp illuminate?	-	Go to **Step 3**	Go to **Step 4**
3	Connect a fused jumper wire between terminal A and terminal B of the brake switch connector. Did the TCC Brake Switch status on the scan tool change from Open to Closed?	-	Go to **Step 7**	Go to **Step 10**
4	Inspect the ENG IGN 1 fuse for an open. Refer to **Circuit Protection - Fuses** in Wiring Systems. Is the fuse open?	-	Go to **Step 5**	Go to **Step 9**
5	**IMPORTANT:** **The condition that affects this circuit may exist in other connecting branches of the circuit. Refer to Electrical Diagnosis for complete circuit distribution.** Test the ignition 1 voltage circuit of the brake,	-		

cardiagn.com

	switch for a short to ground.Refer to **Testing for Short to Ground** and **Wiring Repairs** in Wiring Systems.Did you find and correct the condition?		Go to **Step 12**	Go to **Step 6**
6	Test the TCC brake switch/cruise control release signal circuit of the brake switch for a short to ground. Refer to **Testing for Short to Ground** and **Wiring Repairs** in Wiring Systems. Did you find and correct the condition?	-	Go to **Step 12**	Go to **Step 11**
7	1. Inspect the brake switch for proper adjustment. 2. Adjust the brake switch as necessary. Refer to **Stop Lamp Switch Adjustment** in Lighting Systems. Did the brake switch require adjustment?	-	Go to **Step 12**	Go to **Step 8**
8	Replace the brake switch. Refer to **Stop Lamp Switch Replacement** in Lighting Systems. Did you complete the replacement?	-	Go to **Step 12**	-
9	**IMPORTANT:** **The condition that affects this circuit may exist in other connecting branches of the circuit. Refer to Electrical Diagnosis for complete circuit distribution.** Test the ignition 1 voltage circuit of the brake switch for an open.Refer to **Testing for Continuity** and **Wiring Repairs** in Wiring Systems.Did you find and correct the condition?	-	Go to **Step 12**	-
10	Test the TCC brake switch/cruise control release signal circuit of the brake switch for an open. Refer to **Testing for Continuity** and **Wiring Repairs** in Wiring Systems. Did you find and correct the condition?	-	Go to **Step 12**	Go to **Step 11**
11	Replace the PCM. Refer to **Powertrain Control Module (PCM) Replacement** in Engine Controls. Did you complete the replacement?	-	Go to **Step 12**	-
	Perform the following procedure in order to verify the repair: 1. Select DTC. 2. Select Clear Info.			

cardiagn.com

12	3. Turn ON the ignition, with the engine OFF. 4. Apply and release the brake pedal. 5. Verify that the scan tool TCC Brake Switch status indicates Closed, 12 volts, for 2 seconds. 6. Select Specific DTC. 7. Enter DTC P0719. Has the test run and passed?	-	Go to **Step 13**	Go to **Step 2**
13	With the scan tool, observe the stored information, capture info, and DTC Info. Does the scan tool display any DTCs that you have not diagnosed?	-	Go to **Diagnostic Trouble Code (DTC) List** in Engine Controls	System OK

DTC P0724

cardiagn.com

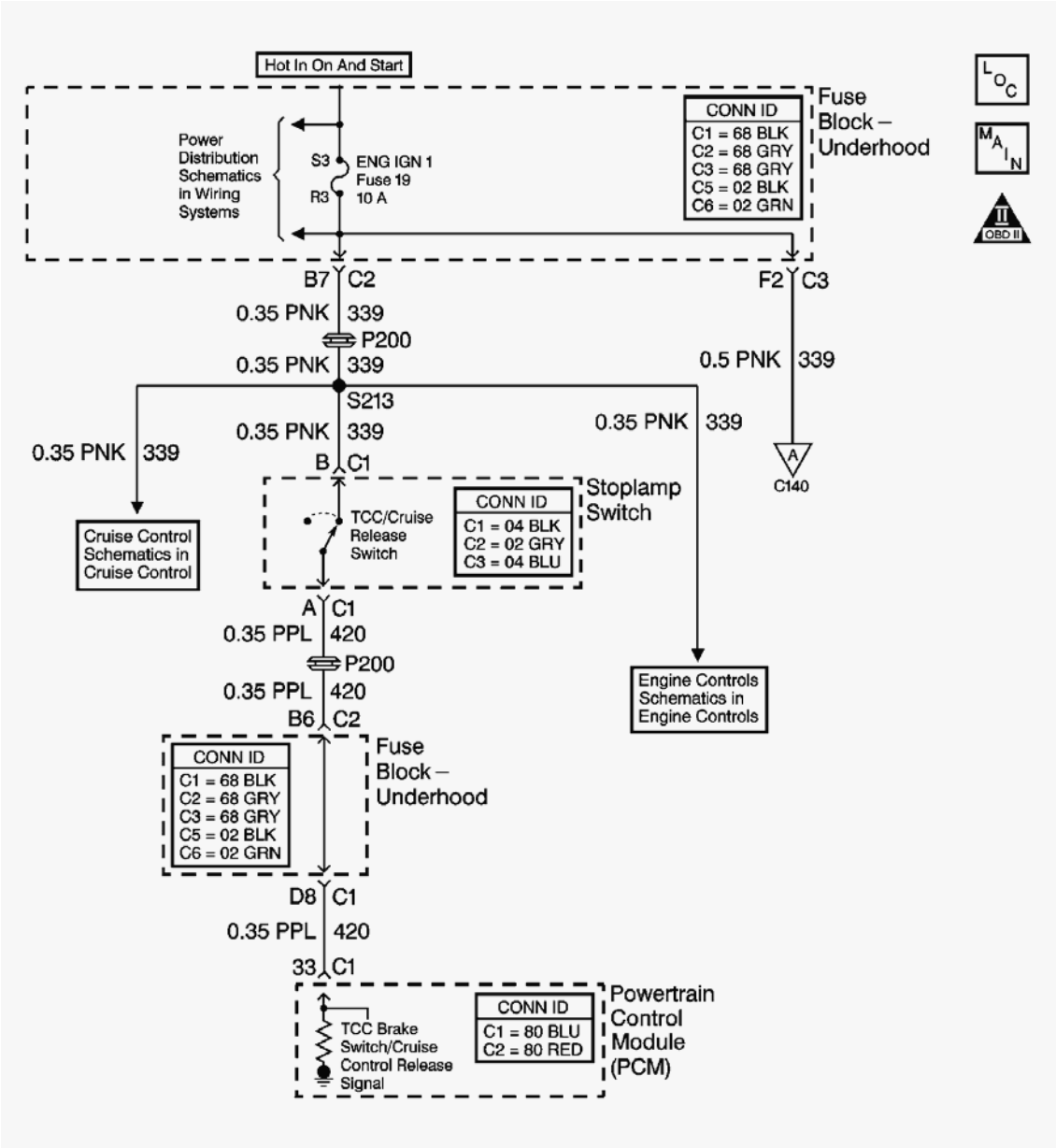

Fig. 9: DTC P0724 Schematics
Courtesy of GENERAL MOTORS CORP.

Circuit Description

The brake switch indicates brake pedal status to the powertrain control module (PCM). The brake switch is a normally-closed switch that supplies ignition voltage on the TCC brake switch signal circuit to the PCM. Applying the brake pedal opens the switch, interrupting voltage to the PCM. When the brake pedal is released, the PCM receives a constant voltage. If the PCM receives a zero ignition voltage at the brake switch signal, and the torque converter clutch (TCC) is engaged, the PCM de-energizes the TCC solenoid valve.

When the PCM detects a closed brake switch circuit, 12 volts, high input, during decelerations, then DTC P0724 sets. DTC P0724 is a type C DTC.

cardiagn.com

Conditions for Running the DTC

- No VSS assembly DTCs P0502 or P0503.
- The ignition is ON.

Conditions for Setting the DTC

The PCM detects a closed brake switch circuit, 12 volts, without changing for 2 seconds and the following events occur eight times:

- The vehicle speed is greater than 32 km/h (20 mph) for 6 seconds;
- then the vehicle speed is between 8-32 km/h (5-20 mph) for 4 seconds;
- then the vehicle speed is less than 8 km/h (5 mph).

Action Taken When the DTC Sets

- The PCM does not illuminate the malfunction indicator lamp (MIL).
- The PCM disregards the brake switch input for TCC scheduling. The PCM then uses throttle position and vehicle speed inputs to determine TCC application and release. Use of these inputs may result in a noticeable harsh apply or abrupt release of the TCC.
- The PCM records the operating conditions when the Conditions for Setting the DTC are met. The PCM stores this information as Failure Records.
- The PCM stores DTC P0724 in PCM history.

Conditions for Clearing the DTC

- A scan tool can clear the DTC.
- The PCM clears the DTC from PCM history if the vehicle completes 40 warm-up cycles without a non-emission-related diagnostic fault occurring.
- The PCM cancels the DTC default actions when the fault no longer exists and/or the ignition switch is OFF long enough in order to power down the PCM.

Diagnostic Aids

Inspect for ABS DTCs. A faulty ABS condition may contribute to setting DTC P0724.

Test Description

The numbers below refer to the step numbers on the diagnostic table.

2: This step isolates the brake switch as a source for setting the DTC.

DTC P0724

Step	Action	Value (s)	Yes	No

cardiagn.com

1	Did you perform the Diagnostic System Check - Engine Controls?	-	Go to **Step 2**	Go to **Diagnostic System Check - Engine Controls** in Engine Controls
2	1. Install a scan tool. 2. Turn ON the ignition, with the engine OFF. **IMPORTANT:** **Before clearing the DTC, use the scan tool in order to record the Failure Records. Using the Clear Info function erases the Failure Records from the PCM.** 3. Record the DTC Failure Records. 4. Clear the DTC. 5. Select TCC Brake Switch on the scan tool. **CAUTION:** **Refer to SIR Caution in Cautions and Notices.** 6. Disconnect the brake switch connector from the brake switch. Did the TCC Brake Switch status change from Closed to Open?	-	Go to **Step 3**	Go to **Step 5**
3	1. Inspect the brake switch for proper adjustment. 2. Adjust the brake switch as necessary. Refer to **Stop Lamp Switch Adjustment** in Lighting Systems. Did the brake switch require adjustment?	-	Go to **Step 7**	Go to **Step 4**
4	Replace the brake switch. Refer to **Stop Lamp Switch Replacement** in Lighting Systems. Did you complete the replacement?	-	Go to **Step 7**	-
5	Test the TCC brake switch/cruise control release signal circuit of the brake switch for a short to power.	-		

cardiagn.com

	Refer to **Testing for a Short to Voltage** and **Wiring Repairs** in Wiring Systems. Did you find and correct the condition?		Go to **Step 7**	Go to **Step 6**
6	Replace the PCM. Refer to **Powertrain Control Module (PCM) Replacement** in Engine Controls. Did you complete the replacement?	-	Go to **Step 7**	-
7	Perform the following procedure in order to verify the repair: 1. Select DTC. 2. Select Clear Info. 3. Turn ON the ignition, with the engine OFF. 4. Apply and release the brake pedal. 5. Verify that the scan tool TCC Brake Switch status indicates Open, 0 volts, for 2 seconds. 6. Select Specific DTC. 7. Enter DTC P0724. Has the test run and passed?	-	Go to **Step 8**	Go to **Step 2**
8	With the scan tool, observe the stored information, capture info, and DTC Info. Does the scan tool display any DTCs that you have not diagnosed?	-	Go to **Diagnostic Trouble Code (DTC) List** in Engine Controls	System OK

DTC P0740

cardiagn.com

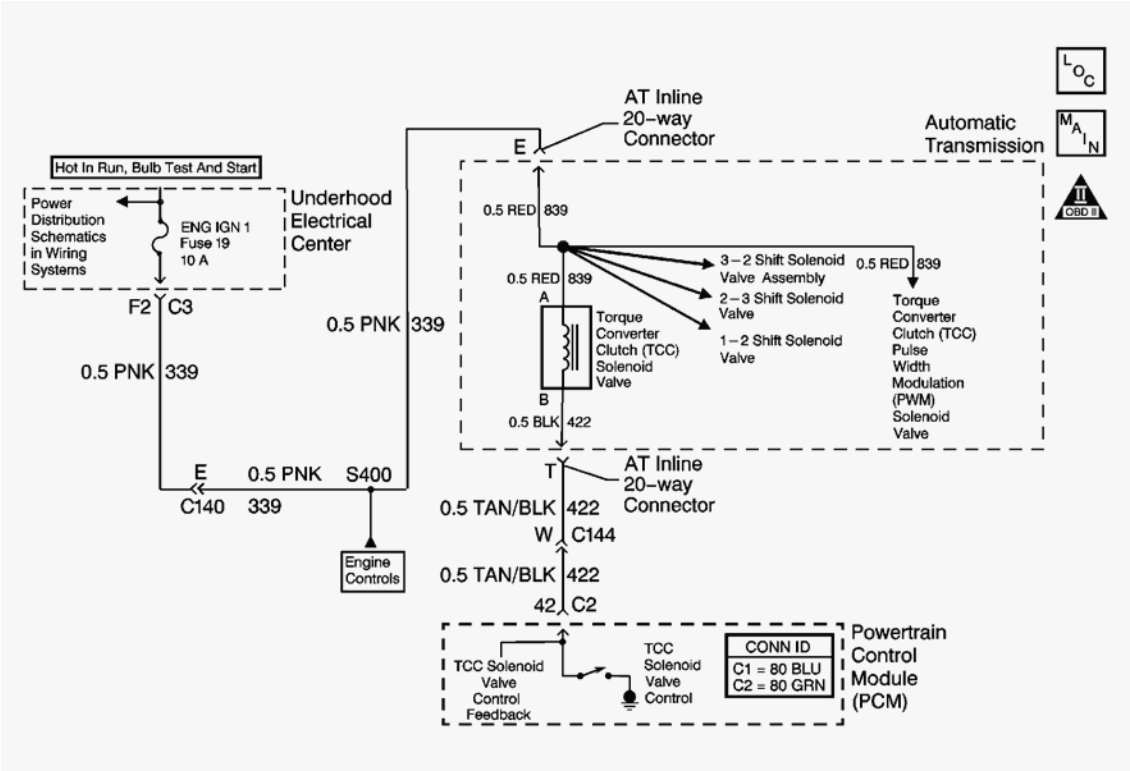

Fig. 10: DTC P0740 Schematics
Courtesy of GENERAL MOTORS CORP.

Circuit Description

The torque converter clutch (TCC) solenoid valve is an electrical device that is used with the torque converter clutch pulse width modulation (TCC PWM) solenoid valve in order to control TCC apply and release. The TCC solenoid valve attaches to the transmission case assembly extending into the pump cover. The TCC solenoid valve receives ignition voltage through the ignition 1 voltage circuit. The powertrain control module (PCM) controls the solenoid by providing the ground path on the TCC solenoid valve control circuit. The PCM monitors the throttle position (TP) voltage, the vehicle speed and other inputs in order to determine when to energize the TCC solenoid valve.

When the PCM detects a continuous open, short to ground or short to power in the TCC solenoid valve circuit, then DTC P0740 sets. DTC P0740 is a type B DTC.

Conditions for Running the DTC

- The system voltage is 10-18 volts.
- The engine speed is greater than 450 RPM for 5 seconds.
- The engine is not in fuel cutoff.

Conditions for Setting the DTC

DTC P0740 sets if one of the following conditions occurs for 5 seconds:

cardiagn.com

Condition 1

The PCM commands the solenoid ON and the voltage feedback remains high, B+.

Condition 2

The PCM commands the solenoid OFF and the voltage feedback remains low, 0 volt.

Action Taken When the DTC Sets

- The PCM illuminates the malfunction indicator lamp (MIL) during the second consecutive trip in which the Conditions for Setting the DTC are met.
- The PCM inhibits TCC engagement.
- The PCM inhibits 4th gear if the transmission is in hot mode.
- The PCM freezes transmission adapt functions.
- The PCM records the operating conditions when the Conditions for Setting the DTC are met. The PCM stores this information as Freeze Frame and Failure Records.
- The PCM stores DTC P0740 in PCM history during the second consecutive trip in which the Conditions for Setting the DTC are met.

Conditions for Clearing the MIL/DTC

- The PCM turns OFF the MIL during the third consecutive trip in which the diagnostic test runs and passes.
- A scan tool can clear the MIL/DTC.
- The PCM clears the DTC from PCM history if the vehicle completes 40 warm-up cycles without an emission-related diagnostic fault occurring.
- The PCM cancels the DTC default actions when the ignition switch is OFF long enough in order to power down the PCM.

Diagnostic Aids

With the TCC engaged, the TCC slip speed should be -20 to +40 RPM.

Test Description

The numbers below refer to the step numbers on the diagnostic table.

4: This step tests for voltage to the solenoid.

5: This step tests the ability of the PCM and wiring to control the ground circuit.

7: This step tests the resistance of the TCC solenoid valve and the automatic transmission (AT) wiring harness assembly.

DTC P0740

cardiagn.com

Step	Action	Value (s)	Yes	No
1	Did you perform the Diagnostic System Check - Engine Controls?	-	Go to **Step 2**	Go to **Diagnostic System Check - Engine Controls** in Engine Controls
2	1. Install a scan tool. 2. Turn ON the ignition, with the engine OFF. **IMPORTANT:** **Before clearing the DTC, use the scan tool in order to record the Freeze Frame and Failure Records. Using the Clear Info function erases the Freeze Frame and Failure Records from the PCM.** 3. Record the DTC Freeze Frame and Failure Records. 4. Clear the DTC. Are any of the following DTCs also set? • P0753 • P0758 • P0785 • P2761	-	Go to **Step 3**	Go to **Step 4**
3	Inspect the ENG IGN 1 fuse for an open. Refer to **Circuit Protection - Fuses** in Wiring Systems. Is the fuse open?	-	Go to **Step 9**	Go to **Step 4**
4	1. Turn OFF the ignition. 2. Disconnect the AT inline 20-way connector, additional DTCs may set. 3. Install the **J 44152** Jumper Harness (20 pins) on the engine side of the AT inline 20-way connector. 4. Turn ON the ignition, with the engine OFF. 5. Using the **J 35616** GM Terminal Test Kit, connect a test lamp from terminal E of the **J 44152** to ground. Refer to **Automatic Transmission Inline 20-**	-		

cardiagn.com

	Way Connector End View . Does the test lamp illuminate?		Go to **Step 5**	Go to **Step 12**
5	1. Connect the test lamp from terminal E to terminal T of the **J 44152** . Refer to **Automatic Transmission Inline 20-Way Connector End View** . 2. Use the scan tool in order to command the TCC solenoid valve ON and OFF three times. Does the test lamp turn ON and OFF with each command?	-	Go to **Step 7**	Go to **Step 6**
6	Is the test lamp always ON?	-	Go to **Step 13**	Go to **Step 14**
7	1. Install the **J 44152** on the transmission side of the AT inline 20-way connector. 2. Using the DMM and the **J 35616** , measure the resistance between terminals T and E of the **J 44152** . Refer to **Automatic Transmission Inline 20-Way Connector End View** . Does the resistance measure within the specified range?	21-33 ohm	Go to **Step 8**	Go to **Step 15**
8	1. Measure the resistance from terminal E of the **J 44152** to ground. 2. Measure the resistance from terminal T of the **J 44152** to ground. Do both readings measure greater than the specified value?	250 K ohm	Go to **Intermittent Conditions** in Engine Controls	Go to **Step 15**
9	**IMPORTANT:** **The condition that affects this circuit may exist in other connecting branches of the circuit. Refer to Power Distribution Schematics in Wiring Systems for complete circuit distribution.** Test the ignition circuit of the TCC solenoid valve for a short to ground between the underhood electrical center and the AT inline 20-way connector.Refer to **Testing for Short to Ground** and **Wiring Repairs** in Wiring Systems.Did you find and correct the condition?	-	Go to **Step 17**	Go to **Step 10**

cardiagn.com

10	**IMPORTANT:** **The condition that affects this circuit may exist in other connecting branches of the circuit. Refer to Power Distribution Schematics in Wiring Systems for complete circuit distribution.** Test the ignition circuit of the TCC solenoid valve for a short to ground between the AT inline 20-way connector and the TCC solenoid valve.Refer to **Testing for Short to Ground** in Wiring Systems.Did you find a short to ground condition?	-	Go to **Step 15**	Go to **Step 11**
11	1. Test each solenoid for a short to ground. 2. Replace the faulty solenoid as necessary. Did you complete the replacement?	-	Go to **Step 17**	-
12	**IMPORTANT:** **The condition that affects this circuit may exist in other connecting branches of the circuit. Refer to Power Distribution Schematics in Wiring Systems for complete circuit distribution.** Test the ignition circuit of the TCC solenoid valve for an open.Refer to **Testing for Continuity** and **Wiring Repairs** in Wiring Systems.Did you find and correct the condition?	-	Go to **Step 17**	-
13	Test the solenoid control circuit of the TCC solenoid valve for a short to ground between the PCM connector C2 and the AT inline 20-way connector. Refer to **Testing for Short to Ground** and **Wiring Repairs** in Wiring Systems. Did you find and correct the condition?	-	Go to **Step 17**	Go to **Step 16**
14	Test the solenoid control circuit of the TCC solenoid valve for an open or short to power between the PCM connector C2 and the AT inline 20-way connector. Refer to **Circuit Testing** and **Wiring Repairs** in Wiring Systems. Did you find and correct the condition?	-	Go to **Step 17**	Go to **Step 16**
15	Replace the AT wiring harness assembly, this includes the TCC solenoid valve. Refer to **Torque Converter Clutch Pulse Width Modulation (TCC PWM) Solenoid, TCC Solenoid, and Wiring Harness** . Did you complete the replacement?	-	Go to **Step 17**	-
	Replace the PCM.			

cardiagn.com

16	Refer to **Powertrain Control Module (PCM) Replacement** in Engine Controls. Did you complete the replacement?	-	Go to **Step 17**	-
17	Perform the following procedure in order to verify the repair: 1. Select DTC. 2. Select Clear Info. 3. Drive the vehicle in D4 with the TCC commanded ON for 5 seconds and commanded OFF for 5 seconds. 4. Select Specific DTC. 5. Enter DTC P0740. Has the test run and passed?	-	Go to **Step 18**	Go to **Step 2**
18	With the scan tool, observe the stored information, capture info, and DTC Info. Does the scan tool display any DTCs that you have not diagnosed?	-	Go to **Diagnostic Trouble Code (DTC) List** in Engine Controls	System OK

DTC P0742

cardiagn.com

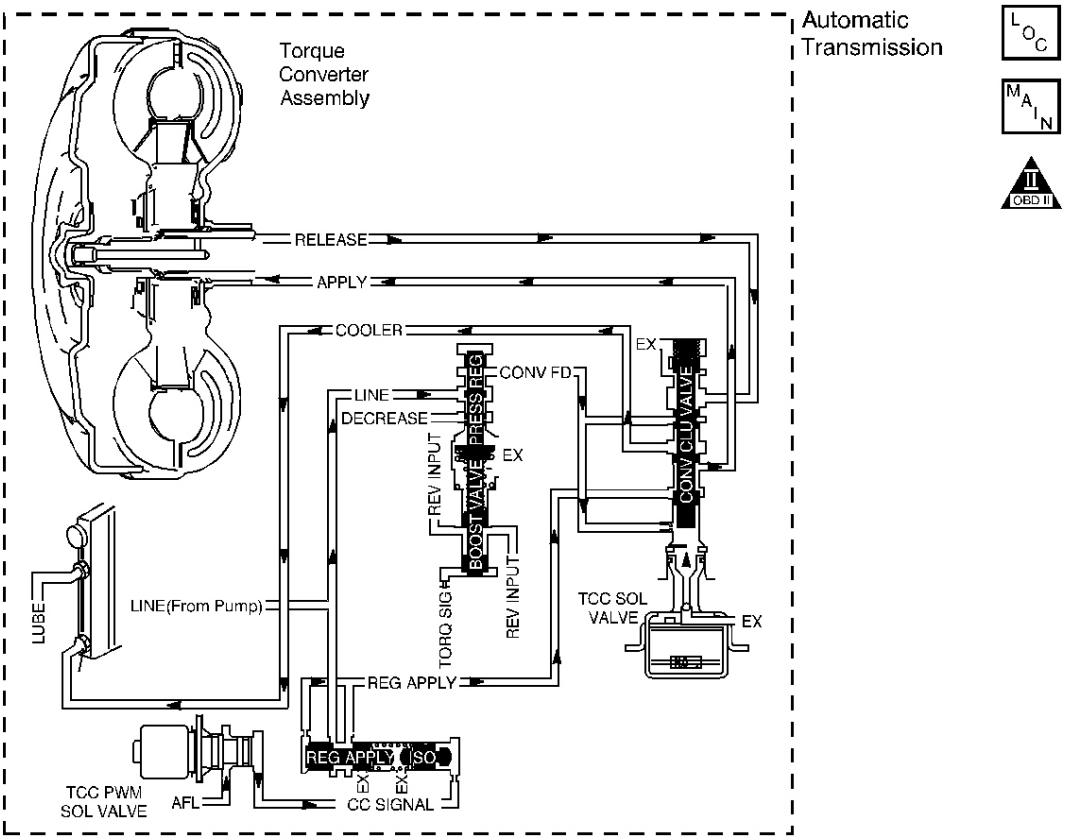

Fig. 11: Torque Converter Clutch (TCC) Fluid Diagram
Courtesy of GENERAL MOTORS CORP.

Circuit Description

The torque converter clutch (TCC) solenoid valve is a normally-open exhaust valve that is used with the torque converter clutch pulse width modulation (TCC PWM) solenoid valve in order to control fluid acting on the converter clutch apply valve. The TCC solenoid valve attaches to the transmission case assembly extending into the pump cover. When grounded, energized, by the powertrain control module (PCM), the TCC solenoid valve stops converter signal oil from exhausting. This causes converter signal oil pressure to increase and move the converter clutch apply valve against spring force and into the apply position. In this position, release fluid is open to an exhaust port and converter feed fluid fills the apply fluid circuit. The converter feed fluid applies the TCC. When the PCM no longer provides a ground path, the TCC solenoid valve de-energizes and apply fluid exhausts, releasing the TCC.

When the PCM detects low torque converter slip when the TCC is commanded OFF, then DTC P0742 sets. DTC P0742 is a type B DTC.

Conditions for Running the DTC

cardiagn.com

- No TP sensor DTCs P1120 or P1220.
- No VSS assembly DTCs P0502 or P0503.
- No TCC solenoid valve DTC P0740.
- No MAF DTCs.
- No TFP manual valve position switch DTC P1810.
- No TCC PWM solenoid valve DTC P2761.
- The TP angle is 17-45 percent.
- The engine speed is greater than 450 RPM for 6 seconds.
- The engine is not in fuel cutoff.
- The TFT is between 20-130°C (68-266°F).
- The engine torque is 68-542 N.m (50-400 lb ft).
- The engine speed is 1,000-3,000 RPM.
- The speed ratio is 0.64 to 1.35.
- The vehicle speed is 24-80 km/h (15-50 mph).
- The gear range does not change within 5 seconds.
- The commanded gear is not 1st.
- The gear range is D4.
- The TCC is commanded OFF.

Conditions for Setting the DTC

DTC P0742 sets if the following condition occurs twice.

The TCC slip speed is -20 to +20 RPM for 5 seconds.

Action Taken When the DTC Sets

- The PCM illuminates the malfunction indicator lamp (MIL) during the second consecutive trip in which the Conditions for Setting the DTC are met.
- The PCM inhibits 4th gear if in hot mode.
- The PCM freezes transmission adapt functions.
- The PCM records the operating conditions when the Conditions for Setting the DTC are met. The PCM stores this information as Freeze Frame and Failure Records.
- The PCM stores DTC P0742 in PCM history during the second consecutive trip in which the Conditions for Setting the DTC are met.

Conditions for Clearing the MIL/DTC

- The PCM turns OFF the MIL during the third consecutive trip in which the diagnostic test runs and passes.
- A scan tool can clear the MIL/DTC.

cardiagn.com

- The PCM clears the DTC from PCM history if the vehicle completes 40 warm-up cycles without an emission-related diagnostic fault occurring.
- The PCM cancels the DTC default actions when the ignition switch is OFF long enough in order to power down the PCM.

Diagnostic Aids

The TCC fluid hydraulically applies the TCC, possibly causing an engine stall, under the following conditions:

- The TCC is hydraulically stuck ON
- The parking brake is applied
- Any gear range is selected
- Contamination may cause the TCC apply valve to intermittently stick in the valve body
- Internal damage in the torque converter may cause no TCC apply

Test Description

The number below refers to the step number on the diagnostic table.

2: This step tests the hydraulic state of the TCC. When the PCM commands the TCC solenoid valve OFF, the slip speed should increase.

DTC P0742

Step	Action	Value (s)	Yes	No
1	Did you perform the Diagnostic System Check - Engine Controls?	-	Go to **Step 2**	Go to **Diagnostic System Check - Engine Controls** in Engine Controls
2	1. Install a scan tool. 2. Turn ON the ignition, with the engine OFF. **IMPORTANT:** **Before clearing the DTC, use the scan tool in order to record the Freeze Frame and Failure Records. Using the Clear Info. Function erases the Freeze Frame and Failure Records from the PCM.** 3. Record the DTC Freeze Frame and Failure Records. 4. Clear the DTC. 5. Drive the vehicle in the D4 drive range in	-20 to +20 RPM		

cardiagn.com

	second, third, or fourth gear under steady acceleration, with a TP angle at 20%. While the scan tool TCC Enable status is NO, does the scan tool display a TCC Slip Speed within the specified range?		Go to **Step 3**	Go to Diagnostic Aids
3	The TCC is hydraulically stuck ON. Inspect for the following: • Clogged exhaust orifice in the TCC solenoid valve. • Converter clutch apply valve stuck in the apply position. • Misaligned or damaged valve body gasket. • Restricted release passage. • Restricted transmission cooler line. Did you find and correct the condition?	-	Go to **Step 4**	-
4	Perform the following procedure in order to verify the repair: 1. Select DTC. 2. Select Clear Info. 3. Drive the vehicle in D4 with the TCC OFF and the throttle above 17%. Ensure that the scan tool TCC Slip Speed is 100-2,000 RPM for 2 seconds. 4. Select Specific DTC. 5. Enter DTC P0742. Has the test run and passed?	-	Go to **Step 5**	Go to **Step 2**
5	With the scan tool, observe the stored information, capture info, and DTC Info. Does the scan tool display any DTCs that you have not diagnosed?	-	Go to **Diagnostic Trouble Code (DTC) List** in Engine Controls	System OK

DTC P0748

cardiagn.com

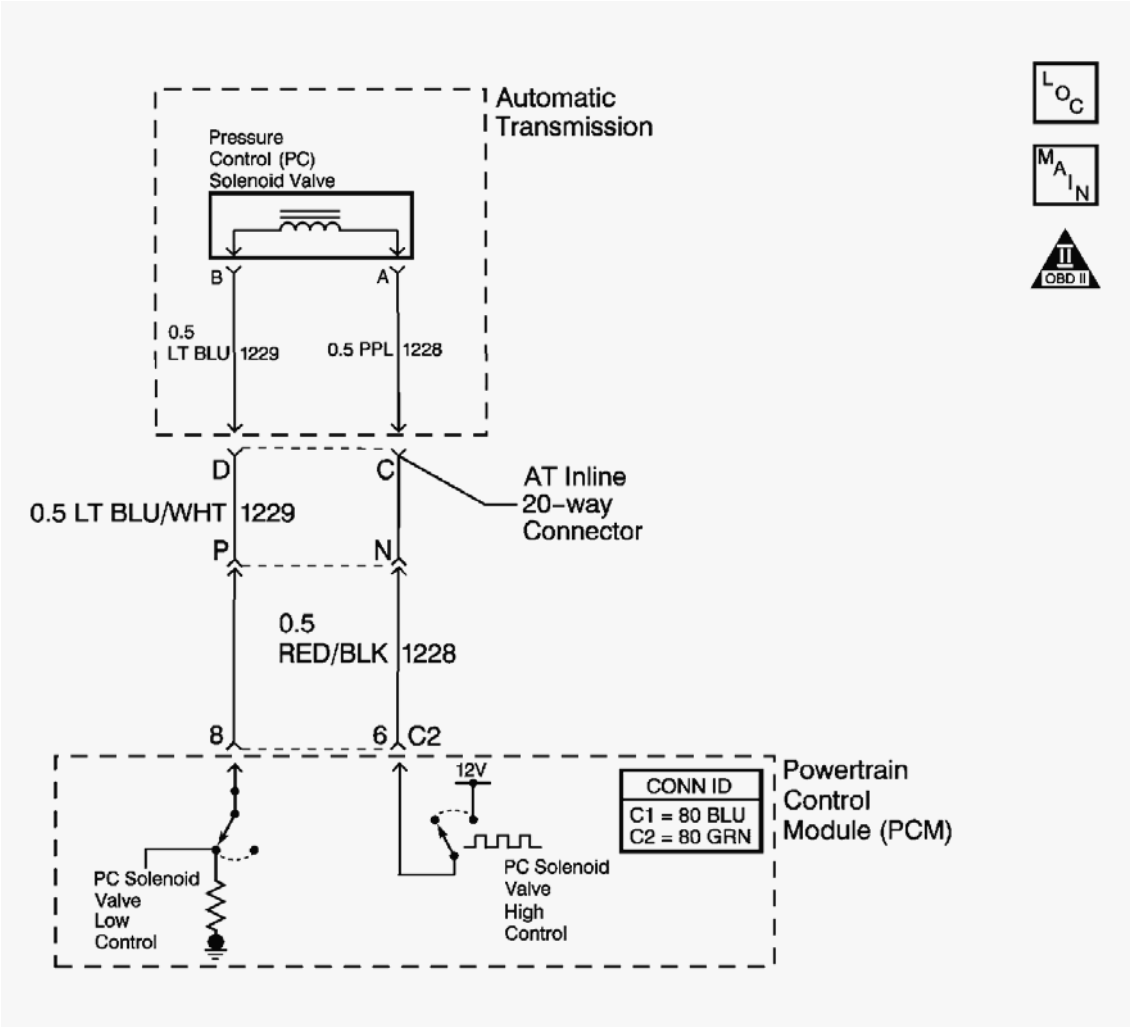

Fig. 12: DTC P0748 Schematics
Courtesy of GENERAL MOTORS CORP.

Circuit Description

The pressure control (PC) solenoid valve is an electronic device that regulates transmission line pressure based on the current flow through its coil winding. The magnetic field produced by the coil moves the solenoid's internal valve which varies pressure to the pressure regulator valve. The powertrain control module (PCM) controls the PC solenoid valve by applying a varying amount of amperage to the solenoid. The applied amperage can vary from 0.1 to 1.1 amps. Low amperage, 0.1 amp, indicates high line pressure. High amperage, 1.1 amps, indicates low line pressure. The duty cycle of the PC solenoid valve is expressed as a percentage of energized ON time. Zero percent indicates zero ON time, non-energized, or no current flow. Approximately 60 percent at idle indicates maximum ON time, energized, or high current flow. The PCM determines the appropriate line pressure for a given load by comparing the throttle, engine speed and other inputs.

When the PCM detects a continuous open or short in the PC solenoid valve circuit, then DTC P0748 sets. DTC P0748 is a type C DTC.

cardiagn.com

Conditions for Running the DTC

- The system voltage is 10-18 volts.
- The engine is running.

Conditions for Setting the DTC

The PC solenoid valve duty cycle reaches its high limit, approximately 95 percent, or low limit, approximately 0 percent.

Action Taken When the DTC Sets

- The PCM does not illuminate the malfunction indicator lamp (MIL).
- The PC solenoid valve is OFF.
- The PCM freezes transmission adapt functions.
- The PCM records the operating conditions when the Conditions for Setting the DTC are met. The PCM stores this information as Failure Records.
- The PCM stores DTC P0748 in PCM history.

Conditions for Clearing the DTC

- A scan tool can clear the DTC.
- The PCM clears the DTC from PCM history if the vehicle completes 40 warm-up cycles without a non-emission-related diagnostic fault occurring.
- The PCM cancels the DTC default actions when the ignition switch is OFF long enough in order to power down the PCM.

Diagnostic Aids

DTC P0748 may set under low voltage conditions caused by high electrical system demands.

Test Description

The numbers below refer to the step numbers on the diagnostic table.

2: This step tests the ability of the PCM to command the PC solenoid valve.

3: This step tests the PC solenoid valve and automatic transmission (AT) wiring harness assembly for incorrect resistance.

DTC P0748

Step	Action	Value (s)	Yes	No
1	Did you perform the Diagnostic System Check - Engine Controls?	-		Go to **Diagnostic System Check - Engine Controls** in

cardiagn.com

			Go to **Step 2**	Engine Controls
2	1. Install a scan tool. 2. Turn ON the ignition, with the engine OFF. **IMPORTANT:** **Before clearing the DTC, use the scan tool in order to record the Failure Records. Using the Clear Info function erases the Failure Records from the PCM.** 3. Record the DTC Failure Records. 4. Clear the DTC. 5. Start the engine. 6. Use the scan tool in order to command 0.1 amp through 1.0 amp while observing PC Sol. Ref. Current and PC Sol. Actual Current. Is the PC Sol. Actual Current always within the specified value of the PC Sol. Ref. Current?	0.16 amp	Go to **Intermittent Conditions** in Engine Controls	Go to **Step 3**
3	1. Turn OFF the ignition. 2. Disconnect the AT inline 20-way connector. 3. Install the **J 44152** Jumper Harness (20 pins) on the transmission side of the AT inline 20-way connector. 4. Using the DMM and the **J 35616** GM Terminal Test Kit, measure the resistance between terminals C and D of the **J 44152** . Refer to **Automatic Transmission Inline 20-Way Connector End View** . Does the resistance measure within the specified range?	3-7 ohm	Go to **Step 5**	Go to **Step 4**
4	Does the resistance measure greater than the specified value?	7 ohm	Go to **Step 9**	Go to **Step 10**
	Measure the resistance from terminal C of the **J 44152** to the transmission case. Refer to **Automatic Transmission Inline 20-**	250 K		

cardiagn.com

5	**Way Connector End View** . Does the resistance measure greater than the specified value?	ohm	Go to **Step 6**	Go to **Step 11**
6	1. Disconnect the **J 44152** from the transmission side of the AT inline 20-way connector. 2. Reconnect the transmission AT inline 20-way connector. 3. Disconnect the PCM connector C2. 4. Measure the resistance between PCM connector terminal C2-6 and terminal C2-8. Does the resistance measure within the specified range?	3-7 ohm	Go to **Step 8**	Go to **Step 7**
7	Does the resistance measure greater than the specified value?	7 ohm	Go to **Step 12**	Go to **Step 13**
8	Using the DMM and the **J 35616** , measure the resistance from PCM connector terminal C2-6 to ground. Does the resistance measure greater than the specified value?	250 K ohm	Go to **Step 17**	Go to **Step 14**
9	Test the high control circuit and the low control circuit of the PC solenoid for an open between the AT inline 20-way connector and the PC solenoid. Refer to **Testing for Continuity** in Wiring Systems. Did you find an open condition?	-	Go to **Step 16**	Go to **Step 15**
10	Test the high control circuit and the low control circuit of the PC solenoid for a shorted together condition between the AT inline 20-way connector and the PC solenoid. Refer to **Circuit Testing** in Wiring Systems. Did you find a shorted together condition?	-	Go to **Step 16**	Go to **Step 15**
11	Test the high control circuit and the low control circuit of the PC solenoid for a short to ground between the AT inline 20-way connector and the PC solenoid. Refer to **Testing for Short to Ground** in Wiring Systems. Did you find a short to ground condition?	-	Go to **Step 16**	Go to **Step 15**
	Test the high control circuit and the low control circuit of the PC solenoid for an open between the PCM connector C2 and the AT			

cardiagn.com

12	inline 20-way connector. Refer to **Testing for Continuity** and **Wiring Repairs** in Wiring Systems. Did you find and correct the condition?	-	Go to **Step 18**	-
13	Test the high control circuit and the low control circuit of the PC solenoid for a shorted together condition between the PCM connector C2 and the AT inline 20-way connector. Refer to **Circuit Testing** and **Wiring Repairs** in Wiring Systems. Did you find and correct the condition?	-	Go to **Step 18**	-
14	Test the high control circuit and the low control circuit of the PC solenoid for a short to ground between the PCM connector C2 and the AT inline 20-way connector. Refer to **Testing for Short to Ground** and **Wiring Repairs** in Wiring Systems. Did you find and correct the condition?	-	Go to **Step 18**	-
15	Replace the PC solenoid valve. Refer to **Valve Body and Pressure Switch Replacement** . Did you complete the replacement?	-	Go to **Step 18**	-
16	Replace the AT wiring harness assembly. Refer to **Valve Body and Pressure Switch Replacement** . Did you complete the replacement?	-	Go to **Step 18**	-
17	Test the high control circuit and the low control circuit of the PC solenoid for a short to voltage. Refer to **Testing for a Short to Voltage** and **Wiring Repairs** in Wiring Systems. Did you find and correct the condition?	-	Go to **Step 19**	Go to **Step 18**
18	Replace the PCM. Refer to **Powertrain Control Module (PCM) Replacement** in Engine Controls. Did you complete the replacement?	-	Go to **Step 19**	-
19	Perform the following procedure in order to verify the repair: 1. Select DTC. 2. Select Clear Info. 3. Start the engine and ensure the following condition is met: The difference between the scan tool PC	-		

cardiagn.com

	Sol. Actual Current and the PC Sol. Ref. Current is less than 0.16 amp. 4. Select Specific DTC. 5. Enter DTC P0748. Has the test run and passed?		Go to **Step 20**	Go to **Step 2**
20	With the scan tool, observe the stored information, capture info, and DTC Info. Does the scan tool display any DTCs that you have not diagnosed?	-	Go to **Diagnostic Trouble Code (DTC) List** in Engine Controls	System OK

DTC P0751

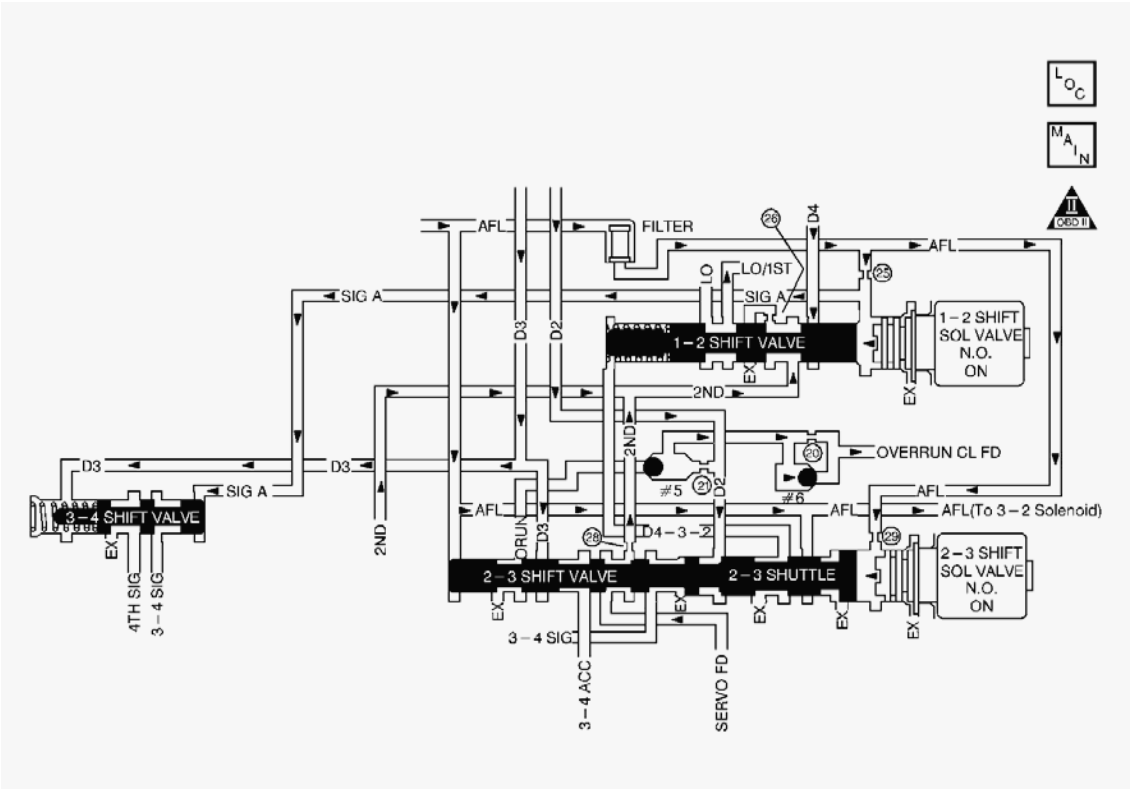

Fig. 13: The 1-2 Shift Solenoid (SS) And 2-3 Shift Solenoid (SS) Valve Fluid Diagram
Courtesy of GENERAL MOTORS CORP.

Circuit Description

The 1-2 shift solenoid (SS) valve controls the fluid flow acting on the 1-2 and 3-4 shift valves. The 1-2 SS valve is a normally-open exhaust valve that is used with the 2-3 SS valve, in order to allow four different shifting combinations.

cardiagn.com

When the PCM detects a 2-2-3-3 shift pattern, then DTC P0751 sets. DTC P0751 is a type B DTC.

Conditions for Running the DTC

- No TP sensor DTCs P1120 or P1220.
- No VSS assembly DTCs P0502 or P0503.
- No TCC solenoid valve DTC P0740.
- No TCC stuck ON DTC P0742.
- No 1-2 SS valve DTC P0753.
- No 2-3 SS valve DTC P0758.
- No 3-2 SS valve assembly DTC P0785.
- No TFP manual valve position switch DTC P1810.
- No TCC PWM solenoid valve DTC P2761.
- The engine speed is greater than 450 RPM for 5 seconds.
- The engine is not in fuel cutoff.
- The gear range is D4.
- The TP angle is greater than 10 percent.
- The transmission fluid temperature is 20-130°C (68-266°F).
- The system voltage is 10-18 volts.
- The engine torque is 68-542 N.m (50-400 lb ft).
- The transmission output speed is 150 RPM or greater.

Conditions for Setting the DTC

DTC P0751 sets if both of the following conditions occur twice:

Condition 1

- The PCM commands first gear for 2 seconds.
- The estimated gear ratio is 1.2-1.8.
- Speed ratio is greater than 0.35.
- All conditions are met for 0.5 seconds.

Condition 2

- The PCM commands fourth gear for 1 second.
- The estimated gear ratio is 0.95-1.15.
- Speed ratio is greater than 0.85.
- All conditions are met for 6 seconds.

Action Taken When the DTC Sets

cardiagn.com

- The PCM illuminates the malfunction indicator lamp (MIL).
- The PCM commands D2 line pressure.
- The PCM inhibits 4th gear if in hot mode.
- The PCM freezes transmission adapt functions.
- The PCM records the operating conditions when the Conditions for Setting the DTC are met. The PCM stores this information as Freeze Frame and Failure Records.
- The PCM stores DTC P0751 in PCM history.

Conditions for Clearing the MIL/DTC

- The PCM turns OFF the MIL during the third consecutive trip in which the diagnostic test runs and passes.
- A scan tool can clear the MIL/DTC.
- The PCM clears the DTC from PCM history if the vehicle completes 40 warm-up cycles without an emission-related diagnostic fault occurring.
- The PCM cancels the DTC default actions when the ignition switch is OFF long enough in order to power down the PCM.

Diagnostic Aids

- Verify that the transmission meets the specifications in the **Shift Speed** table.
- Other internal transmission failures may cause more than one shift to occur.
- Refer to the **Shift Solenoid Valve State and Gear Ratio** table.

Test Description

The number below refers to the step number on the diagnostic table.

2: This step tests that the PCM commanded all shifts, that all shift solenoid valves responded correctly, but that all the shifts did not occur.

DTC P0751

Step	Action	Value (s)	Yes	No
1	Did you perform the Diagnostic System Check - Engine Controls?	-	Go to **Step 2**	Go to **Diagnostic System Check - Engine Controls** in Engine Controls
	1. Install a scan tool. 2. Turn ON the ignition, with the engine OFF. **IMPORTANT:** **Before clearing the DTC, use the scan**			

cardiagn.com

2	**tool in order to record the Freeze Frame and Failure Records. Using the Clear Info function erases the Freeze Frame and Failure Records from the PCM.** 3. Record the DTC Freeze Frame and Failure Records. 4. Clear the DTC. 5. Drive the vehicle in D4 range under the following conditions: Accelerate the vehicle, ensuring that the PCM commands 1st, 2nd, 3rd and 4th gears. Did you detect a 2-2-3-3 shift pattern?	-	Go to **Step 3**	Go to Diagnostic Aids
3	Inspect the shift solenoid/hydraulic circuit for the following conditions: • An internal malfunction. • Damaged seals on the shift solenoid valve. Refer to **Shift Solenoid Leak Test** . Did you find and correct the condition?	-	Go to **Step 4**	-
4	Perform the following procedure in order to verify the repair: 1. Select DTC. 2. Select Clear Info. 3. Drive the vehicle in D4 range under the following conditions, only if traffic and road conditions permit: Hold the throttle at 20% and accelerate to 88 km/h (55 mph). 4. Select Specific DTC. 5. Enter DTC P0751. Has the test run and passed?	-	Go to **Step 5**	Go to **Step 2**
	With the scan tool, observe the stored information, capture info, and DTC Info.		Go to **Diagnostic Trouble Code**	

cardiagn.com

5	Does the scan tool display any DTCs that you have not diagnosed?	-	**(DTC) List** in Engine Controls	System OK

DTC P0752

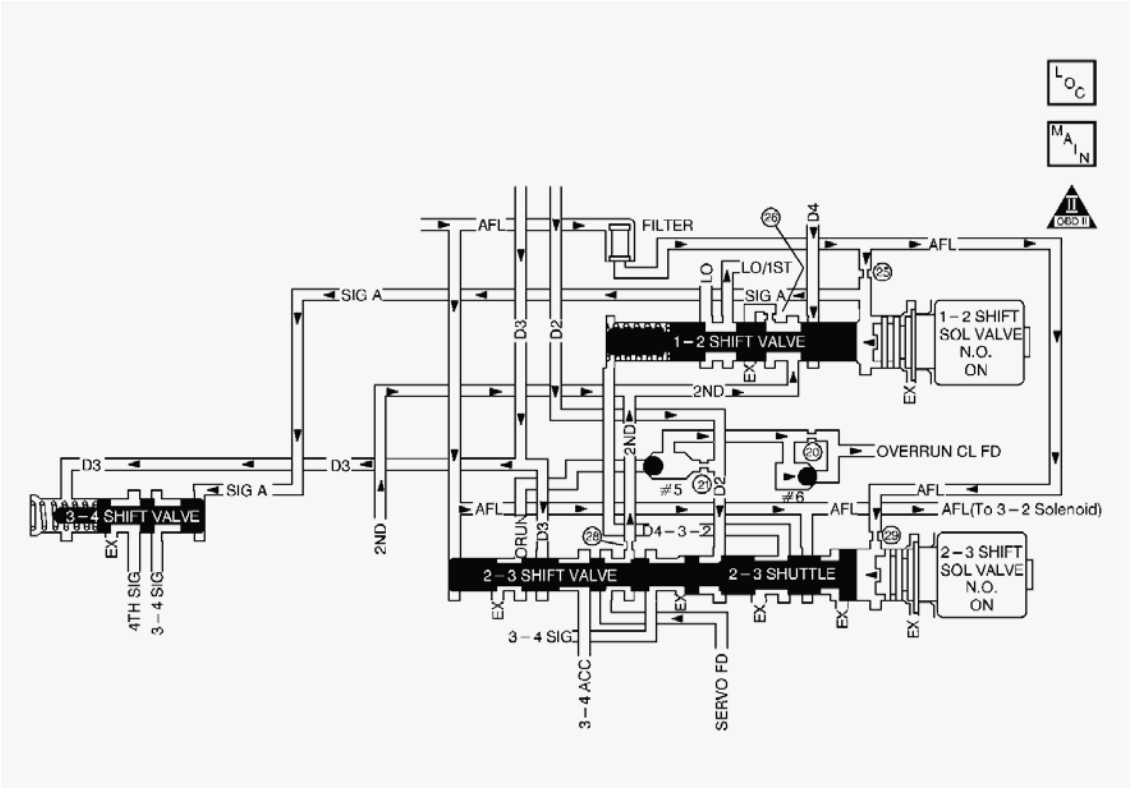

Fig. 14: The 1-2 Shift Solenoid (SS) And 2-3 Shift Solenoid (SS) Valve Fluid Diagram
Courtesy of GENERAL MOTORS CORP.

Circuit Description

The 1-2 shift solenoid (SS) valve controls the fluid flow acting on the 1-2 and 3-4 shift valves. The 1-2 SS valve is a normally-open exhaust valve that is used with the 2-3 SS valve, in order to allow four different shifting combinations.

When the PCM detects a 1-1-4-4 shift pattern, then DTC P0752 sets. DTC P0752 is a type B DTC.

Conditions for Running the DTC

- No TP sensor DTCs P1120 or P1220.
- No VSS assembly DTCs P0502 or P0503.
- No TCC solenoid valve DTC P0740.
- No TCC stuck ON DTC P0742.
- No 1-2 SS valve DTC P0753.

cardiagn.com

- No 2-3 SS valve DTC P0758.
- No 3-2 SS valve assembly DTC P0785.
- No TFP manual valve position switch DTC P1810.
- No TCC PWM solenoid valve DTC P2761.
- The engine speed is greater than 450 RPM for 5 seconds.
- The engine is not in fuel cutoff.
- The gear range is D4.
- The TP angle is greater than 10 percent.
- The transmission fluid temperature is 20-130°C (68-266°F).
- The system voltage is 10-18 volts.
- The transmission output speed is 150 RPM or greater.

Conditions for Setting the DTC

DTC P0752 sets if both of the following conditions occur twice:

Condition 1

- The PCM commands second gear for 1 second.
- The engine torque is 33-610 N.m (25-400 lb ft).
- The estimated gear ratio is 3.0-3.3.
- Speed ratio is greater than 0.5.
- All conditions are met for 2 seconds.

Condition 2

- The PCM commands third gear for 1 second.
- The engine torque is 68-542 N.m (50-400 lb ft).
- The estimated gear ratio is 0.65-0.9.
- Speed ratio is greater than 0.5.
- All conditions are met for 3 seconds.

Action Taken When the DTC Sets

- The PCM illuminates the malfunction indicator lamp (MIL).
- The PCM commands D2 line pressure.
- The PCM inhibits 3-2 downshifts if the vehicle speed is greater than 48 km/h (30 mph).
- The PCM freezes transmission adapt functions.
- The PCM records the operating conditions when the Conditions for Setting the DTC are met. The PCM stores this information as Freeze Frame and Failure Records.
- The PCM stores DTC P0752 in PCM history.

cardiagn.com

Conditions for Clearing the MIL/DTC

- The PCM turns OFF the MIL during the third consecutive trip in which the diagnostic test runs and passes.
- A scan tool can clear the MIL/DTC.
- The PCM clears the DTC from PCM history if the vehicle completes 40 warm-up cycles without an emission-related diagnostic fault occurring.
- The PCM cancels the DTC default actions when the ignition switch is OFF long enough in order to power down the PCM.

Diagnostic Aids

- Verify that the transmission meets the specifications in the **Shift Speed** table.
- Other internal transmission failures may cause more than one shift to occur.
- Refer to the **Shift Solenoid Valve State and Gear Ratio** table.

Test Description

The number below refers to the step number on the diagnostic table.

2: This step tests that the PCM commanded all shifts, that all shift solenoid valves responded correctly, but that all the shifts did not occur.

DTC P0752

Step	Action	Value (s)	Yes	No
1	Did you perform the Diagnostic System Check - Engine Controls?	-	Go to **Step 2**	Go to **Diagnostic System Check - Engine Controls** in Engine Controls
2	1. Install a scan tool. 2. Turn ON the ignition, with the engine OFF. **IMPORTANT:** **Before clearing the DTC, use the scan tool in order to record the Freeze Frame and Failure Records. Using the Clear Info function erases the Freeze Frame and Failure Records from the PCM.** 3. Record the DTC Freeze Frame and Failure Records. 4. Clear the DTC. 5. Drive the vehicle in D4 range under the	-		

cardiagn.com

	following conditions: Accelerate the vehicle, ensuring that the PCM commands 1st, 2nd, 3rd and 4th gears. Did you detect a 1-1-4-4 shift pattern?		Go to **Step 3**	Go to Diagnostic Aids
3	Inspect the shift solenoid/hydraulic circuit for the following conditions: • An internal malfunction. • Damaged seals on the shift solenoid valve. Refer to **Shift Solenoid Leak Test** . Did you find and correct the condition?	-	Go to **Step 4**	-
4	Perform the following procedure in order to verify the repair: 1. Select DTC. 2. Select Clear Info. 3. Drive the vehicle in D4 range under the following conditions, only if traffic and road conditions permit: Hold the throttle at 20% and accelerate to 88 km/h (55 mph). 4. Select Specific DTC. 5. Enter DTC P0752. Has the test run and passed?	-	Go to **Step 5**	Go to **Step 2**
5	With the scan tool, observe the stored information, capture info, and DTC Info. Does the scan tool display any DTCs that you have not diagnosed?	-	Go to **Diagnostic Trouble Code (DTC) List** in Engine Controls	System OK

DTC P0753

cardiagn.com

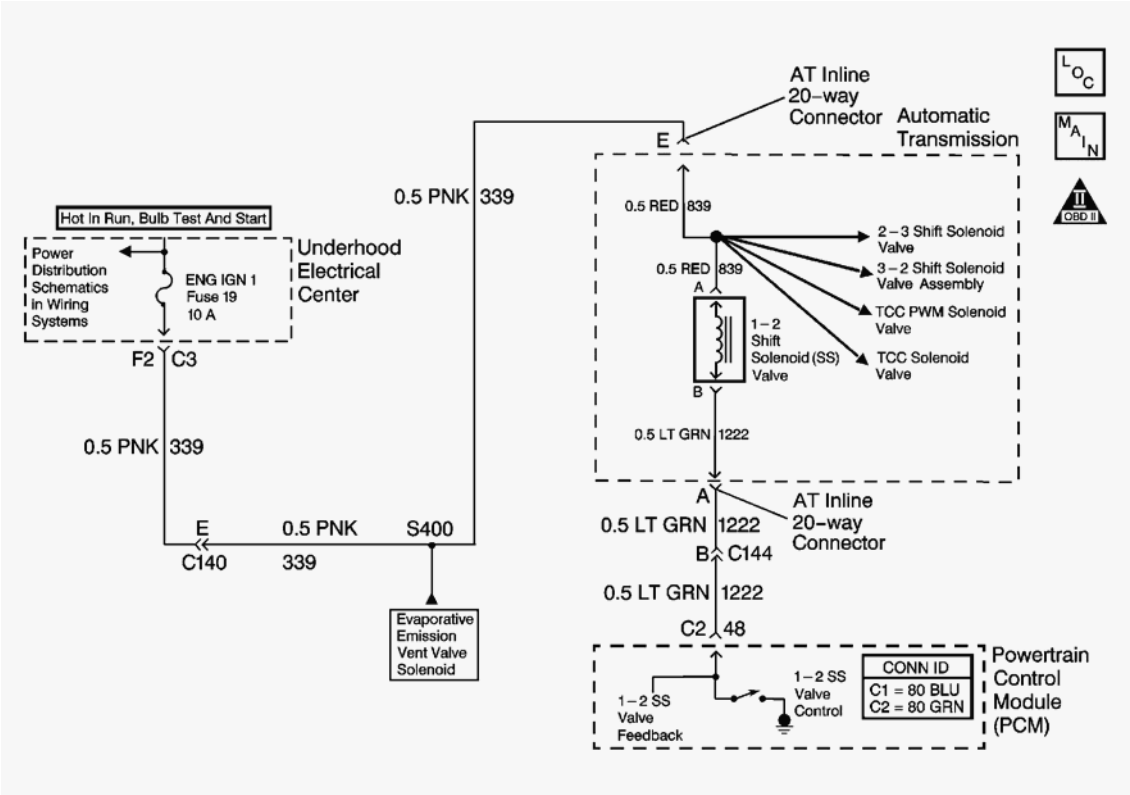

Fig. 15: DTC P0753 Schematics
Courtesy of GENERAL MOTORS CORP.

Circuit Description

The 1-2 shift solenoid (SS) valve controls the fluid flow acting on the 1-2 and 3-4 shift valves. The 1-2 SS valve is a normally-open exhaust valve that is used with the 2-3 SS valve in order to allow four different shifting combinations. The solenoid attaches to the control valve body within the transmission. The 1-2 SS valve receives ignition voltage through ignition 1 circuit. The powertrain control module (PCM) controls the solenoid by providing the ground path on the 1-2 shift solenoid valve control circuit.

When the PCM detects a continuous open, short to ground or short to power in the 1-2 SS valve circuit, then DTC P0753 sets. DTC P0753 is a type B DTC.

Conditions for Running the DTC

- The system voltage is 10-18 volts.
- The engine speed is greater than 450 RPM for 5 seconds.
- The engine is not in fuel cutoff.

Conditions for Setting the DTC

DTC P0753 sets if one of the following conditions occurs for 5 seconds:

cardiagn.com

Condition 1

The PCM commands the solenoid ON and the voltage feedback remains high, B+.

Condition 2

The PCM commands the solenoid OFF and the voltage feedback remains low, 0 volts.

Action Taken When the DTC Sets

- The PCM illuminates the malfunction indicator lamp (MIL) during the second consecutive trip in which the Conditions for Setting the DTC are met.
- The PCM inhibits TCC engagement.
- The PCM commands D2 line pressure.
- The PCM inhibits 3-2 downshifts if the vehicle speed is greater than 48 km/h (30 mph).
- The PCM inhibits 4th gear if in hot mode.
- The PCM freezes transmission adapt functions.
- The PCM records the operating conditions when the Conditions for Setting the DTC are met. The PCM stores this information as Freeze Frame and Failure Records.
- The PCM stores DTC P0753 in the PCM history during the second consecutive trip in which the Conditions for Setting the DTC are met.

Conditions for Clearing the MIL/DTC

- The PCM turns OFF the MIL during the third consecutive trip in which the diagnostic test runs and passes.
- A scan tool can clear the MIL/DTC.
- The PCM clears the DTC from PCM history if the vehicle completes 40 warm-up cycles without an emission-related diagnostic fault occurring.
- The PCM cancels the DTC default actions when the ignition switch is OFF long enough in order to power down the PCM.

Test Description

The numbers below refer to the step numbers on the diagnostic table.

4: This step tests the function of the 1-2 SS valve and the automatic transmission (AT) wiring harness assembly.

5: This step tests for power to the 1-2 SS valve from the ignition through the fuse.

6: This step tests the ability of the PCM and the wiring to control the ground circuit.

8: This step measures the resistance of the AT wiring harness assembly and the 1-2 SS valve.

DTC P0753

		Value		

cardiagn.com

Step	Action	(s)	Yes	No
1	Did you perform the Diagnostic System Check - Engine Controls?	-	Go to **Step 2**	Go to **Diagnostic System Check - Engine Controls** in Engine Controls
2	1. Install a scan tool. 2. Turn ON the ignition, with the engine OFF. **IMPORTANT:** **Before clearing the DTC, use the scan tool in order to record the Freeze Frame and Failure Records. Using the Clear Info function erases the Freeze Frame and Failure Records from the PCM.** 3. Record the DTC Freeze Frame and Failure Records. 4. Clear the DTC. Are any of the following DTCs also set? • P0740 • P0758 • P0785 • P2761	-	Go to **Step 3**	Go to **Step 4**
3	Inspect the ENG IGN 1 fuse for an open. Refer to **Circuit Protection - Fuses** in Wiring Systems. Is the fuse open?	-	Go to **Step 12**	Go to **Step 5**
4	Use the scan tool in order to command the 1-2 SS valve ON and OFF three times while listening to the bottom of the transmission pan, a stethoscope may be necessary. Does the solenoid click when commanded?	-	Go to **Intermittent Conditions** in Engine Controls	Go to **Step 5**
5	1. Turn OFF the ignition. 2. Disconnect the AT inline 20-way connector, additional DTCs may set. 3. Install the **J 44152** Jumper Harness (20 pins) on the engine side of the AT inline 20-way connector. 4. Turn ON the ignition, with the engine OFF. 5. Using the **J 35616** GM Terminal Test Kit,	-		

cardiagn.com

	connect a test lamp from terminal E of the **J 44152** to ground. Refer to **Automatic Transmission Inline 20-Way Connector End View** . Does the test lamp illuminate?		Go to **Step 6**	Go to **Step 15**
6	1. Connect a test lamp between terminal E and terminal A of the **J 44152** . Refer to **Automatic Transmission Inline 20-Way Connector End View** . 2. Use the scan tool in order to command the 1-2 SS valve ON and OFF three times. Does the test lamp turn ON and OFF with each command?	-	Go to **Step 8**	Go to **Step 7**
7	Is the test lamp always ON?	-	Go to **Step 16**	Go to **Step 17**
8	1. Install the **J 44152** on the transmission side of the AT inline 20-way connector. 2. Using the DMM and the **J 35616** , measure the resistance between terminal A and terminal E of the **J 44152** . Refer to **Automatic Transmission Inline 20-Way Connector End View** . Does the resistance measure within the specified range?	19-31 ohm	Go to **Step 9**	Go to **Step 10**
9	Measure the resistance from terminal A to ground, and from terminal E to ground. Do both readings measure greater than the specified value?	250 K ohm	Go to **Intermittent Conditions** in Engine Controls	Go to **Step 11**
10	1. Disconnect the AT wiring harness assembly from the 1-2 SS valve. 2. Measure the resistance of the 1-2 SS valve. Does the resistance measure within the specified range?	19-31 ohm	Go to **Step 18**	Go to **Step 19**
11	1. Disconnect the AT wiring harness assembly from the 1-2 SS valve. 2. Measure the resistance from the component's terminals to ground.	250 K ohm		

cardiagn.com

	Do both readings measure greater than the specified value?		Go to **Step 18**	Go to **Step 19**
12	**IMPORTANT:** **The condition that affects this circuit may exist in other connecting branches of the circuit. Refer to Power Distribution Schematics in Wiring Systems for complete circuit distribution.** Test the ignition circuit of the 1-2 SS valve for a short to ground between the underhood electrical center and the AT inline 20-way connector.Refer to **Testing for Short to Ground** and **Wiring Repairs** in Wiring Systems.Did you find and correct the condition?	-	Go to **Step 21**	Go to **Step 13**
13	**IMPORTANT:** **The condition that affects this circuit may exist in other connecting branches of the circuit. Refer to Power Distribution Schematics in Wiring Systems for complete circuit distribution.** Test the ignition circuit of the 1-2 SS valve for a short to ground between the AT inline 20-way connector and the 1-2 SS valve.Refer to **Testing for Short to Ground** in Wiring Systems.Did you find a short to ground condition?	-	Go to **Step 18**	Go to **Step 14**
14	1. Test each solenoid for a short to ground. 2. Replace the faulty solenoid as necessary. Did you complete the replacement?	-	Go to **Step 21**	-
15	**IMPORTANT:** **The condition that affects this circuit may exist in other connecting branches of the circuit. Refer to Power Distribution Schematics in Wiring Systems for complete circuit distribution.** Test the ignition circuit of the 1-2 SS valve for an open.Refer to **Testing for Continuity** and **Wiring Repairs** in Wiring Systems.Did you find and correct the condition?	-	Go to **Step 21**	-
16	Test the control circuit of the 1-2 SS valve for a short to ground between the PCM connector C2 and the AT inline 20-way connector. Refer to **Testing for Short to Ground** and **Wiring Repairs** in Wiring Systems. Did you find and correct the condition?	-	Go to **Step 21**	Go to **Step 20**

cardiagn.com

17	Test the control circuit of the 1-2 SS valve for an open or short to power between the PCM connector C2 and the AT inline 20-way connector. Refer to **Circuit Testing** and **Wiring Repairs** in Wiring Systems. Did you find and correct the condition?	-	Go to **Step 21**	Go to **Step 20**
18	Replace the AT wiring harness assembly. Refer to **Torque Converter Clutch Pulse Width Modulation (TCC PWM) Solenoid, TCC Solenoid, and Wiring Harness** . Did you complete the replacement?	-	Go to **Step 21**	-
19	Replace the 1-2 SS valve. Refer to **Control and Shift Solenoids Replacement** . Did you complete the replacement?	-	Go to **Step 21**	-
20	Replace the PCM. Refer to **Powertrain Control Module (PCM) Replacement** in Engine Controls. Did you complete the replacement?	-	Go to **Step 21**	-
21	Perform the following procedure in order to verify the repair: 1. Select DTC. 2. Select Clear Info. 3. Drive the vehicle in D4 and ensure the following conditions are met: • The PCM commands the 1-2 SS valve ON and the voltage feedback drops to zero. • The PCM commands the 1-2 SS valve OFF and the voltage feedback increases to B+. • All conditions are met for 5 seconds. 4. Select Specific DTC. 5. Enter DTC P0753. Has the test run and passed?	-	Go to **Step 22**	Go to **Step 2**
22	With the scan tool, observe the stored information, capture info, and DTC Info. Does the scan tool display any DTCs that you have not diagnosed?	-	Go to **Diagnostic Trouble Code (DTC) List** in Engine Controls	System OK

DTC P0756

cardiagn.com

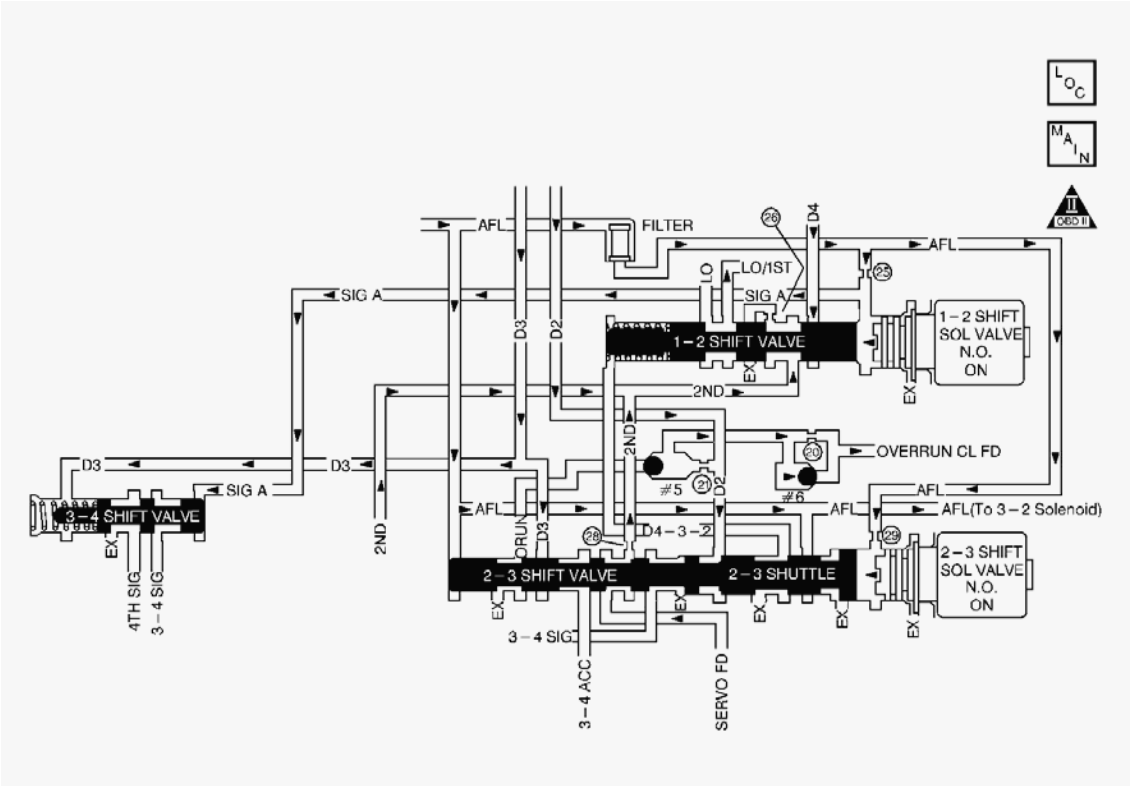

Fig. 16: The 1-2 Shift Solenoid (SS) And 2-3 Shift Solenoid (SS) Valve Fluid Diagram
Courtesy of GENERAL MOTORS CORP.

Circuit Description

The 2-3 shift solenoid (SS) valve controls the fluid flow acting on the 2-3 shift valves. The 2-3 SS valve is a normally-open exhaust valve that is used with the 1-2 SS valve, in order to allow four different shifting combinations.

When the PCM detects a 4-3-3-4 shift pattern, then DTC P0756 sets. DTC P0756 is a type A DTC.

Conditions for Running the DTC

- No TP sensor DTCs P1120 or P1220.
- No VSS assembly DTCs P0502 or P0503.
- No TCC solenoid valve DTC P0740.
- No TCC stuck ON DTC P0742.
- No 1-2 SS valve DTC P0753.
- No 2-3 SS valve DTC P0758.
- No 3-2 SS valve assembly DTC P0785.
- No TFP manual valve position switch DTC P1810.
- No TCC PWM solenoid valve DTC P2761.
- The engine speed is greater than 450 RPM for 5 seconds.

cardiagn.com

- The engine is not in fuel cutoff.
- The gear range is D4.
- The TP angle is greater than 10 percent.
- The transmission fluid temperature is 20-130°C (68-266°F).
- The system voltage is 10-18 volts.

Conditions for Setting the DTC

DTC P0756 sets if both of the following conditions occur:

Condition 1

- The PCM commands first gear for 2 seconds.
- The estimated gear ratio is 0 to 1.4.
- The engine torque is 68-542 N.m (50-400 lb ft).
- The transmission output speed is 200 RPM or greater.
- TCC Slip Speed is -3,000 to +200 RPM.
- All conditions are met for 1 second.

Condition 2

- The PCM commands second gear for 1 second.
- The estimated gear ratio is 0.9 to 1.2.
- The engine torque is 68-542 N.m (50-400 lb ft).
- Speed ratio is 0.5 or greater.
- All conditions are met for 2 seconds.

Action Taken When the DTC Sets

- The PCM illuminates the malfunction indicator lamp (MIL).
- The PCM commands third gear only.
- The PCM commands maximum line pressure.
- The PCM inhibits TCC engagement.
- The PCM inhibits 4th gear if in hot mode.
- The PCM freezes transmission adapt functions.
- The PCM records the operating conditions when the Conditions for Setting the DTC are met. The PCM stores this information as Freeze Frame and Failure Records.
- The PCM stores DTC P0756 in PCM history.

Conditions for Clearing the MIL/DTC

cardiagn.com

- The PCM turns OFF the MIL during the third consecutive trip in which the diagnostic test runs and passes.
- A scan tool can clear the MIL/DTC.
- The PCM clears the DTC from PCM history if the vehicle completes 40 warm-up cycles without an emission-related diagnostic fault occurring.
- The PCM cancels the DTC default actions when the ignition switch is OFF long enough in order to power down the PCM.

Diagnostic Aids

- Verify that the transmission meets the specifications in the **Shift Speed** table.
- Refer to the **Shift Solenoid Valve State and Gear Ratio** table.

Test Description

The number below refers to the step number on the diagnostic table.

2: This step tests that the PCM commanded all shifts, that all shift solenoid valves responded correctly, but that all the shifts did not occur.

DTC P0756

Step	Action	Value (s)	Yes	No
1	Did you perform the Diagnostic System Check - Engine Controls?	-	Go to **Step 2**	Go to **Diagnostic System Check - Engine Controls** in Engine Controls
2	1. Install a scan tool. 2. Turn ON the ignition, with the engine OFF. **IMPORTANT:** **Before clearing the DTC, use the scan tool in order to record the Freeze Frame and Failure Records. Using the Clear Info function erases the Freeze Frame and Failure Records from the PCM.** 3. Record the DTC Freeze Frame and Failure Records. 4. Clear the DTC. 5. Drive the vehicle in D4 range under the following conditions: Accelerate the vehicle, ensuring that the	-		

cardiagn.com

	PCM commands 1st, 2nd, 3rd and 4th gears. Did you detect a 4-3-3-4 shift pattern?		Go to **Step 3**	Go to Diagnostic Aids
3	1. Inspect the shift solenoid/hydraulic circuit for the following conditions: • Debris or chips in the AFL oil passage. • Debris or chips restricting oil flow in passage #29 of the case or through the spacer plate gasket into the valve body. • A cracked 2-3 shift solenoid. • A 2-3 shift valve which is stuck or hung up in the valve body bore. • A 2-3 shuttle valve which is stuck or hung up in its bore. • Damaged seals on the shift solenoid valves. Refer to **Shift Solenoid Leak Test** . 2. Clean and inspect the related valves, bores and the valve body for debris or contamination. Did you find and correct the condition?	-	Go to **Step 4**	-
4	Perform the following procedure in order to verify the repair: 1. Select DTC. 2. Select Clear Info. 3. Drive the vehicle in D4 range under the following conditions, only if traffic and road conditions permit: Hold the throttle at 40% and accelerate to 64 km/h (40 mph). 4. Select Specific DTC. 5. Enter DTC P0756. Has the test run and passed?	-	Go to **Step 5**	Go to **Step 2**

cardiagn.com

5	With the scan tool, observe the stored information, capture info, and DTC Info. Does the scan tool display any DTCs that you have not diagnosed?	-	Go to **Diagnostic Trouble Code (DTC) List** in Engine Controls	System OK

DTC P0757

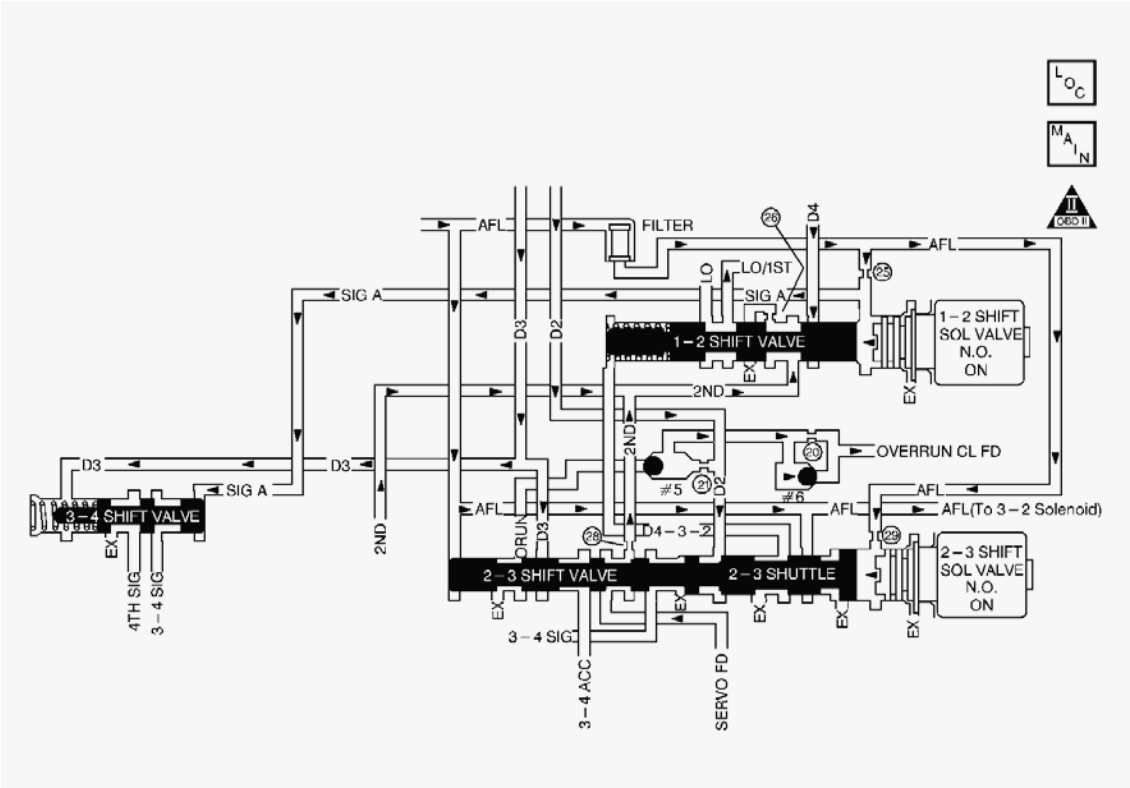

Fig. 17: The 1-2 Shift Solenoid (SS) And 2-3 Shift Solenoid (SS) Valve Fluid Diagram
Courtesy of GENERAL MOTORS CORP.

Circuit Description

The 2-3 shift solenoid (SS) valve controls the fluid flow acting on the 2-3 shift valves. The 2-3 SS valve is a normally-open exhaust valve that is used with the 1-2 SS valve in order to allow four different shifting combinations.

When the PCM detects a 1-2-2-1 shift pattern, then DTC P0757 sets. DTC P0757 is a type A DTC.

Conditions for Running the DTC

- No TP sensor DTCs P1120 or P1220.
- No VSS assembly DTCs P0502 or P0503.
- No TCC solenoid valve DTC P0740.
- No TCC stuck ON DTC P0742.

cardiagn.com

- No 1-2 SS valve DTC P0753.
- No 2-3 SS valve DTC P0758.
- No 3-2 SS valve assembly DTC P0785.
- No TFP manual valve position switch DTC P1810.
- No TCC PWM solenoid valve DTC P2761.
- The engine speed is greater than 450 RPM for 5 seconds.
- The engine is not in fuel cutoff.
- The gear range is D4.
- The TP angle is greater than 10 percent.
- The transmission fluid temperature is 20-130°C (68-266°F).
- The system voltage is 10-18 volts.
- The transmission output speed is 150 RPM or greater.

Conditions for Setting the DTC

DTC P0757 sets if both of the following conditions occur:

Condition 1

- The PCM commands third gear for 1 second.
- The estimated gear ratio is 1.6-1.8.
- Speed ratio is 0.5 or greater.
- The engine torque is 68-542 N.m (50-400 lb ft).
- All conditions are met for 2 seconds.

Condition 2

- The PCM commands fourth gear for 1 second.
- The estimated gear ratio is 1.8-3.3.
- Speed ratio is 0.5 or greater.
- The engine torque is 0-542 N.m (0-400 lb ft).
- All conditions are met for 2 seconds.

Action Taken When the DTC Sets

- The PCM illuminates the malfunction indicator lamp (MIL).
- The PCM commands third gear only.
- The PCM commands maximum line pressure.
- The PCM inhibits TCC engagement.
- The PCM inhibits 4th gear if in hot mode.

cardiagn.com

- The PCM freezes transmission adapt functions.
- The PCM records the operating conditions when the Conditions for Setting the DTC are met. The PCM stores this information as Freeze Frame and Failure Records.
- The PCM stores DTC P0757 in PCM history.

Conditions for Clearing the MIL/DTC

- The PCM turns OFF the MIL during the third consecutive trip in which the diagnostic test runs and passes.
- A scan tool can clear the MIL/DTC.
- The PCM clears the DTC from PCM history if the vehicle completes 40 warm-up cycles without an emission-related diagnostic fault occurring.
- The PCM cancels the DTC default actions when the ignition switch is OFF long enough in order to power down the PCM.

Diagnostic Aids

- Verify that the transmission meets the specifications in the **Shift Speed** table.
- Refer to the **Shift Solenoid Valve State and Gear Ratio** table.

Test Description

The number below refers to the step number on the diagnostic table.

2: This step tests that the PCM commanded all shifts, that all shift solenoid valves responded correctly, but that all the shifts did not occur.

DTC P0757

Step	Action	Value (s)	Yes	No
1	Did you perform the Diagnostic System Check - Engine Controls?	-	Go to **Step 2**	Go to **Diagnostic System Check - Engine Controls** in Engine Controls
	1. Install a scan tool. 2. Turn ON the ignition, with the engine OFF. **IMPORTANT:** **Before clearing the DTC, use the scan tool in order to record the Freeze Frame and Failure Records. Using the Clear Info function erases the Freeze Frame and Failure Records from the PCM.**			

cardiagn.com

2	3. Record the DTC Freeze Frame and Failure Records. 4. Clear the DTC. 5. Drive the vehicle in D4 range under the following conditions: Accelerate the vehicle, ensuring that the PCM commands 1st, 2nd, 3rd and 4th gears. Did you detect a 1-2-2-1 shift pattern?	-	Go to **Step 3**	Go to Diagnostic Aids
3	Inspect the shift solenoid/hydraulic circuit for the following conditions: • An internal malfunction • Damaged seals on the shift solenoid valve Refer to **Shift Solenoid Leak Test** . Did you find and correct the condition?	-	Go to **Step 4**	-
4	Perform the following procedure in order to verify the repair: 1. Select DTC. 2. Select Clear Info. 3. Drive the vehicle in D4 range under the following conditions, only if traffic and road conditions permit: Hold the throttle at 15% and accelerate to 80 km/h (55 mph). 4. Select Specific DTC. 5. Enter DTC P0757. Has the test run and passed?	-	Go to **Step 5**	Go to **Step 2**
5	With the scan tool, observe the stored information, capture info, and DTC Info. Does the scan tool display any DTCs that you have not diagnosed?	-	Go to **Diagnostic Trouble Code (DTC) List** in Engine Controls	System OK

DTC P0758

cardiagn.com

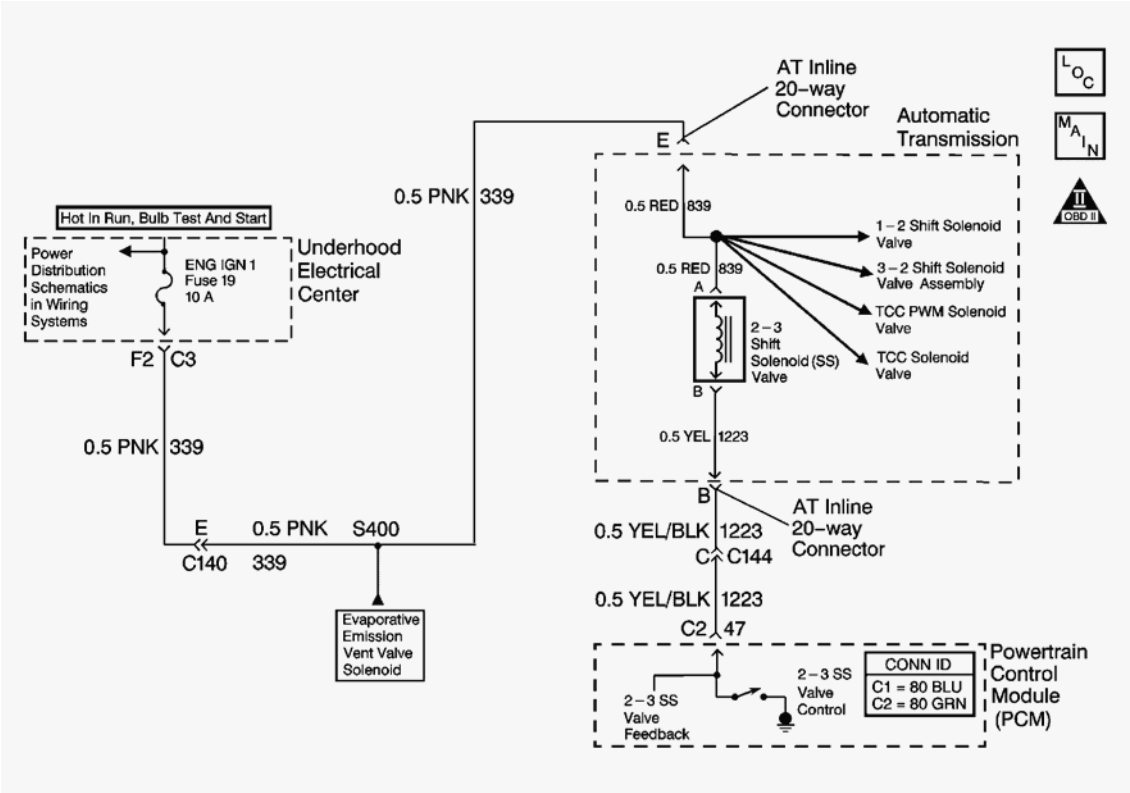

Fig. 18: DTC P0758 Schematics
Courtesy of GENERAL MOTORS CORP.

Circuit Description

The 2-3 shift solenoid (SS) valve controls the fluid flow acting on the 2-3 shift valves. The 2-3 SS valve is a normally-open exhaust valve that is used with the 1-2 SS valve in order to allow four different shifting combinations. The solenoid attaches to the control valve body within the transmission. The 2-3 SS valve receives ignition voltage through the ignition 1 circuit. The powertrain control module (PCM) controls the solenoid by providing the ground path on the 2-3 shift solenoid valve control circuit.

When the PCM detects a continuous open, short to ground or short to power in the 2-3 SS valve circuit, then DTC P0758 sets. DTC P0758 is a type A DTC.

Conditions for Running the DTC

- The system voltage is 10-18 volts.
- The engine speed is 450 RPM for 5 seconds.
- The engine is not in fuel cutoff.

Conditions for Setting the DTC

DTC P0758 sets if one of the following conditions occurs:

Condition 1

cardiagn.com

The PCM commands the solenoid ON and the voltage feedback remains high, B+.

Condition 2

The PCM commands the solenoid OFF and the voltage feedback remains low, 0 volts.

Action Taken When the DTC Sets

- The PCM illuminates the malfunction indicator lamp (MIL).
- The PCM commands third gear only.
- The PCM commands maximum line pressure.
- The PCM inhibits TCC engagement.
- The PCM inhibits 4th gear if in hot mode.
- The PCM freezes transmission adapt functions.
- The PCM records the operating conditions when the Conditions for Setting the DTC are met. The PCM stores this information as Freeze Frame and Failure Records.
- The PCM stores DTC P0758 in PCM history.

Conditions for Clearing the MIL/DTC

- The PCM turns OFF the MIL during the third consecutive trip in which the diagnostic test runs and passes.
- A scan tool can clear the MIL/DTC.
- The PCM clears the DTC from PCM history if the vehicle completes 40 warm-up cycles without an emission-related diagnostic fault occurring.
- The PCM cancels the DTC default actions when the ignition switch is OFF long enough in order to power down the PCM.

Test Description

The numbers below refer to the step numbers on the diagnostic table.

4: This step tests the function of the 2-3 SS valve and the automatic transmission (AT) wiring harness assembly.

5: This step tests for power to the 2-3 SS valve from the ignition through the fuse.

6: This step tests the ability of the PCM and the wiring to control the ground circuit.

8: This step measures the resistance of the AT wiring harness assembly and the 2-3 SS valve.

DTC P0758

Step	Action	Value (s)	Yes	No
	Did you perform the Diagnostic System Check - Engine Controls?			Go to **Diagnostic System Check -**

cardiagn.com

1		-	Go to **Step 2**	**Engine Controls** in Engine Controls
2	1. Install a scan tool. 2. Turn ON the ignition, with the engine OFF. **IMPORTANT:** **Before clearing the DTC, use the scan tool in order to record the Freeze Frame and Failure Records. Using the Clear Info function erases the Freeze Frame and Failure Records from the PCM.** 3. Record the DTC Freeze Frame and Failure Records. 4. Clear the DTC. Are any of the following DTCs also set? • P0740 • P0753 • P0785 • P2761	-	Go to **Step 3**	Go to **Step 4**
3	Inspect the ENG IGN 1 fuse for an open. Refer to **Circuit Protection - Fuses** in Wiring Systems. Is the fuse open?	-	Go to **Step 12**	Go to **Step 5**
4	Use the scan tool in order to command the 2-3 SS valve ON and OFF three times while listening to the bottom of the transmission pan, a stethoscope may be necessary. Does the solenoid click when commanded?	-	Go to **Intermittent Conditions** in Engine Controls	Go to **Step 5**
5	1. Turn OFF the ignition. 2. Disconnect the AT inline 20-way connector, additional DTCs may set. 3. Install the **J 44152** Jumper Harness (20 pins) on the engine side of the AT inline 20-way connector. 4. Turn ON the ignition, with the engine OFF. 5. Using the **J 35616** GM Terminal Test Kit, connect a test lamp from terminal E of the **J 44152** to ground.	-		

cardiagn.com

	Refer to **Automatic Transmission Inline 20-Way Connector End View** . Does the test lamp illuminate?		Go to **Step 6**	Go to **Step 15**
6	1. Connect a test lamp between terminal E and terminal B of the **J 44152** . Refer to **Automatic Transmission Inline 20-Way Connector End View** . 2. Use the scan tool in order to command the 2-3 SS valve ON and OFF three times. Does the test lamp turn ON and OFF with each command?	-	Go to **Step 8**	Go to **Step 7**
7	Is the test lamp always ON?	-	Go to **Step 16**	Go to **Step 17**
8	1. Install the **J 44152** on the transmission side of the AT inline 20-way connector. 2. Using the DMM and **J 35616** , measure the resistance between terminal B and terminal E of the **J 44152** . Refer to **Automatic Transmission Inline 20-Way Connector End View** . Does the resistance measure within the specified range?	19-31 ohm	Go to **Step 9**	Go to **Step 10**
9	Measure the resistance from terminal B to ground, and from terminal E to ground. Do both readings measure greater than the specified value?	250 K ohm	Go to **Intermittent Conditions** in Engine Controls	Go to **Step 11**
10	1. Disconnect the AT wiring harness assembly from the 2-3 SS valve. 2. Measure the resistance of the 2-3 SS valve. Does the resistance measure within the specified range?	19-31 ohm	Go to **Step 18**	Go to **Step 19**
11	1. Disconnect the AT wiring harness assembly from the 2-3 SS valve. 2. Measure the resistance from the component's terminals to ground. Do both readings measure greater than the specified value?	250 K ohm	Go to **Step 18**	Go to **Step 19**

cardiagn.com

12	**IMPORTANT:** **The condition that affects this circuit may exist in other connecting branches of the circuit. Refer to <u>Power Distribution Schematics</u> in Wiring Systems for complete circuit distribution.** Test the ignition circuit of the 2-3 SS valve for a short to ground between the underhood electrical center and the AT inline 20-way connector.Refer to **<u>Testing for Short to Ground</u>** and **<u>Wiring Repairs</u>** in Wiring Systems.Did you find and correct the condition?	-	Go to **Step 21**	Go to **Step 13**
13	**IMPORTANT:** **The condition that affects this circuit may exist in other connecting branches of the circuit. Refer to <u>Power Distribution Schematics</u> in Wiring Systems for complete circuit distribution.** Test the ignition circuit of the 2-3 SS valve for a short to ground between the AT inline 20-way connector and the 2-3 SS valve.Refer to **<u>Testing for Short to Ground</u>** in Wiring Systems.Did you find a short to ground condition?	-	Go to **Step 18**	Go to **Step 14**
14	1. Test each solenoid for a short to ground. 2. Replace the faulty solenoid as necessary. Did you complete the replacement?	-	Go to **Step 21**	-
15	**IMPORTANT:** **The condition that affects this circuit may exist in other connecting branches of the circuit. Refer to <u>Power Distribution Schematics</u> in Wiring Systems for complete circuit distribution.** Test the ignition circuit of the 2-3 SS valve for an open.Refer to **<u>Testing for Continuity</u>** and **<u>Wiring Repairs</u>** in Wiring Systems.Did you find and correct the condition?	-	Go to **Step 21**	-
16	Test the control circuit of the 2-3 SS valve for a short to ground between the PCM connector C2 and the AT inline 20-way connector. Refer to **<u>Testing for Short to Ground</u>** and **<u>Wiring Repairs</u>** in Wiring Systems. Did you find and correct the condition?	-	Go to **Step 21**	Go to **Step 20**
	Test the control circuit of the 2-3 SS valve for an open or short to power between the PCM connector C2 and the AT inline 20-way connector.			

cardiagn.com

17	Refer to **Circuit Testing** and **Wiring Repairs** in Wiring Systems. Did you find and correct the condition?	-	Go to **Step 21**	Go to **Step 20**
18	Replace the AT wiring harness assembly. Refer to **Torque Converter Clutch Pulse Width Modulation (TCC PWM) Solenoid, TCC Solenoid, and Wiring Harness** . Did you complete the replacement?	-	Go to **Step 21**	-
19	Replace the 2-3 SS valve. Refer to **Control and Shift Solenoids Replacement** . Did you complete the replacement?	-	Go to **Step 21**	-
20	Replace the PCM. Refer to **Powertrain Control Module (PCM) Replacement** in Engine Controls. Did you complete the replacement?	-	Go to **Step 21**	-
21	Perform the following procedure in order to verify the repair: 1. Select DTC. 2. Select Clear Info. 3. Drive the vehicle in D4 and ensure the following conditions are met: • The PCM commands the 2-3 SS valve ON and the voltage feedback drops to zero. • The PCM commands the 2-3 SS valve OFF and the voltage feedback increases to B+. • All conditions are met for 5 seconds. 4. Select Specific DTC. 5. Enter DTC P0758. Has the test run and passed?	-	Go to **Step 22**	Go to **Step 2**
22	With the scan tool, observe the stored information, capture info, and DTC Info. Does the scan tool display any DTCs that you have not diagnosed?	-	Go to **Diagnostic Trouble Code (DTC) List** in Engine Controls	System OK

DTC P0785

cardiagn.com

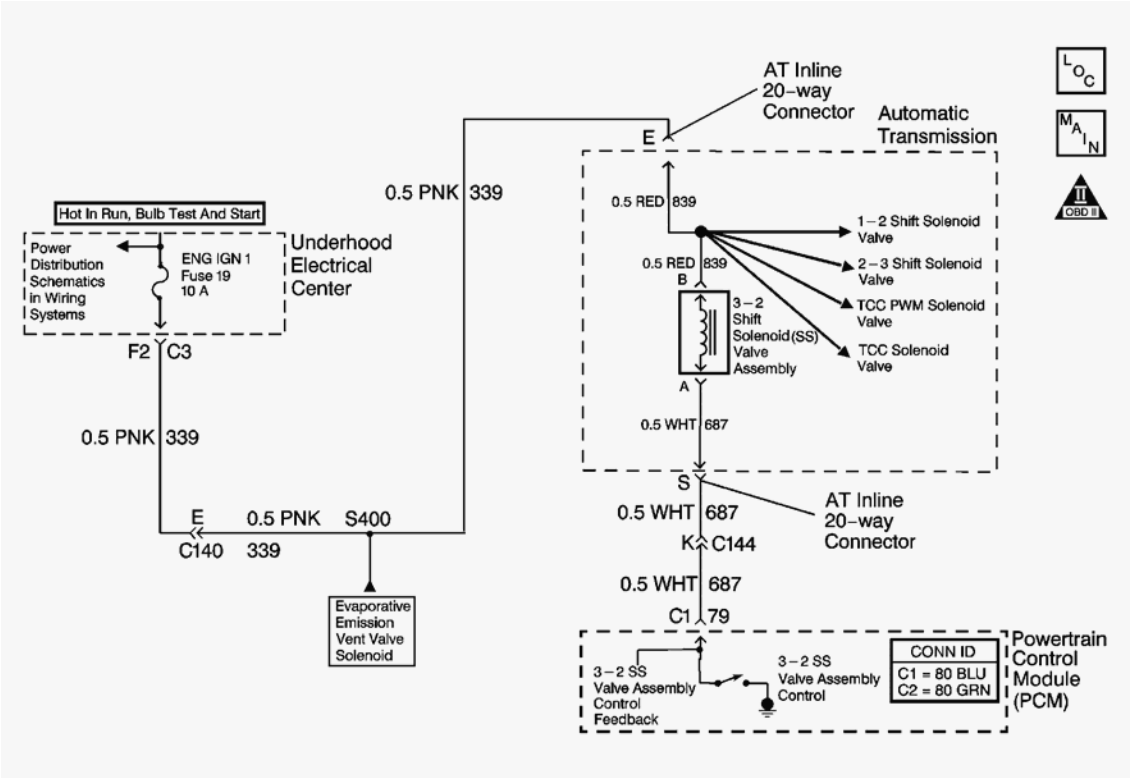

Fig. 19: DTC P0785 Schematics
Courtesy of GENERAL MOTORS CORP.

Circuit Description

The 3-2 shift solenoid (SS) valve assembly is a normally-closed, 3-port, on/off device that controls the 3-2 downshift. The solenoid attaches to the control valve body within the transmission. The solenoid receives ignition voltage through the ignition 1 circuit. The powertrain control module (PCM) controls the solenoid by providing a ground path on the 3-2 shift solenoid valve control circuit. During a 3-2 downshift, the 2-4 band applies as the 3-4 clutch releases. The PCM varies the timing between the 3-4 clutch release and the 2-4 band apply depending on the vehicle speed and the throttle position.

When the PCM detects a continuous open, short to ground or short to power in the 3-2 SS valve assembly circuit, then DTC P0785 sets. DTC P0785 is a type B DTC.

Conditions for Running the DTC

- The system voltage is 10-18 volts.
- The engine speed is greater than 450 RPM for 5 seconds.
- The engine is not in fuel cutoff.

Conditions for Setting the DTC

DTC P0785 sets if one of the following conditions occurs for 5 seconds:

cardiagn.com

Condition 1

The PCM commands the solenoid ON and the voltage feedback remains high, B+.

Condition 2

The PCM commands the solenoid OFF and the voltage feedback remains low, 0 volts.

Action Taken When the DTC Sets

- The PCM illuminates the malfunction indicator lamp (MIL) during the second consecutive trip in which the Conditions for Setting the DTC are met.
- The PCM commands a soft landing to third gear.
- The PCM commands maximum line pressure.
- The PCM inhibits TCC engagement.
- The PCM inhibits fourth gear if the transmission is in hot mode.
- The PCM freezes transmission adapt functions.
- The PCM records the operating conditions when the Conditions for Setting the DTC are met. The PCM stores this information as Freeze Frame and Failure Records.
- The PCM stores DTC P0785 in the PCM history during the second consecutive trip in which the Conditions for Setting the DTC are met.

Conditions for Clearing the MIL/DTC

- The PCM turns OFF the MIL during the third consecutive trip in which the diagnostic test runs and passes.
- A scan tool can clear the MIL/DTC.
- The PCM clears the DTC from PCM history if the vehicle completes 40 warm-up cycles without an emission-related diagnostic fault occurring.
- The PCM cancels the DTC default actions when the ignition switch is OFF long enough in order to power down the PCM.

Test Description

The numbers below refer to the step numbers on the diagnostic table.

4: This step tests the ability of the PCM to control the solenoid.

5: This step tests for power to the 3-2 SS valve assembly.

6: This step tests the ability of the PCM and wiring to control the ground circuit.

8: This step measures resistance of the automatic transmission (AT) wiring harness assembly and the 3-2 SS valve assembly.

DTC P0785

		Value		

cardiagn.com

Step	Action	(s)	Yes	No
1	Did you perform the Diagnostic System Check - Engine Controls?	-	Go to **Step 2**	Go to **Diagnostic System Check - Engine Controls** in Engine Controls
2	1. Install a scan tool. 2. Turn ON the ignition, with the engine OFF. **IMPORTANT:** **Before clearing the DTC, use the scan tool in order to record the Freeze Frame and Failure Records. Using the Clear Info function erases the Freeze Frame and Failure Records from the PCM.** 3. Record the DTC Freeze Frame and Failure Records. 4. Clear the DTC. Are any of the following DTCs also set? • P0740 • P0753 • P0758 • P2761	-	Go to **Step 3**	Go to **Step 4**
3	Inspect the ENG IGN 1 fuse for an open. Refer to **Circuit Protection - Fuses** in Wiring Systems. Is the fuse open?	-	Go to **Step 12**	Go to **Step 5**
4	Use the scan tool in order to command the 3-2 SS valve assembly ON and OFF three times, while listening to the bottom of the transmission pan, a stethoscope may be necessary. Does the solenoid click when commanded?	-	Go to **Intermittent Conditions** in Engine Controls	Go to **Step 5**
5	1. Turn OFF the ignition. 2. Disconnect the AT inline 20-way connector, additional DTCs may set. 3. Install the **J 44152** Jumper Harness (20 pins) on the engine side of the AT inline 20-way connector. 4. Turn ON the ignition, with the engine OFF. 5. Using the **J 35616** GM Terminal Test Kit,	-		

cardiagn.com

	connect a test lamp from terminal E of the **J 44152** to ground. Refer to **Automatic Transmission Inline 20-Way Connector End View** . Does the test lamp illuminate?		Go to **Step 6**	Go to **Step 15**
6	1. Connect a test lamp between terminal E and terminal S of the **J 44152** . Refer to **Automatic Transmission Inline 20-Way Connector End View** . 2. Use the scan tool in order to command the 3-2 SS valve assembly ON and OFF three times. Does the test lamp turn ON and OFF with each command?	-	Go to **Step 8**	Go to **Step 7**
7	Is the test lamp always ON?	-	Go to **Step 16**	Go to **Step 17**
8	1. Install the **J 44152** on the transmission side of the AT inline 20-way connector. 2. Using the DMM and the **J 35616** , measure the resistance between the terminal E and terminal S of the **J 44152** . Refer to **Automatic Transmission Inline 20-Way Connector End View** . Does the resistance measure within the specified range?	20-32 ohm	Go to **Step 9**	Go to **Step 10**
9	1. Measure the resistance from terminal S to ground. 2. Measure the resistance from terminal E to ground. Do both readings measure greater than the specified value?	250 K ohm	Go to **Intermittent Conditions** in Engine Controls	Go to **Step 11**
10	1. Disconnect the AT wiring harness assembly from the 3-2 SS valve assembly. 2. Measure the resistance of the 3-2 SS valve assembly. Does the resistance measure within the specified range?	20-32 ohm	Go to **Step 18**	Go to **Step 19**

cardiagn.com

11	1. Disconnect the AT wiring harness assembly from the 3-2 SS valve assembly. 2. Measure the resistance from the component's terminals to ground. Do both readings measure greater than the specified value?	250 K ohm	Go to **Step 18**	Go to **Step 19**
12	**IMPORTANT:** **The condition that affects this circuit may exist in other connecting branches of the circuit. Refer to Power Distribution Schematics in Wiring Systems for complete circuit distribution.** Test the ignition circuit of the 3-2 SS valve assembly for a short to ground between the underhood electrical center and the AT inline 20-way connector.Refer to **Testing for Short to Ground** and **Wiring Repairs** in Wiring Systems.Did you find and correct the condition?	-	Go to **Step 21**	Go to **Step 13**
13	**IMPORTANT:** **The condition that affects this circuit may exist in other connecting branches of the circuit. Refer to Power Distribution Schematics in Wiring Systems for complete circuit distribution.** Test the ignition circuit of the 3-2 SS valve assembly for a short to ground between the AT inline 20-way connector and the 3-2 SS valve assembly.Refer to **Testing for Short to Ground** in Wiring Systems.Did you find a short to ground condition?	-	Go to **Step 18**	Go to **Step 14**
14	1. Test each solenoid for a short to ground. 2. Replace the faulty solenoid as necessary. Did you complete the replacement?	-	Go to **Step 21**	-
15	**IMPORTANT:** **The condition that affects this circuit may exist in other connecting branches of the circuit. Refer to Power Distribution Schematics in Wiring Systems for complete circuit distribution.** Test the ignition circuit of the 3-2 SS valve assembly for an open.Refer to **Testing for Continuity** and **Wiring Repairs** in Wiring Systems.Did you find and correct the condition?	-	Go to **Step 21**	-

cardiagn.com

16	Test the control circuit of the 3-2 SS valve assembly for a short to ground between the PCM connector C1 and the AT inline 20-way connector. Refer to **Testing for Short to Ground** and **Wiring Repairs** in Wiring Systems. Did you find and correct the condition?	-	Go to **Step 21**	Go to **Step 20**
17	Test the control circuit of the 3-2 SS valve assembly for an open or short to power between the PCM connector C1 and the AT inline 20-way connector. Refer to **Testing for a Short to Voltage** and **Wiring Repairs** in Wiring Systems. Did you find and correct the condition?	-	Go to **Step 21**	Go to **Step 20**
18	Replace the AT wiring harness assembly. Refer to **Torque Converter Clutch Pulse Width Modulation (TCC PWM) Solenoid, TCC Solenoid, and Wiring Harness** . Did you complete the replacement?	-	Go to **Step 21**	-
19	Replace the 3-2 SS valve assembly. Refer to **Control and Shift Solenoids Replacement** . Did you complete the replacement?	-	Go to **Step 21**	-
20	Replace the PCM. Refer to **Powertrain Control Module (PCM) Replacement** in Engine Controls. Did you complete the replacement?	-	Go to **Step 21**	-
21	Perform the following procedure in order to verify the repair: 1. Select DTC. 2. Select Clear Info. 3. Drive the vehicle in D3 or D4 and perform a 3-2 downshift. Ensure the following conditions are met: • The PCM commands the 3-2 SS valve assembly ON and the voltage feedback drops to zero. • The PCM commands the 3-2 SS valve assembly OFF and the voltage feedback increases to B+. • All conditions are met for 5 seconds. 4. Select Specific DTC. 5. Enter DTC P0785.	-		

cardiagn.com

	Has the test run and passed?		Go to **Step 22**	Go to **Step 2**
22	With the scan tool, observe the stored information, capture info, and DTC Info. Does the scan tool display any DTCs that you have not diagnosed?	-	Go to **Diagnostic Trouble Code (DTC) List** in Engine Controls	System OK

DTC P0894

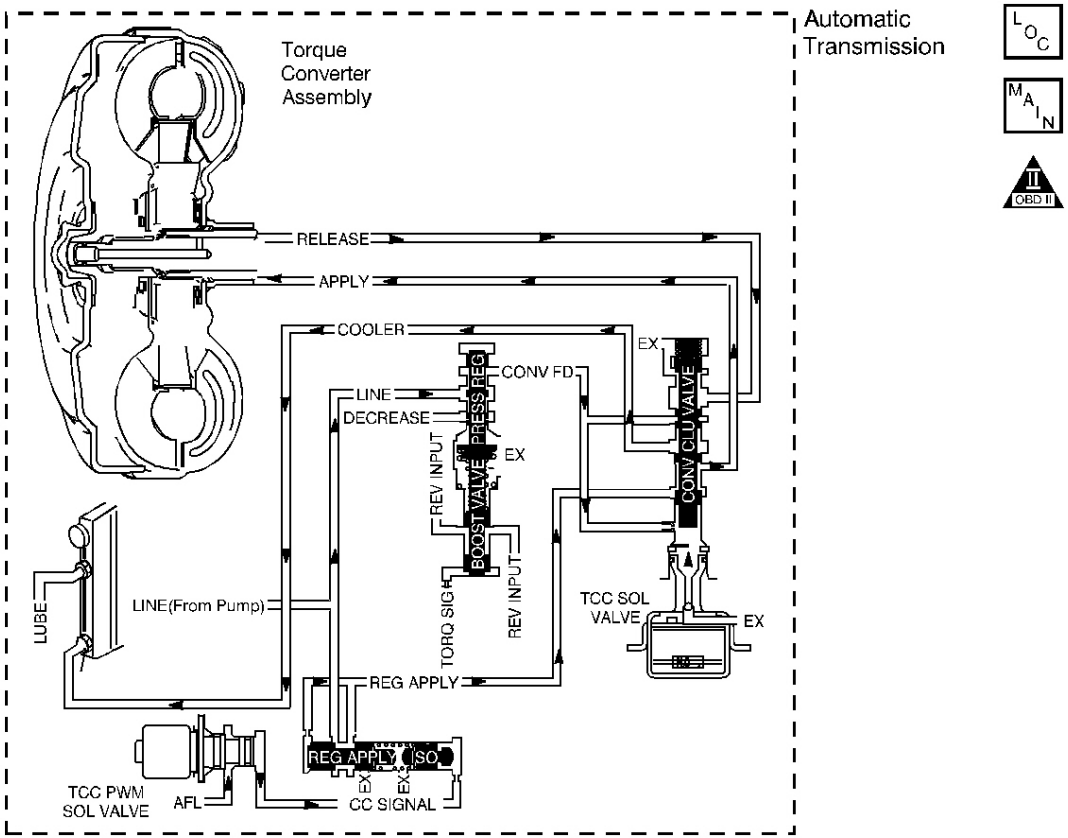

Fig. 20: Torque Converter Clutch (TCC) Fluid Diagram
Courtesy of GENERAL MOTORS CORP.

Circuit Description

The powertrain control module (PCM) monitors the difference between engine speed and transmission output speed. In D3 drive range with the TCC engaged, the engine speed should closely match the transmission output speed. In D4 drive range, with the TCC engaged, the TCC slip speed should be -20 to +50 RPM.

When the PCM detects excessive TCC slip when the TCC should be engaged, then DTC P0894 sets. DTC P0894 is a type B DTC.

cardiagn.com

Conditions for Running the DTC

- No TP sensor DTCs P1120 or P1220.
- No VSS assembly DTCs P0502 or P0503.
- No TCC solenoid valve DTC P0740.
- No 1-2 SS valve DTC P0753.
- No 2-3 SS valve DTC P0758.
- No 3-2 SS valve assembly DTC P0785.
- No TFP manual valve position switch DTC P1810.
- No TCC PWM solenoid valve DTC P2761.
- No MAF DTCs.
- The engine speed is greater than 450 RPM for 5 seconds.
- The engine is not in fuel cutoff.
- The engine torque is 68-542 N.m (50-400 lb ft).
- The engine vacuum is 0-105 kPa (0-15 psi).
- The TP angle is 20-99 percent.
- The vehicle speed is 48-131 km/h (30-82 mph).
- The engine speed is 1,500-3,000 RPM.
- The speed ratio is 0.69-0.88, speed ratio is engine speed divided by the transmission output speed.
- The gear range is D4.
- The commanded gear is not 1st gear.
- The TFT is 20-150°C (68-302°F).
- The shift solenoid performance diagnostic counters are zero.

Conditions for Setting the DTC

DTC P1870 sets if the following conditions occur for three TCC cycles.

- The TCC is commanded ON for 5 seconds.
- The TCC is at 40 percent duty cycle for 5 seconds.
- The TCC slip speed is 130-800 RPM for 7 seconds.

IMPORTANT: The following actions may occur before the DTC sets.

- If the TCC is commanded ON for 5 seconds, the TCC is at 40 percent duty cycle for 5 seconds, the TP angle is 20-99 percent and the transmission slip counter has incremented to either 1 or 2, out of 3 to increment the fail counter for the current ignition cycle, then the following slip conditions and actions may increment the fail counter for the current ignition cycle:

  These conditions must occur sequentially.

cardiagn.com

Condition 1

If the TCC slip speed is 130-800 RPM for 7 seconds, then the PCM will command maximum line pressure and freeze shift adapts from being updated.

Condition 2

If Condition 1 is met and the TCC slip speed is 130-800 RPM for 7 seconds, then the PCM will command the TCC Off for 1.5 seconds.

Condition 3

If Condition 2 is met and the TCC slip speed is 130-800 RPM for 7 seconds, then the fail counter on the current ignition cycle is incremented.

The above slip conditions and actions may be disregarded if the TCC is commanded OFF at any time as a result of a driving maneuver, sudden acceleration or deceleration.

Action Taken When the DTC Sets

- The PCM illuminates the malfunction indicator lamp (MIL) during the second consecutive trip in which the Conditions for Setting the DTC are met.
- The PCM commands maximum line pressure.
- The PCM inhibits TCC engagement.
- The PCM inhibits 4th gear if the transmission is in hot mode.
- The PCM freezes transmission adapt functions.
- The PCM records the operating conditions when the Conditions for Setting the DTC are met. The PCM stores this information as Freeze Frame and Failure Records.
- The PCM stores DTC P0894 in PCM history during the second consecutive trip in which the Conditions for Setting the DTC are met.

Conditions for Clearing the MIL/DTC

- The PCM turns OFF the MIL during the third consecutive trip in which the diagnostic test runs and passes.
- A scan tool can clear the MIL/DTC.
- The PCM clears the DTC from PCM history if the vehicle completes 40 warm-up cycles without an emission-related diagnostic fault occurring.
- The PCM cancels the DTC default actions when the ignition switch is OFF long enough in order to power down the PCM.

Diagnostic Aids

- Bronze material found in the transmission oil pan may indicate stator shaft bushing wear. If bushing wear is suspected, inspect the stator shaft and the input, turbine, shaft for damage.

cardiagn.com

- Refer to **Symptoms - Automatic Transmission** for more information.

Test Description

The number below refers to the step number on the diagnostic table.

3: This step tests the torque converter for slippage while in a commanded lock-up state.

DTC P0894

Step	Action	Value (s)	Yes	No
1	Did you perform the Diagnostic System Check - Engine Controls?	-	Go to **Step 2**	Go to **Diagnostic System Check - Engine Controls** in Engine Controls
2	Inspect for correct transmission fluid level. Refer to **Transmission Fluid Checking Procedure** . Did you perform the fluid checking procedure?	-	Go to **Step 3**	Go to **Transmission Fluid Checking Procedure**
3	1. Install a scan tool. 2. Turn ON the ignition, with the engine OFF. **IMPORTANT:** **Before clearing the DTC, use the scan tool in order to record the Freeze Frame and Failure Records. Using the Clear Info function erases the Freeze Frame and Failure Records from the PCM.** 3. Record the DTC Freeze Frame and Failure Records. 4. Clear the DTC. **IMPORTANT:** **It may be necessary to allow multiple TCC cycles to occur in order to verify a slipping condition. It may also be necessary to ensure the transmission is warm before performing this step.** 5. Drive the vehicle in 4th gear with the TCC commanded ON. Does the scan tool TCC Slip Speed measure within the specified range for 7 seconds?	130-800 RPM	Go to **Step 4**	Go to Diagnostic Aids

cardiagn.com

4	1. Inspect the torque converter clutch (TCC) solenoid valve for the following conditions: • Internal malfunction, such as sediment or damage • Damaged seals Refer to **Torque Converter Clutch Pulse Width Modulation (TCC PWM) Solenoid, TCC Solenoid, and Wiring Harness** . 2. Inspect the torque converter clutch pulse width modulation (TCC PWM) solenoid valve for the following conditions: • Internal malfunction, such as sediment or damage • Damaged seals Refer to **Torque Converter Clutch Pulse Width Modulation (TCC PWM) Solenoid, TCC Solenoid, and Wiring Harness** . Did you find and correct the condition?	-	Go to **Step 14**	Go to **Step 5**
5	1. Inspect the 1-2 shift solenoid (SS) valve for the following conditions: • Internal malfunction, such as sediment or damage • Damaged seals Refer to **Shift Solenoid Leak Test** . 2. Inspect the 2-3 shift solenoid (SS) valve for the following conditions: • Internal malfunction, such as sediment or damage • Damaged seals Refer to **Shift Solenoid Leak Test** . 3. Inspect the 3-2 shift solenoid valve assembly for the following conditions:	-		

cardiagn.com

	• Internal malfunction, such as sediment or damage • Damaged seals Refer to **Shift Solenoid Leak Test** . Did you find and correct the condition?		Go to **Step 14**	Go to **Step 6**
6	Inspect the valve body assembly for the following conditions: • Stuck regulator apply valve • Scored regulator apply valve body Refer to Control Valve Body Disassemble in the 4L60-E section of the Transmission Unit Repair Manual. Did you find and correct the condition?	-	Go to **Step 13**	Go to **Step 7**
7	Inspect the torque converter assembly for the following conditions: • Front stator shaft bushing for wear • Stator roller clutch not holding • External damage/leaks Refer to Torque Converter End Play Inspection in the 4L60-E section of the Transmission Unit Repair Manual. Did you find and correct the condition?	-	Go to **Step 13**	Go to **Step 8**
8	Inspect the oil pump assembly for the following conditions: • A stuck converter clutch valve • The converter clutch valve is assembled backwards • A mispositioned converter clutch valve retaining ring • A cocked converter clutch outer valve spring • A mispositioned pump to case gasket	-		

cardiagn.com

	• Restricted orifice cup plugs • Damaged orifice cup plugs • Over-tightened, or unevenly tightened pump body to cover bolts Refer to Oil Pump Cover Disassemble in the 4L60-E section of the Transmission Unit Repair Manual. Did you find and correct the condition?		Go to **Step 13**	Go to **Step 9**
9	Inspect the input housing and shaft assembly for the following conditions: • Cut turbine shaft O-ring seal • Damaged turbine shaft O-ring seal • Restricted turbine shaft retainer and ball assembly • Damaged turbine shaft retainer and ball assembly Refer to Input Housing and Shaft Assembly Inspection in the 4L60-E section of the Transmission Unit Repair Manual. Did you find and correct the condition?	-	Go to **Step 13**	Go to **Step 10**

	• Inspect the 2-4 band assembly for the following conditions:
	  ○ Worn 2-4 band
	  ○ Damaged 2-4 band
	  ○ Mispositioned 2-4 band
	  ○ Misassembled 2-4 band
	  ○ The band anchor pin is not engaged
	
	  Refer to 2-4 Band Assembly Installation in the 4L60-E section of the Transmission Unit Repair Manual.
	
	• Inspect the 2-4 servo assembly for the following conditions:
	  ○ Restricted apply passages in the 2-4 servo assembly
	  ○ Blocked apply passages in the 2-4			

cardiagn.com

10	servo assembly ○ Nicks or burrs on the 2nd apply piston pin ○ Damaged 2nd apply piston pin ○ Incorrect 2nd apply piston pin ○ Nicks or burrs on the pin bore in the case ○ Damaged fourth servo piston ○ Misassembled fourth servo piston ○ Damaged servo bore in the case ○ Missing piston seals ○ Cut piston seals ○ Damaged piston seals ○ Porosity in the pistons ○ Porosity in the cover ○ Porosity in the case ○ Damaged piston seal grooves ○ Plugged orifice cup plug ○ Missing orifice cup plug Refer to 2-4 Servo Disassemble , 2-4 Servo Pin Length Check and 2-4 Servo Assembly Installation in the 4L60-E section of the Transmission Unit Repair Manual.Did you find and correct the condition?	-	Go to **Step 13**	Go to **Step 11**
11	Inspect the forward clutch assembly for the following conditions: • Worn clutch plates • Porosity in the forward clutch piston • Damaged forward clutch piston • Missing forward clutch piston inner and outer seals • Cut forward clutch piston inner and outer seals • Damaged forward clutch piston inner and outer seals • Missing input housing to forward clutch housing O-ring seal • Cut input housing to forward clutch housing O-ring seal	-		

cardiagn.com

	• Damaged input housing to forward clutch housing O-ring seal • Damaged forward clutch housing • Damaged forward clutch housing retainer and ball assembly • Forward clutch housing retainer and ball assembly is not sealing Refer to Forward Clutch Assembly Assemble in the 4L60-E section of the Transmission Unit Repair Manual. Did you find and correct the condition?		Go to **Step 13**	Go to **Step 12**
12	Inspect the 3-4 clutch assembly for the following conditions: • Worn clutch plates • Porosity in the 3-4 clutch piston • Damaged 3-4 clutch piston • Missing 3-4 clutch inner and outer seals • Cut 3-4 clutch inner and outer seals • Damaged 3-4 clutch inner and outer seals • Damaged 3-4 clutch spring assembly • Damaged 3-4 clutch apply ring • Damaged piston seal grooves • Plugged orifice cup plug • Missing orifice cup plug Refer to 3-4 Clutch Assemble and 3-4 Clutch Plate Travel Check in the 4L60-E section of the Transmission Unit Repair Manual. Did you find and correct the condition?	-	Go to **Step 13**	Go to **Intermittent Conditions** in Engine Controls
	1. Change the AT fluid and filter. 2. Inspect for correct transmission fluid level. Refer to **Transmission Fluid Checking Procedure** . 3. Add new AT fluid as necessary. **IMPORTANT:**			

cardiagn.com

13	**The Clear TAPS function will clear all adapt cells. This may affect transmission performance. The PCM will update the transmission adapt cell values as the vehicle is driven.** 4. Using the scan tool, perform the Clear TAPS function. Did you complete the above procedure?	-	Go to **Step 14**	-
14	Perform the following procedure in order to verify the repair: 1. Select DTC. 2. Select Clear Info. 3. Operate the vehicle under the following conditions: • Drive the vehicle in D4, with the TCC ON, and a throttle position at 20%. • Ensure that the scan tool TCC Slip Speed is -20 to +50 RPM for at least 7 seconds. 4. Select Specific DTC. 5. Enter DTC P0894. Has the test run and passed?	-	Go to **Step 15**	Go to **Step 2**
15	With the scan tool, observe the stored information, capture info, and DTC Info. Does the scan tool display any DTCs that you have not diagnosed?	-	Go to **Diagnostic Trouble Code (DTC) List** in Engine Controls	System OK

DTC P1810

cardiagn.com

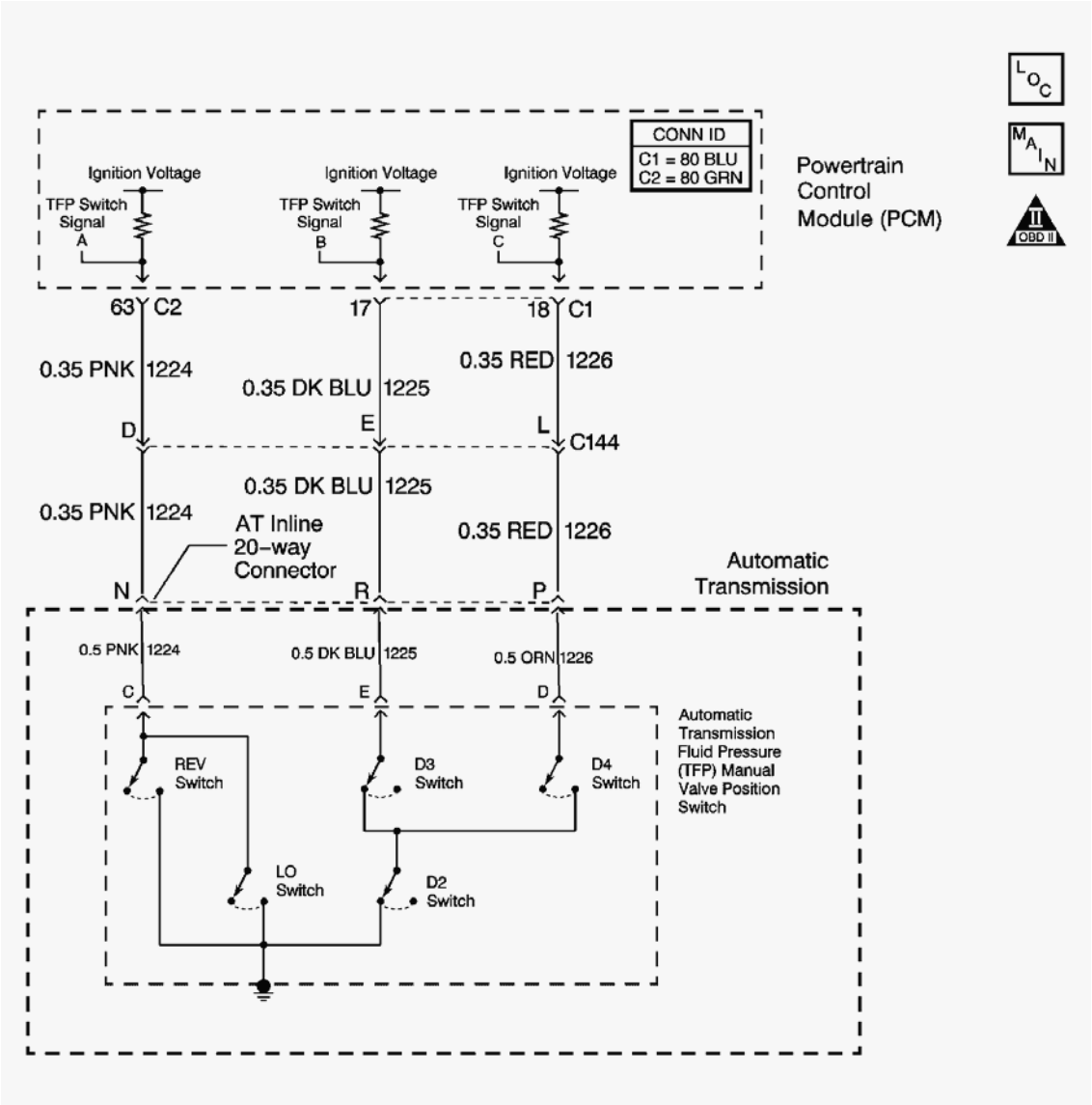

Fig. 21: DTC P1810 Schematics
Courtesy of GENERAL MOTORS CORP.

Circuit Description

The automatic transmission fluid pressure (TFP) manual valve position switch consists of five pressure switches, two normally-closed and three normally-open, and a transmission fluid temperature (TFT) sensor combined into one unit. The combined unit mounts on the valve body. The powertrain control module (PCM) supplies ignition voltage for each range signal. By grounding one or more of these circuits through various combinations of the pressure switches, the PCM detects which manual valve position you select. The PCM compares the actual voltage combination of the switches to a TFP manual valve position switch combination chart stored in memory.

The TFP manual valve position switch cannot distinguish between PARK and NEUTRAL because the monitored valve body pressures are identical. With the engine OFF and the ignition switch in the ON position,

cardiagn.com

the TFP manual valve position switch indicates PARK/NEUTRAL. Disconnecting the AT inline 20-way connector removes the ground potential for the three range signals to the PCM. In this case, with the engine OFF, and the ignition switch in the ON position, D2 will be indicated.

When the PCM detects an invalid state of the TFP manual valve position switch circuit by deciphering the TFP manual valve position switch inputs, then DTC P1810 sets. DTC P1810 is a type B DTC.

Conditions for Running the DTC

- No VSS assembly DTCs P0502 or P0503.
- The system voltage is 10-18 volts.
- The engine speed is greater than 450 RPM for 5 seconds.
- The engine is not in fuel cutoff.
- The engine torque is 54-542 N.m (40-400 lb ft).
- The engine vacuum is 0-105 kPa (0-15 psi).

Conditions for Setting the DTC

DTC P1810 sets if any of the following conditions occurs:

Condition 1

The PCM detects an invalid TFP manual valve position switch state for 60 seconds.

Condition 2

- The engine speed is less than 80 RPM for 0.1 second;

  then the engine speed is 80-550 RPM for 0.07 second;

  then the engine speed is greater than 550 RPM.

- The vehicle speed is less than 3 km/h (2 mph).
- The PCM detects a gear range of D2, D4 or REVERSE during an engine start.
- All conditions met for 5 seconds.

Condition 3

- The TP angle is 10-50 percent.
- The PCM commands fourth gear.
- The TCC is locked ON.
- The speed ratio is 0.60-0.75, speed ratio is engine speed divided by transmission output speed.
- The PCM detects a gear range of PARK or NEUTRAL when the vehicle is operating in D4.
- All conditions met for 10 seconds.

cardiagn.com

Action Taken When the DTC Sets

- The PCM illuminates the malfunction indicator lamp (MIL) during the second consecutive trip in which the Conditions for Setting the DTC are met.
- The PCM commands D2 line pressure.
- The PCM commands a D4 shift pattern.
- The PCM freezes transmission adapt functions.
- The PCM records the operating conditions when the Conditions for Setting the DTC are met. The PCM stores this information as Freeze Frame and Failure Records.
- The PCM stores DTC P1810 in PCM history during the second consecutive trip in which the Conditions for Setting the DTC are met.

Conditions for Clearing the MIL/DTC

- The PCM turns OFF the MIL during the third consecutive trip in which the diagnostic test runs and passes.
- A scan tool can clear the MIL/DTC.
- The PCM clears the DTC from PCM history if the vehicle completes 40 warm-up cycles without an emission-related diagnostic fault occurring.
- The PCM cancels the DTC default actions when the ignition switch is OFF long enough in order to power down the PCM.

Diagnostic Aids

- Refer to the **Transmission Fluid Pressure (TFP) Manual Valve Position Switch Logic** table for the normal range signals and the invalid combinations. On the table, LOW is 0 volts, HI is ignition voltage.
- Sediment in the valve body may cause improper operation of the TFP manual valve position switch. If sediment intrusion is suspected, clean the valve body and replace the TFP manual valve position switch.

Test Description

The numbers below refer to the step numbers on the diagnostic table.

3: This step compares the indicated range signal to the selected manual valve position.

5: This step tests for correct voltage from the PCM to the AT inline 20-way connector.

DTC P1810

Step	Action	Value (s)	Yes	No
1	Did you perform the Diagnostic System Check - Engine Controls?	-	Go to **Step 2**	Go to **Diagnostic System Check - Engine Controls** in Engine Controls
	Inspect for correct transmission fluid level.			Go to **Transmission**

cardiagn.com

2	Refer to **Transmission Fluid Checking Procedure** . Did you perform the fluid checking procedure?	-	Go to **Step 3**	**Fluid Checking Procedure**
3	1. Install a scan tool. 2. Turn ON the ignition, with the engine OFF. **IMPORTANT:** **Before clearing the DTC, use the scan tool in order to record the Freeze Frame and Failure Records. Using the Clear Info function erases the Freeze Frame and Failure Records from the PCM.** 3. Record the DTC Freeze Frame and Failure Records. 4. Clear the DTC. 5. Start the engine and idle at normal operating temperature. 6. Apply the brake pedal. 7. Select each transmission range: P, R, N, D4, D3, D2 and D1. Does each selected transmission range match the scan tool TFP Sw. display?	-	Go to **Intermittent Conditions** in Engine Controls	Go to **Step 4**
4	1. Turn OFF the ignition. 2. Disconnect the AT inline 20-way connector, additional DTCs may set. 3. Turn ON the ignition, with the engine OFF. Does the scan tool TFP Sw. A/B/C parameter indicate HI for all range signal states?	-	Go to **Step 5**	Go to **Step 9**
	1. Turn OFF the ignition. 2. Install the **J 44152** Jumper Harness (20 pins) on the engine side of the AT inline 20-way connector. 3. Turn ON the ignition, with the engine OFF. 4. Using the DMM and the **J 35616** GM Terminal Test Kit, measure the voltage from terminal N of the **J 44152** to			

cardiagn.com

5	ground. Refer to **Automatic Transmission Inline 20-Way Connector End View** . 5. Measure the voltage from terminal R of the **J 44152** to ground. 6. Measure the voltage from terminal P of the **J 44152** to ground. Does the voltage measure within the specified range at all three terminals?	10-12 V	Go to **Step 6**	Go to **Step 10**
6	Connect a fused jumper wire from terminal N of the **J 44152** , signal circuit A, to ground while monitoring the scan tool TFP Sw. A/B/C parameter. When signal circuit A is grounded, do any other signal circuits indicate LOW?	-	Go to **Step 11**	Go to **Step 7**
7	Connect a fused jumper wire from terminal R of the **J 44152** , signal circuit B, to ground while monitoring the scan tool TFP Sw. A/B/C parameter. When signal circuit B is grounded, do any other signal circuits indicate LOW?	-	Go to **Step 11**	Go to **Step 8**
8	Connect a fused jumper wire from terminal P of the **J 44152** , signal circuit C, to ground while monitoring the scan tool TFP Sw. A/B/C parameter. When signal circuit C is grounded, do any other signal circuits indicate LOW?	-	Go to **Step 11**	Go to **Step 12**
9	Test the signal circuits of the TFP manual valve position switch that did not indicate HI for a short to ground between the PCM connector C1 and C2 and the AT inline 20-way connector. Refer to **Testing for Short to Ground** and **Wiring Repairs** in Wiring Systems. Did you find and correct the condition?	-	Go to **Step 16**	Go to **Step 15**
10	Test the signal circuits of the TFP manual valve position switch that did not indicate ignition voltage for an open between the PCM connector C1 and C2 and the AT inline 20-way connector. Refer to **Testing for Continuity** and **Wiring Repairs** in Wiring Systems. Did you find and correct the condition?	-	Go to **Step 16**	Go to **Step 15**

cardiagn.com

11	Test the affected signal circuits of the TFP manual valve position switch for a shorted together condition between the PCM connector C1 and C2 and the AT inline 20-way connector. Refer to **Circuit Testing** and **Wiring Repairs** in Wiring Systems. Did you find and correct the condition?	-	Go to **Step 16**	Go to **Step 15**
12	Test the signal circuits of the TFP manual valve position switch for an open or shorted condition between the TFP manual valve position switch and the AT inline 20-way connector. Refer to **Circuit Testing** and **Wiring Repairs** in Wiring Systems. Did you find a condition?	-	Go to **Step 13**	Go to **Step 14**
13	Replace the AT wiring harness assembly. Refer to **Valve Body and Pressure Switch Replacement** . Did you complete the replacement?	-	Go to **Step 16**	-
14	Replace the TFP manual valve position switch. Refer to **Valve Body and Pressure Switch Replacement** . Did you complete the replacement?	-	Go to **Step 16**	-
15	Replace the PCM. Refer to **Powertrain Control Module (PCM) Replacement** in Engine Controls. Did you complete the replacement?	-	Go to **Step 16**	-

16	Perform the following procedure in order to verify the repair:
	1. Select DTC.
	2. Select Clear Info.
	3. Operate the vehicle under the following conditions:
	  1. Turn ON the ignition, with the engine OFF for at least 2 seconds.
	  2. Start the vehicle and idle for 5 seconds.
	  3. Drive in D4 until the TCC locks for 10 seconds.
	  4. Continue to run the engine for at least 60 seconds from startup.
	4. Select Specific DTC.
		-		

cardiagn.com

	5. Enter DTC P1810. Has the test run and passed?		Go to **Step 17**	Go to **Step 2**
17	With the scan tool, observe the stored information, capture info, and DTC Info. Does the scan tool display any DTCs that you have not diagnosed?	-	Go to **Diagnostic Trouble Code (DTC) List** in Engine Controls	System OK

DTC P2761

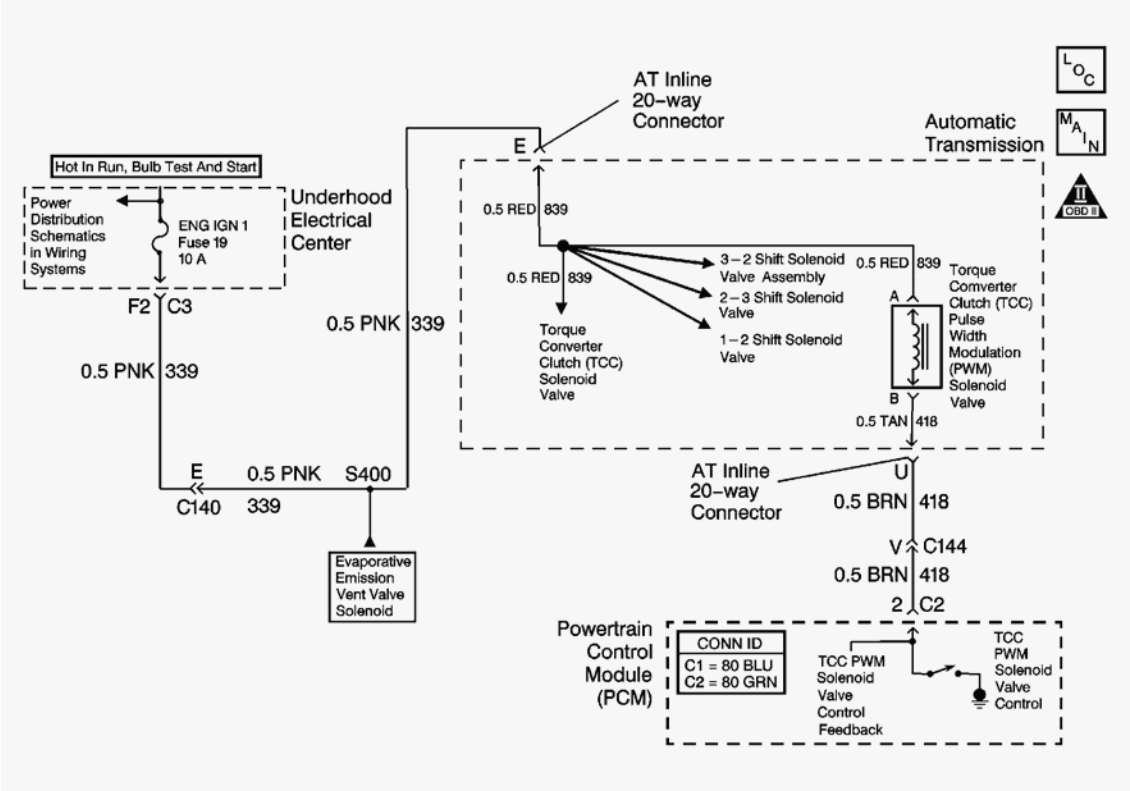

Fig. 22: DTC P2761 Schematics
Courtesy of GENERAL MOTORS CORP.

Circuit Description

The torque converter clutch pulse width modulation (TCC PWM) solenoid valve controls the fluid acting on the converter clutch valve. The converter clutch valve controls the TCC application and release. The solenoid attaches to the control valve body within the transmission. The solenoid receives ignition voltage through the ignition 1 circuit. The powertrain control module (PCM) controls the solenoid by providing a ground path on the TCC PWM solenoid valve control circuit. Current flows through the solenoid coil according to the duty cycle, percentage of ON and OFF time. The TCC PWM solenoid valve provides a smooth engagement of the TCC by operating during a duty cycle percent of ON time.

cardiagn.com

When the PCM detects a continuous open, short to ground or short to power in the TCC PWM solenoid valve circuit, then DTC P2761 sets. DTC P2761 is a type B DTC.

Conditions for Running the DTC

- The system voltage is 10-18 volts.
- The engine speed is greater than 450 RPM for 5 seconds.
- The engine is not in fuel cutoff.
- The PCM commands first gear.
- The TCC duty cycle is less than 10 percent or greater than 90 percent.

Conditions for Setting the DTC

DTC P2761 sets if one of the following conditions occurs for 5 seconds:

Condition 1

The PCM commands the solenoid ON, 90 percent, and the voltage feedback remains high, B+.

Condition 2

The PCM commands the solenoid OFF, 0 percent, and the voltage feedback remains low, 0 volt.

Action Taken When the DTC Sets

- The PCM illuminates the malfunction indicator lamp (MIL) during the second consecutive trip in which the Conditions for Setting the DTC are met.
- The PCM inhibits TCC engagement.
- The PCM inhibits 4th gear if the transmission is in hot mode.
- The PCM freezes transmission adapt functions.
- The PCM records the operating conditions when the Conditions for Setting the DTC are met. The PCM stores this information as Freeze Frame and Failure Records.
- The PCM stores DTC P2761 in PCM history during the second consecutive trip in which the Conditions for Setting the DTC are met.

Conditions for Clearing the MIL/DTC

- The PCM turns OFF the MIL during the third consecutive trip in which the diagnostic test runs and passes.
- A scan tool can clear the MIL/DTC.
- The PCM clears the DTC from PCM history if the vehicle completes 40 warm-up cycles without an emission-related diagnostic fault occurring.
- The PCM cancels the DTC default actions when the ignition switch is OFF long enough in order to power down the PCM.

cardiagn.com

Test Description

The numbers below refer to the step numbers on the diagnostic table.

4: This step tests for voltage to the solenoid.

5: This step tests the ability of the PCM and wiring to control the ground circuit.

7: This step tests the resistance of the TCC PWM solenoid valve and the automatic transmission (AT) wiring harness assembly.

DTC P2761

Step	Action	Value (s)	Yes	No
1	Did you perform the Diagnostic System Check - Engine Controls?	-	Go to **Step 2**	Go to **Diagnostic System Check - Engine Controls** in Engine Controls
2	1. Install a scan tool. 2. Turn ON the ignition, with the engine OFF. **IMPORTANT:** **Before clearing the DTC, use the scan tool in order to record the Freeze Frame and Failure Records. Using the Clear Info function erases the Freeze Frame and Failure Records from the PCM.** 3. Record the DTC Freeze Frame and Failure Records. 4. Clear the DTC. Are any of the following DTCs also set? • P0740 • P0753 • P0758 • P0785	-	Go to **Step 3**	Go to **Step 4**
3	Inspect the ENG IGN 1 fuse for an open. Refer to **Circuit Protection - Fuses** in Wiring Systems. Is the fuse open?	-	Go to **Step 11**	Go to **Step 4**
	1. Turn OFF the ignition. 2. Disconnect the AT inline 20-way connector, additional DTCs may set.			

cardiagn.com

4	3. Install the **J 44152** Jumper Harness (20 pins) on the engine side of the AT inline 20-way connector. 4. Turn ON the ignition, with the engine OFF. 5. Using the **J 35616** GM Terminal Test Kit, connect a test lamp from terminal E of the **J 44152** to ground. Refer to **Automatic Transmission Inline 20-Way Connector End View** . Does the test lamp illuminate?	-	Go to **Step 5**	Go to **Step 14**
5	1. Connect the test lamp between terminal E and terminal U of the **J 44152** . Refer to **Automatic Transmission Inline 20-Way Connector End View** . 2. Use the scan tool in order to command the TCC PWM solenoid valve ON and OFF three times. Does the test lamp turn ON and OFF with each command?	-	Go to **Step 7**	Go to **Step 6**
6	Is the test lamp always ON?	-	Go to **Step 15**	Go to **Step 16**
7	1. Install the **J 44152** on the transmission side of the AT inline 20-way connector. 2. Using the DMM and the **J 35616** , measure the resistance between terminal E and terminal U of the **J 44152** . Refer to **Automatic Transmission Inline 20-Way Connector End View** . Does the resistance measure within the specified range?	10-15 ohm	Go to **Step 8**	Go to **Step 9**
8	Measure the resistance from terminal E to ground, and from terminal U to ground. Do both readings measure greater than the specified value?	250 K ohm	Go to **Intermittent Conditions** in Engine Controls	Go to **Step 10**
9	1. Disconnect the AT wiring harness assembly from the TCC PWM solenoid valve. 2. Measure the resistance of the TCC PWM solenoid valve.	10-15		

cardiagn.com

	Does the resistance measure within the specified range?	ohm	Go to **Step 17**	Go to **Step 18**
10	1. Disconnect the AT wiring harness assembly from the TCC PWM solenoid valve. 2. Measure the resistance from each of the component terminals to ground. Do both readings measure greater than the specified value?	250 K ohm	Go to **Step 17**	Go to **Step 18**
11	**IMPORTANT:** **The condition that affects this circuit may exist in other connecting branches of the circuit. Refer to <u>Power Distribution Schematics</u> in Wiring Systems for complete circuit distribution.** Test the ignition circuit of the TCC PWM solenoid valve for a short to ground between the fuse block and the AT inline 20-way connector.Refer to **<u>Testing for Short to Ground</u>** and **<u>Wiring Repairs</u>** in Wiring Systems.Did you find and correct the condition?	-	Go to **Step 20**	Go to **Step 12**
12	**IMPORTANT:** **The condition that affects this circuit may exist in other connecting branches of the circuit. Refer to <u>Power Distribution Schematics</u> in Wiring Systems for complete circuit distribution.** Test the ignition circuit of the TCC PWM solenoid valve for a short to ground between the AT inline 20-way connector and the TCC PWM solenoid valve.Refer to **<u>Testing for Short to Ground</u>** in Wiring Systems.Did you find a short to ground condition?	-	Go to **Step 17**	Go to **Step 13**
13	1. Test each solenoid for a short to ground. 2. Replace the faulty solenoid as necessary. Did you complete the replacement?	-	Go to **Step 20**	-
14	**IMPORTANT:** **The condition that affects this circuit may exist in other connecting branches of the circuit. Refer to <u>Power Distribution Schematics</u> in Wiring Systems for complete circuit distribution.** Test the ignition circuit of the TCC PWM solenoid	-		-

cardiagn.com

	valve for an open.Refer to **Testing for Continuity** and **Wiring Repairs** in Wiring Systems.Did you find and correct the condition?		Go to **Step 20**	
15	Test the control circuit of the TCC PWM solenoid valve for a short to ground between the PCM connector C2 and the AT inline 20-way connector. Refer to **Testing for Short to Ground** and **Wiring Repairs** in Wiring Systems. Did you find and correct the condition?	-	Go to **Step 20**	Go to **Step 19**
16	Test the control circuit of the TCC PWM solenoid valve for an open or short to power between the PCM connector C2 and the AT inline 20-way connector. Refer to **Circuit Testing** and **Wiring Repairs** in Wiring Systems. Did you find and correct the condition?	-	Go to **Step 20**	Go to **Step 19**
17	Replace the AT wiring harness assembly. Refer to **Torque Converter Clutch Pulse Width Modulation (TCC PWM) Solenoid, TCC Solenoid, and Wiring Harness** . Did you complete the replacement?	-	Go to **Step 20**	-
18	Replace the TCC PWM solenoid valve. Refer to **Torque Converter Clutch Pulse Width Modulation (TCC PWM) Solenoid, TCC Solenoid, and Wiring Harness** . Did you complete the replacement?	-	Go to **Step 20**	-
19	Replace the PCM. Refer to **Powertrain Control Module (PCM) Replacement** in Engine Controls. Did you complete the replacement?	-	Go to **Step 20**	-
20	Perform the following procedure in order to verify the repair: 1. Select DTC. 2. Select Clear Info. 3. Drive the vehicle in D4 with the TCC On. Ensure that the following conditions are met: • The PCM commands the TCC PWM solenoid valve ON, and the voltage feedback drops to zero. • The PCM commands the TCC PWM solenoid valve OFF, and the voltage feedback increases to B+. • All conditions are met for 5 seconds. 4. Select Specific DTC.	-		

cardiagn.com

	5. Enter DTC P2761. Has the test run and passed?		Go to **Step 21**	Go to **Step 2**
21	With the scan tool, observe the stored information, capture info, and DTC Info. Does the scan tool display any DTCs that you have not diagnosed?	-	Go to **Diagnostic Trouble Code (DTC) List** in Engine Controls	System OK

cardiagn.com