Brake System

GENERAL

BRAKE SYSTEM
- BRAKE BOOSTER
- MASTER CYLINDER
- BRAKE LINE
- BRAKE PEDAL
- FRONT DISC BRAKE
- REAR DISC BRAKE

PARKING BRAKE SYSTEM
- PARKING BRAKE

ABS (ANTI-LOCK BRAKE SYSTEM)
- ANTI-LOCK BRAKING SYSTEM CONTROL MODULE
- FRONT WHEEL SPEED SENSOR
- REAR WHEEL SPEED SENSOR

EBD (ELECTRONIC BRAKE-FORCE DISTRIBUTION)

ESP/ESC SYSTEM
- YAW-RATE SENSOR AND G-SENSOR
- ESP/ESC SWITCH
- STEERING WHEEL ANGLE SPEED SENSOR

GENERAL

SPECIFICATIONS E7815AD4

Item		Specification
Master cylinder	Type	Tandem
	Cylinder I.D.	26.99 mm (1.063 in)
	Piston stroke	31 mm (1.22 in)
	Fluid level switch	Provided
Brake booster	Type	9" + 10" Tandem
	Boosting ratio	9: 1
Front brake	Type	Ventilated disc
	Disc O.D.	298 mm (11.73 in)
		325 mm (12.80 in)
	Caliper piston	Double
Rear brake	Type	Solid disc
	Disc O.D.	302 mm (11.89 in)
	Caliper piston	Single
Parking brake	Type	DIH (Drum in hat)
	Drum I.D.	190 mm (7.48 in)
Brake fluid		DOT 3

NOTE

O.D. : Outer Diameter
I.D. : Inner Diameter

SPECIFICATION (ABS)

Part	Item		Standard value	Remark
HECU(Hydraulic and Electronic Control Unit)	System		4 channel 4 sensor (Solenoid)	·ABS system:ABS & EBD control
	Type		Motor, valve relay intergrated type	
	Operating voltage		8 V ~ 16 V(DC)	
	Operating temperature		-40 ~ 120 °C (-40 ~ 248 °F)	
Warning lamp	Operating voltage		12 V	·ABS W/L:ABS failure ·Brake W/L:Parking, brake oil, EBD failure
	Current consumption		80 mA	
Acitve wheel speed sensor	Supply voltage		DC 4.5 ~ 2.0 V	
	Operating temperature		-40 ~ 150 °C	
	Output current low		5.9 ~ 8.4 mA	Typ.7 mA
	Output current High		11.8 ~ 16.8 mA	Typ.14 mA
	Frequency range		1 ~ 2500 HZ	
	Air gap	Front	0.15 ~ 1.5 mm	Typ.0.7 mm
		Rear	0.2 ~ 1.2 mm	Typ.0.7 mm
	Tone wheel		48 teeth	
	Output duty		30~70 %	

SPECIFICATION(VDC)

Part	Item		Standard Value	Remark
HECU(Hydraulic and Electronic Control Unit)	System		4 channel 4 sensor(Solenoid)	·Total control (ABS, EBD, TCS, ESP)
	Type		Motor, valve relay intergrated type	
	Operating voltage		8 V ~ 16 V(DC)	
	Operating temperature		-40 ~ 120 °C(-40 ~ 248 °F)	
Warning lamp	Operating voltage		12 V	·ESP Operating Lamp ·ESP Warning Lamp
	Current consumption		80 mA	
Active wheel speed sensor	Supply voltage		DC 4.5 ~ 20V	
	Operating temperature		-40 ~ 150 °C	
	Output current low		5.9 ~ 8.4 mA	
	Output current high		11.8 ~ 16.8 mA	
	Tone wheel		48 teeth	
	Frequency range		1 ~ 2500 HZ	
	Airgap	Front	0.15 ~ 1.5 mm	Typ. 0.7 mm
		Rear	0.2 ~ 1.2 mm	Typ. 0.7 mm
Steering Wheel Angle Sensor	Operating Voltage		8V ~ 16 V	
	Current Consumption		Max 150 mA	
	Operating Angular velocity		Max ± 780 °/sec	
Yaw-rate & Lateral G sensor	Operating Voltage		8 V ~ 16 V	
	Current Consumption		Max. 120 mA	
	Output Voltage high		4.35 V~ 4.65 V	Typ. 4.5 V
	Output Voltage low		0.35 ~ 0.65 V	Typ. 0.5 V
	Yaw Sensor Operating Range		±100 ° /s	
	G Sensor Operating Range		±1.8 G	
	Reference voltage output		2.464 ~ 2.536 V	Typ. 2.5 V

SERVICE STANDARD

Items	Standard vale
Brake pedal height	214 mm (8.43 in)
Brake pedal stroke	122 mm (4.8 in)
Stop lamp clearance	0.5 ~ 1.0 mm (0.02 ~ 0.04 in)
Brake pedal free play	3 ~ 8 mm (0.12 ~ 0.31 in)
Front brake disc thickness	28 mm (1.10 in)
Front brake disc pad thickness	10.5 mm (0.41 in)
Rear brake disc thickness	11 mm (0.43 in)
Rear brake disc pad thickness	10 mm (0.39 in)

TIGHTENING TORQUE

Items	Nm	kgf.m	lb-ft
Hub nut	88.3 ~ 107.9	9.0 ~ 11.0	65.1 ~ 79.6
Master cylinder to brake booster	7.8 ~ 11.8	0.8 ~ 1.2	5.8 ~ 8.7
Brake booster mounting nuts	12.7 ~ 15.7	1.3 ~ 1.6	9.4 ~ 11.6
Air bleeding screw	6.7 ~ 12.7	0.7 ~ 1.3	5.1 ~ 9.4
Brake tube flare nuts	12.7 ~ 16.7	1.3 ~ 1.7	9.4 ~ 12.3
Front caliper guide rod bolts	21.6 ~ 31.4	2.2 ~ 3.2	15.9 ~ 23.1
Rear caliper guide rod bolts	21.6 ~ 31.4	2.2 ~ 3.2	15.9 ~ 23.1
Front caliper assembly to knuckle	78.5 ~ 98.1	8.0 ~ 10.0	57.9 ~ 72.3
Rear caliper assembly to knuckle	63.7 ~ 73.5	6.5 ~ 7.5	47.0 ~ 54.2
Brake hose to caliper	24.5 ~ 29.4	2.5 ~ 3.0	18.1 ~ 21.7
Brake pedal member bracket bolts	16.7 ~ 25.5	1.7 ~ 2.6	12.3 ~ 18.8
Brake pedal shaft nut	24.5 ~ 34.3	2.5 ~ 3.5	18.1 ~ 25.3
Stop lamp switch lock nut	7.8 ~ 9.8	0.8 ~ 1.0	5.8 ~ 7.2
Wheel speed sensor mounting bolt	6.9 ~ 10.8	0.7 ~ 1.1	5.0 ~ 8.0
HECU bracket bolt	16.7 ~ 25.5	1.7 ~ 2.6	12.3 ~ 18.8
HECU bracket nut	5.9 ~ 9.8	0.6 ~ 1.0	4.3 ~ 7.2
Yaw rate & G sensor mounting bolts	4.9 ~ 7.8	0.5 ~ 0.8	3.6 ~ 5.8

LUBLICANTS EC83FCB5

Items	Recommended	Quantity
Brake pedal bushing and bolt	Chassis grease	As required
Parking brake shoe and backing plate contacting surface	Heat resistance grease	As required
Caliper guide rod and boot	Grease ML 701	0.8 ~ 1.3 g

SPECIAL TOOL E4AE09C6

Tool(Number and Name)	Illustration	Use
09581-11000 Piston expander	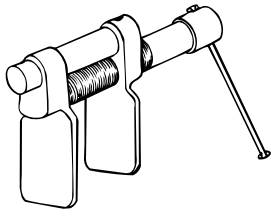 EJDA043A	Spreading the front disc brake piston

TROUBLESHOOTING E2955522

PROBLEM SYMPTOMS TABLE

Use the table below to help you find the cause of the problem. The numbers indicate the priority of the like cause of the problem. Check each part in order. If necessary, replace these parts

Symptom	Suspect Area	Reference
Lower pedal or spongy pedal	1. Brake system (Fluid leaks) 2. Brake system (Air in) 3. Piston seals (Worn or damaged) 4. Rear brake shoe clearance(Out of adjustment) 5. Master cylinder (Inoperative)	repair air·bleed replace adjust replace
Brake drag	1. Brake pedal freeplay (Minimum) 2. Parking brake lever travel (Out of adjustment) 3. Parking brake wire (Sticking) 4. Rear brake shoe clearance(Out of adjustment) 5. Pad or lining (Cracked or distorted) 6. Piston (Stuck) 7. Piston (Frozen) 8. Anchor or Return spring (Inoperative) 9. Booster system (Vacuum leaks) 10. Master cylinder (Inoperative)	adjust adjust repair adjust replace replace replace replace repair replace
Brake pull	1. Piston (Sticking) 2. Pad or lining (Oily) 3. Piston (Frozen) 4. Disc (Scored) 5. Pad or lining (Cracked or distorted)	replace replace replace replace replace
Hard pedal but brake inefficient	1. Brake system (Fluid leaks) 2. Brake system (Air in) 3. Pad or lining (Worn) 4. Pad or lining (Cracked or distorted) 5. Rear brake shoe clearance(Out of adjustment) 6. Pad or lining (Oily) 7. Pad or lining (Glazed) 8. Disc (Scored) 9. Booster system (Vacuum leaks)	repair air·bleed replace replace adjust adjust replace replace repair
Noise from brake	1. Pad or lining (Cracked or distorted) 2. Installation bolt (Loosen) 3. Disc (Scored) 4. Sliding pin (Worn) 5. Pad or lining (Dirty) 6. Pad or lining (Glazed) 7. Anchor or Return spring (Faulty) 8. Brake pad shim (Damage) 9. Shoe hold-down spring (Damage)	replace adjust replace replace clean replace replace replace replace
Brake fades	1. master cylinder	replace

Symptom	Suspect Area	Reference
Brake vibration, pulsation	1. brake booster 2. pedal free play 3. master cylinder 4. caliper 5. master cylinder cap seal 6. damaged brake lines	replace adjust replace replace replace replace
Brake Chatter	Brake chatter is usually caused by loose or worn components, or glazed or burnt linings. Rotors with hard spots can also contribute to brake chatter. Additional causes of chatter are out-of-tolerance rotors, brake lining not securely attached to the shoes, loose wheel bearings and contaminated brake lining.	

BRAKE SYSTEM

OPERATION AND LEAKAGE CHECK EAD34DE9

CHECK ALL OF THE FOLLOWING ITEMS:

Component	Procedure
Brake Booster (A)	Check brake operation by applying the brakes during a test drive. If the brakes do not work properly, check the brake booster. Replace the brake booster as an assembly if it does not work properly or if there are signs of leakage.
Piston cup and pressure cup inspection (B)	• Check brake operation by applying the brakes. Look for damage or signs of fluid leakage. Replace the master cylinder as an assembly if the pedal does not work properly or if there is damage or signs of fluid leakage. • Check for a difference in brake pedal stroke between quick and slow brake applications. Replace the master cylinder if there is a difference in pedal stroke.
Brake hoses (C)	Look for damage or signs of fluid leakage. Replace the brake hose with a new one if it is damaged or leaking.
Caliper piston seal and piston boots (D)	Check brake operation by applying the brakes. Look for damage or signs of fluid leakage. If the pedal does not work properly, the brakes drag, or there is damage or signs of fluid leakage, disassemble and inspect the brake caliper. Replace the boots and seals with new ones whenever the brake caliper is disassembled.

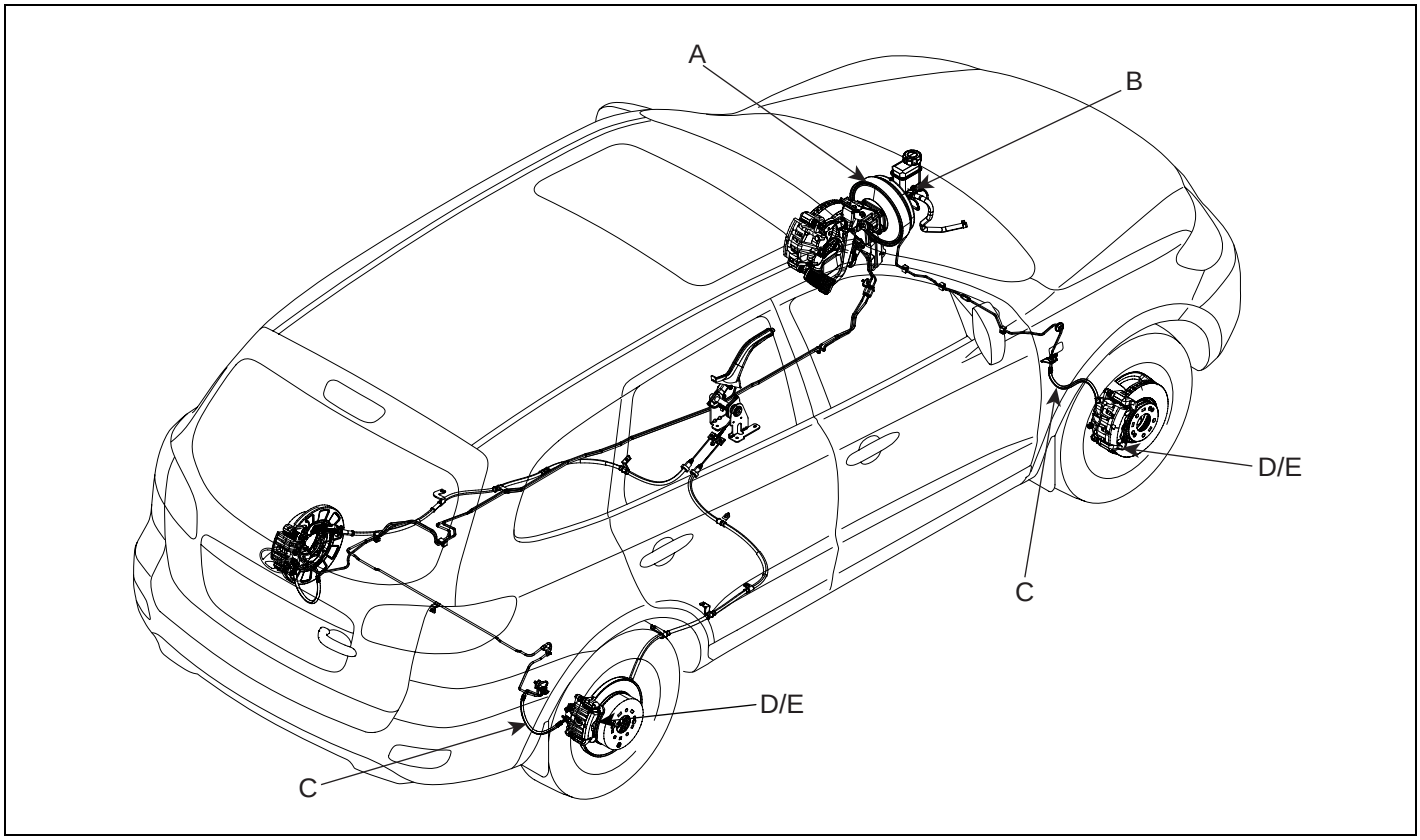

SCMBR6500D

BRAKE SYSTEM BLEEDING

CAUTION

- ***Do not reuse the drained fluid.***
- ***Always use genuine DOT 3 brake Fluid. Using a non-genuine DOT 3 brake fluid can cause corrosion and decrease the life of the system.***
- ***Make sure no dirt of other foreign matter is allowed to contaminate the brake fluid.***
- ***Do not spill brake fluid on the vehicle, it may damage the paint; if brake fluid does contact the paint, wash it off immediately with water.***
- ***The reservoir on the master cylinder must be at the MAX (upper) level mark at the start of bleeding procedure and checked after bleeding each brake caliper. Add fluid as required.***

1. Make sure the brake fluid in the reservoir is at the MAX (upper) level line.
2. Have someone slowly pump the brake pedal several times, and then apply pressure.
3. Loosen the right-rear brake bleed screw (A) to allow air to escape from the system. Then tighten the bleed screw securely.
4. Repeat the procedure for wheel in the sequence shown below unit air bubbles no longer appear in the fluid.
5. Refill the master cylinder reservoir to MAX (upper) level line.

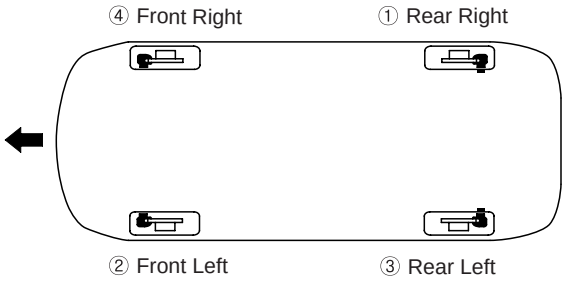

EJKE003B

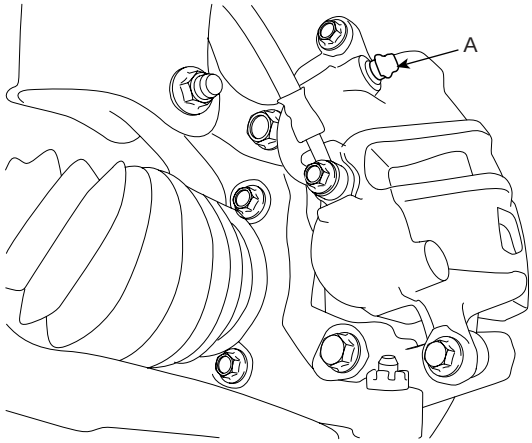

SCMBR6501D

BRAKE BOOSTER

COMPONENTS E7FFE14E

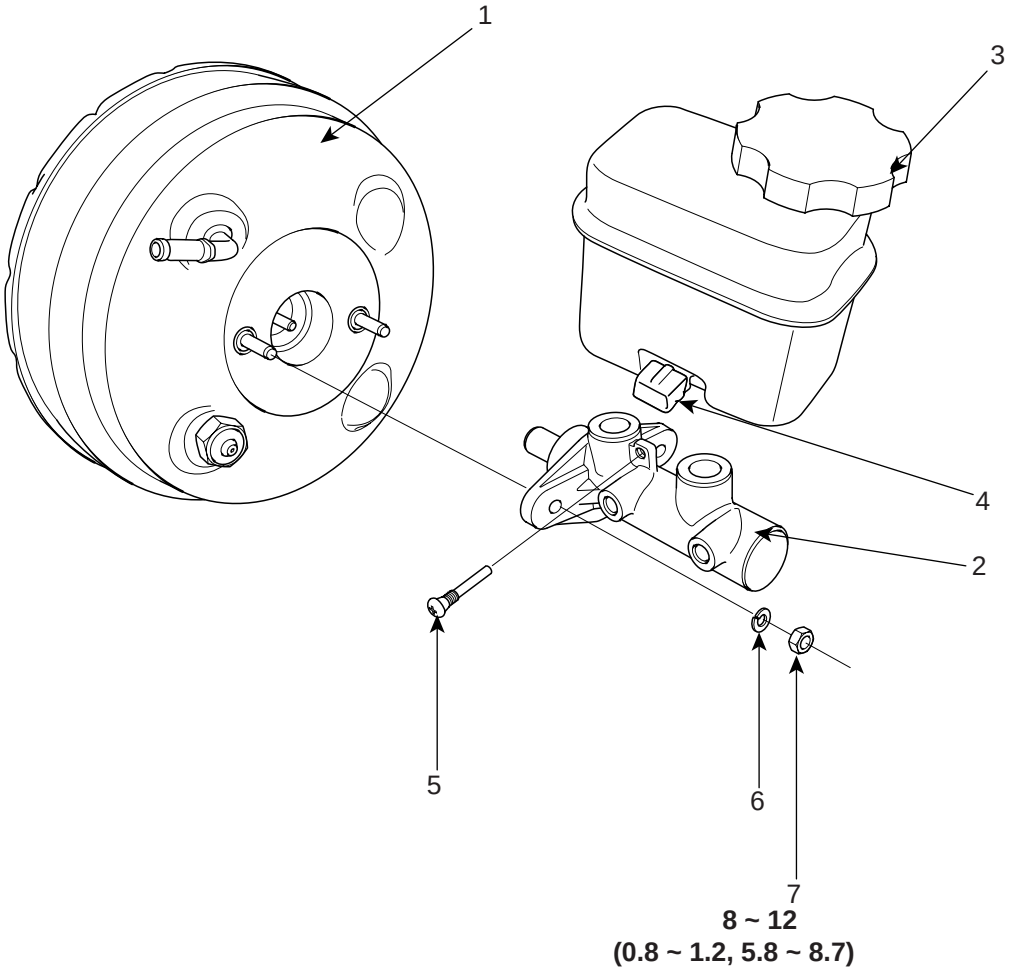

TORQUE : Nm (Kgf.m, lb-ft)

1. Brake booster
2. Master cylinder
3. Reservoir
4. Brake fluid level switch
5. Screw
6. Washer
7. Nut

SCMBR6501L

BRAKE BOOSTER OPERATING TEST EAC92E97

For simple checking of the brake booster operation, carry out the following tests

1. Run the engine for one or two minutes, and then stop it. If the pedal depresses fully the first time but gradually becomes higher when depressed succeeding times, the booster is operating properly, if the pedal height remains unchanged, thebooster is inoperative.

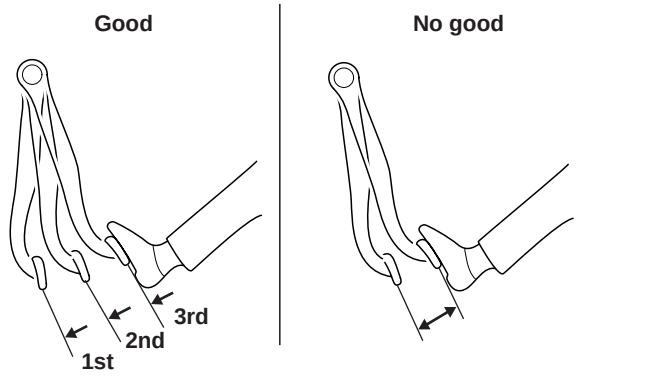

EJRF500B

2. With the engine stopped, step on the brake pedal several times.
   Then step on the brake pedal and start the engine. If the pedal moves downward slightly, the booster is in good condition. If there is no change, the booster is inoperative.

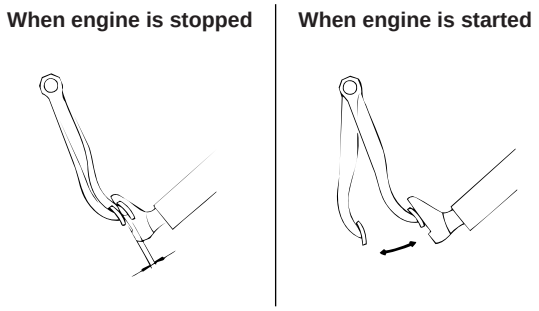

SCMBR6500L

3. With the engine running, step on the brake pedal and then stop the engine.
   Hold the pedal depressed for 30 seconds. If the pedal height does not change, the booster is in good condition, if the pedal rises, the booster is inoperative.
   If the above three tests are okay, the booster performance can be determined as good.
   Even if one of the above three tests is not okay, check the check valve, vacuum hose and booster for malfunction.

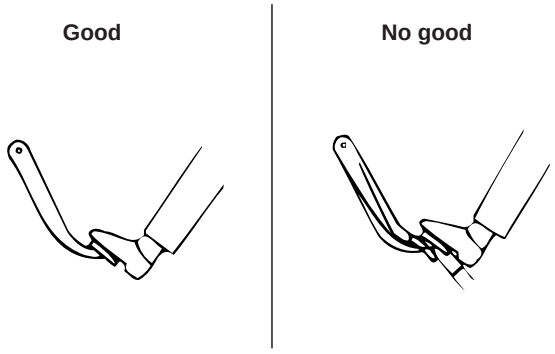

EJRF500C

REMOVAL EAB2C2A3

1. Remove the air cleaner assembly. (LHD only)

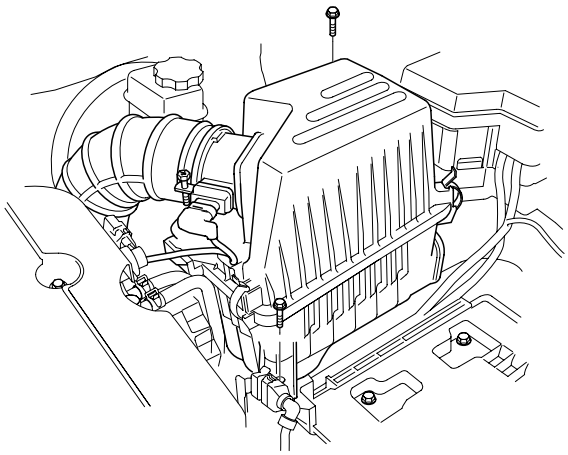

SCMBR6502D

2. Disconnect the vacuum hose (A), vacuum switch connector (B) from the brake booster.

3. Disconnect the brake fluid level switch connector (C) from the reservoir.

[LHD]

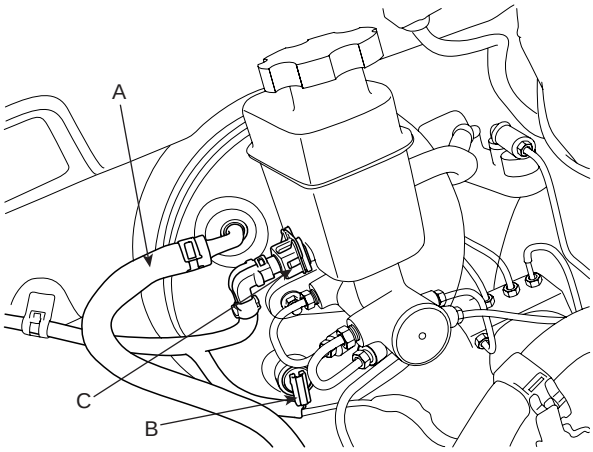

SCMBR6003D

[RHD]

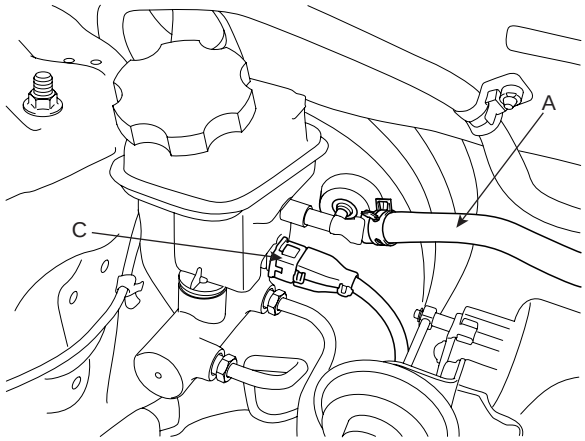

SCMBR6001L

4. Remove the master cylinder. (Refer to Master cylinder)

5. Remove the snap pin (A) and joint pin (B).

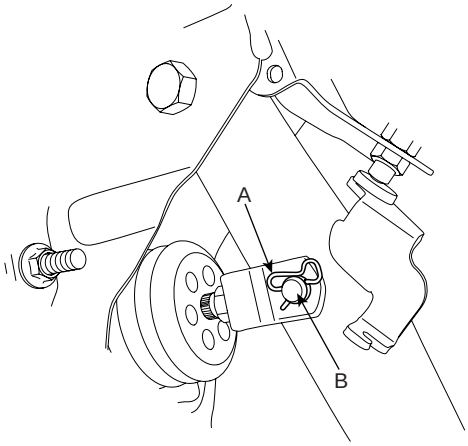

SCMBR6004D

6. Remove the brake booster by loosening the mounting nuts.

Tightening torque Nm (kgf.m, lb-ft):
13 ~ 16 (1.3 ~ 1.6, 9.4 ~ 11.6)

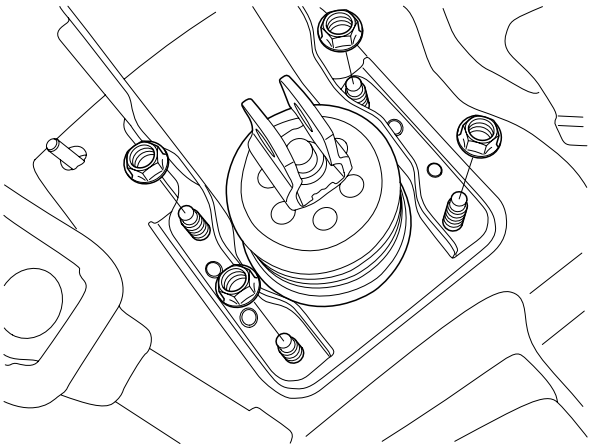

SCMBR6518L

INSPECTION E56ACBAF

1. Inspect the check valve in the vacuum hose.

   CAUTION

   Do not remove the check valve from the vacuum hose.

2. Check the boot for damage.

INSTALLATION E5250350

1. Installation is the reverse of removal.

   CAUTION

   - ***Before installing the pin, apply the grease to the joint pin.***
   - ***Use a new snap pin whenever installing.***

2. After installing, bleed the brake system. (Refer to Brake system bleeding)

3. Adjust the brake pedal height and free play. (Refer to Brake pedal height and free play adjustment)

MASTER CYLINDER

COMPONENTS E599266A

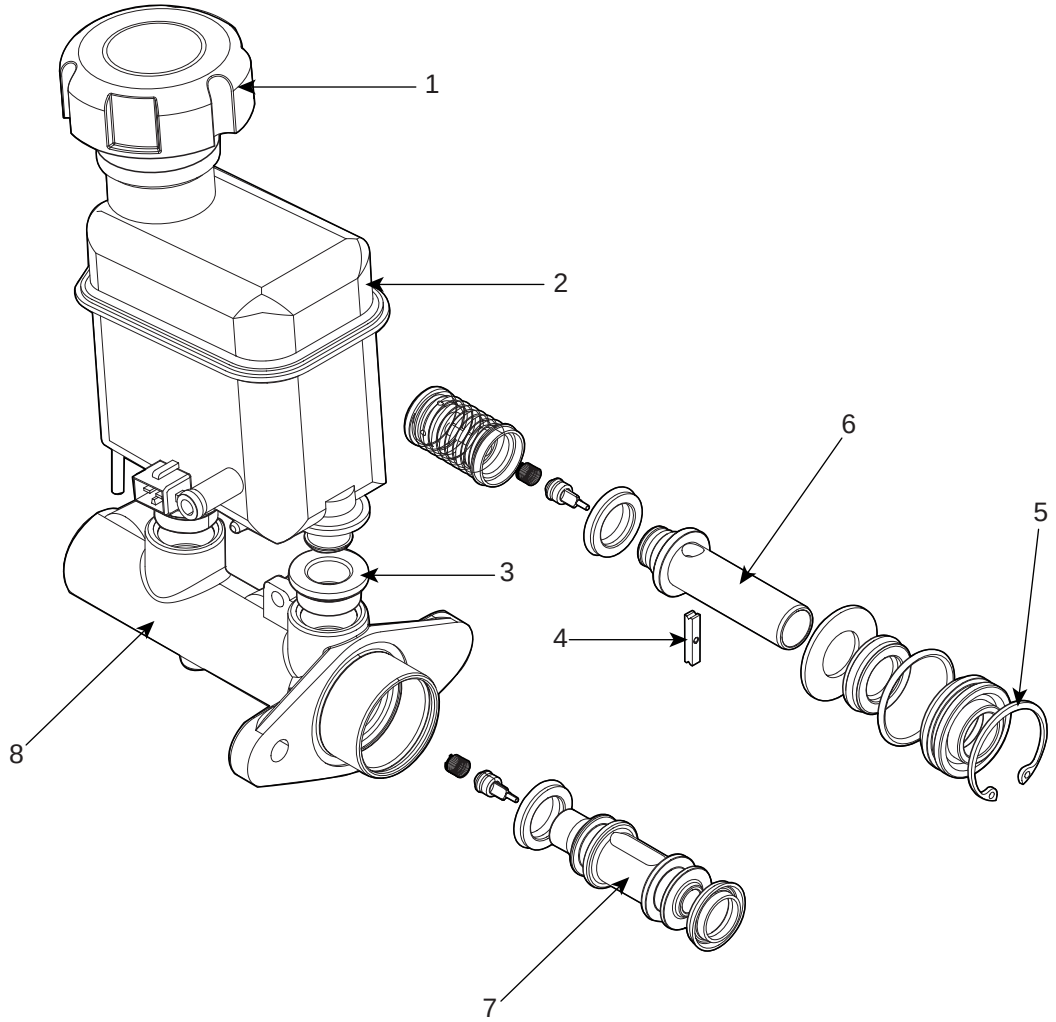

1. Reservoir cap
2. Reservoir
3. Grommet
4. Cylinder pin
5. Retainer
6. Primary piston assembly
7. Secondary piston assembly
8. Master cylinder body

SCMBR6514L

REMOVAL EB7ADF0E

1. Remove the air cleaner assembly. (LHD only)

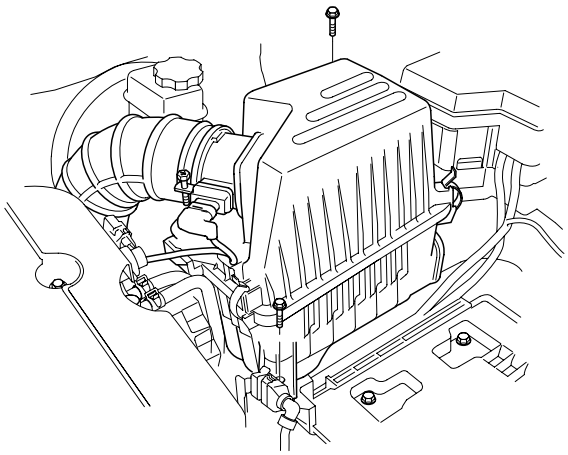

SCMBR6502D

2. Disconnect the brake fluid level switch connector (A) and hose (B) from the reservoir.

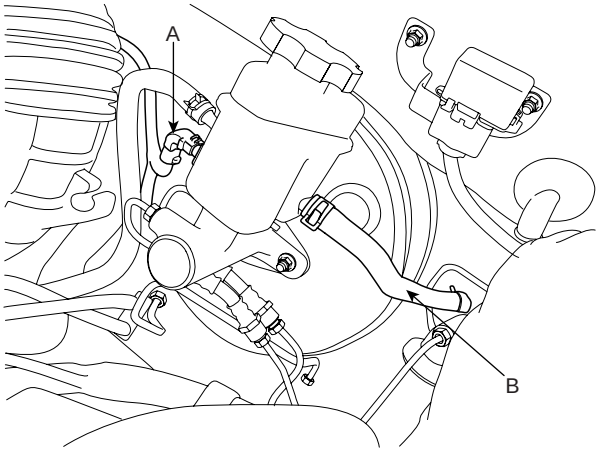

SCMBR6010D

CAUTION

- ***Do not spill brake fluid on the vehicle, it may damage the paint; if brake fluid does contact the paint, wash it off immediately with water.***

3. Disconnect the brake tube from the master cylinder by loosening the tube flare nut (A).

Tightening torque Nm (kgf.m, lb-ft): 12.7 ~ 16.7 (1.3 ~ 1.7, 9.4 ~ 12.3)

4. Remove the master cylinder from the brake booster after loosening the mounting nuts (B).

Tightening torque Nm (kgf.m, lb-ft): 7.8 ~ 11.8 (0.8 ~ 1.2, 5.8 ~ 8.7)

[LHD]

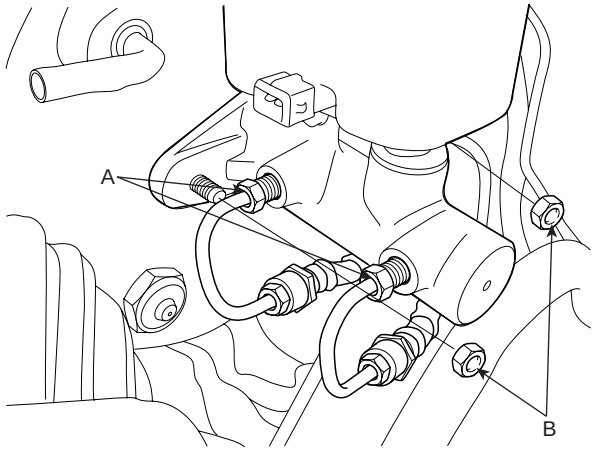

SCMBR6013D

[RHD]

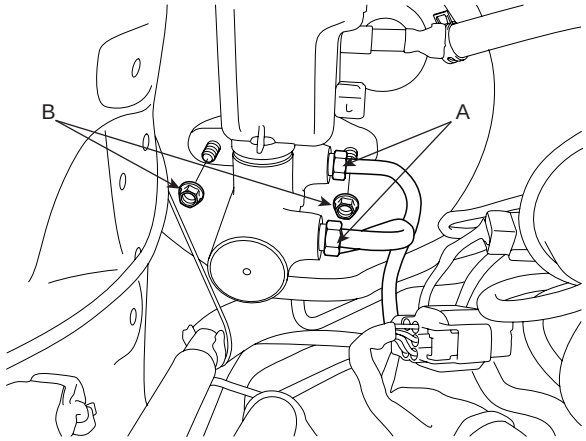

SCMBR6002L

DISASSEMBLY E5FC5E64

1. Remove the reservoir cap and drain the brake fluid into a suitable container.
2. Remove the fluid level sensor.
3. Remove the reservoir from the master cylinder, after remove mounting screw (A).

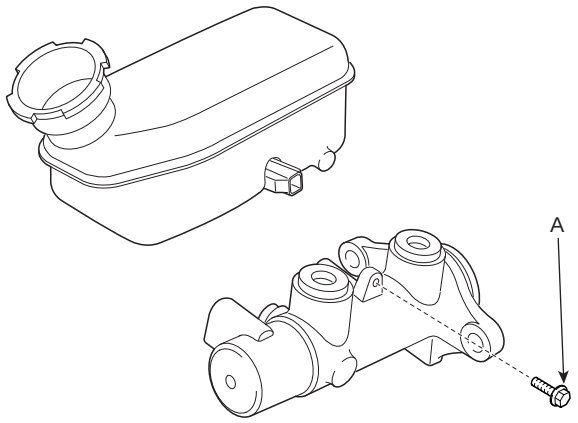

AJKF601T

4. Remove the retainer ring (A) by using the snap ring pliers.

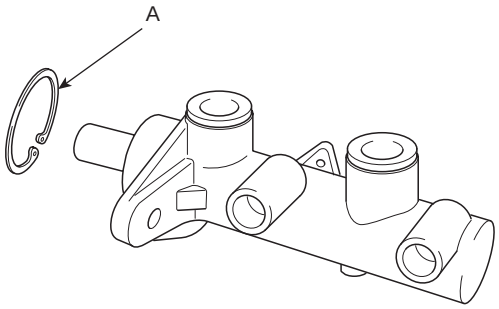

AJKF601U

5. Remove the primary piston assembly (A).
6. Remove the pin (C) with the secondary piston (B) pushed completely using a screwdriver. Remove the secondary piston assembly (B).

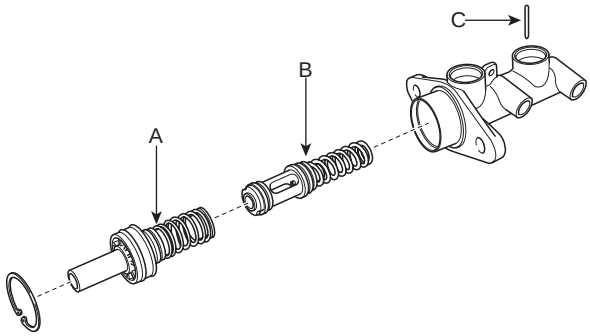

KJBF528A

NOTE

Do not disassemble the primary and secondary piston assembly.

INSPECTION EC789F5E

1. Check the master cylinder bore for rust or scratching.
2. Check the master cylinder for wear or damage. If necessary, clean or replace the cylinder.

CAUTION

- ***If the cylinder bore is damaged, replace the master cylinder assembly.***
- ***Wash the contaminated parts in alcohol.***

REASSEMBLY EF31C9AA

1. Apply genuine brake fluid to the rubber parts of the cylinder kit and grommets.
2. Carefully insert the springs and pistons in the proper direction.
3. Press the piston with a screwdriver (A) and install the cylinder pin (B).

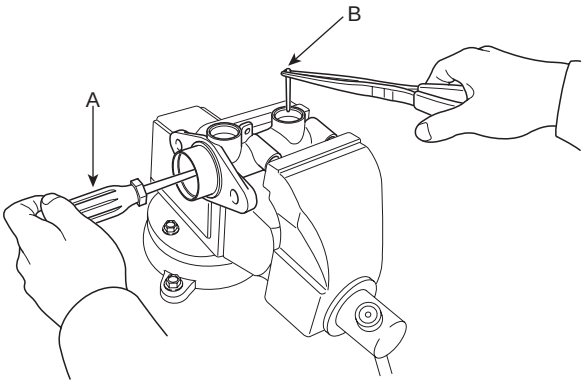

AJKF601W

4. Install the retainer ring (A) after installing primary piston assembly.

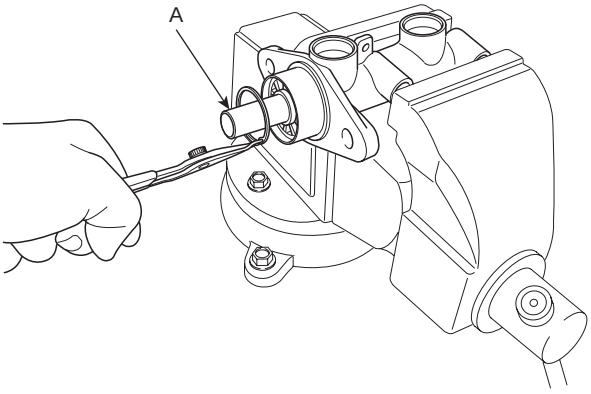

AJKF601X

5. Mount two grommets.
6. Install the reservoir on the cylinder.

INSTALLATION E805C2AD

1. Installation is the reverse of removal.
2. After installation, bleed the brake system. (Refer to Brake system bleeding)

BRAKE LINE

COMPONENTS E68C5CAF

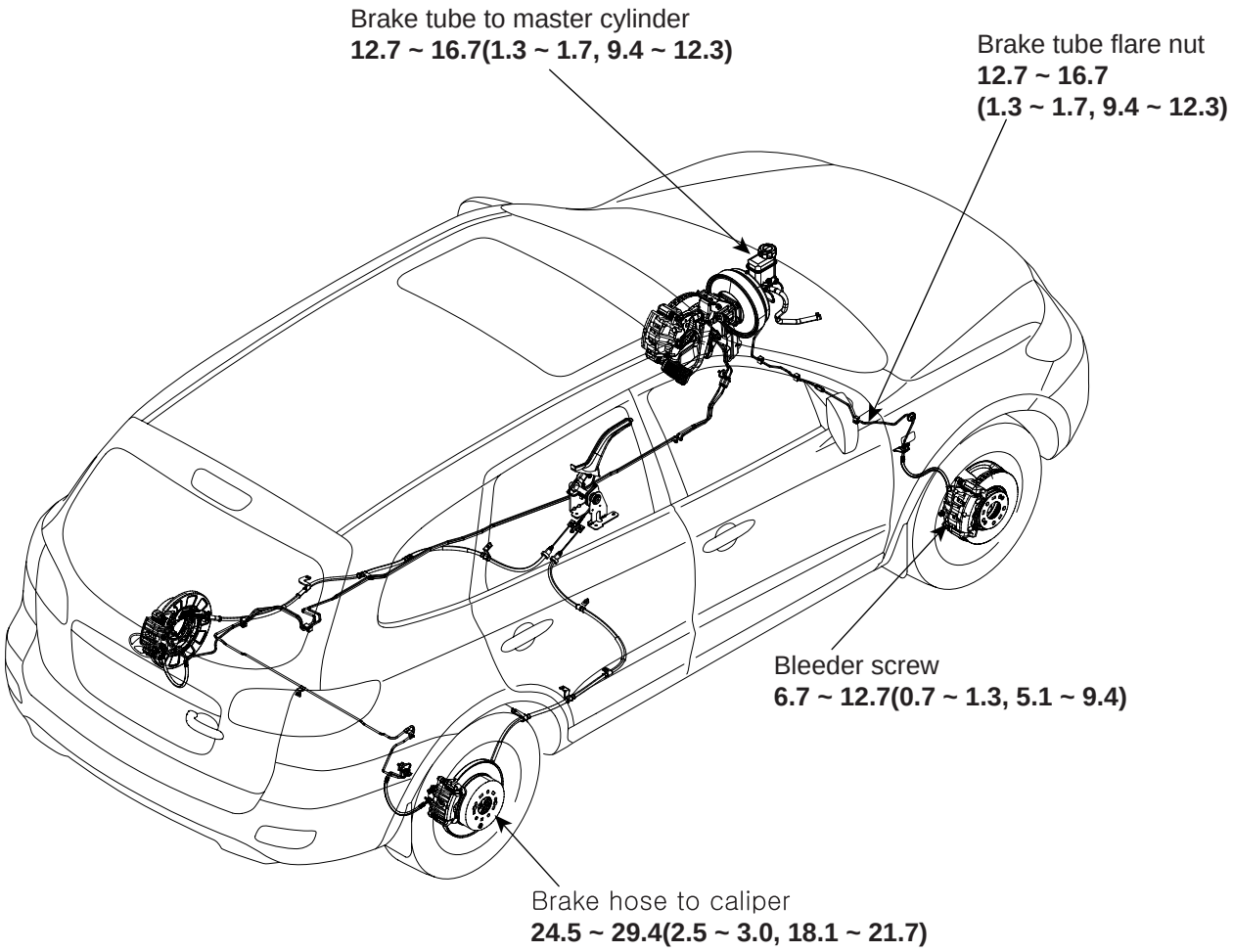

TORQUE : Nm (Kgf.m, lb-ft)

SCMBR6502L

REMOVAL E42B33E0

1. Remove the wheel & tire.
2. Remove the brake hose clip (A).

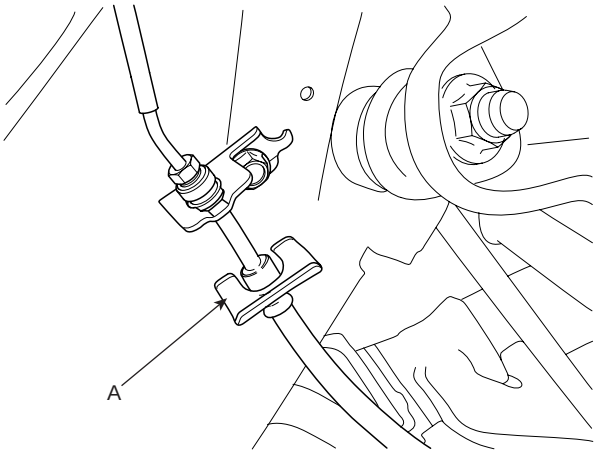

SCMBR6006D

3. Disconnect the brake tube by loosening the tube flare nut (A).

Tightening torque Nm (kgf.m, lb-ft):
12.7 ~ 16.7 (1.3 ~ 1.7, 9.4 ~ 12.3)

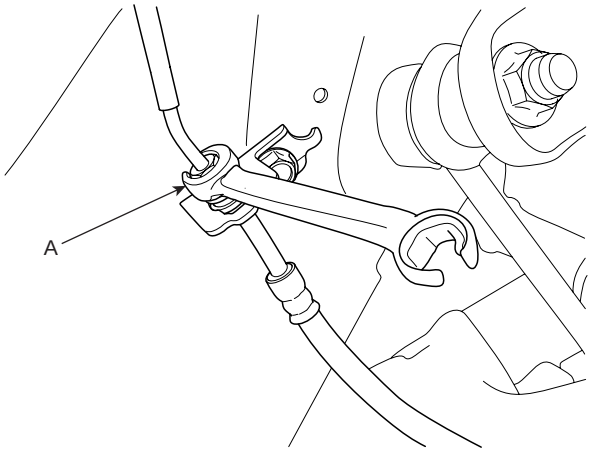

SCMBR6007D

4. Disconnect the brake hose (A) from the brake caliper by loosening the bolt.

Tightening torque Nm (kgf.m, lb-ft):
16.7 ~ 25.5 (1.6 ~ 2.6, 12.3 ~ 18.8)

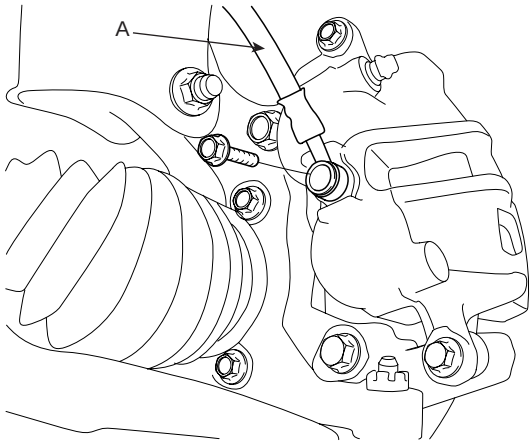

SCMBR6503L

INSPECTION EF20AC0C

1. Check the brake tubes for cracks, crimps and corrosion.
2. Check the brake hoses for cracks, damage and fluid leakage.
3. Check the brake tube flare nuts for damage and fluid leakage.

INSTALLATION EA6DDCBA

1. Installation is the reverse of removal.

CAUTION

Use a new washer (A) whenever installing.

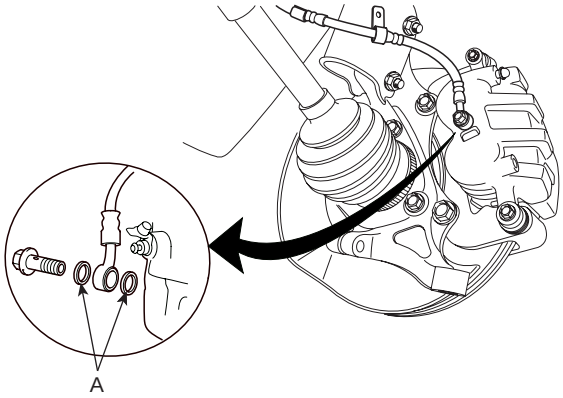

SCMBR6529D

2. After installation, bleed the brake system (Refer to Brake system bleeding)

BRAKE PEDAL

COMPONENTS E7AB27B0

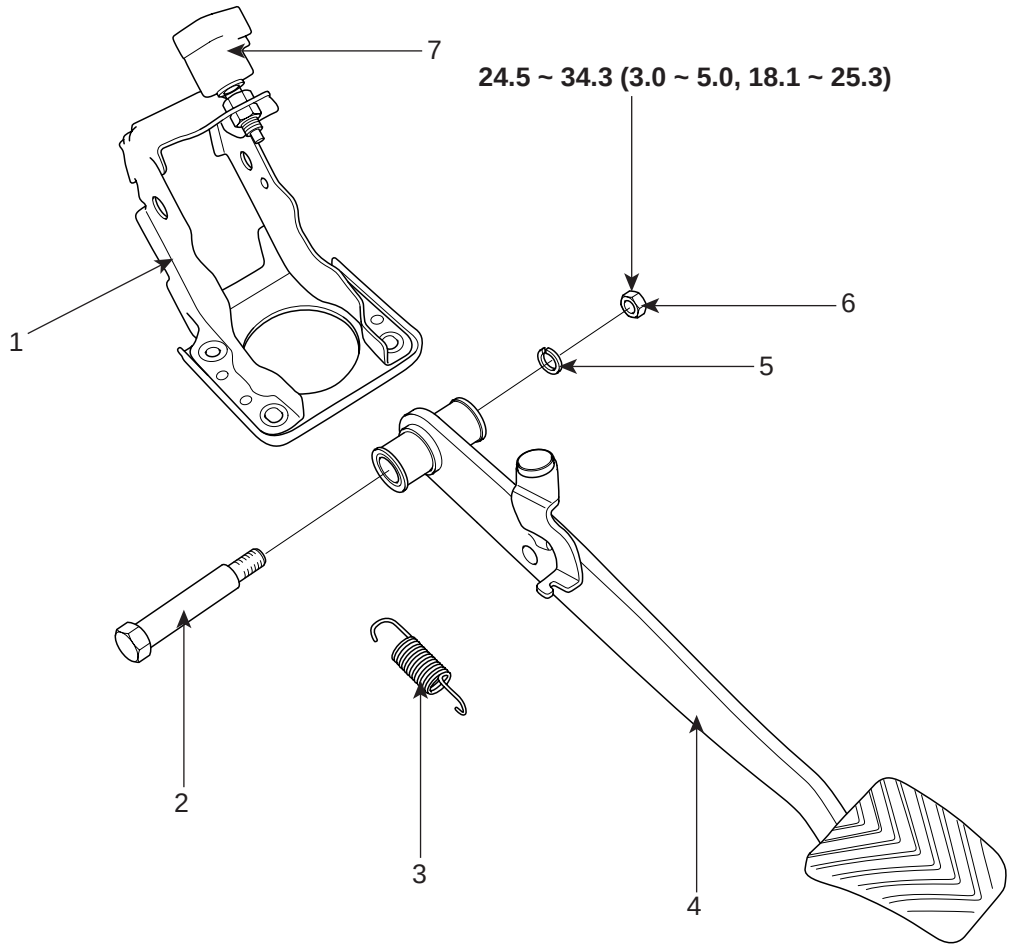

TORQUE : Nm (Kgf.m, lb-ft)

1. Brake pedal member assembly
2. Joint bolt
3. Return spring
4. Brake pedal assembly
5. Washer
6. Nut
7. Stop lamp switch

SCMBR6504L

BRAKE PEDAL HEIGHT AND FREE PLAY ADJUSTMENT EDC2DCA6

1. Disconnect the stop lamp switch (A) connector and loosen the stop lamp switch lock nut.

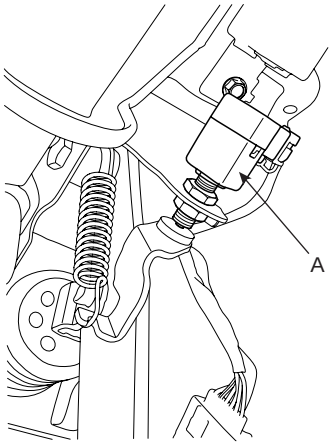

SCMBR6505L

2. Adjust the brake pedal height (A) as illustration below.

Pedal height: 214 mm (8.43 in)

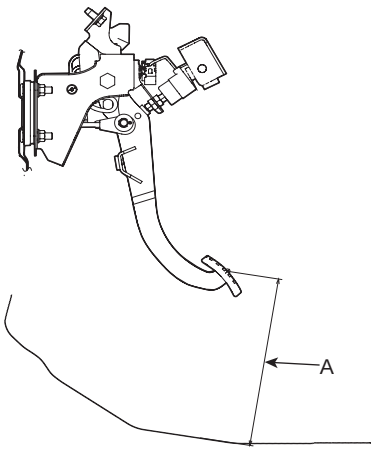

SCMBR6505D

3. Adjust the stop lamp switch clearance and brake pedal free play.

Stop lamp clearance: 0.5 ~ 1.0 mm (0.02 ~ 0.04 in) Pedal free play: 3.0 ~ 8.0 mm (0.12 ~ 0.31)

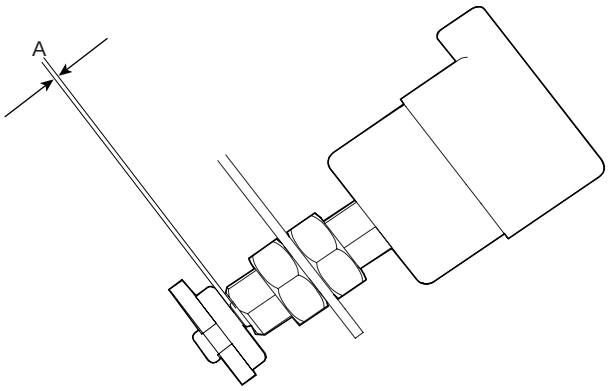

SCMBR6506D

NOTE

Adjust the brake pedal free play using the stop lamp switch lock nut.

REMOVAL EBEEEAD2

1. Remove the lower crash pad.

[LHD]

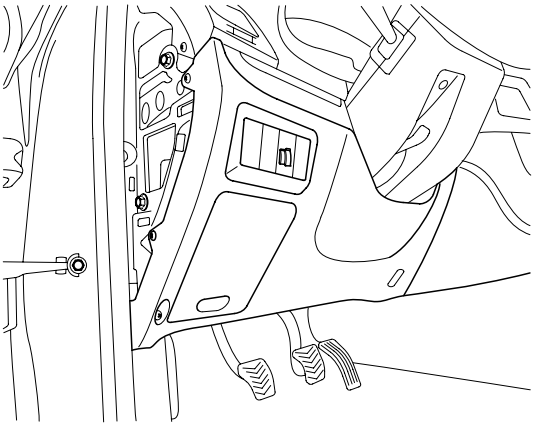

SCMBR6507D

[RHD]

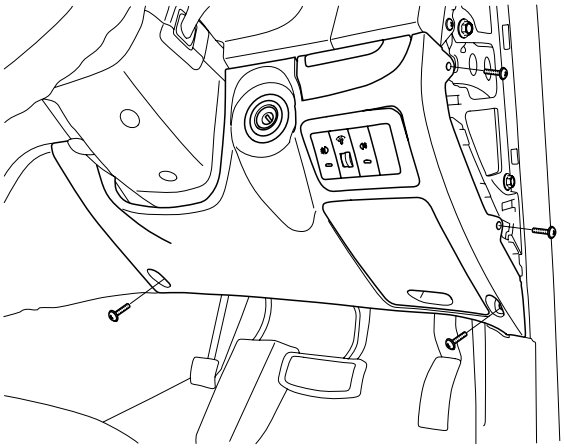

SCMST6001L

2. Disconnect the stop lamp switch (A) connector.

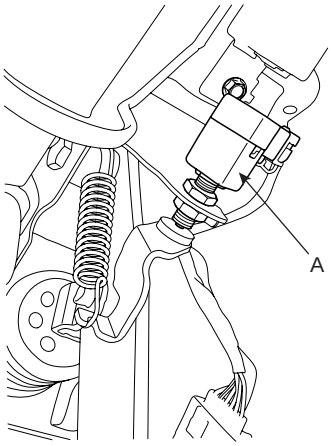

SCMBR6505L

3. Remove the snap pin (A) and joint pin (B).

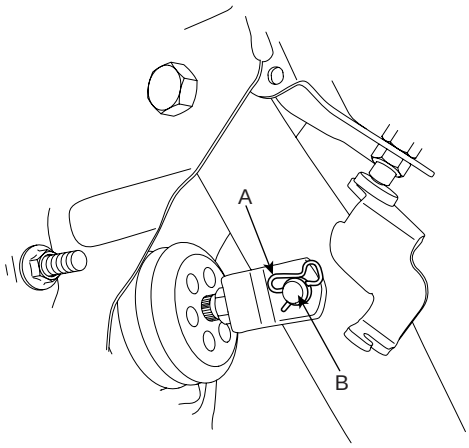

SCMBR6004D

4. Remove the brake pedal by loosen the joint bolt and nut.

Tightening torque Nm (kgf.m, lb-ft): 24.5 ~ 34.3 (2.5 ~ 3.5, 18.1 ~ 25.3)

INSTALLATION ED9EC71E

1. Installation is the reverse of removal.

CAUTION

- ***Before installing the pin, apply the grease to the joint pin.***
- ***Use a new snap pin whenever installing.***

2. Check the brake pedal operation.

FRONT DISC BRAKE

COMPONENTS EAE6F9EB

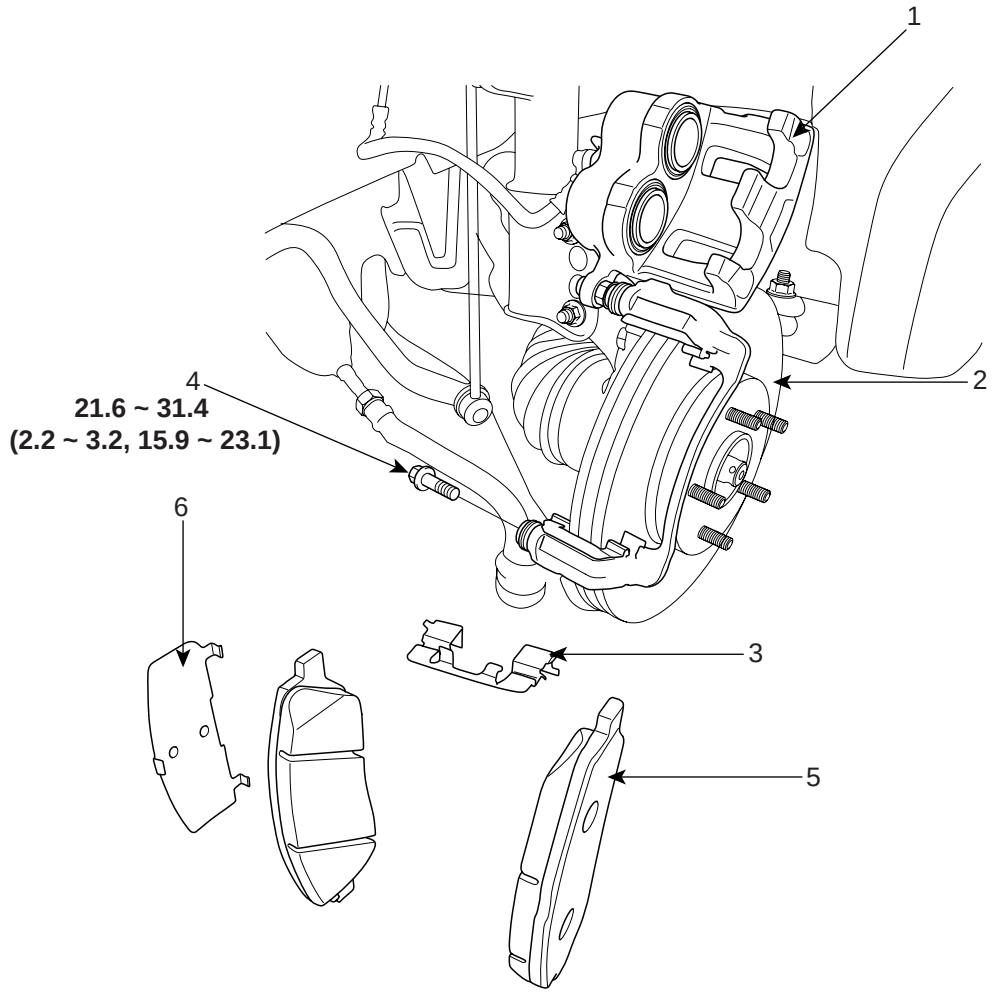

TORQUE : Nm (Kgf.m, lb-ft)

1. Brake caliper assembly
2. Brake disc
3. Pad retainer
4. Guide rod bolt
5. Brake pad
6. Pad shim

SCMBR6507L

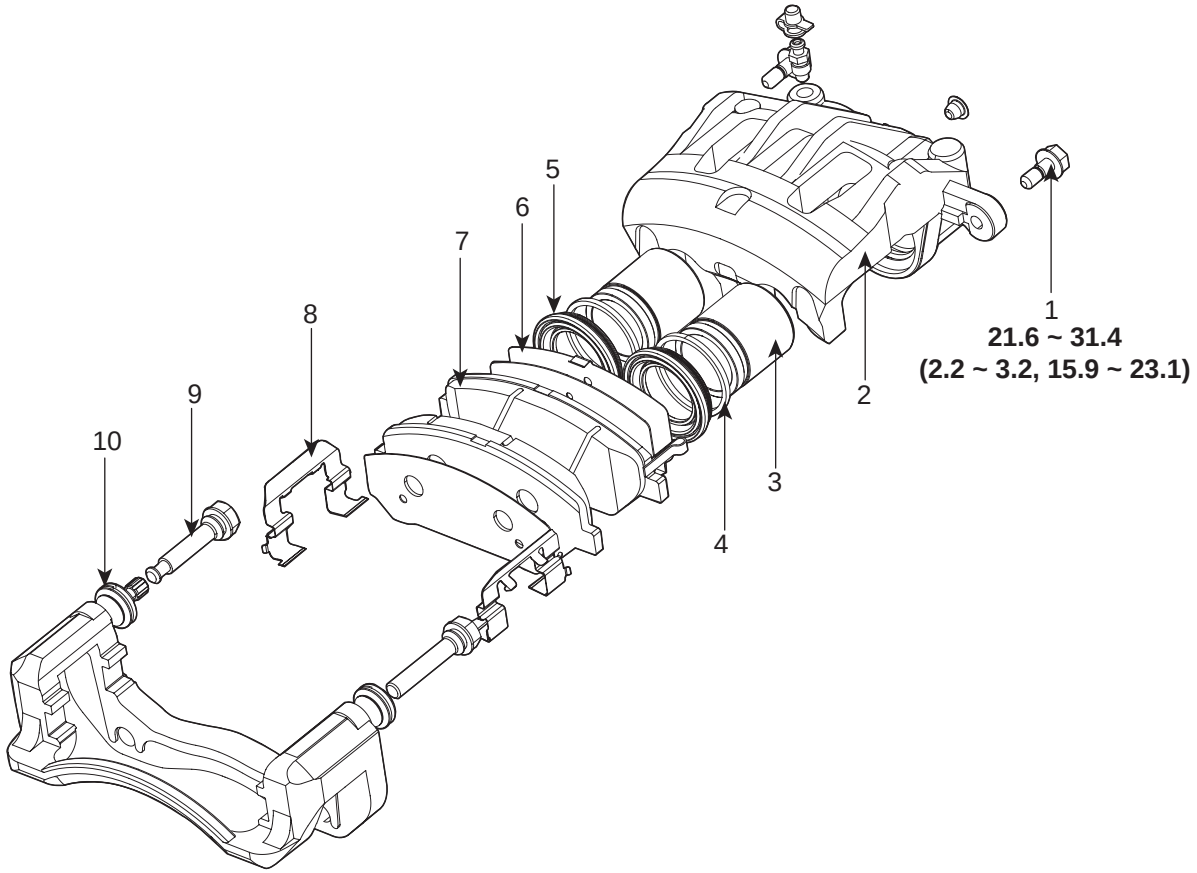

TORQUE : Nm (Kgf.m, lb-ft)

1. Guide rod bolt
2. Caliper body
3. Piston
4. Piston seal
5. Piston boot
6. Pad shim
7. Brake pad
8. Pad retainer
9. Guide rod
10. Boot

SCMBR6508L

REMOVAL EBAEE8FD

1. Remove the front wheel & tire.

Tightening torque Nm (kgf.m, lb-ft):
88.3 ~ 107.9 (9.0 ~ 11.0, 65.1 ~ 79.6)

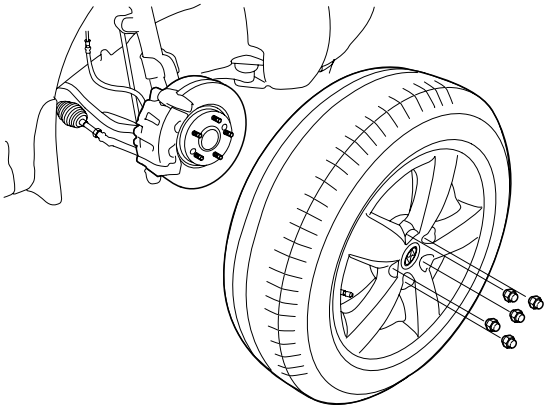

SCMBR6532D

2. Remove the split pin (A) and castle nut (B).

Tightening torque Nm (kgf.m, lb-ft):
200 ~ 260 (20 ~ 26, 145 ~ 188)

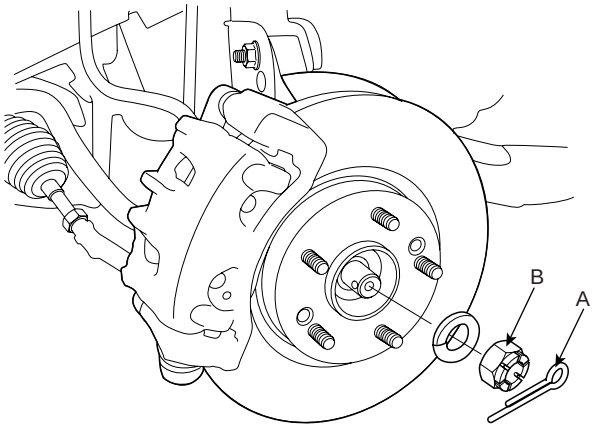

SCMBR6508D

3. Loosen the hose eye-bolt (A) and caliper mounting bolts, then remove the front caliper assembly (B).

Tightening torque Nm (kgf.m, lb-ft):
Brake hose to caliper:
24.5 ~ 29.4 (2.5 ~ 3.0, 18.1 ~ 21.7)
Caliper assembly to knuckle:
78.5 ~ 98.1 (8.0 ~ 10.0, 57.9 ~ 72.3)

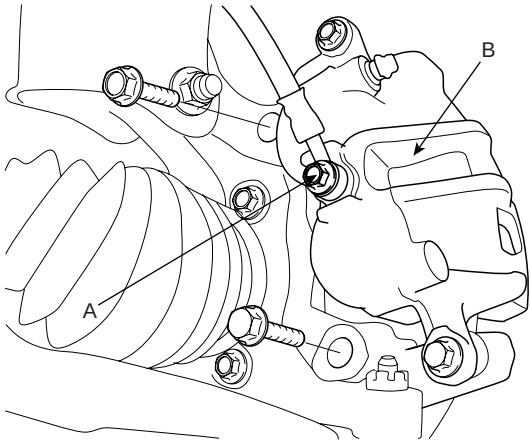

SCMBR6510D

4. Remove the front brake disc by loosening the screws (A).

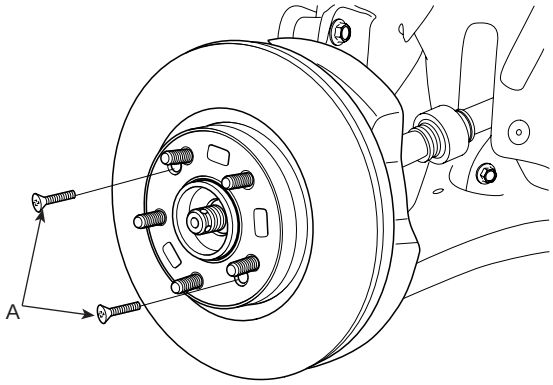

SCMBR6511D

REPLACEMENT E05B87CC

FRONT BRAKE PADS

1. Loosen the guide rod bolt (A) and pivot the caliper (B) up out of the way.

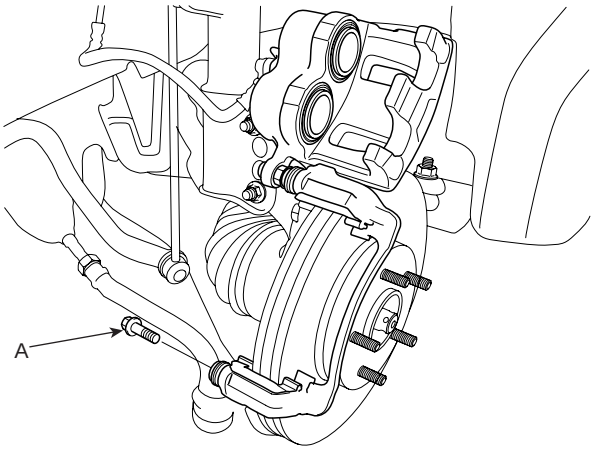

SCMBR6509L

2. Replace shims (A), pad retainers (B), and brake pads (C).

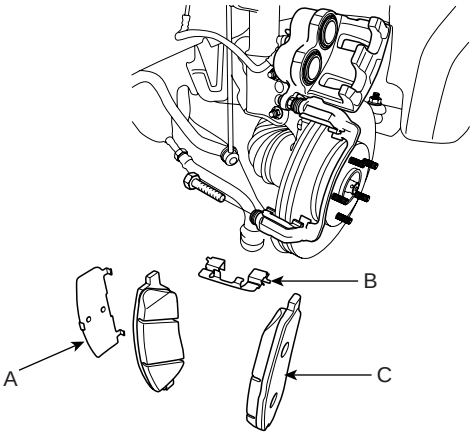

SCMBR6512D

3. Push the piston in the cylinder using a SST (09581-11000)

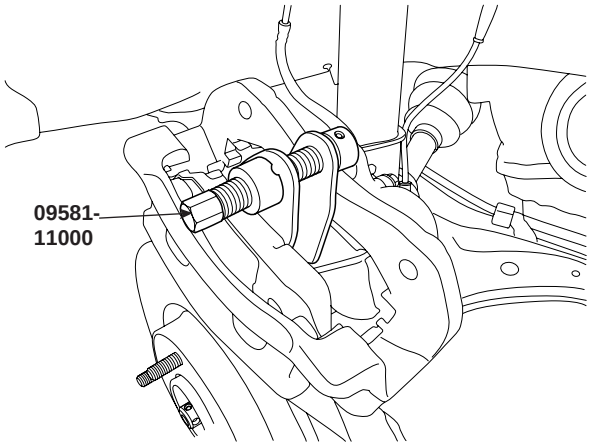

SCMBR6012D

4. Pivot the caliper down and tighten the guide rod bolt.

Tightening torque Nm (kgf.m, lb-ft): 21.6 ~ 31.4 (2.2 ~ 3.2, 15.9 ~ 23.1)

INSPECTION E3C5F70B

1. Check the brake pads for wear and fade.
2. Check the brake disc for damage and cracks.
3. Check the thickness of the brake disc and run-out using a micrometer and a dial gauge on the part dotted line in the illustration below.

Brake disc thickness
Standard: 28 mm (1.10 in)
Service limit: 26 mm (1.02 in)
Deviation: Less than 0.01 mm (0.00039 in)
Run-out
Standard: 0.03 mm (0.00118 in) or less

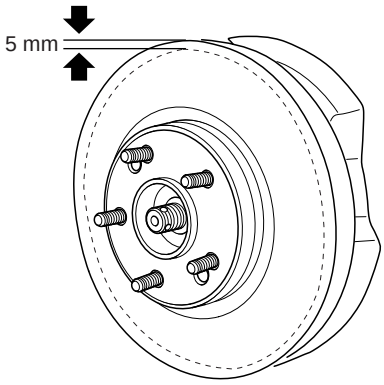

SCMBR6510L

INSTALLATION E87EEEBC

1. Installation is the reverse of removal.
2. Use a SST (09581-11000) when installing the brake caliper assembly.

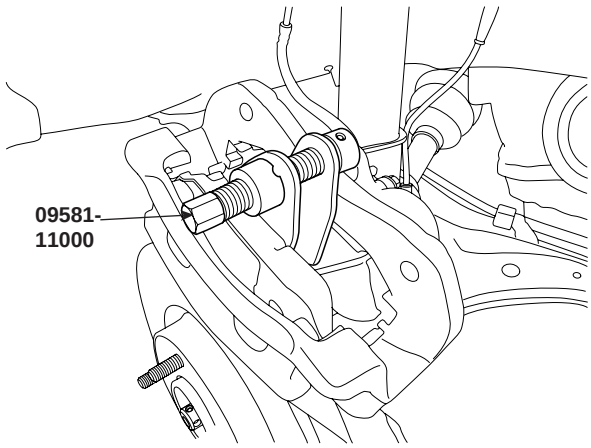

SCMBR6012D

3. After installation, bleed the brake system. (Refer to Brake system bleeding)

REAR DISC BRAKE

COMPONENTS E419477E

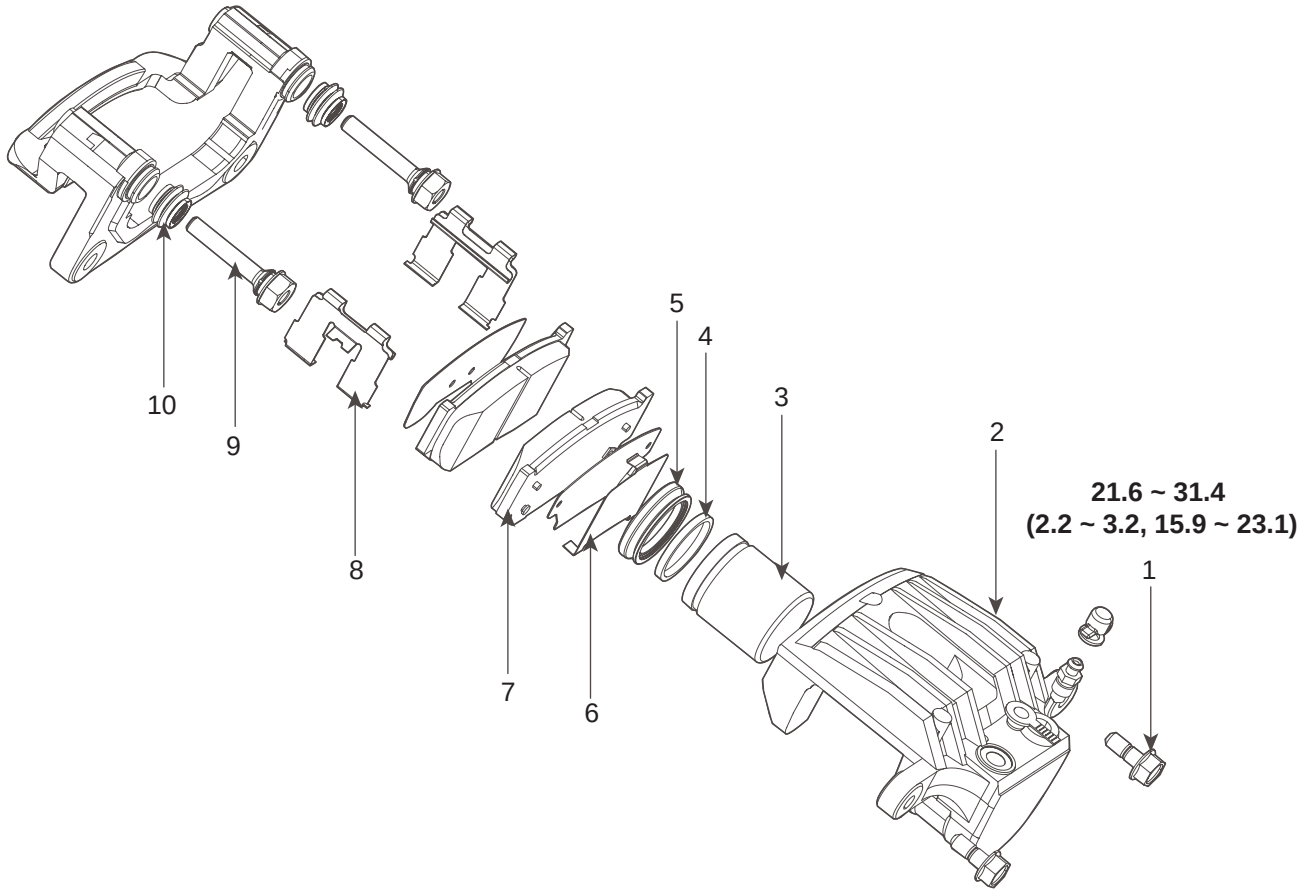

TORQUE : Nm (Kgf.m, lb-ft)

1. Guide rod bolt
2. Caliper body
3. Piston
4. Piston seal
5. Piston boot
6. Pad shim
7. Brake pad
8. Pad retainer
9. Guide rod
10. Boot

SCMBR6511L

REMOVAL EECEE93C

1. Remove the rear wheel & tire.

Tightening torque Nm (kgf.m, lb-ft):
88.3 ~ 107.9 (9.0 ~ 11.0, 65.1 ~ 79.6)

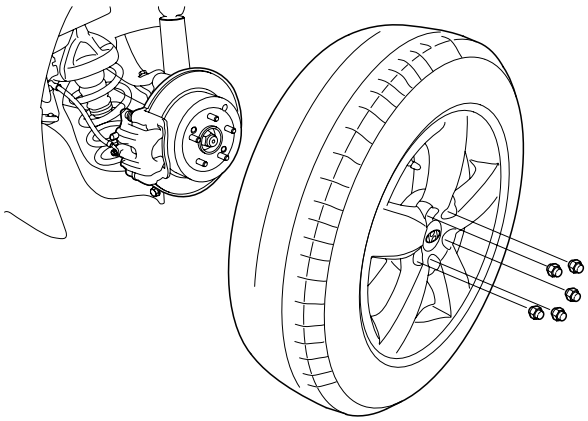

SCMBR6513D

2. Remove the split pin (A) and castle nut (B).

Tightening torque Nm (kgf.m, lb-ft):
200 ~ 260 (20 ~ 26, 145 ~ 188)

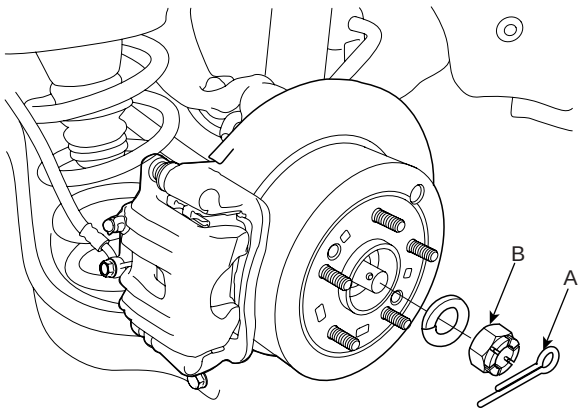

SCMBR6514D

3. Loosen the hose eye-bolt (A) and caliper mounting bolts, then remove the rear caliper assembly.

Tightening torque Nm (kgf.m, lb-ft):
Brake hose to caliper:
24.5 ~ 29.4 (2.5 ~ 3.0, 18.1 ~ 21.7)
Caliper assembly to carrier:
78.5 ~ 98.1 (8.0 ~ 10.0, 57.9 ~ 72.3)

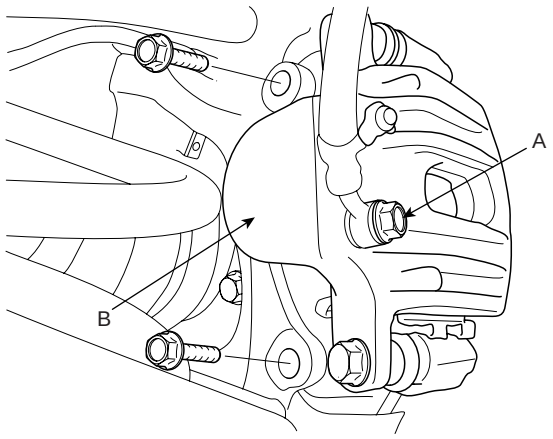

SCMBR6515D

4. Remove the rear brake disc by loosening the screws (A).

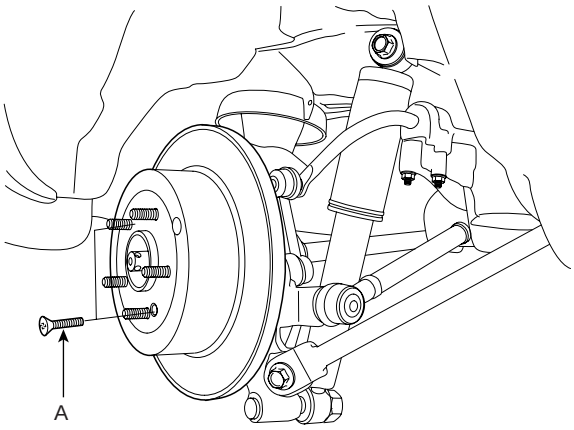

SCMBR6516D

REPLACEMENT E3FC22C7

REAR BRAKE PADS

1. Loosen the guide rod bolt (A) and pivot the caliper up out of the way.

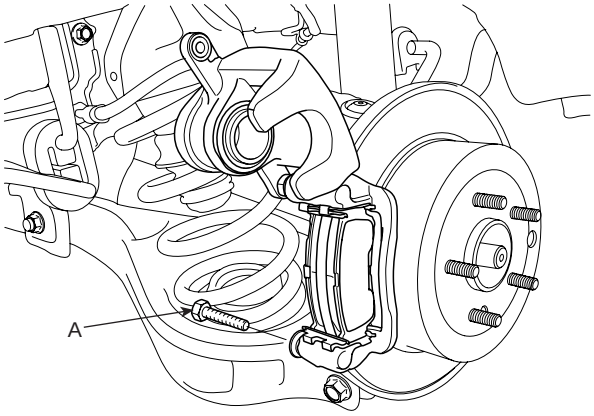

SCMBR6517D

2. Replace shims (A), pad retainers (B), and brake pads (C).

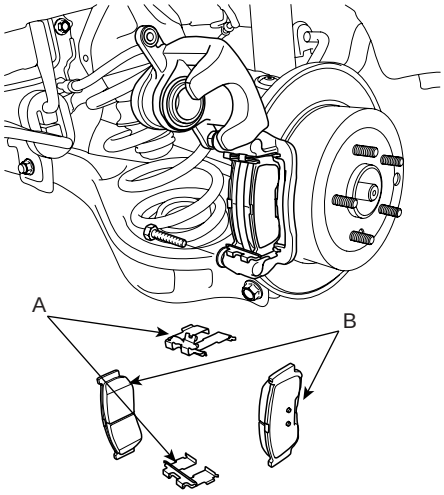

SCMBR6518D

3. Push the piston in the cylinder using a SST (09581-11000)

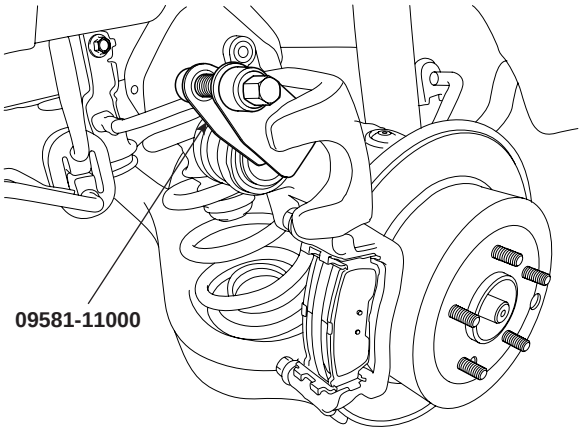

SCMBR6519D

4. Pivot the caliper dwon and tighten the guide rod bolt.

Tightening torque Nm (kgf.m, lb-ft): 21.6 ~ 31.4 (2.2 ~ 3.2, 15.9 ~ 23.1)

INSPECTION EE4792FD

1. Check the brake pads for wear and fade.
2. Check the brake disc for damage and cracks.
3. Check the thickness of the brake disc and run-out using a micrometer and a dial gauge on the part dotted line in the illustration below.

Brake disc thickness
Standard: 11 mm (0.43 in)
Service limit: 9.4 mm (0.37 in)
Deviation: less than 0.01 mm (0.00039 in)
Run-out
Standard: 0.03 mm (0.00118 in) or less

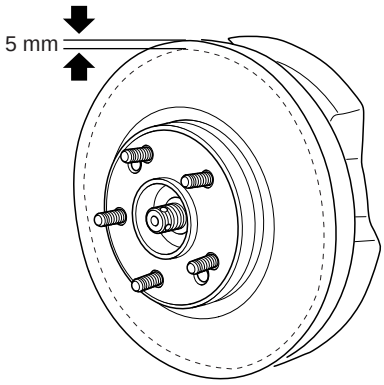

SCMBR6510L

INSTALLATION E6402430

1. Installation is the reverse of removal.
2. Use a SST (09581-11000) when installing the brake caliper assembly.

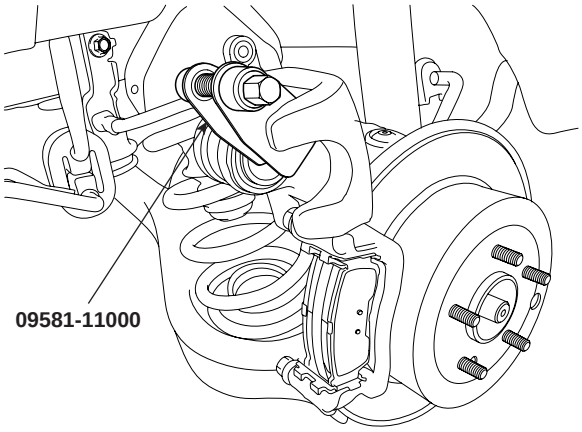

SCMBR6519D

3. After installation, bleed the brake system. (Refer to Brake system bleeding)

PARKING BRAKE SYSTEM

PARKING BRAKE

COMPONENTS EA606AC8

[Hand type]

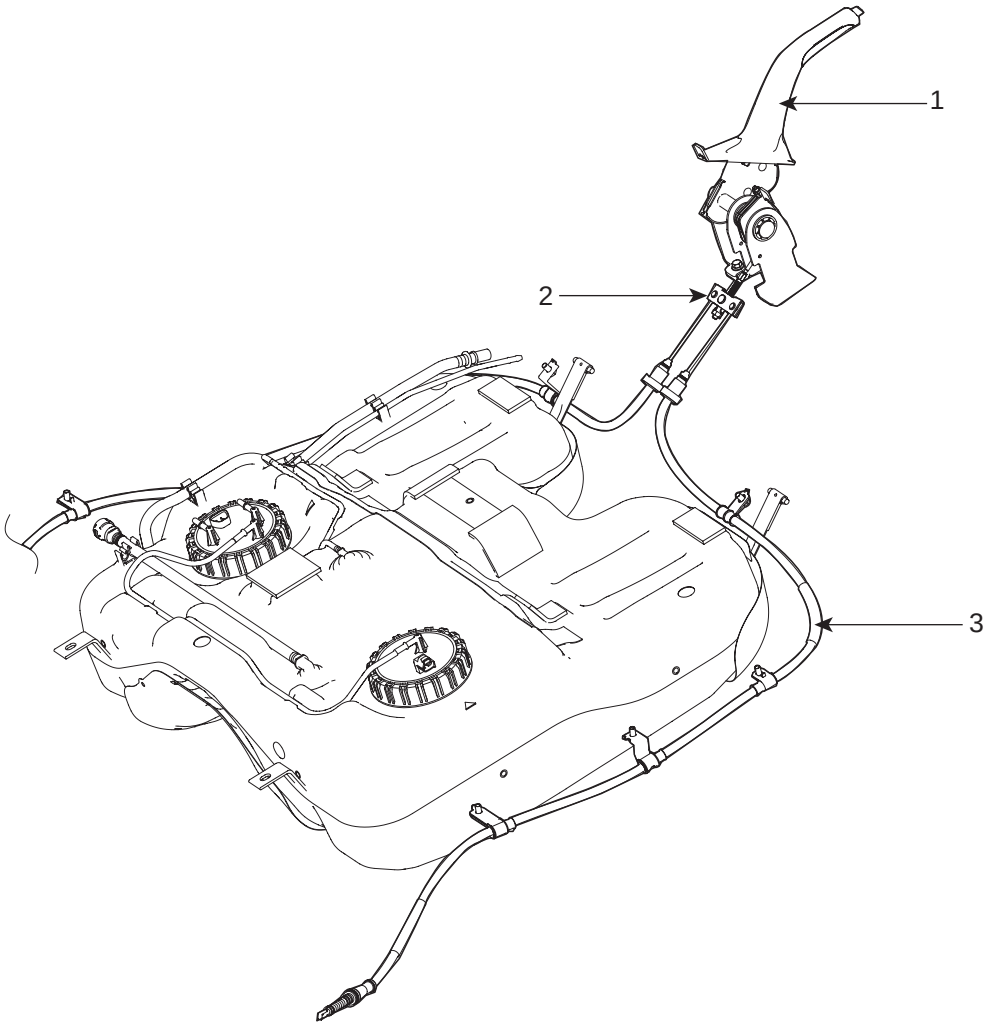

1. Parking brake lever assembly
2. Equalizer assembly
3. Parking brake cable

SCMBR6512L

[Foot type]

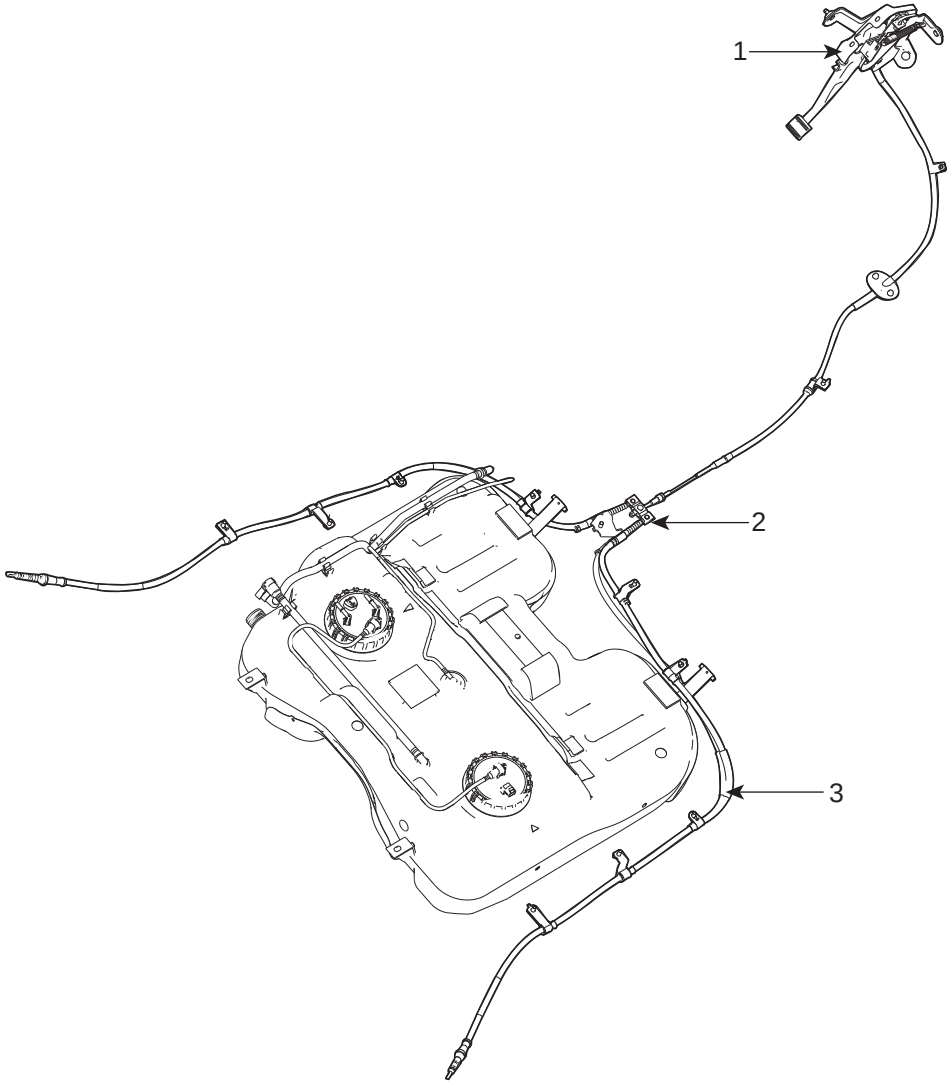

1. Parking brake pedal assembly
2. Equalizer assembly
3. Parking brake cable

SCMBR6513L

REMOVAL E0DB93BC

HAND TYPE

1. Release the parking brake lever thoroughly.
2. Remove the console. (Refer to BD group)

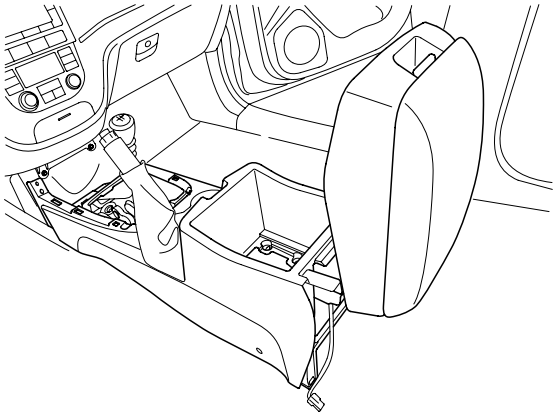

SCMBR6527D

3. Disconnect the parking brake cable (B) from the equalizer assembly (A).

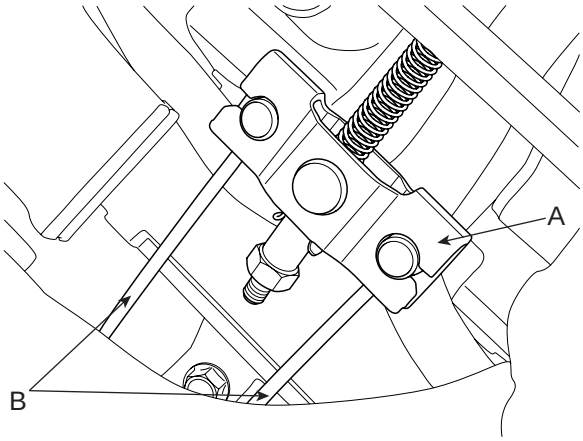

SCMBR6519L

4. Disconnect the parking brake switch connector (A).
5. Remove the parking brake lever assembly by loosening the mounting bolts.

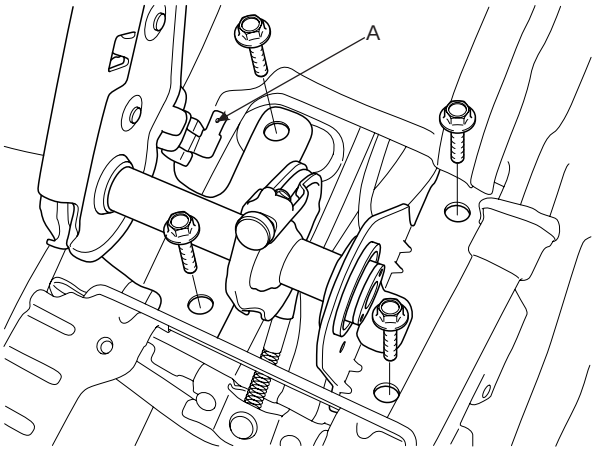

SCMBR6531D

6. Remove the rear wheel & tire.
7. Remove the rear brake caliper and disc.
8. Disconnect the brake cable (A) from the parking brake assembly.

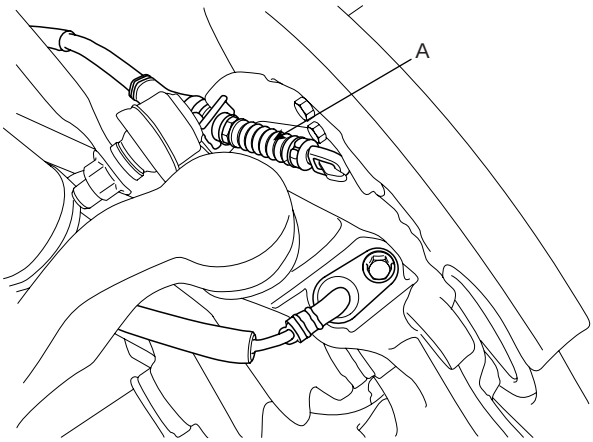

SCMBR6591L

9. Loosen all of the cable guide bracket bolts. (Refer to Parking brake components)

10. Remove the both of brake shoes holder (A) and pin (B).

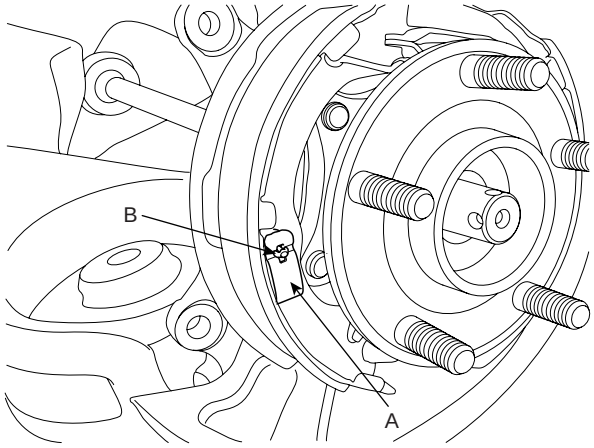

SCMBR6520L

11. Remove the upper spring (A) and strut (B).

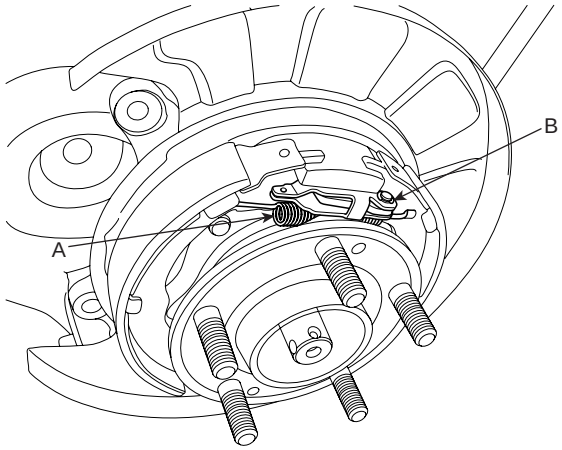

SCMBR6521L

12. Remove the lower spring (A), adjuster assembly (B), and brake shoes.

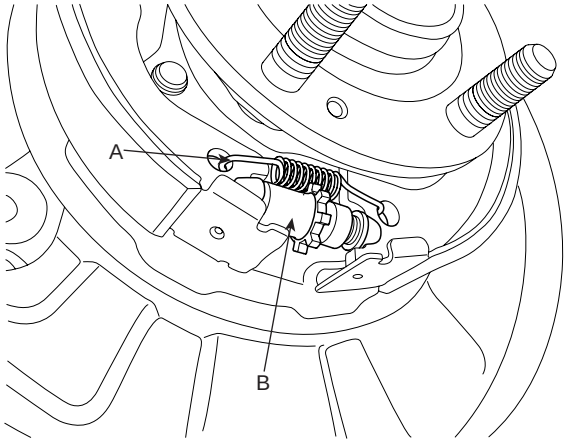

SCMBR6522L

FOOT TYPE

1. Release the parking brake pedal thoroughly.
2. Remove the lower crash pad.

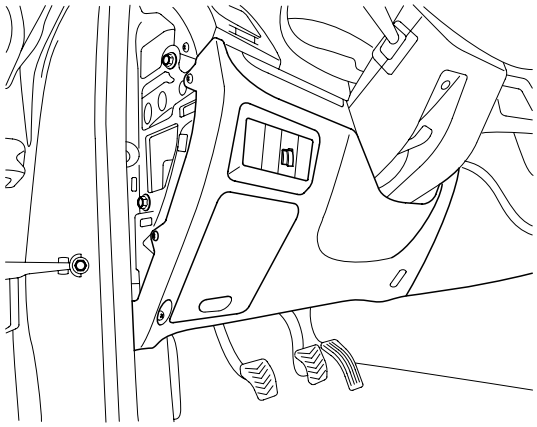

SCMBR6507D

3. Remove the parking brake cable fixing clips (A), then disconnect the cable from the parking brake pedal.

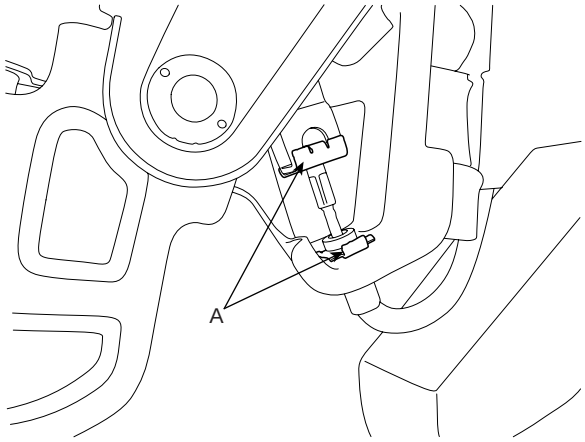

SCMBR6004L

4. Disconnect the parking brake switch connector (A).

5. Remove the parking brake pedal assembly by loosening the mounting bolts.

[LHD]

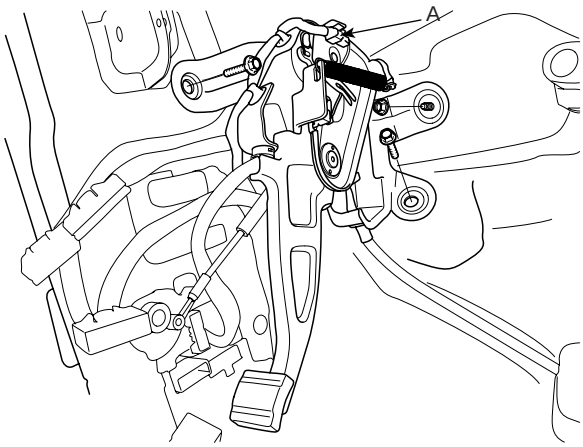

SCMBR6523L

[RHD]

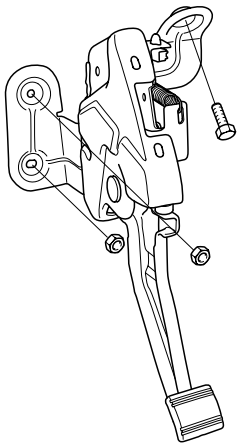

SCMBR6003L

6. Remove the rear wheel & tire.

7. Remove the rear brake caliper and disc.

8. Disconnect the brake cable (A) from the parking brake assembly.

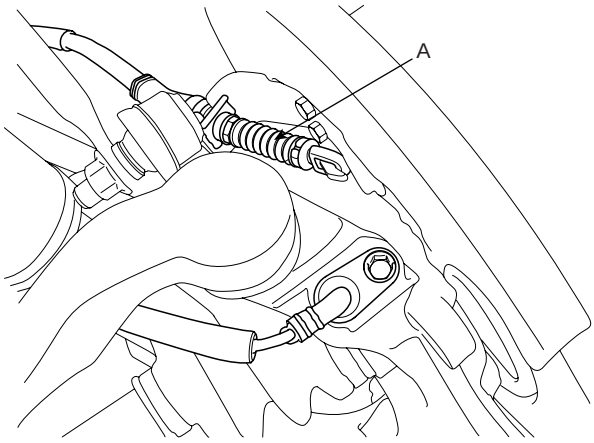

SCMBR6591L

9. Loosen all of the cable guide bracket bolts. (Refer to Parking brake components)

10. Remove the both of brake shoes holder (A) and pin (B).

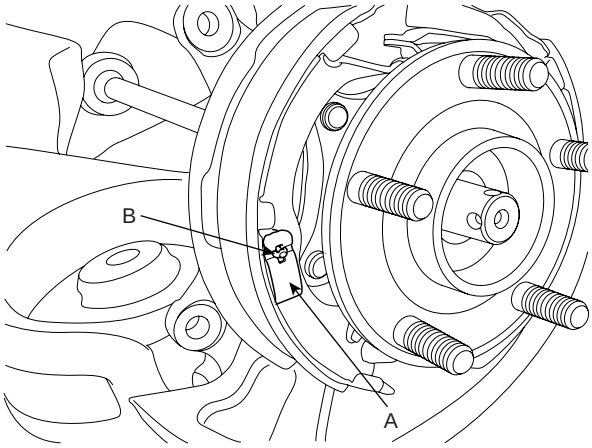

SCMBR6520L

11. Remove the upper spring (A) and strut (B).

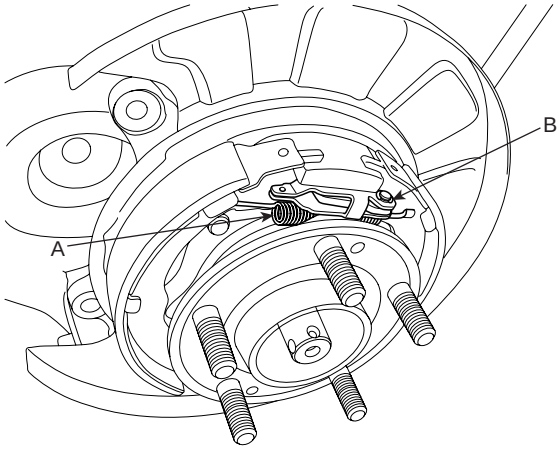

SCMBR6521L

12. Remove the lower spring (A), adjuster assembly (B), and brake shoes.

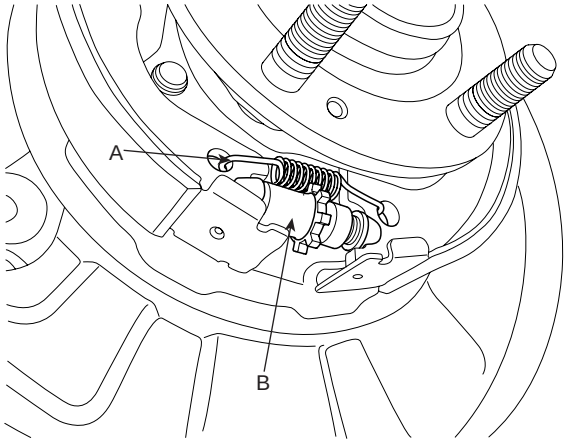

SCMBR6522L

INSTALLATION E5D71E0E

1. Installation is the reverse of removal.
2. After installation, adjust the parking brake.

ADJUSTMENT ECCEE4F6

PARKING BRAKE SHOE CLEARANCE ADJUSTMENT

1. Remove the rear wheel & tire.
2. Remove the plug from the rear brake disc.
3. Rotate adjuster assembly (A) downward until it can not be rotate by using a screw driver.

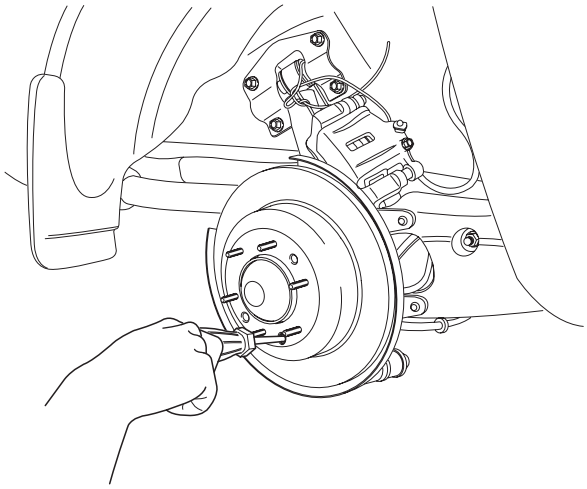

SCMBR6533D

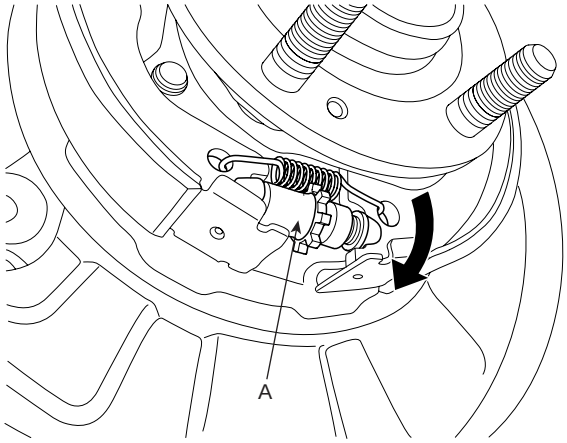

SCMBR6534D

4. Rotate the adjust assembly by 5 notches in the opposite direction.
5. Install the plug to rear brake disc.
6. Install the rear wheel & tire.

PARKING BRAKE CABLE ADJUSTMENT

CAUTION

Parking brake cable adjustment must be carried out after adjusting rear shoe.

HAND TYPE

1. Operate the parking brake lever through a full stoke over 3 times for setting the cables.
2. The travel must be between 6 ~ 7 notches when applying a force of approx. 20kgf (196N, 44.1lb) at 40mm (1.57in) from the end of lever assembly by adjusting nut (A) of equalizer.

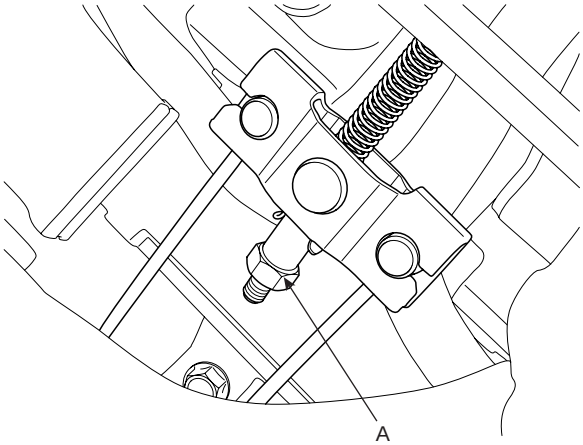

SCMBR6516L

3. The parking brake indicator lamp must be OFF when lever assembly is released, and ON when operating by 1 notch.

FOOT TYPE

4. Operate the parking brake pedal through a full stroke over 3 times for setting the cables.
5. Adjust the adjusting nut (A) for parking brake pedal stroke 130 ~ 140mm when operating effort is approx. 30kgf (294N, 66lb).

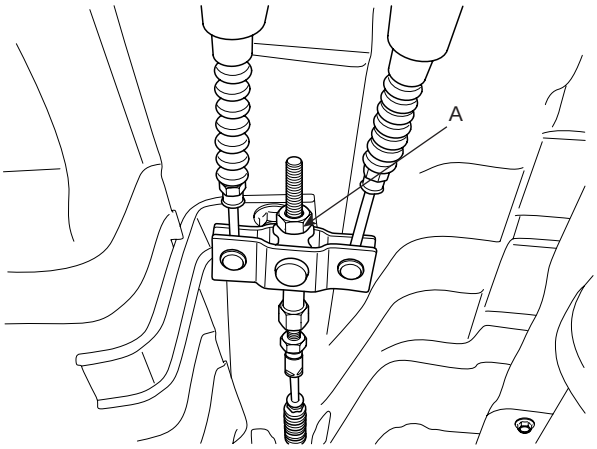

SCMBR6517L

ABS (ANTI-LOCK BRAKE SYSTEM)

COMPONENTS E0AFF9C6

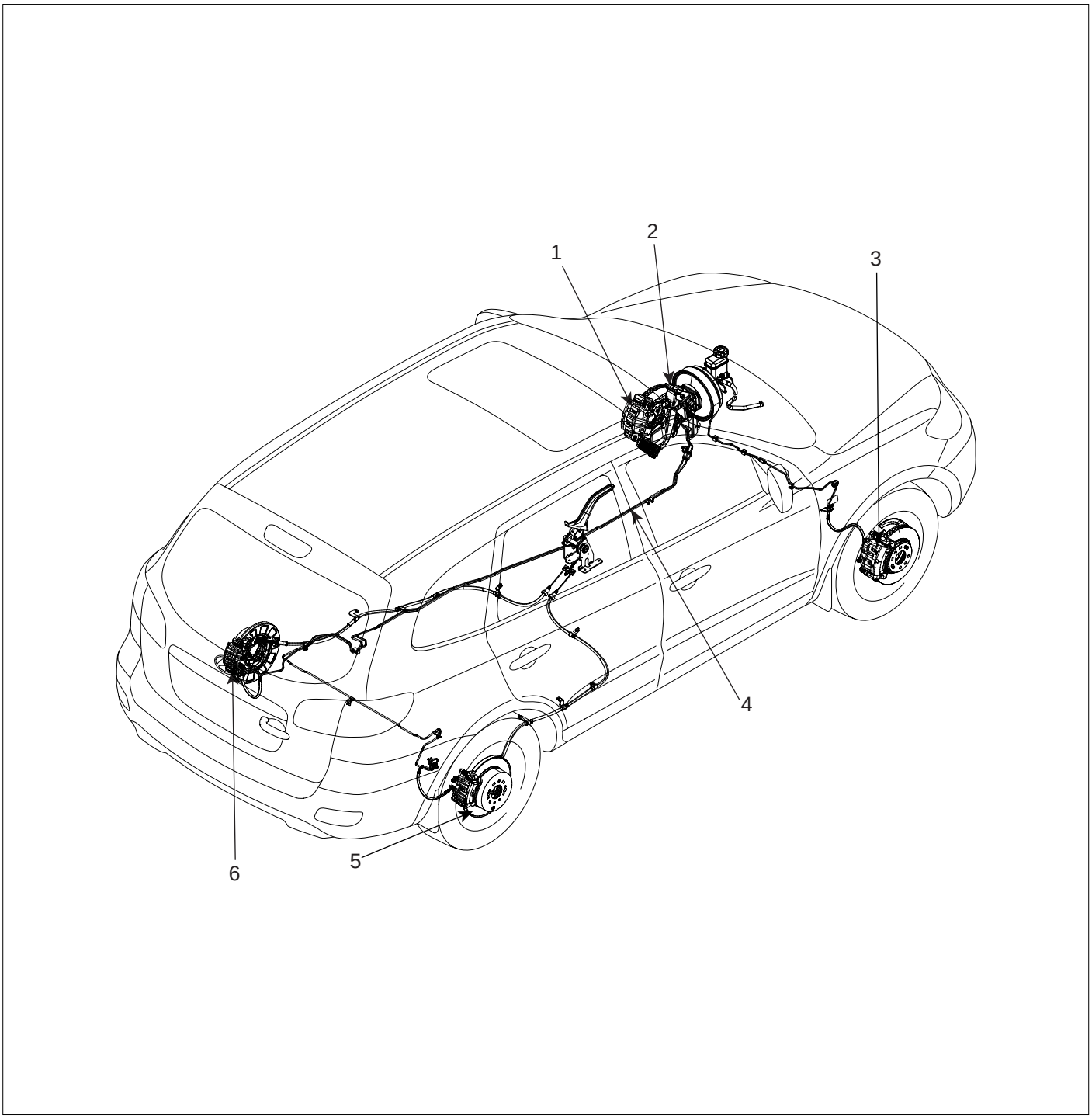

1. Front left wheel speed sensor
2. ABS control module(HECU)
3. Front right wheel speed sensor
4. Hydrauric line
5. Rear right wheel speed sensor
6. Rear left wheel speed sensor

SCMBR6524L

DESCRIPTION E1BC04B1

This specification applies to HCU(Hydraulic Control Unit) and ECU(Electronic Control Unit) of the HECU.(Hydraulic and Electronic Control Unit)
This specification is for the wiring design and installation of ABS/TCS/ESC ECU.
This unit has the functions as follows.

- Input of signal from Pressure sensor, Steering angle sensor, Yaw & Lateral G sensor, the wheel speed sensors attached to each wheel.
- Control of braking force / traction force/ yaw moment.
- Failsafe function.
- Self diagnosis function.
- Interface with the external diagnosis tester.

Installation position : engine compartment

- Brake tube length from Master cylinder port to HECU inlet port should be max. 1m
- The position should not be close to the engine block and not lower than the wheel.

OPERATION

The ECU shall be put into operation by switching on the operating voltage (IGN).
On completion of the initialization phase, the ECU shall be ready for operation.
In the operating condition, the ECU shall be ready, within the specified limits (voltage and temperature), to process the signals offered by the various sensors and switches in accordance with the control algorithm defined by the software and to control the hydraulic and electrical actuators.

WHEEL SENSOR SIGNAL PROCESSING

The ECU shall receive wheel speed signal from the four active wheel sensors.
The wheel signals are converted to voltage signal by the signal conditioning circuit after receiving current signal from active wheel sensors and given as input to the MCU.

SOLENOID VALVE CONTROL

When one side of the valve coil is connected to the positive voltage that is provided through the valve relay and the other side is connected to the ground by the semiconductor circuit, the solenoid valve goes into operation.
The electrical function of the coils are always monitored by the valve test pulse under normal operation conditions.

VOLTAGE LIMITS

- Overvoltage
  When overvoltage is detected(above 16.8 V), the ECU switches off the valve relay and shuts down the system.
  When voltage is returned to operating range, the system goes back to the normal condition after the initialization phase.
- Undervoltage
  In the event of undervoltage(below 9.3 V), ABS control shall be inhibited and the warning lamp shall be turned on.
  When voltage is returned to operating range, the warning lamp is switched off and ECU returns to normal operating mode.

PUMP MOTOR CHECKING

The ECU performs a pump motor test at a speed of 15km/h once after IGN is switched on.

DIAGNOSTIC INTERFACE

Failures detected by the ECU are encoded on the ECU, stored in a EEPROM and read out by diagnostic equipment when the ignition switch is turned on.
The diagnosis interface can also be used for testing the ECU during production of the ECU and for actuating the HCU (Air-bleeding line or Roll and Brake Test line).

WARNING LAMP MODULE

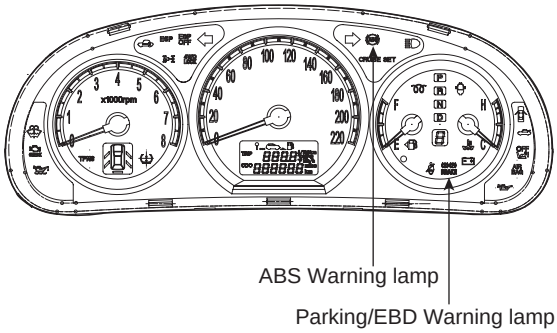

SCMBR6525L

1. ABS WARNING LAMP MODULE
   The active ABS warning lamp module indicates the selftest and failure status of the ABS.The ABS warning lamp shall be on:
   - During the initialization phase after IGN ON. (continuously 3 seconds).
   - In the event of inhibition of ABS functions by failure.
   - During diagnostic mode.
   - When the ECU Connector is seperated from ECU.

2. PARKING/EBD WARNING LAMP MODULE
   The active EBD warning lamp module indicates the selftest and failure status of the EBD.However, in case the Parking Brake Switch is turned on, the EBD warning lamp is always turned on regardless of EBD functions.The EBD warning lamp shall be on:
   - During the initialization phase after IGN ON. (continuously 3 seconds).
   - When the Parking Brake Switch is ON or brake fluid level is low.
   - When the EBD function is out of order.
   - During diagnostic mode.
   - When the ECU Connector is seperated from ECU.

ABS CONTROL EE8C9C94

1. NORMAL BRAKING without ABS

	Inlet valve(EV)	Outlet valve(AV)	Pump motor
Operation	Open	Close	OFF

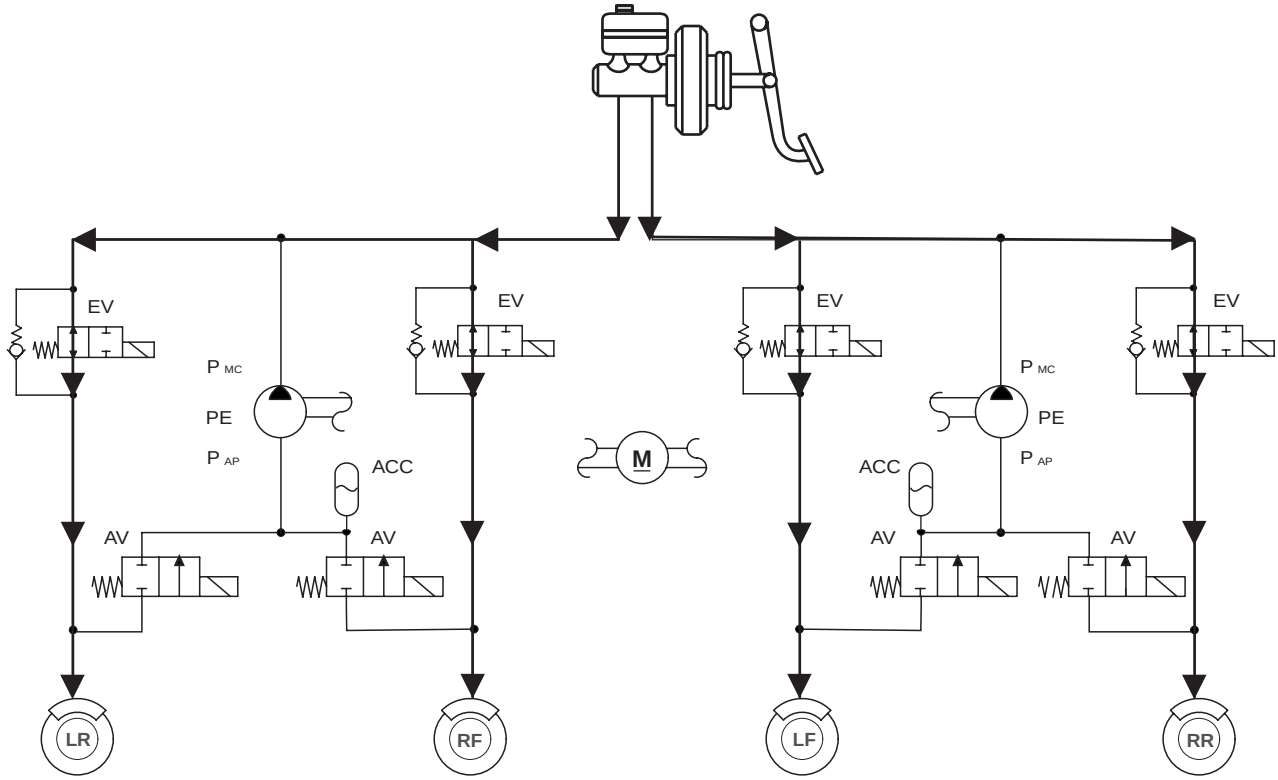

KJRE501E

NOTE

EV : Inlet Valve
AV : Outlet Valve
LR : Rear left wheel
RF : Front right wheel
LF : Front left wheel
RR : Rear right wheel
PE : Pump motor

2. DECREASE MODE

	Inlet valve(EV)	Outlet valve(AV)	Pump motor
Operation	Close	Open	ON(Motor speed control)

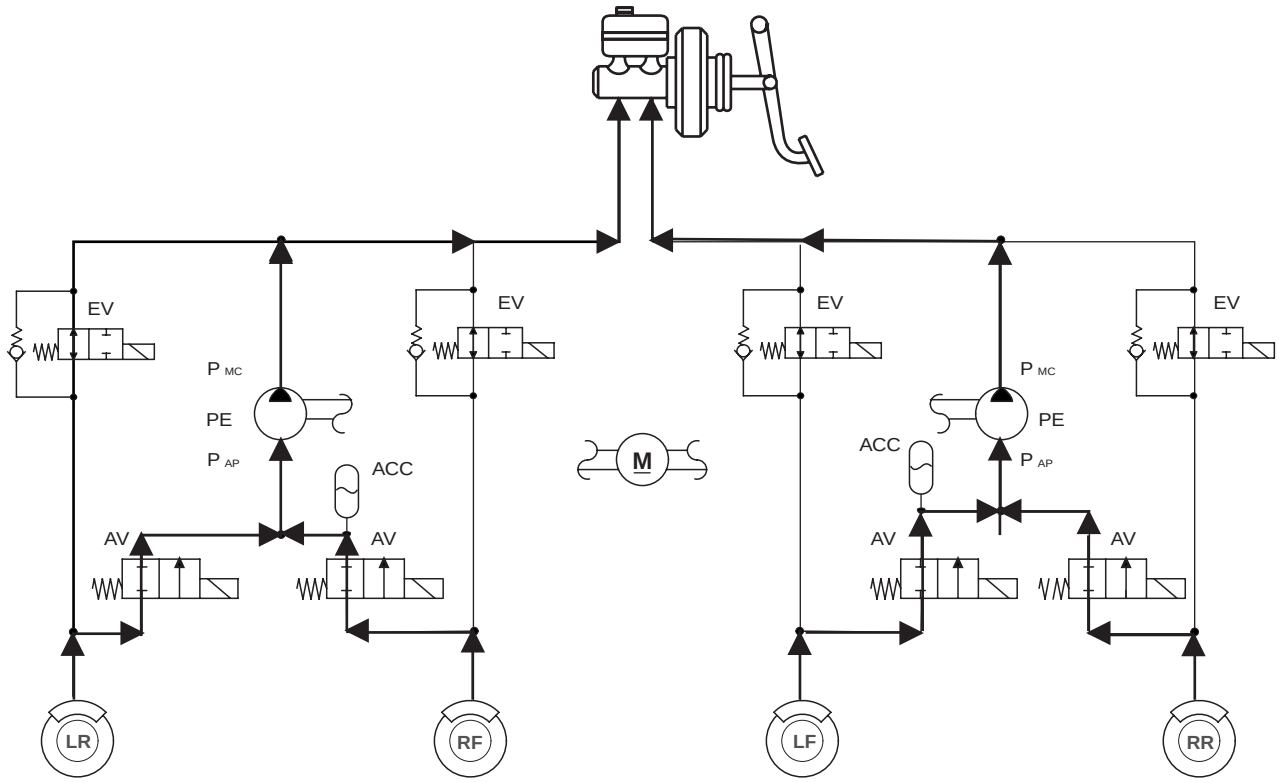

KJRE501F

NOTE

EV : Inlet Valve
AV : Outlet Valve
LR : Rear left wheel
RF : Front right wheel
LF : Front left wheel
RR : Rear right wheel
PE : Pump motor

3. HOLD MODE

	Inlet valve(EV)	Outlet valve(AV)	Pump motor
Operation	Close	Close	OFF

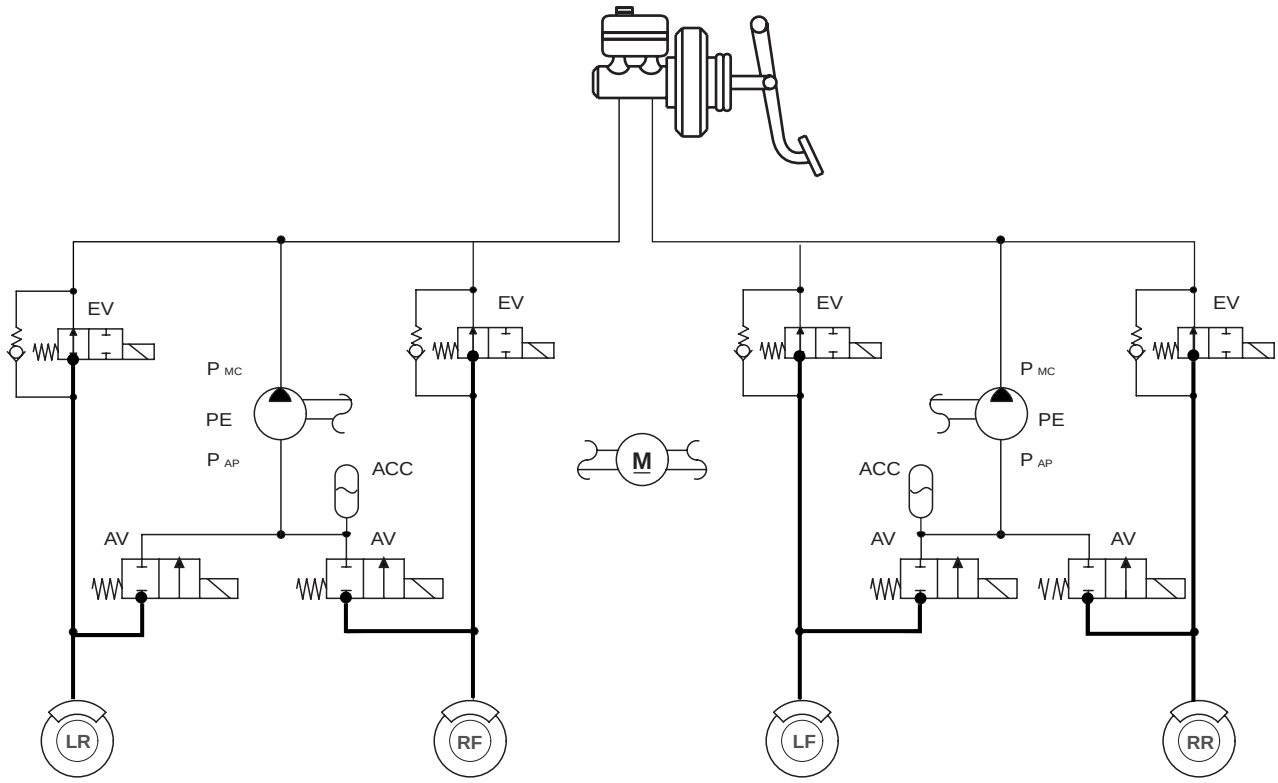

KJRE501G

NOTE

EV : Inlet Valve
AV : Outlet Valve
LR : Rear left wheel
RF : Front right wheel
LF : Front left wheel
RR : Rear right wheel
PE : Pump motor

4. INCREASE MODE

	Inlet valve(EV)	Outlet valve(AV)	Pump motor
Operation	Open	Close	OFF

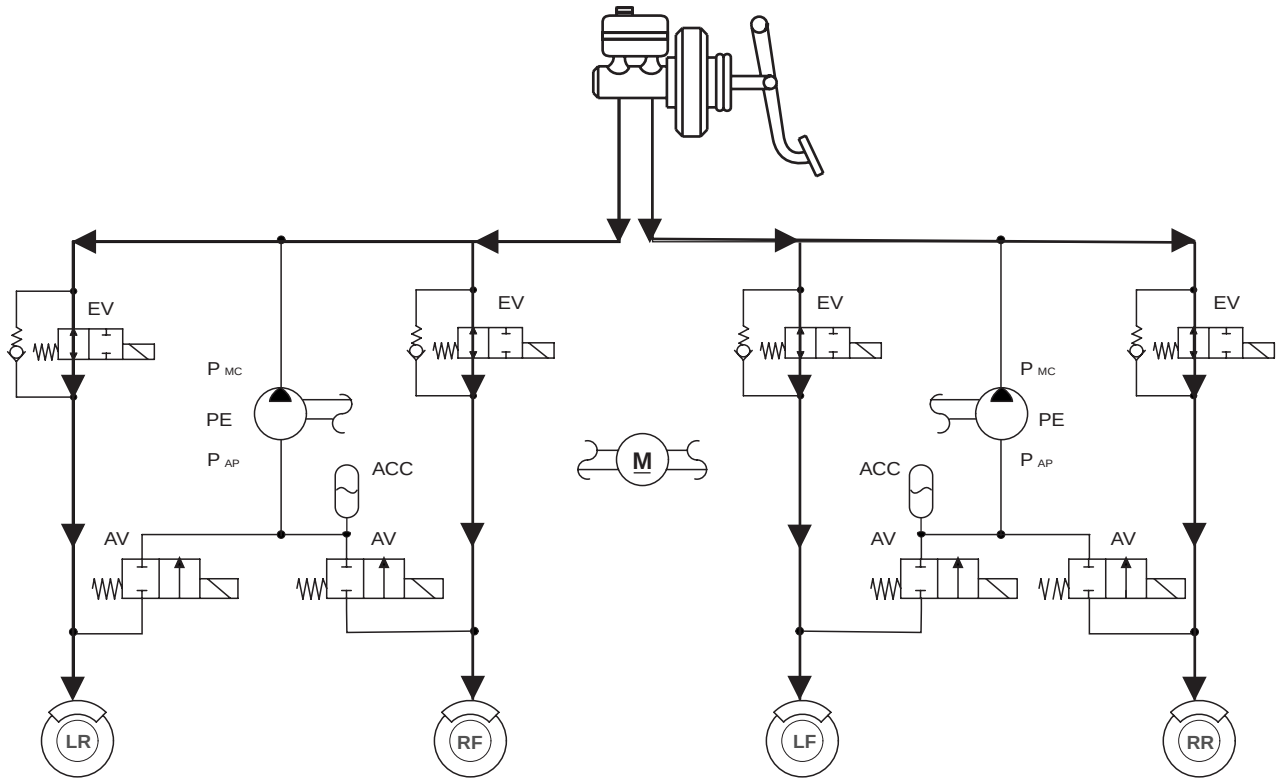

KJRE501H

NOTE

EV : Inlet Valve
AV : Outlet Valve
LR : Rear left wheel
RF : Front right wheel
LF : Front left wheel
RR : Rear right wheel
PE : Pump motor

ABS CIRCUIT DIAGRAM(1) E9FD9505

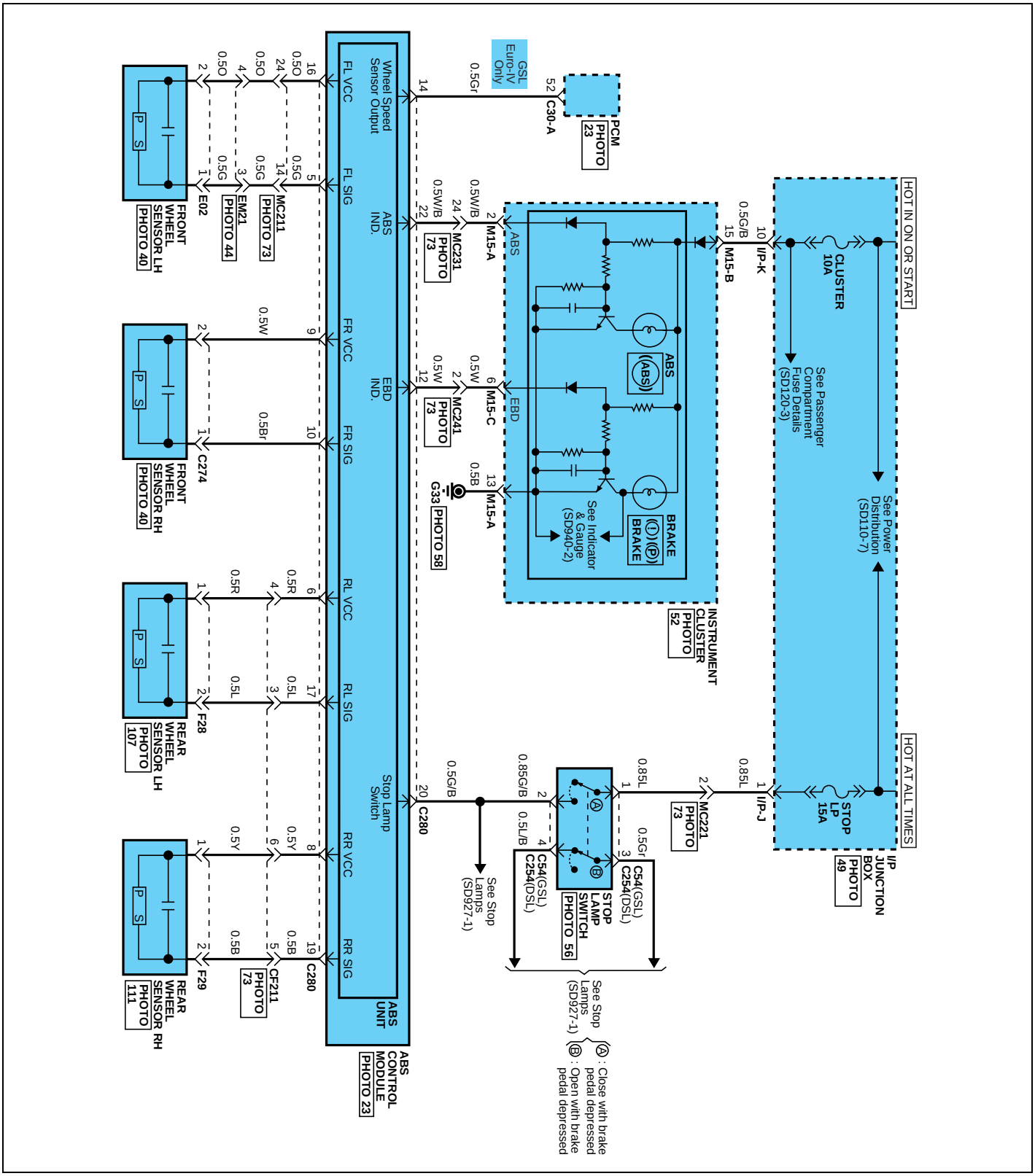

SCMBR6526L

ABS CIRCUIT DIAGRAM(2)

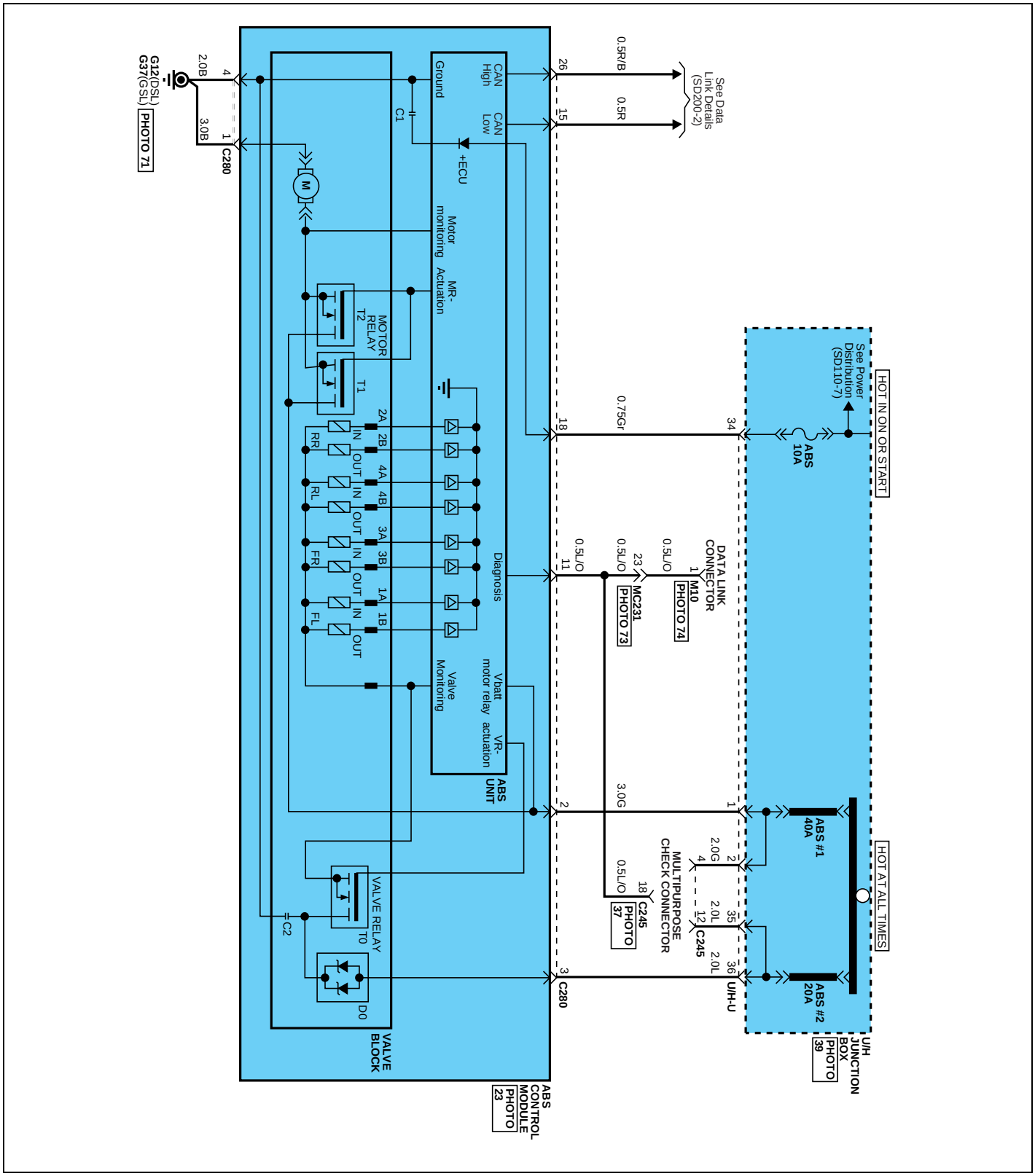

SCMBR6527L

ECU CONNECTOR
INPUT/OUTPUT(ABS) E5DD1467

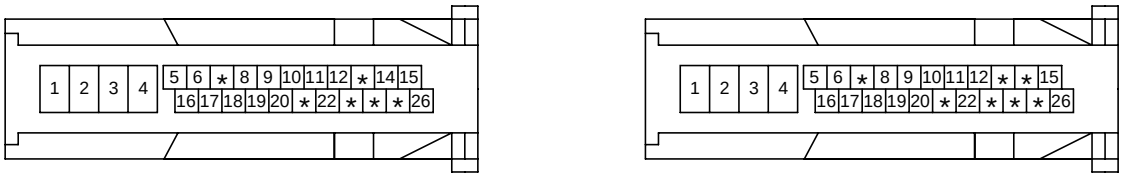

C280 (GSL) C280(DSL)

SCMBR6528L

Wire No.	Designation	Current		max.permis-sible wire re-sistance R_L (mΩ)	min.leakage resistance R_P (kΩ)
		max	min		
1	Ground for recirculation pump	20~39 A	10 A	10	
4	Ground for solenoid valves and ECU	5~15 A	2.5 A	10	
2	Voltage supply for pump motor	20~39 A	10 A	10	200
3	Voltage supply for solenoid valves	5~15 A	2 A	10	200
18	Voltage for hybrid ECU	1 A	500 mA	60	200
5,10,17,19	signal wheel speed sensor FL, FR, RL,RR	6 mA	16 mA	250	200 to ground 1.5M to bat
16,9,6,8	Voltage supply for the active wheel speed sensor FL,FR, RL, RR	6 mA	16 mA	250	200 to ground 1.5M to bat
11	Diagnostic wire K	6 mA	3 mA	250	200
22	ABS-warning lamp actuation	30 mA	5 mA	250	200
12	EBD-warning lamp actuation	30 mA	5 mA	250	200
20	brake light switch	10 mA	5 mA	250	200
15	CAN Low	30 mA	20 mA	250	200
26	CAN High	30 mA	20 mA	250	200

ABS HECU CONNECTOR

Connector terminal		Specification	Condition
Number	Description		
1	Ground for recirculation pump	Current range: Min.10A Max.20~39A	Always
4	Ground for solenoid valves and ECU	Current range: Min.2.5A Max.5~15A	Always
2	Voltage supply for pump motor	Battery voltage	Always
3	Voltage supply for solenoid valves		
16	Voltage supply for the active wheel speed sensor FL,FR, RL, RR	Battery voltage	IG ON
9			
6			
8			
5	signal wheel speed sensor FL, FR, RL,RR	Voltage(High) : 0.89~1.26 V Voltage (Low) : 0.44~0.63 V	On driving
10			
17			
19			
11	Diagnostic wire K	Voltage (High) ≥ 0.8 * IG ON Voltage (Low) ≤ 0.2 * IG ON	On SCAN TOOL communication
18	Voltage for hybrid ECU	Battery voltage	KEY ON/OFF
20	Brake light switch	Voltage (High) ≥ 0.8 * IG ON Voltage (Low) ≤ 0.3 * IG ON	BRAKE ON/OFF

SENSOR OUTPUT ON SCAN TOOL(ABS)

	Description	Abbreviation	Unit	Remarks
1	Vehicle speed sensor	VEH. SPD	Km/h	
2	Battery voltage	BATT. VOL	V	
3	FL Wheel speed sensor	FL WHEEL	Km/h	
4	FR Wheel speed sensor	FR WHEEL	Km/h	
5	RL Wheel speed sensor	RL WHEEL	Km/h	
6	RR Wheel speed sensor	RR WHEEL	Km/h	
7	ABS Warning lamp	ABS LAMP	-	
8	EBD Warning lamp	EBD LAMP	-	
9	Brake Lamp	B/LAMP	-	
10	Pump relay state	PUMP RLY	-	
11	Valve relay state	VALVE RLY	-	
12	Motor	MOTOR	-	
13	Front Left valve(IN)	FL INLET	-	
14	Front Right valve (IN)	FR INLET	-	
15	Rear Left valve (IN)	RL INLET	-	
16	Rear Right valve (IN)	RR INLET	-	
17	Front Left valve (OUT)	FL OUTLET	-	
18	Front Right valve (OUT)	FR OUTLET	-	
19	Rear Left valve(OUT)	RL OUTLET	-	
20	Rear Right valve (OUT)	RR OUTLET	-	

STANDARD FLOW OF DIAGNOSTIC TROUBLESHOOTING E53ECDC7

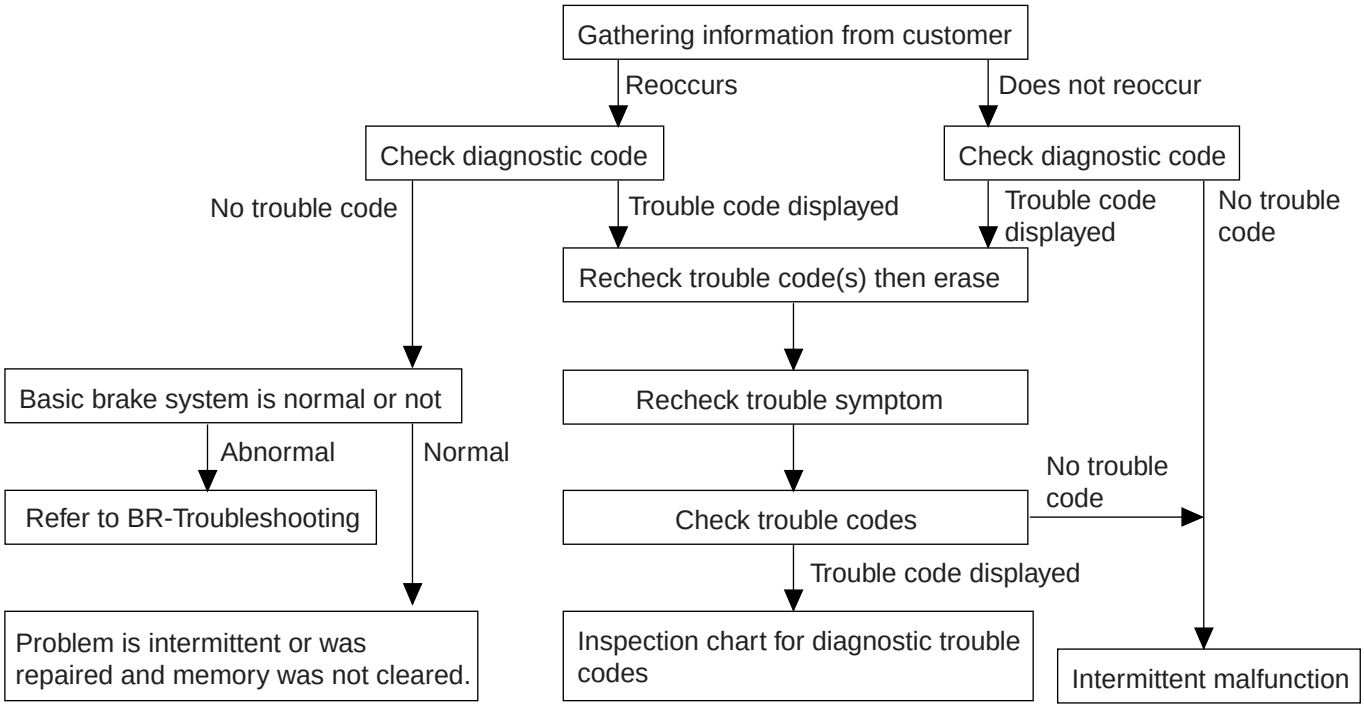

*** Using the customer problem analysis check sheet for reference, ask the customer as much detail as possible about the problem.**

EJKB055A

NOTES WITH REGARD TO DIAGNOSIS

The phenomena listed in the following table are not abnormal.

Phenomenon	Explanation
System check sound	When starting the engine, a thudding sound can sometimes be heard coming from inside the engine compartment. This is because the system operation check is being performed.
ABS operation sound	1. Sound of the motor inside the ABS hydraulic unit operation (whine). 2. Sound is generated along with vibration of the brake pedal (scraping). 3. When ABS operates, sound is generated from the vehicle chassis due to repeated brake application and release (Thump : suspension; squeak: tires)
ABS operation (Long braking distance)	For road surfaces such as snow-covered and gravel roads, the braking distance for vehicles with ABS can sometimes be longer than that for other vehicles. Accordingly, advise the customer to drive safely on such roads by lowering the vehicle speed.
Diagnosis detection conditions can vary depending on the diagnosis code. When checking the trouble symptom after the diagnosis code has been erased, ensure that the requirements listed in "Comment" are met.	

SCAN TOOL (PRO) CHECK

1. Turn the ignition switch OFF.
2. Connector the Scan tool to the 16P data link connector located the driver's side kick panel.

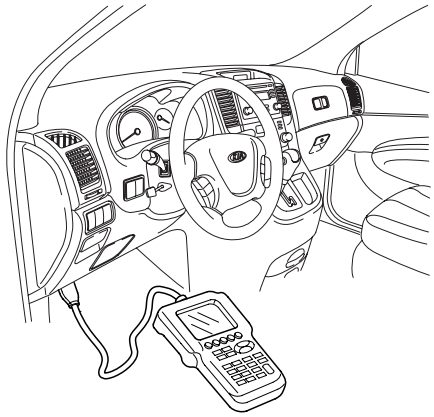

ARKF500A

3. Turn the ignition switch ON.
4. Check for DTC using the Scan tool
5. After completion trouble of the repair or correction of the problem, erase the stored fault codes using the scan tool.
6. Disconnect the Scan tool from the 16P data link connector.

ABS CHECK SHEET

ABS Check Sheet

Inspector's Name _____

Customer's Name	_____	**Registration No.**	
		Registration Year	/ /
		VIN.	
Date Vehicle Brought In	/ /	**Odometer**	Km Miles

Date the Problem First Occurred	/ /
Frequency of Occurence of Problem	☐ Continuous ☐ Intermittent (times a day)

Symptoms	☐ ABS does not operate.		
	☐ ABS does not operate efficiently.	☐ Intermittent (times a day)	
	ABS Warning Light Abnormal	☐ Remains ON	☐ Does not light up

Diagnostic Trouble Code Check	**1st Time**	☐ Normal Code	☐ Malfunction Code (Code)
	2nd Time	☐ Normal Code	☐ Malfunction Code (Code)

EJDA017A

PROBLEM SYMPTOMS TABLE

If a normal code is displayed during the DTC check but the problem still occurs, check the circuits for each problem symptom in the order given in the table below and proceed to the relevant troubleshooting page.

Symptom	Suspect Area	See page
ABS does not operate.	Only when 1. -4. are all normal and the problem is still occurring, replace the HECU. 1. Check the DTC reconfirming that the normal code is output. 2. Power source circuit. 3. Speed sensor circuit. 4. Check the hydraulic circuit for leakage.	BR - 56
ABS does not operate intermittently.	Only when 1. -4. are all normal and the problem is still occurring, replace the ABS actuator assembly. 1. Check the DTC reconfirming that the system is operating to specifications. 2. Wheel speed sensor circuit. 3. Stop lamp switch circuit. 4. Check the hydraulic circuit for leakage.	BR - 58
Communication with Scan tool is not possible. (Communication with any system is not possible)	1. Power source circuit 2. Diagnosis line	BR - 59
Communication with Scan tool is not possible. (Communication with ABS only is not possible)	1. Power source circuit 2. Diagnosis line 3. HECU	BR - 60
When ignition key is turned ON (engine OFF), the ABS warning lamp does not light up.	1. ABS warning lamp circuit 2. HECU	BR - 61
Even after the engine is started, the ABS warning lamp remains ON.	1. ABS warning lamp circuit 2. HECU	BR - 62

CAUTION

During ABS operation, the brake pedal may vibrate or may not be able to be depressed. Such phenomena are due to intermittent changes in hydraulic pressure inside the brake line to prevent the wheels from locking and is not an abnormality.

ABS Does Not Operate.

EJBF505T

DETECTING CONDITION

Trouble Symptoms	Possible Cause
Brake operation varies depending on driving conditions and road surface conditions, so diagnosis can be difficult.However if a normal DTC is displayed, check the following probable cause. When the problem is still occurring, replace the ABS control module.	- Inoperative power source circuit - Inoperative wheel speed sensor circuit - Inoperative hydraulic circuit for leakage - Inoperative HECU

INSPECTION PROCEDURES

DTC INSPECTION

1. Connect the Scan Tool with the data link connector and turn the ignition switch ON.

2. Verify that the system is operating to specifications. Is the system operating to specifications?

NO

▶ Check the power source circuit.

YES

▶ Erase the DTC and recheck using Scan Tool.

CHECK THE POWER SOURCE CIRCUIT.

1. Disconnect the connector from the ABS control module.

2. Turn the ignition switch ON, measure the voltage between terminal 18 of the ABS control module harness side connector and body ground.

Specification: approximately B+

Is the voltage within specification?

YES

▶ Check the ground circuit.

NO

▶ Check the harness or connector between the fuse (10A) in the engine compartment junction block and the ABS control module. Repair if necessary.

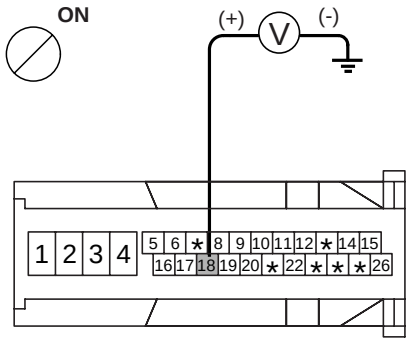

EJRF702O

CHECK THE GROUND CIRCUIT.

1. Disconnect the connector from the ABS control module.

2. Check for continuity between terminals 1,4 of the ABS control module harness side connector and ground point.
Is there continuity?

YES

▶ Check the wheel speed sensor circuit.

NO

▶ Repair an open in the wire and ground point.

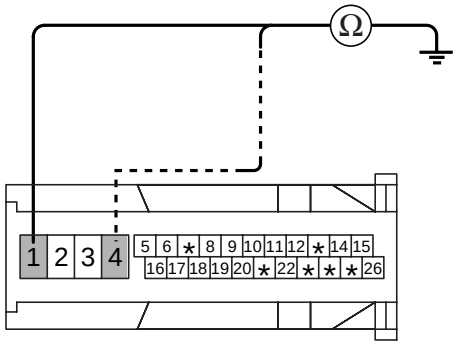

EJRF702P

CHECK THE WHEEL SPEED SENSOR CIRCUIT.

Refer to the DTC troubleshooting procedures.
Is the system operating to specifications?

YES

▶ Check the hydraulic circuit for leakage.

NO

▶ Repair or replace the wheel speed sensor.

CHECK THE HYDRAULIC CIRCUIT FOR LEAKAGE.

Refer to the hydraulic lines.
Inspect leakage of the hydraulic lines.
Is the system operating to specifications?

YES

▶ The problem is still occurring, replace the ABS control module.

NO

▶ Replace the leaking hydraulic lines.

ABS Does Not Operate (Intermittently).

BJKG500R

DETECTING CONDITION

Trouble Symptoms	Possible Cause
Brake operation varies depending on driving conditions and road surface conditions, so diagnosis can be difficult.However if a normal DTC is displayed, check the following probable cause. When the problem is still occurring, replace the ABS control module.	- Inoperative power source circuit - Inoperative wheel speed sensor circuit - Inoperative hydraulic circuit for leakage - Inoperative HECU

INSPECTION PROCEDURES

DTC INSPECTION

1. Connect the Scan Tool with the data link connector and turn the ignition switch ON.
2. Verify that the system is operating to specifications. Is the system operating to specifications?

NO

▶ Check the wheel speed sensor circuit.

YES

▶ Erase the DTC and recheck using Scan Tool.

CHECK THE WHEEL SPEED SENSOR CIRCUIT.

Refer to the DTC troubleshooting procedures.
Is the system operating to specifications?

YES

▶ Check the stop lamp switch circuit.

NO

▶ Repair or replace the wheel speed sensor.

CHECK THE STOP LAMP SWITCH CIRCUIT.

1. Check that stop lamp lights up when brake pedal is depressed and turns off when brake pedal is released.
2. Measure the voltage between terminal 20 of the ABS control module harness side connector and body ground when brake pedal is depressed.

Specification: approximately B+

Is the voltage within specification?

YES

▶ Check the hydraulic circuit for leakage.

NO

▶ Repair the stop lamp switch. Repair an open in the wire between the ABS control module and the stop lamp switch.

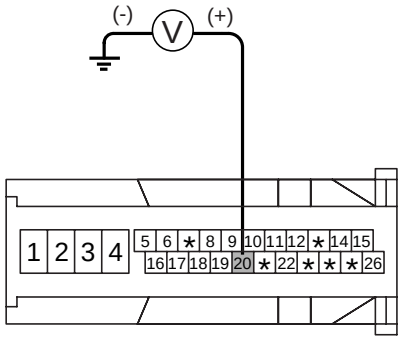

EJRF702Q

CHECK THE HYDRAULIC CIRCUIT FOR LEAKAGE.

Refer to the hydraulic lines.
Inspect leakage of the hydraulic lines.
Is the system operating to specifications?

YES

▶ The problem is still occurring, replace the ABS control module.

NO

▶ Replace the leaking hydraulic lines.

Communication with Scan-Tool is not possible.
(Communication with any system is not possible)

BJKG500S

DETECTING CONDITION

Trouble Symptoms	Possible Cause
Possible malfunction in the power supply system (including ground) for the diagnosis line.	- An open in the wire - Poor ground - Inoperative power source circuit

INSPECTION PROCEDURES

CHECK THE POWER SUPPLY CIRCUIT FOR THE DIAGNOSIS

Measure the voltage between terminal 9 of the data link connector and body ground.

Specification: approximately B+

Is voltage within specification?

YES

▶ Check the ground circuit for the diagnosis.

NO

▶ Repair an open in the wire. Check and replace fuse (15A) from the engine compartment junction block.

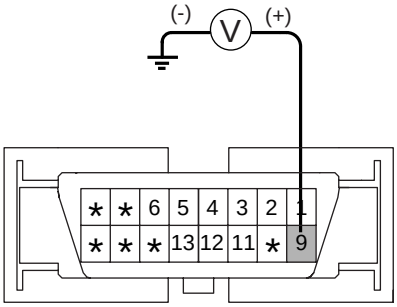

SCMBR6529L

CHECK THE GROUND CIRCUIT FOR THE DIAGNOSIS

Check for continuity between terminal 5 of the data link connector and body ground.
Is there continuity?

NO

▶ Repair an open in the wire between terminal 5 of the data link connector and ground point.

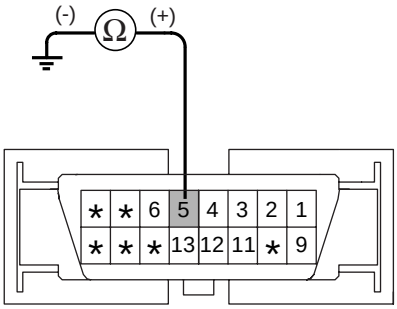

SCMBR6530L

Communication with Scan Tool is not possible.
(Communication with ABS only is not possible)

BJKG500T

DETECTING CONDITION

Trouble Symptoms	Possible Cause
When communication with Scan Tool is not possible, the cause may be probably an open in the HECU power circuit or an open in the diagnosis output circuit.	- An open in the wire - Inoperative HECU - Inoperative power source circuit

INSPECTION PROCEDURES

CHECK FOR CONTINUITY IN THE DIAGNOSIS LINE

1. Disconnect the connector from the ABS control module.
2. Check for continuity between terminals 11 of the ABS control module connector and 1 of the data link connector.
   Is there continuity?

YES

▶ Check the power source of ABS control module.

NO

▶ Repair an open in the wire.

CHECK THE POWER SOURCE OF ABS CONTROL MODULE

1. Disconnect the connector from the ABS control module.
2. Turn the ignition switch ON, measure the voltage between terminal 18 of the ABS control module harness side connector and body ground.

Specification: approximately B+

Is voltage within specification?

YES

▶ Check for poor ground.

NO

▶ Check the harness or connector between the fuse (10A) in the engine compartment junction block and the ABS control module.Repair if necessary.

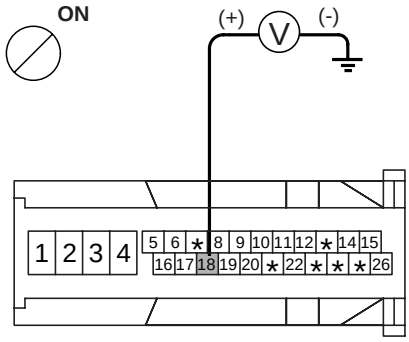

EJRF702O

CHECK FOR POOR GROUND

Check for continuity between terminal 5 of the data link connector and ground point.

YES

▶ Replace the ABS control module and recheck.

NO

▶ Repair an open in the wire or poor ground.

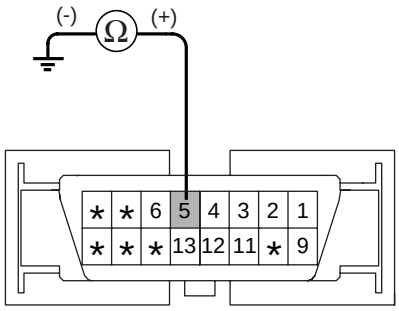

SCMBR6530L

When Ignition Key Is Turned ON (engine OFF), The ABS Warning Lamp Does Not Light Up.

EJBF505X

DETECTING CONDITION

Trouble Symptoms	Possible Cause
When current flows in the HECU the ABS warning lamp turns from ON to OFF as the initial check.Therefore if the lamp does not light up, the cause may be an open in the lamp power supply circuit, a blown bulb, an open in the both circuits between the ABS warning lamp and the HECU, and the inoperative HECU.	- Inoperative ABS warning lamp bulb - Blown No.2 fuse (10A) in the engine compartment junction block - Inoperative ABS warning lamp module - Inoperative HECU

INSPECTION PROCEDURES

PROBLEM VERIFICATION

Disconnect the connector from the ABS control module and turn the ignition switch ON.
Does the ABS warning lamp light up?

YES

▶ It is normal. Recheck the ABS control module.

NO

▶ Check the power source for the ABS warning lamp.

CHECK THE POWER SOURCE FOR THE ABS WARNING LAMP

1. Disconnect the instrument cluster connector and turn the ignition switch ON.
2. Measure the voltage between terminal 8 of the cluster harness side connector and body ground.

Specification: approximately B+

Is voltage within specification?

YES

▶ Repair bulb or instrument cluster assembly.

NO

▶ Check for blown fuse.

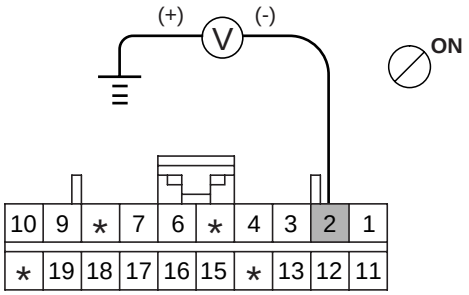

SCMBR6531L

CHECK FOR BLOWN FUSE

Check continuity of fuse (10A) from the engine compartment junction block.
Is there continuity?

YES

▶ Repair an open in the wire between ABS fuse and 1 of cluster connector.

NO

▶ Replace the blown fuse.

Even After The Engine Is Started, The ABS Warning Lamp Remains ON.

EJBF505Y

DETECTING CONDITION

Trouble Symptoms	Possible Cause
If the HECU detects trouble, it lights the ABS warning lamp while at the same time prohibiting ABS control. At this time, the HECU records a DTC in memory.Even though the normal code is output, the ABS warning lamp remains ON, then the cause may be probably an open or short in the ABS warning lamp circuit.	- An open in the wire - Inoperative instrument cluster assembly - Inoperative ABS warning lamp module - Inoperative HECU

INSPECTION PROCEDURES

CHECK DTC OUTPUT.

1. Connect the Scan Tool to the 16P data link connector located behind the driver's side kick panel.
2. Check the DTC output using Scan Tool.
   Is DTC output?

YES

▶ Repair circuit indicated by code output.

NO

▶ Check instrument cluster.

CHECK INSTRUMENT CLUSTER

Disconnect the cluster connector and turn the ignition switch ON.
Does the ABS warning lamp remains ON?

YES

▶ Replace the instrument cluster.

NO

▶ Check for open the wire.

CHECK FOR OPEN IN THE WIRE

Check for continuity in the wire between cluster and ABS control module.
Is there continuity?

YES

▶ Replace the ABS control module and recheck.

NO

▶ Repair an open in the wire between cluster and ABS control module.

BLEEDING OF BRAKE SYSTEM

This procedure should be followed to ensure adequate bleeding of air and filling of the ABS unit, brake lines and master cylinder with brake fluid.

1. Remove the reservoir cap and fill the brake reservoir with brake fluid.

   CAUTION

   If there is any brake fluid on any painted surface, wash it off immediately.

   NOTE

   When pressure bleeding, do not depress the brake pedal.
   Recommended fluid..... DOT3

2. Connect a clear plastic tube to the brake caliper bleeder plug and insert the other end of the tube into a half filled clear plastic bottle.

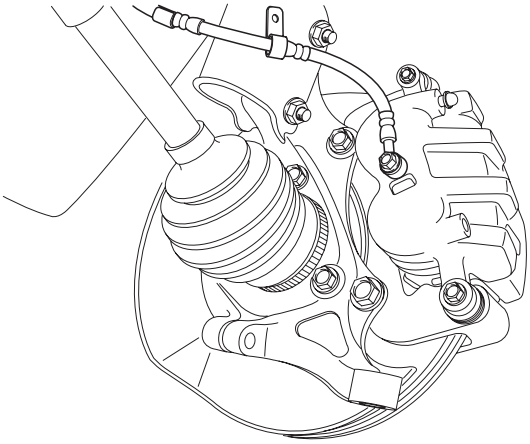

AJKF603S

3. Connect the scan tool to the data link connector located underneath the dash panel.

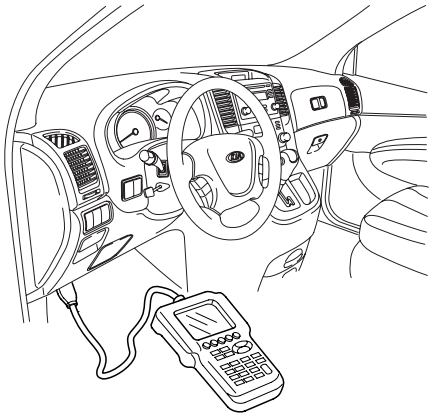

ARKF500A

4. Select and operate according to the instructions on the scan tool screen.

   CAUTION

   You must obey the maximum operating time of the ABS motor with the scan tool to prevent the motor pump from burning.

   1) Select Hyundai vehicle diagnosis.
   2) Select vehicle name.
   3) Select Anti-Lock Brake system.
   4) Select air bleeding mode.
   5) Press "YES" to operate motor pump and solenoid valve.

1.6 AIR BLEEDING MODE	
ABS AIR BLEEDING STATUS	
01. SOLENOID VALVE STATUS	CLOSE
02. MOTOR PUMP STATUS	OFF
DO YOU WANT TO START ?	
(PRESS [YES] KEY)	

EJDA014F

   6) Wait 60 sec. before operating the air bleeding again. (If not, you may damage the motor.)

1.6 AIR BLEEDING MODE	
ABS AIR BLEEDING STATUS	
01. SOLENOID VALVE STATUS	OPEN
02. MOTOR PUMP STATUS	ON
TIME : AUTOMATIC COUNT (1-60 SEC.)	

EJDA014G

5. Pump the brake pedal several times, and then loosen the bleeder screw until fluid starts to run out without bubbles. Then close the bleeder screw.

6. Repeat step 5 until there are no more bubbles in the fluid for each wheel.

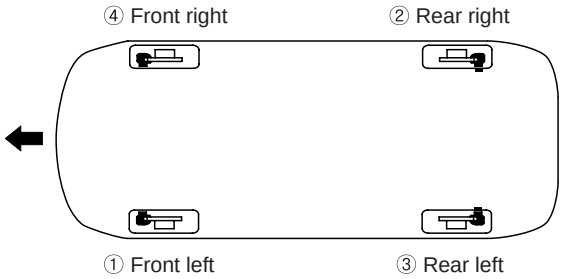

EJRF702W

7. Tighten the bleeder screw.

Bleed screw tightening torque: 7~1 3 Nm (0.7 ~1.3 kgf·m, 5.1 ~ 9.4 lb-ft)

DIAGNOSTIC TROUBLE CODE CHART(DTC)

● : MIL ON ○ : MIL OFF

DTC CODE	Trouble description	Warning lamp condition			Etc.	SEE PAGE
		EBD	ABS	ESP		
C1101	Battery voltage high	●	●	●		BR - 67
C1102	Battery voltage low	○/●	●	●		BR - 72
C1200	Wheel speed sensor front-LH open/short	○/●	●	●		BR - 76
C1201	Wheel speed sensor front-LH range / performance / intermittent	○/●	●	●		BR - 82
C1202	Wheel speed sensor front-LH invalid/no signal	○/●	●	●		BR - 86
C1203	Wheel speed sensor front-RH open/short	○/●	●	●		BR - 76
C1204	Wheel speed sensor front-RH range / performance / intermittent	○/●	●	●		BR - 82
C1205	Wheel speed sensor front-RH invalid/no signal	○/●	●	●		BR - 86
C1206	Wheel speed sensor rear-LH open/short	○/●	●	●		BR - 76
C1207	Wheel speed sensor rear-LH range / performance / intermittent	○/●	●	●		BR - 82
C1208	Wheel speed sensor rear-LH invalid/no signal	○/●	●	●		BR - 86
C1209	Wheel speed sensor rear-RH open/short	○/●	●	●		BR - 76
C1210	Wheel speed sensor rear-RH range / performance / intermittent	○/●	●	●		BR - 82
C1211	Wheel speed sensor rear-RH invalid/no signal	○/●	●	●		BR - 86
C1213	Wheel speed frequency error	○/●	●	●		BR - 91
C1235	Primary pressure sensor - electrical	○	●	●	ESP only	BR - 95
C1237	Pressure sensor - other	○	●	●	ESP only	BR - 99
C1260	Steering angle sensor - signal	○	○	●	ESP only	BR - 100
C1261	Steering angle sensor not calibrated	○	○	●	ESP only	BR - 107
C1282	Yaw rate & lateral G sensor - electrical	○	○	●	ESP only	BR - 110
C1283	Yaw rate & lateral G sensor - signal	○	○	●	ESP only	BR - 117
C1503	ESP switch error	○	○	●	ESP only	BR - 121
C1513	Brake switch error	○	●	●	ESP only	BR - 125
C1604	ECU hardware error	●	●	●		BR - 131
C1605	CAN hardware error	○	○	●	ESP only	BR - 132
C1611	CAN time-out EMS	○	○	●	ESP only	BR - 133
C1612	ECU(brake system) hardware error	○	○	●	ESP only	BR - 135

DTC CODE	Trouble description	Warning lamp condition			Etc.	SEE PAGE
		EBD	ABS	ESP		
C1616	CAN bus off ESP	○	○	●	ESP only	BR - 137
C1623	CAN time-out SAS	○	○	●	ESP only	BR - 143
C1625	CAN time-out ESP	○	○	●	ESP only	BR - 150
C1626	Implausible Control	○	●	●	ESP only	BR - 151
C1702	Variant Coding	●	●	●	ESP only	BR - 152
C2112	Valve relay error	○/●	●	●		BR - 154
C2308	Front-LH Valve error (Inlet valve)	●	●	●		BR - 157
C2312	Front-LH Valve error (Outlet valve)	●	●	●		BR - 161
C2316	Front-RH Valve error (Inlet valve)	●	●	●		BR - 157
C2320	Front-RH Valve error (Outlet valve)	●	●	●		BR - 161
C2324	Rear-LH Valve error (Inlet valve)	●	●	●		BR - 157
C2328	Rear-LH Valve error (Outlet valve)	●	●	●		BR - 161
C2332	Rear-RH Valve error (Inlet valve)	●	●	●		BR - 157
C2336	Rear-RH Valve error (Outlet valve)	●	●	●		BR - 161
C2366	USV1 error	●	●	●	ESP only	BR - 163
C2370	USV2 error	●	●	●	ESP only	BR - 163
C2372	HSV1 error	●	●	●	ESP only	BR - 163
C2374	HSV2 error	●	●	●	ESP only	BR - 163
C2402	Motor electrical	●	●	●		BR - 165

DTC C1101 BATTERY VOLTAGE HIGH

COMPONENT LOCATION EA52FC74

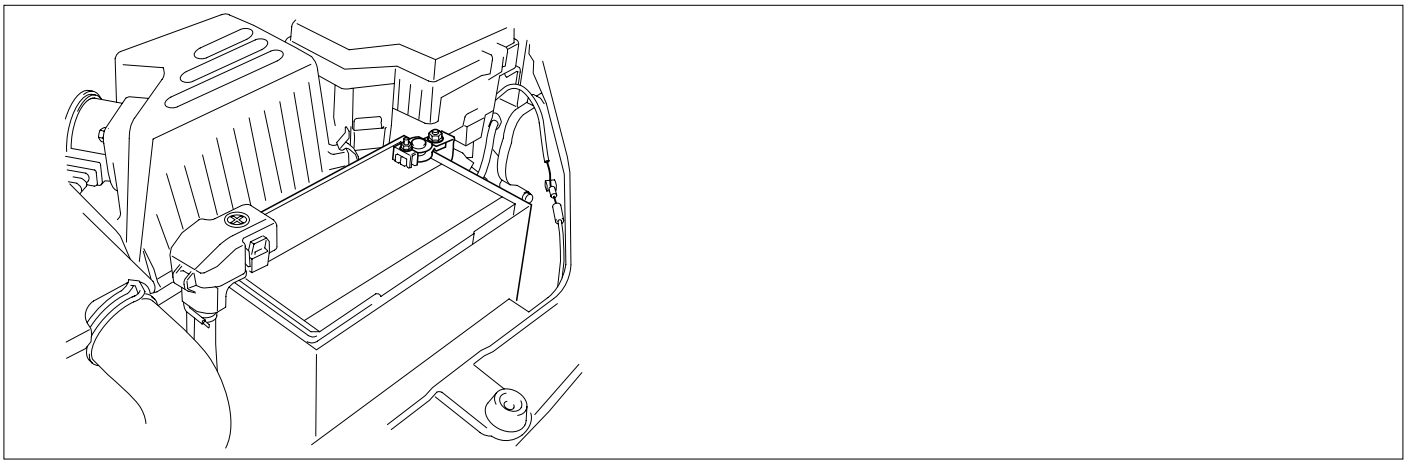

SCMBR6544D

GENERAL DESCRIPTION EA8D3933

The ABS ECU(Electronic Control Unit) checks the battery voltage and alternator output voltage to determine, as a safety issue, whether the ABS system can operate normally or not. The normal battery voltage range is essential for controlling the ABS system as intended.

DTC DESCRIPTION ED2E3597

The ABS ECU monitors battery voltage and alternator output voltage by reading the value of voltage. When the voltage is higher than the expected normal value, this code is set, and the ABS/EBD/ESP functions are prohibited. If the voltage recovers, to within normal operating ranges, then the controller returns to normal operation as well.

DTC DETECTING CONDITION EC14AE66

Item	Detecting Condition	Possible cause
DTC Strategy	• Battery Voltage Monitoring	• Poor connection in power supply circuit (IGN+) • Inoperative Alternator • Inoperative HECU
Monitoring Period	• Continuous (Over voltage faults will be always stored.)	
Enable Conditions	• When Vign is higher than 16.8 V. - If the voltage is recovered to 16.7 V, the controller returns to normal state. - The monitored supply voltage is filtered and limited to a rise time of 4 volts per second.	
Fail Safe	• The ABS/EBD/ESP functions are inhibited. - The proper function of valves and return pump is not guaranteed. • The ABS/EBD/ESP warning lamps are activated. • The supply voltage to wheel speed sensor is interrupted.	

MONITOR SCANTOOL DATA E8F74786

1. Connect scantool to Data Link Connector(DLC)
2. Engine "ON".
3. Monitor the "BATTERY VOLTAGE" parameter on the scantool.

Specification : Approx. Below. 16.7 V

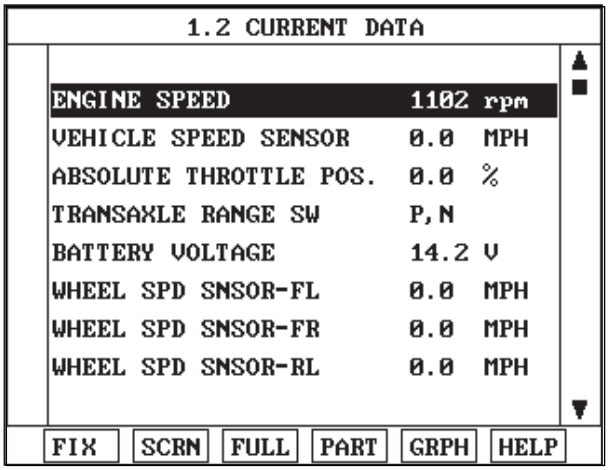

Fig1

Fig 1) Test Condition : Ignition "ON" & Engine "ON" Normal Data

SCMBR6532L

4. Is parameter displayed within specifications?

YES

▶ Fault is intermittent caused by poor connection in power harness (IGN+) and/or HECU's connector or was repaired and HECU memory was not cleared. Thoroughly check connectors for looseness, poor connection, bending, corrosion, contamination, deterioration, or damage. Repair or replace as necessary and then go to "Verification Of Vehicle Repair" procedure.

NO

▶ Go to "W/Harness Inspection" procedure.

TERMINAL & CONNECTOR INSPECTION E41C0980

1. Many malfunctions in the electrical system are caused by poor harness(es) and terminals condition. Faults can also be caused by interference from other electrical systems, and mechanical or chemical damage.

2. Thoroughly check connectors for looseness, poor connection, bending, corrosion, contamination, deterioration, or damage.

3. Has a problem been found?

YES

▶ Repair as necessary and then go to "Verification Of Vehicle Repair" procedure.

NO

▶ Confirm the DTC status at another system to be able to confirm C1101 or DTC code ralated to over voltage.
▶ If there isn't C1101 code at another system, Go to "Power Circuit Inspection" procedure.
▶ If there is C1101 or DTC code ralated to over voltage at another system, Go to "Alternator Output Voltage Inspection" procedure.

ALTERNATOR OUTPUT VOLTAGE INSPECTION

1. Engine "ON".

2. Measure voltage between the battery terminal(+) and the battery terminal(-) with maintaining ENG RPM 2,500RPM (idle). over 2 minutes.

Specification : Below. 16.7 V

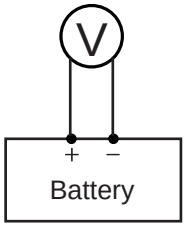

1. Battery Terminal(+)
2. Battery Terminal(-)

SCMBR6533L

3. Is the measured voltage within specifications?

YES

▶ Go to "Power Circuit Inspection" procedure.

NO

▶ Check that the tension of driving velt, ENG RPM, fuse, terminal of battery, all terminals of alternator are in good condition and check for damaged harness and poor connection between alternator and battery. If OK repair or replace alternator and then go to "Verification Of Vehicle Repair" procedure.

POWER SUPPLY CIRCUIT INSPECTION E2C172E4

1. Engine "ON".

2. Measure voltage between the battery terminal(+) and terminal "28" of the HECU harness connector.

Specification : Approx. below 0.2 V

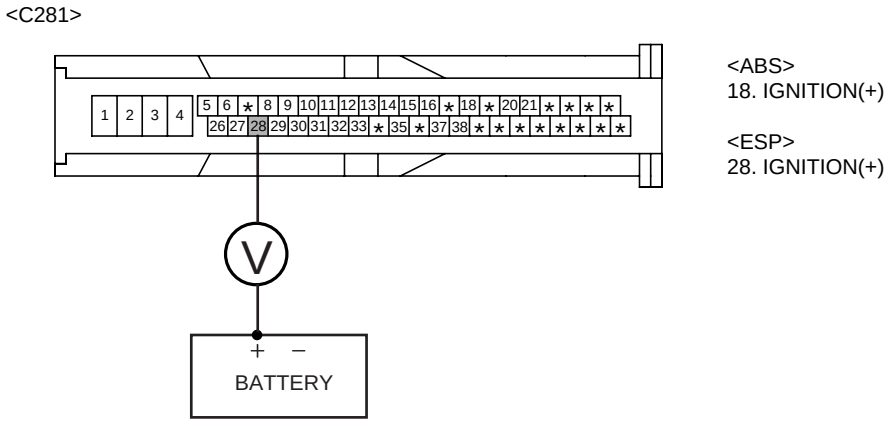

SCMBR6534L

3. Is the measured voltage within specifications?

YES

▶ Go to "Ground Circuit Inspection" procedure.

NO

▶ Check for damaged harness and poor connection between the battery terminal(+) and terminal "28" of the HEC Uharness connector. Repair as necessary and then go to "Verification Of Vehicle Repair" procedure.

GROUND CIRCUIT INSPECTION E03AF84C

1. Ignition "OFF".
2. Disconnect HECU connector.
3. Measure resistance between terminal "4" of the HECU harness connector and chassis ground.

Specification : Approx. below 1 Ω

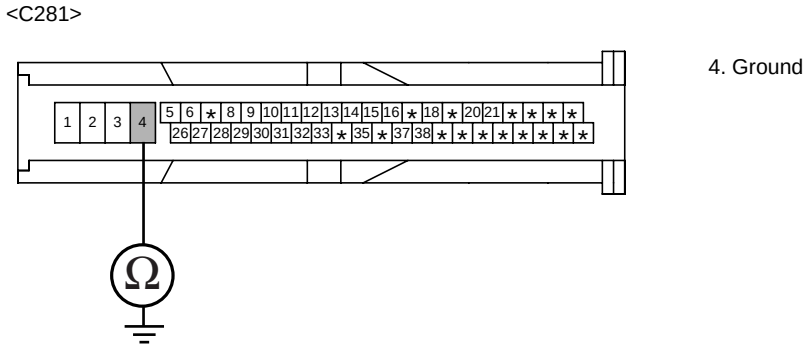

4. Is the measured resistance within specifications?

YES

▶ Substitute with a known-good HECU and check for proper operation. If problem is corrected, replace HECU and then go to "Verification Of Vehicle Repair" procedure.

NO

▶ Check for damaged harness and poor connection between terminal "4" of the HECU harness connector and chassis ground. Repair as necessary and then go to "Verification Of Vehicle Repair" procedure.

VERIFICATION OF VEHICLE REPAIR E91923EB

After a repair, it is essential to verify that the fault has been corrected.

1. Connect scantool and select "Diagnostic Trouble Codes (DTCs)" mode
2. Using a scantool, Clear DTC.
3. Operate the vehicle within DTC Detecting Condition in General Information
4. Are any DTCs present?

YES

▶ Go to the applicable troubleshooting procedure.

NO

▶ System performing to specification at this time.

DTC C1102 BATTERY VOLTAGE LOW

COMPONENT LOCATION EB61E615

Refer to DTC C1101.

GENERAL DESCRIPTION E3922A1D

Refer to DTC C1101.

DTC DESCRIPTION E63054CB

The ABS ECU monitors the battery voltage and alternator output voltage by reading the value of voltage. When the voltage is lower than the expected normal value, this code is set. The ABS/ESP functions are prohibited and the EBD function is allowed on LOW VOLTAGE CONDITION, the ABS/EBD/ESP functions are prohibited on UNDER VOLTAGE CONDITION. If the voltage recovers, to within normal operating ranges, then the controller returns to normal operations as well

DTC DETECTING CONDITION EE4B7682

Item		Detecting Condition	Possible cause
DTC Strategy		• Battery Voltage Monitoring	• Poor connection in power supply circuit (IGN+) • Inoperative HECU
Monitoring Period		• Continuous (Under voltage faults are only entered in the EEPROM if the vehicle speed is > 6 km/h.)	
Case1 (Low voltage)	Enable Conditions	• When Vign is lower than 9.3 V outside ABS/ESP control. • When Vign is lower than 9.2 V inside ABS/ESP control. - If IGN voltage is recovered to 9.6 V, the system recovers to normal state. - The monitored supply voltage is filtered and limited to a rise time of 4 volts per second.	
	Fail Safe	• The ABS/ESP functions are inhibited. • The ABS/ESP warning lamps are activated.	
Case2 (Under voltage)	Enable Conditions	• When Vign is lower than 7.7 V. - If IGN voltage is recovered to 7.8V, the system recovers to normal state. - The monitored supply voltage is filtered and limited to a rise time of 4 volts per second.	
	Fail Safe	• The ABS/EBD/ESP functions are inhibited. • The ABS/EBD/ESP warning lamps are activated.	

MONITOR SCANTOOL DATA EBFD375A

1. Connect scantool to Data Link Connector(DLC)
2. Engine "ON".
3. Monitor the "BATTERY VOLTAGE" parameter on the scantool.

Specification : Above. 9.6 V

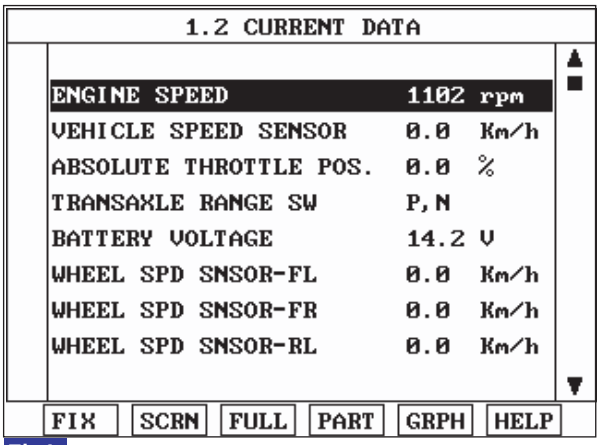

Fig1

Fig 1) Test Condition : Ignition "ON" & Engine "ON". Normal Data

SCMBR6536L

4. Is parameter displayed within specifications?

YES

▶ Fault is intermittent caused by poor connection in power harness (IGN+) and/or HECU's connector or was repaired and HECU memory was not cleared. Thoroughly check connectors for looseness, poor connection, bending, corrosion, contamination, deterioration, or damage. Repair or replace as necessary and then go to "Verification Of Vehicle Repair" procedure

NO

▶ Go to "W/Harness Inspection" procedure.

TERMINAL & CONNECTOR INSPECTION E0E76E90

1. Many malfunctions in the electrical system are caused poor harness(es) and terminals condition. Faults can also be caused by interference from other electrical systems, and mechanical or chemical damage.
2. Thoroughly check connectors for looseness, poor connection, bending, corrosion, contamination, deterioration, or damage.
3. Has a problem been found?

YES

▶ Repair as necessary and then go to "Verification Of Vehicle Repair" procedure.

NO

▶ Go to "Alternator Output Voltage" procedure.

ALTERNATOR OUTPUT VOLTAGE INSPECTION

1. Engine "ON".

2. Measure voltage between the battery terminal(+) and the battery terminal(-) with maintaining ENG RPM 2,500RPM (idle) over 2 minutes.

Specification : Above. 9.6 V

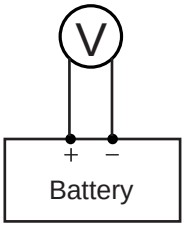

1. Battery Terminal(+)
2. Battery Terminal(-)

SCMBR6533L

3. Is the measured voltage within specifications?

YES

▶ Go to "Power Circuit Inspection" procedure.

NO

▶ Check that the tension of driving velt, ENG RPM, fuse, terminal of battery, all terminals of alternator are in good condition and check for damaged harness and poor connection between alternator and battery. If OK repair or replace alternator and then go to "Verification Of Vehicle Repair" procedure.

POWER CIRCUIT INSPECTION E7186C63

1. Ignition "OFF".
2. Disconnect HECU connector.
3. Ignition "ON" & Engine "OFF".
4. Measure voltage between terminal "28" of the HECU harness connector and chassis ground.

Specification : Approx. B+

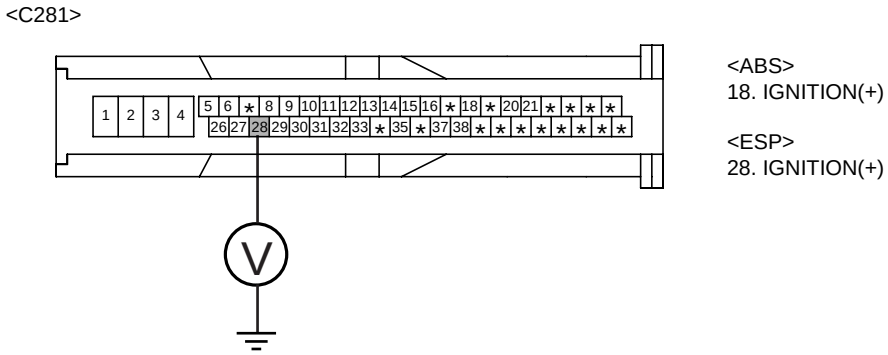

SCMBR6537L

5. Is the measured voltage within specifications?

YES

▶ Go to "Ground Circuit Inspection" procedure.

NO

▶ Check for damaged harness and poor connection between the battery terminal(+) and terminal "28" of the HECU harness connector. Check for open or blown 10A ABS fuse referring to "Circuit Diagram". Repair as necessary and then go to "Verification Of Vehicle Repair" procedure.

GROUND CIRCUIT INSPECTION ED5D60D9

Refer to DTC C1101.

VERIFICATION OF VEHICLE REPAIR EC8DB117

Refer to DTC C1101.

DTC C1200 FL WHEEL SPEED SENSOR-OPEN/SHORT
DTC C1203 FR WHEEL SPEED SENSOR-OPEN/SHORT
DTC C1206 RL WHEEL SPEED SENSOR-OPEN/SHORT
DTC C1209 RR WHEEL SPEED SENSOR-OPEN/SHORT

COMPONENT LOCATION EF3C984D

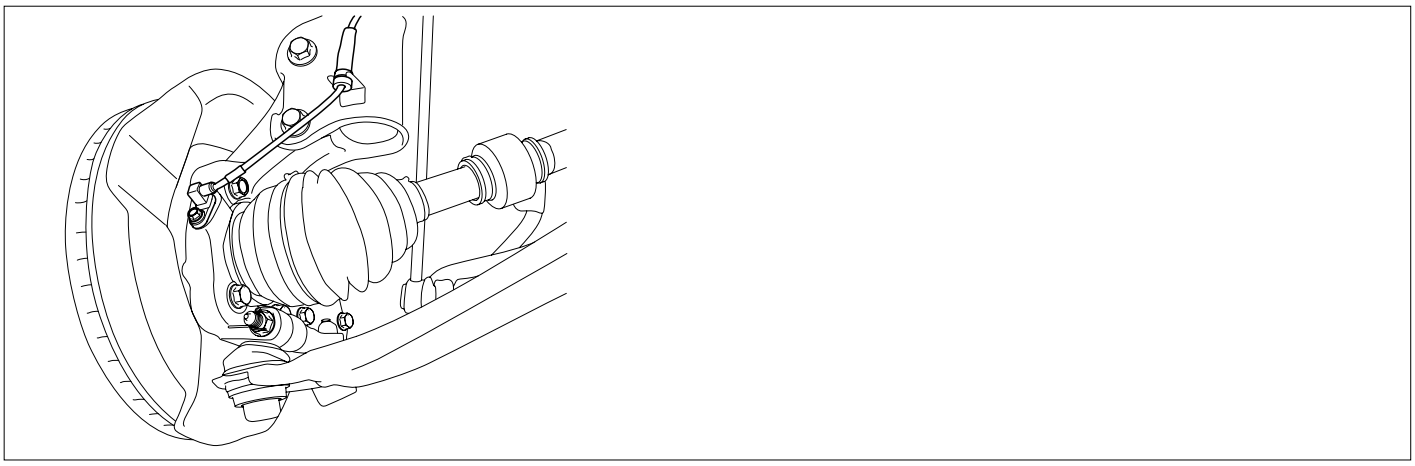

SCMBR6547D

GENERAL DESCRIPTION EF598248

The wheel speed sensor is the essential component the ABS ECU uses to calculate vehicle speed and to determine whether wheel lock occurs. For example, rear wheel speed signal is used as a referecnce value, for vehicle speed, in front wheel drive vehicles, and if a difference between front and rear wheel speed occurs, then ABS control is performed. Wheel speed sensor is active hall-sensor type and good at temperature and noise chariteristic. Digital waveform is produced as tone wheel rotate according as hall sensor principle. Frequency of duty waveform is changed in proportion to rotation of tone wheel and HECU calculate vehicle speed by this frequency.

DTC DESCRIPTION E3A8CED9

The ABS ECU monitors the wheel speed sensor circuit continuously. A direct current is supplied in the wheel-speed sensor by a power source in the input amplifier of the control unit. If the WSS circuit is broken, in that case a fault is detected by detecting abnormal input current. HECU cuts off the voltage supply to wheel sensor channel which had a fault and prevent vehicle's damage due to super heated harness. If one or more defects has detected, DTC code of defected wheel will be stored. Mutual short between sensors is detected by executing self diagnosis successively at corresponding wheel when ignition ON. Warning lamp is turned OFF unless additional faults are detected when the IG KEY is turned ON again.

DTC DETECTING CONDITION EA7455B1

Item		Detecting Condition	Possible cause
DTC Strategy		• Voltage monitoring	• Open or short of Wheel speed sensor circuit • Inoperative Wheel speed sensor • Inoperative HECU
Case1	Monitoring Period	• Once after power up.	
	Enable Conditions	• Shorts between WSS lines and shorts to UZ can be detected by switching single WSS channels in sequence. If there is an error after end of test, a failure is recognized.	
Case2	Monitoring Period	• Continuous	
	Enable Conditions	• When the sensor current levels are out of permissible range(LOW : 7 mA, HIGH : 14 mA) for 200 ms.	
Fail Safe		• Sensor failure outside of the ABS control cycle 1) Only one wheel failure : Only the ABS/ESP functions are inhibited. The ABS/ESC warning lamps are activated and the EBD warning lamp is not activated. 2) Two wheels failure : Only the ABS/ESP functions are inhibited. The ABS/ESP warning lamps are activated and the EBD warning lamp is not activated. 3) More than 3 wheels failure :System down. The ABS/EBD/ESP functions are inhibited. The ABS/EBD/ESP warning lamps are activated. • Sensor failure inside the ABS control cycle 1) One front wheel failure : Inhibit the ABS/ESP control. Pressure is increased on a front wheel, Pressure is decreased on a rear wheel. After the ABS/ESP control, the ABS/ESP functions are inhibited. The ABS/ESP warning lamps are activated and the EBD warning lamp is not activated. 2) Two wheels failure : Inhibit the ABS/ESP control. Pressure is increased on a front wheel, Pressure is decreased on a rear wheel. After the ABS/ESP control, the ABS/ESP functions are inhibited. The ABS/ESP warning lamps are activated and the EBD warning lamp is not activated. 3) More than 3 wheels failure : System down. The ABS/EBD/ESP functions are inhibited. The ABS/EBD/ESP warning lamps are activated.	

MONITOR SCANTOOL DATA E81CC041

1. Engine "ON".
2. Connect scantool to Data Link Connector(DLC).
3. Start and drive vehicle in gear and maintain vehicle speed at or above 10 km/h(6 mph)
4. Monitor the "Wheel speed sensor" parameter on the Scantool.

Specification : Compare with another parameters related to wheel speed sensor. If it is the same as another parameters, it is in normal condition.

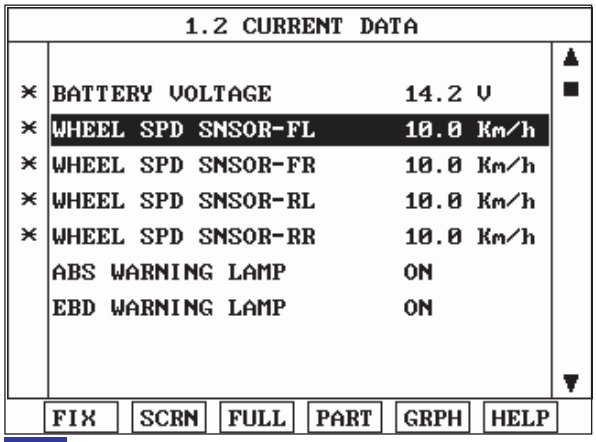

Fig1

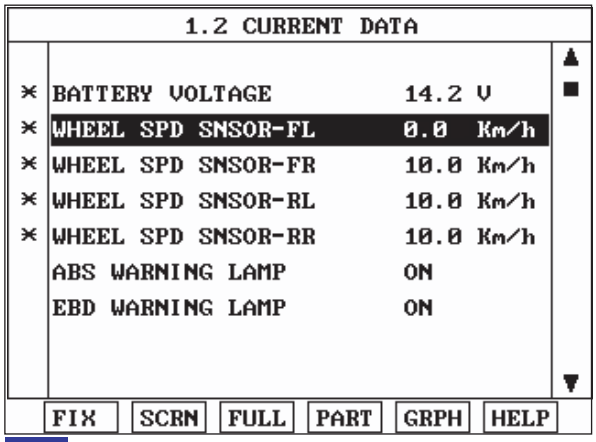

Fig2

Fig 1) Test Condition : Test Condition : Drive vehicle at a speed of 10km/h or more. (6mph or more) Normal Data
Fig 2) Test Condition : Drive vehicle at a speed of 10km/h or more. (6mph or more) Abnormal Data (Open)

SCMBR6538L

5. Is parameter displayed within specifications?

YES

▶ Fault is intermittent caused by poor connection in wheel speed sensor harness and/or HECU's connector or was repaired and HECU memory was not cleared. Thoroughly check connectors for looseness, poor connection, bending, corrosion, contamination, deterioration, or damage. Repair or replace as necessary and then go to "Verification Of Vehicle Repair" procedure.

NO

▶ Go to "W/Harness Inspection" procedure.

TERMINAL & CONNECTOR INSPECTION E3D7980A

1. Many malfunctions in the electrical system are caused by poor harness(es) and terminals. Faults can also be caused by interference from other electrical systems, and mechanical or chemical damage.

2. Thoroughly check connectors for looseness, poor connection, bending, corrosion, contamination, deterioration, or damage.

3. Has a problem been found?

YES

▶ Repair as necessary and then go to "Verification Of Vehicle Repair" procedure.

NO

▶ Go to "Power Circuit Inspection" procedure.

POWER SUPPLY CIRCUIT INSPECTION E08856A2

1. Ignition "ON".

2. Measure voltage between terminal (1) of the wheel speed sensor harness connector and chassis ground.

Specification : Approx. B+

<E02>

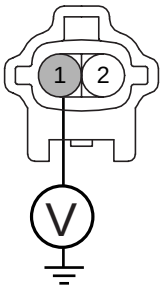

1. Wheel speed sensor(+)
2. Wheel speed sensor(-)

SCMBR6539L

3. Is the measured voltage within specifications?

YES

▶ Go to "Signal Circuit Inspection" procedure.

NO

▶ Check for open or short to GND in wheel speed sensor harness(FL) between terminal "1" of the wheel speed sensor(FL) harness connector and terminal of the HECU harness connector. Repair as necessary and then go to "Verification Of Vehicle Repair" procedure.
▶ If OK, Substitute with a known-good HECU and check for proper operation. If problem is corrected, replace HECU and then go to "Verification Of Vehicle Repair" procedure.

DTC	LOCATION	HECU harness connector (Power supply)	
		ABS	ESP
DTC C1200	Front Left	16	26
DTC C1203	Front Right	9	9
DTC C1206	Rear Left	6	6
DTC C1209	Rear Right	8	8

SIGNAL CIRCUIT INSPECTION E7F06691

1. Lift the vehicle.
2. Ignition "ON".
3. Turn the wheel with hand.
4. Measure waveform between terminal of the HECU harness connector and chassis ground.

Specification : Approx. High : 1.05 V , Low : 0.525 V

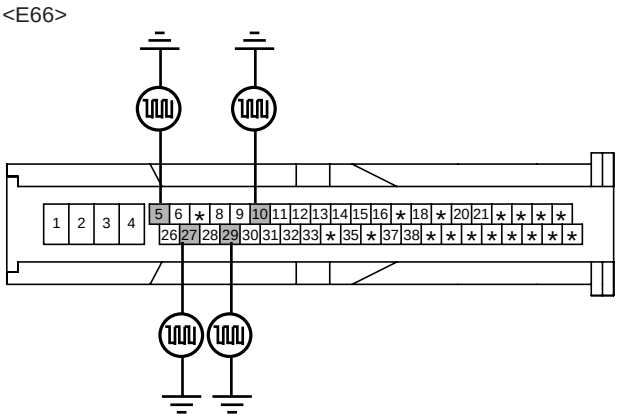

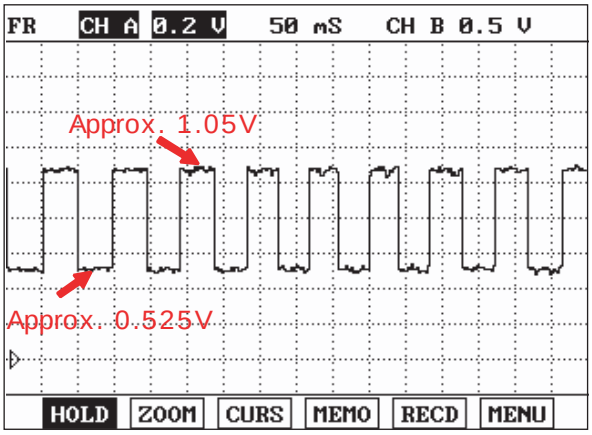

SCMBR6540L

DTC	LOCATION	HECU harness connector (Signal)	
		ABS	ESP
DTC C1200	Front Left	5	5
DTC C1203	Front Right	10	10
DTC C1206	Rear Left	17	27
DTC C1209	Rear Right	19	29

5. Is the measured waveform within specifications?

YES

▶ Substitute with a known-good HECU and check for proper operation. If problem is corrected, replace HECU and then go to "Verification Of Vehicle Repair" procedure.

NO

▶ Check for open or short to GND in wheel speed sensor harness(FL) between terminal "2" of the wheel speed sensor(FL) harness connector and terminal "5" of the HECU harness connector. Repair as necessary and then go to "Verification Of Vehicle Repair" procedure.
▶ If OK, Go to "Component Inspection" procedure.

COMPONENT INSPECTION E07F1542

1. Lift the vehicle.
2. Ignition "ON".
3. Turn the wheel with hand.
4. Measure waveform between terminal "1" of the wheel speed sensor harness connector and chassis ground.

Specification : Approx. High : 1.05 V , Low : 0.525 V

<E02>

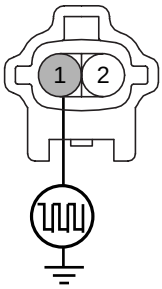

1. Wheel speed sensor (FL-)

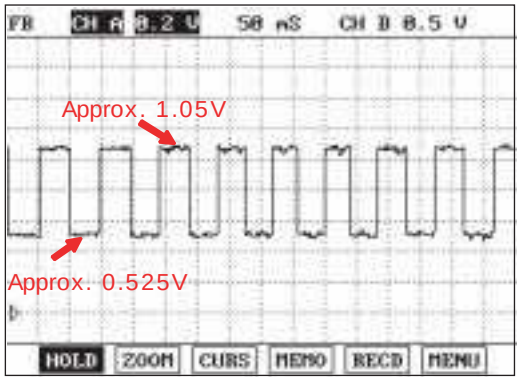

SCMBR6541L

5. Is the measured waveform within specifications?

YES

▶ Fault is intermittent caused by poor connection in wheel speed sensor harness (FL). Go to "Verification Of Vehicle Repair" procedure.

NO

▶ Substitute with a known-good Wheel speed sensor and check for proper operation. If problem is corrected, replace Wheel speed sensor and then go to "Verification Of Vehicle Repair" procedure.

VERIFICATION OF VEHICLE REPAIR EECDC592

Refer to DTC C1101.

DTC C1201 FL WHEEL SENSOR-RANGE/PERFORMANCE
DTC C1204 FR WHEEL SENSOR-RANGE/PERFORMANCE
DTC C1207 RL WHEEL SENSOR-RANGE/PERFORMANCE
DTC C1210 RR WHEEL SENSOR-RANGE/PERFORMANCE

COMPONENT LOCATION E9711C81

Refer to DTC C1200.

GENERAL DESCRIPTION E511D3E6

Refer to DTC C1200.

DTC DESCRIPTION EEC18A75

The ABS ECU monitors the wheel speed sensor signal continuously. This code is set when an abnormal signal due to air gap problem or an abnormal speed change ratio are detected at the vehicle speed between 10 km/h to 80 km/h. Warning lamp is turned OFF unless additional faults are detected when the IG KEY is turned ON again, and wheel speed is more than 12 Km/h.

DTC DETECTING CONDITION E11689A9

Item		Detecting Condition	Possible cause
DTC Strategy		• Signal monitoring	• Improper installation of wheel speed sensor • Abnormal Rotor and wheel bearing • Inoperative Wheel speed sensor • Inoperative HECU
Case1	Monitoring Period	• The monitoring is active from 10 km/h to 80 km/h and if no ABS-control is active at a front wheel and a rear wheel.	
	Enable Conditions	• Every time, if a gap in the wheel speed sensor signal occurs cyclically with one wheel rotation, a fault counter is increased by one. If the fault counter exceeds its limit of 6, a wheel specific fault is stored in the EEPROM.	
Case2	Monitoring Period	• Continuous	
	Enable Conditions	• If following interference and signal disturbance is detected, a failure is set after 10 s. non-plausible high frequency received. non-plausible high wheel acceleration. non-plausible high wheel jurk. non-plausible delta T and edges at low speed.	
Fail Safe		Refer to DTC C1200.	

MONITOR SCANTOOL DATA E9CE2C17

1. Engine "ON".
2. Connect scantool to Data Link Connector(DLC).
3. Start and drive vehicle in gear and maintain vehicle speed at or above 12 km/h(7 mph)
4. Monitor the "Wheel Speed Sensor" parameter on the Scantool.

Specification : Compare with another parameters related to wheel speed sensor. If it is the same as another parameters, it is in normal condition

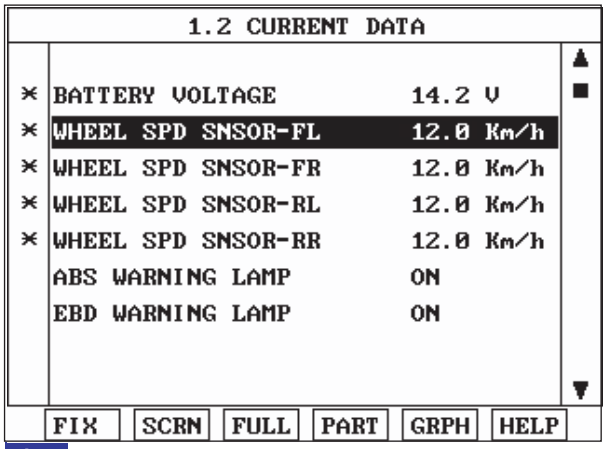

Fig1

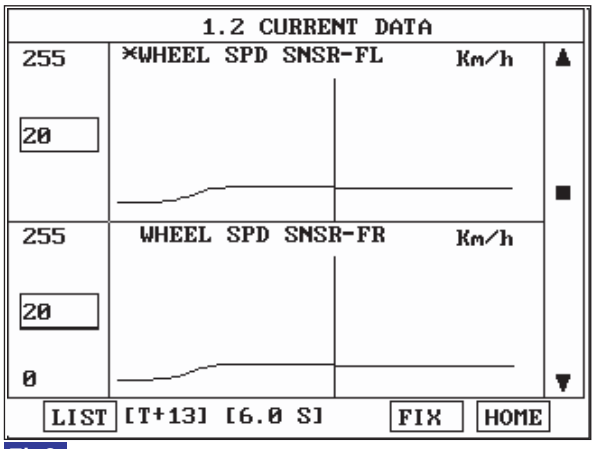

Fig2

Fig 1) Test Condition : Drive vehicle at a speed of 12 km/h or more. (7 mph or more) Normal Data
Fig 2) Test Condition : Drive vehicle at a speed of 20 km/h or more. (12 mph or more) Normal Graph

SCMBR6542L

5. Is parameter displayed within specifications?

YES

▶ Fault is intermittent caused by faulty HECU or external noise, was repaired and HECU memory was not cleared. Thoroughly check connectors for looseness, poor connection, bending, corrosion, contamination, deterioration, or damage. Repair as necessary and then go to "Verification Of Vehicle Repair" procedure.

NO

▶ Go to "Component Inspection" Procedure.

COMPONENT INSPECTION E85B1854

1. Lift the vehicle.
2. Ignition "ON".
3. Turn the wheel with hand.
4. Measure waveform between terminal "1" of the wheel speed sensor harness connector and chassis ground.

Specification : High : 1.05 V , Low : 0.525 V

<E02>

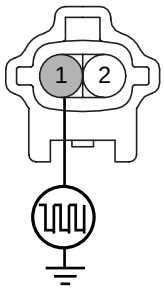

1. Wheel speed sensor (FL-)

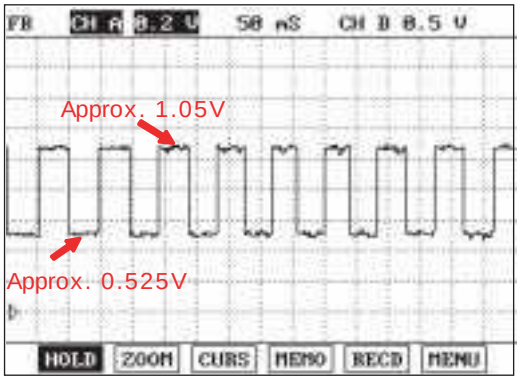

SCMBR6541L

5. Is the measured waveform within specifications?

YES

▶ Fault is intermittent caused by poor connection in wheel speed sensor harness or external noise, Thoroughly check connectors for looseness, poor connection, bending, corrosion, contamination, deterioration, or damage and external noise, an interference between harnesses. Repair or replace as necessary and then go to "Verification Of Vehicle Repair" procedure.
▶ If OK, Substitute with a known-good HECU and check for proper operation. If problem is corrected, replace HECU and then go to "Verification Of Vehicle Repair" procedure.

NO

▶ Check for improper installation of wheel speed sensor. If NG, repair as necessary and then go to "Verification Of Vehicle Repair" procedure.
▶ Check for damage of rotor teeth or wheel bearing. If NG, repair as necessary and then go to "Verification Of Vehicle Repair" procedure.
▶ Substitute with a known-good Wheel speed sensor and check for proper operation. If problem is corrected, replace Wheel speed sensor and then go to "Verification Of Vehicle Repair" procedure.

VERIFICATION OF VEHICLE REPAIR EBC95BA8

After a repair, it is essential to verify that the fault has been corrected.

1. Connect scantool and select "Diagnostic Trouble Codes (DTCs)" mode
2. Using a scantool, Clear DTC.
3. Operate the vehicle within DTC Detecting Condition in General Information.(Start and drive vehicle in gear and maintain vehicle speed at or above 12 km/h (7 mph))
4. Are any DTCs present ?

YES

▶ Go to the applicable troubleshooting procedure.

NO

▶ System performing to specification at this time.

DTC C1202 FL WHEEL SPEED SENSOR-NO SIGNAL
DTC C1205 FR WHEEL SPEED SENSOR-NO SIGNAL
DTC C1208 RL WHEEL SPEED SENSOR-NO SIGNAL
DTC C1211 RR WHEEL SPEED SENSOR-NO SIGNAL

COMPONENT LOCATION EDE1D3AF

Refer to DTC C1200.

GENERAL DESCRIPTION E10AAB5A

Refer to DTC C1200.

DTC DESCRIPTION EFD1371E

The ABS ECU monitors the wheel speed sensor signal continuously. This code is set when there is no wheel speed signals within 10 ms to 20 ms at a vehicle speed > 43.2 km/h or a deviation between sensors exceed the threshold or one or two wheels are at 2.75 km/h while the vehicle speed is at 12 km/h. Warning lamp is turned OFF unless additional faults are detected when the IG KEY is turned ON again, and wheel speed is more than 12 Km/h.

DTC DETECTING CONDITION E827615F

Item		Detecting Condition	Possible cause
DTC Strategy		• Signal monitoring	• Improper installation of wheel speed sensor • Abnormal Rotor and wheel bearing • Inoperative Wheel speed sensor • Inoperative HECU
Case1	Monitoring Period	• Continuous (only no under voltage is not detected)	
	Enable Conditions	• If one (or two) wheel are at 2.75 km/h and the other wheels are above 12 km/h for longer than 1s. • During driving, when the vehicle accelerates 18 km/h after a particular wheel speed gets to 2.75 km/h and stays there. At that time, If one (or two) wheel are at 2.75 km/h. - This monitoring is performed at the following condition. 1) At the time the vehicle is accelerated to 12 km/h 2) Once after energizing the system. 3) If the vehicle was stationary for approx. 2s. • If one (or two) wheels are under 5 km/h and the two fastest wheels have a velocity above 12 km/h for more than 20 s.	

Item		Detecting Condition	Possible cause
Case2	Monitoring Period	• Continuous (If vehicle speed > 12 m/s) - but this monitoring is disabled in the following event 1) Aquaplaning. 2) Interference. 3) Supply voltage below 7.6 or above 18 Volts	
	Enable Conditions	• No wheel speed signals within 10 ms to 20 ms at a vehicle speed > 12 m/s (43.2 km/h). - If the dynamic sensor monitor responses, the failures will be stored into failure memory immediately after a waiting period of 60 ms. - If occurs low voltage active sensors during the waiting period of 60 ms no failure is stored in the EEPROM.	
Case3	Monitoring Period	• Main Monitoring The main monitor needs additional information of the ESP-sensors and is active for a velocity > 20 km/h and no under voltage is detected. • Backup Monitoring - Continuous	
	Enable Conditions	• Main Monitoring 1) If the maximum difference of wheel speeds related to maximum wheel speed exceeds 5 %. 2) Detection filter time : - The above conditions apply for 20 s for 1 inoperative wheel speed sensor. - The above conditions apply for 40 s for 2 inoperative wheel speed sensor. • Backup Monitoring 1) If the deviation between the fastest and the slowest wheel is below 6 % related to the fastest wheel when the velocity is higher than 50 km/h. 2) When the velocity is below 50 km/h, if the deviation is an absolute value of 3 km/h. 3) Detection filter time : normally 20 s - In case of a detected curve, the threshold is increased with an additional value of 4 km/h.	
Case4	Monitoring Period	• Continuous	
	Enable Conditions	• The pulse width of wheel speed sensor is below 2 ms when vehicle speed is > 0 km/h and < 20 km/h.	

Item		Detecting Condition	Possible cause
Case 5	Monitoring Period	• Continuous	
	Enable Conditions	• Vehicle < 100 Km/h - Difference of two wheel speeds at FL to RL/RR to RR > 1.7 m/s (6 km/h). - Difference of two wheel speeds at FL to FR/RL to RR > 1.7 m/s + 1.1 m/s. - Difference of two wheel speeds at FL to RR/FR to RL > 1.7 m/s + 2.2 m/s. ※ If at least one wheel is at 1.4 m/s or lower, a wheel speed difference of adjoining wheels up to 3.3 m/s(or 3.3 m/s + 1.1 m/s) is permitted. • Vehicle > 100 Km/h - Difference of two wheel speeds at FL to RL/RR to RR > (6%×Vref). - Difference of two wheel speeds at FL to FR/RL to RR > (6%×Vref + 1.1 m/s). - Difference of two wheel speeds at FL to RR/FR to RL > (6%×Vref + 2.2 m/s). • Detection filter time - Response and detection filter time depend on the amount of the speed difference and additional conditions as shown below. 1) 18s - if fault threshold is exceeding > 1.7 m/s resp.6% 2) 9s - if fault threshold is exceeding > 3.3 m/s resp. 12% 3) If any wheel shows strong deceleration the fault detection filter time is not shorter than 18s. 4) If spinning wheel is detected the fault detection filter time is not shorter than 72s. • Fault allocation If the exact fault location can be determined the wheel specific fault will be set. This is the case if at the time of detection the faulty wheel speed is at or below 1.4 m/s. Otherwise a general wheel speed sensor generic fauly is set.	
Fail Safe		Refer to DTC C1200.	

MONITOR SCANTOOL DATA E311F0BA

1. Engine "ON".
2. Connect scantool to Data Link Connector(DLC).
3. Start and drive vehicle in gear and maintain vehicle speed at or above 50 km/h(31 mph)
4. Monitor the "Wheel Speed Sensor" parameter on the Scantool.

Specification : Compare with another parameters related to wheel speed sensor. If it is the same as another parameters, it is in normal condition.

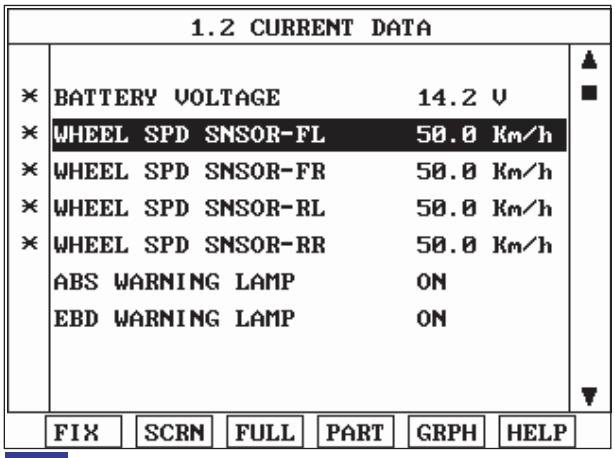

Fig1

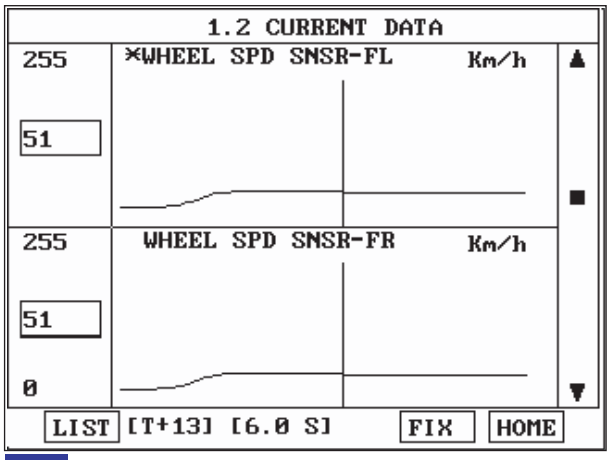

Fig2

SCMBR6543L

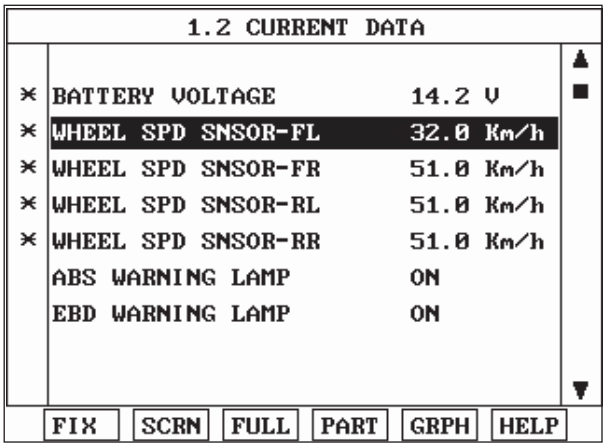

Fig3

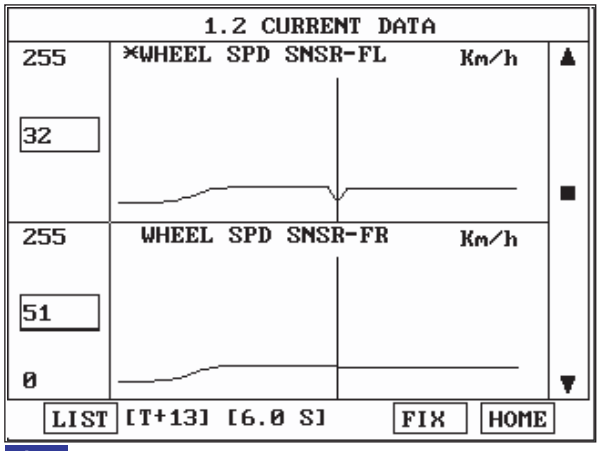

Fig4

Fig 1) Test Condition : Drive vehicle at a speed of 50 km/h or more. (31 mph or more) Normal Data
Fig 2) Test Condition : Drive vehicle at a speed of 51 km/h or more. (31 mph or more) Normal Graph
Fig 3) Test Condition : Drive vehicle at a speed of 51 km/h or more. (31 mph or more) Abnormal Data
Fig 4) Test Condition : Drive vehicle at a speed of 51 km/h or more. (31 mph or more) Abnormal Graph

SCMBR6544L

5. Is parameter displayed within specifications?

YES

▶ Fault is intermittent caused by poor connection in wheel speed sensor harness (FL), Thoroughly check connectors for looseness, poor connection, bending, corrosion, contamination, deterioration, or damage. Repair as necessary and then go to "Verification Of Vehicle Repair" procedure.

NO

▶ Go to "Component Inspection" Procedure.

COMPONENT INSPECTION ECF760AA

Refer to DTC C1201.

VERIFICATION OF VEHICLE REPAIR E5C12FB8

After a repair, it is essential to verify that the fault has been corrected.

1. Connect scantool and select "Diagnostic Trouble Codes (DTCs)" mode
2. Using a scantool, Clear DTC.
3. Operate the vehicle within DTC Detecting Condition in General Information.(Start and drive vehicle in gear and maintain vehicle speed at or above 50 km/h (31 mph))
4. Are any DTCs present ?

YES

▶ Go to the applicable troubleshooting procedure.

NO

▶ System performing to specification at this time.

DTC C1213 WHEEL SPEED FREQUENCY ERROR

COMPONENT LOCATION E8E790AC

Refer to DTC C1200.

GENERAL DESCRIPTION ECF51D36

Refer to DTC C1200.

DTC DESCRIPTION E7CF6293

The ABS ECU monitors the wheel speed sensor signal continuously. This code is set, if the speed difference with adjacent wheel is out of permissible range or the ABS control cycle is abnormal.

DTC DETECTING CONDITION E2FEC3D0

Item		Detecting Condition	Possible cause
Case 1	DTC Strategy	• Signal motorning	• Improper installation of wheel speed sensor • Abnormal Rotor and wheel bearing • Inoperative Wheel speed sensor • Inoperative HECU
	Monitoring Period	• Continous	
	Enable Conditions	• When short cut between the wheel speed sensor supply and the battery.	
	Fail Safe	• Wheel speed sensor signals are not reliable.	
Case 2	DTC Strategy	• Signal motorning	
	Monitoring Period	• Continous	
	Enable Conditions	• The monitoring reports a failure if the ABS target slip is exceeded for a time period > = 10 s at one or more wheels. - If the driver brakes or the velocity is lower than 50 km/h the detection time is enlarged to 60 s.	
	Fail Safe	• Reduced function of the ESP system	

MONITOR SCANTOOL DATA E22D3668

1. Engine "ON".
2. Connect scantool to Data Link Connector(DLC).
3. Start and drive vehicle in gear and maintain vehicle speed at or above 10 km/h(6 mph)
4. Monitor the "Wheel Speed Sensor" parameter on the Scantool.

Specification : Compare with another parameters related to wheel speed sensor. If it is the same as another parameters, it is in normal condition.

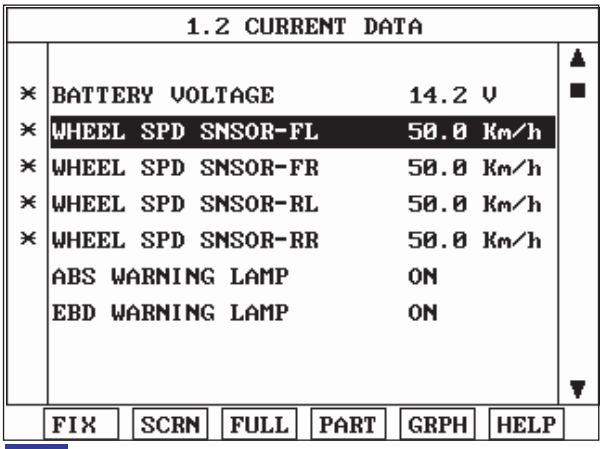

Fig1

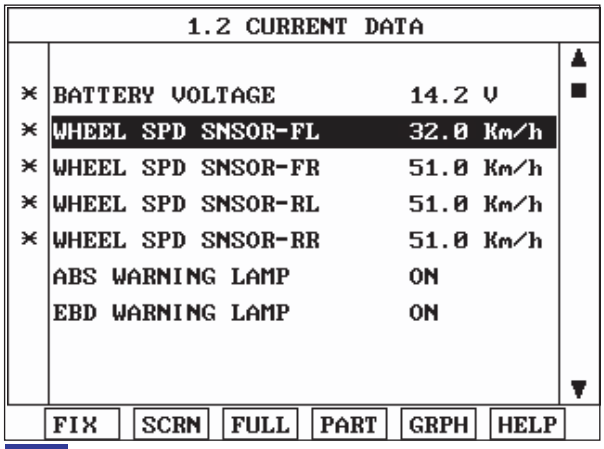

Fig2

Fig 1) Test Condition : Drive vehicle at a speed of 50 km/h or more. (31 mph or more) Normal Data
Fig 2) Test Condition : Drive vehicle at a speed of 51 km/h or more. (31 mph or more) Abnormal Data

SCMBR6545L

5. Is parameter displayed within specifications?

YES

▶ Fault is intermittent caused by poor connection in wheel speed sensor harness, Thoroughly check connectors for looseness, poor connection, bending, corrosion, contamination, deterioration, or damage. Repair as necessary and then go to "Verification Of Vehicle Repair" procedure..

NO

▶ Go to "Component Inspection" Procedure.

COMPONENT INSPECTION E7600A75

1. Lift the vehicle.
2. Ignition "ON".
3. Turn the wheel with hand.
4. Measure waveform between terminal "1,2" of the wheel speed sensor harness connector and chassis ground.

Specification :
High : 1.05 V , Low : 0.525 V
Compare waveforms of all wheel speed sensors.
If they have same waveform, it is in normal condition.

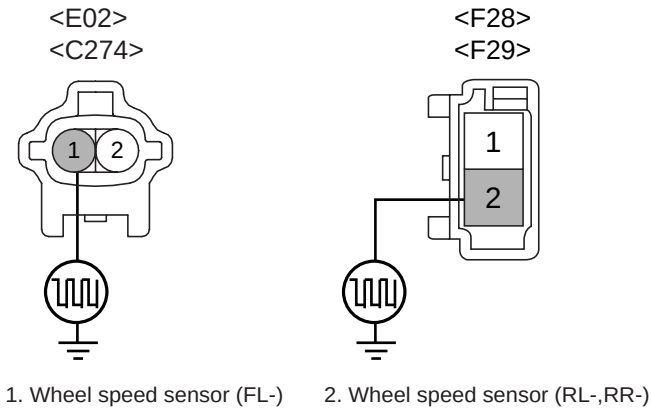

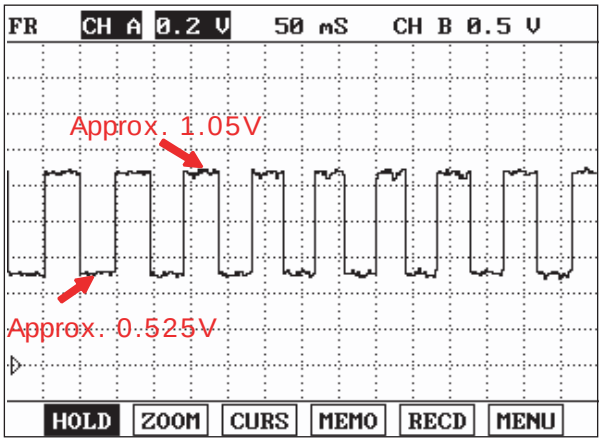

SCMBR6546L

5. Is the measured waveform within specifications?

YES

▶ Fault is intermittent caused by poor connection in wheel speed sensor harness, Thoroughly check connectors for looseness, poor connection, bending, corrosion, contamination, deterioration, or damage. Repair or replace as necessary and then go to "Verification Of Vehicle Repair" procedure.
▶ Substitute with a known-good HECU and check for proper operation. If problem is corrected, replace HECU and then go to "Verification Of Vehicle Repair" procedure.

NO

▶ Check following point at wheel speed sensor which has abnormal waveform.
▶ Check for improper installation of wheel speed sensor. If NG, repair as necessary and then go to "Verification Of Vehicle Repair" procedure.
▶ Check for damage of rotor teeth or wheel bearing. If NG, repair as necessary and then go to "Verification Of Vehicle Repair" procedure.
▶ Substitute with a known-good Wheel speed sensor and check for proper operation. If problem is corrected, replace Wheel speed sensor and then go to "Verification Of Vehicle Repair" procedure.

VERIFICATION OF VEHICLE REPAIR E7CF2DE4

After a repair, it is essential to verify that the fault has been corrected.

1. Connect scantool and select "Diagnostic Trouble Codes(DTCs)" mode
2. Using a scantool, Clear DTC.
3. Operate the vehicle within DTC Detecting Condition in General Information. (Start and drive vehicle in gear and maintain vehicle speed is approx. 50km/h or more(31mph or more))
4. Are any DTCs present ?

YES

▶ Go to the applicable troubleshooting procedure.

NO

▶ System performing to specification at this time.

DTC C1235 PRESSURE SENSOR(PRIMARY) - ELECTRICAL

COMPONENT LOCATION EE9A1785

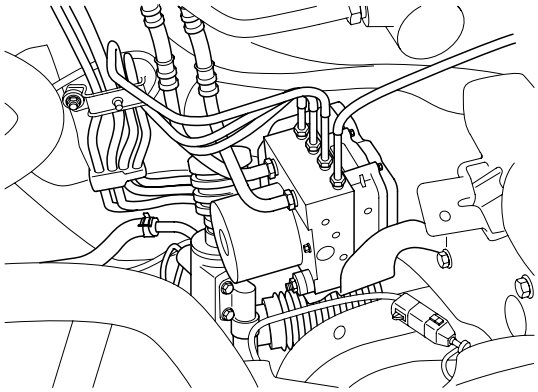

EJBF502R

GENERAL DESCRIPTION ED1866C3

The pressure sensor, installed in the HECU, sense the brake oil pressure to judge driver's brake intention when ESP is operating. If pressure of master cyclinder is applied to pressure sensor, the strain of the piezo element is changed and then the resistance of brige circuit is chanded according to changed strain. Therefore this changed resistance changes output voltage of brige circuit and output voltage changes linearly. The sensor output is a analog signal in proportion to supply voltage, and the HECU recognizes a pressure value according to signal ratio about supply voltage.

DTC DESCRIPTION E1F99F60

Each unfiltered input signal voltage is monitored to be in the range of 4.7 V < input signal voltage < 5.3 V. A failure is detected if the output signal value is out of specified range for more than 100 ms or pressure sensor self test form is out of specification during self test.

DTC DETECTING CONDITION E5CB8634

Item		Detecting Condition	Possible cause
DTC Strategy		• Voltage Monitoring	• Open or short of pressure sensor circuit • Inoperative pressure sensor • Inoperative HECU
Case 1	Monitoring Period	• Continuous	
	Enable Conditions	• A sensor supply failure is detected if Sensor Supply Voltage > 5.3 V or Sensor Supply Voltage < 4.7 V for t >= 60 ms.	
Case 2	Monitoring Period	• Continuous	
	Enable Conditions	• A Fault is set if the DSO signal is voltage of DSO > 4.7 V or voltage of DSO < 0.3V for a time t >= 100 ms. - DSO : original pressure value.	

Item		Detecting Condition	Possible cause
Case 3	Monitoring Period	• Continuous	
	Enable Conditions	• A Fault is set if the DSI signal is voltage of DSI > 4.7 V or voltage of DSI < 0.3V for a time t >= 100 ms. - DSI : inverted pressure value.	
Case 4	Monitoring Period	• Continuous	
	Enable Conditions	• A Fault is set if the voltage of DSO + DSI > 5.5V or voltage of DSO + DSI < 4.5V for a time t >= 100ms. - DSO : original pressure value. - DSI : inverted pressure value.	
Case 5	Monitoring Period	• Once during Power Up	
	Enable Conditions	• POS detects internal sensor malfunctions (sensor element, amplification, etc.). The POS is triggered if no low voltage is present and supply voltage is switched on. The test phase is divided in two 60 ms parts. DSO signal must be < 0.5 V for 30 ms. In phase 2 DSO signal must be between 1.9V and 3.1V for also 30 ms then the POS Test is passed. The test phase is divided in two 60 ms parts. DSO and DSI signal must be < 0.5 V for 30 ms. In phase 2 DSO and DSI signal must be between 1.9 V and 3.1 V for also 30 ms then the POS Test is passed. A fault is set if POS does not satisfy the above conditions - POS : Power on selftest.	
Fail Safe		• No Pressure Signal available.. • Sensor failure outside the ABS control cycle - Only the ABS/ESP functions are inhibited, allow the EBD. The ABS/ESP warning lamps are activated and the EBD warning lamp is not activated. • Sensor failure inside the ABS control cycle - Inhibit the ESP control, allow the EBD. The ESP warning lamps are activated. After the control, the ABS functions are inhibited. The ABS warning lamps are activated.	

MONITOR SCANTOOL DATA EA3E9727

1. Connect scantool to Data Link Connector(DLC).
2. Ignition "ON" & Engine "ON".
3. Press the brake pedal.
4. Monitor the "Pressure Sensor" parameter on the Scantool.

Specification : Approx. 60 bar ~150 bar (There are difference in displayed parameter according to braking force)

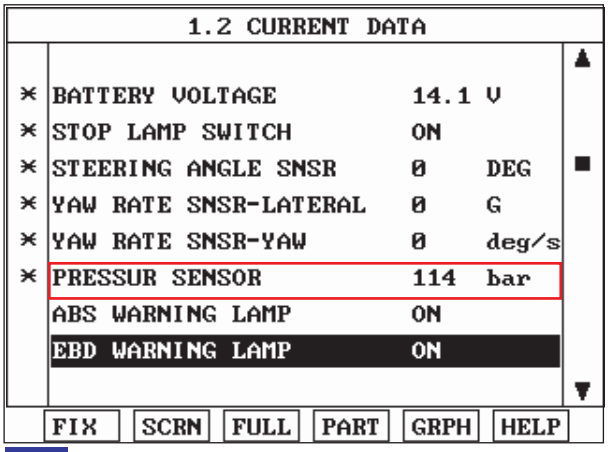

Fig1

Fig 1) Test Condition : Ignition "ON" & Engine "ON" Normal data (There are difference in displayed parameter according to braking force)

EJBF502S

5. Whenever brake pedal is pushed down, is the pressure sensor's scantool data changed?

YES

▶ Fault is caused by having been repaired and HECU memory was not cleared. Clear the DTC and then go to "Verification Of Vehicle Repair" procedure.

NO

▶ Go to "Component Inspection" procedure.

COMPONENT INSPECTION E1DC2E13

1. Ignition "OFF".
2. Ignition "ON".
3. Connect scantool and select "Diagnostic Trouble Codes (DTCs)" mode.
4. Using a scantool, Clear DTC.
5. Select "Diagnostic Trouble Codes (DTCs)" mode again.
6. Are any DTCs present ?

YES

▶ Substitute with a known-good HECU and check for proper operation. If problem is corrected, replace HECU and then go to "Verification Of Vehicle Repair" procedure.

NO

▶ Fault is intermittent caused by faulty HECU or was repaired and HECU memory was not cleared. go to "Verification Of Vehicle Repair" procedure.

VERIFICATION OF VEHICLE REPAIR EB07C6B9

Refer to DTC C1101.

DTC C1237 PRESSURE SENSOR - OTHER

COMPONENT LOCATION E5C4A680

Refer to DTC C1235.

GENERAL DESCRIPTION ECEA85DD

Refer to DTC C1235.

DTC DESCRIPTION EB4647FA

With the driver torque demand and the lateral acceleration a driver braking demand is calculated. Unless the pump motor is opreating or there is a brake signal, The offset compensation is executed. A failure is detected if offset value exceeded ±15 bar.

DTC DETECTING CONDITION E6FCF23F

Item	Detecting Condition	Possible cause
DTC Strategy	• Voltage Monitoring	• Open or short of pressure sensor circuit • Inoperative pressure sensor • Inoperative HECU
Monitoring Period	• After Pressure sensor initialization. • No under voltage • No pumps are running. • No BLS-signal is set.	
Enable Conditions	• The pressure sensor-offset value must be in the range of ± 15 bar. A failure is detected if this range is exceeded.	
Fail Safe	• Reduced function caused by inoperative pressure sensor signal. • Sensor failure outside the ABS control cycle - Only the ABS/ESP functions are inhibited, allow the EBD. The ABS/ESP warning lamps are activated and the EBD	

MONITOR SCANTOOL DATA ECBE89B1

Refer to DTC C1235.

COMPONENT INSPECTION E1A41FFE

Refer to DTC C1235.

VERIFICATION OF VEHICLE REPAIR E6D7E347

Refer to DTC C1101.

DTC C1260 STEERING ANGLE SENSOR - SIGNAL

COMPONENT LOCATION E581E002

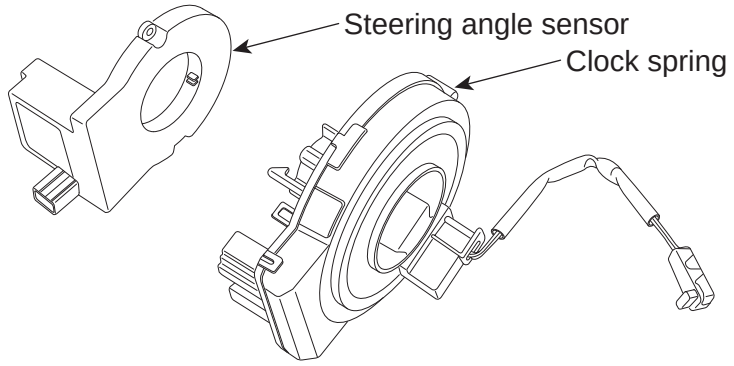

EJBF502V

GENERAL DESCRIPTION E13280AC

The Steering angle sensor(SAS) is joined to the multi function switch and uses a CAN communication. The SAS is used to determine turning direction and speed of the steering wheel. The HECU uses the signals from the SAS when performing ESP-related calculations.

DTC DESCRIPTION E9756B8F

If the SAS signal is different from calculated value by yaw-rate sensor and wheel speed sensor, mechanically impossible SAS signal is detected, there is a difference between SAS signal and driving condition of the vehicle calculated from yaw-rate sensor and lateral G sensor, a failure is detected.

DTC DETECTING CONDITION E0CC8DDA

Item		Detecting Condition	Possible cause
DTC Strategy		• Signal Monitoring	• Open or short of steering angle sensor circuit • Inoperative steering angle sensor • Inoperative HECU
Case 1	Monitoring Period	• Continuous	
	Enable Conditions	• During normal driving conditions the long time filtered driving direction is straight ahead. The long time filtered SAS-value is equivalent to the offset. If the offset value exceeds a threshold of approximately 15 deg a SAS-fault is determined. Failure detection time depends on the driving distance, vehicle speed and on the amount of failed SAS signal. Within 30 km of symmetrical driving the calculated offset corresponds to the sensor offset.	

Item		Detecting Condition	Possible cause
Case 2	Monitoring Period	• Continous (If the following conditions are satisfied) 1) After SAS-initialization and vehicle reference speed > 1.4 m/s (5 km/h) 2) No under voltage 3) At least one SAS-message was sent in the current 20 ms-cycle.	
	Enable Conditions	• A SAS-gradient-failure is set, if 1) Signal gradient (steering angle velocity) from one 20 ms-cycle to another is higher than 40° or 2) Change of this gradient (steering angle acceleration) is higher than 15° : | (LwInK0K1 . LwInK1K2)| > 15° and | (LwInK0K1 + LwInK1K2)| > 15° - LwInK0K1 : Difference of the SAS-signal between the current 20 ms-cycle and the last 20 ms-cycle. - LwInK1K2 : Difference of the SAS-signal between the last 20 ms-cycle and 20 ms-cycle before.	
Case 3	Monitoring Period	• Continuous (After initialization and no under voltage detected)	
	Enable Conditions	• If value is higher than 665° + 90° tolerance for more than 300 ms a fault is determined.	
Case 4	Monitoring Period	• Continuous (during driving)	
	Enable Conditions	• Based on a vehicle model a reference SAS signal is build. The difference between measured SAS signal and SAS signal calculated from yaw-rate sensor signal is evaluated for fault detection. Dependent on the driving conditions failures in size of [10 + 60 m/s / vehicle reference speed] deg at steering angle are recognized within 400 ~ 4800 ms through three possible recognition paths: 1) Curve Branch (lateral G > 2 m/s^2 and left and right curve driving) 2) Stability Branch (no large wheel speed differences and stable acceleration) 3) Straight ahead Branch (lateral G < 0.5 m/s^2 and yaw rate < 2 deg/s). The recognition time depends on the active branch (the time is shorter in a relation 1):2):3)-4:2:1) and the value of the permissible time threshold dependent on the deviation between the compared signals (small deviation → long detection time, large deviation → small detection time).	

Item		Detecting Condition	Possible cause
Case 5	Monitoring Period	• Initialization once in every ignition cycle. • The monitoring is active until a reset by a change in the SAS signal or until a right and left cornering can be recognized.	
	Enable Conditions	• If there is no change in the signal, but a right and left cornering has been recognized, a fault is determined. (lateral G > 2 m/s^2 in combination with a yaw rate > 6 °/s in both directions). - At a minimum change of e.g. 5° in the signal, the monitoring is reset.	
Case 6	Monitoring Period	• Continuous (during driving)	
	Enable Conditions	• The measured yaw rate and the yaw rates, calculated from the wheel speed sensor and SAS are compared. If the signals don't fit and forwards driving is detected, a fault is determined.	
Case 7	Monitoring Period	• Continuous (during driving)	
	Enable Conditions	• Under normal conditions, two SAS messages are sent in one 20 ms cycle, which is shown by an increase of the message counter by 2. If the message counter shows an increase higher than 3 or lower than 1 in one 20 ms-cyle, a fault is stored after 160 ms.	
Fail Safe		• Reduced controller function caused by inoperative SAS signal. ABS/EBD control is available. • The ESP warning lamp is activated.	

MONITOR SCANTOOL DATA ED418175

1. Connect scantool to Data Link Connector(DLC).
2. Ignition "ON" & Engine "ON".
3. Turn the steering wheel to the left or right.
4. Monitor the "Steering Sensor" parameters on the Scantool.

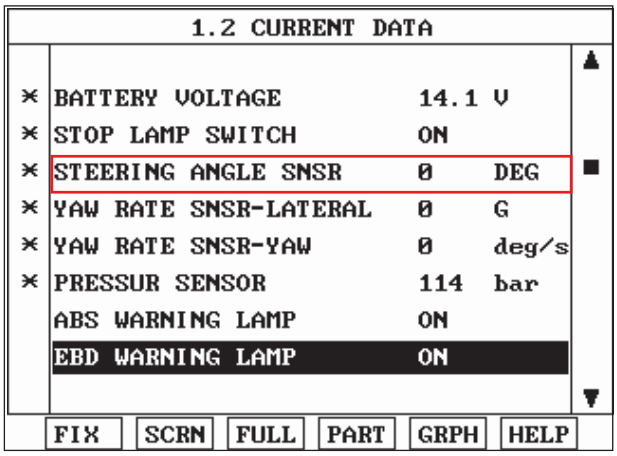

Fig1

Fig 1) Test Condition : Ignition "ON" & Engine "ON". Normal data

SCMBR6547L

5. Whenever steering wheel is turned, is the steering sensor's scantool data changed?

YES

1) Connect scantool to Data Link Connector (DLC).
2) Ignition "ON" & Engine "ON".
3) Turn the steering wheel to the full left or right position.

4) Monitor the "steering sensor" parameters on the Scantool.

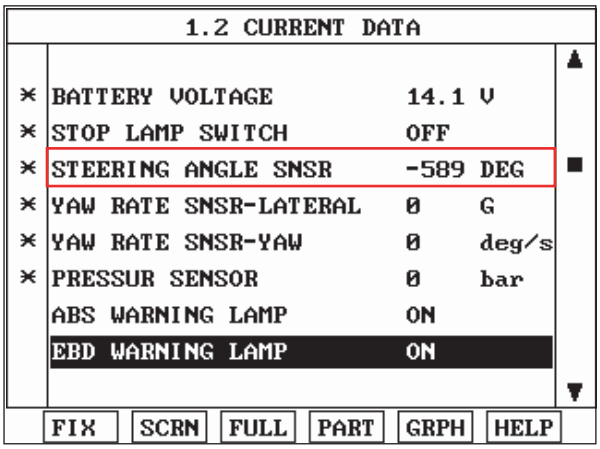

Fig2

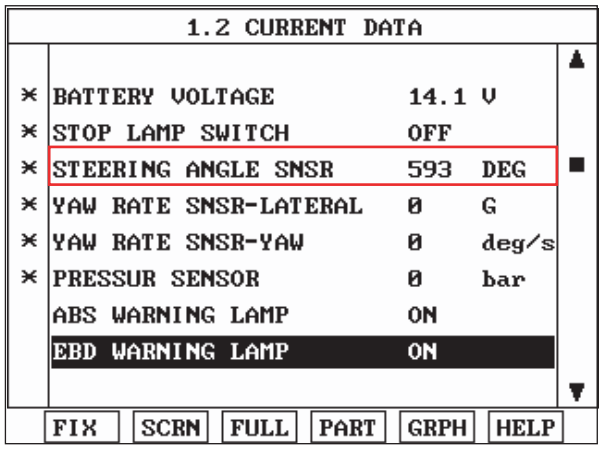

Fig3

Fig 2) Test Condition : Ignition "ON" & Engine "ON". Normal data (Right side)
Fig 3) Test Condition : Ignition "ON" & Engine "ON". Normal data (Left side)

SCMBR6548L

5) Is parameter displayed within specifications?

YES

▶ Go to "W/Harness Inspection" procedure.

NO

▶ Go to number 6. procedure.

NO

▶ Go to "W/Harness Inspection" procedure.

6. Perform steering angle sensor calibration.

1) Ignition "ON" & Engine "OFF".

2) Line up the steering wheel in a straight.

3) Connect scantool to Data Link Connector(DLC).

4) Go in Anti-Rock brake system. (figure 4).

5) Perform steering angle sensor calibration. (figure 5).

6) Go to "Compnent Inspection" Precedure.

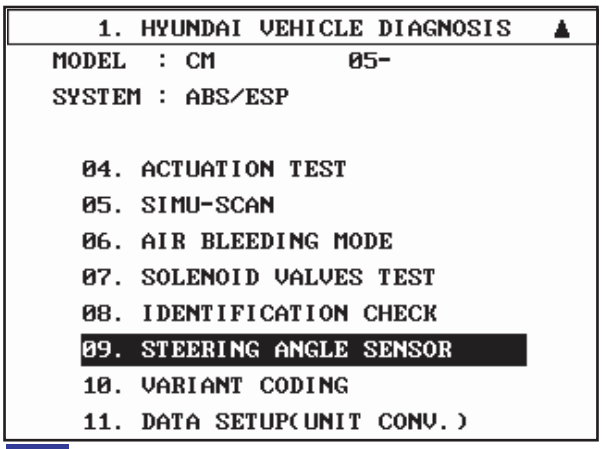

Fig4

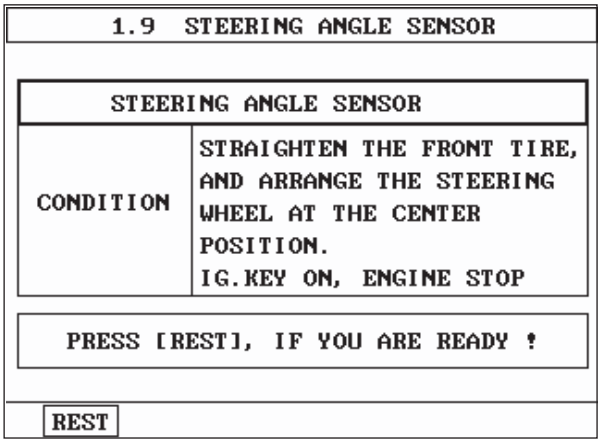

Fig5

SCMBR6549L

7. Whenever steering wheel is turned, is the steering sensor's scantool data changed HIGH/LOW?

YES

▶ Fault is intermittent caused by poor connection in steering sensor harness and/or HECU's connector or was repaired and HECU memory was not cleared. Thoroughly check connectors for looseness, poor connection, bending, corrosion, contamination, deterioration, or damage. Repair or replace as necessary and then go to "Verification of Vehicle Repair" procedure.

NO

▶ Go to "W/Harness Inspection" procedure.

TERMINAL & CONNECTOR INSPECTION E4D7980A

1. Many malfunctions in the electrical system are caused by poor harness(es) and terminals. Faults can also be caused by interference from other electrical systems, and mechanical or chemical damage.

2. Thoroughly check connectors for looseness, poor connection, bending, corrosion, contamination, deterioration, or damage.

3. Has a problem been found?

YES

▶ Repair as necessary and then go to "Verification of Vehicle Repair" procedure.

NO

▶ Go to "Component Inspection" procedure.

COMPONENT INSPECTION EEFDC04F

1. Ignition "OFF".
2. Ignition "ON".
3. Connect scantool and select "Diagnostic Trouble Codes (DTCs)" mode.
4. Using a scantool, Clear DTC.
5. Operate the vehicle within DTC Detecting Condition in General Information. (turn right and left at least 1 time)
6. Select "Diagnostic Trouble Codes (DTCs)" mode again.
7. Are any DTCs present ?

YES

1) Substitute with a known-good steering angle sensor and check for proper operation. If problem is corrected, replace sensor and then go to "Verification of Vehicle Repair" procedure.

2) Substitute with a known-good HECU and check for proper operation. If problem is corrected, replace HECU and then go to "Verification of Vehicle Repair" procedure.

NO

▶ Fault is intermittent caused by faulty HECU or was repaired and HECU memory was not cleared. go to "Verification of Vehicle Repair" procedure.

VERIFICATION OF VEHICLE REPAIR EADC54A2

Refer to DTC C1101.

DTC C1261 STEERING ANGLE SENSOR IS NOT CALIBRATED

COMPONENT LOCATION ED186D22

Refer to DTC C1260.

GENERAL DESCRIPTION E2B7726C

Refer to DTC C1260.

DTC DESCRIPTION EF8998E6

The SAS used for ESP control needs zero point adjustment because the SAS measures an absolute angle. Zero point adjustment is done by using the scantool device. If abnormal zero point adjustment is detected, a failure is recognized.

DTC DETECTING CONDITION EECD8EA0

Item	Detecting Condition	Possible cause
DTC Strategy	• Signal Monitoring	• A fail of SAS zero point adjustment • Inoperative HECU
Monitoring Period	• During SAS zero point adjustment.	
Enable Conditions	• The position of steering wheel is out of specified range (straight positon, a max. error ±5°) during SAS zero point adjustment.	
Fail Safe	• Reduced controller function caused by inoperative SAS signal. ABS/EBD control is available. • The ESP warning lamp is activated.	

MONITOR SCANTOOL DATA E94D13A2

1. Connect scantool to Data Link Connector(DLC).
2. Ignition "ON" & Engine "ON".
3. Monitor the "SAS CALIBRATED" parameters on the Scantool.

Specification : YES

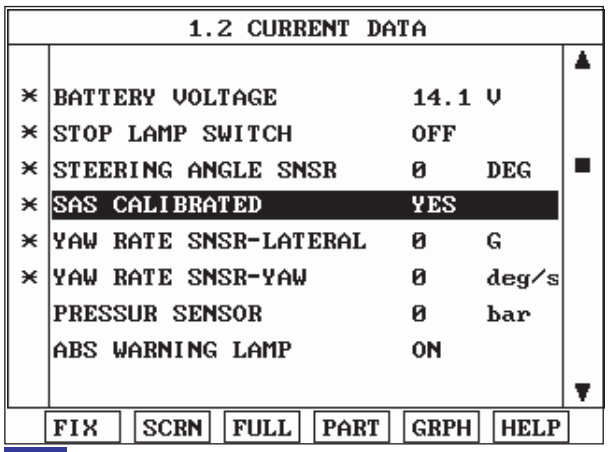

Fig1

Fig 1) SAS Calibrate normal data - YES : SAS calibrated, NO : SAS not calibrated.

SCMBR6550L

4. Is parameter displayed within specifications?

YES

▶ Fault is caused by having been repaired and HECU memory was not cleared. Clear the DTC and then go to "Verification Of Vehicle Repair" procedure.

NO

▶ Go to "Component Inspection" procedure.

COMPONENT INSPECTION EB9E8D6B

1. Line up wheels like (figure 1).
   1) Perform the wheel alignment.
   2) Line up the steering wheel in a straight.
   3) Go ahead and Go back the vehicle 2~3 times without holding steering wheel.
2. Connect scantool to Data Link Connector(DLC).
3. Go in Anti-Lock brake system. (figure 2).
4. Perform steering angle sensor calibration. (figure 3).
5. Disconnect scantool.
6. Check the condition of SAS zero point adjustment by operating the vehicle (turn right and left at least 1 time)

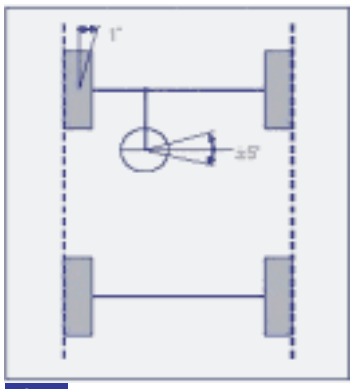

Fig1

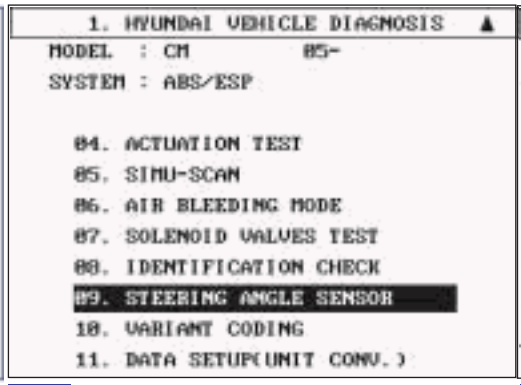

Fig2

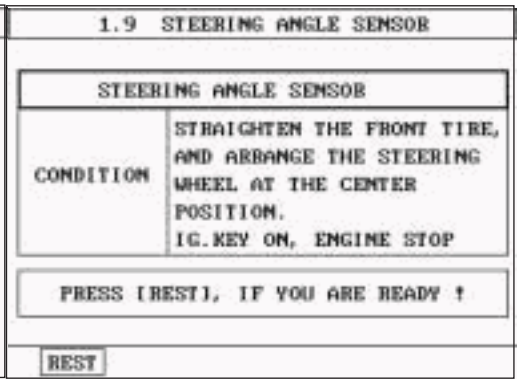

Fig3

SCMBR6551L

7. Is zero point adjustment completed?

YES

▶ Go to "Verification Of Vehicle Repair" procedure.

NO

▶ Substitute with a known-good HECU and check for proper operation. If problem is corrected, replace HECU and then go to "Verification Of Vehicle Repair" procedure.

VERIFICATION OF VEHICLE REPAIR E56C56A6

Refer to DTC C1101.

DTC C1282 YAW RATE AND LATERAL G SENSOR - ELECTRICAL

COMPONENT LOCATION ECB9896F

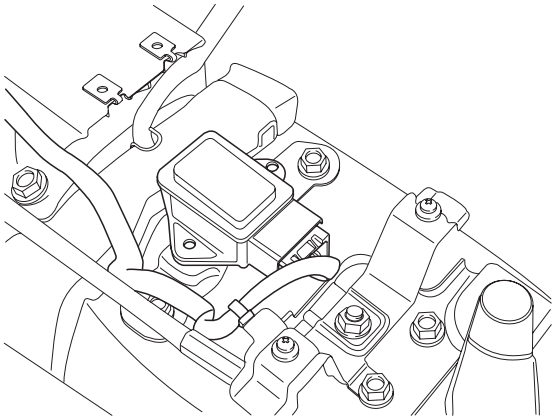

EJBF503C

GENERAL DESCRIPTION E5DF85C9

The yaw-rate and G sensor assembly is installed on the lower floor. The yaw-rate sensor detects acceleration of the vehicle around its vertical axis, while the G sensor detects lateral acceleration of the vehicle. When the vehicle is not moving, the G sensor output is approximately 2.5 V.

DTC DESCRIPTION E1B3F4C4

The HECU monitors a signal voltage of either yaw-rate sensor or lateral G sensor to detect open or short to battery or short to ground. A failure is detected if the lateral acceleration sensor or yaw rate sensor signal voltage stays in the fault range longer than 100 ms or the lateral acceleration sensor or yaw rate sensor reference voltage stays in the fault range longer than 200 ms, or the self test form is against specification during self test.

DTC DETECTING CONDITION E0485056

Item		Detecting Condition	Possible cause
Case 1	DTC Strategy	• Voltage Monitoring	• Inoperative Yaw Rate & Lateral G sensor • Open or short of Yaw Rate & Lateral G sensor • Inoperative HECU
	Monitoring Period	• Continous	
	Enable Conditions	• A line fault is detected if V[LG] < 0.3 V or V[LG] > 4.7 V for a time t >= 100ms. • A line fault is detected if V[YAW] < 0.225 V OR V[YAW] > 4.774 V for a time t >= 100 ms. • A line fault is detected if V[YAW REFERENCE] < 2.1 V OR V[YAW REFERENCE] > 2.9 V for a time t >= 200 ms.	
Case 2	DTC Strategy	• Selftest Monitoring	
	Monitoring Period	• Once after power up and no low voltage.	
	Enable Conditions	• A line fault is detected if 0.2 V < V[LG] < 0.8 V isn't continued for a time t >= 60 ms during POS (POS : power on selftest)	
Fail Safe		• Reduced controller function. • Inhibit the ESP control and ABS/EBD control is available. • The ESP warning lamps are activated.	

MONITOR SCANTOOL DATA E2DC379B

1. Connect scantool to Data Link Connector (DLC).
2. Ignition "ON".
3. Monitor the "Yaw rate sensor-lateral & Yaw rate sensor-yaw" parameter on the Scantool.

Specification : Lateral G sensor : ± 0 G, YAW rate Sensor : ± 0 deg/s

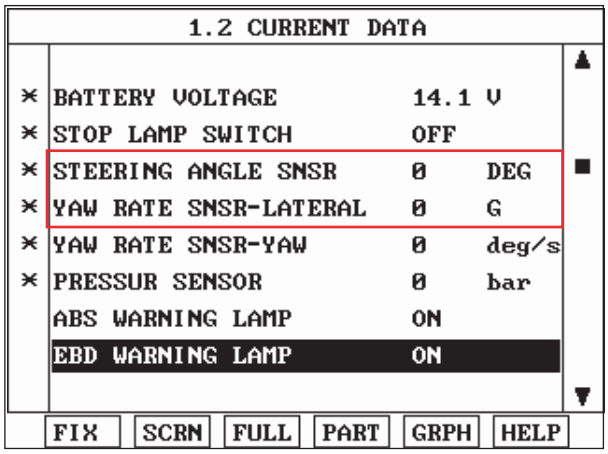

Fig1

Fig 1) Test Condition : Ignition "ON" & Engine "ON" Normal data (There are difference in displayed Normal data)

SCMBR6552L

4. Is parameter displayed within specifications?

YES

▶ Fault is intermittent caused by poor connection in Yaw Rate & Lateral G sensor harness and/or HECU's connector or was repaired and HECU memory was not cleared. Thoroughly check connectors for looseness, poor connection, bending, corrosion, contamination, deterioration, or damage. Repair or replace as necessary and then go to "Verification Of Vehicle Repair" procedure.

NO

▶ Go to "W/Harness Inspection" procedure.

TERMINAL & CONNECTOR INSPECTION EB2312B5

Refer to DTC C1200.

POWER SUPPLY CIRCUIT INSPECTION ED0FD1F0

1. Ignition "ON" & Engine "OFF".

2. Measure voltage between terminal "1" of the Yaw Rate & Lateral G sensor harness connector and chassis ground.

Specification : Approx. 5 V

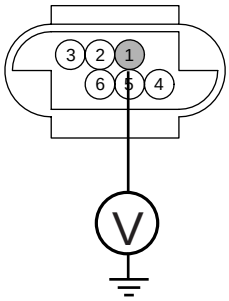

1. Battery +
2. Yaw-Rate self test line
3. Yaw-Rate reference line
4. Ground
5. Lateral G sensor signal
6. Yaw-Rate sensor signal

EJBF503E

3. Is the measured voltage within specifications?

YES

▶ Go to "Ground Circuit Inspection" procedure.

NO

▶ Check for open or short to GND in the Yaw Rate & Lateral G sensor harness between terminal "1" of the Yaw Rate & Lateral G sensor harness connector and battery +. Repair as necessary and then go to "Verification Of Vehicle Repair" procedure.

GROUND CIRCUIT INSPECTION EAEF449A

1. Ignition "OFF".

2. Disconnect Yaw Rate & Lateral G sensor connector.

3. Measure resistance between terminal "4" of the Yaw Rate & Lateral G sensor harness connector and chassis ground.

Specification : Approx. below 1Ω

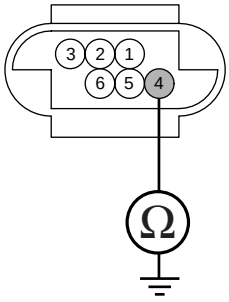

1. Battery +
2. Yaw-Rate self test line
3. Yaw-Rate reference line
4. Ground
5. Lateral G sensor signal
6. Yaw-Rate sensor signal

EJBF503F

4. Is the measured resistance within specifications?

YES

▶ Go to "Signal Circuit Inspection" procedure.

NO

▶ Check for open or short in the Yaw Rate & Lateral G sensor harness between terminal "4" of the Yaw Rate & Lateral G sensor harness connector and terminal "15" of the HECU harness connector . Repair as necessary and then go to "Verification Of Vehicle Repair" procedure.

SIGNAL CIRCUIT INSPECTION E7645762

1. Ignition "ON" & Engine "OFF".

2. Measure voltage between terminal "3,5,6" of the Yaw Rate & Lateral G sensor harness connector and chassis ground.

Specification : Approx. 2.5 V (Voltage between terminal "5, 6" of the Yaw Rate & Lateral G sensor harness connector and chassis ground.)

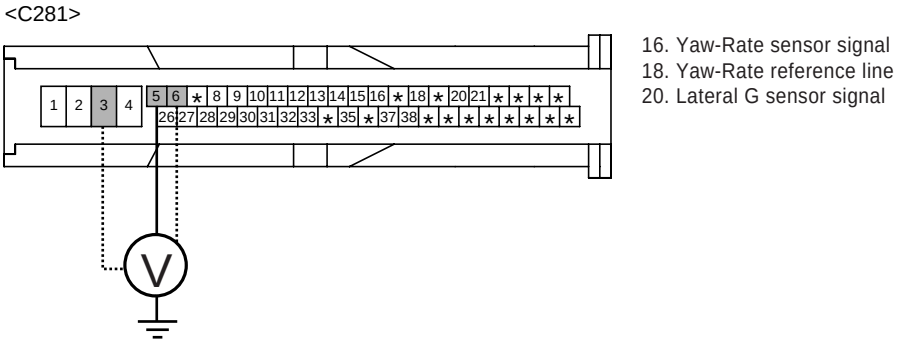

SCMBR6553L

3. Is the measured voltage within specifications?

YES

▶ Go to "Self Test Circuit Inspection" procedure.

NO

▶ Check for open or short in the Yaw Rate & Lateral G sensor harness between terminal "3, 5, 6" of the Yaw Rate & Lateral G sensor harness connector and terminal "16, 18, 20" of the chassis ground. Repair as necessary and then go to "Verification Of Vehicle Repair" procedure.
▶ If OK, Go to "Component Inspection" procedure.

SELF TEST CIRCUIT INSPECTION

1. Measure waveform between terminal "2" of the Yaw Rate & Lateral G sensor harness connector and chassis ground.

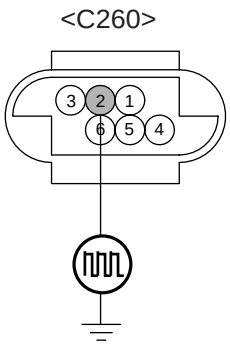

1. Battery +
2. Yaw-Rate self test line
3. Yaw-Rate reference line
4. Ground
5. Lateral G sensor signal
6. Yaw-Rate sensor signal

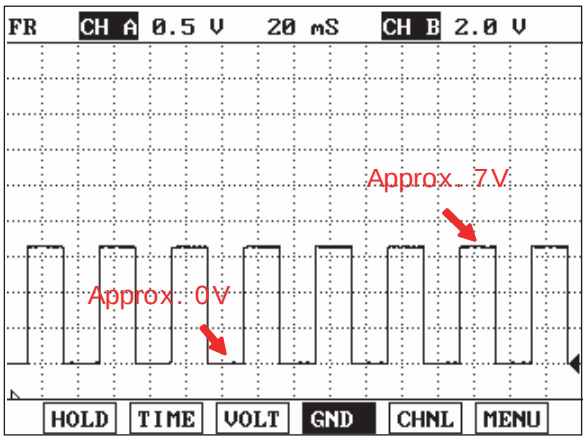

Yaw-Rate self test line - Channel B

SCMBR6554L

2. Is the measured waveform within specifications?

YES

▶ Substitute with a known-good HECU and check for proper operation. If problem is corrected, replace HECU and then go to "Verification Of Vehicle Repair" procedure.

NO

▶ Check for open or short to GND in the Yaw Rate & Lateral G sensor harness between terminal "2" of the Yaw Rate & Lateral G sensor harness connector and terminal "37" of the chassis ground. Repair as necessary and then go to "Verification Of Vehicle Repair" procedure.

COMPONENT INSPECTION E23E2E86

1. Ignition "ON" & Engine "OFF".

2. Measure voltage between terminal "3,5,6" of the Yaw Rate & Lateral G sensor harness connector and chassis ground.

Specification : Approx. 2.5V (Voltage between terminal "5, 6" of the HECU harness connector and chassis ground.) Specification : Approx. above 2.1 V and below 2.9 V (Voltage between terminal "3" of the HECU harness connector and chassis ground.)

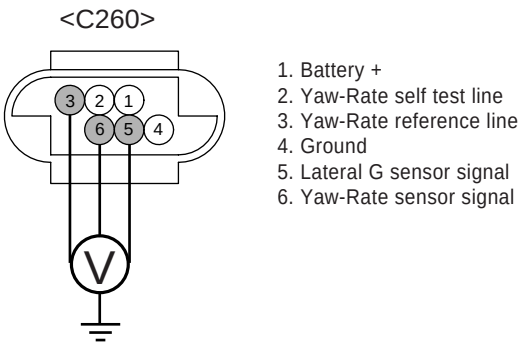

SCMBR6555L

3. Is the measured voltage within specifications?

YES

▶ Fault is intermittent caused by poor connection in Yaw Rate & Lateral G sensor harness. Go to "Verification Of Vehicle Repair" procedure.

NO

▶ Substitute with a known-good Yaw Rate & Lateral G sensor and check for proper operation. If problem is corrected, replace Yaw Rate & Lateral G sensor and then go to "Verification Of Vehicle Repair" procedure.

VERIFICATION OF VEHICLE REPAIR EA225D1E

Refer to DTC C1101.

DTC C1283 YAW RATE AND LATERAL G SENSOR - SIGNAL

COMPONENT LOCATION E67FB030

Refer to DTC C1282.

GENERAL DESCRIPTION EE82842A

Refer to DTC C1282.

DTC DESCRIPTION EC6257CA

A lateral acceleration reference signal is calculated from the wheel speeds, the steering angle and the yaw rate signals to observe the lateral acceleration sensor signal. The difference between the reference signal and the sensor signal is evaluated for failure detection. A yaw rate reference signal is calculated from the wheel speeds, the steering angle and the lateral acceleration signals to observe the yaw rate sensor signal. The difference between the reference signal and the sensor signal, and the gradient of the measured sensor signal is evaluated for the failure detection. If the difference between estimated value and measured value of the sensor is larger than predefined value for predefined time, the failure is recognized. Plauibility faults (signals received which fall outside of the sensor characteristics) are also recognized.

DTC DETECTING CONDITION E57CA66D

Item		Detecting Condition	Possible cause
DTC Strategy		• Signal Monitoring	• Inoperative Yaw Rate & Lateral G sensor • Open or short of Yaw Rate & Lateral G sensor • Inoperative HECU
Case 1	Monitoring Period	• Continuous (during stable driving)	
	Enable Conditions	• By building a reference lateral G from the yaw-rate sensor, wheel speed sensor and the SAS it is possible to test the lateral G Signal on plausibility. If during stable vehicle behavior an lateral G Failure larger than approximately 2.5 m/s2 occurs, the ESP controller will disregard the lateral G sensor information so that a false ESP intervention is prevented. A fault is recognized after 1.6 s during model validity. • The measured and offset compensated yaw rate signal is compared to the reference yaw rate signal calculated from yaw rate sensor, lateral G sensor, SAS and wheel speed sensor. If the measured yaw rate deviates more than 2.5 °/s plus a dynamic threshold from the reference yaw rate during model validity, a failure is recognized after 1.6 s. The dynamic threshold is between 2.5°/s and more than 5°/s. A typical value is 3°/s. - During the possibility to observe the recognition time depends on the amount of failure.	

Item		Detecting Condition	Possible cause
Case 2	Monitoring Period	• Continuous (during driving)	
	Enable Conditions	• During normal driving conditions the long time filtered driving direction is straight ahead. The long time filtered later G value is equivalent to the offset. If the offset value exceeds a threshold of approximately 2.25 m/s^2 an later G fault is determined.Failure detection time depends on the driving distance, vehicle speed and on the amount of failed later G signal. Within 30 km of symmetrical driving the calculated offset corresponds to the sensor offset.	
Case 3	Monitoring Period	• Continuous (If no under voltage is detected)	
	Enable Conditions	• A fault is detected If the lateral G is higher than 15 m/s^2 for more than 800 ms.	
Case 4	Monitoring Period	• Continuous (during standstill)	
	Enable Conditions	• If the filtered value of |lateral G| is larger than 7 m/s^2 for more than 400 m/s a fault is set.	
Case 5	Monitoring Period	• Continuous (dependent on driving situation)	
	Enable Conditions	• Standstill compensation : - The offset corresponds to the measured and filtered input value. Failure threshold 5.25 °/s. • Fast compensation (during driving if no standstill compensation could be completed): - The offset corresponds to the slightly filtered deviation between measured yaw rate and the reference yaw rate calculated from SAS, lateral G sensor and wheel speed sensor. Failure threshold is 7.5 °/s. • Long-term ("normal") compensation (during driving after successful standstill or fast offset compensation): - The offset corresponds to the strong filtered deviation between measured yaw rate and the reference yaw rate calculated from SAS, lateral G sensor and wheel speed sensor. Failure threshold is 7.5 °/s	
Case 6	Monitoring Period	• After every standstill.	
	Enable Conditions	• The measured yaw rate and the model yaw rates, calculated from the wheel speed sensor and SAS are compared. If the signals doesn.t fit and forward driving is recognized, a fault is determined.	

Item		Detecting Condition	Possible cause
Case 7	Monitoring Period	• Continuous (after initialization of the YRS and if no under voltage is detected)	
	Enable Conditions	• The yaw rate sensor BITE logic evaluates the BITE-signal by extraction of the measured yaw rate of the vehicle. The allowed range for the BITE-signal is 25 °/s ± 7 °/s. If the BITE-signal is not in the allowed range, a suspected failure bit is set after 200 ms. A failure is set within 400 ms.	
Case 8	Monitoring Period	• After YRS-initialization, no under voltage	
	Enable Conditions	• Depending on the driving conditions a signal gradient higher than 10 ~ 23 °/s / 40 ms sets a suspected failure bit after 280 ms, unless a single signal peak is recognized by a peakfilter. A failure is set, if the good check is not settled successfully after 10 s.	
Case 9	Monitoring Period	• Continuous (except spinning, use of handbrake, unsteady driving conditions or a detected under voltage)	
	Enable Conditions	• During standstill - The allowed range of the yaw rate sensor signal is ±30 °/s. Leaving this range for 5 s sets a fault. In case of driving off after the failure was present for longer than 500 ms during standstill, the fault is detected immediately. • While driving - The allowed range of the yaw rate sensor signal is ±94.75 °/s and a suspected failure bit is set, if the signal is out of this range for 500 ms. A fault is set after 1 s.	
Fail Safe		• Reduced controller function. • Inhibit the ESP control and ABS/EBD control is available. • The ESP warning lamps are activated.	

MONITOR SCANTOOL DATA ED6E8BFF

Refer to DTC C1282.

TERMINAL & CONNECTOR INSPECTION E347ECB1

Refer to DTC C1200.

SIGNAL CIRCUIT INSPECTION E70886DB

1. Ignition "ON" & Engine "OFF".

2. Measure voltage between terminal "16,18,20" of the HECU harness connector and chassis ground.

Specification : Approx. 2.5 V (Voltage between terminal "16, 20" of the HECU harness connector and chassis ground.) If the voltage of the yaw & lateral G sensor is changed within normal voltage range (approx. 0.1 ~ 4.9 V) during shaking it, it is in normal condition.
Specification : Approx. above 2.1 V and below 2.9 V (Voltage between terminal "18" of the HECU harness connector and chassis ground.)

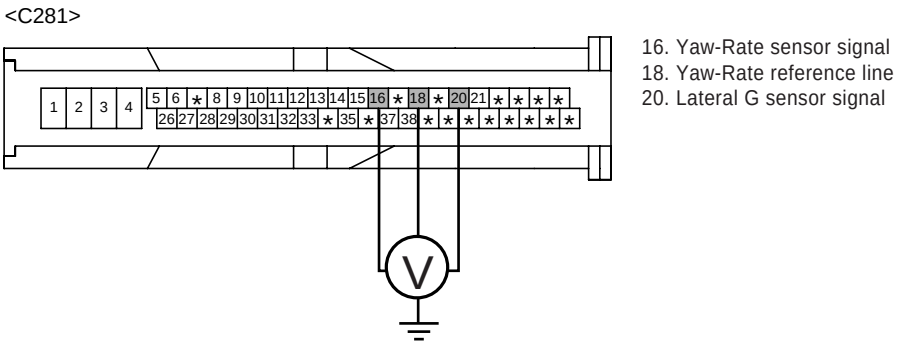

SCMBR6556L

3. Is the measured voltage within specifications?

YES

▶ Substitute with a known-good HECU and check for proper operation. If problem is corrected, replace HECU and then go to "Verification Of Vehicle Repair" procedure.

NO

▶ Check for open or short in the Yaw Rate & Lateral G sensor harness between terminal "3, 5, 6" of the Yaw Rate & Lateral G sensor harness connector and terminal "16, 18, 20" of the HECU harness connector . Repair as necessary and then go to "Verification Of Vehicle Repair" procedure.
▶ If OK, Go to "Component Inspection" procedure.

COMPONENT INSPECTION EAFB8090

Refer to DTC C1282.

VERIFICATION OF VEHICLE REPAIR EDCDEEC7

Refer to DTC C1101.

DTC C1503 TCS/ESP SWITCH ERROR

COMPONENT LOCATION E1BF91AE

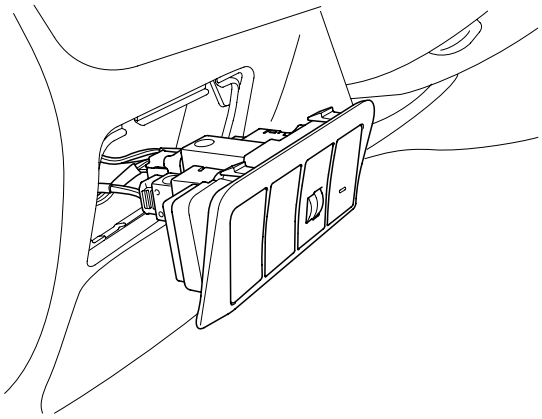

SCMBR6567D

GENERAL DESCRIPTION ED4F1C7C

Driver can inhibit the ESP control by ESC switch. When switch signal send into HECU, ESP warning lamp go ON and ESP control is stopped and if next switch signal is inputted again, ESP control is ready. This function is used for sporty driving or vehicle inspection.

DTC DESCRIPTION E53A5837

Trouble code is set when the condition that the level of ESP switch is high is continued for 60 sec. When the ESP switch failure is set there is no signal in the warning lamp and HECU inhibit the ESP control and allow the ABS/EBD control.

DTC DETECTING CONDITION E7CD022D

Item	Detecting Condition	Possible cause
DTC Strategy	• Short circuit monitoring	• Open or short ESP switch
Monitoring Period	• Continuous	
Enable Conditions	• When the ESP switch is ON for 60 sec.	
Fail Safe	• Inhibit the ESP control and allow the ABS/EBD control. • The ESP warning lamps are activated.	

MONITOR SCANTOOL DATA E3DC379B

1. Connect scantool to Data Link Connector(DLC).
2. Ignition "ON" & Engine "OFF".
3. Press the ESP SWITCH.
4. Monitor the "TCS/ESP SWITCH" parameter on the scantool.

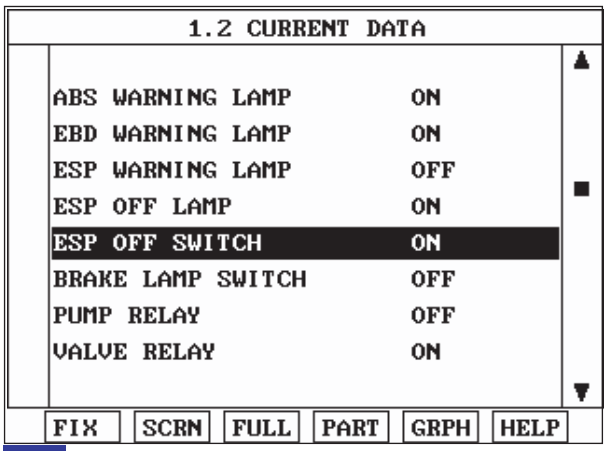

Fig1

Fig 1) Test Condition : Ignition "ON" & Engine "OFF". Normal data

SCMBR6588L

5. Whenever the switch is pushed up/down, is the esp off switch's scantool data changed ON/OFF?

YES

▶ Fault is intermittent caused by poor connection in esp switch line or was repaired and HECU memory was not cleared. Thoroughly check connectors for looseness, poor connection, bending, corrosion, contamination, deterioration, or damage. Repair or replace as necessary and then go to "Verification Of Vehicle Repair" procedure.

NO

▶ Go to "W/Harness Inspection" procedure.

TERMINAL & CONNECTOR INSPECTION E2E4D46A

1. Many malfunctions in the electrical system are caused by poor harness(es) and terminals. Faults can also be caused by interference from other electrical systems, and mechanical or chemical damage.
2. Thoroughly check connectors for looseness, poor connection, bending, corrosion, contamination, deterioration, or damage.
3. Has a problem been found?

YES

▶ Repair as necessary and then go to "Verification Of Vehicle Repair" procedure.

NO

▶ Go to "Signal Circuit Inspection" procedure.

SIGNAL CIRCUIT INSPECTION EEBC21E6

1. Ignition "ON" & Engine "OFF" & ESP Switch"ON".

2. Measure voltage between terminal "31" of the HECU harness connector and chassis ground.

Specification : Approx B+

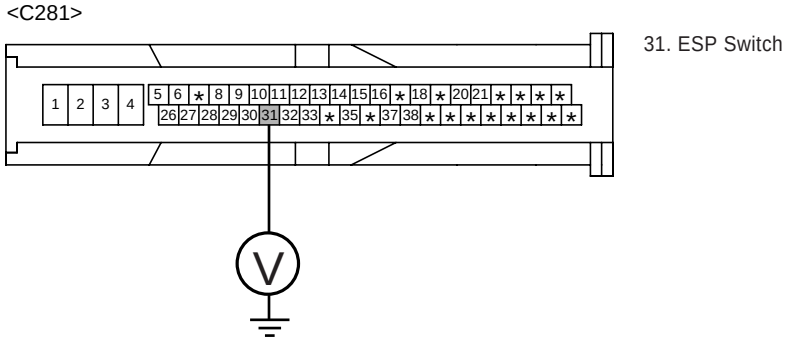

SCMBR6557L

3. Is the measured voltage within specifications?

YES

▶ Fault is intermittent caused by open or short in ESP switch line, inoperative ESP switch or was repaired and HECU memory was not cleared. Go to the applicable troubleshooting procedure.

NO

▶ Check for damaged harness and poor connection in the power harness between the battery terminal(+) and the terminal "31" of the HECU harness connector . Check for open or blown 10 A fuse referring to "Circuit Diagram" . Repair as necessary and then go to "Verification Of vehicle Repair" procedure.
▶ If OK, Go to "Component Inspection" Procedure.

COMPONENT INSPECTION EF2CACB9

1. Ignition "ON".
2. Disconnect ESP switch connector.
3. Press the ESP switch.
4. Measure resistance between terminal "3, 4" of the ESP switch component connector and terminal "4, 5" of the ESP switch component connector.

Specification : Approx. below 1 Ω - ESP switch is depressed. . Approx. ∞ Ω - ESP switch is not depressed

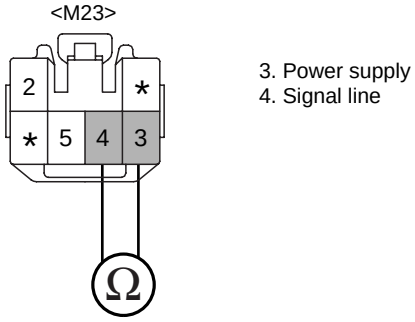

SCMBR6561L

5. Is the measured resistance within specifications?

YES

▶ Fault is intermittent caused by inoperative ESP switch or was repaired and HECU memory was not cleared. Go to the applicable troubleshooting procedure.

NO

▶ Substitute with a known-good ESP switch and check for proper operation. If problem is corrected, replace ESP switch and then go to "Verification Of Vehicle Repair" procedure.

VERIFICATION OF VEHICLE REPAIR EF9F4B63

Refer to DTC C1101.

DTC C1513 BRAKE SWITCH ERROR

COMPONENT LOCATION EAA84560

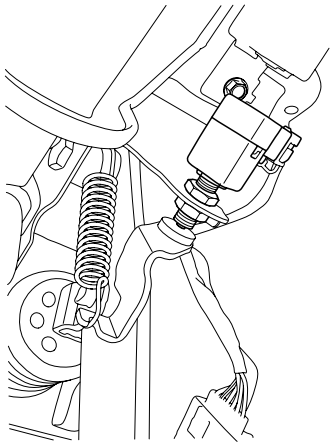

SCMBR6558L

GENERAL DESCRIPTION E97C7A58

The brake light switch indicates brake pedal status to the ABS control unit. The brake light switch which is dual switch type send brake light signal to HECU. The switch is turned on when brake is depressed. The brake light switch runs to battery voltage when brake depressed. but The brake light switch doesn't run to battery voltage when brake is not depressed. On the contrary, The brake switch is normally close type which doesn't run to battery voltage when brake depressed.

DTC DESCRIPTION E308E9E1

The brake light signal is a reference to judge driver's intention for braking and The HECU checks open or short circuit of brake light switch for normal ABS/ESP control. If an error exists, warning lamp will be turned ON.

DTC DETECTING CONDITION EC7FF7E5

		Detecting Condition	Possible cause
		• Voltage monitoring	• Open circuit in brake switch line • Inoperative brake light switch
Case 1	Monitoring Period	• Continuous (only no under voltage is not detected)	
	Enable Conditions	• If the BLS-signals is high for 60 s, while the gas pedal is stepped, with vehicle speed > 10.8 km/h, offset compensated pressure < 5 bar and no control is active, a fault is set.	
Case 2	Monitoring Period	• Continuous (only normal voltage)	
	Enable Conditions	• For redundancy reasons an additional BLSpVor-signal is created by the pressure sensor signal. If the pressure sensor is compensated, the threshold for generating the BLSpVor signal is 10 bar. If the pressure sensor is not compensated, the threshold is increased by 15 bar. If this signal is set without any hardware-BLS-signals being set for at least 1s. • If the pressure signal is higher than 80bar and not both of the hardware-BLS are set, a fault is stored after 1s.	
		• Inhibit the ESP control and ABS/EBD control is available. • The ESP warning lamps are activated.	

MONITOR SCANTOOL DATA E70AF2E4

1. Connect scantool to Data Link Connector(DLC).
2. Ignition "ON" & Engine "ON"
3. Press the brake pedal.
4. Monitor the "BRAKE SWITCH" parameter on the scantool.

Specification : Lateral G sensor : ± 0 G, YAW rate Sensor : ± 0 deg/s

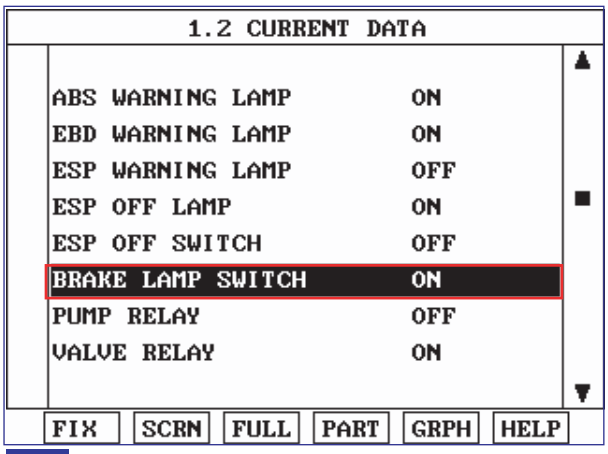

Fig1

Fig 1) Test Condition : Ignition "ON" & Engine "OFF" Normal data (There are difference in displayed Normal data

SCMBR6559L

5. Whenever brake pedal is pushed down, is the brake switch's scantool data changed ON/OFF?

YES

▶ Fault is intermittent caused by poor connection in Yaw Rate & Lateral G sensor harness and/or HECU's connector or was repaired and HECU memory was not cleared. Thoroughly check connectors for looseness, poor connection, bending, corrosion, contamination.

NO

▶ Go to "W/Harness Inspection" procedure.

TERMINAL & CONNECTOR INSPECTION E65E3A3D

1. Many malfunctions in the electrical system are caused by poor harness(es) and terminals. Faults can also be caused by interference from other electrical systems, and mechanical or chemical damage.

2. Thoroughly check connectors for looseness, poor connection, bending, corrosion, contamination, deterioration, or damage.

3. Has a problem been found?

YES

▶ Repair as necessary and then go to "Verification Of Vehicle Repair" procedure.

NO

▶ Go to "Signal Circuit Inspection (brake pedal isn't depressed)" procedure.

SIGNAL CIRCUIT INSPECTION (BRAKE PEDAL ISN'T DEPRESSED) E023A6AB

1. Ignition "ON" & Engine "OFF".

2. Don't press the brake pedal.

3. Measure voltage between the terminal "30" of the HECU harness connector and chassis ground.

Specification : Brake Light Switch - Approx. 0V

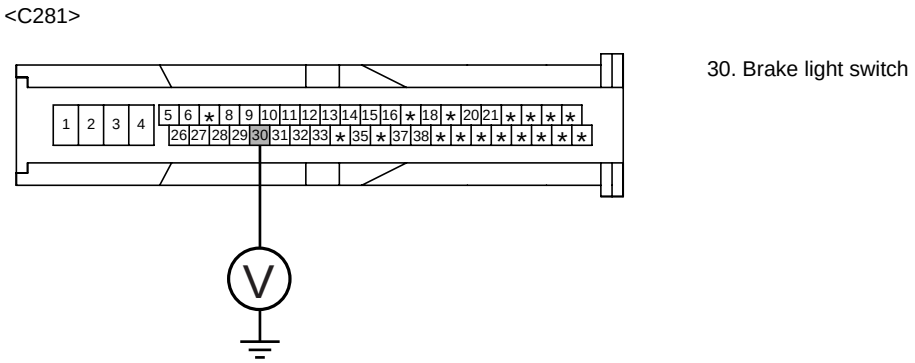

4. Is the measured voltage within specifications?

YES

▶ Go to "Signal Circuit Inspection (brake pedal is depressed)" procedure.

NO

▶ Check for open or blown 20A STOP, 7.5A SNSR fuse referring to "Circuit Diagram". Check for open or short to battery between the battery terminal(+) and the terminal "30" of the HECU harness connector. Repair as necessary and then go to "Verification Of Vehicle Repair" procedure.
▶ If OK, Go to "Component Inspection" Precedure.

SIGNAL CIRCUIT INSPECTION (BRAKE PEDAL IS DEPRESSED)

1. Ignition "ON" & Engine "OFF".
2. Press the brake pedal.
3. Measure voltage between the terminal "30" of the HECU harness connector and chassis ground.

Specification : Brake Light Switch - Approx. B+

<C281>

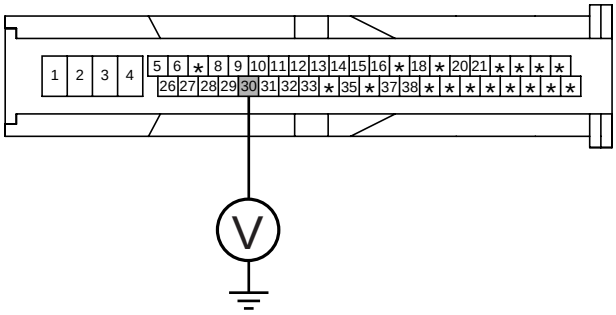

30. Brake light switch

SCMBR6590L

4. Is the measured voltage within specifications?

YES

▶ Fault is intermittent caused by open or short harness in brake light switch, faulty brake light switch or was repaired and HECU memory was not cleared. Go to "Verification Of Vehicle Repair" procedure.

NO

▶ Check for open or short to ground between the battery terminal(+) and the terminal "30" of the HECU harness connector. Repair as necessary and then go to "Verification Of Vehicle Repair" procedure.
▶ If OK, Go to "Component Inspection" Precedure.

COMPONENT INSPECTION E679EB3B

1. Ignition "OFF".
2. Disconnect brake switch connector.
3. Measure resistance between the terminal "1", "2" of the brake switch.

Resistance between the terminal "1,2" of the brake switch - ∞Ω (when the plunger is pushed down), 0Ω (when the plunger isn't pushed down).

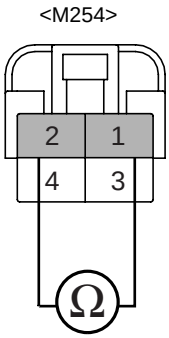

1. brake light switch signal
2. brake light switch power supply

SCMBR6562L

4. Is the measured voltage within specifications?

YES

▶ Fault is intermittent caused by open or short harness in brake light switch, faulty brake light switch or was repaired and HECU memory was not cleared. Go to "Verification Of Vehicle Repair" procedure.

NO

▶ Substitute with a known-good brake lamp switch and check for proper operation. If problem is corrected, replace brake light switch and then go to "Verification Of Vehicle Repair" procedure.

VERIFICATION OF VEHICLE REPAIR E4C6A9D0

Refer to DTC C1101.

DTC C1604 ECU HARDWARE ERROR

COMPONENT LOCATION E7E41667

Refer to DTC C1235.

GENERAL DESCRIPTION EEFC3248

The HECU is composed of an ECU (Electronic Control Unit) and a HCU(Hydraulic Control Unit) , HCU is composed of a source of hydraulic pressure and modulator valve block. Increase and decrease of hydraulic pressure is opreated by electronic motor, According to a detected signal by wheel speed sensor, The hydraulic pressure which is needed for control is supplied by pump. The HCU' function which is composed of a accumulator, return pump, solenoid valve is to increase, decrease or maintain the hydralic pressure supplied to a brake caliper by operating return pump according to HECU control signal while ABS control is active.

DTC DESCRIPTION EDAABDE6

The HECU monitors the operation of the IC components such as memory, register, A/D converter and so on. The ECU sets this code when the EEPROM data read by the master processor is different than prior data writed, or when the master/slave processor detects abnormal operation in RAM, Status Register, Interrupt, Timer, A/D converter or cycle time.

DTC DETECTING CONDITION E191019E

Item		Detecting Condition	Possible cause
DTC Strategy		• Internal monitoring	• Inoperative HECU
Case 1	Monitoring Period	• Continuous	
	Enable Conditions	• If Internal control unit failures of the master/slave processor or peripheral integrated circuits is detected.	
Case 2	Monitoring Period	• Directly after ignition on, during reading of EEPROM-values	
	Enable Conditions	• Failure is set if checksum not correct or PSW-EEPROM-Handler reported unknown failure during EEPROM-value reading. • If EEPROM reading sequence take longer then 3 s, a failure is set.	
Fail Safe		• The ABS/EBD/ESP functions are inhibited. • The ABS/EBD/ESP warning lamps are activated.	

TERMINAL & CONNECTOR INSPECTION EB2312B6

Refer to DTC C1260.

COMPONENT INSPECTION E3AF7919

Refer to DTC C1235.

VERIFICATION OF VEHICLE REPAIR EDA6B173

Refer to DTC C1101.

DTC C1605 CAN HARDWARE ERROR

COMPONENT LOCATION E42E151F

Refer to DTC C1235.

GENERAL DESCRIPTION EFD3DC76

The HECU send requirement data, such as Torque reduction, the number of fuel cut cylinders, and TCS control requests, to the PCM(ECM & TCM) through CAN bus line. The PCM(ECM) performs fuel cut functions according to requests from the HECU and retards ignition timing by torque reduction requests. The PCM(TCM) maintains current gear positions during TCS control time, in order not to increase power which causes a Kickdown shift.

DTC DESCRIPTION E54ED072

The HECU checks the CAN control module for normal TCS control, and sets this code if CAN control module malfunction is detected.

DTC DETECTING CONDITION ECBE70FD

Item	Detecting Condition	Possible cause
DTC Strategy	• CAN control module monitoring	• Inoperative HECU
Monitoring Period	• Immediate during start up	
Enable Conditions	• Faults are detected immediately if the initialization software can't have write access to the configuration registers of the CAN-controller module.	
Fail Safe	• Inhibit the ESP control and ABS/EBD control is available. Meanwhile, stop checking the ESP switch failure under the ESP control.	

TERMINAL & CONNECTOR INSPECTION EB2312B7

Refer to DTC C1260.

COMPONENT INSPECTION EE960EE5

Refer to DTC C1235.

VERIFICATION OF VEHICLE REPAIR E77708CC

Refer to DTC C1101.

DTC C1611 CAN TIME-OUT EMS

COMPONENT LOCATION EDCCC649

Refer to DTC C1235.

GENERAL DESCRIPTION E3850C33

Refer to DTC C1605.

DTC DESCRIPTION ECFFF519

The HECU checks the CAN communcation lines for normal ESP control, and sets this code if a PCM(ECM) message is not received within predefined time.

DTC DETECTING CONDITION EA602299

Item	Detecting Condition	Possible cause
DTC Strategy	• CAN massage monitoring	• Inoperative PCM(ECM) • Inoperative HECU
Monitoring Period	• Continuous	
Enable Conditions	• Faults are detected if PCM(ECM) message was not received on time by the CAN controller of HECU.	
Fail Safe	• Inhibit the ESP control and ABS/EBD control is available. Meanwhile, stop checking the ESP switch failure under the ESP control.	

TERMINAL & CONNECTOR INSPECTION EB2312B8

Refer to DTC C1260.

COMPONENT INSPECTION E511BB15

1. Ignition "OFF".
2. Ignition "ON".
3. Connect scantool and select "Diagnostic Trouble Codes (DTCs)" mode.
4. Using a scantool, Clear DTC.
5. Select "Diagnostic Trouble Codes(DTCs)" mode again.
6. Are any DTCs present?

YES

▶ Substitute with a known-good PCM(ECM) and check for proper operation. If problem is corrected, replace PCM(ECM) and then go to "Verification Of Vehicle Repair" procedure.If NG, replace HECU and then go to "Verification Of Vehicle Repair" procedure.

NO

▶ Fault is intermittent caused by faulty HECU or was repaired and HECU memory was not cleared. go to "Verification Of Vehicle Repair" procedure.

VERIFICATION OF VEHICLE REPAIR E5A708F3

Refer to DTC C1101.

DTC C1612 CAN TIME-OUT TCU

COMPONENT LOCATION E174F640

Refer to DTC C1235.

GENERAL DESCRIPTION ED93156E

Refer to DTC C1605.

DTC DESCRIPTION EC71E820

The HECU checks the CAN communcation lines for normal TCS control, and sets this code if a PCM(TCM) message is not received within predefined time.

DTC DETECTING CONDITION EE329DFE

Item	Detecting Condition	Possible cause
DTC Strategy	• CAN control module monitoring	• Inoperative PCM(TCM) • Inoperative HECU
Monitoring Period	• Continuous	
Enable Conditions	• Faults are detected if PCM(TCM) message was not received on time by the CAN controller of HECU.	
Fail Safe	• Inhibit the ESP control and ABS/EBD control is available. Meanwhile, stop checking the ESP switch failure under the ESP control.	

COMPONENT INSPECTION EED2CFB7

1. Ignition "OFF".
2. Ignition "ON".
3. Connect scantool and select "Diagnostic Trouble Codes (DTCs)" mode.
4. Using a scantool, Clear DTC.
5. Select "Diagnostic Trouble Codes(DTCs)" mode again.
6. Are any DTCs present?

YES

▶ Substitute with a known-good PCM(ECM) and check for proper operation. If problem is corrected, replace PCM(ECM) and then go to "Verification of Vehicle Repair" procedure.If NG, replace HECU and then go to "Verification of Vehicle Repair" procedure.

NO

▶ Fault is intermittent caused by faulty HECU or was repaired and HECU memory was not cleared. go to "Verification of Vehicle Repair" procedure.

TERMINAL & CONNECTOR INSPECTION EB2312B9

Refer to DTC C1260.

VERIFICATION OF VEHICLE REPAIR E2F441E9

Refer to DTC C1101.

DTC C1616 CAN BUS OFF

COMPONENT LOCATION E73AF7AC

Refer to DTC C1235.

GENERAL DESCRIPTION E776AF18

Refer to DTC C1605.

DTC DESCRIPTION EF12F92F

The HECU checks the CAN communication lines for normal TCS control, and sets this code if re-initialization is tried for 15 times in sequence without success.

DTC DETECTING CONDITION EABC4B64

Item	Detecting Condition	Possible cause
DTC Strategy	• Open or short monitoring	• Open or short circuit in CAN line • Inoperative HECU
Monitoring Period	• Continuous	
Enable Conditions	• A CAN BUS off fault is established if re-initialization is tried for 15 times in sequence without success.	
Fail Safe	• Inhibit the ESP control and ABS/EBD control is available. Meanwhile, stop checking the ESP switch failure under the ESP control.	

TERMINAL & CONNECTOR INSPECTION EF4B2AE2

Refer to DTC C1503.

SIGNAL CIRCUIT INSPECTION E023A5AB

1. Ignition "OFF".
2. Disconnet the HECU harness connector.
3. Measure resistance between terminal "14" of the HECU harness connector and terminal "35" of the HECU harness connector.

Specification : Approx. 60Ω

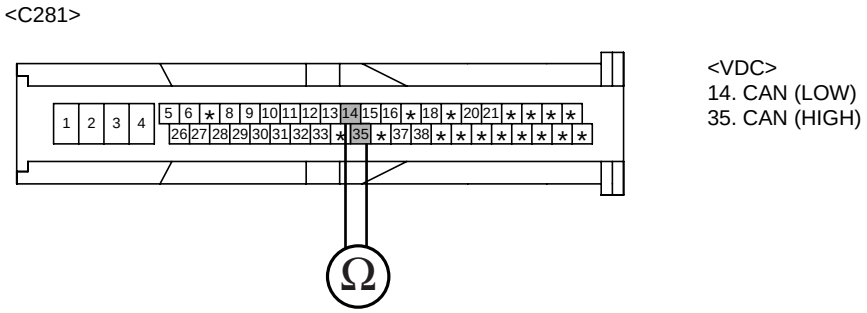

SCMBR6563L

4. Is the measured resistance within specifications?

YES

▶ Fault is intermittent caused by open or short in CAN signal harness or was repaired and HECU memory wasnot cleared. go to "CAN Bus Short (to ground) Inspection" procedure.

NO

▶ Check for open or short in CAN signal harness between terminal "14" of the HECU harness connector and terminal "35" of the HECU harness connector. Repair as necessary and then go to "Verification Of Vehicle Repair" procedure.

CAN BUS SHORT (TO GROUND) INSPECTION

1. Ignition "OFF".
2. Disconnet the HECU harness connector.
3. Measure resistance between terminal "14, 35" of the HECU harness connector and chassis ground.

Specification : Approx. ∞ Ω

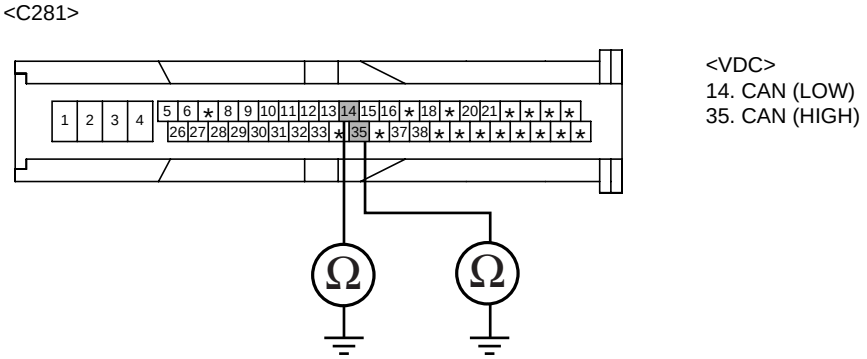

SCMBR6564L

4. Is the measured resistance within specifications?

YES

▶ Go to "CAN Bus Short (to battery) Inspection" procedure.

NO

▶ Check for short to ground in CAN HIGH signal harness in case of abnormal resistance measured betweenterminal "35" of the HECU harness connector and chassis ground. Repair as necessary and then go to "Verification Of Vehicle Repair" procedure.
▶ Check for short to ground in CAN LOW signal harness in case of abnormal resistance measured betweenterminal "14" of the HECU harness connector and chassis ground. Repair as necessary and then go to "Verification Of Vehicle Repair" procedure.

CAN BUS SHORT (TO BATTERY) INSPECTION

1. Ignition "OFF".
2. Disconnet the HECU harness connector.
3. Measure voltage between terminal "14, 35" of the HECU harness connector and chassis ground.

Specification : Below. 0.2 V

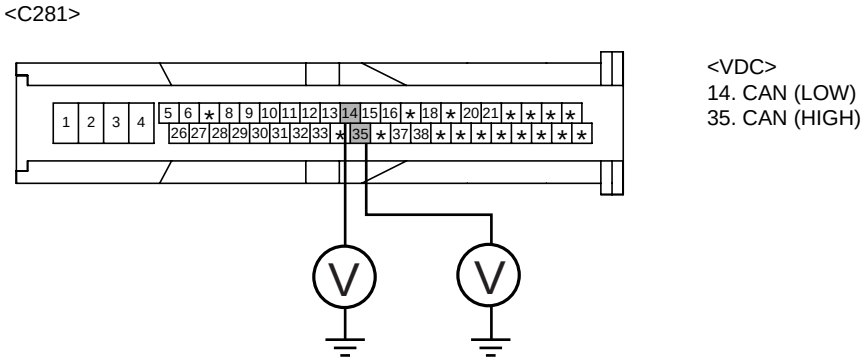

SCMBR6565L

4. Is the measured resistance within specifications?

YES

▶ Go to "CAN Bus Short (between HIGH and LOW) Inspection" procedure.

NO

▶ Check for short to battery in CAN HIGH signal harness in case of abnormal resistance measured betweenterminal "14" of the HECU harness connector and chassis ground. Repair as necessary and then go to "Verification Of Vehicle Repair" procedure.
▶ Check for short to battery in CAN LOW signal harness in case of abnormal resistance measured betweenterminal "35" of the HECU harness connector and chassis ground. Repair as necessary and then go to "Verification Of Vehicle Repair" procedure.

CAN BUS SHORT (BETWEEN HIGH AND LOW) INSPECTION

1. Ignition "OFF".
2. Disconnet all the connetor related to CAN such as HECU, PCU, EPS, ECS harness connector.
3. Measure resistance between terminal "14, 35" of the HECU harness.

Specification : Approx. 120 Ω

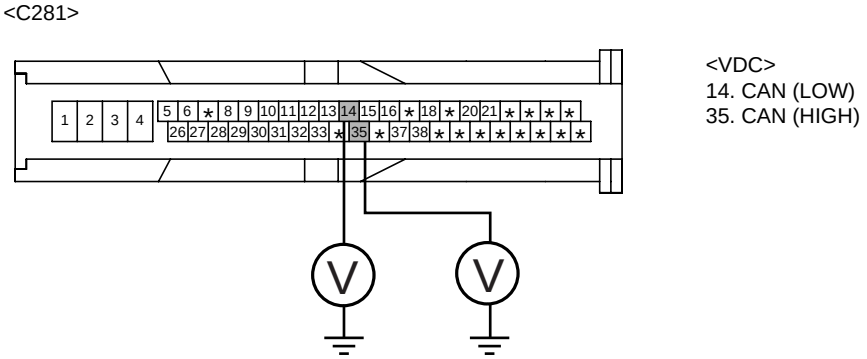

SCMBR6565L

4. Is the measured resistance within specifications?

YES

▶ Go to "Component Inspection" procedure.

NO

▶ Check for short in CAN signal harness between terminal "14" of the HECU harness connector and terminal "35" of the HECU harness connector. Repair as necessary and then go to "Verification of vehicle Repair" procedure.

COMPONENT INSPECTION EEE71ACE

1. Ignition "OFF".
2. Ignition "ON".
3. Connect scantool and select "Diagnostic Trouble Codes (DTCs)" mode.
4. Using a scantool, Clear DTC.
5. Select "Diagnostic Trouble Codes(DTCs)" mode again.
6. Are any DTCs present?

YES

▶ Substitute with a known-good HECU and check for proper operation. If problem is corrected, replace HECU and then go to "Verification Of Vehicle Repair" procedure.

NO

▶ Fault is intermittent caused by faulty HECU or was repaired and HECU memory was not cleared. go to "Verification of Vehicle Repair" procedure.

VERIFICATION OF VEHICLE REPAIR EB1C1480

Refer to DTC C1101.

DTC C1623 CAN TIME-OUT STEERING ANGLE SENSOR

COMPONENT LOCATION E13058C2

Refer to DTC C1235.

GENERAL DESCRIPTION EABBA871

The Steering angle sensor(SAS) is joined to the multi function switch and uses a CAN communication. The SAS is used to determine turning direction and speed of the steering wheel. The HECU uses the signals from the SAS when performing ESP-related calculations.

DTC DESCRIPTION E2768D2E

The HECU checks the CAN communcation lines for normal ESP control, and sets this code if a sAS message is not received within predefined time.

DTC DETECTING CONDITION E7C4B0FD

Item	Detecting Condition	Possible cause
DTC Strategy	• CAN massage monitoring	• Inoperative SAS • Inoperative HECU • Open circuit in SAS line
Monitoring Period	• Continuous	
Enable Conditions	• Faults are detected if SAS message was not received on time by the CAN controller of HECU.	
Fail Safe	• Inhibit the ESP control and ABS/EBD control is available. Meanwhile, stop checking the ESP switch failure under the ESP control.	

TERMINAL & CONNECTOR INSPECTION E1F07986

Refer to DTC C1200.

POWER SUPPLY CIRCUIT INSPECTION ECCC0617

1. Ignition "ON".

2. Measure voltage between terminal "2" of the steering angle sensor harness connector and chassis ground.

Specification : Approx. B+

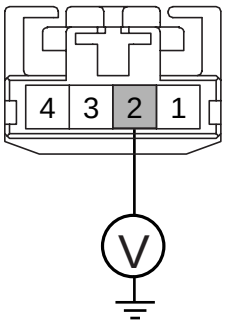

1. Steering Angle Sensor Ground
2. Steering Angle Sensor Supply
3. CAN Line (HIGH)
4. CAN Line (LOW)

EJBF504A

3. Is the measured voltage within specifications?

YES

▶ Go to "Ground Circuit Inspection" procedure.

NO

▶ Check for damaged harness and poor connection between the battery terminal(+) and terminal "2" of the steering angle sensor harness connector. Check for open or blown 10 A ABS fuse referring to "Circuit Diagram". Repair as necessary and then go to "Verification Of Vehicle Repair" procedure.

GROUND CIRCUIT INSPECTION E79BB25D

1. Ignition "OFF".
2. Disconnect SAS connector.
3. Measure resistance between terminal "1" of the steering angle sensor harness connector and chassis ground.

Specification : Approx. below 1 Ω

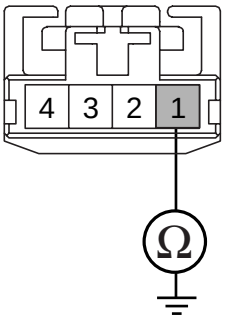

1. Steering Angle Sensor Ground
2. Steering Angle Sensor Supply
3. CAN Line (HIGH)
4. CAN Line (LOW)

EJBF504B

4. Is the measured resistance within specifications?

YES

▶ Go to "CAN Circuit Inspection" procedure.

NO

▶ Check for damaged harness and poor connection between terminal "15" of the HECU harness connector and terminal "1" of the steering angle sensor harness connector . Repair as necessary and then go to "Verification Of Vehicle Repair" procedure.

CAN CIRCUIT INSPECTION

1. Ignition "OFF".
2. Disconnect SAS connector.
3. Measure resistance between terminal "3, 4" of the steering angle sensor harness connector.

Specification : Approx. 60 Ω

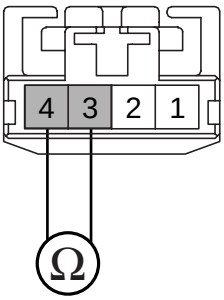

1. Steering Angle Sensor Ground
2. Steering Angle Sensor Supply
3. CAN Line (HIGH)
4. CAN Line (LOW)

EJBF504C

4. Is the measured resistance within specifications?

YES

▶ Check for improper installation of wheel speed sensor. If NG, repair as necessary and then go to "Verification Of Vehicle Repair" procedure.
▶ If OK, Go to "Component Inspection" procedure.

NO

▶ Check for damaged harness and poor connection between terminal "3, 4" of the steering angle sensor harness connector. Repair as necessary and then go to "Verification Of Vehicle Repair" procedure.

CAN BUS SHORT (TO GROUND) INSPECTION

1. Ignition "OFF".
2. Disconnet the HECU harness connector.
3. Measure resistance between terminal "3, 4" of the HECU harness connector and chassis ground.

Specification : Approx. ∞ Ω

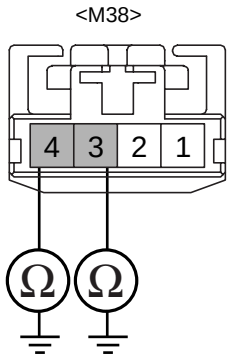

1. Steering Angle Sensor Ground
2. Steering Angle Sensor Supply
3. CAN Line (HIGH)
4. CAN Line (LOW)

SCMBR6566L

4. Is the measured resistance within specifications?

YES

▶ Go to "CAN Bus Short (between HIGH and LOW) Inspection" procedure.

NO

▶ Check for short to ground in CAN HIGH signal harness in case of abnormal resistance measured betweenterminal "3" of the HECU harness connector and chassis ground. Repair as necessary and then go to "Verification Of Vehicle Repair" procedure.
▶ Check for short to ground in CAN LOW signal harness in case of abnormal resistance measured betweenterminal "4" of the HECU harness connector and chassis ground. Repair as necessary and then go to "Verification Of Vehicle Repair" procedure.

CAN BUS SHORT (BETWEEN HIGH AND LOW) INSPECTION

1. Ignition "OFF".
2. Disconnet all the connetor related to CAN such as HECU, PCU, EPS, ECS harness connector.
3. Measure resistance between terminal "3, 4" of the HECU harness.

Specification : Approx. 120 Ω

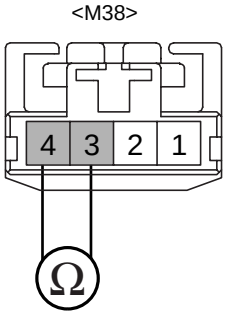

1. Steering Angle Sensor Ground
2. Steering Angle Sensor Supply
3. CAN Line (HIGH)
4. CAN Line (LOW)

SCMBR6567L

4. Is the measured resistance within specifications?

YES

▶ Go to "Component Inspection" procedure.

NO

▶ Check for short in CAN signal harness between terminal "3" of the HECU harness connector and terminal "4" of the HECU harness connector. Repair as necessary and then go to "Verification Of Vehicle Repair" procedure.

COMPONENT INSPECTION E0354D6C

1. Ignition "OFF".
2. Ignition "ON".
3. Connect scantool and select "Diagnostic Trouble Codes (DTCs)" mode.
4. Using a scantool, Clear DTC.
5. Select "Diagnostic Trouble Codes (DTCs)" mode again.
6. Are any DTCs present ?

YES

1) Substitute with a known-good steering angle sensor and check for proper operation. If problem is corrected, replace sensor and then go to "Verification Of Vehicle Repair" procedure.

2) Substitute with a known-good HECU and check for proper operation. If problem is corrected, replace HECU and then go to "Verification Of Vehicle Repair" procedure.

NO

▶ Fault is intermittent caused by poor connection in steering angle sensor harness or faulty steering angle sensor. Go to "Verification Of Vehicle Repair" procedure.

VERIFICATION OF VEHICLE REPAIR EDDB39C4

Refer to DTC C1101.

DTC C1625 CAN TIME-OUT ABS/TCS/ESP

COMPONENT LOCATION EE4D6C4A

Refer to DTC C1235.

GENERAL DESCRIPTION EA8B81C6

Refer to DTC C1605.

DTC DESCRIPTION E1AACA13

The HECU checks the CAN communcation lines for normal ESP control, and sets this code if a CAN message is not transmitted within predefined time.

DTC DETECTING CONDITION ECA90A70

Item	Detecting Condition	Possible cause
DTC Strategy	• CAN massage monitoring	• Inoperative HECU
Monitoring Period	• Continuous	
Enable Conditions	• Faults are detected if CAN message was not transmitted on time by the CAN controller of HECU.	
Fail Safe	• Inhibit the ESP control and ABS/EBD control is available. Meanwhile, stop checking the ESP switch failure under the ESP control.	

TERMINAL & CONNECTOR INSPECTION EB2312B0

Refer to DTC C1260.

COMPONENT INSPECTION ECF6F03E

Refer to DTC C1235.

VERIFICATION OF VEHICLE REPAIR E90D8919

Refer to DTC C1101.

DTC C1626 IMPLAUSIBLE CONTROL

COMPONENT LOCATION E04AB5EA

Refer to DTC C1235.

GENERAL DESCRIPTION E43144C2

The pressure sensor, installed in the HECU, sense the brake oil pressure to judge driver's brake intention when ESP is operating. If pressure of master cyclinder is applied to pressure sensor, the strain of the piezo element is changed and then the resistance of brige circuit is chanded according to changed strain. Therefore this changed resistance changes output voltage of brige circuit and output voltage changes linearly. The sensor output is a analog signal in proportion to supply voltage, and the HECU recognizes a pressure value according to signal ratio about supply voltage.

DTC DESCRIPTION ED2FA73C

Under normal conditions, the inlet valves of all four wheels are not closed during control for longer than 1.28s or If the controller requests pressure-hold or pressure-decrease for longer than 1.28s, a fault is detected. The ABS/ESP warning lamp is turned ON and the EBD warning lamp is turned OFF.

DTC DETECTING CONDITION EC18FDBE

Item		Detecting Condition	Possible cause
DTC Strategy		• Signal monitoring	• Inoperative HECU
Case 1	Monitoring Period	• Continuous	
	Enable Conditions	• If the controller requests pressure-hold or pressure-decrease for longer than 1.28 s, a fault is stored.	
Case 2	Monitoring Period	• Continuous (at vehicle reference speed > 6 m/s, no detected under voltage and a fault is not already detected)	
	Enable Conditions	• The monitoring reports a failure if continuous ESP control occurs for a time period >= 10 s.	
Fail Safe		• The ABS/ESP functions are inhibited, allow the EBD control. • The ABS/ESP warning lamps are activated.	

COMPONENT INSPECTION EF9690E7

Refer to DTC C1235.

VERIFICATION OF VEHICLE REPAIR E8F1EE76

Refer to DTC C1101.

DTC C1702 VARIANT CODING ERROR

COMPONENT LOCATION EB373A2E

Refer to DTC C1235.

GENERAL DESCRIPTION E57AFA56

There is no hardware difference of the HECU according to the vehicle's specification, just software is changed by the vehicle parameter used for ESP control. The HECU stores a classified variant code value according to the received data(a kind of engine, engine displacement, a kind of T/M). After then the HECU read a various parameter according to the stored variant value in the memory to use for the ESP control.

DTC DESCRIPTION E06AF2C9

The HECU checks the variant code after ignition. If a inappropriate variant code is detected or there is no variant code, a fault is detected.

DTC DETECTING CONDITION EA677BE2

Item	Detecting Condition	Possible cause
DTC Strategy	• Internal monitoring	• Inoperative HECU • Replacement of PCM(ECM & TCM)
Monitoring Period	• Once during startup.	
Enable Conditions	• During intialization, there is no inputed valid varient code. • No variant code stored in EEPROM. • Receieved variant code is invalid. • There is a difference between preset variant code and detected variant code.	
Fail Safe	• The ABS/EBD/ESP functions are inhibited. • The ABS/EBD/ESP warning lamps are activated.	

MONITOR SCANTOOL DATA EC715F53

VARIANT CODE

1. Check for improper installation of EMS/PCM(ECM & TCM)/ESP.
2. Connect scantool to Data Link Connector(DLC).
3. Ignition "ON".
4. Go in Anti-Lock brake system (figure 1).
5. Perform variant code.
6. Disconnect scantool.
7. Ignition "OFF" and then ignition "ON". Go to "Component Inspection"Procedure.

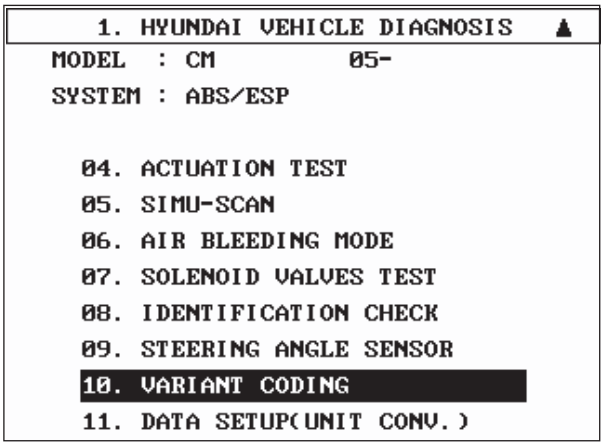

Fig1

Fig 1) Varient coding.

SCMBR6568L

COMPONENT INSPECTION EDF8867E

Refer to DTC C1235.

VERIFICATION OF VEHICLE REPAIR E894754C

Refer to DTC C1101.

DTC C2112 VALVE RELAY ERROR

COMPONENT LOCATION E17FAF5F

Refer to DTC C1235.

GENERAL DESCRIPTION E510D9AF

The HECU supplies battery power to all solenoid valves with a valve relay which is controlled by the Electronic Control UNIT(ECU). The valve relay and all solenoid valves are installed inside the HECU (Hydraulic and Electronic Control Unit).

DTC DESCRIPTION E5C5A183

The HECU monitors voltage of the valve relay to check if the HECU can perform ABS control normally. When the valve relay is switched to ON, the HECU will set this code if the solenoid drive voltage is below permissible voltage ranges for a period of time. When the valve relay is switched to OFF, the HECU sets this code if the solenoid drive voltage is over the permissible voltage range for a period of time.

DTC DETECTING CONDITION E59AFF33

<table>
<tr><th colspan="2">Item</th><th>Detecting Condition</th><th>Possible cause</th></tr>
<tr><td colspan="2">DTC Strategy</td><td>• Voltage monitoring</td><td rowspan="9">• Open or short in power supply circuit (IGN+)
• Inoperative HECU</td></tr>
<tr><td rowspan="2">Case 1</td><td>Monitoring Period</td><td>• Once during startup.</td></tr>
<tr><td>Enable Conditions</td><td>• Watchdog and valve relay function is tested during startup.A failure is detected if the valve relay/Enable remains in off position when it is turned on and vice versa. Reason could be short to GND or UZ, interrupted lines or a inoperative output stage etc.</td></tr>
<tr><td rowspan="2">Case 2</td><td>Monitoring Period</td><td>• Continuous</td></tr>
<tr><td>Enable Conditions</td><td>• A Fault is detected if valve relay voltage ＜ 0.8 * battery voltage for a time 500 ms.</td></tr>
<tr><td rowspan="2">Case 3</td><td>Monitoring Period</td><td>• Continuous</td></tr>
<tr><td>Enable Conditions</td><td>• If valve relay malfunction and supply solenoid valve short to battery or supply solenoid valve and medium or high ohmic short of valve relay (or a valve) to valve relay voltage, solenoid valve voltage or GND are detected.</td></tr>
<tr><td colspan="2">Fail Safe</td><td>• No valve actuation possible.
• The ABS/EBD/ESP functions are inhibited.
• The ABS/EBD/ESP warning lamps are activated.</td></tr>
</table>

MONITOR ACTUATION TEST EBFD31F0

1. Connect scantool to Data Link Connector(DLC)
2. Ignition "ON" & Engine "OFF".
3. Select the "Actuation Test" mode on the scantool.
4. Inspect opearating status of all vlaves with Actuation Test.

Specification : It's normal if operating sound is heard.

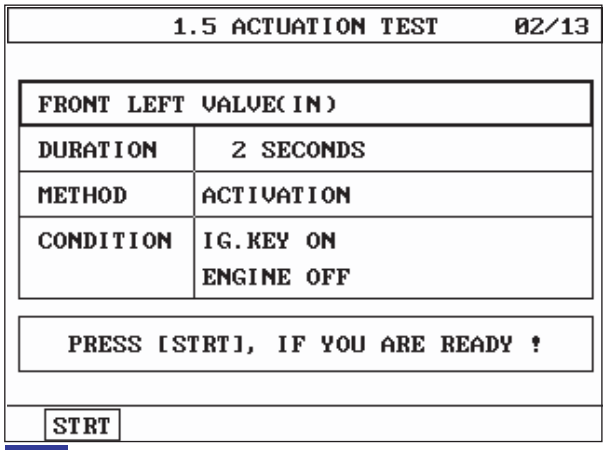

Fig1

Fig 1) Test Condition : Ignition "ON" & Engine "OFF".
Ex) Actuation Test on Front left valve(in)

SCMBR6569L

5. Do all valves operate normally?

YES

▶ Fault is intermittent caused by poor connection in power harness (ABS2) and/or HECU's connector or wasrepaired and HECU memory was not cleared. Thoroughly check connectors for looseness, poor connection, bending, corrosion, contamination, deterioration, or damage. Repair or replace as necessary and then go to "Verification Of Vehicle Repair" procedure.

NO

▶ Go to "W/Harness Inspection" procedure.

TERMINAL & CONNECTOR INSPECTION E91F6FE5

Refer to DTC C1200.

POWER SUPPLY CIRCUIT INSPECTION EB45563A

1. Ignition "OFF".
2. Disconnect HECU connector.
3. Ignition "ON".
4. Measure voltage between terminal "3" of the HECU harness connector and chassis ground.

Specification : Approx. B+

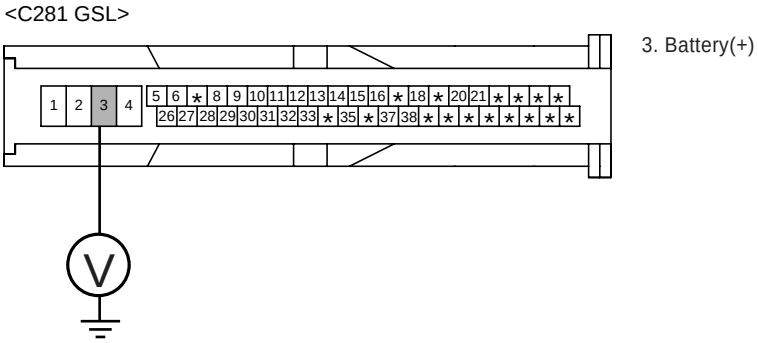

SCMBR6570L

5. Is the measured voltage within specifications?

YES

▶ Go to "Ground Circuit Inspection" procedure.

NO

▶ Check for damaged harness and open or short to GND between the battery terminal(+) and terminal "3" of the HECU harness connector. Check for open or blown 40A ABS fuse referring to "Circuit Diagram". Repair as necessary and then go to "Verification of vehicle Repair" procedure.

GROUND CIRCUIT INSPECTION E513968B

Refer to DTC C1101.

VERIFICATION OF VEHICLE REPAIR E5E5A1F6

Refer to DTC C1101.

DTC C2308 FL INLET VALVE MALFUNCTION
DTC C2316 FR INLET VALVE MALFUNCTION
DTC C2324 RL INLET VALVE MALFUNCTION
DTC C2332 RR INLET VALVE MALFUNCTION

COMPONENT LOCATION E0DE60DF

Refer to DTC C1235.

GENERAL DESCRIPTION EFB7DCDD

The HECU is composed of an ECU (Electronic Control Unit) and an HCU(Hydraulic Control Unit), so the HECU hardware includes all solenoid valves inside the unit as well as the ECU. Solenoid valves are switched to ON, OFF by HECU when the ABS is activated. Solenoid valves function is to increase, decrease or maintain the hydralic pressure supplied to a brake caliper.

DTC DESCRIPTION ED337373

The HECU monitors the operation of the valves by checking the drive circuit of the solenid valves, and then sets this code when the unexpcted drive voltage is detected. For example, the HECU sets the DTC if the electrical feedback signal does not match the actuation signal for the corresponding valve.

DTC DETECTING CONDITION E9273E4B

Item		Detecting Condition	Possible cause
DTC Strategy		• Voltage monitoring	• Inoperative HECU
Case 1	Monitoring Period	• Continuous	
	Enable Conditions	• The electrical feedback signal does not match the actuation signal for the corresponding valve for more than 30 ms. - Current controlled valves and under voltage conditions :detection time is 80 ms	
Case 2	Monitoring Period	• Immediately after power on • every 20 s - The Test is canceled if any control, valve actuation takes place or if the Vehicle is in motion and the BLS is on.	
	Enable Conditions	• A Fault is found if UVR is not within 0.1*battery voltage < valve relay voltage < 0.8*battery voltage • A Fault is found if valve relay voltage ≥ 0.2*battery voltage. - After that all valves are switched on sequential, valve relay voltage and valve feedback is measured.	
Case 3	Monitoring Period	• The Valve and Pump motor Test is performed once after ignition on if vehicle speed is >= 15 km/h.	
	Enable Conditions	• The valve and pump motor test detects electrical actuation malfunction of ABS valves. The test actuates all valves in series (to detect short cuts or shunts between the valve lines). Faults are detected if there is an error during the test.	
Case 4	Monitoring Period	• The drift test executes only once during an ignition Cycle. The test is triggered if the following conditions are fulfilled : 10min after power up or end of control 1) No BLS is applied 2) Brake pressure is < 10 bar 3) Vehicle speed >15 km/h 4) Vehicle acceleration > 0.5 m/s^2 5) Supply voltage > 11 volts.	
	Enable Conditions	• The drift test is executed only once during an ignition Cycle.If it detects partly shorted valve coils,almost inoperative coils or malfunction of the valve driver, a failure is recognized.	
Fail Safe		• Valve cannot be actuated or valve is incorrectly actuated. This may result in locked wheels or wheels without pressure. • ABS/EBD/ESP function is prohibited. • ABS/EBD/ESP warning lamp is turned ON.	

MONITOR ACTUATION TEST ED3E7D6C

1. Connect scantool to Data Link Connector(DLC)
2. Ignition "ON" & Engine "OFF".
3. Select the "Actuation Test" mode on the scantool.
4. Inspect opearating status of inlet valve with Actuation Test.

Specification : It's normal if operating sound is heard.

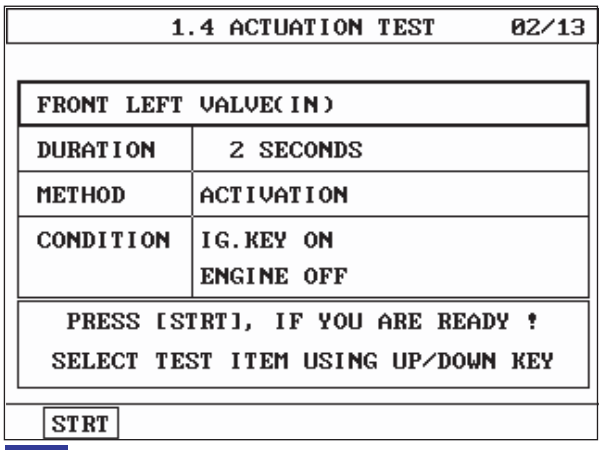

Fig1

Fig 1) Test Condition : Ignition "ON" & Engine "OFF"
Ex) Actuation Test on Front left valve(in)

EJBF504L

5. Does a inlet valve operate normally?

YES

▶ Fault is intermittent caused by inoperative valve or was repaired and HECU memory was not cleared. Go to the pplicable troubleshooting procedure.

NO

▶ Go to "W/Harness Inspection" procedure.

TERMINAL AND CONNECTOR INSPECTION EE3CAC26

1. Many malfunctions in the electrical system are caused by poor harness(es) and terminals. Faults can also be caused by interference from other electrical systems, and mechanical or chemical damage.

2. Thoroughly check connectors for looseness, poor connection, bending, corrosion, contamination, deterioration, or damage.

3. Has a problem been found?

YES

▶ Repair as necessary and then go to "Verification of Vehicle Repair" procedure.

NO

▶ Substitute with a known-good HECU and check for proper operation. If problem is corrected, replace HECU and then go to "Verification of Vehicle Repair" procedure.

VERIFICATION OF VEHICLE REPAIR E05FDCDF

Refer to DTC C1101.

DTC C2312 FL OUTLET VALVE MALFUNCTION
DTC C2320 FR OUTLET VALVE MALFUNCTION
DTC C2328 RL OUTLET VALVE MALFUNCTION
DTC C2336 RR OUTLET VALVE MALFUNCTION

COMPONENT LOCATION E17CE012

Refer to DTC C1235.

GENERAL DESCRIPTION E765168C

Refer to DTC C2308.

DTC DESCRIPTION EB63DB57

Refer to DTC C2308.

DTC DETECTING CONDITION EF1E4919

Refer to DTC C2308.

MONITOR ACTUATION TEST EF9ABF10

1. Connect scantool to Data Link Connector(DLC)
2. Ignition "ON" & Engine "OFF".
3. Select the "Actuation Test" mode on the scantool.
4. Inspect opearating status of outlet valve with Actuation Test.

Specification : It's normal if operating sound is heard.

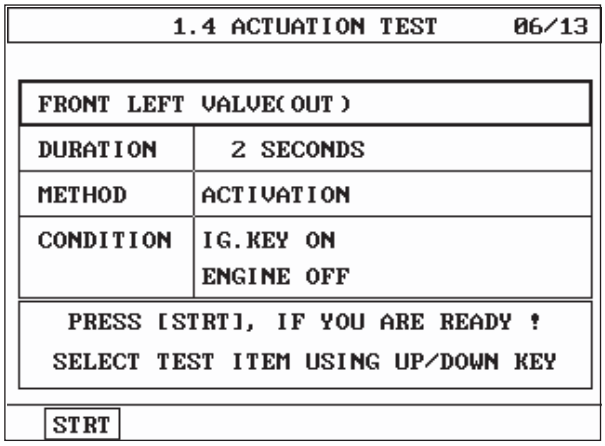

Fig1

Fig 1) Test Condition : Ignition "ON" & Engine "OFF"
Ex) Actuation Test on Front left valve(out)

SCMBR6572L

5. Does a inlet valve operate normally?

YES

▶ Fault is intermittent caused by inoperative valve or was repaired and HECU memory was not cleared. Go to the pplicable troubleshooting procedure.

NO

▶ Go to "Component Inspection" procedure.

TERMINAL AND CONNECTOR INSPECTION E3277A22

Refer to DTC C2308.

VERIFICATION OF VEHICLE REPAIR EF041650

Refer to DTC C1101.

DTC C2366 TCS VALVE PRIMARY (USV1) ERROR
DTC C2370 TCS VALVE SECONDARY (USV2) ERROR
DTC C2372 ESP VALVE 1 (HSV1) ERROR
DTC C2374 ESP VALVE 2 (HSV2) ERROR

COMPONENT LOCATION EEF8A5A9

Refer to DTC C1235.

GENERAL DESCRIPTION E0D75DC9

Refer to DTC C2308.

DTC DESCRIPTION E459C827

Refer to DTC C2308.

DTC DETECTING CONDITION E3B9D83B

Item		Detecting Condition	Possible cause
DTC Strategy		• Voltage monitoring	• Inoperative HECU
Case 1	Monitoring Period	• Once after ignition on at standstill if the BLS is off • At vehicle speed ≥ 15 km/h if the BLS is on.	
	Enable Conditions	• The test actuates all valves in series to detect shorts or shunts between the valve lines. Faults are detected if there is an error during the test.	
Case 2	Monitoring Period	• The drift test executes only once during an ignition Cycle. The test is triggered if the following conditions are fulfilled : 10 min after power up or end of control 1) No BLS is applied 2) Brake pressure is < 10 bar 3) Vehicle speed >15 km/h 4) Vehicle acceleration > 0.5 m/s^2 5) Supply voltage > 11 volts.	
	Enable Conditions	• The drift test is executed only once during an ignition Cycle.If it detects partly shorted valve coils,almost inoperative coils or malfunction of the valve driver, a failure is recognized.	
Fail Safe		• Valve cannot be actuated or valve is incorrectly actuated. This may result in locked wheels or wheels without pressure. • ABS/EBD/ESP function is prohibited. • ABS/EBD/ESP warning lamp is turned ON.	

MONITOR ACTUATION TEST EE1C235C

1. Connect scantool to Data Link Connector(DLC)
2. Ignition "ON" & Engine "OFF".
3. Select the "Actuation Test" mode on the scantool.
4. Inspect opearating status of inlet valve with Actuation Test.

Specification : It's normal if operating sound is heard.

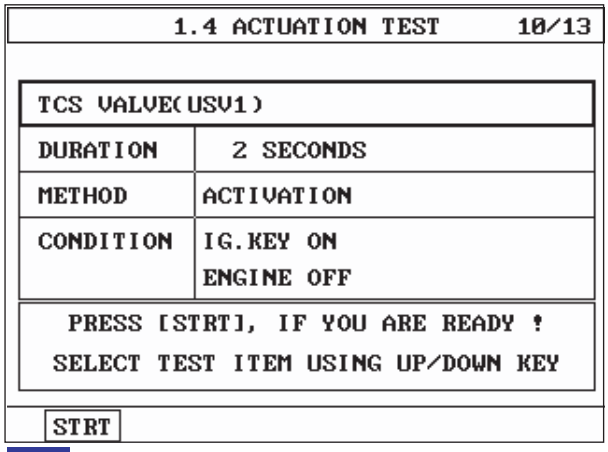

Fig1

Fig 1) Test Condition : Ignition "ON" & Engine "OFF"
Ex) Actuation Test on TCS(USV) valve #1

SCMBR6573L

5. Does a inlet valve operate normally?

YES

▶ Fault is intermittent caused by inoperative valve or was repaired and HECU memory was not cleared. Go to the pplicable troubleshooting procedure.

NO

▶ Go to "W/Harness Inspection" procedure.

TERMINAL AND CONNECTOR INSPECTION EEA1AAFD

Refer to DTC C2308.

VERIFICATION OF VEHICLE REPAIR E83A38F7

Refer to DTC C1101.

DTC C2402 MOTOR - ELECTRICAL

COMPONENT LOCATION E1D99F74

Refer to DTC C1235.

GENERAL DESCRIPTION E076365D

The HECU supplies battery power to the electric motor with a motor relay which is controlled by the Electronic Control Unit(ECU). The electric motor pump supplies hydraulic pressure to all wheel brake calipers by operating the piston inside the pump.

DTC DESCRIPTION E7B83C4C

The ABS ECU monitors the pump motor relay or fuse open, open or short in motor or motor lock and then sets this code if a malfunction is detected.

DTC DETECTING CONDITION E230FE39

Item		Detecting Condition	Possible cause
DTC Strategy		• Battery Voltage Monitoring	• Open or short of power supply circuit (ABS2) • Inoperative HECU
Case1(Motor Relay Open orMotor Short to GND)	Detect Mode	• Outside the ABS control cycle • Inside the ABS control cycle • Diagnosis mode	
	Enable Conditions	• If the motor relay is switched ON and motor voltage < (IGN voltage ? 4V±0.5V) continued for 49msec, the failure is detected.	
Case2 (Motor Lock)	Detect Mode	• Outside the ABS control cycle • Diagnosis mode	
	Enable Conditions	• After motor relay is switched OFF, VMR is measured. If the time which VMR > 1±0.1V is less than evaluation time, recheck is performed again for a maximum of three times. When VMR is not normal even on the third recheck, the controller recognizes it as failure.	
Case3(Motor Open, Motor Short to BATT)	Detect Mode	• Initial Check • Outside the ABS control cycle • Diagnosis mode • Failure mode	
	Enable Conditions	• After 1.8sec from the time that motor relay is switched OFF, VMR > 4±0.5V continued for 1.8sec, the failure is detected.	
Case4(Motor Fuse Open)	Detect Mode	• Initial Check • Outside the ABS control cycle • Inside the ABS control cycle • Diagnosis mode • Failure mode	
	Enable Conditions	• If the motor relay is switched OFF and VMRP (Motor power supply voltage) < 4±0.5V continued for 1sec, the failure is detected.	
Fail Safe		• The ABS/ESP functions are inhibited. • The ABS/ESP warning lamps are activated and the EBD warning lamp is not activated. • Motor failure during the ABS control cycle (Case 1, 4) :Inhibit the ABS/ESP control of front wheels, allow the ABS/ESP control of rear wheels, and ABS/ESP warning lamps are switched on at the end of ABS control.	

MONITOR ACTUATION TEST E7DFBFCD

1. Connect scantool to Data Link Connector(DLC)
2. Ignition "ON" & Engine "OFF".
3. Select the "Actuation Test" mode on the scantool.
4. Inspect opearating status of inlet valve with Actuation Test.

Specification : It's normal if operating sound is heard.

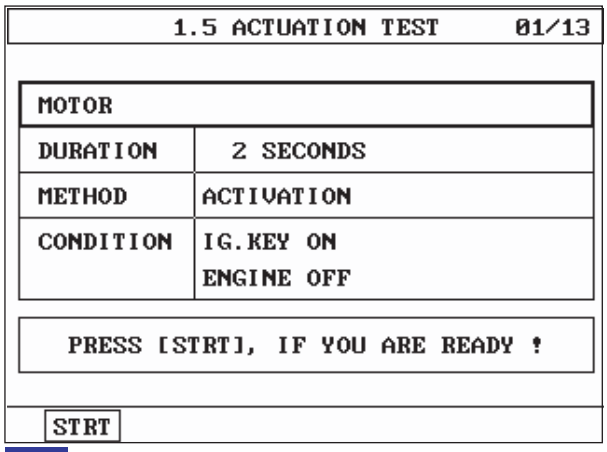

Fig1

Fig 1) Test Condition : Ignition "ON" & Engine "OFF"
Ex) Actuation Test on motor

SCMBR6574L

5. Does a inlet valve operate normally?

YES

▶ Fault is intermittent caused by poor connection in motor circuit or was repaired and HECU memory was not cleared. Thoroughly check connectors for looseness, poor connection, bending, corrosion, contamination, deterioration, or damage. Repair or replace as necessary and then go to "Verification Of Vehicle Repair" procedure.

NO

▶ Go to "W/Harness Inspection" procedure.

TERMINAL & CONNECTOR INSPECTION E60065FA

Refer to DTC C1200.

POWER SUPPLY CIRCUIT INSPECTION EDAFB067

1. Ignition "OFF".
2. Disconnect HECU connector.
3. Ignition "ON".
4. Measure voltage between terminal "2" of the HECU harness connector and chassis ground.

Specification : Approx. B+

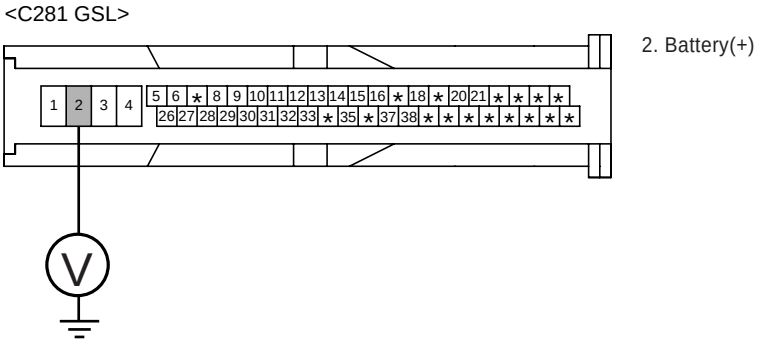

SCMBR6575L

5. Is the measured voltage within specifications?

YES

▶ Go to "Ground Circuit Inspection" procedure.

NO

▶ Check for damaged harness and open or short to GND between the battery terminal(+) and terminal "2" of the HECU harness connector. Check for open or blown 40A ABS fuse referring to "Circuit Diagram". Repair as necessary and then go to "Verification Of vehicle Repair" procedure.

GROUND CIRCUIT INSPECTION E92788A0

1. Ignition "OFF".
2. Disconnect HECU connector.
3. Measure resistance between terminal "1" of the HECU harness connector and chassis ground.

Specification : Approx. below 1 Ω

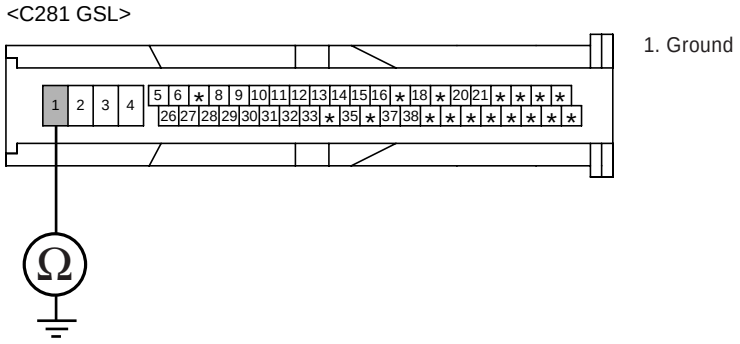

SCMBR6576L

4. Is the measured resistance within specifications?

YES

▶ Substitute with a known-good HECU and check for proper operation. If problem is corrected, replace HECU and then go to "Verification Of Vehicle Repair" procedure.

NO

▶ Check for damaged harness and poor connection between terminal "1" of the HECU harness connectorand chassis ground. Repair as necessary and then go to "Verification Of vehicle Repair" procedure.

VERIFICATION OF VEHICLE REPAIR E68792E0

Refer to DTC C1101.

ANTI-LOCK BRAKING SYSTEM CONTROL MODULE

COMPONENTS EDD0BBD5

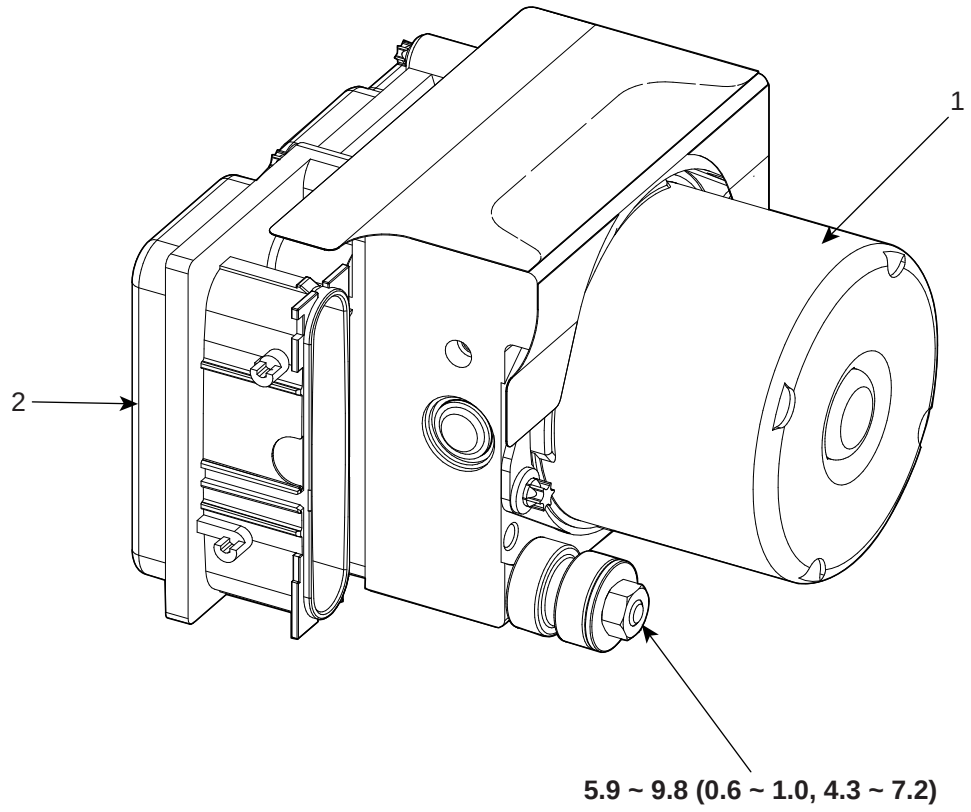

TORQUE : Nm (Kgf.m, lb-ft)

1. HCU assembly
2. ECU assembly

SCMBR6577L

REMOVAL E3FAEDF1

1. Remove the air cleaner assembly.

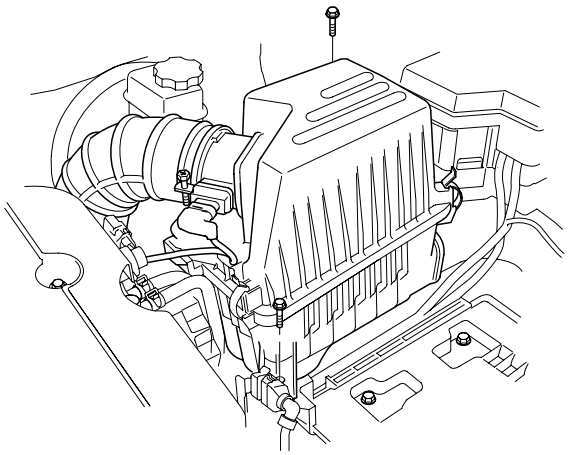

SCMBR6502D

2. Remove the ECM (Engine Control Module).

3. Disconnect the brake tubes from the HECU.

Tightening torque Nm (kgf.m, lb-ft):
5.9 ~ 9.8 (0.6 ~ 1.0, 4.3 ~ 7.2)

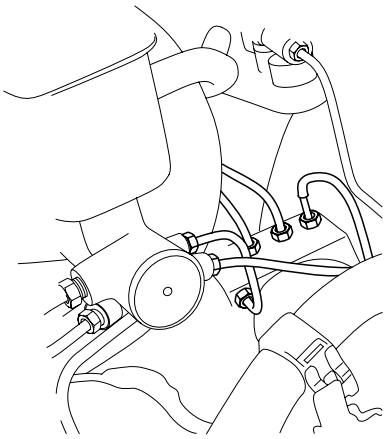

SCMBR6030D

4. Disconnect the HECU connector.

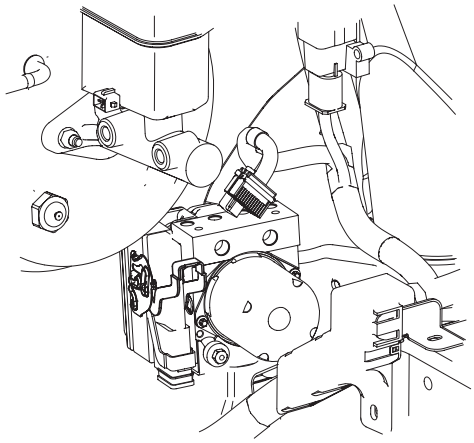

SCMBR6031D

5. Remove the HECU by loosening the bracket mounting bolts.

Tightening torque Nm (kgf.m, lb-ft):
16.7 ~ 25.5 (1.7 ~ 2.6, 12.3 ~ 18.8)

CAUTION

- ***Never attempt to disassemble the HECU.***
- ***The HECU must be protected during storage and transport, and must not be subjected to excessive shock.***

INSTALLATION ED22ACCD

1. Installation is the reverse of removal.

2. After installation, bleed the brake system. (Refer to ABS bleeding)

FRONT WHEEL SPEED SENSOR

COMPONENTS EB05B232

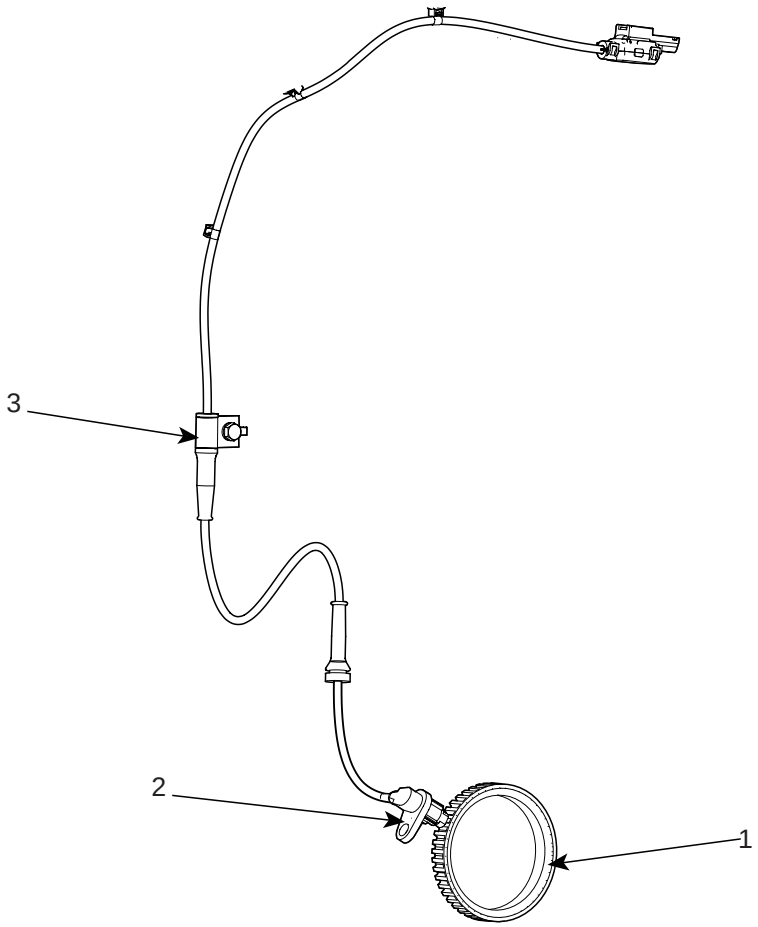

1. Tone wheel
2. Front wheel speed sensor
3. Sensor cable bracket

SCMBR6578L

INSPECTION E7C860B4

1. Measure the output voltage between the terminal of the wheel speed sensor and the body ground.

CAUTION

In order to protect the wheel speed sensor, when measuring output voltage, a 75Ω resistor must be used as shown.

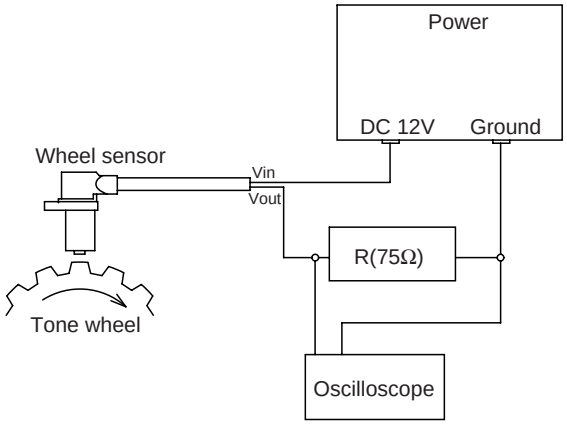

EJRF501Z

2. Compare the change of the output voltage of the wheel speed sensor to the normal change of the output voltage as shown below.

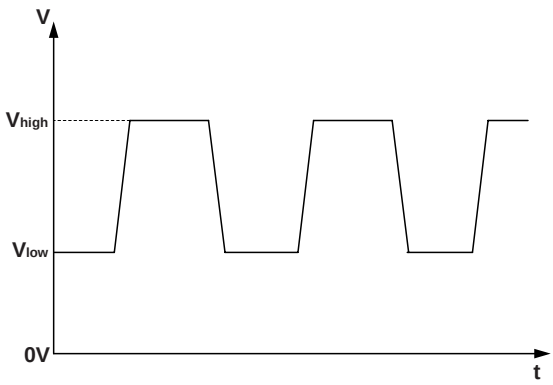

KJQE260B

- V_low : 0.44 V ~ 0.63 V
- V_high : 0.885 V ~ 1.26 V
- Frequency range : 1~2,500 Hz

REAR WHEEL SPEED SENSOR

COMPONENTS EF1FCFDB

1. Rear wheel speed sensor connector
2. Rear wheel speed sensor
3. Sensor cable bracket

SCMBR6579L

INSPECTION EC6A680F

1. Measure the output voltage between the terminal of the wheel speed sensor and the body ground.

CAUTION

In order to protect the wheel speed sensor, when measuring output voltage, a 75Ω resistor must be used as shown.

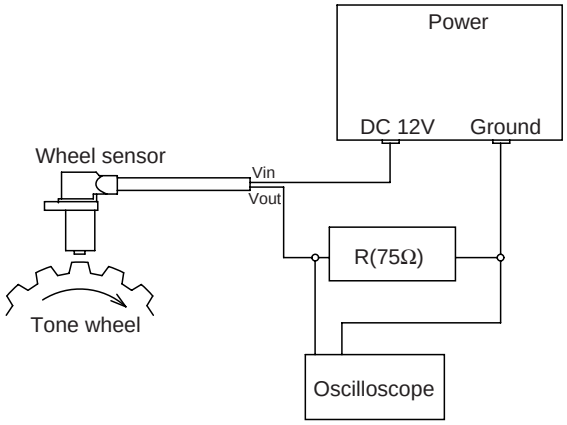

EJRF501Z

2. Compare the change of the output voltage of the wheel speed sensor to the normal change of the output voltage as shown below.

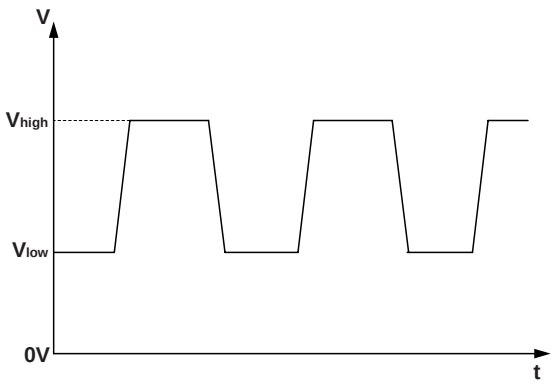

KJQE260B

- V_low : 0.44 V ~ 0.63 V
- V_high : 0.885 V ~ 1.26 V
- Frequency range : 1~2,500 Hz

EBD (ELECTRONIC BRAKE-FORCE DISTRIBUTION)

DESCRIPTION E747F93F

The EBD system (Electronic Brake force Distribution) as a sub-system of the ABS system is to control the effective adhesion utilization by the rear wheels.

It further utilizes the efficiency of highly developed ABS equipment by controlling the slip of the rear wheels in the partial braking range.

The brake force is moved even closer to the optimum and controlled electronically, thus dispensing with the need for the proportioning valve.

The proportioning valve, because of a mechanical device, has limitations to achieve an ideal brake force distribution tothe rear wheels as well as to carry out the flexible brake force distribution proportioning to the vehicle load or weight increasing. And in the event of malfunctioning, driver cannot notice whether it fails or not.

EBD controlled by the ABS Control Module, calculates the slip ratio of each wheel at all times and controls the brake pressure of the rear wheels not to exceed that of the front wheels.

If the EBD fails, the EBD warning lamp (Parking brake lamp) lights up.

ADVANTAGES

- Function improvement of the base-brake system.
- Compensation for the different friction coefficients.
- Elimination of the proportioning valve.
- Failure recognition by the warning lamp.

COMPARISON BETWEEN PROPORTIONING VALVE AND EBD

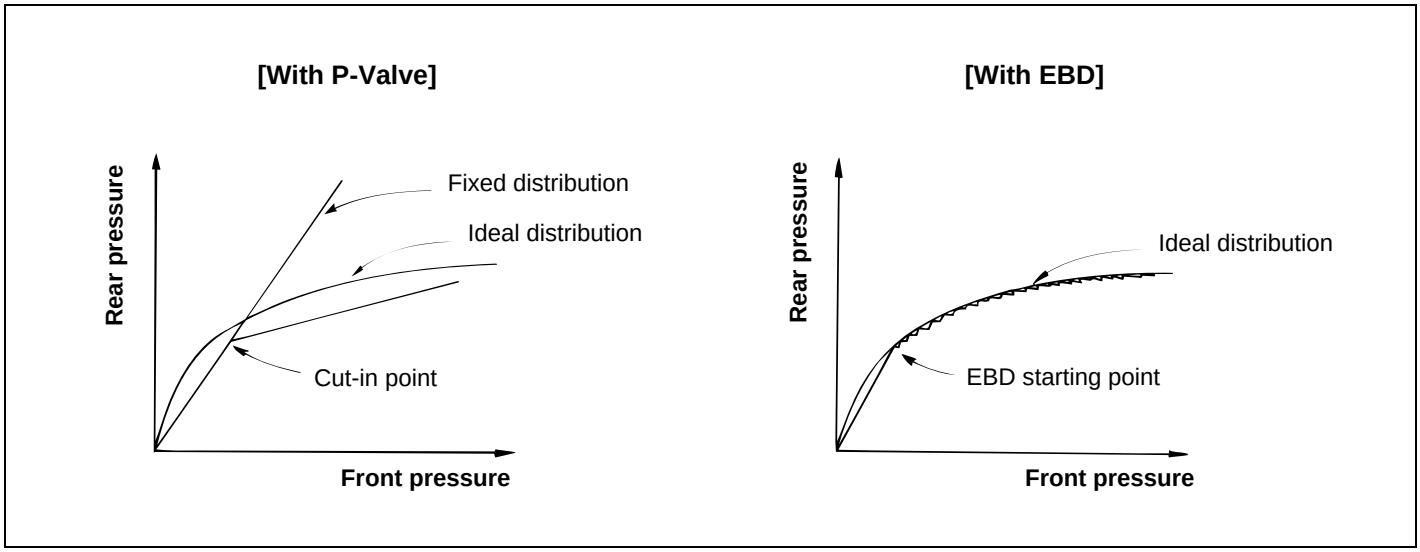

EJA0032A

ESP/ESC SYSTEM

DESCRIPTION OF ESP E1A8FE6B

Optimum driving safety now has a name : ESP, the Electronic Stability Control.

ESP recognizes critical driving conditions, such as panic reactions in dangerous situations, and stabilizes the vehicle by wheel-individual braking and engine control intervention with no needfor actuating the brake or the gas pedal.

ESP adds a further function known as Active Yaw Control (AYC) to the ABS, TCS, EBD and ESP functions. Whereas the ABS/TCS function controls wheel slip during braking and acceleration and, thus, mainly intervenes in the longitudinal dynamics of the vehicle, active yaw control stabilizes the vehicle about its vertical axis.

This is achieved by wheel individual brake intervention and adaptation of the momentary engine torque with no need for any action to be taken by the driver.

ESC essentially consists of three assemblies : the sensors, the electronic control unit and the actuators.

Of course, the stability control feature works under all driving and operating conditions. Under certain driving conditions, the ABS/TCS function can be activated simultaneously with the ESP function in response to a command by the driver.

In the event of a failure of the stability control function, the basic safety function, ABS, is still maintained.

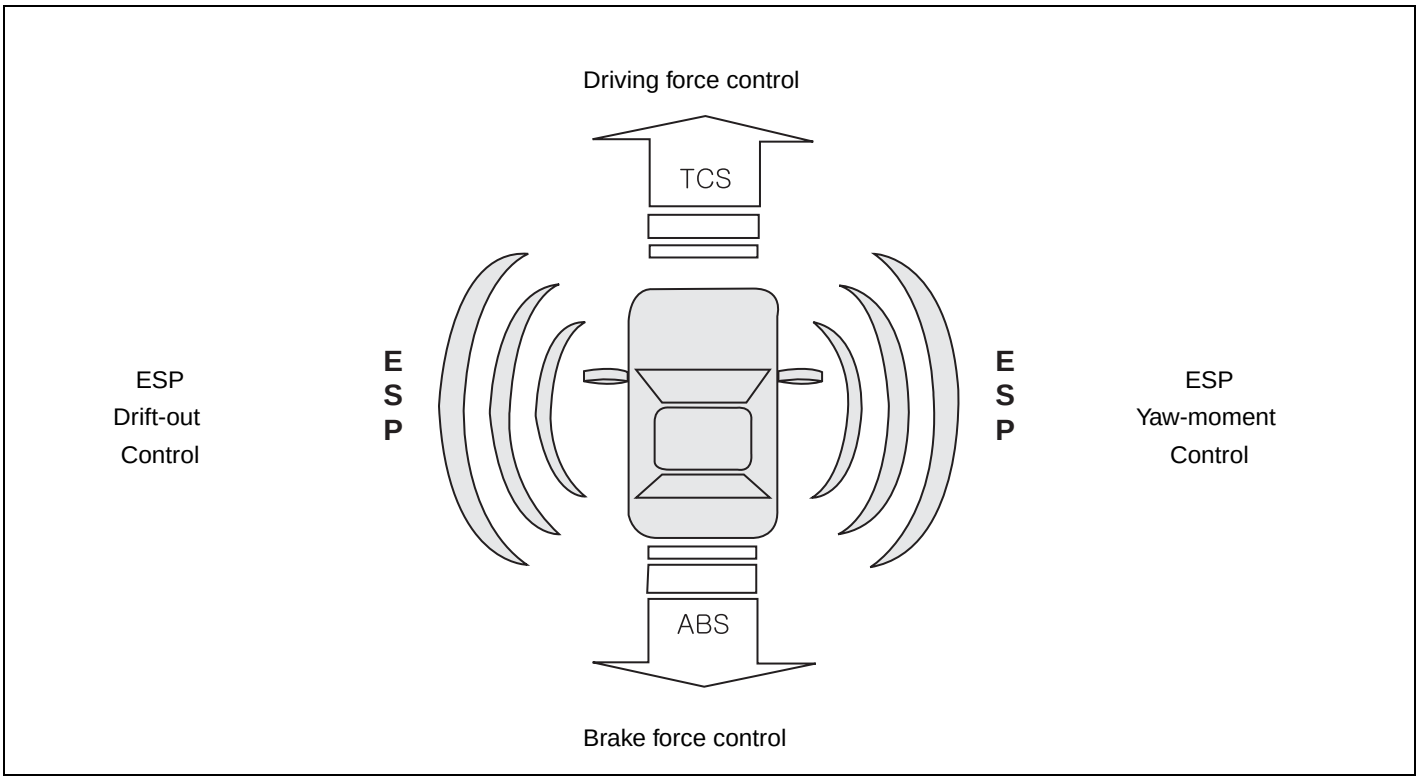

LJCD201A

DESCRIPTION OF ESP CONTROL

ESP system includes ABS/EBD, TCS and AYC (Active yaw control) function.

ABS/EBD function : The ECU changes the active sensor signal (current shift) coming from the four wheel sensors to the square waveform.By using the input of above signals, the ECU calculates the vehicle speed and the acceleration & deceleration of the four wheels.And, the ECU judges whether the ABS/EBD should be actuated or not.

TCS function prevents the wheel slip of drive direction by adding the brake pressure and engine torque reduction via CAN communication.TCS function uses the wheel speed sensor signal to determine the wheel slip as far as ABS function.

AYC function prevents unstable maneuver of the vehicle. To determine the vehicle maneuver, AYC function uses the maneuver sensor signals(Yaw Rate Sensor, Lateral Acceleration Sensor, Steering Wheel Angle Sensor).If vehicle maneuver is unstable (Over Steer or Under Steer), AYC function applies the brake pressure on certain wheel, and send engine torque reduction signal by CAN.

After the key-on, the ECU continually diagnoses the system failure. (self-diagnosis)If the system failure is detected, the ECU informs driver of the system failure through the BRAKE/ABS/ESP warning lamp. (fail-safe warning)

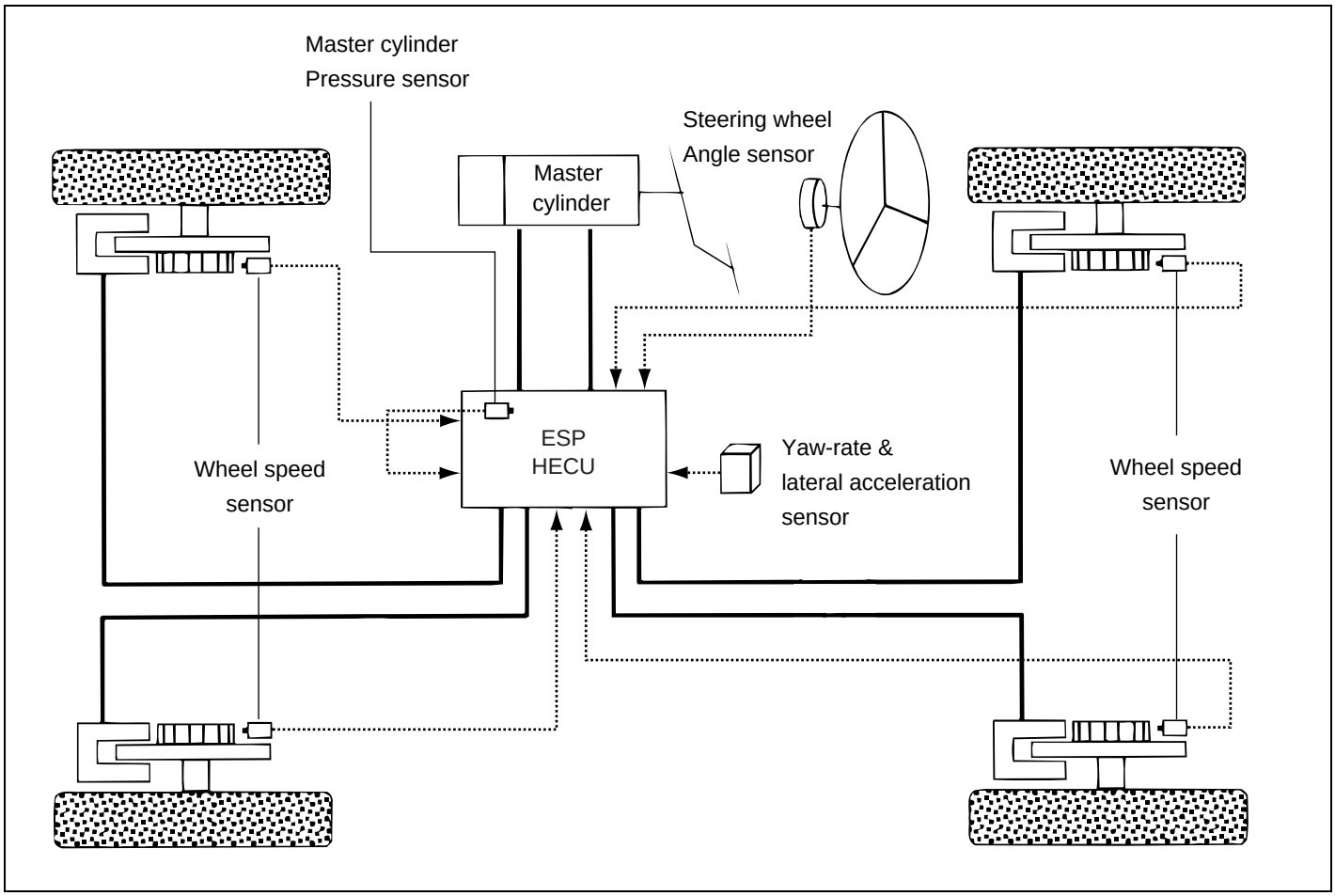

EJRF502K

VARIANT CODING

The HECU is programmed with a variant code based on the vehicle powertrain configuration. This variant code is used to determine the appropriate ESP calculations. Variant code programming should be performed whenever an HECU is replaced.

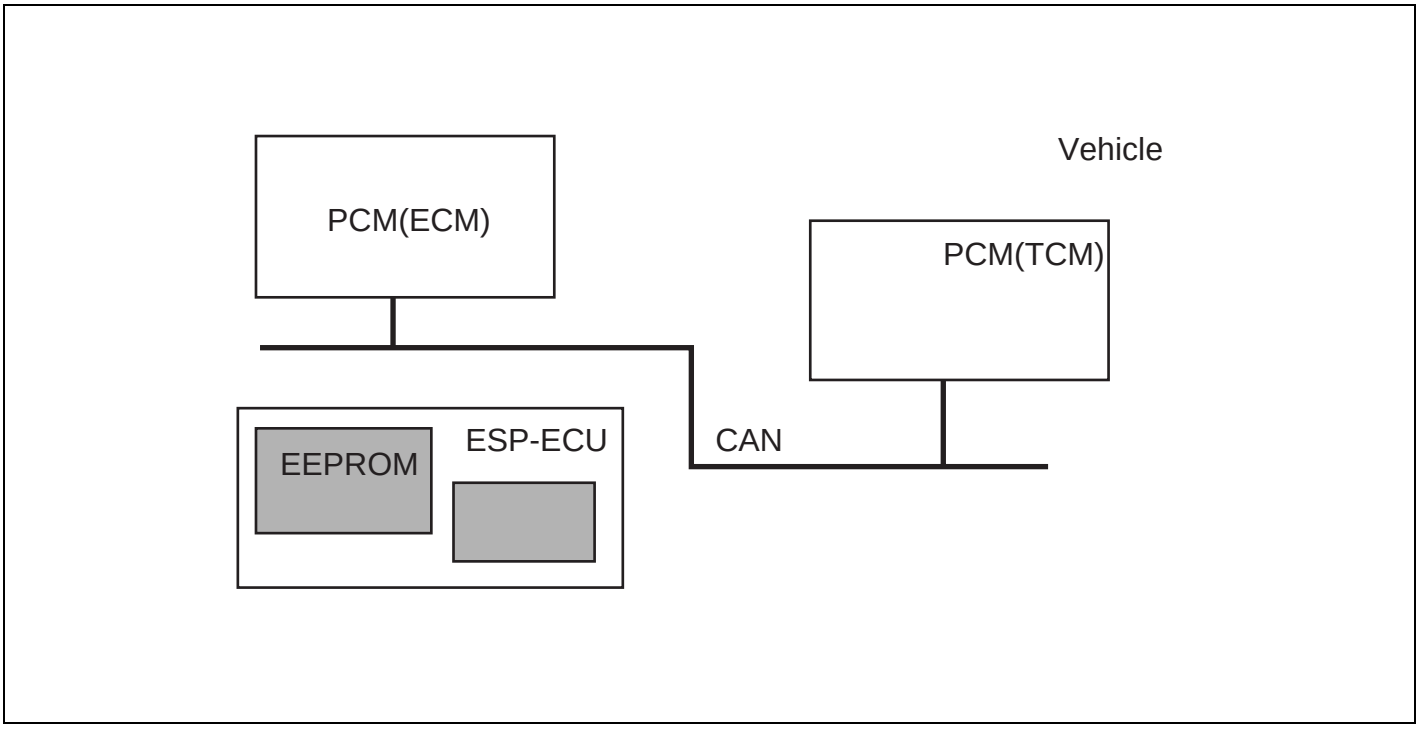

LJKG500Y

PROCEDURE OF VARIANT CODING

1. Install a PCM(ECM & TCM)/ESP normally.
2. Connect the scan tool to the data link connector located underneath the dash panel.
3. Select vehicle name.
4. Select ANTI-LOCK BRAKE SYSTEM.
5. Select the variant coding.

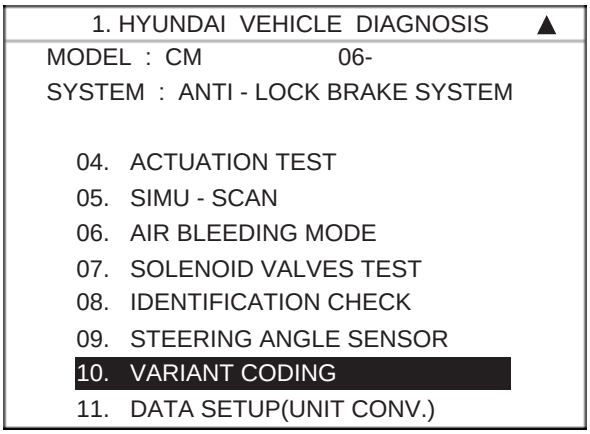

SCMBR6580L

6. Follow the next procedure according to the comment .

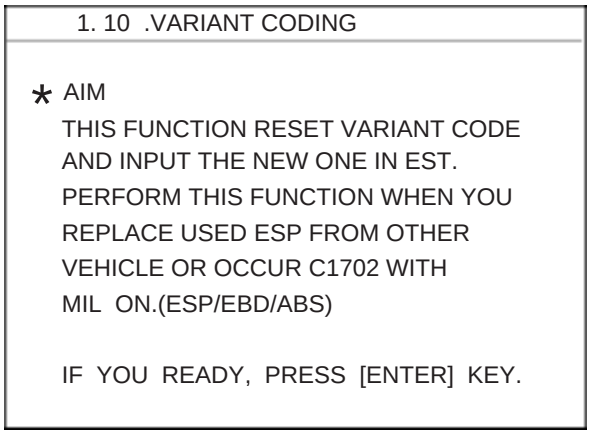

EJBF505O

7. Confirm the condition , and then push the "REST".

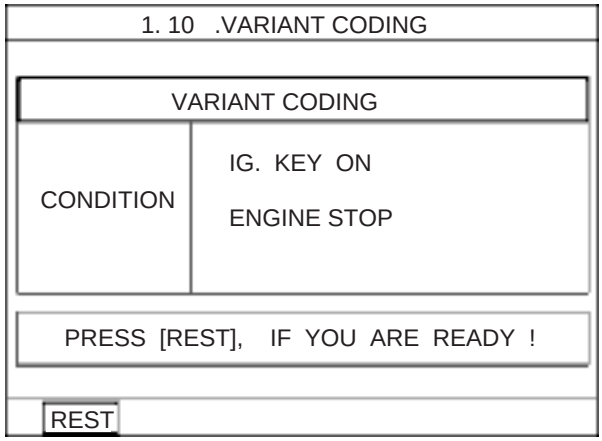

EJRF703J

8. If the procedure is finished, the screen is displayed as shown below.

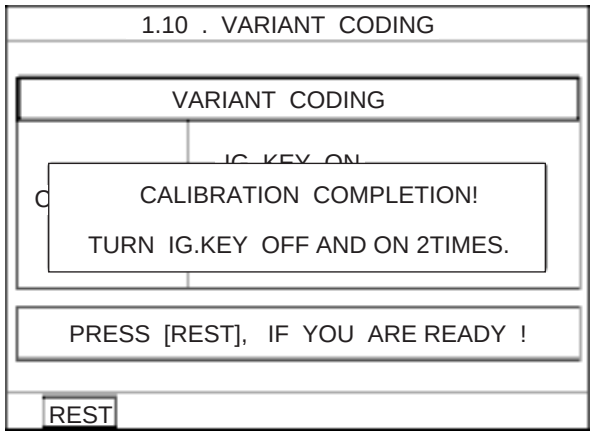

EJRF703K

9. IGN off.
10. IGN on.
11. The variant coding is completed.

CAUTION

If the warning lamp(ESP, EBD, ABS) is illuminated, follow the "Variant coding" again.

INPUT AND OUTPUT DIAGRAM

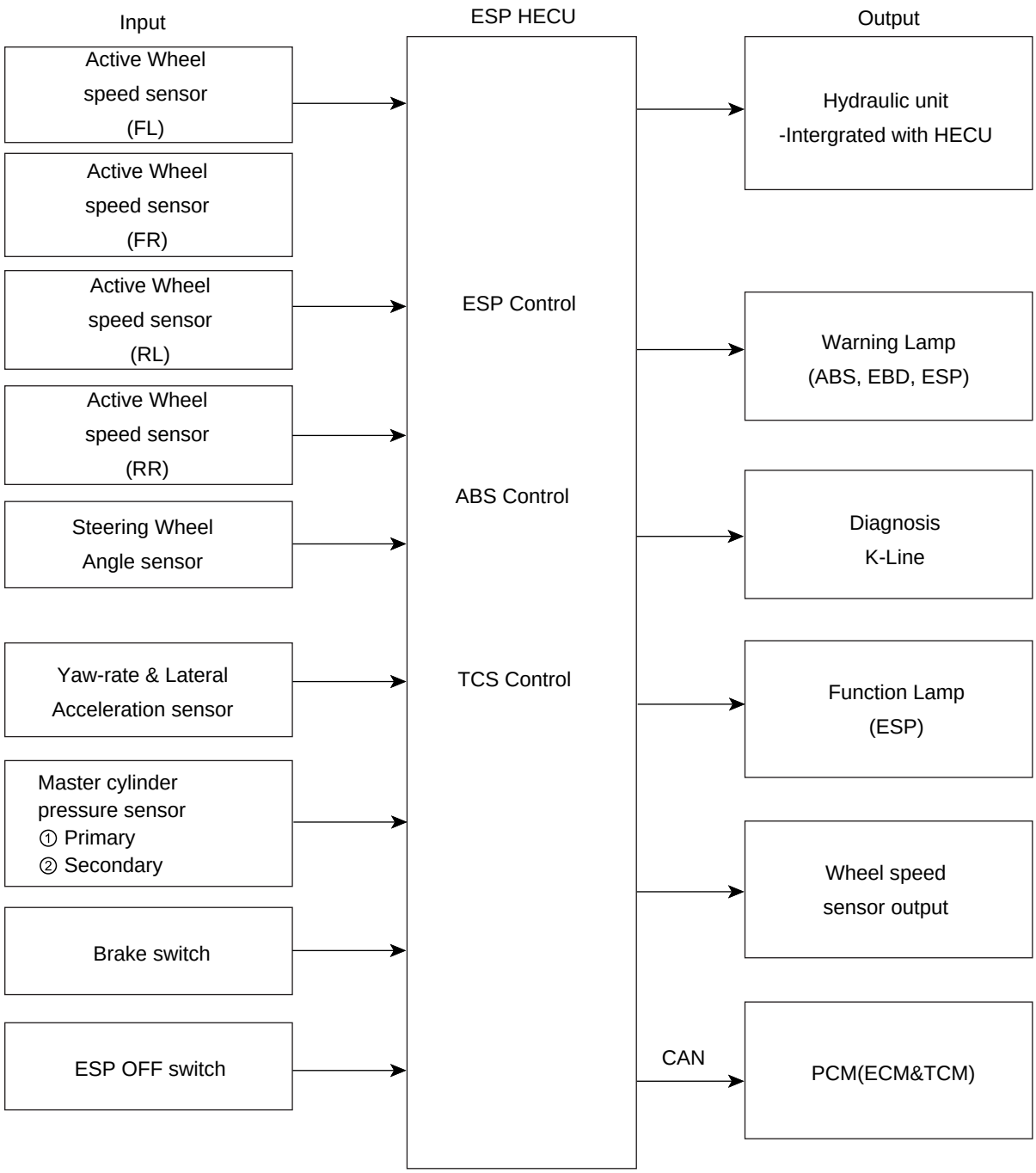

LJKG500X

ESP OPERATION MODE EA2472C6

1. STEP 1
   The ESP analyzes the intention of the driver.

Position of steering wheel
+ Vehicle speed
+ Acceleration pedal

→ ECU decides the intention of the driver.

EJRF502B

2. STEP 2
   It analyzes the movement of the ESP vehicle.

Vehicle rotation speed
+ Operated power to the side

→ ECU decides movement of the ESP vehicle.

EJRF502C

3. STEP 3
   he HECU calculates the required strategy, then actuates the appropriate valves and sents torque control requests via CAN to maintain vehicle stability.

ESP OPERATION MODE

1. ESP Non-operation-Normal braking.

	Inlet valve(EV)	Outlet valve(AV)	Pilot valve(USV)	High pressure switch valve(HSV)	Pump motor
Normal braking	Open	Close	Open	Close	OFF

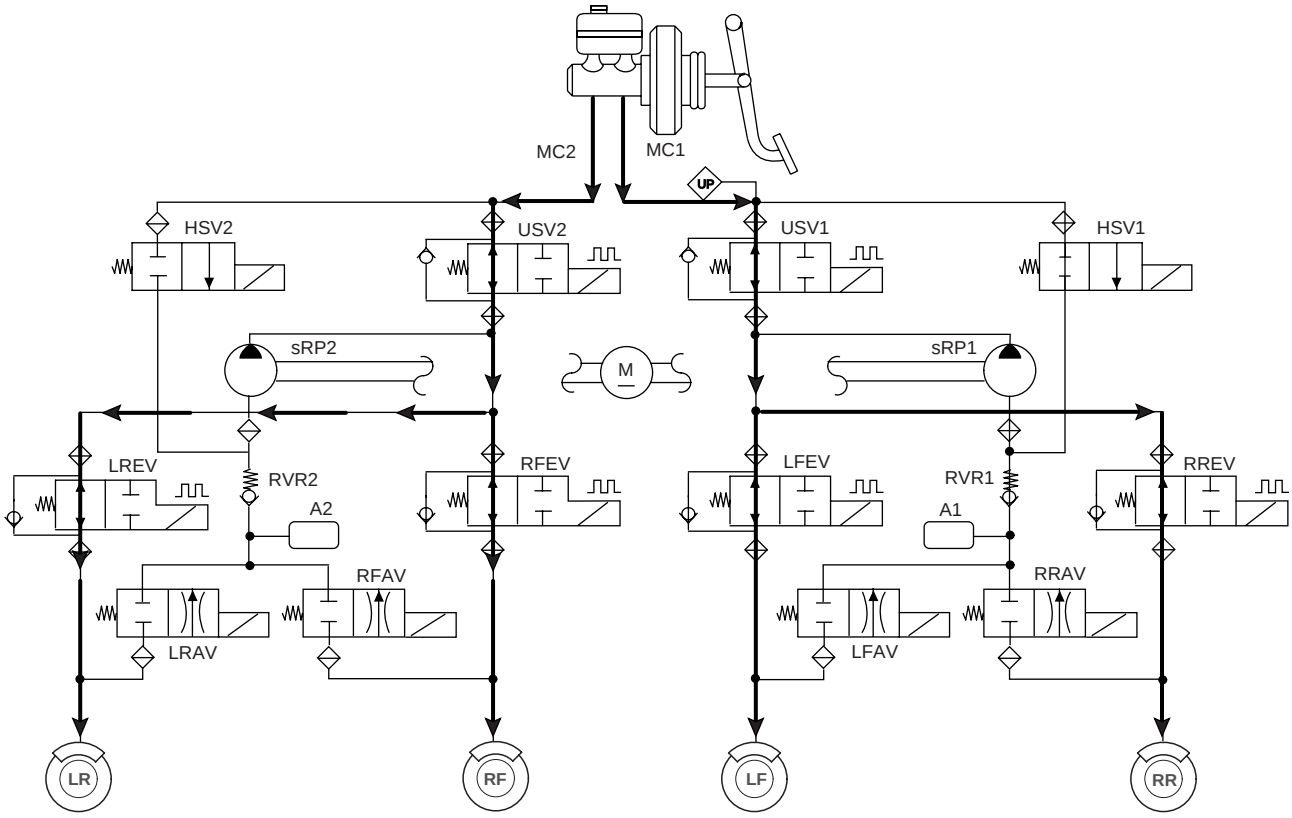

EJRF703R

NOTE

EV : Inlet Valve
AV : Outlet Valve
LR : Rear left wheel
RF : Front right wheel
LF : Front left wheel
RR : Rear right wheel
PE : Pump motor
USV : Pilot Valve
HSV : High pressure Switch Valve

2. ESP INCREASE MODE

	Inlet valve(EV)	Outlet valve(AV)	Pilot valve(USV)	High pressure switch valve(HSV)	Pump motor
Normal braking	Open	Close	Close(Partial)	Open	ON(Motor speed control)

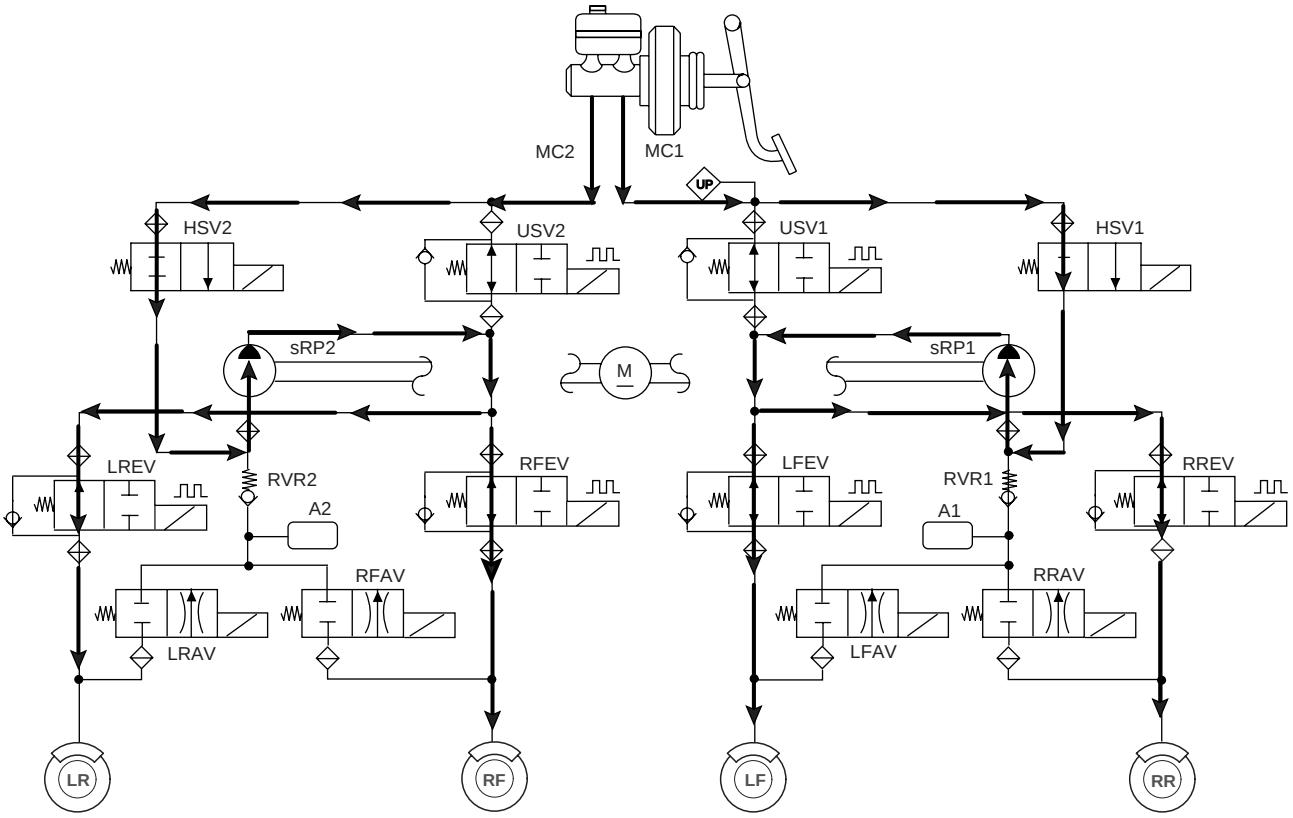

EJRF703S

NOTE

EV : Inlet Valve
AV : Outlet Valve
LR : Rear left wheel
RF : Front right wheel
LF : Front left wheel
RR : Rear right wheel
PE : Pump motor
USV : Pilot Valve
HSV : High pressure Switch Valve

3. ESP HOLD MODE (FR is only controlled.)

	Inlet valve(EV)	Outlet valve(AV)	Pilot valve(USV)	High pressure switch valve(HSV)	Pump motor
Normal braking	Close	Close	Close(Partial)	Open	ON(Motor speed low control)

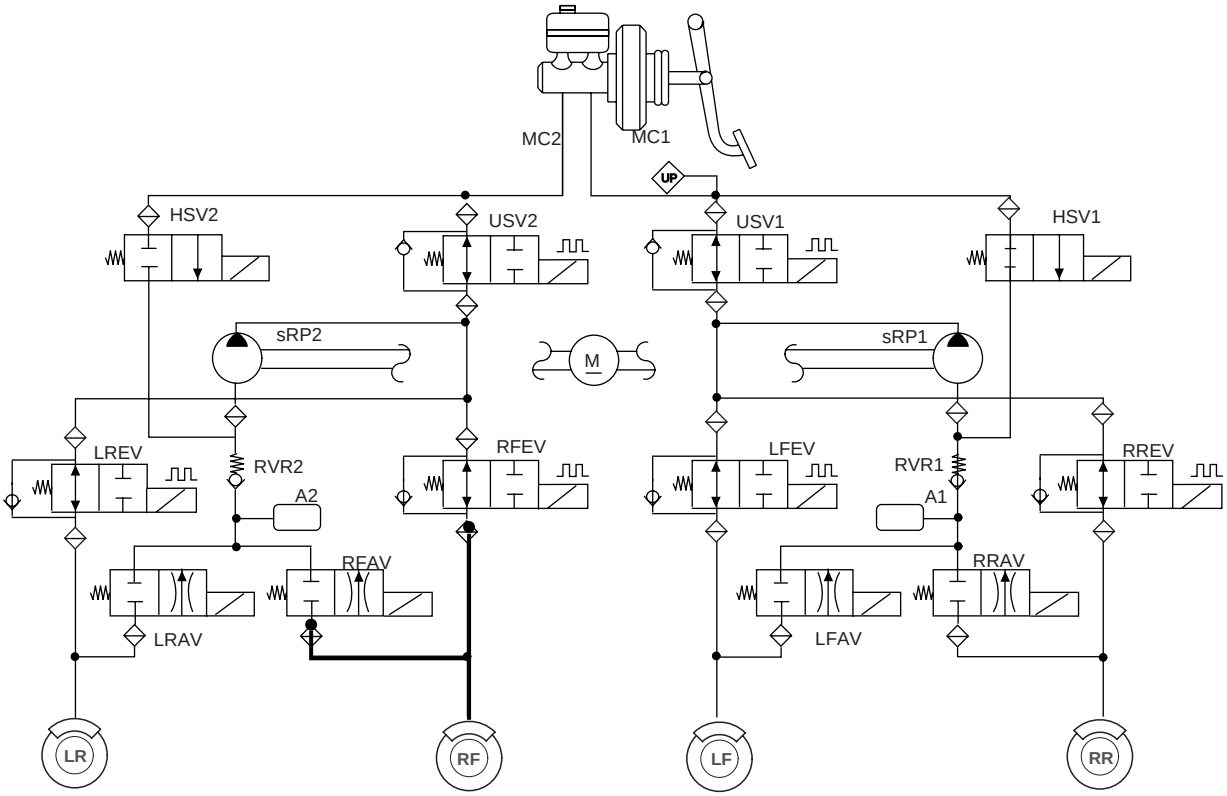

KJRE501N

NOTE

EV : Inlet Valve
AV : Outlet Valve
LR : Rear left wheel
RF : Front right wheel
LF : Front left wheel
RR : Rear right wheel
PE : Pump motor
USV : Pilot Valve
HSV : High pressure Switch Valve

4. ESP DECREASE MODE (FR is only controlled)

	Inlet valve(EV)	Outlet valve(AV)	Pilot valve(USV)	High pressure switch valve(HSV)	Pump motor
Normal braking	Close	Open	Close(Partial)	Open	ON(Motor speed low control)

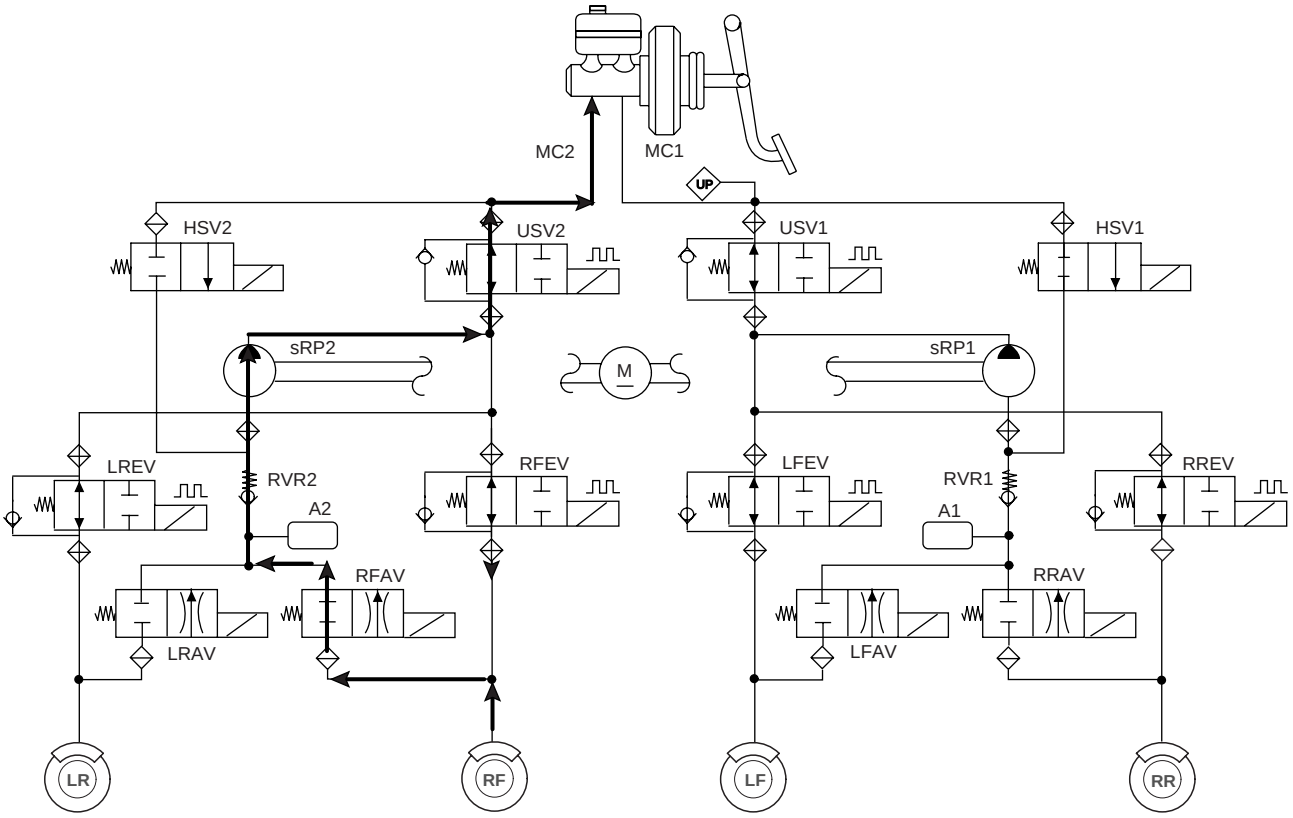

EJRF703T

NOTE

EV : Inlet Valve
AV : Outlet Valve
LR : Rear left wheel
RF : Front right wheel
LF : Front left wheel
RR : Rear right wheel
PE : Pump motor
USV : Pilot Valve
HSV : High pressure Switch Valve

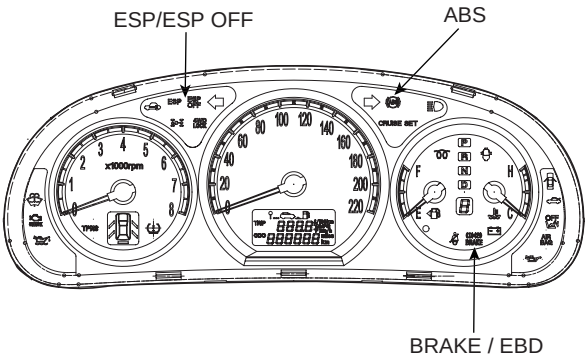

SCMBR6034D

ABS WARNING LAMP MODULE

The active ABS warning lamp module indicates the self-test and failure status of the ABS .The ABS warning lamp shall be on:

- During the initialization phase after IGN ON. (continuously 3 seconds).
- In the event of inhibition of ABS functions by failure.
- During diagnostic mode.
- When the ECU Connector is seperated from ECU.

EBD/PARKING BRAKE WARNING LAMP MODULE

The active EBD warning lamp module indicates the self-test and failure status of the EBD. However, in case the Parking Brake Switch is turned on, the EBD warning lamp is always turned on regardless of EBD functions. The EBD warning lamp shall be on:

- During the initialization phase after IGN ON. (continuously 3 seconds).
- When the Parking Brake Switch is ON or brake fluid level is low.
- When the EBD function is out of order .
- During diagnostic mode.
- When the ECU Connector is seperated from ECU.

ESP WARNING LAMP (ESP SYSTEM)

The ESP warning lamp indicates the self-test and failure status of the ESP.
The ESP warning lamp is turned on under the following conditions :

- During the initialization phase after IGN ON. (continuously 3 seconds).
- In the event of inhibition of ESP functions by failure.
- When driver turn off the ESP function by on/off switch.
- During diagnostic mode.

ESC FUNCTION LAMP (ESC SYSTEM)

The ESP function lamp indicates the self-test and operating status of the ESP.
The ESP Function lamp operates under the following conditions :

- During the initialization phase after IGN ON. (continuously 3 seconds).
- When the ESP control is operating. (Blinking - 2Hz)

ESP ON/OFF SWITCH (ESP SYSTEM)

The ESP On/Off Switch shall be used to toggle the ESP function between On/Off states based upon driver input.
The On/Off switch shall be a normally open, momentary contact switch.
Initial status of the ESP function is on and the switch is used to request an ESC status change.

COMPONENTS EED5CF6E

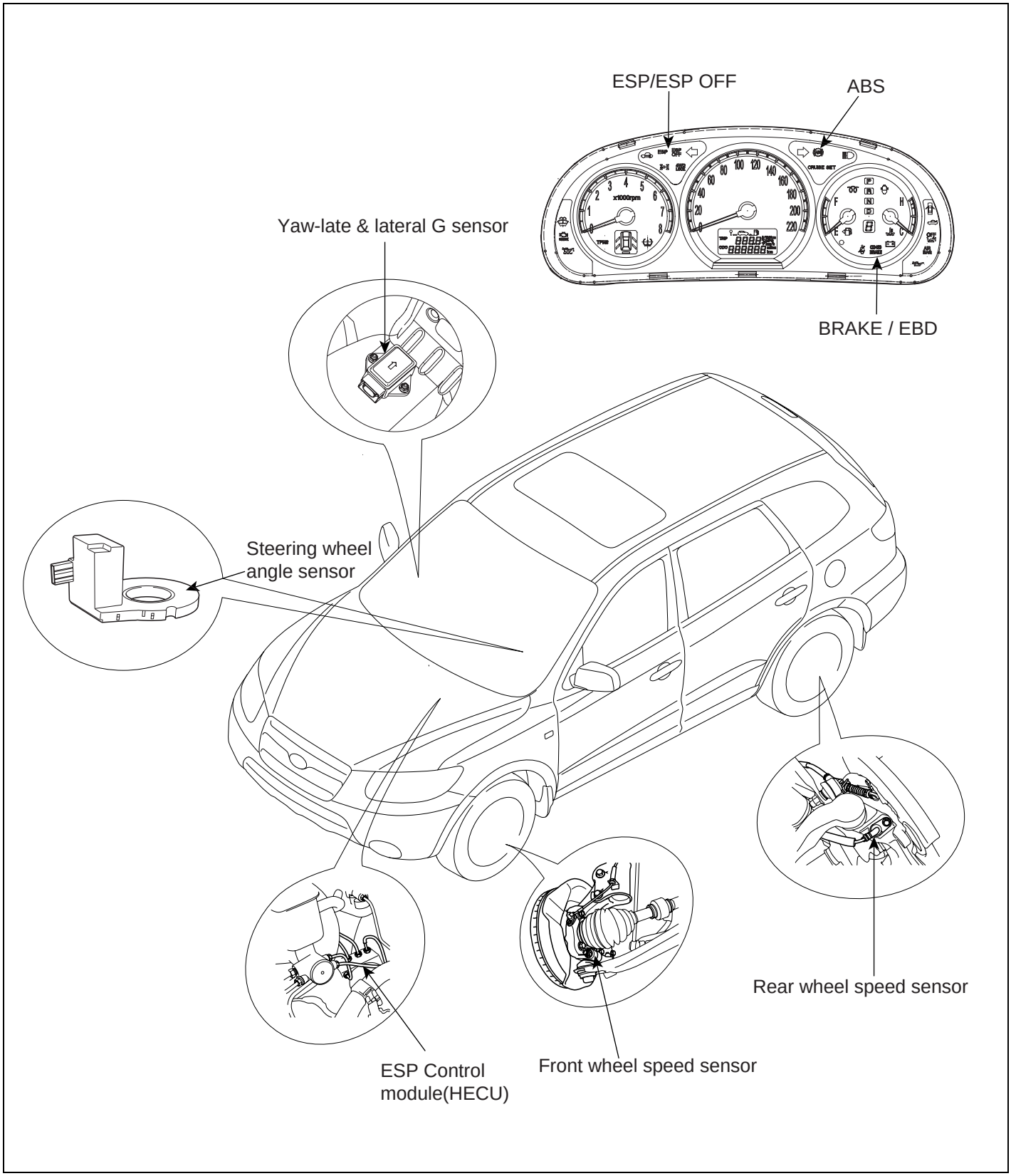

SCMBR6581L

ESP CIRCUIT DIAGRAM(1) EF9B79A4

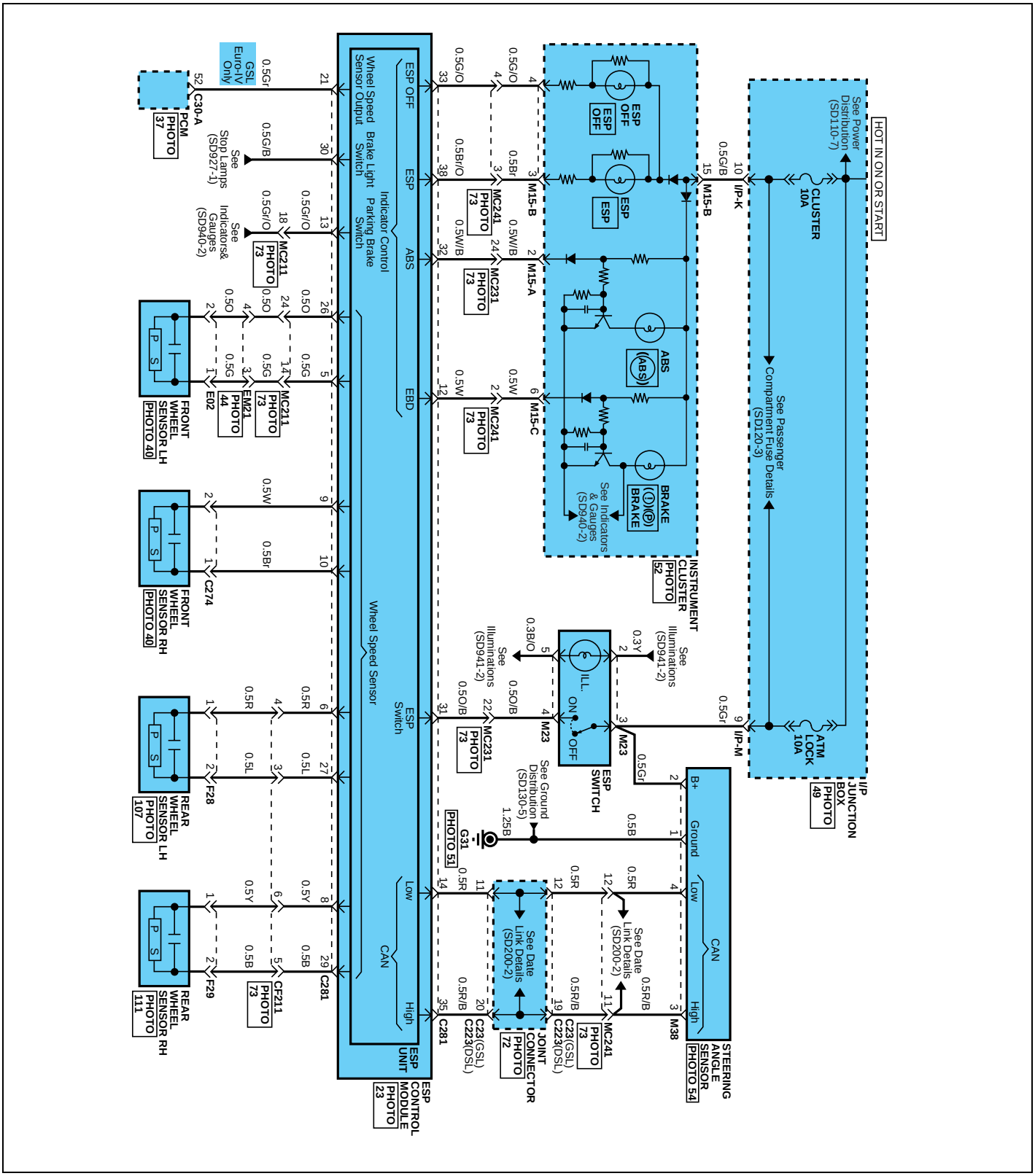

SCMBR6582L

ESP CIRCUIT DIAGRAM(2)

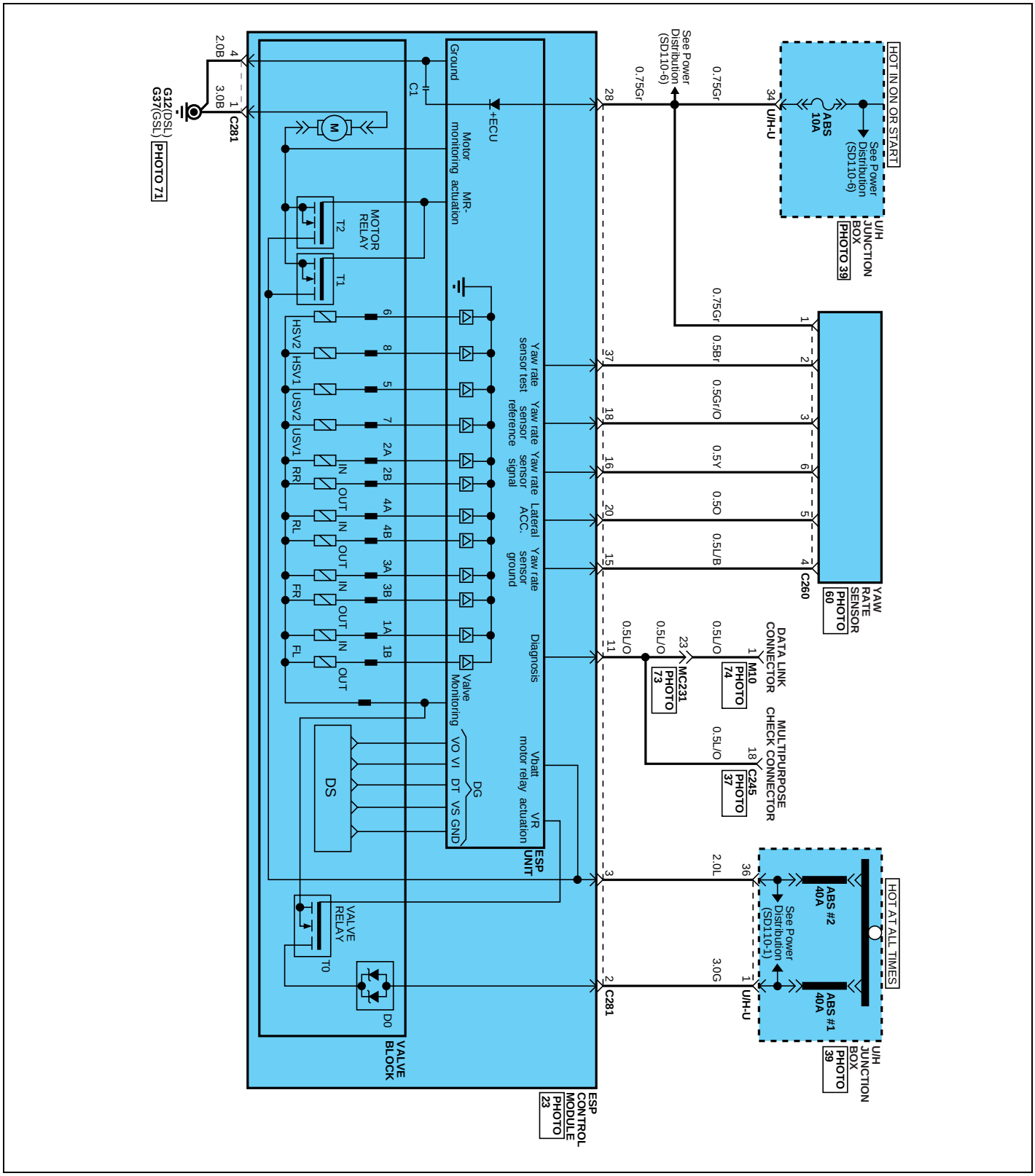

SCMBR6583L

ESP HECU CONNECTOR INPUT / OUTPUT

ECE97D81

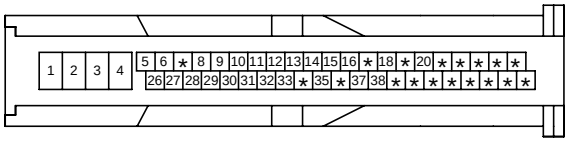

C281(DSL)

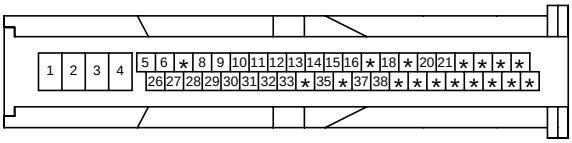

C281(GSL)

SCMBR6584L

Connector Terminal		Specifications	Conditions
No	Description		
1	Ground(Pump)	Current range : Min-10 A Max-20 ~ 39 A	Always
4	Ground(Valve,ECU)	Current range : Min-2.5 A Max-5 ~ 15 A	Always
2	Supply voltage(Pump)	Battery voltage	Always
3	Supply voltage(Valve)		
26	Wheel sensor voltage(FL)	Battery voltage	IG ON
9	Wheel sensor voltage(FR)		
6	Wheel sensor voltage(RL)		
8	Wheel sensor voltage(RR)		
5	Wheel sensor signal(FL)	Voltage(High) : 0.89~1.26 V Voltage(Low) : 0.44~0.63 V	RUNNING
10	Wheel sensor signal(FR)		
27	Wheel sensor signal(RL)		
29	Wheel sensor signal(RR)		
11	Diagnosis Input/oupput	Voltage(High) : 0.8 * IG ON more Voltage(Low) : 0.2 * IG ON lower	SCAN TOOL Communication
28	Ignition	Battery voltage	KEY ON/OFF
31	ESP Passive switch	Voltage(High) : 0.6 * IG ON more Voltage(Low) : 0.4 * IG ON lower	Switch ON/OFF
37	Yaw Rate Sensor Test	Voltage(High) : 4.1 V more Voltage(Low) : 1 V lower	IG ON
18	Yaw Rate Sensor Reference	2.464 V ~ 2.536 V	IG ON
16	Yaw Rate Sensor Signal	Offset voltage :2.5 V range : 0.35 V ~ 4.65 V(-100 ~ 100 ° /s)	IG ON
20	Acceleration Sensor Signal	Offset voltage :2.5 V range : 0.35 V ~ 4.65 V(-1.8 g ~ 1.8 g)	IG ON
15	Yaw Rate Sensor Ground	GND LEVEL	Always

Connector Terminal		Specifications	Conditions
No	Description		
35	CAN High	not communicating:2.5 ± 0.5 V communication :	IG ON
14	CAN Low	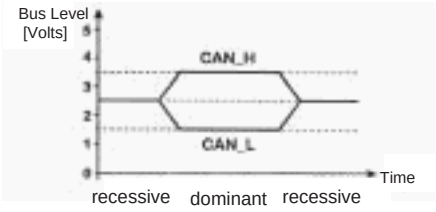 EJRF502L	
30	BRAKE LIGHT SWITCH	voltage(High) : 0.8 * IG ON more voltage(Low) : 0.3 * IG ON lower	BRAKE ON/OFF

FAILURE DIAGNOSIS EB5415C8

1. In principle, ESP and TCS controls are prohibited in case of ABS failure.
2. When ESP or TCS fails, only the failed system control is prohibited.
3. However, when the solenoid valve relay should be turned off in case of ESP failure, refer to the ABS fail-safe.
4. Information on ABS fail-safe is identical to the fail-safe in systems where ESP is not installed.

MEMORY OF FAIL CODE

1. It keeps the code as far as the backup lamp power is connected. (O)
2. It keeps the code as long as the HCU power is on. (X)

FAILURE CHECKUP

1. Initial checkup is performed immediately after the HECU power on.
2. Valve relay checkup is performed immediately after the IG2 ON.
3. It executes the checkup all the time while the IG2 power is on.
4. Initial checkup is made in the following cases.
   1) When no failure is detected
   2) When ABS and ESP are not in control.
   3) Initial checkup is not made after ECU power on.
   4) If the vehicle speed is over 5 mph(8 km/h) when the brake lamp switch is off.
   5) When the vehicle speed is over 24.8 mph(40 km/h).
5. Though, it keeps on checkup even if the brake lamp switch is on.
6. When performing ABS or ESP control before the initial checkup, stop the initial checkup and wait for the HECU power input again.
7. Judge failure in the following cases.
   1) When the power is normal.
   2) From the point in which the vehicle speed reaches 4.9 mph(8 km/h) after HECU power on.

COUNTERMEASURES IN FAIL

1. Shut the system down and perform the following actions and wait for HECU power OFF.
2. Turn the valve relay off.
3. Do not perform any ABS/TCS/ESC functions until normal operating condition is restored.

WARNING LAMP ON

1. ABS warning lamp turns on when ABS is malfunctioning.
2. ESP operation lamp turns on when ESP is malfunctioning.

When power voltage and valve relay voltage are abnormal, input/output related failure judgment is not made.

YAW-RATE SENSOR AND G-SENSOR

DESCRIPTION E22CC1EC

1. The yaw-rate & lateral G sensor is applied for the ESP system.
2. The yaw-rate is the angular velocity, when a vehicle turns a corner, and the lateral G is the acceleration to move a vehicle out of the way when cornering.
3. The sensor is located in the crash pad lower floor on vehicle.

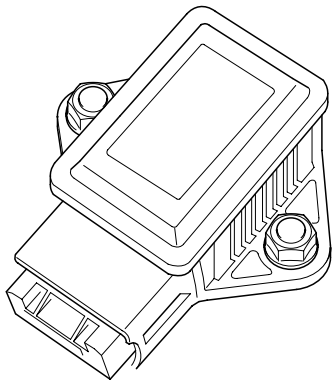

KJRE504E

SPECIFICATION

Description			Specification	Remark
Nominal supply voltage			11.5 ~ 12.5 V	
Supply voltage range			8 ~ 16 V	
Supply current			Max. 120 mA	Typ. 75 mA
Reference Voltage Output			2.464 ~ 2.536 V	Typ. 2.5 V
Operating temperature range			-40 ~ 85℃	
Yaw-late sensor	Measurement range	+w direction, left turn	Min.100 °/s	Typ. 111 °/S
		-w direction, right turn	Min.100 °/s	Typ. 111 °/S
	Non-linearity		-1 ~ 1 %	
	Offset (within life,within operating temperature)		3.75 °/S	
	Upper cut-off frequency		Min. 45 Hz	Typ. 60 Hz
Lateral G sensor	Measurement range	+y direction, left turn	Min.1.8 g	Typ. 2 g
		-y direction, right turn	Min. -1.8 g	Typ. 2 g
	Non-linearity		-4 ~ 4 %	
	Offset (within life,within operating temperature)		-0.09 ~ 0.09 g	
	Upper cut-off frequency		Min. 20 Hz	Typ. 40 Hz

OUTPUT CHARACTERISTIC

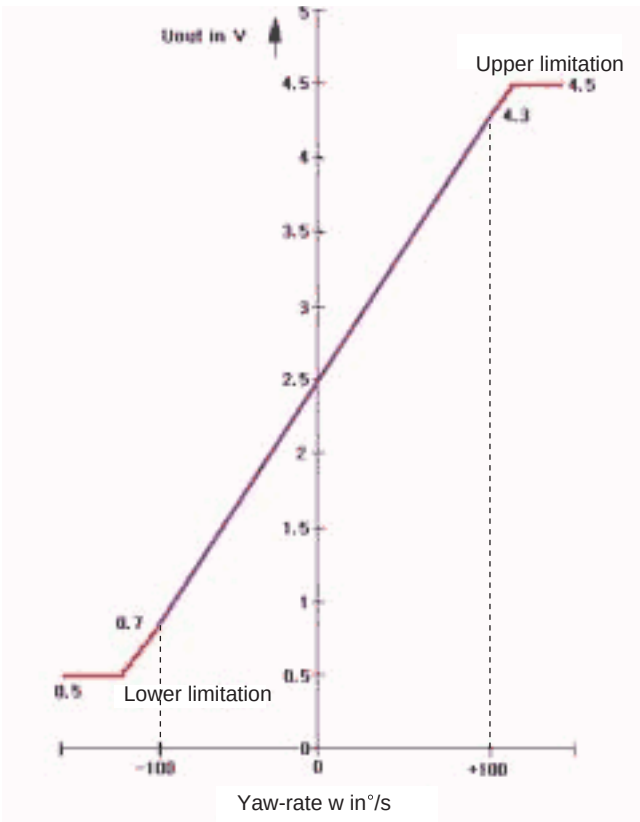

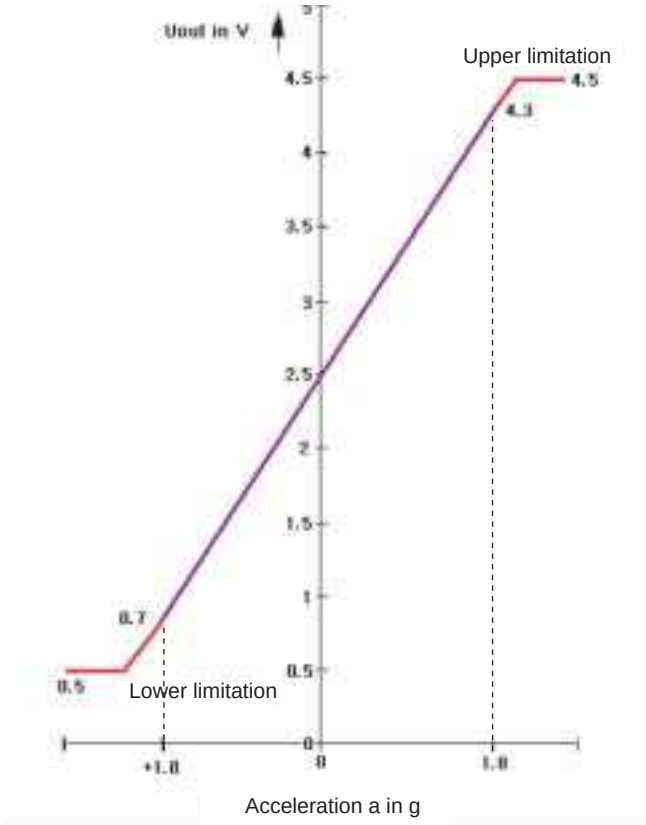

EJRF502E

CIRCUIT DIAGRAM (YAW-RATE & LATERAL G SENSOR)

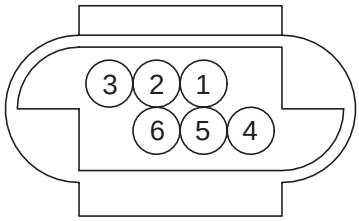

[Yaw-rate & lateral G sensor connector]

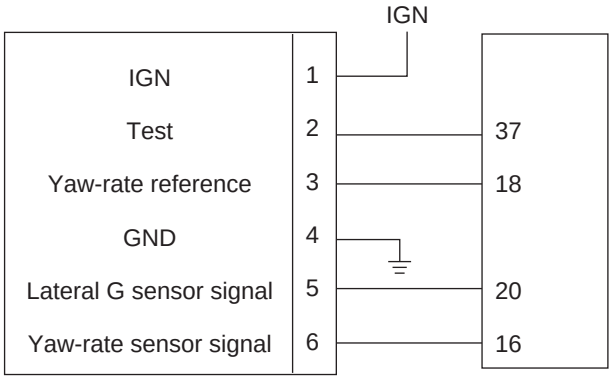

LJKF501B

ESP/ESC SWITCH

DESCRIPTION EA50DA4D

1. The ESP OFF switch is for the user to turn off the ESP system.

2. The ESP OFF lamp is on when ESP OFF switch is engaged.

INSPECTION ECCACCB6

1. Remove the ESP OFF switch from the switch panel on the crach pad of the driver's side.

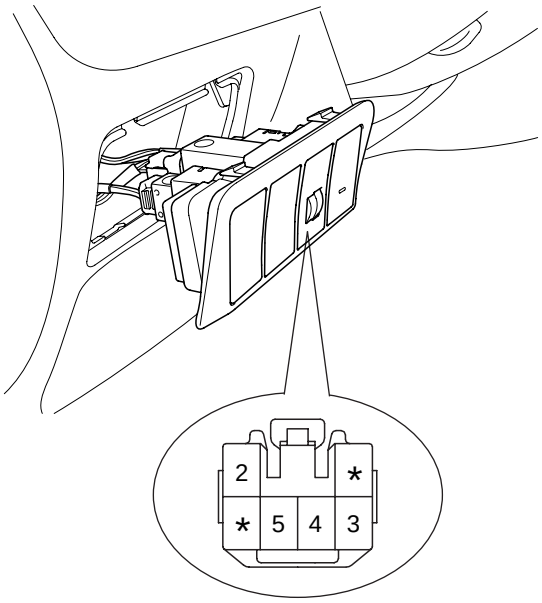

SCMBR6585L

2. Check the continuity between the switch terminals as the ESP OFF switch is engaged. (Refer to circuit diagram)

STEERING WHEEL ANGLE SPEED SENSOR

DESCRIPTION EFE7E8E2

GENERAL DATA

The steering angle speed sensor detects the angle of the steering wheel in order to which direction a user chooses.

MEASUREING PRINCIPLE

A non contact, analog angle sensor carrying out absolute measuring by the use of the Anisotropic-Magneto-Resistive effect (AMR).Measuring of the absolute angle by means of a toothed measuring gear with magnetic properties in combination with different ratios. Corresponding AMR elements that change their electrical resistance according to the magnetic field direction detect the angle position of the measuring gears.A micro-controller decodes the measured voltage signals after A/D converting with the help of a mathematical function. Output of the digital angle value and velocity via CAN-interface.

SPECIFICATION

Description		Specification
Operating voltage		8~16 V
Operating temperature		-40 ~ 85 ℃
Current consumption		Max.150 mA
Steering angle velocity		Max. ±2000 °/sec
Connection delay time		t < 200 ms
Reverse voltage		-13.5 V
Measuring range	Angle	-780 ° ~ 779 °
	Angular velocity	0~ 1016 °/s
Nonlinearity angle		-2.5 ° ~ +2.5 °
Hysteresis angle		0 ° ~ 5 °
Rotational friction torque measuring		10 °/s

CIRCUIT DIAGRAM(STEERING WHEEL SPEED ANGLE SENSOR)

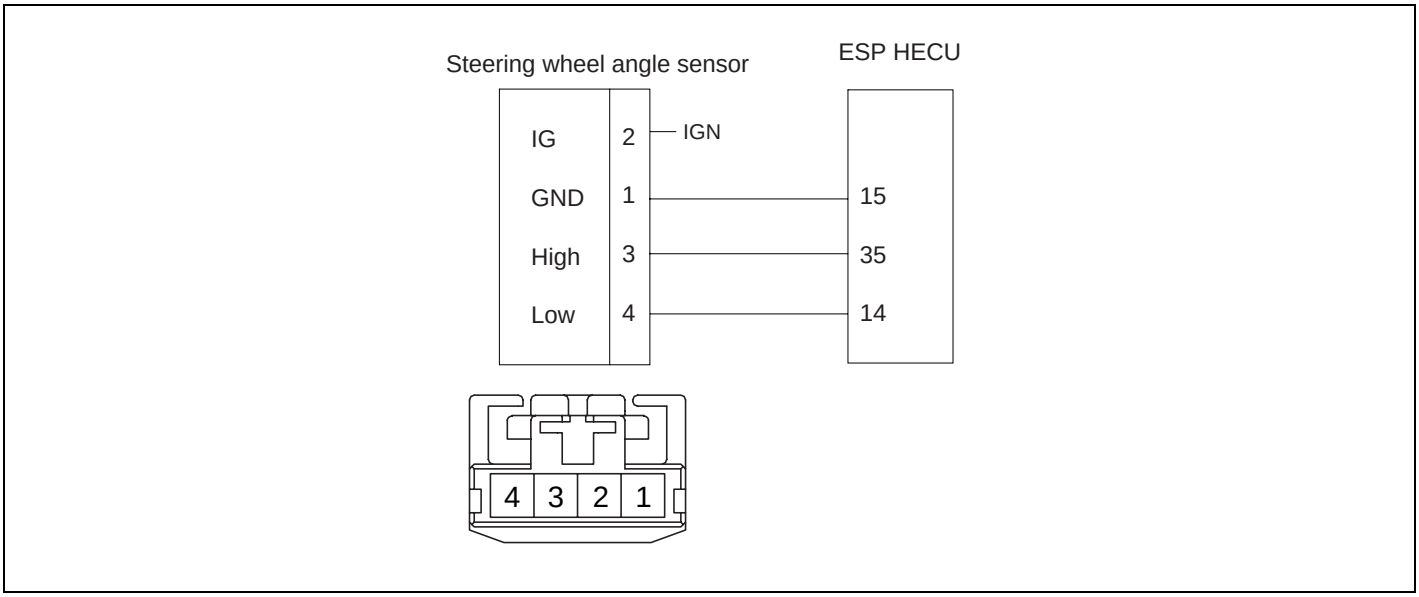

LJKF501E

STEERING ANGLE SENSOR (SAS) CALIBRATION

1. PURPOSE OF calibration
   - On vehicle control, an ESP analyzes the intention of the driver.
   - An ESP recognizes a steering angle which a driver rotates through the steering angle sensor.
   - A steering angle sensor used in ESP adjusts 0° setting of steering wheel through K-line or CAN communication.

2. STEERING ANGLE SENSOR (SAS) CALIBRATION METHOD

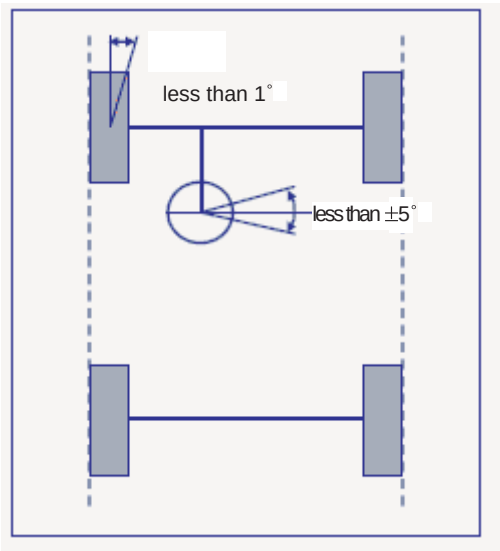

EJRF502J

1) Align the wheel to the straight line. (steering wheel < ± 5°)
   ex) Perform the wheel alignment first.
   Align the wheel to the straight line.
   A driver moves the vehicle to the front and back about 5 meters twice or three times.

2) Connect Scan tool to the vehicle.

3) Select Brake system.

4) Select Steering angle sensor(SAS) calibration.

```
1. HYUNDAI VEHICLE DIAGNOSIS ▲
MODEL : CM          06-
SYSTEM : ANTI - LOCK BRAKE SYSTEM

  01. DIAGNOSTIC TROUBLE CODES
  02. CURRENT DATA
  03. FLIGHT RECORD
  04. ACTUATION TEST
  05. SIMU-SCAN
  06. AIR BLEEDING MODE
  07. IDENTIFICATION CHECK
  08. STEERING ANGLE SENSOR
```

SCMBR6586L

5) Perform the Steering angle sensor(SAS) calibration.

```
1. 9 .STEERING ANGLE SENSOR

* AIM
  THIS FUNCTION RESET THE SAS
  VALVE TO ZERO-SET.
  PERFORM THIS FUNCTION WHEN
  YOU REPLACE SENSOR OR
  STEERING COLUMN.

  IF YOU READY, PRESS [ENTER] KEY.
```

EJRF703M

6) Perform the procedure continuously.

```
1.9 STEERING ANGLE SENSOR

STEERING ANGLE SENSOR
CONDITION | STRAIGHTEN THE FRONT TIRE,
          | AND ARRANGE THE STEERING
          | WHEEL AT THE CENTER
          | POSITION.
          | IG.KEY ON, ENGINE STOP

PRESS [REST], IF YOU ARE READY!

REST
```

EJRF703N

7) The procedure is finished. Push the "ESC" key.

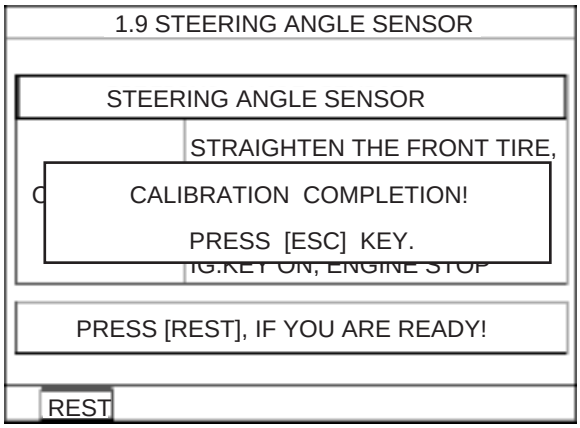

EJRF703O

8) Scanner OFF.

9) Remove the scanner from the vehicle.

10) Confirm the Steering angle sensor(SAS) calibration as driving the vehicle.(turn left once, turn right once)