# Workshop Manual

## Audi A4 1995 ➤, Audi A4 2001 ➤, Audi A4 Cabriolet 2003 ➤, Audi A6 1998 ➤, Audi A8 1994 ➤

Protected by copyright. Copying for private or commercial purposes, in part or in whole, is not permitted unless authorised by AUDI AG. AUDI AG does not guarantee or assume any liability with respect to the correctness of information in this document. Copyright by AUDI AG.

## Servicing automatic gearbox 01V, front-wheel drive and four-wheel drive

Edition 12.2005

# List of Workshop Manual Repair Groups

## Repair Group

00 - Technical data
32 - Torque converter
37 - Controls, housing
38 - Gears, control
39 - Final drive - front differential

Protected by copyright. Copying for private or commercial purposes, in part or in whole, is not permitted unless authorised by AUDI AG. AUDI AG does not guarantee or accept any liability with respect to the correctness of information in this document. Copyright by AUDI AG.

Technical information should always be available to the foremen and mechanics, because their careful and constant adherence to the instructions is essential to ensure vehicle road-worthiness and safety. In addition, the normal basic safety precautions for working on motor vehicles must, as a matter of course, be observed.

All rights reserved.
No reproduction without prior agreement from publisher.

Copyright © 2015 Audi AG, Ingolstadt

# Contents

**00 - Technical data** . . . . . 1
- **1 Repair instructions** . . . . . 1
- 1.1 General repair instructions . . . . . 1
- 1.2 Special tools . . . . . 3
- **2 Rules for cleanliness when working on the automatic gearbox** . . . . . 12
- **3 Frequently occurring faults** . . . . . 13
- 3.1 No power transmitted in any gear . . . . . 13
- 3.2 Gearshift jolts; individual gears slipping; gearshifts take too long . . . . . 14
- 3.3 Gearshift jolts, power transmission problems in 4th and 5th gear . . . . . 15
- 3.4 ATF leaks between engine and gearbox . . . . . 15
- 3.5 Noise while driving (changes with road speed) . . . . . 16

**32 - Torque converter** . . . . . 17
- **1 Torque converter** . . . . . 17
- 1.1 Checking torque converter lock-up clutch . . . . . 17
- 1.2 Draining torque converter . . . . . 19
- 1.3 Checking torque converter . . . . . 19

**37 - Controls, housing** . . . . . 21
- **1 Securing gearbox to assembly stand** . . . . . 21
- **2 Dismantling and assembling planetary gearbox** . . . . . 22
- 2.1 Planetary gearbox - exploded view of components . . . . . 22
- 2.2 Dismantling and assembling planetary gearbox . . . . . 24
- **3 Dismantling and assembling body “I”** . . . . . 55
- 3.1 Body “I” - exploded view of components . . . . . 55
- 3.2 Dismantling body “I” . . . . . 56
- 3.3 Clutch “F” - exploded view of components . . . . . 57
- 3.4 Dismantling and assembling clutch “F” . . . . . 58
- 3.5 Clutch “D/G” with freewheel - exploded view of components . . . . . 61
- 3.6 Dismantling and assembling clutch “D/G” with freewheel . . . . . 63
- 3.7 Planetary drive “III” - exploded view of components . . . . . 72
- 3.8 Dismantling and assembling planetary drive “III” . . . . . 74
- 3.9 Assembling body “I” . . . . . 74
- **4 Dismantling and assembling body “II”** . . . . . 76
- 4.1 Body “II” - exploded view of components . . . . . 76
- 4.2 Dismantling body “II” . . . . . 77
- 4.3 Clutch “B” - exploded view of components . . . . . 78
- 4.4 Dismantling and assembling clutch “B” . . . . . 79
- 4.5 Clutch “A” - exploded view of components . . . . . 83
- 4.6 Dismantling and assembling clutch “A” . . . . . 84
- 4.7 Clutch “E” - exploded view of components . . . . . 89
- 4.8 Dismantling and assembling clutch “E” . . . . . 90
- 4.9 Assembling body “II” . . . . . 95
- **5 Dismantling and assembling clutch “C”** . . . . . 97
- 5.1 Clutch “C” - exploded view of components . . . . . 97
- 5.2 Dismantling and assembling clutch “C” . . . . . 98

**38 - Gears, control** . . . . . 103
- **1 Dismantling and assembling ATF supply unit** . . . . . 103
- 1.1 ATF supply unit - exploded view of components . . . . . 103
- 1.2 Removing and installing complete ATF supply unit (gearbox not dismantled) . . . . . 104
- 1.3 Removing and installing ATF pump in housing of ATF supply unit . . . . . 119

Printed copy and copy on CD-ROM for internal use only. Any other use, in particular for commercial purposes, in part or in whole, is not permitted unless authorised by AUDI AG. AUDI AG does not guarantee or accept any liability with respect to the correctness of the information in this document. Copyright by AUDI AG.

1.4 Removing and installing housing for ATF supply unit and stator shaft . . . . . 123
1.5 Removing and installing stator shaft . . . . . 127
1.6 Renewing oil seal for ATF pump . . . . . 128
**2 Performing servicing work with gearbox installed . . . . . 129**
2.1 Removing and installing valve body . . . . . 129
2.2 Removing and installing internal oil pipe . . . . . 132
2.3 Removing and installing gearbox speed sender G38 / gearbox output speed sender G195 . . . . . 133
2.4 Removing and installing gearbox input speed sender G182 - gearbox with hydraulic control type “E17” . . . . . 134
2.5 Removing and installing gearbox input speed sender G182 - gearbox with hydraulic control type “E18/2” . . . . . 135
2.6 Removing and installing wiring harness in gearbox . . . . . 136
**3 Assessment of wear on gearbox components . . . . . 138**
3.1 Assessment of wear by checking ATF for colour and contamination . . . . . 138
3.2 Clutch “F” . . . . . 138
3.3 Clutch “D/G” with freewheel . . . . . 140
3.4 Planetary drive “III” . . . . . 143
3.5 Clutch “B” . . . . . 145
3.6 Clutch “A” . . . . . 147
3.7 Clutch “E” . . . . . 149
3.8 Clutch “C” . . . . . 152
3.9 ATF supply unit . . . . . 154

## 39 - Final drive - front differential . . . . . 158

**1 Servicing front axle drive and transfer box . . . . . 158**
1.1 Removing and installing transfer box with Torsen differential . . . . . 158
1.2 Front axle drive and transfer box - exploded view of components . . . . . 158
1.3 Renewing oil seal for output flange for propshaft . . . . . 162
1.4 Renewing oil seal in intermediate flange for front axle drive . . . . . 162
1.5 Renewing oil seal in input pinion . . . . . 163
1.6 Renewing needle bearing for spur gear 2 . . . . . 164

Protected by copyright. Copying for private or commercial purposes, in part or in whole, is not permitted unless authorised by AUDI AG. AUDI AG does not guarantee or accept any liability with respect to the correctness of information in this document. Copyright by AUDI AG.

# 00 – Technical data

## 1 Repair instructions

### 1.1 General repair instructions

Proper tools and the maximum possible care and cleanliness are essential for satisfactory gearbox repairs. The usual basic safety precautions also naturally apply when carrying out repair work.

A number of generally applicable instructions for the various repair procedures - which were previously repeated at numerous places in the Workshop Manual - are summarised here. They apply to the work described in this Manual.

Protected by copyright. Copying for private or commercial purposes, in part or in whole, is not permitted unless authorised by AUDI AG. AUDI AG does not guarantee or accept any liability with respect to the correctness of information in this document. Copyright by AUDI AG.

### Gearbox

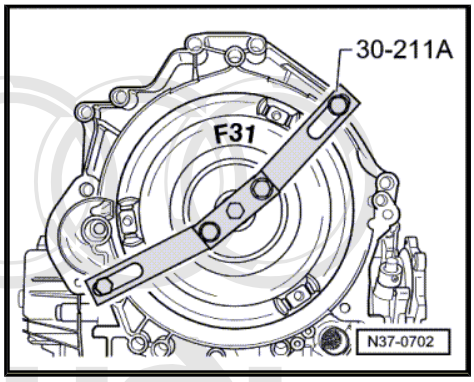


- Rules for cleanliness when working on the automatic gearbox ⇒ page 12 .
- If gearbox has been removed from vehicle, secure torque converter using support bridge -30-211 A- to prevent it from falling out.
- Use only ATF or vaseline on all parts running in ATF. Other lubricants will cause malfunction of the gearbox hydraulics.
- Clean ATF pipes and ATF cooler after performing repairs on the gearbox and renew ATF strainer.
- After installation, check the following fluid levels and top up if necessary: ATF in planetary gearbox ⇒ Automatic gearbox 01V, front-wheel drive and four-wheel drive; Rep. Gr. 37 , gear oil in front final drive ⇒ Automatic gearbox 01V, front-wheel drive and four-wheel drive; Rep. Gr. 39 , gear oil in transfer box ⇒ Automatic gearbox 01V, front-wheel drive and four-wheel drive; Rep. Gr. 39 . Capacities and specifications ⇒ Automatic gearbox 01V, front-wheel drive and four-wheel drive; Rep. Gr. 00 .

Protected by copyright. Copying for private or commercial purposes, in part or in whole, is not permitted unless authorised by AUDI AG. AUDI AG does not guarantee or accept any liability with respect to the correctness of information in this document. Copyright by AUDI AG.

### Procedure if ATF is dirty

If the ATF and related components are very dirty (caused by worn clutch linings):

- Dismantle complete gearbox and clean all parts, renew ATF pipes.
- Dismantle and check all clutches.
- Renew torque converter (cannot be cleaned).
- Renew valve body (cannot be cleaned).
- Clean ATF pipes and ATF cooler and renew ATF strainer.

### O-rings, oil seals and gaskets

- Always install new O-rings, oil seals and gaskets.
- After removing gaskets and seals, always inspect the contact surface on the housing or shaft for burrs resulting from removal or for other signs of damage.
- The open side of the oil seal should face the side containing the fluid.
- Lightly lubricate the outer circumference and sealing lip of oil seals with ATF before installing.
- Lightly lubricate O-rings with ATF or vaseline before inserting to prevent them from getting crushed during assembly.
- Use only ATF or vaseline on all parts running in ATF. Other lubricants will cause malfunction of the gearbox hydraulics.
- When installing a new oil seal, position the seal such that the sealing lip does not contact the shaft in the same place as the old seal (make use of installation depth tolerances).
- Renew paper gaskets, remove previous gaskets completely and clean all sealing surfaces thoroughly.

### Nuts, bolts

- Slacken bolts in reverse sequence to the specified tightening sequence.
- Nuts and bolts which secure covers and housings should be loosened and tightened in diagonal sequence and in stages if no tightening sequence is specified.

- The tightening torques stated apply to non-oiled nuts and bolts.
- Always renew self-locking bolts and nuts.

### Locking elements

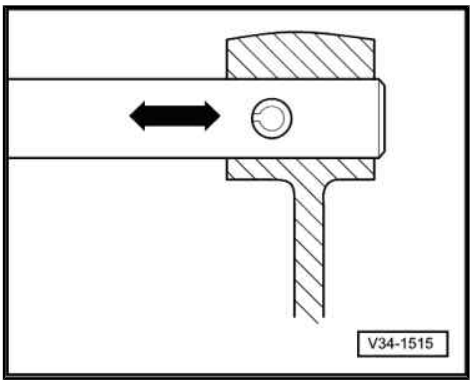


- Do not over-stretch circlips.
- Always renew circlips which have been damaged or over-stretched.
- Circlips must be properly seated in the base of the groove.
- Renew spring pins. Installation position: slot must be in line with direction of force -arrow-.

### Bearings

- Lightly lubricate bearings with ATF before inserting.
- Fit bearings and shims loosely with vaseline only. Other types of lubricant will cause the gearbox hydraulics to malfunction.

### ATF/oil pipes

- The removed oil pipes must always be renewed.
- The oil pipes must be renewed if the gearbox is very dirty.

## 1.2 Special tools

### Special tools

For a complete list of special tools used in this Workshop Manual
⇒ "Workshop equipment and special tools"

Protected by copyright. Copying for private or commercial purposes, in part or in whole, is not permitted unless authorised by AUDI AG. AUDI AG does not guarantee or accept any liability with respect to the correctness of information in this document. Copyright by AUDI AG.

**Special tools and workshop equipment required**

- Support plate -VW 309-
- Measuring bridge -VW 382/7- from measuring tool -VW 382-
- Universal dial gauge bracket -VW 387-
- Thrust plate -VW 401-
- Thrust plate -VW 402-
- Press tool -VW 407-

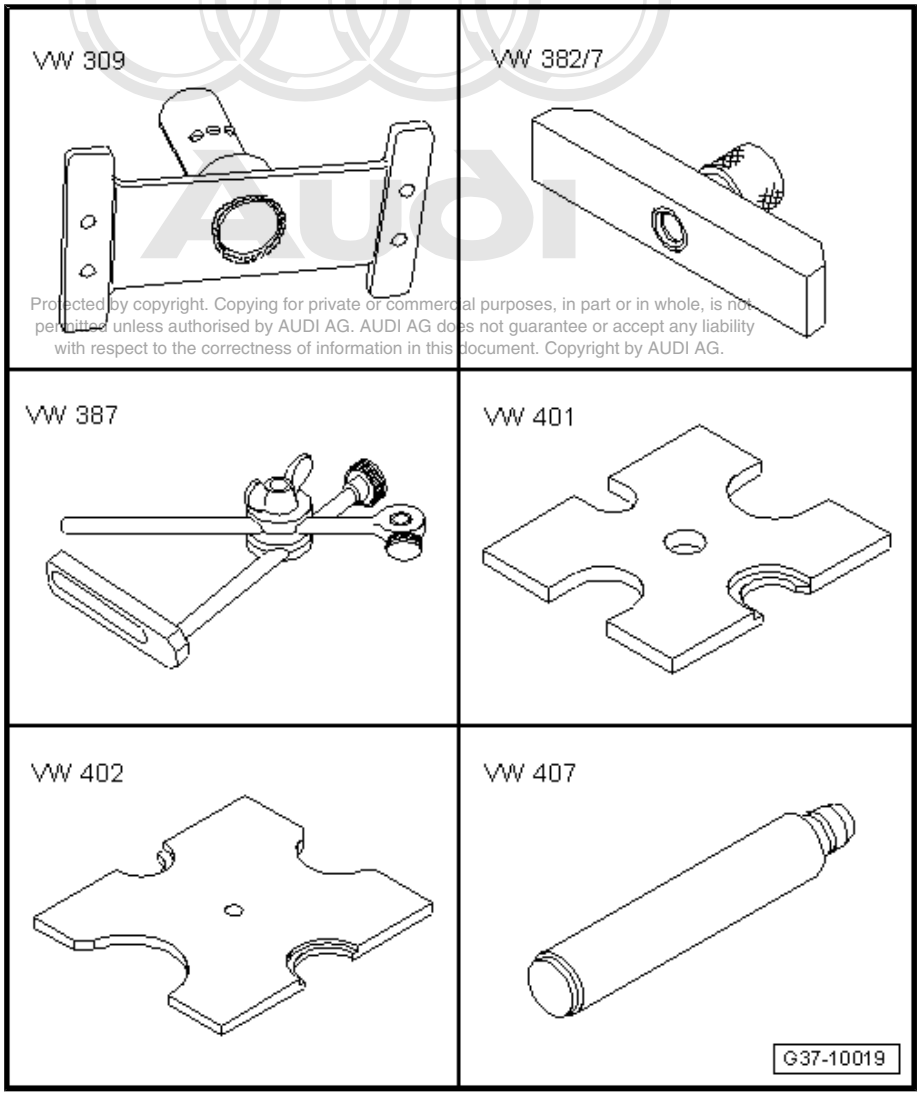


Protected by copyright. Copying for private or commercial purposes, in part or in whole, is not permitted unless authorised by AUDI AG. AUDI AG does not guarantee or accept any liability with respect to the correctness of information in this document. Copyright by AUDI AG.

- Press tool -VW 408 A-
- Press tool -VW 412-
- Press tool -VW 454-
- Sleeve -30-21-
- Support bridge -30-211 A-
- Drift sleeve -40-20-

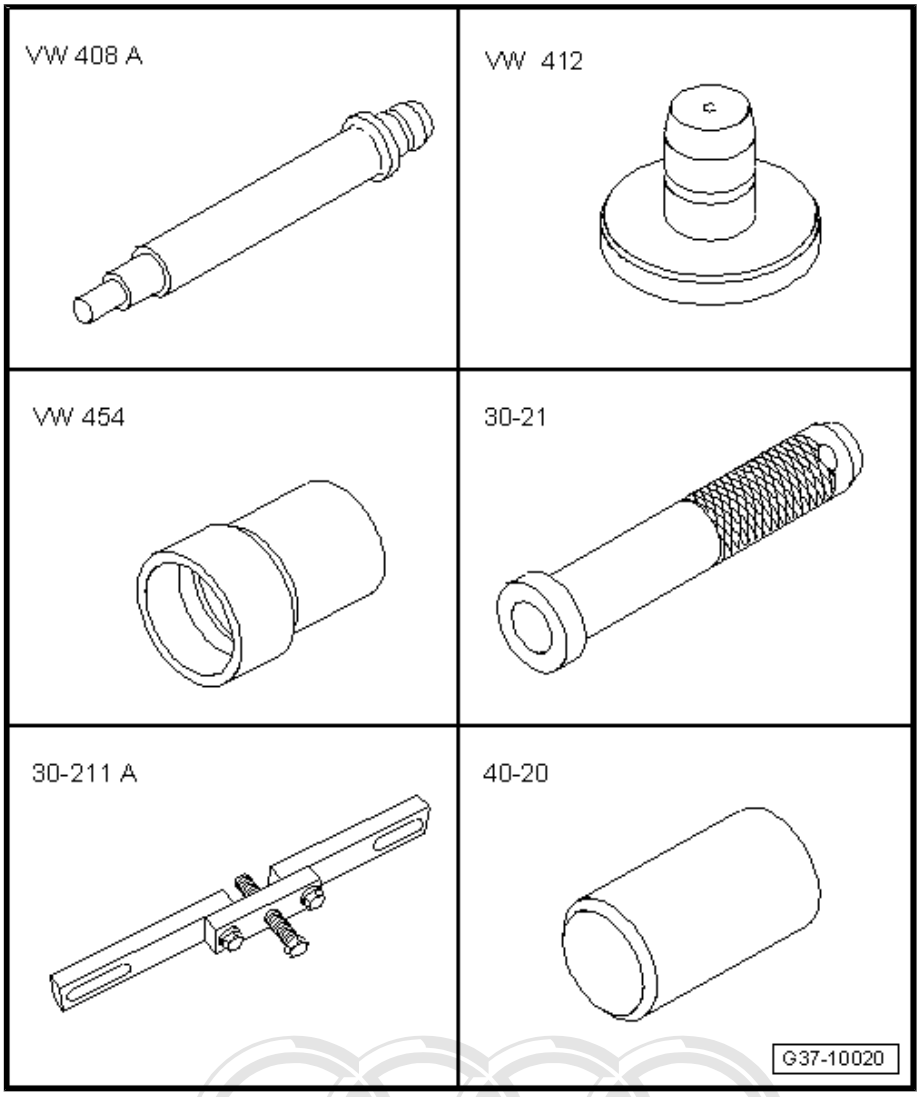


Protected by copyright. Copying for private or commercial purposes, in part or in whole, is not permitted unless authorised by AUDI AG. AUDI AG does not guarantee or accept any liability with respect to the correctness of information in this document. Copyright by AUDI AG.

- Fitting sleeves for seal -2080 A-
- Press tool -3118-
- Thrust piece -3295-
- Thrust piece -3301/4- from assembly tool -3301-
- Fitting tool -3381-
- Thrust piece -3403-

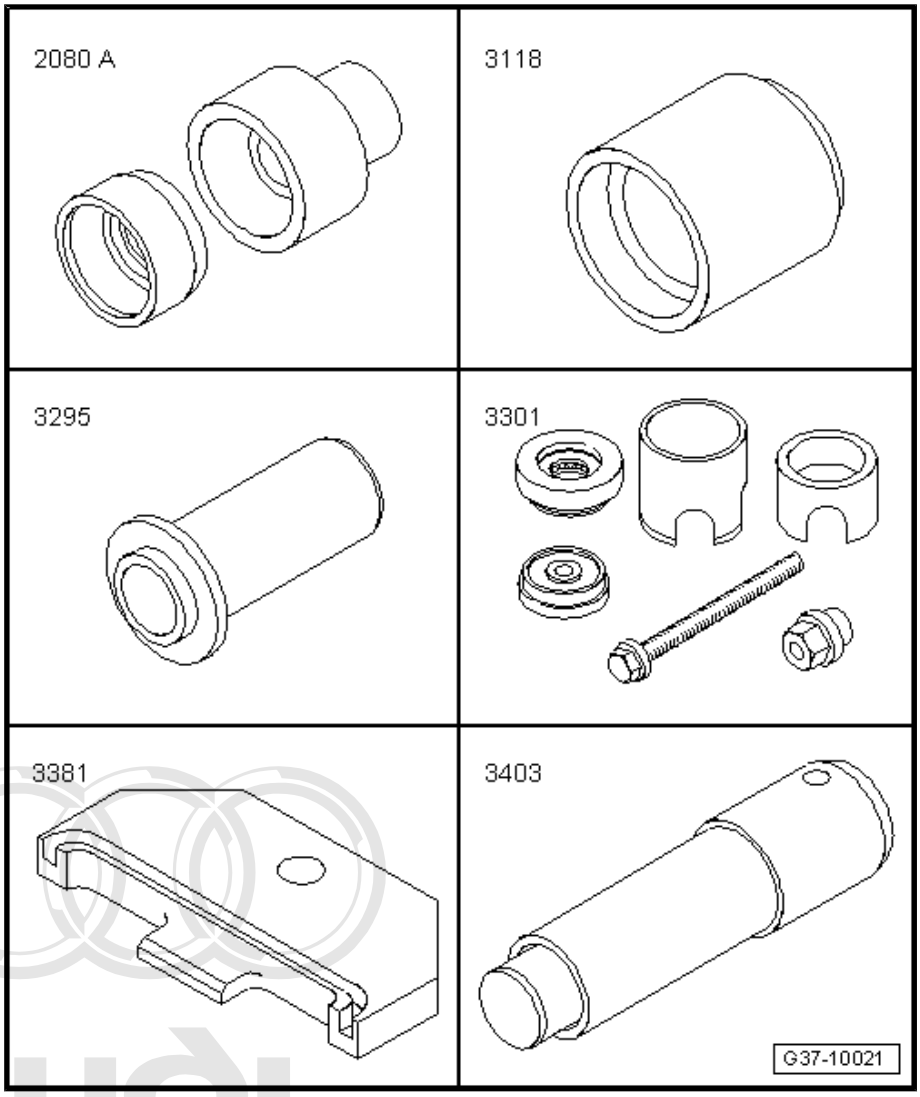


Protected by copyright. Copying for private or commercial purposes, in part or in whole, is not permitted unless authorised by AUDI AG. AUDI AG does not guarantee or accept any liability with respect to the correctness of information in this document. Copyright by AUDI AG.

- Thrust piece -3404-
- Hooks -3438-
- Transportation tool -3457-
- Used oil collection and extraction unit -V.A.G 1782-
- Vehicle diagnostic, testing and information system -VAS 5051-
- Dial gauge -VAS 6080-

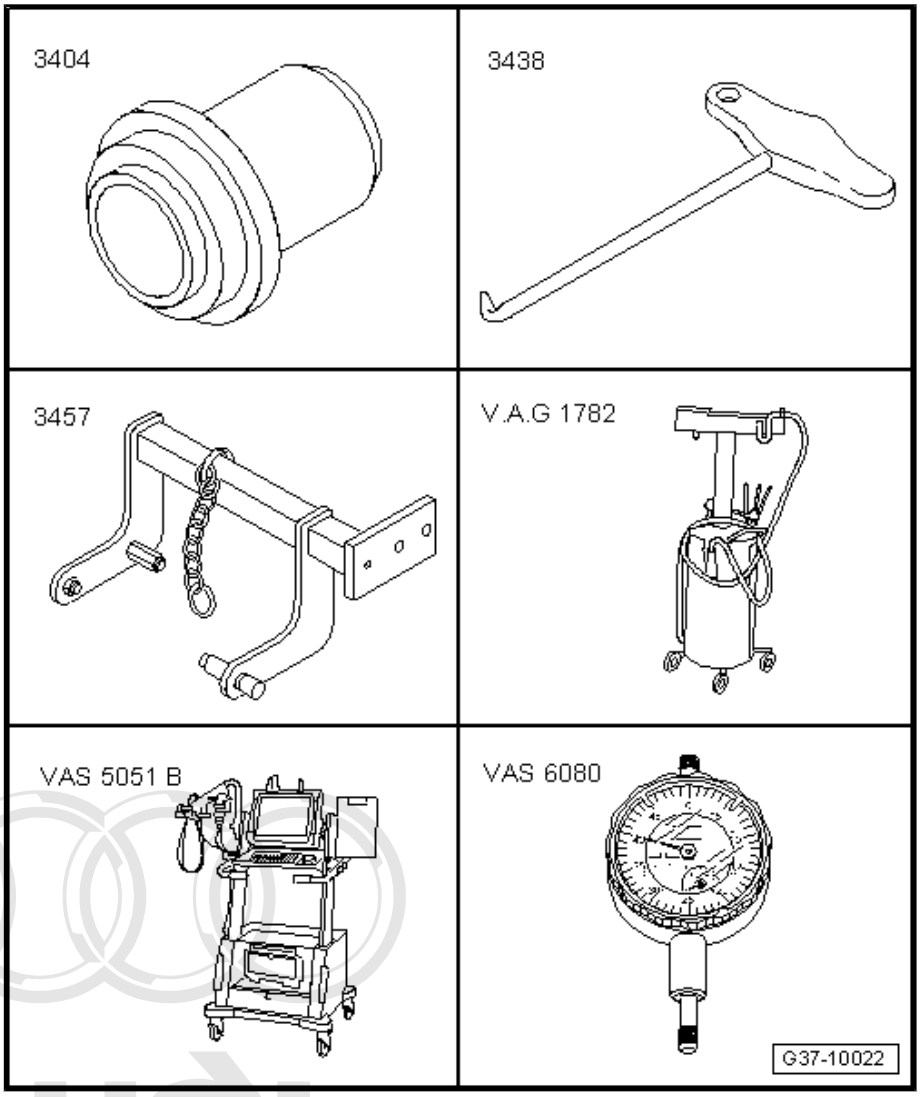


Protected by copyright. Copying for private or commercial purposes, in part or in whole, is not permitted unless authorised by AUDI AG. AUDI AG does not guarantee or accept any liability with respect to the correctness of information in this document. Copyright by AUDI AG.

- Digital depth gauge -VAS 6087-
- Engine/gearbox support -VAS 6095-
- Workshop hoist -VAS 6100-
- Extractor tool -T10271-
- Mounting bracket -T10276-
- Mounting bracket -T10277-

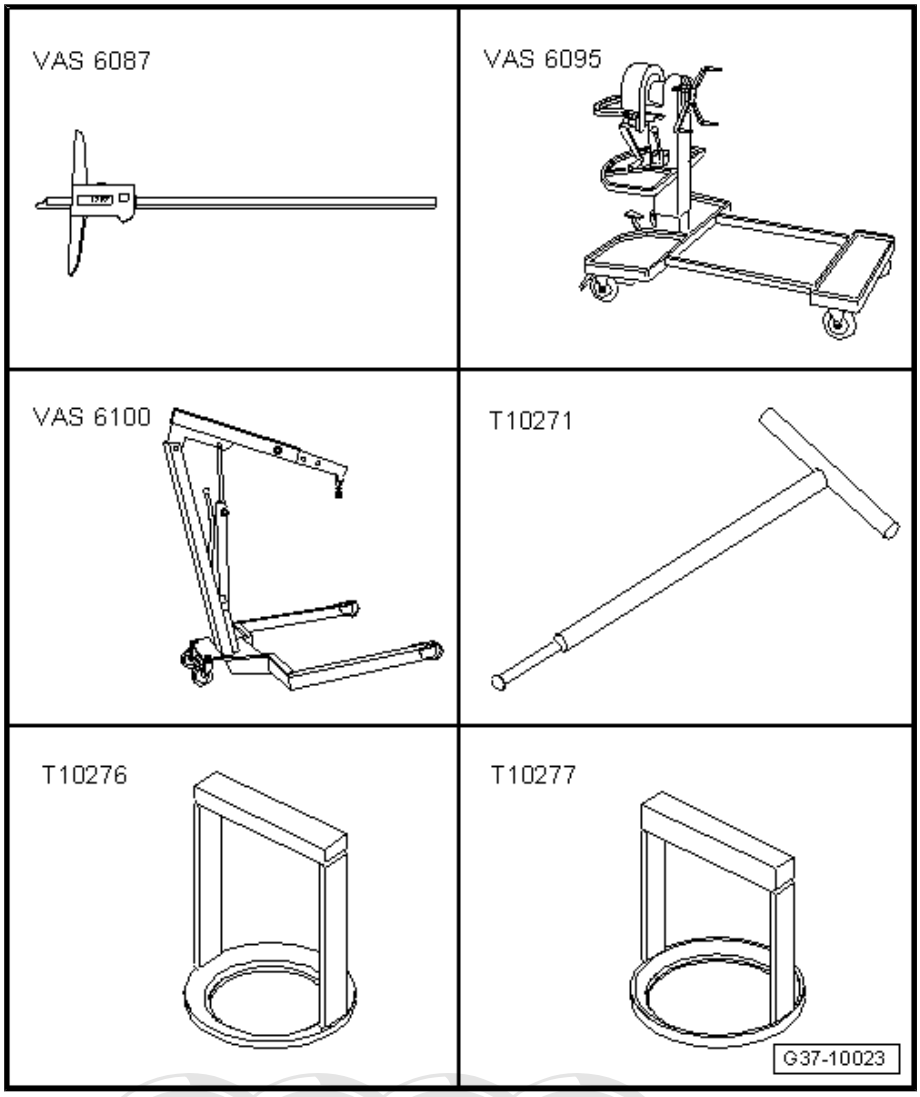


Protected by copyright. Copying for private or commercial purposes, in part or in whole, is not permitted unless authorised by AUDI AG. AUDI AG does not guarantee or accept any liability with respect to the correctness of information in this document. Copyright by AUDI AG.

- Support element -T10282-
- Support element -T10283-
- Torque converter adapter -T10284-
- Compressor tool -T10285-
- Puller for ATF supply unit -T10286-
- Lifting tool -T10287-

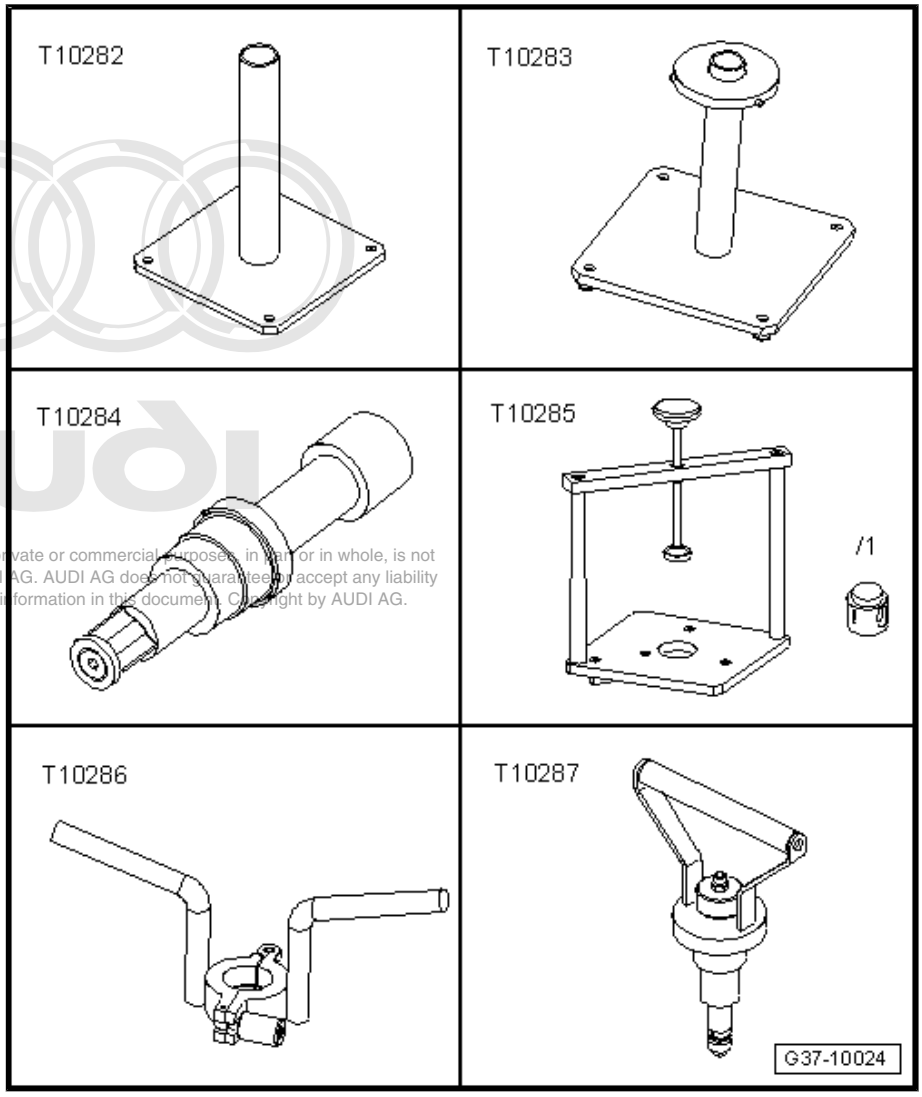


Protected by copyright. Copying for private or commercial purposes, in part or in whole, is not permitted unless authorised by AUDI AG. AUDI AG does not guarantee or accept any liability with respect to the correctness of information in this document. Copyright by AUDI AG.

- Centring tool -T10288-
- Mounting bracket -T10289-
- Assembly sleeve -T10290-
- Holding plate -T10291-
- Holding plate -T10292-
- Holding plate -T10293-

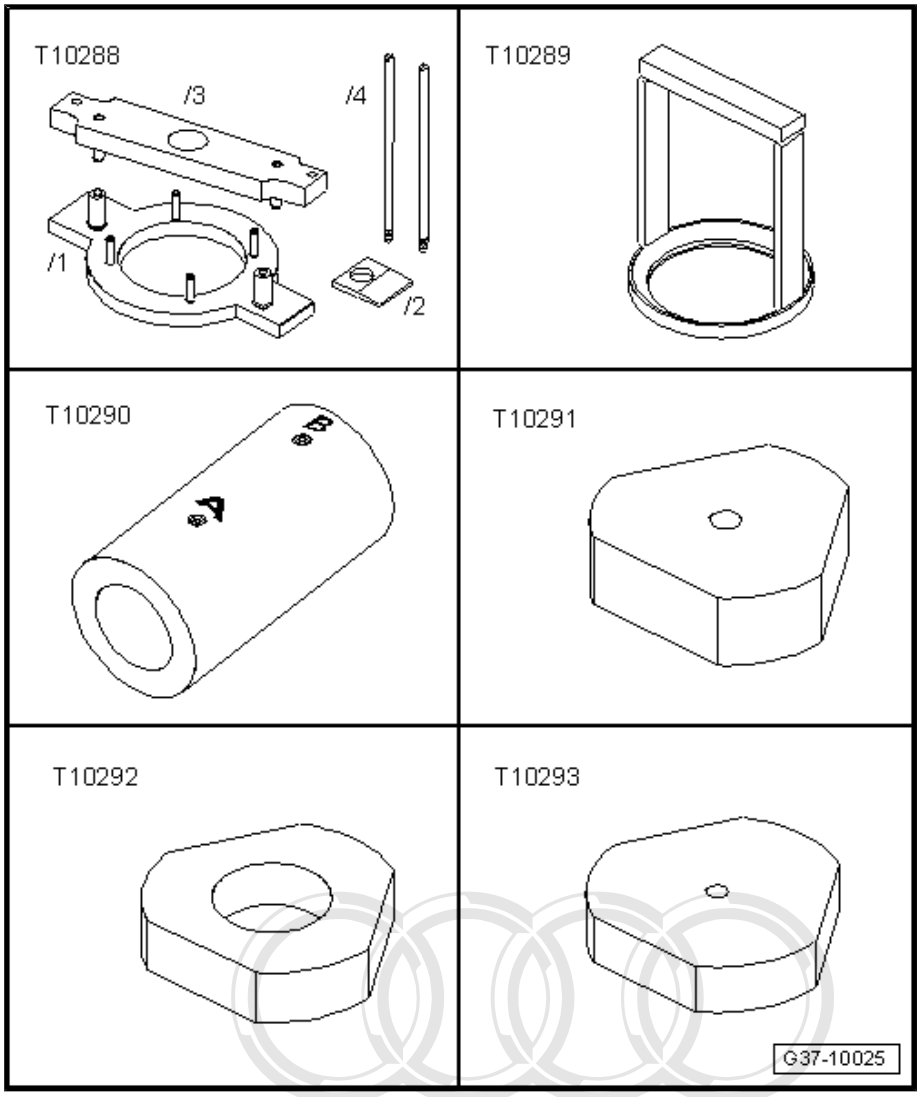


Protected by copyright. Copying for private or commercial purposes, in part or in whole, is not permitted unless authorised by AUDI AG. AUDI AG does not guarantee or accept any liability with respect to the correctness of information in this document. Copyright by AUDI AG.

- Holding plate -T10294-
- Holding plate -T10295-
- -1- Internal puller -Kukko 21/4-
- -3- Splitter 22 ... 115 mm - Kukko 17/2-
- -4- Counter-support -Kukko 22/1-
- Hot air blower
- Safety goggles

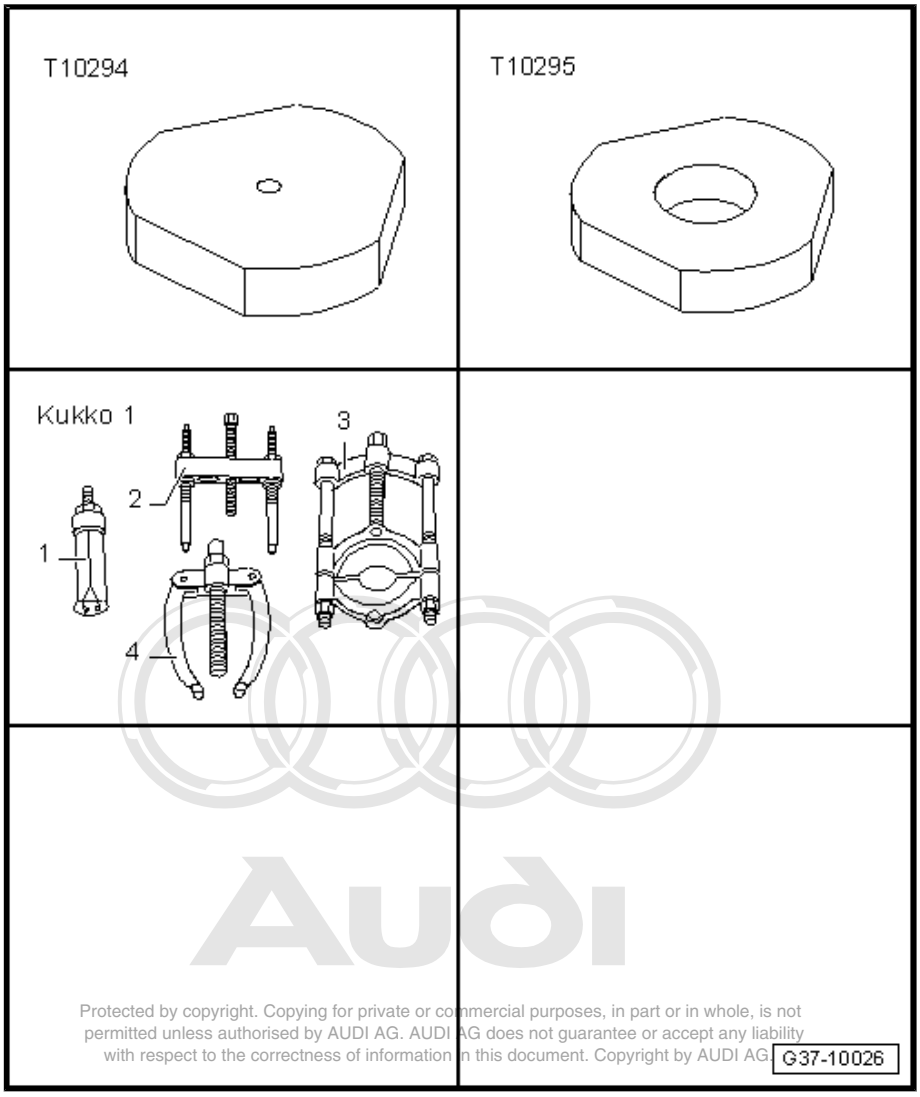


Protected by copyright. Copying for private or commercial purposes, in part or in whole, is not permitted unless authorised by AUDI AG. AUDI AG does not guarantee or accept any liability with respect to the correctness of information in this document. Copyright by AUDI AG.

# 2 Rules for cleanliness when working on the automatic gearbox

- Thoroughly clean all joints and surrounding areas before dismantling.
- Place removed parts on a clean surface and cover them over. Use sheeting and paper. Use lint-free cloths.
- Carefully cover or seal open components if repairs cannot be carried out immediately.
- Only install clean components: do not remove replacement parts from packaging until just before installation.

Protected by copyright. Copying for private or commercial purposes, in part or in whole, is not permitted unless authorised by AUDI AG. AUDI AG does not guarantee or accept any liability with respect to the correctness of information in this document. Copyright by AUDI AG.

# 3 Frequently occurring faults

**Note**

- *Before commencing fault-finding, interrogate fault memory of automatic gearbox control unit -J217- ⇒ Vehicle diagnosis, testing and information system VAS 5051.*
- *In addition, interrogate fault memory of engine control unit, because faults detected by the engine control unit can also cause malfunctions of the gearbox ⇒ Vehicle diagnosis, testing and information system VAS 5051.*
- *Before commencing fault-finding, check ATF level ⇒ Automatic gearbox 01V, front-wheel drive and four-wheel drive ; Rep. Gr. 37 .*

## 3.1 No power transmitted in any gear

- Possible fault:

Drive lugs -arrows- on ATF pump gear broken off

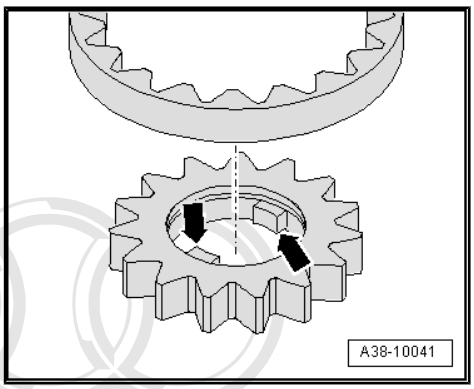


- Possible causes:

A - Torque converter not inserted properly when installing gearbox or engine. Check installation depth ⇒ Automatic gearbox 01V, front-wheel drive and four-wheel drive; Rep. Gr. 32 .

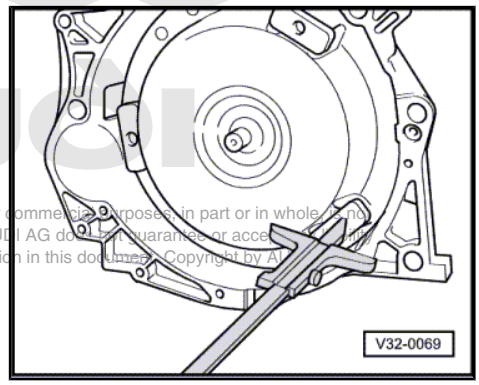


Protected by copyright. Copying for private or commercial purposes, in part or in whole, is not permitted unless authorised by AUDI AG. AUDI AG does not guarantee or accept any liability with respect to the correctness of information in this document. Copyright by AUDI AG.

B - Torque converter centring sleeve -arrow- not fitted in crankshaft ⇒ Engine, mechanics; Rep. Gr. 13 .

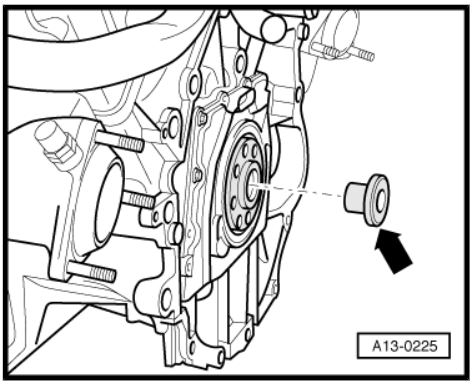

C - One or both dowel sleeves -A- for locating engine/gearbox flange not fitted. Dowel sleeves or drillings in gearbox flange damaged.

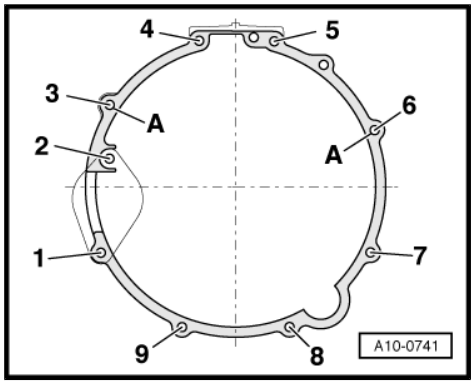


Note

*-Items 1 ... 9- can be disregarded.*

D - Torque converter drive plate not installed in correct position, drive plate not secured to engine with correct shim -1-, or shim -1- and washer -2- interchanged by mistake ⇒ Engine, mechanics; Rep. Gr. 13 .

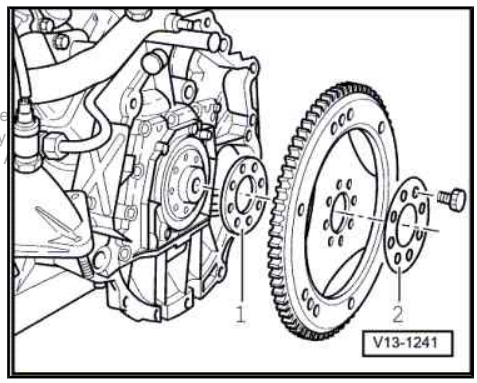


Protected by copyright. Copying for private or commercial purposes, in part or in whole, is not permitted unless authorised by AUDI AG. AUDI AG does not guarantee or accept any liability with respect to the correctness of information in this document. Copyright by AUDI AG.

♦ Fault rectification:

– Dismantle ATF pump and check; remove broken-off drive lugs.

Caution

***Make sure that broken-off drive lugs are found and removed.***

## 3.2 Gearshift jolts; individual gears slipping; gearshifts take too long

Note

*The illustration shows this fault with the valve body dismantled. The valve body must not be dismantled for workshop servicing.*

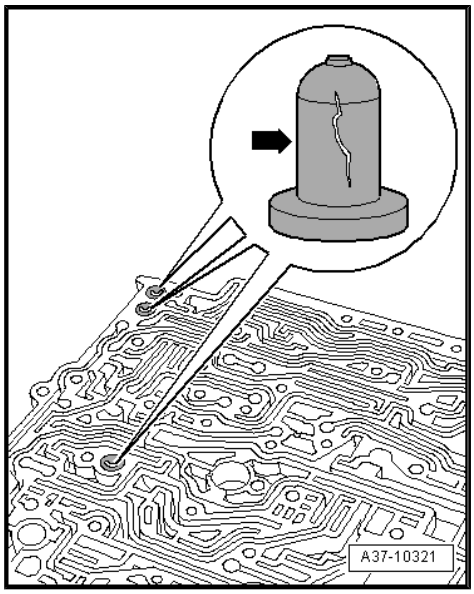


♦ Possible fault:

One of the 3 rubber dampers in the valve body cracked -arrow-.

♦ Fault rectification:

– Check condition of ATF ⇒ page 138 .

If ATF is OK:

– Renew valve body ⇒ page 129 .

If ATF is not OK, the fault was not identified and repaired quickly enough. In this case, clutch “G” is probably also damaged.

– Dismantle and clean complete gearbox.

– Clean ATF pipes and ATF cooler.

– Dismantle and check all clutches.

– Renew valve body ⇒ page 129 .

## 3.3 Gearshift jolts, power transmission problems in 4th and 5th gear

♦ Possible fault:

Plates of clutch “E” -item 3- burnt out.

♦ Cause of fault:

Torque converter lock-up clutch worn or defective.

♦ Fault rectification:

– Check torque converter lock-up clutch while driving ⇒ page 17 .

– Dismantle and clean complete gearbox.

– Clean ATF pipes and ATF cooler.

– Dismantle and check all clutches.

– If ATF is very dirty ⇒ page 138 , renew torque converter (cannot be cleaned).

– Renew components -items 2 … 5- of clutch “E”.

– Renew overheated cylinder “E” -item 1- (visible blue discoloration).

– Renew ATF strainer ⇒ page 48 .

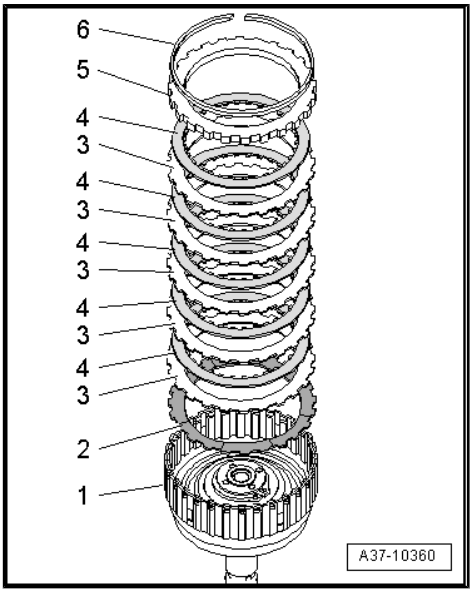


## 3.4 ATF leaks between engine and gearbox

♦ Possible fault:

Brass bush of ATF pump seized, causing increased wear and scoring/damage on the torque converter hub; severe ATF leakage.

♦ Fault rectification:

– After removing gearbox, check that ATF is not coming out of the leakage inspection hole -arrow-. If this is the case, the twin-lip oil seal for final drive/gearbox housing is leaking.

– Renew twin-lip oil seal for final drive/gearbox housing if necessary ⇒ Automatic gearbox 01V, front-wheel drive and four-wheel drive; Rep. Gr. 39 .

Protected by copyright. Copying for private or commercial purposes, in part or in whole, is not permitted unless authorised by AUDI AG. AUDI AG does not guarantee or accept any liability with respect to the correctness of information in this document. Copyright by AUDI AG.

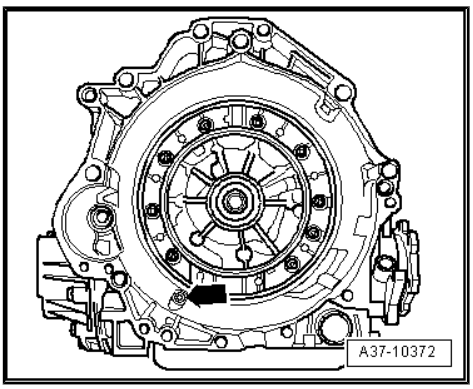


– Check brass bush -arrow- for scoring and damage.

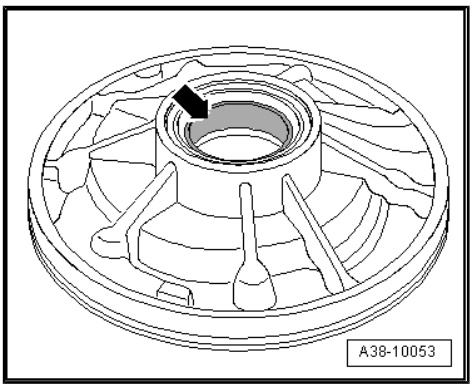

– Check hub -arrow- of torque converter for scoring and damage.

If scoring/damage is visible:

– Renew ATF pump and torque converter.

– Dismantle and clean gearbox if ATF is very dirty
⇒ “3.1 Assessment of wear by checking ATF for colour and contamination”, page 138 .

– Renew valve body ⇒ page 129 .

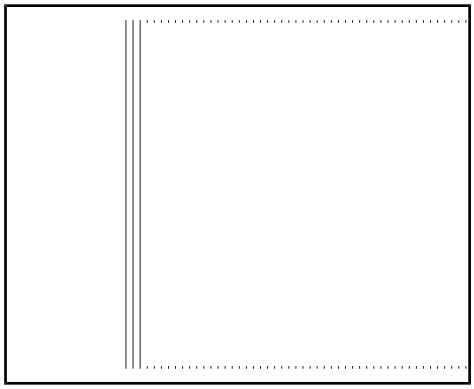

– Check whether torque converter centring sleeve -arrow- is fitted in crankshaft ⇒ Engine, mechanics; Rep. Gr. 13 .

Protected by copyright. Copyright by AUDI AG.

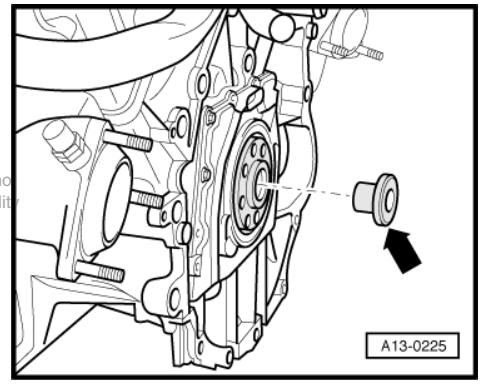


– Check that both dowel sleeves -A- are fitted in cylinder block.

– Check whether the dowel sleeves are deformed or the drillings in the gearbox flange are damaged.

**Note**

*-Items 1 ... 9- can be disregarded.*

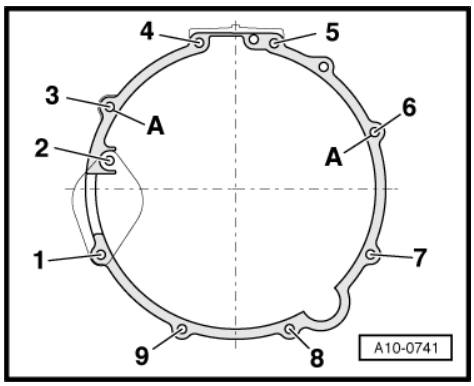


## 3.5 Noise while driving (changes with road speed)

♦ Possible fault:

Spur gear bearings or spur gears -1 … 3- defective.

♦ Fault rectification:

– Renew gearbox.

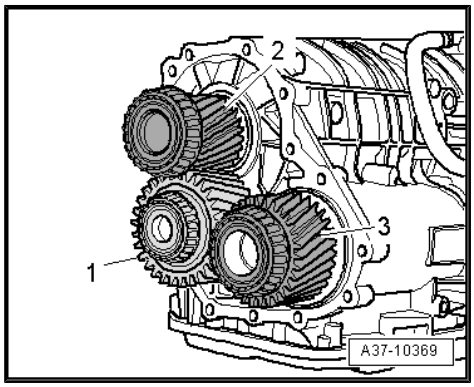

# 32 – Torque converter

## 1 Torque converter

### 1.1 Checking torque converter lock-up clutch

Note

- *Before commencing fault-finding, interrogate fault memory of automatic gearbox control unit -J217- ⇒ Vehicle diagnosis, testing and information system VAS 5051.*
- *In addition, interrogate fault memory of engine control unit, because faults detected by the engine control unit can also cause malfunctions of the gearbox ⇒ Vehicle diagnosis, testing and information system VAS 5051.*
- *Before commencing fault-finding, check ATF level ⇒ Automatic gearbox 01V, front-wheel drive and four-wheel drive ; Rep. Gr. 37 .*

Protected by copyright. Copying for private or commercial purposes, in part or in whole, is not permitted unless authorised by AUDI AG. AUDI AG does not guarantee or accept any liability with respect to the correctness of information in this document. Copyright by AUDI AG.

The torque converter lock-up clutch can only be tested via self-diagnosis with the vehicle moving.

WARNING

- *Test equipment must always be secured on the rear seat and operated from that position by a second person.*
- *If test and measuring instruments are operated from the front passenger's seat and the vehicle is involved in an accident, there is a possibility that the person sitting in this seat may suffer serious injuries when the airbag is triggered.*

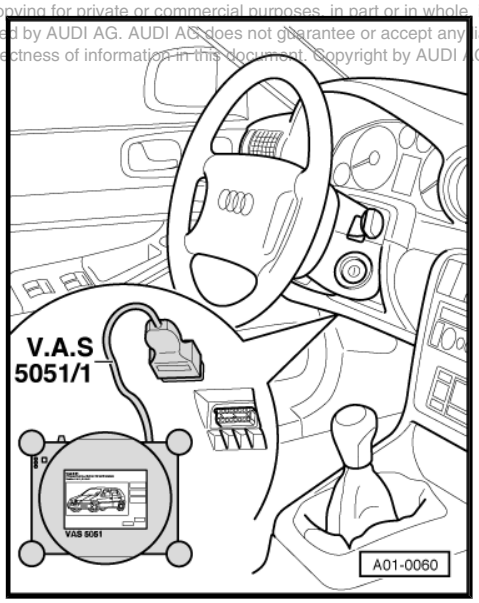


– Connect the vehicle diagnostic, testing and information system -VAS 5051- to the diagnostic connector with the ignition switched off.

– Start engine.

Display on -VAS 5051- :

– Touch `Vehicle self-diagnosis` button.

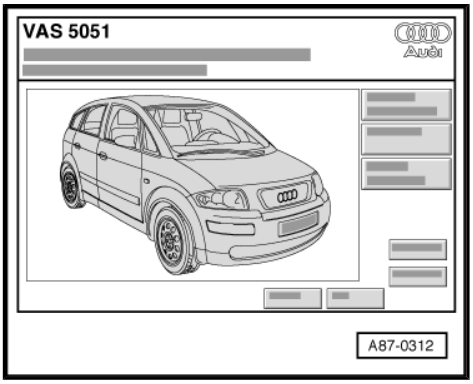

Display on -VAS 5051- :

– From list -1- select vehicle system “02 - Gearbox electronics”.
– Wait until next screen display appears.

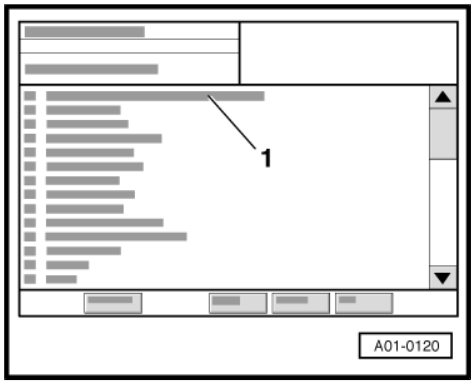


Display on -VAS 5051- :

– From list -1-, select function “08 - Read measured value block”.

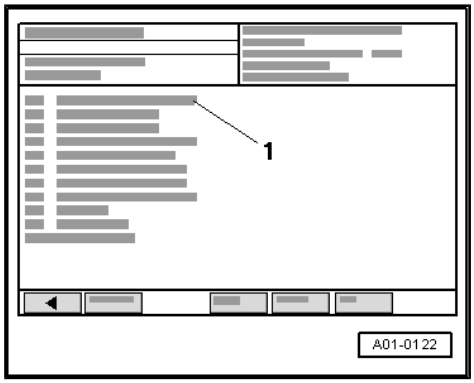


Display on -VAS 5051- :

1 - Enter display group (max. input value = 255).

– Use keypad -2- to enter 7 for “Display group 007” and confirm by touching Q key.
– Road-test vehicle.

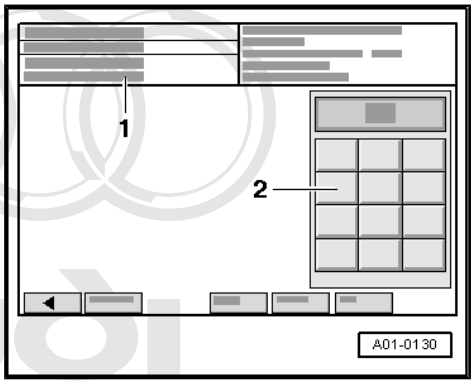


Protected by copyright. Copying for private or commercial purposes, in part or in whole, is not permitted unless authorised by AUDI AG. AUDI AG does not guarantee or accept any liability with respect to the correctness of information in this document. Copyright by AUDI AG.

Display on -VAS 5051- :

– Check display in zones -3- and -4-. Specifications:

3 - TC closed

4 - 0 ... 20 rpm

If the specified readout is not obtained, the ratio of gearbox input speed to engine speed with closed torque converter lock-up clutch is not correct (implausible result).

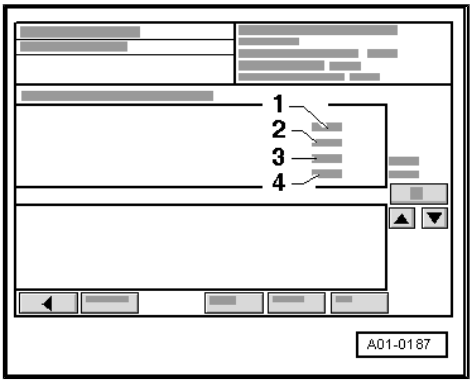


♦ Possible causes of fault:

1. Torque converter lock-up clutch defective or worn
2. Incorrect torque converter version installed
3. Mechanical fault in automatic gearbox pressure control valve 4 -N218-
4. Problems with ATF supply to automatic gearbox pressure control valve 4 -N218-
5. Torque converter pressure valve defective
6. Valve for torque converter lock-up clutch defective.

– Exit from function “08 - Read measured value block” by touching ⇦ key.

– Select function “06 - End output”.

– Switch off ignition and unplug diagnostic connector.

## 1.2 Draining torque converter

Drain the torque converter as follows if the ATF is very dirty due to component wear, or when performing a major gearbox overhaul:

Protected by copyright. Copying for private or commercial purposes, in part or in whole, is not permitted unless authorised by AUDI AG. AUDI AG does not guarantee or accept any liability with respect to the correctness of information in this document. Copyright by AUDI AG.

– Extract ATF from torque converter with used oil collection and extraction unit -V.A.G 1782- .

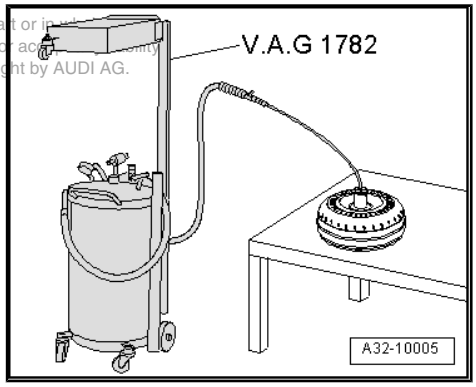


## 1.3 Checking torque converter

– Check hub -arrow- of torque converter for scoring and damage.

– Check that balance plates are firmly secured and threads are undamaged.

If torque converter shows scoring or damage (abnormal wear), if balance plates are loose or threads are damaged:

– Renew torque converter.

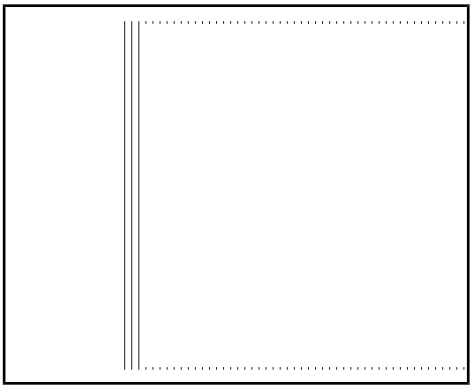

Note

- *If the torque converter lock-up clutch is burnt or worn this will leave sand-like particles and deposits in the ATF strainer.*
- *If the bolts -arrow- securing the torque converter to the drive plate are just 2 mm too long they will make a dent in the torque converter, which will damage the torque converter clutch. For this reason it is important to use only the correct type of bolts (same as original equipment).*

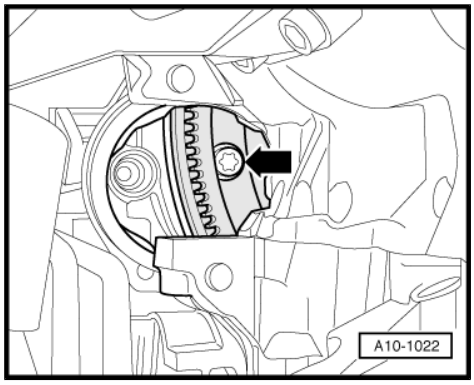


Protected by copyright. Copying for private or commercial purposes, in part or in whole, is not permitted unless authorised by AUDI AG. AUDI AG does not guarantee or accept any liability with respect to the correctness of information in this document. Copyright by AUDI AG.

# 37 – Controls, housing

## 1 Securing gearbox to assembly stand

**Procedure**

- Torque converter secured with support bridge -30-211 A- or removed.

– Attach support plate -VW 309- to transportation tool -3457- .

– Attach transportation tool -3457- to attachment points on gearbox housing and secure in place.

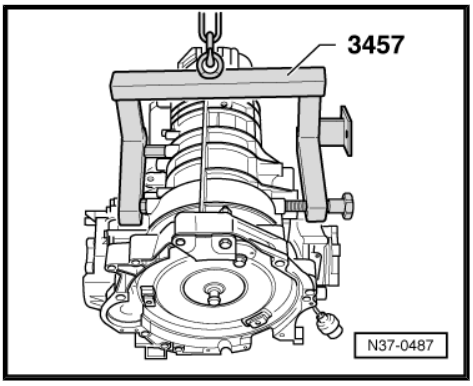


**Note**

♦ *The bolt on the transportation tool -3457- must only be screwed hand-tight into gearbox.*

♦ *The gearbox housing may be damaged if pliers are used to tighten the bolt.*

– Use workshop hoist -VAS 6100- to place gearbox into engine and gearbox support -VAS 6095- .

**Note**

*If the gearbox is full and it is to be turned in the engine and gearbox support so that the oil pan points upwards, the breather holes for the gearbox housing and final drive must be sealed.*

Protected by copyright. Copying for private or commercial purposes, in part or in whole, is not permitted unless authorised by AUDI AG. AUDI AG does not guarantee or accept any liability with respect to the correctness of information in this document. Copyright by AUDI AG.

# 2 Dismantling and assembling planetary gearbox

Note

- *General repair instructions* ⇒ page 1 .
- *Rules for cleanliness when working on the automatic gearbox* ⇒ page 12 .
- *Lightly lubricate O-rings and seals with ATF or vaseline before installing to prevent them from getting crushed during assembly.*
- *Fit bearings and shims loosely with vaseline only.*
- *Use only ATF or vaseline on all parts running in ATF. Other lubricants will cause malfunction of the gearbox hydraulics.*

## 2.1 Planetary gearbox - exploded view of components

Note

*Some of the components shown are supplied as part of an assembly group and cannot be ordered as individual components ⇒ Parts catalogue .*

Protected by copyright. Copying for private or commercial purposes, in part or in whole, is not permitted unless authorised by AUDI AG. AUDI AG does not guarantee or accept any liability with respect to the correctness of information in this document. Copyright by AUDI AG.

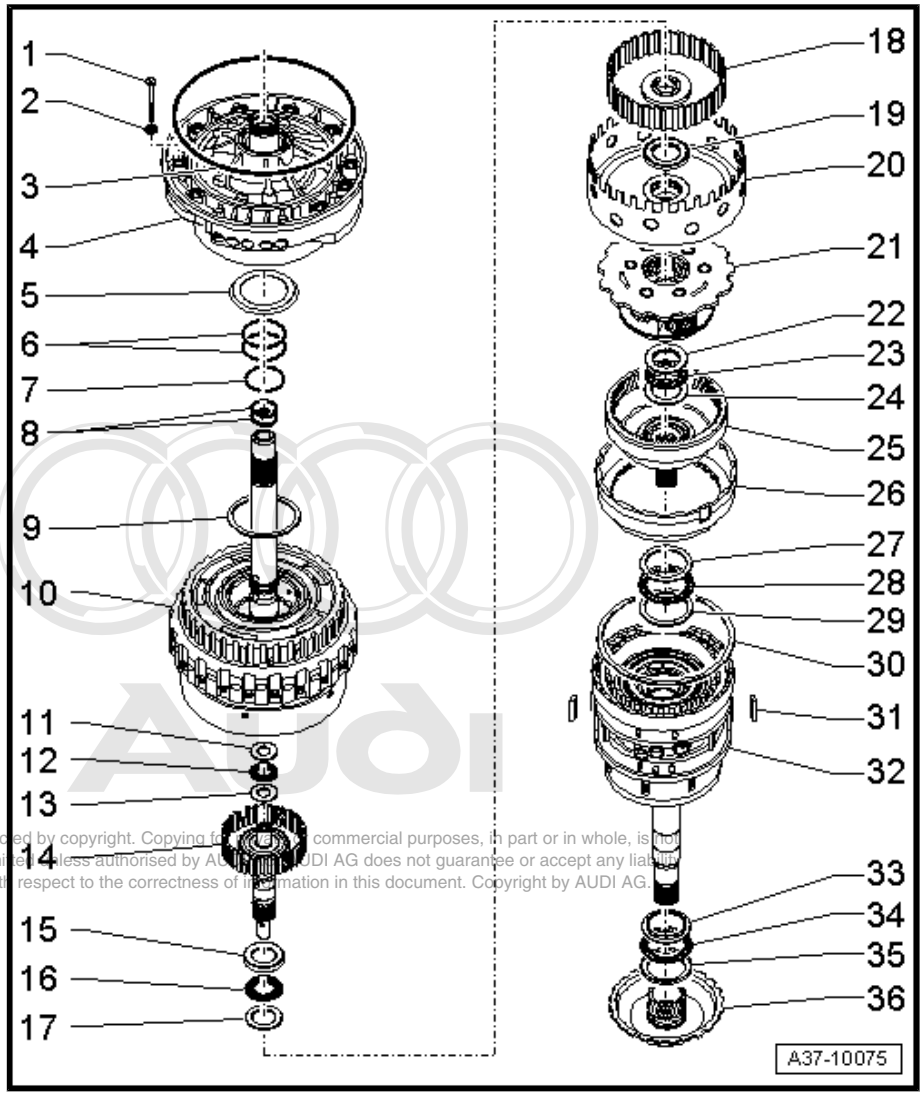


Protected by copyright. Copying for commercial purposes, in part or in whole, is not permitted unless authorised by AUDI AG. AUDI AG does not guarantee or accept any liability with respect to the correctness of information in this document. Copyright by AUDI AG.

1 - Bolt, 10 Nm

2 - Washer
- ❑ Renew

3 - O-ring
- ❑ Renew

4 - ATF supply unit
- ❑ With ATF pump
- ❑ Dismantling and assembling ⇒ page 97

5 - Axial needle bearing

6 - Rectangular section seals
- ❑ Renew

7 - Rectangular section seal
- ❑ Renew

8 - O-rings
- ❑ Renew

9 - Shim
- ❑ Determining thickness ⇒ page 45

10 - Body “II”
- ❑ Dismantling and assembling ⇒ page 76

11 - Thrust washer

12 - Axial needle bearing

13 - Thrust washer

14 - Intermediate shaft with inner plate carrier

15 - Flange washer

16 - Axial needle bearing

17 - Thrust washer

18 - Sun shaft

19 - Axial needle bearing

20 - Sun gear “I”
- ❑ Magnetic version for gearbox with hydraulic control type “E17”, the gearbox input speed sender -G182- is an inductive sender on this version.
- ❑ Non-magnetic version for gearbox with hydraulic control type “E18/2”, the gearbox input speed sender -G182- is a Hall sender on this version.

21 - Planetary gear set “I” and “II”

22 - Flange washer

23 - Axial needle bearing

24 - Thrust washer

25 - Shaft with annulus “I”

26 - Flanged housing

27 - Thrust washer

28 - Axial needle bearing

29 - Flange washer
- ❑ Height including flange: 2.5 mm
- ❑ Do not interchange with flange washer ⇒ Item 33 (page 24)

30 - Circlip

31 - Parallel key

32 - Body “I”
- ❑ Dismantling and assembling ⇒ page 55

33 - Flange washer
- ❑ Height including flange: 5 mm
- ❑ Do not interchange with flange washer ⇒ Item 29 (page 24)

Protected by copyright. Copying for private or commercial purposes, in part or in whole, is not permitted unless authorised by AUDI AG. AUDI AG does not guarantee or accept any liability with respect to the correctness of information in this document. Copyright by AUDI AG.

34 - Axial needle bearing

35 - Flange washer

36 - Sun gear “III”

## 2.2 Dismantling and assembling planetary gearbox

### Dismantling

- Gearbox mounted on assembly stand ⇒ page 21 .

– Remove torque converter.

– Place used oil collection and extraction unit -V.A.G 1782- below gearbox.

> ⚠ **WARNING**
>
> *Wear safety goggles.*

– Remove ATF drain plug -1- and allow ATF to drain off.

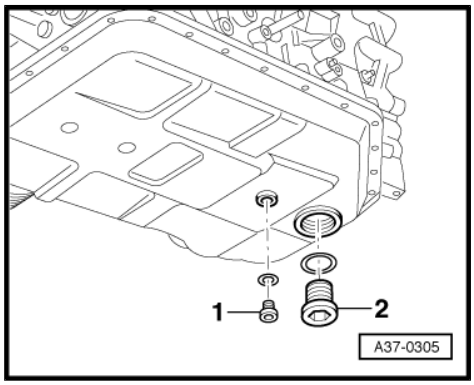


**Note**

- ♦ *Observe relevant disposal regulations.*
- ♦ *Some ATF always remains in the oil pan.*

### Automatic gearbox 01V, front-wheel drive

– Place used oil collection and extraction unit -V.A.G 1782- below gearbox.

– Slacken bolts on housing cover for front axle drive in the sequence -14 ... 1- and remove bolts.

– Catch escaping gear oil using used oil collection and extraction unit -V.A.G 1782- .

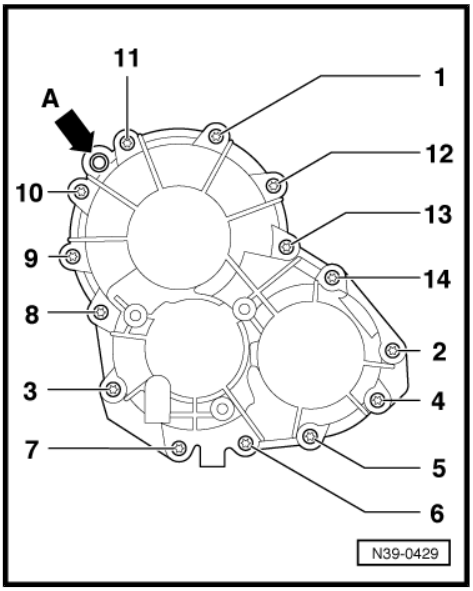


**Caution**

- *Detach cover for front axle drive from gearbox housing slowly and carefully. Otherwise spur gears could drop out of gearbox.*
- *Spur gears which have been dropped on the floor must not be used again. If this happens, the gearbox must be renewed.*

– Lift off cover for front axle drive.

– Mark installation position of intermediate pinion -1- and pinion gear -3-.

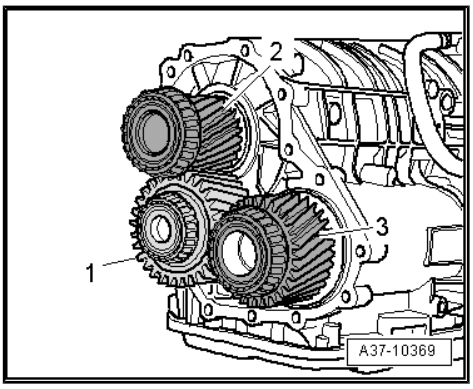


**Caution**

- *The intermediate pinion -1- and pinion gear -3- must be re-fitted in the same position to make sure the direction of rotation is maintained.*
- *For this reason, the original installation positions of the intermediate pinion and pinion gear must be marked.*

– Take off pinion gear together with intermediate pinion; at the same time pull input pinion -2- slightly towards the rear.

– Remove input pinion -2-.

– Remove shim -1- and axial needle bearing -2- from input shaft.

– Remove coil spring -3- from pinion shaft.

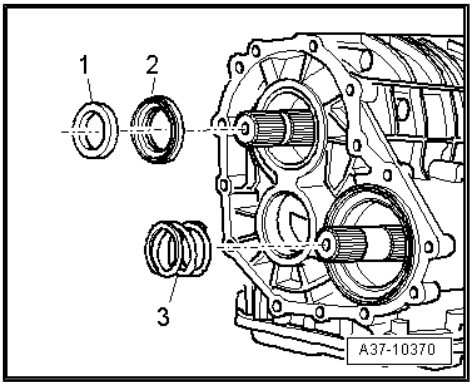


Protected by copyright. Copying for private or commercial purposes, in part or in whole, is not permitted unless authorised by AUDI AG. AUDI AG does not guarantee or accept any liability with respect to the correctness of information in this document. Copyright by AUDI AG.

### Automatic gearbox 01V, four-wheel drive

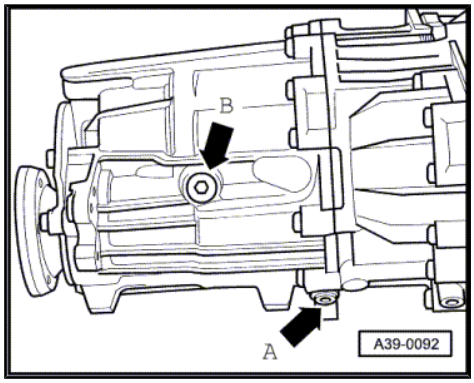


– Place used oil collection and extraction unit -V.A.G 1782- below gearbox.

– Remove drain plug -A- and allow gear oil to drain out of transfer box.

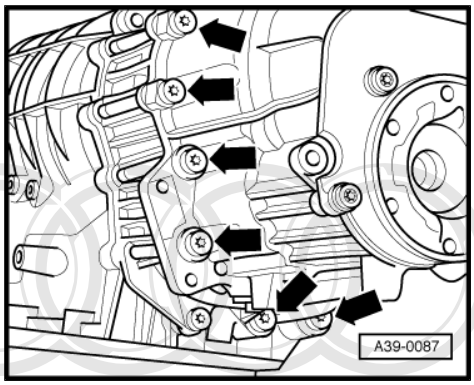


– Loosen bolts -arrows- for transfer box housing in diagonal sequence and remove bolts.

> **Caution**
>
> ***Detach transfer box housing slowly and carefully from rear of gearbox. The Torsen differential may otherwise fall out of the gearbox.***

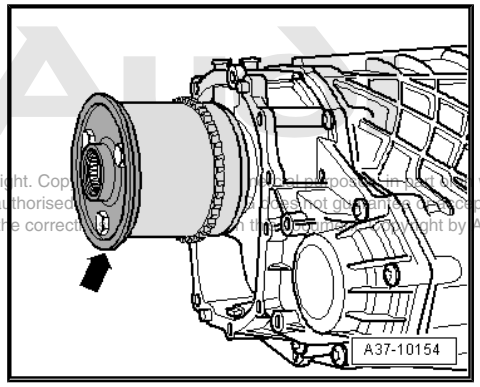


– Pull Torsen differential -arrow- off input shaft.

Protected by copyright. Copy[illegible] whole, is not permitted unless authorised [illegible] does not guarantee or accept any liability with respect to the correct[illegible] copyright by AUDI AG.

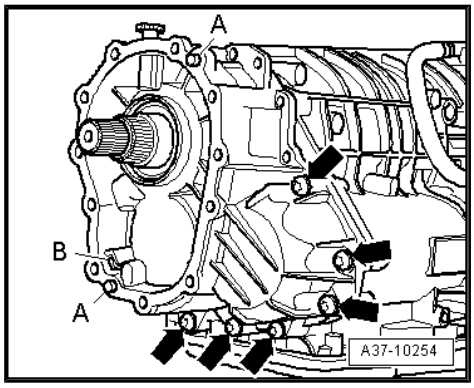


– Place used oil collection and extraction unit -V.A.G 1782- below gearbox.

– Remove bolts -arrows- on intermediate flange for front axle drive.

– Catch escaping gear oil using used oil collection and extraction unit -V.A.G 1782- .

> **Caution**
>
> ♦ ***Remove the intermediate flange for front axle drive from the gearbox housing slowly and carefully. Otherwise spur gears could drop out of gearbox.***
>
> ♦ ***Spur gears which have been dropped on the floor must not be used again. If this happens, the gearbox must be renewed.***

– Lift off intermediate flange for front axle drive.

– Cover splines -arrow- of input shaft with insulating tape to prevent damage to oil seal in intermediate flange for front axle drive when pulling off input pinion -2-. Take care to cover the splines completely, without creasing or overlapping the tape.

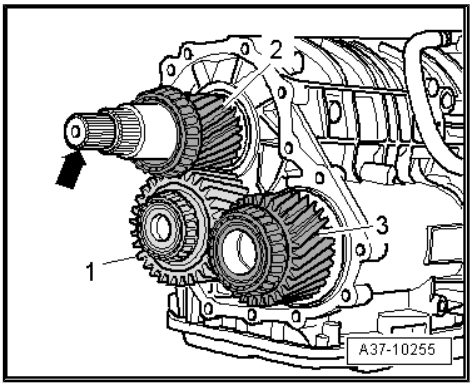


**Caution**

- *The intermediate pinion -1- and pinion gear -3- must be re-fitted in the same position to make sure the direction of rotation is maintained.*

Protected by copyright. Copying for private or commercial purposes, in part or in whole, is not permitted unless authorised by AUDI AG. AUDI does not guarantee or accept any liability with respect to the correctness of information in this document. Copyright by AUDI AG.

– Mark installation position of intermediate pinion -1- and pinion gear -3-.

– Take off pinion gear together with intermediate pinion; at the same time pull input pinion -2- slightly towards the rear.

– Remove input pinion -2-.

– Remove shim -1- and axial needle bearing -2- from input shaft.

– Remove coil spring -3- from pinion shaft.

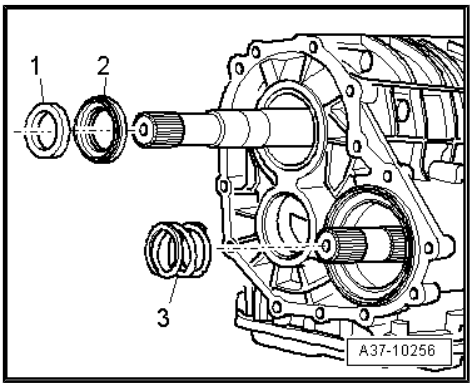


**Automatic gearbox 01V, front-wheel drive and four-wheel drive**

– Remove bolt -arrow- securing flange shaft (right-side). To do so, screw two bolts into flange and counterhold flange shaft with suitable lever.

– Place used oil collection and extraction unit -V.A.G 1782- below gearbox.

– Pull out flange shaft (right-side).

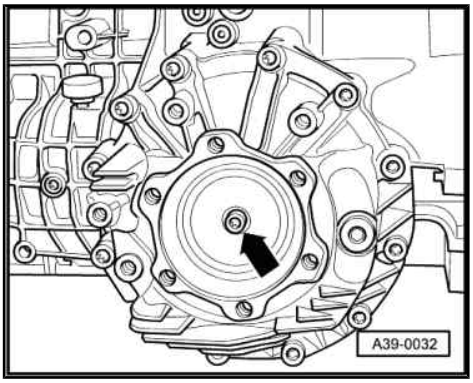

– Slacken bolts on housing cover for final drive in the sequence -12 ... 1- and remove bolts.

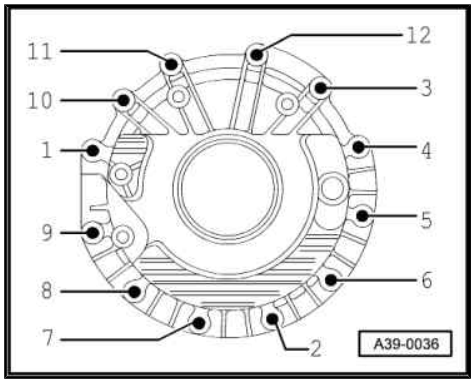


> **Caution**
>
> - *Detach cover for final drive from gearbox housing slowly and carefully. The differential may otherwise fall out of the gearbox.*
> - *A differential which has fallen to the ground can no longer be installed. If this happens, the gearbox must be renewed.*

– Remove cover for final drive.

Protected by copyright. Copying for private or commercial purposes, in part or in whole, is not permitted unless authorised by AUDI AG. AUDI AG does not guarantee or accept any liability with respect to the correctness of information in this document. Copyright by AUDI AG.

> **Caution**
>
> - *Take care that the outer race for the tapered roller bearing or the shim for the differential does not fall out of the final drive cover.*
> - *The outer race for the tapered roller bearing must be re-installed in the same position.*
> - *Thickness of shim has been measured to fit; the shim must not be replaced with another shim of different thickness.*

– Carefully take out differential -arrow-.

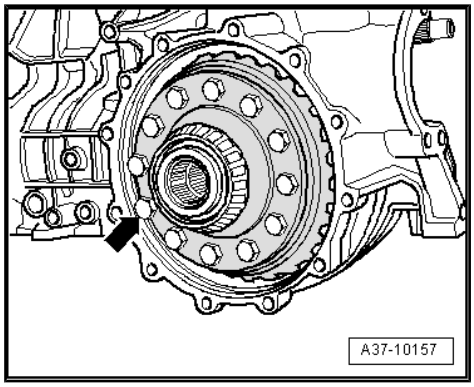


– Remove bolts -arrows- and detach baffle plate.

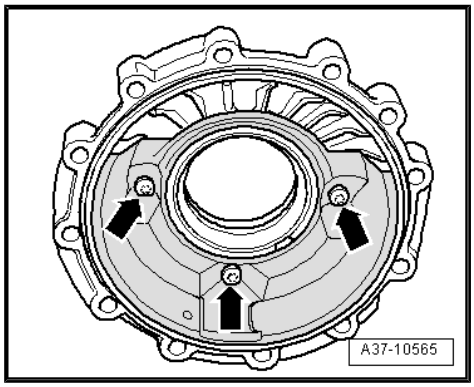

– Cover splines on flange shaft (left-side) -arrow- with insulating tape to prevent damage to twin-lip oil seal for final drive/gearbox housing when pulling out flange shaft. Take care to cover the splines completely, without creasing or overlapping the tape.

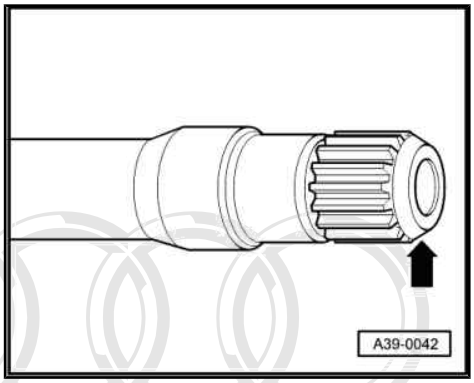


– Unbolt bearing bracket for flange shaft (left-side) -arrows-.
– Pull out flange shaft (left-side).

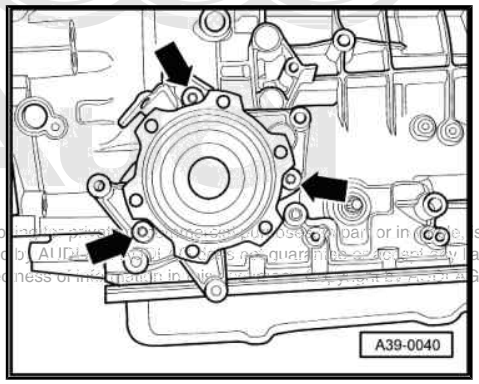


**Note**

*While pulling out the flange shaft (left-side), it must be guided carefully by hand to avoid damaging the twin-lip oil seal between the final drive and gearbox housing.*

Protected by copyright. Copying for private or commercial purposes, in part or in whole, is not permitted unless authorised by AUDI AG. AUDI AG does not guarantee or accept any liability with respect to the correctness of information in this document. Copyright by AUDI AG.

– Loosen bolts for ATF oil pan -arrow- in diagonal sequence and remove bolts.
– Take off ATF oil pan.

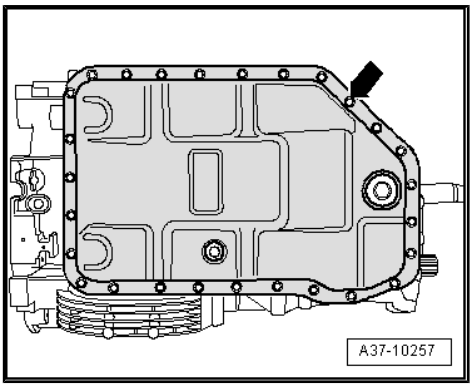


**Note**

*A fault in the torque converter lock-up clutch is indicated by a clouded coating of greenish colour in the ATF oil pan.*

– Remove bolts -arrows- for ATF strainer.
– Detach ATF strainer from valve body.

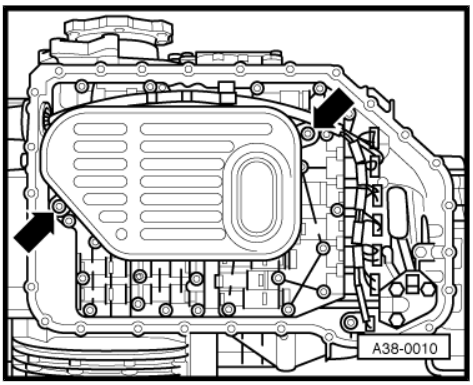

– Remove retaining clip -arrow- for wiring harness connector.
– Remove wiring harness connector by pressing inwards.

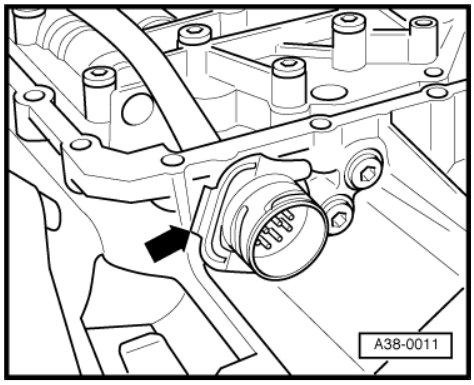


– Unscrew bolt -arrow- and detach gearbox speed sender -G38- / gearbox output speed (sender) -G195- .

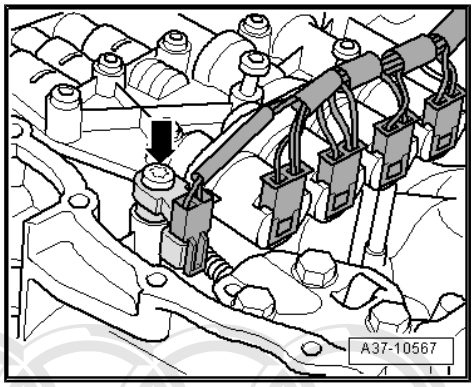


– On gearboxes with hydraulic control type “E18/2”, detach electrical connector for gearbox input speed sender -G182- at valve body -arrow- and unplug connector.

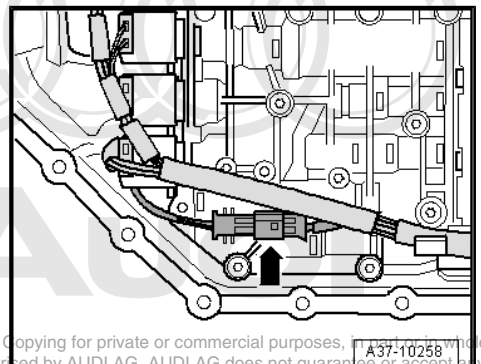


Protected by copyright. Copying for private or commercial purposes, in part or in whole, is not permitted unless authorised by AUDI AG. AUDI AG does not guarantee or accept any liability with respect to the correctness of information in this document. Copyright by AUDI AG.

– Slacken bolts for valve body in the sequence -17 ... 1- and remove bolts.

> ⚠ **Caution**
>
> - *Only remove the bolts marked; bolt -6- is only fitted on gearboxes with hydraulic control type “E17”.*
> - *If other bolts are removed, this may affect the operation of the valve body or the valve body could come apart.*
> - *Observe different bolt lengths.*

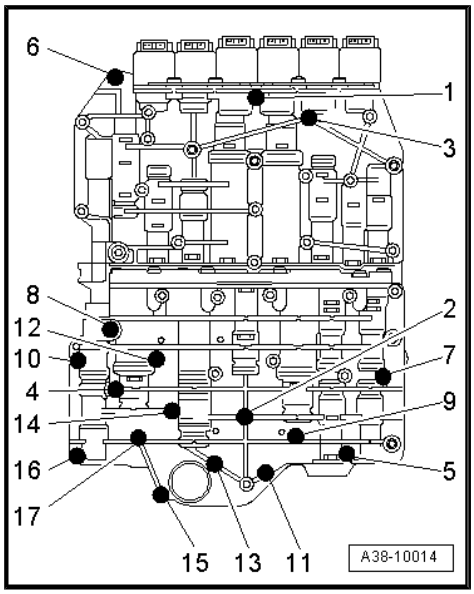

– Detach valve body carefully from gearbox.

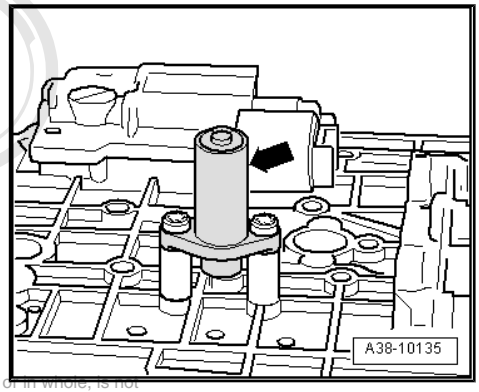


> **Caution**
>
> *Only on gearboxes with hydraulic control type "E17": To prevent damage after removal, do not put down the valve body on the gearbox input speed sender -G182- (located on reverse side of valve body -arrow-).*

Protected by copyright. Copying for private or commercial purposes, in part or in whole, is not permitted unless authorised by AUDI AG. AUDI AG does not guarantee or accept any liability with respect to the correctness of information in this document. Copyright by AUDI AG.

– Using extractor tool -T10271- , pull out sealing sleeves -arrows- from feed bores to clutches "C", "A", "B" and "E" and to torque converter lock-up clutch.

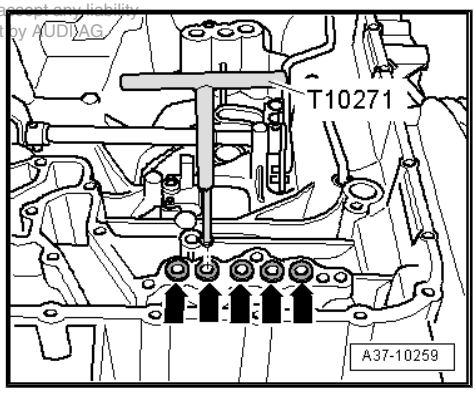


– Remove 3 circlips -1-.
– Detach coil springs -2-.
– Pull out sealing sleeves -3- using extractor tool -T10271- .

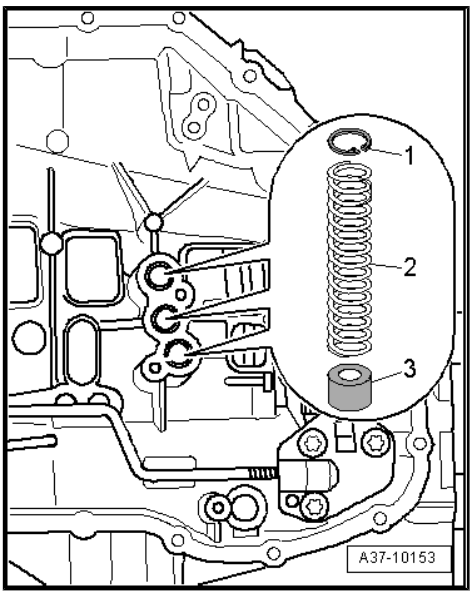


– Turn gearbox on assembly stand.
• ATF supply unit points upwards.
– Slacken bolts for ATF supply unit in the sequence -9 ... 1- and remove bolts.
– Remove bolts with washers.

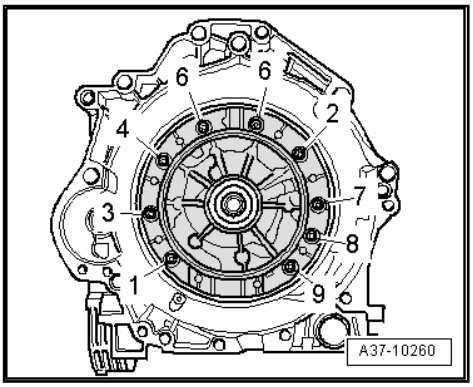

– Attach puller for ATF supply unit -T10286- to stator shaft and lift out ATF supply unit by pulling firmly.

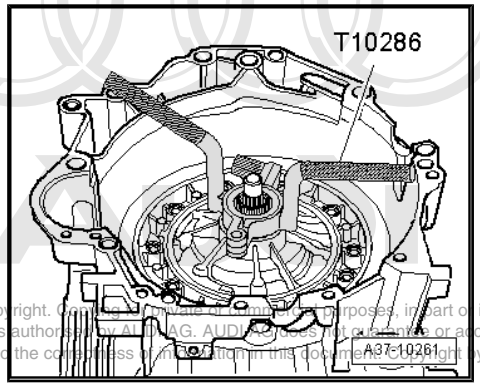


Protected by copyright. Copying for private or commercial purposes, in part or in whole, is not permitted unless authorised by AUDI AG. AUDI AG does not guarantee or accept any liability with respect to the correctness of information in this document. Copyright by AUDI AG.

If it is not possible to detach ATF supply unit:

– Insert a screwdriver between sun gear “I” and flanged housing on underside of gearbox and lever components located above sun gear upwards -arrow-.

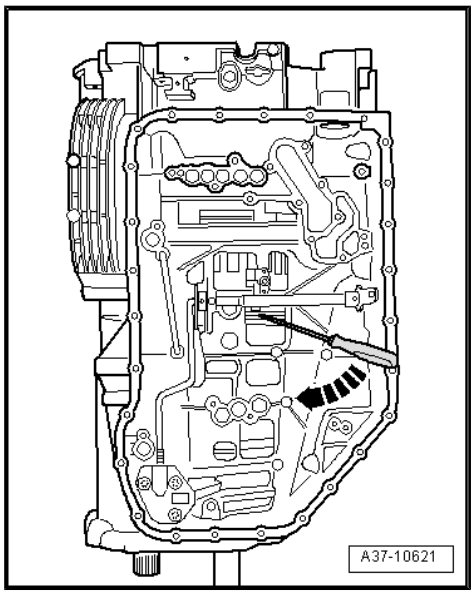


– Remove shim -1- and axial needle bearing -2-.

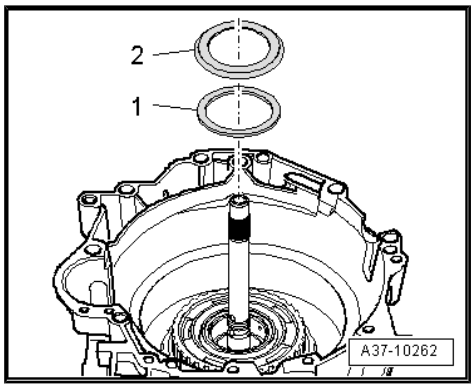


– Pull body “II” -item 1- out of gearbox housing.

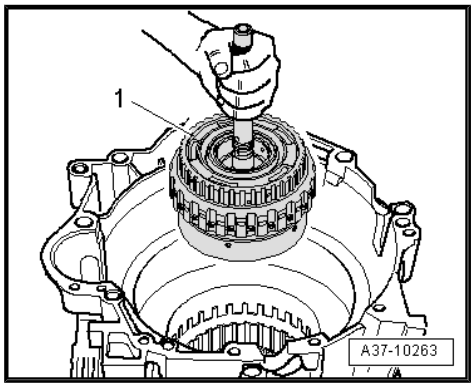

– Turn body “II” -item 1- upside down and place on support element -T10283- together with input shaft.

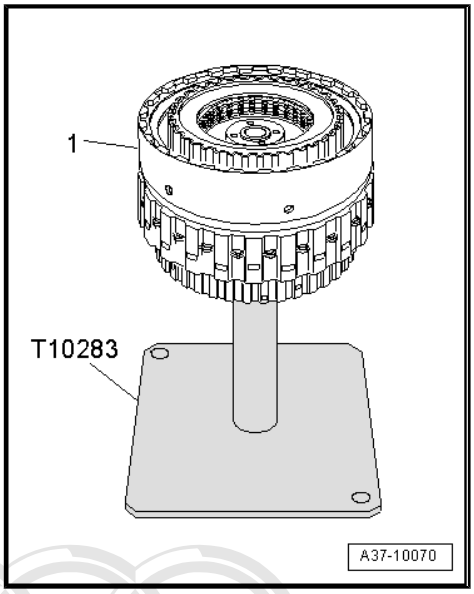


– Take out sun shaft -1- and intermediate shaft -2- with inner plate carrier.

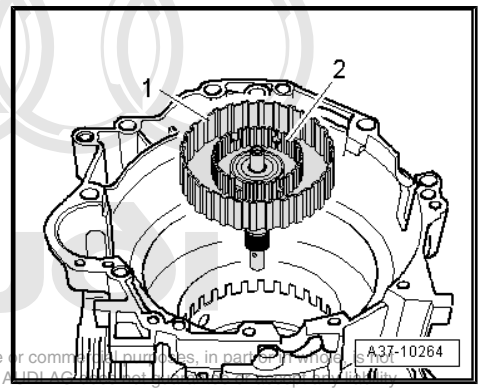


Protected by copyright. Copying for private or commercial purposes, in part or in whole, is not permitted unless authorised by AUDI AG. AUDI AG does not guarantee or assume any liability with respect to the correctness of information in this document. Copyright by AUDI AG.

– Dismantle the following components:

1 - Sun shaft

2 - Thrust washer

3 - Axial needle bearing

4 - Flange washer

5 - Intermediate shaft with inner plate carrier

6 - Thrust washer

7 - Axial needle bearing

8 - Thrust washer

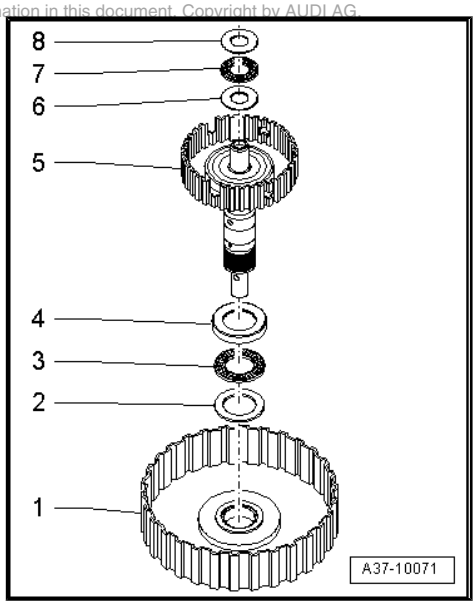

– Remove axial needle bearing -1-.

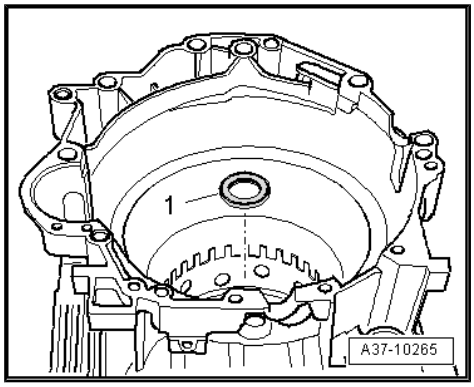


– Remove sun gear “I” -item 1-.

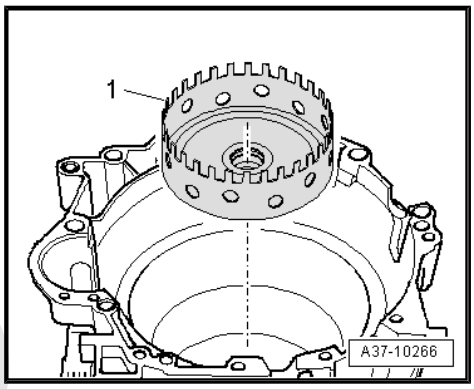


– Remove planetary gear set “I” and “II” -item 1-.

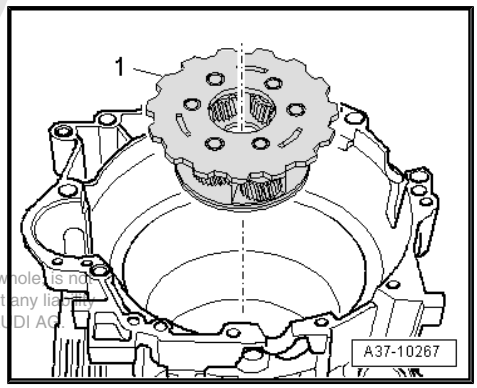


Protected by copyright. Copying for private or commercial purposes, in part or in whole is not permitted unless authorised by AUDI AG. AUDI AG does not guarantee or accept any liability with respect to the correctness of information in this document. Copyright by AUDI AG.

– Remove flange washer -3-, axial needle bearing -2- and thrust washer -1-.

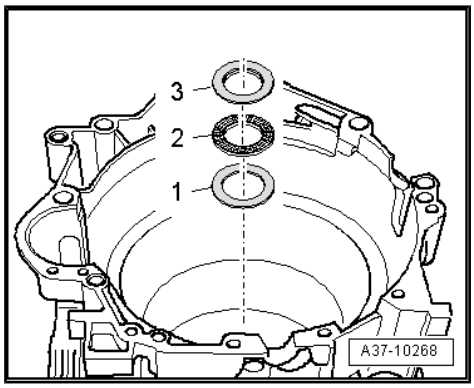

– Remove shaft with annulus “I” -item 4-, thrust washer -3-, axial needle bearing -2- and flange washer -1-.

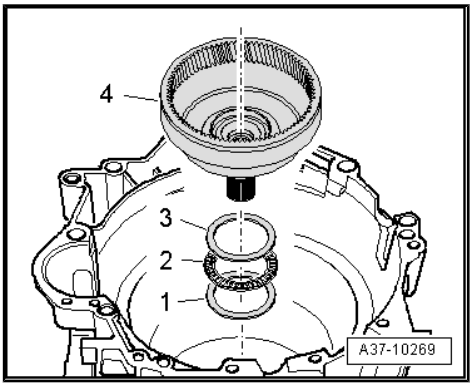


– Remove flanged housing -1-.

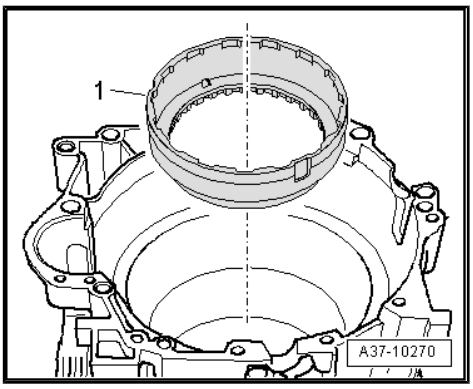


– Remove circlip -arrow- for body “I”.

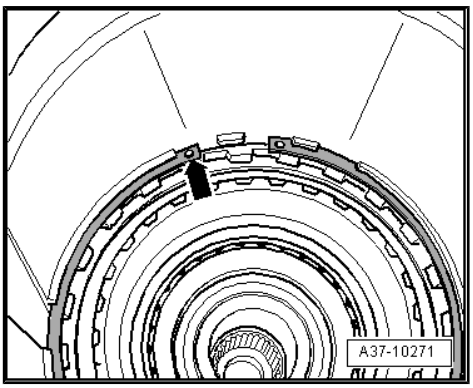


– Unscrew knurled nut on lifting tool -T10287- slightly.
– Insert lifting tool into body “I” far as it will go.
– Tighten knurled nut on lifting tool by turning clockwise.
– Make sure that lifting tool is securely attached in body “I”.
– Lift body “I” by hand out of gearbox housing.

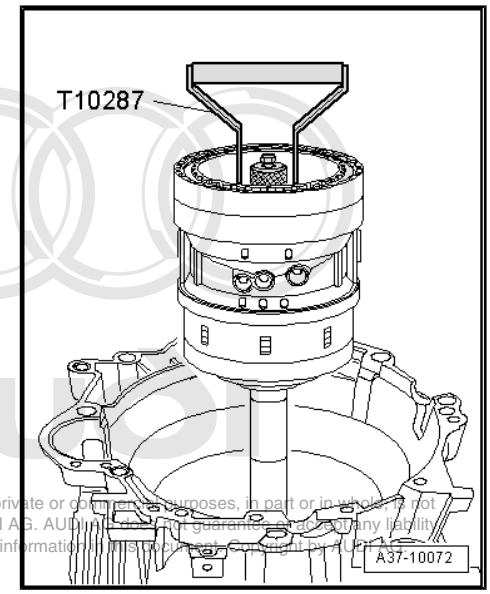


Protected by copyright. Copying for private or commercial purposes, in part or in whole, is not permitted unless authorised by AUDI AG. AUDI AG does not guarantee or accept any liability with respect to the correctness of information in this document. Copyright by AUDI AG.

– Place body “I” in support element -T10282- .

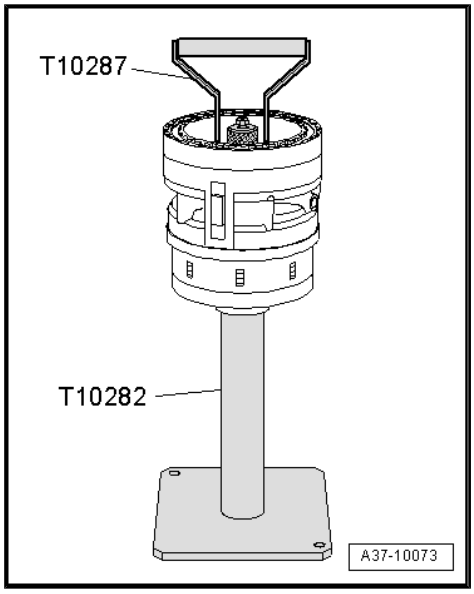


– Remove sun gear “III” -item 1- with bottom flange washer -2-, axial needle bearing -3- and top flange washer -4- from gear-box housing.

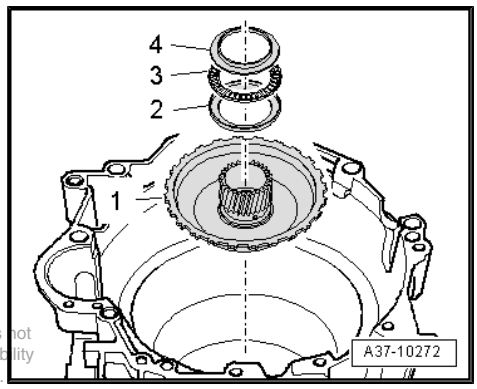


**Note**

*The top flange washer -4- may stick to the bottom surface of body “I”.*

Protected by copyright. Copying for private or commercial purposes, in part or in whole, is not permitted unless authorised by AUDI AG. AUDI AG does not guarantee or accept any liability with respect to the correctness of information in this document. Copyright by AUDI AG.

## Assembling

– Make sure that lifting tool is securely attached in body “I”.

– Lift body “I” by hand off support element -T10282- and place onto workbench.

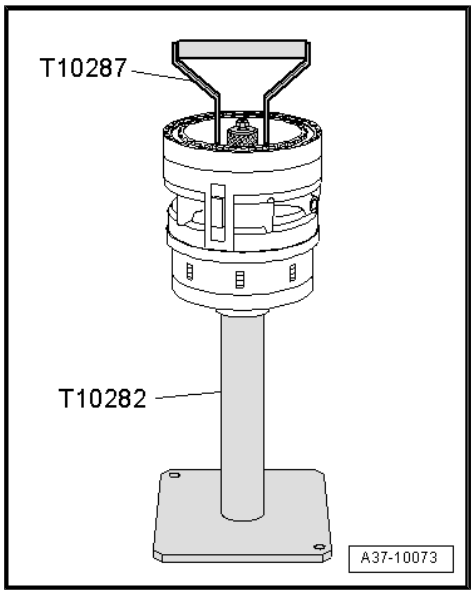

– Fit the following components on input shaft of body “I” -item 5-:

4 - Top flange washer (flange faces upwards towards body “I”)

3 - Axial needle bearing

2 - Bottom flange washer (flange faces towards axial needle bearing)

1 - Sun gear “III” (external splines on sun gear must engage in splines of clutch “F”)

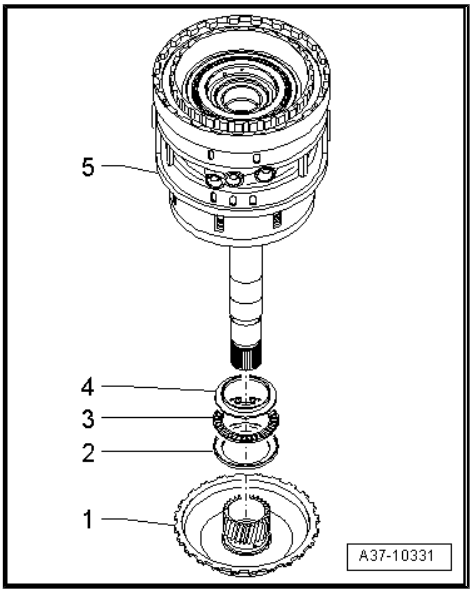


**Note**

*Do not interchange flange washer -4- (height including flange: 5 mm) with flange washer* *⇒ Item 29 (page 24)* *(height including flange: 2.5 mm).*

### Automatic gearbox 01V, front-wheel drive

– Using assembly sleeve -T10290- , secure sun gear “III” on input shaft without play as shown in illustration (screw grub screw -1- into hole marked “A”, -arrow A- in illustration and hand-tighten).

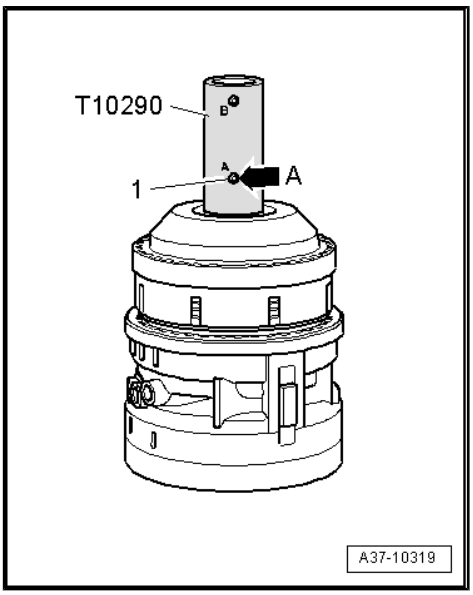


**Caution**

- *DO NOT screw the grub screw into the hole marked “B”; this would damage the splines.*
- *Hole “A” faces towards the sun gear “III”.*

Protected by copyright. Copying for private or commercial purposes, in part or in whole, is not permitted unless authorised by AUDI AG. AUDI AG does not guarantee or accept any liability with respect to the correctness of information in this document. Copyright by AUDI AG.

### Automatic gearbox 01V, four-wheel drive

– Using assembly sleeve -T10290- , secure sun gear “III” on input shaft without play as shown in illustration (screw grub screw -1- into hole marked “B”, -arrow B- in illustration and hand-tighten).

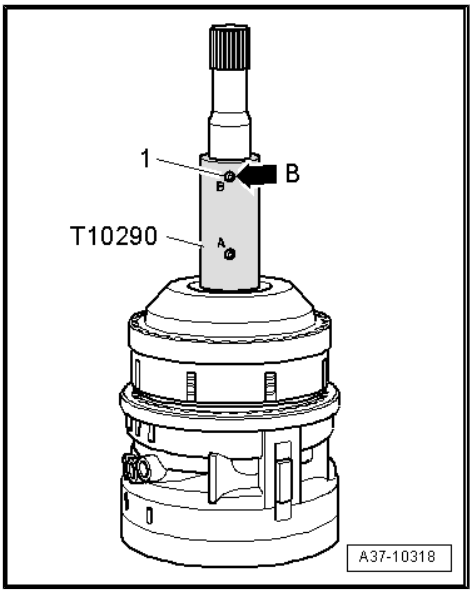


**Caution**

- *DO NOT screw the grub screw into the hole marked “A”; this would damage the bearing surface.*
- *Hole “A” faces towards the sun gear “III”.*

**Automatic gearbox 01V, front-wheel drive and four-wheel drive**

– Check whether parallel keys -arrow- are centred on both sides of cylinder “D/G”.

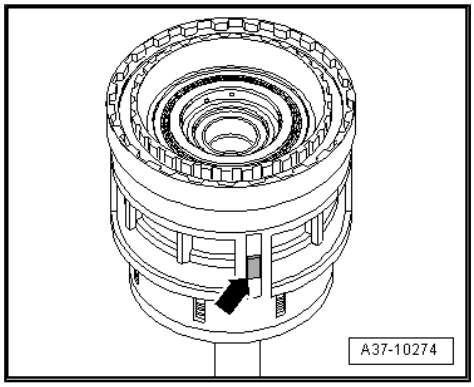


– Move body “I” to installation position.

• The oil drillings -arrows- on cylinder “D/G” face underside of gearbox and must align with drillings in gearbox housing.

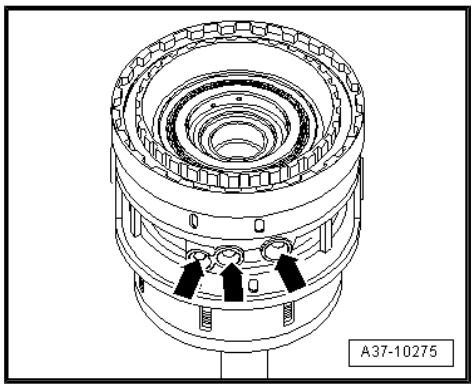


– Insert body “I” fully into gearbox housing.

• Push body “I” down until circlip can be inserted in groove.

– Slacken knurled nut and detach lifting tool -T10287- .

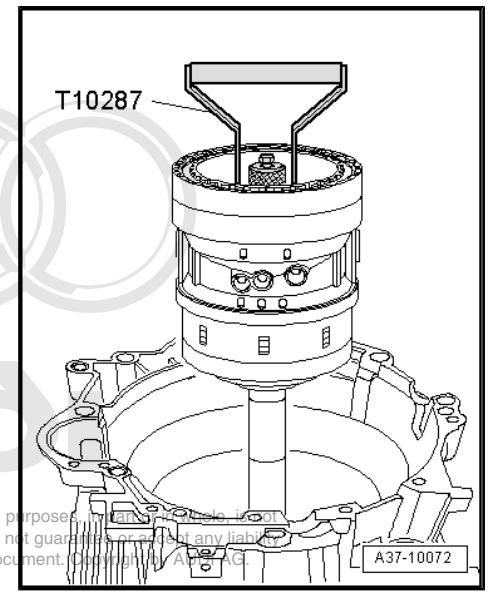


Protected by copyright. Copying for private or commercial purposes, in part or in whole, is not permitted unless authorised by AUDI AG. AUDI AG does not guarantee or assume any liability with respect to the correctness of information in this document. Copyright by AUDI AG.

– Carefully insert circlip -arrow- for body “I” into gearbox housing.

> ⚠ **Caution**
>
> ***Make sure that circlip locates securely in groove of gearbox housing; knock circlip into groove all round with a punch if necessary.***

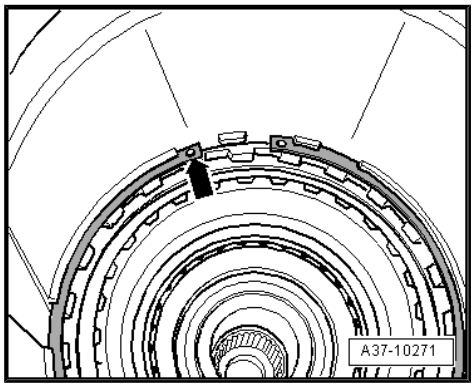

– Slacken grub screw and take off assembly sleeve -T10290- .

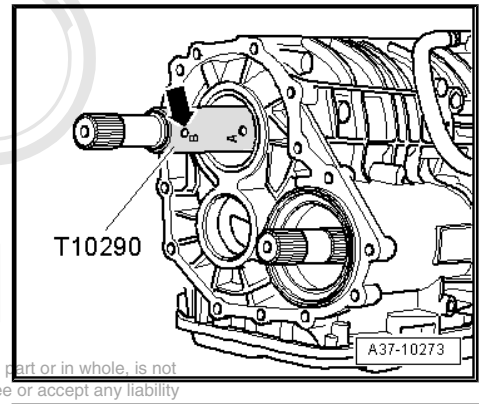


**Note**

*The illustration shows automatic gearbox 01V, four-wheel drive*

Protected by copyright. Copying for private or commercial purposes, in part or in whole, is not permitted unless authorised by AUDI AG. AUDI AG does not guarantee or accept any liability with respect to the correctness of information in this document. Copyright by AUDI AG.

– Insert flanged housing -1-.

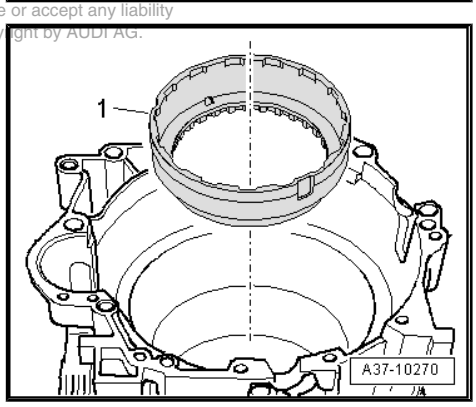


– Fit flange washer -1- onto body “I”.

• The flange on the flange washer faces downwards.

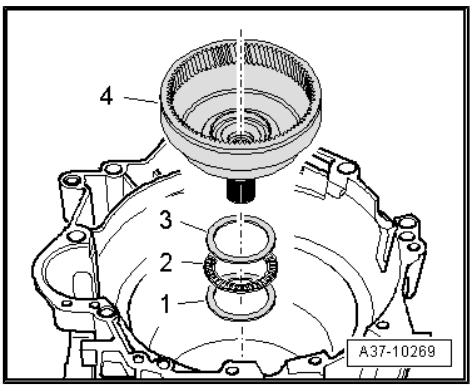


**Note**

*Do not interchange flange washer -1- (height including flange: 2.5 mm) with flange washer* *⇒ Item 33 (page 24)* *(height including flange: 5 mm).*

– Fit axial needle bearing -2-.

– Fit thrust washer -3-.

– Insert shaft with annulus “I” -item 4-.

– Fit thrust washer -1- in annulus “I”.

– Fit axial needle bearing -2-.

– Fit flange washer -3-.

• The flange on the flange washer faces downwards.

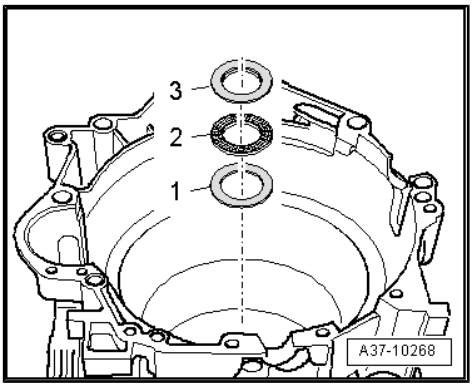

– Insert planetary gear set “I” and “II” -item 1-.

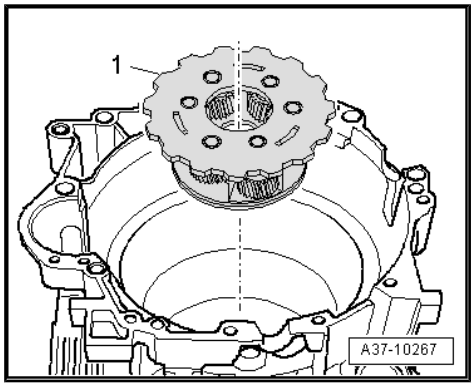


– Insert sun gear “I” -item 1- and planetary gear set “I” and “II”.

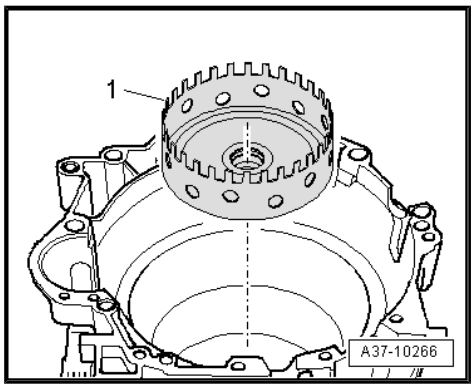


**Note**

- *Magnetic sun gear for gearbox version with hydraulic control type “E17”, the gearbox input speed sender -G182- is an inductive sender on this version.*
- *Non-magnetic sun gear for gearbox version with hydraulic control type “E18/2”, the gearbox input speed sender -G182- is a Hall sender on this version.*

– Fit axial needle bearing -1-.

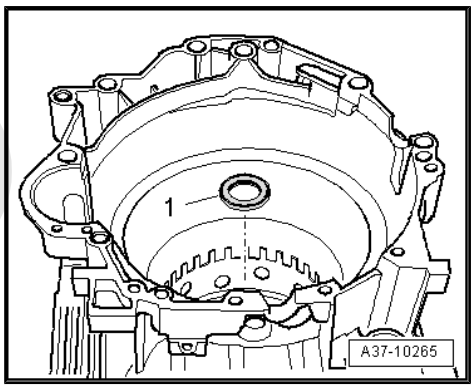


– Assemble the following components to form one unit:

1 - Sun shaft

2 - Thrust washer

3 - Axial needle bearing

4 - Flange washer (flange faces downwards towards axial needle bearing)

5 - Intermediate shaft with inner plate carrier

6 - Thrust washer

7 - Axial needle bearing

8 - Thrust washer

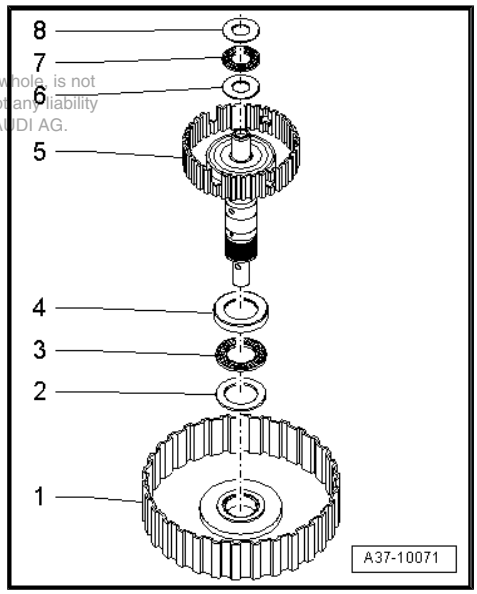


Protected by copyright. Copying for private or commercial purposes, in part or in whole, is not permitted unless authorised by AUDI AG. AUDI AG does not guarantee or accept any liability with respect to the correctness of information in this document. Copyright by AUDI AG.

– Install sun shaft -1- and intermediate shaft -2- with inner plate carrier.

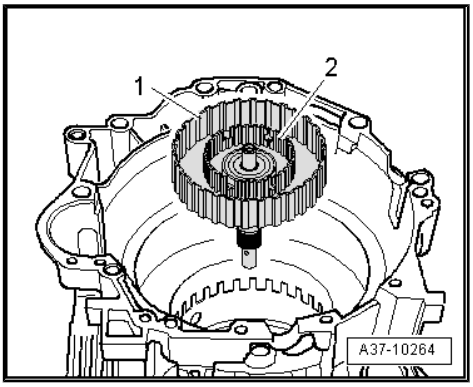


– Take “body II” -item 1- out of support element -T10283- and rotate it into installation position.

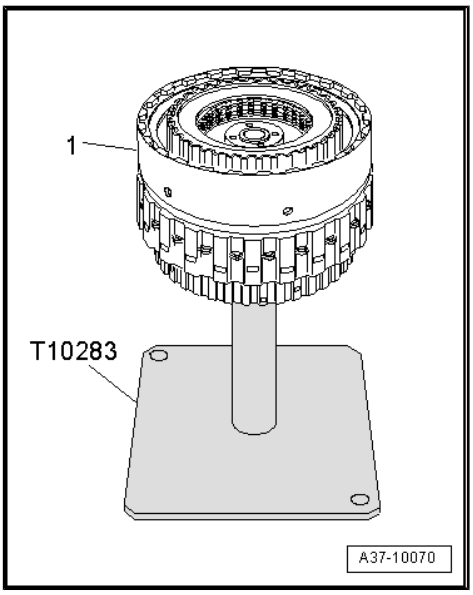


– Insert “body II” -item 1- into gearbox by hand, turning in both directions as required.

– Make sure that the coupling splines of the sun gear “I” engage in the external splines of cylinder “B” (turn input shaft and sun gear “I” as required).

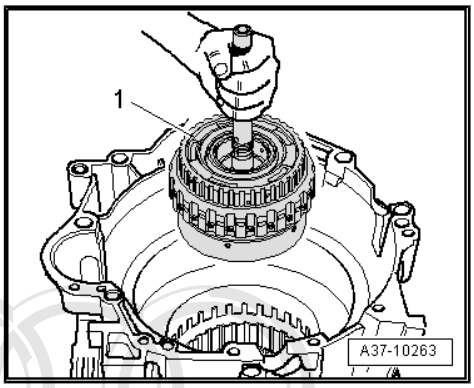


Protected by copyright. Copying for private or commercial purposes, in part or in whole, is not permitted unless authorised by AUDI AG. AUDI AG does not guarantee or accept any liability with respect to the correctness of information in this document. Copyright by AUDI AG.

– Check proper installation of body “II”.
– Measure distance between seat for shim on body “II” and contact surface for ATF pump on gearbox housing.
• Dimension -a- = 6.0 mm (minimum).
• The shim must not be fitted at this stage.

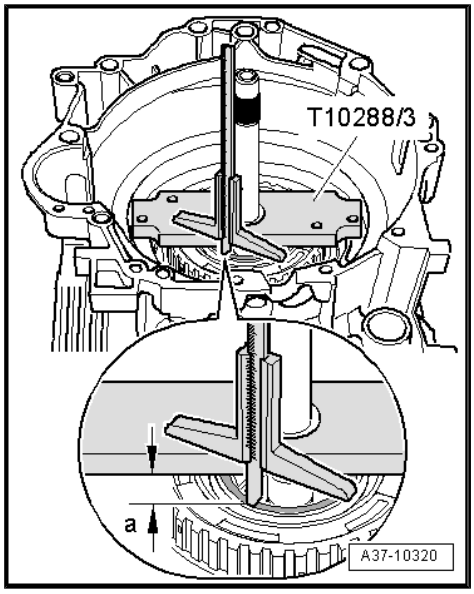


– Fit existing shim -1- onto plate carrier “C”.

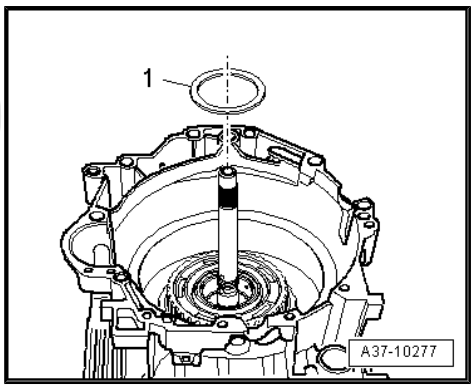


– Renew two rectangular section seals on input shaft.
– Lightly lubricate the two rectangular section seals on the input shaft with vaseline before fitting. Use vaseline only. Other types of lubricant will cause the gearbox hydraulics to malfunction.
– Make sure that rectangular section seals are seated properly all round in groove on input shaft.

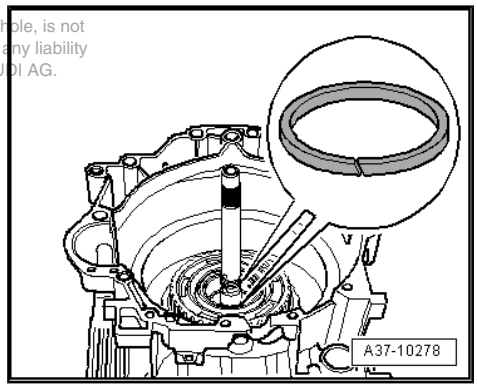


Protected by copyright. Copying for private or commercial purposes, in part or in whole, is not permitted unless authorised by AUDI AG. AUDI AG does not guarantee or accept any liability with respect to the correctness of information in this document. Copyright by AUDI AG.

– Lightly lubricate reverse side of axial needle bearing -2- with vaseline. Use vaseline only. Other types of lubricant will cause the gearbox hydraulics to malfunction.

– Fit axial needle bearing onto ATF supply unit -1- so that it sticks in position.

• Closed side of axial needle bearing faces ATF supply unit.

– Renew rectangular section seals -3- and -4- on stator shaft.

– Lightly lubricate the rectangular section seals with vaseline before fitting. Use vaseline only. Other types of lubricant will cause the gearbox hydraulics to malfunction.

– Make sure that rectangular section seals are seated properly all round in grooves on stator shaft.

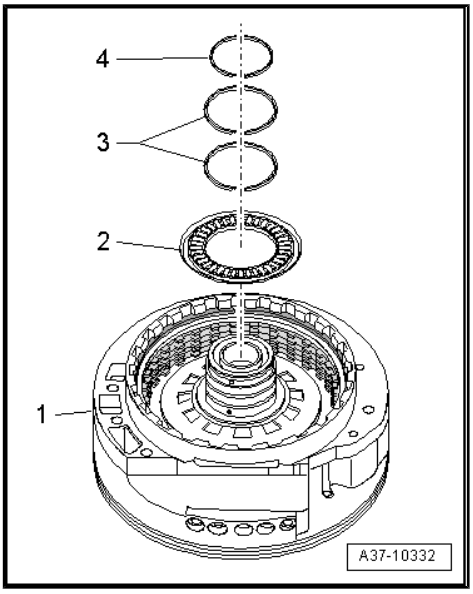


– After installation, hook the ends of the rectangular section seals -arrows- together as illustrated.

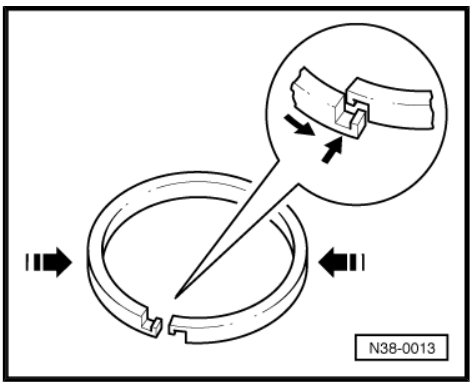


– Renew O-ring -1- on ATF supply unit.

– Lightly lubricate O-ring with vaseline. Use vaseline only. Other types of lubricant will cause the gearbox hydraulics to malfunction.

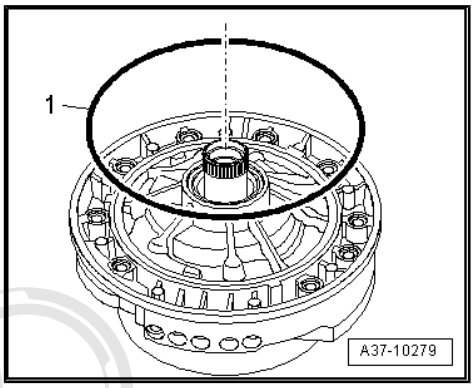


Protected by copyright. Copying for private or commercial purposes, in part or in whole, is not permitted unless authorised by AUDI AG. AUDI AG does not guarantee or accept any liability with respect to the correctness of information in this document. Copyright by AUDI AG.

– Align friction plates -3- of clutch “C” symmetrically using centring tool -T10288/1- (engage aligning pins -2- and -4- in splines of all friction plates).

– Align friction plates in relation to housing of ATF supply unit (insert aligning pins -1- and -5- in corresponding drillings in ATF supply unit).

• The aligning pins only fit in one position.

– Hold centring tool in this position and insert wedge -T10288/2- at the side between corrugated spring and piston “F” -arrow-.

• The wedge should hold all the plates in their present position.

– Take off centring tool -T10288/1- ; wedge -T10288/2- remains in position.

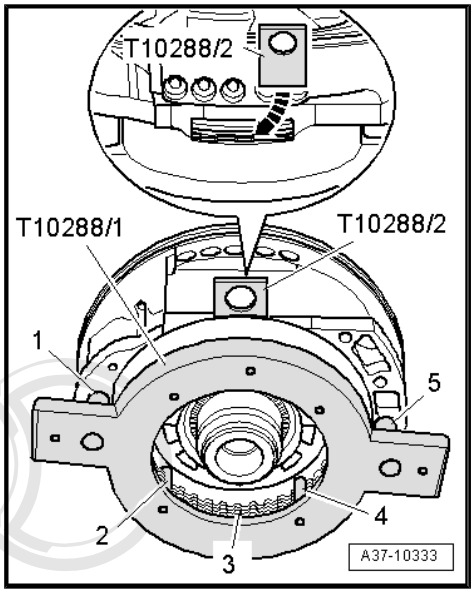


– Align plate carrier for clutch “C” using centring tool -T10288/3- (screw guide pins -T10288/4- into gearbox housing).

• The drillings in the centring tool and gearbox housing can only be aligned in one position.

– Carefully lift off centring tool -T10288/3- ; guide pins -T10288/4- remain in gearbox housing.

• The plate carrier for clutch “C” must not be turned from this point onwards.

Copyright by AUDI AG. Copying for private or commercial purposes, in part or in whole, is not permitted unless authorised by AUDI AG. AUDI AG does not guarantee or accept any liability with respect to the correctness of information in this document. Copyright by AUDI AG.

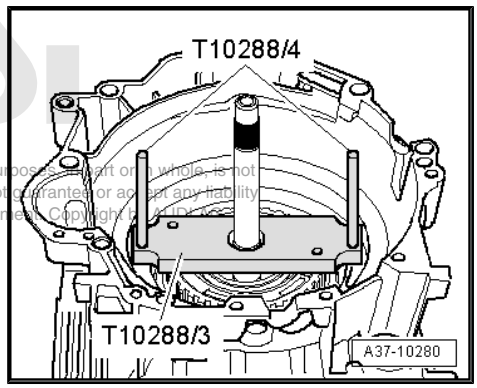


– Apply puller for ATF supply unit -T10286- to stator shaft.

– Bring ATF supply unit into installation position.

• The recess for the flange shaft faces towards valve body side.

– Fit corresponding holes on ATF supply unit onto guide pins -T10288/4- .

– Install ATF supply unit carefully into gearbox housing and press down firmly.

– Pull down ATF supply unit into its final position by alternately tightening two opposite securing bolts.

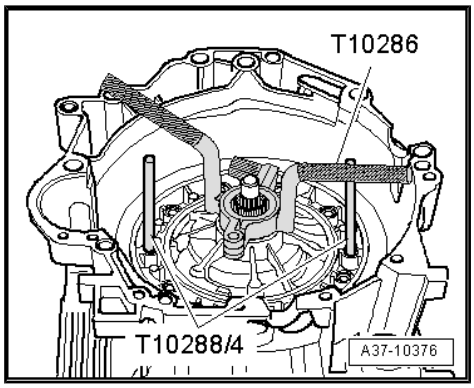


– Pull out wedge -10288/2- with hook -3438- .

– Detach puller for ATF supply unit -T10286- .

– Unscrew guide pins -T10288/4- .

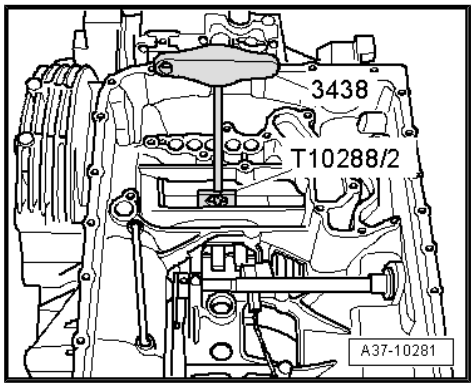

– Fit bolts for ATF supply unit with new washers into ATF supply unit housing.

– Secure bolts for ATF supply unit in sequence -1 ... 9-.

• Tightening torque: 10 Nm.

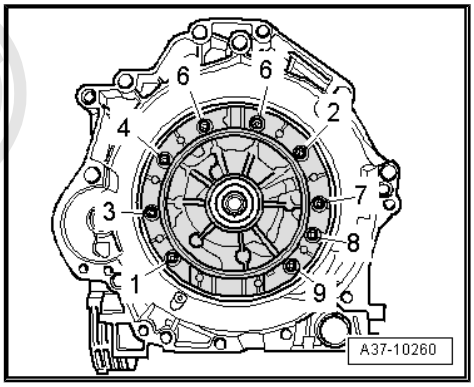


**Note**

*Check that the ATF supply unit is correctly installed: it should be possible to turn the input shaft, otherwise the topmost plate of clutch "C" may have become trapped and bent on installation. If it is not possible to turn input shaft, remove ATF supply unit again and check plates for damage.*

Protected by copyright. Copying for private or commercial purposes, in part or in whole, is not permitted unless authorised by AUDI AG. AUDI AG does not guarantee or accept any liability with respect to the correctness of information in this document. Copyright by AUDI AG.

– Set up dial gauge -VAS 6080- with universal dial gauge bracket -VW 387- on gearbox flange.

– Apply dial gauge -VAS 6080- with dial gauge extension to gearbox input shaft as shown in illustration.

– Set dial gauge to "0".

– Wrap insulating tape around input shaft to prevent damage.

– Move input shaft up and down with pliers (avoid diagonal movements).

– Read off axial clearance of input shaft from dial gauge.

• Specification: 0.10 ... 0.30 mm

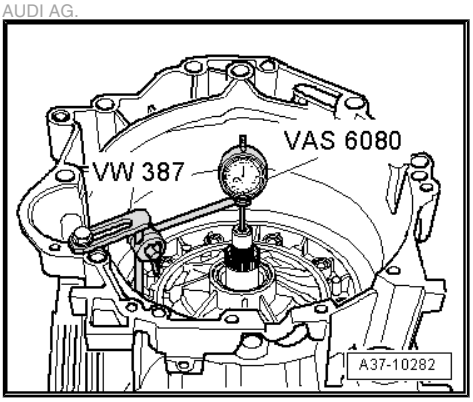


**Note**

*If no axial clearance can be measured (0 mm), it is possible that the flange washers ⇒ Item 33 (page 24) and ⇒ Item 29 (page 24) have been interchanged.*

If readout does not match specification:

– Remove ATF supply unit again.

– Determine correct thickness of shim -2- on body "II", -item 1- according to following table.

• If measured axial clearance is below specification: insert thinner shim of appropriate thickness.

• If determined axial clearance is above specification: insert thicker shim of appropriate thickness.

| Available shims - Thickness of shims in mm | | |
|---|---|---|
| 1.6 | 2.0 | 2.4 |
| 1.8 | 2.2 | 2.6 |

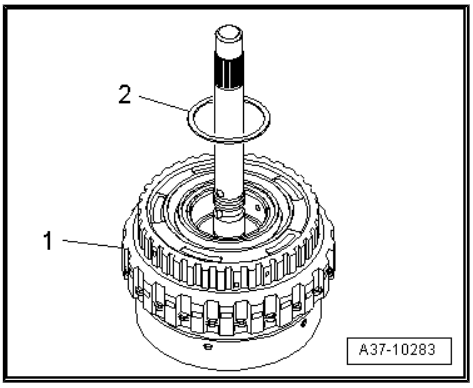


– Install ATF supply unit again with new shim, new washers and new O-ring ⇒ page 43 .

– Read off axial clearance of input shaft again ⇒ page 45 .

If reading again does not match specification:

– Repeat adjustment.

If reading matches specification:

– Turn gearbox on assembly stand.

• Valve body side faces upwards.

– Press sealing sleeves -3- into bores in gearbox housing as far as stop.

– Fit coil springs -2- and secure with circlips -1- (push circlips down into bores as far as shoulder).

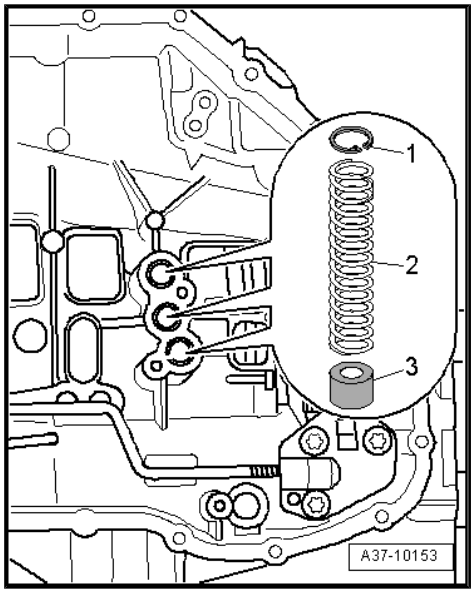

**Caution**

*Only on gearboxes with hydraulic control type "E17": To prevent damage after removal, do not put down the valve body on the gearbox input speed sender -G182- (located on reverse side of valve body -arrow-).*

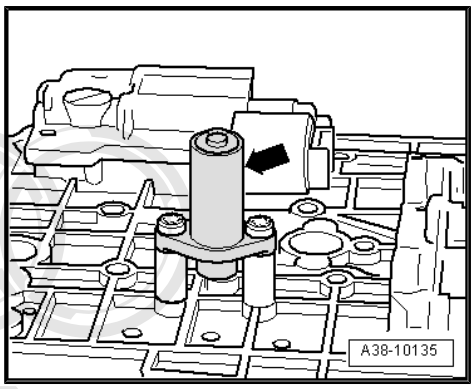


– Place valve body in position on gearbox housing (do not apply force). At the same time insert pin of detent plate -1- so that it engages in slot on selector slide -2-.

Protected by copyright. Copying for private or commercial purposes, in part or in whole, is not permitted unless authorised by AUDI AG. AUDI AG does not guarantee or accept any liability with respect to the correctness of information in this document. Copyright by AUDI AG.

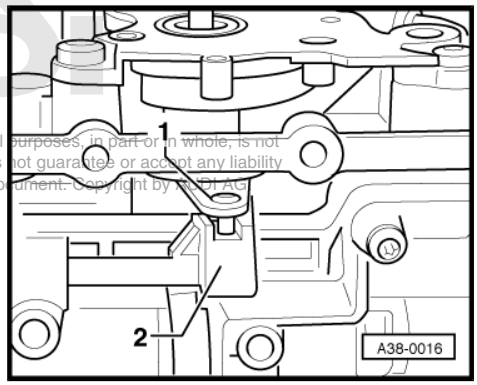

– Fit bolts for valve body.

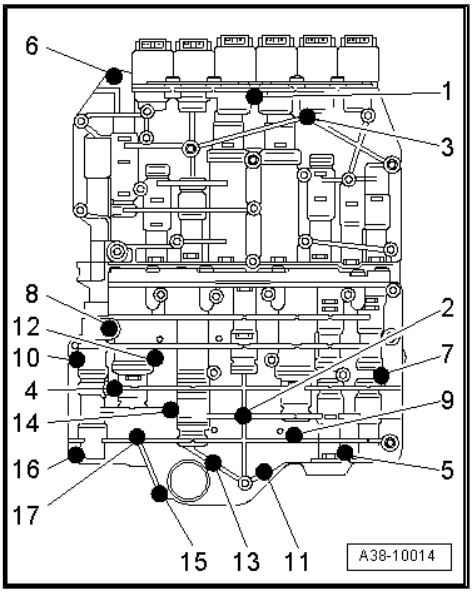


**Note**

- *Note different bolt lengths.*
- *Bolt -6- is only fitted on gearboxes with hydraulic control type "E17".*
- *On gearboxes with hydraulic control type "E18/2", make sure that electrical wiring for gearbox input speed sender -G182- does not become trapped between gearbox housing and valve body.*

– Tighten bolts on valve body in two stages as follows:

| Step | Tightening sequence |
|---|---|
| I | – Tighten bolts hand-tight in sequence -1 ... 17-. |
| II | – Tighten bolts to 8 Nm in sequence -1 ... 17-. |

– Renew O-rings for wiring harness connector.

– Fit wiring harness connector -arrow- in gearbox housing.

• Installation position: lugs -1- and -2- on shoulder are horizontal, flat part -arrow- of connector should be parallel to sealing surface for ATF oil pan.

Copyright by AUDI AG. Passing on to third parties or duplicating this document, in whole or in part, is not permitted unless authorised by AUDI AG. AUDI AG does not guarantee or accept any liability with respect to the correctness of information in this document. Copyright by AUDI AG.

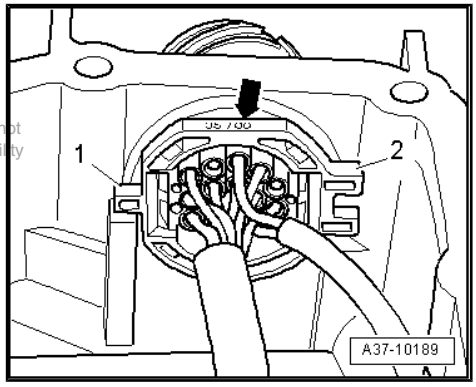


– Fit retaining clip -arrow- for wiring harness connector and check that clip is properly engaged.

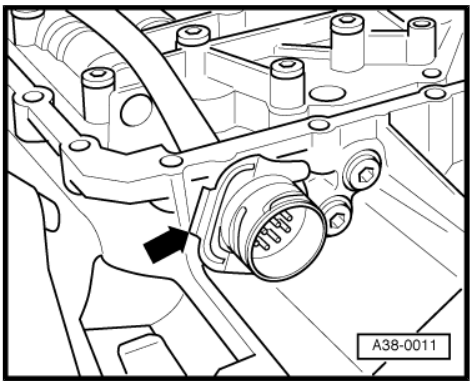


– Secure gearbox speed sender -G38- / gearbox output speed sender -G195- -arrow-.

• Tightening torque: 10 Nm.

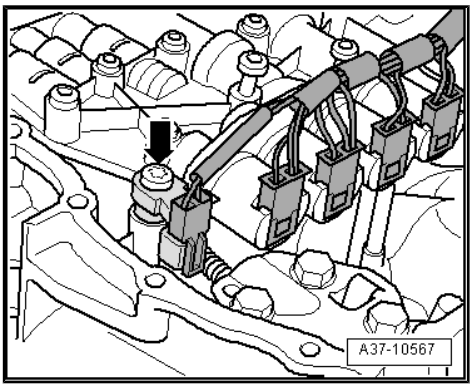

– On gearboxes with hydraulic control type “E18/2”, connect electrical wiring for gearbox input speed sender -G182- .
– Clip electrical connector into retainer on valve body -arrow-.

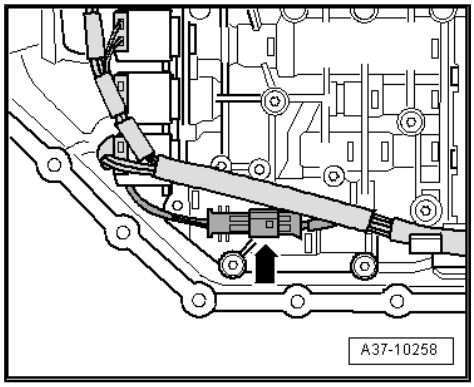


– Renew ATF strainer.
– Fit ATF strainer to valve body and secure -arrows-.
• Tightening torque: 5 Nm.

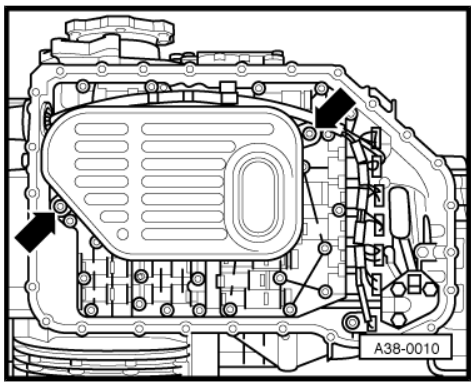


Note

♦ *Clean magnets (6x) in ATF oil pan.*
♦ *Ensure that magnets make full contact with ATF oil pan.*

– Install ATF oil pan -arrow- with new gasket.
– Tighten bolts for ATF oil pan progressively in diagonal sequence.
• Tightening torque: 10 Nm.

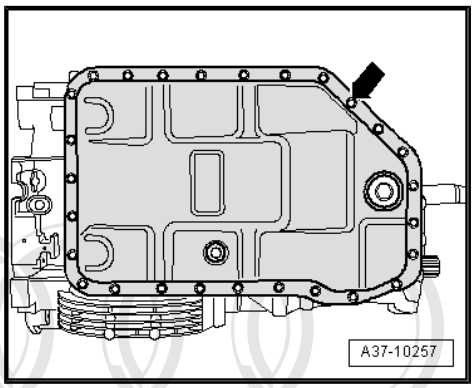


– Renew oil seal for flange shaft (left-side) if necessary ⇒ Automatic gearbox 01V, front-wheel drive and four-wheel drive; Rep. Gr. 39 .
– Renew O-ring -arrow B- in bearing bracket for flange shaft (left-side).

Note

*-Arrow A- can be disregarded.*

– Renew twin-lip oil seal for final drive/gearbox housing if necessary ⇒ Automatic gearbox 01V, front-wheel drive and four-wheel drive; Rep. Gr. 39 .

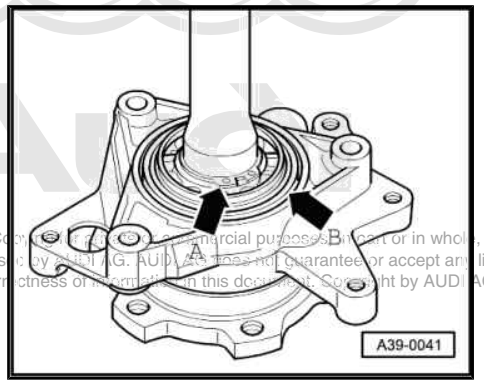


Protected by copyright. Copy[illegible] commercial purposes, in part or in whole, is not permitted unless authorised by AUDI AG. AUDI AG does not guarantee or accept any liability with respect to the correctness of information in this document. Copyright by AUDI AG.

– Cover splines on flange shaft (left-side) -arrow- with insulating tape to prevent damage to twin-lip oil seal for final drive/gearbox housing when pushing in flange shaft. Take care to cover the splines completely, without creasing or overlapping the tape.

– Insert flange shaft (left-side) into gearbox.

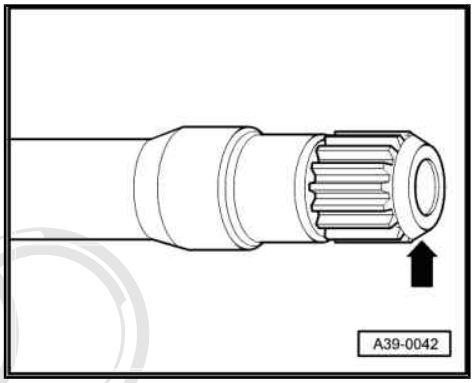


**Note**

*While pushing in the flange shaft (left-side), it must be guided carefully by hand to avoid damaging the twin-lip oil seal for final drive/gearbox housing.*

– Tighten bearing bracket bolts for flange shaft (left-side) -arrows-.

• Tightening torque: 23 Nm.

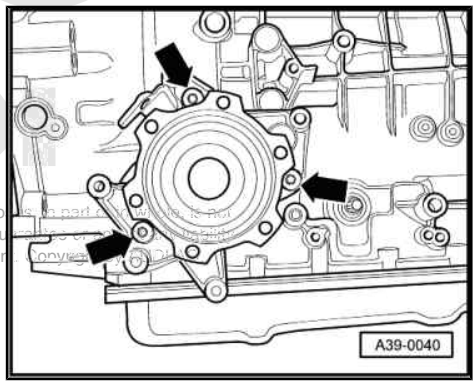


**Caution**

- ***Take care that the outer race for the tapered roller bearing or the shim for the differential does not fall out of the final drive cover.***
- ***The outer race for the tapered roller bearing must be re-installed in the same position.***
- ***Thickness of shim has been measured to fit; the shim must not be replaced with another shim of different thickness.***

Protected by copyright. Copying for private or commercial purposes, in part or in whole, is not permitted unless authorised by AUDI AG. AUDI AG does not guarantee or assume liability for any purpose that is not in conformity with this document. Copyright by AUDI AG.

– Clean baffle plate and secure to cover for final drive -arrows-

• Tightening torque: 10 Nm.

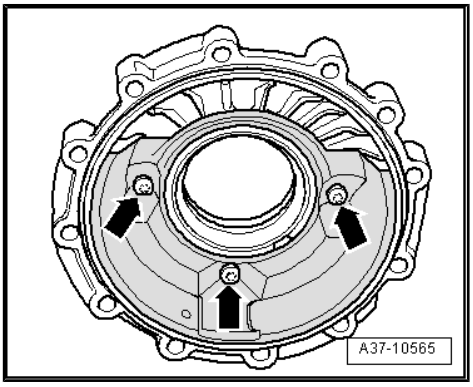


– Renew O-ring -arrow- in cover for final drive.

– Renew oil seal for flange shaft (right-side) if necessary ⇒ Automatic gearbox 01V, front-wheel drive and four-wheel drive; Rep. Gr. 39 .

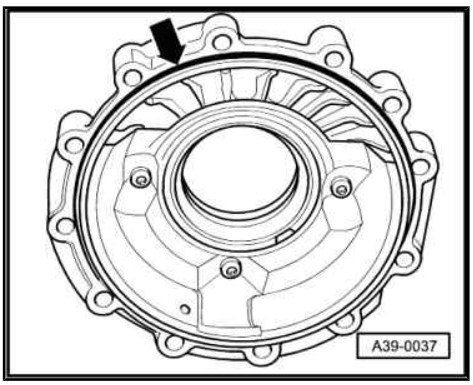

– Install differential -arrow- carefully.

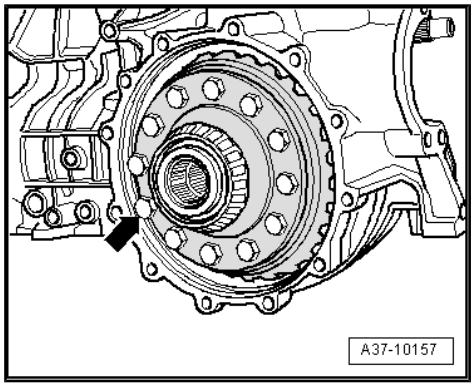


– Fit cover for final drive on gearbox housing.
– Tighten bolts on cover for final drive in two stages as follows:

| Step | Tightening sequence |
|---|---|
| I | – Tighten bolts hand-tight in sequence -1 ... 3-. |
| II | – Tighten bolts to 23 Nm in sequence -1 ... 12-. |

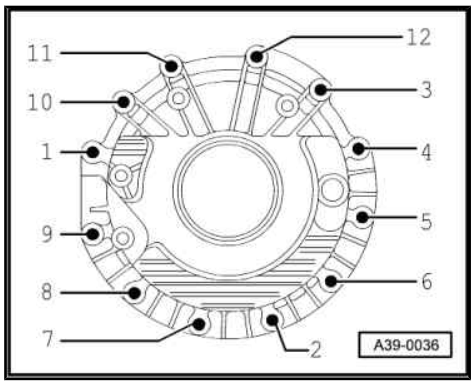


– Tighten bolt -arrow- securing flange shaft (right-side). To do so, screw two bolts into flange and counterhold flange shaft with suitable lever.
• Tightening torque: 23 Nm.

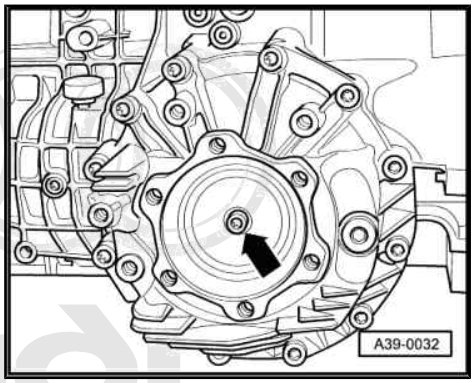


**Automatic gearbox 01V, front-wheel drive**

– Fit coil spring -3- onto pinion shaft.
– Fit axial needle bearing -2- and shim -1- onto input shaft.
• The flange on the outside of the axial needle bearing faces the shim.

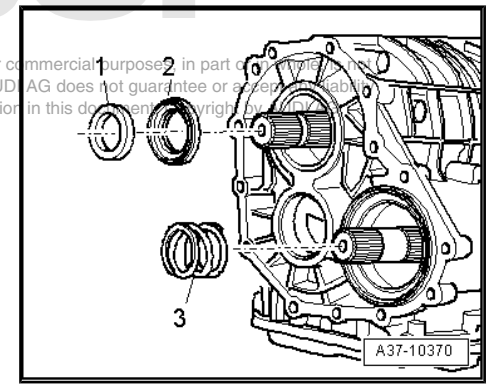


Protected by copyright. Copying for private or commercial purposes, in part or in whole, is not permitted unless authorised by AUDI AG. AUDI AG does not guarantee or accept any liability with respect to the correctness of information in this document. Copyright by AUDI AG.

– Fit input pinion -2- onto input shaft (push on as far as stop).

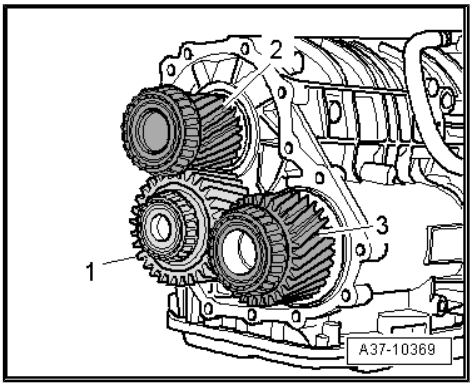


**Caution**

*The intermediate pinion -1- and pinion gear -3- must be re-fitted in the same position to make sure the direction of rotation is maintained.*

– Fit pinion gear -3- together with intermediate pinion -1- into gearbox housing according to markings made on removal (pull back input pinion -2- approx. 20 mm on input shaft).

– Check that dowel sleeve -A- is fitted in cover for front axle drive.

– Fit new gasket.

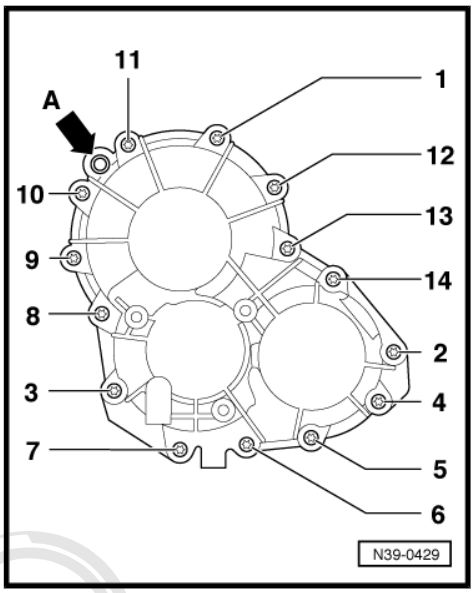


**Note**

*Before attaching the gasket, apply a thin coating of gear oil to the sealing surface to prevent it from slipping.*

– Tighten bolts on cover for front axle drive in two stages as follows:

| Step | Tightening sequence |
|---|---|
| I | – Screw in bolts hand-tight in sequence -1 ... 3-, ensuring that the gap between the cover for front axle drive and the gearbox housing is reduced evenly all round. |
| II | – Tighten bolts to 23 Nm in sequence -1 ... 14-. |

### Automatic gearbox 01V, four-wheel drive

– Cover splines on end of input shaft -arrow A- with insulating tape to prevent damage to oil seal when pushing on input pinion. Take care to cover the splines completely, without creasing or overlapping the tape.

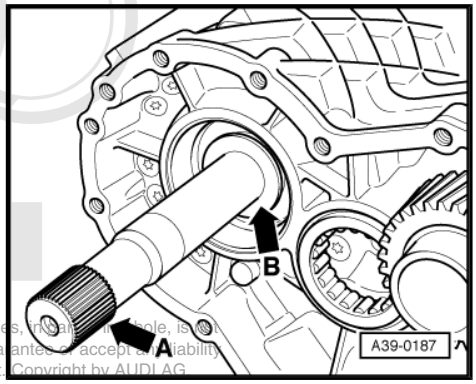


**Note**

*-Arrow B- can be disregarded.*

Protected by copyright. Copying for private or commercial purposes, in part or in whole, is not permitted unless authorised by AUDI AG. AUDI AG does not guarantee or accept any liability with respect to the correctness of information in this document. Copyright by AUDI AG

– Fit coil spring -3- onto pinion shaft.

– Fit axial needle bearing -2- and shim -1- onto input shaft.

• The flange on the outside of the axial needle bearing faces the shim.

– Renew oil seal in input pinion ⇒ page 163 if necessary.

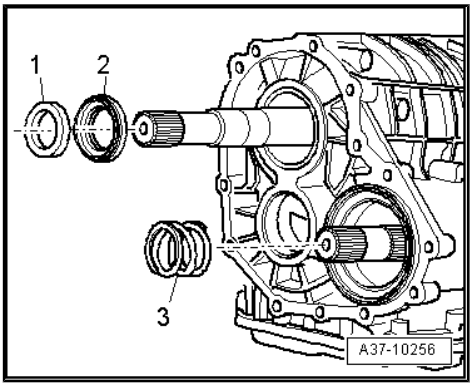

– Fit input pinion -2- onto input shaft (push on as far as stop).

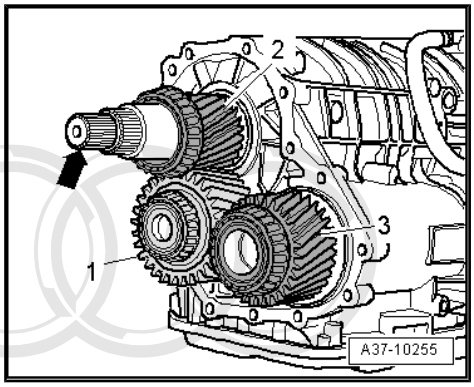


**Caution**

*The intermediate pinion -1- and pinion gear -3- must be re-fitted in the same position to make sure the direction of rotation is maintained.*

– Fit pinion gear -3- together with intermediate pinion -1- into gearbox housing according to markings made on removal (pull back input pinion -2- approx. 20 mm on input shaft).

– Renew oil seal for output flange to propshaft if necessary ⇒ Automatic gearbox 01V, front-wheel drive and four-wheel drive; Rep. Gr. 39 .

– Check that dowel sleeve -A- is fitted in intermediate flange for front axle drive.

– Fit new gasket.

Protected by copyright. Copying for private or commercial purposes, in part or in whole, is not permitted unless authorised by AUDI AG. AUDI AG does not guarantee or assume any liability with respect to the correctness of information in this document. Copyright by AUDI AG.

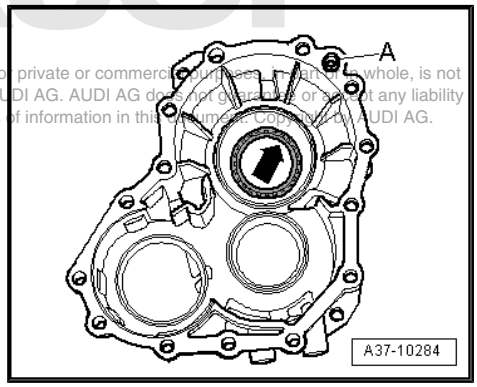


**Note**

*Before attaching the gasket, apply a thin coating of gear oil to the sealing surface to prevent it from slipping.*

– Carefully place intermediate flange for front axle drive in position.

**Caution**

*Fitting the intermediate flange onto the input shaft without sufficient care can damage the sealing lips of the oil seal -arrow-.*

– Tighten bolts on intermediate flange for front axle drive in two stages as follows:

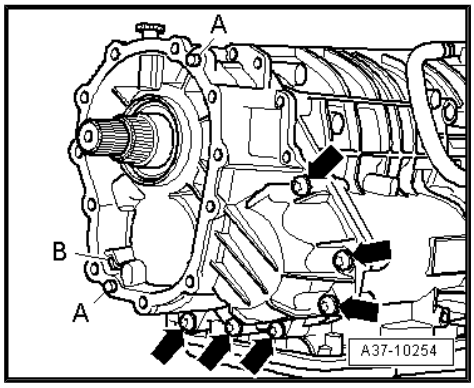


| Step | Tightening sequence |
|---|---|
| I | – Screw in the bolts -arrows- hand-tight in diagonal sequence, ensuring that the gap between the intermediate flange for the front axle drive and the gearbox housing is reduced evenly all round. |
| II | – Tighten bolts in diagonal sequence to 23 Nm. |

– Check that dowel sleeves -A- are fitted in intermediate flange for front axle drive.

– Place new gasket in position.

**Note**

*Before attaching the gasket, apply a thin coating of gear oil to the sealing surface to prevent it from slipping.*

– Clean magnet and insert it in chamber -B- on the casting of the intermediate flange for front axle drive.

– Put 200 ml of gear oil into Torsen differential.
– Push Torsen differential -arrow- onto input shaft.

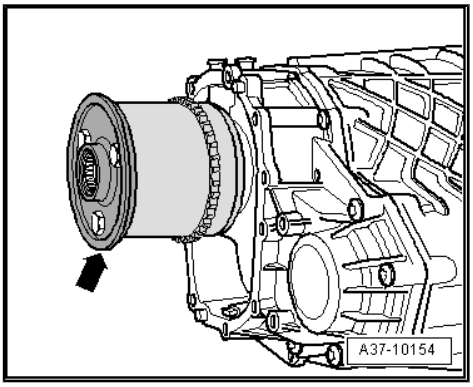


– Fit transfer box housing on gearbox with spur gears and output flange for propshaft installed.
– Tighten bolts on transfer box housing in two stages as follows:

Protected by copyright. Copying for private or commercial purposes, in part or in whole, is not permitted unless authorised by AUDI AG. AUDI AG does not guarantee or accept any liability with respect to the correctness of information in this document. Copyright by AUDI AG.

| Step | Tightening sequence |
|---|---|
| I | – Screw in the bolts -arrows- hand-tight in diagonal sequence, ensuring that the gap between the transfer box housing and the gearbox housing is reduced evenly all round. |
| II | – Tighten bolts in diagonal sequence to 23 Nm. |

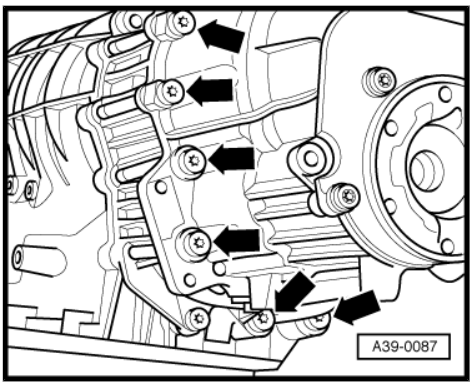


**Automatic gearbox 01V, front-wheel drive and four-wheel drive**

– Detach gearbox from assembly stand.

– Place torque converter in position and secure against falling out using support bridge -30-211 A- .

– Check position of torque converter ⇒ Automatic gearbox 01V, front-wheel drive and four-wheel drive; Rep. Gr. 32 .

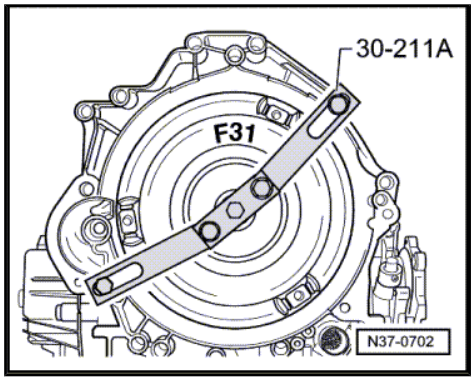


**Caution**

*After the gearbox has been overhauled it should be installed and operated as soon as possible to make sure the new components are not submitted to corrosion.*

– Fill with ATF and check ATF level ⇒ Automatic gearbox 01V, front-wheel drive and four-wheel drive; Rep. Gr. 37 .

– Fill front final drive with gear oil and check oil level ⇒ Automatic gearbox 01V, front-wheel drive and four-wheel drive; Rep. Gr. 39 .

– Fill transfer gear housing with gear oil and check oil level ⇒ Automatic gearbox 01V, front-wheel drive and four-wheel drive; Rep. Gr. 39 .

Tightening torques

| Component | Nm |
|---|---|
| ATF supply unit to gearbox housing | 10 |
| Valve body to gearbox housing | 8 |
| ATF strainer to valve body | 5 |
| ATF oil pan to gearbox housing | 10 |
| Bearing bracket for flange shaft (left-side) to gearbox | 23 |
| Cover for final drive to gearbox | 23 |
| Flange shaft (right-side) | 25 |
| Cover for front axle drive / intermediate flange for front axle drive to gearbox | 23 |
| Transfer box housing to gearbox | 23 |

Protected by copyright. Copying for private or commercial purposes, in part or in whole, is not permitted unless authorised by AUDI AG. AUDI AG does not guarantee or accept any liability with respect to the correctness of information in this document. Copyright by AUDI AG.

# 3 Dismantling and assembling body “I”

Note

- *General repair instructions* *⇒ page 1* *.*
- *Rules for cleanliness when working on the automatic gearbox* *⇒ page 12* *.*
- *Lightly lubricate O-rings and seals with ATF or vaseline before installing to prevent them from getting crushed during assembly.*
- *Fit bearings and shims loosely with vaseline only.*
- *Use only ATF or vaseline on all parts running in ATF. Other lubricants will cause malfunction of the gearbox hydraulics.*

## 3.1 Body “I” - exploded view of components

1 - Clutch “D/G” with freewheel
2 - Clutch “F”
3 - Flange washer
4 - Axial needle bearing
5 - Thrust washer
6 - Planetary drive “III”

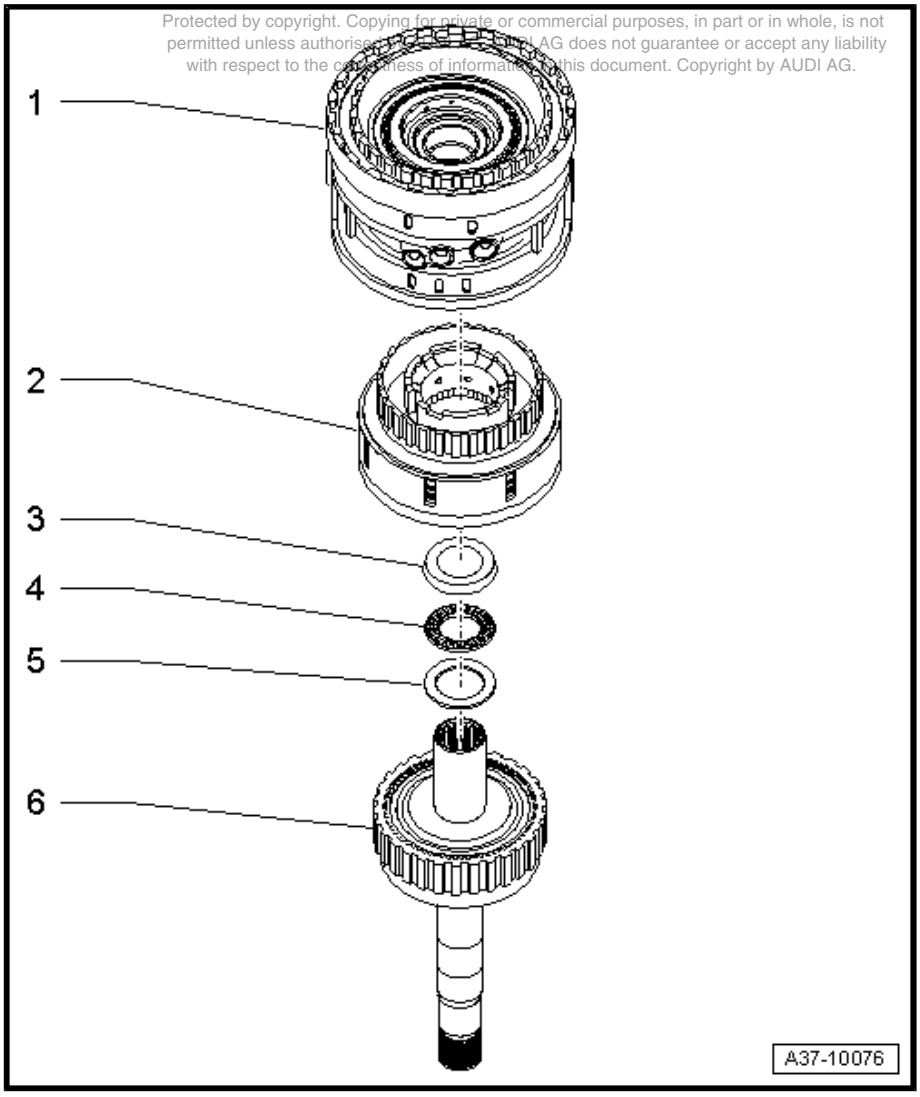


Protected by copyright. Copying for private or commercial purposes, in part or in whole, is not permitted unless authorised by AUDI AG. AUDI AG does not guarantee or accept any liability with respect to the correctness of information in this document. Copyright by AUDI AG.

## 3.2 Dismantling body “I”

– Detach lifting tool -T10287- from body “I”.

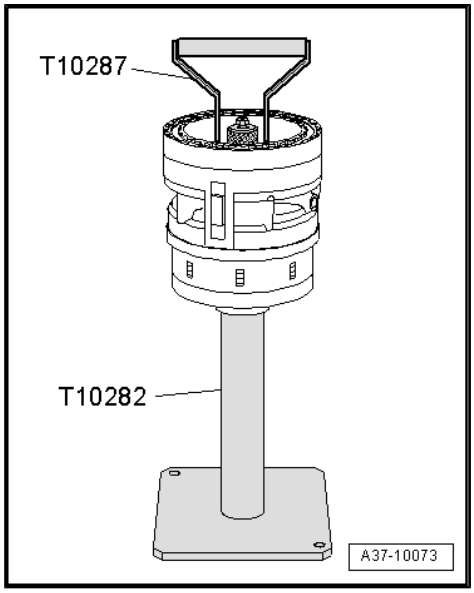


– Detach clutch “D/G”, -item 2- from clutch “F”, -item 1-.

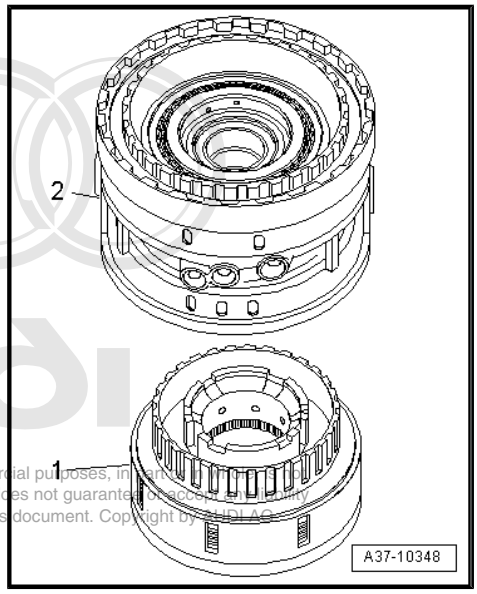


Protected by copyright. Copying for private or commercial purposes, in part or in whole, is not permitted unless authorised by AUDI AG. AUDI AG does not guarantee or accept any liability with respect to the correctness of information in this document. Copyright by AUDI AG.

– Remove clutch “F”, -item 5- from planetary drive “III” -1-.

**Note**

*Thrust washer -2-, axial needle bearing -3- and flange washer -4- remain on planetary drive “III”.*

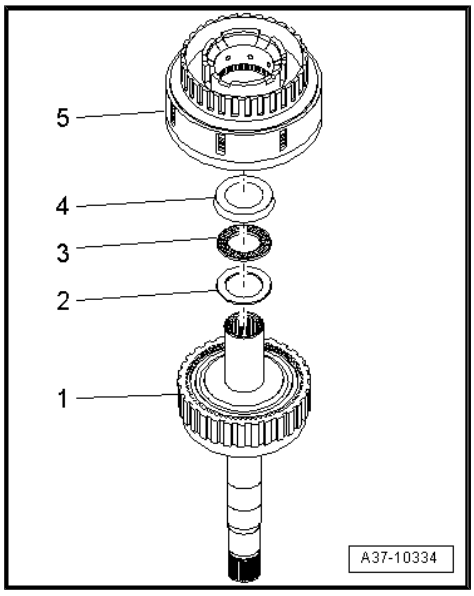

## 3.3 Clutch “F” - exploded view of components

**Note**

- *Clutch “F” is shown in the installation position.*
- *Some of the components shown are supplied as part of an assembly group and cannot be ordered as individual components ⇒ Parts catalogue .*
- *Before assembly, check the components of clutch “F” for traces of wear and damage* *⇒ page 138* *.*

1 - Cylinder “F”
2 - O-ring
❑ Renew
3 - Piston “F”
4 - O-ring
❑ Renew
5 - Thrust plate
6 - Dished spring
7 - Split retaining ring
8 - Corrugated spring
9 - Outer plate
10 - Friction plate
11 - Circlip

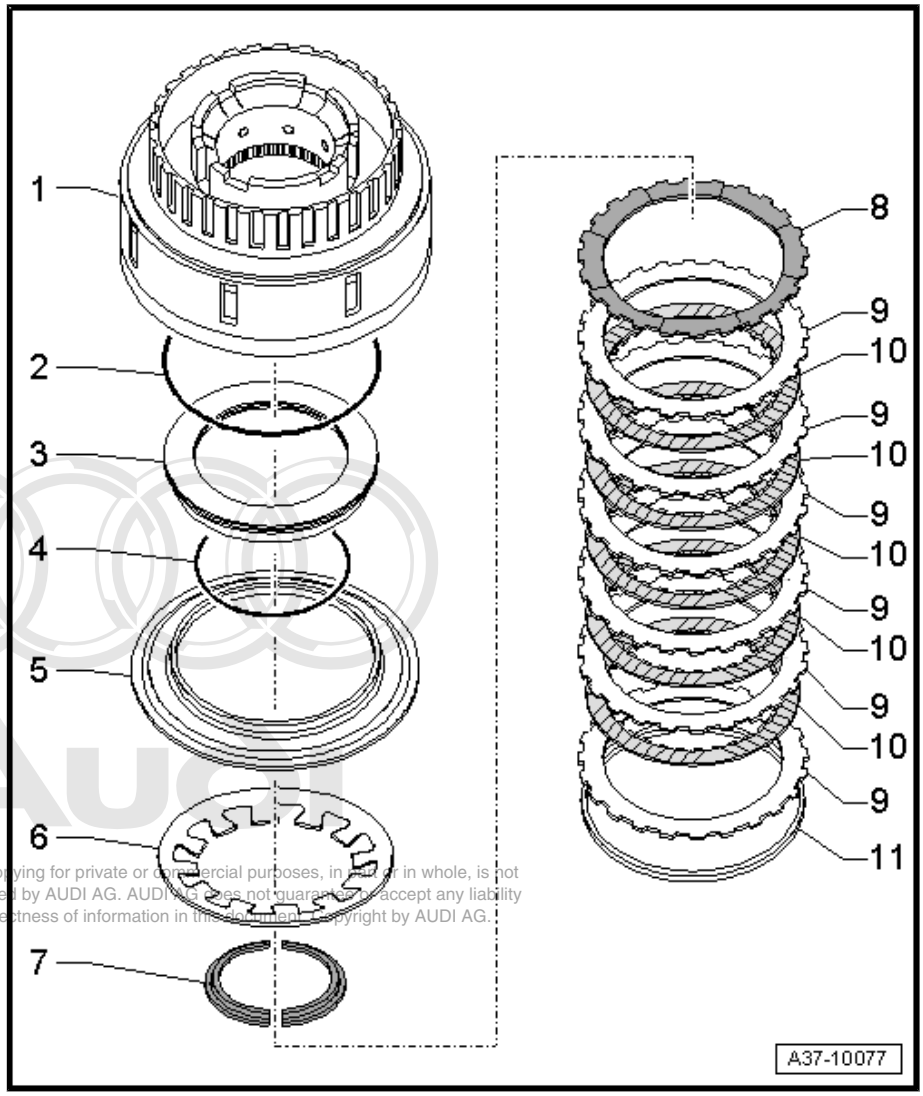


Protected by copyright. Copying for private or commercial purposes, in part or in whole, is not permitted unless authorised by AUDI AG. AUDI AG does not guarantee or accept any liability with respect to the correctness of information in this document. Copyright by AUDI AG.

## 3.4 Dismantling and assembling clutch “F”

### Dismantling

– Turn clutch -F- upside down.

– Detach circlip -1- and remove set of plates -2- from cylinder “F”.

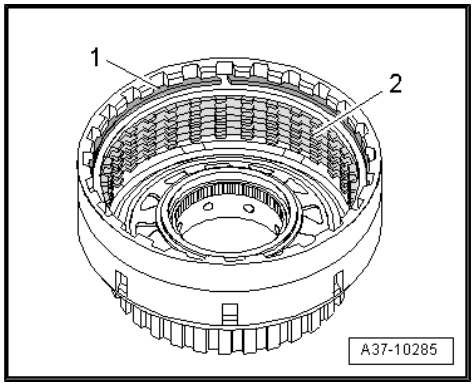


– Press dished spring down using workshop press with mounting bracket -T10289- .

– Remove split retaining ring -1-.

– Release workshop press.

– Detach thrust plate and dished spring.

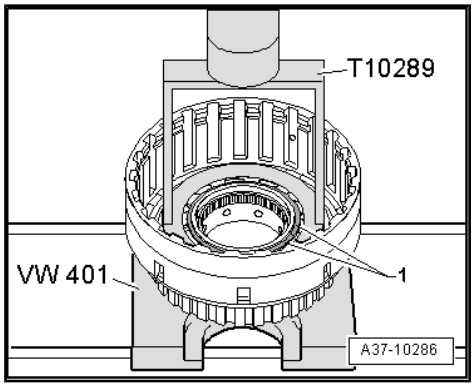


– Fit cylinder “F” onto clutch “D/G” with freewheel.

> **WARNING**
>
> *Wear safety goggles.*

Copying for private or commercial purposes, in part or in whole, is not permitted unless authorised by AUDI AG. AUDI AG does not guarantee or accept any liability with respect to the correctness of information in this document. Copyright by AUDI AG.

– Carefully press piston “F” out of cylinder “F” by applying compressed air as shown in illustration.

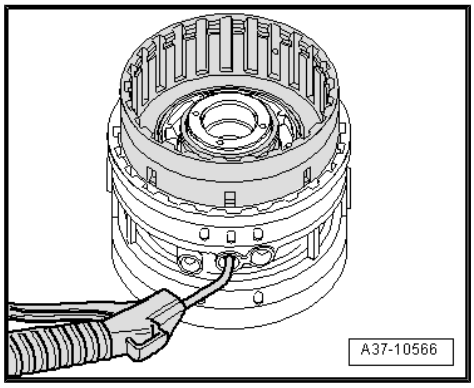


### Assembling

> **Caution**
>
> *Before assembly, check the components of clutch “F” for traces of wear and damage* *⇒ page 138* *.*

– Renew O-rings -2- and -4- for piston “F”, -item 3-.

– Push piston “F”, -item 3- into cylinder “F”, -item 1- as far as stop.

– Fit thrust plate -5-.

– Fit dished spring -6-.

7 - Split retaining ring

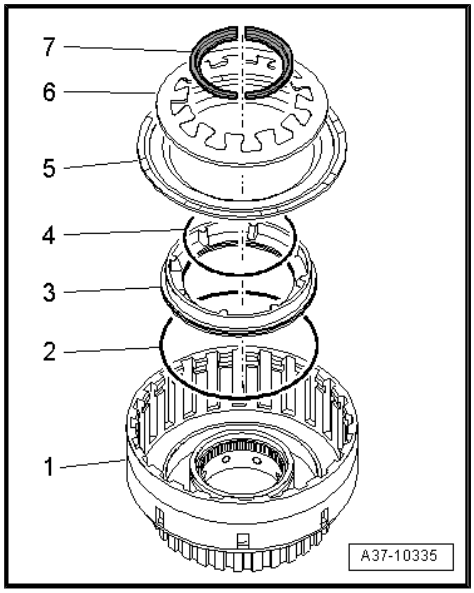

– Press dished spring down using workshop press with mounting bracket -T10289- .
– Insert split retaining ring -1-.
• Collar of split retaining ring faces downwards.
– Release workshop press.

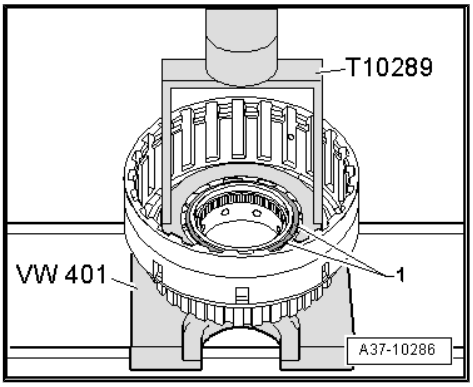


– Fit corrugated spring -2- into cylinder “F”, -item 1-.
– Fit outer plates -3- and friction plates -4- alternately.

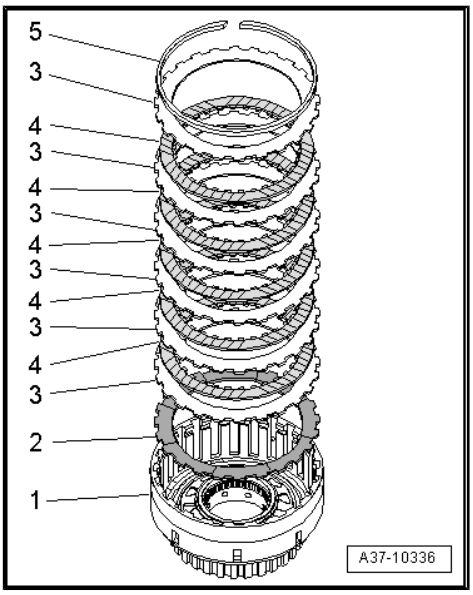


**Note**

*Make sure that the rounded edges of the topmost outer plate face friction plate -4- and not circlip -5-. The contact surface for the circlip is thus increased.*

– Insert circlip -5-.

Protected by copyright. Copying for private or commercial purposes, in part or in whole, is not permitted unless authorised by AUDI AG. AUDI AG does not guarantee or accept any liability with respect to the correctness of information in this document. Copyright by AUDI AG.

### Adjusting clearance of clutch “F”

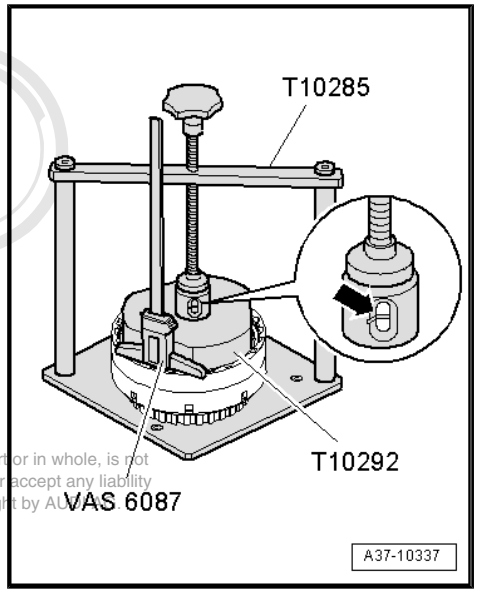


– Place clutch “F” onto compressor tool -T10285- .
– Position holding plate -T10292- onto outer plate of clutch “F”.
• Avoid any contact between holding plate and circlip.
– Fit centring pin of thrust piece -T10285/1- into drilling in holding plate.
– Bring clutch “F” into correct position on holding plate of compressor tool.
• Thrust piece must be positioned centrally below thrust plate of spindle.
– Turn spindle of compressor tool downwards.
• The markings on the inspection hole of the thrust piece must align -arrow-.
– Apply digital depth gauge -VAS 6087- to upper rim of cylinder “F” as shown in illustration.
– Bring measuring tip into contact with outer plate and note value obtained.
– Mark contact point on cylinder “F”.
– Repeat measurement at two other points on outer plate (offset by 120°) and mark measuring points.
– Determine average value from the three measurements under load.
– Release spindle and remove holding plate.

Protected by copyright. Copying for private or commercial purposes, in part or in whole, is not permitted unless authorised by AUDI AG. AUDI AG does not guarantee or accept any liability with respect to the correctness of information in this document. Copyright by AUDI AG.

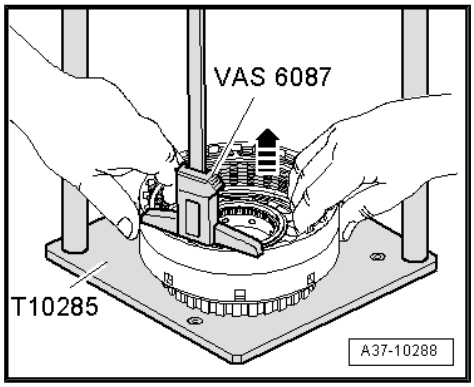


– Use both hands to pull set of plates upwards as far as stop in clutch “F”.
– With set of plates pulled up as far as stop, measure distance between upper rim of cylinder “F” and outer plate at one of the points marked (assistance of second mechanic required).
– Repeat measurement at the two remaining markings on the outer plate.
– Determine average value from the three measurements with set of plates pulled up as far as stop.
– Determine clearance using the following formula:

| | |
|---|---|
| | Mean value of measurements under load<br>(value 1 + value 2 + value 3) : 3 |
| – | Mean value of measurements with set of plates pulled up as far as stop<br>(value 1 + value 2 + value 3) : 3 |
| = | Clearance |

– Subtract mean value of measurement with set of plates pulled up as far as stop from mean value of measurements under load.

### Clearance of clutch “F”, Automatic gearbox 01V, front-wheel drive

| Gearbox code letters | Specification |
|---|---|
| CJQ, CJU, DDS, DDT, DRF, DUL, DUM | 1.50 ... 1.82 mm |
| CJV, CJW, CJX, CJY, CJZ, DEQ, DCS, DES, DEU, DPS, DRD, DSS, EFR, ETU, ETV, ETW, EZV, FAC | 1.90 ... 2.20 mm |
| EBU, EBY, EZR, EZS, FAB, FEV | 1.81 ... 2.10 mm |

| Gearbox code letters | Specification |
|---|---|
| EBV, EBW, EBX, EBZ, ECJ, EDC, EDE, EFP, EKC, EMA, ERY, ETK, ETL, ETZ, EYF, EZP, EZW, EZX, EZY, EZZ, FAD, FAE, FATF, FAH, FAJ, FAK, FED, FEE, FHV, FNL, FRT, GDE, GML | 2.26 ... 2.55 mm |

Clearance of clutch “F”, Automatic gearbox 01V, four-wheel drive

| Gearbox code letters | Specification |
|---|---|
| DKB, DTV | 1.50 ... 1.82 mm |
| CJP, CJR, CJS, CJT, DEV, DEW, DEX, DEY, DPT, DRK, DRN, DST, DTU, EKX, ETX, ETY, FAN, FHD | 1.90 ... 2.20 mm |
| EFQ, FAL, FEP, GBH | 1.81 ... 2.10 mm |
| ECB, ECC, ECD, ECG, ECH, EDF, EKD, EMM, EMP, ETM, ETN, EUA, EYJ, EYK, EZB, FAM, FAP, FAQ, FAR, FAS, FAU, FAV, FAW, FAX, FAZ, FBA, FBB, FEF, FEG, FEJ, FEQ, FHF, FHG, FHH, FLC, FLV, FNM, FRU, FVE, FXL, GAK, GBF, GBG, GBJ | 2.26 ... 2.55 mm |

If reading does not match specification:

– Determine new circlip -1- according to following table.

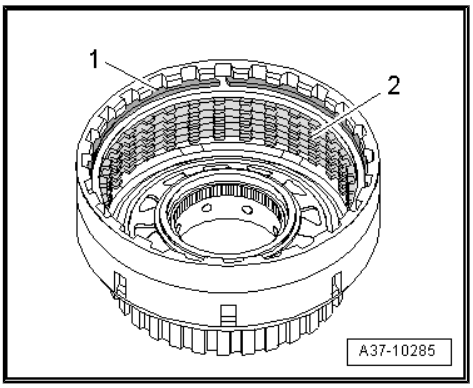


Note

*-Item 2- can be disregarded.*

- If clearance is below specification: insert thinner circlip of appropriate thickness.
- If clearance is above specification: insert thicker circlip of appropriate thickness.

Protected by copyright. Copying for private or commercial purposes, in part or in whole, is not permitted unless authorised by AUDI AG. AUDI AG does not guarantee or accept any liability with respect to the correctness of information in this document. Copyright by AUDI AG.

| Available circlips - Thickness of circlips in mm | | |
|---|---|---|
| 1.2 | 1.8 | 2.4 |
| 1.4 | 2.0 | 2.6 |
| 1.6 | 2.2 | 2.8 |

– Check clearance again after inserting circlip.

## 3.5 Clutch “D/G” with freewheel - exploded view of components

Note

- *Some of the components shown are supplied as part of an assembly group and cannot be ordered as individual components ⇒ Parts catalogue .*
- *Before assembly, check the components of the freewheel, clutch “D” and clutch “G” for traces of wear and damage* *⇒ page 140* *.*

1 - Freewheel inner race

2 - O-rings
- ❑ Renew

3 - Rectangular section seals
- ❑ Renew

4 - Freewheel with freewheel cage

5 - Circlip

6 - Outer plate (thick)

7 - Friction plate

8 - Outer plate

9 - Corrugated spring

10 - Retaining plate

11 - Dished spring

12 - O-ring
- ❑ Renew

13 - Piston“D”

14 - O-ring
- ❑ Renew

15 - Cylinder “D/G”

16 - O-ring
- ❑ Renew

17 - Piston“G”

18 - O-ring
- ❑ Renew

19 - Dished spring

20 - Thrust washer

21 - Circlip

22 - Corrugated spring

23 - Outer plate

24 - Friction plate

25 - Outer plate (thick)

26 - Circlip

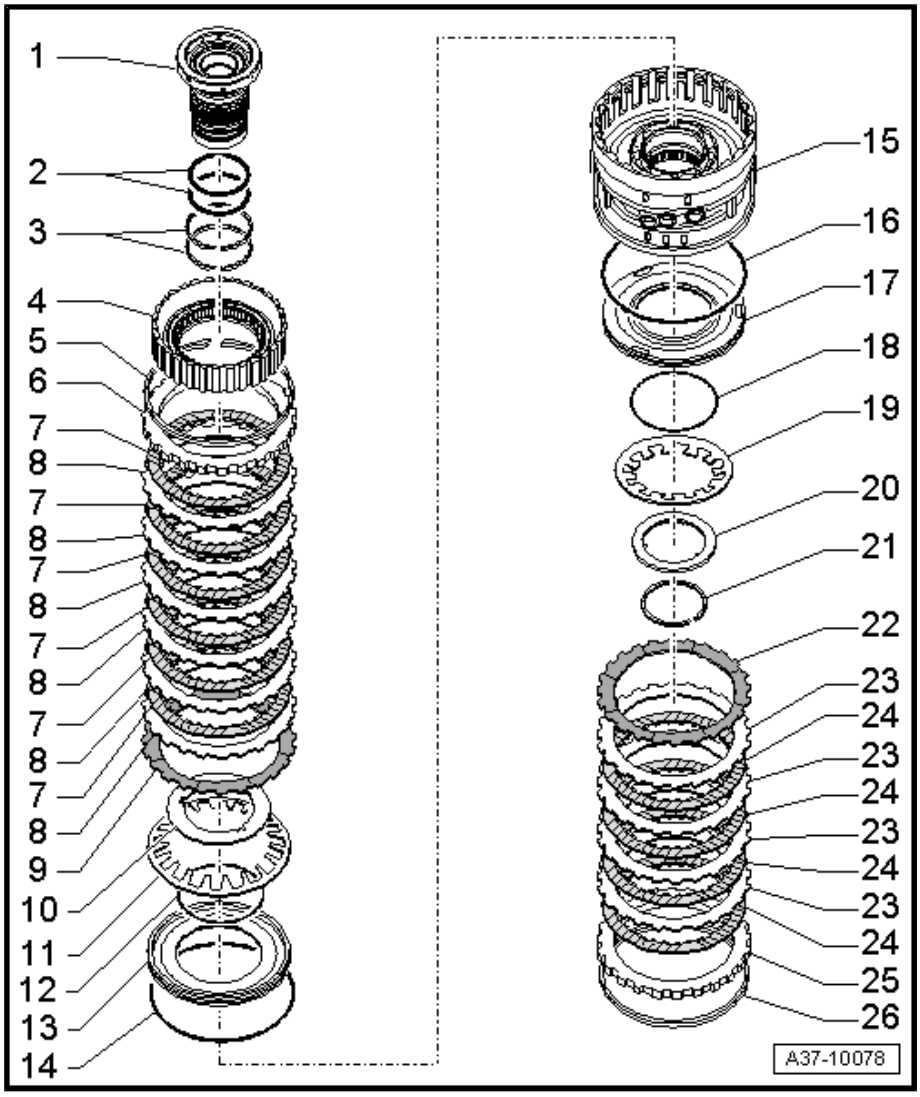


Protected by copyright. Copying for private or commercial purposes, in part or in whole, is not permitted unless authorised by AUDI AG. AUDI AG does not guarantee or accept any liability with respect to the correctness of information in this document. Copyright by AUDI AG.

## 3.6 Dismantling and assembling clutch “D/G” with freewheel

### Dismantling

- Clutch “D” faces upwards.

– Detach circlip -1- and remove set of plates -2- from cylinder “D/G”.

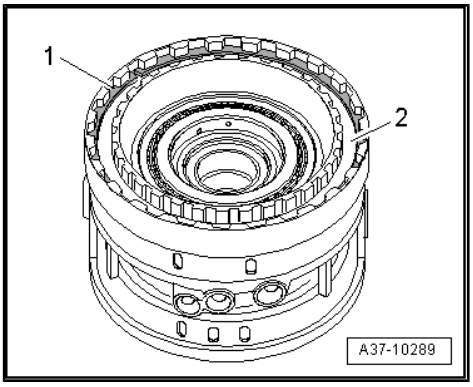


– Turn cylinder “D/G” upside down.

- Clutch “G” faces upwards (dished spring is visible).

– Detach circlip -1- and remove set of plates -2- from cylinder “D/G”.

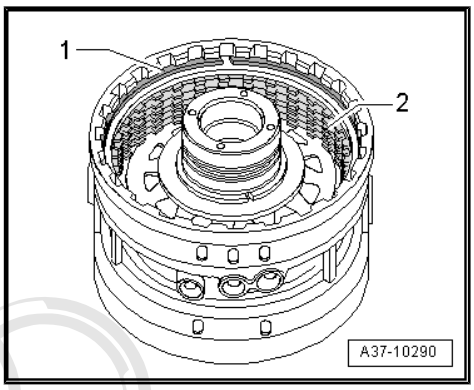


– Place cylinder “D/G” on thrust piece -3301/4- under workshop press.

– Press dished spring down using workshop press with mounting bracket -T10289- .

– Detach circlip -1-, thrust washer and dished spring.

– Release workshop press.

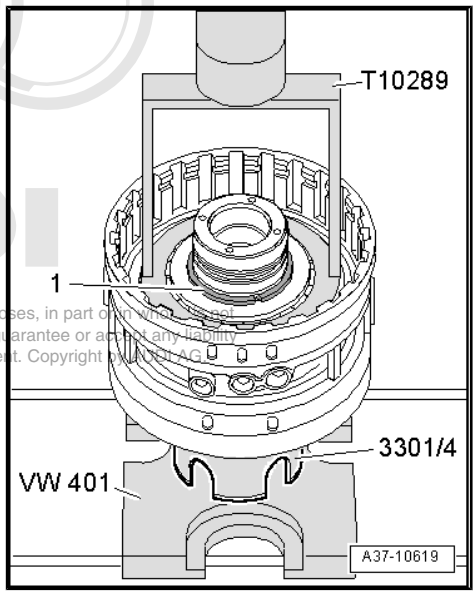


Protected by copyright. Copying for private or commercial purposes, in part or in whole, is not permitted unless authorised by AUDI AG. AUDI AG does not guarantee or accept any liability with respect to the correctness of information in this document. Copyright by AUDI AG.

**WARNING**

*Wear safety goggles.*

– Carefully press piston “G” out of cylinder “D/G” by applying compressed air.

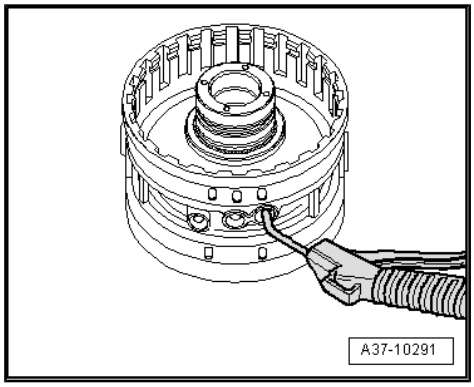


– Press freewheel inner race -2- out of cylinder “D/G” -item 1- -arrow- (if necessary, release by knocking lightly with a plastic hammer).

– Detach cylinder “D/G” from freewheel.

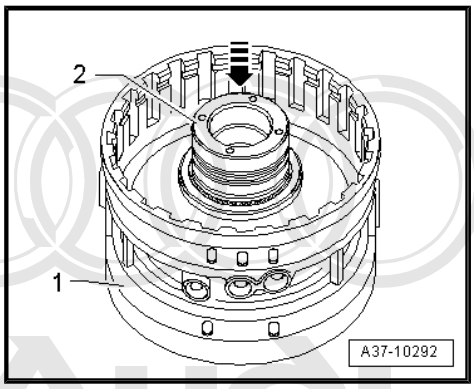


– Turn cylinder “D/G” upside down.

• Cylinder “D” faces upwards.

Protected by copyright. Copying for private or commercial purposes, in part or in whole, is not permitted unless authorised by AUDI AG. AUDI AG does not guarantee or accept any liability with respect to the correctness of information in this document. Copyright by AUDI AG.

**WARNING**

*Wear safety goggles.*

– Carefully press piston “D” out of cylinder “D/G” by applying compressed air.

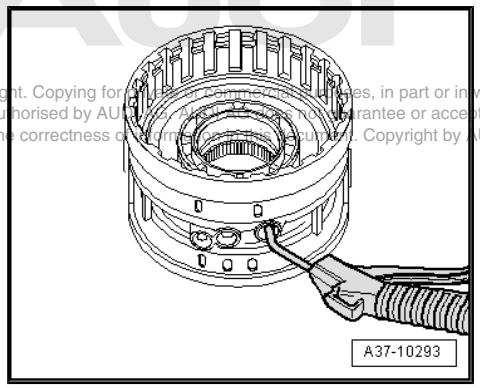


– Dismantle freewheel.

6 - Dished spring

5 - Retaining plate

4 - Freewheel with freewheel cage

3 - Rectangular section seals

2 - O-rings

1 - Freewheel inner race

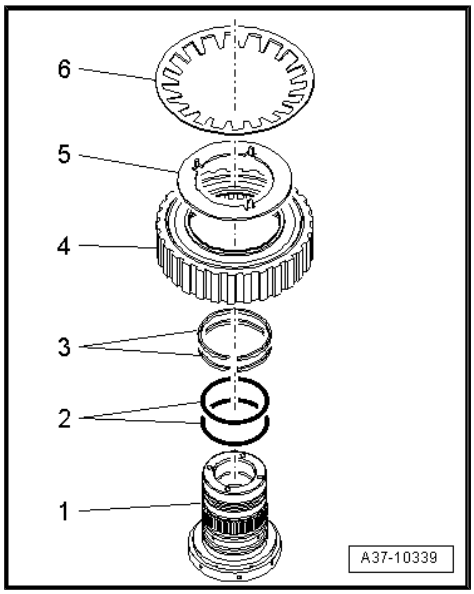

## Assembling

**Caution**

*Before assembly, check the components of the freewheel, clutch "D" and clutch "G" for traces of wear and damage* *⇒ page 140* *.*

– Renew O-rings -2- and -4- for piston "D" -item 3-.
– Push piston "D", -item 3- into cylinder "D/G", -item 1- as far as stop.

Protected by copyright. Copying for private or commercial purposes, in part or in whole, is not permitted unless authorised by AUDI AG. AUDI AG does not guarantee or accept any liability with respect to the correctness of information in this document. Copyright by AUDI AG.

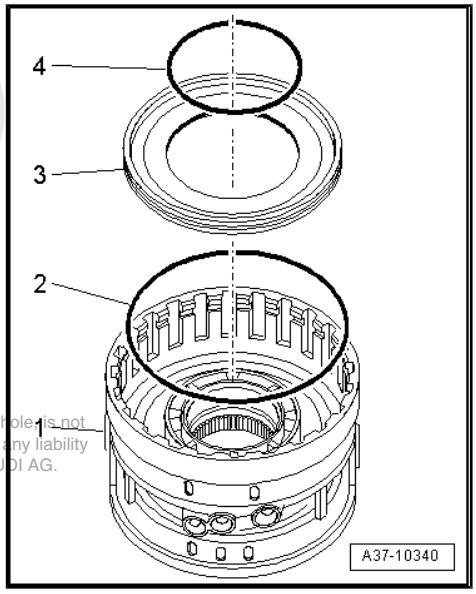


– Fit corrugated spring -2- into cylinder "D/G" -item 1-.
– Fit outer plates -3- and friction plates -4- alternately.
– Insert thick outer plate -5-.

**Note**

*Make sure that the rounded edges of the thick outer plate face friction plate -4- and not circlip -6-. The contact surface for the circlip is thus increased.*

– Insert circlip -6-.

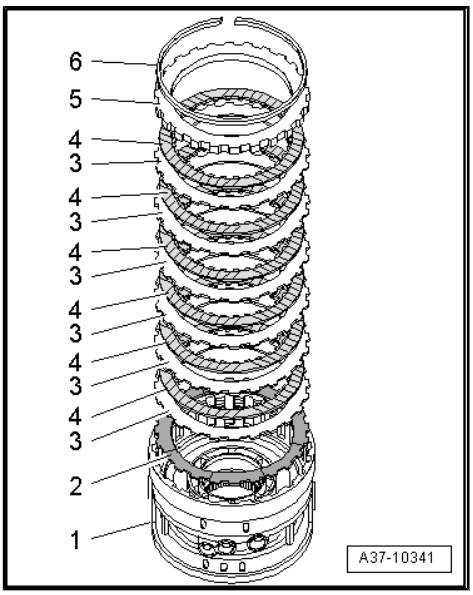

### Adjusting clearance of clutch “D”

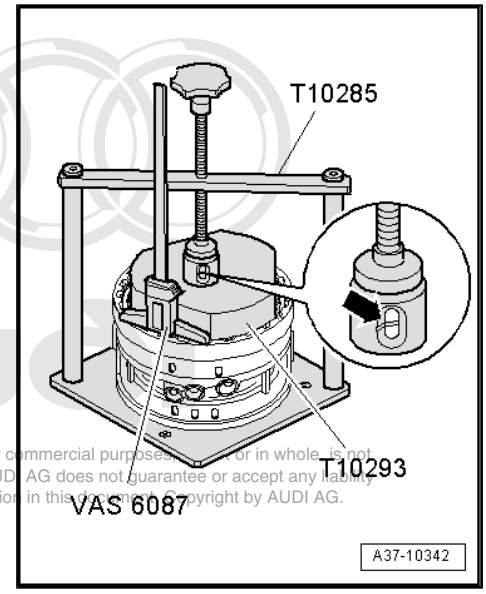


– Fit clutch “D/G” onto compressor tool -T10285- .
• Clutch “D” faces upwards.
– Position holding plate -T10293- onto outer plate of clutch “D”.
• Avoid any contact between holding plate and circlip.
– Fit centring pin of thrust piece -T10285/1- into drilling in holding plate.
– Bring clutch “D/G” into correct position on holding plate of compressor tool.
• Thrust piece must be positioned centrally below thrust plate of spindle.
– Turn spindle of compressor tool downwards.
• The markings on the inspection hole of the thrust piece must align -arrow-.
– Apply digital depth gauge -VAS 6087- to upper rim of cylinder “D/G” as shown in illustration.
– Bring measuring tip into contact with outer plate and note value obtained.
– Mark measuring point on cylinder “D/G”.
– Repeat measurement at two other points on outer plate (offset by 120°) and mark measuring points.
– Determine average value from the three measurements under load.
– Release spindle and remove holding plate.

Protected by copyright. Copying for private or commercial purposes, in part or in whole, is not permitted unless authorised by AUDI AG. AUDI AG does not guarantee or accept any liability with respect to the correctness of information in this document. Copyright by AUDI AG.

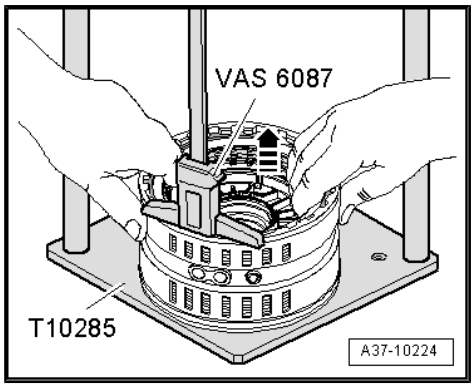


– Use both hands to pull set of plates upwards in clutch “D” as far as stop.
– With set of plates pulled up as far as stop, measure distance between upper rim of cylinder “D/G” and outer plate at one of the points marked (assistance of second mechanic required).
– Repeat measurement at the two remaining markings on the outer plate.
– Determine average value from the three measurements with set of plates pulled up as far as stop.
– Determine clearance using the following formula:

| | |
|---|---|
| | Mean value of measurements under load<br>(value 1 + value 2 + value 3) : 3 |
| – | Mean value of measurements with set of plates pulled up as far as stop<br>(value 1 + value 2 + value 3) : 3 |
| = | Clearance |

– Subtract mean value of measurement with set of plates pulled up as far as stop from mean value of measurements under load.

### Clearance of clutch “D”, Automatic gearbox 01V, front-wheel drive

| Gearbox code letters | Specification |
|---|---|
| EBV, EBW, EBX, EBZ, ECJ, EDC, EDE, EFP, EKC, EMA, ERY, ETK, ETL, ETZ, EYF, EZP, EZW, EZX, EZY, EZZ, FAD, FAE, FATF, FAH, FAJ, FAK, FED, FEE, FHV, FNL, FRT, GDE, GML | 2.29 ... 2.59 mm |
| EBU, EBY, EZR, EZS, FAB, FEV | 1.92 ... 2.22 mm |

| Gearbox code letters | Specification |
|---|---|
| CJQ, CJU, CJW, CJX, CJY, CJZ, DCS, DDS, DDT, DEQ, DES, DEU, DPS, DRD, DRF, DUL, DUM, DSS, EFR, ETV, ETW, ETU, EZV, FAC | 2.55 ... 2.85 mm |
| CJV | 2.60 ... 2.92 mm |

**Clearance of clutch "D", Automatic gearbox 01V, four-wheel drive**

| Gearbox code letters | Specification |
|---|---|
| CJP, CJR, CJS, CJT, DEV, DEW, DEX, DEY, DKB, DPT, DRK, DRN, DST, DTU, DTV, EKX, ETX, ETY, FAN, FHD | 2.55 ... 2.85 mm |
| ECB, ECC, ECD, ECG, ECH, EDF, EKD, EMM, EMP, ETM, ETN, EUA, EYJ, EYK, EZB, FAM, FAP, FAQ, FAR, FAS, FAU, FAV, FAW, FAX, FAZ, FBA, FBB, FEF, FEG, FEJ, FEQ, FHF, FHG, FHH, FLC, FLV, FNM, FRU, FVE, FXL, GAK, GBG, GBH, GBJ | 2.29 ... 2.59 mm |
| EFQ, FAL, FEP, GBF | 1.92 ... 2.22 mm |

If reading does not match specification:

– Determine new circlip -1- according to following table.

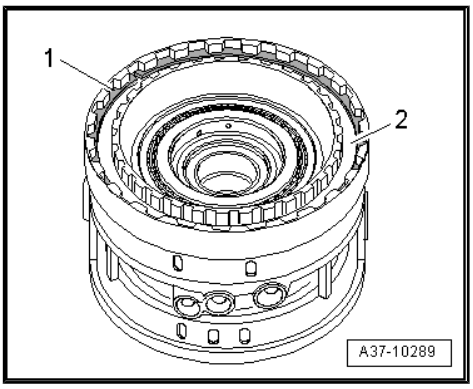


**Note**

*-Item 2- can be disregarded.*

- If clearance is below specification: insert thinner circlip of appropriate thickness.
- If clearance is above specification: insert thicker circlip of appropriate thickness.

| Available circlips - Thickness of circlips in mm | | |
|---|---|---|
| 2.2 | 3.0 | 3.8 |
| 2.4 | 3.2 | 4.0 |
| 2.6 | 3.4 | 4.2 |
| 2.8 | 3.6 | |

– Check clearance again after inserting circlip.

– After determining thickness of required circlip, detach circlip -1- and remove set of plates -2- from cylinder "D/G".

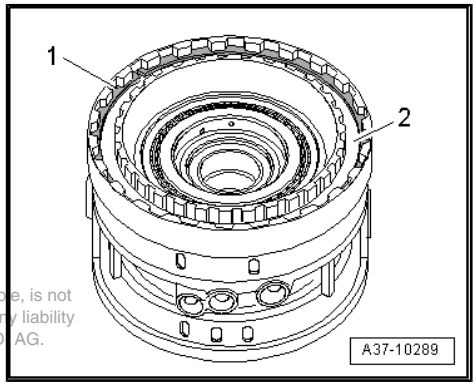


Protected by copyright. Copying for private or commercial purposes, in part or in whole, is not permitted unless authorised by AUDI AG. AUDI AG does not guarantee or accept any liability with respect to the correctness of information in this document. Copyright by AUDI AG.

– Renew O-rings -2- and rectangular section seals -3- on freewheel inner race -1-.

4 - Freewheel with freewheel cage

5 - Retaining plate

6 - Dished spring

– Lightly lubricate O-rings and rectangular section seals with vaseline before fitting. Use vaseline only. Other types of lubricant will cause the gearbox hydraulics to malfunction.

– Make sure that the rectangular section seals are seated properly all round in the grooves on the freewheel inner race.

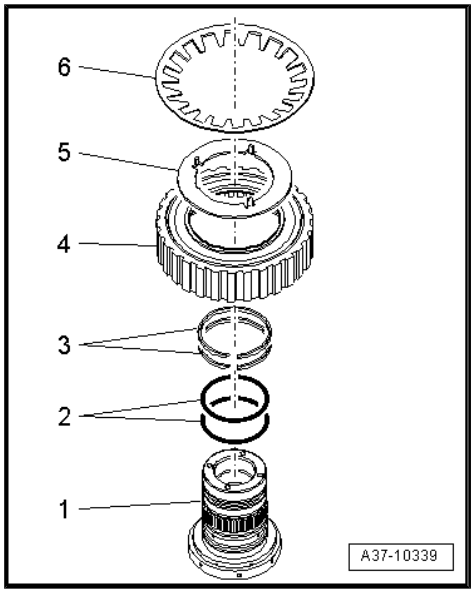


– Insert freewheel inner race -2- in freewheel -1- with freewheel cage as far as stop, turning clockwise as required -arrows-.

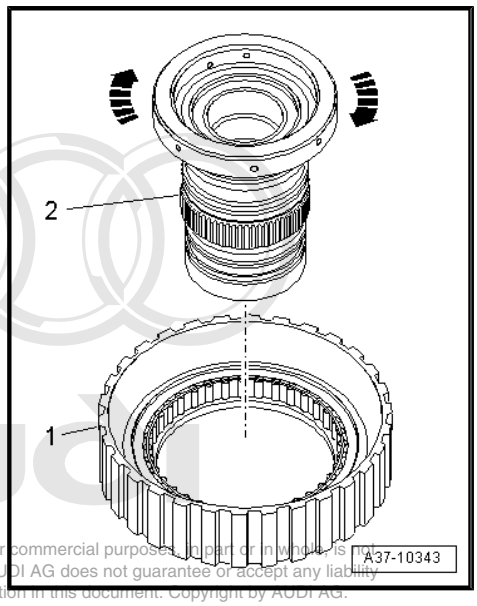


Protected by copyright. Copying for private or commercial purposes, in part or in whole, is not permitted unless authorised by AUDI AG. AUDI AG does not guarantee or accept any liability with respect to the correctness of information in this document. Copyright by AUDI AG.

– Place cylinder “D/G”, -item 1- onto 2 rectangular wooden blocks (approx. 40 mm high).

• Cylinder “D” faces upwards.

– Fit dished spring -2- and retaining plate -3- into cylinder “D/G”.

• Lugs on retaining plate face towards cylinder “D/G”.

– Take hold of freewheel -4- so that freewheel inner race cannot slip out, and push splines on freewheel inner race into splines of cylinder “D/G”.

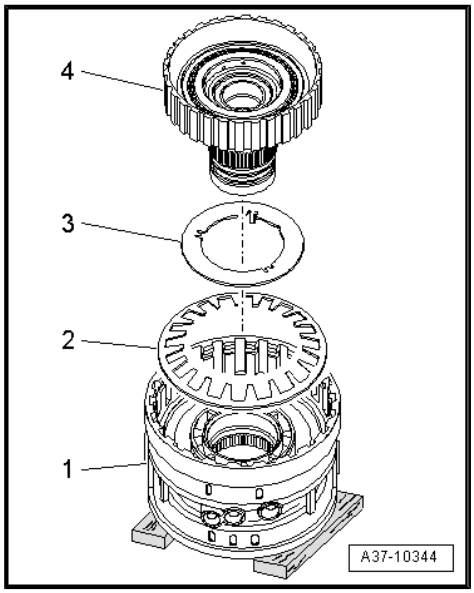

– Turn cylinder “D/G” -1- upside down (prevent freewheel inner race from slipping out).

• Cylinder “G” faces upwards.

– Place cylinder “D/G” on thrust piece -3301/4- .

– Renew O-rings -2- and -4- for piston “G”, -item 3-.

– Push piston “G” -item 3- into cylinder “D/G” as far as stop.

– Fit dished spring -5- and thrust washer -6-.

• The teeth on the thrust washer must engage in the splines of the freewheel inner race.

7 - Circlip

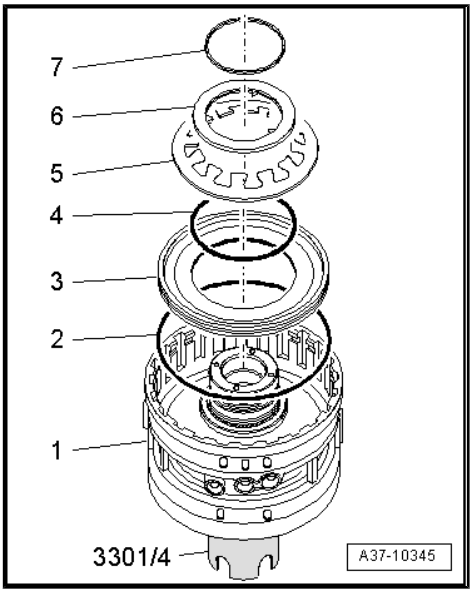


– Place cylinder “D/G” on thrust piece -3301/4- under workshop press.

– Press dished spring down using workshop press with mounting bracket -T10289- .

– Push down thrust washer as far as it will go and fit circlip -1-.

– Make sure that circlip locates securely all round in groove in freewheel inner race; press circlip into groove all round with a screwdriver if necessary.

– Release workshop press.

– Press dished spring down again to make sure freewheel is correctly installed.

• It should be possible to move thrust washer -item 6- ⇒ previous illustration “A37-10345”.

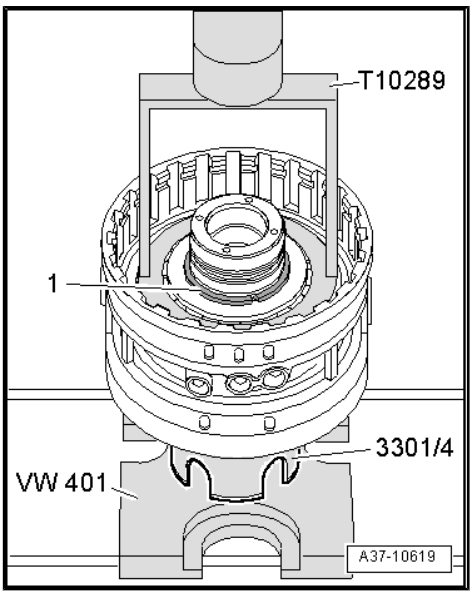


– Fit corrugated spring -2- into cylinder “D/G” -item 1-.

– Fit outer plates -3- and friction plates -4- alternately.

– Insert thick outer plate -5-.

**Note**

*Make sure that the rounded edges of the thick outer plate face friction plate -4- and not circlip -6-. The contact surface for the circlip is thus increased.*

– Insert circlip -6-.

Protected by copyright. Copying for private or commercial purposes, in part or in whole, is not permitted unless authorised by AUDI AG. AUDI AG does not guarantee or accept any liability with respect to the correctness of information in this document. Copyright by AUDI AG.

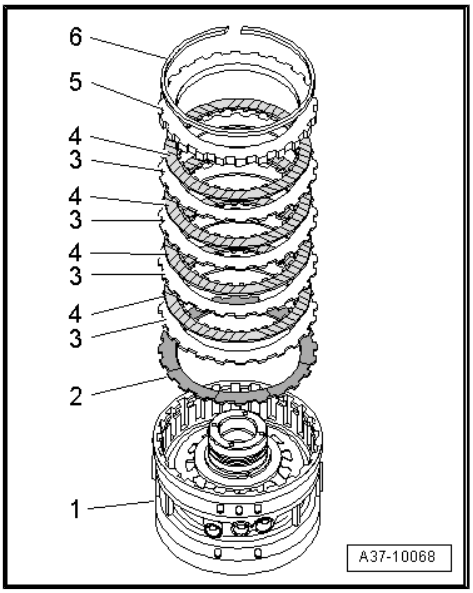

### Adjusting clearance of clutch “G”

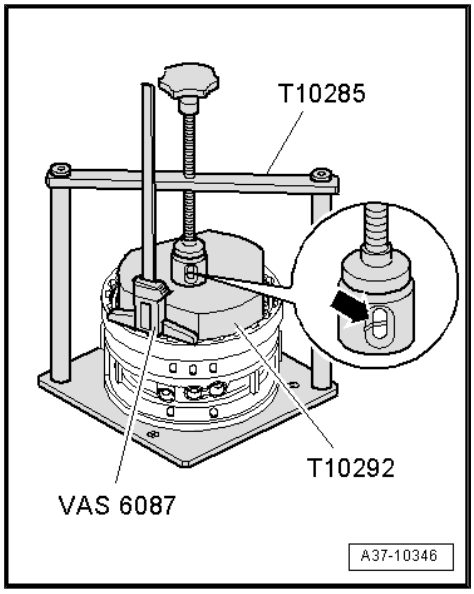


- Clutch “G” faces upwards.
- Fit clutch “D/G” onto compressor tool -T10285- .
- Position holding plate -T10292- onto outer plate of clutch “G”.
- Avoid any contact between holding plate and circlip.
- Fit centring pin of thrust piece -T10285/1- into drilling in holding plate.
- Bring clutch “D/G” into correct position on holding plate of compressor tool.
- Thrust piece must be positioned centrally below thrust plate of spindle.
- Turn spindle of compressor tool downwards.
- The markings on the inspection hole of the thrust piece must align -arrow-.
- Apply digital depth gauge -VAS 6087- to upper rim of cylinder “D/G” as shown in illustration.
- Bring measuring tip into contact with outer plate and note value obtained.
- Mark measuring point on cylinder “D/G”.
- Repeat measurement at two other points on outer plate (offset by 120°) and mark measuring points.
- Determine average value from the three measurements under load.
- Release spindle and remove holding plate.

Protected by copyright. Copying for private or commercial purposes, in part or in whole, is not permitted unless authorised by AUDI AG. AUDI AG does not guarantee or accept any liability with respect to the correctness of information in this document. Copyright by AUDI AG.

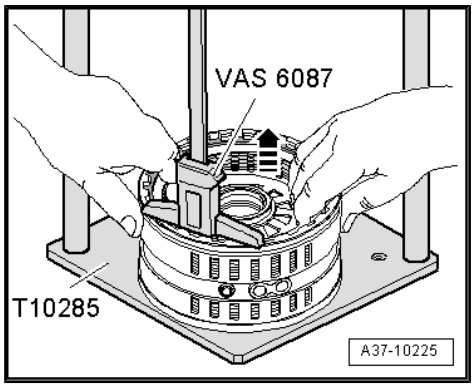


- Use both hands to pull set of plates upwards as far as stop in clutch “G”.
- With set of plates pulled up as far as stop, measure distance between upper rim of cylinder “D/G” and outer plate at one of the points marked (assistance of second mechanic required).
- Repeat measurement at the two remaining markings on the outer plate.
- Determine average value from the three measurements with set of plates pulled up as far as stop.
- Determine clearance using the following formula:

| | |
|---|---|
| | Mean value of measurements under load<br>(value 1 + value 2 + value 3) : 3 |
| – | Mean value of measurements with set of plates pulled up as far as stop<br>(value 1 + value 2 + value 3) : 3 |
| = | Clearance |

- Subtract mean value of measurement with set of plates pulled up as far as stop from mean value of measurements under load.

### Clearance of clutch “G”, Automatic gearbox 01V, front-wheel drive

| Gearbox code letters | Specification |
|---|---|
| CJV, CJW, CJX, CJY, CJZ, DCS, DEQ, DES, DEU, DPS, DRD, DSS, EFR, ETU, ETV, ETW, EZV, FAC | 1.52 ... 1.82 mm |
| CJQ, CJU, DDS, DDT, DRF, DUL, DUM | 1.15 ... 1.45 mm |

| Gearbox code letters | Specification |
|---|---|
| EBW, EBX, EBZ, ECJ, EDC, EDE, EFP, EKC, EMA, ERY, ETK, ETL, ETZ, EYF, EZP, EZW, EZX, EZY, EZZ, FAB, FAE, FATF, FAH, FAJ, FAK, FED, FEE, FHV, FNL, FRT, GDE, GML | 1.79 ... 2.08 mm |
| EBU, EBV, EBY, EZR, EZS, FAD, FEV | 1.33 ... 1.62 mm |

**Clearance of clutch "G", Automatic gearbox 01V, four-wheel drive**

| Gearbox code letters | Specification |
|---|---|
| CJP, CJR, CJS, CJT, DEV, DEW, DEX, DEY, DPT, DRK, DRN, DST, DTU, ECB, ECC, ECD, ECG, ECH, EDF, EKD, EKX, EMM, EMP, ETM, ETN, ETX, ETY, EUA, EYJ, EYK, EZB, FAM, FAN, FAP, FAQ, FAR, FAS, FAU, FAV, FAW, FAX, FAZ, FBA, FBB, FEF, FEG, FEJ, FHD, FHF, FHG, FHH, FLC, FLV | 1.52 ... 1.82 mm |
| DKB, DTV | 1.15 ... 1.45 mm |
| FEQ, FNM, FRU, FVE, FXL, GAK, GBG, GBH, GBJ | 1.79 ... 2.08 mm |
| EFQ, FAL, FEP, GBF | 1.33 ... 1.62 mm |

If reading does not match specification:

– Determine new circlip -1- according to following table.

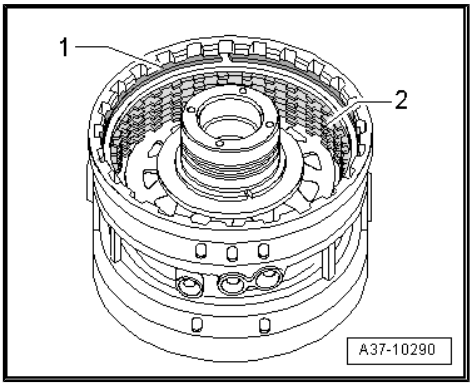


**Note**

*-Item 2- can be disregarded.*

- If clearance is below specification: insert thinner circlip of appropriate thickness.
- If clearance is above specification: insert thicker circlip of appropriate thickness.

| Available circlips - Thickness of circlips in mm | | |
|---|---|---|
| 1.8 | 2.4 | 3.0 |
| 2.0 | 2.6 | 3.2 |
| 2.2 | 2.8 | 3.4 |

– Turn clutch "D/G" upside down.

- Clutch "D" faces upwards.

– Install plates for clutch "D" together with correct new circlip as follows:

Protected by copyright. Copying for private or commercial purposes, in part or in whole, is not permitted unless authorised by AUDI AG. AUDI AG does not guarantee or accept any liability with respect to the correctness of information in this document. Copyright by AUDI AG.

– Fit corrugated spring -2- into cylinder “D/G” -item 1-.
– Fit outer plates -3- and friction plates -4- alternately.
– Insert thick outer plate -5-.

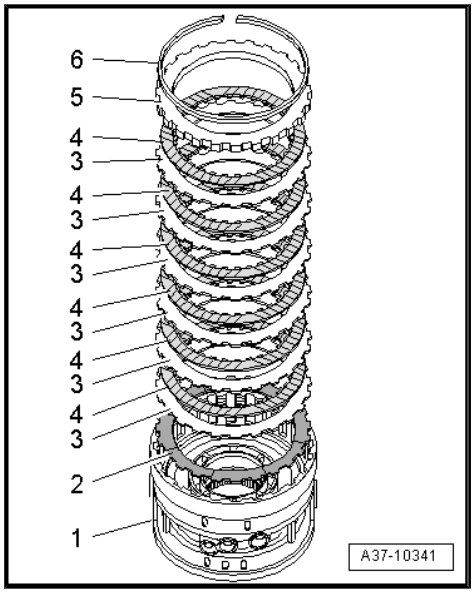


**Note**

*Make sure that the rounded edges of the thick outer plate face friction plate -4- and not circlip -6-. The contact surface for the circlip is thus increased.*

– Insert circlip -6-.

## 3.7 Planetary drive “III” - exploded view of components

**Note**

- *Some of the components shown are supplied as part of an assembly group and cannot be ordered as individual components ⇒ Parts catalogue .*
- *Before assembly, check the components of the planetary drive for traces of wear and damage* *⇒ page 143* .

Protected by copyright. Copying for private or commercial purposes, in part or in whole, is not permitted unless authorised by AUDI AG. AUDI AG does not guarantee or accept any liability with respect to the correctness of information in this document. Copyright by AUDI AG.

1 - Circlip
2 - Shaft
3 - Annulus “III”
4 - Flange washer
5 - Axial needle bearing
6 - Thrust washer
7 - Planet carrier “III”

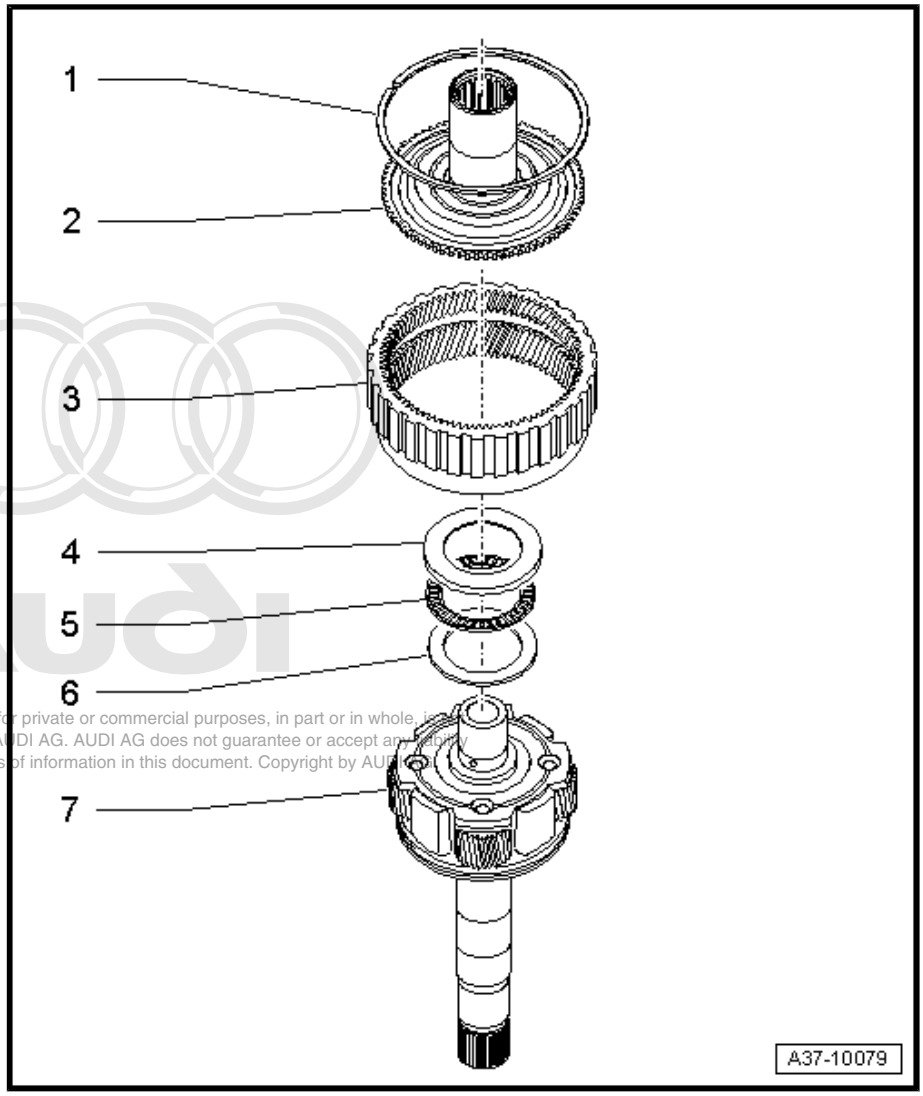


Protected by copyright. Copying for private or commercial purposes, in part or in whole, is not permitted unless authorised by AUDI AG. AUDI AG does not guarantee or accept any liability with respect to the correctness of information in this document. Copyright by AUDI AG.

## 3.8 Dismantling and assembling planetary drive “III”

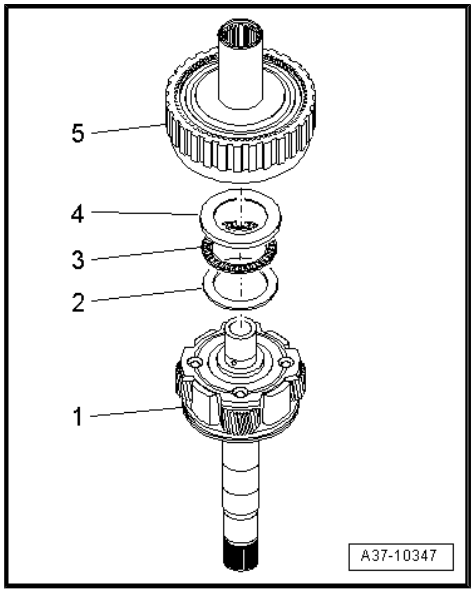


### Dismantling

– Detach annulus “III” -item 5- with shaft from planet carrier “III” -item 1-.

– Detach flange washer -4-, axial needle bearing -3- and thrust washer -2-.

### Assembling

> ⚠ **Caution**
>
> *Before assembly, check the components of the planetary drive “III” for traces of wear and damage* *⇒ page 143* *.*

– Fit the following parts on the shaft of planet carrier “III” -item 1-:

2 - Thrust washer

3 - Axial needle bearing

4 - Flange washer (flange faces towards axial needle bearing)

– Fit annulus “III” -item 5- with shaft onto planet carrier “III” -item 1-.

## 3.9 Assembling body “I”

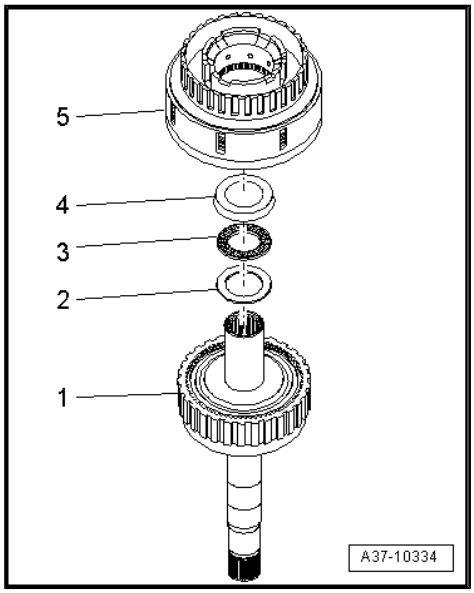


– Place planetary drive “III” -item 1- into support element -T10282- .

– Fit thrust washer -2-, axial needle bearing -3- and flange washer -4- on planetary drive “III” -item 1-.

• The flange on the flange washer faces towards the planetary drive “III”.

– Fit clutch “F” -item 5- onto plate carrier of planetary drive “III” -item 1- (lift and rotate clutch slightly as required).

• Make sure that all plates of clutch “F” mesh one after the other with the plate carrier of the planetary drive “III”.

– Lift clutch “F” a few millimetres and then let it drop to check that the plates have meshed.

♦ If you hear a metallic sound, all the plates have meshed.

♦ If you only hear a muffled sound, some of the plates have not meshed.

Protected by copyright. Copying for private or commercial purposes, in part or in whole, is not permitted unless authorised by AUDI AG. AUDI AG does not guarantee or accept any liability with respect to the correctness of information in this document. Copyright by AUDI AG.

– Fit clutch “D/G” -item 2- onto plate carrier of clutch “F” -item 1- (lift and rotate slightly as required).

• Make sure that all plates of clutch “G” mesh one after the other with the plate carrier of clutch “F”.

– Lift clutch “D/G” a few millimetres and then let it drop to check whether the plates have meshed.

♦ If you hear a metallic sound, all the plates have meshed.

♦ If you only hear a muffled sound, some of the plates have not meshed.

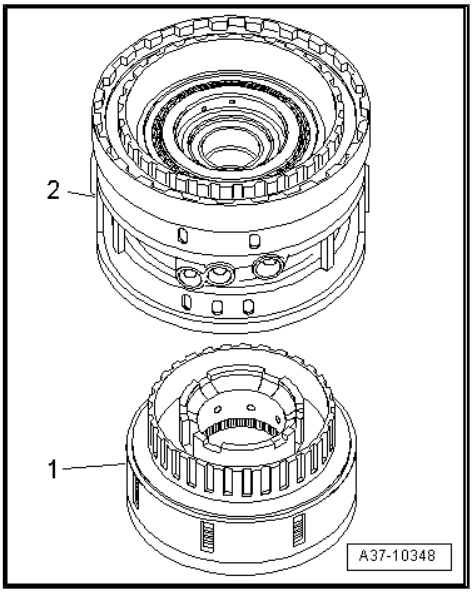


Attach lifting tool -T10287- as follows.

– Unscrew knurled nut on lifting tool slightly.

– Insert lifting tool into body “I” far as it will go.

– Tighten knurled nut on lifting tool by turning clockwise.

– Make sure that lifting tool is securely attached in body “I”.

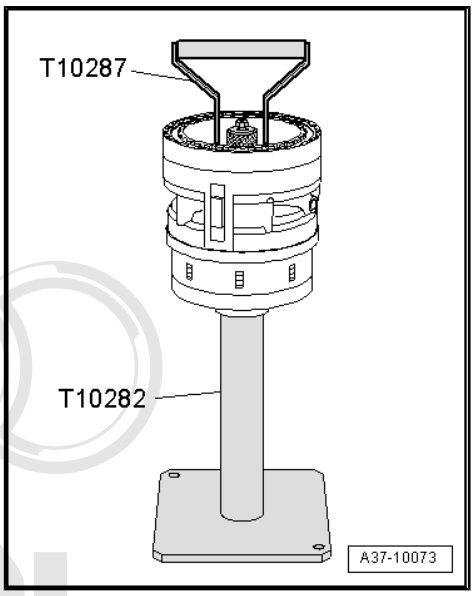


Protected by copyright. Copying for private or commercial purposes, in part or in whole, is not permitted unless authorised by AUDI AG. AUDI AG does not guarantee or accept any liability with respect to the correctness of information in this document. Copyright by AUDI AG.

# 4 Dismantling and assembling body “II”

**Note**

- *General repair instructions* ⇒ page 1 .
- *Rules for cleanliness when working on the automatic gearbox* ⇒ page 12 .
- *Lightly lubricate O-rings and seals with ATF or vaseline before installing to prevent them from getting crushed during assembly.*
- *Fit bearings and shims loosely with vaseline only.*
- *Use only ATF or vaseline on all parts running in ATF. Other lubricants will cause malfunction of the gearbox hydraulics.*

## 4.1 Body “II” - exploded view of components

Protected by copyright. Copying for private or commercial purposes, in part or in whole, is not permitted unless authorised by AUDI AG. AUDI AG does not guarantee or assume any liability with respect to the correctness of information in this document. Copyright by AUDI AG.

1 - Clutch “E”

2 - O-ring
- ❑ Renew

3 - Clutch “A”

4 - Circlip

5 - Axial needle bearing

6 - Clutch “B”

7 - Shim
- ❑ Determining thickness ⇒ page 45

8 - Rectangular section seals
- ❑ Renew

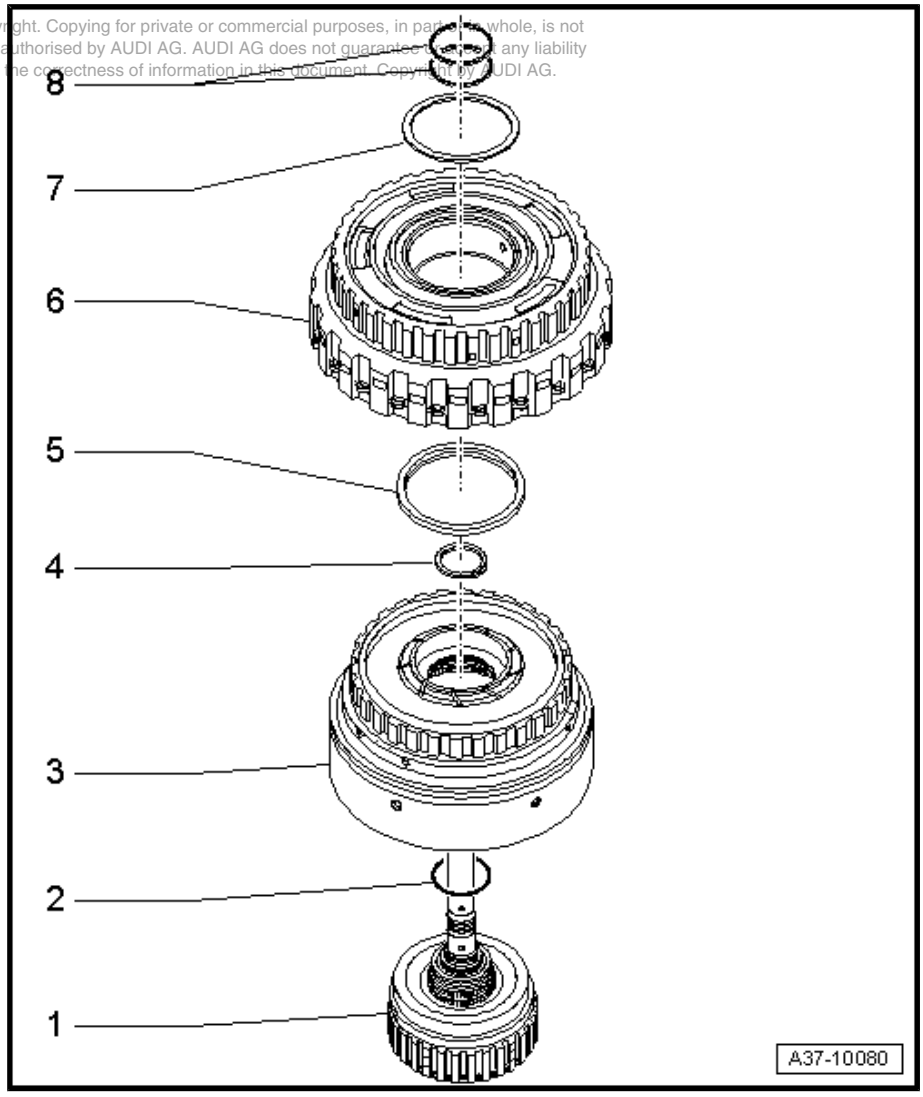

## 4.2 Dismantling body “II”

– Detach shim -2- from clutch “B” -item 1- (if not already removed).

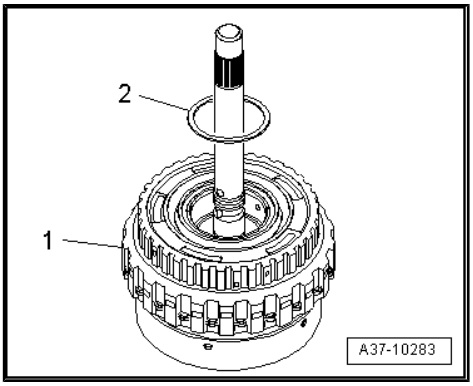


– Detach clutch “B” -item 3- and axial needle bearing -2- from clutch “A” -item 1-.

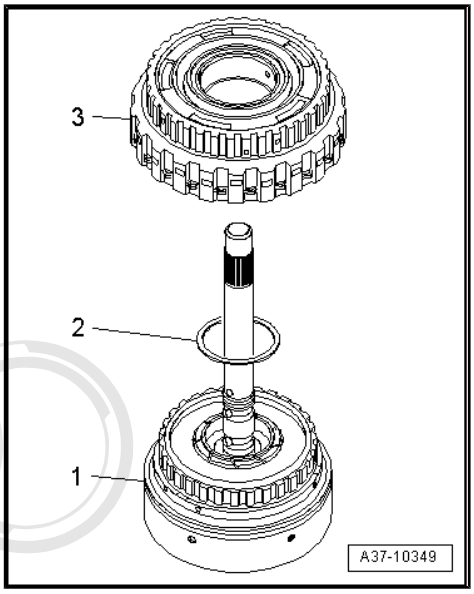


– Remove circlip -2- from input shaft -1-.

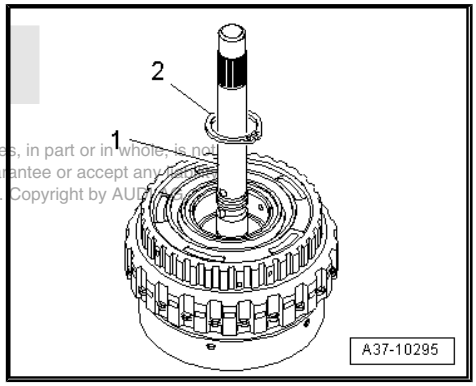


Protected by copyright. Copying for private or commercial purposes, in part or in whole, is not permitted unless authorised by AUDI AG. AUDI AG does not guarantee or accept any liability with respect to the correctness of information in this document. Copyright by AUDI AG.

– Place outer circumference of clutch “A”, -item 1- onto 2 rectangular wooden blocks (approx. 40 mm high).
– Apply a blow with a plastic hammer to input shaft -2- with clutch “E”.
– Detach clutch “A” from clutch “E”.

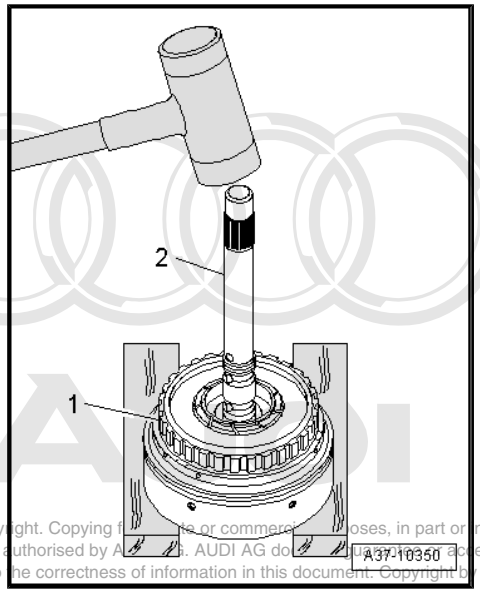


Protected by copyright. Copying for private or commercial purposes, in part or in whole, is not permitted unless authorised by AUDI AG. AUDI AG does not guarantee or accept any liability with respect to the correctness of information in this document. Copyright by AUDI AG.

## 4.3 Clutch “B” - exploded view of components

**Note**

- *Some of the components shown are supplied as part of an assembly group and cannot be ordered as individual components ⇒ Parts catalogue .*
- *Before assembly, check the components of clutch “B” for traces of wear and damage* *⇒ page 145* *.*

**Caution**

***The illustration shows the currently installed version of clutch “B”, with corrugated spring ⇒ Item 8 (page 79) , 2 outer plates ⇒ Item 9 (page 79) and 2 friction plates ⇒ Item 10 (page 79) . If an older version is installed (with no corrugated spring but 3 friction plates and 3 outer plates), always renew clutch “B”.***

1 - Shim

2 - Cylinder “B”

3 - O-ring
- ❑ Renew

4 - Piston “B”

5 - O-ring
- ❑ Renew

6 - Dished spring

7 - Split retaining ring
- ❑ Shoulder faces dished spring

8 - Corrugated spring

9 - Outer plate

10 - Friction plate

11 - Outer plate (thick)

12 - Circlip
- ❑ Determining thickness ⇒ page 82

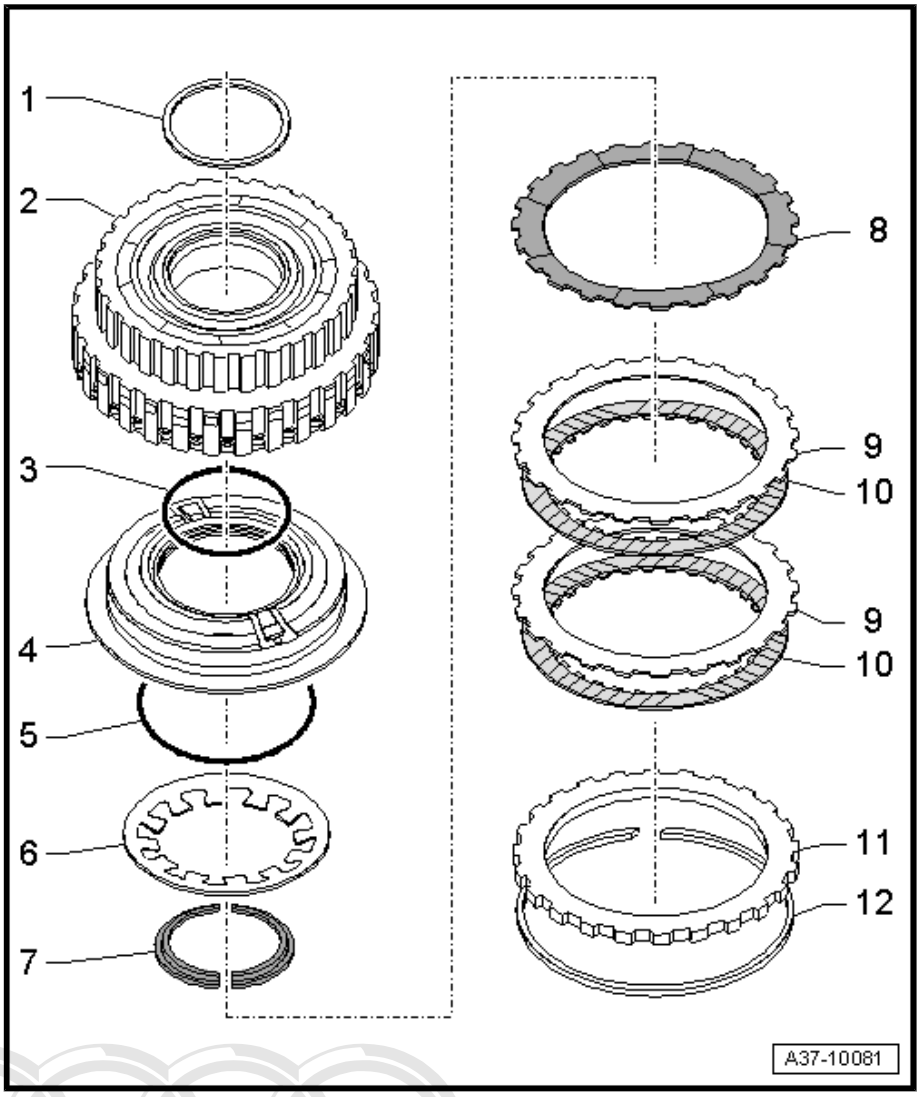


## 4.4 Dismantling and assembling clutch “B”

### Dismantling

– Turn clutch “B” upside down.

– Detach circlip -1- and remove set of plates -2- from cylinder “B”.

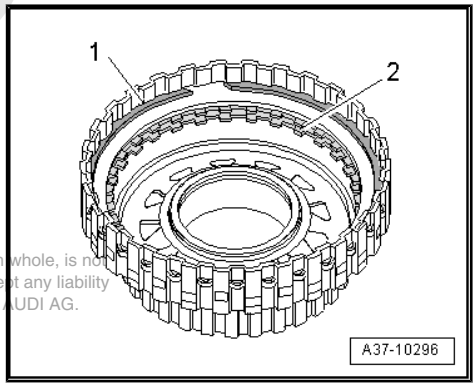


Protected by copyright. Copying for private or commercial purposes, in part or in whole, is not permitted unless authorised by AUDI AG. AUDI AG does not guarantee or accept any liability with respect to the correctness of information in this document. Copyright by AUDI AG.

– Press dished spring down using workshop press with mounting bracket -T10289- .
– Remove split retaining ring -1-.

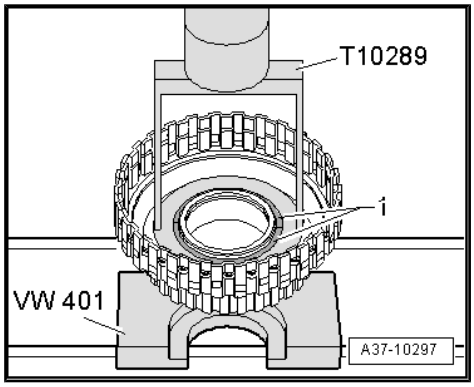


– Detach dished spring -5-.
– Release workshop press.

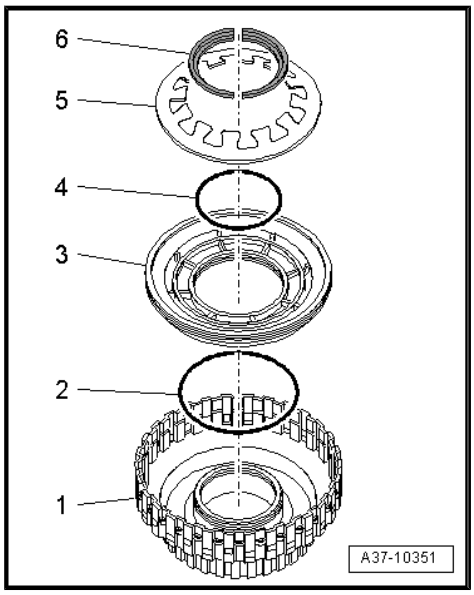

WARNING

*Wear safety goggles.*

– Carefully press piston “B” out of cylinder “B” by applying compressed air (cover remaining oil drilling with your finger).

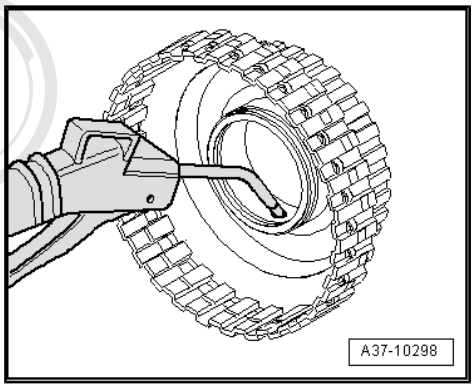


Protected by copyright. Copying for private or commercial purposes, in part or in whole, is not permitted unless authorised by AUDI AG. AUDI AG does not guarantee or accept any liability with respect to the correctness of information in this document. Copyright by AUDI AG.

## Assembling

**Caution**

*Before assembly, check the components of clutch "B" for traces of wear and damage* ⇒ page 145 .

– Renew O-rings -2- and -4- for piston "B" -item 3-.
– Push piston "B", -item 3- into cylinder "B", -item 1- as far as stop.
– Fit dished spring -5-.

6 - Split retaining ring

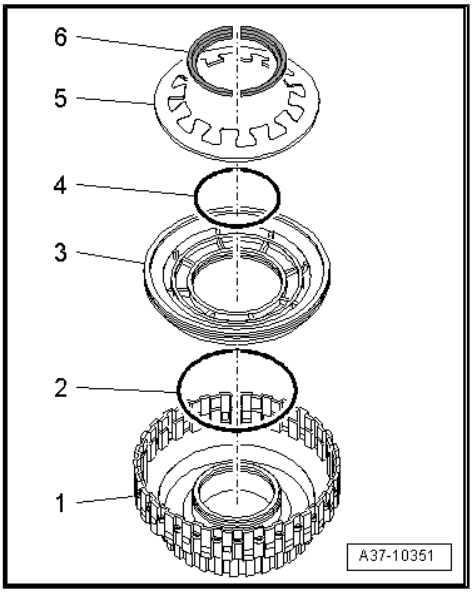


– Press dished spring down using workshop press with mounting bracket -T10289- .
– Insert split retaining ring -1-.
– Release workshop press.

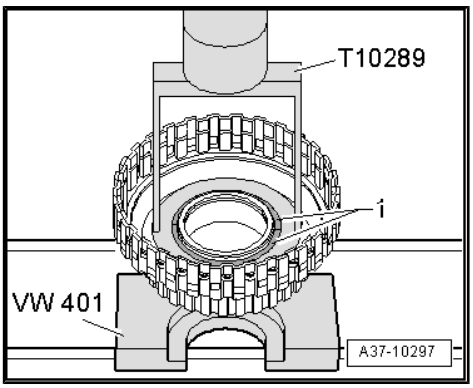


– Insert corrugated spring -2- into cylinder "B" -item 1-.
– Fit outer plates -3- and friction plates -4- alternately.
– Insert thick outer plate -5-.

**Note**

*Make sure that the rounded edges of the thick outer plate face friction plate -4- and not circlip -6-. The contact surface for the circlip is thus increased.*

– Insert circlip -6-.

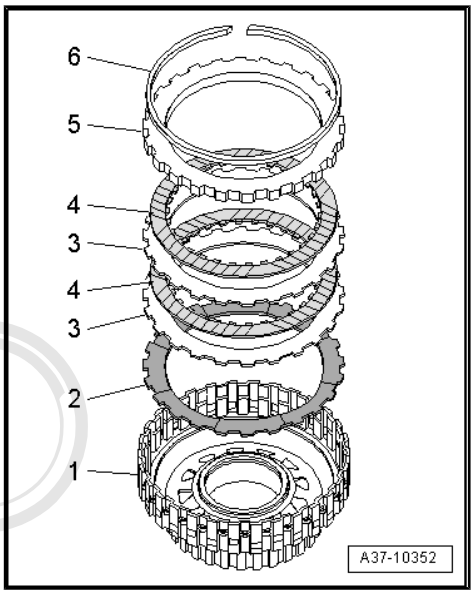


**Caution**

*The illustration shows the currently installed version of clutch "B", with corrugated spring -2-, 2 outer plates -3- and 2 friction plates -4-. If an older version is installed (with no corrugated spring but 3 friction plates and 3 outer plates), always renew clutch "B".*

Protected by copyright. Copying for private or commercial purposes, in part or in whole, is not permitted unless authorised by AUDI AG. AUDI AG does not guarantee or accept any liability with respect to the correctness of information in this document. Copyright by AUDI AG.

### Adjusting clearance of clutch “B”

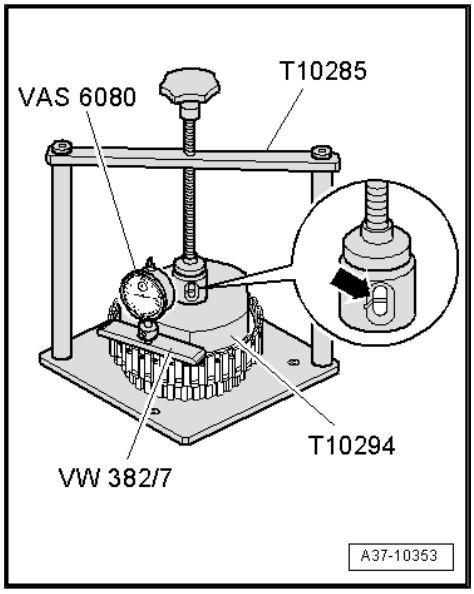


– Position clutch “B” onto compressor tool -T10285- .

– Position holding plate -T10294- onto outer plate of clutch “B”.

• Avoid any contact between holding plate and circlip.

– Fit centring pin of thrust piece -T10285/1- into drilling in holding plate.

– Bring clutch “B” into correct position on holding plate of compressor tool.

• Thrust piece must be positioned centrally below thrust plate of spindle.

– Turn spindle of compressor tool downwards.

• The markings on the inspection hole of the thrust piece must align -arrow-.

– Insert dial gauge -VAS 6080- into measuring bridge -VW 382/7- and secure with knurled nut.

– Position measuring bridge on upper rim of cylinder “B” as shown in illustration.

– Check that measuring bridge is seated properly on rim of cylinder “B”.

– Bring measuring tip into contact with outer plate and note value obtained.

– Mark exact contact point on cylinder “B”.

Protected by copyright. Copying for private or commercial purposes, in part or in whole, is not permitted unless authorised by AUDI AG. AUDI AG does not guarantee or accept any liability with respect to the correctness of information in this document. Copyright by AUDI AG.

– Repeat measurement at two other points on outer plate (offset by 120°) and mark measuring points.

– Determine average value from the three measurements under load.

– Release spindle and remove holding plate.

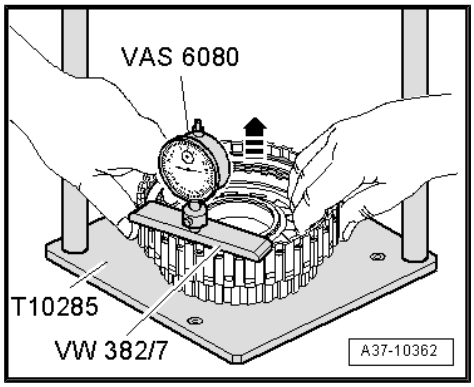


– Use both hands to pull set of plates upwards as far as stop in clutch “B”.

– With set of plates pulled up as far as stop, measure distance between upper rim of cylinder “B” and outer plate exactly at one of the points marked (assistance of second mechanic required).

– Repeat measurement at the two remaining markings on the outer plate.

– Determine average value from the three measurements with set of plates pulled up as far as stop.

– Determine clearance using the following formula:

| | |
|---|---|
| | Mean value of measurements under load<br>(value 1 + value 2 + value 3) : 3 |
| – | Mean value of measurements with set of plates pulled up as far as stop<br>(value 1 + value 2 + value 3) : 3 |
| = | Clearance |

– Subtract mean value of measurement with set of plates pulled up as far as stop from mean value of measurements under load.

**Clearance of clutch "B", Automatic gearbox 01V, front-wheel drive**

| Gearbox code letters | Specification |
|---|---|
| CJQ, CJU, CJV, CJW, CJX, CJY, CJZ, DCS, DDS, DDT, DEQ, DES, DEU, DPS, DRD, DRF, DSS, DUL, DUM, EFR, ETU, ETV, ETW, EZV, FAC | 0.99 ... 1.28 mm |
| EBU, EBV, EBW, EBX, EBY, EBZ, ECJ, EDC, EDE, EFP, EKC, EMA, ERY, ETK, ETL, ETZ, EYF, EZP, EZR, EZS, EZW, EZX, EZY, EZZ, FAB, FAD, FAE, FATF, FAH, FAJ, FAK, FED, FEE, FEV, FHV, FNL, FRT, GDE, GML | 1.37 ... 1.66 mm |

**Clearance of clutch "B", Automatic gearbox 01V, four-wheel drive**

| Gearbox code letters | Specification |
|---|---|
| CJP, CJR, CJS, CJT, DEV, DEW, DEX, DEY, DKB, DPT, DRK, DRN, DST, DTU, DTV, EKX, ETX, ETY, FAN, FHD | 0.99 ... 1.28 mm |
| ECB, ECC, ECD, ECG, ECH, EDF, EFQ, EKD, EMM, EMP, ETM, ETN, EUA, EYJ, EYK, EZB, FAL, FAM, FAP, FAQ, FAR, FAS, FAU, FAV, FAW, FAX, FAZ, FBA, FBB, FEF, FEG, FEJ, FEP, FEQ, FHF, FHG, FHH, FLC, FLV, FNM, FRU, FVE, FXL, GAK, GBF, GBG, GBH, GBJ | 1.37 ... 1.66 mm |

If reading does not match specification:

– Determine new circlip -1- according to following table.

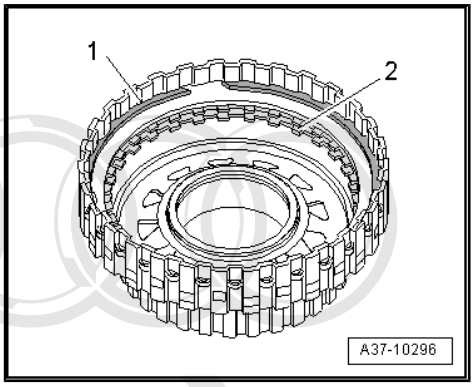


**Note**

*-Item 2- can be disregarded.*

- If clearance is below specification: insert thinner circlip of appropriate thickness.
- If clearance is above specification: insert thicker circlip of appropriate thickness.

| Available circlips - Thickness of circlips in mm | | |
|---|---|---|
| 0.8 | 1.4 | 2.0 |
| 1.0 | 1.6 | |
| 1.2 | 1.8 | |

Protected by copyright. Copying for private or commercial purposes, in part or in whole, is not permitted unless authorised by AUDI AG. AUDI AG does not guarantee or accept any liability with respect to the correctness of information in this document. Copyright by AUDI AG.

– Check clearance again after inserting circlip.

## 4.5 Clutch "A" - exploded view of components

**Note**

- *Some of the components shown are supplied as part of an assembly group and cannot be ordered as individual components ⇒ Parts catalogue .*
- *Before assembly, check the components of clutch "A" for traces of wear and damage* *⇒ page 147* *.*

**1 - Circlip**
- ❑ Renew
- ❑ Make sure circlip is not stretched too far when installing

**2 - Shim**
- ❑ Determining thickness ⇒ page 45

**3 - O-ring**
- ❑ Renew

**4 - Ring**

**5 - Cylinder “A”**

**6 - O-ring**
- ❑ Renew

**7 - O-ring (green)**
- ❑ Renew

**8 - Piston “A”**

**9 - O-ring**
- ❑ Renew

**10 - Dished spring**

**11 - Split retaining ring**
- ❑ Shoulder faces dished spring

**12 - Corrugated spring**
- ❑ Different types depending on gearbox version

**13 - Outer plate**

**14 - Friction plate**

**15 - Outer plate (thick)**

**16 - Circlip**
- ❑ Determining thickness ⇒ page 87

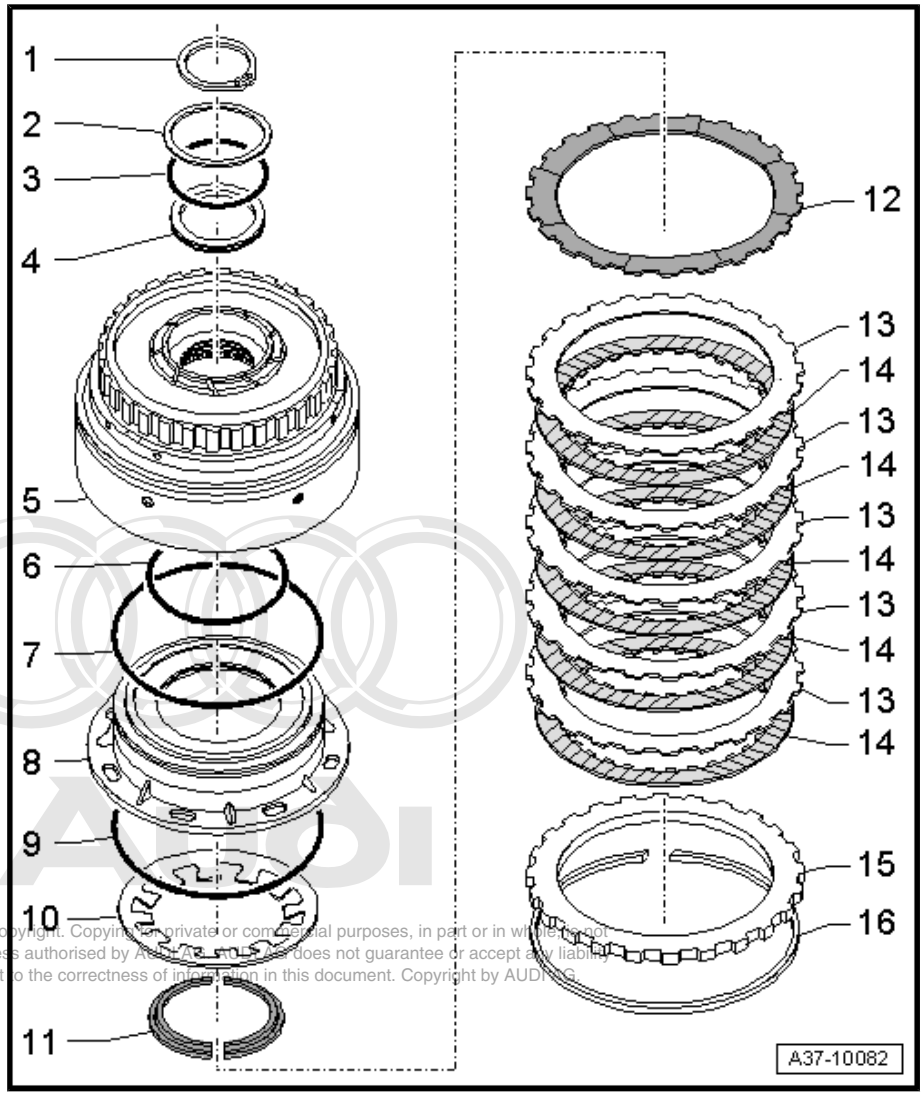


Protected by copyright. Copying for private or commercial purposes, in part or in whole, is not permitted unless authorised by AUDI AG. AUDI AG does not guarantee or accept any liability with respect to the correctness of information in this document. Copyright by AUDI AG.

## 4.6 Dismantling and assembling clutch “A”

**Dismantling**

– Turn clutch “A” upside down.

– Detach circlip -1- and remove set of plates -2- from cylinder “A”.

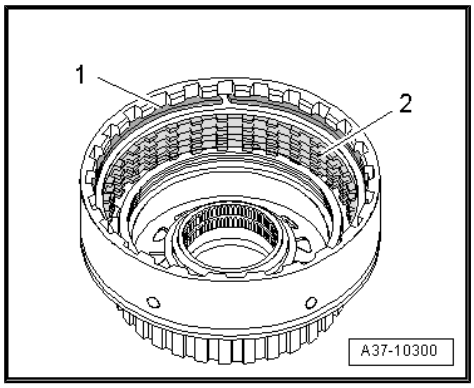

– Press dished spring down using workshop press with mounting bracket -T10276- .
– Remove split retaining ring -1-.
– Release workshop press.
– Remove dished spring.

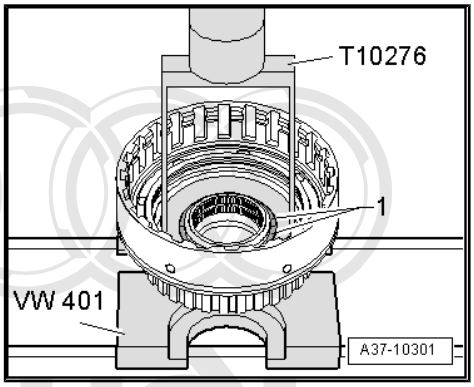


– Pry ring -2- with O-ring -3- out of cylinder “A” -item 1-.

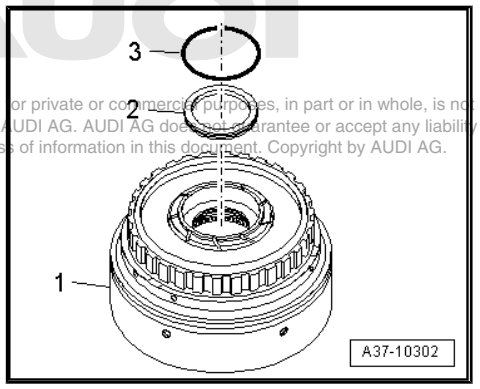


Protected by copyright. Copying for private or commercial purposes, in part or in whole, is not permitted unless authorised by AUDI AG. AUDI AG does not guarantee or accept any liability with respect to the correctness of information in this document. Copyright by AUDI AG.

**WARNING**

*Wear safety goggles.*

– Carefully press piston “A” out of cylinder “A” by applying compressed air (cover remaining two oil drillings with your fingers).

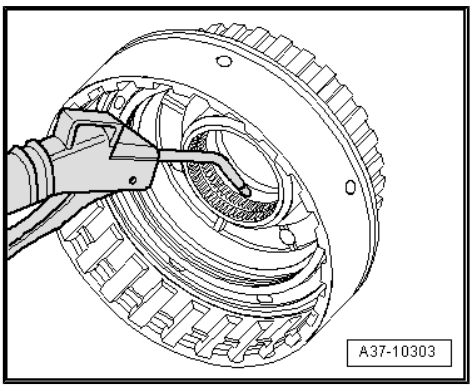


## Assembling

**Caution**

*Before assembly, check the components of clutch “A” for traces of wear and damage* ⇒ page 147 *.*

– Renew O-rings -2- (green), -3- (black) and -5- (black) for piston “A” -item 4-.
– Push piston “A”, -item 4- into cylinder “A”, -item 1- as far as stop.
– Fit dished spring -6-.

7 - Split retaining ring

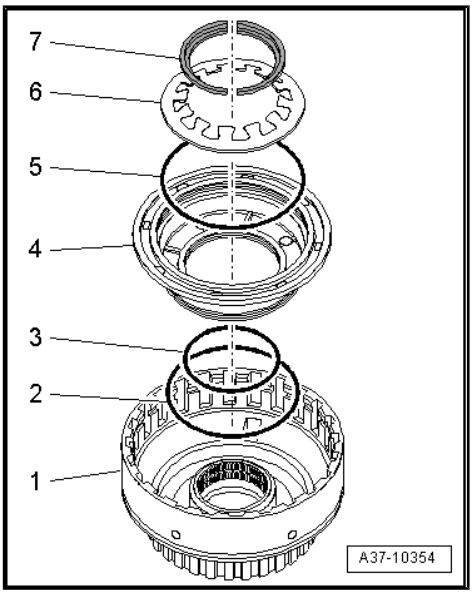

– Press dished spring down using workshop press with mounting bracket -T10276- .
– Insert split retaining ring -1-.
• Collar of split retaining ring faces downwards.
– Release workshop press.

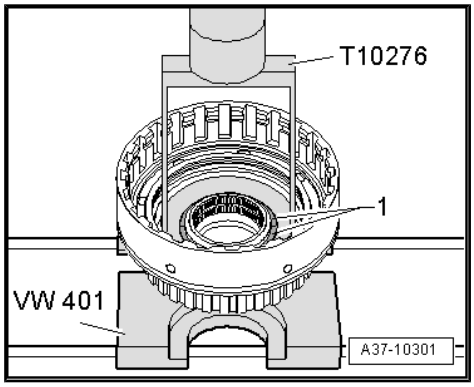


– Insert corrugated spring -2- into cylinder “A” -item 1-.
– Fit outer plates -3- and friction plates -4- alternately.
– Insert thick outer plate -5-.

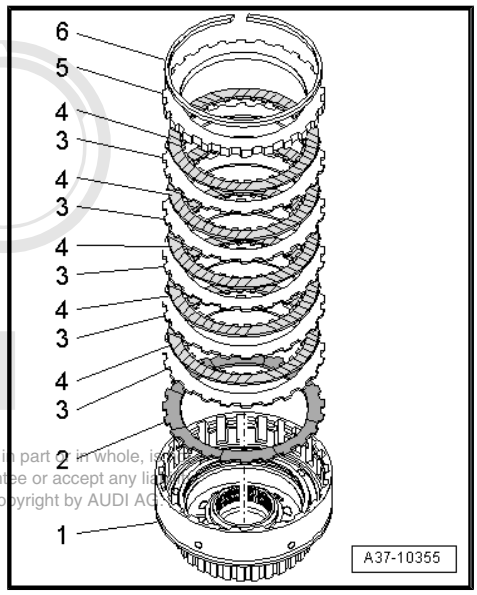


**Note**

*Make sure that the rounded edges of the thick outer plate face friction plate -4- and not circlip -6-. The contact surface for the circlip is thus increased.*

– Insert circlip -6-.

Protected by copyright. Copying for private or commercial purposes, in part or in whole, is not permitted unless authorised by AUDI AG. AUDI AG does not guarantee or accept any liability with respect to the correctness of information in this document. Copyright by AUDI AG.

### Adjusting clearance of clutch “A”

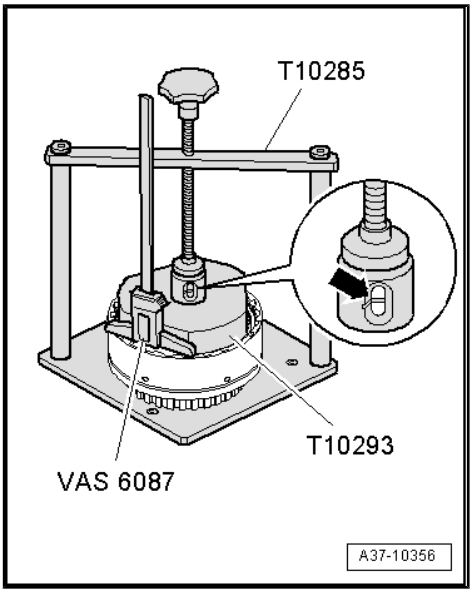


– Position clutch “A” onto compressor tool -T10285- .

– Position holding plate -T10293- onto outer plate of clutch “A”.

• Avoid any contact between holding plate and circlip.

– Fit centring pin of thrust piece -T10285/1- into drilling in holding plate.

– Bring clutch “A” into correct position on holding plate of compressor tool.

• Thrust piece must be positioned centrally below thrust plate of spindle.

– Turn spindle of compressor tool downwards.

• The markings on the inspection hole of the thrust piece must align -arrow-.

– Apply digital depth gauge -VAS 6087- to upper rim of cylinder “A” as shown in illustration.

– Bring measuring tip into contact with outer plate and note value obtained.

– Mark contact point on cylinder “A”.

– Repeat measurement at two other points on outer plate (offset by 120°) and mark measuring points.

– Determine average value from the three measurements under load.

– Release spindle and remove holding plate.

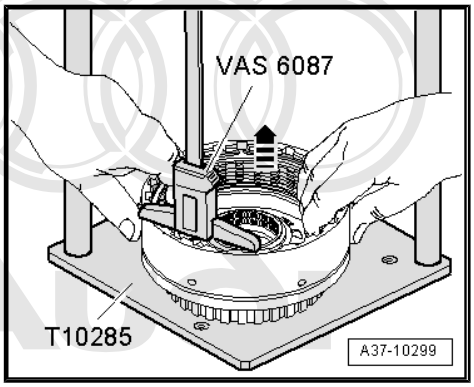


– Use both hands to pull set of plates upwards as far as possible in clutch “A”.

– With set of plates pulled up as far as stop, measure distance between upper rim of cylinder “A” and outer plate at one of the points marked (assistance of second mechanic required).

– Repeat measurement at the two remaining markings on the outer plate.

– Determine average value from the three measurements with set of plates pulled up as far as stop.

– Determine clearance using the following formula:

| | |
|---|---|
| | Mean value of measurements under load<br>(value 1 + value 2 + value 3) : 3 |
| – | Mean value of measurements with set of plates pulled up as far as stop<br>(value 1 + value 2 + value 3) : 3 |
| = | Clearance |

Protected by copyright. Copying for private or commercial purposes, in part or in whole, is not permitted unless authorised by AUDI AG. AUDI AG does not guarantee or accept any liability with respect to the correctness of information in this document. Copyright by AUDI AG.

– Subtract mean value of measurement with set of plates pulled up as far as stop from mean value of measurements under load.

### Clearance of clutch “A”, Automatic gearbox 01V, front-wheel drive

| Gearbox code letters | Specification |
|---|---|
| CJV, CJW, CJX, CJY, CJZ, DCS, DDT, DEQ, DES, DEU, DPS, DRD, DSS, EFR, ETU, ETV, ETW, EZV, FAC | 1.73 ... 2.03 mm |
| CJQ, CJU, DDS, DDT, DRF, DUL, DUM | 1.57 ... 1.87 mm |

| Gearbox code letters | Specification |
|---|---|
| EBV, EBW, EBX, EBZ, ECJ, EDC, EDE, EFP, EKC, EMA, ERY, ETK, ETL, ETZ, EYF, EZP, EZW, EZX, EZY, EZZ, FAD, FAE, FATF, FAH, FAJ, FAK, FED, FEE, FHV, FNL, FRT, GDE, GML | 2.06 ... 2.35 mm |
| EBU, EBY, EZR, EZS, FAB, FEV | 1.73 ... 2.02 mm |

Clearance of clutch “A”, Automatic gearbox 01V, four-wheel drive

| Gearbox code letters | Specification |
|---|---|
| CJP, CJR, CJS, CJT, DEV, DEW, DEX, DEY, DPT, DRK, DRN, DST, DTU, EKX, ETX, ETY, FAN, FHD | 1.73 ... 2.03 mm |
| DKB, DTV | 1.41 ... 1.71 mm |
| ECB, ECC, ECD, ECG, ECH, EDF, EKD, EMM, EMP, ETM, ETN, EUA, EYJ, EYK, EZB, FAM, FAP, FAQ, FAR, FAS, FAU, FAV, FAW, FAX, FAZ, FBA, FBB, FEF, FEG, FEJ, FEQ, FHF, FHG, FHH, FLC, FLV, FNM, FRU, FVE, FXL, GAK, GBG, GBH, GBJ | 2.06 ... 2.35 mm |
| EFQ, FAL, FEP, GBF | 1.73 ... 2.02 mm |

If reading does not match specification:

– Determine new circlip -1- according to following table.

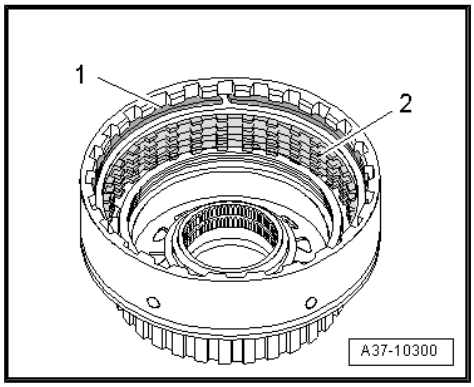


Note

*-Item 2- can be disregarded.*

- If clearance is below specification: insert thinner circlip of appropriate thickness.
- If clearance is above specification: insert thicker circlip of appropriate thickness.

| Available circlips - Thickness of circlips in mm | | |
|---|---|---|
| 1.0 | 1.6 | 2.2 |
| 1.2 | 1.8 | 2.4 |
| 1.4 | 2.0 | 2.6 |

– Check clearance again after inserting circlip.

– Renew O-ring -3- on ring -2-.

– Press ring into cylinder “A” -item 1- as far as stop.

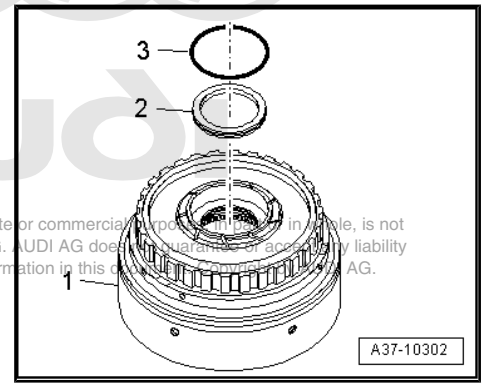


Protected by copyright. Copying for private or commercial purposes, in part or in whole, is not permitted unless authorised by AUDI AG. AUDI AG does not guarantee or accept any liability with respect to the correctness of information in this document. Copyright by AUDI AG.

## 4.7 Clutch “E” - exploded view of components

**Note**

- *Some of the components shown are supplied as part of an assembly group and cannot be ordered as individual components ⇒ Parts catalogue .*
- *Before assembly, check the components of clutch “E” for traces of wear and damage ⇒ page 149 .*

**1 - Rectangular section seals**
- ❑ Renew

**2 - O-ring**
- ❑ Renew

**3 - Cylinder “E”**

**4 - O-ring**
- ❑ Renew

**5 - Piston “E”**

**6 - O-ring**
- ❑ Renew

**7 - Dished spring**

**8 - O-ring**
- ❑ Renew

**9 - Retaining plate**

**10 - Circlip**
- ❑ Renew
- ❑ Make sure circlip is not stretched too far when installing

**11 - Corrugated spring**

**12 - Outer plate**

**13 - Friction plate**

**14 - Outer plate (thick)**

**15 - Circlip**
- ❑ Determining thickness ⇒ page 93

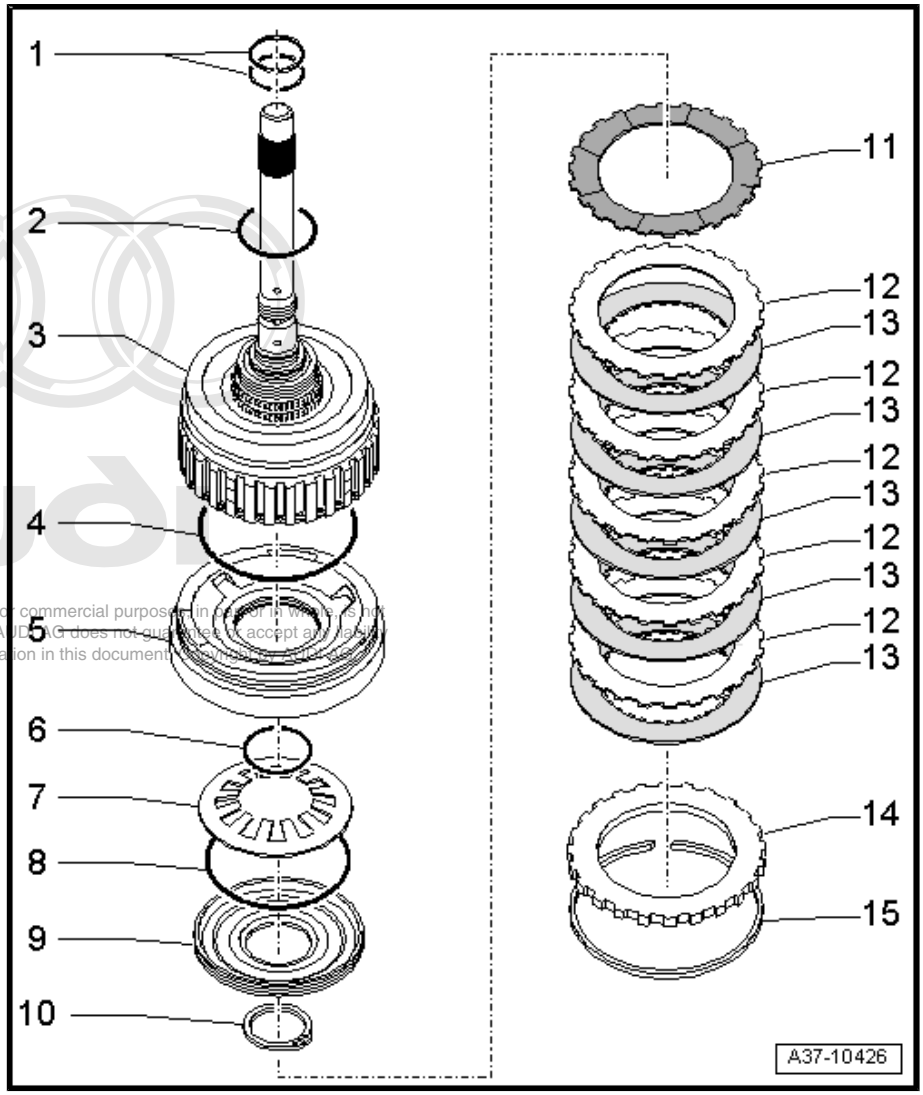


Reproduction copyright. Copying for private or commercial purposes, in part or in whole, is not permitted unless authorised by AUDI AG. AUDI AG does not guarantee or accept any liability with respect to the correctness of information in this document.

## 4.8 Dismantling and assembling clutch “E”

### Dismantling

– Place clutch “E” -item 1- into support element -T10283- .

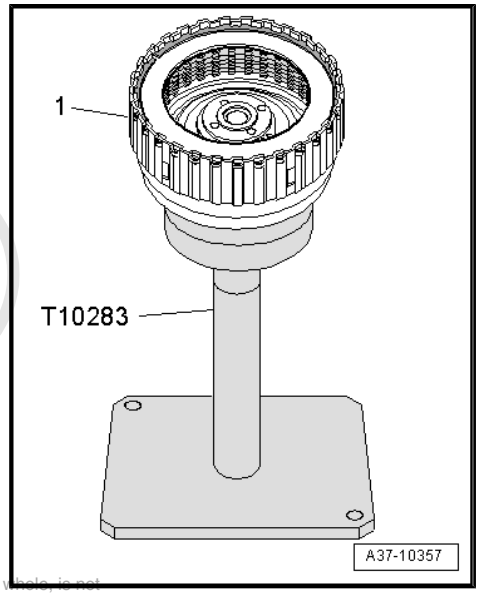


Protected by copyright. Copying for private or commercial purposes, in part or in whole, is not permitted unless authorised by AUDI AG. AUDI AG does not guarantee or accept any liability with respect to the correctness of information. Copyright by AUDI AG.

– Detach circlip -1- and remove set of plates -2- from cylinder “E”.

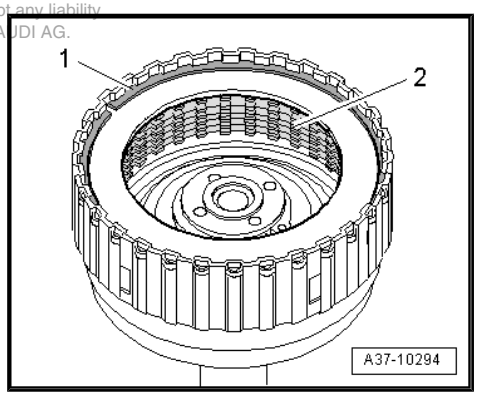


– Press retaining plate down using workshop press with mounting bracket -T10276- .
– Remove circlip -1-.
– Release workshop press.

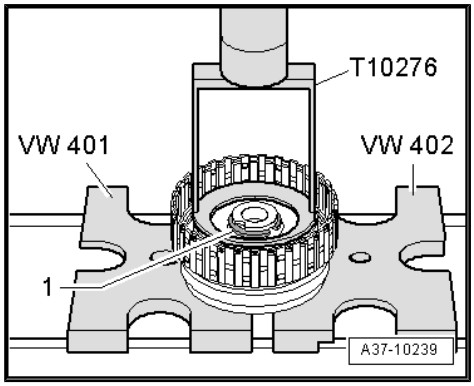

– Detach retaining plate -7-.
– Detach dished spring -5-.

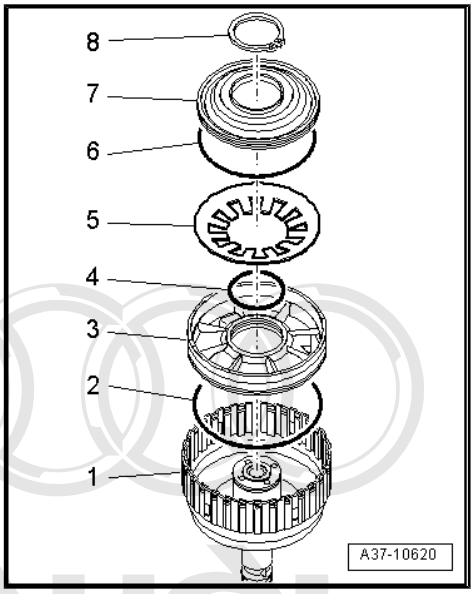


– Turn cylinder “E” upside down.

> **WARNING**
>
> *Wear safety goggles.*

Protected by copyright. Copying for private or commercial purposes, in part or in whole, is not permitted unless authorised by AUDI AG. AUDI AG does not guarantee or accept any liability with respect to the correctness of information in this document. Copyright by AUDI AG.

– Carefully press piston “E” out of cylinder “E” by applying compressed air.

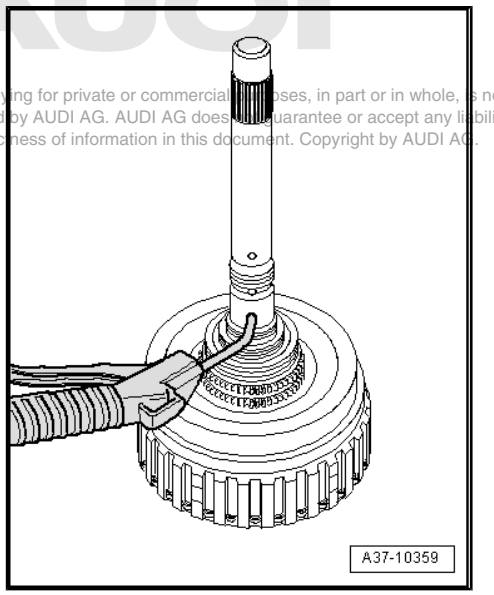


## Assembling

> **Caution**
>
> *Before assembly, check the components of clutch “E” for traces of wear and damage* *⇒ page 149* *.*

– Renew O-rings -2- and -4- for piston “E”, -item 3-.
– Push piston “E”, -item 3- into cylinder “E”, -item 1- as far as stop.
– Fit dished spring -5-.
– Renew O-ring -6- on retaining plate -7-.
– Fit retaining plate -7- into cylinder “E” -item 1-.

8 - Circlip

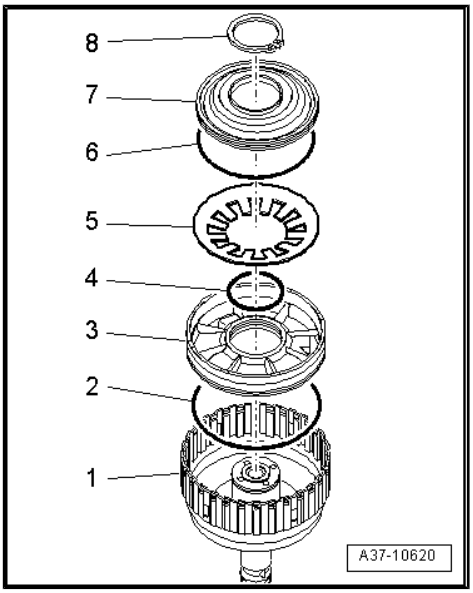

– Press retaining plate down using workshop press with mounting bracket -T10276- .
– Fit new circlip -1-.

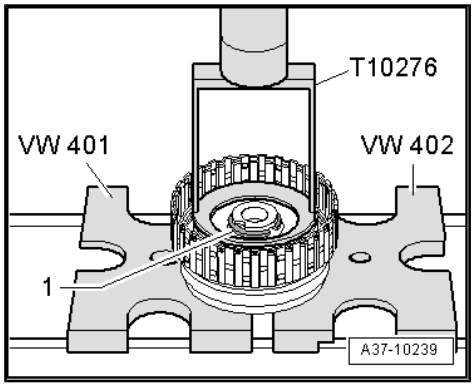


**Caution**

*Take care not to stretch circlip too far when installing. After installing, check that circlip is seated properly.*

– Release workshop press.

– Fit corrugated spring -2- in cylinder “E” -item 1-.
– Fit outer plates -3- and friction plates -4- alternately.
– Insert thick outer plate -5-.

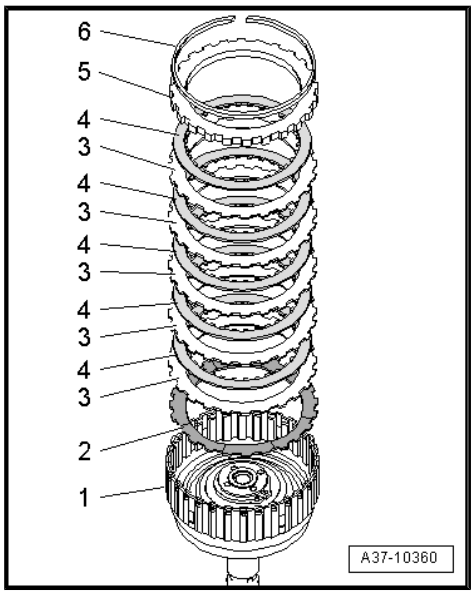


**Note**

*Make sure that the rounded edges of the thick outer plate face friction plate -4- and not circlip -6-. The contact surface for the circlip is thus increased.*

– Insert circlip -6-.

Protected by copyright. Copying for private or commercial purposes, in part or in whole, is not permitted unless authorised by AUDI AG. AUDI AG does not guarantee or accept any liability with respect to the correctness of information in this document. Copyright by AUDI AG.

### Adjusting clearance of clutch “E”

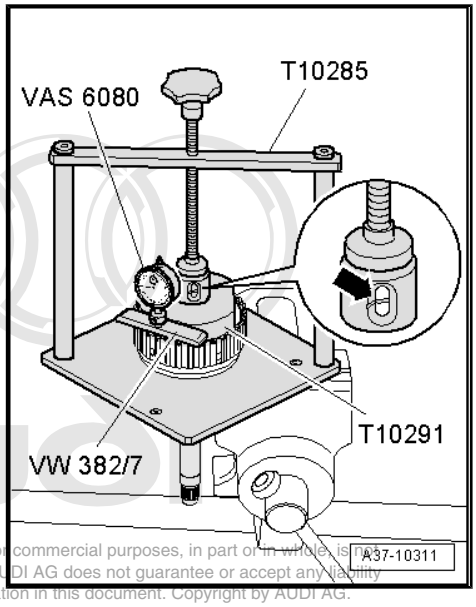


– Clamp support leg of compressor tool -T10285- in vice.

– Insert clutch “E” in compressor tool.

• The input shaft projects out of drilling in base plate.

– Position holding plate -T10291- onto outer plate of clutch “E”.

• Avoid any contact between holding plate and circlip.

– Fit centring pin of thrust piece -T10285/1- into drilling in holding plate.

– Bring clutch “E” into correct position on holding plate of compressor tool.

• Thrust piece must be positioned centrally below thrust plate of spindle.

– Turn spindle of compressor tool downwards.

• The markings on the inspection hole of the thrust piece must align -arrow-.

Reproduction or distribution, even in private or commercial purposes, in part or in whole, is not permitted unless authorised by AUDI AG. AUDI AG does not guarantee or accept any liability with respect to the correctness of information in this document. Copyright by AUDI AG.

– Insert dial gauge -VAS 6080- into measuring bridge -VW 382/7- and secure with knurled nut.

– Position measuring bridge on upper rim of cylinder “E” as shown in illustration.

– Check that measuring bridge is seated properly on rim of cylinder “E”.

– Bring measuring tip into contact with outer plate and note value obtained.

– Mark exact contact point on cylinder “E”.

– Repeat measurement at two other points on outer plate (offset by 120°) and mark measuring points.

– Determine average value from the three measurements under load.

– Release spindle and remove holding plate.

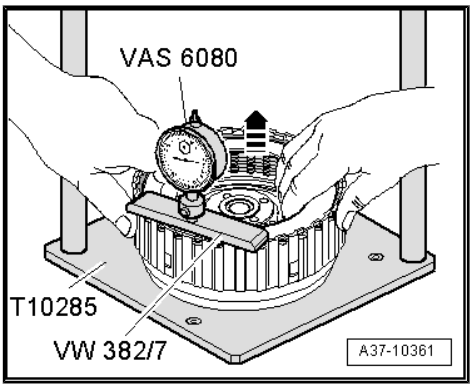


– Use both hands to pull set of plates upwards in clutch “E” as far as stop.

– With set of plates pulled up as far as stop, measure distance between upper rim of cylinder “E” and outer plate at one of the points marked (assistance of second mechanic required).

– Repeat measurement at the two remaining markings on the outer plate.

– Determine average value from the three measurements with set of plates pulled up as far as stop.

– Determine clearance using the following formula:

| | |
|---|---|
| | Mean value of measurements under load<br>(value 1 + value 2 + value 3) : 3 |
| – | Mean value of measurements with set of plates pulled up as far as stop<br>(value 1 + value 2 + value 3) : 3 |
| = | Clearance |

– Subtract mean value of measurement with set of plates pulled up as far as stop from mean value of measurements under load.

### Clearance of clutch “E”, Automatic gearbox 01V, front-wheel drive

| Gearbox code letters | Specification |
|---|---|
| CJV, CJW, CJX, CJY, CJZ, DCS, DEQ, DES, DEU, DPS, DRD, DSS, EBV, EBW, EBX, EBZ, ECJ, EDC, EDE, EFP, EFR, EKC, EMA, ERY, ETK, ETL, ETU, ETV, ETW, ETZ, EYF, EZP, EZV, EZW, EZX, EZY, EZZ, FAC, FAD, FAE, FATF, FAH, FAJ, FAK, FED, FEE, FHV, FNL, FRT, GDE, GML | 1.78 ... 2.08 mm |
| CJQ, CJU, DDS, DDT, DRF, DUL, DUM, EBU, EBY, EZR, EZS, FAB, FEV | 1.41 ... 1.71 mm |

### Clearance of clutch “E”, Automatic gearbox 01V, four-wheel drive

| Gearbox code letters | Specification |
|---|---|
| CJP, CJR, CJS, CJT, DEV, DEW, DEX, DEY, DPT, DRK, DRN, DST, DTU, ECB, ECC, ECD, ECG, ECH, EDF, EKD, EKX, EMM, EMP, ETM, ETN, ETX, ETY, EUA, EYJ, EYK, EZB, FAM, FAN, FAP, FAQ, FAR, FAS, FAU, FAV, FAW, FAX, FAZ, FBA, FBB, FEF, FEG, FEJ, FEQ, FHD, FHF, FHG, FHH, FLC, FLV, FNM, FRU, FVE, FXL, GAK, GBG, GBH, GBJ | 1.78 ... 2.08 mm |
| DKB, DTV, EFQ, FAL, FEP, GBF | 1.41 ... 1.71 mm |

If reading does not match specification:

– Determine new circlip -1- according to following table.

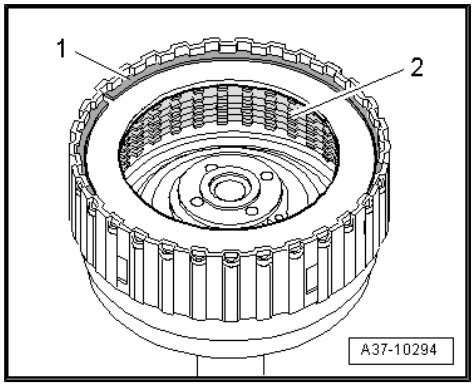


**Note**

*-Item 2- can be disregarded.*

- If clearance is below specification: insert thinner circlip of appropriate thickness.
- If clearance is above specification: insert thicker circlip of appropriate thickness.

| Available circlips - Thickness of circlips in mm | | |
|---|---|---|
| 1.2 | 1.8 | 2.4 |
| 1.4 | 2.0 | 2.6 |
| 1.6 | 2.2 | |

– Check clearance again after inserting circlip.

Protected by copyright. Copying for private or commercial purposes, in part or in whole, is not permitted unless authorised by AUDI AG. AUDI AG does not guarantee or accept any liability with respect to the correctness of information in this document. Copyright by AUDI AG.

## 4.9 Assembling body “II”

– Renew rectangular section seals -3- and O-ring -2- for input shaft on clutch “E” -item 1-.

– Lightly lubricate rectangular section seals -3- and O-ring -2- with vaseline before installing. Use vaseline only. Other types of lubricant will cause the gearbox hydraulics to malfunction.

– Make sure that rectangular section seals -3- are seated properly all round in groove on input shaft.

Protected by copyright. Copying for private or commercial purposes, in part or in whole, is not permitted unless authorised by AUDI AG. AUDI AG does not guarantee or accept any liability with respect to the correctness of information in this document. Copyright by AUDI AG.

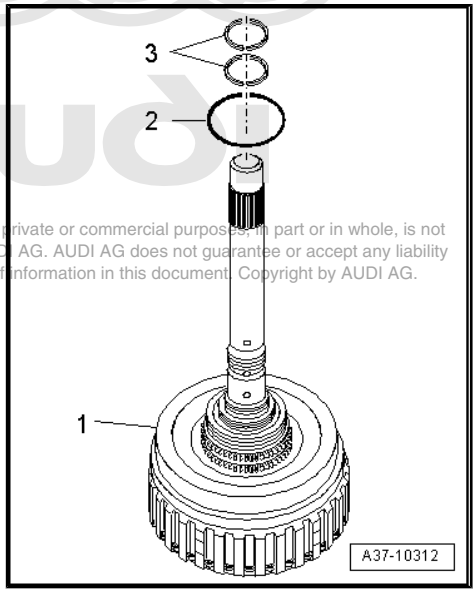


– Push clutch “A” -item 2- onto clutch “E” -item 1- as far as stop.

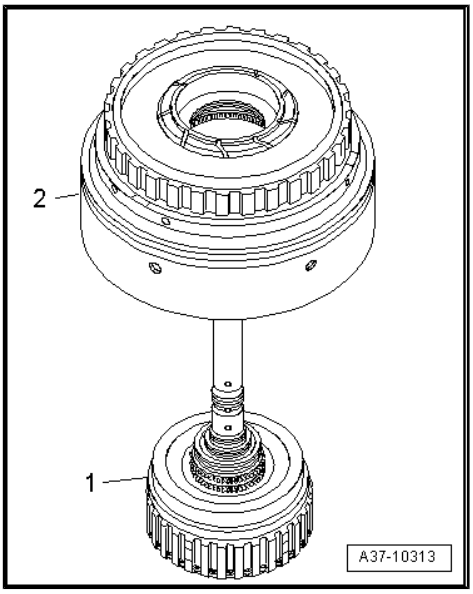


– Fit circlip -2- on input shaft -1-.

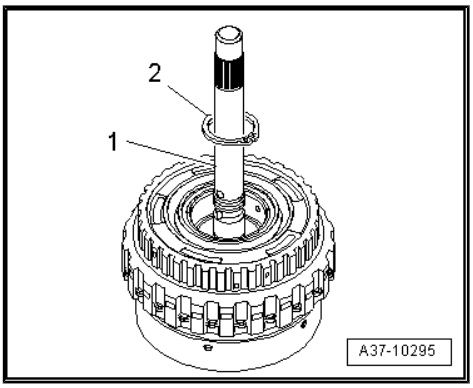

– Fit axial needle bearing -2- on clutch “A” -item 1-.

– Fit clutch “B” -item 3- onto plate carrier of clutch “A” (lift and rotate slightly as required).

• Make sure that all plates of clutch “B” mesh one after the other with the plate carrier of clutch “A”.

– Lift clutch “B” a few millimetres and then let it drop to check that all the plates have meshed.

♦ If you hear a metallic sound, all the plates have meshed.

♦ If you only hear a muffled sound, some of the plates have not meshed.

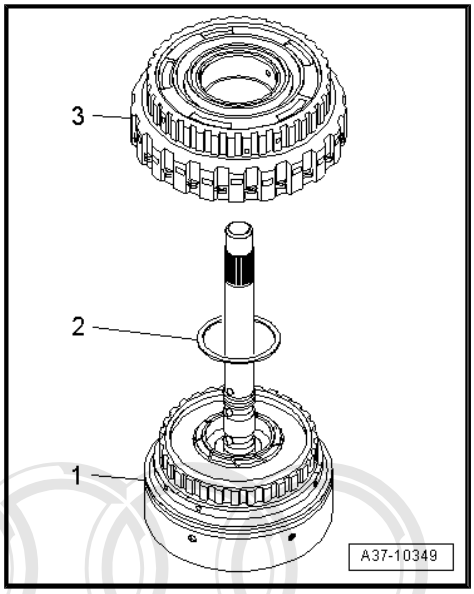


– Fit shim -2- on clutch “B” -item 1-.

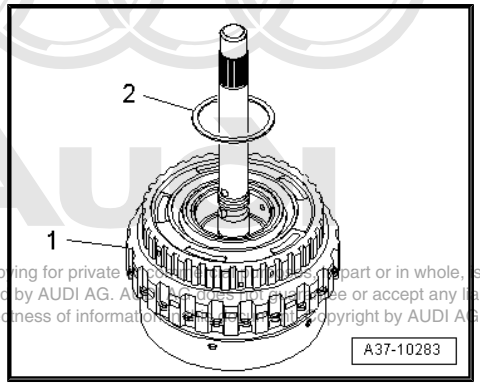


Protected by copyright. Copying for private or commercial purposes, in part or in whole, is not permitted unless authorised by AUDI AG. AUDI AG does not guarantee or accept any liability with respect to the correctness of information. Copyright by AUDI AG.

# 5 Dismantling and assembling clutch "C"

Note

- *General repair instructions ⇒ page 1 .*
- *Rules for cleanliness when working on the automatic gearbox ⇒ page 12 .*
- *Lightly lubricate O-rings and seals with ATF or vaseline before installing to prevent them from getting crushed during assembly.*
- *Fit bearings and shims loosely with vaseline only.*
- *Use only ATF or vaseline on all parts running in ATF. Other lubricants will cause malfunction of the gearbox hydraulics.*

## 5.1 Clutch "C" - exploded view of components

Note

- *Some of the components shown are supplied as part of an assembly group and cannot be ordered as individual components ⇒ Parts catalogue .*
- *Before assembly, check the individual components of clutch "C" for traces of wear and damage ⇒ page 152 .*

Protected by copyright. Copying for private or commercial purposes, in part or in whole, is not permitted unless authorised by AUDI AG. AUDI AG does not guarantee or accept any liability with respect to the correctness of information in this document. Copyright by AUDI AG.

1 - ATF supply unit
- ❑ Dismantling ⇒ page 103

2 - O-ring
- ❑ Renew

3 - Piston“C”

4 - O-ring
- ❑ Renew

5 - Dished spring

6 - Split retaining ring

7 - Corrugated spring

8 - Outer plate

9 - Friction plate

10 - Outer plate (thick)

11 - Circlip
- ❑ Determining thickness ⇒ page 101

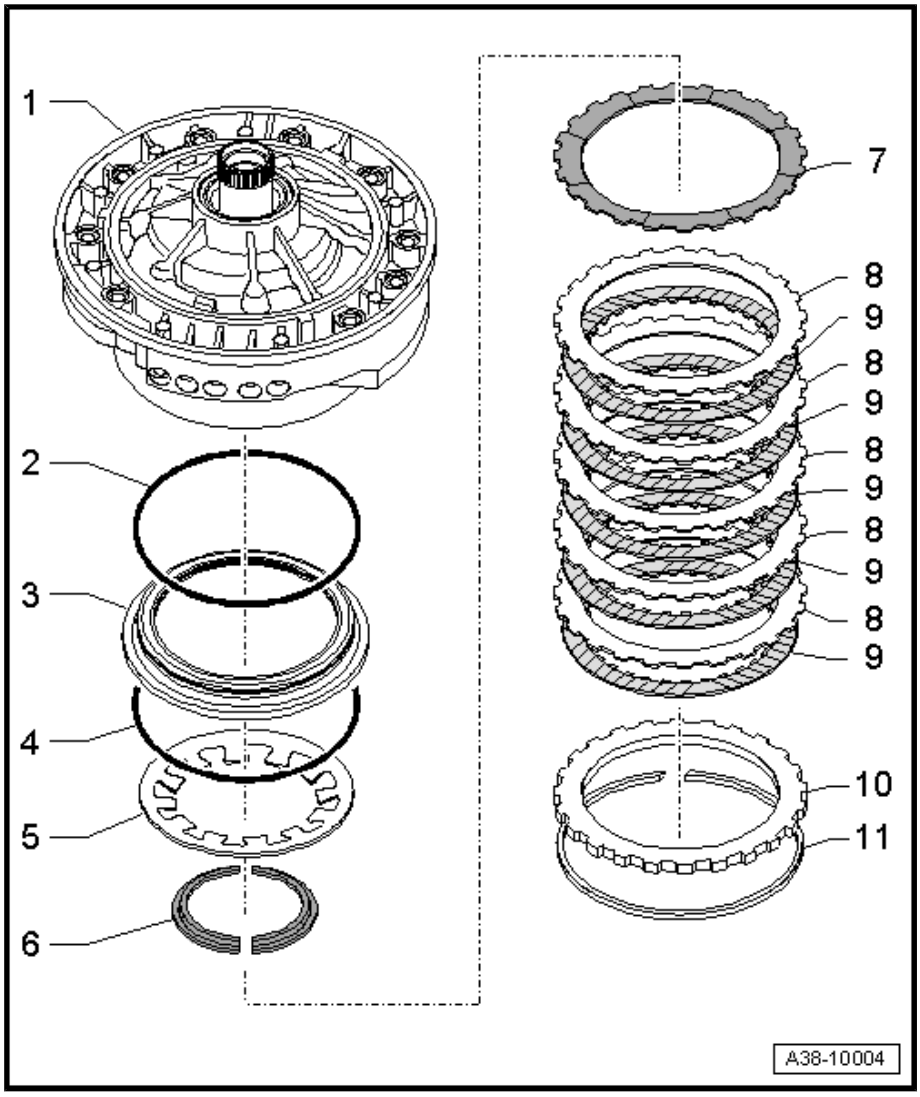


## 5.2 Dismantling and assembling clutch “C”

### Dismantling

– Turn ATF supply unit upside down.

– Remove circlip -1- and remove set of plates -2- from cylinder “C”.

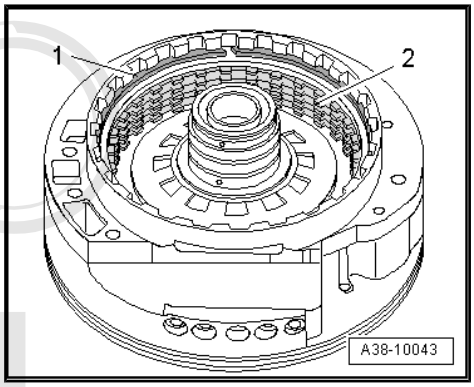


Protected by copyright. Copying for private or commercial purposes, in part or in whole, is not permitted unless authorised by AUDI AG. AUDI AG does not guarantee or accept any liability with respect to the correctness of information in this document. Copyright by AUDI AG.

– Press dished spring down using workshop press with mounting bracket -T10289- .
– Remove split retaining ring -1-.
– Release workshop press.

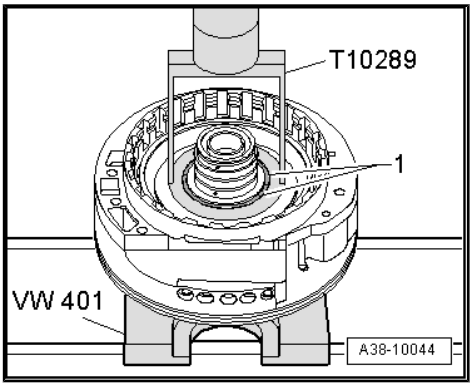


– Detach dished spring -5-.

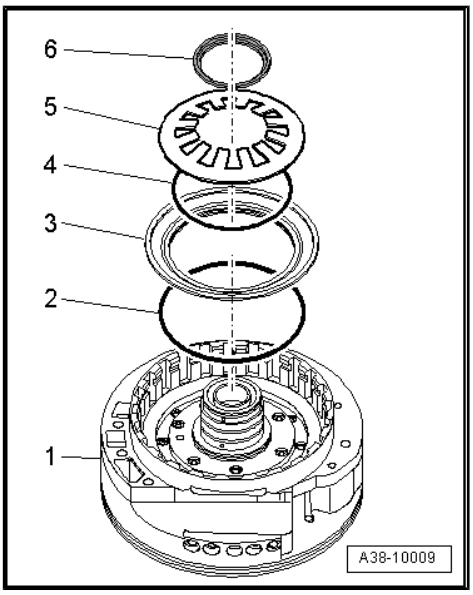


WARNING

*Wear safety goggles.*

– Carefully press piston “C” out of ATF supply unit by applying compressed air.

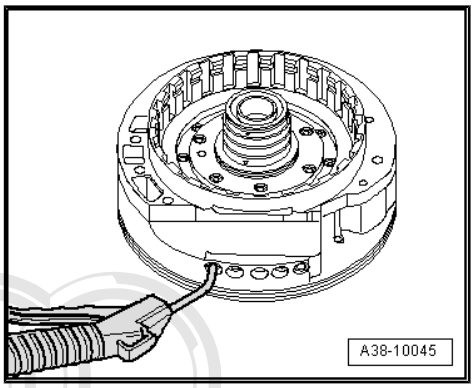


Protected by copyright. Copying for private or commercial purposes, in part or in whole, is not permitted unless authorised by AUDI AG. AUDI AG does not guarantee or accept any liability with respect to the correctness of information in this document. Copyright by AUDI AG.

## Assembling

**Caution**

*Before assembly, check the individual components of clutch "C" for traces of wear and damage* ⇒ page 152 .

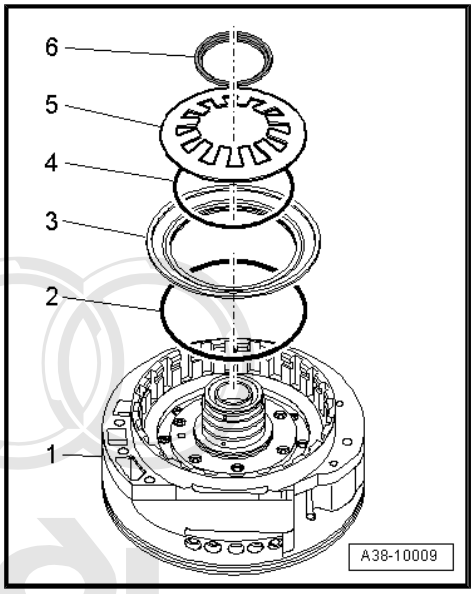


– Renew O-rings -2- and -4- for piston "C" -item 3-.
– Insert piston "C" -item 3- into ATF supply unit -item 1- as far as stop.
– Fit dished spring -5-.

6 - Split retaining ring

– Press dished spring down using workshop press with mounting bracket -T10289- .
– Insert split retaining ring -1-.
• Collar of split retaining ring faces downwards.
– Release workshop press.

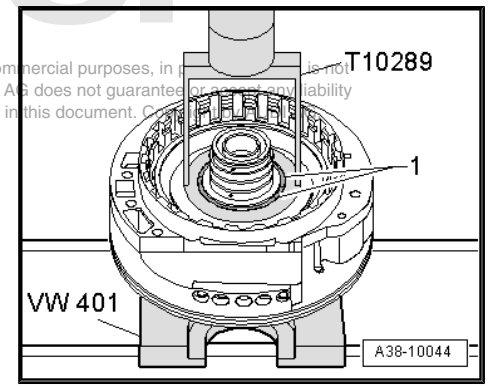


Protected by copyright. Copying for private or commercial purposes, in part or in whole, is not permitted unless authorised by AUDI AG. AUDI AG does not guarantee or accept any liability with respect to the correctness of information in this document. Copyright by AUDI AG.

– Insert corrugated spring -2- into cylinder "B" -item 1-.
– Fit outer plates -3- and friction plates -4- alternately.
– Insert thick outer plate -5-.

**Note**

*Make sure that the rounded edges of the thick outer plate face friction plate -4- and not circlip -6-. The contact surface for the circlip is thus increased.*

– Insert circlip -6-.

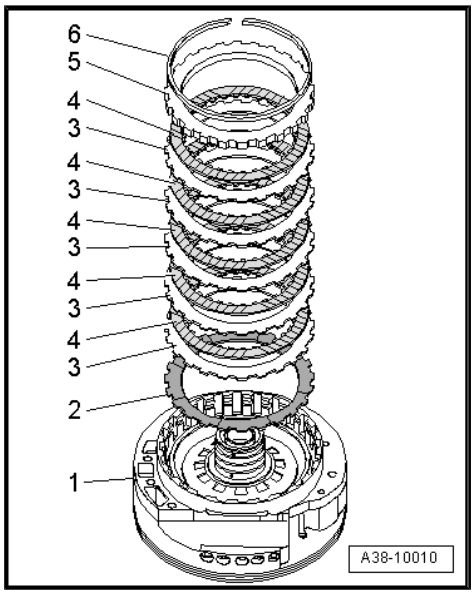

### Adjusting clearance of clutch “C”

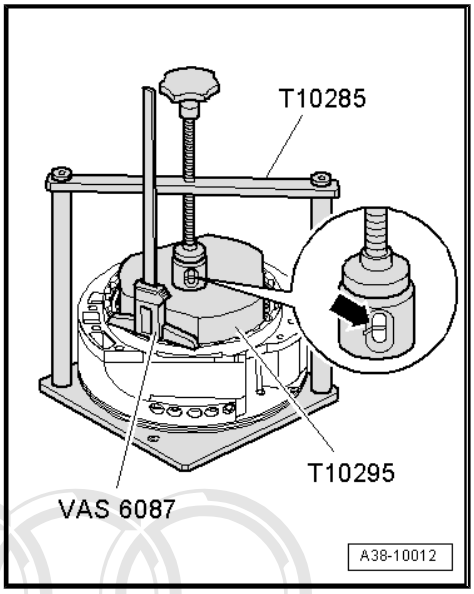


– Clamp support leg of compressor tool -T10285- in vice.
– Place ATF supply unit on compressor tool.
• The stator shaft projects out of the drilling in the base plate.
– Position holding plate -T10295- onto outer plate of clutch “C”.
• Avoid any contact between holding plate and circlip.
– Fit centring pin of thrust piece -T10285/1- into drilling in holding plate.
– Bring ATF supply unit into correct position on holding plate of compressor tool.
• Thrust piece must be positioned centrally below thrust plate of spindle.
– Turn spindle of compressor tool downwards.
• The markings on the inspection hole of the thrust piece must align -arrow-.
– Apply digital depth gauge -VAS 6087- to upper rim of outer plate carrier “C” as shown in illustration.
– Bring measuring tip into contact with outer plate and note value obtained.
– Mark contact point on outer plate carrier “C”.
– Repeat measurement at two other points on outer plate (offset by 120°) and mark measuring points.
– Determine average value from the three measurements under load.
– Release spindle and remove holding plate.

Protected by copyright. Copying for private or commercial purposes, in part or in whole, is not permitted unless authorised by AUDI AG. AUDI AG does not guarantee or accept any liability with respect to the correctness of information in this document. Copyright by AUDI AG.

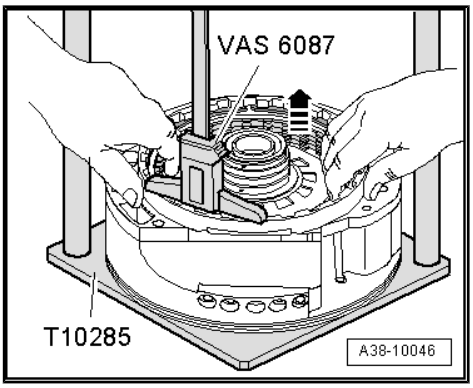


– Use both hands to pull set of plates upwards as far as possible in clutch “C”.
– With set of plates pulled up as far as stop, measure distance between upper rim of outer plate carrier “C” and outer plate at one of the points marked (assistance of second mechanic required).
– Repeat measurement at the two remaining markings on the outer plate.
– Determine average value from the three measurements with set of plates pulled up as far as stop.
– Determine clearance using the following formula:

| | |
|---|---|
| | Mean value of measurements under load<br>(value 1 + value 2 + value 3) : 3 |
| – | Mean value of measurements with set of plates pulled up as far as stop<br>(value 1 + value 2 + value 3) : 3 |
| = | Clearance |

– Subtract mean value of measurement with set of plates pulled up as far as stop from mean value of measurements under load.

### Clearance of clutch “C”, Automatic gearbox 01V, front-wheel drive

| Gearbox code letters | Specification |
|---|---|
| CJW, CJX, CJY, CJZ, DEQ, DEU, DPS, DRD, DSS, ECJ, EDE, EFR, ERY, ETK, ETL, ETU, ETV, ETW, ETZ, EYF, EZV, EZW, FAC, FAD, FATF, FAH, FAK, FED, FEE, FNL, FRT, GDE, GML | 2.00 ... 2.30 mm |
| CJQ, CJU, CJV, DCS, DDS, DDT, DES, DRF, DUL, DUM | 1.63 ... 1.93 mm |
| EBU, EBV, EBW, EBX, EBY, EBZ, EDC, EFP, EKC, EMA, EZP, EZR, EZS, EZX, EZY, EZZ, FAB, FAE, FAJ, FEV, FHV | 1.25 ... 1.54 mm |

### Clearance of clutch “C”, Automatic gearbox 01V, four-wheel drive

| Gearbox code letters | Specification |
|---|---|
| CJR, CJS, CJT, DEW, DEX, DEY, DPT, DRK, DRN, DST, DTU, ECH, EDF, EKX, EMM, EMP, ETM, ETN, ETX, ETY, EUA, EYJ, EYK, EZB, FAN, FAP, FAQ, FAU, FAW, FAX, FAZ, FBB, FEF, FEG, FEJ, FEQ, FHD, FHG, FLC, FLV, FNM, FRU, FVE, FXL, GAK, GBH, GBJ | 2.00 ... 2.30 mm |
| CJP, DEV, DKB, DTV | 1.63 ... 1.93 mm |
| ECB, ECC, ECD, ECG, EFQ, EKD, FAL, FAM, FAR, FAS, FAV, FBA, FEP, FHF, FHH, GBF, GBG, | 1.25 ... 1.54 mm |

If reading does not match specification:

– Determine new circlip -1- according to following table.

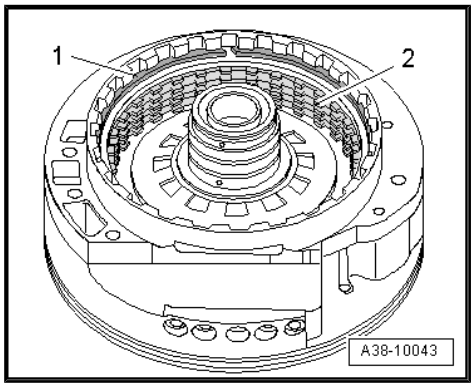


**Note**

*-Item 2- can be disregarded.*

- If clearance is below specification: insert thinner circlip of appropriate thickness.
- If clearance is above specification: insert thicker circlip of appropriate thickness.

| Available circlips - Thickness of circlips in mm | | |
|---|---|---|
| 1.2 | 1.8 | 2.4 |
| 1.4 | 2.0 | 2.6 |
| 1.6 | 2.2 | 2.8 |

– Check clearance again after inserting circlip.

Protected by copyright. Copying for private or commercial purposes, in part or in whole, is not permitted unless authorised by AUDI AG. AUDI AG does not guarantee or accept any liability with respect to the correctness of information in this document. Copyright by AUDI AG.

# 38 – Gears, control

## 1 Dismantling and assembling ATF supply unit

Note

- *General repair instructions ⇒ page 1 .*
- *Rules for cleanliness when working on the automatic gearbox ⇒ page 12 .*
- *Lightly lubricate O-rings and seals with ATF or vaseline before installing to prevent them from getting crushed during assembly.*
- *Fit bearings and shims loosely with vaseline only.*
- *Use only ATF or vaseline on all parts running in ATF. Other lubricants will cause malfunction of the gearbox hydraulics.*

Protected by copyright. Copying for private or commercial purposes, in part or in whole, is not permitted unless authorised by AUDI AG. AUDI AG does not guarantee or accept any liability with respect to the correctness and completeness of this document. ©AUDI AG

### 1.1 ATF supply unit - exploded view of components

Note

- *Some of the components shown are supplied as part of an assembly group and cannot be ordered as individual components ⇒ Parts catalogue .*
- *Before assembly, check the individual components of the ATF pump for traces of wear and damage ⇒ page 154 .*
- *Before assembly, check the individual components of clutch “C” for traces of wear and damage ⇒ page 152 .*

1 - Oil seal
- ❑ Renew

2 - Corrugated washer

3 - O-ring
- ❑ Renew

4 - ATF pump housing

5 - Annulus (outer pump gear)

6 - ATF pump gear

7 - Locating sleeve

8 - Intermediate plate

9 - O-ring
- ❑ Renew

10 - Housing for ATF supply unit

11 - Outer plate carrier “C”

12 - Countersunk bolt
- ❑ Tightening sequence ⇒ page 125

13 - Bolt
- ❑ Tightening sequence ⇒ page 125

14 - Stator shaft
- ❑ Removing and installing ⇒ page 127

15 - Countersunk bolt
- ❑ Tightening sequence ⇒ page 125

16 - Rectangular section seals
- ❑ Renew

17 - Rectangular section seal
- ❑ Renew

18 - Axial needle bearing

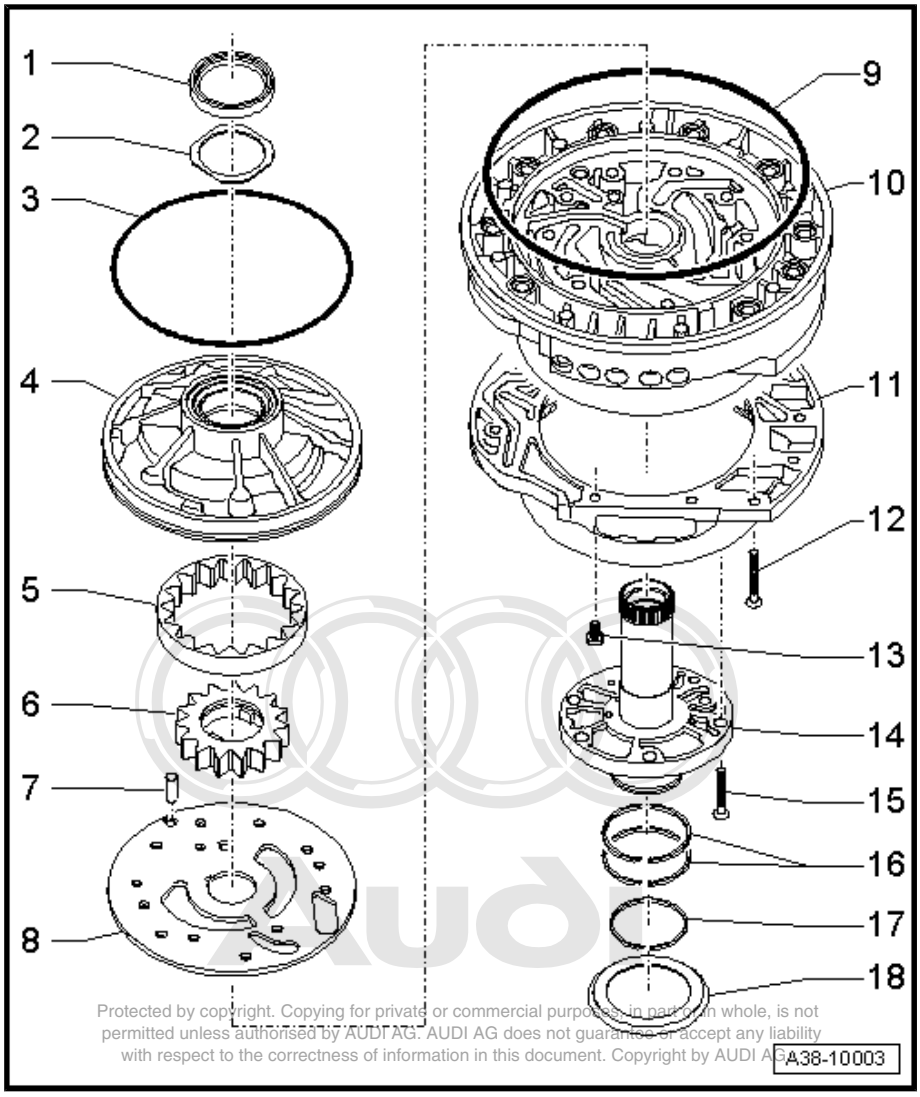


Protected by copyright. Copying for private or commercial purposes, in part or in whole, is not permitted unless authorised by AUDI AG. AUDI AG does not guarantee or accept any liability with respect to the correctness of information in this document. Copyright by AUDI AG.

## 1.2 Removing and installing complete ATF supply unit (gearbox not dismantled)

### Removing

- Gearbox mounted on assembly stand ⇒ page 21 .

– Place used oil collection and extraction unit -V.A.G 1782- below gearbox.

**WARNING**

*Wear safety goggles.*

– Remove ATF drain plug -1- and allow ATF to drain off.

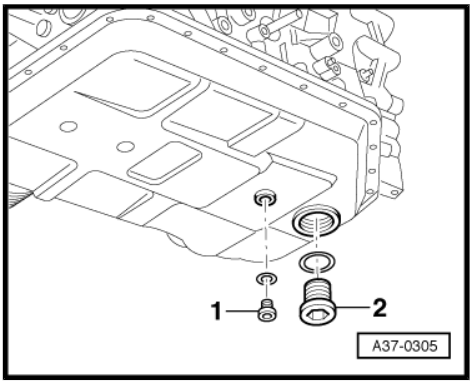


**Note**

- *Observe relevant disposal regulations.*
- *Some ATF always remains in the oil pan.*

– Remove torque converter.

– Remove bolt -arrow- securing flange shaft (right-side). To do so, screw two bolts into flange and counterhold flange shaft with suitable lever.

This document is copyright protected. Copyright of the original document extends to any extracts from it. Reproduction, in whole, is not authorised by AUDI AG. AUDI AG does not guarantee or accept any liability with respect to the correctness of information in this document. Copyright by AUDI AG.

– Place used oil collection and extraction unit -V.A.G 1782- below gearbox.

– Pull out flange shaft (right-side).

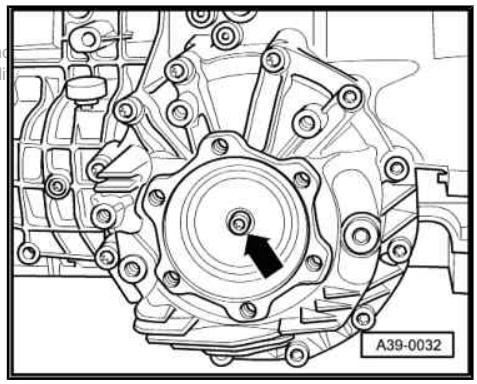


– Slacken bolts on housing cover for final drive in the sequence -12 ... 1- and remove bolts.

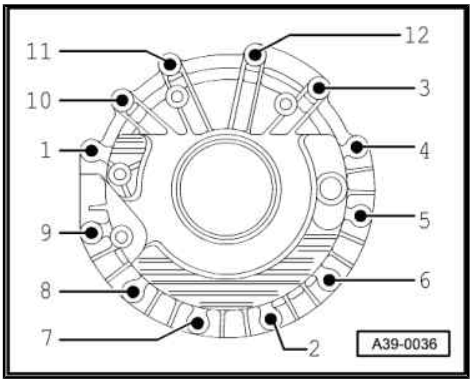


**Caution**

- *Detach cover for final drive from gearbox housing slowly and carefully. The differential may otherwise fall out of the gearbox.*
- *A differential which has fallen to the ground can no longer be installed. If this happens, the gearbox must be renewed.*

– Remove cover for final drive.

**Caution**

- *Take care that the outer race for the tapered roller bearing or the shim for the differential does not fall out of the final drive cover.*
- *The outer race for the tapered roller bearing must be reinstalled in the same position.*
- *Thickness of shim has been measured to fit; the shim must not be replaced with another shim of different thickness.*

– Carefully take out differential -arrow-.

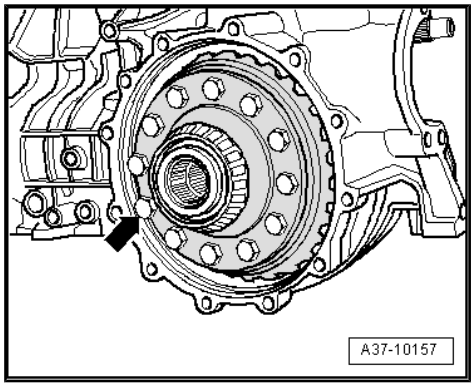


– Cover splines on flange shaft (left-side) -arrow- with insulating tape to prevent damage to twin-lip oil seal for final drive/gearbox housing when pulling off flange shaft (left-side). Take care to cover the splines completely, without creasing or overlapping the tape.

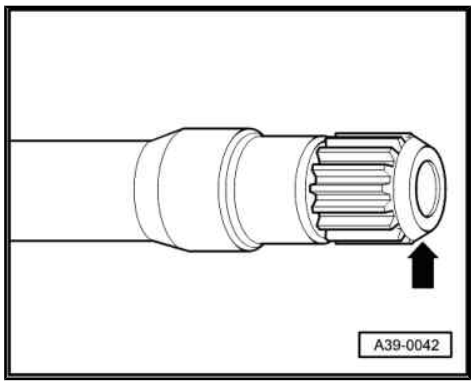


– Unbolt bearing bracket for flange shaft (left-side) -arrows-.
– Pull out flange shaft (left-side).

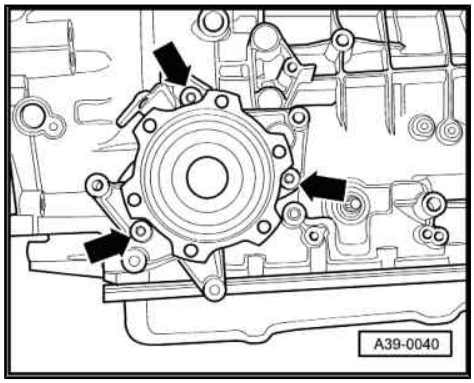


**Note**

*While pulling out the flange shaft (left-side), it must be guided carefully by hand to avoid damaging the twin-lip oil seal between the final drive and gearbox housing.*

– Loosen bolts for ATF oil pan -arrow- in diagonal sequence and remove bolts.
– Take off ATF oil pan.

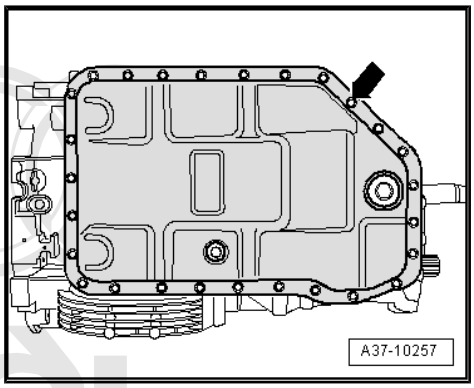


Protected by copyright. Copying for private or commercial purposes, in part or in whole, is not permitted unless authorised by AUDI AG. AUDI AG does not guarantee or accept any liability with respect to the correctness of information in this document. Copyright by AUDI AG.

– Remove bolts -arrows- for ATF strainer.
– Detach ATF strainer from valve body.

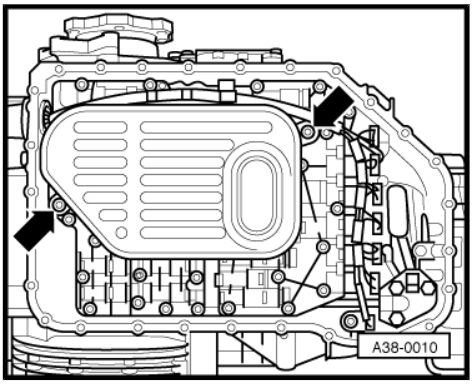


– Remove retaining clip -arrow- for wiring harness connector.
– Remove wiring harness connector by pressing inwards.

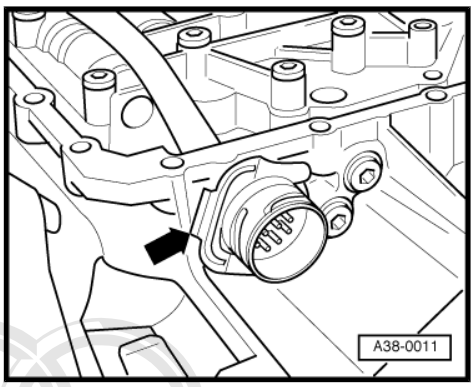


– Unscrew bolt -arrow- and detach gearbox speed sender -G38- / gearbox output speed (sender) -G195- .

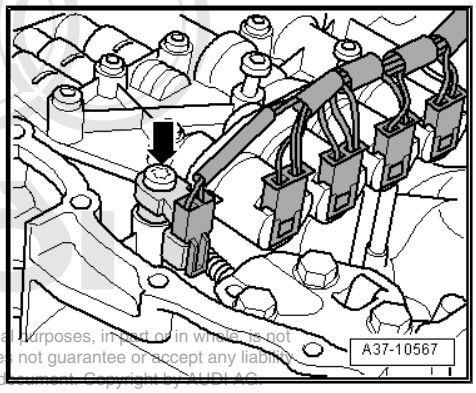


Protected by copyright. Copying for private or commercial purposes, in part or in whole, is not permitted unless authorised by AUDI AG. AUDI AG does not guarantee or accept any liability with respect to the correctness of information in this document. Copyright by AUDI AG.

– On gearboxes with hydraulic control type “E18/2”, detach electrical connector for gearbox input speed sender -G182- at valve body -arrow- and unplug connector.

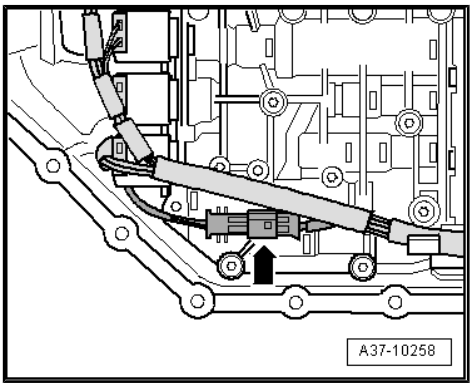

– Slacken bolts for valve body in the sequence -17 ... 1- and remove bolts.

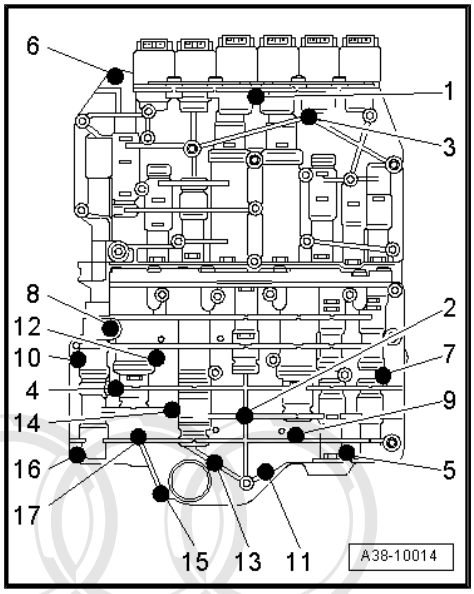


**Caution**

- *Only remove the bolts marked; bolt -6- is only fitted on gearboxes with hydraulic control type "E17".*
- *If other bolts are removed, this may affect the operation of the valve body or the valve body could come apart.*
- *Observe different bolt lengths.*

– Detach valve body carefully from gearbox.

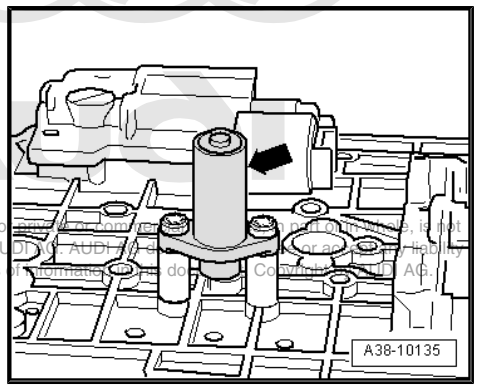


**Caution**

*Only on gearboxes with hydraulic control type "E17": To prevent damage after removal, do not put down the valve body on the gearbox input speed sender -G182- (located on reverse side of valve body -arrow-).*

Protected by copyright. Copying for private or commercial purposes, in part or in whole, is not permitted unless authorised by AUDI AG. AUDI AG does not guarantee or assume any liability with respect to the correctness of information. © Copyright AUDI AG.

– Using extractor tool -T10271- , pull out sealing sleeves -arrows- from feed bores to clutches "C", "A", "B" and "E" and to torque converter lock-up clutch.

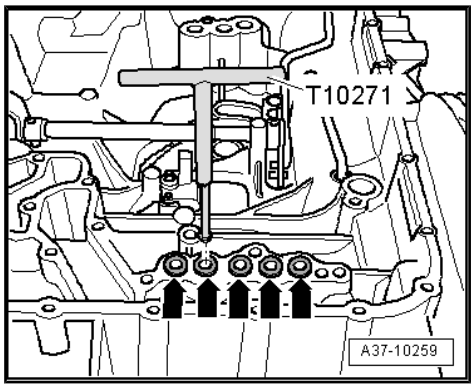

– Remove 3 circlips -1-.
– Detach coil springs -2-.
– Pull out sealing sleeves -3- using extractor tool -T10271- .

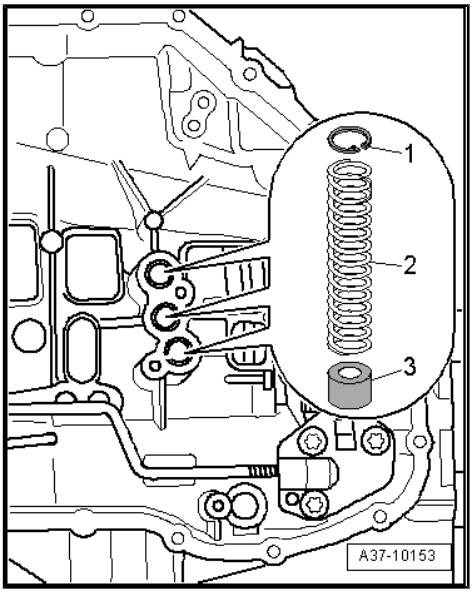


– Turn gearbox on assembly stand.
• ATF supply unit points upwards.

Protected by copyright. Copying for private or commercial purposes, in part or in whole, is not permitted unless authorised by AUDI AG. AUDI AG does not guarantee or assume any liability with respect to the correctness of information in this document. Copyright by AUDI AG.

– Slacken bolts for ATF supply unit in the sequence -9 ... 1- and remove bolts.
– Remove bolts with washers.

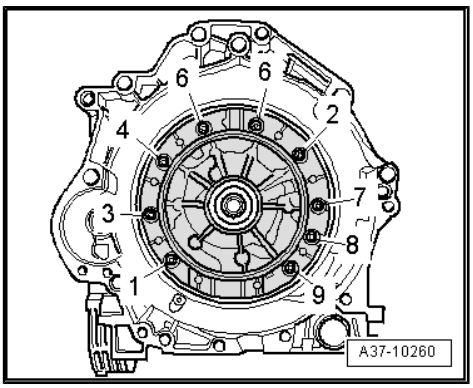


– Attach puller for ATF supply unit -T10286- to stator shaft and lift out ATF supply unit by pulling firmly.

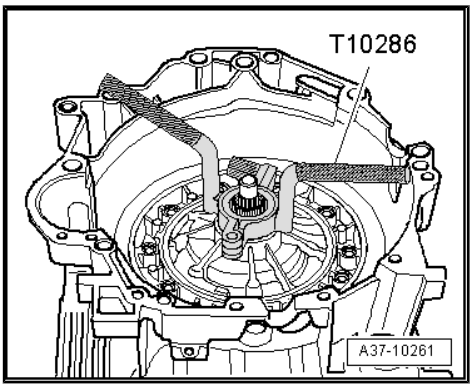

If it is not possible to detach ATF supply unit:

– Insert a screwdriver between sun gear “I” and flanged housing on underside of gearbox and lever components located above sun gear upwards -arrow-.

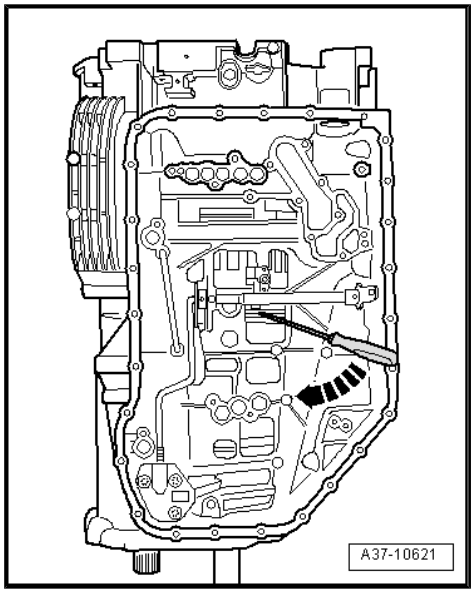


**Installing**

– Make sure that body “II” is still correctly installed.

– Measure distance between seat for shim on body “II” and contact surface for ATF pump on gearbox housing.

• Dimension -a- = 6.0 mm (minimum).

• The shim must not be fitted at this stage.

If dimension -a- is exceeded, body “II” was pulled out of plates upon removal.

– Remove body “II” and then install again ⇒ page 32 .

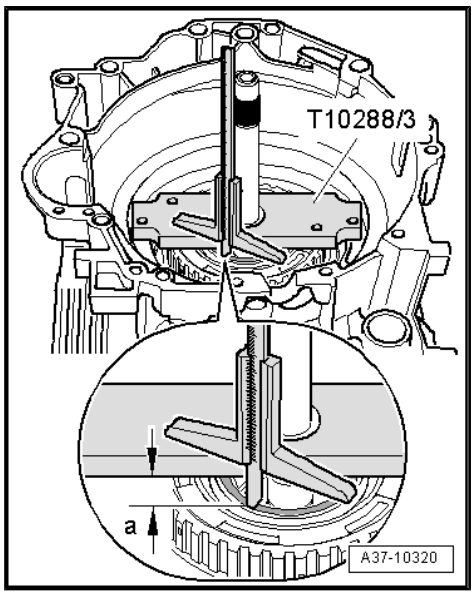


– Fit existing shim -1- onto plate carrier “C”.

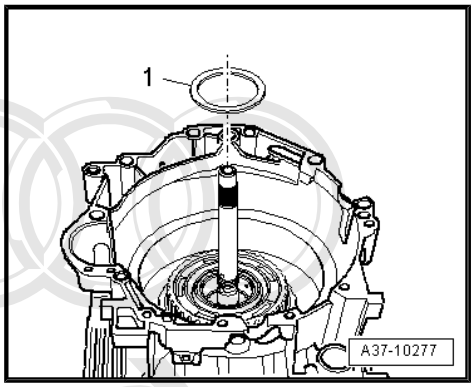


Protected by copyright. Copying for private or commercial purposes, in part or in whole, is not permitted unless authorised by AUDI AG. AUDI AG does not guarantee or accept any liability with respect to the correctness of information in this document. Copyright by AUDI AG.

– Renew two rectangular section seals on input shaft.

– Lightly lubricate the two rectangular section seals on the input shaft with vaseline before fitting. Use vaseline only. Other types of lubricant will cause the gearbox hydraulics to malfunction.

– Make sure that rectangular section seals are seated properly all round in groove on input shaft.

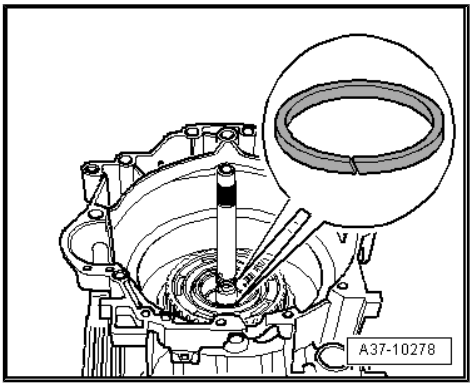


– Lightly lubricate reverse side of axial needle bearing -2- with vaseline. Use vaseline only. Other types of lubricant will cause the gearbox hydraulics to malfunction.

– Fit axial needle bearing onto ATF supply unit -1- so that it sticks in position.

• Closed side of axial needle bearing faces ATF supply unit.

– Renew rectangular section seals -3- and -4- on stator shaft.

– Lightly lubricate the rectangular section seals with vaseline before fitting. Use vaseline only. Other types of lubricant will cause the gearbox hydraulics to malfunction.

– Make sure that rectangular section seals are seated properly all round in grooves on stator shaft.

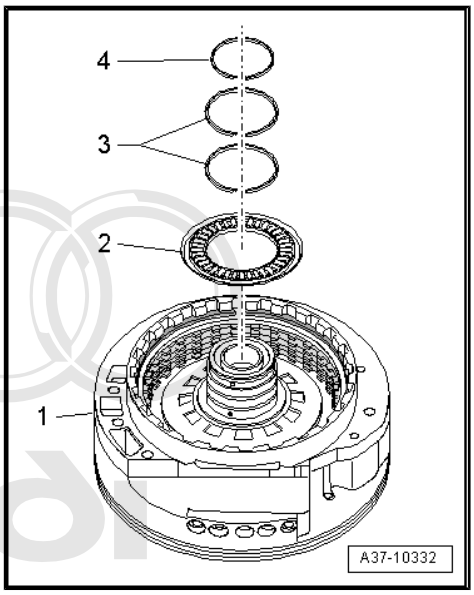


Protected by copyright. Copying for private or commercial purposes, in part or in whole, is not permitted unless authorised by AUDI AG. AUDI AG does not guarantee or accept any liability with respect to the correctness of information in this document. Copyright by AUDI AG.

– After installation, hook the ends of the rectangular section seals -arrows- together as illustrated.

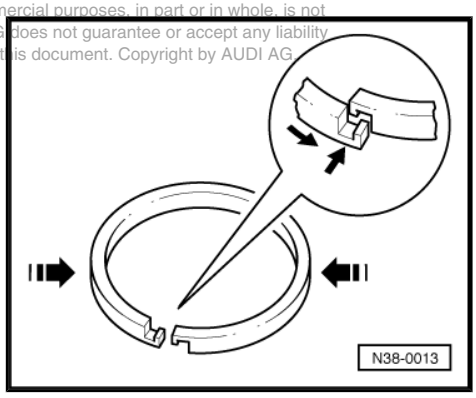


– Renew O-ring -1- on ATF supply unit.

– Lightly lubricate O-ring with vaseline. Use vaseline only. Other types of lubricant will cause the gearbox hydraulics to malfunction.

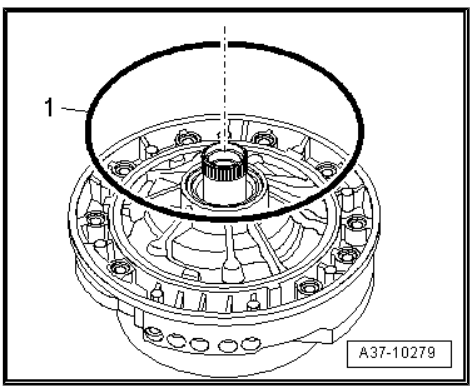

– Align friction plates -3- of clutch “C” symmetrically using centring tool -T10288/1- (engage aligning pins -2- and -4- in splines of all friction plates).

– Align friction plates in relation to housing of ATF supply unit (insert aligning pins -1- and -5- in corresponding drillings in ATF supply unit).

• The aligning pins only fit in one position.

– Hold centring tool in this position and insert wedge -T10288/2- at the side between corrugated spring and piston “F” -arrow-.

• The wedge should hold all the plates in their present position.

– Take off centring tool -T10288/1- ; wedge -T10288/2- remains in position.

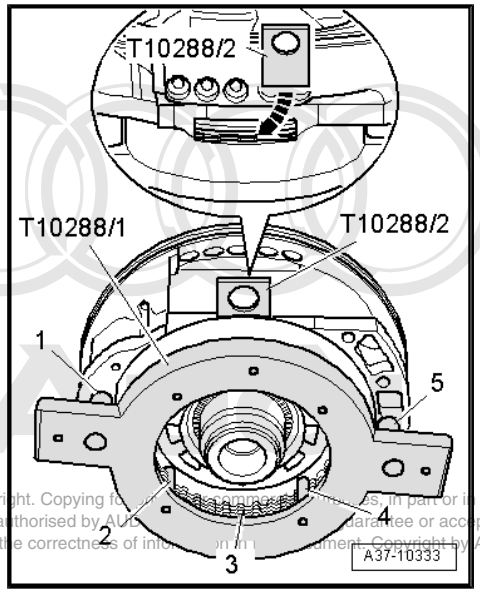


Protected by copyright. Copying for private or commercial purposes, in part or in whole, is not permitted unless authorised by AUDI AG. AUDI AG does not guarantee or accept any liability with respect to the correctness of information in this document. Copyright by AUDI AG.

– Align plate carrier for clutch “C” using centring tool -T10288/3- (screw guide pins -T10288/4- into gearbox housing).

• The drillings in the centring tool and gearbox housing can only be aligned in one position.

– Carefully lift off centring tool -T10288/3- ; guide pins -T10288/4- remain in gearbox housing.

• The plate carrier for clutch “C” must not be turned from this point onwards.

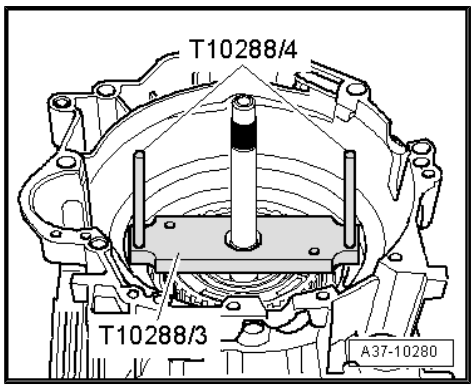


– Apply puller for ATF supply unit -T10286- to stator shaft.

– Bring ATF supply unit into installation position.

• The recess for the flange shaft faces towards valve body side.

– Fit corresponding holes on ATF supply unit onto guide pins -T10288/4- .

– Install ATF supply unit carefully into gearbox housing and press down firmly.

– Pull down ATF supply unit into its final position by alternately tightening two opposite securing bolts.

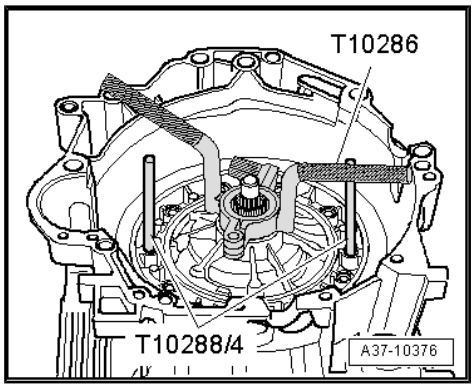


– Pull out wedge -10288/2- with hook -3438- .

– Detach puller for ATF supply unit -T10286- .

– Unscrew guide pins -T10288/4- .

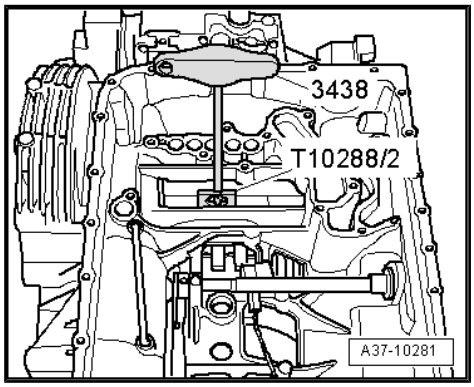

– Fit bolts for ATF supply unit with new washers into ATF supply unit housing.

– Secure bolts for ATF supply unit in sequence -1 ... 9-.

• Tightening torque: 10 Nm.

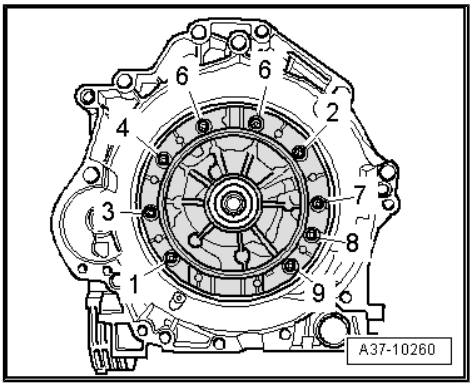


**Note**

*Check that the ATF supply unit is correctly installed: it should be possible to turn the input shaft, otherwise the topmost plate of clutch "C" may have become trapped and bent on installation. If it is not possible to turn input shaft, remove ATF supply unit again and check plates for damage.*

– Set up dial gauge -VAS 6080- with universal dial gauge bracket -VW 387- on gearbox flange.

– Apply dial gauge -VAS 6080- with dial gauge extension to gearbox input shaft as shown in illustration.

– Set dial gauge to "0".

– Wrap insulating tape around input shaft to prevent damage.

– Move input shaft up and down with pliers (avoid diagonal movements).

– Read off axial clearance of input shaft from dial gauge.

• Specification: 0.10 ... 0.30 mm

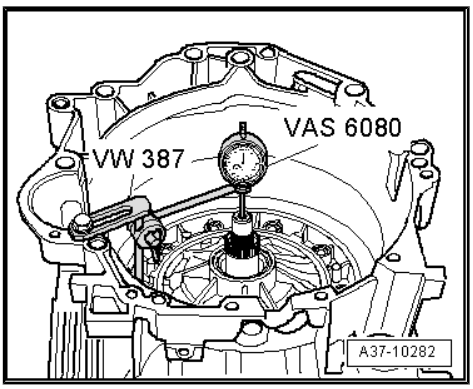


**Note**

*If no axial clearance can be measured (0 mm), it is possible that the flange washers ⇒ Item 33 (page 24) and ⇒ Item 29 (page 24) have been interchanged.*

If readout does not match specification:

– Remove ATF supply unit again.

– Determine correct thickness of shim -2- on body "II", -item 1- according to following table.

• If measured axial clearance is below specification: insert thinner shim of appropriate thickness.

• If determined axial clearance is above specification: insert thicker shim of appropriate thickness.

Copyright © AUDI AG. Copying for private or commercial purposes, in part or in whole, is not permitted unless authorised by AUDI AG. AUDI AG does not guarantee or accept any liability with respect to the correctness of information in this document. Copyright by AUDI AG.

| Available shims - Thickness of shims in mm | | |
|---|---|---|
| 1.6 | 2.0 | 2.4 |
| 1.8 | 2.2 | 2.6 |

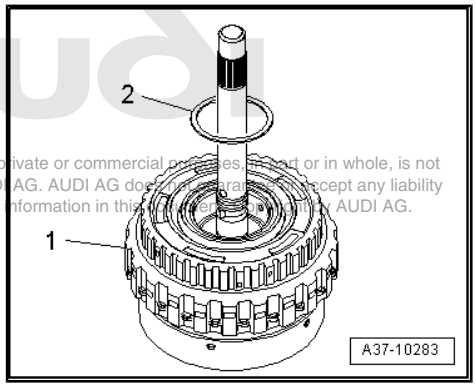


– Install ATF supply unit again with new shim, new washers and new O-ring ⇒ page 43 .

– Read off axial clearance of input shaft again ⇒ page 45 .

If reading again does not match specification:

– Repeat adjustment.

If reading matches specification:

– Turn gearbox on assembly stand.

• Valve body side faces upwards.

– Press sealing sleeves -3- into bores in gearbox housing as far as stop.

– Fit coil springs -2- and secure with circlips -1- (push circlips down into bores as far as shoulder).

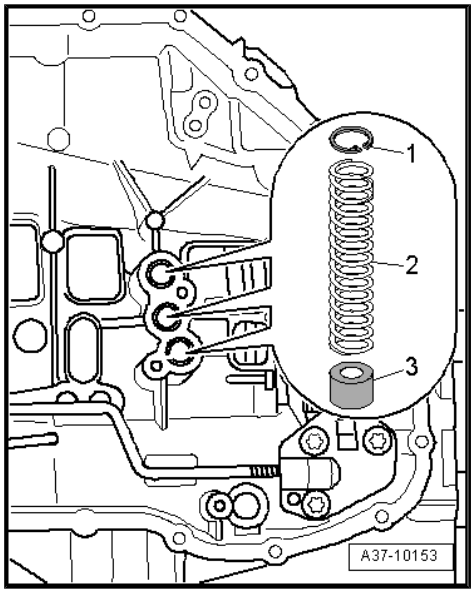


**Caution**

*Only on gearboxes with hydraulic control type "E17": To prevent damage after removal, do not put down the valve body on the gearbox input speed sender -G182- (located on reverse side of valve body -arrow-).*

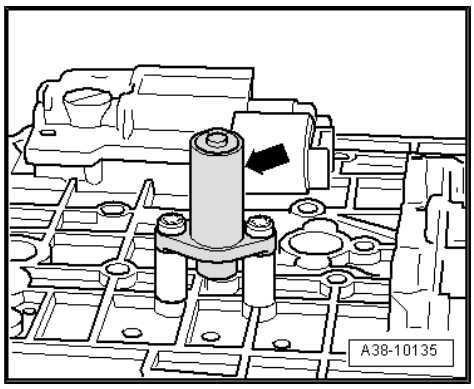


– Place valve body in position on gearbox housing (do not apply force). At the same time insert pin of detent plate -1- so that it engages in slot on selector slide -2-.

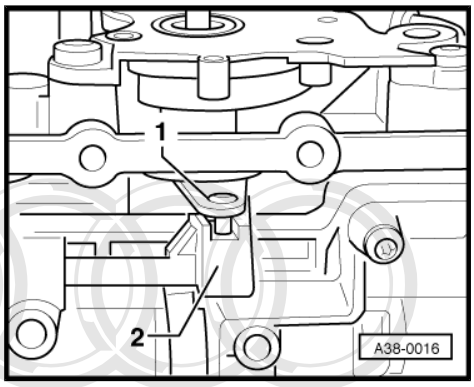


Protected by copyright. Copying for private or commercial purposes, in part or in whole, is not permitted unless authorised by AUDI AG. AUDI AG does not guarantee or accept any liability with respect to the correctness of information in this document. Copyright by AUDI AG.

– Fit bolts for valve body.

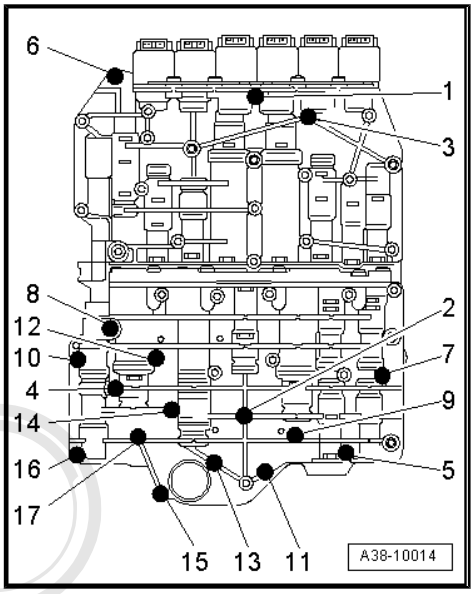


**Note**

- *Note different bolt lengths.*
- *Bolt -6- is only fitted on gearboxes with hydraulic control type "E17".*
- *On gearboxes with hydraulic control type "E18/2", make sure that electrical wiring for gearbox input speed sender -G182- does not become trapped between gearbox housing and valve body.*

– Tighten bolts on valve body in two stages as follows:

| Step | Tightening sequence |
|---|---|
| I | – Tighten bolts hand-tight in sequence -1 ... 17-. |
| II | – Tighten bolts to 8 Nm in sequence -1 ... 17-. |

– Renew O-rings for wiring harness connector.

– Fit wiring harness connector -arrow- in gearbox housing.

• Installation position: lugs -1- and -2- on shoulder are horizontal, flat part -arrow- of connector should be parallel to sealing surface for ATF oil pan.

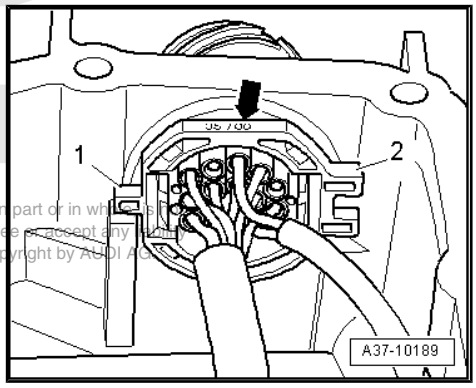


Protected by copyright. Copying for private or commercial purposes, in part or in whole, is not permitted unless authorised by AUDI AG. AUDI AG does not guarantee or accept any liability with respect to the correctness of information in this document. Copyright by AUDI AG.

– Fit retaining clip -arrow- for wiring harness connector and check proper engagement.

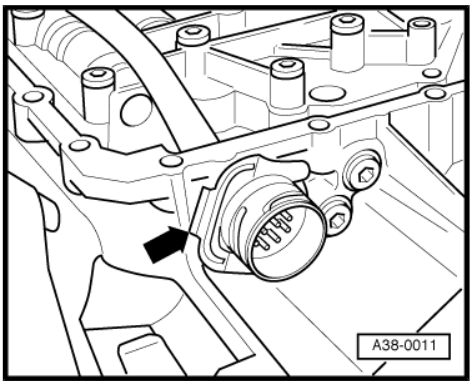


– Secure gearbox speed sender -G38- / gearbox output speed sender -G195- -arrow-.

• Tightening torque: 10 Nm.

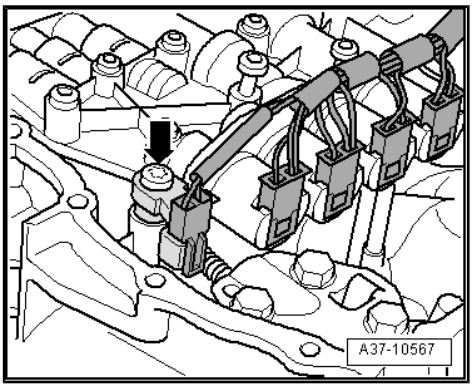

– On gearboxes with hydraulic control type “E18/2”, connect electrical wiring for gearbox input speed sender -G182- .
– Clip electrical connector into retainer on valve body -arrow-.

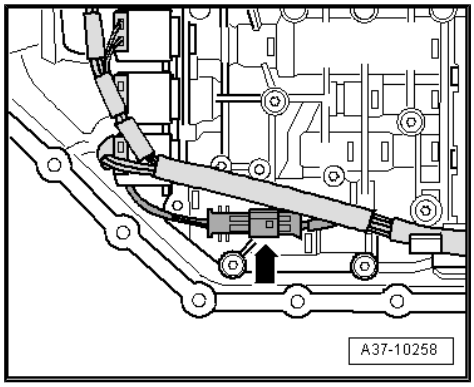


– Renew ATF strainer.
– Fit ATF strainer to valve body and secure -arrows-.
• Tightening torque: 5 Nm.

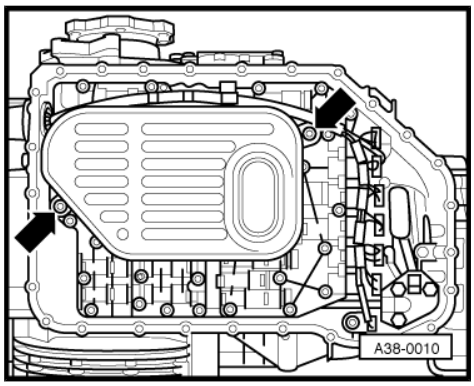


Note

♦ *Clean magnets (6x) in ATF oil pan.*
♦ *Ensure that magnets make full contact with ATF oil pan.*

– Install ATF oil pan -arrow- with new gasket.
– Tighten bolts for ATF oil pan progressively in diagonal sequence.
• Tightening torque: 10 Nm.

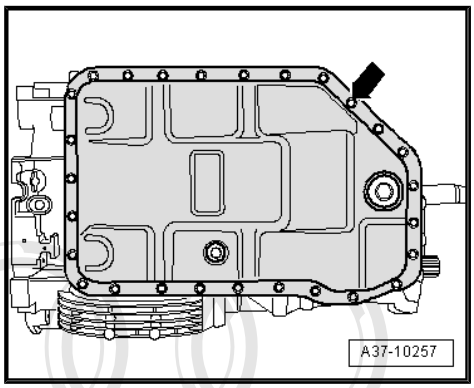


– Renew oil seal for flange shaft (left-side) if necessary ⇒ Automatic gearbox 01V, front-wheel drive and four-wheel drive; Rep. Gr. 39 .
– Renew O-ring -arrow B- in bearing bracket for flange shaft (left-side).

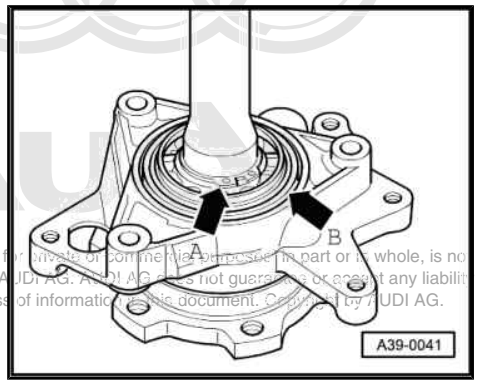


Note

*-Arrow A- can be disregarded.*

Protected by copyright. Copying for private or commercial purposes, in part or in whole, is not permitted unless authorised by AUDI AG. AUDI AG does not guarantee or accept any liability with respect to the correctness of information in this document. Copyright by AUDI AG.

– Renew twin-lip oil seal for final drive/gearbox housing if necessary ⇒ Automatic gearbox 01V, front-wheel drive and four-wheel drive; Rep. Gr. 39 .

– Cover splines on flange shaft (left-side) -arrow- with insulating tape to prevent damage to twin-lip oil seal for final drive/gearbox housing when pushing in flange shaft. Take care to cover the splines completely, without creasing or overlapping the tape.

– Insert flange shaft (left-side) into gearbox.

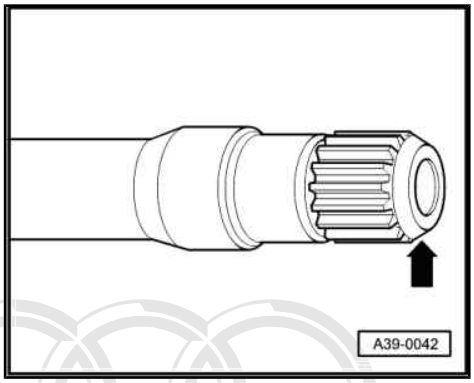


**Note**

*While pushing in the flange shaft (left-side), it must be guided carefully by hand to avoid damaging the twin-lip oil seal for final drive/gearbox housing.*

– Tighten bearing bracket bolts for flange shaft (left-side) -arrows-.

• Tightening torque: 23 Nm.

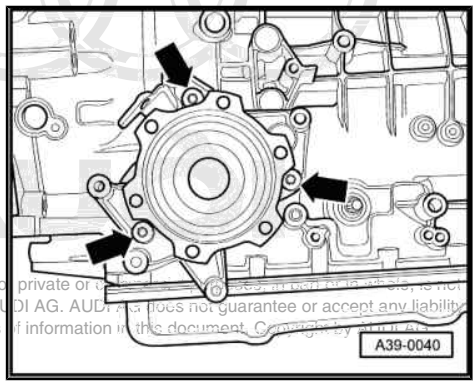


**Caution**

- *Make sure that the outer race for tapered roller bearing and the shim for differential do not drop out of the final drive cover.*
- *Make sure that outer race for tapered roller bearing is at previous position when installing.*
- *Thickness of shim has been measured to fit; the shim must not be replaced with another shim of different thickness.*

Protected by copyright. Copying for private or commercial purposes, in part or in whole, is not permitted unless authorised by AUDI AG. AUDI AG does not guarantee or accept any liability with respect to the correctness of information in this document. Copyright by AUDI AG.

– Renew O-ring -arrow- in cover for final drive.

– Renew oil seal for flange shaft (right-side) if necessary ⇒ Automatic gearbox 01V, front-wheel drive and four-wheel drive; Rep. Gr. 39 .

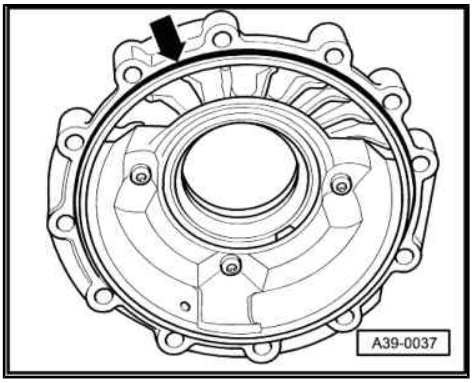


– Install differential -arrow- carefully.

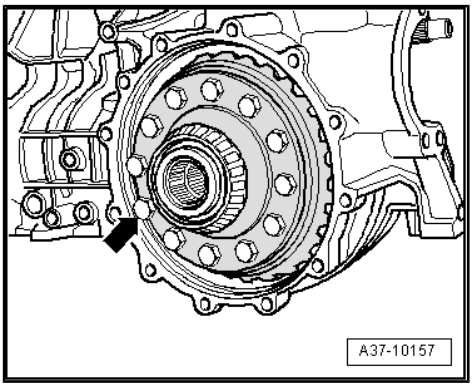

– Fit cover for final drive on gearbox housing.

– Tighten bolts on cover for final drive in two stages as follows:

| Step | Tightening sequence |
|---|---|
| I | – Tighten bolts hand-tight in sequence -1 ... 3-. |
| II | – Tighten bolts to 23 Nm in sequence -1 ... 12-. |

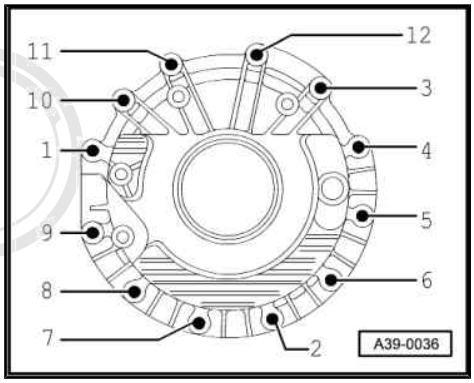


– Tighten bolt -arrow- securing flange shaft (right-side). To do so, screw two bolts into flange and counterhold flange shaft with suitable lever.

• Tightening torque: 23 Nm.

– Detach gearbox from assembly stand.

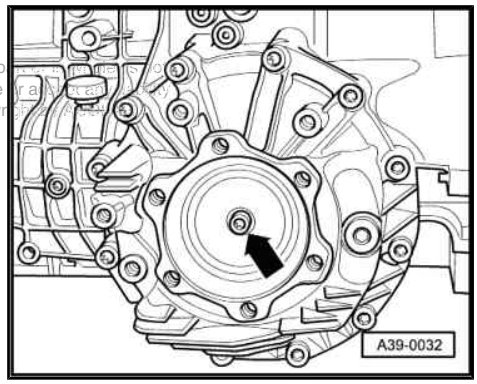


Protected by copyright. Copying for private or commercial purposes, in p
permitted unless authorised by AUDI AG. AUDI AG does not guarantee
with respect to the correctness of information in this document. Copyr

– Place torque converter in position and secure against falling out using support bridge -30-211 A- .

– Check position of torque converter ⇒ Automatic gearbox 01V, front-wheel drive and four-wheel drive; Rep. Gr. 32 .

– Fill with ATF and check ATF level ⇒ Automatic gearbox 01V, front-wheel drive and four-wheel drive; Rep. Gr. 37 .

– Fill front final drive with gear oil and check oil level ⇒ Automatic gearbox 01V, front-wheel drive and four-wheel drive; Rep. Gr. 39 .

– Fill transfer gear housing with gear oil and check oil level ⇒ Automatic gearbox 01V, front-wheel drive and four-wheel drive; Rep. Gr. 39 .

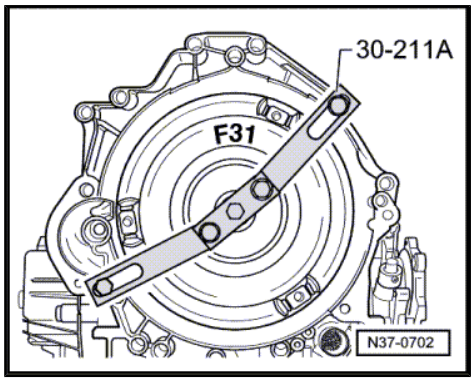


Tightening torques

| Component | Nm |
|---|---|
| ATF supply unit to gearbox housing | 10 |
| Valve body to gearbox housing | 8 |
| ATF strainer to valve body | 5 |
| ATF oil pan to gearbox housing | 10 |
| Bearing bracket for flange shaft (left-side) to gearbox | 23 |
| Cover for final drive to gearbox | 23 |
| Flange shaft (right-side) | 25 |

## 1.3 Removing and installing ATF pump in housing of ATF supply unit

### Removing

- ATF supply unit removed.

– Turn ATF supply unit upside down.

– Remove circlip -1- and remove set of plates -2- from cylinder “C”.

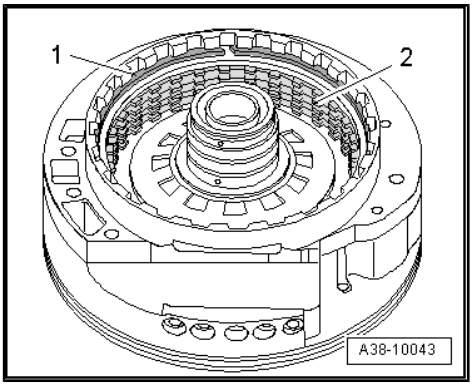


– Press dished spring down using workshop press with mounting bracket -T10289-.

– Remove split retaining ring -1-.

– Release workshop press.

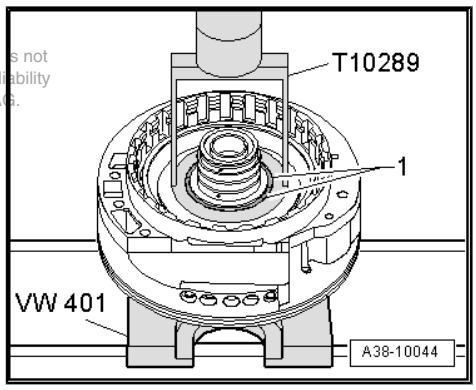


Protected by Copyright. Copying for private or commercial purposes, in part or in whole, is not permitted unless authorised by AUDI AG. AUDI AG does not guarantee or accept any liability with respect to the correctness of information in this document. Copyright by AUDI AG.

– Detach dished spring -5-.

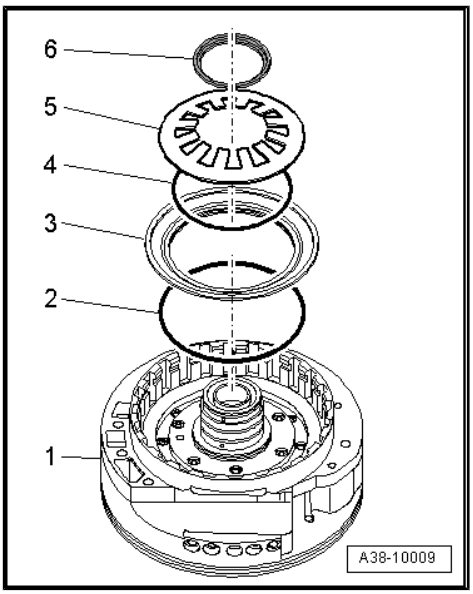

**WARNING**

*Wear safety goggles.*

– Carefully press piston “C” out of ATF supply unit by applying compressed air.

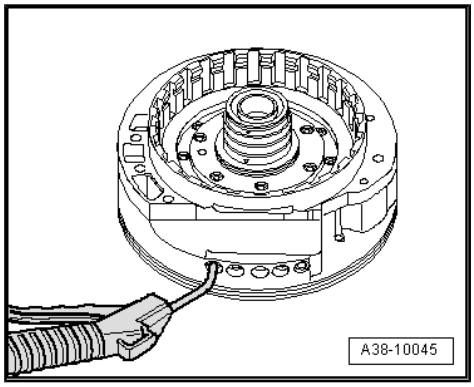


– Remove bolts -3 … 10-.
– Unscrew bolts -1- and -2- approx. 5 turns.

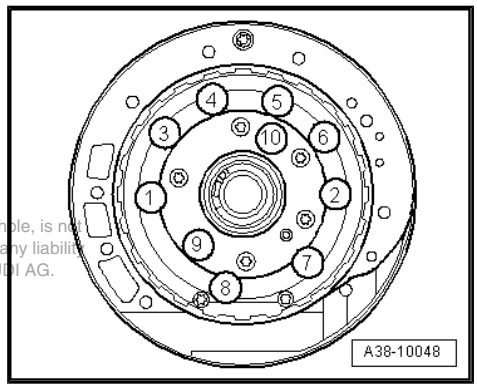


Protected by copyright. Copyright by AUDI AG.

– Apply TORX key with extension -1- to bolt head as illustrated.
– Loosen the ATF supply unit by gently tapping the two bolts alternately with a plastic-headed hammer -arrow-.
– Unscrew remaining two bolts.
– Detach housing of ATF supply unit.

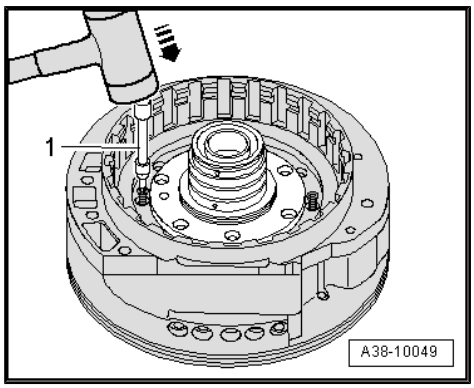

– Remove intermediate plate -5- and locating sleeve -6-.

– Remove ATF pump gears -3- and -4- from ATF pump housing -2-.

1 - O-ring

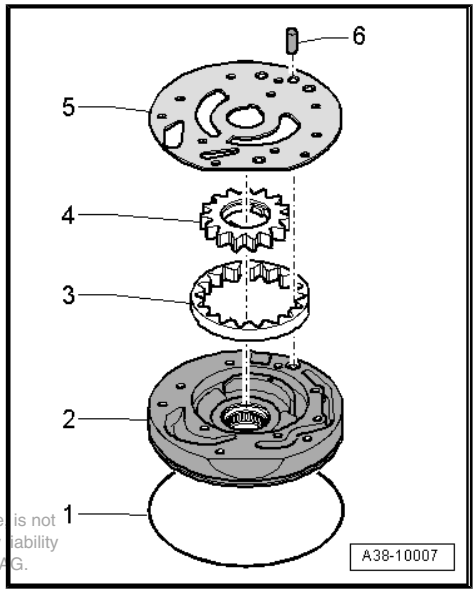


**Installing**

> **Caution**
>
> *Before assembly, check the individual components of the ATF pump for traces of wear and damage* ⇒ page 154 .

– Renew O-ring -1- on ATF pump housing.

– Insert ATF pump gears -3- and -4- into ATF pump housing -2-.

Protected by copyright. Copying for private or commercial purposes, in part or in whole, is not permitted unless authorised by AUDI AG. AUDI AG does not guarantee or accept any liability with respect to the correctness of information in this document. Copyright by AUDI AG.

- The dots marked on the ATF pump gears face the intermediate plate -5-.

– Fit intermediate plate and insert locating sleeve -6-.

- The locating sleeve engages into the rectangular opening on the intermediate plate

– Screw guide pins -T10288/4- into the two opposite bores in housing of ATF supply unit.

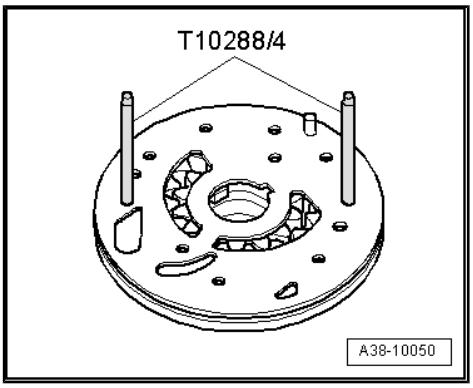


– Fit housing of ATF supply unit onto ATF pump.

– Tighten bolts on ATF pump in two stages as follows:

| Step | Tightening sequence |
|---|---|
| I | – Tighten bolts to 5 Nm in sequence -1 ... 10-. |
| II | – Tighten bolts to 10 Nm in sequence -1 ... 10-. |

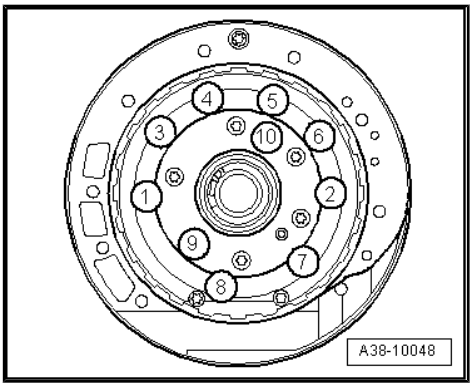

– Renew O-rings -2- and -4- for piston “C” -item 3-.
– Insert piston “C” -item 3- into ATF supply unit -item 1- as far as stop.
– Fit dished spring -5-.

6 - Split retaining ring

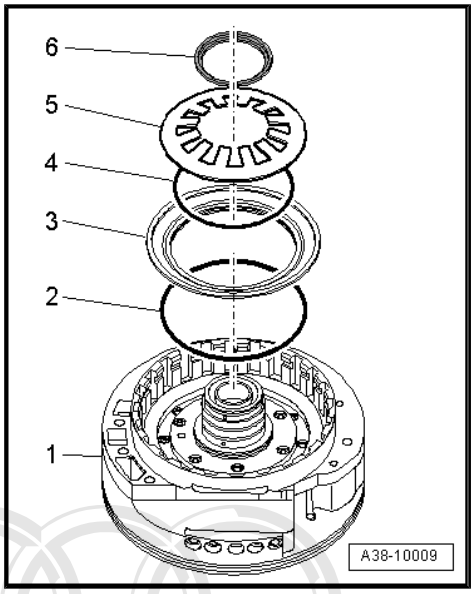


– Press dished spring down using workshop press with mounting bracket -T10289- .
– Insert split retaining ring -1-.
• Collar of split retaining ring faces downwards.
– Release workshop press.

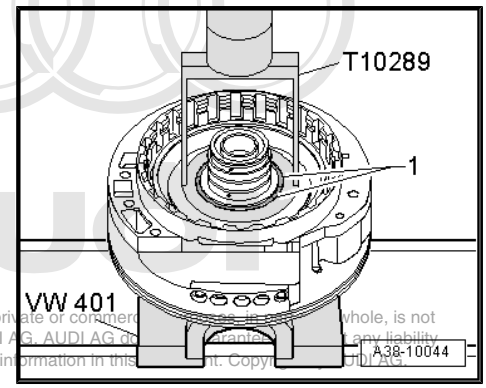


Protected by copyright. Copying for private or commercial purposes, in part or in whole, is not permitted unless authorised by AUDI AG. AUDI AG does not guarantee or assume any liability with respect to the correctness of information in this document. Copyright by AUDI AG.

– Insert corrugated spring -2- into cylinder “C” -item 1-.
– Fit outer plates -3- and friction plates -4- alternately.
– Insert thick outer plate -5-.

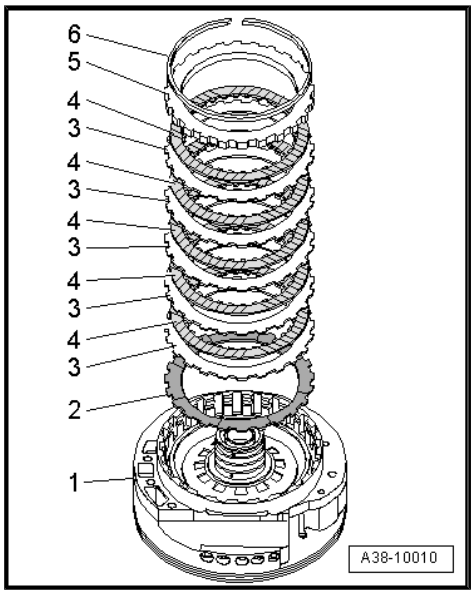


**Note**

*Make sure that the rounded edges of the thick outer plate face friction plate -4- and not circlip -6-. The contact surface for the circlip is thus increased.*

– Insert circlip -6-.

**Note**

*The clutch clearance must be re-adjusted* *⇒ page 101* *if the set of plates for clutch “C” has been renewed.*

## 1.4 Removing and installing housing for ATF supply unit and stator shaft

### Removing

- ATF supply unit removed.

– Turn ATF supply unit upside down.

– Remove circlip -1- and remove set of plates -2- from cylinder “C”.

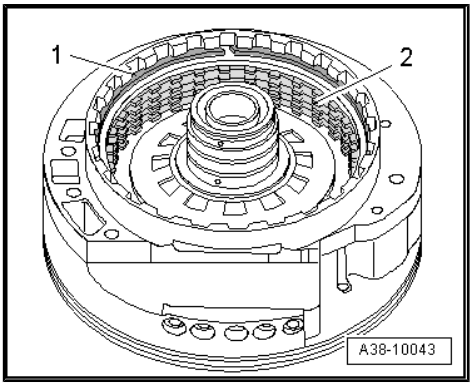


– Press dished spring down using workshop press with mounting bracket -T10289- .

– Remove split retaining ring -1-.

– Release workshop press.

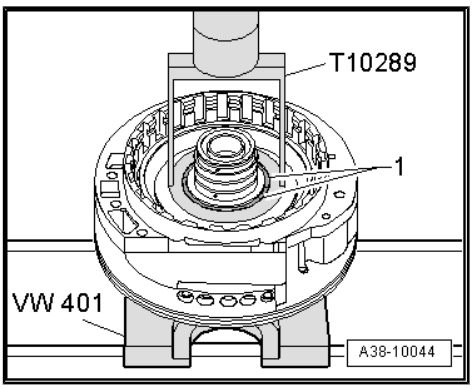


– Detach dished spring -5-.

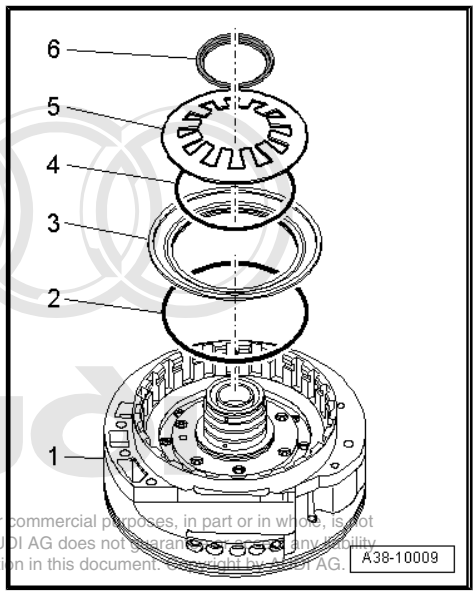


Protected by copyright. Copying for private or commercial purposes, in part or in whole, is not permitted unless authorised by AUDI AG. AUDI AG does not guarantee or assume any liability with respect to the correctness of information in this document. Copyright by AUDI AG.

**WARNING**

*Wear safety goggles.*

– Carefully press piston “C” out of ATF supply unit by applying compressed air.

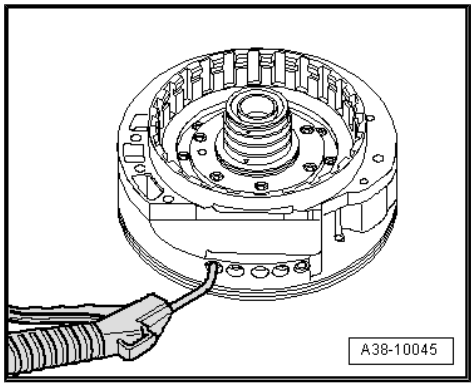


– Remove bolts -1 … 3-.

Protected by copyright. Copying for private or commercial purposes, in part or in whole, is not permitted unless authorised by AUDI AG. AUDI AG does not guarantee or accept any liability with respect to the correctness of information in this document. Copyright by AUDI AG.

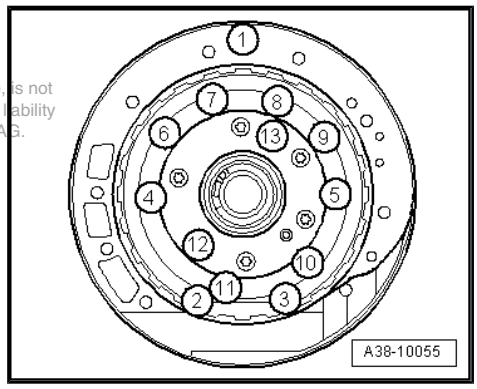


– Detach outer plate carrier “C” -item 2- from housing of ATF supply unit -1-.

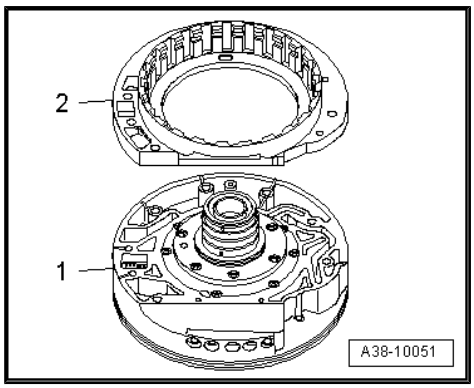


– Remove bolts -6 … 13-.

– Unscrew bolts -4- and -5- approx. 5 turns.

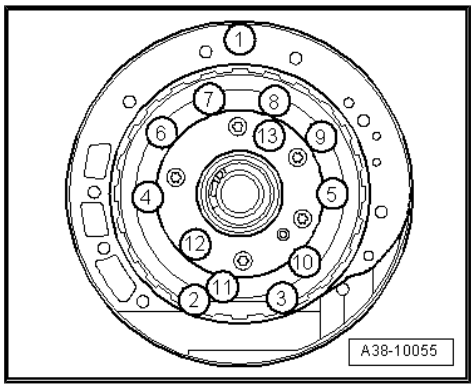

– Apply TORX key with extension -1- to bolt head as illustrated.
– Loosen the ATF supply unit by gently tapping the two bolts alternately with a plastic-headed hammer -arrow-.
– Unscrew remaining two bolts.
– Detach housing of ATF supply unit.

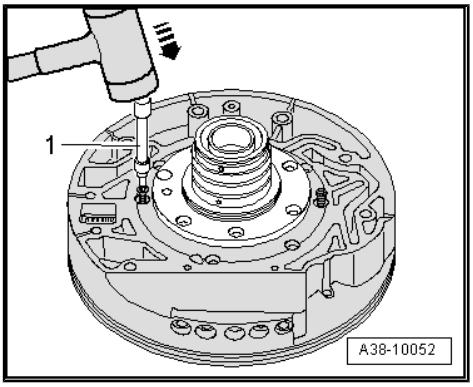


– Remove intermediate plate -5- and locating sleeve -6-.
– Remove ATF pump gears -3- and -4- from ATF pump housing -2-.

1 - O-ring

**Installing**

– Renew O-ring -1- on ATF pump housing.
– Insert ATF pump gears -3- and -4- into ATF pump housing -2-.
• The dots marked on the ATF pump gears face the intermediate plate -5-.
– Fit intermediate plate and insert locating sleeve -6-.
• The locating sleeve engages into the rectangular opening on the intermediate plate

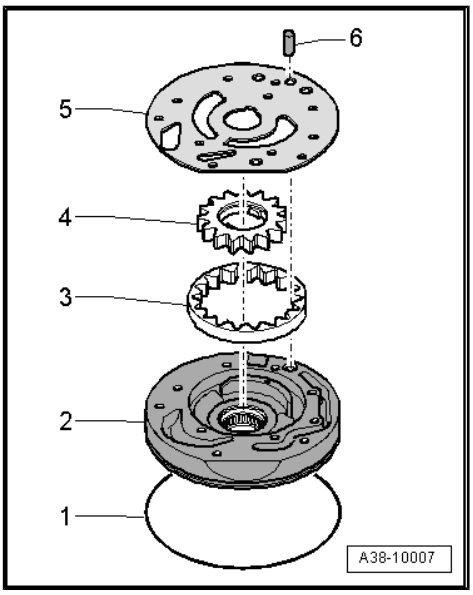


– Screw guide pins -T10288/4- into the two opposite bores in housing of ATF supply unit.

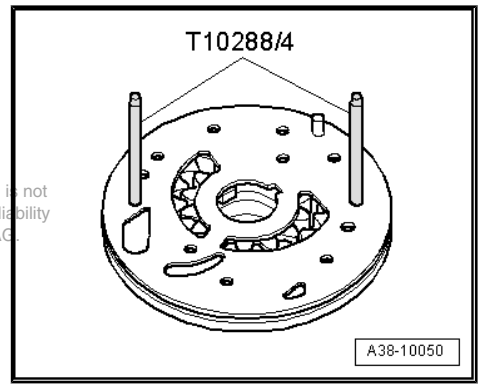


Protected by copyright. Copying for private or commercial purposes, in part or in whole, is not permitted unless authorised by AUDI AG. AUDI AG does not guarantee or accept any liability with respect to the correctness of information in this document. Copyright by AUDI AG.

– Fit housing of ATF supply unit onto ATF pump.
– Initially tighten bolts on ATF pump as follows:

| Step | Tightening sequence |
|---|---|
| I | – Tighten bolts to 5 Nm in sequence -4 ... 13-. |

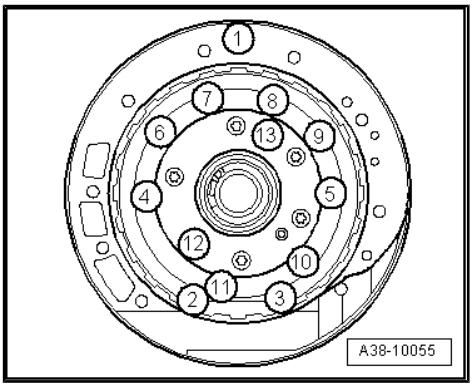

– Fit outer plate carrier “C” -item 2- to housing of ATF supply unit -1- and tighten bolts hand-tight.

• It should still be possible to move the outer plate carrier “C” on the housing of ATF supply unit.

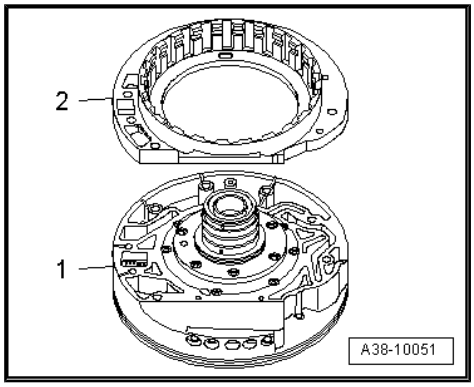


– Renew O-rings -2- and -4- for piston “C” -item 3-.

– Insert piston “C” -item 3- into ATF supply unit -item 1- as far as stop.

5 - Dished spring

6 - Split retaining ring

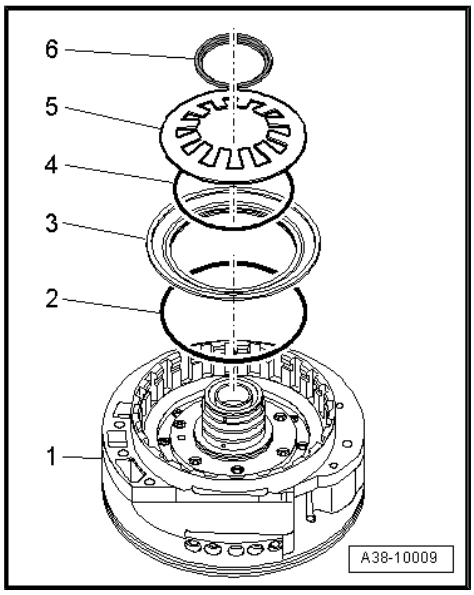


– After installing piston “C”, tighten bolts on outer plate carrier “C” and ATF pump in two further stages as follows:

| Step | Tightening sequence |
|---|---|
| II | – Tighten bolts to 5 Nm in sequence -1 ... 3-. |
| III | – Tighten bolts to 10 Nm in sequence -4 ... 13-. |

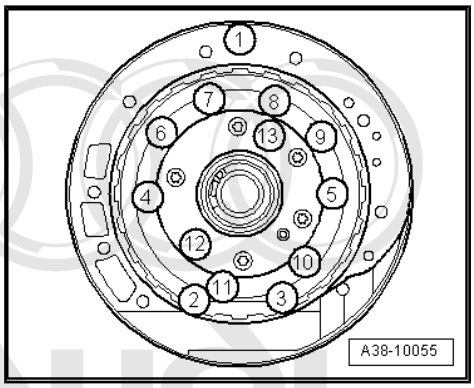


– Fit dished spring.

– Press dished spring down using workshop press with mounting bracket -T10289- .

– Insert split retaining ring -1-.

• Collar of split retaining ring faces downwards.

– Release workshop press.

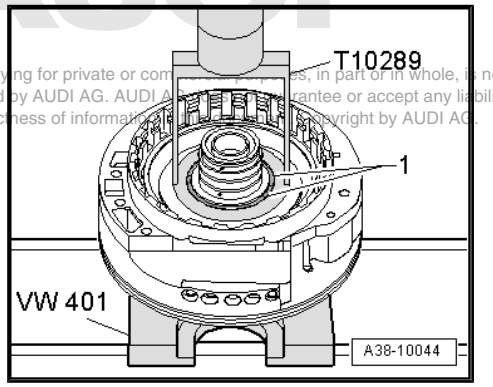


Protected by copyright. Copying for private or commercial purposes, in part or in whole, is not permitted unless authorised by AUDI AG. AUDI AG does not guarantee or accept any liability with respect to the correctness of information. Copyright by AUDI AG.

– Insert corrugated spring -2- into cylinder “C” -item 1-.
– Fit outer plates -3- and friction plates -4- alternately.
– Insert thick outer plate -5-.

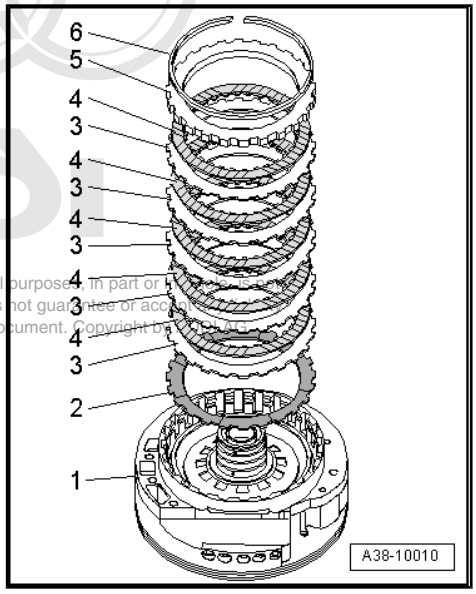


**Note**

*Make sure that the rounded edges of the thick outer plate face friction plate -4- and not circlip -6-. The contact surface for the circlip is thus increased.*

Reproduction for commercial purposes, in part or in whole, is not permitted unless authorised by AUDI AG. AUDI AG does not guarantee or accept any liability with respect to the correctness of information in this document. Copyright by AUDI AG.

– Insert circlip -6-.

**Note**

*The clutch clearance must be re-adjusted* ⇒ page 101 *if the set of plates for clutch “C” has been renewed.*

## 1.5 Removing and installing stator shaft

### Removing

- ATF pump removed from housing of ATF supply unit ⇒ page 119 .
– Remove bolts -arrows-.

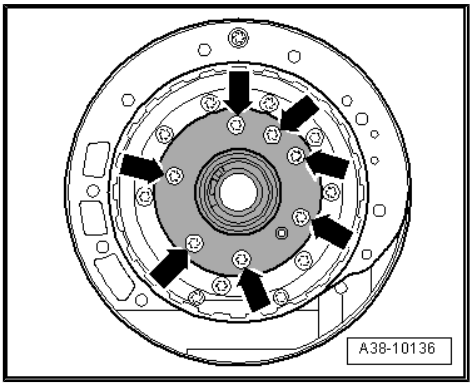


– Heat part of housing for ATF supply unit around stator shaft to approx. 70 °C using a hot air blower.
– Press out stator shaft downwards with workshop press using a suitable drift -1-.

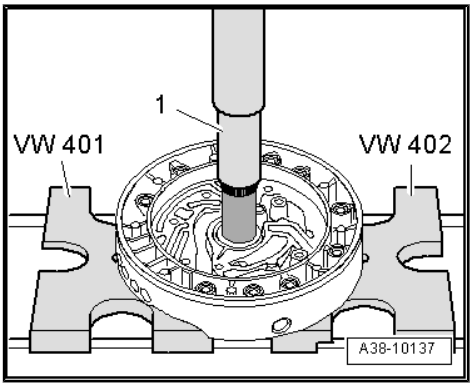

### Installing

**Caution**

*Check the individual components of ATF supply unit for traces of wear and damage* ⇒ page 154 .

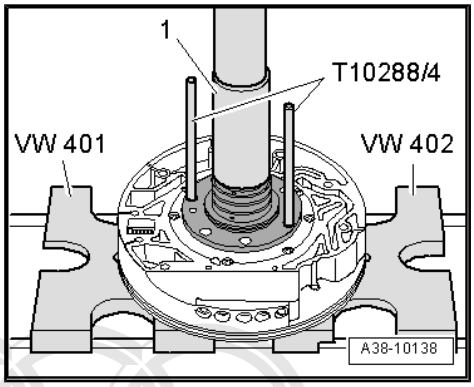


– Screw in guide pins M6 -T10288/4- and place stator shaft in position.

– Heat part of housing for ATF supply unit around stator shaft to approx. 70 °C using a hot air blower.

– Press in stator shaft with workshop press using a suitable drift.

– Tighten bolts -arrows-.

• Tightening torque: 10 Nm.

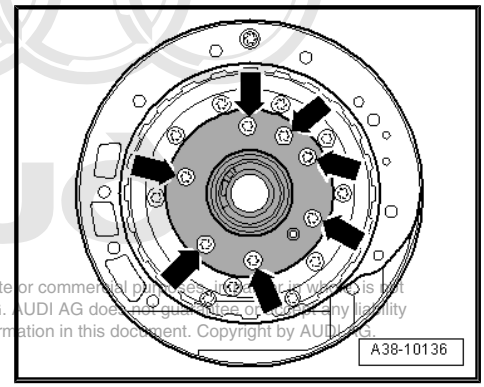


Protected by copyright. Copying for private or commercial purposes, in part or in whole, is not permitted unless authorised by AUDI AG. AUDI AG does not guarantee or assume any liability with respect to the correctness of information in this document. Copyright by AUDI AG.

## 1.6 Renewing oil seal for ATF pump

### Procedure

• ATF pump removed from housing of ATF supply unit ⇒ page 119 .

**Note**

*Make sure screwdriver is applied only to oil seal and not to corrugated washer located below.*

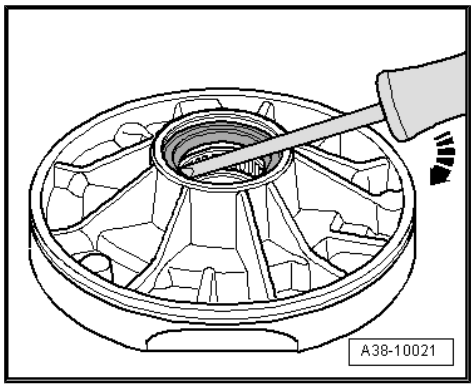


– Use screwdriver to pry off the oil seal -arrow-.

– Check corrugated washer located below for damage.

– Drive new oil seal in onto stop using thrust piece -3295- .

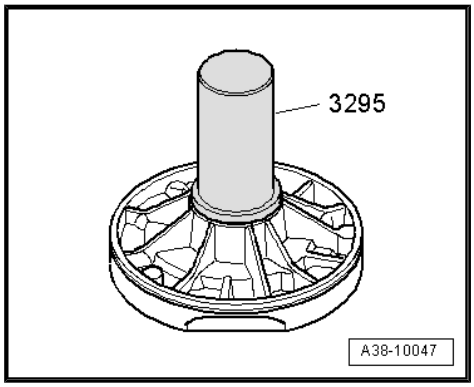

# 2 Performing servicing work with gearbox installed

Note

- *General repair instructions ⇒ page 1 .*
- *Observe rules for cleanliness when working on automatic gearbox ⇒ page 12 .*

## 2.1 Removing and installing valve body

### Removing

– Remove ATF oil pan ⇒ Automatic gearbox 01V, front-wheel drive and four-wheel drive; Rep. Gr. 38 .

– Remove bolts -arrows- for ATF strainer.

– Detach ATF strainer from valve body.

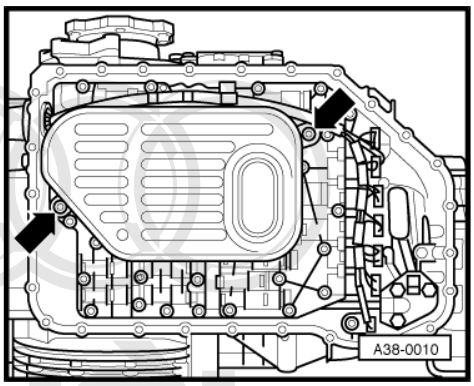


– Remove retaining clip -arrow- for wiring harness connector.

– Remove wiring harness connector by pressing inwards.

Protected by copyright. Copying for private or commercial purposes, in part or in whole, is not permitted unless authorised by AUDI AG. AUDI AG does not guarantee or assume any liability with respect to the correctness of information in this document. Copyright by AUDI AG.

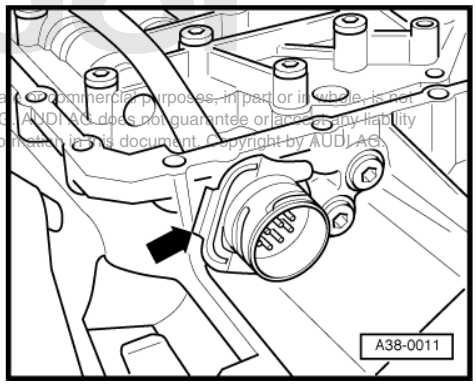


– Unscrew bolt -arrow- and detach gearbox speed sender -G38- / gearbox output speed (sender) -G195- .

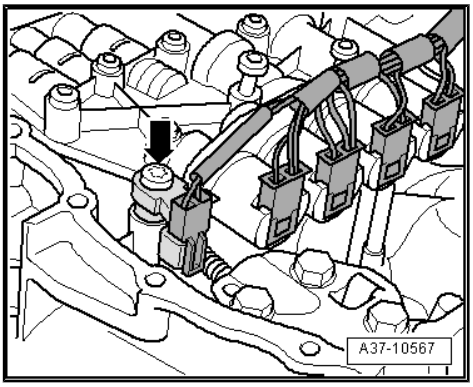

– On gearboxes with hydraulic control type “E18/2”, detach electrical connector for gearbox input speed sender -G182- at valve body -arrow- and unplug connector.

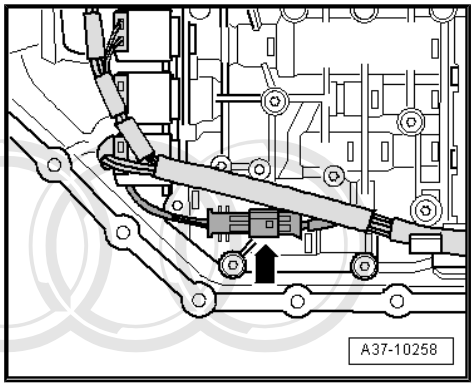


– Slacken bolts for valve body in the sequence -17 ... 1- and remove bolts.

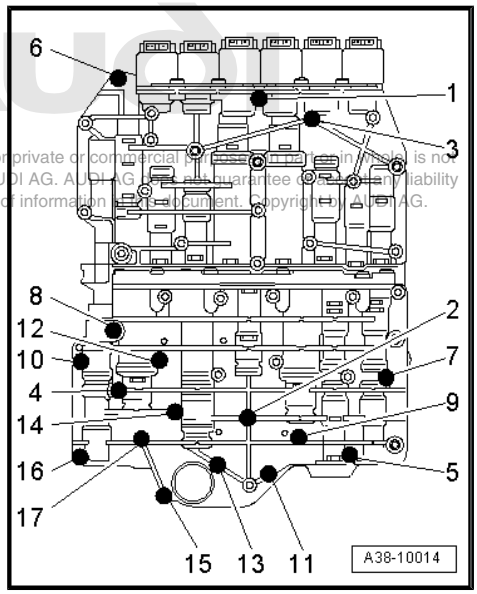


**Caution**

- *Only remove the bolts marked; bolt -6- is only fitted on gearboxes with hydraulic control type “E17”.*
- *If other bolts are removed, this may affect the operation of the valve body or the valve body could come apart.*
- *Observe different bolt lengths.*

Protected by copyright. Copying for private or commercial purposes, in part or in whole, is not permitted unless authorised by AUDI AG. AUDI AG does not guarantee or assume any liability with respect to the correctness of information in this document. Copyright by AUDI AG.

– Remove valve body from gearbox, at the same time guide out wiring harness connector.

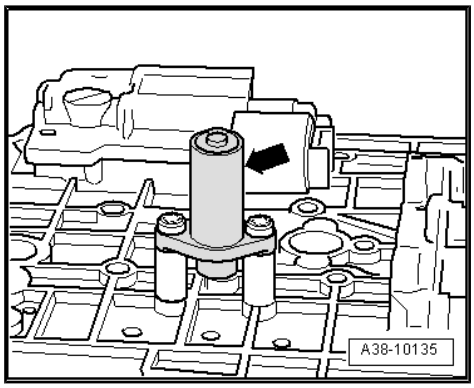


**Caution**

*Only on gearboxes with hydraulic control type “E17”: To prevent damage after removal, do not put down the valve body on the gearbox input speed sender -G182- (located on reverse side of valve body -arrow-).*

### Installing

Installation is carried out in reverse sequence; note the following:

**Note**

*Always renew valve body if it has collected dirt or if it is defective.*

– Place valve body in position on gearbox housing (do not apply force). At the same time insert pin of detent plate -1- so that it engages in slot on selector slide -2-.

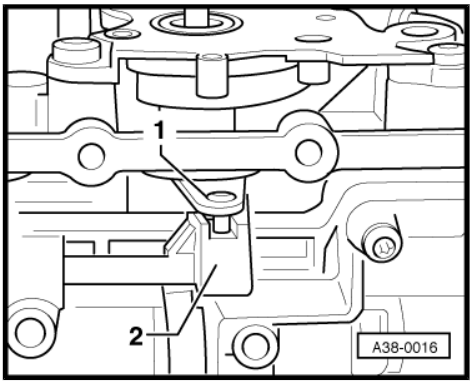


– Fit bolts for valve body.

Protected by copyright. Copying for private or commercial purposes, in part or in whole, is not permitted unless authorised by AUDI AG. AUDI AG does not guarantee or accept any liability with respect to the correctness of information in this document. Copyright by AUDI AG.

**Note**

- *Note different bolt lengths.*
- *Bolt -6- is only fitted on gearboxes with hydraulic control type "E17".*
- *On gearboxes with hydraulic control type "E18/2", make sure that electrical wiring for gearbox input speed sender -G182- does not become trapped between gearbox housing and valve body.*

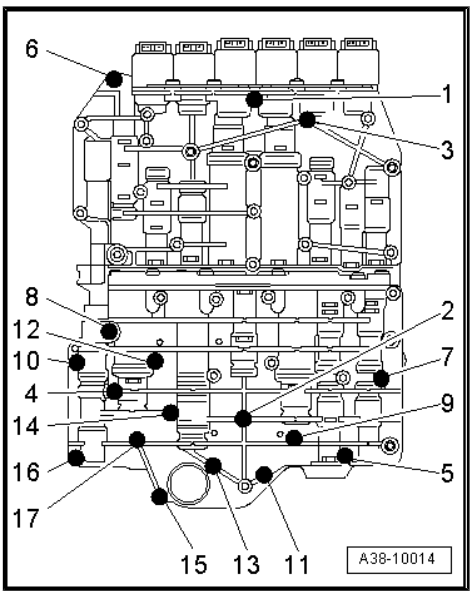


– Tighten bolts on valve body in two stages as follows:

| Step | Tightening sequence |
|---|---|
| I | – Tighten bolts hand-tight in sequence -1 ... 17-. |
| II | – Tighten bolts to 8 Nm in sequence -1 ... 17-. |

– Renew O-rings for wiring harness connector.

– Fit wiring harness connector -arrow- in gearbox housing.

• Installation position: lugs -1- and -2- on shoulder are horizontal, flat part -arrow- of connector should be parallel to sealing surface for ATF oil pan.

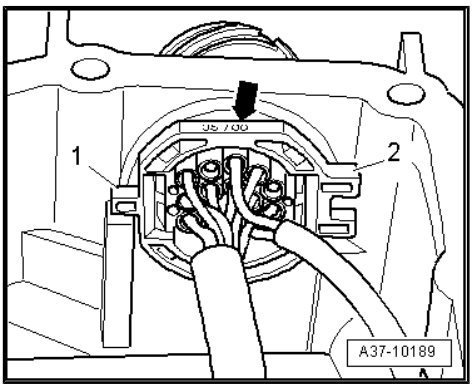


– Fit retaining clip -arrow- for wiring harness connector and check that clip is properly engaged.

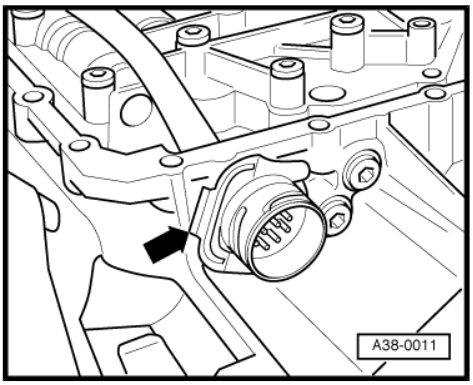

– Secure gearbox speed sender -G38- / gearbox output speed sender -G195- -arrow-.

• Tightening torque: 10 Nm.

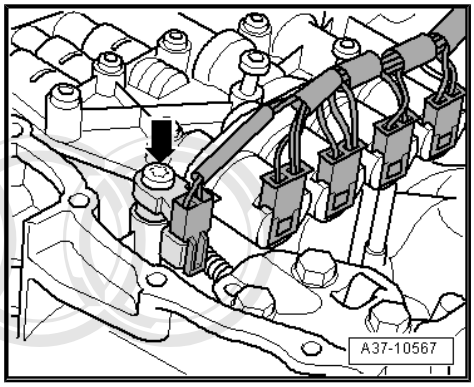


– On gearboxes with hydraulic control type “E18/2”, connect electrical wiring for gearbox input speed sender -G182- .

– Clip electrical connector into retainer on valve body -arrow-.

Protected by copyright. Copying for private or commercial purposes, in part or in whole, is not permitted unless authorised by AUDI AG. AUDI AG does not guarantee or assume any liability with respect to the correctness of information in this document. Copyright by AUDI AG.

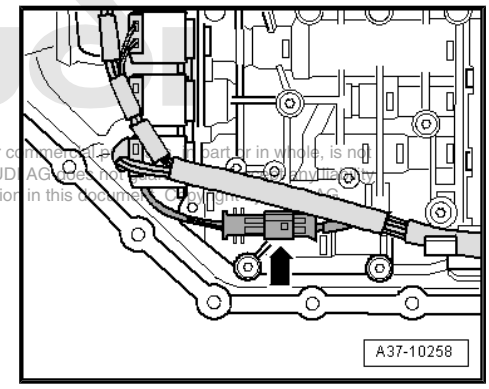


– Fit ATF strainer to valve body and secure -arrows-.

• Tightening torque: 5 Nm.

– Install ATF oil pan ⇒ Automatic gearbox 01V, front-wheel drive and four-wheel drive; Rep. Gr. 38 .

– Fill up with ATF ⇒ Automatic gearbox 01V, front-wheel drive and four-wheel drive; Rep. Gr. 37 .

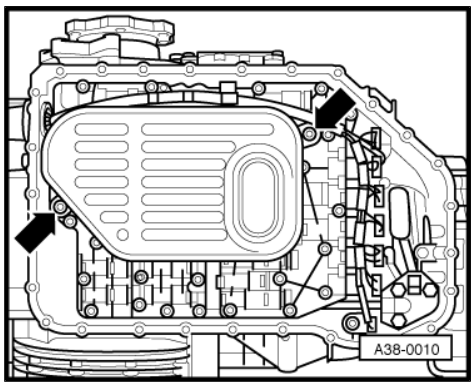


**Tightening torque**

| Component | Nm |
|---|---|
| Valve body to gearbox housing | 8 |

## 2.2 Removing and installing internal oil pipe

**Note**

*Defective O-rings on the internal oil pipe will allow ATF to leak into the differential, which will become overfilled and cause oil to drip out at the differential breather.*

### Removing

– Remove valve body ⇒ page 129 .

– Lever off internal oil pipe from gearbox housing evenly using a screwdriver.

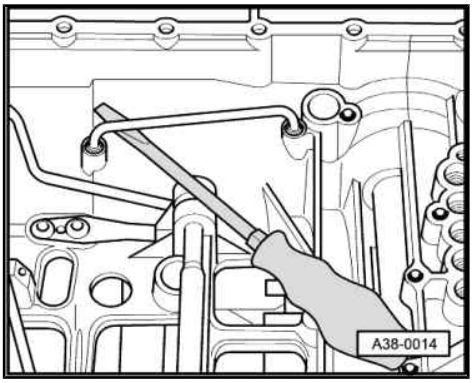


**Note**

*Internal oil pipe cannot be removed without being damaged.*

### Installing

Installation is carried out in reverse sequence; note the following:

**Note**

- *Renew O-rings.*
- *Fitting tool -3381- must always be used when installing oil pipe. Otherwise there is a risk of leakage due bending of the oil pipe.*

Proprietary information. Reproduction or disclosure to third parties or their use for any purpose other than that for which it is intended is not permitted without the express authorised by AUDI AG. AUDI AG does not guarantee or accept any liability with respect to the correctness of information in this document. Copyright by AUDI AG.

– Insert oil pipe in fitting tool -3381- .

– Drive oil pipe into gearbox housing by knocking fitting tool -3381- lightly with a plastic hammer until fitting tool reaches limit stop.

- The open side of fitting tool -3381- faces outside wall of gearbox housing.
- Take care to keep oil pipe straight. Knock in both ends of oil pipe evenly.

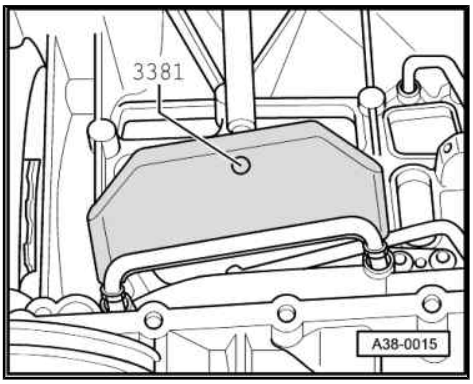


– Install valve body ⇒ page 129 .

– Fill up with ATF ⇒ Automatic gearbox 01V, front-wheel drive and four-wheel drive; Rep. Gr. 37 .

– Check oil level in front final drive ⇒ Automatic gearbox 01V, front-wheel drive and four-wheel drive; Rep. Gr. 39 .

## 2.3 Removing and installing gearbox speed sender -G38- / gearbox output speed sender -G195-

### Removing

– Drain ATF ⇒ Automatic gearbox 01V, front-wheel drive and four-wheel drive; Rep. Gr. 37 .

– Remove ATF oil pan ⇒ Automatic gearbox 01V, front-wheel drive and four-wheel drive; Rep. Gr. 38 .

– Unplug electrical connector -arrow- for gearbox speed sender -G38- / gearbox output speed sender -G195- .

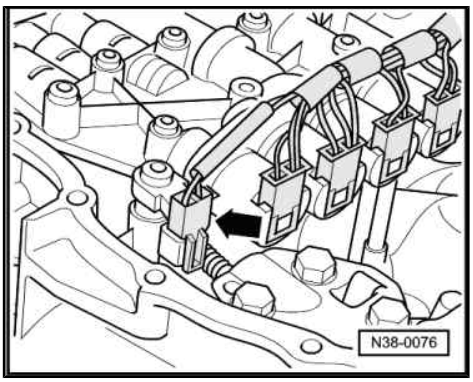

– Unscrew bolt and remove gearbox speed sender -G38- / gearbox output speed sender -G195- -item 2- with spacer bush -1-.

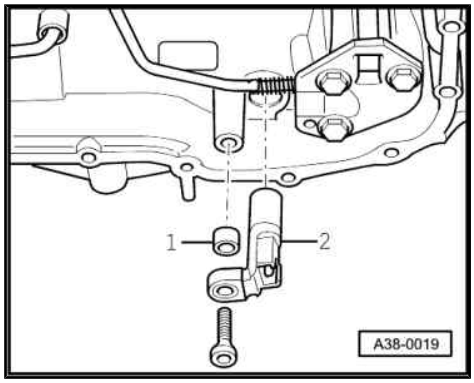


### Installing

Installation is carried out in reverse sequence; note the following:

– Fit gearbox speed sender -G38- / gearbox output speed sender -G195- -item 2- with spacer bush -1- to gearbox and tighten bolt.

• Length of spacer bush: 8 mm.

– Install ATF oil pan ⇒ Automatic gearbox 01V, front-wheel drive and four-wheel drive; Rep. Gr. 38 .

– Fill up with ATF ⇒ Automatic gearbox 01V, front-wheel drive and four-wheel drive; Rep. Gr. 37 .

### Tightening torque

| Component | Nm |
|---|---|
| Gearbox speed sender -G38- / gearbox output speed sender -G195- to gearbox | 6 |

## 2.4 Removing and installing gearbox input speed sender -G182- - gearbox with hydraulic control type “E17”

**Note**

♦ *On gearboxes with hydraulic control system type “E17”, the gearbox input speed sender -G182- is an inductive sender and is fixed to the underside of the valve body.*

♦ *For allocation of hydraulic control system refer to technical data ⇒ Automatic gearbox 01V, front-wheel drive and four-wheel drive; Rep. Gr. 00 .*

Protected by copyright. Copying for private or commercial purposes, in part or in whole, is not permitted unless authorised by AUDI AG. AUDI AG does not guarantee or accept any liability with respect to the correctness of information in this document. Copyright by AUDI AG.

### Removing

– Remove valve body ⇒ page 129 .

– Turn valve body over.

– Unplug electrical connector at gearbox input speed sender -G182- -item 1-.

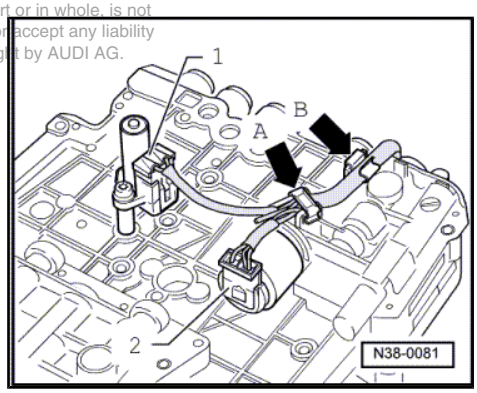


**Note**

*Ignore -item 1- and -item 2-.*

– Unscrew bolts and remove gearbox input speed sender -G182- -item 1-.

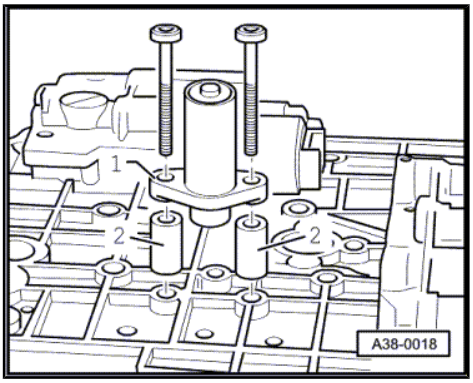


**Note**

*-Item 2- can be disregarded.*

### Installing

Installation is carried out in reverse sequence; note the following:

– Fit gearbox input speed sender -G182- -item 1- with spacer bushes -2- to valve body and tighten bolts.

- Length of spacer bushes: 20 mm.
- Installation position: the contacts of gearbox input speed sender -G182- point towards the centre of the valve body.

– Install valve body ⇒ page 129 .

– Fill up with ATF ⇒ Automatic gearbox 01V, front-wheel drive and four-wheel drive; Rep. Gr. 37 .

Protected by copyright. Copying for private or commercial purposes, in part or in whole, is not permitted unless authorised by AUDI AG. AUDI AG does not guarantee or accept any liability with respect to the accuracy of information in this document. Copyright by AUDI AG.

### Tightening torque

| Component | Nm |
|---|---|
| Gearbox input speed sender -G182- to valve body | 7 |

## 2.5 Removing and installing gearbox input speed sender -G182- - gearbox with hydraulic control type “E18/2”

**Note**

- *On gearboxes with hydraulic control system type “E18/2”, the gearbox input speed sender -G182- is a Hall sender and is fixed to the gearbox housing behind the valve body.*
- *For allocation of hydraulic control system refer to technical data ⇒ Automatic gearbox 01V, front-wheel drive and four-wheel drive; Rep. Gr. 00 .*

### Removing

– Remove valve body ⇒ page 129 .

– Unscrew bolt -B-.

– Detach gearbox input speed sender -G182- -item A- from gearbox.

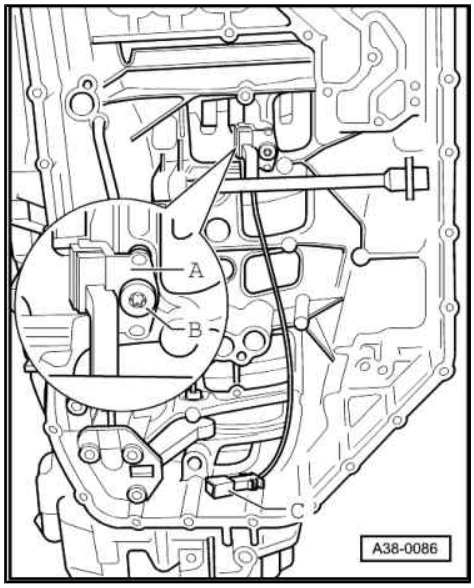


### Installing

Installation is carried out in reverse sequence; note the following:

– Clip electrical connector -C- for gearbox input speed sender -G182- into valve body mounting after installing valve body.

– Install valve body ⇒ page 129 .

– Fill up with ATF ⇒ Automatic gearbox 01V, front-wheel drive and four-wheel drive; Rep. Gr. 37 .

### Tightening torque

| Component | Nm |
|---|---|
| Gearbox input speed sender -G182- to gearbox | 9 |

## 2.6 Removing and installing wiring harness in gearbox

### Removing

– Remove valve body ⇒ page 129 .

– Use a small screwdriver to pry out retaining tabs of connectors for solenoid valves and pull off connectors -A- one by one.

– Disengage wiring harness at retainers -B- on side of valve body.

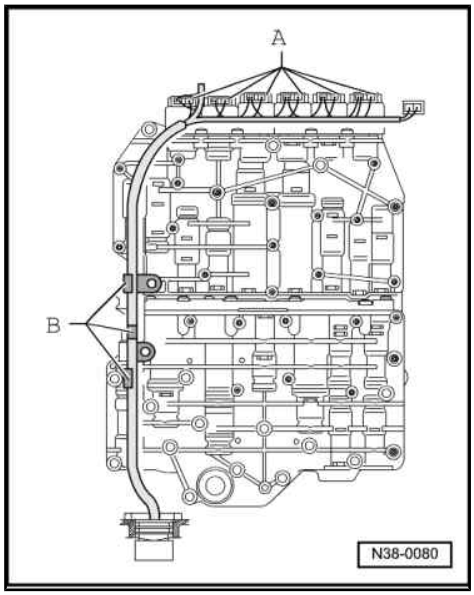


– Unplug electrical connector -arrow- for gearbox speed sender -G38- / gearbox output speed sender -G195- .

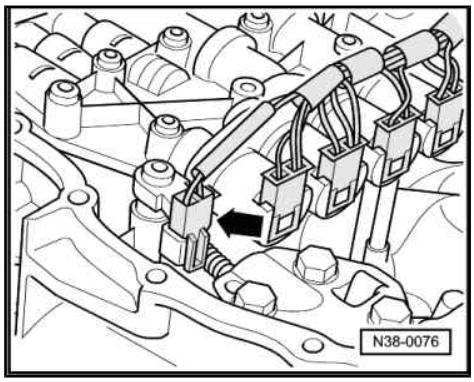


**Note**

*Shown in illustration with valve body installed.*

– Turn valve body over.

Protected by copyright. Copying for private or commercial purposes, in part or in whole, is not permitted unless authorised by AUDI AG. AUDI AG does not guarantee or accept any liability with respect to the correctness of information in this document. Copyright by AUDI AG.

**Gearbox with hydraulic control type “E17”:**

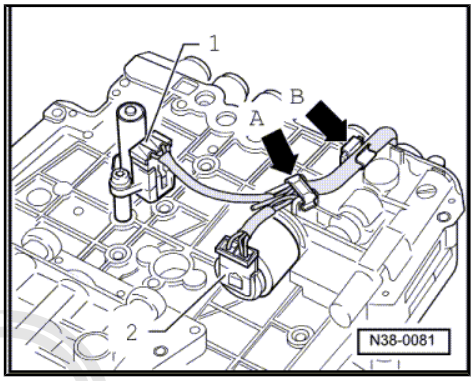


- Unplug electrical connector at gearbox input speed sender -G182- -item 1-.
- Remove retaining clip -arrow A- and unclip wiring harness from retaining clip -arrow B-.
- Detach electrical connector -2- on solenoid valve 4 -N91- .

**Gearbox with hydraulic control type “E18/2”:**

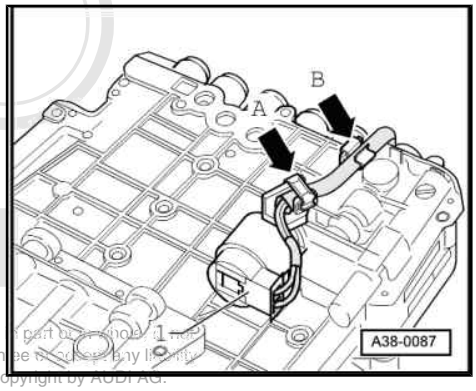


- Unplug electrical connector at gearbox input speed sender -G182- -item 1-.
- Remove retaining clip -arrow A- and unclip wiring harness from retaining clip -arrow B-.

**Installing**

Installation is carried out in reverse sequence; note the following:

- Attach wiring harness connectors to corresponding solenoid valves and senders.
- Clip wiring harness into corresponding retaining clips. If the wiring harness is not installed correctly, it may become trapped when the valve body is installed.
- Install valve body ⇒ page 129 .
- Fill up with ATF ⇒ Automatic gearbox 01V, front-wheel drive and four-wheel drive; Rep. Gr. 37 .

Protected by copyright. Copying for private or commercial purposes, in part or in whole, is not permitted unless authorised by AUDI AG. AUDI AG does not guarantee the accuracy of any information contained in this document. Copyright by AUDI AG.

# 3 Assessment of wear on gearbox components

## 3.1 Assessment of wear by checking ATF for colour and contamination

### Colour of ATF

- Colour yellow: ATF is new.
- Colour brown: ATF is used (approx. 60,000 km upwards)
- Colour black, ATF smells burnt: one or more gearbox components defective (e.g. overheating of torque converter clutch, burnt out clutch linings).

**Note**

*On vehicles with TDI engines, the ATF turns black after approx. 60,000 km without the gearbox being defective.*

### ATF contains metal particles

- Degree of wear is normal if metal particles on magnet in ATF oil pan or in ATF are not larger than 0.1 mm in diameter and quantity of particles does not exceed 1 $cm^3$.
- Wear exceeds normal range or there is a mechanical fault if metal particles on magnet in ATF oil pan or in ATF are larger than 2.0 mm in ∅.

### Procedure if ATF is contaminated

ATF very contaminated (ATF black or metal particles in ATF ⇒ page 138 ):

- Dismantle and clean complete gearbox.
- Flush ATF galleries and blow through with compressed air.
- Dismantle and check all clutches.
- Renew torque converter (cannot be cleaned).
- Renew valve body (cannot be cleaned).
- Renew ATF strainer
- Clean ATF pipes and ATF cooler.

## 3.2 Clutch “F”

Protected by copyright. Copying for private or commercial purposes, in part or in whole, is not permitted unless authorised by AUDI AG. AUDI AG does not guarantee or accept any liability with respect to the correctness of information in this document. Copyright by AUDI AG.

**1 - Cylinder “F”**

- ❑ Check inner surfaces for traces of scoring by friction plates ⇒ page 139
- ❑ Check outer surfaces for traces of scoring by friction plates ⇒ page 140
- ❑ Check splines
- ❑ Checking needle bearing and metal bush for wear ⇒ page 140

**3 - Piston “F”**

- ❑ Check for wear

**6 - Dished spring**

- ❑ Renew if there are traces of scoring or if ends of dished spring are bent.
- ❑ Renew dished spring if broken

**7 - Split retaining ring**

- ❑ Renew if distorted

**10 - Outer plate**

- ❑ Checking for wear ⇒ page 140

**11 - Friction plate**

- ❑ Checking for wear ⇒ page 140

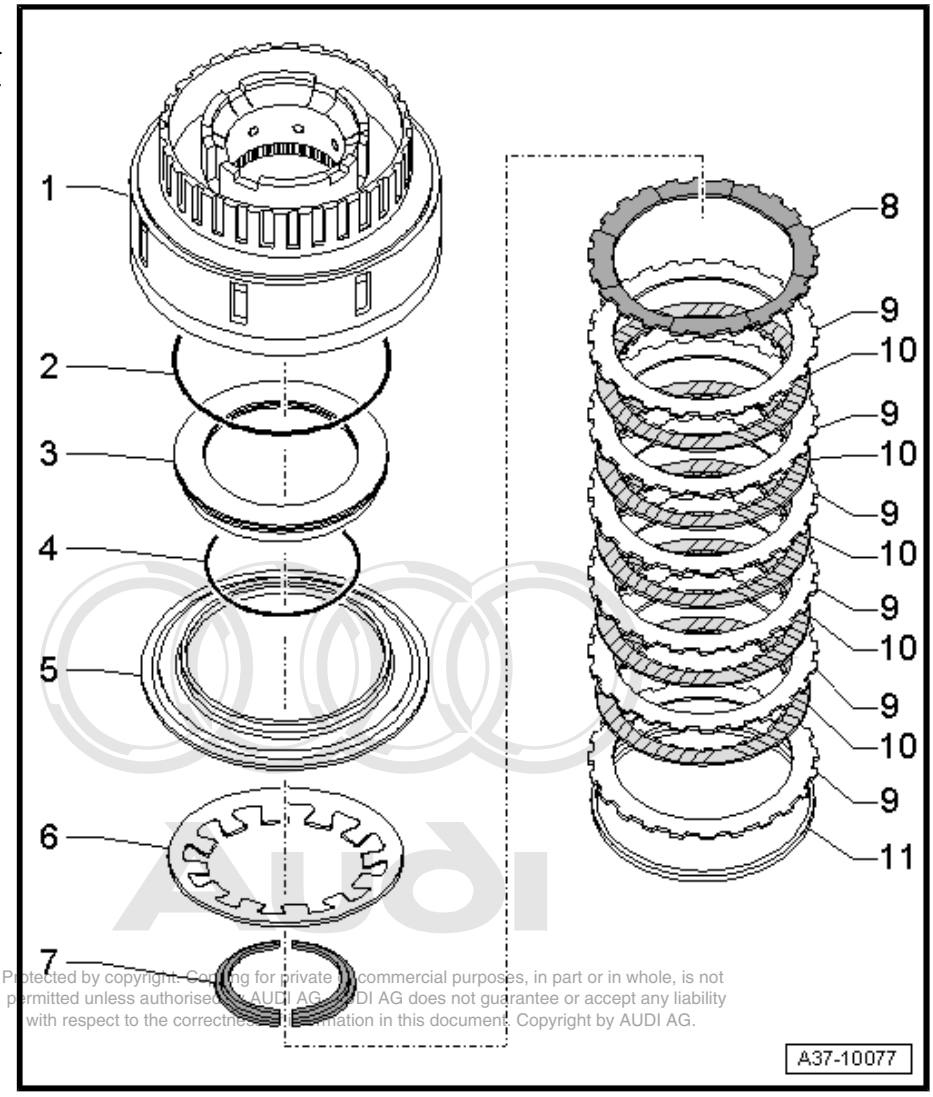


Protected by copyright. Copying for private or commercial purposes, in part or in whole, is not permitted unless authorised by AUDI AG. AUDI AG does not guarantee or accept any liability with respect to the correctness of information in this document. Copyright by AUDI AG.

**Checking inner surfaces of cylinder “F” for traces of scoring by friction plates**

– Check inner surfaces of cylinder “F” for scoring by friction plates.

• Friction plates must not get stuck in scores -arrow-.

If the scores -arrows- caused by the friction plates are deeper than 0.5 mm:

– Renew cylinder “F” and freewheel inner race of clutch “D/G”.

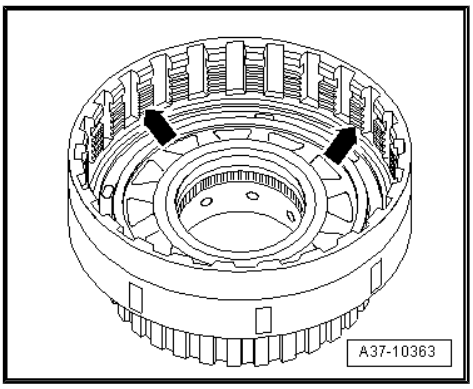

### Checking outer surfaces of cylinder “F” for traces of scoring by friction plates

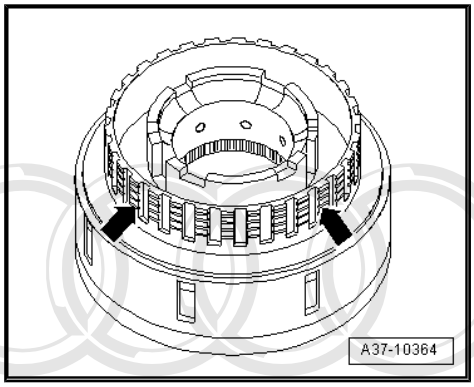


– Check outer surfaces of cylinder “F” for scoring by friction plates.

• Friction plates must not get stuck in scores -arrow-.

If the scores -arrows- caused by the friction plates are deeper than 0.5 mm:

– Renew cylinder “F”.

**Note**

*Damage of this kind is invariably caused by a defective valve body.*

### Checking needle bearing and metal bush in cylinder “F” for wear

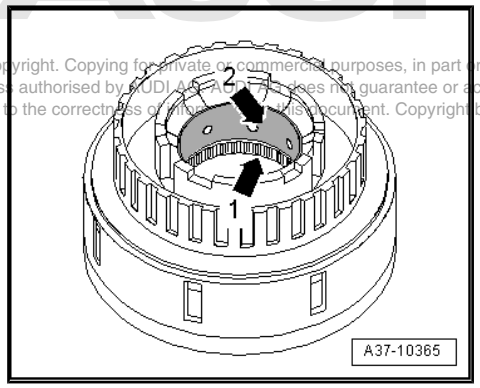


Protected by copyright. Copying for private or commercial purposes, in part or in whole, is not permitted unless authorised by AUDI AG. AUDI AG does not guarantee or accept any liability with respect to the correctness of information in this document. Copyright by AUDI AG.

– Visually inspect needle bearing -arrow 1-.

• The needle bearing should be in as-new condition.

– Renew cylinder “F” if necessary.

– Check running surface of metal bush -arrow 2- in cylinder “F” for wear.

• The running surface should not have any deep scoring and/or blue discoloration.

If there are deep scores and/or blue discolouring:

– Renew cylinder “F”.

Proceed as follows if the running surface has no blue discoloration and there are only slight scores:

– Rub down running surface one or two times with abrasive paper and oil (grain size 600).

– Clean running surface thoroughly with clean cloth and check running surface. The running surface should now be in as-new condition.

If scoring is still present after this step:

– Renew cylinder “F”.

### Checking friction plates and outer plates for wear

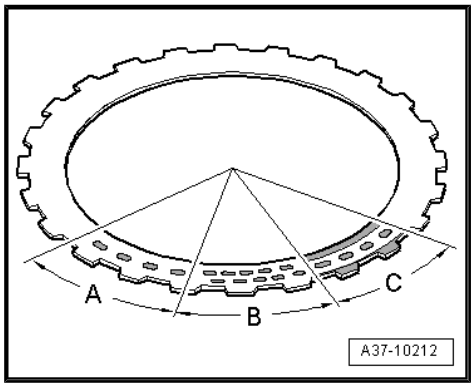


Signs of overheating on the outer plates indicate that the friction plates are worn. Assess the degree of wear as described below:

A - Heat discoloration spots at intervals of more than 20 mm: outer plates and friction plates are OK; they can be used again.

B - Heat discoloration spots at intervals of less than 20 mm: outer plates and friction plates are worn and require renewal.

C - If outer and/or inner parts of outer plates are discoloured blue or brown: outer plates and friction plates are worn and require renewal.

## 3.3 Clutch “D/G” with freewheel

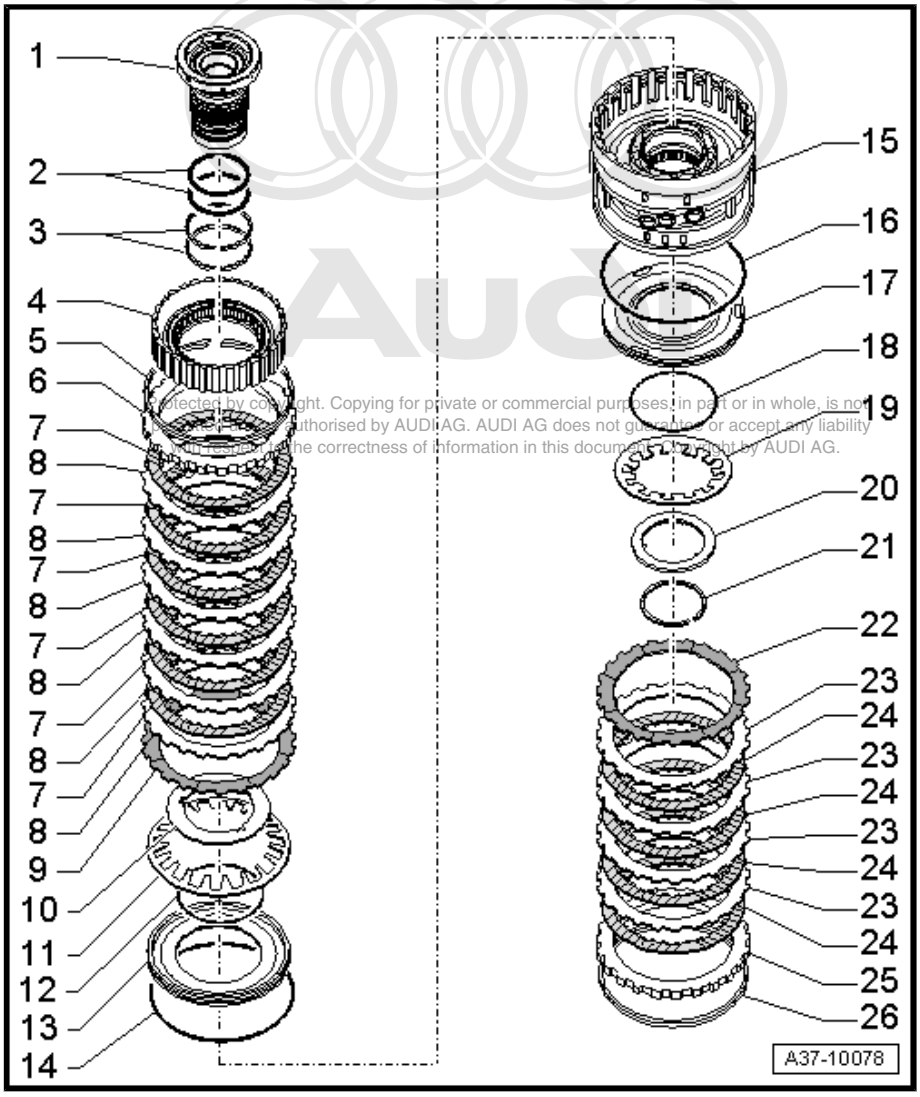


Protected by copyright. Copying for private or commercial purposes, in part or in whole, is not authorised by AUDI AG. AUDI AG does not guarantee or accept any liability with respect to the correctness of information in this document. Copyright by AUDI AG.

**1 - Freewheel inner race**

- ❑ Check rotating and non-rotating direction of free-wheel ⇒ page 142
- ❑ Check brass bushes for wear ⇒ page 142
- ❑ Check splines

**3 - Rectangular section seals**

- ❑ Checking for wear ⇒ page 142

**4 - Freewheel with freewheel cage**

- ❑ Check rotating and non-rotating direction of free-wheel ⇒ page 142

**7 - Friction plate**

- ❑ Checking for wear ⇒ page 143

**8 - Outer plate**

- ❑ Checking for wear ⇒ page 143

**11 - Dished spring**

- ❑ Renew if there are traces of scoring or if ends of dished spring are bent.
- ❑ Check for cracks

**13 - Piston“D”**

- ❑ Check for cracks
- ❑ Listen to sound generated when tapping on piston with screwdriver: Clear sound - piston o.k., dull sound - cracks in piston

**15 - Cylinder “D/G”**

- ❑ Check inner and outer surfaces for traces of scoring by friction plates ⇒ page 143
- ❑ Check splines
- ❑ Check for cracks around circlip groove

**19 - Dished spring**

- ❑ Renew if there are traces of scoring or if ends of dished spring are bent.

**23 - Friction plate**

- ❑ Checking for wear ⇒ page 143

**24 - Outer plate**

- ❑ Checking for wear ⇒ page 143

### Checking rotating and non-rotating direction of freewheel

- It should be possible to turn inner race of freewheel -2- clockwise. It should lock when turned anti-clockwise.

If it does not lock:

– Renew freewheel with freewheel cage -1-.

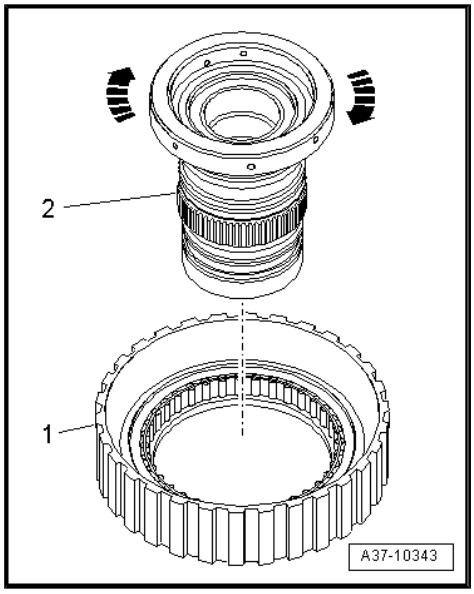


### Checking brass bushes (top and bottom) in freewheel inner race for wear

– Check running surfaces of brass bushes -arrows- on inside of freewheel inner race for wear.

- The running surfaces should not have any deep scoring and/or blue discoloration.

If there are deep scores and/or blue discolouring:

– Renew freewheel inner race.

Proceed as follows if the running surfaces have no blue discoloration and there is only slight scoring:

– Rub down running surface one or two times with abrasive paper and oil (grain size 600).

– Wipe off thoroughly with a clean cloth and check running surfaces.

- The running surfaces should now be in as-new condition.

If scoring is still present after this step:

– Renew freewheel inner race.

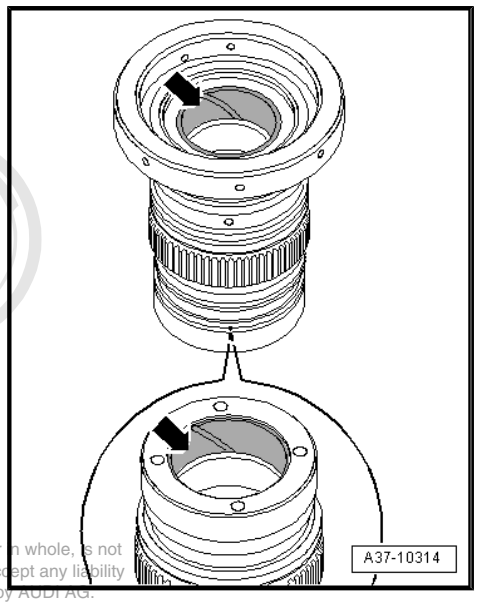


Protected by copyright. Copying for private or commercial purposes, in part or in whole, is not permitted unless authorised by AUDI AG. AUDI AG does not guarantee or accept any liability with respect to the correctness of information in this document. Copyright by AUDI AG.

### Checking rectangular section seals for wear

**Note**

*Always renew rectangular section seals. Nevertheless, the wear pattern on the rectangular section seals gives an indication of the condition of the contact surface for the seals. For this reason it is always advisable to check the rectangular section seals for wear.*

If the axial wear on the rectangular section seals exceeds 0.3 mm -arrow 1- (slight wear on the outside corners is normal):

– Renew freewheel inner race.

If the radial wear on the rectangular section seals exceeds 0.3 mm -arrow 2- (compare with thickness of new rectangular section seal):

– Renew cylinder “F” ⇒ Item 1 (page 139) .

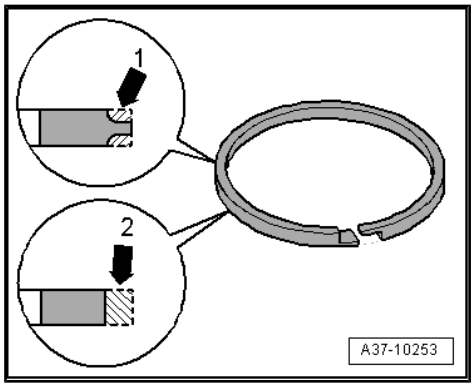

### Checking friction plates and outer plates for wear

Signs of overheating on the outer plates indicate that the friction plates are worn. Assess the degree of wear as described below:

A - Heat discoloration spots at intervals of more than 20 mm: outer plates and friction plates are OK; they can be used again.

B - Heat discoloration spots at intervals of less than 20 mm: outer plates and friction plates are worn and require renewal.

C - If outer and/or inner parts of outer plates are discoloured blue or brown: outer plates and friction plates are worn and require renewal.

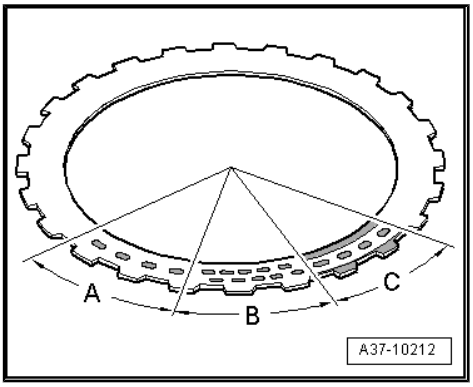


### Checking for traces of scoring on cylinder “D/G” caused by friction plates

– Check inner and outer surfaces of cylinder “D/G” for scoring by friction plates.

• Friction plates must not get stuck in scores.

If the scores -arrows- caused by the friction plates are deeper than 0.5 mm:

– Renew cylinder “D/G”.

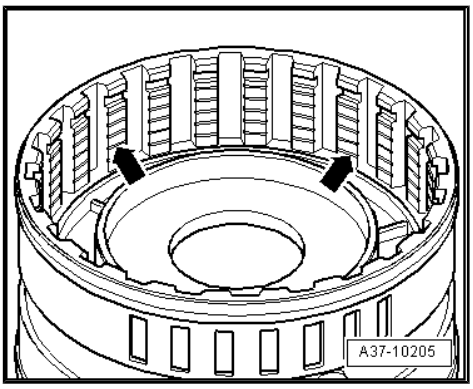


## 3.4 Planetary drive “III”

Protected by copyright. Copying for private or commercial purposes, in part or in whole, is not permitted unless authorised by AUDI AG. AUDI AG does not guarantee or accept any liability with respect to the correctness of information in this document. Copyright by AUDI AG.

**2 - Shaft**

- ❑ Checking running surface and brass bush on shaft for wear ⇒ page 144
- ❑ Check splines

**3 - Annulus “III”**

- ❑ Check teeth of planetary drive; renew planetary drive if teeth are damaged

**4 - Flange washer**

**5 - Axial needle bearing**

- ❑ Inspect visually for damage: axial needle bearing and contact surfaces of flange washer ⇒ Item 4 (page 144) and thrust washer ⇒ Item 6 (page 144) should be in as-new condition; renew all three parts if necessary.

**6 - Thrust washer**

**7 - Planet carrier “III”**

- ❑ Check running surfaces of shaft for wear ⇒ page 145
- ❑ Check teeth of planetary drive; renew planetary drive if teeth are damaged
- ❑ Checking axial and radial clearance of planetary gears ⇒ page 145

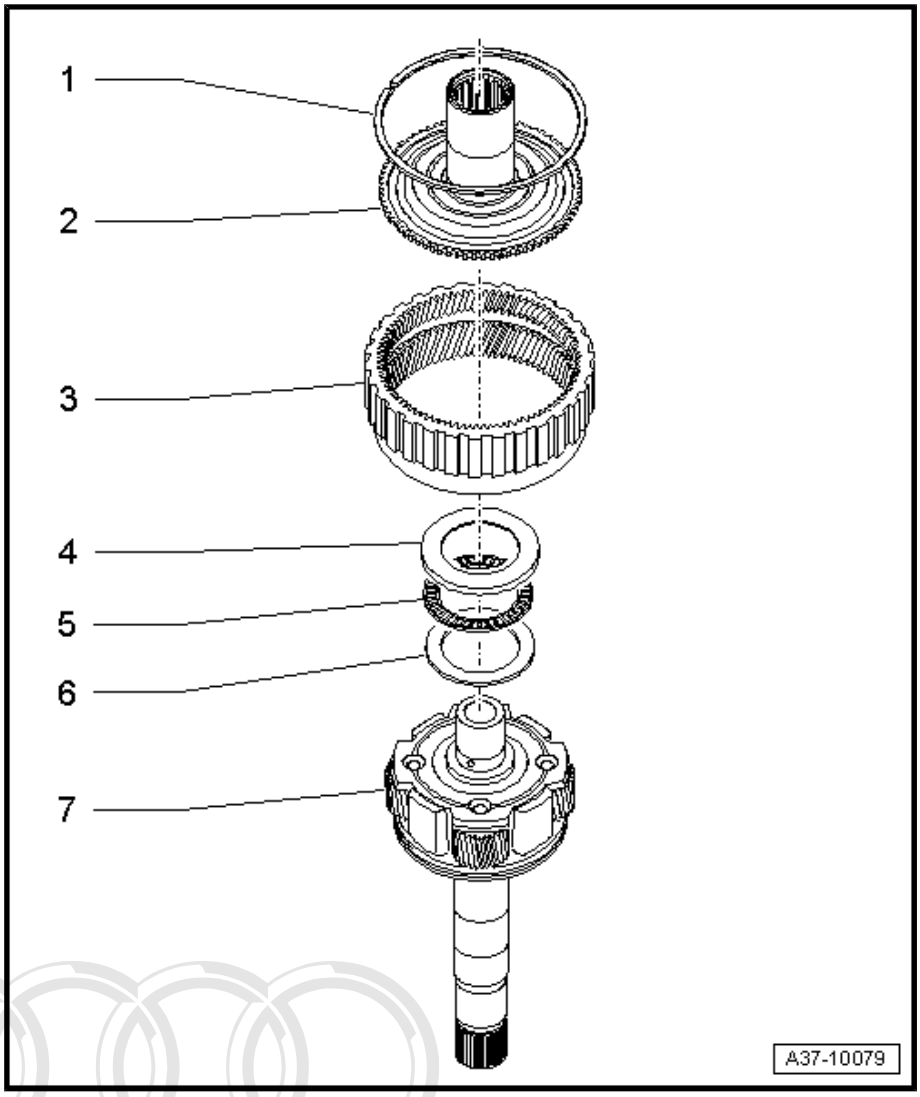


**Checking running surface and brass bush on shaft for wear**

– Check running surface of brass bush -arrow 2- on inside of shaft and running surface on outside of shaft -arrow 1- for wear.

• The running surfaces should not have any deep scoring and/or blue discoloration.

Protected by copyright. Copying for private or commercial purposes, in part or in whole, is not permitted unless authorised by AUDI AG. AUDI AG does not guarantee or accept any liability with respect to the correctness of information in this document. Copyright by AUDI AG.

If there are deep scores and/or blue discolouring:

– Renew shaft.

Proceed as follows if the running surfaces have no blue discoloration and there is only slight scoring:

– Rub down running surface one or two times with abrasive paper and oil (grain size 600).

– Clean running surface thoroughly with clean cloth and check running surface.

• The running surfaces should now be in as-new condition.

If scoring is still present after this step:

– Renew shaft.

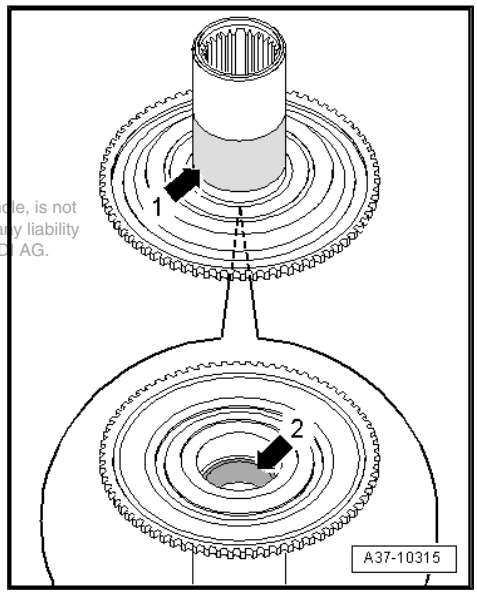

**Checking running surfaces of planet carrier shaft "III" for wear**

– Check running surfaces -arrows- of shaft for wear.

• The running surfaces should not have any deep scoring and/ or blue discoloration.

If there are deep scores and/or blue discolouring:

– Renew planetary drive.

Proceed as follows if the running surfaces have no blue discoloration and there is only slight scoring:

– Rub down running surface one or two times with abrasive paper and oil (grain size 600).

– Clean running surface thoroughly with clean cloth and check running surface.

• The running surfaces should now be in as-new condition.

If scoring is still present after this step:

– Renew planetary drive.

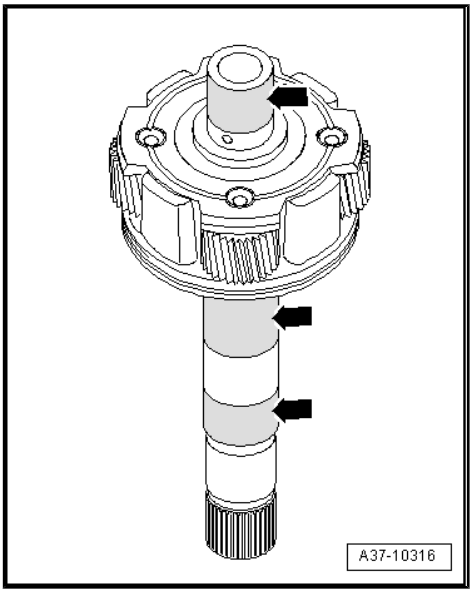


**Checking axial and radial clearance of planetary gears**

– Check axial clearance of planetary gears -arrow A-.

• Wear limit (axial clearance): 0.4 mm

– Check planetary gears for radial clearance -arrow B-.

• The planetary gears must not have any noticeable radial clearance.

– Check shafts for planetary gears.

• Shafts must be properly secured (check peening)

• Make sure area around shafts has no blue discolouration.

– Renew planet carrier "III" if necessary.

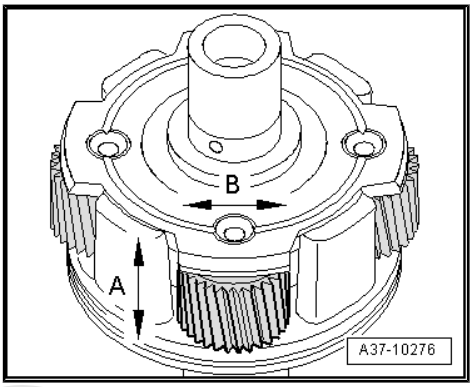


## 3.5 Clutch "B"

**Caution**

*The illustration shows the currently installed version of clutch "B", with corrugated spring ⇒ Item 8 (page 146) , 2 outer plates ⇒ Item 9 (page 146) and 2 friction plates ⇒ Item 10 (page 146) . If an older version is installed (with no corrugated spring but 3 friction plates and 3 outer plates), always renew clutch "B".*

Protected by copyright. Copying for private or commercial purposes, in part or in whole, is not permitted unless authorised by AUDI AG. AUDI AG does not guarantee or accept any liability with respect to the correctness of information in this document. Copyright by AUDI AG.

**2 - Cylinder "B"**

- ❑ Check running surface of rectangular section seals for wear ⇒ page 146

**4 - Piston "B"**

- ❑ Check that valve ball moves easily ⇒ page 147

**6 - Dished spring**

- ❑ Renew if there are traces of scoring or if ends of dished spring are bent.

**7 - Split retaining ring**

- ❑ Renew if distorted

**8 - Corrugated spring**

**9 - Outer plate**

- ❑ Checking for wear ⇒ page 147

**10 - Friction plate**

- ❑ Checking for wear ⇒ page 147

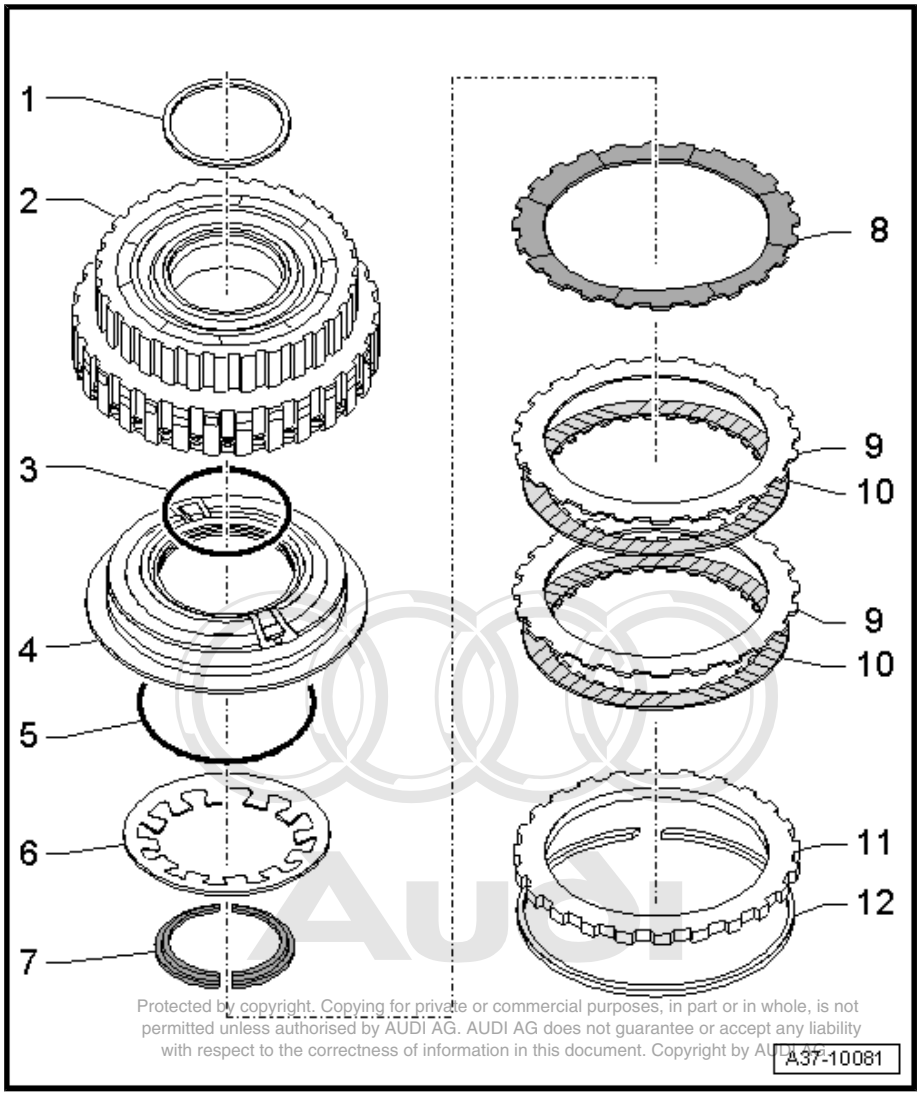


Protected by copyright. Copying for private or commercial purposes, in part or in whole, is not permitted unless authorised by AUDI AG. AUDI AG does not guarantee or accept any liability with respect to the correctness of information in this document. Copyright by AUDI AG.

**Checking running surface for rectangular section seals in cylinder "B" for wear**

– Check running surface -arrow- in cylinder "B" for wear.

• The running surface should not have any deep scoring and/or blue discoloration.

If there are deep scores and/or blue discolouring:

– Renew cylinder "B".

– Check rectangular section seals ⇒ Item 16 (page 155) .

Proceed as follows if the running surface has no blue discoloration and there are only slight scores:

– Rub down running surface one or two times with abrasive paper and oil (grain size 600).

– Clean running surface thoroughly with clean cloth and check running surface.

• The running surface should now be in as-new condition.

If scoring is still present after this step:

– Renew cylinder "B".

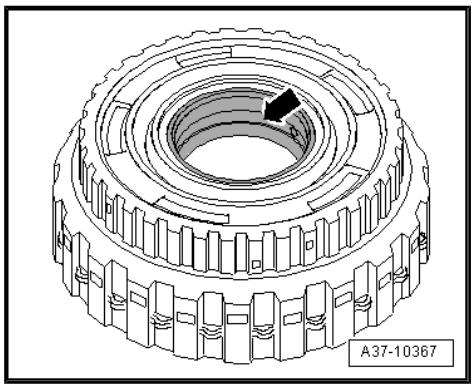

**Checking that valve ball in piston “B” moves freely**

– Lightly lubricate drilling for valve ball -arrow- from the front with oil.

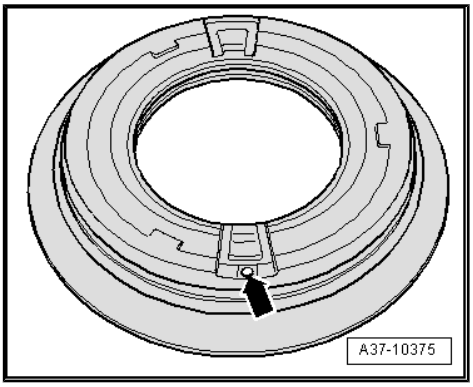


> **WARNING**
>
> *Wear safety goggles.*

– Apply compressed air to valve ball from the rear.

♦ Lift of ball is small (hardly visible).

♦ No spring fitted (ball returns slowly).

If valve ball does not move:

– Release ball with nail or tip of ballpoint pen.

If valve ball is still leaking or does not move:

– Renew piston “B”.

**Note**

*A leaking or sticking valve ball will cause impairment of power transmission in reverse gear.*

Protected by copyright. Copying for private or commercial purposes, in part or in whole, is not permitted unless authorised by AUDI AG. AUDI AG does not guarantee or accept any liability with respect to the correctness of information in this document. Copyright by AUDI AG.

**Checking friction plates and outer plates for wear**

Signs of overheating on the outer plates indicate that the friction plates are worn. Assess the degree of wear as described below:

A - Heat discoloration spots at intervals of more than 20 mm: outer plates and friction plates are OK; they can be used again.

B - Heat discoloration spots at intervals of less than 20 mm: outer plates and friction plates are worn and require renewal.

C - If outer and/or inner parts of outer plates are discoloured blue or brown: outer plates and friction plates are worn and require renewal.

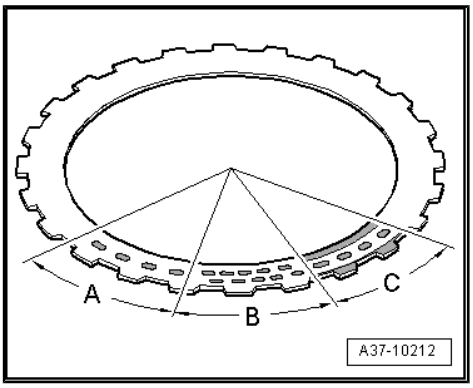


## 3.6 Clutch “A”

**5 - Cylinder "A"**

- ❑ Check inner surfaces for traces of scoring by friction plates ⇒ page 148
- ❑ Check outer surfaces for traces of scoring by friction plates ⇒ page 149
- ❑ Checking running surface for rectangular section seal in cylinder "A" for wear ⇒ page 149
- ❑ Check splines

**10 - Dished spring**

- ❑ Renew if there are traces of scoring or if ends of dished spring are bent.

**11 - Split retaining ring**

- ❑ Renew if distorted

**12 - Outer plate**

- ❑ Checking for wear ⇒ page 149

**13 - Friction plate**

- ❑ Checking for wear ⇒ page 149

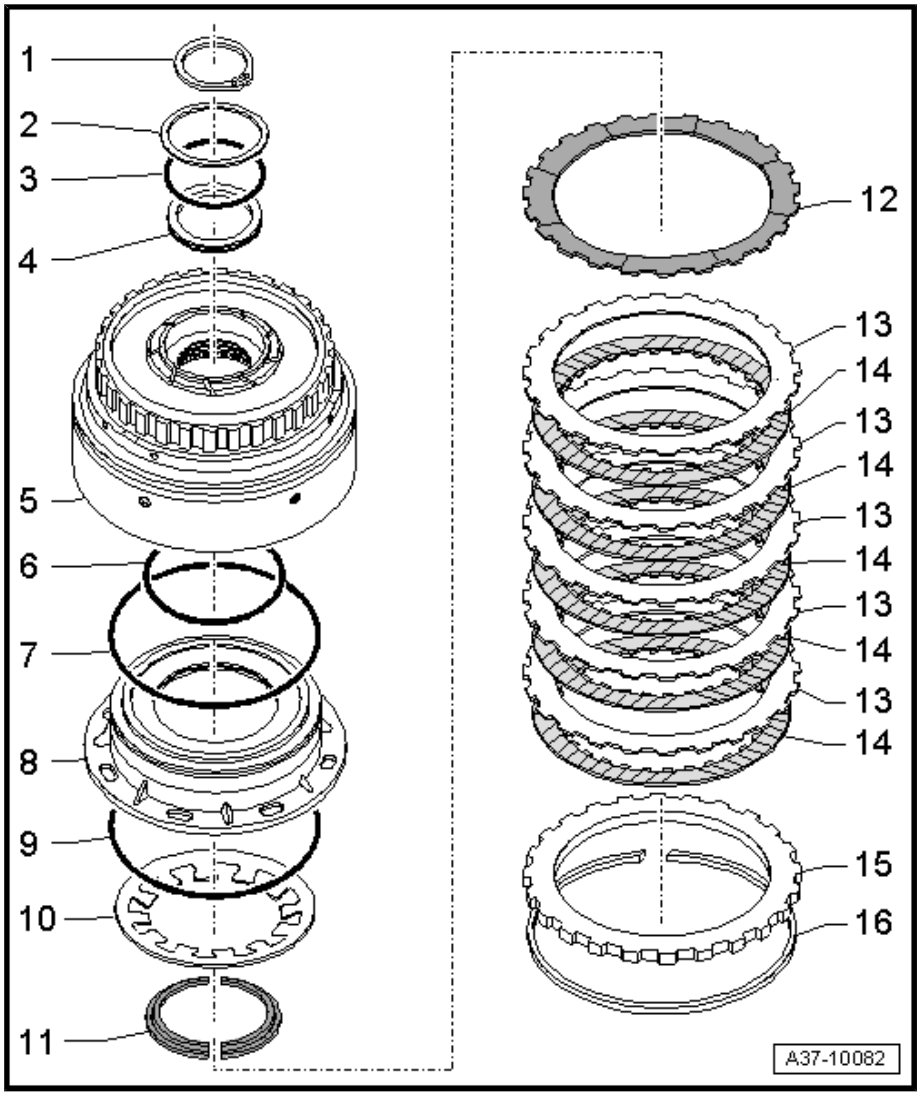


**Checking inner surfaces of cylinder "A" for traces of scoring by friction plates**

– Check inner surfaces of cylinder "A" for scoring by friction plates.

• Friction plates must not get stuck in scores -arrow-.

If the scores -arrows- caused by the friction plates are deeper than 0.5 mm:

– Renew cylinder "A".

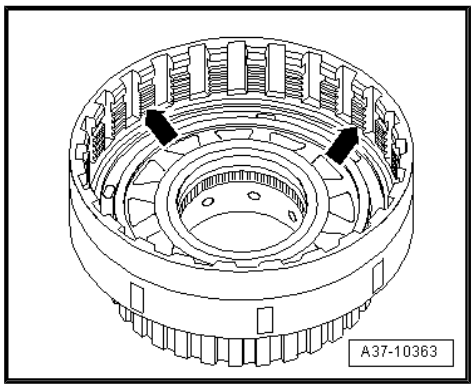


Protected by copyright. Copying for private or commercial purposes, in part or in whole, is not permitted unless authorised by AUDI AG. AUDI AG does not guarantee or accept any liability with respect to the correctness of information in this document. Copyright by AUDI AG.

### Checking outer surfaces of cylinder “A” for traces of scoring by friction plates

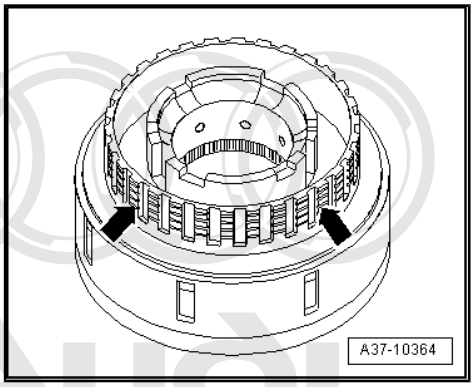


– Check outer surfaces of cylinder “A” for scoring by friction plates.

• Friction plates must not get stuck in scores -arrow-.

If the scores -arrows- caused by the friction plates are deeper than 0.5 mm:

– Renew cylinder “A”.

### Checking running surface for rectangular section seal in cylinder “A” for wear

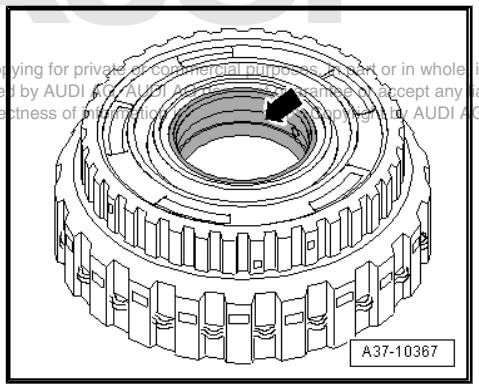


Protected by copyright. Copying for private or commercial purposes, in part or in whole, is not permitted unless authorised by AUDI AG. AUDI AG does not guarantee or accept any liability with respect to the correctness of information. Copyright by AUDI AG.

– Check running surface -arrow- in cylinder “A” for wear.

• The running surface should not have any deep scoring and/or blue discoloration.

If there are deep scores and/or blue discolouring:

– Renew cylinder “A”.

– Check rectangular section seals ⇒ Item 17 (page 155) .

Proceed as follows if the running surface has no blue discoloration and there are only slight scores:

– Rub down running surface one or two times with abrasive paper and oil (grain size 600).

– Clean running surface thoroughly with clean cloth and check running surface.

• The running surface should now be in as-new condition.

If scoring is still present after this step:

– Renew cylinder “A”.

### Checking friction plates and outer plates for wear

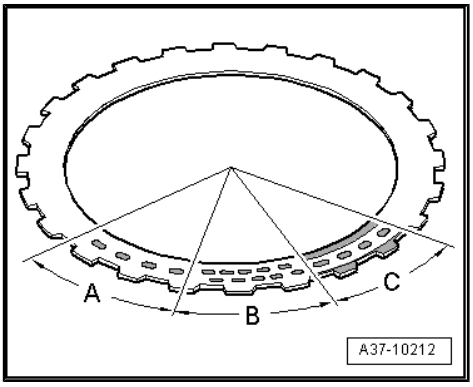


Signs of overheating on the outer plates indicate that the friction plates are worn. Assess the degree of wear as described below:

A - Heat discoloration spots at intervals of more than 20 mm: outer plates and friction plates are OK; they can be used again.

B - Heat discoloration spots at intervals of less than 20 mm: outer plates and friction plates are worn and require renewal.

C - If outer and/or inner parts of outer plates are discoloured blue or brown: outer plates and friction plates are worn and require renewal.

## 3.7 Clutch “E”

**1 - Rectangular section seals**

- ❑ Checking for wear ⇒ page 151

**3 - Cylinder "E"**

- ❑ Checking running surfaces of shaft and brass bush for wear ⇒ page 151
- ❑ Checking weld seam between shaft and cylinder ⇒ page 152
- ❑ Check splines

**7 - Dished spring**

- ❑ Renew if there are traces of scoring or if ends of dished spring are bent.

**12 - Outer plate**

- ❑ Checking for wear ⇒ page 152

**13 - Friction plate**

- ❑ Checking for wear ⇒ page 152

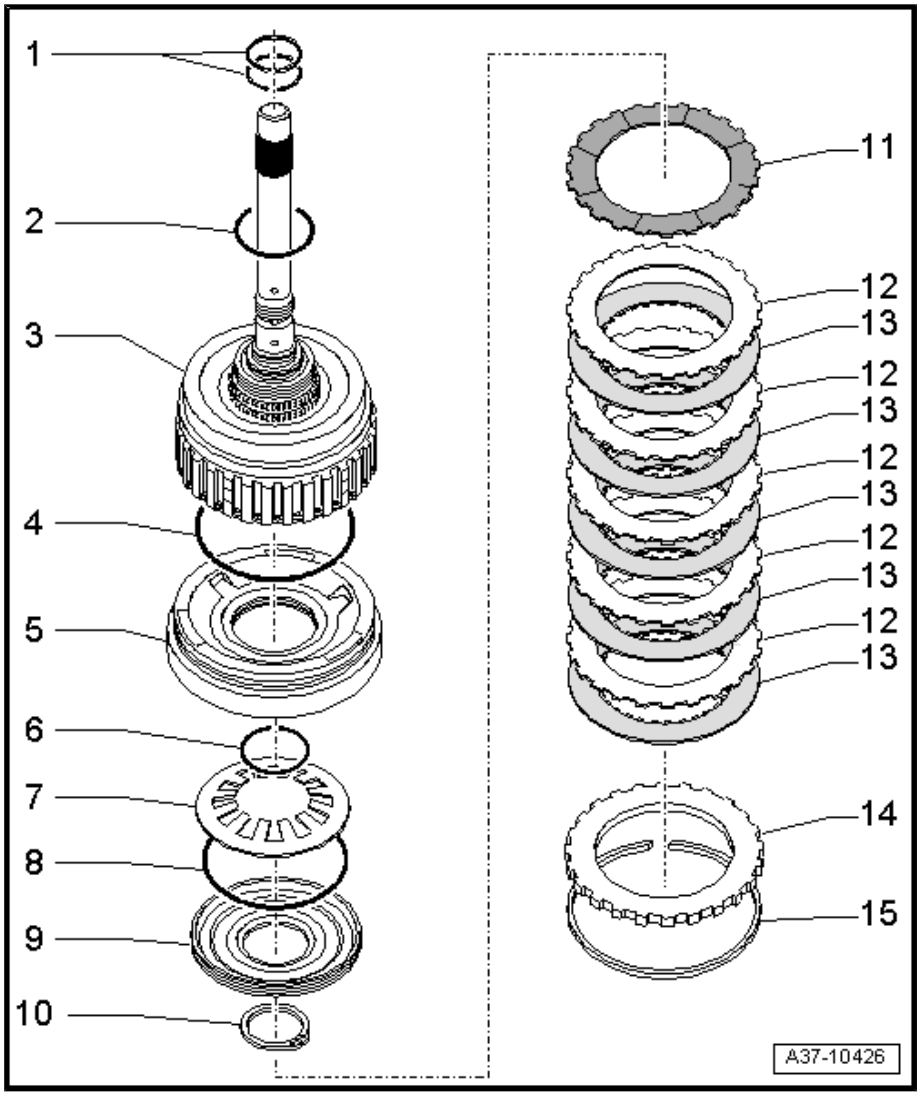


Protected by copyright. Copying for private or commercial purposes, in part or in whole, is not permitted unless authorised by AUDI AG. AUDI AG does not guarantee or accept any liability with respect to the correctness of information in this document. Copyright by AUDI AG.

### Checking rectangular section seals for wear

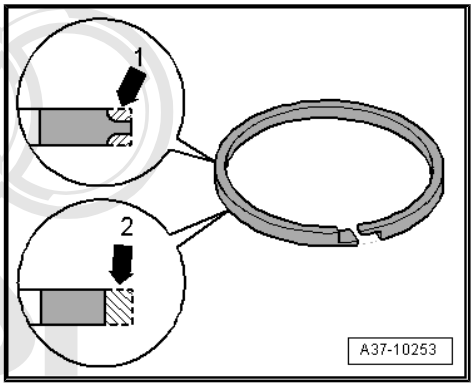


**Note**

*Always renew rectangular section seals. Nevertheless, the wear pattern on the rectangular section seals gives an indication of the condition of the contact surface for the seals. For this reason it is always advisable to check the rectangular section seals for wear.*

If the axial wear -arrow 1- on the rectangular section seals is excessive (slight wear on the outside corners is normal):

– Renew cylinder “E”.

If the radial wear on the rectangular section seals exceeds 0.3 mm -arrow 2- (compare with thickness of new rectangular section seal):

– Renew stator shaft ⇒ Item 14 (page 154) .

Protected by copyright. Copying for private or commercial purposes, in part or in whole, is not permitted unless authorised by AUDI AG. AUDI AG does not guarantee or accept any liability with respect to the correctness of information in this document. Copyright by AUDI AG.

**Note**

*If the rectangular section seals are worn, the torque converter lock-up clutch may also be worn due to insufficient closing pressure.*

### Checking running surfaces of cylinder “E” shaft and brass bush for wear

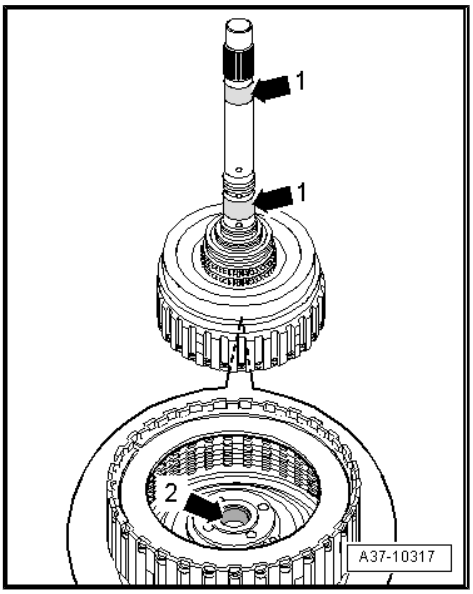


– Check running surfaces of brass bush -arrow 2- on inside of shaft and running surfaces on outside of shaft -arrows 1- for wear.

• The running surfaces should not have any deep scoring and/or blue discoloration.

If there are deep scores and/or blue discolouring:

– Renew cylinder “E”.

Proceed as follows if the running surfaces have no blue discoloration and there is only slight scoring:

– Rub down running surface one or two times with abrasive paper and oil (grain size 600).

– Clean running surface thoroughly with clean cloth and check running surface.

• The running surfaces should now be in as-new condition.

If scoring is still present after this step:

– Renew cylinder “E”.

### Checking weld seam between shaft and cylinder

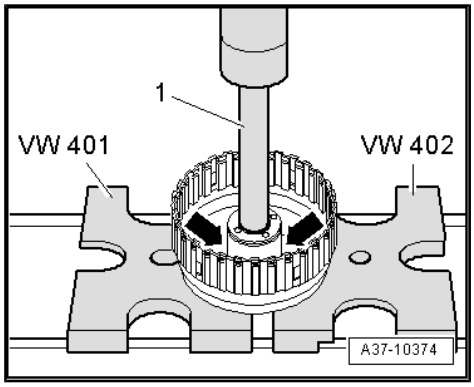


– Check for leaks at weld seam between shaft and cylinder “E” by applying a very small force to the shaft with a screw press (use plastic insert -1- under the press).

If the shaft is loose, or if cracking is visible in the area marked with -arrows-:

– Renew cylinder “E”.

**Note**

*The gearshift from 4th to 5th gear will not operate if cylinder “E” is leaking.*

### Checking friction plates and outer plates for wear

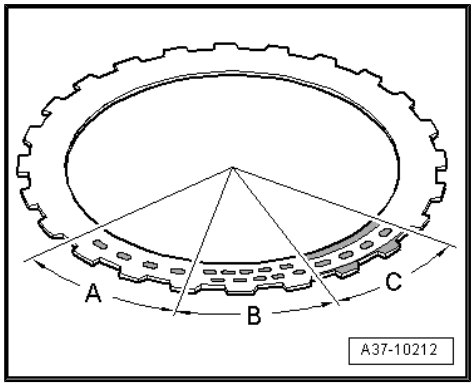


Signs of overheating on the outer plates indicate that the friction plates are worn. Assess the degree of wear as described below:

A - Heat discoloration spots at intervals of more than 20 mm: outer plates and friction plates are OK; they can be used again.

B - Heat discoloration spots at intervals of less than 20 mm: outer plates and friction plates are worn and require renewal.

C - If outer and/or inner parts of outer plates are discoloured blue or brown: outer plates and friction plates are worn and require renewal.

Copyright by AUDI AG. Reproduction or distribution of the content, in whole or in part, is prohibited and not permitted unless authorised by AUDI AG. AUDI AG does not guarantee or accept any liability with respect to the correctness of information in this document. Copyright by AUDI AG.

## 3.8 Clutch “C”

**1 - ATF supply unit with outer plate carrier "C"**

- ❑ Check internal splines for traces of scoring by friction plates ⇒ page 153

**5 - Dished spring**

- ❑ Renew if there are traces of scoring or if ends of dished spring are bent.

**6 - Split retaining ring**

- ❑ Renew if distorted

**8 - Friction plate**

- ❑ Checking for wear ⇒ page 154

**9 - Outer plate**

- ❑ Checking for wear ⇒ page 154

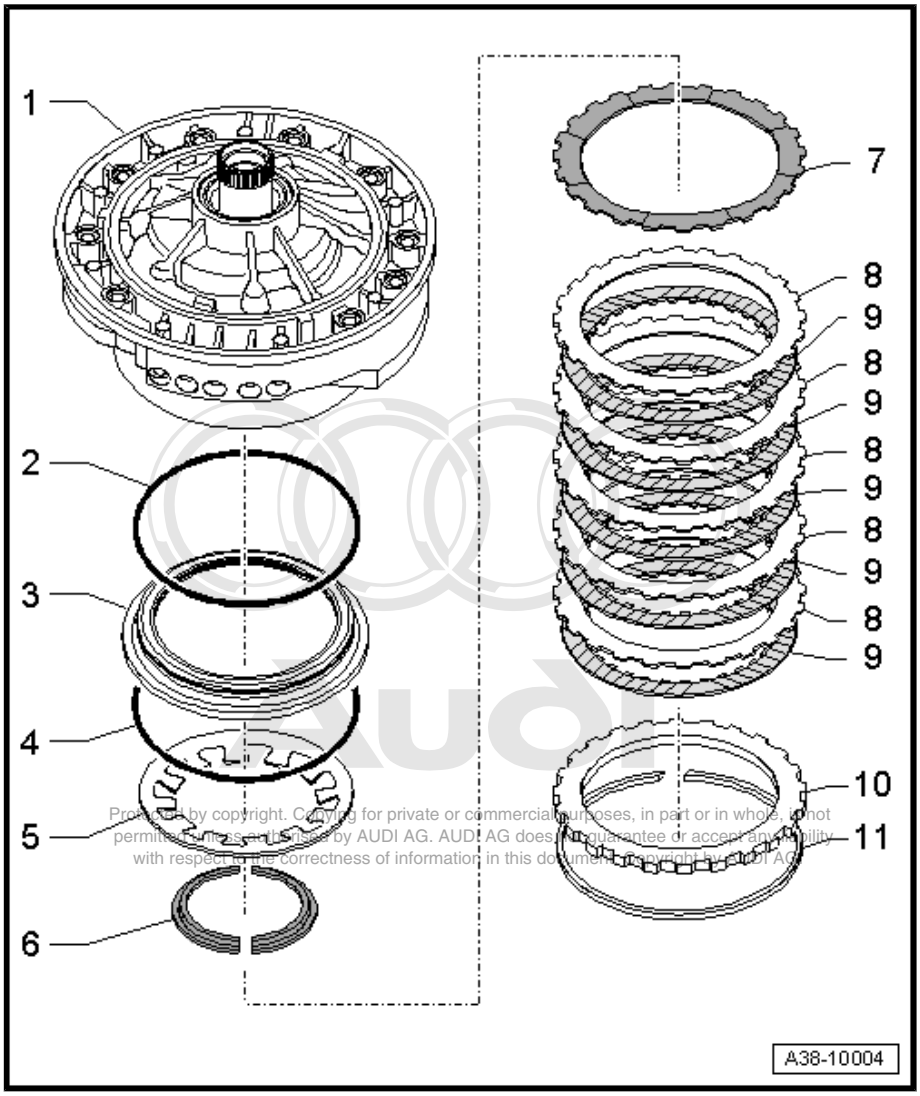


Protected by copyright. Copying for private or commercial purposes, in part or in whole, is not permitted unless authorised by AUDI AG. AUDI AG does not guarantee or accept any liability with respect to the correctness of information in this document. Copyright by AUDI AG.

**Checking internal splines of ATF supply unit with outer plate carrier "C" for traces of scoring by friction plates**

– Check internal splines for scoring by friction plates.

• Friction plates must not get stuck in scores -arrow-.

If the scores -arrows- caused by the friction plates are deeper than 0.5 mm:

– Renew outer plate carrier "C".

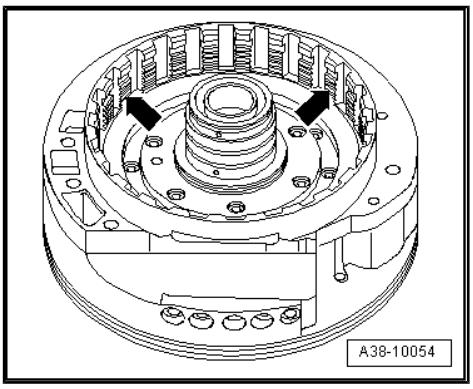

### Checking friction plates and outer plates for wear

Signs of overheating on the outer plates indicate that the friction plates are worn. Assess the degree of wear as described below:

A - Heat discoloration spots at intervals of more than 20 mm: outer plates and friction plates are OK; they can be used again.

B - Heat discoloration spots at intervals of less than 20 mm: outer plates and friction plates are worn and require renewal.

C - If outer and/or inner parts of outer plates are discoloured blue or brown: outer plates and friction plates are worn and require renewal.

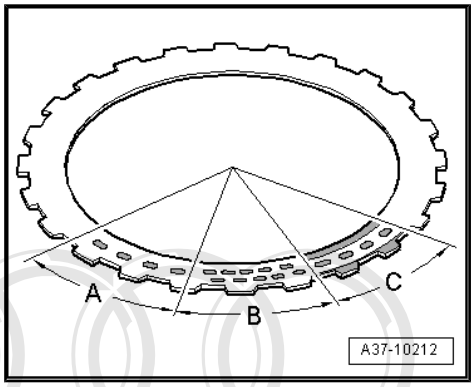


## 3.9 ATF supply unit

**Caution**

*Make sure to install ATF pump and ATF supply unit of same version - oil drillings must align. The ATF pump will not build up pressure if other version of ATF supply unit is fitted.*

Protected by copyright. Copying for private or commercial purposes, in part or in whole, is not permitted unless authorised by AUDI AG. AUDI AG does not guarantee or accept any liability with respect to the correctness of information in this document. Copyright by AUDI AG.

**2 - Corrugated washer**

- ❑ Check for distortion

**4 - ATF pump housing**

- ❑ Check running surfaces for scoring and signs of abnormal wear ⇒ page 156
- ❑ Check brass bush for wear ⇒ page 155

**5 - Annulus**

- ❑ Check running surfaces for scoring and signs of abnormal wear ⇒ page 156

**6 - ATF pump gear**

- ❑ Check running surfaces for scoring and signs of abnormal wear ⇒ page 156
- ❑ Check drive lugs in ATF pump gear ⇒ page 156

**8 - Intermediate plate**

- ❑ Check running surfaces for scoring and signs of abnormal wear ⇒ page 156

**10 - ATF supply unit**

- ❑ Check that flow control valve of ATF supply unit moves freely ⇒ page 156

**14 - Stator shaft**

- ❑ Check brass bushes for

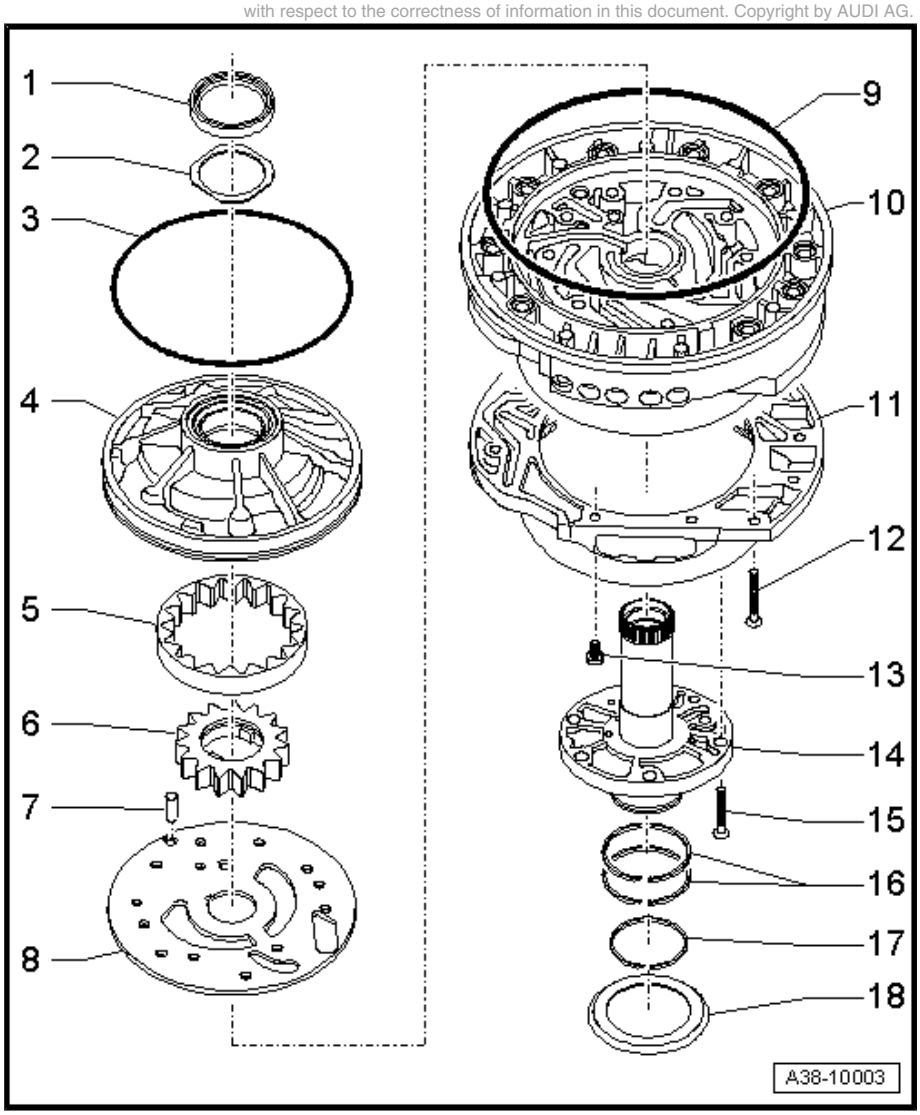

wear ⇒ page 157

- ❑ Check splines for wear
- ❑ Must be seated securely in housing of ATF supply unit ⇒ Item 10 (page 154) ; renew both parts if loose

**16 - Rectangular section seals for clutch “B”**

- ❑ Checking for wear ⇒ page 157

**17 - Rectangular section seal for clutch “A”**

- ❑ Checking for wear ⇒ page 157

**18 - Axial needle bearing**

- ❑ Perform visual check for damage: axial needle bearing and contact surfaces should be in as-new condition; renew if necessary.

**Checking brass bush in ATF pump housing for wear.**

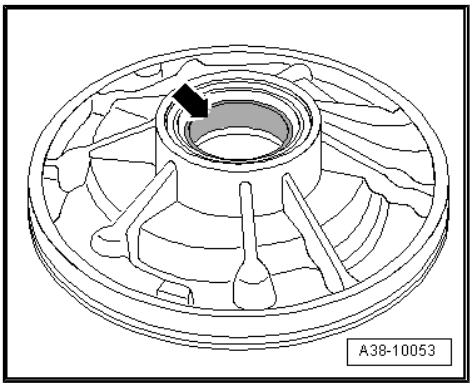


– Check running surface of brass bush -arrow- for wear.

• The running surface should not have any deep scoring and/or blue discoloration.

If there are deep scores and/or blue discolouring:

– Renew ATF pump.

Proceed as follows if the running surface has no blue discoloration and there are only slight scores:

– Rub down running surface one or two times with abrasive paper and oil (grain size 600).

– Clean running surface thoroughly with clean cloth and check running surface.

• The running surface should now be in as-new condition.

If scoring is still present after this step:

– Renew ATF pump.

– Also check hub -arrow- of torque converter for scoring.

If scoring is visible on the torque converter:

– Renew torque converter.

Protected by copyright. Copying for private or commercial purposes, in part or in whole, is not permitted unless authorised by AUDI AG. AUDI AG does not guarantee or accept any liability with respect to the correctness of information in this document. Copyright by AUDI AG.

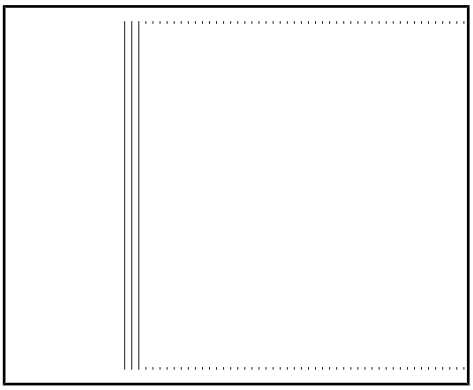

### Checking components of ATF pump for scoring and signs of wear

– Check running surfaces of following components for scoring and signs of wear:

2 - ATF pump housing

3 - Annulus (outer pump gear)

4 - ATF pump gear

5 - Intermediate plate

• The running surfaces should have either a dull or bright finish and should be free of even the slightest trace of scoring.

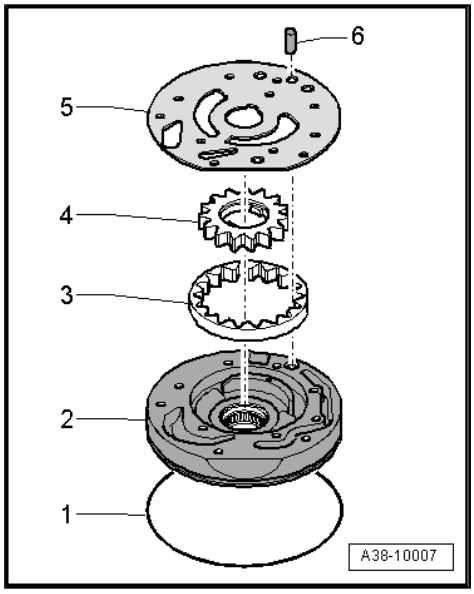


**Note**

*A defective ATF pump causes delays in power transmission and gear changes.*

### Checking drive lugs in ATF pump gear

– Check whether the drive lugs -arrows- on the ATF pump gear show signs of damage or are broken off; renew ATF pump if necessary.

Possible causes of fault:

A - Torque converter not fully inserted when installing gearbox or engine

B - Centring sleeve for torque converter not fitted in crankshaft

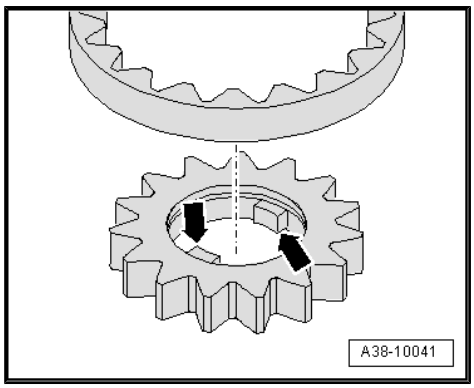


**Caution**

***Make sure that broken-off drive lugs are found and removed.***

### Checking flow control valve in ATF supply unit

Check flow control valve as follows:

– Move valve piston against spring pressure.

• The valve piston should move freely in both directions -arrow-.

• The valve should be free of scoring.

• There must be no metal particles lodged in aperture -1-.

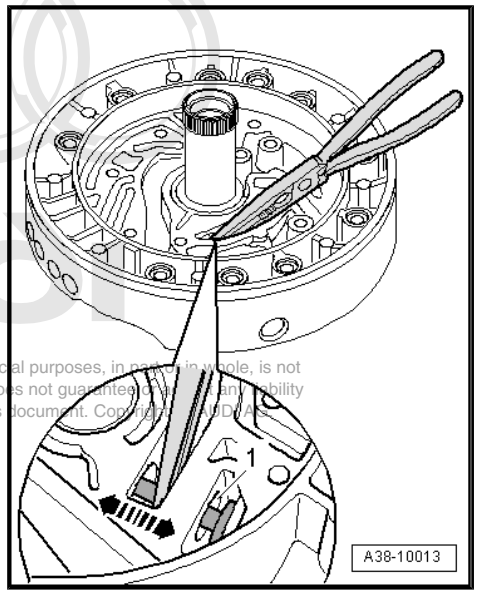


**Note**

*Power transmission may fail completely if the valve piston sticks or if aperture -1- is obstructed.*

Protected by copyright. Copying for private or commercial purposes, in part or in whole, is not permitted unless authorised by AUDI AG. AUDI AG does not guarantee or assume any liability with respect to the correctness of information in this document. Copyright by AUDI AG.

### Checking brass bushes on stator shaft for wear.

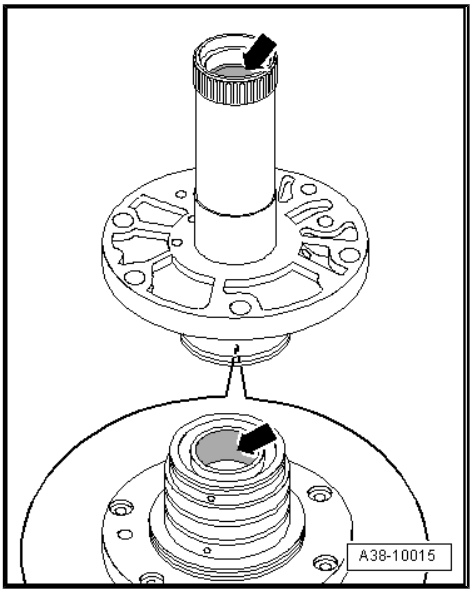


– Check running surfaces of brass bushes -arrows- on inside of stator shaft for wear.

• The running surfaces should not have any deep scoring and/ or blue discoloration.

If there are deep scores and/or blue discolouring:

– Renew stator shaft.

Proceed as follows if the running surfaces have no blue discoloration and there is only slight scoring:

– Rub down running surface one or two times with abrasive paper and oil (grain size 600).

– Clean running surface thoroughly with clean cloth and check running surface.

• The running surfaces should now be in as-new condition.

If scoring is still present after this step:

– Renew stator shaft.

Protected by copyright. Copying for private or commercial purposes, in part or in whole, is not permitted unless authorised by AUDI AG. AUDI AG does not guarantee or accept any liability with respect to the correctness of information in this document. Copyright by AUDI AG.

### Checking rectangular section seals -item 16- for wear

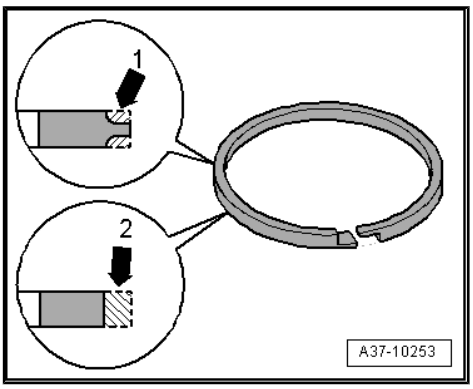


**Note**

*Always renew rectangular section seals. Nevertheless, the wear pattern on the rectangular section seals gives an indication of the condition of the contact surface for the seals. For this reason it is always advisable to check the rectangular section seals for wear.*

If the axial wear on the rectangular section seals exceeds 0.3 mm -arrow 1- (slight wear on the outside corners is normal):

– Renew stator shaft.

If the radial wear on the rectangular section seals exceeds 0.3 mm -arrow 2- (compare with thickness of new rectangular section seal):

– Renew cylinder “B” ⇒ Item 2 (page 146) .

### Checking rectangular section seal -item 17- for wear

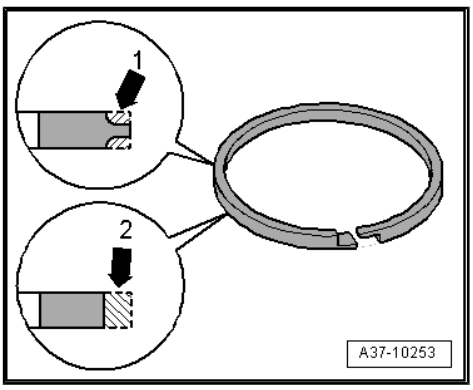


**Note**

*Always renew the rectangular section seal. Nevertheless, the wear pattern on the rectangular section seal gives an indication of the condition of the contact surface for the seal. For this reason it is always important to check the rectangular section seal for wear.*

If the axial wear on the rectangular section seal exceeds 0.3 mm -arrow 1- (slight wear on the outside corners is normal):

– Renew stator shaft.

If the radial wear on the rectangular section seal exceeds 0.3 mm -arrow 2- (compare with thickness of new rectangular section seal):

– Renew cylinder “A” ⇒ Item 5 (page 148) .

# 39 – Final drive - front differential

## 1 Servicing front axle drive and transfer box

Note

- *General repair instructions* ⇒ *page 1* .
- *Rules for cleanliness when working on the automatic gearbox* ⇒ *page 12* .

### 1.1 Removing and installing transfer box with Torsen differential

Removing and installing transfer box with Torsen differential ⇒ Automatic gearbox 01V, front-wheel drive and four-wheel drive; Rep. Gr. 39 .

### 1.2 Front axle drive and transfer box - exploded view of components

Note

*The parts shown in the illustration can be removed without removing the gearbox from the vehicle.*

Protected by copyright. Copying for private or commercial purposes, in part or in whole, is not permitted unless authorised by AUDI AG. AUDI AG does not guarantee or accept any liability with respect to the correctness of information in this document. Copyright by AUDI AG.

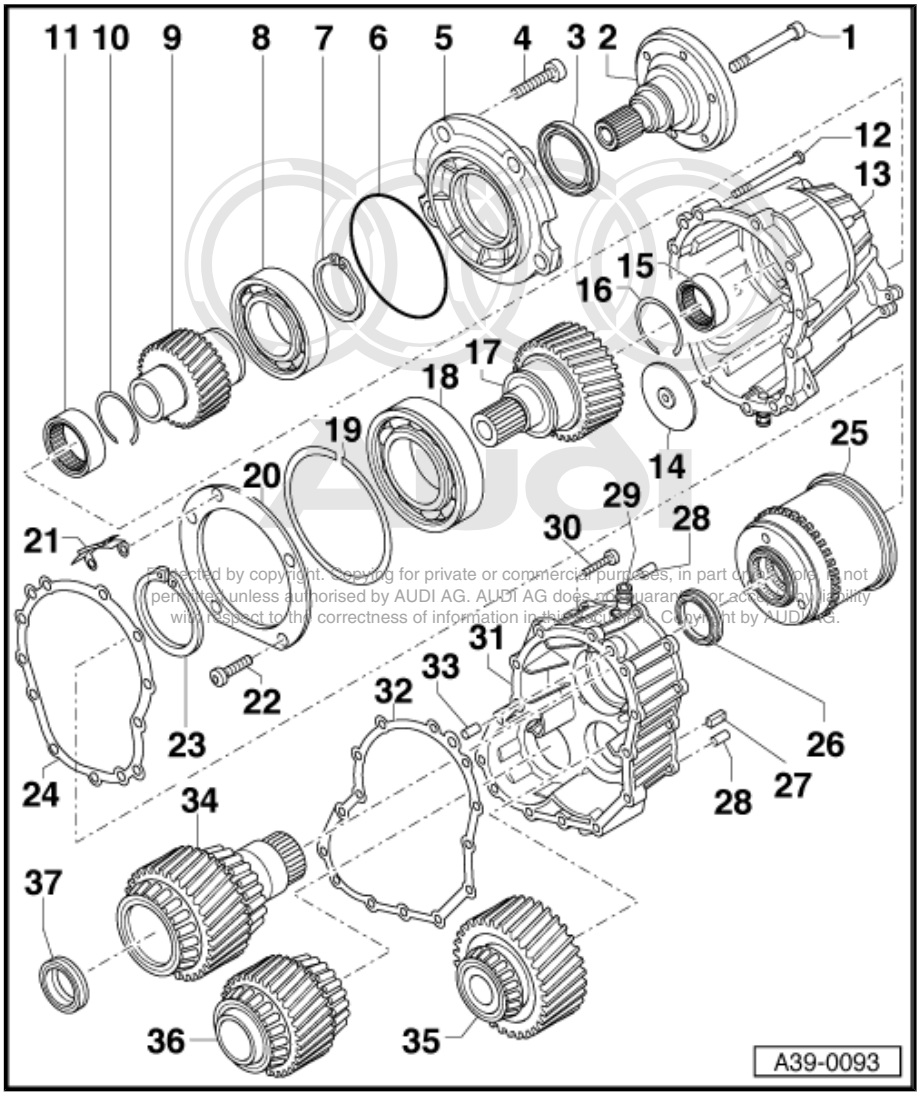


**1 - Hexagon socket head bolt, 25 Nm**

**2 - Output flange for propshaft**

**3 - Oil seal**

- ❑ Renew ⇒ Automatic gearbox 01V, front-wheel drive and four-wheel drive; Rep. Gr. 39

**4 - Bolt, 23 Nm**

- ❑ 4 x

**5 - Housing cover**

**6 - O-ring**

- ❑ Lubricate with gear oil

**7 - Circlip**

**8 - Grooved ball bearing**

- ❑ For spur gear 1
- ❑ Pressing off ⇒ page 161
- ❑ Pressing on ⇒ page 161

**9 - Spur gear 1**

- ❑ For rear axle drive
- ❑ If damaged, always renew together with spur gear 2 ⇒ Item 17 (page 160)
- ❑ To remove, pull out of transfer box housing towards the rear, together with ⇒ Item 7 (page 159) and ⇒ Item 8 (page 159)

**10 - Circlip**

**11 - Needle bearing**

- ❑ For spur gear 1
- ❑ Only remove bearing in order to renew
- ❑ To renew, heat transfer box housing to approx. 100 °C and drive out needle bearing towards the rear with suitable drift (Warning: wear protective gloves)
- ❑ Drive in onto stop using sleeve -30-21-

**12 - Bolt, 23 Nm**

- ❑ Loosen and tighten in diagonal sequence

**13 - Transfer box housing**

- ❑ Can be renewed if damaged

**14 - Tensioning nut**

- ❑ Output flange for propshaft ⇒ Item 2 (page 159)

**15 - Needle bearing**

- ❑ For spur gear 2 ⇒ Item 17 (page 160)
- ❑ Only remove bearing in order to renew
- ❑ Renewing ⇒ page 164

**16 - Circlip**

- ❑ Secures needle bearing ⇒ Item 15 (page 159) in transfer box housing ⇒ Item 13 (page 159)

**17 - Spur gear 2**

- For rear axle drive
- If damaged, always renew together with spur gear 1 ⇒ Item 9 (page 159)
- To renew, remove transfer box ⇒ Automatic gearbox 01V, front-wheel drive and four-wheel drive; Rep. Gr. 39 and pull out together with ⇒ Item 19 (page 160) and ⇒ Item 23 (page 160)

**18 - Grooved ball bearing**

- For spur gear 2
- Pressing off ⇒ page 161
- Pressing on ⇒ page 162

**19 - Circlip**

- Secures grooved ball bearing ⇒ Item 18 (page 160) in transfer box housing

**20 - Securing plate**

- For grooved ball bearing ⇒ Item 18 (page 160)
- Before installing, clip alignment plate ⇒ Item 21 (page 160) onto securing plate

**21 - Alignment plate**

**22 - Bolt, 8 Nm**

- For securing plate ⇒ Item 20 (page 160)

**23 - Circlip**

- Secures grooved ball bearing ⇒ Item 18 (page 160) on spur gear 2 ⇒ Item 17 (page 160)

**24 - Gasket**

- Renew ⇒ Automatic gearbox 01V, front-wheel drive and four-wheel drive; Rep. Gr. 39

**25 - Torsen differential**

- Renew as complete unit if damaged
- Removing and installing ⇒ Automatic gearbox 01V, front-wheel drive and four-wheel drive; Rep. Gr. 39 .

**26 - Oil seal**

- Renewing ⇒ page 162

**27 - Magnet**

- Installing ⇒ Automatic gearbox 01V, front-wheel drive and four-wheel drive; Rep. Gr. 39

**28 - Dowel sleeve**

- 2 x

Protected by copyright. Copying for private or commercial purposes, in part or in whole, is not permitted unless authorised by AUDI AG. AUDI AG does not guarantee or accept any liability with respect to the correctness of information in this document. Copyright by AUDI AG.

**29 - Breather**

- For transfer box
- With fitted cap
- Installation position: breather without cap must project 10 ... 11 mm from housing

**30 - Bolt, 23 Nm**

- Loosen and tighten in diagonal sequence

**31 - Intermediate flange for front axle drive**

- Removing and installing ⇒ Automatic gearbox 01V, front-wheel drive and four-wheel drive; Rep. Gr. 39 .

**32 - Gasket**

- Renew ⇒ Automatic gearbox 01V, front-wheel drive and four-wheel drive; Rep. Gr. 39

**33 - Dowel sleeve**

**34 - Input pinion**

- For front axle drive
- Removing and installing ⇒ “1.5 Renewing oil seal in input pinion”, page 163

**35 - Intermediate pinion**

- ❑ For front axle drive
- ❑ Installation position: gear identification faces towards transfer box

**36 - Pinion gear**

- ❑ For front axle drive
- ❑ Installation position: gear identification faces towards transfer box

**37 - Oil seal**

- ❑ Renewing ⇒ page 163

Protected by copyright. Copying for private or commercial purposes, in part or in whole, is not permitted unless authorised by AUDI AG. AUDI AG does not guarantee or accept any liability with respect to the correctness of information in this document. Copyright by AUDI AG.

**Pressing off grooved ball bearing for spur gear 1**

A - Splitter 22 ... 115 mm -Kukko 17/2-

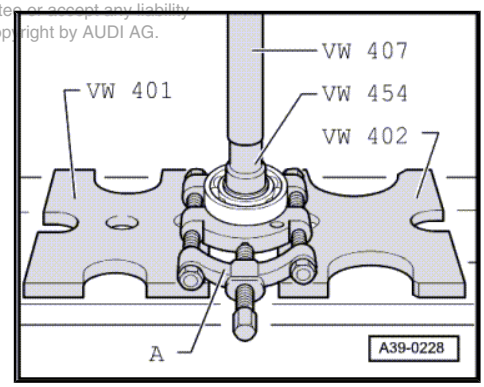


**Pressing on grooved ball bearing for spur gear 1**

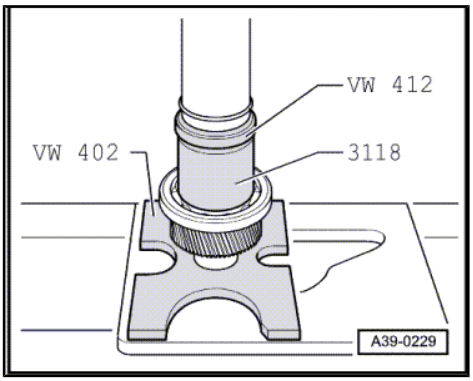


**Pressing off grooved ball bearing for spur gear 2**

A - Splitter 22 ... 115 mm -Kukko 17/2-

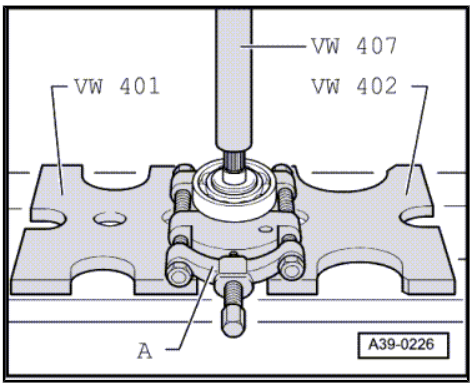

Pressing on grooved ball bearing for spur gear 2

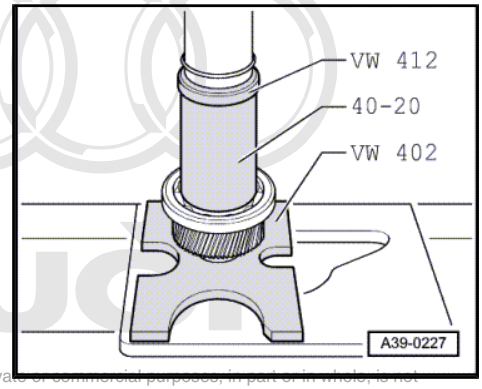


Protected by copyright. Copying for private or commercial purposes, in part or in whole, is not permitted unless authorised by AUDI AG. AUDI AG does not guarantee or accept any liability with respect to the correctness of information in this document. Copyright by AUDI AG.

## 1.3 Renewing oil seal for output flange for propshaft

Renewing oil seal for output flange for propshaft ⇒ Automatic gearbox 01V, front-wheel drive and four-wheel drive; Rep. Gr. 39

## 1.4 Renewing oil seal in intermediate flange for front axle drive

Note

*An inspection drilling -arrow- is provided on the left side of the intermediate flange for front axle drive to check for oil leaks at the oil seal in the input pinion and the oil seal in the intermediate flange for front axle drive.*

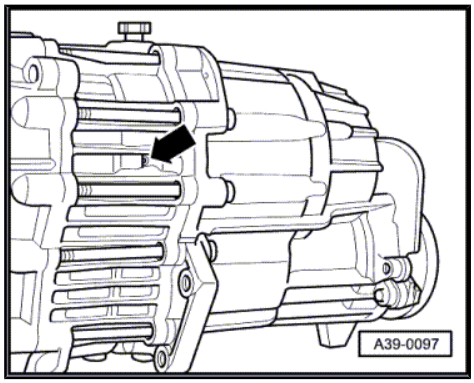


Procedure

- Remove transfer box ⇒ Automatic gearbox 01V, front-wheel drive and four-wheel drive; Rep. Gr. 39 .
- Remove intermediate flange for front axle drive ⇒ Automatic gearbox 01V, front-wheel drive and four-wheel drive; Rep. Gr. 39 .
- Drive out oil seal -arrow-, towards transfer box, using a drift.
- Check oil seal seat in intermediate flange for front axle drive for damage and rework if necessary.

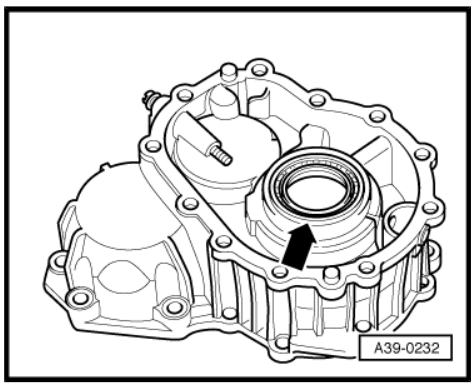

– Slide oil seal onto thrust piece -3404- .

• The larger, projecting outer ring -arrow- of the oil seal faces thrust piece.

– Drive in oil seal with thrust piece -3404- until thrust piece reaches stop.

– Install intermediate flange for front axle drive ⇒ Automatic gearbox 01V, front-wheel drive and four-wheel drive; Rep. Gr. 39 .

– Install transfer box ⇒ Automatic gearbox 01V, front-wheel drive and four-wheel drive; Rep. Gr. 39 .

– Check ATF level in planetary gearbox and top up as required ⇒ Automatic gearbox 01V, front-wheel drive and four-wheel drive; Rep. Gr. 37 .

Protected by copyright. Copying for private or commercial purposes, in part or in whole, is not permitted unless authorised by AUDI AG. AUDI AG does not guarantee or accept any liability with respect to the correctness of information in this document. Copyright by AUDI AG.

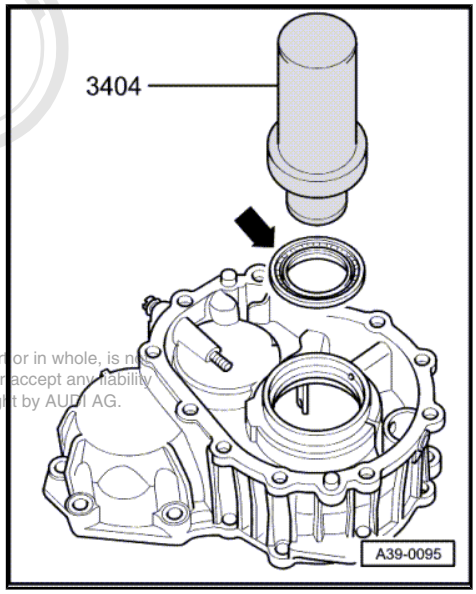


## 1.5 Renewing oil seal in input pinion

**Note**

*An inspection drilling -arrow- is provided on the left side of the intermediate flange to check for oil leaks at the oil seal in the input pinion and the oil seal in the intermediate flange.*

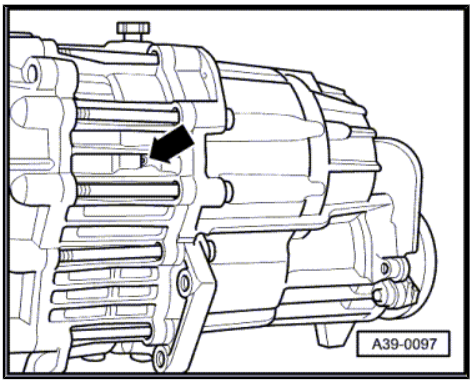


**Procedure**

– Remove transfer box ⇒ Automatic gearbox 01V, front-wheel drive and four-wheel drive; Rep. Gr. 39 .

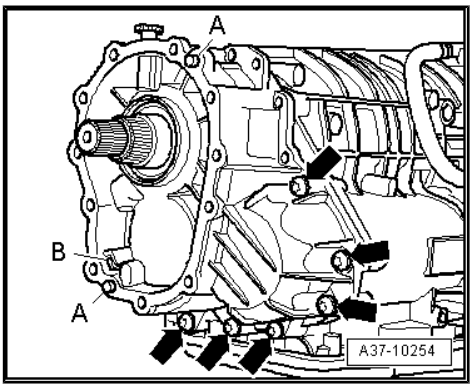

– Remove intermediate flange for front axle drive ⇒ Automatic gearbox 01V, front-wheel drive and four-wheel drive; Rep. Gr. 39 .

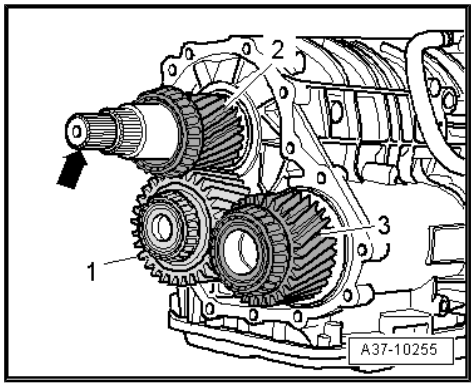


**Caution**

- *The intermediate pinion -1- and pinion gear -3- must be re-fitted in the same position to make sure the direction of rotation is maintained.*

– Mark installation position of intermediate pinion -1- and pinion gear -3-.

– Take off pinion gear together with intermediate pinion; at the same time pull input pinion -2- slightly towards the rear.

– Remove input pinion -2-.

– Knock out oil seal using a punch.

– Slide oil seal onto thrust piece -3403- .

– Drive in oil seal with thrust piece -3403- until thrust piece reaches stop.

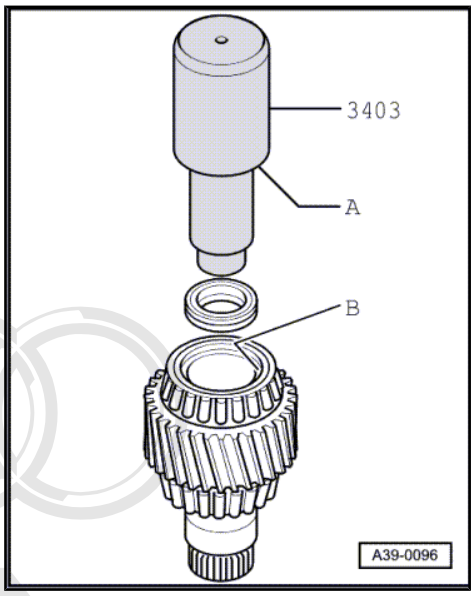


**Note**

*Ignore -item A- and -item B-.*

– Cover splines on end of input shaft -arrow- with insulating tape to prevent damage to oil seal when pushing on input pinion. Take care to cover the splines completely, without creasing or overlapping the tape.

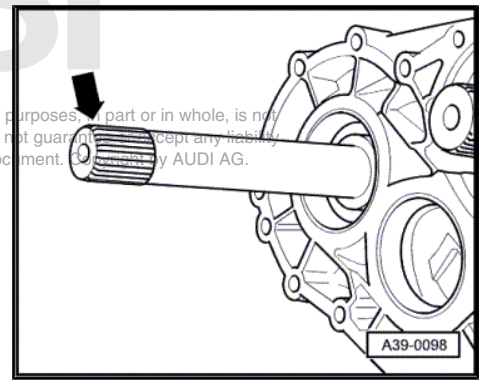


Protected by copyright. Copying for private or commercial purposes, in part or in whole, is not permitted unless authorised by AUDI AG. AUDI AG does not guarantee or accept any liability with respect to the correctness of information in this document. Copyright by AUDI AG.

– Install intermediate flange for front axle drive ⇒ Automatic gearbox 01V, front-wheel drive and four-wheel drive; Rep. Gr. 39 .

– Install transfer box ⇒ Automatic gearbox 01V, front-wheel drive and four-wheel drive; Rep. Gr. 39 .

– Check ATF level in planetary gearbox and top up as required ⇒ Automatic gearbox 01V, front-wheel drive and four-wheel drive; Rep. Gr. 37 .

## 1.6 Renewing needle bearing for spur gear 2

### Procedure

– Remove transfer box ⇒ Automatic gearbox 01V, front-wheel drive and four-wheel drive; Rep. Gr. 39 .

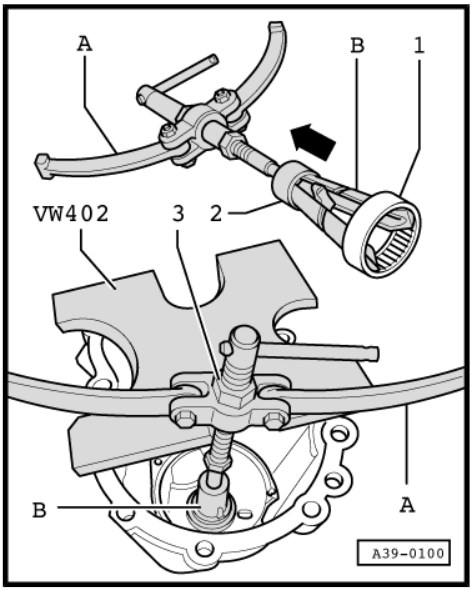


Note

*The upper section of the illustration shows how the extractor hooks on internal puller -item B- must be inserted in the needle bearing -1-.*

A - Counter-support -Kukko 22/1-

B - Internal puller -Kukko 21/4-

– Move centralising sleeve -2- of internal puller -Kukko 21/4- -item B- about 4 mm in direction indicated by -arrow-, so that the extractor hooks of the puller can be opened wide enough.

– Grasp upper lip of needle bearing -1- with internal puller -B- and tension internal puller with nut.

– Fit counter-support -Kukko 22/1- -item A- to internal puller -B- as shown in the illustration.

– Brace counter-support against thrust plate -VW 402- and apply tension with nut -3- of counter-support.

WARNING

*Wear protective gloves.*

– Use hot-air blower to quickly heat up the outside of the transfer box housing (around the seat of the needle bearing) to approx. 100 °C.

– Pull out needle bearing without delay.

– Check needle bearing seat in transfer box housing for damage and rework if necessary.

WARNING

*Wear protective gloves.*

– Use hot-air blower to heat up the outside of the transfer box housing (around the seat of the needle bearing) to approx. 100 °C (apply heat evenly).

Protected by copyright. Copying for private or commercial purposes, in part or in whole, is not permitted unless authorised by AUDI AG. AUDI AG does not guarantee or accept any liability with respect to the correctness of information in this document. Copyright by AUDI AG.

– Fit fitting sleeve -2080 A- onto new needle bearing -1-.
– Using press tool -VW 408 A- , drive needle bearing into transfer box housing onto stop.
– Install transfer box ⇒ Automatic gearbox 01V, front-wheel drive and four-wheel drive; Rep. Gr. 39 .

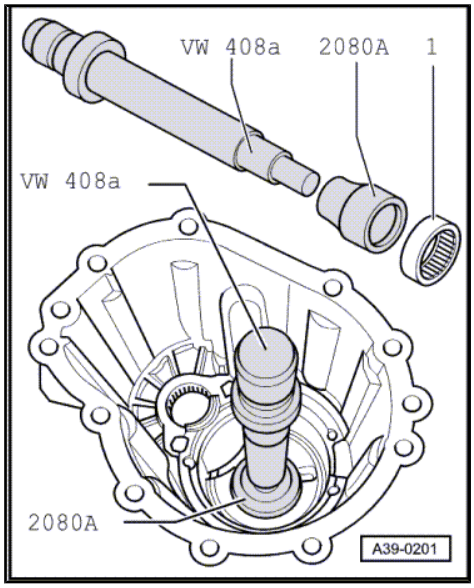


Protected by copyright. Copying for private or commercial purposes, in part or in whole, is not permitted unless authorised by AUDI AG. AUDI AG does not guarantee or accept any liability with respect to the correctness of information in this document. Copyright by AUDI AG.