Fastener Tightening Specifications

Application	Specification	
	Metric	English
Coolant Heater Bolt - LAT/LE5	10 N·m	89 lb in
Coolant Heater Bolt	60 N·m	44 lb ft
Cooling Fan to Fan Motor Nut	8 N·m	71 lb in
Cooling Fan Motor to Shroun Bolts	8 N·m	71 lb in
Condenser Radiator Fan Module (CRFM) Bracket Bolt	22 N·m	16 lb ft
Crossover Pipe Bolts - LZ4	22 N·m	16 lb ft
Engine Coolant Temperature (ECT) Sensor - LAT/LE5	20 N·m	15 lb ft
Engine Coolant Temperature (ECT) Sensor - LZ4	18 N·m	13 lb ft
Exhaust Heat Shield Bolts - LAT	22 N·m	16 lb ft
Fan Assembly to Radiator Bolt	8 N·m	71 lb in
Fan Assembly Screw	8 N·m	71 lb in
Negative Battery Terminal Bolt	17 N·m	13 lb ft
Surge Tank Bolt	8 N·m	71 lb in
Thermostat Housing Bolt - LAT/LZ4	10 N·m	89 lb in
Thermostat Housing Bolt - LY7	10 N·m	89 lb in
Thermostat Housing Cover Bolt - LAT	10 N·m	89 lb in
Transaxle Oil Cooler Line Fitting	16 N·m	12 lb ft
Water Pump Access Cover Bolt - LAT/LE5	10 N·m	89 lb in
Water Pump Bolt - LAT/LE5	25 N·m	18 lb ft
Water Pump and Pulley Bolts - LZ4	25 N·m	18 lb ft
Water Pump and Pulley Bolts - LY7	10 N·m	89 lb in
Water Pump Sprocket Bolt - LAT/LE5	10 N·m	89 lb in
Wheel Nut	125 N·m	92 lb ft
Wiring Harness Ground Terminal Nut	12 N·m	106 lb in

cardiagn.com

Engine Cooling (LCS)

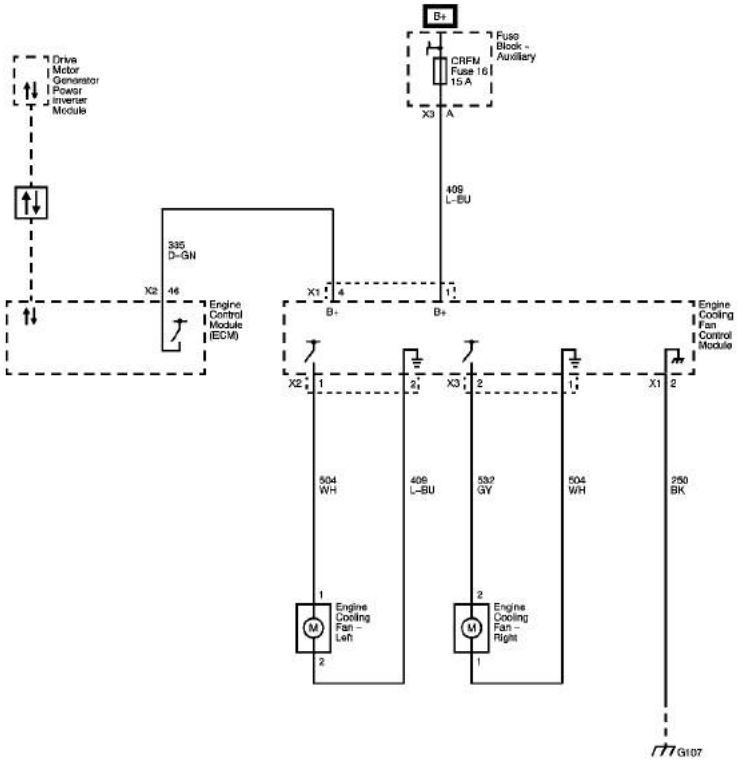

cardiagn.com

[redacted]

LAT

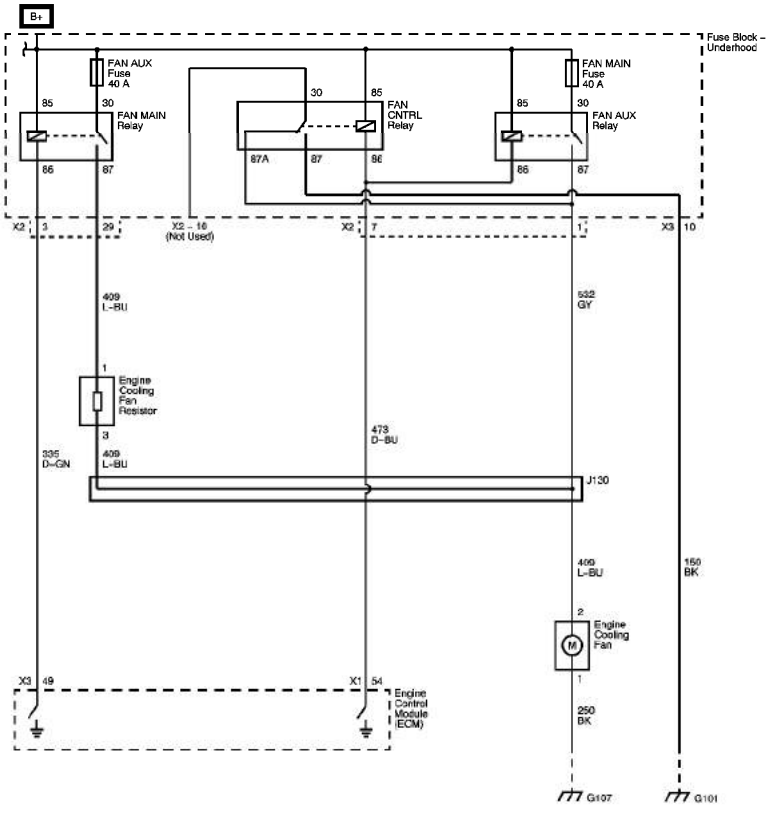

cardiagn.com

[redacted]

LE5 / LY7 / LZ4

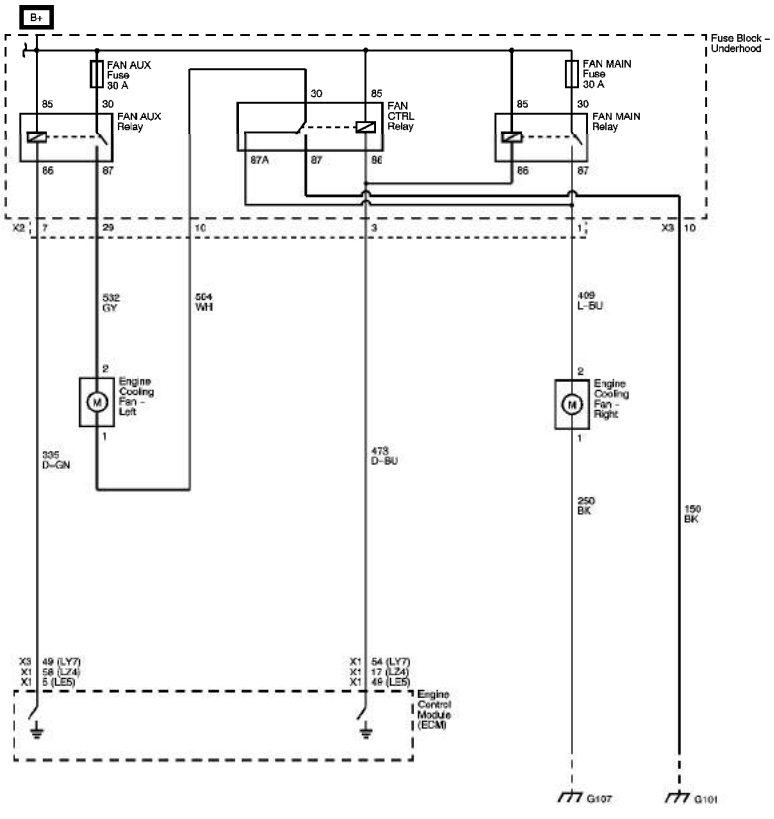

cardiagn.com

Cooling System Draining and Filling (Static Fill With HP5)

Draining Procedure

Warning: In order to avoid personal injury, do not remove the cap or open the cooling system drains from a hot system. Allow the system to cool first.

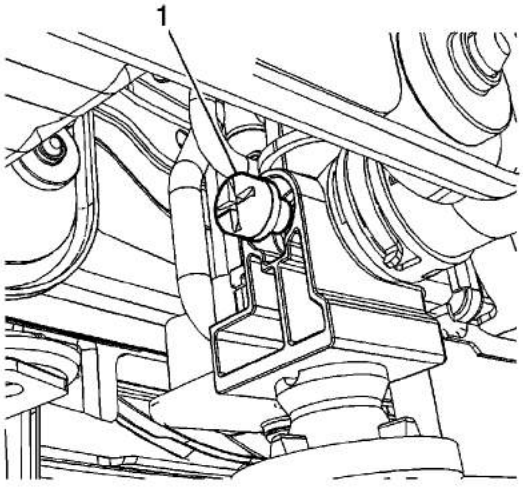

Note: A 7.6 liter (8 qt) coolant container will be needed.

1. Place the coolant container under the radiator drain cock located at the bottom of the left radiator end tank.
2. Open the drain cock and drain the coolant. A small amount of coolant will drain from the system.

cardiagn.com

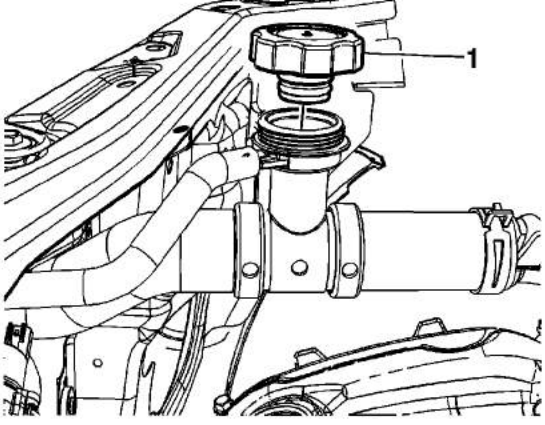

3. Remove the pressure cap (1) from the radiator inlet hose and the coolant will drain from the system.
4. Inspect the coolant.
5. Follow the appropriate procedure based on the condition of the coolant.
   - Normal in appearance--follow the filling procedure.
   - Discolored--follow the flush procedure. Refer to Coolant System Flushing

Filling Procedure

Caution: All entrapped air must be purged from the powertrain cooling system before the final coolant level can be determined. Proper coolant level is critical to avoid engine damage.

Note: The vehicle must be level when filling the cooling system.

1. Slowly add a mixture of 50/50 DEX-COOL antifreeze and de-ionized water to the service fill port on the radiator inlet hose. Fill the cooling system with approximately 4 liters (4.2 qts) of the coolant mixture. If 4 liters (4.2 qts) of coolant can not be added through the service fill port, add as much coolant mixture as possible to the coolant overflow reservoir, but do not exceed the full hot level indicator.
2. Install the pressure cap.
3. Start the engine and check for leaks.
4. Run the engine and cycle the vehicle from idle to 3,000 RPM in 30 second intervals until the engine cooling fan comes ON, the engine cooling fan turns ON at approximately 102°C (216° F). Repeat this process twice before the engine is turned OFF.
5. Return the engine to idle, and idle for 30 seconds and then turn the engine OFF.

cardiagn.com

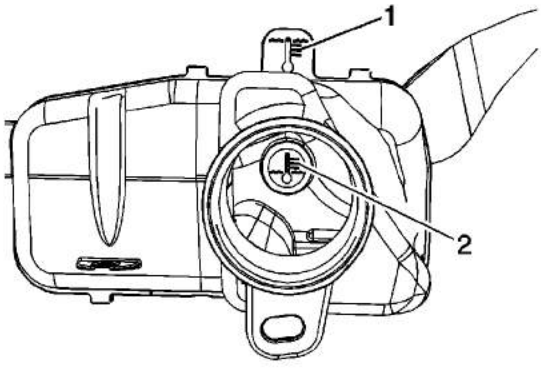

6. Allow the vehicle to cool, before adding additional coolant.
7. Add coolant to the coolant overflow reservoir and fill to the full hot level indicator (1).

   Note: The level in the coolant overflow reservoir will return into the cold fill indicator (2) once the vehicle cools.

8. Add additional coolant to the coolant overflow reservoir if the level falls below the cold fill indicator (2).

cardiagn.com

Cooling System Draining and Filling (Static Fill Without HP5)

Draining Procedure

Warning: In order to avoid personal injury, do not remove the cap or open the cooling system drains from a hot system. Allow the system to cool first.

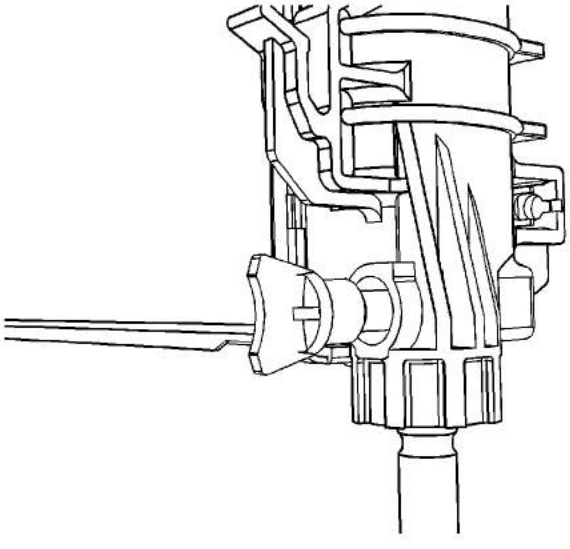

Note: A 7.6 liter (8 qt) coolant container will be needed.

1. Place the coolant container under the radiator drain cock located at the bottom of the right radiator end tank.
2. Open the drain cock and drain the coolant. A small amount of coolant will drain from the system.

cardiagn.com

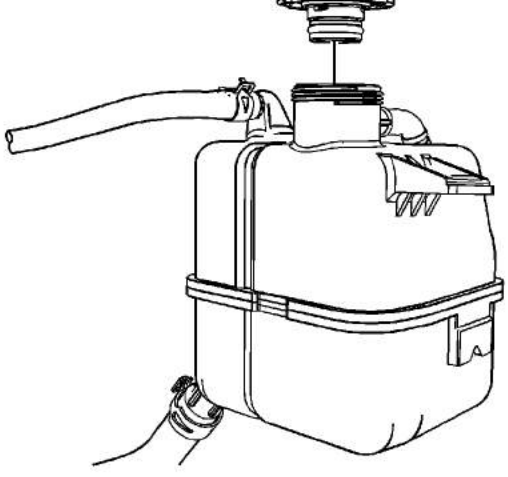

3. Remove the surge tank cap from the surge tank and the coolant will drain from the system.

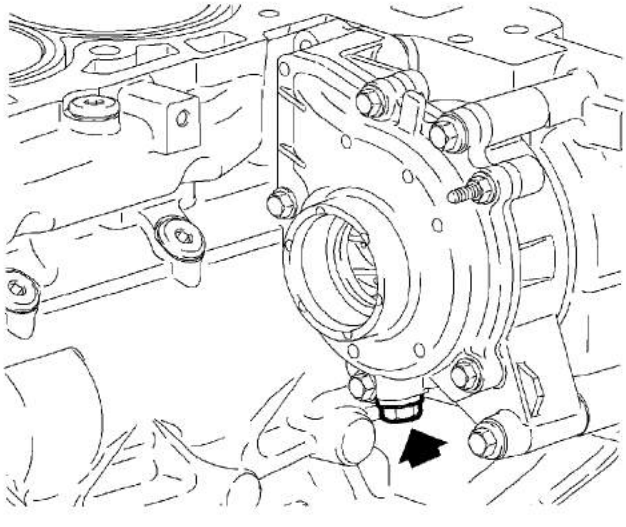

4. For LE5 and LAT vehicles, if the engine block needs to be drained, a drain bolt is located near the bottom of the water pump assembly.
5. Inspect the coolant.
6. Follow the appropriate procedure based on the condition of the coolant.
   - Normal in appearance--follow the filling procedure.
   - Discolored--follow the flush procedure. Refer to Coolant System Flushing.

Filling Procedure

Caution: All entrapped air must be purged from the powertrain cooling system before the final coolant level can be determined. Proper coolant level is critical to avoid engine damage.

cardiagn.com

1. Slowly add a mixture of 50/50 DEX-COOL antifreeze and clean water to the coolant surge tank. Fill the cooling system as indicated below:
   - For LE5/LAT vehicles when the engine block is not drained, add 3.5 liters (3.7 qts)
   - For LE5/LAT vehicles when the engine block is drained, add 6 liters (6.3 qts)
   - For LZ4/LY7 vehicles, add 5 liters (5.3 qts)
2. Start the engine and check for leaks.
3. Run the engine and cycle the vehicle from idle to 3,000 RPM in 30 second intervals until the engine cooling fan comes ON, the engine cooling fan turns ON at approximately 102°C (216° F). Repeat this process twice before the engine is turned OFF.
4. Return the engine to idle, and idle for 30 seconds, then turn the engine OFF.
5. Allow the vehicle to cool, before adding additional coolant.

   Note: The level in the surge tank will return into the cold fill range once the vehicle cools.

6. Add additional coolant to the surge tank until the level is approximately 13 mm (0.5 in) above the surge tank seam.
7. Install the coolant surge tank cap.

cardiagn.com

Cooling System Draining and Filling (GE 47716 Fill With HP5)

Special Tools

- *J 26568* Coolant and Battery Fluid Tester
- *GE-47716* Vac N Fill Coolant Refill Tool
- *J 42401* Radiator Pressure Adapter

Draining Procedure

Warning: In order to avoid personal injury, do not remove the cap or open the cooling system drains from a hot system. Allow the system to cool first.

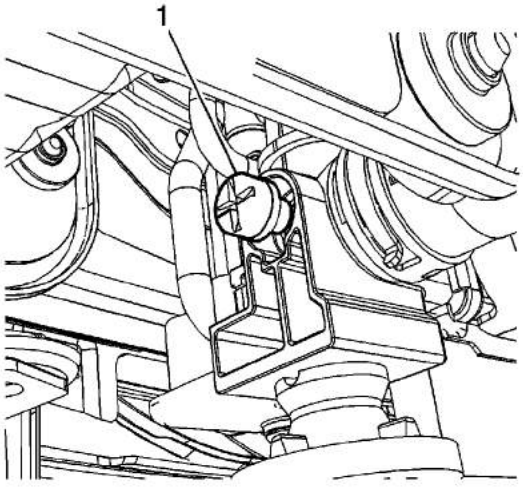

Note: A 7.6 liter (8 qt) coolant container will be needed.

1. Place the coolant container under the radiator drain cock located at the bottom of the left radiator end tank.
2. Open the drain cock and drain the coolant. A small amount of coolant will drain from the system.

cardiagn.com

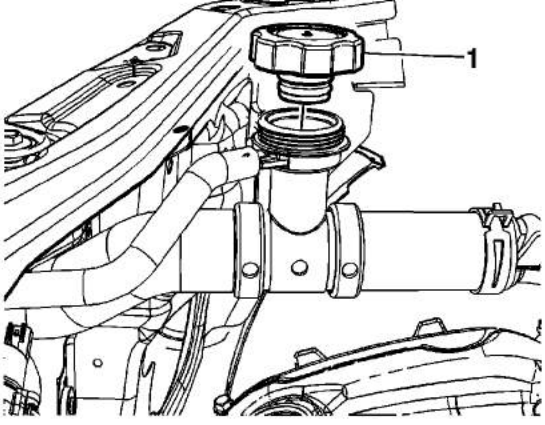

3. Remove the pressure cap (1) from the radiator inlet hose and the coolant will drain from the system.
4. Inspect the coolant.
5. Follow the appropriate procedure based on the condition of the coolant.
   - Normal in appearance--follow the filling procedure.
   - Discolored--follow the flush procedure. Refer to Coolant System Flushing

Vac-N-Fill Procedure

Warning: To avoid being burned, do not remove the radiator cap or surge tank cap while the engine is hot. The cooling system will release scalding fluid and steam under pressure if radiator cap or surge tank cap is removed while the engine and radiator are still hot.

Note: To prevent boiling of the coolant/water mixture in the vehicle's cooling system, do not apply vacuum to a cooling system above 49°C (120°F). The tool will not operate properly when the coolant is boiling.

cardiagn.com

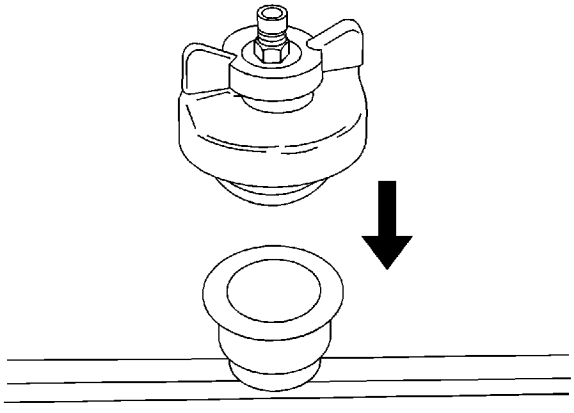

1. Install J 42401-2 into the surge tank fill neck.
2. Install J 42401-3 to the surge tank fill neck.
3. Attach the Vac N Fill cap to the J 42401-3.

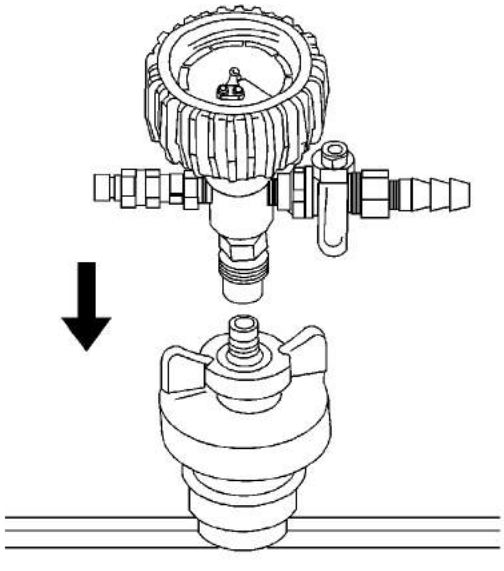

4. Attach the vacuum gage assembly to the Vac N Fill cap.

cardiagn.com

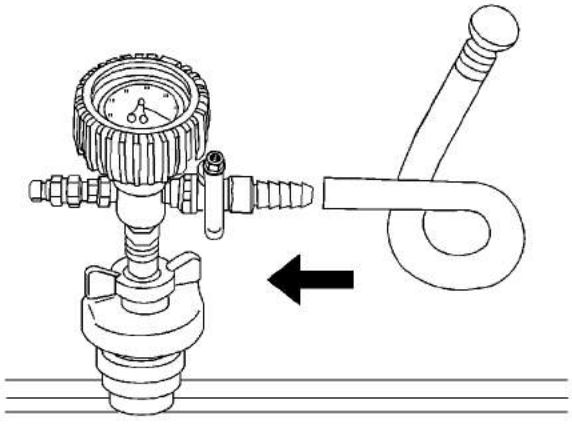

5. Attach the fill hose to the barb fitting on the vacuum gage assembly.

   Ensure that the valve is closed.

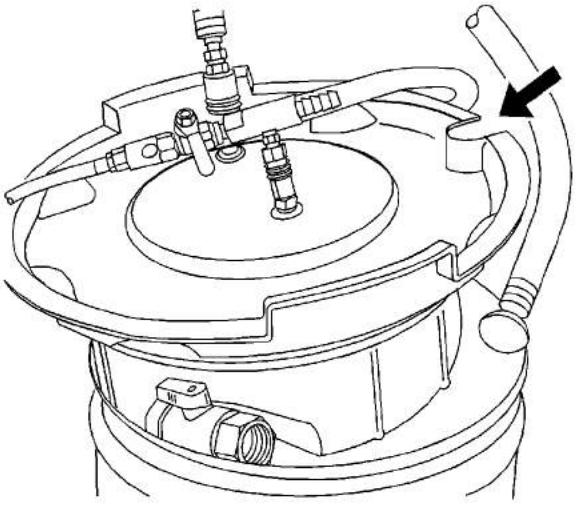

Note: Use a 50/50 mixture of DEX-COOL antifreeze and de-ionized water.

Always use more coolant than necessary. This will eliminate air from being drawn into the cooling system.

6. Pour the coolant mixture into the graduated reservoir.
7. Place the fill hose in the graduated reservoir.

cardiagn.com

8. Install the vacuum tank on the graduated reservoir with the fill hose routed through the cut-out area in the vacuum tank.

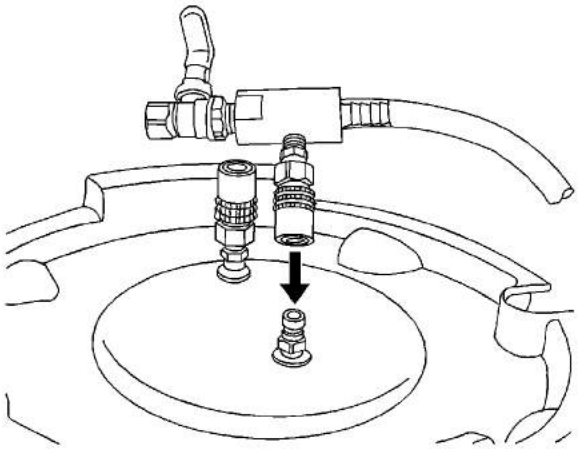

9. Attach the venturi assembly to the vacuum tank.

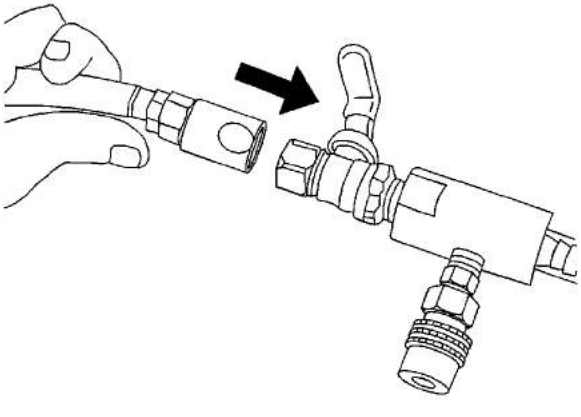

10. Attach a shop air hose to the venturi assembly.

    Ensure the valve on the venturi assembly is closed.

cardiagn.com

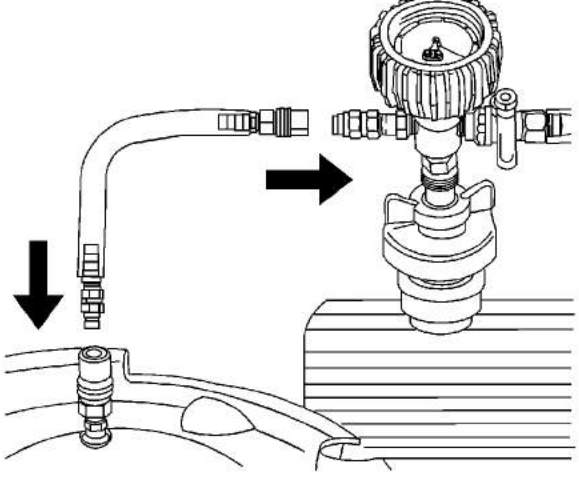

11. Attach the vacuum hose to the vacuum gage assembly and the vacuum tank.

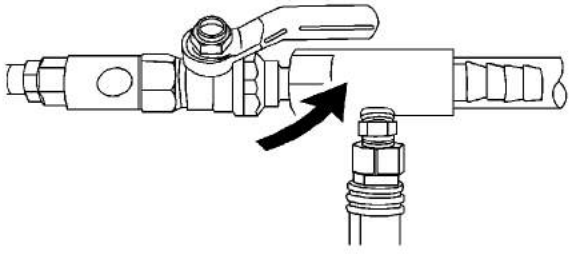

12. Open the valve on the venturi assembly. The vacuum gage will begin to rise and a hissing noise will be present.

cardiagn.com

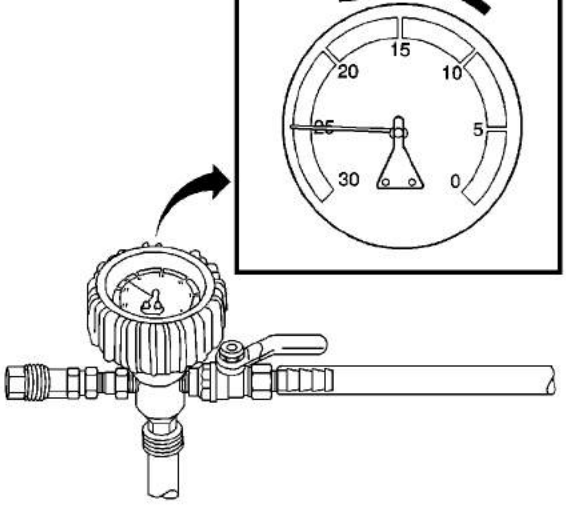

13. Continue to draw vacuum until the needle stops rising. This should be 610-660 mm Hg (24-26 in Hg).

    Cooling hoses may start to collapse. This is normal due to vacuum draw.

14. To aid in the fill process, position the graduated reservoir above the surge tank.

Object Number: 1617446 Size: SH

15. Slowly open the valve on the vacuum gage assembly. When the coolant reaches the top of the fill hose, close the valve. This will eliminate air from the fill hose.
16. Close the valve on the venturi assembly.
17. If there is a suspected leak in the cooling system, allow the system to stabilize under vacuum and monitor for vacuum loss.

    If vacuum loss is observed, refer to Loss of Coolant.

cardiagn.com

Object Number: 1617448 Size: SH

19. Once the vacuum gage reaches zero, close the valve on the vacuum gage assembly and repeat steps 12-18.

Object Number: 1617450 Size: SH

20. Detach the Vac N Fill cap from the J 42401-3.
21. Remove J 42401-2 from the surge tank fill neck.
22. Add coolant to the system as necessary.
23. Inspect the concentration of the coolant mixture using *J 26568* Coolant and Battery Fluid Tester .

Note: After filling the cooling system, the extraction hose can be used to remove excess coolant to achieve the proper coolant level.

cardiagn.com

Object Number: 1617453 Size: SH

26. Open the valve on the venturi assembly to start a vacuum draw.

Object Number: 1617456 Size: SH

27. Use the extraction hose to draw out coolant to the proper level.
28. The vacuum tank has a drain valve on the bottom of the tank. Open the valve to drain coolant from the vacuum tank into a suitable container for disposal.

cardiagn.com

Cooling System Draining and Filling (GE 47716 Fill Without HP5)

Special Tools

- *J 26568* Coolant and Battery Fluid Tester
- *GE-47716* Vac N Fill Coolant Refill Tool
- *J 42401* Radiator Pressure Adapter

Draining Procedure

Warning: In order to avoid personal injury, do not remove the cap or open the cooling system drains from a hot system. Allow the system to cool first.

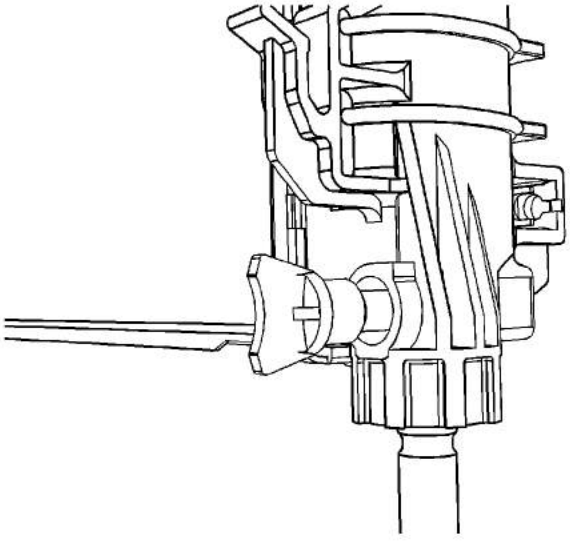

Note: A 7.6 liter (8 qt) coolant container will be needed.

1. Place the coolant container under the radiator drain cock located at the bottom of the right radiator end tank.
2. Open the drain cock and drain the coolant. A small amount of coolant will drain from the system.

cardiagn.com

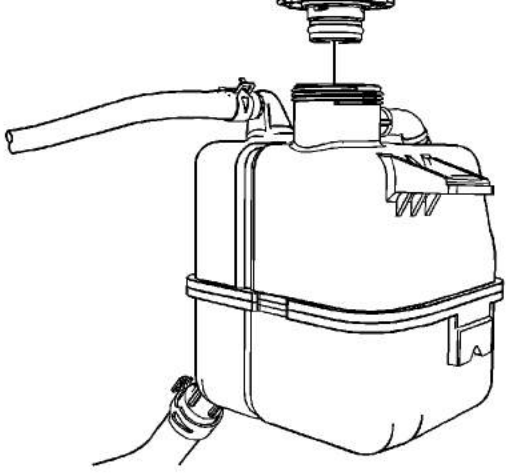

3. Remove the surge tank cap from the surge tank and the coolant will drain from the system.

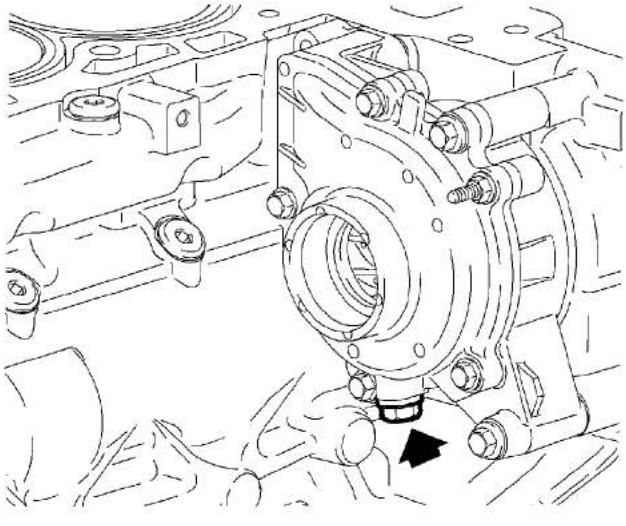

4. For LE5 and LAT vehicles, if the engine block needs to be drained, a drain bolt is located near the bottom of the water pump assembly.
5. Inspect the coolant.
6. Follow the appropriate procedure based on the condition of the coolant.
   - Normal in appearance--Follow the filling procedure.
   - Discolored--Follow the flush procedure. Refer to Coolant System Flushing.

Vac-N-Fill Procedure

Warning: To avoid being burned, do not remove the radiator cap or surge tank cap while the engine is hot. The cooling system will release scalding fluid and steam under pressure if

cardiagn.com

Note: To prevent boiling of the coolant/water mixture in the vehicle's cooling system, do not apply vacuum to a cooling system above 49°C (120°F). The tool will not operate properly when the coolant is boiling.

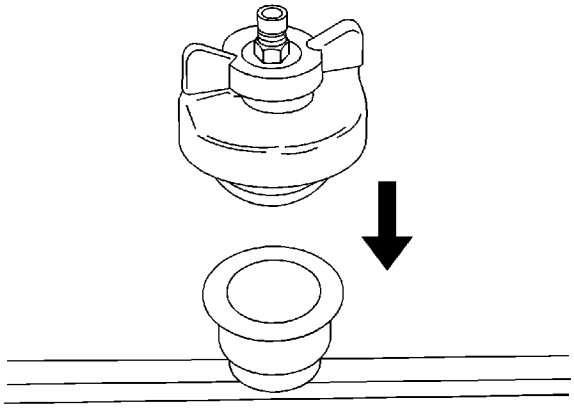

1. Install J 42401-2 into the surge tank fill neck.
2. Install J 42401-3 to the surge tank fill neck.
3. Attach the Vac N Fill cap to the J 42401-3.

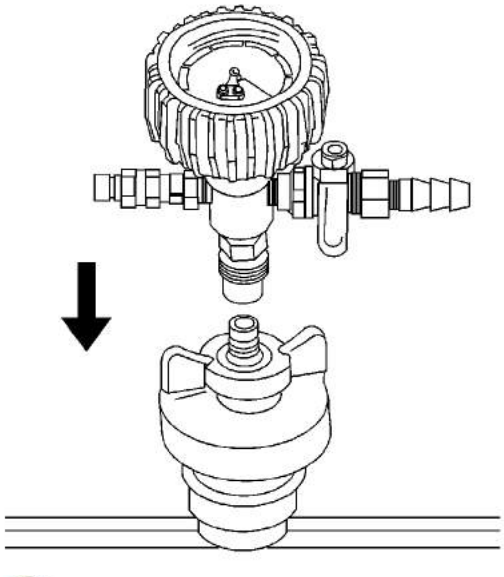

4. Attach the vacuum gage assembly to the Vac N Fill cap.

cardiagn.com

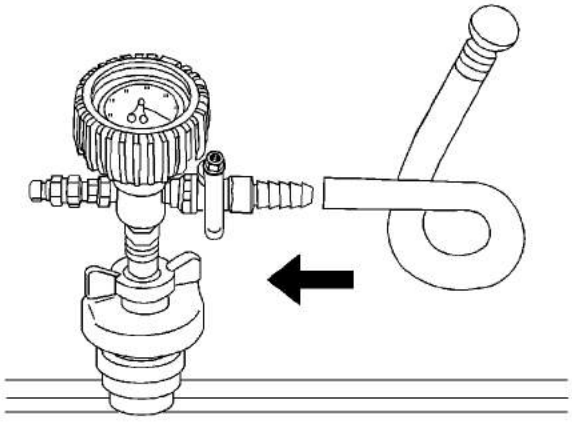

5. Attach the fill hose to the barb fitting on the vacuum gage assembly.

   Ensure that the valve is closed.

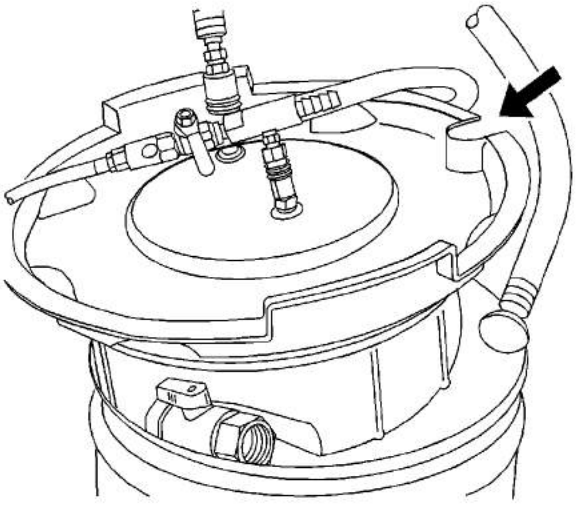

Note: Use a 50/50 mixture of DEX-COOL antifreeze and de-ionized water.

Always use more coolant than necessary. This will eliminate air from being drawn into the cooling system.

6. Pour the coolant mixture into the graduated reservoir.
7. Place the fill hose in the graduated reservoir.

cardiagn.com

8. Install the vacuum tank on the graduated reservoir with the fill hose routed through the cut-out area in the vacuum tank.

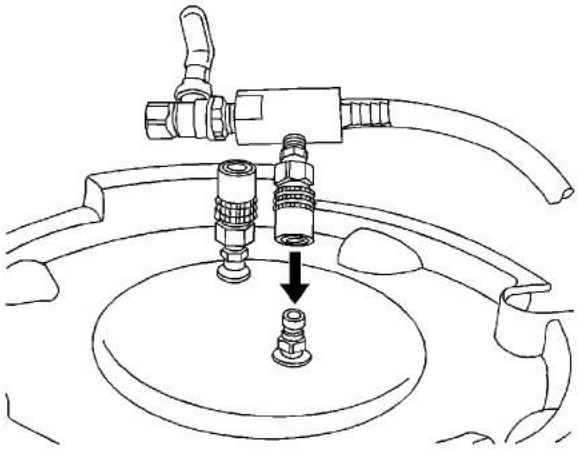

9. Attach the venturi assembly to the vacuum tank.

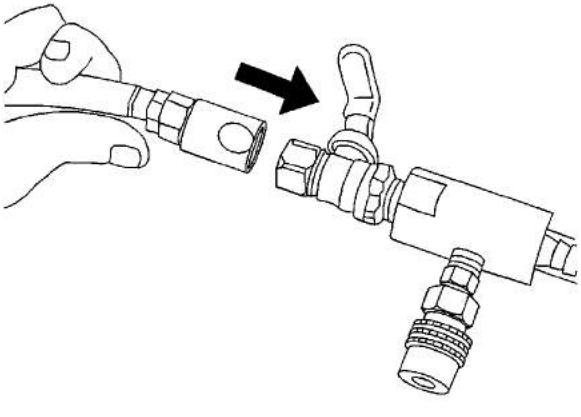

10. Attach a shop air hose to the venturi assembly.

    Ensure the valve on the venturi assembly is closed.

cardiagn.com

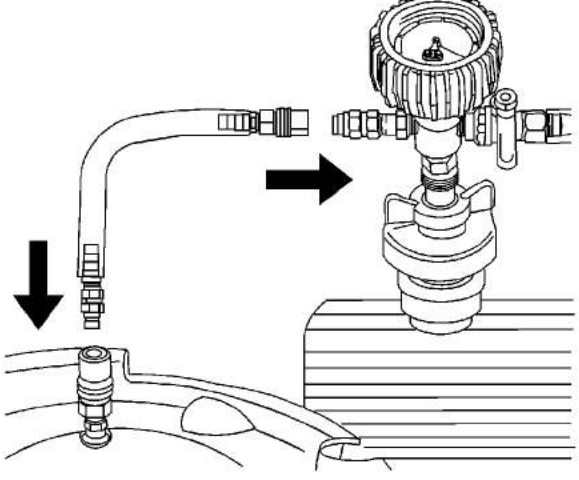

11. Attach the vacuum hose to the vacuum gage assembly and the vacuum tank.

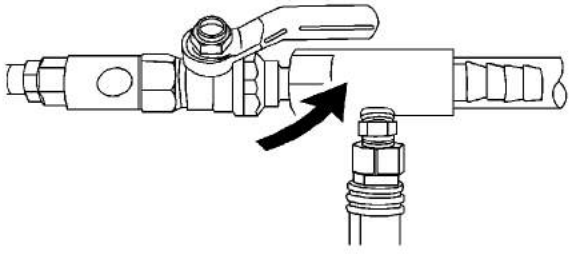

12. Open the valve on the venturi assembly. The vacuum gage will begin to rise and a hissing noise will be present.

cardiagn.com

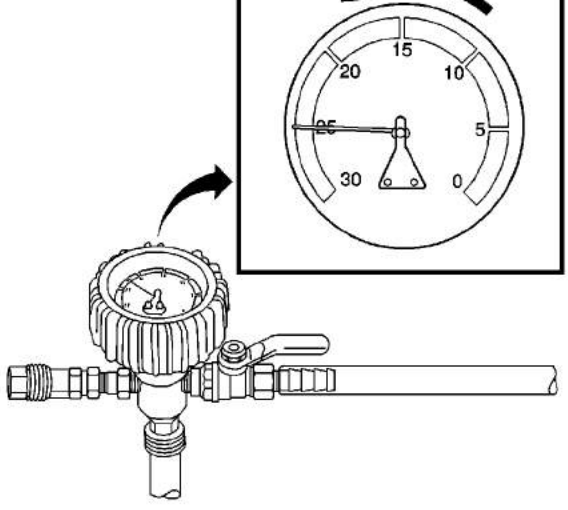

13. Continue to draw vacuum until the needle stops rising. This should be 610-660 mm Hg (24-26 in Hg).

    Cooling hoses may start to collapse. This is normal due to vacuum draw.

14. To aid in the fill process, position the graduated reservoir above the surge tank.

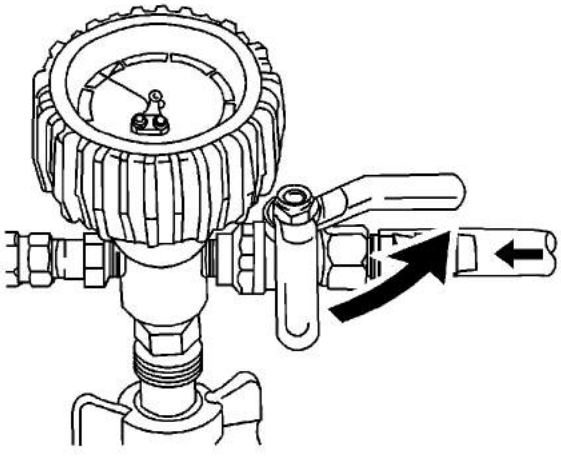

15. Slowly open the valve on the vacuum gage assembly. When the coolant reaches the top of the fill hose, close the valve. This will eliminate air from the fill hose.
16. Close the valve on the venturi assembly.
17. If there is a suspected leak in the cooling system, allow the system to stabilize under vacuum and monitor for vacuum loss.

    If vacuum loss is observed, refer to Loss of Coolant.

cardiagn.com

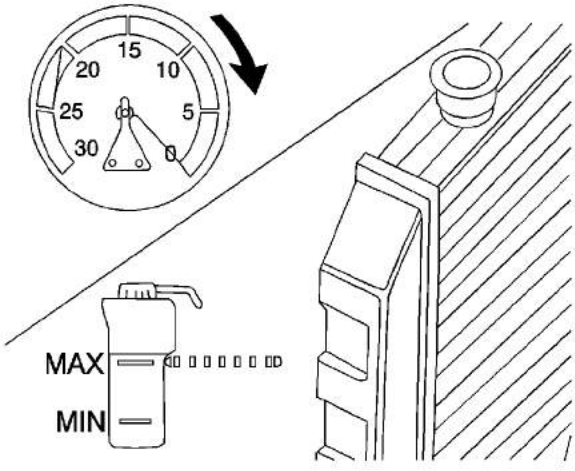

19. Once the vacuum gage reaches zero, close the valve on the vacuum gage assembly and repeat steps 12-18.

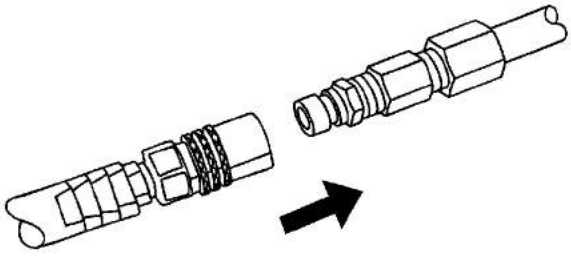

20. Detach the Vac N Fill cap from the J 42401-3.
21. Remove J 42401-2 from the surge tank fill neck.
22. Add coolant to the system as necessary.
23. Inspect the concentration of the coolant mixture using *J 26568* Coolant and Battery Fluid Tester .

Note: After filling the cooling system, the extraction hose can be used to remove excess coolant to achieve the proper coolant level.

cardiagn.com

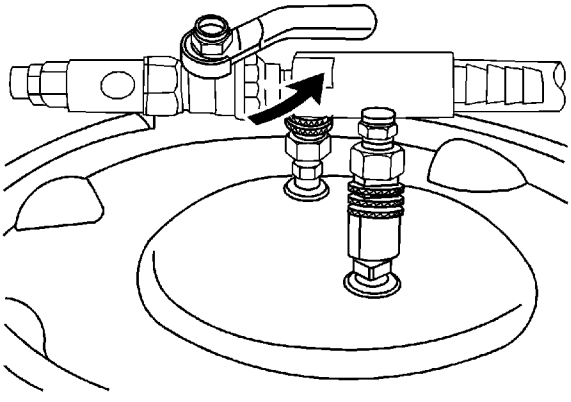

26. Open the valve on the venturi assembly to start a vacuum draw.

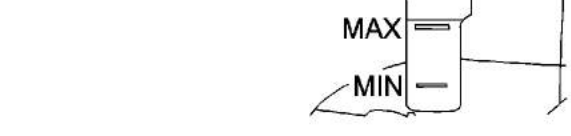

27. Use the extraction hose to draw out coolant to the proper level.
28. The vacuum tank has a drain valve on the bottom of the tank. Open the valve to drain coolant from the vacuum tank into a suitable container for disposal.

cardiagn.com

Coolant System Flushing (With HP5)

Note: This procedure is intended for the engine cooling system only. Never use this procedure to flush the hybrid cooling system.

Note: Do not use a chemical flush.

Store used coolant in the proper manner, such as in a used engine coolant holding tank. Do not pour used coolant down a drain. Ethylene glycol antifreeze is a very toxic chemical. Do not dispose of coolant into the sewer system or ground water. This is illegal and ecologically unsound.

Various methods and equipment can be used to flush the cooling system. If special equipment is used, such as a back flusher, follow the manufacturer's instruction. Always remove the thermostat before flushing the cooling system.

When the cooling system becomes contaminated, the cooling system should be flushed thoroughly to remove the contaminants before the engine is seriously damaged.

1. Drain the cooling system. Refer to Cooling System Draining and Filling.
2. Remove the coolant recovery reservoir. Refer to Coolant Recovery Reservoir Replacement.
3. Clean and flush the coolant recovery reservoir with clean, drinkable water.
4. Install the coolant recovery reservoir. Refer to Coolant Recovery Reservoir Replacement.
5. Follow the drain and fill procedure using only clean, drinkable water. Refer to Cooling System Draining and Filling.
6. Run the engine for 20 minutes.
7. Stop the engine.
8. Drain the cooling system. Refer to Cooling System Draining and Filling
9. Repeat the procedure if necessary, until the fluid is nearly colorless.
10. Fill the cooling system. Refer to Cooling System Draining and Filling.

cardiagn.com

Coolant System Flushing (Without HP5)

Note: This procedure is intended for the engine cooling system only. Never use this procedure to flush the hybrid cooling system.

Note: Do not use a chemical flush.

Store used coolant in the proper manner, such as in a used engine coolant holding tank. Do not pour used coolant down a drain. Ethylene glycol antifreeze is a very toxic chemical. Do not dispose of coolant into the sewer system or ground water. This is illegal and ecologically unsound.

Various methods and equipment can be used to flush the cooling system. If special equipment is used, such as a back flusher, follow the manufacturer's instruction. Always remove the thermostat before flushing the cooling system.

When the cooling system becomes contaminated, the cooling system should be flushed thoroughly to remove the contaminants before the engine is seriously damaged.

1. Drain the cooling system. Refer to Cooling System Draining and Filling.
2. Remove the surge tank. Refer to Radiator Surge Tank Replacement.
3. Clean and flush the surge tank with clean, drinkable water.
4. Install the surge tank. Refer to Radiator Surge Tank Replacement.
5. Follow the drain and fill procedure using only clean, drinkable water. Refer to Cooling System Draining and Filling.
6. Run the engine for 20 minutes.
7. Stop the engine.
8. Drain the cooling system. Refer to Cooling System Draining and Filling
9. Repeat the procedure if necessary, until the fluid is nearly colorless.
10. Fill the cooling system. Refer to Cooling System Draining and Filling.

cardiagn.com

Radiator Surge Tank Replacement

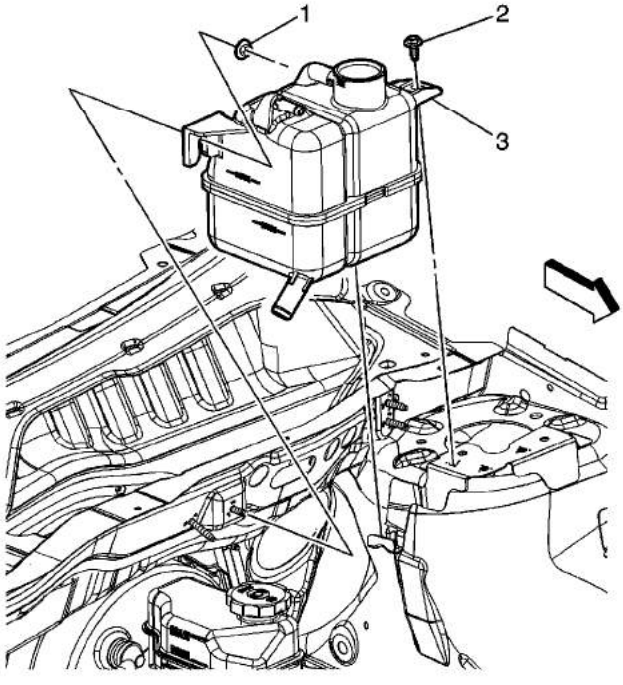

Callout	Component Name
Preliminary Procedures 1. Drain the cooling system. Refer to Cooling System Draining and Filling. 2. Remove surge tank inlet hose from surge tank. Refer to Radiator Surge Tank Inlet Hose/Pipe Replacement. 3. Remove surge tank outlet hose from surge tank. Refer to Radiator Surge Tank Outlet Hose/Pipe Replacement.	
1	Surge Tank Nut **Caution:** Refer to Fastener Caution in the Preface section. **Tighten** 8 N·m (71 lb in)
2	Surge Tank Bolt **Tighten** 8 N·m (71 lb in)
3	Surge Tank

cardiagn.com

Coolant Recovery Reservoir Replacement (HP5)

Removal Procedure

1. Drain the cooling system. Refer to Cooling System Draining and Filling
2. Remove the underhood junction block. Refer to Underhood Electrical Center or Junction Block Replacement
3. Remove the radiator vent inlet hose. Refer to Radiator Vent Inlet Hose Replacement

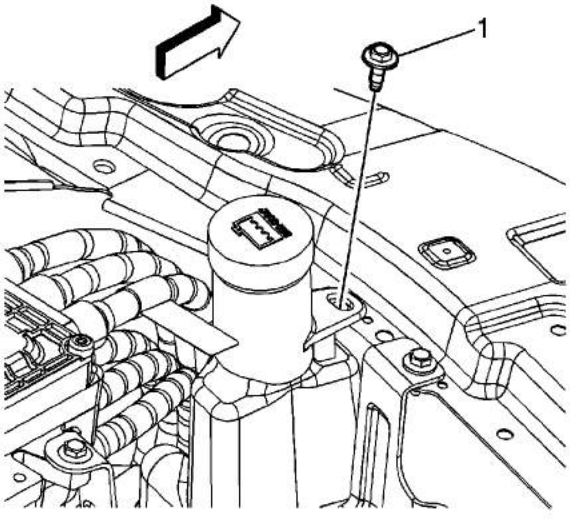

4. Remove the coolant recovery reservoir bolt (1).

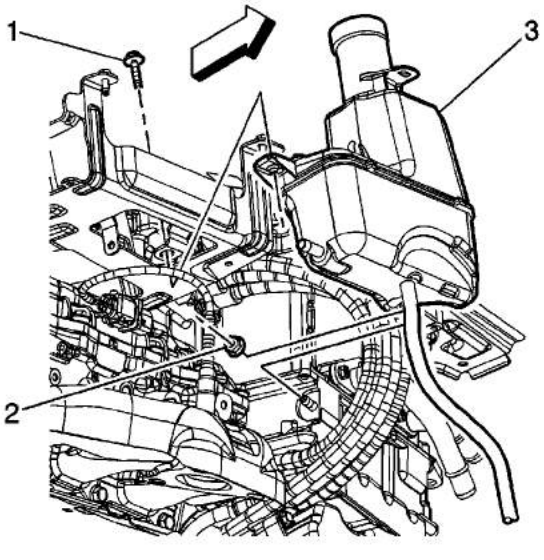

5. Remove the coolant recovery reservoir bolt (1).

© 2010 General Motors Corporation. All rights reserved.

cardiagn.com

8. Remove the coolant recovery reservoir (3) from the vehicle.

Installation Procedure

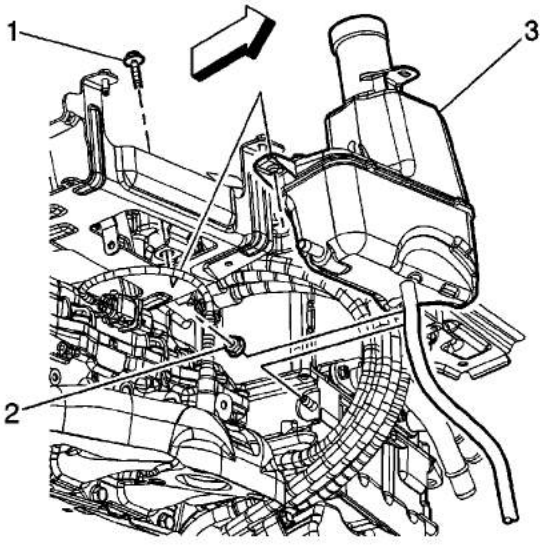

1. Install the coolant recovery reservoir (3) to the vehicle.
2. Clip the coolant recovery reservoir hose to the fan shroud.

Caution: Refer to Fastener Caution in the Preface section.

3. Install the coolant recovery reservoir nut (2) and tighten to **7.5 N·m (66 lb in)**.
4. Install the coolant recovery reservoir bolt (1) and tighten to **7.5 N·m (66 lb in)**.

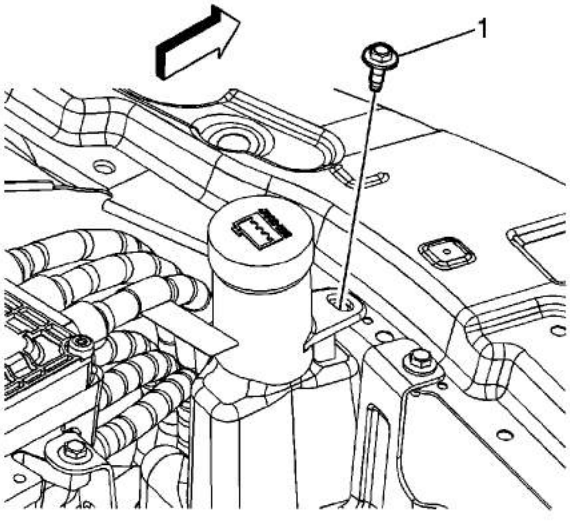

cardiagn.com

5. Install the coolant recovery reservoir bolt (1) and tighten to **7.5 N·m (66 lb in)**.
6. Install the radiator vent inlet hose. Refer to Radiator Vent Inlet Hose Replacement
7. Install the underhood junction block. Refer to Underhood Electrical Center or Junction Block Replacement
8. Fill the cooling system. Refer to Cooling System Draining and Filling

cardiagn.com

Radiator Surge Tank Inlet Hose/Pipe Replacement (LAT)

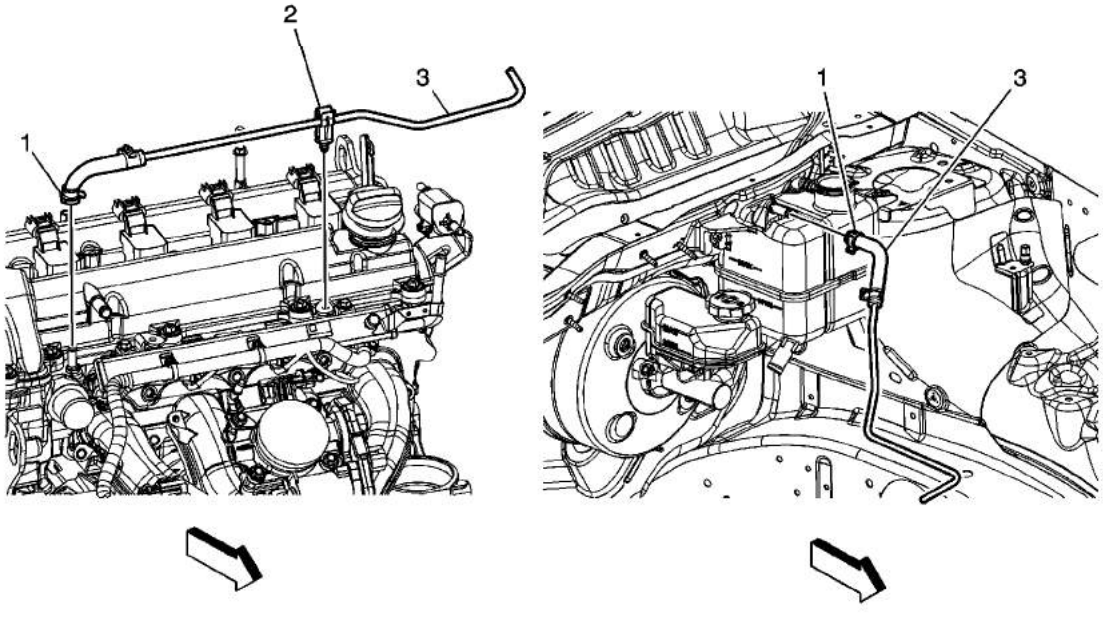

Callout	Component Name
Preliminary Procedures 1. Partially drain the cooling system. Refer to Cooling System Draining and Filling . 2. Remove the engine cover.	
1	Radiator surge tank inlet hose/pipe clamps (Qty 2).
2	Radiator surge tank inlet hose/pipe clip.
3	Radiator surge tank inlet hose/pipe.

cardiagn.com

Radiator Surge Tank Inlet Hose/Pipe Replacement (LE5)

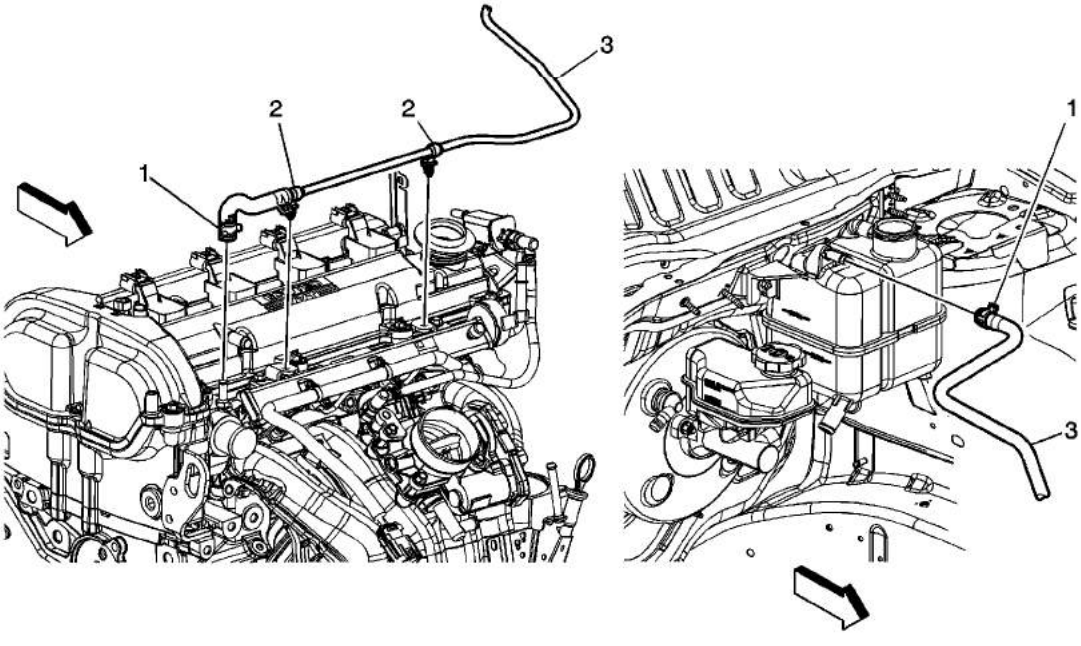

Callout	Component Name
Preliminary Procedures 1. Partially drain the cooling system. Refer to Cooling System Draining and Filling . 2. Remove the engine cover.	
1	Radiator surge tank inlet hose/pipe clamps (Qty 2).
2	Radiator surge tank inlet hose/pipe clips (Qty 2).
3	Radiator surge tank inlet hose/pipe.

cardiagn.com

Radiator Surge Tank Inlet Hose/Pipe Replacement (LZ4)

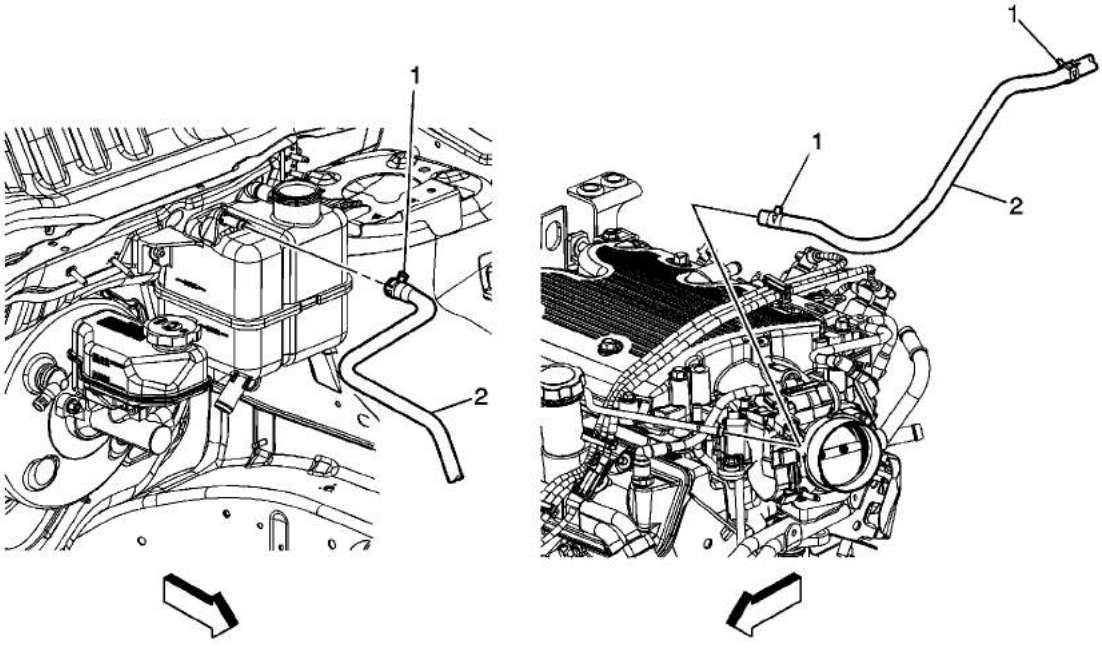

Callout	Component Name
Preliminary Procedures 1. Partially drain the cooling system. Refer to Cooling System Draining and Filling . 2. Remove the engine cover.	
1	Radiator surge tank inlet hose/pipe clamps (Qty 2).
2	Radiator surge tank inlet hose/pipe.

cardiagn.com

Radiator Surge Tank Inlet Hose/Pipe Replacement (LY7)

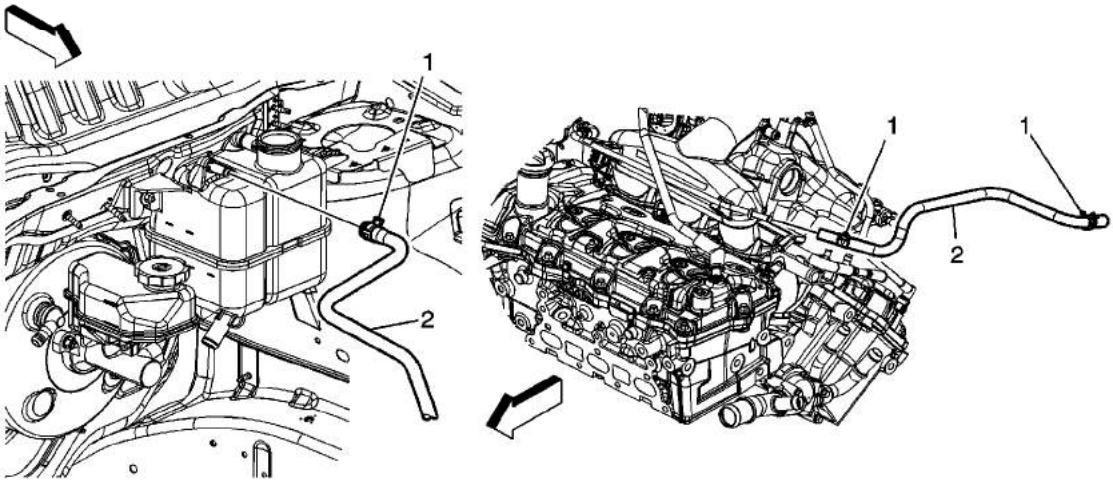

Callout	Component Name
Preliminary Procedures 1. Partially drain the cooling system. Refer to Cooling System Draining and Filling . 2. Remove the engine cover.	
1	Radiator surge tank inlet hose/pipe clamps (Qty 2).
2	Radiator surge tank inlet hose/pipe.

cardiagn.com

Radiator Surge Tank Outlet Hose/Pipe Replacement (LAT)

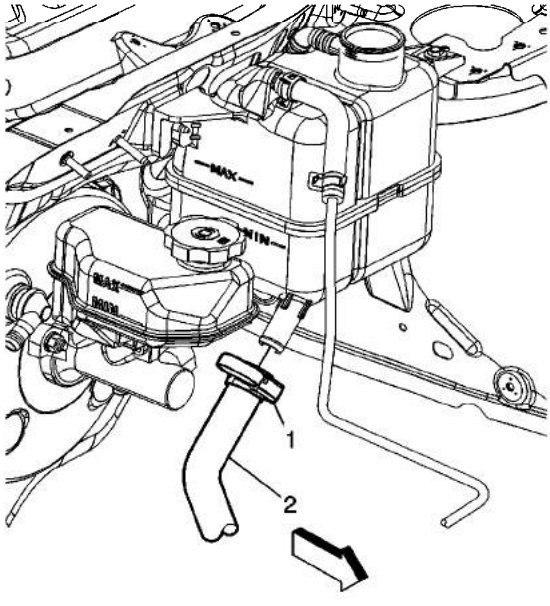

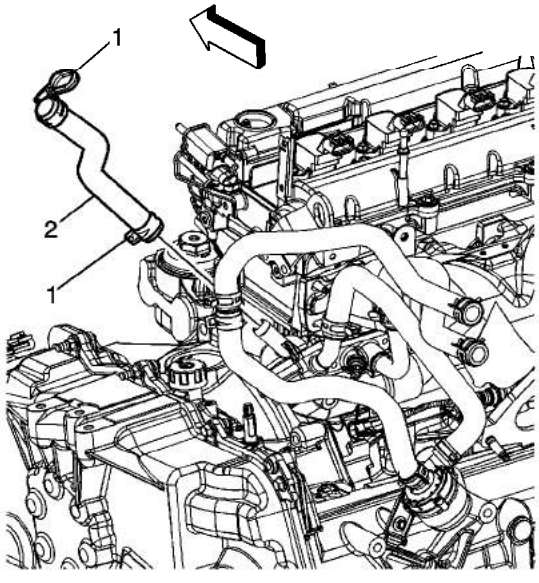

Callout	Component Name
Preliminary Procedures 1. Partially drain the cooling system. Refer to Cooling System Draining and Filling . 2. Remove the engine cover. 3. Remve the bolt holding the engine wiring harness at the rear of the cylindar head and position out of the way.	
1	Radiator Surge Tank Outlet Hose/Pipe Clamp (Qty: 2)
2	Radiator Surge Tank Outlet Hose/Pipe

cardiagn.com

Radiator Surge Tank Outlet Hose/Pipe Replacement (LY7)

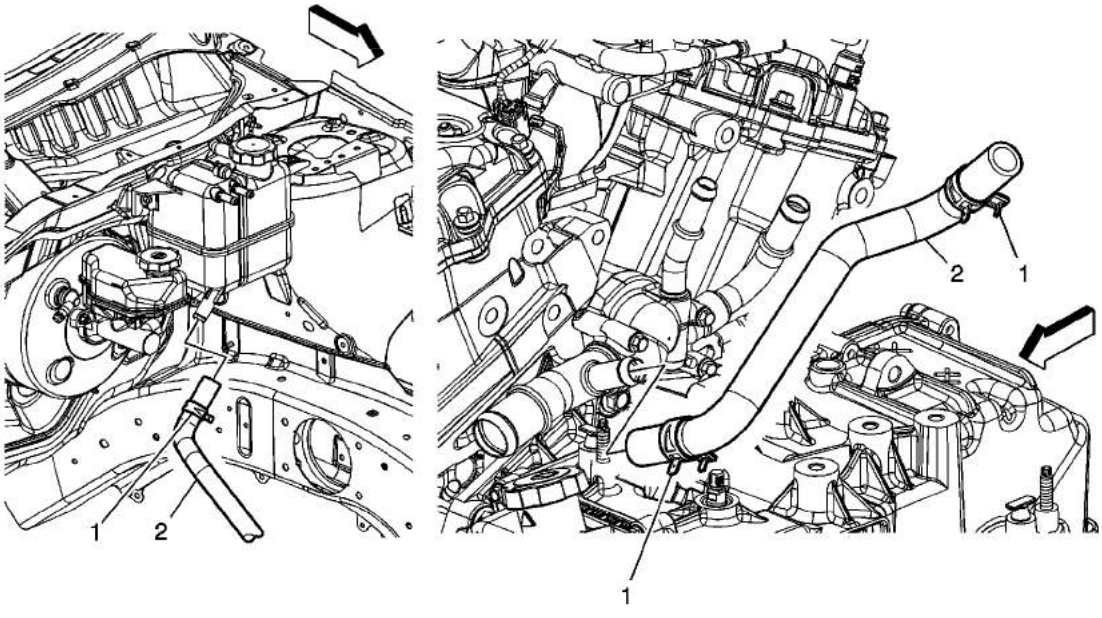

Callout	Component Name
Preliminary Procedures 1. Partially drain the cooling system. Refer to Cooling System Draining and Filling . 2. Remove the engine cover.	
1	Radiator surge tank outlet hose/pipe clamps (Qty 2).
2	Radiator surge tank outlet hose/pipe.

cardiagn.com

Radiator Surge Tank Outlet Hose/Pipe Replacement (LE5)

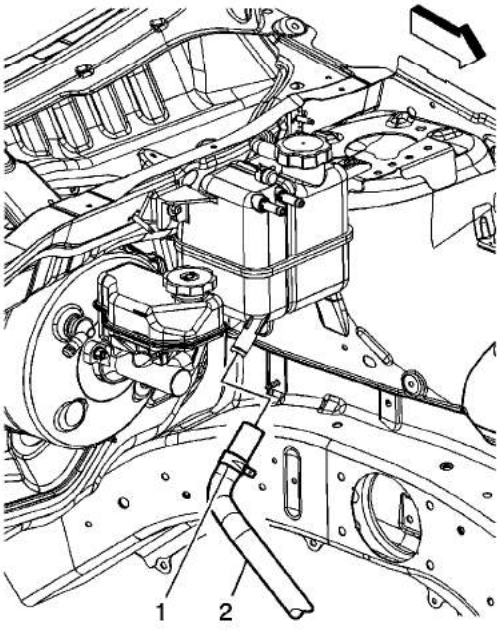

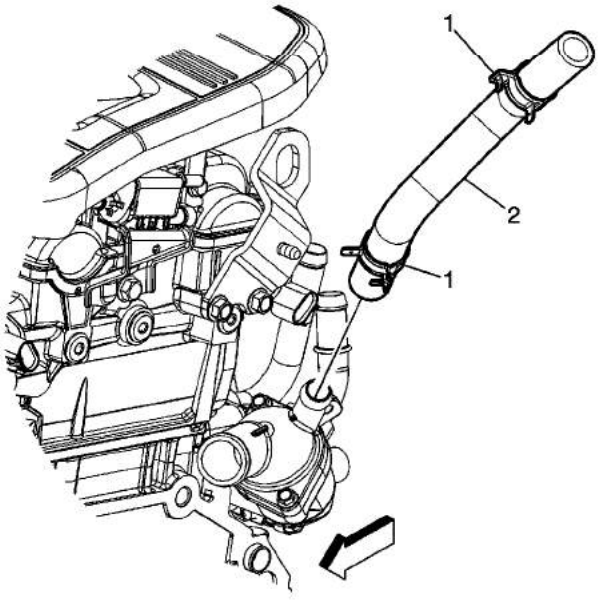

Callout	Component Name
Preliminary Procedures 1. Partially drain the cooling system. Refer to Cooling System Draining and Filling . 2. Remove the engine cover.	
1	Radiator surge tank outlet hose/pipe clamps (Qty 2).
2	Radiator surge tank outlet hose/pipe.

cardiagn.com

Radiator Surge Tank Outlet Hose/Pipe Replacement (LZ4)

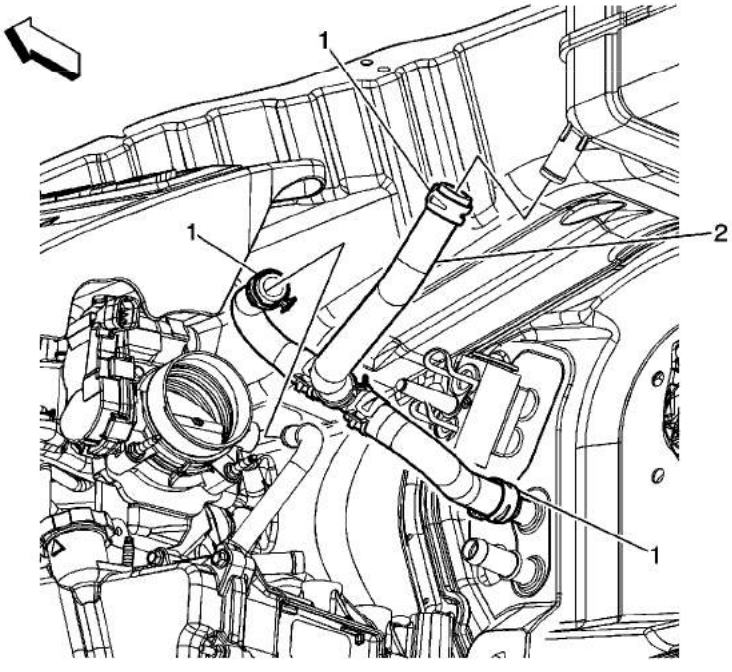

Callout	Component Name
Preliminary Procedures 1. Partially drain the cooling system. Refer to Cooling System Draining and Filling . 2. Remove the engine cover.	
1	Radiator surge tank outlet hose/pipe clamps (Qty 2).
2	Radiator surge tank outlet hose/pipe.

cardiagn.com

Front End Guard Replacement

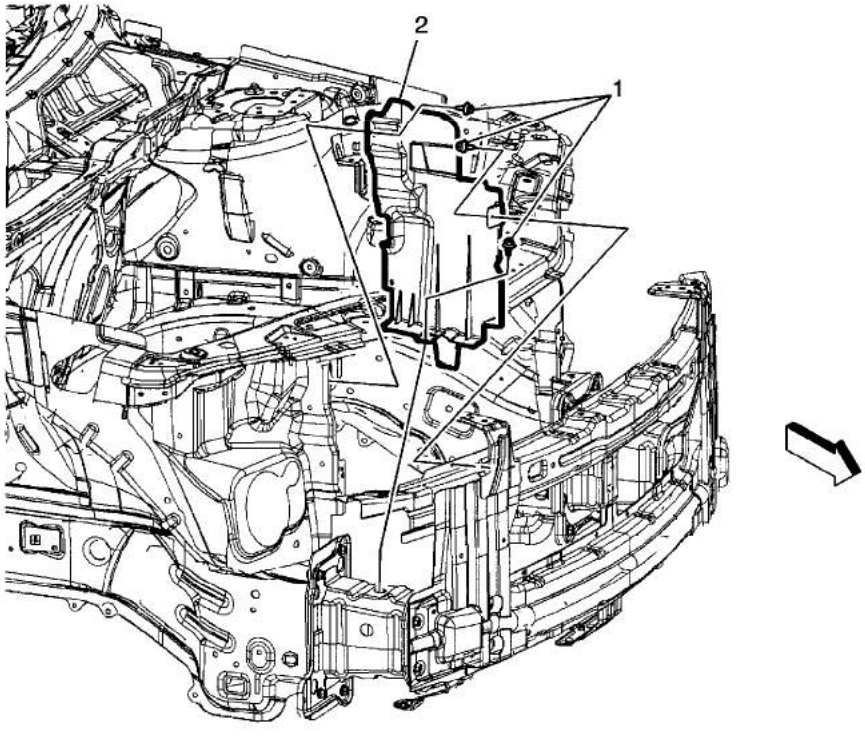

Callout	Component Name
Preliminary Procedures 1. Remove the radiator opening upper cover. Refer to Radiator Opening Upper Cover Replacement 2. Remove the right headlamp. Refer to Headlamp Replacement	
1	Front End Guard Retainers (Qty 3)
2	Front End Guard

cardiagn.com

Radiator Inlet Hose Replacement (LY7)

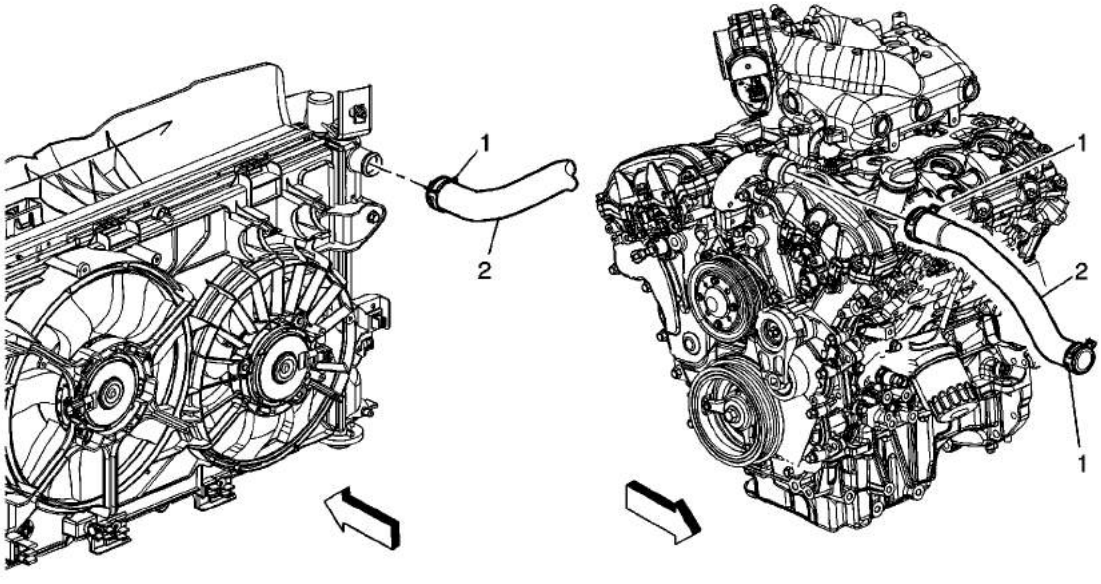

Callout	Component Name
Preliminary Procedures 1. Drain the cooling system. Refer to Cooling System Draining and Filling. 2. Remove radiator opening upper cover.	
1	Radiator Inlet Hose Clamp (Qty: 2)
2	Radiator Inlet Hose

cardiagn.com

Radiator Inlet Hose Replacement (LZ4)

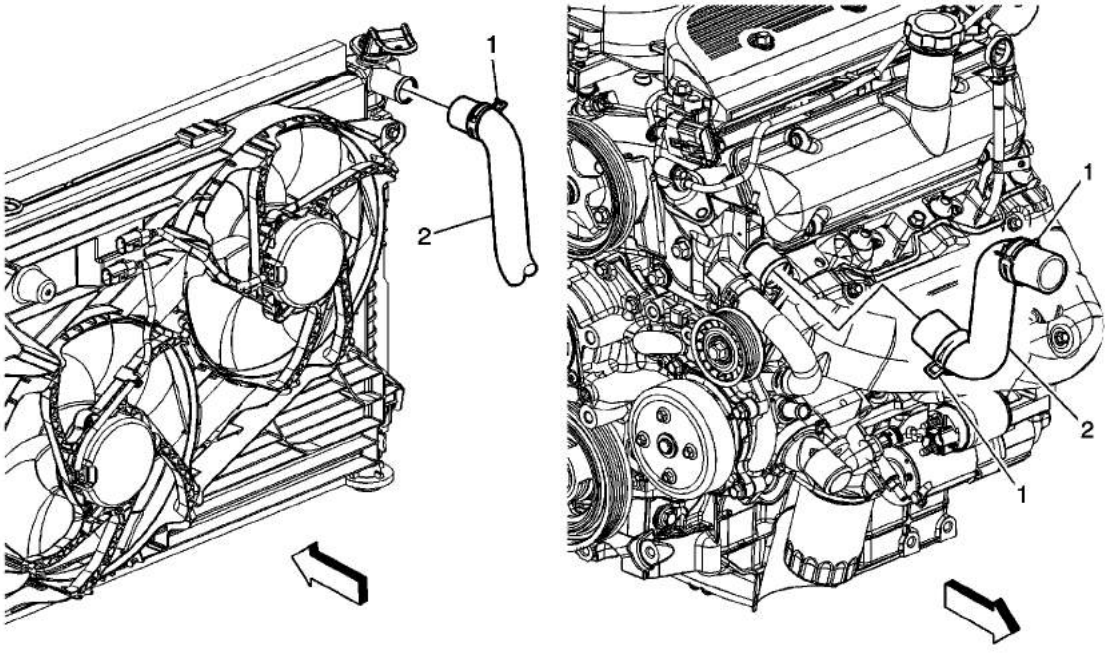

Callout	Component Name
Preliminary Procedures Drain the cooling system. Refer to Cooling System Draining and Filling.	
1	Radiator Inlet Hose Clamps (Qty 2).
2	Radiator Inlet Hose.

cardiagn.com

Radiator Inlet Hose Replacement (LAT)

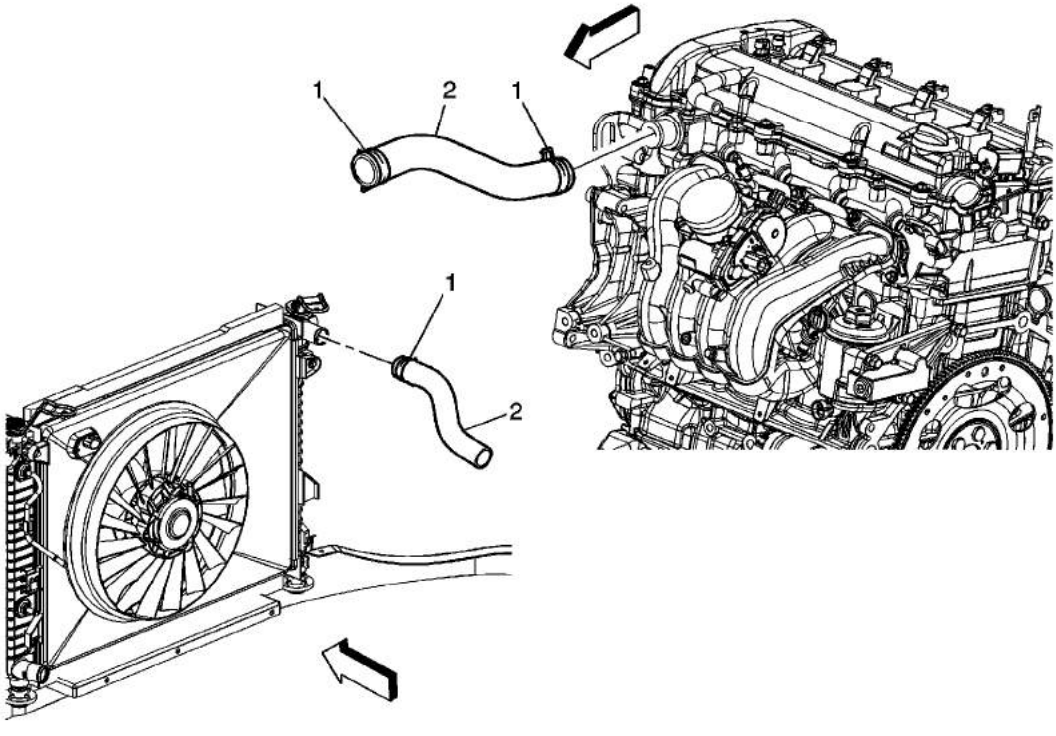

Callout	Component Name
Preliminary Procedures 1. Drain the cooling system. Refer to Cooling System Draining and Filling. 2. Remove radiator opening upper cover.	
1	Radiator Inlet Hose Clamps (Qty: 2)
2	Radiator Inlet Hose

cardiagn.com

Radiator Inlet Hose Replacement (LE5)

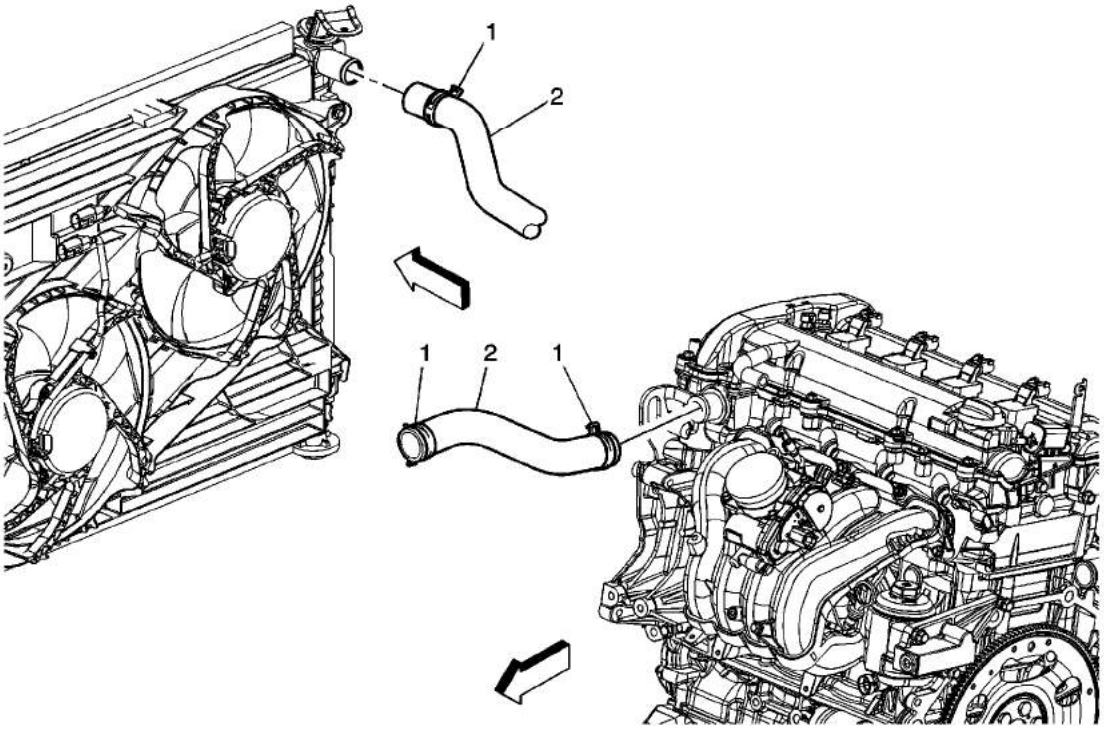

Callout	Component Name
Preliminary Procedures Drain the cooling system. Refer to Cooling System Draining and Filling.	
1	Radiator Intlet Hose Clamps (Qty 2).
2	Radiator Inlet Hose.

cardiagn.com

Radiator Inlet Hose Replacement (HP5)

Special Tools

J 38185 Hose Clamp Pliers

Removal Procedure

1. Drain the coolant. Refer to Cooling System Draining and Filling
2. Remove the fuel injector sight shield. Refer to Fuel Injector Sight Shield Replacement
3. Remove the radiator opening upper cover. Refer to Radiator Opening Upper Cover Replacement
4. Remove the front end guard. Refer to Front End Guard Replacement
5. Remove the radiator vent inlet hose from the radiator inlet hose. Refer to Radiator Vent Inlet Hose Replacement

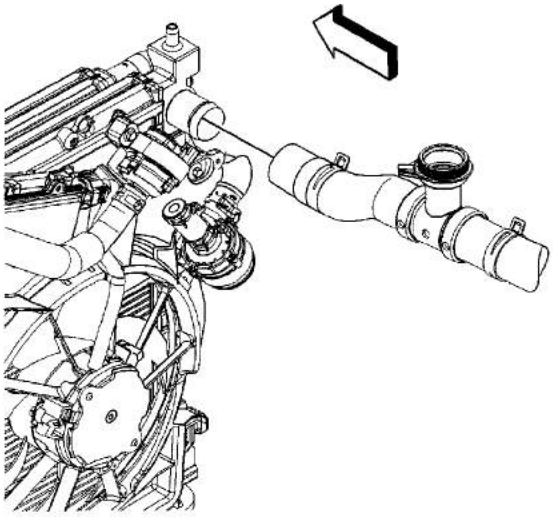

6. Using *J 38185* Hose Clamp Pliers disengage the tension on the hose clamp (1) and remove the radiator inlet hose (2) from the radiator.

cardiagn.com

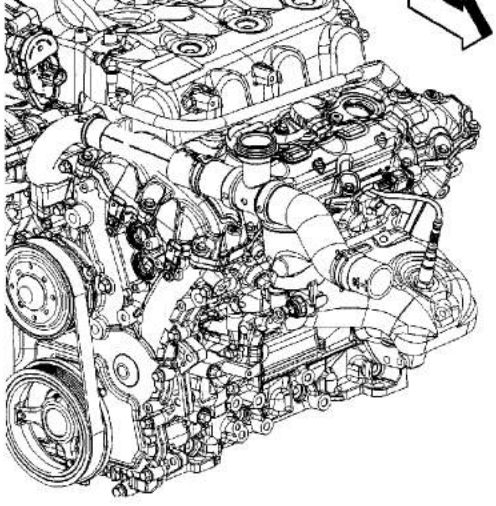

7. Using *J 38185* Hose Clamp Pliers disengage the tension on the hose clamp (1) and remove the radiator inlet hose (2) from the engine.
8. Remove the radiator inlet hose from the vehicle.

Installation Procedure

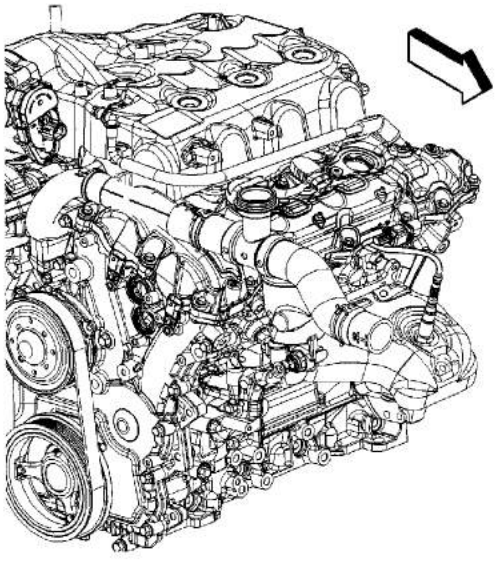

Note: Lubricate the inside diameters of the hoses with clean coolant prior to installation.

1. Install the inlet radiator hose into the vehicle.
2. Using *J 38185* Hose Clamp Pliers disengage the tension on the hose clamp and install the

cardiagn.com

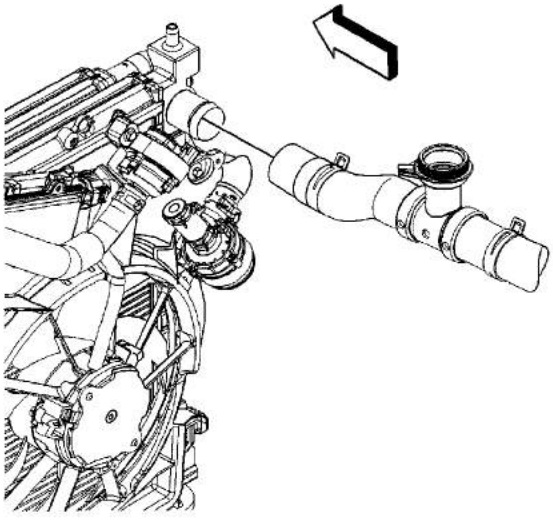

3. Using *J 38185* Hose Clamp Pliers disengage the tension on the hose clamp and Install the radiator inlet hose to the radiator.
4. Install the radiator vent inlet hose from the radiator inlet hose. Refer to Radiator Vent Inlet Hose Replacement
5. Install the front end guard. Refer to Front End Guard Replacement
6. Install the radiator opening upper cover. Refer to Radiator Opening Upper Cover Replacement
7. Install the fuel injector sight shield. Refer to Fuel Injector Sight Shield Replacement
8. Fill the coolant. Refer to Cooling System Draining and Filling

cardiagn.com

Radiator Outlet Hose Replacement (LAT)

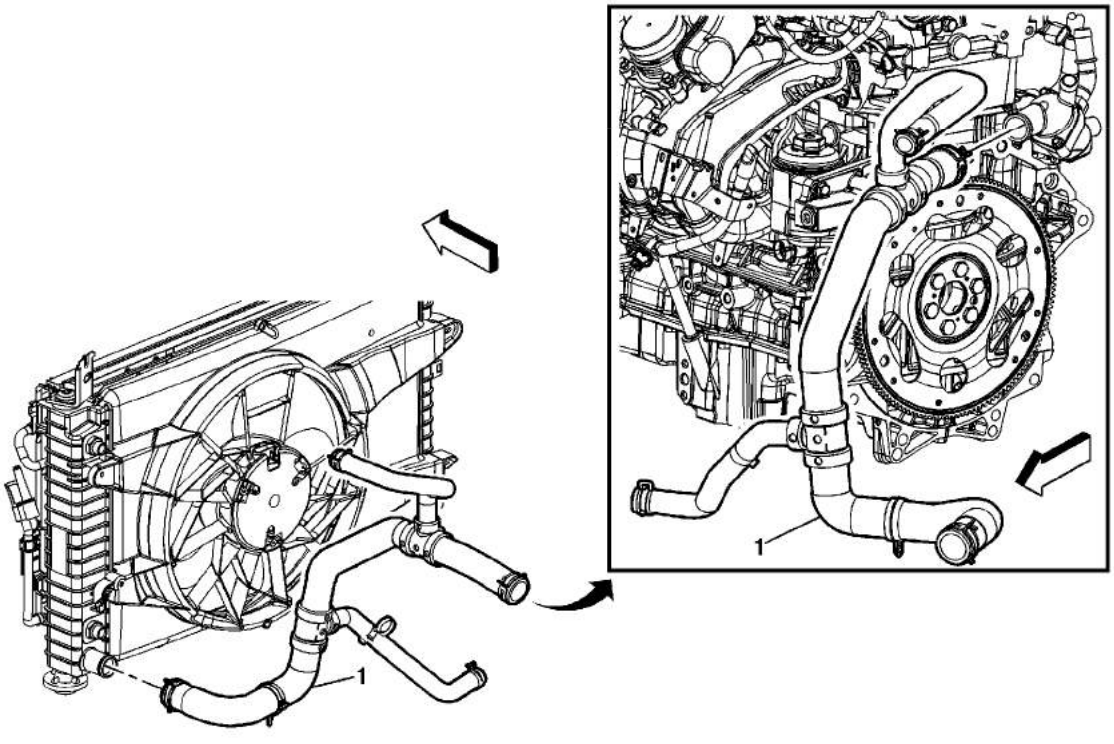

Callout	Component Name
Preliminary Procedures 1. Drain the cooling system. Refer to Cooling System Draining and Filling. 2. Remove air cleaner outlet duct. 3. Remove intake manifold cover. Refer to Air Cleaner Outlet Duct Replacement 4. Remove the hose clamps from the radiator outlet hose at engine. 5. Remove the hose clamp from the generator control module coolant outlet hose. 6. Raise and suitably support the vehicle. Refer to Lifting and Jacking the Vehicle. 7. Remove the radiator clamp and hose from the thermostat housing. 8. Remove hose clamp from radiator outlet hose at radiator.	
1	Radiator Outlet Hose **Tip** This hose is integral to the generator control module coolant hoses with T's and clamps and must replaced as an assembly.

cardiagn.com

Radiator Outlet Hose Replacement (LY7)

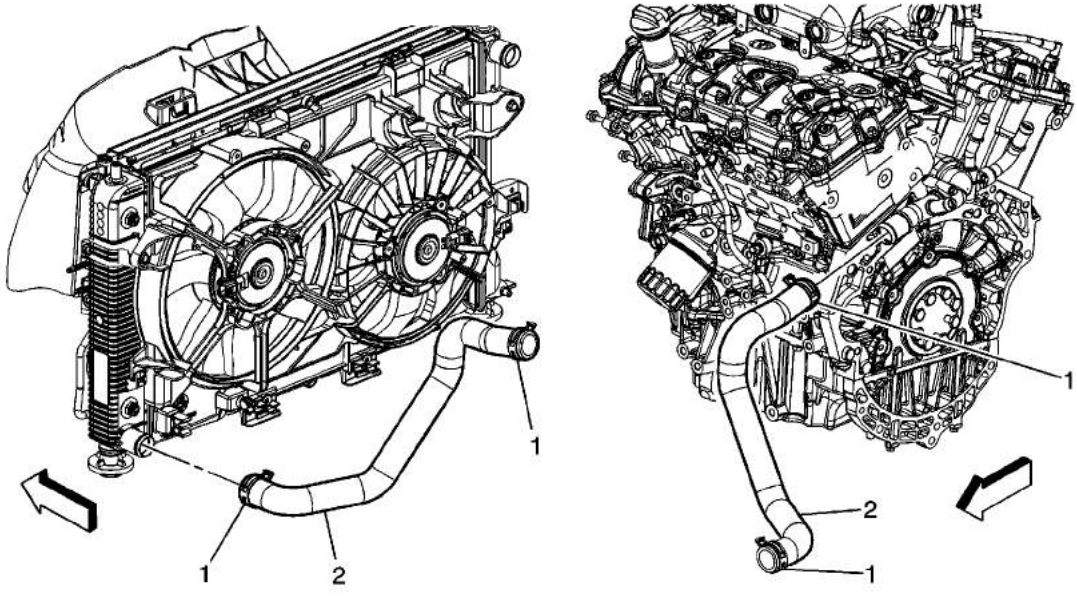

Callout	Component Name
Preliminary Procedures Drain the cooling system. Refer to Cooling System Draining and Filling.	
1	Radiator Outlet Hose Clamps (Qty 2).
2	Radiator Outlet Hose.

cardiagn.com

Radiator Outlet Hose Replacement (LZ4)

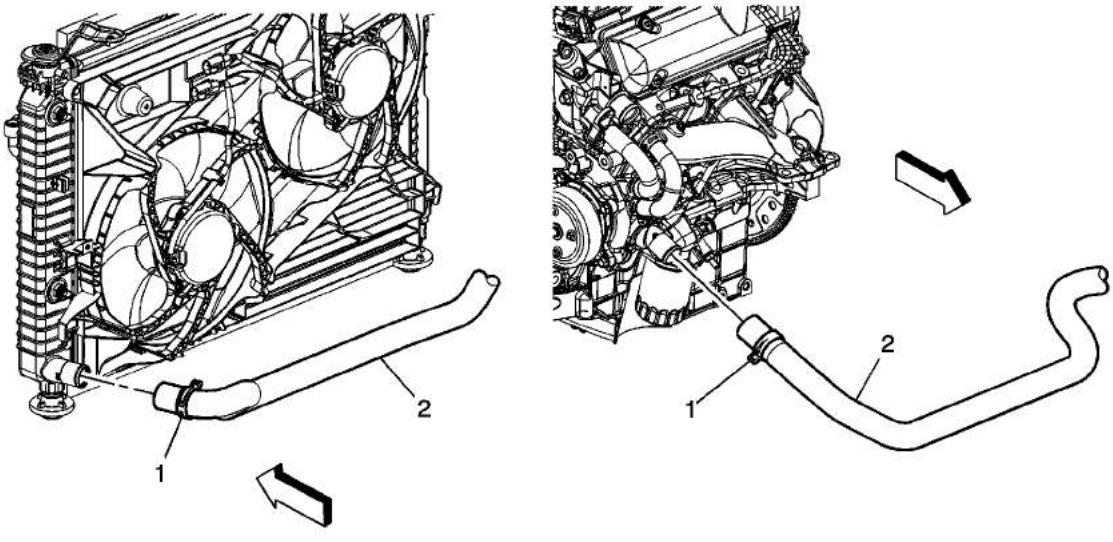

Callout	Component Name
Preliminary Procedures Drain the cooling system. Refer to Cooling System Draining and Filling.	
1	Radiator Outlet Hose Clamps (Qty 2).
2	Radiator Outlet Hose.

cardiagn.com

Radiator Outlet Hose Replacement (LE5)

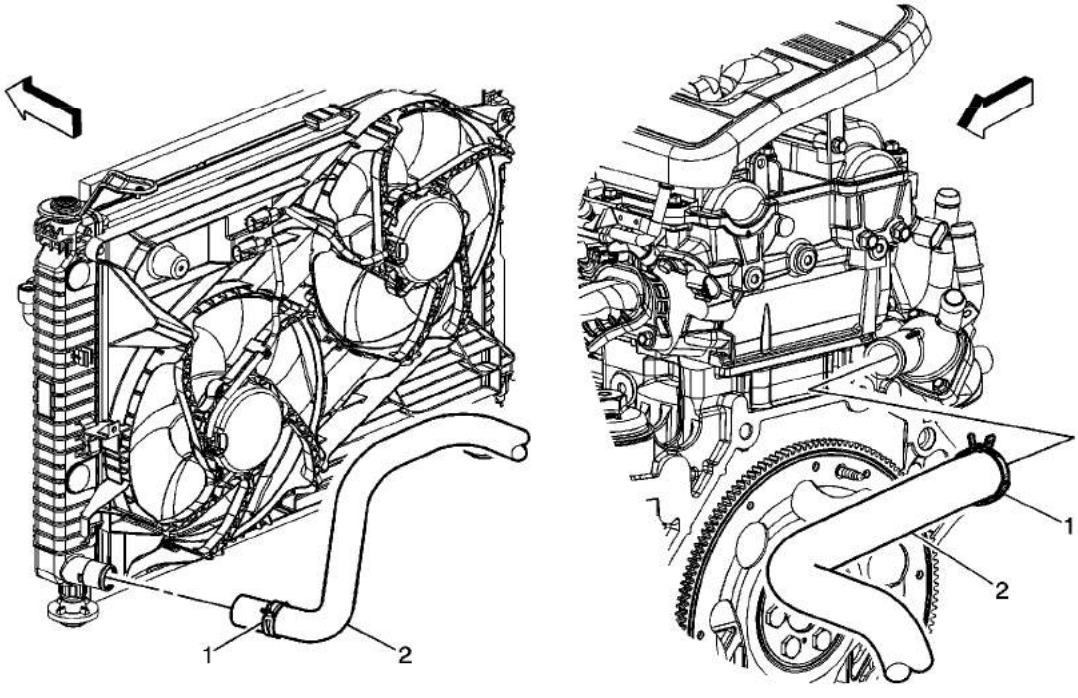

Callout	Component Name
Preliminary Procedures Drain the cooling system. Refer to Cooling System Draining and Filling.	
1	Radiator Outlet Hose Clamps (Qty 2).
2	Radiator Outlet Hose.

cardiagn.com

Radiator Outlet Hose Replacement (HP5)

Special Tools

J 38185 Hose Clamp Pliers

Removal Procedure

1. Drain the coolant. Refer to Cooling System Draining and Filling
2. Remove the drive motor generator control module assembly. Refer to Drive Motor Generator Control Module Assembly Replacement

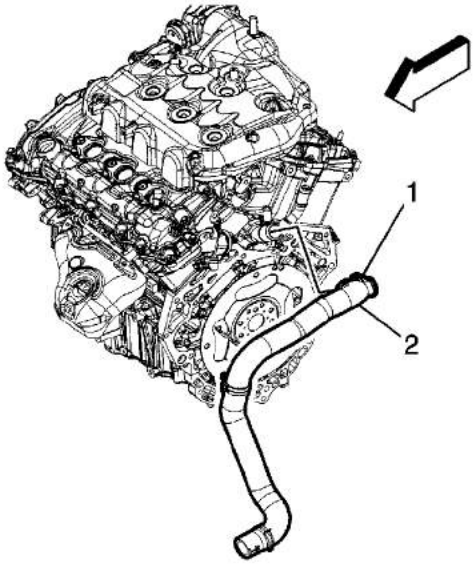

3. Using *J 38185* Hose Clamp Pliers disengage the tension on the hose clamp (1) and remove the radiator outlet hose (2) from the thermastat housing.
4. Raise and support the vehicle. Refer to Lifting and Jacking the Vehicle
5. Remove the front bumper facia air deflector. Refer to Front Bumper Fascia Air Deflector Replacement

cardiagn.com

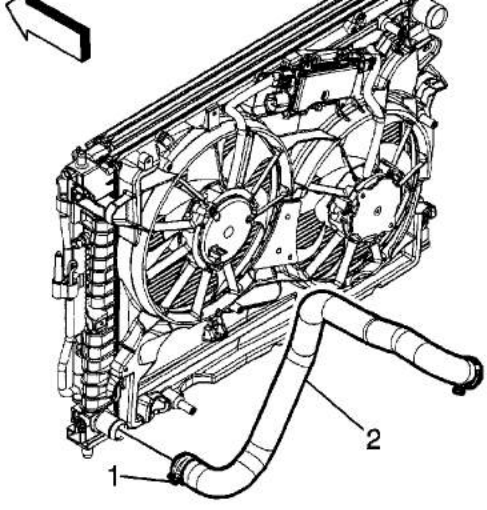

6. Using *J 38185* Hose Clamp Pliers disengage the tension on the hose clamp (1) and remove the radiator outlet hose (2) from the radiator.
7. Remove the radiator outlet hose from the vehicle.

Installation Procedure

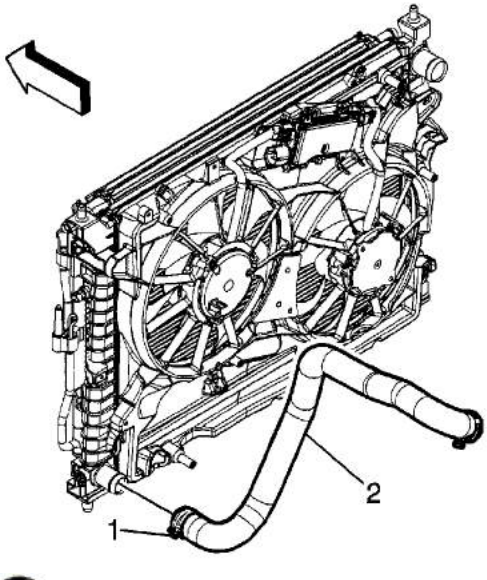

Note: Lubricate the inside diameters of the hoses with clean coolant prior to installation.

1. Install the outlet radiator hose into the vehicle.
2. Using *J 38185* Hose Clamp Pliers disengage the tension on the hose clamp (1) and install the

cardiagn.com

Replacement

4. Lower the vehicle. Refer to Lifting and Jacking the Vehicle

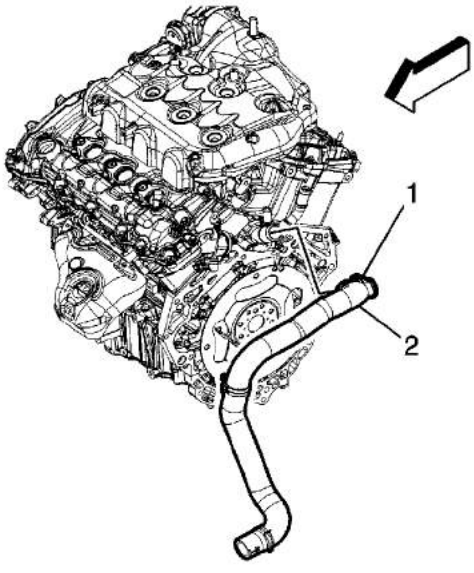

5. Using *J 38185* Hose Clamp Pliers disengage the tension on the hose clamp (1) and install the radiator outlet hose (2) to the thermastat housing.
6. Install the drive motor generator control module assembly. Refer to Drive Motor Generator Control Module Assembly Replacement
7. Fill the coolant. Refer to Cooling System Draining and Filling

cardiagn.com

Radiator Vent Inlet Hose Replacement (HP5)

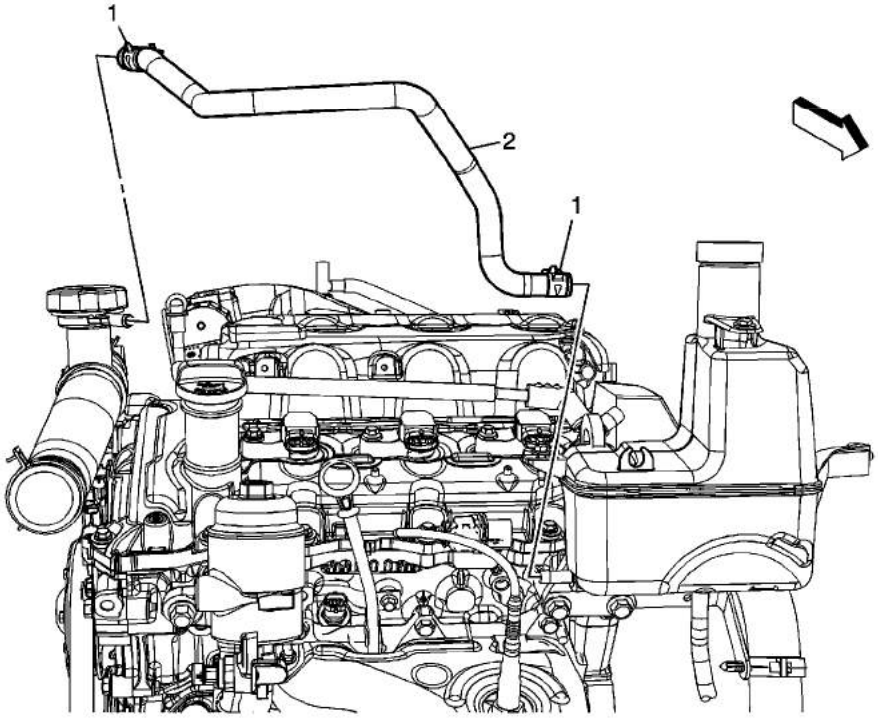

Callout	Component Name
Preliminary Procedure 1. Remove fuel injector sight sheild. Refer to Fuel Injector Sight Shield Replacement 2. Remove underhood junction block and bracket. Refer to Underhood Electrical Center or Junction Block Replacement 3. Drain the cooling system. Refer to Cooling System Draining and Filling	
1	Radiator Vent Inlet Hose Clamp (Qty 2)
2	Radiator Vent Inlet Hose

cardiagn.com

Engine Coolant Fan Replacement (HP5)

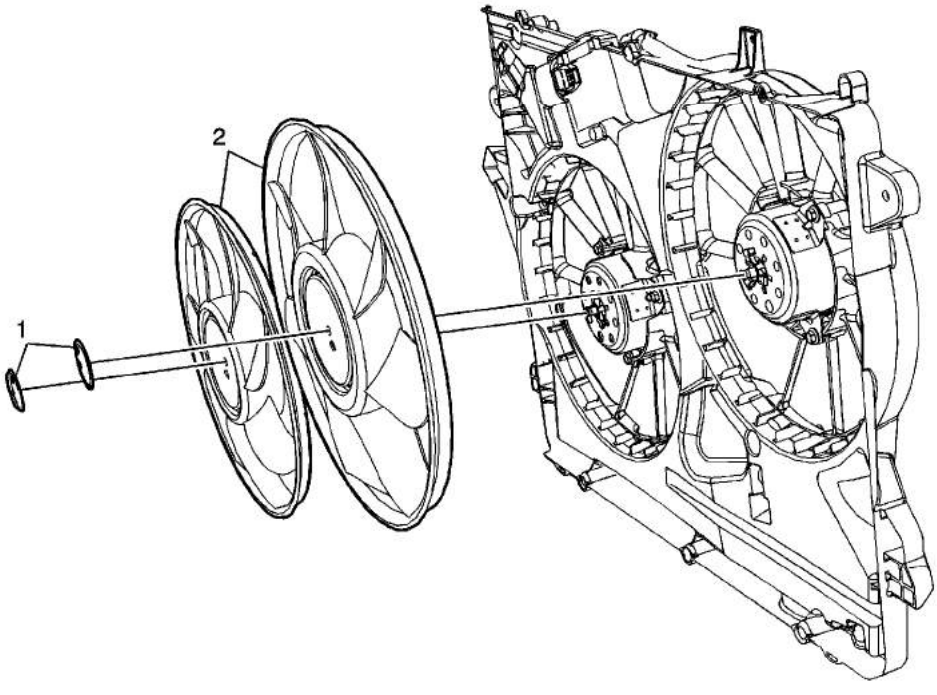

Callout	Component Name
Preliminary Procedures Remove the cooling fan and shroud. Refer to Cooling Fan and Shroud Replacement	
1	Engine Coolant Fan Retainers (Qty 2)
2	Engine Coolant Fans

cardiagn.com

Engine Coolant Fan Replacement (LAT)

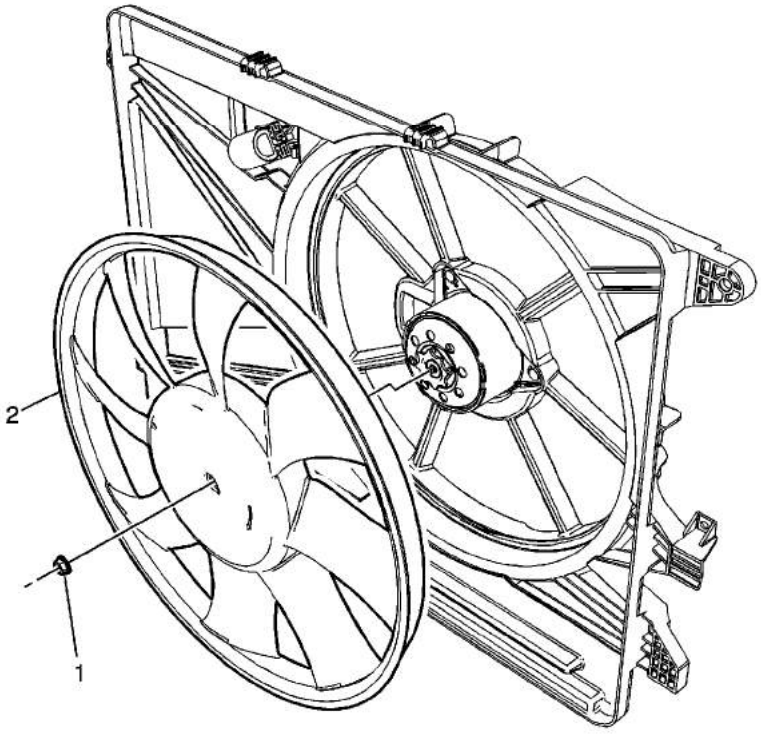

Callout	Component Name
Preliminary Procedures Remove the cooling fan and shroud. Refer to Cooling Fan and Shroud Replacement.	
1	Cooling Fan Nut **Caution:** Refer to Fastener Caution in the Preface section. **Tighten** 8 N·m (71 lb in)
2	Cooling Fan

cardiagn.com

Engine Coolant Fan Replacement (LE5, LZ4, LY7)

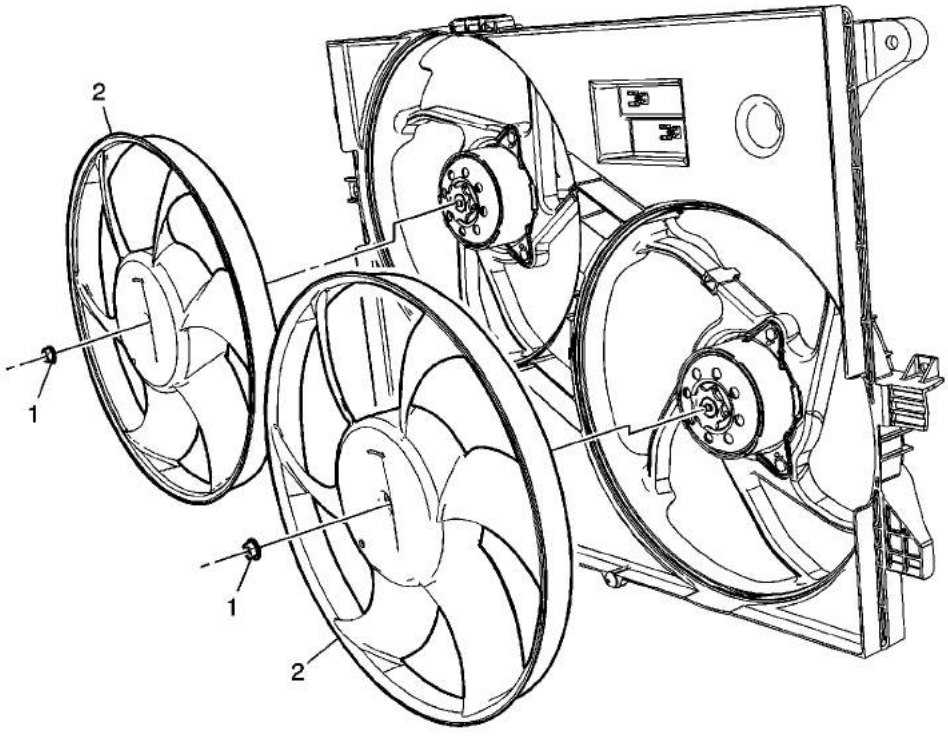

Callout	Component Name
Preliminary Procedures Remove the cooling fan and shroud. Refer to Cooling Fan and Shroud Replacement.	
1	Cooling Fan Nut (Qty: 2) **Caution:** Refer to Fastener Caution in the Preface section. **Tighten** 8 N·m (71 lb in)
2	Cooling Fan

cardiagn.com

Engine Coolant Fan Motor Replacement (HP5)

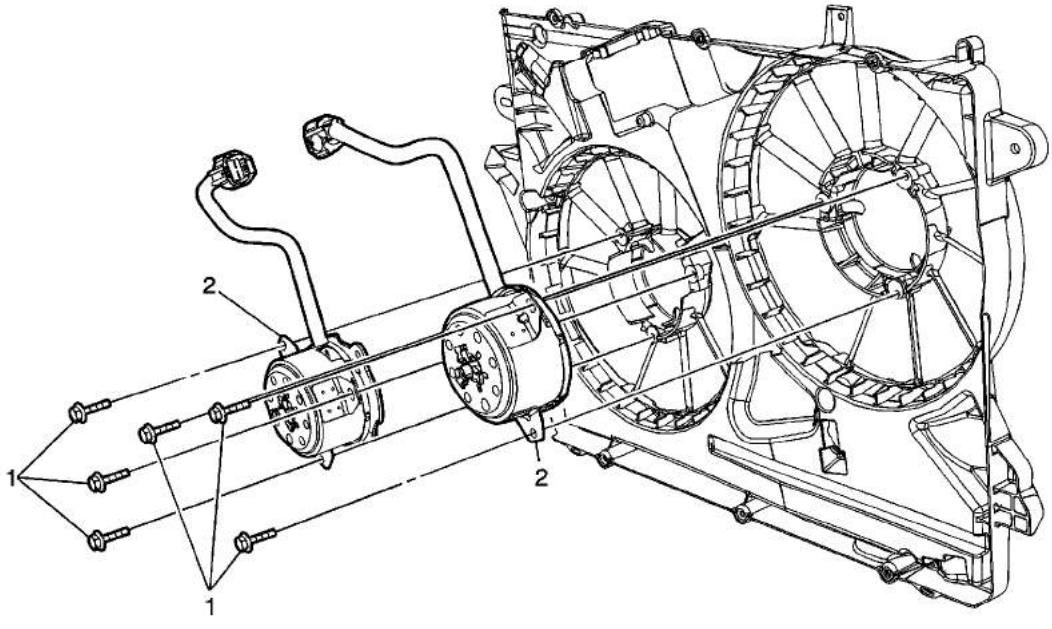

Callout	Component Name
Preliminary Procedures 1. Remove the cooling fan and shroud. Refer to Cooling Fan and Shroud Replacement 2. Remove the engine coolant fan blades. Refer to Engine Coolant Fan Replacement 3. Disconnect the fan motors electrical connectors.	
1	Engine Coolant Fan Motor Retainers (Qty 6) **Caution:** Refer to Fastener Caution in the Preface section. **Tighten** 8 N·m (71 lb in)
2	Engine Coolant Fan Motor

cardiagn.com

Engine Coolant Fan Motor Replacement (LAT)

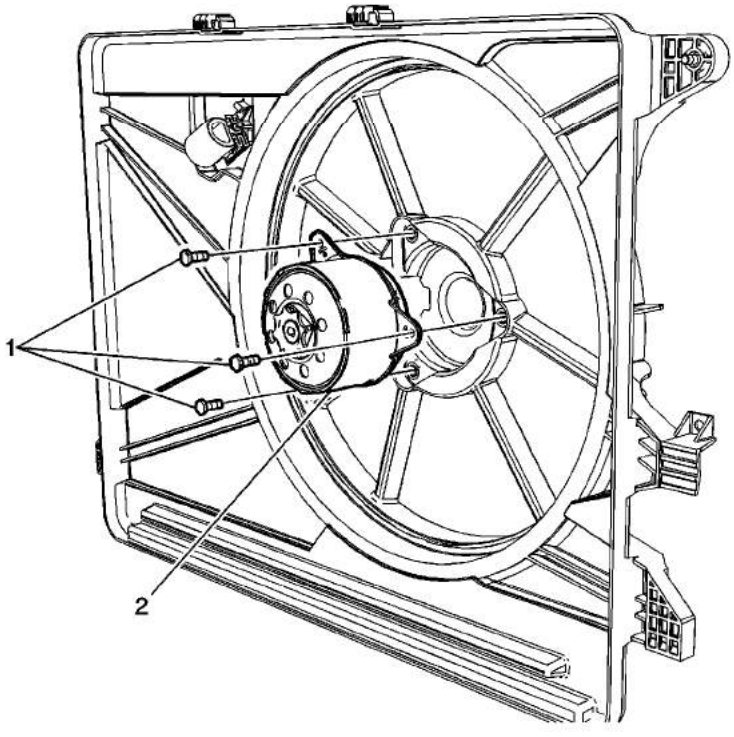

Callout	Component Name
Preliminary Procedures 1. Remove the cooling fan and shroud. Refer to Cooling Fan and Shroud Replacement. 2. Remove the cooling fan blade. Refer to Engine Coolant Fan Replacement. 3. Unclip the fan motors wiring harness from the fan shroud.	
1	Cooling Fan Motor Bolt (Qty: 3) **Caution:** Refer to Fastener Caution in the Preface section. **Tighten** 8 N·m (71 lb in)
2	Cooling Fan Motor

cardiagn.com

Engine Coolant Fan Motor Replacement (LE5, LZ4, LY7)

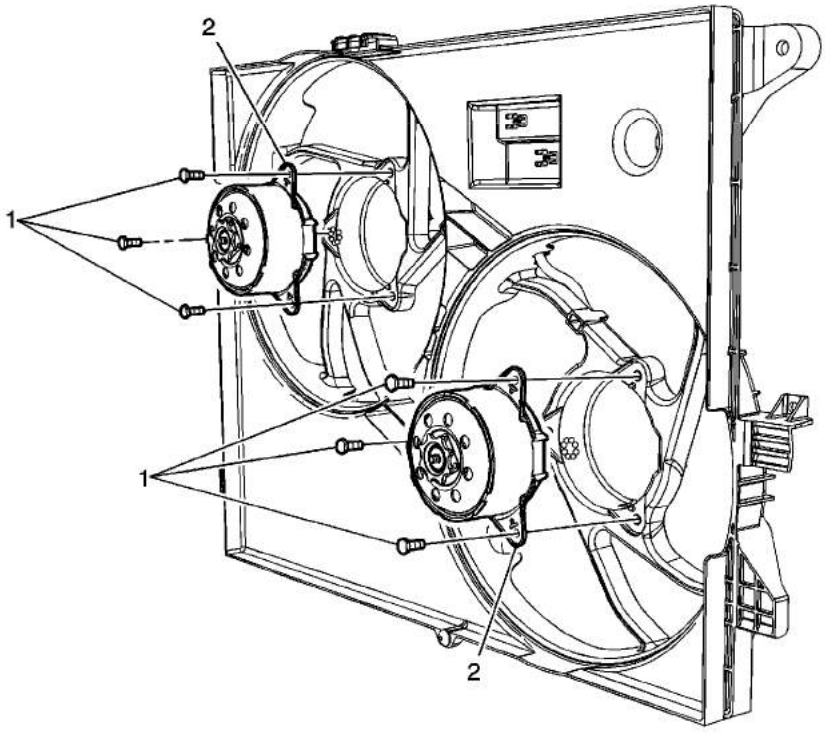

Callout	Component Name
Preliminary Procedures 1. Remove the cooling fan and shroud. Refer to Cooling Fan and Shroud Replacement. 2. Remove the cooling fan blade(s). Refer to Engine Coolant Fan Replacement. 3. Unclip wiring harness to fan motors from fan shroud.	
1	Cooling Fan Motor Bolt (Qty: 6) **Caution:** Refer to Fastener Caution in the Preface section. **Tighten** 8 N·m (71 lb in)
2	Cooling Fan Motor

cardiagn.com

Cooling Fan and Shroud Replacement (LAT)

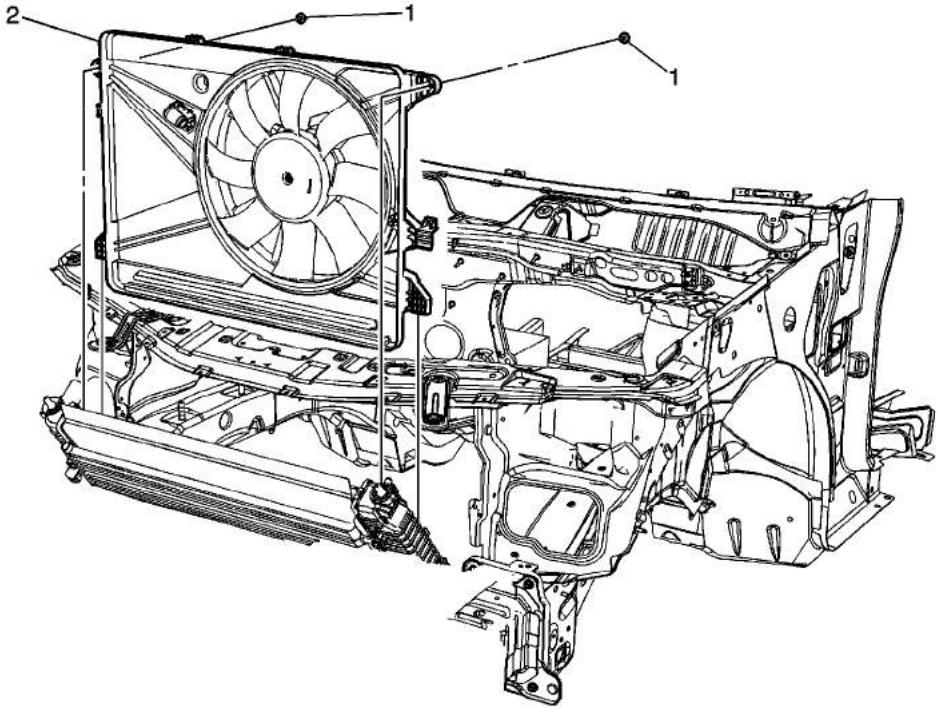

Callout	Component Name

Preliminary Procedure

1. Drain the cooling system. Refer to Cooling System Draining and Filling.
2. Disconnect the hybrid system. Refer to Hybrid Battery Service Disconnect/Connect.
3. Raise and suitably support the vehicle. Refer to Lifting and Jacking the Vehicle.
4. Remove the radiator opening upper cover. Refer to Radiator Opening Upper Cover Replacement.
5. Disconnect the electrical connector from the fan motor.
6. Remove the front fascia. Refer to Front Bumper Fascia Replacement.
7. Remove the front bumper impact bar. Refer to Front Bumper Impact Bar Replacement.
8. Disconnect the transmission oil cooler lines from the radiator.
9. Remove the radiator inlet and outlet hoses. Refer to Radiator Inlet Hose Replacement , and Radiator Outlet Hose Replacement.
10. Disconnect the compressor hose from the condenser. Refer to Compressor Hose Assembly Replacement
11. Disconnect the liquid line from the condenser. Refer to Liquid Line Replacement
12. Remove the condenser radiator fan module (CRFM) mounting bracket bolts from the radiator support.
13. Remove the CRFM mounting brackets from the radiator support.
14. Lift the CRFM assembly from the lower mounts and carefully move the bottom of the assembly rearward while tilting the top forward.

cardiagn.com

1	**Caution:** Refer to Fastener Caution in the Preface section. **Tighten** 8 N·m (71 lb in)
2	Fan and Shroud Assembly **Procedure** Transfer cooling fan resistor.

cardiagn.com

Cooling Fan and Shroud Replacement (HP5)

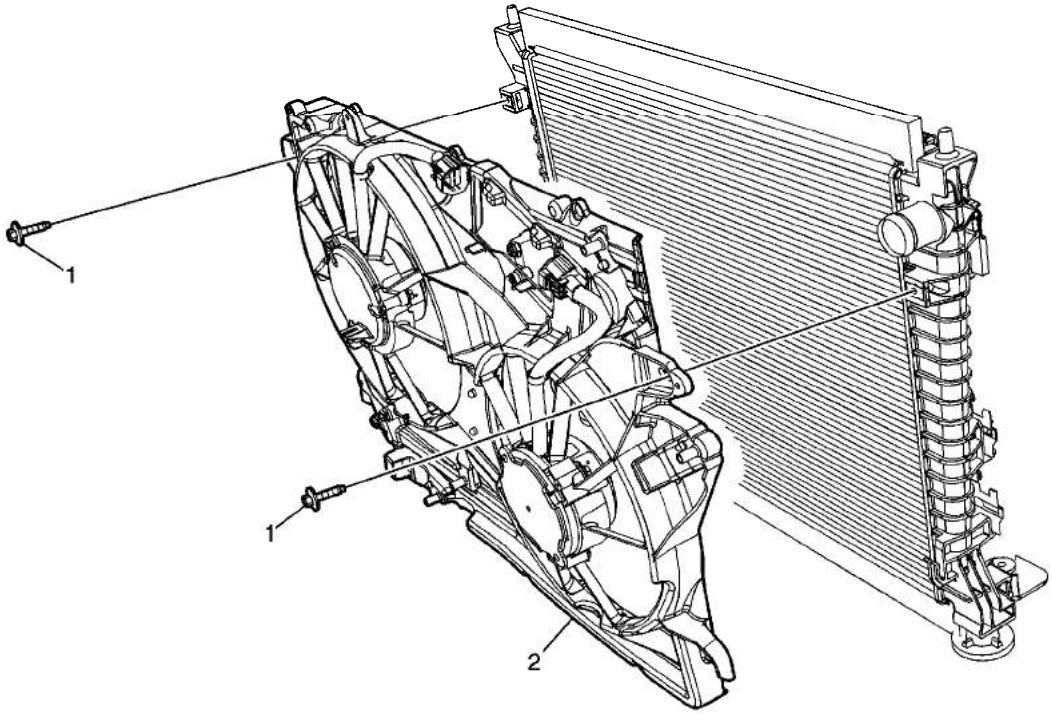

Callout	Component Name
Preliminary Procedures 1. Drain the cooling system. Refer to Fuel Injector Sight Shield Replacement 2. Remove underhood electrical block. Refer to Underhood Electrical Center or Junction Block Replacement 3. Disconnect electrical connectors from cooling fan control module. 4. Reposition radiator. Refer to Radiator Replacement	
1	Cooling Fan and Shroud Bolt (Qty: 2) **Caution:** Refer to Fastener Caution in the Preface section. **Tighten** 8 N·m (71 lb in)
2	Cooling Fan and Shroud

cardiagn.com

Cooling Fan and Shroud Replacement (LE5, LZ4, LY7)

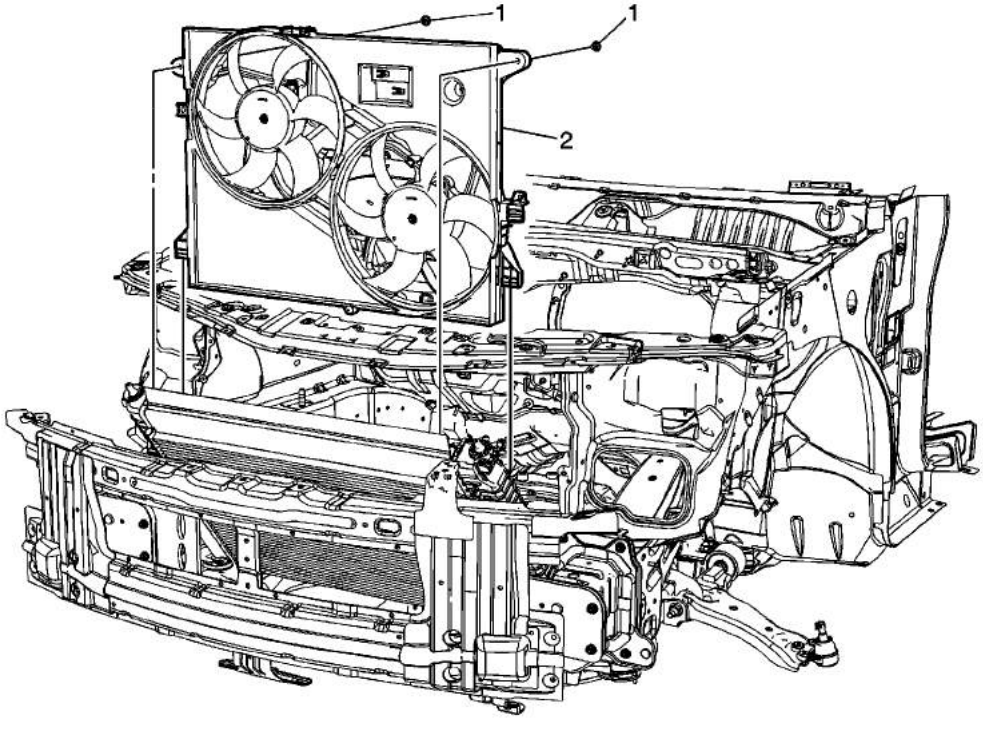

Callout	Component Name
	Preliminary Procedure 1. Drain the cooling system. Refer to Cooling System Draining and Filling. 2. Raise and suitably support the vehicle as necessary. Refer to Lifting and Jacking the Vehicle. 3. Remove the radiator opening upper cover. Refer to Radiator Opening Upper Cover Replacement. 4. Disconnect the electrical connector from the fan motor. 5. Remove the front fascia. Refer to Front Bumper Fascia Replacement. 6. Remove the front bumper impact bar. Refer to Front Bumper Impact Bar Replacement. 7. Disconnect the transmission oil cooler lines from the radiator. 8. Remove the radiator inlet and outlet hose. Refer to Radiator Inlet Hose Replacement , and Radiator Outlet Hose Replacement. 9. Remove the condenser radiator fan module (CRFM) mounting bracket bolts from the radiator support. 10. Remove the CRFM mounting brackets from the radiator support. 11. Lift the CRFM assembly from the lower mounts and carefully move the bottom of the assembly rearward while tilting the top forward.
	Fan Assembly Bolt (Qty: 2)

© 2010 General Motors Corporation. All rights reserved.

cardiagn.com

1	**Procedure** Remove the fan assembly bolts from the radiator. **Tighten** 8 N·m (71 lb in)
2	Fan and Shroud Assembly **Procedure** Remove the fan and shroud assembly.

cardiagn.com

Cooling Fan Control Module Replacement (HP5)

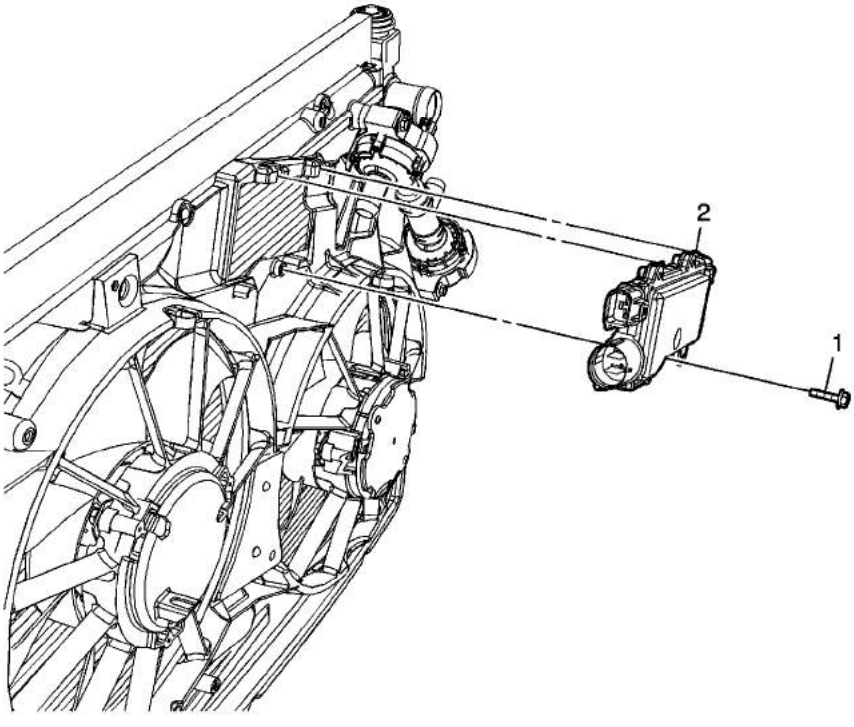

Callout	Component Name
Preliminary Procedures 1. Remove fuel injector sight shield. Refer to Fuel Injector Sight Shield Replacement 2. Remove underhood electrical block. Refer to Underhood Electrical Center or Junction Block Replacement 3. Disconnect electrical connectors from cooling fan control module.	
1	Cooling Fan Control Module Bolt **Caution:** Refer to Fastener Caution in the Preface section. **Tighten** 8 N·m (71 lb in)
2	Cooling Fan Control Module

cardiagn.com

Engine Coolant Thermostat Housing Replacement (LAT)

Removal Procedure

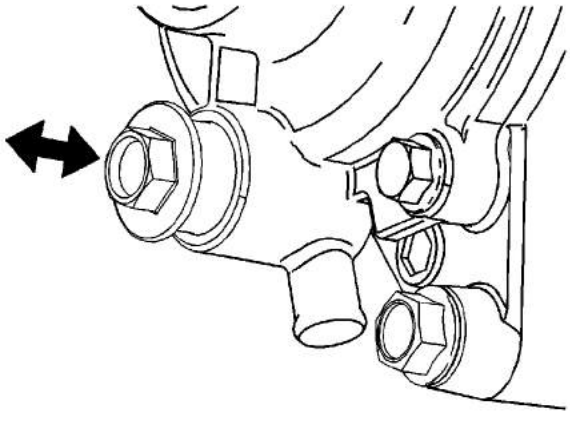

1. Drain the cooling system. Refer to Cooling System Draining and Filling.

   Note: A drain has been provided at the bottom of the water pump for engine block coolant drainage.

2. Drain the coolant from the engine block at the water pump drain. After the coolant has drained, tighten the drain bolt.
3. Lower the vehicle.
4. Remove the battery tray. Refer to Battery Tray Replacement.

cardiagn.com

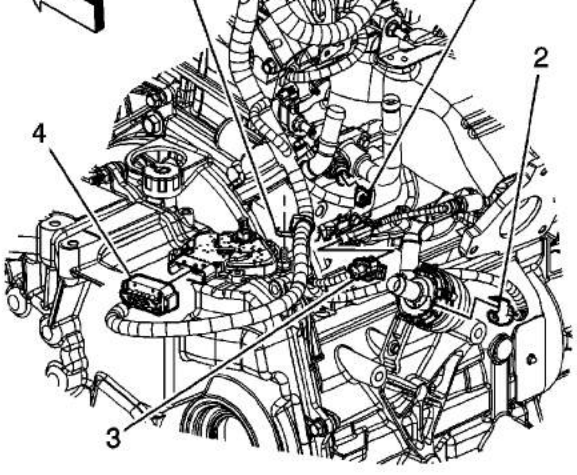

5. Disconnect the engine wiring harness electrical connector (1) from the engine coolant temperature (ECT) sensor.
6. Remove the heated oxygen sensor (HO2S) electrical connector rosebud clip from the thermostat housing.

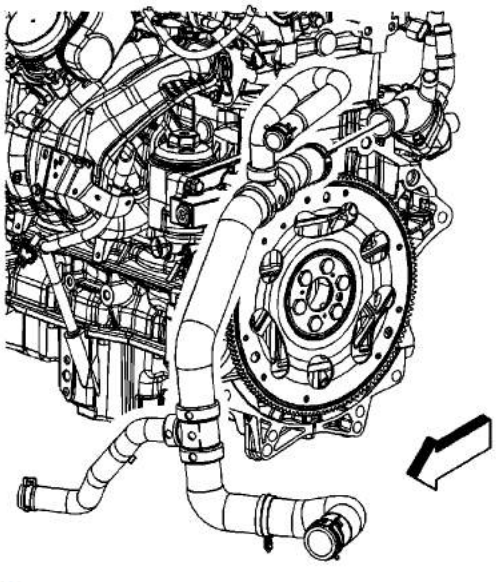

7. Reposition the radiator outlet hose clamp at the thermostat cover.
8. Remove the radiator outlet hose from the thermostat cover.

cardiagn.com

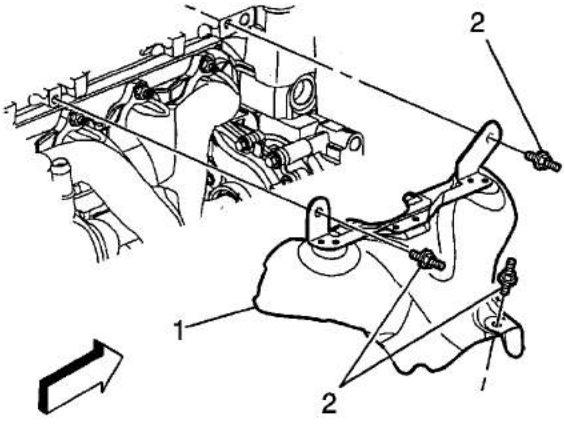

9. Remove the exhaust heat shield studs (2).
10. Remove the exhaust heat shield.

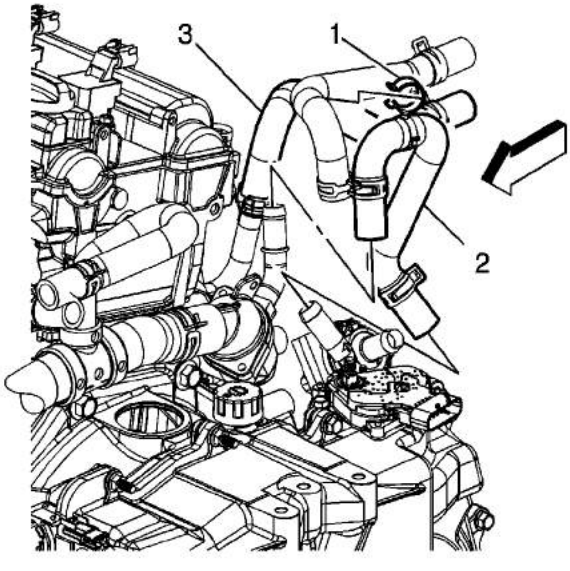

11. Remove the auxiliary heater water pump hose clip (1) from the heater outlet hose.
12. Reposition the auxiliary heater water pump hose clamp at the thermostat housing.
13. Remove the auxiliary heater water pump hose (2) from the thermostat housing.
14. Reposition the heater inlet hose clamp at the thermostat housing.
15. Remove the heater inlet hose (3) from the thermostat housing.
16. Raise and support the vehicle. Refer to Lifting and Jacking the Vehicle.

cardiagn.com

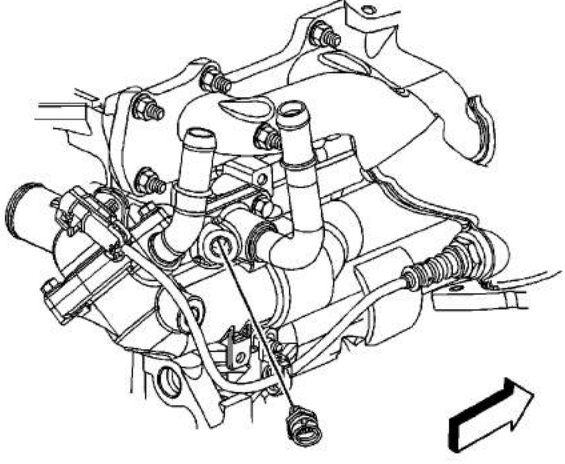

17. Remove the ECT sensor, if necessary.

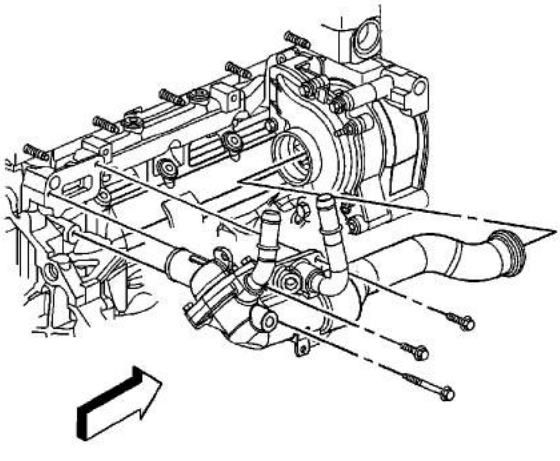

18. Remove the thermostat housing bolts.

Important: Twist the water transfer pipe while pulling in order to remove it from the water pump.

19. Remove the thermostat from the vehicle.
20. Remove the water transfer pipe from the thermostat housing, if necessary.
21. Remove and discard the water transfer pipe O-ring seals, if necessary.

cardiagn.com

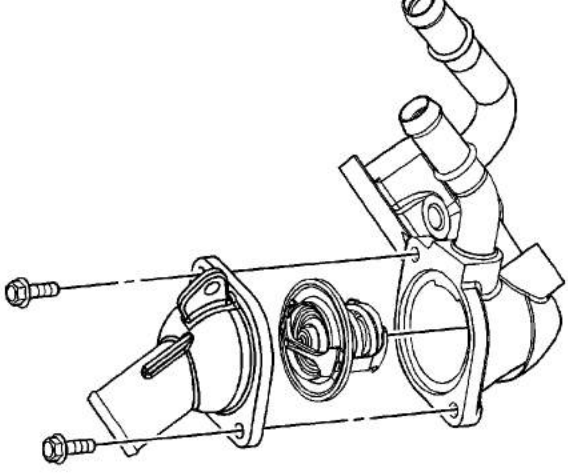

22. Remove the thermostat cover bolts and cover, if necessary.
23. Remove the thermostat, if necessary.
24. Remove and discard the thermostat cover O-ring seal, if necessary.
25. Remove all debris and thread sealant from the engine coolant temperature (ECT) sensor and bolt holes if the housing is being re-used.

Installation Procedure

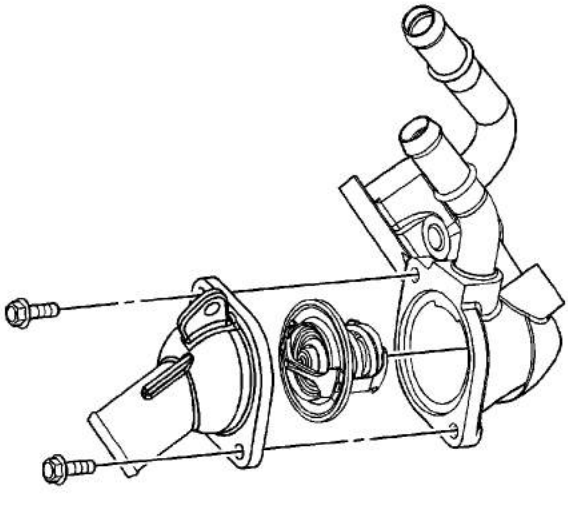

1. Install a NEW thermostat cover O-ring seal into the recess groove.
2. Install the thermostat, if necessary.

Caution: Refer to Fastener Caution in the Preface section.

cardiagn.com

5. Load the thermostat housing assembly into position.

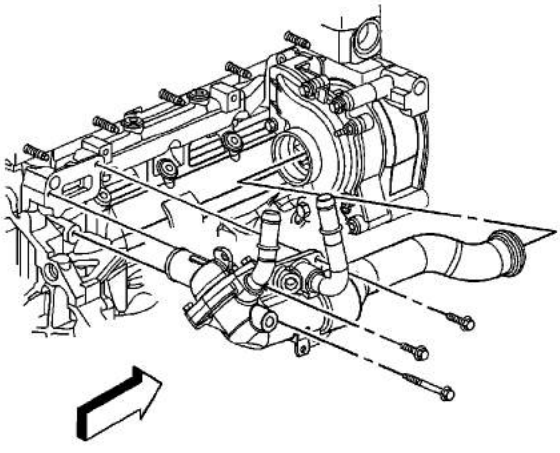

Note: The water feed pipe seals can be lightly lubricated with coolant to aid during installation.

6. Install NEW O-ring seals onto the water feed pipe.

Important: Lubricate the O-rings with coolant ONLY.

7. Install the water feed pipe into the thermostat housing aligning locator tab.
8. Align the water pipe to water pump.
9. Seat the water feed O-ring seal by pushing inward toward the water pump. Take care not to tear or damage the O-ring.
10. Position the thermostat housing against the engine.
11. Install the thermostat housing bolts and tighten to **10 N·m (89 lb in)**.

cardiagn.com

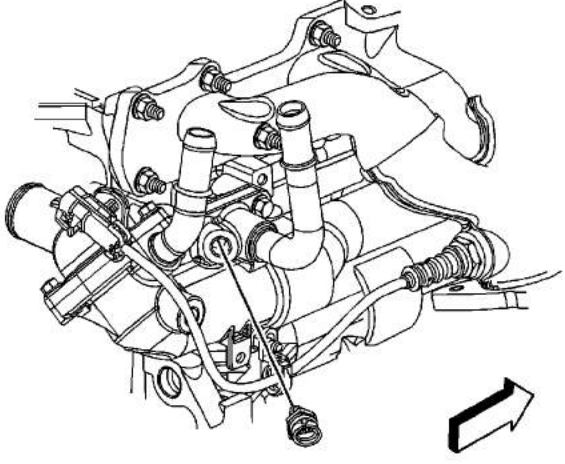

12. If reinstalling the old sensor, coat the threads with sealant. Refer to Adhesives, Fluids, Lubricants, and Sealers.
13. Install the ECT sensor, if necessary and tighten to **20 N·m (15 lb ft)**.
14. Lower the vehicle.

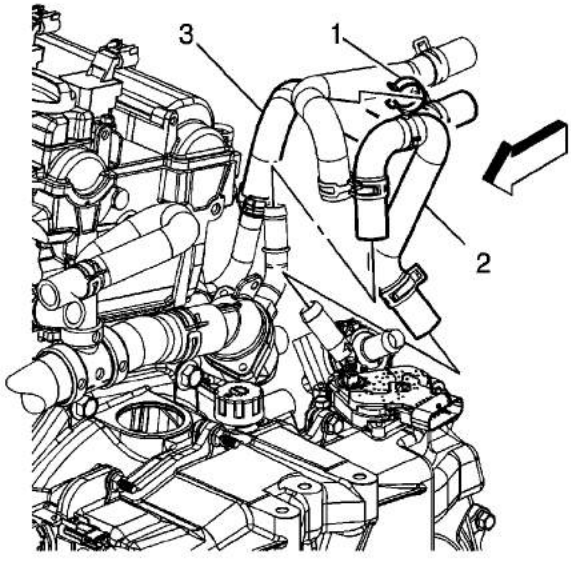

15. Install the heater inlet hose (3) to the thermostat housing.
16. Position the heater inlet hose clamp at the thermostat housing.
17. Install the auxiliary heater water pump hose (2) to the thermostat housing.
18. Position the auxiliary heater water pump hose clamp at the thermostat housing.
19. Install the auxiliary heater water pump hose clip (1) to the heater outlet hose.

cardiagn.com

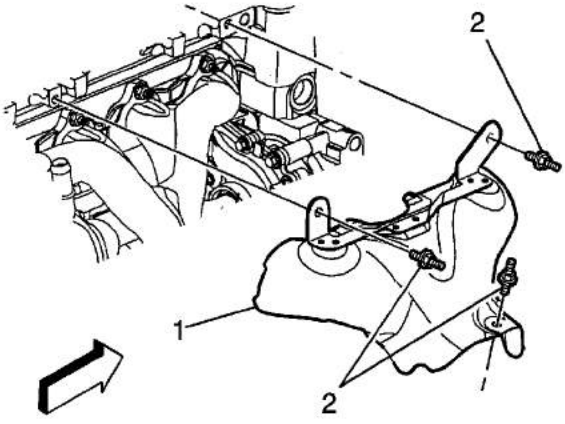

20. Install the exhaust heat shield.
21. Install the exhaust heat shield studs (2) and tighten to **22 N·m (16 lb ft)**.

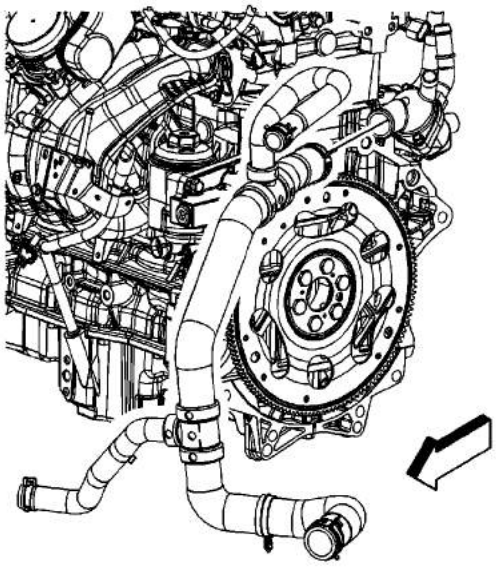

22. Install the radiator outlet hose to the thermostat cover.
23. Position the radiator outlet hose clamp at the thermostat cover.

cardiagn.com

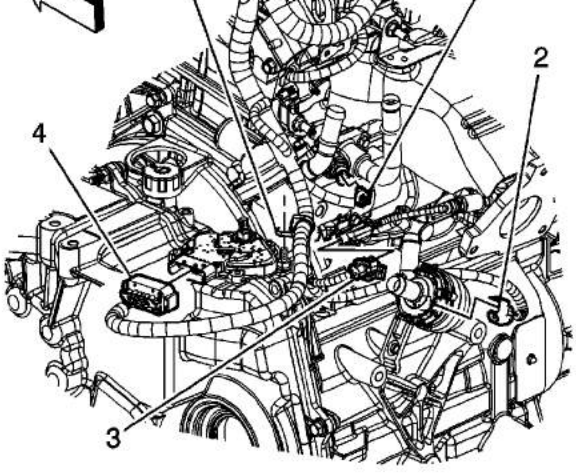

24. Connect the engine wiring harness electrical connector (1) to the ECT sensor.
25. Install the HO2S electrical connector rosebud clip to the thermostat housing.
26. Install the battery tray. Refer to Battery Tray Replacement.

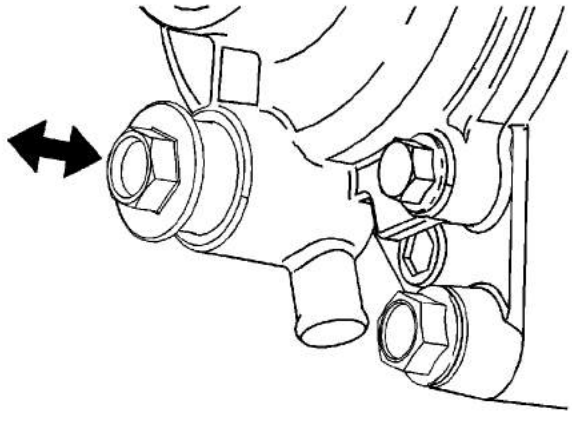

27. Verify the drain valves at the radiator and water pump are closed.
28. Lower the vehicle.
29. Fill the cooling system. Refer to Cooling System Draining and Filling.

cardiagn.com

Engine Coolant Thermostat Housing Replacement (LY7)

Removal Procedure

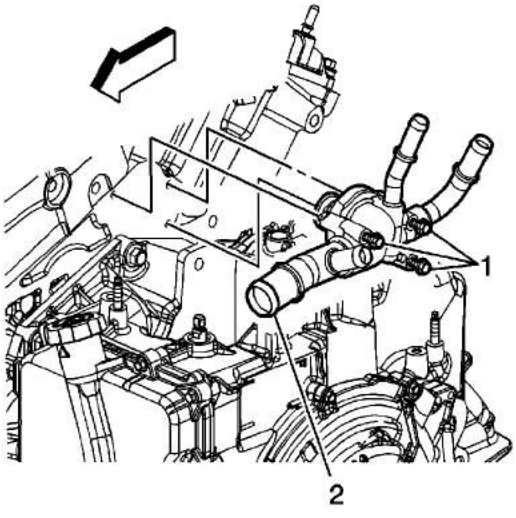

1. Partially drain the cooling system. Refer to Cooling System Draining and Filling.
2. Remove the radiator outlet hose from the thermostat housing.
3. Remove the heater inlet and outlet hoses.
4. Remove the surge tank outlet hose.
5. Remove the thermostat housing bolts (1).
6. Remove the housing (2).

Installation Procedure

Caution: Refer to Fastener Caution in the Preface section.

cardiagn.com

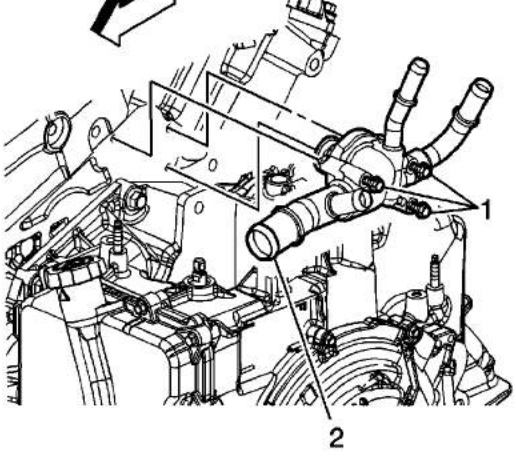

1. Install the thermostat housing bolts (1) and tighten to **10 N·m (89 lb in)**.
2. Install the surge tank outlet hose.
3. Install the heater inlet and outlet hoses.
4. Install the radiator outlet hose to the thermostat housing (2).
5. Fill the cooling system. Refer to Cooling System Draining and Filling.

cardiagn.com

Engine Coolant Thermostat Replacement (LAT)

Removal Procedure

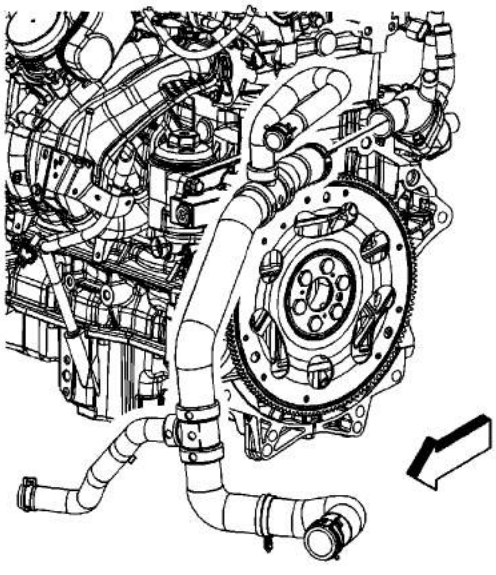

1. Drain the cooling system. Refer to Cooling System Draining and Filling.
2. Reposition the radiator outlet hose clamp at the thermostat cover.
3. Remove the radiator outlet hose from the thermostat cover.
4. Remove the battery tray. Refer to Battery Tray Replacement.

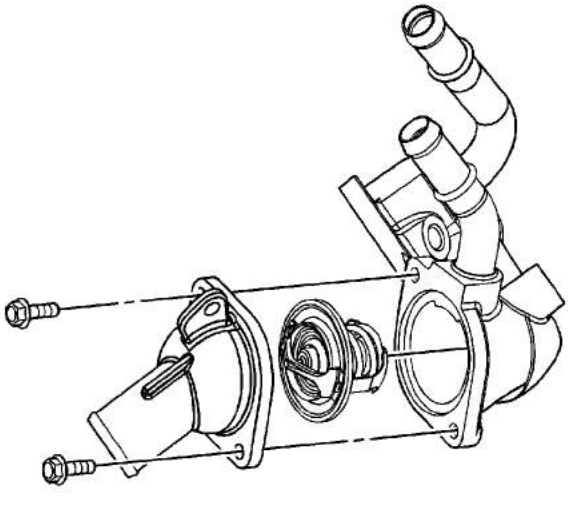

5. Remove the thermostat cover bolts and cover.

© 2010 General Motors Corporation. All rights reserved.

cardiagn.com

Installation Procedure

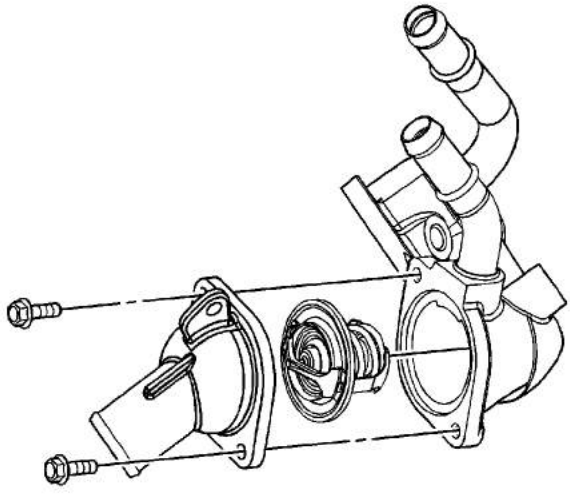

1. Install a NEW thermostat cover O-ring seal.
2. Install the thermostat.

   Caution: Refer to Fastener Caution in the Preface section.

3. Install the thermostat cover bolts and tighten to **10 N·m (89 lb in)**.

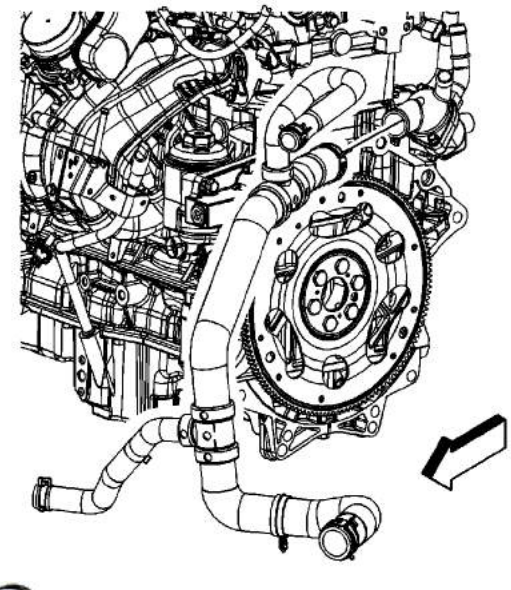

cardiagn.com

6. Position the radiator outlet hose clamp at the thermostat cover.
7. Fill the cooling system. Refer to Cooling System Draining and Filling.

cardiagn.com

Engine Coolant Thermostat Replacement (LZ4)

Removal Procedure

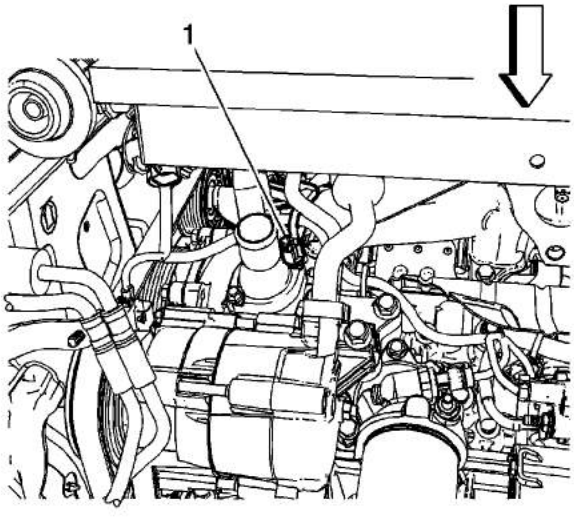

1. Remove the radiator outlet hose. Refer to Radiator Outlet Hose Replacement.
2. Remove wire harness clamp from thermostat housing stud (1).

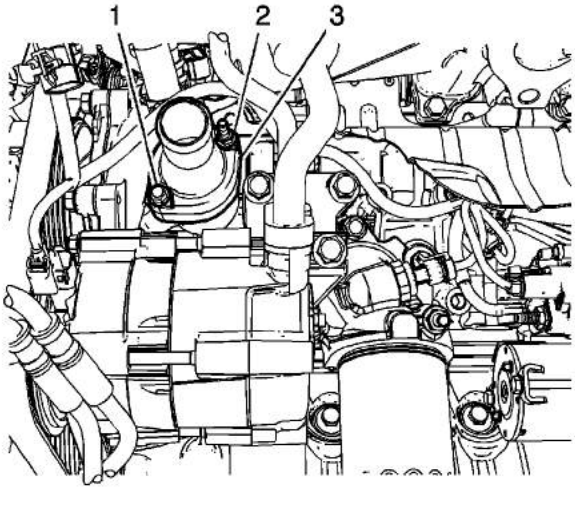

3. Remove the thermostat housing bolt (1) and nut (2).
4. Remove the thermostat housing (3).
5. Remove the thermostat.

© 2010 General Motors Corporation. All rights reserved.

cardiagn.com

Caution: Refer to Fastener Caution in the Preface section.

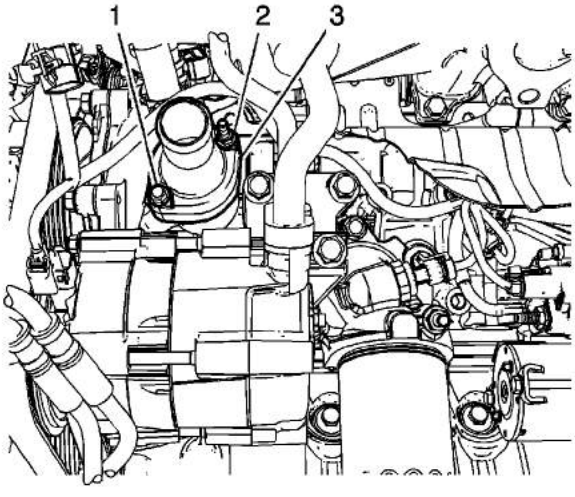

1. Install the thermostat with housing (3).
   1.1. Install a new gasket.
   1.2. Position the thermostat with the housing.
   1.3. Apply thread sealant PST 565® to the bolt threads.
   1.4. Install the housing bolt (2) and nut (1) and tighten to **10 N·m (89 lb in)**.

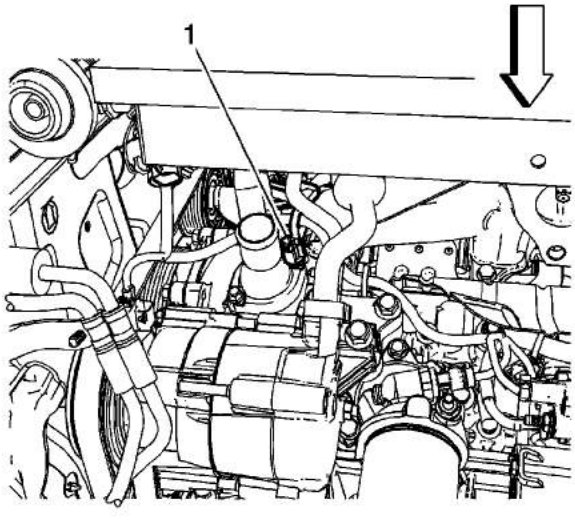

cardiagn.com

cardiagn.com

Engine Coolant Thermostat Replacement (LY7)

Removal Procedure

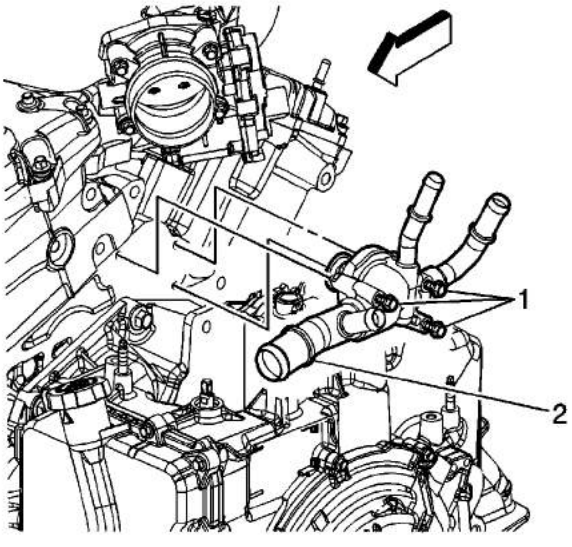

1. Partially drain the cooling system. Refer to Cooling System Draining and Filling.
2. Remove the radiator outlet hose from the thermostat housing.
3. Remove the heater inlet and outlet hoses.
4. Remove the surge tank outlet hose.
5. Remove the thermostat housing bolts (1).
6. Remove the housing.
7. Remove the thermostat (2) and discard the thermostat gasket.

Installation Procedure

cardiagn.com

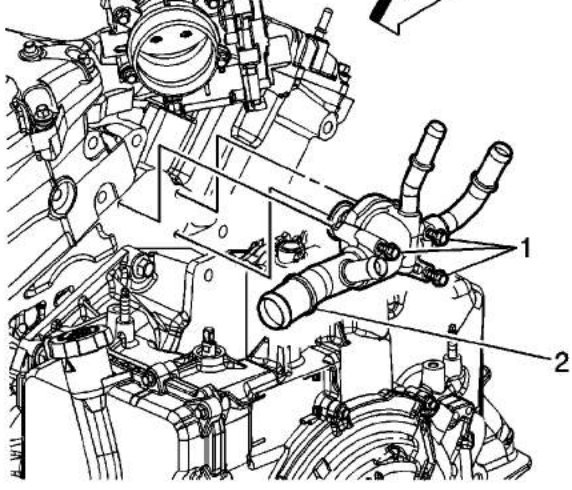

1. Install the thermostat (2) with a NEW thermostat gasket.

   Caution: Refer to Fastener Caution in the Preface section.

2. Install the thermostat housing bolts (1) and tighten to **10 N·m (89 lb in)**.
3. Install the surge tank outlet hose.
4. Install the heater inlet and outlet hoses.
5. Install the radiator outlet hose to the thermostat housing.
6. Fill the cooling system. Refer to Cooling System Draining and Filling.

cardiagn.com

Engine Coolant Crossover Pipe Replacement (LZ4)

Removal Procedure

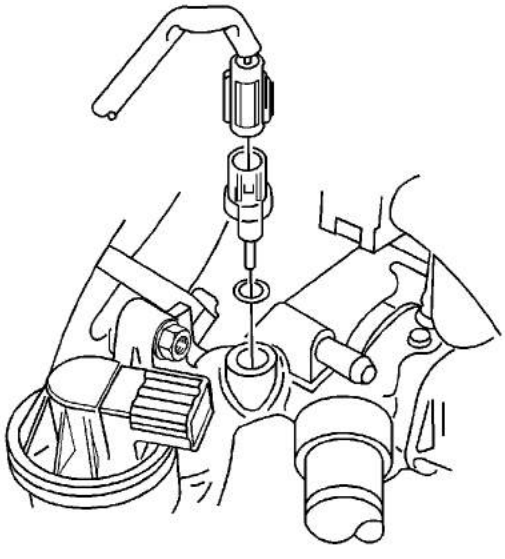

1. Disconnect the negative battery cable. Refer to Battery Negative Cable Disconnection and Connection.
2. Remove the battery. Refer to Battery Replacement.
3. Drain the engine coolant. Refer to Cooling System Draining and Filling.
4. Disconnect the engine coolant temperature (ECT) sensor electrical connector.
5. Remove the ECT sensor.
6. Remove the radiator inlet and outlet hoses from the crossover pipe.
7. Disconnect the wiring harness ground terminal from the crossover pipe.

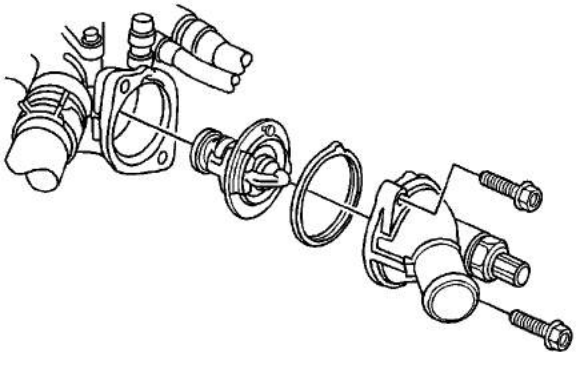

[redacted]

cardiagn.com

8. Remove the thermostat housing and thermostat from the crossover pipe.

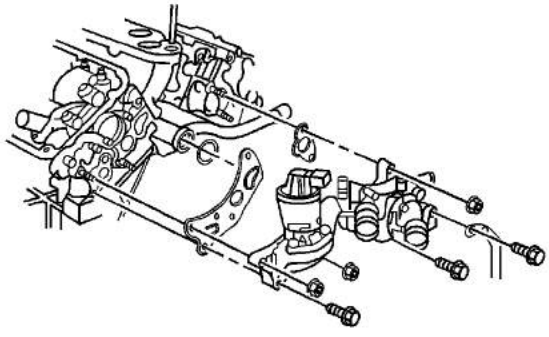

9. Remove the crossover pipe bolts and crossover pipe.

Installation Procedure

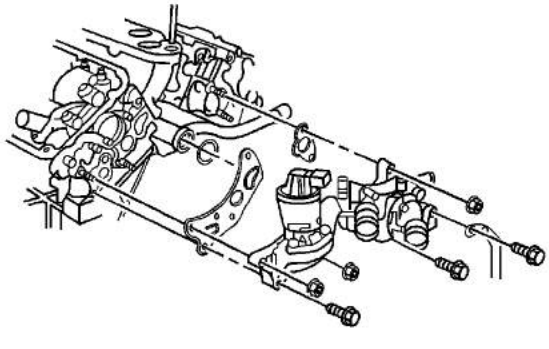

1. Clean and dry the area before installing new seals.
2. Install the crossover pipe.

Caution: Refer to Fastener Caution in the Preface section.

cardiagn.com

5. Connect the coolant hoses at the crossover pipe.
6. Connect the wiring harness ground terminal to the crossover pipe and tighten the nut to **12 N·m (106 lb in)**.

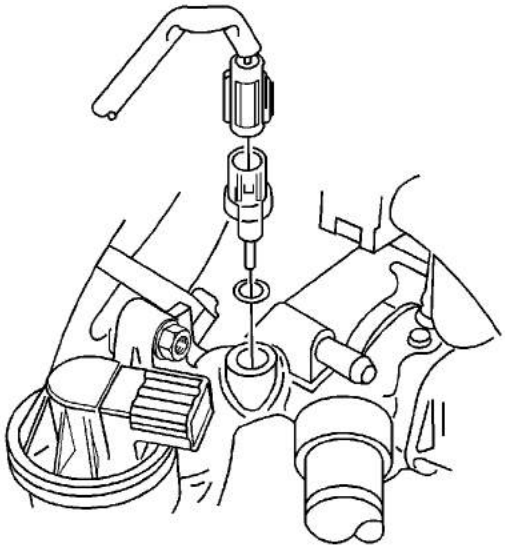

7. Apply thread sealant (Saturn P/N 21485277) Loctite™ 242 threadlocker, or equivalent, to sensor threads.
8. Install the ECT sensor and tighten to **18 N·m (13 lb ft)**.
9. Connect the ECT sensor harness connector. Push in the connector until a click is heard, then pull back to confirm a positive engagement.
10. Install the battery. Refer to Battery Replacement.
11. Connect the negative battery cable. Refer to Battery Negative Cable Disconnection and Connection.

    Tighten the battery terminal bolt to **17 N·m (13 lb ft)**.

12. Fill the coolant. Refer to Cooling System Draining and Filling.

cardiagn.com

Water Pump Replacement (LAT)

Special Tools

J 43651 Water Pump Holding Tool

Removal Procedure

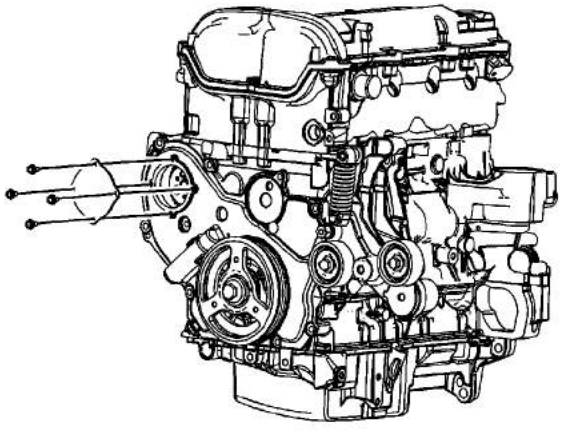

1. Remove the thermostat housing. Refer to Engine Coolant Thermostat Housing Replacement.
2. Remove the engine splash shield. Refer to Engine Splash Shield Replacement.
3. Remove the water pump access plate from the front cover.

cardiagn.com

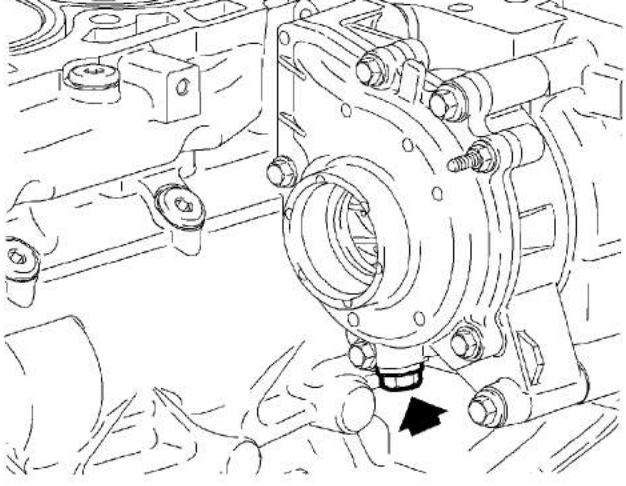

Note: A drain plug has been provided at the bottom of the water pump assembly for additional coolant drainage from the engine block and water pump.

4. Drain the coolant from the water pump using the plug at the bottom of the pump.

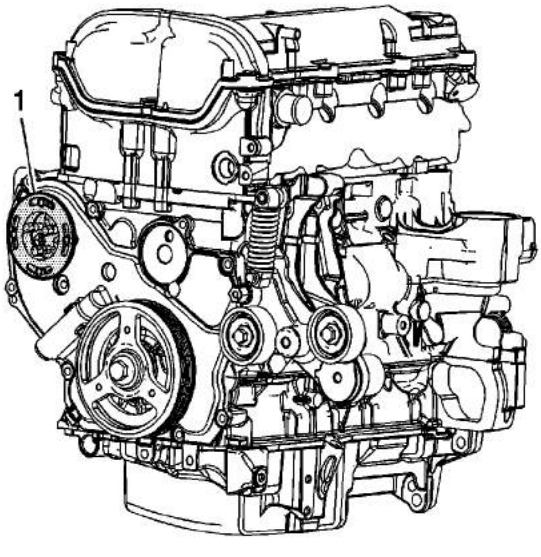

Note: The water pump holding tool supports the sprocket and chain during water pump service. The tool must be used or the balance shaft must be re-timed.

5. Install the J 43651 (1) into position.
6. Tighten the bolts on the water pump holding tool into the threads on the water pump sprocket.
7. Install the access cover bolts that were removed earlier to secure the water pump holding

cardiagn.com

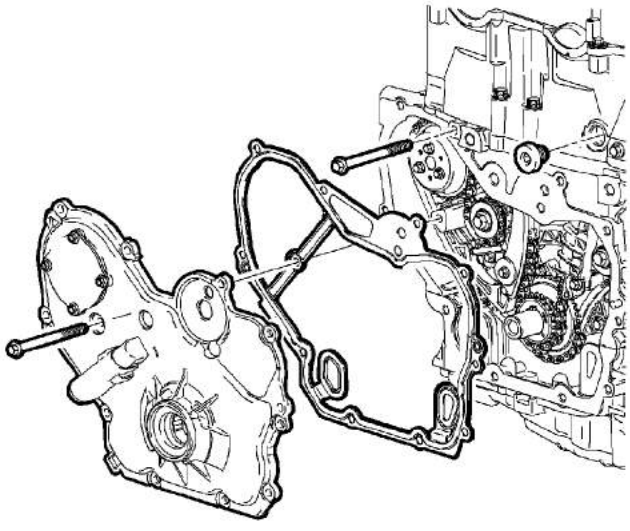

Note: Be sure to remove both water pump bolts from the front of the engine block.

9. Remove the 2 water pump bolts.

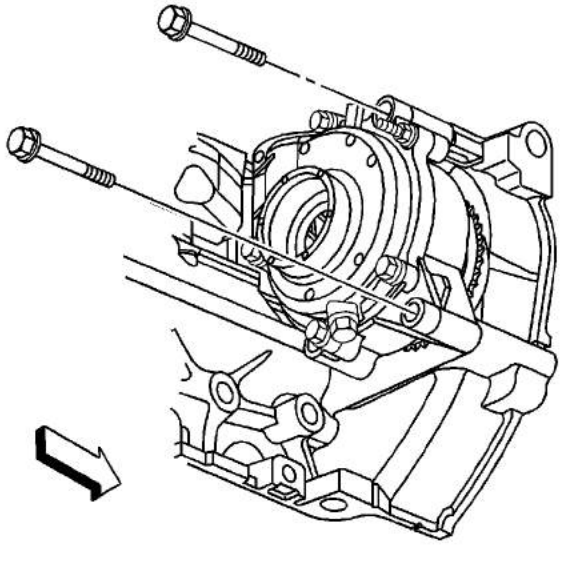

10. Remove the rear 2 water pump bolts.

cardiagn.com

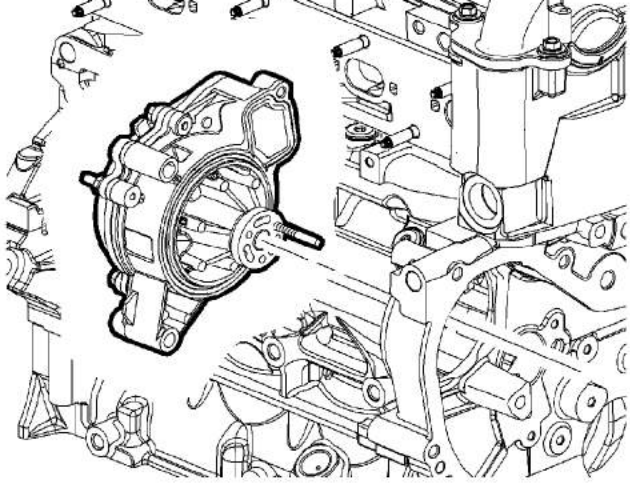

11. Remove the water pump.
12. Remove and discard the water pump O-ring seal.

Installation Procedure

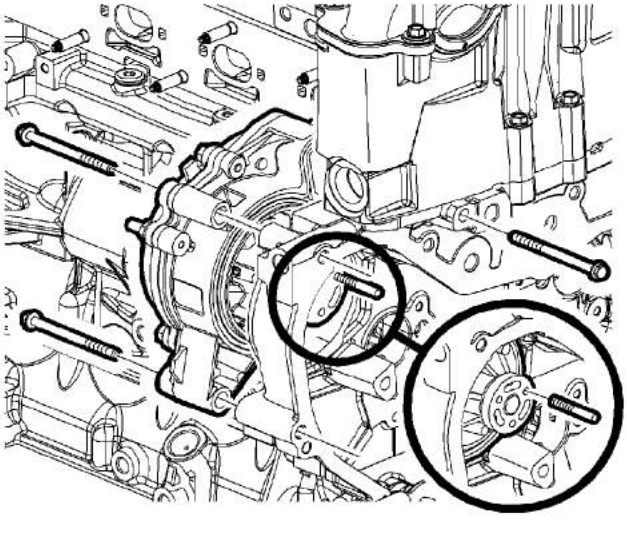

Note: Prior to installing the water pump, read the entire procedure. This will help avoid balance shaft chain re-timing and ensure proper sealing.

1. Install a NEW water pump O-ring seal.

cardiagn.com

2. Using the guide pin, align the pin with the water pump holding tool.
3. Position the water pump against the engine block and hand tighten the water pump bolts.

   Caution: Refer to Fastener Caution in the Preface section.

4. Install the inner water pump sprocket bolts. After 2 are snug, remove the guide pin and install the 3rd bolt.

   Tighten the water pump bolts to **25 N·m (18 lb ft)**.

5. Tighten the water pump sprocket bolts last to **10 N·m (89 lb in)**.

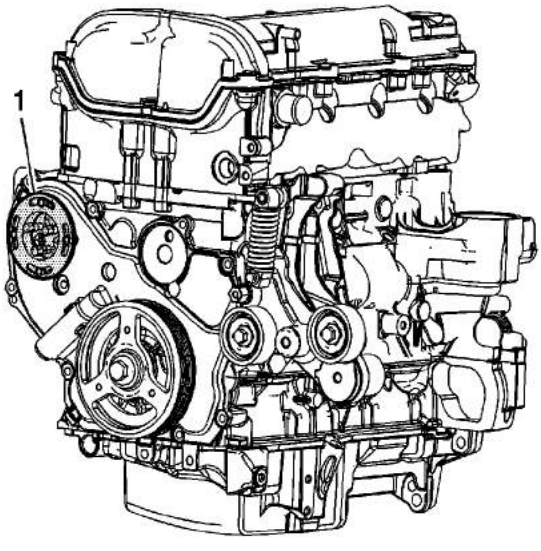

6. Remove the J 43651 (1).

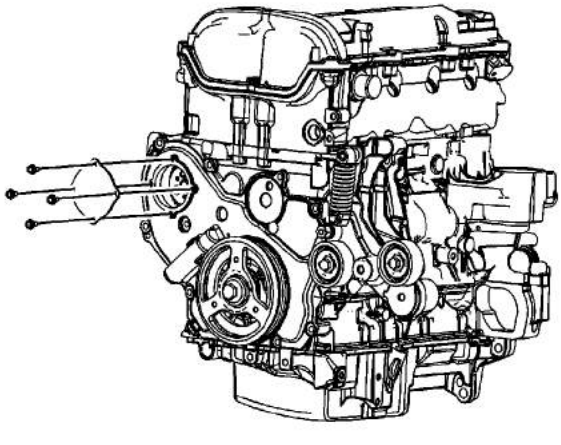

cardiagn.com

7. Install the water pump access plate and bolts and tighten the bolts to **10 N·m (89 lb in)**.
8. Install the engine splash shield. Refer to Engine Splash Shield Replacement.
9. Install the thermostat housing. Refer to Engine Coolant Thermostat Housing Replacement.

cardiagn.com

Water Pump Replacement (LY7)

Special Tools

EN 46104 Water Pump Pulley Holding Tool

Removal Procedure

1. Drain the cooling system. Refer to Cooling System Draining and Filling.
2. Remove the drive belt. Refer to Drive Belt Replacement.

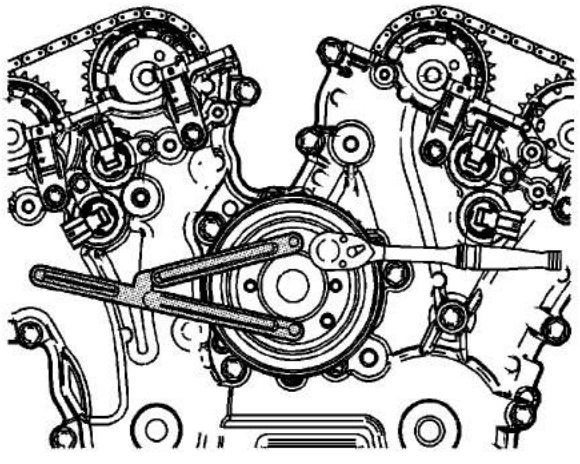

3. Use the EN 46104 in order to retain the water pump pulley.

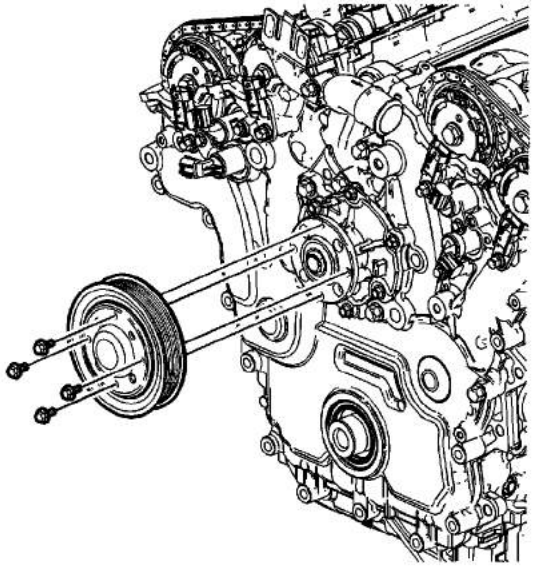

cardiagn.com

4. Remove the water pump pulley bolts.
5. Remove the water pump pulley.

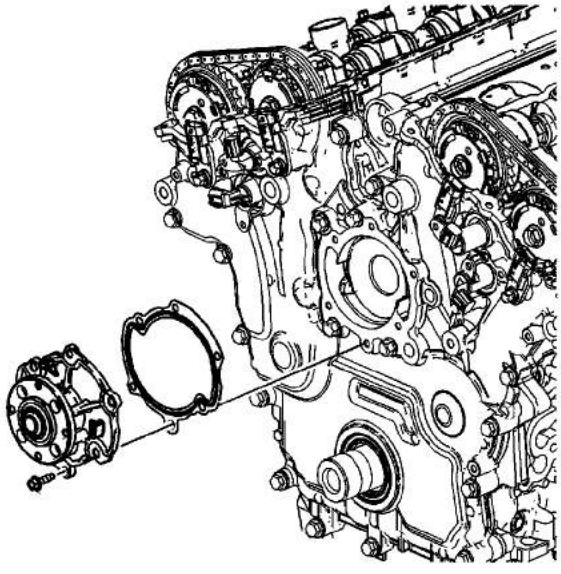

6. Remove the water pump bolts.
7. Remove the water pump.
8. Remove and DISCARD the water pump seal.
9. Carefully clean the water pump sealing surfaces.

Installation Procedure

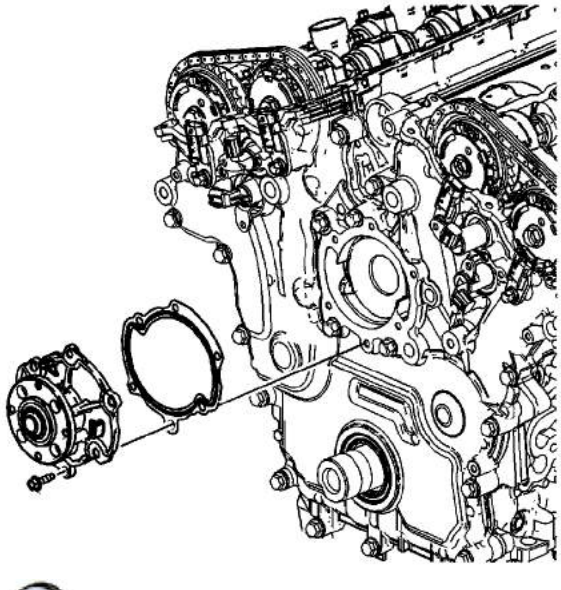

cardiagn.com

Caution: Refer to Fastener Caution in the Preface section.

3. Install the water pump bolts and tighten to **10 N·m (89 lb in)**.

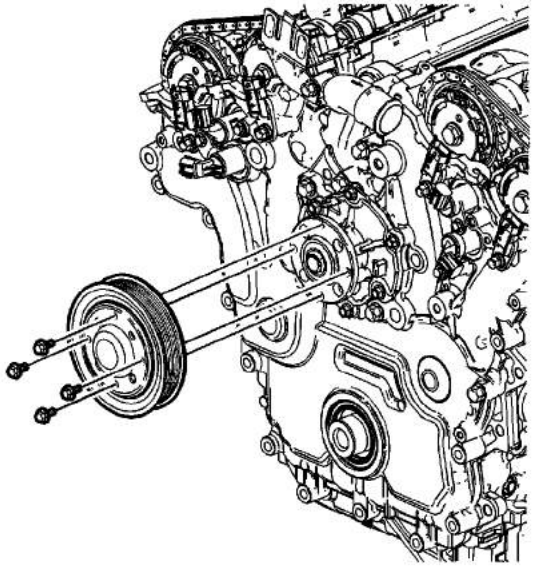

4. Install the water pump pulley and the water pump pulley bolts.

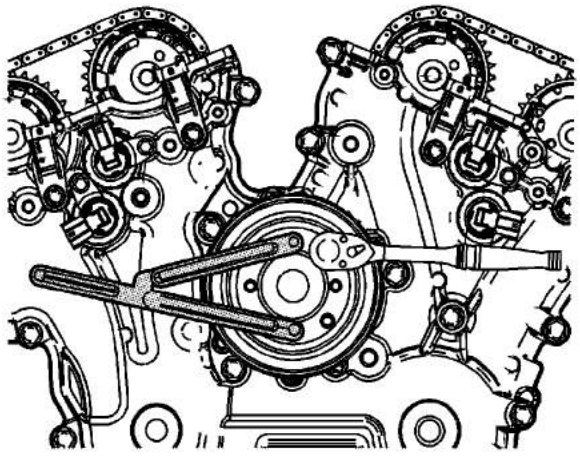

5. Use the EN 46104 in order to retain the water pump pulley.
6. Install the water pump pulley bolts and tighten to **10 N·m (89 lb in)**.
7. Install the drive belt. Refer to Drive Belt Replacement.
8. Fill the cooling system. Refer to Cooling System Draining and Filling.

cardiagn.com

Water Pump Replacement (LZ4)

Removal Procedure

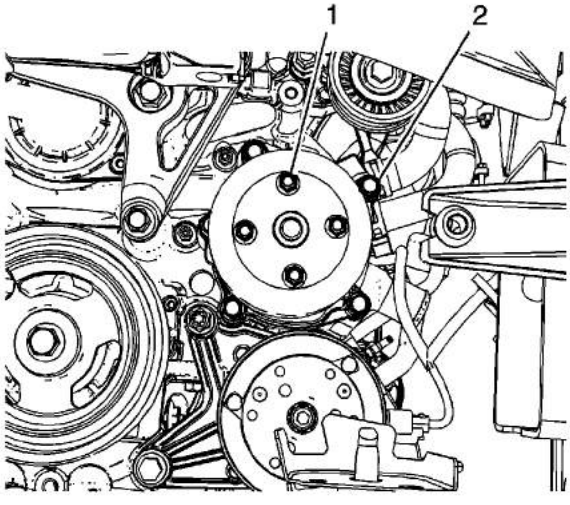

1. Remove the radiator outlet hose. Refer to Radiator Outlet Hose Replacement.
2. Remove the front wheelhouse liner. Refer to Front Wheelhouse Liner Replacement.
3. Remove the drive belt. Refer to Drive Belt Replacement.
4. Remove the water pump pulley bolts (1).
5. Remove the water pump assembly bolts (2).
6. Remove the water pump and O-ring.

Installation Procedure

cardiagn.com

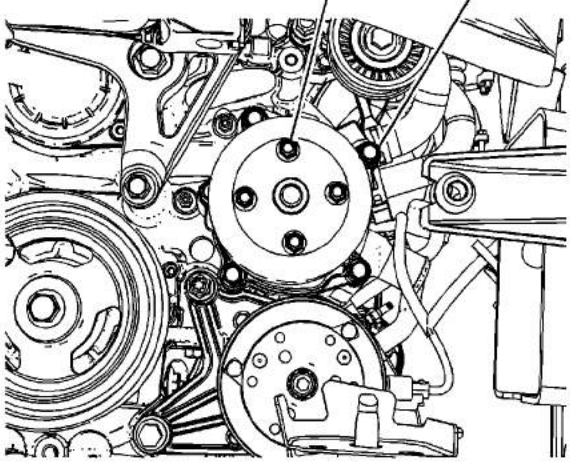

1. Clean the engine block at the water pump mating surface.
2. Install a new water pump O-ring to the water pump.
3. Install the water pump assembly.

Caution: Refer to Fastener Caution in the Preface section.

4. Install the water pump bolts (2) and tighten to **25 N·m (18 lb ft)**.
5. Install the water pump pulley bolts (1) and tighten to **25 N·m (18 lb ft)**.
6. Install the drive belt. Refer to Drive Belt Replacement.
7. Install the front wheelhouse liner. Refer to Front Wheelhouse Liner Replacement.
8. Install the radiator outlet hose. Refer to Radiator Outlet Hose Replacement.

cardiagn.com

Radiator Drain Cock Replacement (Without HP5)

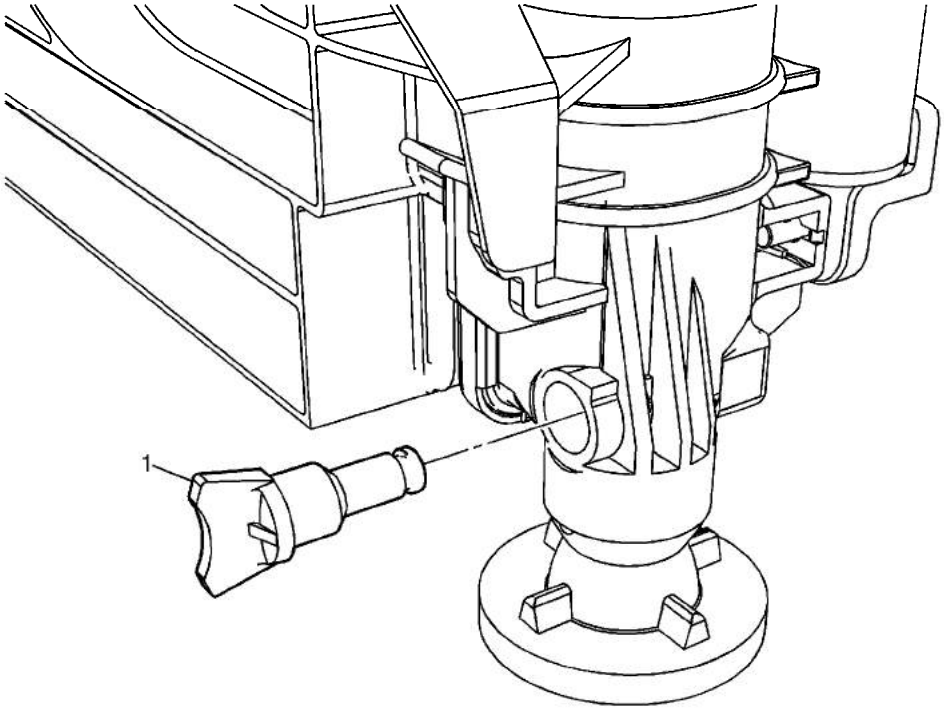

Callout	Component Name
Fastener Tightening Specifications: Refer to Fastener Tightening Specifications. **Preliminary Procedure** Drain the cooling system. Refer to Cooling System Draining and Filling.	
1	Drain Cock **Procedure:** 1. Remove the radiator drain cock from the radiator side tank with a firm tug. 2. Install a new drain cock seal.

cardiagn.com

Radiator Drain Cock Replacement (With HP5)

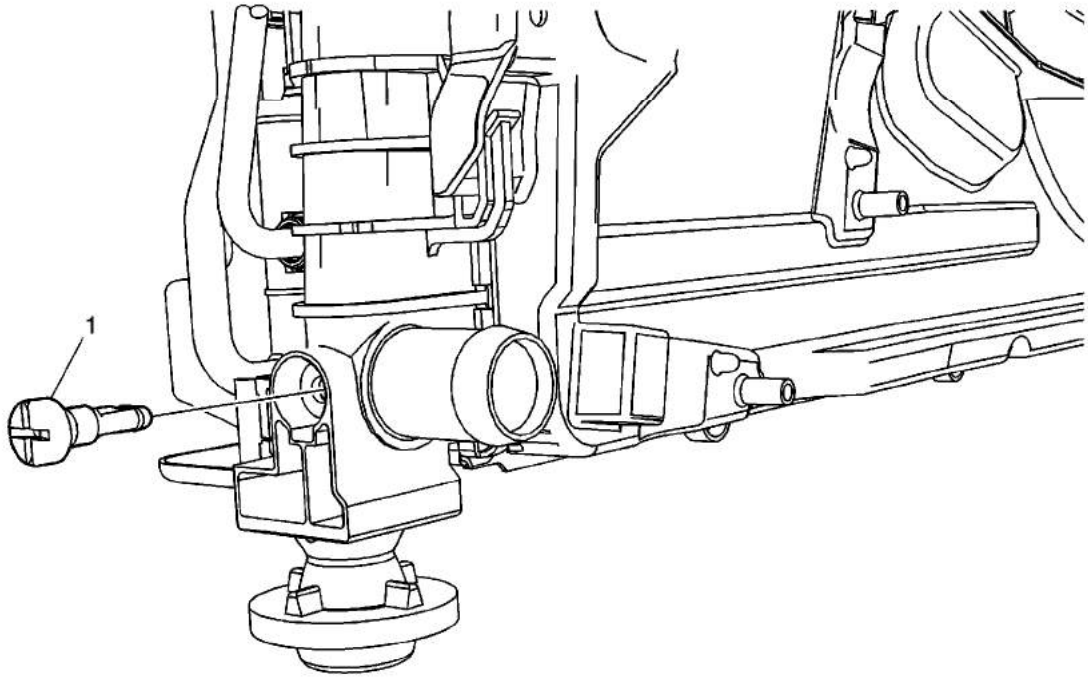

Preliminary Procedure

1. Remove the front bumper fascia air deflector. Refer to Front Bumper Fascia Air Deflector Replacement
2. Drain the cooling system. Refer to Cooling System Draining and Filling

1	Drain Cock **Procedure** 1. Remove the radiator drain cock from the radiator side tank with a firm tug. 2. Install a new drain cock seal.

cardiagn.com

Radiator Replacement (Without HP5)

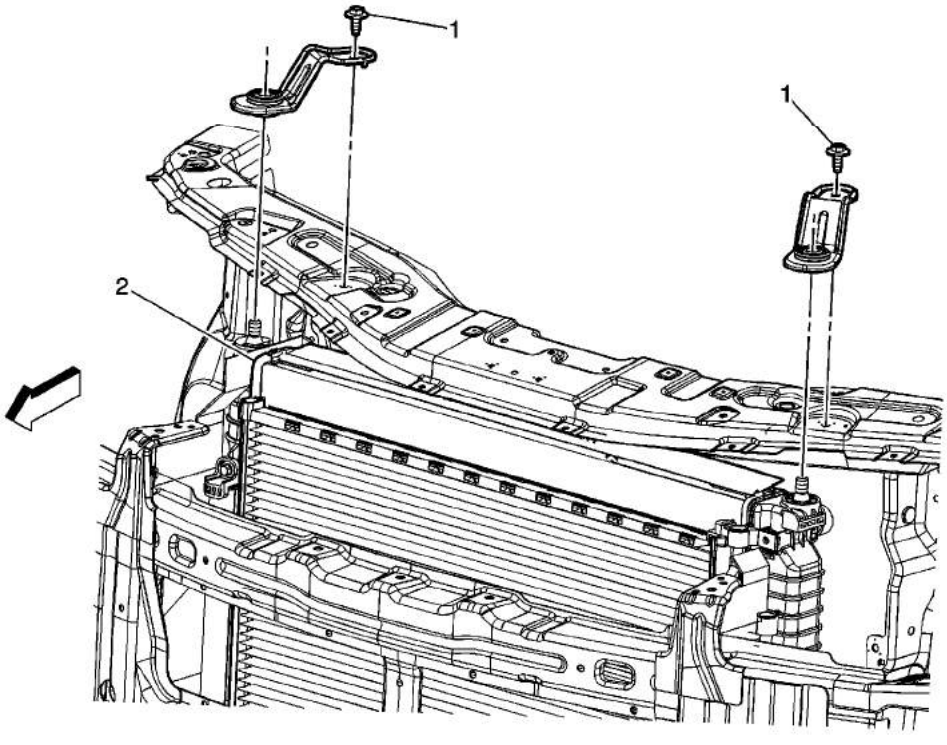

Callout	Component Name
Preliminary Procedure	
1. Drain the cooling system. Refer to Cooling System Draining and Filling. 2. Disconnect the hybrid system. Refer to Hybrid Battery Service Disconnect/Connect. 3. Raise and suitably support the vehicle as necessary. Refer to Lifting and Jacking the Vehicle. 4. Remove radiator opening upper cover. Refer to Radiator Opening Upper Cover Replacement 5. Remove front fascia. Refer to Front Bumper Fascia Replacement 6. Remove the front bumper impact bar. Refer to Front Bumper Impact Bar Replacement. 7. Remove compressor hose/pipe bolt from bracket at top radiator support. 8. Remove mounting bolts (Qty: 3) from condenser, reposition and support the condenser. Refer to Air Conditioning Condenser Replacement. 9. Remove radiator inlet and outlet hoses. Refer to Radiator Inlet Hose Replacement , or Radiator Outlet Hose Replacement. 10. Disconnect transmission oil cooler lines from the radiator. 11. Remove fan shroud bolts (Qty: 2) and reposition.	
1	Radiator Support Bolt (Qty: 2) **Caution:** Refer to Fastener Caution in the Preface section.

© 2010 General Motors Corporation. All rights reserved.

cardiagn.com

2	Radiator

cardiagn.com

Radiator Replacement (With HP5)

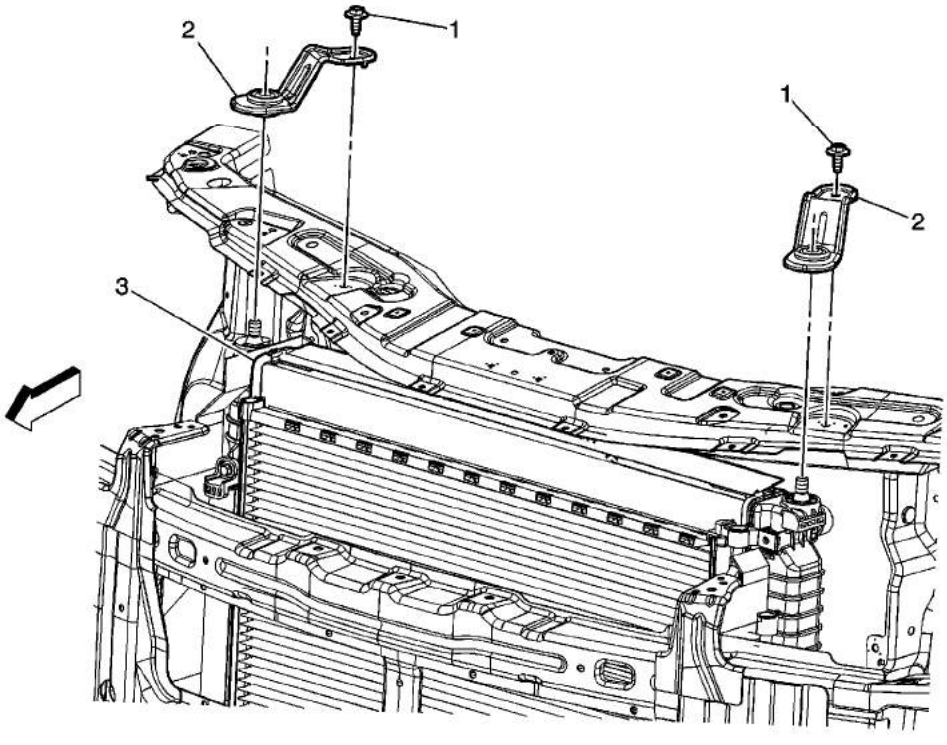

Callout	Component Name
Preliminary Procedures 1. Drain the cooling system. Refer to Cooling System Draining and Filling 2. Raise and suitably support the vehicle as necessary. Refer to Lifting and Jacking the Vehicle 3. Remove the radiator inlet hose. Refer to Radiator Inlet Hose Replacement 4. Remove the radiator outlet hose. Refer to Radiator Outlet Hose Replacement 5. Remove the transmission fluid auxiliary cooler. Refer to Transmission Fluid Auxiliary Cooler Replacement 6. Reposition the fan shroud. Refer to Engine Coolant Fan Motor Replacement	
1	Radiator Support Bolt (Qty 2) **Caution:** Refer to Fastener Caution in the Preface section. **Tighten** 22 N·m (16 lb ft)
2	Radiator Support Bracket (Qty 2)
3	Radiator

[redacted]

cardiagn.com

Coolant Heater Replacement (LY7)

Removal Procedure

1. Turn the ignition OFF.
2. Raise and support the vehicle. Refer to Lifting and Jacking the Vehicle.
3. Remove the rear transmission Mount. Refer to Transmission Rear Mount Replacement
4. Disconnect the coolant heater cord from the coolant heater.

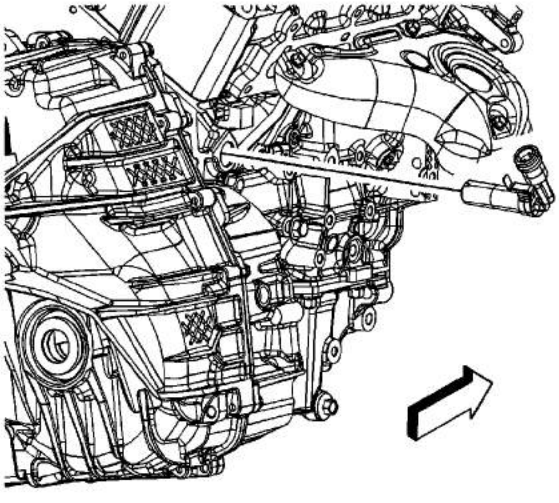

5. Remove the coolant heater.

Installation Procedure

cardiagn.com

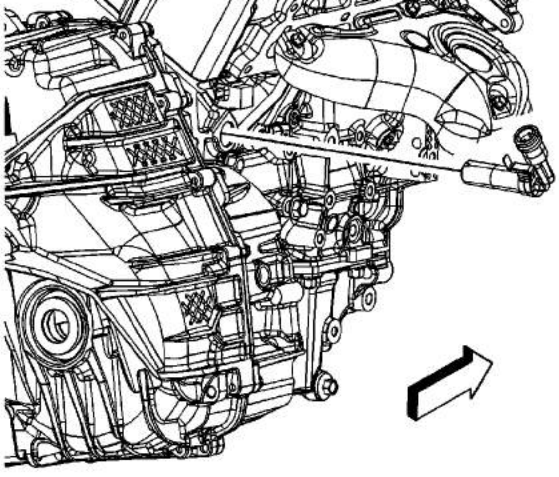

1. Install the coolant heater.
2. Connect the coolant heater cord to the coolant heater.
3. Install the rear transmission Mount. Refer to Transmission Rear Mount Replacement
4. Lower the vehicle.

cardiagn.com

Coolant Heater Replacement (2.4L LAT)

Removal Procedure

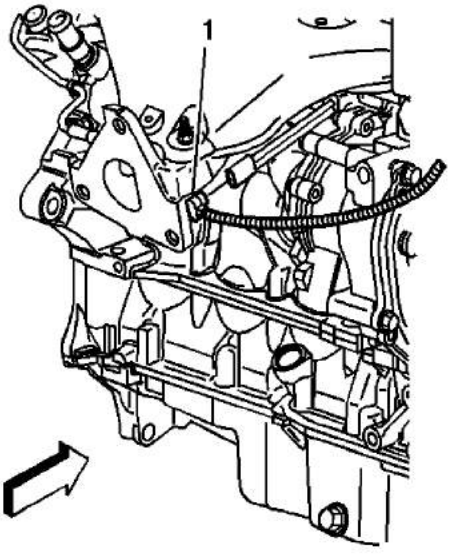

1. Disconnect the coolant heater cord (1).

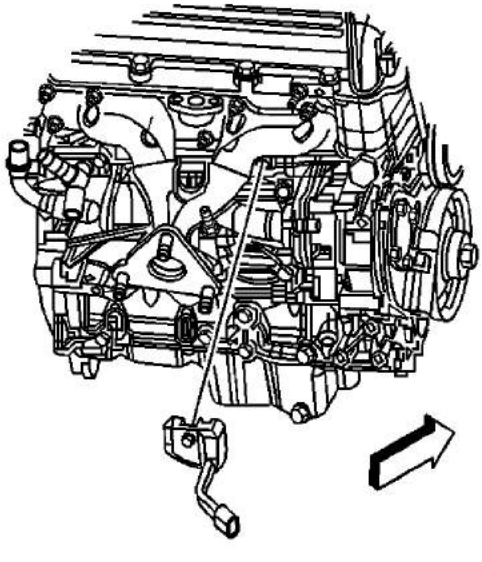

2. Remove the coolant heater bolt.
3. Remove the coolant heater.

cardiagn.com

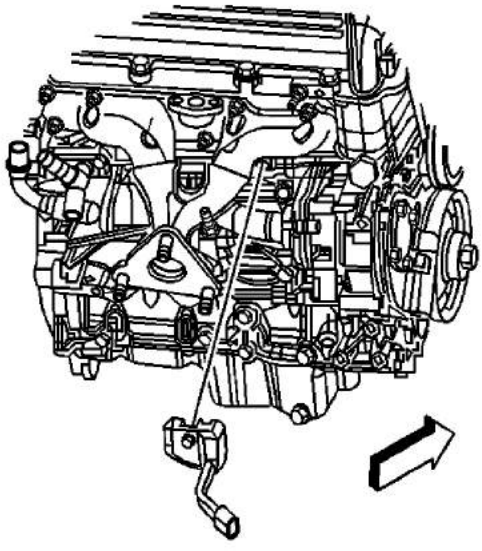

1. Install the coolant heater.

   Caution: Refer to Fastener Caution in the Preface section.

2. Install the coolant heater bolt and tighten to **10 N·m (89 lb in)**.

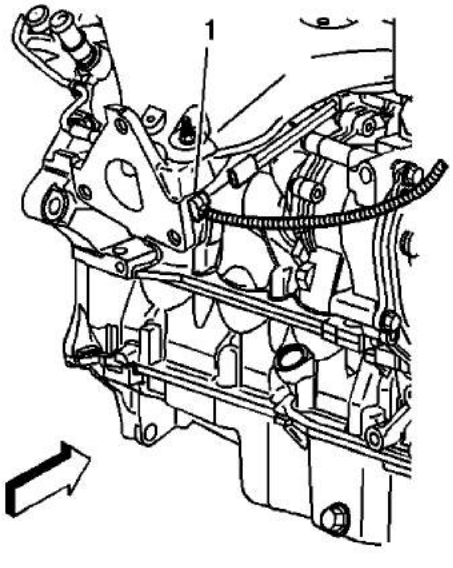

3. Connect the coolant heater cord (1).

cardiagn.com

Coolant Heater Cord Replacement (3.5L (L66))

Removal Procedure

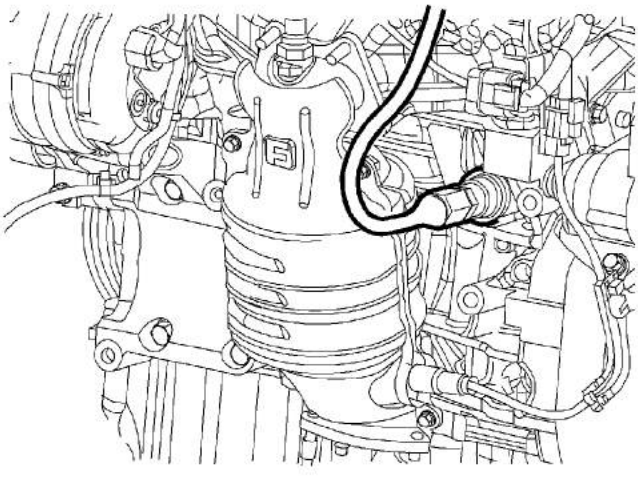

1. Disconnect the coolant heater power supply cord from the coolant heater (2).
2. Disconnect the coolant heater cord clip (1) from the engine.

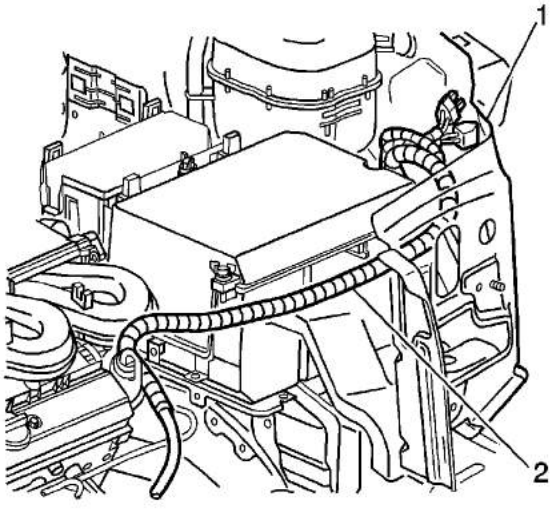

3. Disconnect the coolant heater cord from between the washer bottle and the coolant reservoir (1).
4. Remove the coolant heater cord from the vehicle.

© 2010 General Motors Corporation. All rights reserved.

cardiagn.com

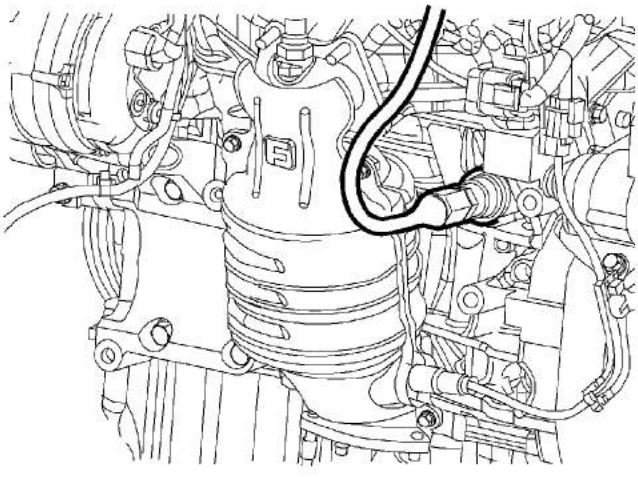

1. Connect the coolant heater cord to the coolant heater (2).
2. Secure the coolant heater cord clip (1) to the engine .

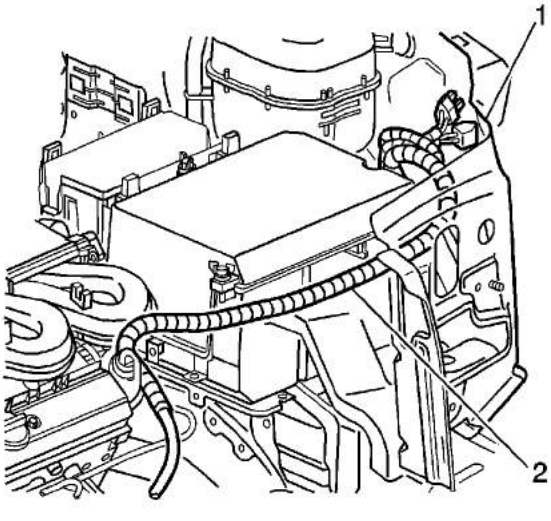

3. Route the coolant heater cord along the battery (2).
4. Secure the coiled power cord between the washer fluid bottle and the coolant reservoir (1).

cardiagn.com

Coolant Heater Cord Replacement (2.4L (LAT))

Removal Procedure

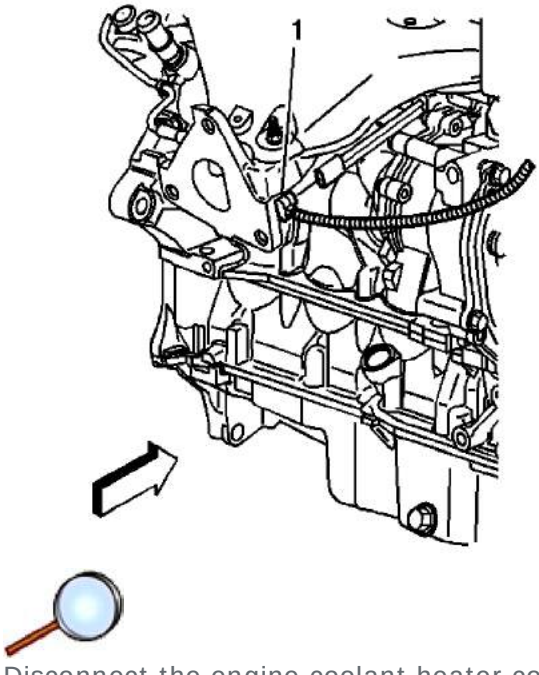

1. Disconnect the engine coolant heater cord (1).
2. Remove the clips from the engine mount and surge tank.

Installation Procedure

1. Install the clips from the engine mount and surge tank.

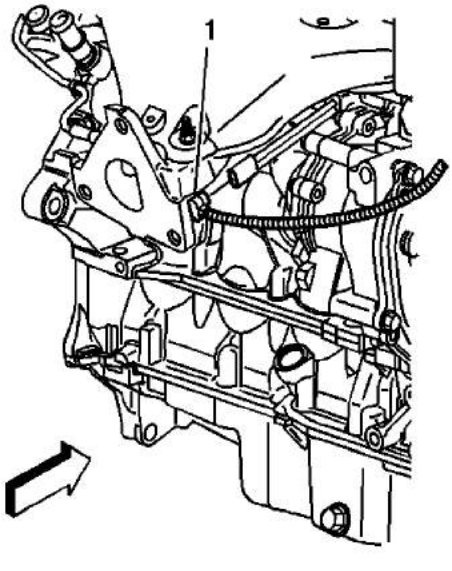

[redacted]

cardiagn.com

2. Connect the engine coolant heater cord (1).

cardiagn.com