Restraints

GENERAL

SUPPLEMENTAL RESTRAINTS SYSTEM CONTROL MODULE(SRSCM)
SRS CONTROL MODULE

AIR BAG MODULE (DRIVE SIDE)
AIR BAG MODULE AND CLOCK SPRING

AIR BAG MODULE (PASSENGER SIDE)
AIR BAG MODULE

AIR BAG MODULE (SIDE AIR BAG)
AIR BAG MODULE

AIR BAG MODULE (CURTAIN AIR BAG)
AIR BAG MODULE

SEAT BELT PRETENSIONER
SEAT BELT PRETENSIONER

SRS CONTROL SYSTEM
FRONT IMPACT SENSOR (FIS)
SIDE IMPACT SENSOR (SIS)

TROUBLESHOOTING

AIR BAG MODULE DISPOSAL

GENERAL

GENERAL EFAC12FD

The supplemental restraint system (SRS) is designed to supplement the seat belt to help reduce the risk or severity of injury to the driver and passenger by activating and deploying the driver, passenger, side airbag and belt pretensioner in certain frontal or side collisions.
The SRS (Airbag) consists of : a driver side airbag module located in the center of the steering wheel, which contains the folded cushion and an inflator unit ; a passenger side airbag module located in the passenger side crash pad contains the folded cushion assembled with inflator unit ; side airbag modules located in the front seat contain the folded cushion and an inflator unit ; curtain airbag modules located inside of the headliner which contains folded cushions and inflator units. The impact sensing function of the SRSCM is carried out by electronic accelerometer that continuously measure the vehicle's acceleration and delivers a corresponding signal through amplifying and filtering circuitry to the microprocessor.

SRSCM (SRS CONTROL MODULE)

SRSCM will detect front impact with front impact sensor, and side impact with side impact sensor, and determine airbag module deployment.

1. DC/DC converter: DC/DC converter in power supply unit includes up/down transformer converter, and provide ignition voltage for 2 front airbag ignition circuits and the internal operation voltage of the SRSCM. If the internal operation voltage is below critical value setting, it will perform resetting.

2. Safety sensor: Safety sensor is located in airbag ignition circuit. Safety sensor will operate airbag circuit at any deployment condition and release airbag circuit safely at normal driving condition. Safety sensor is a double contact electro-mechanical switch that will close detecting deceleration above certain criteria.

3. Back up power supply: SRSCM has separate back up power supply, that will supply deployment energy instantly in low voltage condition or upon power failure by front crash.

4. Self diagnosis: SRSCM will constantly monitor current SRS operation status and detect system failure while vehicle power supply is on, system failure may be checked with trouble codes using scan tool. (Hi-Scan)

5. Airbag warning lamp on: Upon detecting error, the module will transmit signal to SRSCM indicator lamp located at cluster. MIL lamp will indicate driver SRS error. Upon ignition key on, SRS lamp will turn on for about six seconds.

6. Trouble code registration: Upon error occurrence in system, SRSCM will store DTC corresponding to the error. DTC can be cleared only by Hi-Scan. However, if an internal fault code is logged or if a crash is recorded the fault clearing should not happen.

7. Self diagnostic connector: Data stored in SRSCM memory will be output to Hi-Scan or other external output devices through connector located below driver side crash pad.

8. Once airbag is deployed, SRSCM should not be used again but replaced.

9. SRSCM will determine whether passenger put on seat belt by the signal from built-in switch in seat belt buckle, and deploy front seat airbag at each set crash speed.

10. Side airbag deployment will be determined by SRSCM that will detect satellite sensor impact signal upon side crash, irrespective to seat belt condition.

SPECIFICATION E89D783B

Item	Resistance (Ω)
Driver Airbag (DAB)	1.4 ~ 6.2
Passenger Airbag (PAB)	1.4 ~ 6.2
Side Airbag (SAB)	1.4 ~ 6.2
Curtain Airbag (CAB)	1.4 ~ 6.2
Seat Belt Retractor Pretensioner (BPT)	1.4 ~ 6.2

TIGHTENING TORQUES EB73AFF1

Item	kgf·m	Nm	lb-ft
Driver Airbag (DAB)	0.8 ~ 1.1	7.9 ~ 10.8	5.8 ~ 8.0
Passenger Airbag (PAB)	Bolt : 1.9 ~ 2.7 Nut : 0.9 ~ 1.4	18.6 ~ 26.5 8.8 ~ 13.7	13.7 ~ 19.5 6.5 ~ 10.1
Curtain Airbag (CAB)	1.1 ~ 1.5	10.9 ~ 14.7	8.0 ~ 10.8
Side Airbag (SAB)	0.7 ~ 0.9	7.0 ~ 9.0	5.2 ~ 6.6
Seat Belt Anchor Bolt (BPT)	4.0 ~ 5.5	39.2 ~ 53.9	28.9 ~ 39.8
SRSCM Mounting Bolt	0.7 ~ 0.9	6.8 ~ 9.2	5.0 ~ 6.8
Front Impact Sensor (FIS) Mounting Bolt	0.7 ~ 0.9	6.8 ~ 9.2	5.0 ~ 6.8
Side Impact Sensor (SIS) Mounting Bolt	0.7 ~ 0.9	6.8 ~ 9.2	5.0 ~ 6.8

SPECIAL SERVICE TOOLS E37A38C8

Tool(Number and Name)	Illustration	Use
Deployment tool 0957A-34100A	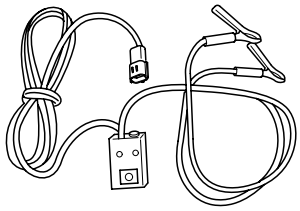 ARIE500A	Airbag deployment tool
Deployment adapter 0957A-3F100	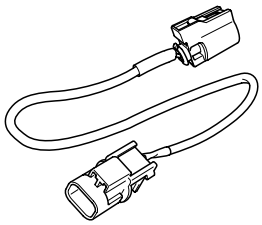 ERKD001F	Use with deployment tool. (PAB, SAB, CAB)
Deployment adapter 0957A-38500	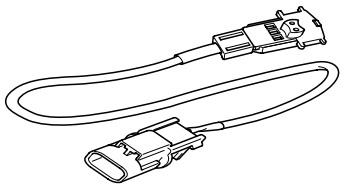 ARIE500C	Use with deployment tool. (DAB, BPT)
Dummy 0957A-38200	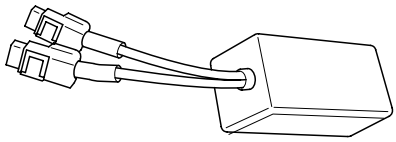 ARIE500D	Simulator to check the resistance of each wiring harness

Tool(Number and Name)	Illustration	Use
Dummy adapter 0957A-3F000	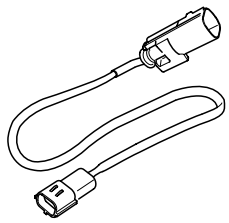 ERKD001G	Use with dummy (PAB, SAB, CAB)
Dummy adapter 0957A-2G000	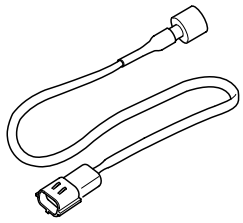 ARIE500F	Use with dummy (DAB, BPT)

DAB : Driver Airbag
PAB : Passenger Airbag
SAB : Side Airbag
CAB : Curtain Airbag
BPT : Seat Belt Retractor Pretensioner

REFERENCE SERVICE TOOLS

Tool Number	Tool Name
TRK00A	Wiring Repair Kit

*For more information of the Wiring Repair Kit, please refer to BE group - "REFERENCE SERVICE TOOLS"

PRECAUTIONS E915C2A3

GENERAL PRECAUTIONS

Please read the following precautions carefully before performing the airbag system service. Observe the instructions described in this manual, or the airbags could accidentally deploy and cause damage or injuries.

- Except when performing electrical inspections, always turn the ignition switch OFF and disconnect the negative cable from the battery, and wait at least three minutes before beginning work.

  NOTE

  The contents in the memory are not erased even if the ignition switch is turned OFF or the battery cables are disconnected from the battery.

- Use the replacement parts which are manufactured to the same standards as the original parts and quality. Do not install used SRS parts from another vehicle. Use only new parts when making SRS repairs.
- Carefully inspect any SRS part before you install it. Do not install any part that shows signs of being dropped or improperly handled, such as dents, cracks or deformation.

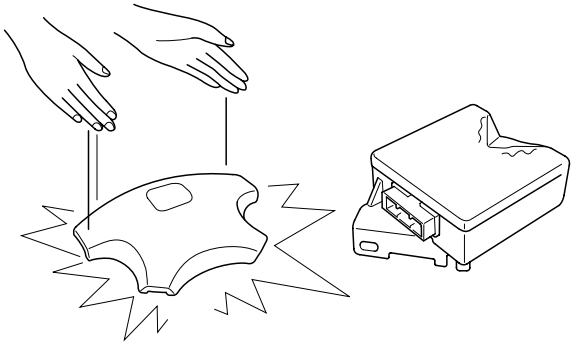

ERKD002V

- Before removing any of the SRS parts (including the disconnection of the connectors), always disconnect the SRS connector.

AIRBAG HANDLING AND STORAGE

Do not disassemble the airbags; it has no serviceable parts. Once an airbag has been deployed, it cannot be repaired or reused.

For temporary storage of the air bag during service, please observe the following precautions.

- Store the removed airbag with the pad surface up.
- Keep free from any oil, grease, detergent, or water to prevent damage to the airbag assembly.

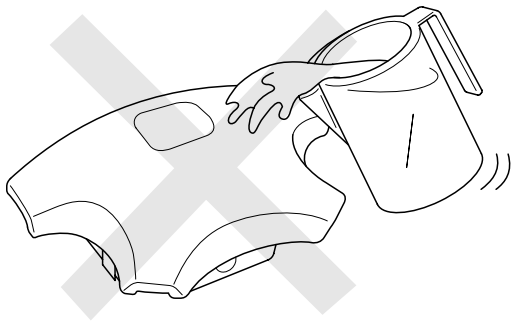

ERKD002Z

- Store the removed airbag on secure, flat surface away from any high heat source (exceeding 85°C/185°F).
- Never perform electrical inspections to the airbags, such as measuring resistance.
- Do not position yourself in front of the airbag assembly during removal, inspection, or replacement.
- Refer to the scrapping procedures for disposal of the damaged airbag.
- Be careful not to bump or impact the SRS unit or the side impact sensors whenever the ignition switch is ON, wait at least three minutes after the ignition switch is turned OFF before begin work.
- During installation or replacement, be careful not to bump (by impact wrench, hammer, etc.) the area around the SRS unit and the side impact sensor. The airbags could accidentally deploy and cause damage or injury.
- After a collision in which the airbags were deployed, replace the front airbags and the SRS unit. After a collision in which the side airbag was deployed, replace the side airbag, the front impact sensor and side impact sensor on the side where the side airbag deployed and the SRS unit. After a collision in which the airbags or the side air bags did not deploy, inspect for any damage or any deformation on the SRS unit and

the side impact sensors. If there is any damage, replace the SRS unit, the front impact sensor and/or the side impact sensors.

- Do not disassemble the SRS unit, the front impact sensor or the side impact sensors
- Turn the ignition switch OFF, disconnect the battery negative cable and wait at least three minutes before beginning installation or replacement of the SRS unit.
- Be sure the SRS unit, the front impact sensor and side impact sensors are installed securely with the mounting bolts.
- Do not spill water or oil on the SRS unit,or the front impact sensor or the side impact sensors and keep them away from dust.
- Store the SRS unit, the front impact sensor and the side impact sensors in a cool (less than 40°C/104°F) and dry (less than 80% relative humidity, no moisture) area.

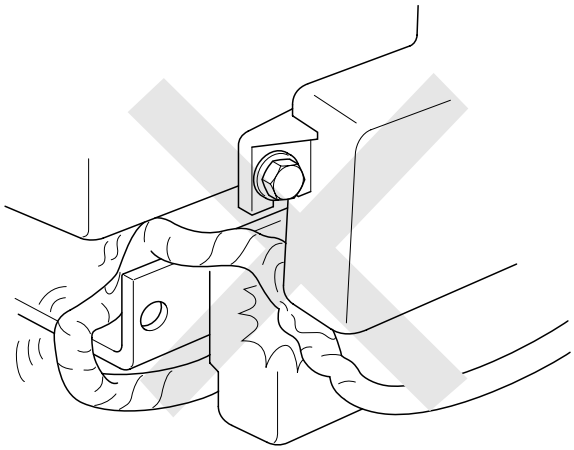

ERKD002X

WIRING PRECAUTIONS

SRS wiring can be identified by special yellow outer covering (except the SRS circuits under the front seats).
Observe the instructions described in this section.

- Never attempt to modify, splice, or repair SRS wiring. If there is an open or damage in SRS wiring, replace the harness.

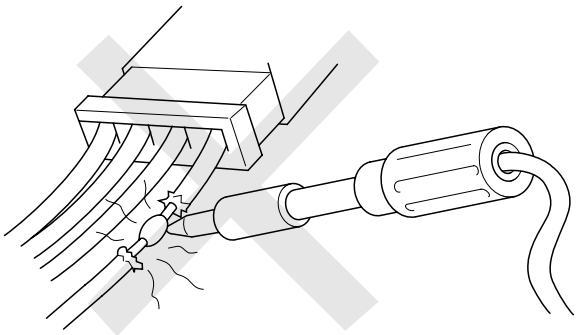

ERKD002Y

- Be sure to install the harness wires so that they are not pinched, or interfere with other parts.
- Make sure all SRS ground locations are clean, and grounds are securely fastened for optimum metal-to-metal contact. Poor grounding can cause intermittent problems that are difficult to diagnose.

PRECAUTIONS FOR ELECTRICAL INSPECTIONS

- When using electrical test equipment, insert the probe of the tester into the wire side of the connector.
  Do not insert the probe of the tester into the terminal side of the connector, and do not tamper with the connector.

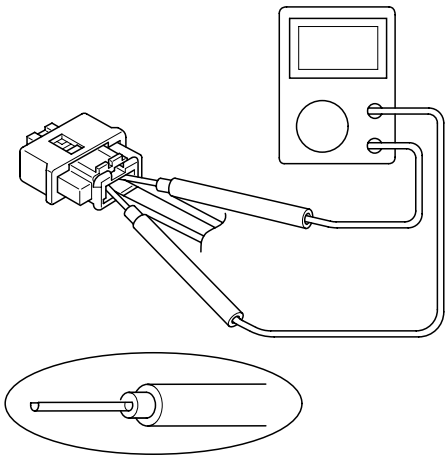

ERKD002W

- Use a u-shaped probe. Do not insert the probe forcibly.
- Use specificed service connectors for troubleshooting.

Using improper tools could cause an error in inspection due to poor metal contact.

AIRBAG CONNECTOR

DISCONNECTING

To release the lock, pull the spring-loaded sleeve (A) and the slider (B), while holding the opposite half of the connector. Pull the connector halves apart. Be sure to pull on the sleeve and not on the connector half.

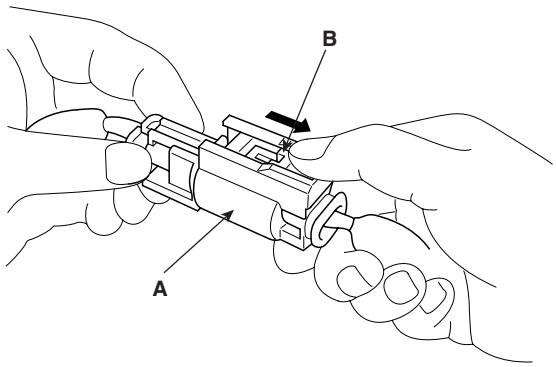

ERKD511D

CONNECTING

Hold both connector halves and press firmly until the projection (C) of the sleeve-side connector clicks to lock.

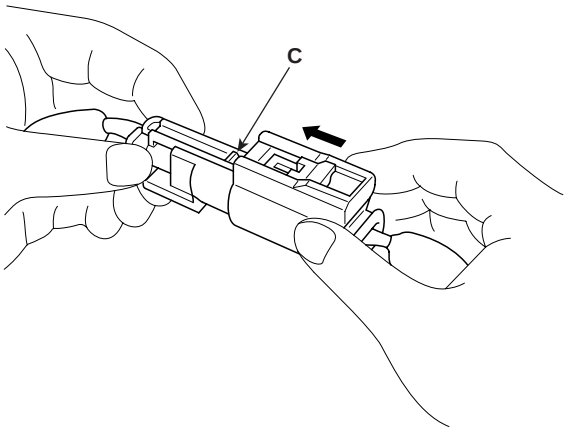

ERBF511E

WARNING LAMP ACTIVATION E2B5F9DA

WARNING LAMP BEHAVIOR AFTER IGNITION ON

As soon as the operating voltage is applied to the SRSCM ignition input, the SRSCM activates the warning lamp for a bulb check.
The lamp shall turn on for 6 seconds during the initialization phase and be turned off afterward. However, in order to indicate the driver, the warning lamp shall turn on for 6 seconds and off for one second then on continuously after the operating voltage is applied if any active fault exists.

1. Active fault or historical fault counter is greater or equal to 10

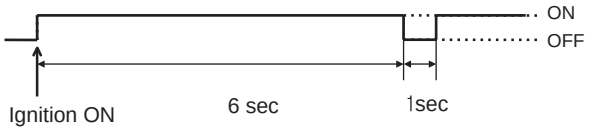

BRIF500A

2. Normal or historical fault counter is less than 10

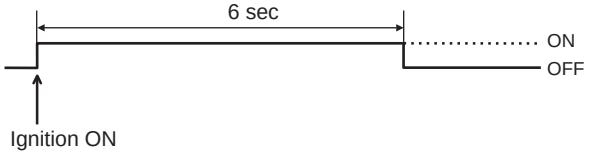

BRIF500B

SRSCM INDEPENDENT WARNING LAMP ACTIVATION

There are certain fault conditions in which the SRSCM cannot function and thus cannot control the operation of the standard warning lamp. In these cases, the standard warning lamp is directly activated by appropriate circuitry that operates independently of the SRSCM. These cases are:

1. Loss of battery supply to the SRSCM : warning lamp turned on continuously.
2. Loss of internal operating voltage : warning lamp turned on continuously.
3. Loss of Microprocessor operation : warning lamp turned on continuously.
4. SRSCM not connected : warning lamp turned on continuously through the shorting bar.

PASSENGER AIRBAG DEACTIVATION (PAD) LAMP OPERATION

The SRSCM is designed with circuitry and software to drive a PAD lamp, which is used for depowered airbag system. For the PAD indicator circuitry to function properly, both the SRSCM and PAD indicator are sourced from the same ignition line. After ignition on, the PAD indicator will be turned on for 4 seconds and off for 3 seconds during the initialization phase. Thereafter the lamp will be turned on as long as the PAD switch is in the disabled position.

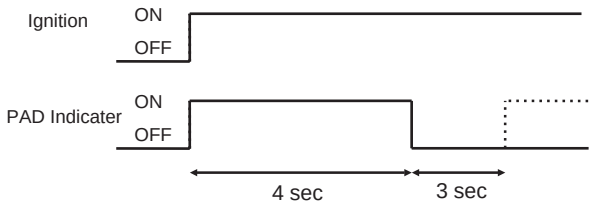

ERRF501U

PASSENGER RESTRAINTS ACTIVATION WITH PAD SWITCH

The PAD switch affects the activation of the front passenger airbag only and the switch is controlled manually. The PAD switch will be functioned as follows:

PAD Switch status	PAD Lamp	PAB
Phase-up	ON → OFF	Enabled
OFF	ON	Disabled
ON	OFF	Enabled
Fault	OFF	Enabled

COMPONENT REPLACEMENT AFTER DEPLOYMENT EA6E180C

NOTE

Before doing any SRS repairs, use the Hi-Scan Pro to check for DTCs. Refer to the Diagnostic Trouble Code list for repairing of the related DTCs.

When the front airbag(s) deployed after a collision, replace the following items.
- SRSCM
- Deployed airbag(s)
- Seat belt pretensioner(s)
- Front impact sensors
- SRS wiring harnesses
- Inspect the clock spring for heat damage.
  If any damage found, replace the clock spring.

When the seat belt pretensioner(s) deployed after a collision, replace the following items.
- Seat belt pretensioner(s)
- SRSCM (if B1658 detected)
- Front impact sensors
- SRS wiring harnesses

When the side/curtain airbag(s) deployed after a collision, replace the following items.
- SRSCM
- Deployed airbag(s)
- Side impact sensor(s) for the deployed side(s)
- SRS wiring harnesses

After the vehicle is completely repaired, confirm the SRS airbag system is OK.
- Turn the ignition switch ON, the SRS indicator should come on for about 6 seconds and then go off.

COMPONENTS E703CF82

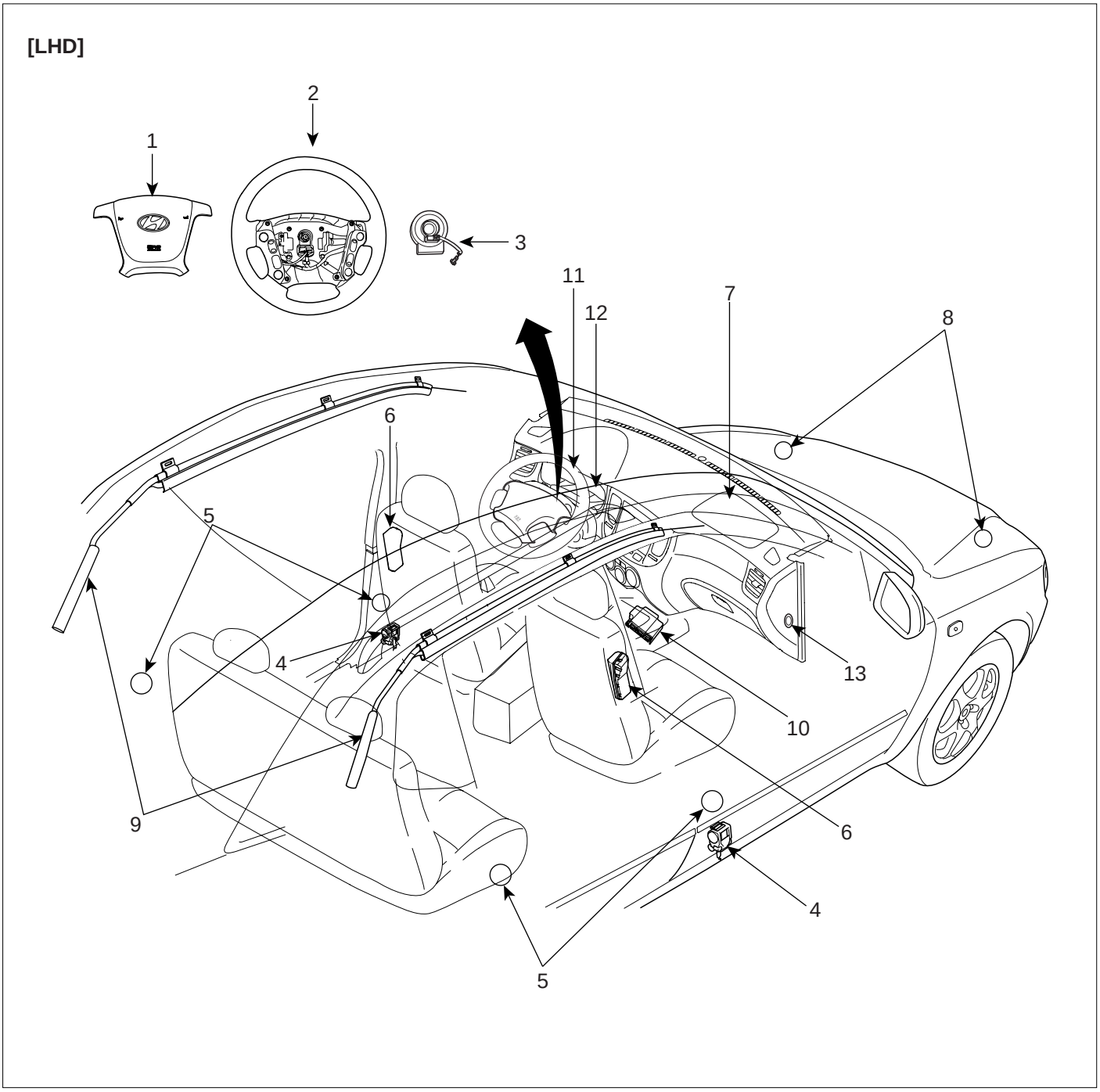

1. Driver Airbag (DAB)
2. Steering Wheel
3. Clock Spring
4. Seat Belt Pretensioner (BPT)
5. Side Impact Sensor (SIS)
6. Side Airbag (SAB)
7. Passenger Airbag (PAB)
8. Front Impact Sensor (FIS)
9. Curtain Airbag (CAB)
10. Supplemental Restraint System Control Module(SRSCM)
11. Airbag Warning Lamp
12. Passenger Airbag Deactivation (PAD) Lamp
13. PAD Switch

SCMRT6500L

[RHD]

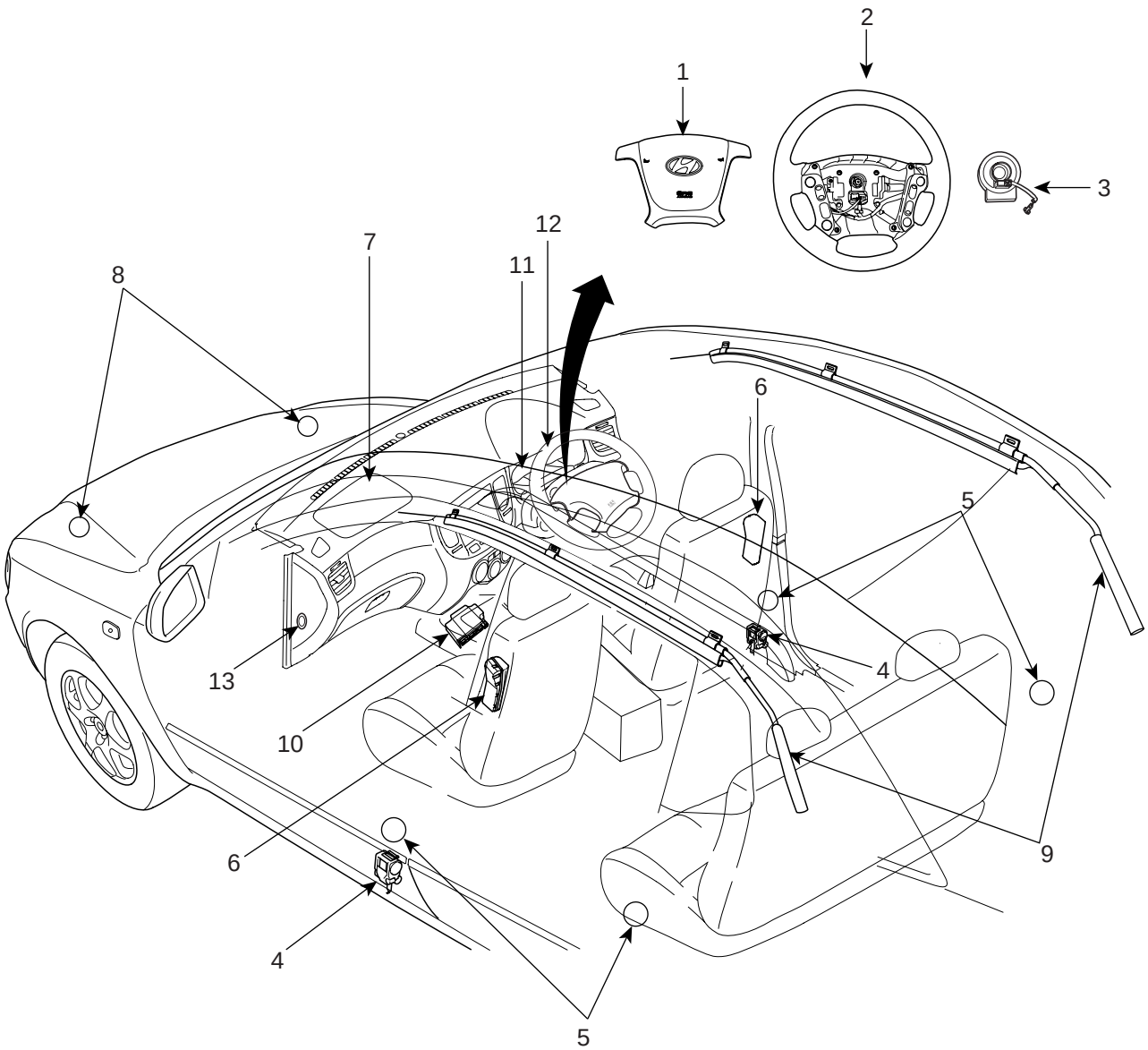

1. Driver Airbag (DAB)
2. Steering Wheel
3. Clock Spring
4. Seat Belt Pretensioner (BPT)
5. Side Impact Sensor (SIS)
6. Side Airbag (SAB)
7. Passenger Airbag (PAB)
8. Front Impact Sensor (FIS)
9. Curtain Airbag (CAB)
10. Supplemental Restraint System Control Module(SRSCM)
11. Airbag Warning Lamp
12. Passenger Airbag Deactivation (PAD) Lamp
13. PAD Switch

SCMRT6500R

COMPONENTS LOCATION

DRIVER AIRBAG (DAB) / PASSENGER AIRBAG (PAB)

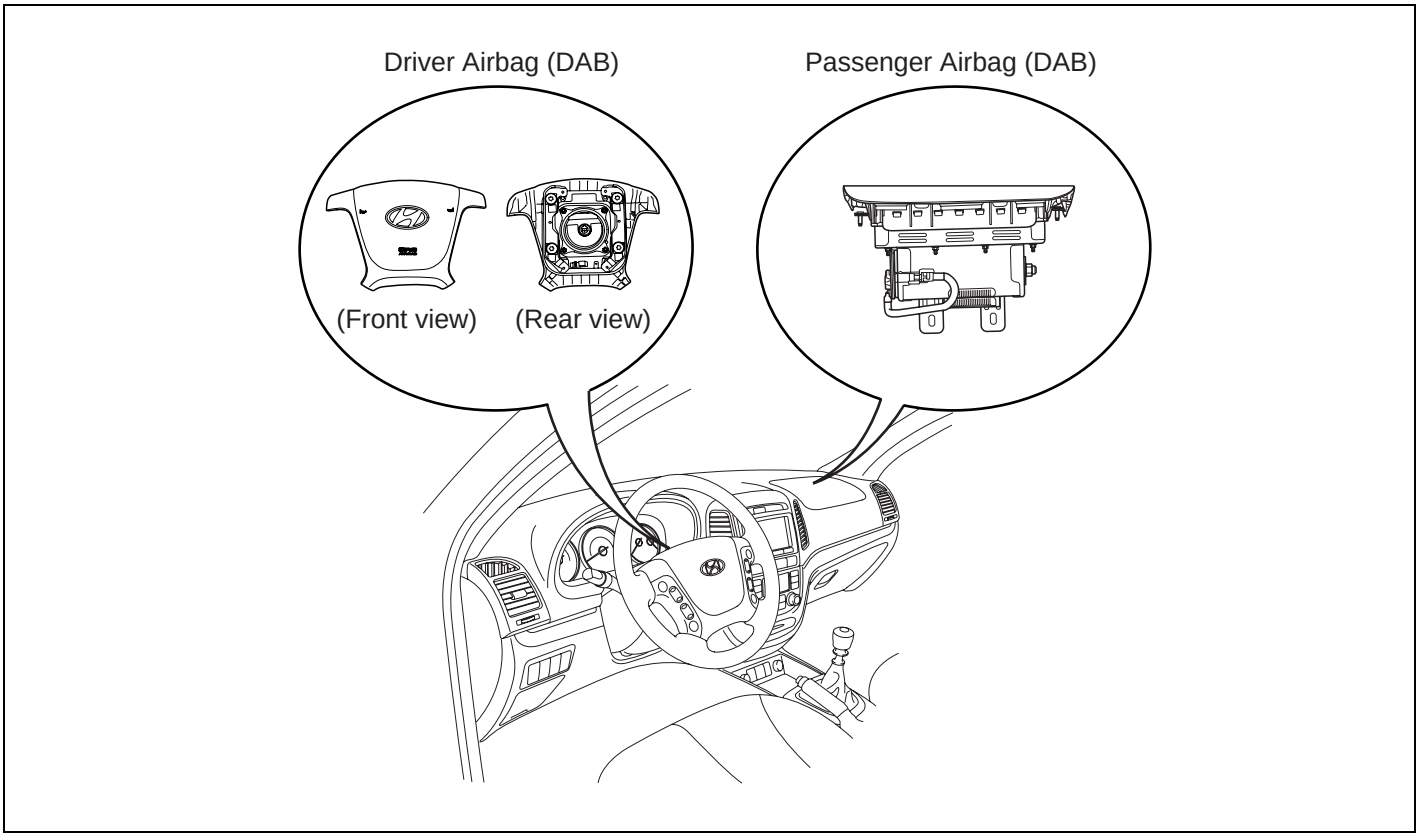

SCMRT6501L

SIDE AIRBAG (SAB)

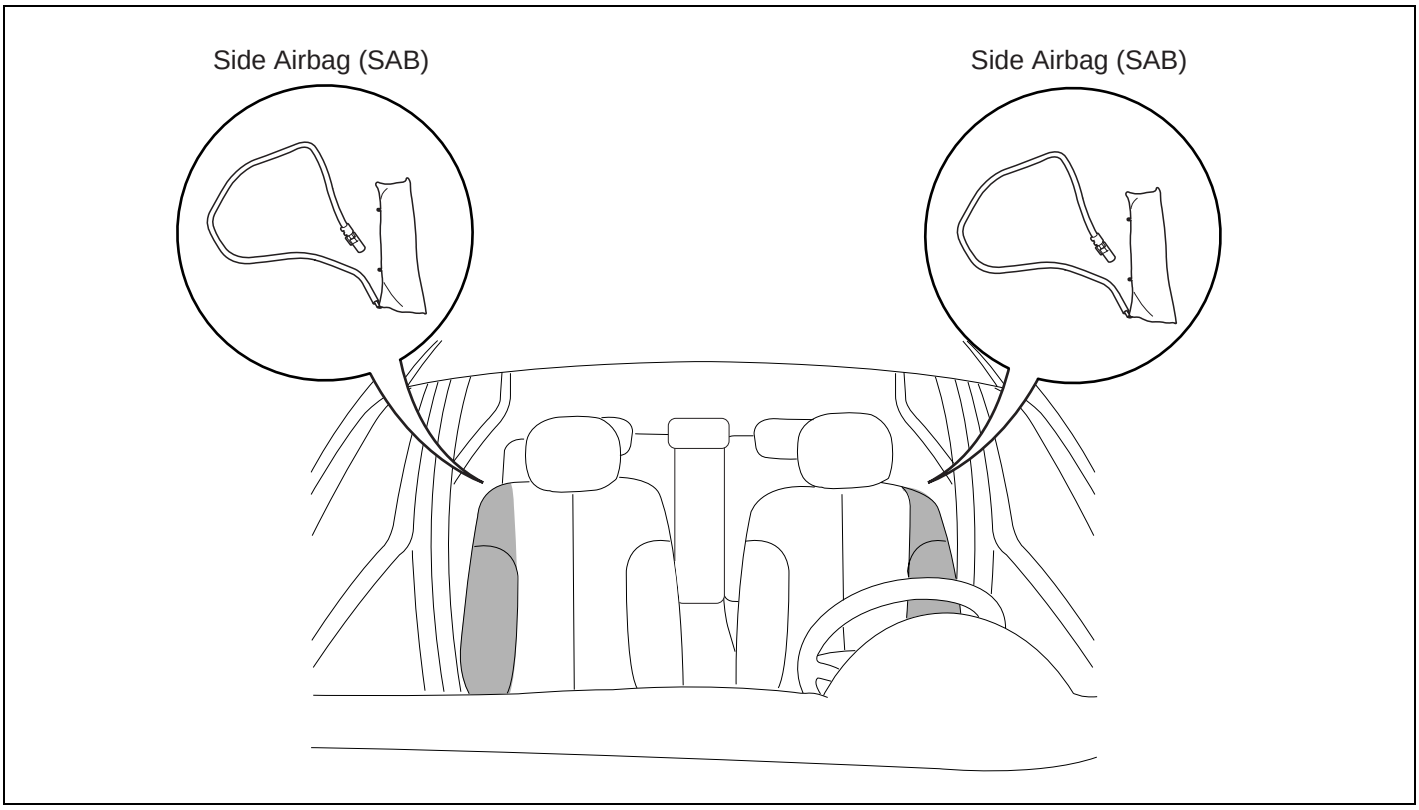

LRLG101C

CURTAIN AIRBAG (CAB)

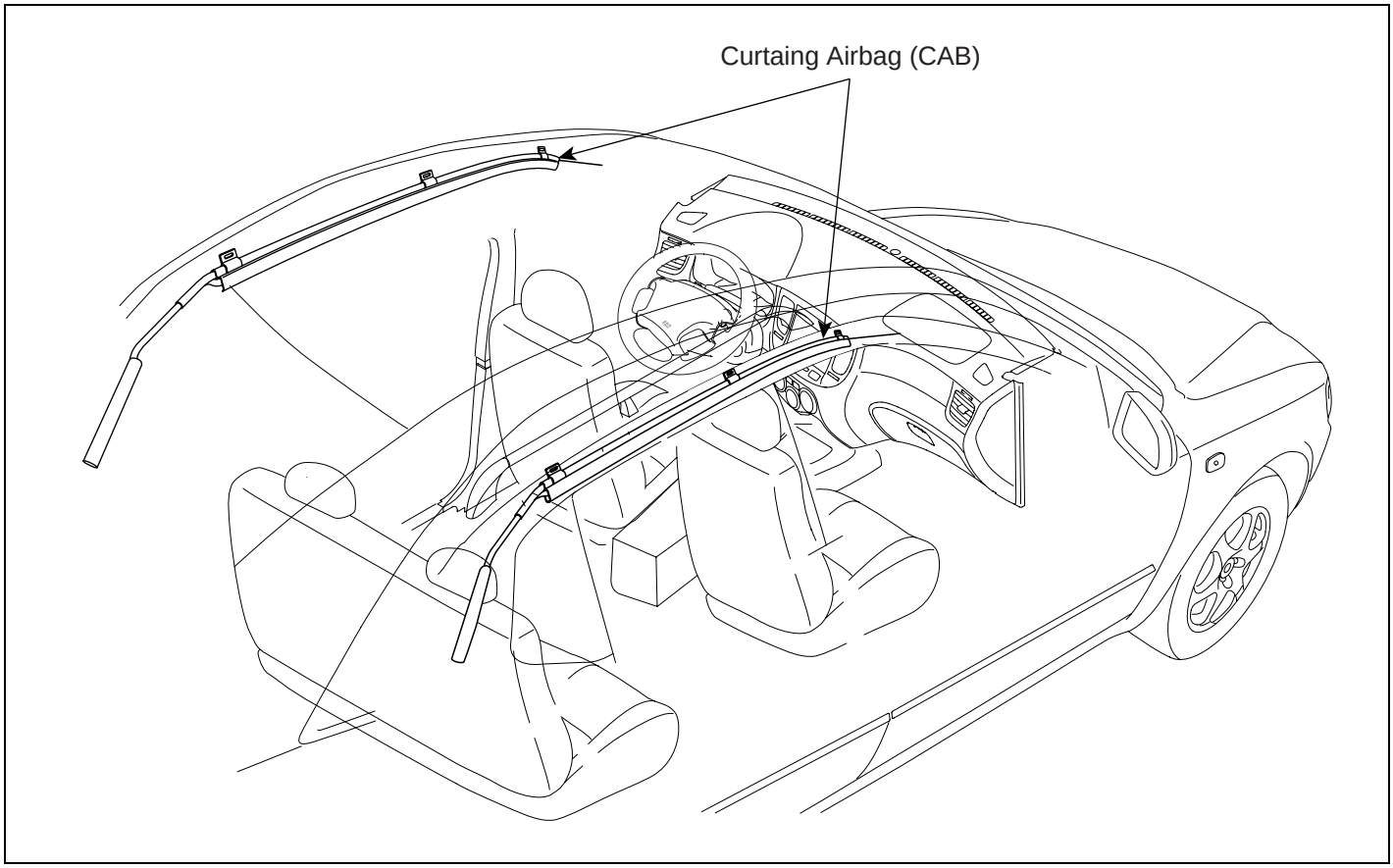

SCMRT6502L

SEAT BELT RETRACTOR PRETENSIONER (BPT)

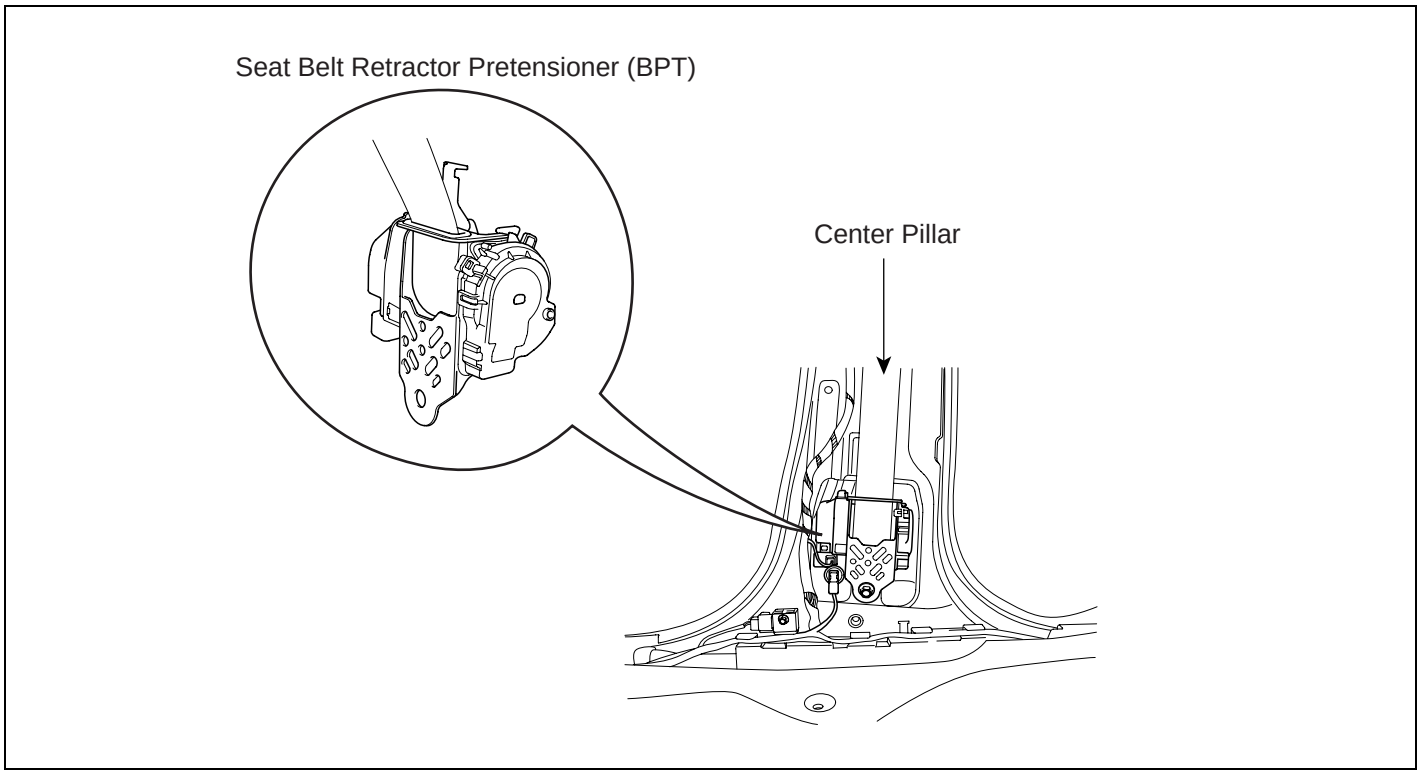

SCMRT6503L

SUPPLEMENTAL RESTRAINT SYSTEM CONTROL MODULE (SRSCM)

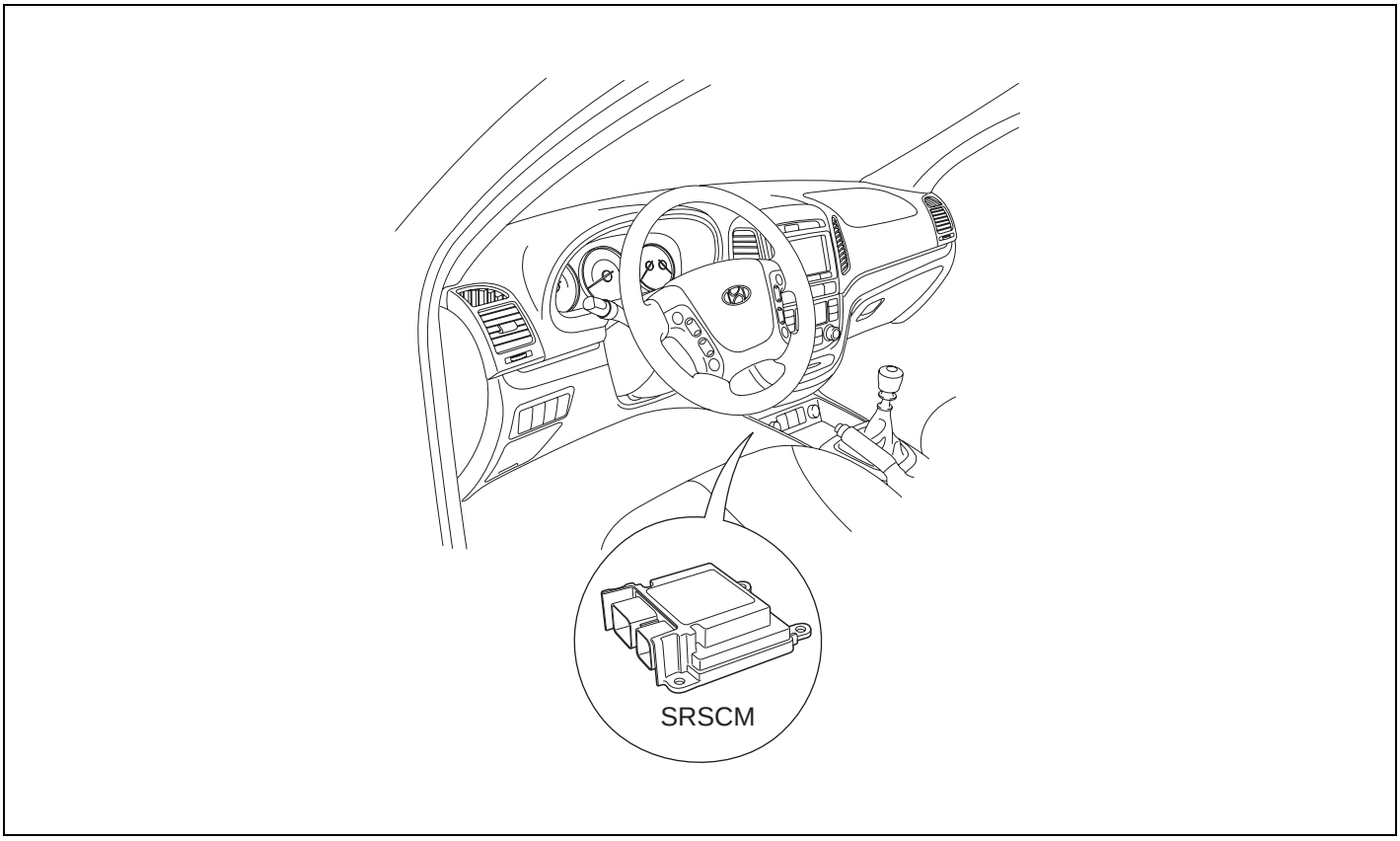

SCMRT6504L

FRONT IMPACT SENSOR (FIS)

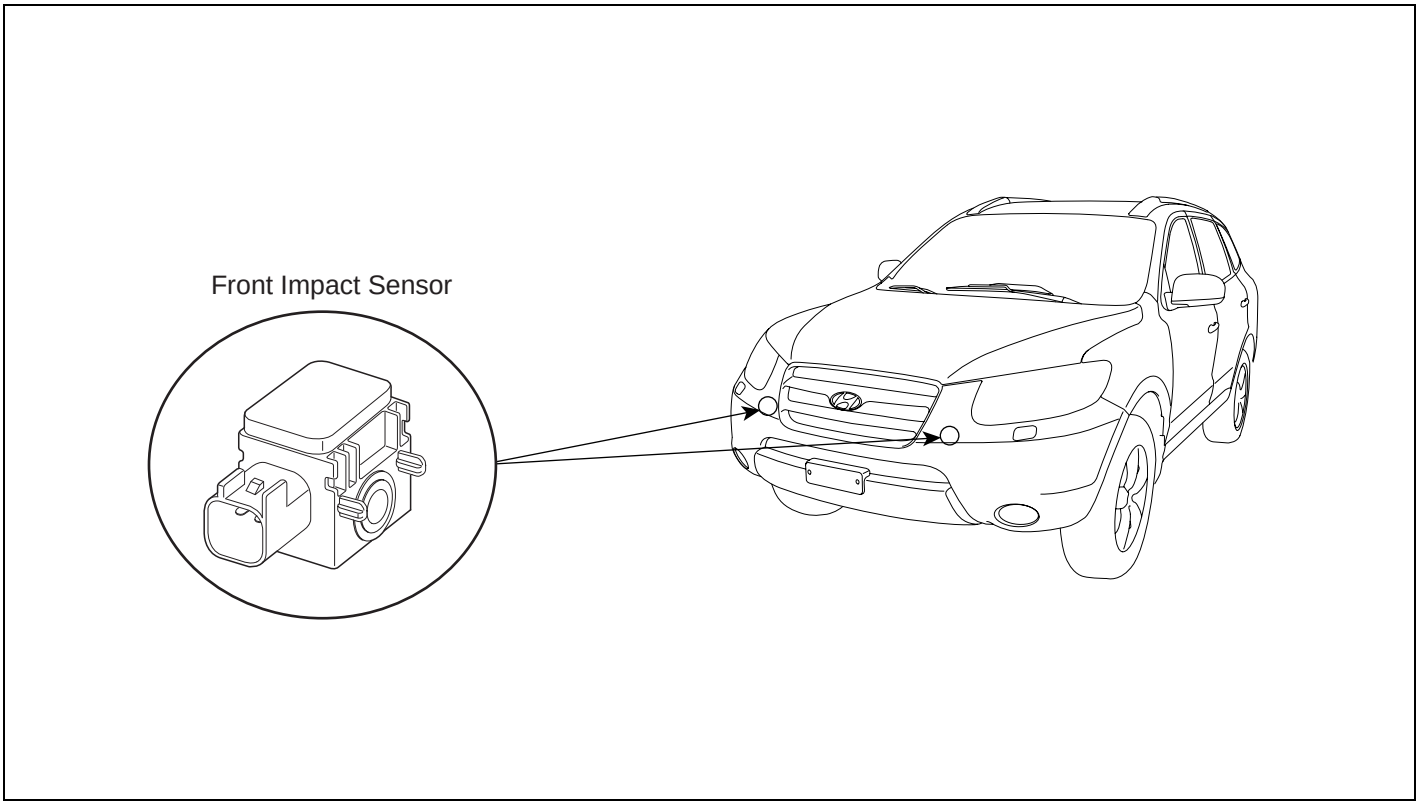

SCMRT6505L

SIDE IMPACT SENSOR (SIS)

[FRONT]

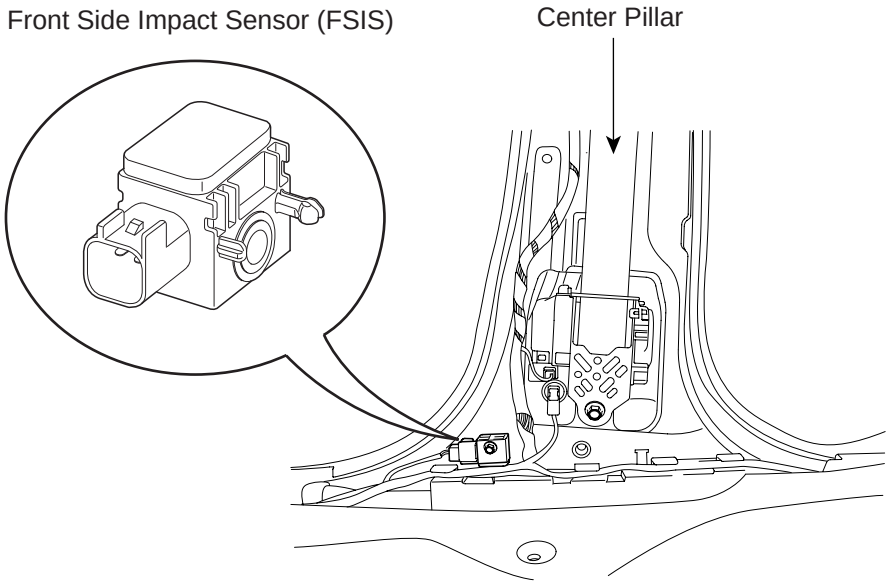

[REAR]

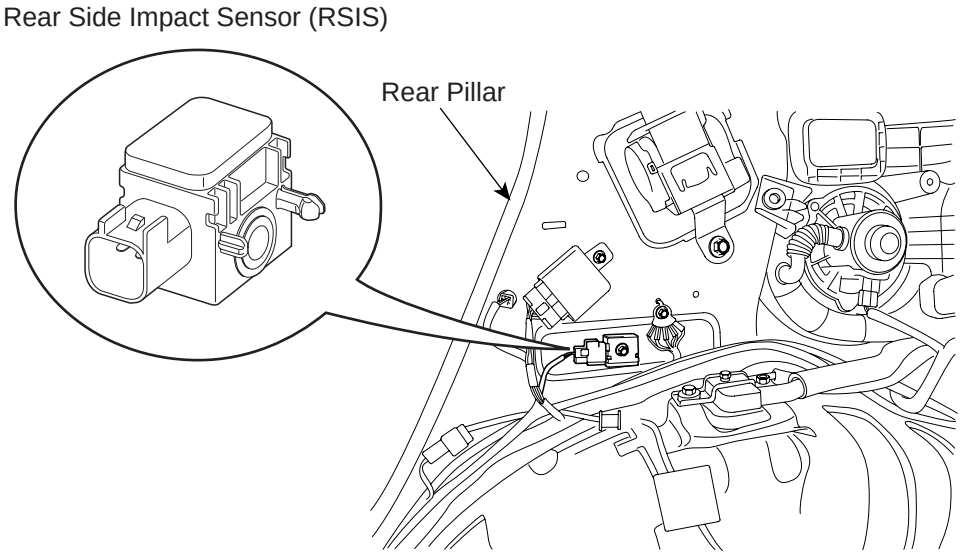

SCMRT6506L

SUPPLEMENTAL RESTRAINTS SYSTEM CONTROL MODULE(SRSCM)

SRS CONTROL MODULE

DESCRIPTION ECCF71AB

The primary purpose of the SRSCM (Supplemental Restraints System Control Module) is to discriminate between an event that warrants restraint system deployment and an event that does not. The SRSCM must decide whether to deploy the restraint system or not. After determining that pretensioners and/or airbag deployment is required, the SRSCM must supply sufficient power to the pretensioners and airbag igniters to initiate deployment. The SRSCM determines that an impact may require deployment of the pretensioners and airbags from data obtained from impact sensors and other components in conjunction with a safing function. The SRSCM will not be ready to detect a crash or to activate the restraint system devices until the signals in the SRSCM circuitry stabilize. It is possible that the SRSCM could activate the safety restraint devices in approximately 2 seconds but is guaranteed to fully function after prove-out is completed. The SRSCM must perform a diagnostic routine and light a system readiness indicator at key-on. The system must perform a continuous diagnostic routine and provide fault annunciation through a warning lamp indicator in the event of fault detection. A serial diagnostic communication interface will be used to facilitate servicing of the restraint control system.

COMPONENTS EE414878

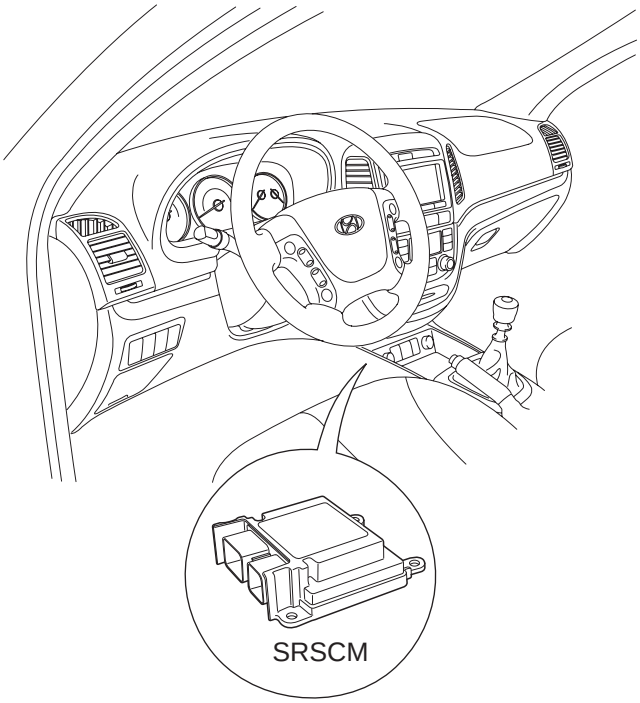

SCMRT6504L

REMOVAL E977543F

1. Disconnect the battery negative cable and wait for at least three minutes before beginning work.
2. Remove the ignition key from the vehicle.
3. Disconnect the DAB, PAB, SAB, CAB and BPT connectors.
4. Remove the floor console and heater ducts. (Refer to BD group)
5. Disconnect the SRSCM harness connector from the SRSCM.

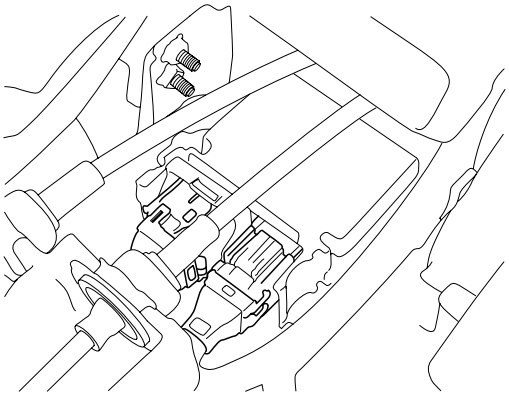

SCMRT6001D

6. Remove the SRSCM mounting bolts(4EA) from the SRSCM, then remove the SRSCM.

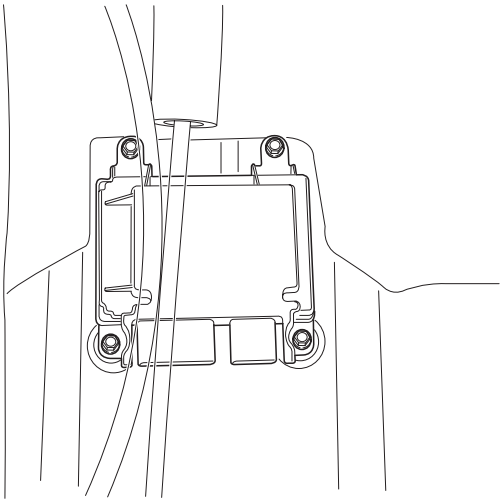

KRBF101H

INSTALLATION E507F553

1. Disconnect the battery negative cable and wait for at least three minutes before beginning work.
2. Remove the ignition key from the vehicle.
3. Install the SRSCM with the SRSCM mounting bolts.

Tightening torque (SRSCM Mounting bolt) : 0.7 ~ 0.9 kgf.m (6.8 ~ 9.2 Nm, 5.0 ~ 6.8 lb.ft)

NOTE

Use new mounting bolts when replacing the SRSCM after a collision.

4. Connect the SRSCM harness connector.
5. Install the heater ducts and floor console. (Refer to BD group)
6. Connect the DAB, PAB, SAB, CAB and BPT connectors.
7. Reconnect the battery negative cable.
8. After installing the SRSCM, confirm proper system operation:
   - Turn the ignition switch ON; the SRS indicator light should be turned on for about six seconds and then go off.

AIR BAG MODULE (DRIVE SIDE)

AIR BAG MODULE AND CLOCK SPRING

DESCRIPTION E19698E7

Driver Airbag (DAB) is installed in steering wheel and electrically connected to SRSCM via clockspring. It protects the driver from danger by deploying a bag when frontal crash occurs. The SRSCM determines deployment of Driver Airbag (DAB).

CAUTION

Never attempt to measure the circuit resistance of the airbag module (squib) even if you are using the specified tester. If the circuit resistance is measured with a tester, accidental airbag deployment will result in serious personal injury.

COMPONENTS E0833290

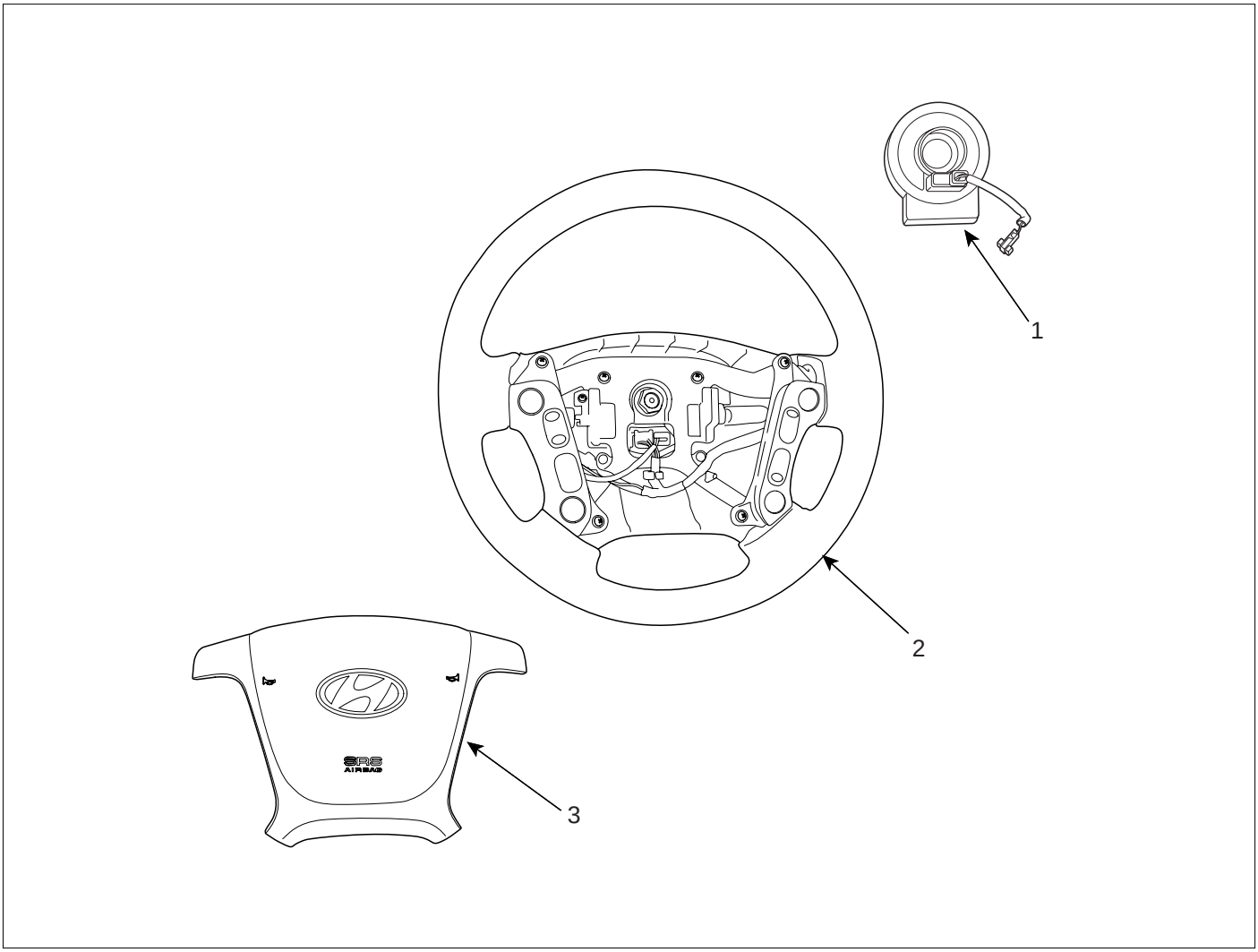

1. Clock Spring
2. Steering Wheel
3. Driver Airbag (DAB)

SCMRT6507L

REMOVAL E0450A67

1. Disconnect the battery negative cable and wait for at least three minutes before beginning work.

2. Remove the airbag module mounting bolts(2EA).

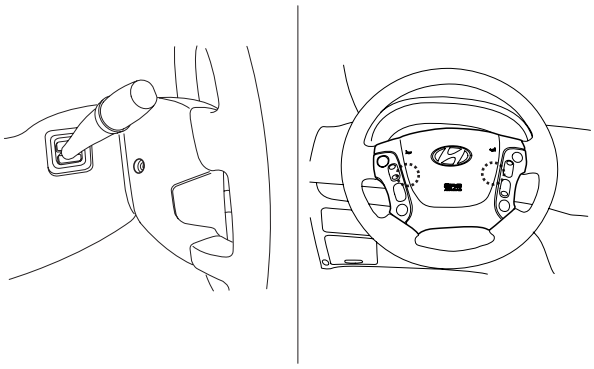

SCMRT6508D

3. Disconnect the horn connector(A).

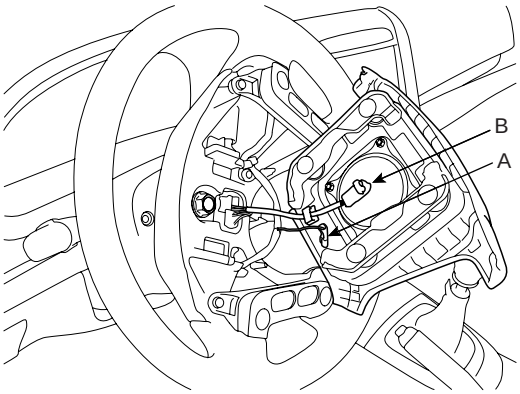

SCMRT6004D

4. Release the connector locking pin, then disconnect the driver airbag module connector(B).

CAUTION

The removed airbag module should be stored in a clean, dry place with the pad cover face up.

5. Remove the steering wheel and steering wheel column cover. (Refer to ST group)

6. Disconnect the clock spring and horn connector, then remove the clock spring.

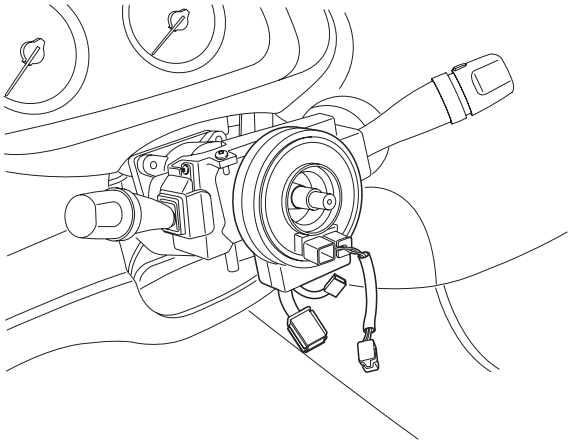

KRBF102D

INSPECTION E043119F

DRIVER AIRBAG (DAB)

If any improper parts are found during the following inspection, replace the airbag module with a new one.

CAUTION

Never attempt to measure the circuit resistance of the airbag module (squib) even if you are using the specified tester. If the circuit resistance is measured with a tester, accidental airbag deployment will result in serious personal injury.

1. Check pad cover for dents, cracks or deformities.

2. Check the airbag module for denting, cracking or deformation.

3. Check hooks and connectors for damage, terminals for deformities, and harness for binds.

4. Check airbag inflator case for dents, cracks or deformities.

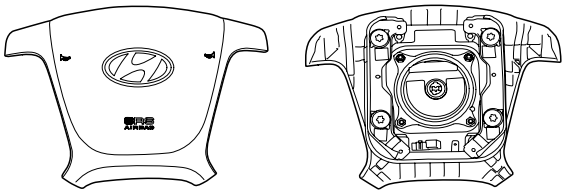

(Front view) (Rear view)

SCMRT6509L

5. Install the airbag module to the steering wheel to check for fit or alignment with the wheel.

CLOCKSPRING

1. If, as a result of the following checks, even one abnormal point is discovered, replace the clock spring with a new one.
2. Check connectors and protective tube for damage, and terminals for deformities.

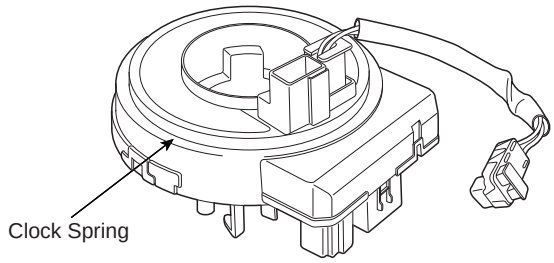

ERBF102H

INSTALLATION EE7BDA1C

1. Disconnect the battery negative cable from battery and wait for at least three minutes before beginning work.
2. Remove the ignition key from the vehicle.
3. Connect the clock spring harness connector and horn harness connector to the clock spring.
4. Set the clock spring on neutral position and after turning the front wheels to the straight-ahead position, install the clock spring.
5. Install the steering wheel column cover and the steering wheel. (Refer to ST group)
6. Connect the Driver Airbag (DAB) module connector and horn connector, then install the Driver Airbag (DAB) module on the steering wheel.
7. Secure the Driver Airbag (DAB) with the new mounting bolts.

Tightening torque (DAB Mounting Bolt) : 0.8 ~ 1.1 kgf.m (7.9 ~ 10.8 Nm, 5.8 ~ 8.0 lb.ft)

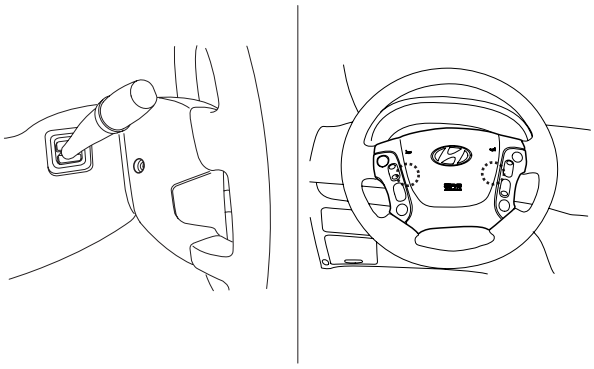

SCMRT6508D

8. Connect the battery negative cable.
9. After installing the airbag, confirm proper system operation:
   - Turn the ignition switch ON; the SRS indicator light should be turned on for about six seconds and then go off.
   - Make sure horn button works.

AIR BAG MODULE (PASSENGER SIDE)

AIR BAG MODULE

DESCRIPTION E9593A37

The passenger Airbag (PAB) is installed inside the crash pad and protects the front passenger in the event of a frontal crash. The SRSCM determines if and when to deploy the PAB.

CAUTION

Never attempt to measure the circuit resistance of the airbag module (squib) even if you are using the specified tester. If the circuit resistance is measured with a tester, accidental airbag deployment will result in serious personal injury.

COMPONENTS EF548B7A

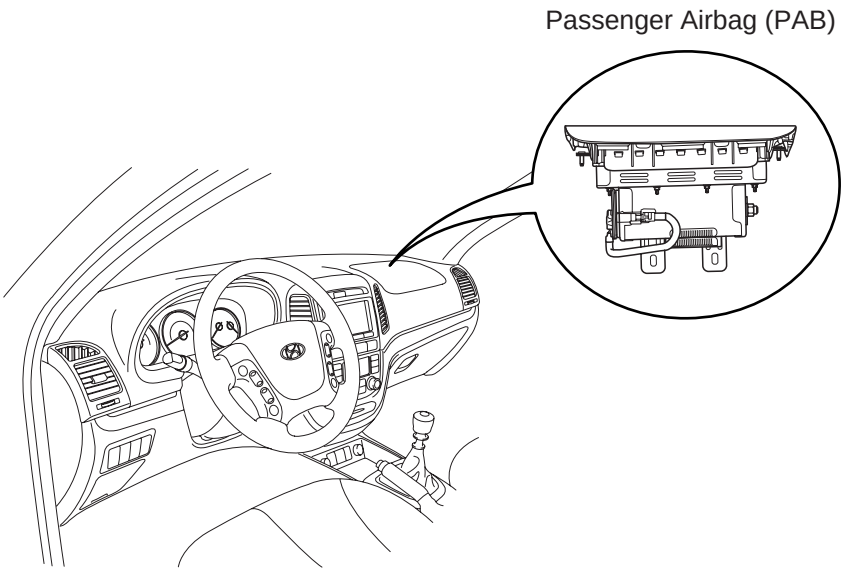

SCMRT6510L

REMOVAL E4EB22D1

1. Disconnect the battery negative cable and wait for at least three minutes before beginning work.
2. Remove the glove box. (Refer to BD group)
3. Disconnect the PAB connector and remove the PAB mounting bolts (2EA).

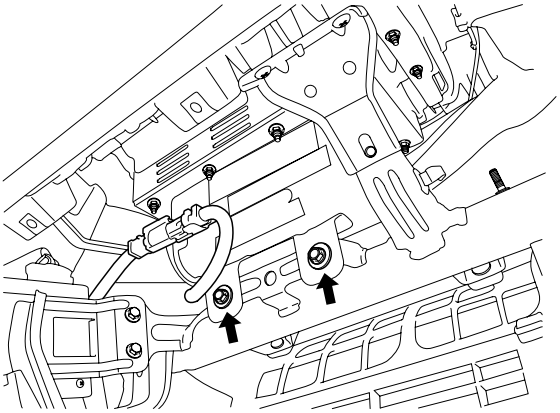

SCMRT6015D

4. Remove the crash pad. (Refer to BD group)

NOTE

If the crash pad is damaged when the PAB is deployed, replace the damaged crash pad and PAB together.

5. Remove the heater duct from the crash pad.
6. Remove the mounting nuts(4EA) from the crash pad. Then remove the passenger airbag.

CAUTION

The removed airbag module should be stored in a clean and dry place with the pad cover face up.

INSTALLATION E15B14BB

1. Disconnect the battery negative cable from battery and wait for at least three minutes before beginning work.
2. Remove the ignition key from the vehicle.
3. Place a Passenger Airbag (PAB) on the crash pad and tighten the Passenger Airbag (PAB) mounting nuts.

Tightening torque : 0.9 ~ 1.4 kgf.m (8.8 ~ 13.7 N.m, 6.5 ~ 10.1 lb.ft)

4. Install the heater duct to the crash pad.
5. Install the crash pad. (Refer to BD group)
6. Tighten the PAB mounting bolt.

Tightening torque : 1.9 ~ 2.7 kgf.m (18.6 ~ 26.5 N.m, 13.7 ~ 19.5 lb.ft)

7. Connect the Passenger Airbag (PAB) harness connector to the SRS main harness connector.
8. Reinstall the glove box. (Refer to BD group)
9. Reconnect the battery negative cable.
10. After installing the Passenger Airbag (PAB), confirm proper system operation:
    - Turn the ignition switch ON; the SRS indicator light should be turned on for about six seconds and then go off.

AIR BAG MODULE (SIDE AIR BAG)

AIR BAG MODULE

DESCRIPTION EE101199

The Side Airbags (SAB) are installed inside the front seat and protect the driver and front passenger from danger when side crash occurs. The SRSCM determines deployment of side airbag by using Side Impact Sensor (SIS) signal.

CAUTION

Never attempt to measure the circuit resistance of the airbag module (squib) even if you are using the specified tester. If the circuit resistance is measured with a tester, accidental airbag deployment will result in serious personal injury.

COMPONENTS E5587BEA

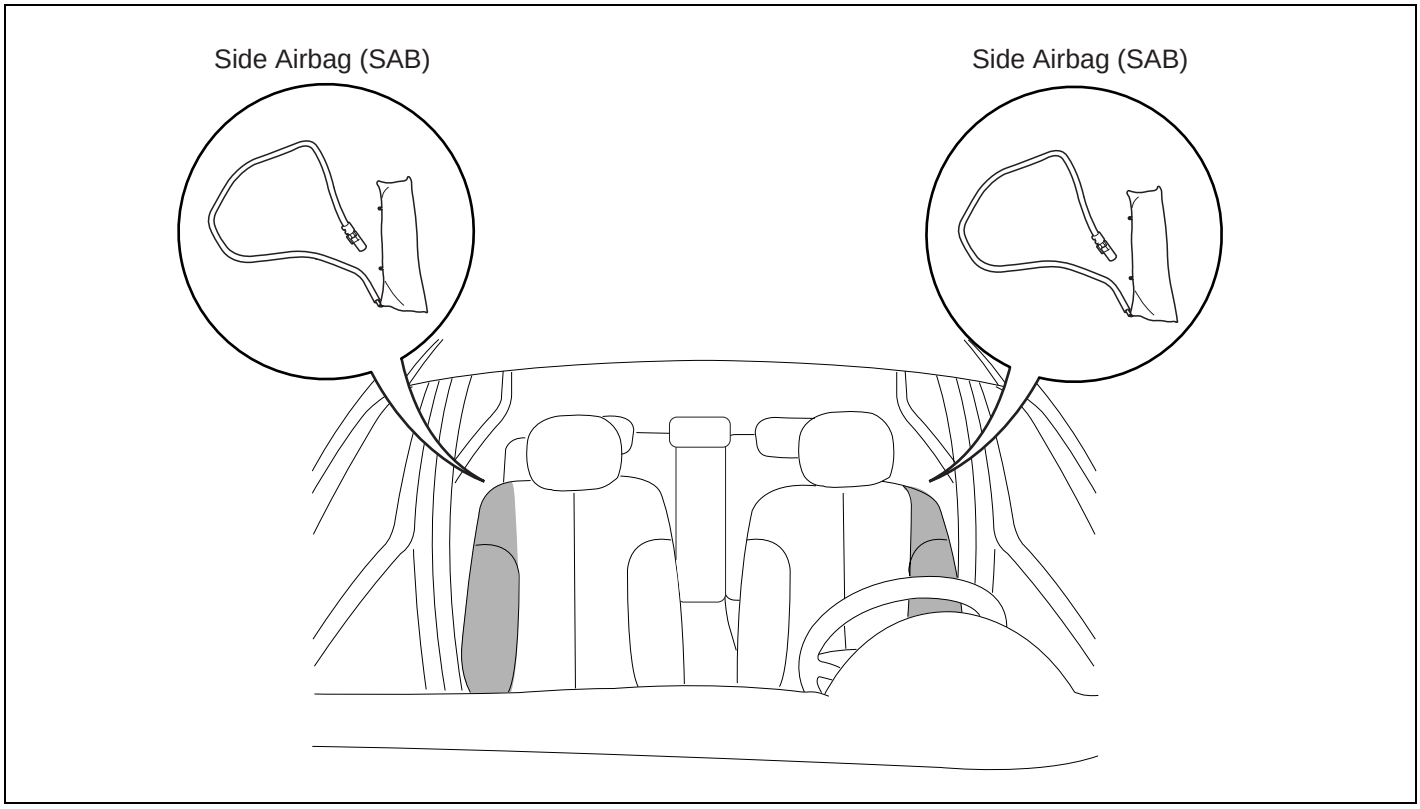

LRLG101C

REMOVAL EE264C47

1. Disconnect the battery negative cable and wait for at least 3 minutes before beginning work.
2. Remove the front seat assembly.(Refer to BD group)
3. Remove the seatback cover.(Refer to BD group)

   NOTE

   When the side airbag depoyed after a collision, replace the seatback as an assembly.

4. Loosen the SAB mounting nuts and remove the SAB module.

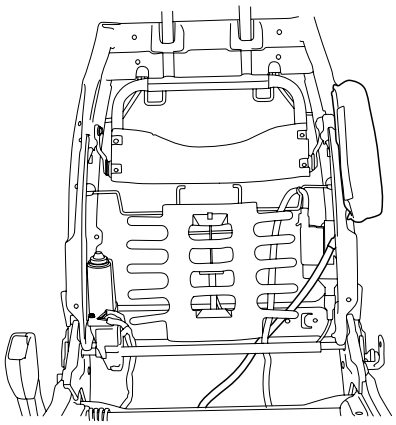

SCMRT6007D

INSTALLATION E3E8FAAD

CAUTION

Ensure that the harness is installed and routed properly to prevent damage to the wiring.

NOTE

- *Do not open the lid of the side airbag cover.*
- *Use a new mounting nuts when you replace a side airbag.*
- *Make sure that the seatback cover is installed properly. Improper installation may prevent the proper deployment.*

1. Disconnect the battery negative cable and wait for at least three minutes.
2. Remove ignition key from the vehicle.
3. Place a Side Airbag (SAB) on the seatback frame and tighten the side airbag mounting nuts.

Tightening torque : 0.7 ~ 0.9 kgf.m (7.0 ~ 9.0 Nm, 5.2 ~ 6.6 lb.ft)

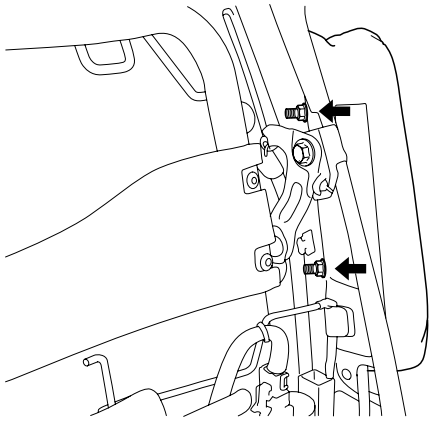

SCMRT6008D

4. Install the new seatback cover.(Refer to BD group)
5. Install the seat assembly, then connect the Side Airbag (SAB) harness connector.
6. Recline and slide the front seat forward fully, make sure the harness wires are not pinched or interfering with other parts.
7. Reconnect the battery negative cable.
8. After installing the Side Airbag (SAB), confirm proper system operation:
   - Turn the ignition switch ON; the SRS indicator light should be turned on for about six seconds and then go off.

AIR BAG MODULE (CURTAIN AIR BAG)

AIR BAG MODULE

DESCRIPTION EF7FBAD3

Curtain airbags are installed inside the headliner (LH and RH) and protect the driver and passenger from danger when side crash occurs. The SRSCM determines deployment of curtain airbag by using side impact sensor (SIS) signal.

CAUTION

Never attempt to measure the circuit resistance of the airbag module even if you are using the specified tester. If the circuit resistance is measured with a tester, accidental airbag deployment will result in serious personal injury.

COMPONENTS E4B3122F

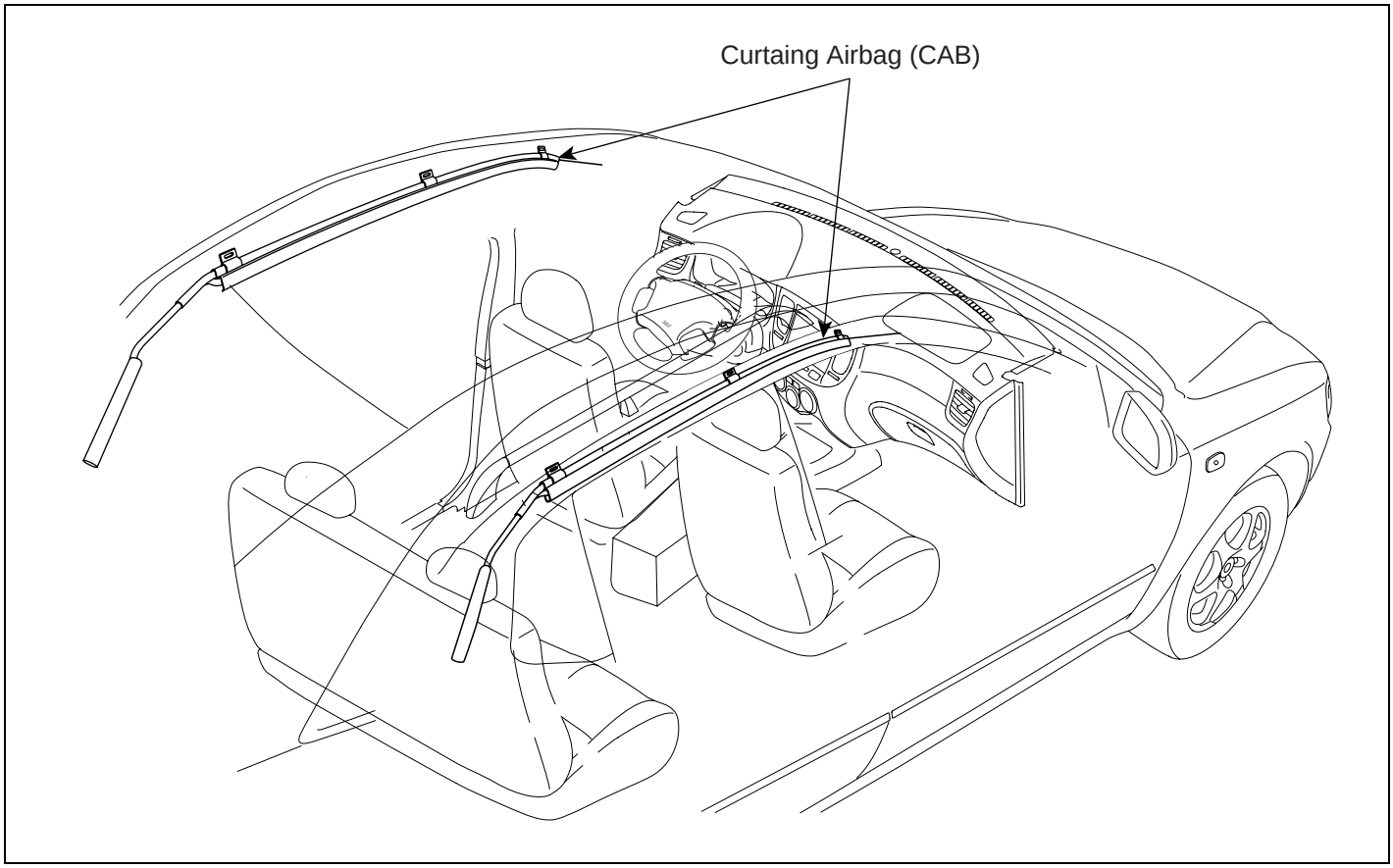

SCMRT6502L

REMOVAL E41D5D56

1. Disconnect the battery negative cable and wait for at least 3 minutes before beginning work.

2. Remove the following parts. (Refer to BD group)
   - Side trim, Roof trim

3. Disconnect the Curtain Airbag harness connector.

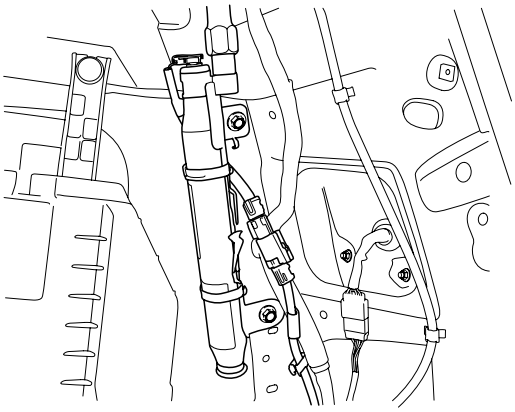

SCMRT6009D

4. After loosening the mounting bolts(10EA) remove the curtain airbag.

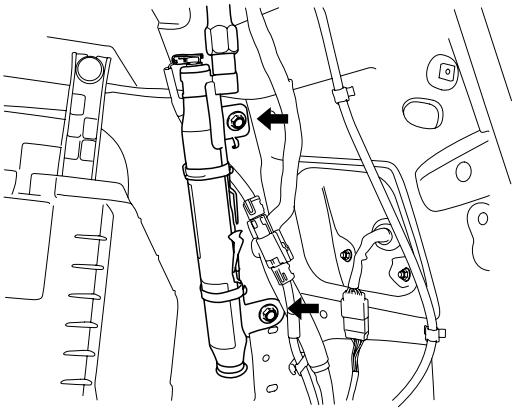

SCMRT6511D

INSTALLATION E50B5670

1. Disconnect the battery negative cable and wait for at least three minutes.

2. Remove the ignition key from the vehicle.

3. Install a Curtain Airbag (CAB) on the mounting bracket.

4. Tighten the CAB mounting bolts (10EA).

Tightening torque : 1.1 ~ 1.5 kgf.m(10.9 ~ 14.7 Nm, 8.0 ~ 10.8 lb.ft)

CAUTION

- ***Never twist the airbag module when installing it. If the module is twisted, airbag module may operate abnormally.***

5. Connect the CAB connector.

6. Install the following parts. (Refer to BD group)
   - Side trim, Roof trim

7. Reconnect the battery negative cable.

8. After installing the Curtain Airbag (CAB), confirm proper system operation:
   - Turn the ignition switch ON; the SRS indicator light should be turned on for about six seconds and then go off.

SEAT BELT PRETENSIONER

SEAT BELT PRETENSIONER

DESCRIPTION E4167EBA

The Seat Belt Pretensioners (BPT) are installed inside Center Pillar (LH & RH). When a vehicle crashes with a certain degree of frontal impact, the pretensioner seat belt helps to reduce the severity of injury to the front seat occupants by retracting the seat belt webbing. This prevents the front occupants from thrusting forward and hitting the steering wheel or the instrument panel when the vehicle crashes.

CAUTION

Never attempt to measure the circuit resistance of the Seat Belt Pretensioner (BPT) even if you are using the specified tester. If the circuit resistance is measured with a tester, the pretensioner will be ignited accidentally. This will result in serious personal injury.

COMPONENTS E13C3CFE

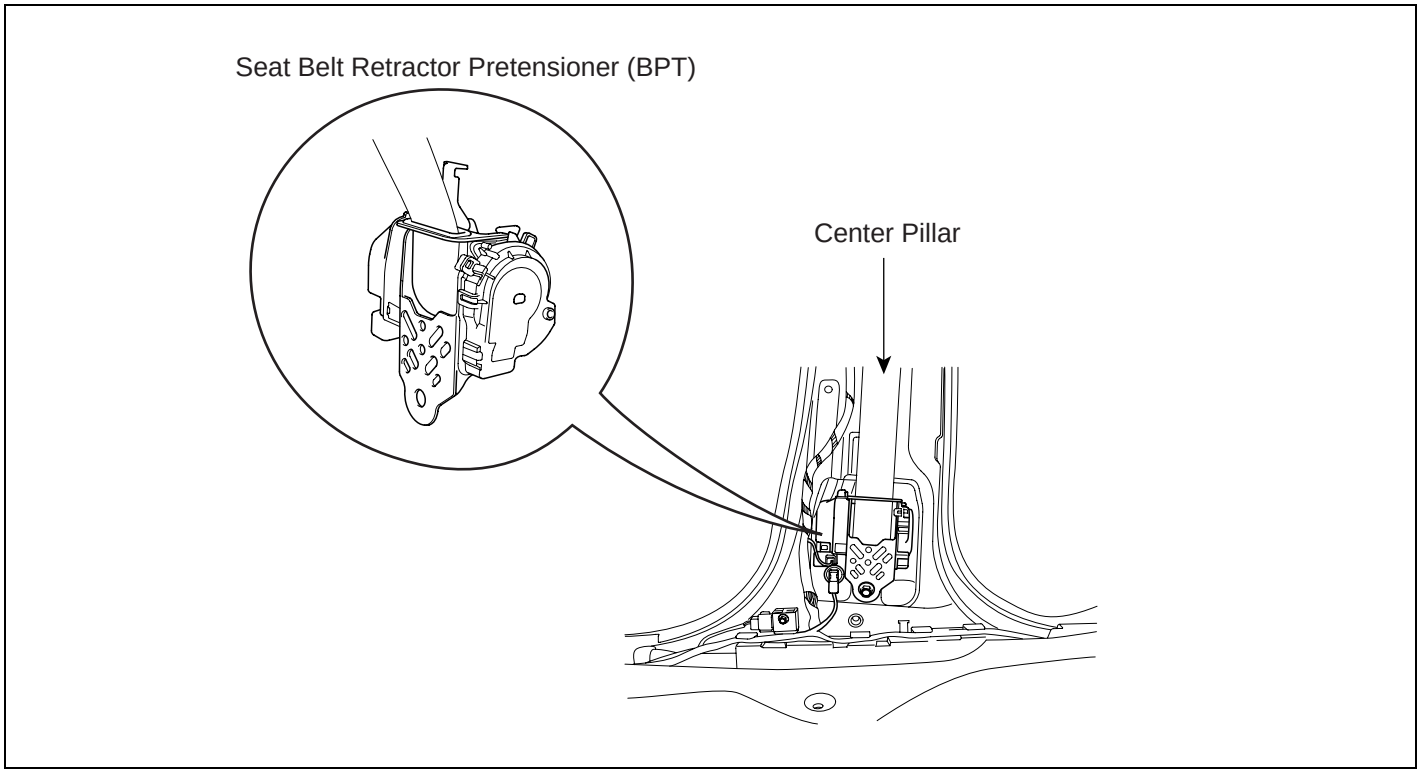

SCMRT6503L

REMOVAL E3B165BB

1. Disconnect the battery negative cable, and wait for at least three minutes before beginning work.
2. Remove the door scuff trim. (Refer to BD group)
3. Remove the center pillar trim. (Refer to BD group)
4. Remove the lower anchor bolt.
5. Remove the upper anchor bolt.
6. Disconnect the Seat Belt Pretensioner connector.
7. Loosen the Seat Belt Pretensioner mounting bolt and remove the Seat Belt Pretensioner.

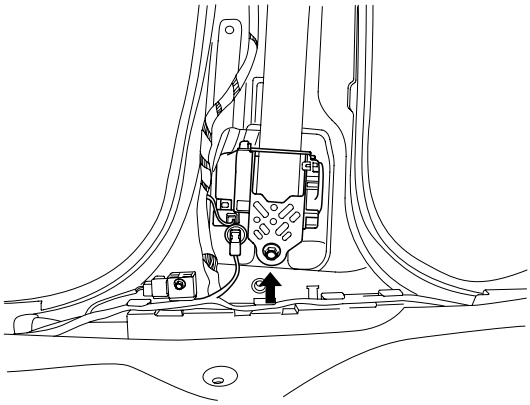

SCMRT6011D

INSTALLATION E3B35607

1. Disconnect the battery negative cable and wait for at least three minutes.
2. Remove the ignition key from the vehicle.
3. Install the Seat Belt Pretensioner (BPT) with a bolt.

Tightening torque : 4.0 ~ 5.5 kgf.m (39.2 ~ 53.9 Nm, 28.9 ~ 39.8 lb.ft)

4. Install the upper and lower anchor bolts.

Tightening torque (Seat Belt Anchor Bolt) : 4.0 ~ 5.5 kgf.m (39.2 ~ 53.9 Nm, 28.9 ~ 39.8 lb.ft)

5. Install the center pillar trim.
6. Install the door scuff trim.
7. Reconnect the battery negative cable.
8. After installing the Seat Belt Pretensioner (BPT), confirm proper system operation:
   - Turn the ignition switch ON; the SRS indicator light should be turned on for about six seconds and then go off.

SRS CONTROL SYSTEM

FRONT IMPACT SENSOR (FIS)

DESCRIPTION EBEE040F

The front impact sensor (FIS) is installed in the side member. They are remote sensors that detect acceleration due to a collision at its mounting location. The primary purpose of the Front Impact Sensor (FIS) is to provide an indication of a collision. The Front Impact Sensor(FIS) sends acceleration data to the SRSCM.

COMPONENTS E603A5DC

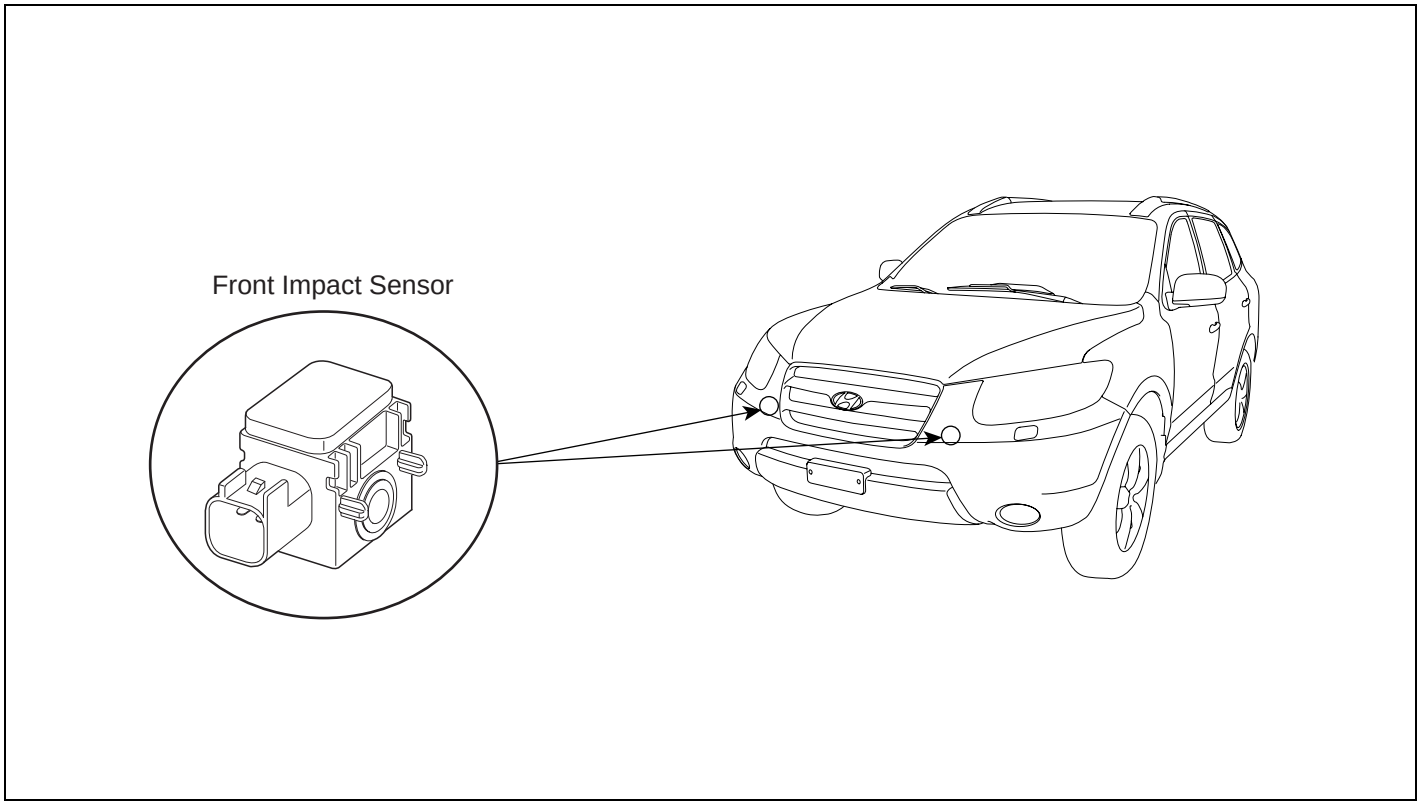

SCMRT6505L

REMOVAL EDE19F4F

CAUTION

- ***Removal of the airbag must be performed according to the precautions/ procedures described previously.***
- ***Before disconnecting the front impact sensor connector, disconnect the front airbag connector(s).***
- ***Do not turn the ignition switch ON and do not connect the battery cable while replacing the front impact sensor.***

1. Disconnect the battery negative cable, and wait for at least three minutes before beginning work.
2. Remove the Front Impact Sensor connector cover.

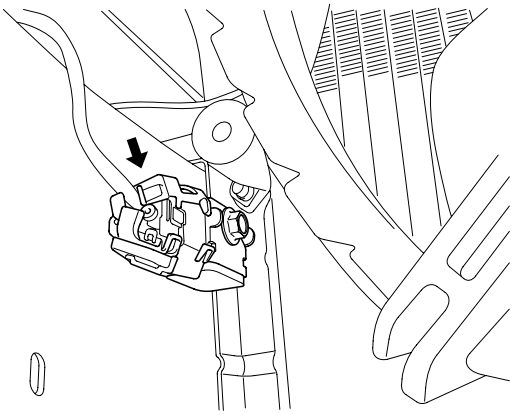

SCMRT6012D

3. Disconnect the Front Impact Sensor connector.
4. Remove the Front Impact Sensor mounting bolt.

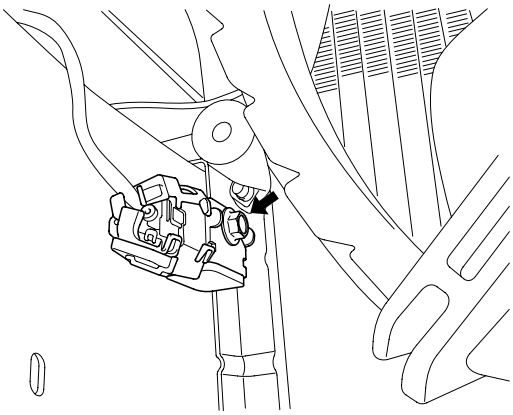

SCMRT6520D

5. Remove the Front Impact Sensor.

INSTALLATION E50C4826

CAUTION

- ***Do not turn the ignition switch ON and do not contact the battery cable while replacing the front impact sensor.***

1. Install the new Front Impact Sensor.
2. Tighten the Front Impact Sensor mounting bolt.

Tightening torque : 0.7 ~ 0.9 kgf.m (6.8 ~ 9.2 Nm, 5.0 ~ 6.8 lb.ft)

3. Connect the Front Impact Sensor connector and install the connector cover.
4. Reconnect the battery negative cable.
5. After installing the Front Impact Sensor, confirm proper system operation: Turn the ignition switch ON the SRS indicator light should be turned on for about six seconds and then go off.

SIDE IMPACT SENSOR (SIS)

DESCRIPTION E49F823B

The Side Impact Sensor (SIS) system consists of two front SIS which are installed in the center pillar (LH and RH) and two rear SIS which are installed in the rear pillar (LH and RH). They are remote sensors that detect acceleration due to collision at their mounting locations. The primary purpose of the Side Impact Sensor (SIS) is to provide an indication of a collision. The Side Impact Sensor (SIS) sends acceleration data to the SRSCM.

COMPONENTS E86DACCB

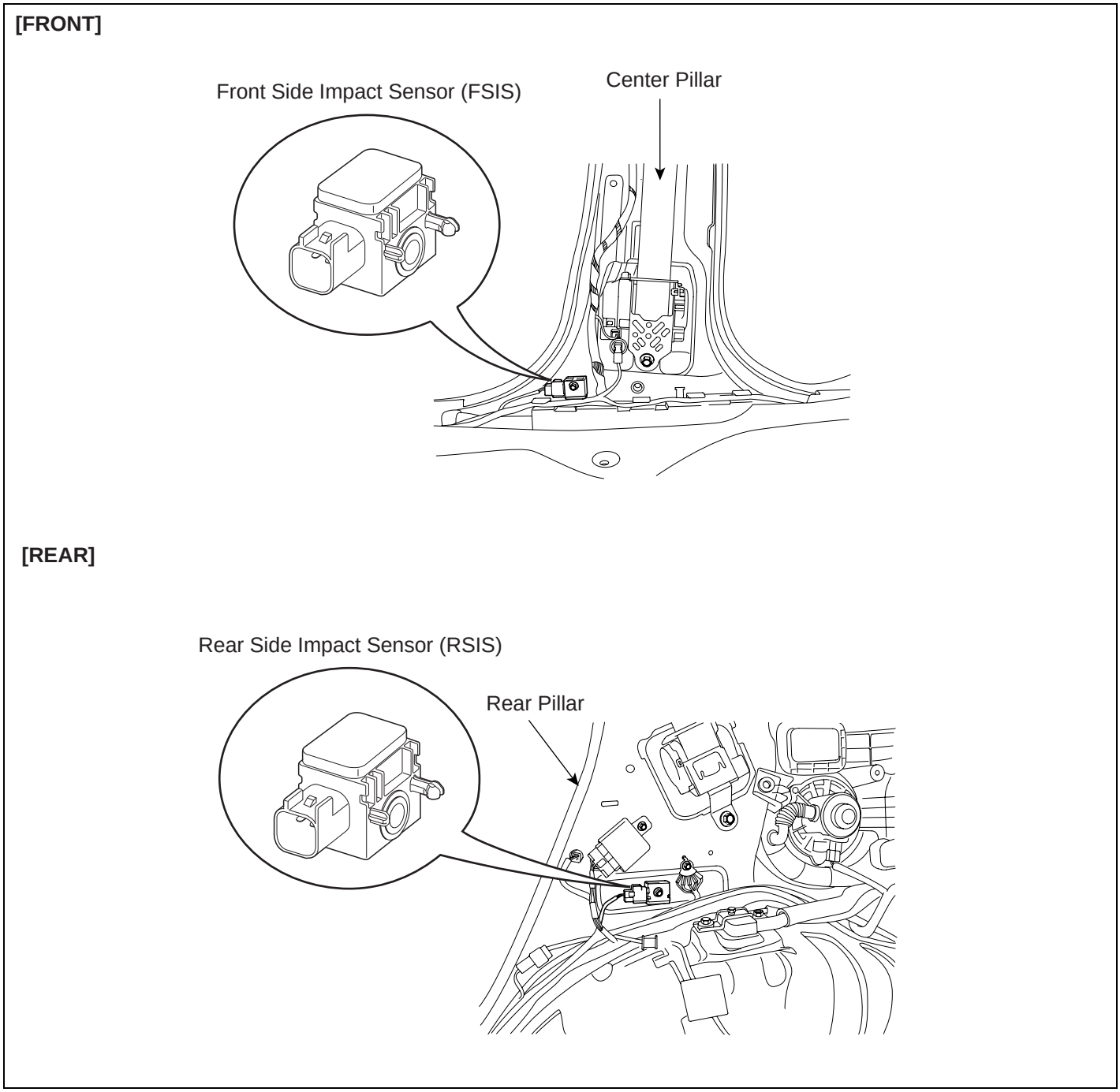

SCMRT6521L

REMOVAL E34BD0EF

FRONT SIDE IMPACT SENSOR

CAUTION

- ***Removal of the airbag must be performed according to the precautions/procedures described previously.***
- ***Before disconnecting the side impact sensor connector(s), disconnect the side airbag connector(s).***
- ***Do not turn the ignition switch ON and do not connect the battery cable while replacing the side impact sensor.***

1. Disconnect the battery negative cable, and wait for at least three minutes before beginning work.
2. Remove the door scuff trim. (Refer to BD group)
3. Remove the center pillar trim. (Refer to BD group)
4. Disconnect the Side Impact Sensor connector and remove the Side Impact Sensor mounting bolt.

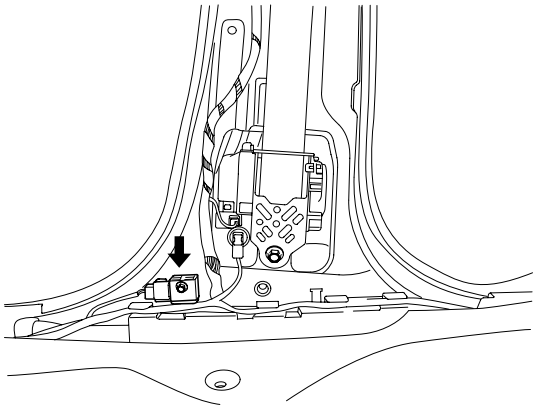

SCMRT6522D

REAR SIDE IMPACT SENSOR

1. Disconnect the battery negative cable and wait for at least three minutes before beginning work.
2. Remove the rear seat. (Refer to BD group)
3. Disconnect the side impact sensor connector.
4. Loosen the side impact sensor mounting bolt and remove the side impact sensor.

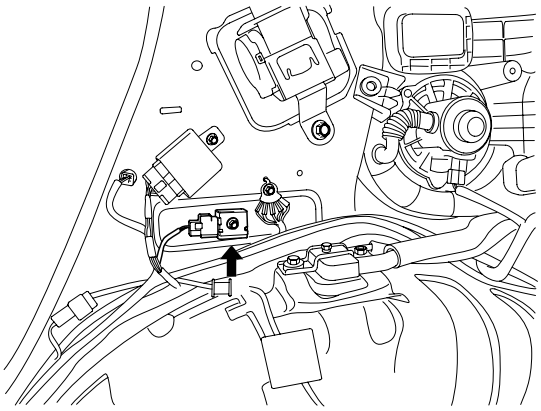

SCMRT6013D

INSTALLATION E88CF110

FRONT SIDE IMPACT SENSOR

CAUTION

- ***Do not turn the ignition switch ON and do not connect the battery cable while replacing the side impact sensor.***

1. Install the new Side Impact Sensor with the bolt then connect the SRS harness connector to the Side Impact Sensor.

Tightening torque : 0.7 ~ 0.9 kgf.m (6.8 ~ 9.2 Nm, 5.0 ~ 6.8 lb.ft)

2. Install the center pillar trim. (Refer to BD group)
3. Install the door scuff trim. (Refer to BD group)
4. Reconnect the battery negative cable.
5. After installing the Side Impact Sensor, confirm proper system operation: Turn the ignition switch ON, the SRS indicator light should be turned on for about six seconds and then go off.

REAR SIDE IMPACT SENSOR

CAUTION

- ***Do not turn the ignition switch ON and do not connect the battery cable while replacing the side impact sensor.***

1. Install the new Side Impact Sensor with the bolt then connect the SRS harness connector to the Side Impact Sensor.

Tightening torque : 0.7 ~ 0.9 kgf.m (6.8 ~ 9.2 Nm, 5.0 ~ 6.8 lb.ft)

2. Install the rear seat. (Refer to BD group)
3. Reconnect the battery negative cable.
4. After installing the Side Impact Sensor, confirm proper system operation: Turn the ignition switch ON, the SRS indicator light should be turned on for about six seconds and then go off.

TROUBLESHOOTING

DESCRIPTION E24ED7B0

HI-SCAN CHECK

1. Turn the ignition switch off.
2. Connect the Hi-Scan Pro connector to the data link connector located under the crash pad.

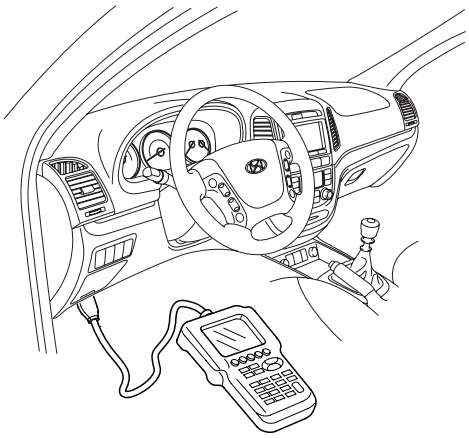

SCMRT6899D

3. Turn the ignition switch on and power on the Hi-Scan Pro.
4. Read DTCs.
5. Find and repair the trouble, and clear the DTCs using Hi-Scan Pro.
6. Disconnect the Hi-Scan Pro.

DIAGNOSTIC TROUBLESHOOTING FLOW

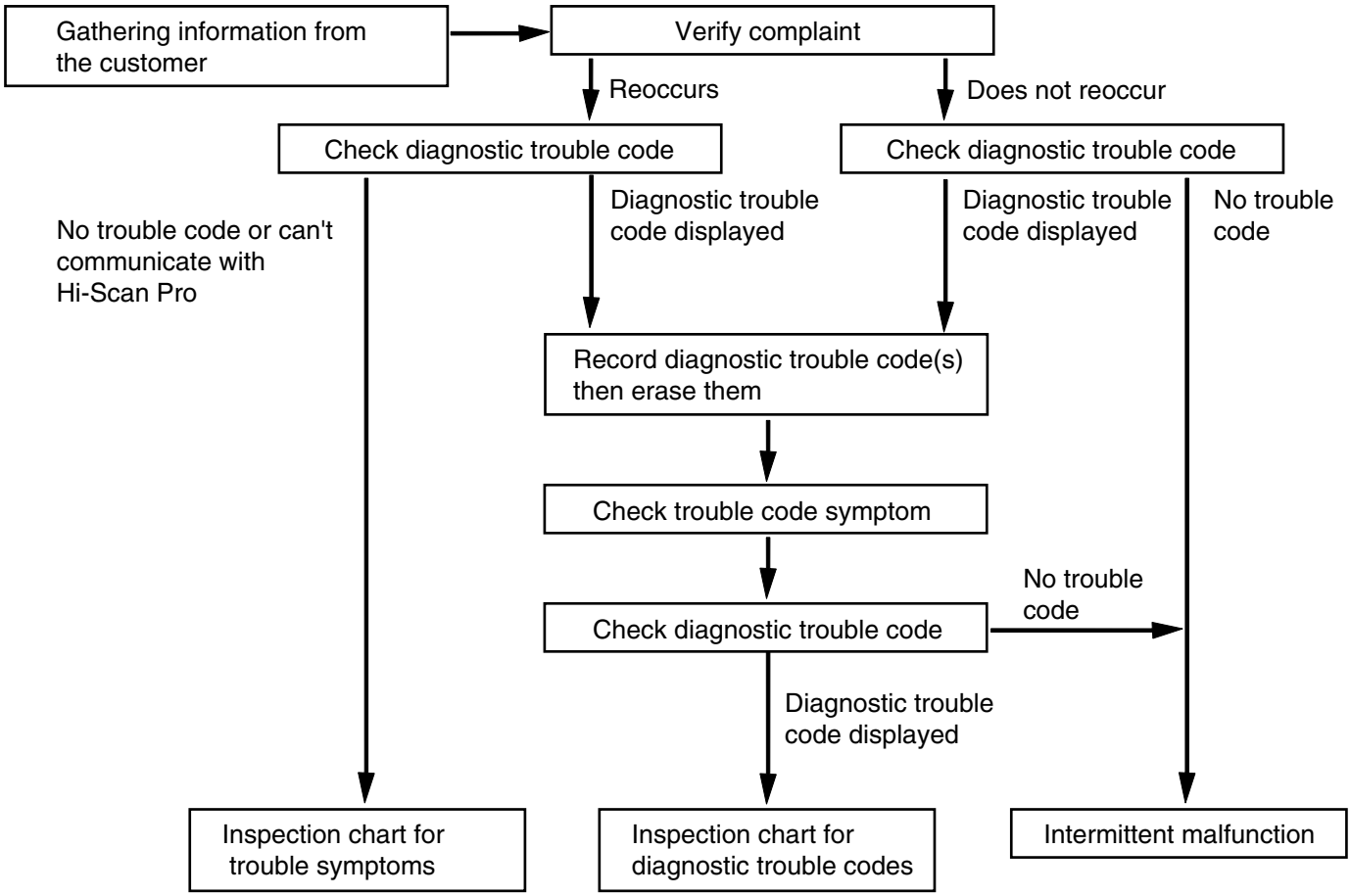

ERA9035A

TERMINAL & CONNECTOR INSPECTION

Be sure to perform "TERMINAL & CONNECTOR INSPECTION" before doing "INSPECTION PROCEDURE" for troubleshooting of each DTC.

1. Visually inspect all connectors related to the affected circuit for damage and secure connection.
2. Inspect terminals for damage and corrosion.

   CAUTION

   Avoid damaging connectors during the inspection process.

3. Are any problems found?

   NO

   ▶ Go to next step (INSPECTION PROCEDURE).

   YES

   ▶ After repairing the trouble part, check whether DTC occurs or not.

PREPARATION OF INSPECTION

Refer to the following steps while doing "INSPECTION PROCEDURE" which is described in the DTC troubleshooting section.

1. Turn the ignition switch to LOCK.
2. Disconnect the battery negative cable from the battery and wait for at least 3 minutes.
3. Remove the DAB module and disconnect the DAB connector.
4. Disconnect the connectors of the PAB, SAB, CAB, BPT, FIS and SIS.
5. Disconnect the SRSCM connector.

CHECKING OF SHORT OR OPEN CIRCUIT

Refer to the following tips for checking of short or open circuit.

1. Shorting bar is located on the upper side of pin 1 and 2 of SRSCM connector A.
2. When checking the short circuit shorting bar must be opened. Use a plastic clip to put into as a shorting bar opener for disconnecting shorting bar.
3. Use SST Dummy adapter (0957A-2G000) to measure resistance or voltage for checking of short or open circuit.
   Plug it into DAB (BPT) connector to avoid enlarging or damaging the connector pins.

CLEAR THE DTC AND CHECK THE VEHICLE AGAIN

1. Install the DAB module and connect the DAB connector.
2. Connect the connector of the PAB, SAB, CAB, BPT, FIS and SIS.
3. Connect the SRSCM connector.
4. Connect the battery negative cable to the battery.
5. Connect a Hi-Scan(Pro) to the data link connector.
6. Turn the ignition switch to ON.
7. Clear the DTC stored in the SRSCM memory with the Hi-Scan(Pro)
8. Turn the ignition switch to LOCK and wait for at least 30 seconds.
9. Turn the ignition switch to ON and wait for at least 30 seconds.
10. Check the vehicle again with the Hi-Scan(Pro).
    Does the above DTC(s) go off?

    YES

    ▶ Problem is intermittent or was repaired and SRSCM memory was not cleared.

    NO

    ▶ Replace the SRSCM with a new one and then check the vehicle again. At this time, if the vehicle normally operates with a new one, the fault may be the SRSCM. Replace the SRSCM.

CIRCUIT DIAGRAM E4BAAC09

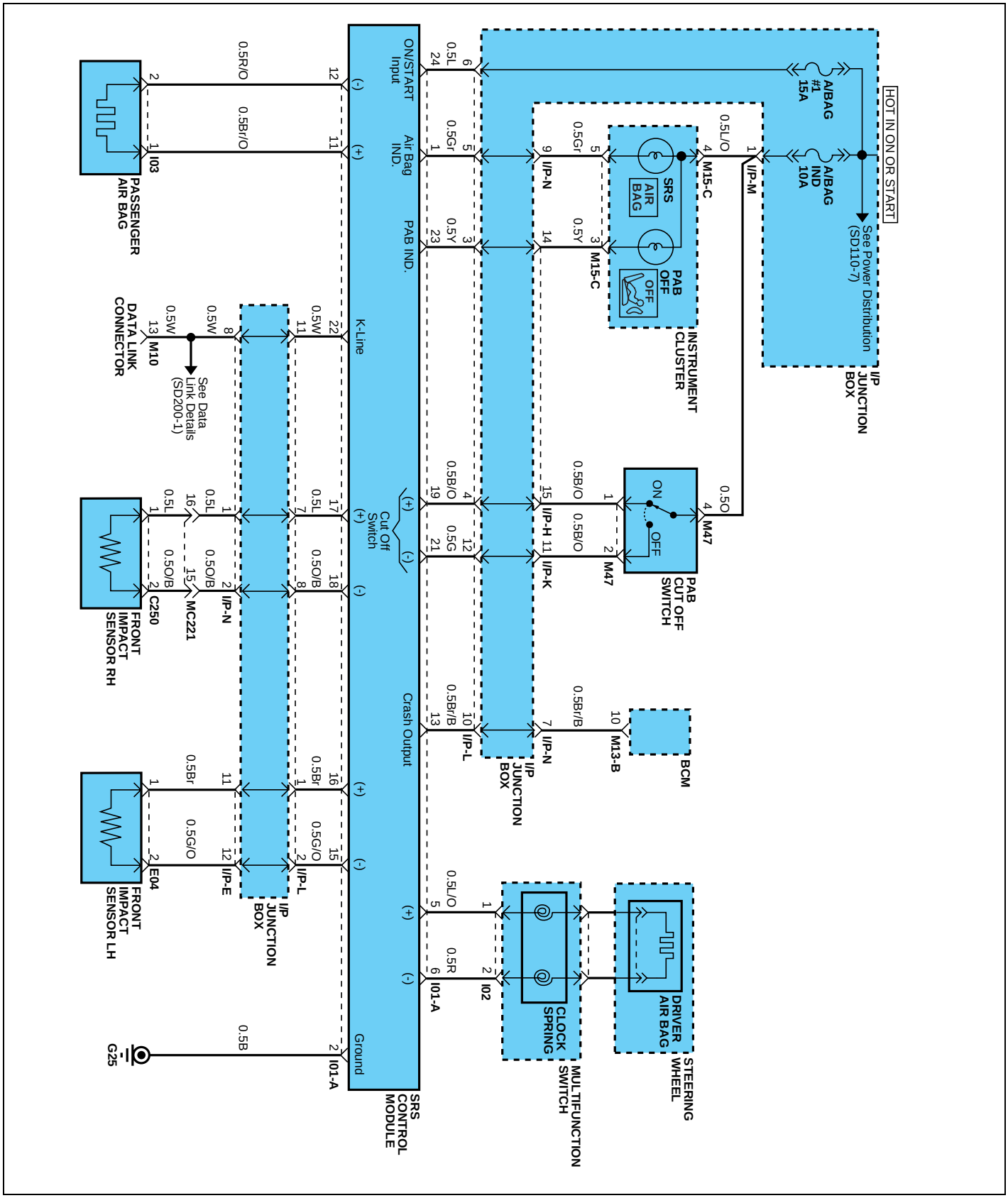

SCMRT6100L

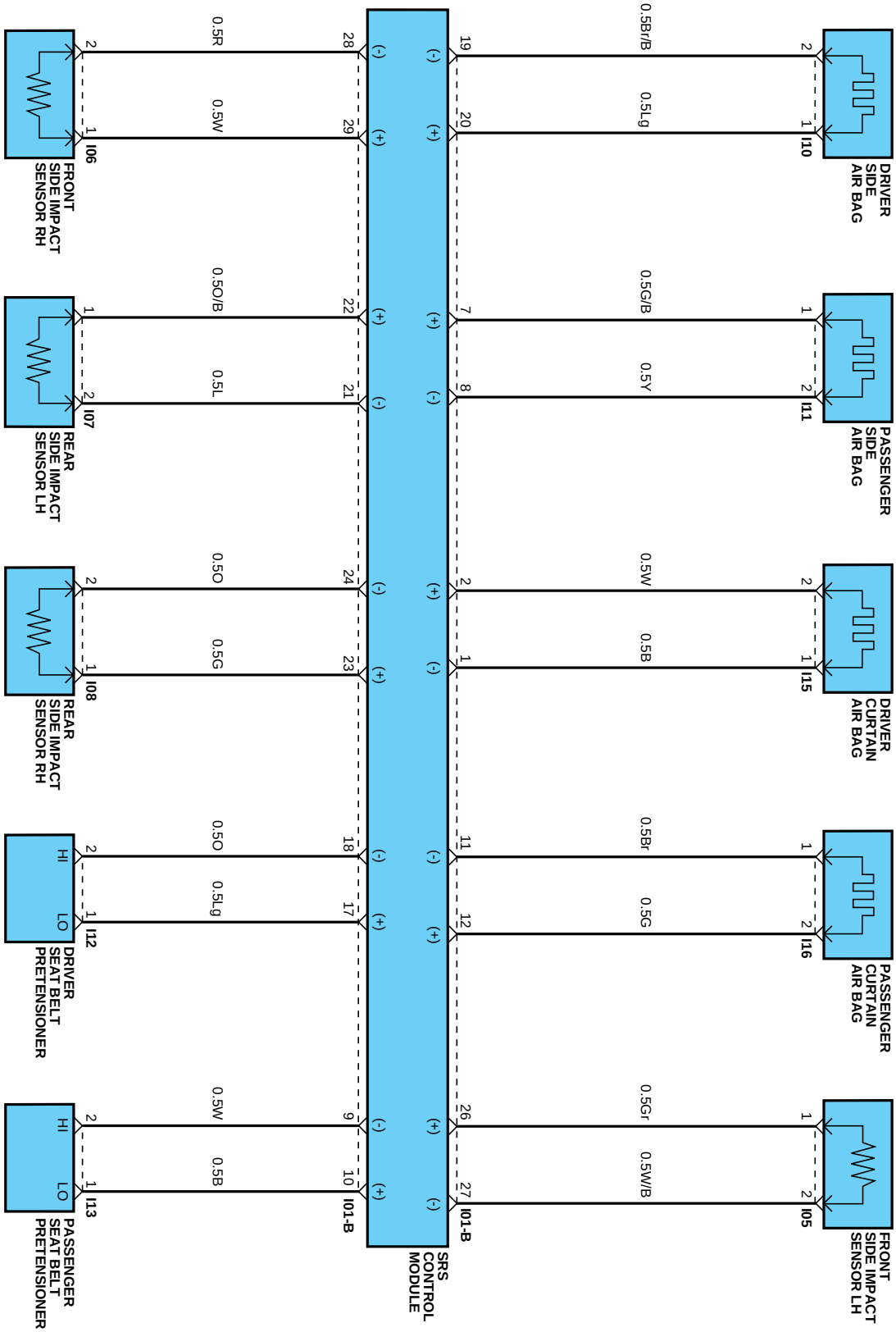
DRIVER SIDE AIR BAG
PASSENGER SIDE AIR BAG
DRIVER CURTAIN AIR BAG
PASSENGER CURTAIN AIR BAG
FRONT SIDE IMPACT SENSOR LH
FRONT SIDE IMPACT SENSOR RH
REAR SIDE IMPACT SENSOR LH
REAR SIDE IMPACT SENSOR RH
DRIVER SEAT BELT PRETENSIONER
PASSENGER SEAT BELT PRETENSIONER
SRS CONTROL MODULE
I10
I11
I15
I16
I05
I06
I07
I08
I12
I13
I01-B
0.5Br/B
0.5Lg
0.5G/B
0.5Y
0.5W
0.5B
0.5Br
0.5G
0.5Gr
0.5W/B
0.5R
0.5W
0.5O/B
0.5L
0.5O
0.5G
0.5O
0.5Lg
0.5W
0.5B
HI
LO

SCMRT6101L

SRSCM CONNECTOR TERMINAL E72E8805

6	5	4	3	2	1
12	11	10	9	8	7
18	17	16	15	14	13
24	23	22	21	20	19

CONNECTOR A (M71)

10	9	8	7	6	5	4	3	2	1
20	19	18	17	16	15	14	13	12	11
30	29	28	27	26	25	24	23	22	21
40	39	38	37	36	35	34	33	32	31

CONNECTOR B (A01)

Shorting bar (▭) : located on the upper side of pin 1 and 2 of SRSCM connector A
Note : For short circuit check, shorting bar must be opened. Use a plastic clip as a shorting bar opener for disconnecting shorting bar.

Pin	Function (Connector A)	Pin	Function (Connector B)
1	Airbag Warning Lamp	1	Curtain Airbag [Driver] Low
2	Ground	2	Curtain Airbag [Driver] High
3	-	3	-
4	-	4	-
5	Driver Airbag High	5	-
6	Driver Airbag Low	6	-
7	-	7	Side Airbag [Front-Passenger] High
8	-	8	Side Airbag [Front-Passenger] Low
9	-	9	Seat Belt Pretensioner [Front-Passenger] Low
10	-	10	Seat Belt Pretensioner [Front-Passenger] High
11	Passenger Airbag High	11	Curtain Airbag [Passenger] Low
12	Passenger Airbag Low	12	Curtain Airbag [Passenger] High
13	Crash Output	13	-
14	-	14	-
15	Front Impact Sensor [Driver] Low	15	-
16	Front Impact Sensor [Driver] High	16	-
17	Front Impact Sensor [Passenger] High	17	Seat Belt Pretensioner [Front-Driver] High
18	Front Impact Sensor [Passenger] Low	18	Seat Belt Pretensioner [Front-Driver] Low
19	PAD Switch High	19	Side Airbag [Front-Driver] Low
20	-	20	Side Airbag [Front-Driver] High
21	PAD Switch Low	21	Side Impact Sensor [Rear-Driver] Low
22	K-Line Diagnostic	22	Side Impact Sensor [Rear-Driver] High
23	PAD Lamp	23	Side Impact Sensor [Rear-Passenger] High
24	Ignition	24	Side Impact Sensor [Rear-Passenger] Low
		25	-
		26	Side Impact Sensor [Driver] High
		27	Side Impact Sensor [Driver] Low
		28	Side Impact Sensor [Passenger] Low
		29	Side Impact Sensor [Passenger] High
		30	-
		31	-
		32	-
		33	-
		34	-
		35	-
		36	-
		37	-
		38	-
		39	-
		40	-

SCMRT6102L

DIAGNOSTIC TROUBLE CODES (DTC)

DTC	FAULT DESCRIPTION	REMARK
B1101	Battery Voltage High	RT - 43
B1102	Battery Voltage Low	RT - 43
B1326	Front Impact Sensor [Driver] Short to Ground	RT - 46
B1327	Front Impact Sensor [Driver] Short to Battery	RT - 48
B1328	Front Impact Sensor [Driver] Defect	RT - 50
B1329	Front Impact Sensor [Driver] Communication Error	RT - 50
B1330	Front Impact Sensor [Driver] Wrong ID	RT - 53
B1331	Front Impact Sensor [Passenger] Short to Ground	RT - 46
B1332	Front Impact Sensor [Passenger] Short to Battery	RT - 48
B1333	Front Impact Sensor [Passenger] Defect	RT - 50
B1334	Front Impact Sensor [Passenger] Communication Error	RT - 50
B1335	Front Impact Sensor [Passenger] Wrong ID	RT - 53
B1346	Driver Airbag Resistance Too High	RT - 54
B1347	Driver Airbag Resistance Too Low	RT - 54
B1348	Driver Airbag Circuit Short to Ground	RT - 57
B1349	Driver Airbag Circuit Short to Battery	RT - 60
B1352	Passenger Airbag Resistance Too High	RT - 63
B1353	Passenger Airbag Resistance Too Low	RT - 63
B1354	Passenger Airbag Circuit Short to Ground	RT - 66
B1355	Passenger Airbag Circuit Short to Battery	RT - 68
B1361	Seat Belt Pretensioner [Front-Driver] Resistance Too High	RT - 70
B1362	Seat Belt Pretensioner [Front-Driver] Resistance Too Low	RT - 70
B1363	Seat Belt Pretensioner [Front-Driver] Circuit Short to Ground	RT - 73
B1364	Seat Belt Pretensioner [Front-Driver] Circuit Short to Battery	RT - 75
B1367	Seat Belt Pretensioner [Front-Passenger] Resistance Too High	RT - 70
B1368	Seat Belt Pretensioner [Front-Passenger] Resistance Too Low	RT - 70
B1369	Seat Belt Pretensioner [Front-Passenger] Circuit Short to Ground	RT - 73
B1370	Seat Belt Pretensioner [Front-Passenger] Circuit Short to Battery	RT - 75
B1378	Side Airbag [Front-Driver] Resistance Too High	RT - 78
B1379	Side Airbag [Front-Driver] Resistance Too Low	RT - 78
B1380	Side Airbag [Front-Driver] Circuit Short to Ground	RT - 81
B1381	Side Airbag [Front-Driver] Circuit Short to Battery	RT - 83
B1382	Side Airbag [Front-Passenger] Resistance Too High	RT - 78
B1383	Side Airbag [Front-Passenger] Resistance Too Low	RT - 78
B1384	Side Airbag [Front-Passenger] Circuit Short to Ground	RT - 81
B1385	Side Airbag [Front-Passenger] Circuit Short to Battery	RT - 83
B1395	Squib Interconnection Fault	RT - 85

DTC	FAULT DESCRIPTION	REMARK
B1400	Side Impact Sensor [Front-Driver] Defect	RT - 86
B1401	Side Impact Sensor [Front-Driver] Short to Ground	RT - 89
B1402	Side Impact Sensor [Front-Driver] Short to Battery	RT - 91
B1403	Side Impact Sensor [Front-Passenger] Defect	RT - 86
B1404	Side Impact Sensor [Front-Passenger] Short to Ground	RT - 89
B1405	Side Impact Sensor [Front-Passenger] Short to Battery	RT - 91
B1409	Side Impact Sensor [Front-Driver] Communication Error	RT - 86
B1410	Side Impact Sensor [Front-Passenger] Communication Error	RT - 86
B1412	Side Impact Sensor [Rear-Driver] Communication Error	RT - 94
B1413	Side Impact Sensor [Rear-Passenger] Communication Error	RT - 94
B1414	Side Impact Sensor [Front-Driver] Wrong ID	RT - 97
B1415	Side Impact Sensor [Front-Passenger] Wrong ID	RT - 97
B1416	Side Impact Sensor [Rear-Driver] Wrong ID	RT - 97
B1417	Side Impact Sensor [Rear-Passenger] Wrong ID	RT - 97
B1418	Side Impact Sensor [Rear-Driver] Defect	RT - 94
B1419	Side Impact Sensor [Rear-Passenger] Defect	RT - 94
B1451	Side Impact Sensor [Rear-Driver] Short to Ground	RT - 98
B1452	Side Impact Sensor [Rear-Driver] Short to Battery	RT - 100
B1454	Side Impact Sensor [Rear-Passenger] Short to Ground	RT - 98
B1455	Side Impact Sensor [Rear-Passenger] Short to Battery	RT - 100
B1473	Curtain Airbag [Driver] Resistance Too High	RT - 102
B1474	Curtain Airbag [Driver] Resistance Too Low	RT - 102
B1475	Curtain Airbag [Driver] Circuit Short to Ground	RT - 106
B1476	Curtain Airbag [Driver] Circuit Short to Battery	RT - 108
B1477	Curtain Airbag [Passenger] Resistance Too High	RT - 102
B1478	Curtain Airbag [Passenger] Resistance Too Low	RT - 102
B1479	Curtain Airbag [Passenger] Circuit Short to Ground	RT - 106
B1480	Curtain Airbag [Passenger] Circuit Short to Battery	RT - 108
B1527	Passenger Airbag Deactivation Switch Open or Short to Battery	RT - 111
B1528	Passenger Airbag Deactivation Switch Short or Short to Ground	RT - 115
B1529	Passenger Airbag Deactivation Switch Defect	RT - 119
B1530	Passenger Airbag Deactivation Switch Instability	RT - 119
B1620	Supplemental Restraint System Control Module Internal Fault (Replace SRSCM)	RT - 123
B1650	Crash Recorded - Frontal (Replace SRSCM)	RT - 124
B1651	Crash Recorded - Driver Side (Replace SRSCM)	RT - 124
B1652	Crash Recorded - Passenger Side (Replace SRSCM)	RT - 124
B1657	Crash Recorded - Belt Pretensioner Only	RT - 124
B1658	Belt Pretensioner 6 times Deployment (Replace SRSCM)	RT - 124

DTC	FAULT DESCRIPTION	REMARK
B2500	Warning Lamp Fault	RT - 125
B2505	Passenger Airbag Deactivation Lamp Fault	RT - 129

DTC B1101 BATTERY VOLTAGE HIGH
DTC B1102 BATTERY VOLTAGE LOW

DTC DESCRIPTION E4E28840

The SRSCM sets above DTC(s) if it detects that the battery voltage of restraints system is too high or too low. When the voltage returns to normal, the SRS warning light automatically goes off and a malfunction is no longer indicated.

DTC DETECTING CONDITION E725F7D5

DTC	Condition	Probable cause
B1101	Battery Voltage > 17.0 V for 4 seconds after IG ON	• Battery • Generator • Wiring Harness • SRSCM
B1102	Battery Voltage < 8.38 V for 4 seconds after IG ON	

SCHEMATIC DIAGRAM E16BCD55

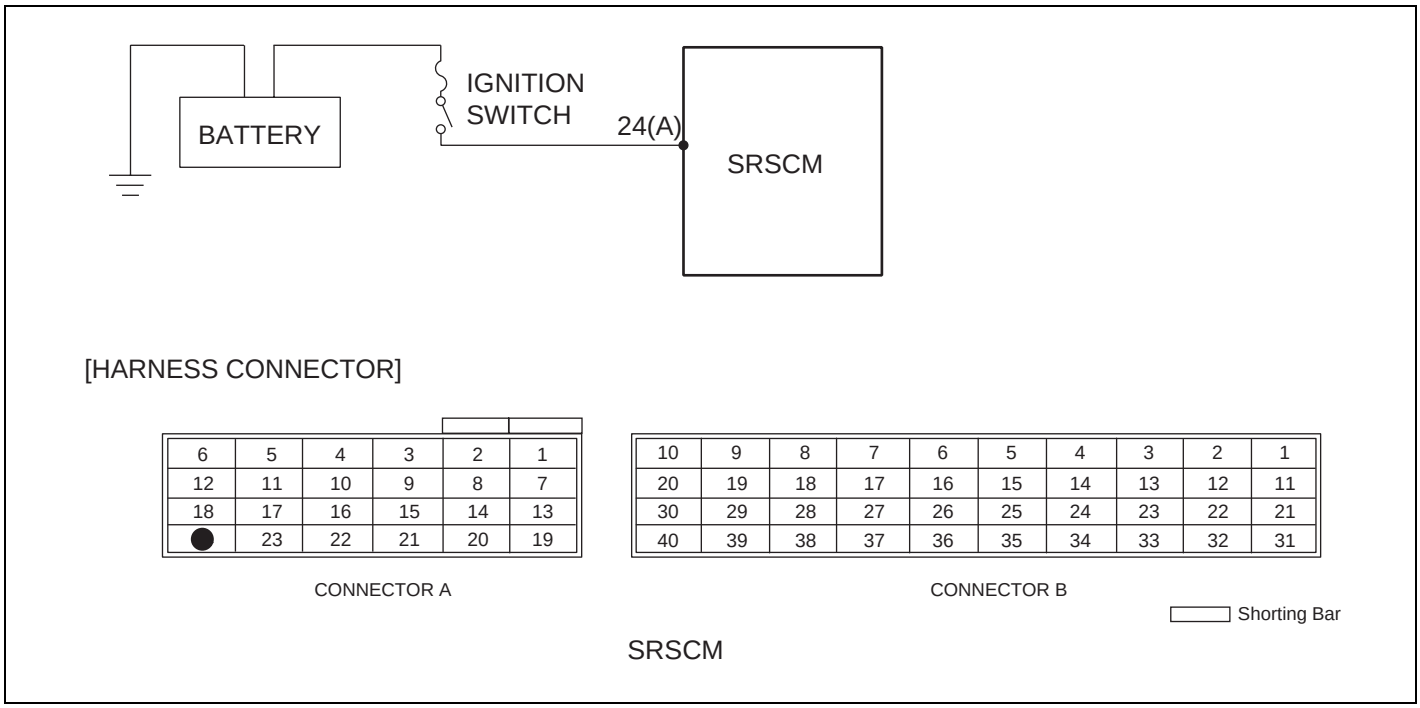

ERBF500N

SPECIFICATION E76738DA

Voltage : 8.38 ~ 17.0 V

TERMINAL & CONNECTOR INSPECTION EDA5878D

Refer to the DESCRIPTION in this TROUBLESHOOTING section. (See page RT - 36)

INSPECTION PROCEDURE E6C2A87D

1. PREPARATION
   Refer to the DESCRIPTION in this TROUBLESHOOTING section. (See page RT - 36)

2. CHECK SOURCE VOLTAGE

   1) Turn the ignition switch to ON.

   2) Measure voltage between the terminal 24(A) of SRSCM harness connector and chassis ground.

Specification (voltage) : 8.38 ~ 17.0 V

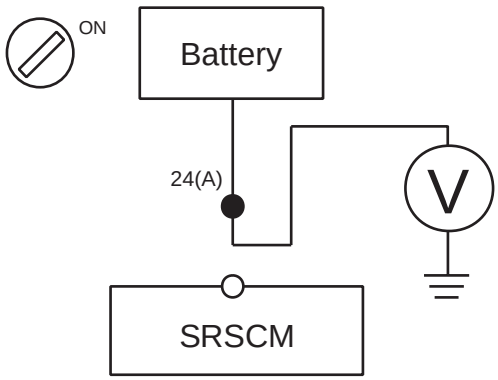

ERBF501Q

   3) Is the measured voltage within specification?

   NO

   ▶ Check the battery.

   YES

   ▶ Replace the SRSCM with a new one, and then check the vehicle again. At this time, if the vehicle normally operates with a new SRSCM, the fault may be the SRSCM(Replace SRSCM).

3. CHECK THE BATTERY

   1) Check the battery.
   ● Refer to "EE" group in this SERVICE MANUAL.
   Is the battery normal?

   YES

   ▶ Check the generator.

   NO

   ▶ Repair or replace the battery.(Refer to "EE" group in this SERVICE MANUAL)

4. CHECK GENERATOR

1) Check the generator.
● Refer to "EE" group in this SERVICE MANUAL.
Is the generator normal?

YES

▶ Check wiring harness.

NO

▶ Repair or replace the generator.(Refer to "EE" group in this SERVICE MANUAL)

5. CHECK WIRING HARNESS

1) Check the wiring harness between the battery and SRSCM.
Is the wiring harness normal?

YES

▶ Check the DTC again.

NO

▶ Repair or Replace the wiring harness.

6. CHECK THE DTC AGAIN

1) Turn the ignition switch to LOCK and wait for at least 30 seconds.

CAUTION

Check again that the battery negative cable is disconnected from the battery.

2) Install the DAB module and connect the DAB connector.

3) Connect the connectors of the PAB, SAB, CAB, BPT, FIS and SIS.

4) Connect the SRSCM connector.

5) Connect the battery negative cable to the battery.

6) Connect a Hi-Scan(Pro) to the data link connector.

7) Turn the ignition switch to ON and check the vehicle again.
Does Hi-Scan (Pro) indicate any DTC?

YES

▶ Perform the troubleshooting procedures associated with those codes.

NO

▶ Problem is intermittent or was repaired and SRSCM memory was not cleared.

DTC B1326 FRONT IMPACT SENSOR [DRIVER] SHORT TO GROUND
DTC B1331 FRONT IMPACT SENSOR [PASSENGER] SHORT TO GROUND

DTC DESCRIPTION E5EE0DD3

The detecting system for front crash consists of the SRSCM and two Front Impact Sensors (FIS). The SRSCM sets above DTC(s) if it detects short to ground on the FIS circuit.

DTC DETECTING CONDITION ED0DA1A6

DTC	Condition	Probable cause
B1326 B1331	• Short to ground between FIS and SRSCM • Front Impact Sensor(FIS) Malfunction • SRSCM Malfunction	• Short to ground on Wiring Harness • Front Impact Sensor(FIS) • SRSCM

SCHEMATIC DIAGRAM EE068E9D

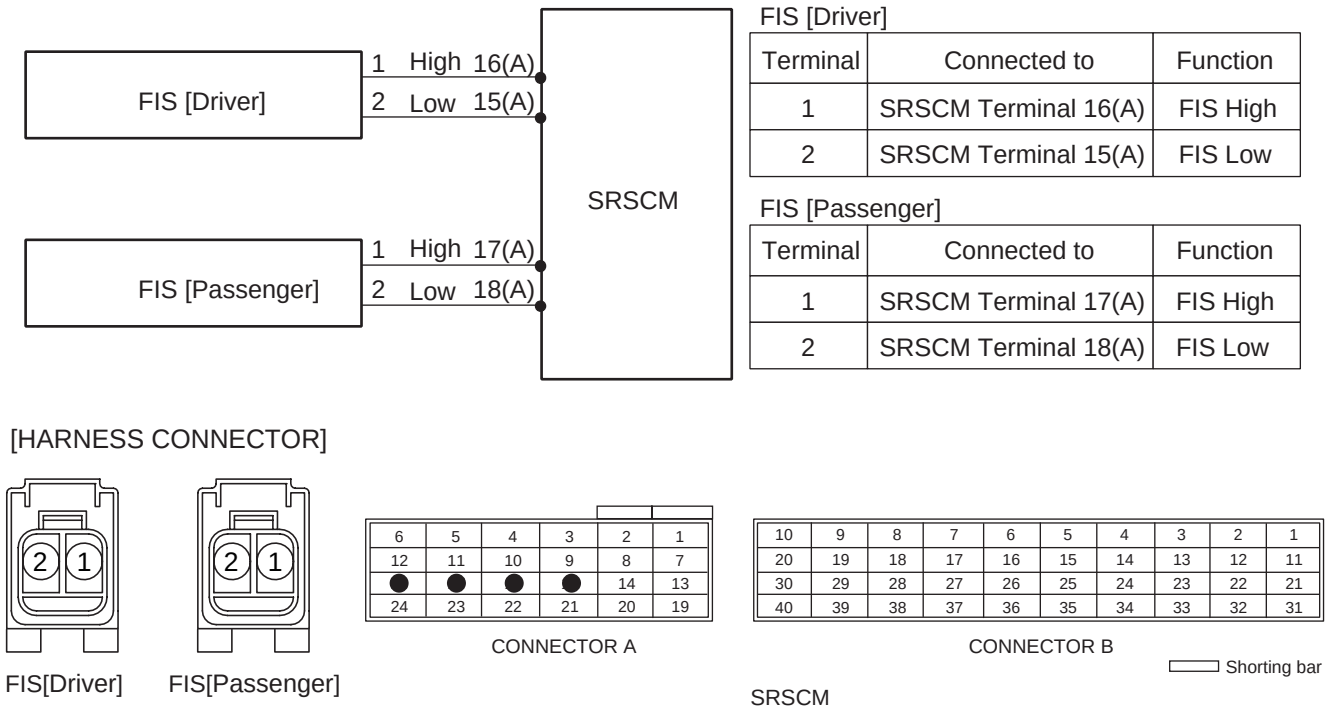

FIS [Driver]

Terminal	Connected to	Function
1	SRSCM Terminal 16(A)	FIS High
2	SRSCM Terminal 15(A)	FIS Low

FIS [Passenger]

Terminal	Connected to	Function
1	SRSCM Terminal 17(A)	FIS High
2	SRSCM Terminal 18(A)	FIS Low

SCMRT6110L

TERMINAL & CONNECTOR INSPECTION EB9AB00B

Refer to the DESCRIPTION in this TROUBLESHOOTING section. (See page RT - 36)

INSPECTION PROCEDURE EBA9DD37

1. PREPARATION
   Refer to the DESCRIPTION in this TROUBLESHOOTING section. (See page RT - 36)

2. CHECK FIS CIRCUIT

1) Measure resistance between the terminal 1 of FIS harness connector and chassis ground.

specification(resistance) : ∞ Ω

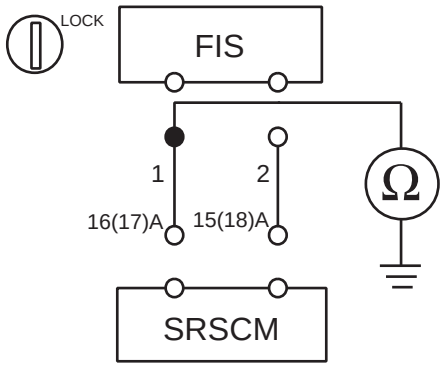

ERBF500R

2) Is the measured resistance within specification?

YES

▶ Check Front Impact Sensor.

NO

▶ Repair or replace the wiring harness between the FIS and the SRSCM.

3. CHECK FRONT IMPACT SENSOR

1) Replace the front impact sensor(FIS) with a new one.
● Refer to "Front Impact Sensor(FIS)" section in this SERVICE MANUAL.

2) Install the DAB module and connect the DAB connector.

3) Connect the connectors of the PAB, SAB, CAB, BPT, FIS and SIS.

4) Connect the SRSCM connector.

5) Connect the battery negative cable to the battery.

6) Connect a Hi-Scan(Pro) to the data link connector.

7) Turn the ignition switch to ON and check the vehicle again.
Does Hi-Scan (Pro) indicate any DTC related to FIS?

YES

▶ Go to next step.

NO

▶ Replace the Front Impact Sensor(FIS).

4. CLEAR THE DTC AND CHECK THE DTC AGAIN
Refer to the DESCRIPTION in this TROUBLESHOOTING section. (See page RT - 36)

DTC B1327 FRONT IMPACT SENSOR [DRIVER] SHORT TO BATTERY
DTC B1332 FRONT IMPACT SENSOR [PASSENGER] SHORT TO BATTERY

DTC DESCRIPTION ECF62D8B

The detecting system for front crash consists of the SRSCM and two Front Impact Sensors (FIS). The SRSCM sets above DTC(s) if it detects short to battery on the FIS circuit.

DTC DETECTING CONDITION EBBDEFA3

DTC	Condition	Probable cause
B1327 B1332	• Short to battery line between FIS and SRSCM • Front Impact Sensor(FIS) Malfunction • SRSCM Malfunction	• Short to battery line on Wiring Harness • Front Impact Sensor(FIS) • SRSCM

SCHEMATIC DIAGRAM EC734759

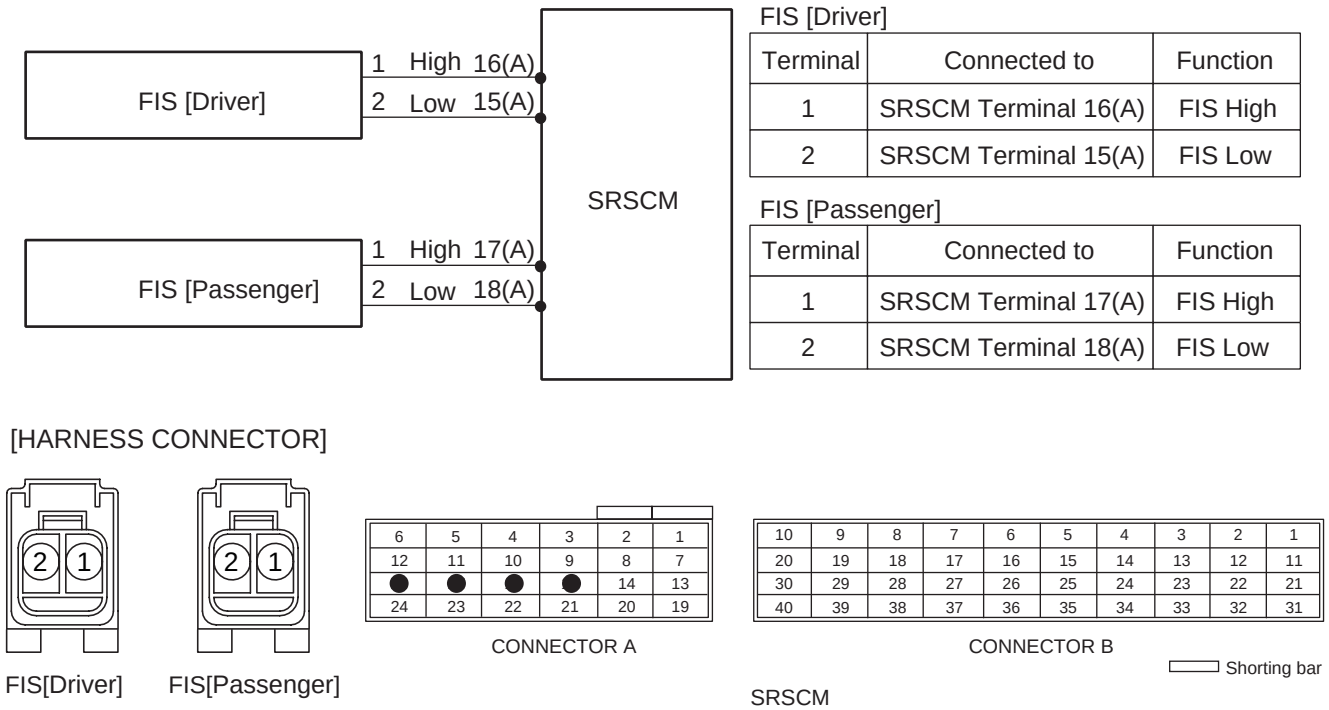

FIS [Driver]

Terminal	Connected to	Function
1	SRSCM Terminal 16(A)	FIS High
2	SRSCM Terminal 15(A)	FIS Low

FIS [Passenger]

Terminal	Connected to	Function
1	SRSCM Terminal 17(A)	FIS High
2	SRSCM Terminal 18(A)	FIS Low

SCMRT6110L

TERMINAL & CONNECTOR INSPECTION E283653D

Refer to the DESCRIPTION in this TROUBLESHOOTING section. (See page RT - 36)

INSPECTION PROCEDURE E29FB001

1. PREPARATION
   Refer to the DESCRIPTION in this TROUBLESHOOTING section. (See page RT - 36)

2. CHECK FIS CIRCUIT

1) Connect the battery negative cable to the battery.

2) Turn the ignition switch to ON.

3) Measure voltage between the terminal 1 of FIS harness connector and chassis ground.

specification(voltage) : Approximately 0 V

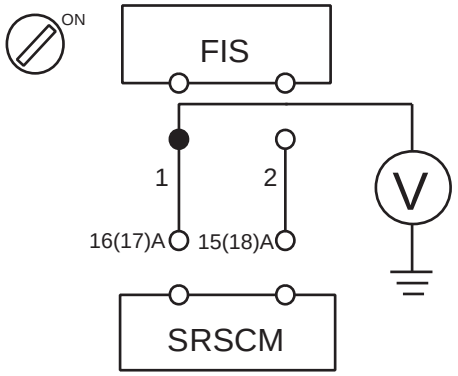

ERBF500S

4) Is the measured voltage within specification?

YES

▶ Check Front Impact Sensor.

NO

▶ Repair the short to battery line circuit on wiring harness between the FIS and the SRSCM.

3. CHECK FRONT IMPACT SENSOR

1) Replace the front impact sensor(FIS) with a new one.
● Refer to "Front Impact Sensor(FIS)" section in this SERVICE MANUAL.

2) Install the DAB module and connect the DAB connector.

3) Connect the connectors of the PAB, SAB, CAB, BPT, FIS and SIS.

4) Connect the SRSCM connector.

5) Connect the battery negative cable to the battery.

6) Connect a Hi-Scan(Pro) to the data link connector.

7) Turn the ignition switch to ON and check the vehicle again.
Does Hi-Scan (Pro) indicate any DTC related to FIS?

YES

▶ Go to next step.

NO

▶ Replace the Front Impact Sensor(FIS).

4. CLEAR THE DTC AND CHECK THE DTC AGAIN
Refer to the DESCRIPTION in this TROUBLESHOOTING section. (See page RT - 36)

DTC B1328 FRONT IMPACT SENSOR [DRIVER] DEFECT
DTC B1329 FRONT IMPACT SENSOR [DRIVER] COMMUNICATION ERROR
DTC B1333 FRONT IMPACT SENSOR [PASSENGER] DEFECT
DTC B1334 FRONT IMPACT SENSOR [PASSENGER] COMMUNICATION ERROR

DTC DESCRIPTION E3EC260A

The detecting system for front crash consists of the SRSCM and two Front Impact Sensors (FIS). The SRSCM sets above DTC(s) if it detects that any FIS is defective or there is communication error between any FIS and the SRSCM.

DTC DETECTING CONDITION E0BDC22F

DTC	Condition	Probable cause
B1328 B1329 B1333 B1334	• Open between FIS and SRSCM • Front Impact Sensor(FIS) Malfunction • SRSCM Malfunction	• Wiring Harness • Front Impact Sensor(FIS) • SRSCM

SCHEMATIC DIAGRAM E2AA4609

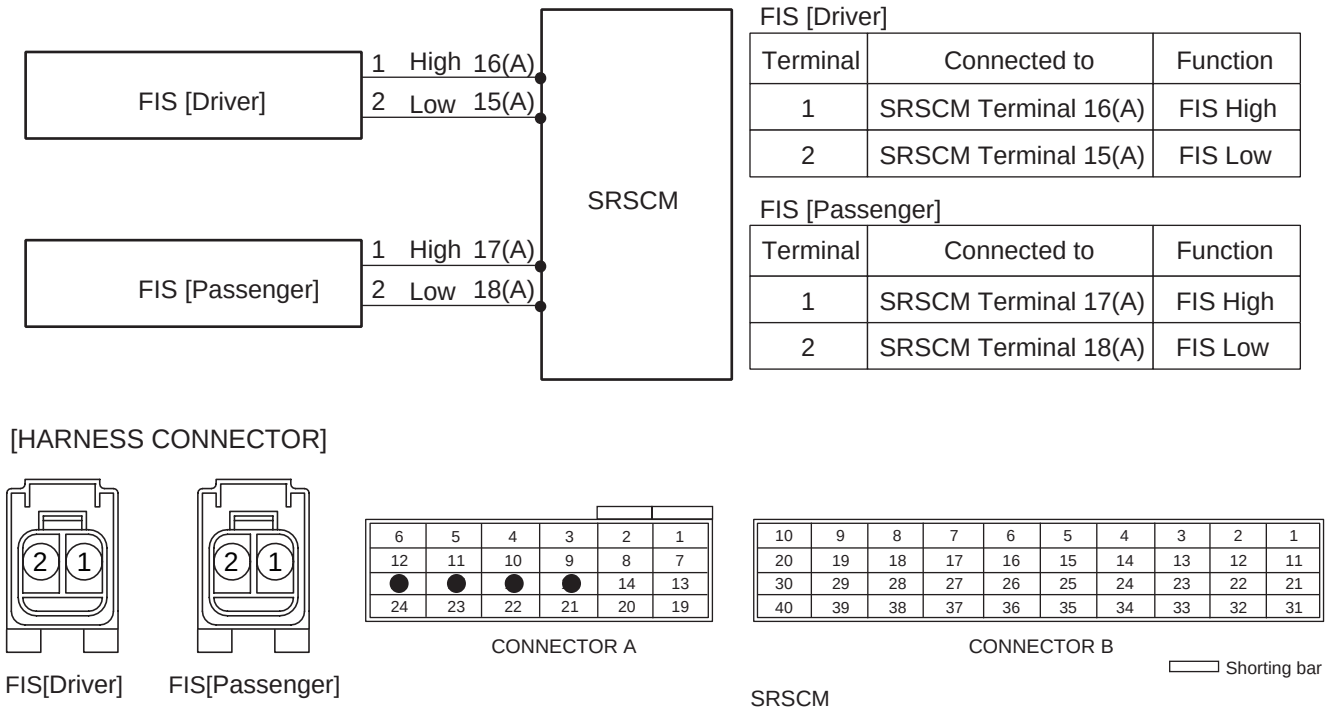

FIS [Driver]

Terminal	Connected to	Function
1	SRSCM Terminal 16(A)	FIS High
2	SRSCM Terminal 15(A)	FIS Low

FIS [Passenger]

Terminal	Connected to	Function
1	SRSCM Terminal 17(A)	FIS High
2	SRSCM Terminal 18(A)	FIS Low

SCMRT6110L

TERMINAL & CONNECTOR INSPECTION ECAC7931

Refer to the DESCRIPTION in this TROUBLESHOOTING section. (See page RT - 36)

INSPECTION PROCEDURE EB342E09

1. PREPARATION
   Refer to the DESCRIPTION in this TROUBLESHOOTING section. (See page RT - 36)

2. CHECK FIS CIRCUIT

   1) Measure resistance between the terminal 1 of FIS harness connector and the terminal 16(17) of SRSCM harness connector (A).

   2) Measure resistance between the terminal 2 of FIS harness connector and the terminal 15(18) of SRSCM harness connector (A).

Specification (resistance) : below 1 Ω

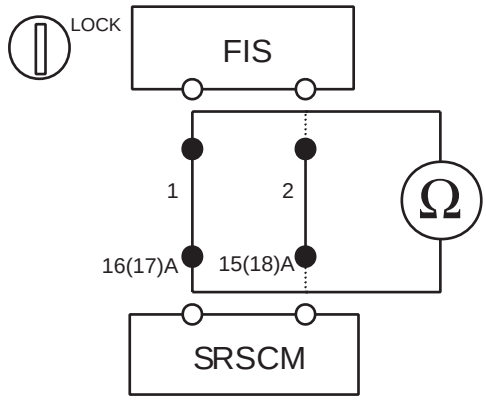

ERBF500W

   3) Is the measured resistance within specification?

   YES

   ▶ Check Front Impact Sensor.

   NO

   ▶ Repair or replace the wiring harness between the FIS and the SRSCM.

3. CHECK FRONT IMPACT SENSOR

   1) Replace the front impact sensor(FIS) with a new one.
      ● Refer to "Front Impact Sensor(FIS)" section in this SERVICE MANUAL.

   2) Install the DAB module and connect the DAB connector.

   3) Connect the connectors of the PAB, SAB, CAB, BPT, FIS and SIS.

   4) Connect the SRSCM connector.

   5) Connect the battery negative cable to the battery.

   6) Connect a Hi-Scan(Pro) to the data link connector.

7) Turn the ignition switch to ON and check the vehicle again.
Does Hi-Scan (Pro) indicate any DTC related to FIS?

YES

▶ Go to next step.

NO

▶ Replace the Front Impact Sensor(FIS).

4. CLEAR THE DTC AND CHECK THE VEHICLE AGAIN
Refer to the DESCRIPTION in this TROUBLESHOOTING section. (See page RT - 36)

DTC B1330 FRONT IMPACT SENSOR [DRIVER] WRONG ID
DTC B1335 FRONT IMPACT SENSOR [PASSENGER] WRONG ID

DTC DESCRIPTION ECF43815

The detecting system for front crash consists of the SRSCM and two Front Impact Sensors (FIS). The SRSCM sets above DTC(s) if it detects wrong FIS is used.

DTC DETECTING CONDITION EF87DBCC

DTC	Condition	Probable cause
B1330 B1335	• Wrong Front Impact Sensor(FIS) • SRSCM Malfunction	• Front Impact Sensor(FIS) • SRSCM

SCHEMATIC DIAGRAM E14A21C4

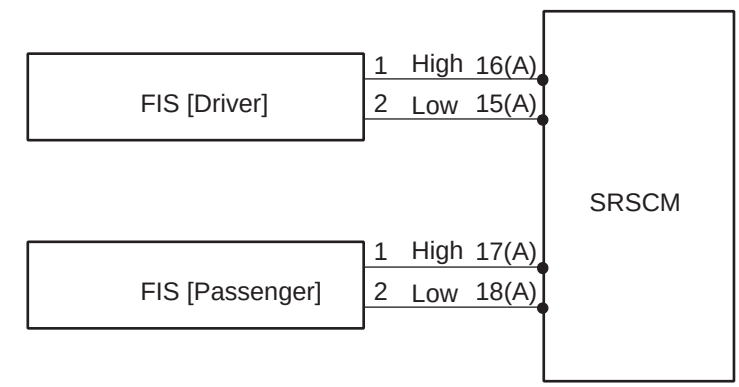

FIS [Driver]

Terminal	Connected to	Function
1	SRSCM Terminal 16(A)	FIS High
2	SRSCM Terminal 15(A)	FIS Low

FIS [Passenger]

Terminal	Connected to	Function
1	SRSCM Terminal 17(A)	FIS High
2	SRSCM Terminal 18(A)	FIS Low

[HARNESS CONNECTOR]

FIS[Driver]

FIS[Passenger]

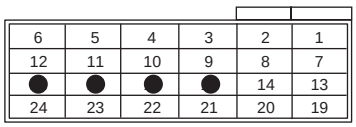

CONNECTOR A

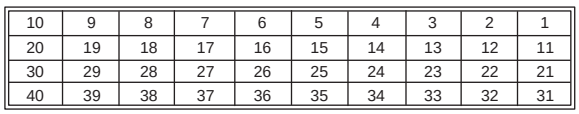

CONNECTOR B

Shorting bar

SRSCM

SCMRT6110L

TERMINAL & CONNECTOR INSPECTION E16FA0B2

Refer to the DESCRIPTION in this TROUBLESHOOTING section. (See page RT - 36)

INSPECTION PROCEDURE E171444B

If above DTC is detected replace the Front Impact Sensor.

DTC B1346 DRIVER AIRBAG RESISTANCE TOO HIGH
DTC B1347 DRIVER AIRBAG RESISTANCE TOO LOW

DTC DESCRIPTION EFB92994

The Driver Airbag circuit consists of the SRSCM, Clockspring and the Driver Airbag (DAB). The SRSCM sets above DTC(s) if it detects that the resistance of DAB squib is too high or low.

DTC DETECTING CONDITION E7B42F6E

DTC	Condition	Probable cause
B1346 B1347	• Too high or low resistance between DAB high(+) and DAB low (-) • Driver Airbag (DAB) Malfunction • Clockspring Malfunction • SRSCM Malfunction	• Open or short circuit on wiring harness • Driver Airbag (DAB) squib • Clockspring • SRSCM

SCHEMATIC DIAGRAM E43B7579

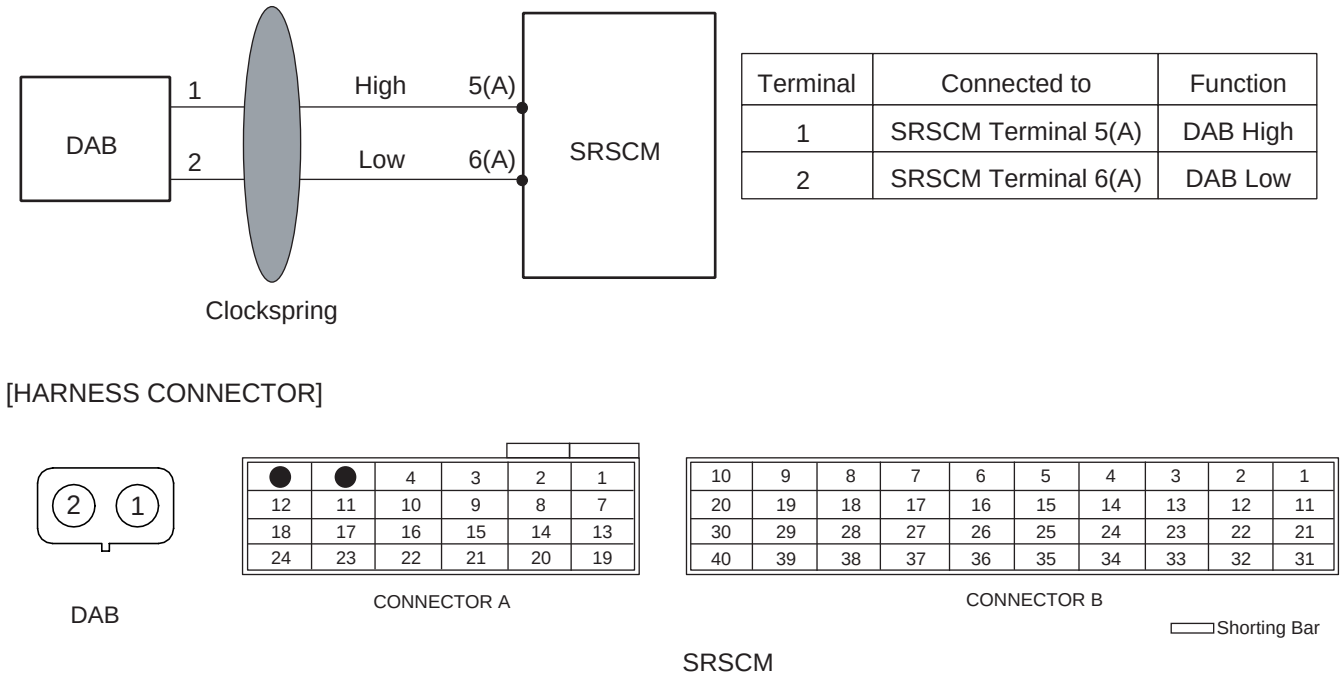

Terminal	Connected to	Function
1	SRSCM Terminal 5(A)	DAB High
2	SRSCM Terminal 6(A)	DAB Low

SCMRT6120L

SPECIFICATION E28BE0B8

DAB resistance : 1.4 ~ 6.2 Ω

TERMINAL & CONNECTOR INSPECTION E66FD84C

Refer to the DESCRIPTION in this TROUBLESHOOTING section. (See page RT - 36)

INSPECTION PROCEDURE EBC88CD3

1. PREPARATION
   Refer to the DESCRIPTION in this TROUBLESHOOTING section. (See page RT - 36)

2. CHECK DAB RESISTANCE

   CAUTION

   Never attempt to measure the circuit resistance of the airbag module(squib) even if you are using the specified tester.

   1) Connect the Dummy and the Dummy Adapter on DAB harness connector.
      ●Refer to "SPECIAL SERVICE TOOL" section in this SERVICE MANUAL for the SST No. of Dummy and Dummy Adapter.

   2) Measure resistance between the terminal 5 and 6 of SRSCM harness connector(A).

Specification (resistance) : 1.4 ~ 6.2 Ω

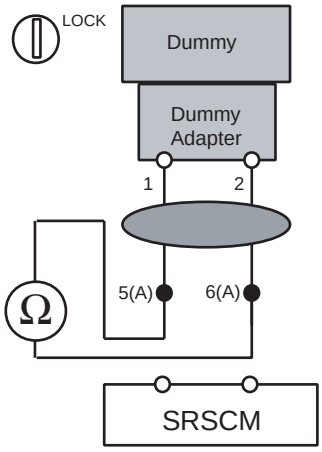

SCMRT6121L

   3) Is the measured resistance within specification?

   NO

   ▶ Check open circuit.

   YES

   ▶ Replace the Driver Airbag(DAB) module.

3. CHECK OPEN CIRCUIT

   1) Measure resistance between the terminal 1 of DAB harness connector and the terminal 5 of SRSCM harness connector(A).

   2) Measure resistance between the terminal 2 of DAB harness connector and the terminal 6 of SRSCM harness connector(A).

Specification (resistance) : below 1 Ω

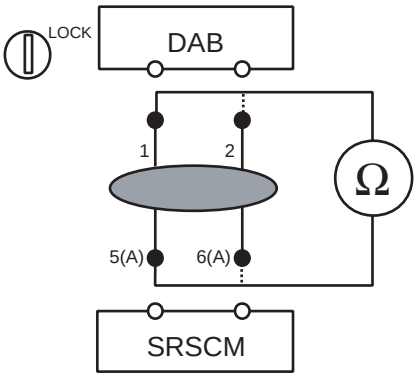

SCMRT6122L

3) Is the measured resistance within specification?

YES

▶ Check short circuit.

NO

▶ Repair or replace the wiring harness between the DAB and the clockspring or between the clockspring and the SRSCM.

4. CHECK SHORT CIRCUIT

1) Measure resistance between the terminal 1 and 2 of DAB harness connector.

Specification (resistance) : ∞ Ω

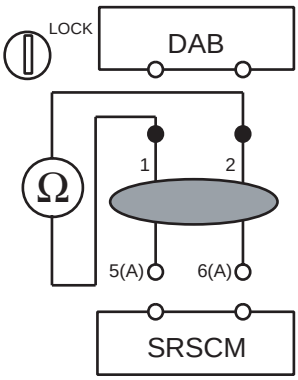

SCMRT6123L

2) Is the measured resistance within specification?

YES

▶ Go to next step.

NO

▶ Repair or replace the wiring harness between the DAB and the clockspring or between the clockspring and the SRSCM.

5. CLEAR THE DTC AND CHECK THE VEHICLE AGAIN
Refer to the DESCRIPTION in this TROUBLESHOOTING section. (See page RT - 36)

DTC B1348 DRIVER AIRBAG RESISTANCE CIRCUIT SHORT TO GROUND

DTC DESCRIPTION E8857516

The Driver Airbag circuit consists of the SRSCM, Clockspring and the Driver Airbag (DAB). The SRSCM sets above DTC(s) if it detects short to ground on the DAB circuit.

DTC DETECTING CONDITION EDEAA31B

DTC	Condition	Probable cause
B1348	• Short to ground between DAB and clockspring • Short to ground between clockspring and SRSCM • Driver Airbag (DAB) Malfunction • Clockspring Malfunction • SRSCM Malfunction	• Short to ground circuit on wiring harness • Driver Airbag (DAB) squib • Clockspring • SRSCM

SCHEMATIC DIAGRAM E7452174

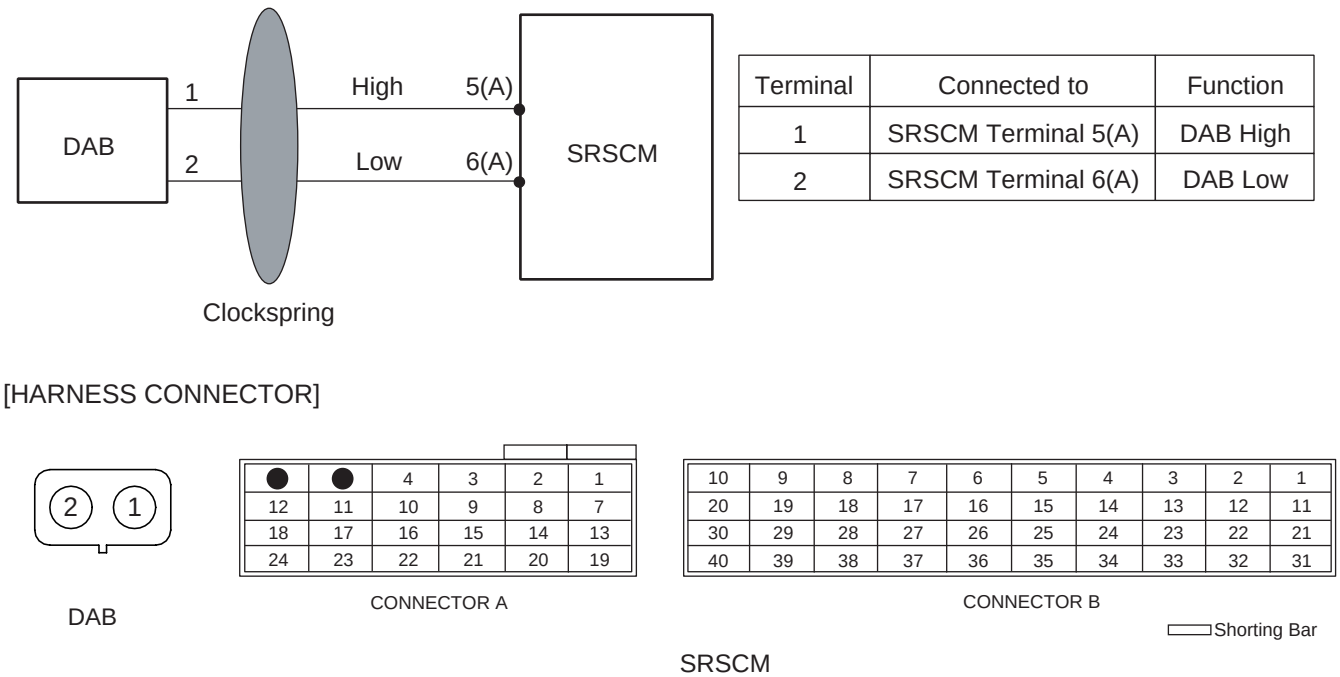

Terminal	Connected to	Function
1	SRSCM Terminal 5(A)	DAB High
2	SRSCM Terminal 6(A)	DAB Low

SCMRT6120L

TERMINAL & CONNECTOR INSPECTION EF24FC93

Refer to the DESCRIPTION in this TROUBLESHOOTING section. (See page RT - 36)

INSPECTION PROCEDURE E8231ED6

1. PREPARATION
   Refer to the DESCRIPTION in this TROUBLESHOOTING section. (See page RT - 36)

2. CHECK SHORT TO GROUND

   1) Measure resistance between the terminal 2 of DAB harness connector and chassis ground.

Specification (resistance) : infinite

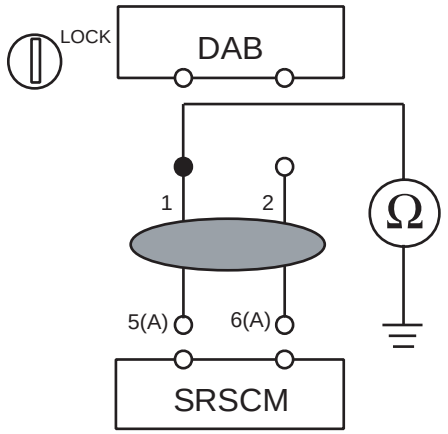

SCMRT6124L

   2) Is the measured resistance within specification?

   YES

   ▶ Check the DAB Module.

   NO

   ▶ Repair or replace the wiring harness between the DAB and the clockspring or between the clockspring and the SRSCM.

3. CHECK THE DAB MODULE

   1) Replace the Driver Airbag(DAB) with a new one.
      ● Refer to "Driver Airbag(DAB)" section in this SERVICE MANUAL.

   2) Install the DAB module and connect the DAB connector.

   3) Connect the connectors of the PAB, SAB, CAB, BPT, FIS and SIS.

   4) Connect the SRSCM connector.

   5) Connect the battery negative cable to the battery.

   6) Connect a Hi-Scan(Pro) to the data link connector.

7) Turn the ignition switch to ON and check the vehicle again.
Does Hi-Scan (Pro) indicate any DTC related to DAB?

YES

▶ Check the clockspring.

NO

▶ Replace the Driver Airbag(DAB).

4. CHECK THE CLOCKSPRING

1) Check the clockspring.
Is the clockspring normal?

YES

▶ Go to next step.

NO

▶ Replace the clockspring.

5. CLEAR THE DTC AND CHECK THE VEHICLE AGAIN
Refer to the DESCRIPTION in this TROUBLESHOOTING section. (See page RT - 36)

DTC B1349 DRIVER AIRBAG RESISTANCE CIRCUIT SHORT TO BATTERY

DTC DESCRIPTION EBEDC615

The Driver Airbag circuit consists of the SRSCM, Clockspring and the Driver Airbag (DAB). The SRSCM sets above DTC(s) if it detects short to battery line on the DAB circuit.

DTC DETECTING CONDITION EC4BA437

DTC	Condition	Probable cause
B1349	• Short to battery line between DAB and clockspring • Short to battery line between clockspring and SRSCM • Driver Airbag (DAB) Malfunction • Clockspring Malfunction • SRSCM Malfunction	• Short to battery line on wiring harness • Driver Airbag (DAB) squib • Clockspring • SRSCM

SCHEMATIC DIAGRAM E7DD8B59

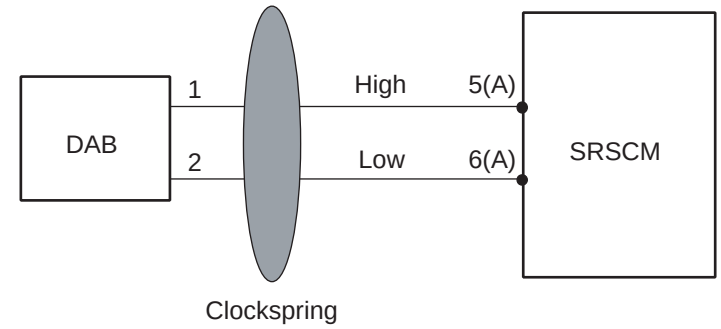

Terminal	Connected to	Function
1	SRSCM Terminal 5(A)	DAB High
2	SRSCM Terminal 6(A)	DAB Low

[HARNESS CONNECTOR]

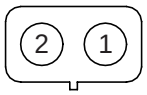

DAB

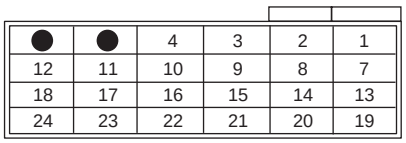

CONNECTOR A

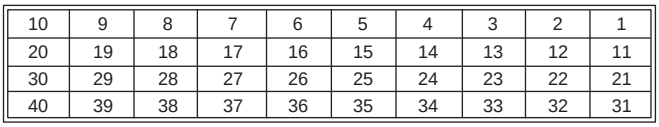

CONNECTOR B

Shorting Bar

SRSCM

SCMRT6120L

TERMINAL & CONNECTOR INSPECTION E6607887

Refer to the DESCRIPTION in this TROUBLESHOOTING section. (See page RT - 36)

INSPECTION PROCEDURE ECBB0522

1. PREPARATION
   Refer to the DESCRIPTION in this TROUBLESHOOTING section. (See page RT - 36)

2. CHECK SHORT TO BATTERY LINE

1) Connect the battery negative cable to the battery.

2) Turn the ignition switch to ON.

3) Measure voltage between the terminal 2 of DAB harness connector and chassis ground.

Specification (voltage) : Approximately 0 V

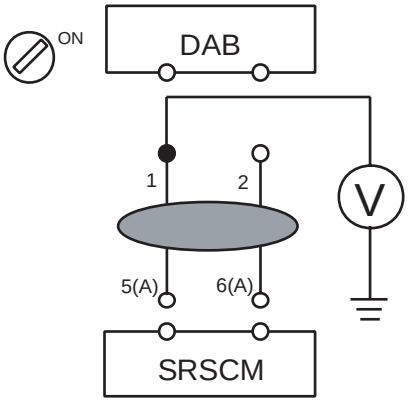

SCMRT6125L

4) Is the measured voltage within specification?

YES

▶Check the DAB module.

NO

▶ Repair or replace the wiring harness between the DAB and the clockspring or between the clockspring and the SRSCM.

3. CHECK THE DAB MODULE

1) Replace the Driver Airbag(DAB) with a new one.
● Refer to "Driver Airbag(DAB)" section in this SERVICE MANUAL.

2) Install the DAB module and connect the DAB connector.

3) Connect the connectors of the PAB, SAB, CAB, BPT, FIS and SIS.

4) Connect the SRSCM connector.

5) Connect the battery negative cable to the battery.

6) Connect a Hi-Scan(Pro) to the data link connector.

7) Turn the ignition switch to ON and check the vehicle again.
Does Hi-Scan (Pro) indicate any DTC related to DAB?

YES

▶Check the clockspring.

NO

▶Replace the Driver Airbag(DAB).

4. CHECK THE CLOCKSPRING

   1) Check the clockspring.
      Is the clockspring normal?

      YES

      ▶ Go to next step.

      NO

      ▶ Replace the clockspring.

5. CLEAR THE DTC AND CHECK THE VEHICLE AGAIN
   Refer to the DESCRIPTION in this TROUBLESHOOTING section. (See page RT - 36)

DTC B1352 PASSENGER AIRBAG RESISTANCE TOO HIGH
DTC B1353 PASSENGER AIRBAG RESISTANCE TOO LOW

DTC DESCRIPTION EFA671A4

The Passenger Airbag circuit consists of the SRSCM and the Passenger Airbag (PAB). The SRSCM sets above DTC(s) if it detects that the resistance of PAB squib is too high or low.

DTC DETECTING CONDITION E71070B2

DTC	Condition	Probable cause
B1352 B1353	• Too high or low resistance between PAB high(+) and PAB low (-) • Passenger Airbag (PAB) Malfunction • SRSCM Malfunction	• Open or short circuit on wiring harness • Passenger Airbag (PAB) squib • SRSCM

SCHEMATIC DIAGRAM E00881BB

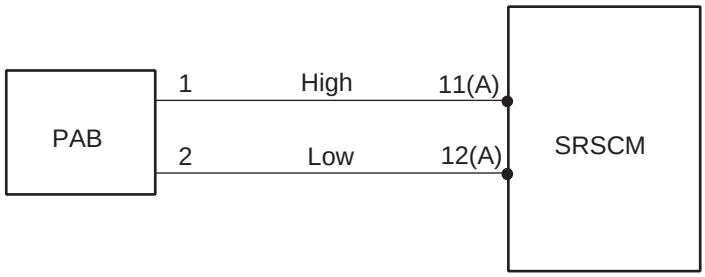

Terminal	Connected to	Function
1	SRSCM Terminal 11(A)	PAB High
2	SRSCM Terminal 12(A)	PAB Low

[HARNESS CONNECTOR]

PAB

6	5	4	3	2	1
●	●	10	9	8	7
18	17	16	15	14	13
24	23	22	21	20	19

CONNECTOR A

10	9	8	7	6	5	4	3	2	1
20	19	18	17	16	15	14	13	12	11
30	29	28	27	26	25	24	23	22	21
40	39	38	37	36	35	34	33	32	31

CONNECTOR B

Shorting Bar

SRSCM

ERBF200C

SPECIFICATION E69C3EA8

PAB resistance : 1.4 ~ 6.2 Ω

TERMINAL & CONNECTOR INSPECTION E1DCF032

Refer to the DESCRIPTION in this TROUBLESHOOTING section. (See page RT - 36)

INSPECTION PROCEDURE E8418581

1. PREPARATION
   Refer to the DESCRIPTION in this TROUBLESHOOTING section. (See page RT - 36)

2. CHECK PAB RESISTANCE

   CAUTION

   Never attempt to measure the circuit resistance of the airbag module(squib) even if you are using the specified tester.

   1) Connect the Dummy and the Dummy Adapter on PAB harness connector.
      ● Refer to "SPECIAL SERVICE TOOL" section in this SERVICE MANUAL for the SST No. of Dummy and Dummy Adapter.

   2) Measure resistance between the terminal 11 and 12 of SRSCM harness connector(A).

Specification (resistance) : 1.4 ~ 6.2 Ω

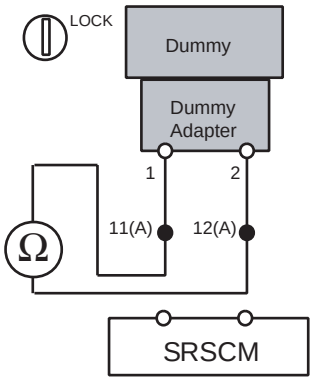

ERBF200D

   3) Is the measured resistance within specification?

   YES

   ▶ Replace the Passenger Airbag(PAB) module.

   NO

   ▶ Check open circuit.

3. CHECK OPEN CIRCUIT

   1) Measure resistance between the terminal 1 of PAB harness connector and the terminal 11 of SRSCM harness connector(A).

   2) Measure resistance between the terminal 2 of PAB harness connector and the terminal 12 of SRSCM harness connector(A).

Specification (resistance) : below 1 Ω

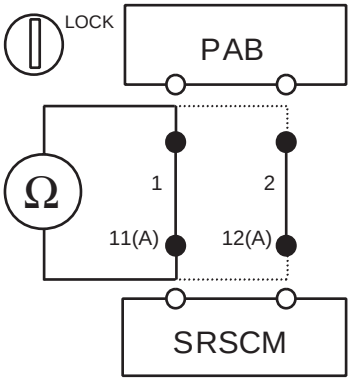

ERBF200E

3) Is the measured resistance within specification?

YES

▶ Check short circuit.

NO

▶ Repair or replace the wiring harness between the PAB and the SRSCM.

4. CHECK SHORT CIRCUIT

1) Measure resistance between the terminal 1 and 2 of PAB harness connector.

Specification (resistance) : infinite

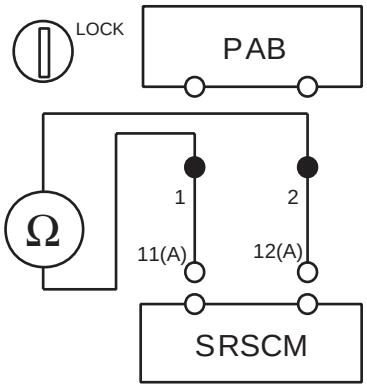

ERBF200F

2) Is the measured resistance within specification?

YES

▶ Go to next step.

NO

▶ Repair or replace the wiring harness between the PAB and the SRSCM.

5. CLEAR THE DTC AND CHECK THE VEHICLE AGAIN
Refer to the DESCRIPTION in this TROUBLESHOOTING section. (See page RT - 36)

DTC B1354 PASSENGER AIRBAG RESISTANCE CIRCUIT SHORT TO GROUND

DTC DESCRIPTION E8568D94

The Passenger Airbag circuit consists of the SRSCM and the Passenger Airbag (PAB). The SRSCM sets above DTC(s) if it detects short to ground on the PAB circuit.

DTC DETECTING CONDITION EB6C385A

DTC	Condition	Probable cause
B1354	• Short to ground between PAB module and SRSCM • Passenger Airbag (PAB) Malfunction • SRSCM Malfunction	• Short to ground on wiring harness • Passenger Airbag (PAB) squib • SRSCM

SCHEMATIC DIAGRAM E6A95081

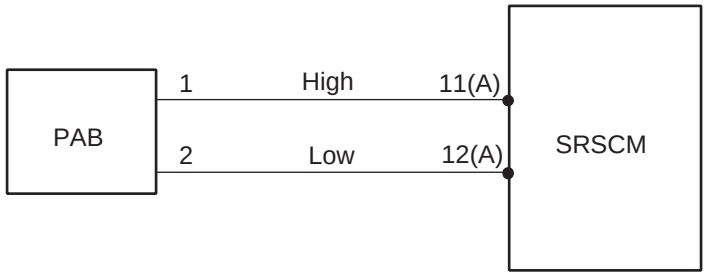

Terminal	Connected to	Function
1	SRSCM Terminal 11(A)	PAB High
2	SRSCM Terminal 12(A)	PAB Low

[HARNESS CONNECTOR]

PAB

6	5	4	3	2	1
●	●	10	9	8	7
18	17	16	15	14	13
24	23	22	21	20	19

CONNECTOR A

10	9	8	7	6	5	4	3	2	1
20	19	18	17	16	15	14	13	12	11
30	29	28	27	26	25	24	23	22	21
40	39	38	37	36	35	34	33	32	31

CONNECTOR B

Shorting Bar

SRSCM

ERBF200C

TERMINAL & CONNECTOR INSPECTION E0C1965C

Refer to the DESCRIPTION in this TROUBLESHOOTING section. (See page RT - 36)

INSPECTION PROCEDURE E8AB760A

1. PREPARATION
   Refer to the DESCRIPTION in this TROUBLESHOOTING section. (See page RT - 36)

2. CHECK SHORT TO GROUND

   1) Measure resistance between the terminal 1 of PAB harness connector and chassis ground.

Specification (resistance) : infinite

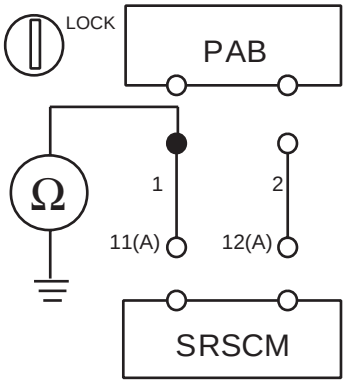

ERBF500O

2) Is the measured resistance within specification?

YES

▶ Check the PAB Module.

NO

▶ Repair or replace the wiring harness between the PAB and the SRSCM.

3. CHECK THE PAB MODULE

1) Replace the Passenger Airbag (PAB) with a new one.
● Refer to "Passenger Airbag (PAB)" section in this SERVICE MANUAL.

2) Install the DAB module and connect the DAB connector.

3) Connect the connectors of the PAB, SAB, CAB, BPT, FIS and SIS.

4) Connect the SRSCM connector.

5) Connect the battery negative cable to the battery.

6) Connect a Hi-Scan(Pro) to the data link connector.

7) Turn the ignition switch to ON and check the vehicle again.
Does Hi-Scan (Pro) indicate any DTC related to PAB?

YES

▶ Go to next step.

NO

▶Replace PAB module.

4. CLEAR THE DTC AND CHECK THE VEHICLE AGAIN
Refer to the DESCRIPTION in this TROUBLESHOOTING section. (See page RT - 36)

DTC B1355 PASSENGER AIRBAG CIRCUIT SHORT TO BATTERY

DTC DESCRIPTION E9F54B5F

The Passenger Airbag circuit consists of the SRSCM and the Passenger Airbag (PAB). The SRSCM sets above DTC(s) if it detects short to battery line on the PAB circuit.

DTC DETECTING CONDITION E9D89E39

DTC	Condition	Probable cause
B1355	• Short to battery line between PAB and SRSCM • Passenger Airbag (PAB) Malfunction • SRSCM Malfunction	• Short to battery line circuit on wiring harness • Passenger Airbag (PAB) squib • SRSCM

SCHEMATIC DIAGRAM E2FEC588

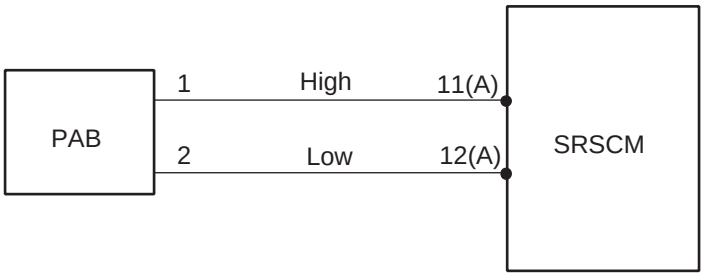

Terminal	Connected to	Function
1	SRSCM Terminal 11(A)	PAB High
2	SRSCM Terminal 12(A)	PAB Low

[HARNESS CONNECTOR]

PAB

6	5	4	3	2	1
●	●	10	9	8	7
18	17	16	15	14	13
24	23	22	21	20	19

CONNECTOR A

10	9	8	7	6	5	4	3	2	1
20	19	18	17	16	15	14	13	12	11
30	29	28	27	26	25	24	23	22	21
40	39	38	37	36	35	34	33	32	31

CONNECTOR B

Shorting Bar

SRSCM

ERBF200C

TERMINAL & CONNECTOR INSPECTION EC5A213D

Refer to the DESCRIPTION in this TROUBLESHOOTING section. (See page RT - 36)

INSPECTION PROCEDURE EBF2C8C7

1. PREPARATION
   Refer to the DESCRIPTION in this TROUBLESHOOTING section. (See page RT - 36)

2. CHECK SHORT TO BATTERY LINE

   1) Connect the battery negative cable to the battery.

   2) Turn the ignition switch to ON.

   3) Measure voltage between the terminal 1 of PAB harness connector and chassis ground.

Specification (voltage) : Approximately 0 V

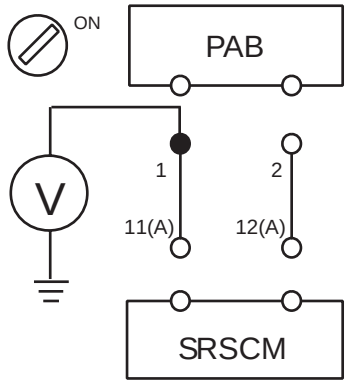

ERBF500P

4) Is the measured voltage within specification?

YES

▶ Check the PAB Module.

NO

▶ Repair the short to battery line circuit on wiring harness between the PAB and the SRSCM.

3. CHECK THE PAB MODULE

1) Replace the Passenger Airbag(PAB) with a new one.
● Refer to "Passenger Airbag(PAB)" section in this SERVICE MANUAL.

2) Install the DAB module and connect the DAB connector.

3) Connect the connectors of the PAB, SAB, CAB, BPT, FIS and SIS.

4) Connect the SRSCM connector.

5) Connect the battery negative cable to the battery.

6) Connect a Hi-Scan(Pro) to the data link connector.

7) Turn the ignition switch to ON and check the vehicle again.
Does Hi-Scan (Pro) indicate any DTC related to PAB?

YES

▶ Go to next step.

NO

▶Replace PAB module.

4. CLEAR THE DTC AND CHECK THE VEHICLE AGAIN
Refer to the DESCRIPTION in this TROUBLESHOOTING section. (See page RT - 36)

DTC B1361 SEAT BELT PRETENSIONER [FRONT-DRIVER] RESISTANCE TOO HIGH
DTC B1362 SEAT BELT PRETENSIONER [FRONT-DRIVER] RESISTANCE TOO LOW
DTC B1367 SEAT BELT PRETENSIONER [FRONT-PASSENGER] RESISTANCE TOO HIGH
DTC B1368 SEAT BELT PRETENSIONER [FRONT-PASSENGER] RESISTANCE TOO LOW

DTC DESCRIPTION E5E4C460

The Seat Belt Pretensioner circuit consists of the SRSCM and two Seat Belt Pretensioners (BPT). The SRSCM sets above DTC(s) if it detects that the resistance of BPT squib is too high or low.

DTC DETECTING CONDITION EB0714DE

DTC	Condition	Probable cause
B1361 B1362 B1367 B1368	• Too high or low resistance between BPT high(+) and BPT low (-) • Seat Belt Pretensioner (BPT) Malfunction • SRSCM Malfunction	• Open or short circuit on wiring harness • Seat Belt Pretensioner (BPT) squib • SRSCM

SCHEMATIC DIAGRAM ED9CDDE7

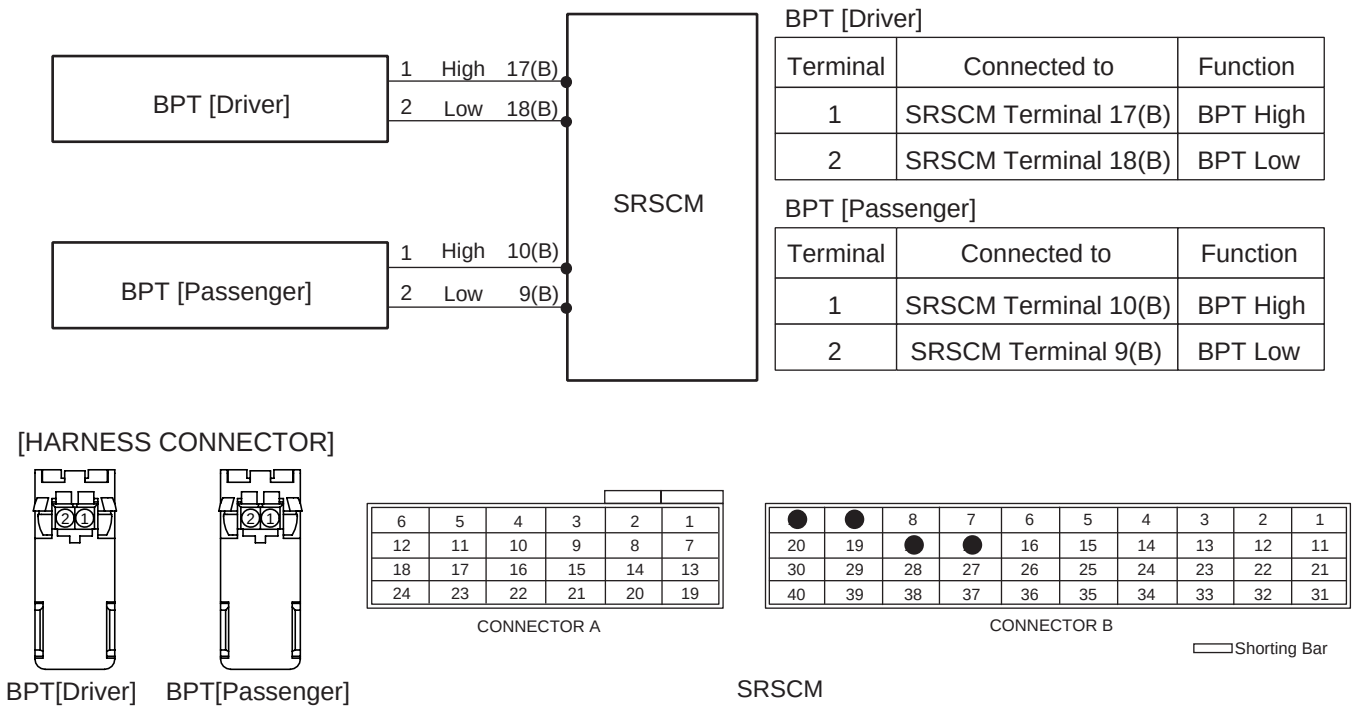

BPT [Driver]

Terminal	Connected to	Function
1	SRSCM Terminal 17(B)	BPT High
2	SRSCM Terminal 18(B)	BPT Low

BPT [Passenger]

Terminal	Connected to	Function
1	SRSCM Terminal 10(B)	BPT High
2	SRSCM Terminal 9(B)	BPT Low

SCMRT6140L

SPECIFICATION E609C78B

BPT resistance : 1.4 ~ 6.2 Ω

TERMINAL & CONNECTOR INSPECTION E26841C2

Refer to the DESCRIPTION in this TROUBLESHOOTING section. (See page RT - 36)

INSPECTION PROCEDURE E0EB316D

1. PREPARATION
   Refer to the DESCRIPTION in this TROUBLESHOOTING section. (See page RT - 36)

2. CHECK BPT RESISTANCE

   CAUTION

   Never attempt to measure the circuit resistance of the airbag module(squib) even if you are using the specified tester.

   1) Connect the Dummy and the Dummy Adapter on BPT harness connector.
      ● Refer to "SPECIAL SERVICE TOOL" section in this SERVICE MANUAL for the SST No. of Dummy and Dummy Adapter.

   2) Measure resistance between the terminal 17(10) and 18(9) of SRSCM harness connector(B).

Specification (resistance) : 1.4 ~ 6.2 Ω

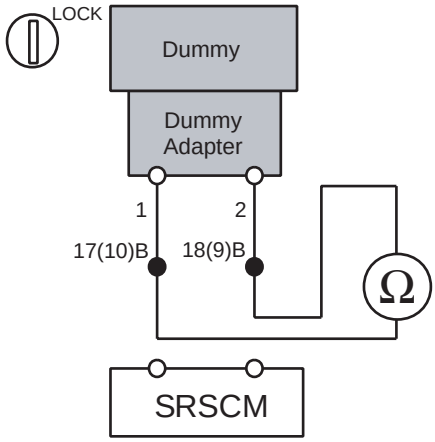

SCMRT6141L

   3) Is the measured resistance within specification?

   YES

   ▶ Replace the Seat Belt Pretensioner(BPT) module.

   NO

   ▶ Check open circuit.

3. CHECK OPEN CIRCUIT

   1) Measure resistance between the terminal 1 of BPT harness connector and the terminal 17(10) of SRSCM harness connector(B).

   2) Measure resistance between the terminal 2 of BPT harness connector and the terminal 18(9) of SRSCM harness connector(B).

Specification (resistance) : below 1 Ω

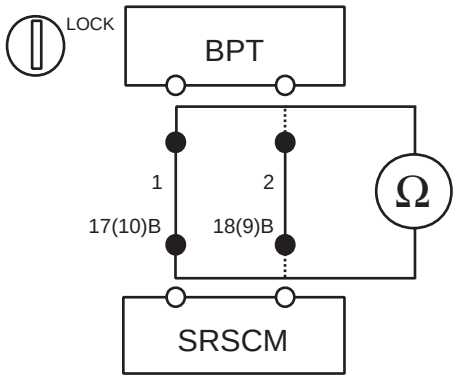

SCMRT6142D

3) Is the measured resistance within specification?

YES

▶ Check short circuit.

NO

▶ Repair or replace the wiring harness between the BPT and the SRSCM.

4. CHECK SHORT CIRCUIT

1) Measure resistance between the terminal 1 and 2 of BPT harness connector.

Specification (resistance) : infinite

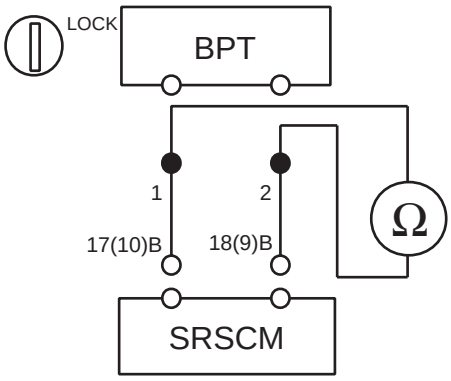

SCMRT6143D

2) Is the measured resistance within specification?

YES

▶ Go to next step.

NO

▶ Repair or replace the wiring harness between the BPT and the SRSCM.

5. CLEAR THE DTC AND CHECK THE VEHICLE AGAIN
Refer to the DESCRIPTION in this TROUBLESHOOTING section. (See page RT - 36)

DTC B1363 SEAT BELT PRETENSIONER [FRONT-DRIVER] CIRCUIT SHORT TO GROUND
DTC B1369 SEAT BELT PRETENSIONER [FRONT-PASSENGER] CIRCUIT SHORT TO GROUND

DTC DESCRIPTION E424B2CF

The Seat Belt Pretensioner consists of the SRSCM and two Seat Belt Pretensioners (BPT). The SRSCM sets above DTC(s) if it detects short to ground on the BPT circuit.

DTC DETECTING CONDITION E7DB074E

DTC	Condition	Probable cause
B1363 B1369	• Short to ground between BPT and SRSCM • Seat Belt Pretensioner (BPT) Malfunction • SRSCM Malfunction	• Short to ground circuit on wiring harness • Seat Belt Pretensioner (BPT) squib • SRSCM

SCHEMATIC DIAGRAM E0B0CB0A

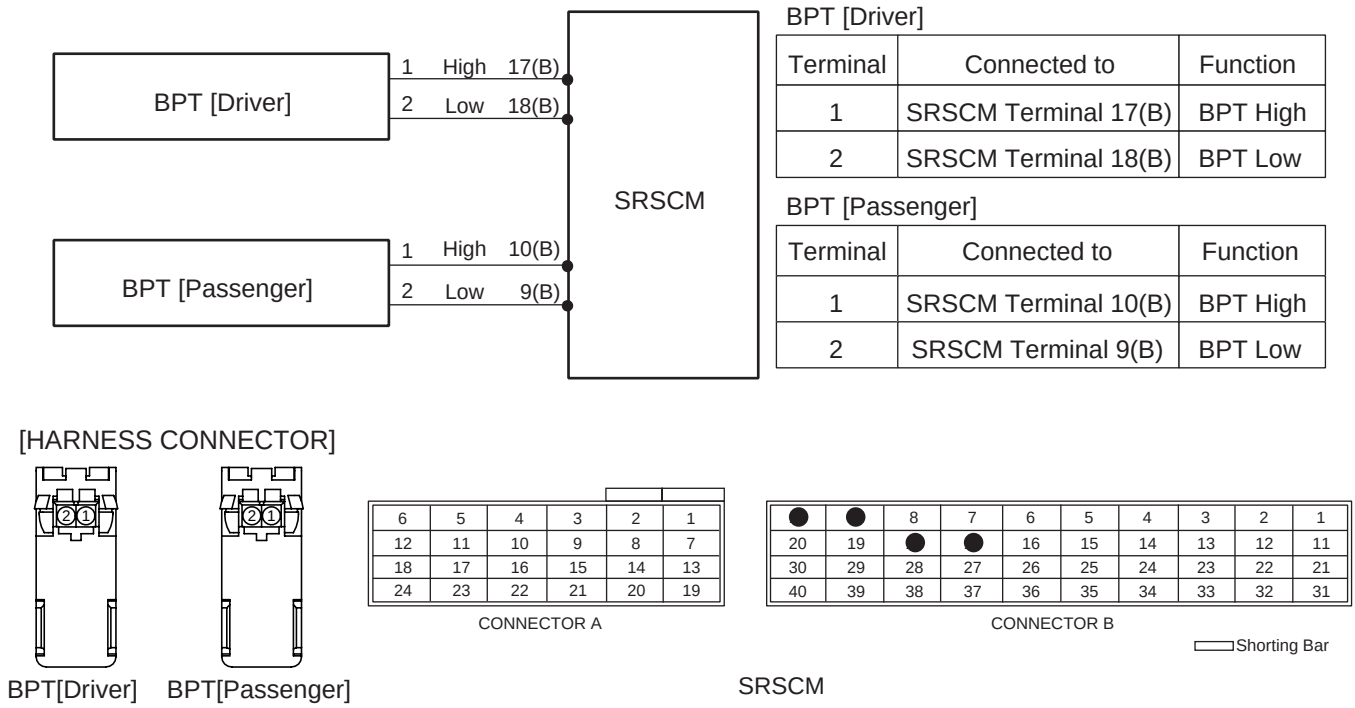

BPT [Driver]

Terminal	Connected to	Function
1	SRSCM Terminal 17(B)	BPT High
2	SRSCM Terminal 18(B)	BPT Low

BPT [Passenger]

Terminal	Connected to	Function
1	SRSCM Terminal 10(B)	BPT High
2	SRSCM Terminal 9(B)	BPT Low

SCMRT6140L

TERMINAL & CONNECTOR INSPECTION E61C7A42

Refer to the DESCRIPTION in this TROUBLESHOOTING section. (See page RT - 36)

INSPECTION PROCEDURE ED1E80E8

1. PREPARATION
   Refer to the DESCRIPTION in this TROUBLESHOOTING section. (See page RT - 36)

2. CHECK SHORT TO GROUND

1) Measure resistance between the terminal 1 of BPT harness connector and chassis ground.

Specification (resistance) : infinite

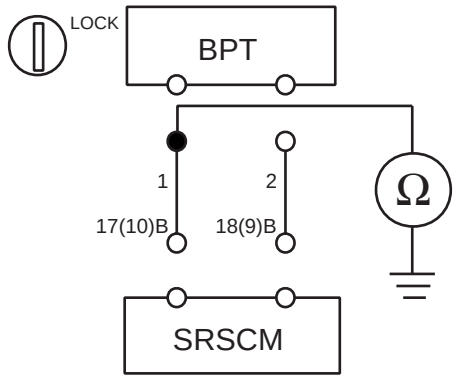

SCMRT6144D

2) Is the measured resistance within specification?

YES

▶Check the BPT Module.

NO

▶ Repair or replace the wiring harness between the BPT and the SRSCM.

3. CHECK THE BPT MODULE

1) Replace the Belt Pretensioner (BPT) with a new one.
● Refer to "Belt Pretensioner (BPT)" section in this SERVICE MANUAL.

2) Install the DAB module and connect the DAB connector.

3) Connect the connectors of the PAB, SAB, CAB, BPT, FIS and SIS.

4) Connect the SRSCM connector.

5) Connect the battery negative cable to the battery.

6) Connect a Hi-Scan(Pro) to the data link connector.

7) Turn the ignition switch to ON and check the vehicle again.
Does Hi-Scan (Pro) indicate any DTC related to Belt Pretensioner (BPT)?

YES

▶Go to next step.

NO

▶Replace BPT module.

4. CLEAR THE DTC AND CHECK THE VEHICLE AGAIN
Refer to the DESCRIPTION in this TROUBLESHOOTING section. (See page RT - 36)

DTC B1364 SEAT BELT PRETENSIONER [FRONT-DRIVER] CIRCUIT SHORT TO BATTERY
DTC B1370 SEAT BELT PRETENSIONER [FRONT-PASSENGER] CIRCUIT SHORT TO BATTERY

DTC DESCRIPTION E6196895

The Seat Belt Pretensioner consists of the SRSCM and two Seat Belt Pretensioners (BPT). The SRSCM sets above DTC(s) if it detects short to battery line on the BPT circuit.

DTC DETECTING CONDITION E31AE084

DTC	Condition	Probable cause
B1364 B1370	• Short to battery line between BPT and SRSCM • Seat Belt Pretensioner (BPT) Malfunction • SRSCM Malfunction	• Short to battery line circuit on wiring harness • Seat Belt Pretensioner (BPT) squib • SRSCM

SCHEMATIC DIAGRAM EA9BC3BC

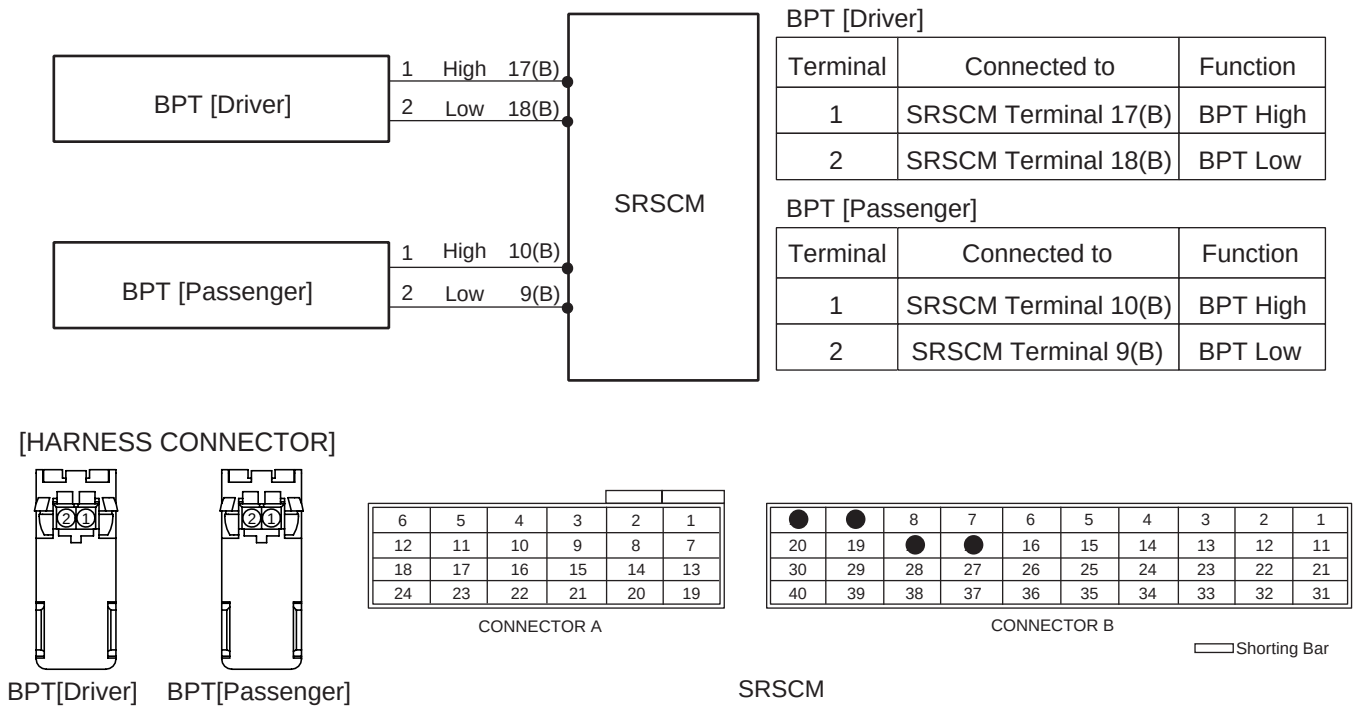

BPT [Driver]

Terminal	Connected to	Function
1	SRSCM Terminal 17(B)	BPT High
2	SRSCM Terminal 18(B)	BPT Low

BPT [Passenger]

Terminal	Connected to	Function
1	SRSCM Terminal 10(B)	BPT High
2	SRSCM Terminal 9(B)	BPT Low

SCMRT6140L

TERMINAL & CONNECTOR INSPECTION EBEEE926

Refer to the DESCRIPTION in this TROUBLESHOOTING section. (See page RT - 36)

INSPECTION PROCEDURE E79D17F8

1. PREPARATION
   Refer to the DESCRIPTION in this TROUBLESHOOTING section. (See page RT - 36)

2. CHECK SHORT TO BATTERY LINE

   1) Connect the battery negative cable to the battery.

   2) Turn the ignition switch to ON.

   3) Measure voltage between the terminal 1 of BPT harness connector and chassis ground.

Specification (voltage) : Approximately 0 V

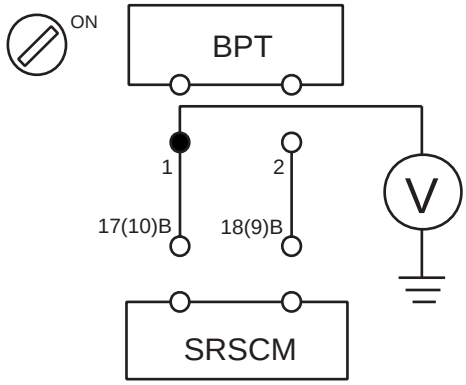

SCMRT6145D

   4) Is the measured voltage within specification?

   YES

   ▶Check the BPT Module.

   NO

   ▶Repair the short to battery line circuit on wiring harness between the BPT and the SRSCM.

3. CHECK THE BPT MODULE

   1) Replace the Belt Pretensioner (BPT) with a new one.
      ● Refer to "Belt Pretensioner (BPT)" section in this SERVICE MANUAL.

   2) Install the DAB module and connect the DAB connector.

   3) Connect the connectors of the PAB, SAB, CAB, BPT, FIS and SIS.

   4) Connect the SRSCM connector.

   5) Connect the battery negative cable to the battery.

   6) Connect a Hi-Scan(Pro) to the data link connector.

7) Turn the ignition switch to ON and check the vehicle again.
Does Hi-Scan (Pro) indicate any DTC related to Belt Pretensioner (BPT)?

YES

▶ Go to next step.

NO

▶ Replace BPT module.

4. CLEAR THE DTC AND CHECK THE VEHICLE AGAIN
Refer to the DESCRIPTION in this TROUBLESHOOTING section. (See page RT - 36)

DTC B1378 SIDE AIRBAG [FRONT-DRIVER] RESISTANCE TOO HIGH
DTC B1379 SIDE AIRBAG [FRONT-DRIVER] RESISTANCE TOO LOW
DTC B1382 SIDE AIRBAG [FRONT-PASSENGER] RESISTANCE TOO HIGH
DTC B1383 SIDE AIRBAG [FRONT-PASSENGER] RESISTANCE TOO LOW

DTC DESCRIPTION E7BD1E52

The Side Airbag circuit consists of the SRSCM and two Side Airbags (SAB). The SRSCM sets above DTC(s) if it detects that the resistance of SAB squib is too high or low.

DTC DETECTING CONDITION EFB0E0EA

DTC	Condition	Probable cause
B1378 B1379 B1382 B1383	• Too high or low resistance between SAB high(+) and SAB low (-) • Side Airbag (SAB) Malfunction • SRSCM Malfunction	• Open or short circuit on wiring harness • Side Airbag (SAB) squib • SRSCM

SCHEMATIC DIAGRAM EC34F93D

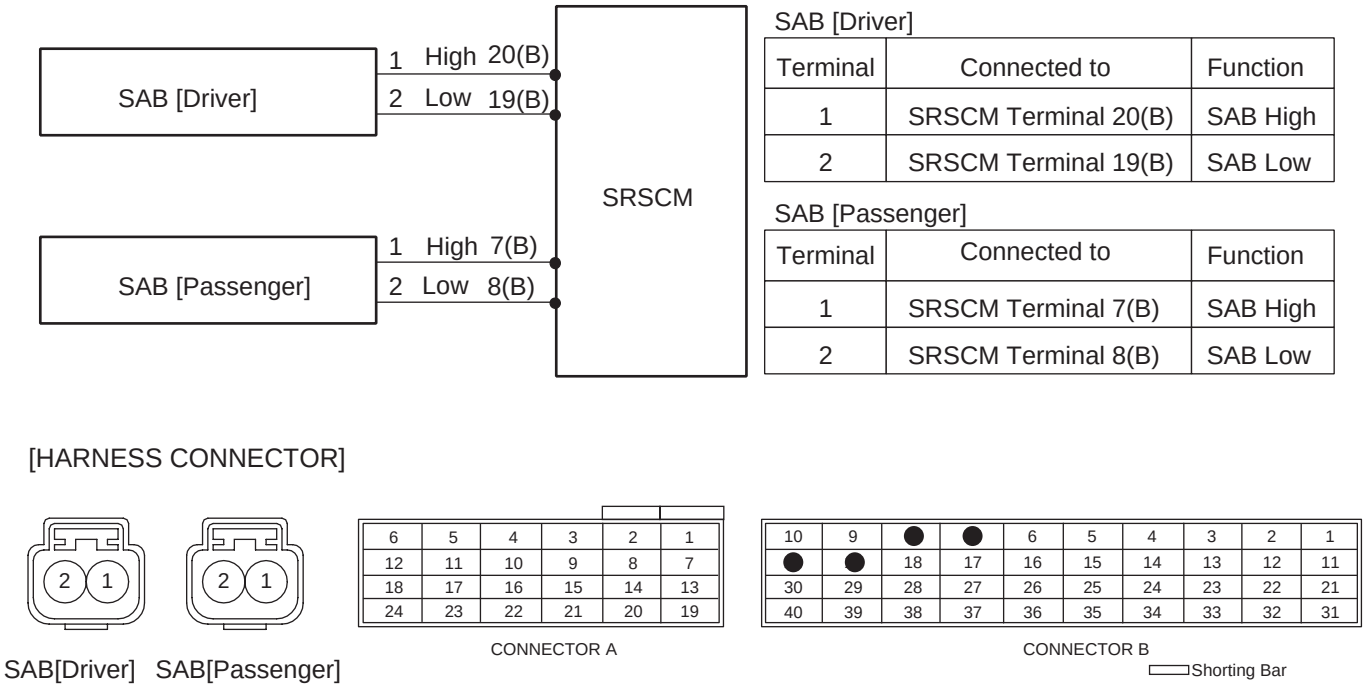

SAB [Driver]

Terminal	Connected to	Function
1	SRSCM Terminal 20(B)	SAB High
2	SRSCM Terminal 19(B)	SAB Low

SAB [Passenger]

Terminal	Connected to	Function
1	SRSCM Terminal 7(B)	SAB High
2	SRSCM Terminal 8(B)	SAB Low

ERBF501S

SPECIFICATION EBEB1D00

SAB resistance : 1.4 ~ 6.2 Ω

TERMINAL & CONNECTOR INSPECTION E93C87E7

Refer to the DESCRIPTION in this TROUBLESHOOTING section. (See page RT - 36)

INSPECTION PROCEDURE EF40A750

1. PREPARATION
   Refer to the DESCRIPTION in this TROUBLESHOOTING section. (See page RT - 36)

2. CHECK SAB RESISTANCE

   CAUTION

   Never attempt to measure the circuit resistance of the airbag module(squib) even if you are using the specified tester.

   1) Connect the Dummy and the Dummy Adapter on SAB harness connector.
      ● Refer to "SPECIAL SERVICE TOOL" section in this SERVICE MANUAL for the SST No. of Dummy and Dummy Adapter.

   2) Measure resistance between the terminal 20(7) and 19(8) of SRSCM harness connector(B).

Specification (resistance) : 1.4 ~ 6.2 Ω

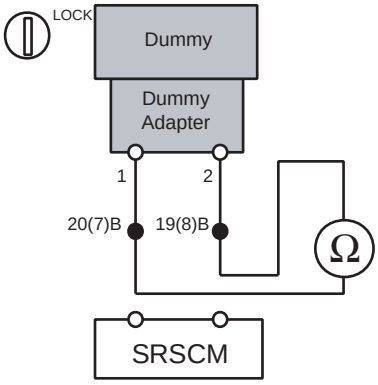

ERBF500Y

   3) Is the measured resistance within specification?

   YES

   ▶ Replace the Side Airbag(SAB) module.

   NO

   ▶ Check open circuit.

3. CHECK OPEN CIRCUIT

   1) Measure resistance between the terminal 1 of SAB harness connector and the terminal 20(7) of SRSCM harness connector(B).

   2) Measure resistance between the terminal 2 of SAB harness connector and the terminal 19(8) of SRSCM harness connector(B).

Specification (resistance) : below 1 Ω

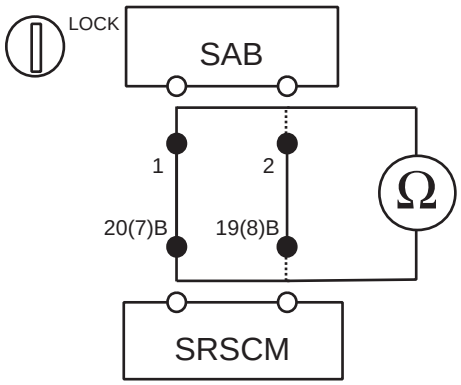

SCMRT6151D

3) Is the measured resistance within specification?

YES

▶ Check short circuit.

NO

▶ Repair or replace the wiring harness between the SAB and the SRSCM.

4. CHECK SHORT CIRCUIT

1) Measure resistance between the terminal 1 and 2 of SAB harness connector.

Specification (resistance) : infinite

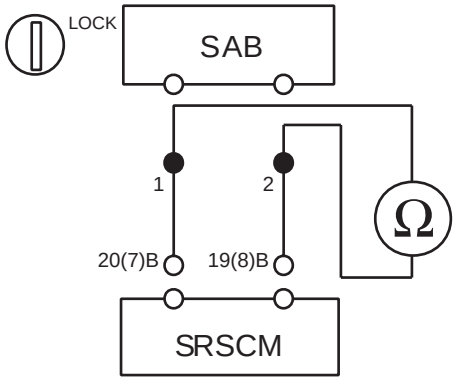

ERBF200I

2) Is the measured resistance within specification?

YES

▶ Go to next step.

NO

▶ Repair or replace the wiring harness between the SAB and the SRSCM.

5. CLEAR THE DTC AND CHECK THE VEHICLE AGAIN
Refer to the DESCRIPTION in this TROUBLESHOOTING section. (See page RT - 36)

DTC B1380 SIDE AIRBAG [FRONT-DRIVER] CIRCUIT SHORT TO GROUND
DTC B1384 SIDE AIRBAG [FRONT-PASSENGER] CIRCUIT SHORT TO GROUND

DTC DESCRIPTION E550E963

The Side Airbag circuit consists of the SRSCM and two Side Airbags (SAB). The SRSCM sets above DTC(s) if it detects short to ground on the SAB circuit.

DTC DETECTING CONDITION ED535401

DTC	Condition	Probable cause
B1380 B1384	• Short to ground between SAB and SRSCM • Side Airbag (SAB) Malfunction • SRSCM Malfunction	• Short to ground circuit on wiring harness • Side Airbag (SAB) squib • SRSCM

SCHEMATIC DIAGRAM EF684607

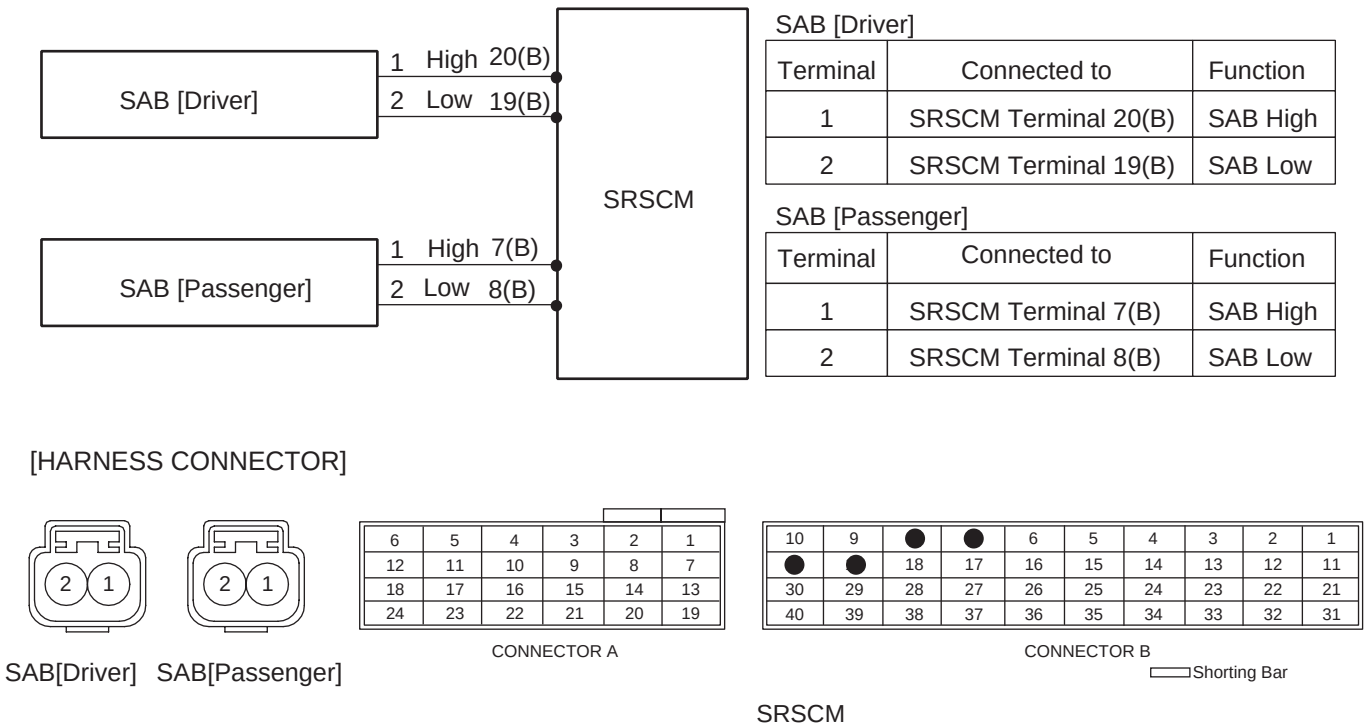

SAB [Driver]

Terminal	Connected to	Function
1	SRSCM Terminal 20(B)	SAB High
2	SRSCM Terminal 19(B)	SAB Low

SAB [Passenger]

Terminal	Connected to	Function
1	SRSCM Terminal 7(B)	SAB High
2	SRSCM Terminal 8(B)	SAB Low

ERBF501S

TERMINAL & CONNECTOR INSPECTION E894CAD8

Refer to the DESCRIPTION in this TROUBLESHOOTING section. (See page RT - 36)

INSPECTION PROCEDURE EFA29334

1. PREPARATION
   Refer to the DESCRIPTION in this TROUBLESHOOTING section. (See page RT - 36)

2. CHECK SHORT TO GROUND

1) Measure resistance between the terminal 1 of SAB harness connector and chassis ground.

Specification (resistance) : infinite

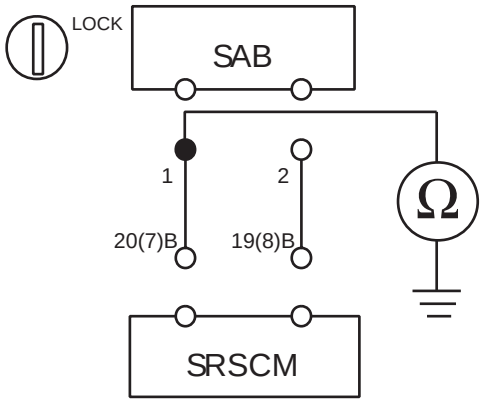

ERBF200J

2) Is the measured resistance within specification?

YES

▶ Check the SAB Module.

NO

▶ Repair or replace the wiring harness between the SAB and the SRSCM.

3. CHECK THE SAB MODULE

1) Replace the Side Airbag(SAB) with a new one.
● Refer to "Side Airbag(SAB)" section in this SERVICE MANUAL.

2) Install the DAB module and connect the DAB connector.

3) Connect the connectors of the PAB, SAB, CAB, BPT, FIS and SIS.

4) Connect the SRSCM connector.

5) Connect the battery negative cable to the battery.

6) Connect a Hi-Scan(Pro) to the data link connector.

7) Turn the ignition switch to ON and check the vehicle again.
Does Hi-Scan (Pro) indicate any DTC related to Side Airbag(SAB)?

YES

▶Go to next step.

NO

▶Replace SAB module.

4. CLEAR THE DTC AND CHECK THE VEHICLE AGAIN
Refer to the DESCRIPTION in this TROUBLESHOOTING section. (See page RT - 36)

DTC B1381 SIDE AIRBAG [FRONT-DRIVER] CIRCUIT SHORT TO BATTERY
DTC B1385 SIDE AIRBAG [FRONT-PASSENGER] CIRCUIT SHORT TO BATTERY

DTC DESCRIPTION EAB44A15

The Side Airbag circuit consists of the SRSCM and two Side Airbags (SAB). The SRSCM sets above DTC(s) if it detects short to battery line on the SAB circuit.

DTC DETECTING CONDITION E4071D8F

DTC	Condition	Probable cause
B1381 B1385	• Short to battery line between SAB and SRSCM • Side Airbag (SAB) Malfunction • SRSCM Malfunction	• Short to battery line circuit on wiring harness • Side Airbag (SAB) squib • SRSCM

SCHEMATIC DIAGRAM E478E059

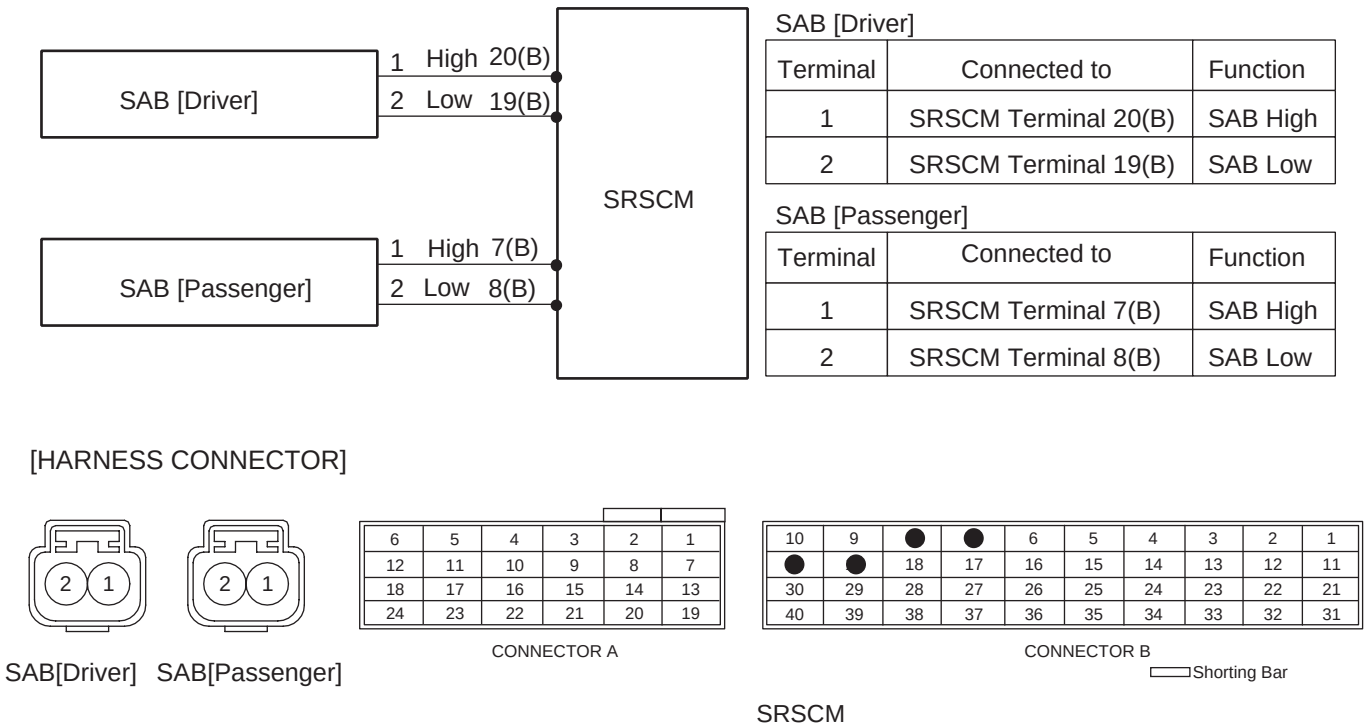

SAB [Driver]

Terminal	Connected to	Function
1	SRSCM Terminal 20(B)	SAB High
2	SRSCM Terminal 19(B)	SAB Low

SAB [Passenger]

Terminal	Connected to	Function
1	SRSCM Terminal 7(B)	SAB High
2	SRSCM Terminal 8(B)	SAB Low

ERBF501S

TERMINAL & CONNECTOR INSPECTION EA290C2E

Refer to the DESCRIPTION in this TROUBLESHOOTING section. (See page RT - 36)

INSPECTION PROCEDURE ED4551E8

1. PREPARATION
   Refer to the DESCRIPTION in this TROUBLESHOOTING section. (See page RT - 36)

2. CHECK SHORT TO BATTERY LINE

1) Connect the battery negative cable to the battery.

2) Turn the ignition switch to ON.

3) Measure voltage between the terminal 1 of SAB harness connector and chassis ground.

Specification (voltage) : Approximately 0 V

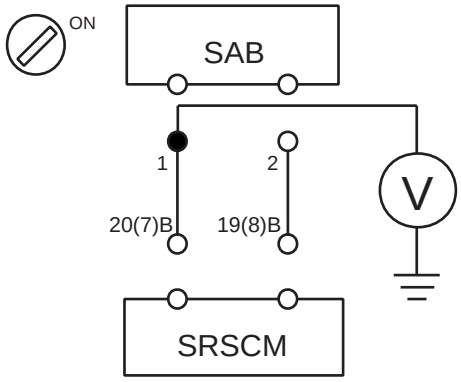

KRBF501A

4) Is the measured voltage within specification?

YES

▶ Check the SAB Module.

NO

▶ Repair the short to battery line circuit on wiring harness between the SAB and the SRSCM.

3. CHECK THE SAB MODULE

1) Replace the Side Airbag(SAB) with a new one.
● Refer to "Side Airbag(SAB)" section in this SERVICE MANUAL.

2) Install the DAB module and connect the DAB connector.

3) Connect the connectors of the PAB, SAB, CAB, BPT, FIS and SIS.

4) Connect the SRSCM connector.

5) Connect the battery negative cable to the battery.

6) Connect a Hi-Scan(Pro) to the data link connector.

7) Turn the ignition switch to ON and check the vehicle again.
Does Hi-Scan (Pro) indicate any DTC related to Side Airbag(SAB)?

YES

▶ Go to next step.

NO

▶Replace SAB module.

4. CLEAR THE DTC AND CHECK THE VEHICLE AGAIN
Refer to the DESCRIPTION in this TROUBLESHOOTING section. (See page RT - 36)

DTC B1395 FIRING LOOPS INTERCONNECTION FAULT

DTC DESCRIPTION E027D453

While start up phase, SRSCM will measure cross link of squibs. If one of them is failed during interconnection test, then SRSCM will store interconnection fault. Once the interconnection fault is detected, it remains active continuously till the fault is erased. Only one fault code is assigned for all interconnection fault.

TERMINAL & CONNECTOR INSPECTION EECD3199

Refer to the DESCRIPTION in this TROUBLESHOOTING section. (See page RT - 36)

INSPECTION PROCEDURE E0656F8A

1. PREPARATION
   Refer to the DESCRIPTION in this TROUBLESHOOTING section. (See page RT - 36)

2. CHECK SHORT CIRCUIT

   1) Measure resistance between following squibs.(DAB - PAB, DAB - SAB, DAB - CAB, DAB - BPT, PAB - SAB, PAB - CAB, PAB - BPT, SAB - PAB, SAB - CAB, SAB - BPT, CAB - BPT)

Specification (resistance) : infinite

   2) Is the measured resistance within specification?

   YES

   ▶ Go to next step.

   NO

   ▶ Repair or replace the wiring harness between two squibs.

3. CLEAR THE DTC AND CHECK THE VEHICLE AGAIN
   Refer to the DESCRIPTION in this TROUBLESHOOTING section. (See page RT - 36)

DTC B1400 SIDE IMPACT SENSOR [FRONT-DRIVER] DEFECT
DTC B1403 SIDE IMPACT SENSOR [FRONT-PASSENGER] DEFECT
DTC B1409 SIDE IMPACT SENSOR [FRONT-DRIVER] COMMUNICATION ERROR
DTC B1410 SIDE IMPACT SENSOR [FRONT-PASSENGER] COMMUNICATION ERROR

DTC DESCRIPTION E7C1CA1D

The detecting system for side crash consists of the SRSCM and four Side Impact Sensors (SIS). The SRSCM sets above DTC(s) if it detects that any SIS is defective or there is communication error between any SIS and the SRSCM.

DTC DETECTING CONDITION EFA2D8F7

DTC	Condition	Probable cause
B1400 B1403 B1409 B1410	• Open between SIS and SRSCM • Side Impact Sensor (SIS) Malfunction • SRSCM Malfunction	• Wiring Harness • Side Impact Sensor (SIS) • SRSCM

SCHEMATIC DIAGRAM EB8523E1

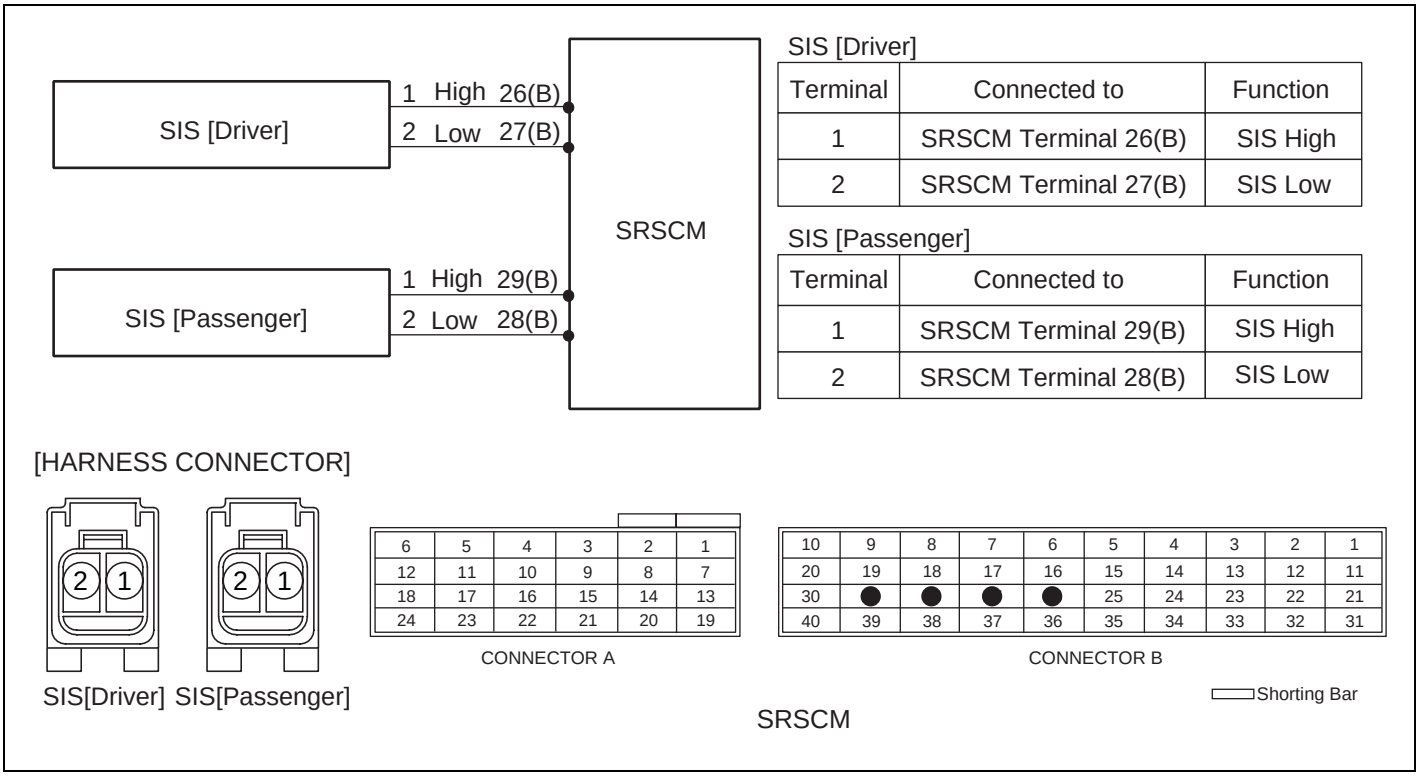

SIS [Driver]

Terminal	Connected to	Function
1	SRSCM Terminal 26(B)	SIS High
2	SRSCM Terminal 27(B)	SIS Low

SIS [Passenger]

Terminal	Connected to	Function
1	SRSCM Terminal 29(B)	SIS High
2	SRSCM Terminal 28(B)	SIS Low

SCMRT6160L

TERMINAL & CONNECTOR INSPECTION E276ABDE

Refer to the DESCRIPTION in this TROUBLESHOOTING section. (See page RT - 36)

INSPECTION PROCEDURE EE9E71F6

1. PREPARATION
   Refer to the DESCRIPTION in this TROUBLESHOOTING section. (See page RT - 36)

2. CHECK SIS CIRCUIT

   1) Measure resistance between the terminal 1 of SIS harness connector and the terminal 26(29) of SRSCM harness connector(B).

   2) Measure resistance between the terminal 2 of SIS harness connector and the terminal 27(28) of SRSCM harness connector(B).

Specification (resistance) : below 1 Ω

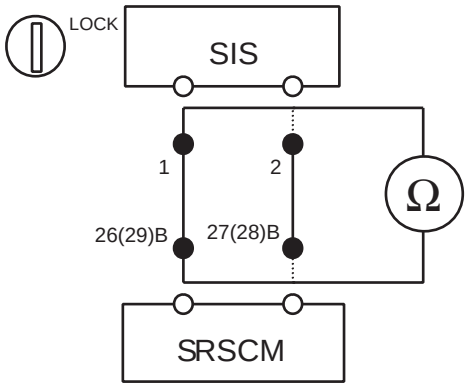

ERBF502E

   3) Is the measured resistance within specification?

   YES

   ▶ Check Side Impact Sensor.

   NO

   ▶ Repair or replace the wiring harness between the SIS and the SRSCM.

3. CHECK THE SIDE IMPACT SENSOR

   1) Replace the Side Impact Sensor(SIS) with a new one.
      ● Refer to "Side Impact Sensor(SIS)" section in this SERVICE MANUAL.

   2) Install the DAB module and connect the DAB connector.

   3) Connect the connectors of the PAB, SAB, CAB, BPT, FIS and SIS.

   4) Connect the SRSCM connector.

   5) Connect the battery negative cable to the battery.

   6) Connect a Hi-Scan(Pro) to the data link connector.

7) Turn the ignition switch to ON and check the vehicle again.
Does Hi-Scan (Pro) indicate any DTC related to Side Impact Sensor(SIS)?

YES

▶ Go to next step.

NO

▶ Replace SIS.

4. CLEAR THE DTC AND CHECK THE VEHICLE AGAIN
Refer to the DESCRIPTION in this TROUBLESHOOTING section. (See page RT - 36)

DTC B1401 SIDE IMPACT SENSOR [FRONT-DRIVER] CIRCUIT SHORT TO GROUND
DTC B1404 SIDE IMPACT SENSOR [FRONT-PASSENGER] CIRCUIT SHORT TO GROUND

DTC DESCRIPTION E97ECDA8

The detecting system for side crash consists of the SRSCM and four Side Impact Sensors (SIS). The SRSCM sets above DTC(s) if it detects short to ground on the SIS circuit.

DTC DETECTING CONDITION E0FA7544

DTC	Condition	Probable cause
B1401 B1404	• Short to ground between SIS and SRSCM • Side Impact Sensor (SIS) Malfunction • SRSCM Malfunction	• Short to ground circuit on wiring harness • Side Impact Sensor (SIS) • SRSCM

SCHEMATIC DIAGRAM EE98102E

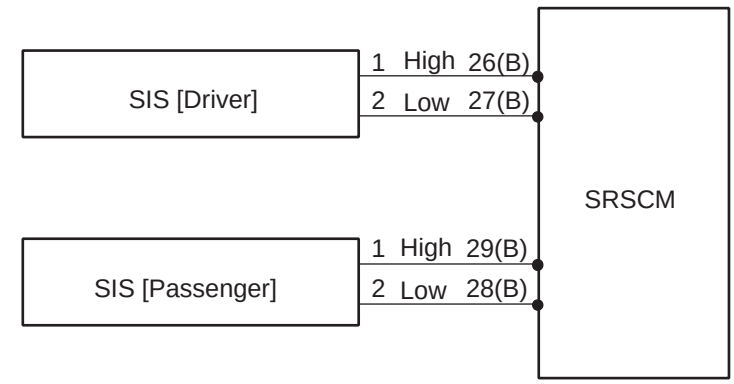

SIS [Driver]

Terminal	Connected to	Function
1	SRSCM Terminal 26(B)	SIS High
2	SRSCM Terminal 27(B)	SIS Low

SIS [Passenger]

Terminal	Connected to	Function
1	SRSCM Terminal 29(B)	SIS High
2	SRSCM Terminal 28(B)	SIS Low

[HARNESS CONNECTOR]

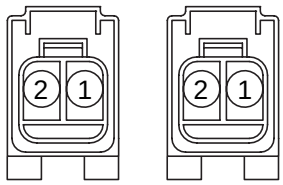

SIS[Driver] SIS[Passenger]

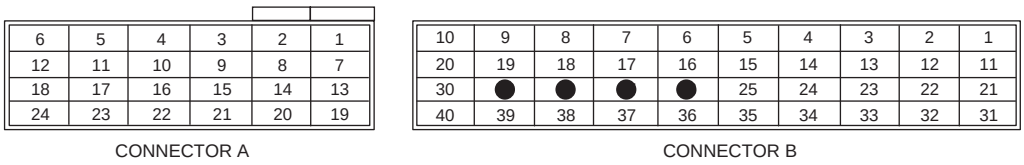

SRSCM

SCMRT6160L

TERMINAL & CONNECTOR INSPECTION EF53CDBA

Refer to the DESCRIPTION in this TROUBLESHOOTING section. (See page RT - 36)

INSPECTION PROCEDURE E384A624

1. PREPARATION
   Refer to the DESCRIPTION in this TROUBLESHOOTING section. (See page RT - 36)

2. CHECK SHORT TO GROUND

1) Measure resistance between the terminal 1 of SIS harness connector and chassis ground.

Specification (resistance) : infinite

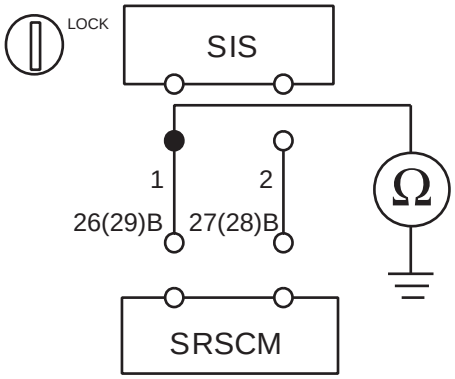

ERBF501A

2) Is the measured resistance within specification?

YES

▶ Check the SIS.

NO

▶ Repair or replace the wiring harness between the SIS and the SRSCM.

3. CHECK THE SIDE IMPACT SENSOR

1) Replace the Side Impact Sensor(SIS) with a new one.
● Refer to "Side Impact Sensor(SIS)" section in this SERVICE MANUAL.

2) Install the DAB module and connect the DAB connector.

3) Connect the connectors of the PAB, SAB, CAB, BPT, FIS and SIS.

4) Connect the SRSCM connector.

5) Connect the battery negative cable to the battery.

6) Connect a Hi-Scan(Pro) to the data link connector.

7) Turn the ignition switch to ON and check the vehicle again.
Does Hi-Scan (Pro) indicate any DTC related to Side Impact Sensor(SIS)?

YES

▶ Go to next step.

NO

▶ Replace SIS module.

4. CLEAR THE DTC AND CHECK THE VEHICLE AGAIN
Refer to the DESCRIPTION in this TROUBLESHOOTING section. (See page RT - 36)

DTC B1402 SIDE IMPACT SENSOR [FRONT-DRIVER] CIRCUIT SHORT TO BATTERY
DTC B1405 SIDE IMPACT SENSOR [FRONT-PASSENGER] CIRCUIT SHORT TO BATTERY

DTC DESCRIPTION EF82BE9A

The detecting system for side crash consists of the SRSCM and four Side Impact Sensors (SIS). The SRSCM sets above DTC(s) if it detects short to battery line on the SIS circuit.

DTC DETECTING CONDITION EE2D6B55

DTC	Condition	Probable cause
B1402 B1405	• Short to battery line between SIS and SRSCM • Side Impact Sensor (SIS) Malfunction • SRSCM Malfunction	• Short to battery line circuit on wiring harness • Side Impact Sensor (SIS) • SRSCM

SCHEMATIC DIAGRAM E01F8A57

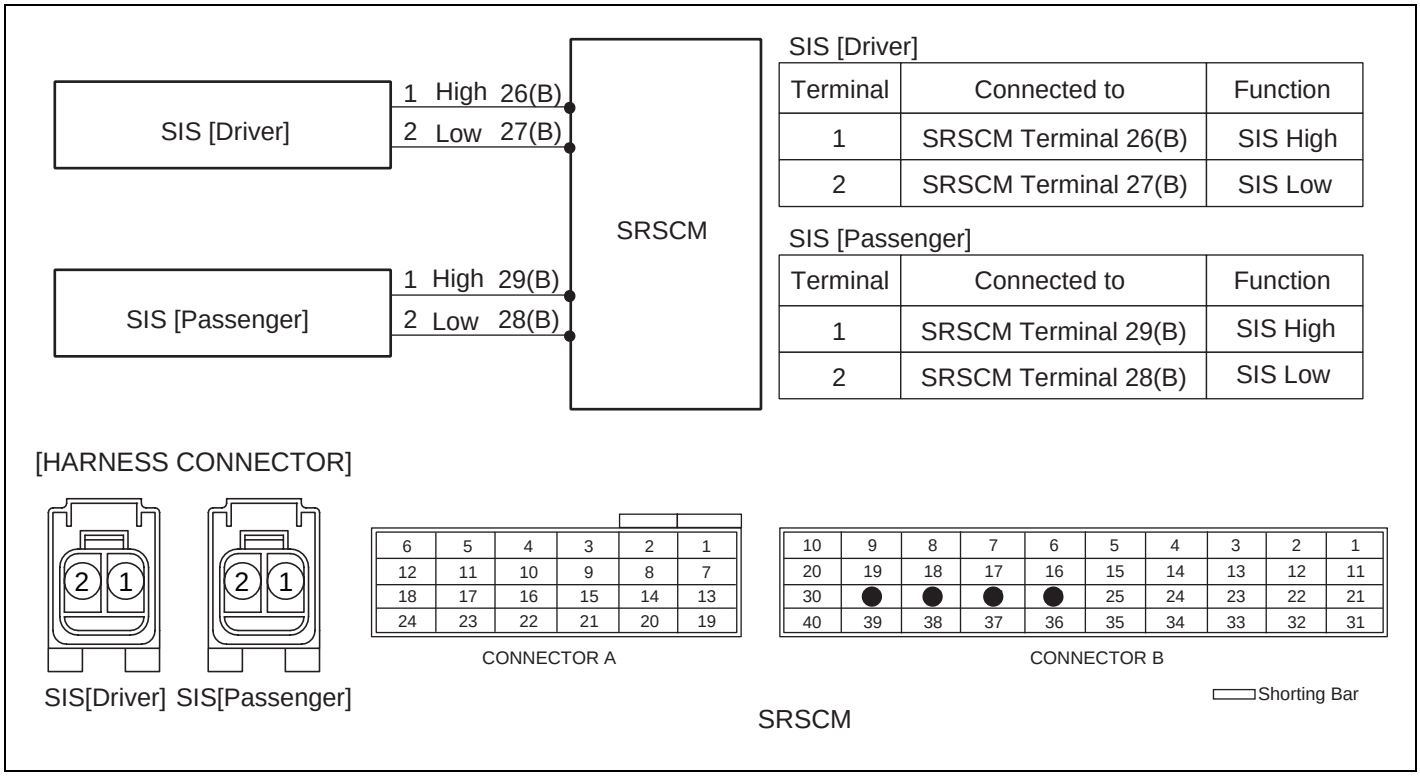

SIS [Driver]

Terminal	Connected to	Function
1	SRSCM Terminal 26(B)	SIS High
2	SRSCM Terminal 27(B)	SIS Low

SIS [Passenger]

Terminal	Connected to	Function
1	SRSCM Terminal 29(B)	SIS High
2	SRSCM Terminal 28(B)	SIS Low

SCMRT6160L

TERMINAL & CONNECTOR INSPECTION E4FA9AB0

Refer to the DESCRIPTION in this TROUBLESHOOTING section. (See page RT - 36)

INSPECTION PROCEDURE E1FCB2A7

1. PREPARATION
   Refer to the DESCRIPTION in this TROUBLESHOOTING section. (See page RT - 36)

2. CHECK SHORT TO BATTERY LINE

   1) Connect the battery negative cable to the battery.

   2) Turn the ignition switch to ON.

   3) Measure voltage between the terminal 1 of SIS harness connector and chassis ground.

Specification(voltage) : Approximately 0V

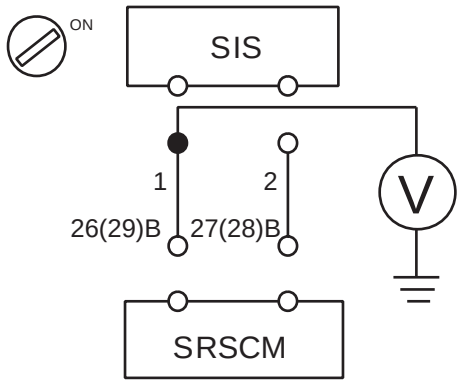

ERBF502R

   4) Is the measured voltage within specification?

   YES

   ▶Check the SIS Module.

   NO

   ▶Repair the short to battery line circuit on wiring harness between the SIS and the SRSCM.

3. CHECK THE SIS MODULE

   1) Replace the Side Impact Sensor(SIS) with a new one.
      ● Refer to "Side Impact Sensor(SIS)" section in this SERVICE MANUAL.

   2) Install the DAB module and connect the DAB connector.

   3) Connect the connectors of the PAB, SAB, CAB, BPT, FIS and SIS.

   4) Connect the SRSCM connector.

   5) Connect the battery negative cable to the battery.

   6) Connect a Hi-Scan(Pro) to the data link connector.

7) Turn the ignition switch to ON and check the vehicle again.
Does Hi-Scan (Pro) indicate any DTC related to Side Impact Sensor(SIS)?

YES

▶ Go to next step.

NO

▶ Replace SIS module.

4. CLEAR THE DTC AND CHECK THE VEHICLE AGAIN
Refer to the DESCRIPTION in this TROUBLESHOOTING section. (See page RT - 36)

DTC B1412 SIDE IMPACT SENSOR [REAR-DRIVER] COMMUNICATION ERROR
DTC B1413 SIDE IMPACT SENSOR [REAR-PASSENGER] COMMUNICATION ERROR
DTC B1418 SIDE IMPACT SENSOR [REAR-DRIVER] DEFECT
DTC B1419 SIDE IMPACT SENSOR [REAR-PASSENGER] DEFECT

DTC DESCRIPTION EF83DBCD

The detecting system for side crash consists of the SRSCM and four Side Impact Sensors (SIS). The SRSCM sets above DTC(s) if it detects that any SIS is defective or there is communication error between any SIS and the SRSCM.

DTC DETECTING CONDITION EEDFDB5F

DTC	Condition	Probable cause
B1412 B1413 B1418 B1419	• Open between SIS and SRSCM • Side Impact Sensor (SIS) Malfunction • SRSCM Malfunction	• Wiring Harness • Side Impact Sensor (SIS) • SRSCM

SCHEMATIC DIAGRAM E4FB645C

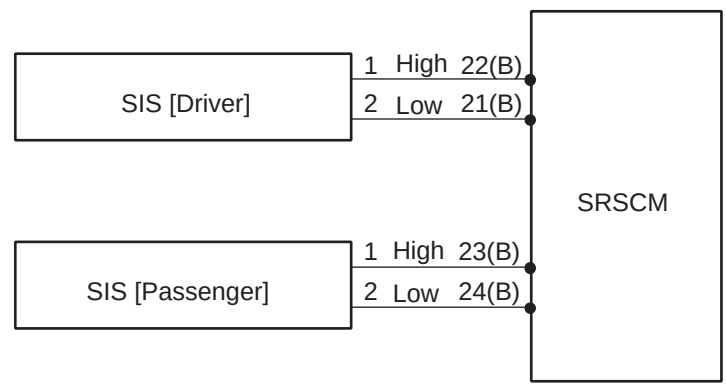

SIS [Driver]

Terminal	Connected to	Function
1	SRSCM Terminal 22(B)	SIS High
2	SRSCM Terminal 21(B)	SIS Low

SIS [Passenger]

Terminal	Connected to	Function
1	SRSCM Terminal 23(B)	SIS High
2	SRSCM Terminal 24(B)	SIS Low

[HARNESS CONNECTOR]

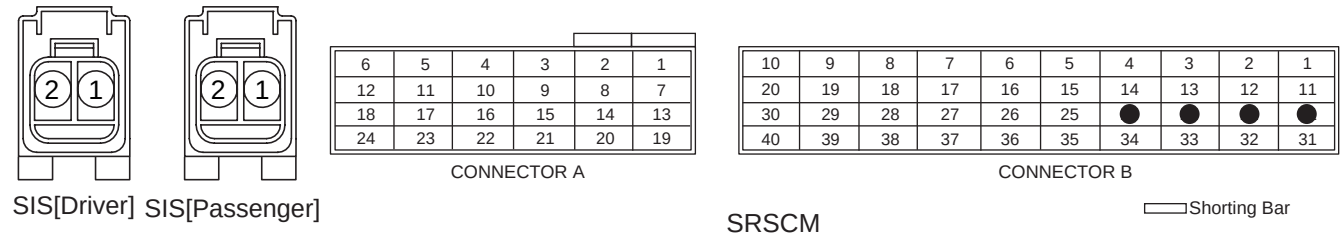

SCMRT6170L

TERMINAL & CONNECTOR INSPECTION EFB513A5

Refer to the DESCRIPTION in this TROUBLESHOOTING section. (See page RT - 36)

INSPECTION PROCEDURE E8CCFCFC

1. PREPARATION
   Refer to the DESCRIPTION in this TROUBLESHOOTING section. (See page RT - 36)

2. CHECK SIS CIRCUIT

   1) Measure resistance between the terminal 1 of SIS harness connector and the terminal 22(23) of SRSCM harness connector(B).

   2) Measure resistance between the terminal 2 of SIS harness connector and the terminal 21(24) of SRSCM harness connector(B).

Specification (resistance) : below 1 Ω

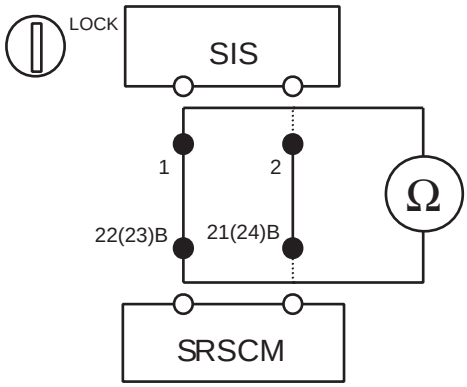

ERBF503E

   3) Is the measured resistance within specification?

   YES

   ▶ Check Side Impact Sensor.

   NO

   ▶ Repair or replace the wiring harness between the SIS and the SRSCM.

3. CHECK THE SIDE IMPACT SENSOR

   1) Replace the Side Impact Sensor(SIS) with a new one.
      ● Refer to "Side Impact Sensor(SIS)" section in this SERVICE MANUAL.

   2) Install the DAB module and connect the DAB connector.

   3) Connect the connectors of the PAB, SAB, CAB, BPT, FIS and SIS.

   4) Connect the SRSCM connector.

   5) Connect the battery negative cable to the battery.

   6) Connect a Hi-Scan(Pro) to the data link connector.

7) Turn the ignition switch to ON and check the vehicle again.
Does Hi-Scan (Pro) indicate any DTC related to Side Impact Sensor(SIS)?

YES

▶ Go to next step.

NO

▶ Replace SIS.

4. CLEAR THE DTC AND CHECK THE VEHICLE AGAIN
Refer to the DESCRIPTION in this TROUBLESHOOTING section. (See page RT - 36)

DTC B1414 SIDE IMPACT SENSOR [FRONT-DRIVER] WRONG ID
DTC B1415 SIDE IMPACT SENSOR [FRONT-PASSENGER] WRONG ID
DTC B1416 SIDE IMPACT SENSOR [REAR-DRIVER] WRONG ID
DTC B1417 SIDE IMPACT SENSOR [REAR-PASSENGER] WRONG ID

DTC DESCRIPTION E7BCC6BD

The detecting system for side crash consists of the SRSCM and four Side Impact Sensors (SIS). The SRSCM sets above DTC(s) if it detects that wrong SIS is used.

DTC DETECTING CONDITION E2A0FF8A

DTC	Condition	Probable cause
B1414 B1415 B1416 B1417	• Wrong Side Impact Sensor (SIS) • SRSCM Malfunction	• Side Impact Sensor (SIS) • SRSCM

TERMINAL & CONNECTOR INSPECTION E394EEA7

Refer to the DESCRIPTION in this TROUBLESHOOTING section. (See page RT - 36)

INSPECTION PROCEDURE E04EC6EF

If above DTC is detected replace the side impact sensor.

DTC B1451 SIDE IMPACT SENSOR [REAR-DRIVER] CIRCUIT SHORT TO GROUND
DTC B1454 SIDE IMPACT SENSOR [REAR-PASSENGER] CIRCUIT SHORT TO GROUND

DTC DESCRIPTION E2C1F3FE

The detecting system for side crash consists of the SRSCM and four Side Impact Sensors (SIS). The SRSCM sets above DTC(s) if it detects short to ground on the SIS circuit.

DTC DETECTING CONDITION EB5BE55B

DTC	Condition	Probable cause
B1451 B1454	• Short to ground between SIS and SRSCM • Side Impact Sensor (SIS) Malfunction • SRSCM Malfunction	• Short to ground circuit on wiring harness • Side Impact Sensor (SIS) • SRSCM

SCHEMATIC DIAGRAM E2866786

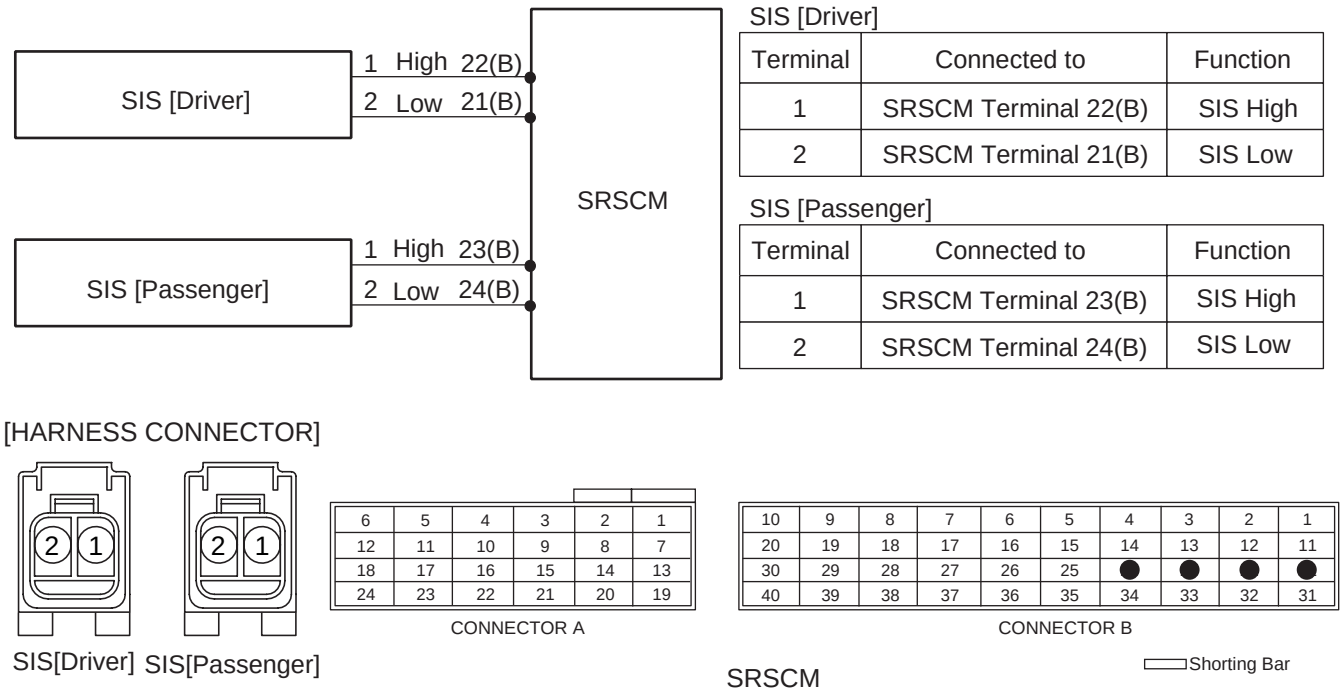

SIS [Driver]

Terminal	Connected to	Function
1	SRSCM Terminal 22(B)	SIS High
2	SRSCM Terminal 21(B)	SIS Low

SIS [Passenger]

Terminal	Connected to	Function
1	SRSCM Terminal 23(B)	SIS High
2	SRSCM Terminal 24(B)	SIS Low

SCMRT6170L

TERMINAL & CONNECTOR INSPECTION E9E88BA8

Refer to the DESCRIPTION in this TROUBLESHOOTING section. (See page RT - 36)

INSPECTION PROCEDURE E1588FE0

1. PREPARATION
   Refer to the DESCRIPTION in this TROUBLESHOOTING section. (See page RT - 36)

2. CHECK SHORT TO GROUND

1) Measure resistance between the terminal 1 of SIS harness connector and chassis ground.

Specification (resistance) : infinite

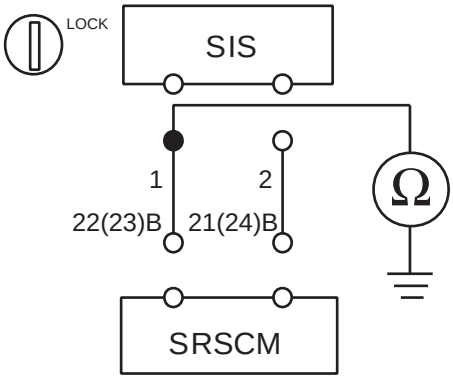

ERBF502A

2) Is the measured resistance within specification?

YES

▶ Check the SIS.

NO

▶ Repair or replace the wiring harness between the SIS and the SRSCM.

3. CHECK THE SIDE IMPACT SENSOR

1) Replace the Side Impact Sensor(SIS) with a new one.
● Refer to "Side Impact Sensor(SIS)" section in this SERVICE MANUAL.

2) Install the DAB module and connect the DAB connector.

3) Connect the connectors of the PAB, SAB, CAB, BPT, FIS and SIS.

4) Connect the SRSCM connector.

5) Connect the battery negative cable to the battery.

6) Connect a Hi-Scan(Pro) to the data link connector.

7) Turn the ignition switch to ON and check the vehicle again.
Does Hi-Scan (Pro) indicate any DTC related to Side Impact Sensor(SIS)?

YES

▶ Go to next step.

NO

▶ Replace SIS module.

4. CLEAR THE DTC AND CHECK THE VEHICLE AGAIN
Refer to the DESCRIPTION in this TROUBLESHOOTING section. (See page RT - 36)

DTC B1452 SIDE IMPACT SENSOR [REAR-DRIVER] CIRCUIT SHORT TO BATTERY
DTC B1455 SIDE IMPACT SENSOR [REAR-PASSENGER] CIRCUIT SHORT TO BATTERY

DTC DESCRIPTION EE3957BE

The detecting system for side crash consists of the SRSCM and four Side Impact Sensors (SIS). The SRSCM sets above DTC(s) if it detects short to battery line on the SIS circuit.

DTC DETECTING CONDITION EC9739E6

DTC	Condition	Probable cause
B1452 B1455	• Short to battery line between SIS and SRSCM • Side Impact Sensor (SIS) Malfunction • SRSCM Malfunction	• Short to battery line circuit on wiring harness • Side Impact Sensor (SIS) • SRSCM

SCHEMATIC DIAGRAM E076667C

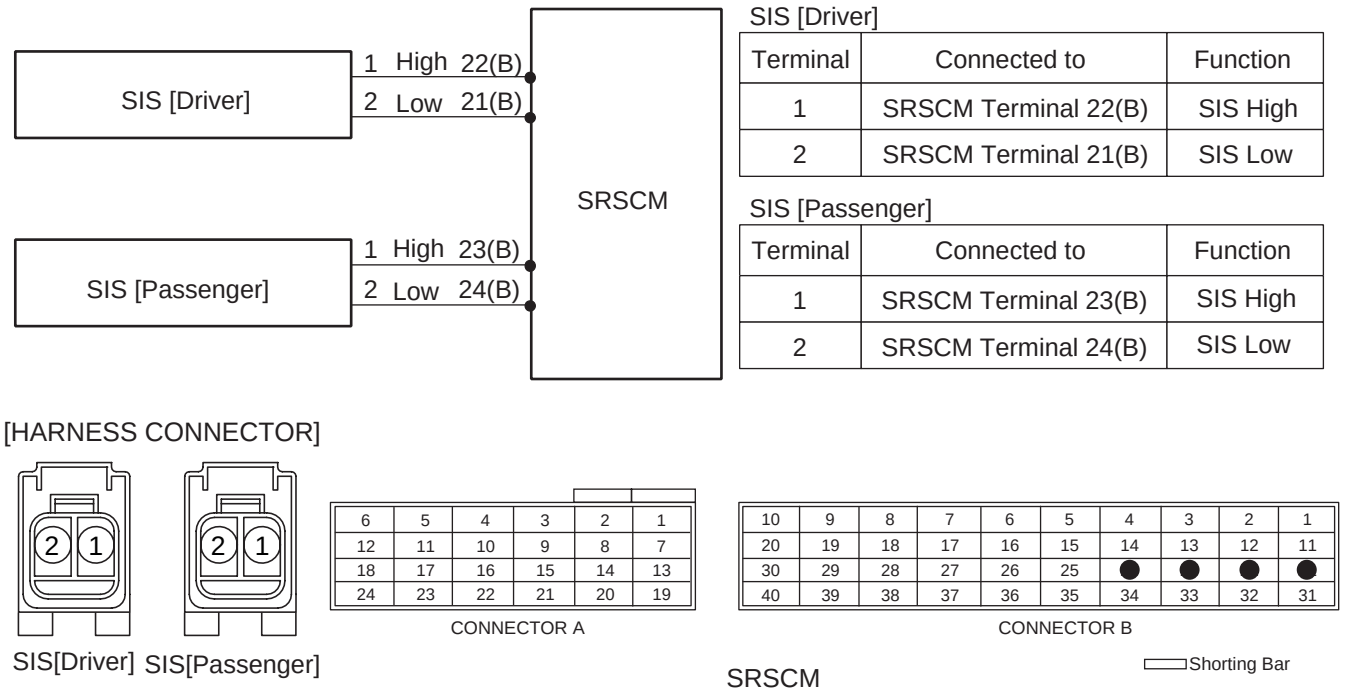

SIS [Driver]

Terminal	Connected to	Function
1	SRSCM Terminal 22(B)	SIS High
2	SRSCM Terminal 21(B)	SIS Low

SIS [Passenger]

Terminal	Connected to	Function
1	SRSCM Terminal 23(B)	SIS High
2	SRSCM Terminal 24(B)	SIS Low

SCMRT6170L

TERMINAL & CONNECTOR INSPECTION E5EA384D

Refer to the DESCRIPTION in this TROUBLESHOOTING section. (See page RT - 36)

INSPECTION PROCEDURE E32EDA9C

1. PREPARATION
   Refer to the DESCRIPTION in this TROUBLESHOOTING section. (See page RT - 36)

2. CHECK SHORT TO BATTERY LINE

1) Connect the battery negative cable to the battery.

2) Turn the ignition switch to ON.

3) Measure voltage between the terminal 1 of SIS harness connector and chassis ground.

Specification (voltage) : Approximately 0V

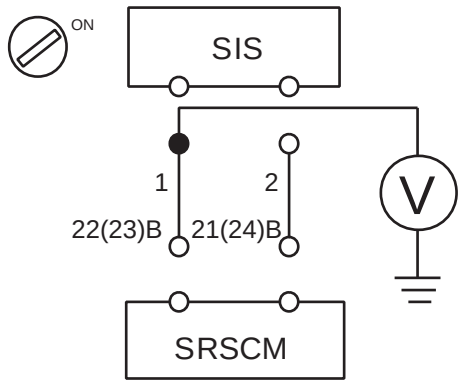

ERBF503R

4) Is the measured voltage within specification?

YES

▶ Check the SIS Module.

NO

▶ Repair the short to battery line circuit on wiring harness between the SIS and the SRSCM.

3. CHECK THE SIS MODULE

1) Replace the Side Impact Sensor(SIS) with a new one.
● Refer to "Side Impact Sensor(SIS)" section in this SERVICE MANUAL.

2) Install the DAB module and connect the DAB connector.

3) Connect the connectors of the PAB, SAB, CAB, BPT, FIS and SIS.

4) Connect the SRSCM connector.

5) Connect the battery negative cable to the battery.

6) Connect a Hi-Scan(Pro) to the data link connector.

7) Turn the ignition switch to ON and check the vehicle again.
Does Hi-Scan (Pro) indicate any DTC related to Side Impact Sensor(SIS)?

YES

▶ Go to next step.

NO

▶ Replace SIS module.

4. CLEAR THE DTC AND CHECK THE VEHICLE AGAIN
Refer to the DESCRIPTION in this TROUBLESHOOTING section. (See page RT - 36)

DTC B1473 CURTAIN AIRBAG [DRIVER] RESISTANCE TOO HIGH
DTC B1474 CURTAIN AIRBAG [DRIVER] RESISTANCE TOO LOW
DTC B1477 CURTAIN AIRBAG [PASSENGER] RESISTANCE TOO HIGH
DTC B1478 CURTAIN AIRBAG [PASSENGER] RESISTANCE TOO LOW

DTC DESCRIPTION E9E2C023

The CAB squib circuit consists of the SRSCM and two Curtain Airbags(CAB). It causes the SRS to deploy when the SRS deployment conditions are satisfied. The above DTC is recorded when the CAB resistance too high or low is detected in the CAB squib circuit.

DTC DETECTING CONDITION E71AB0A4

DTC	Condition	Probable cause
B1473 B1474 B1477 B1478	• Too high or low resistance between CAB high(+) and CAB low(-) • Curtain Airbag (CAB) Malfunction • SRSCM Malfunction	• Open or short circuit on wiring harness • Curtain Airbag (CAB) squib • SRSCM

SCHEMATIC DIAGRAM E813CB8C

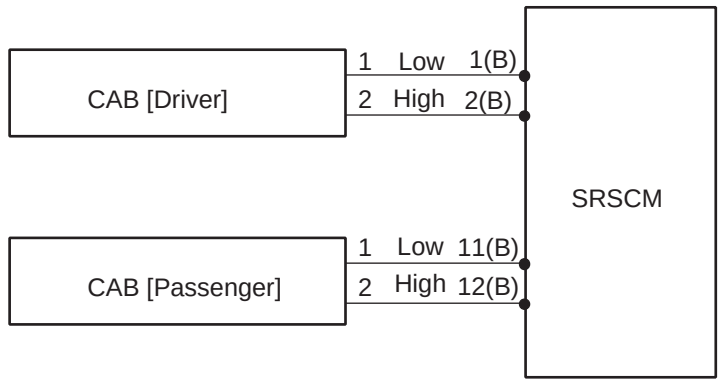

CAB [Driver]

Terminal	Connected to	Function
1	SRSCM Terminal 1(B)	CAB Low
2	SRSCM Terminal 2(B)	CAB High

CAB [Passenger]

Terminal	Connected to	Function
1	SRSCM Terminal 11(B)	CAB Low
2	SRSCM Terminal 12(B)	CAB High

[HARNESS CONNECTOR]

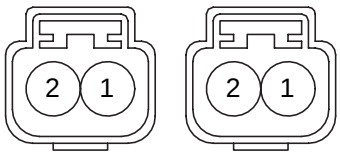

CAB[Driver] CAB[Passenger]

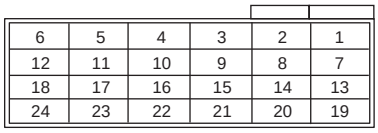

CONNECTOR A

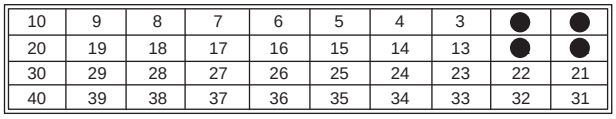

CONNECTOR B

Shorting Bar

SRSCM

SCMRT6180L

SPECIFICATION E7348974

CAB resistance : 1.4 ~ 6.2 Ω

TERMINAL & CONNECTOR INSPECTION E67565A8

Refer to the DESCRIPTION in this TROUBLESHOOTING section. (See page RT - 36)

INSPECTION PROCEDURE E0265A0E

1. PREPARATION
   Refer to the DESCRIPTION in this TROUBLESHOOTING section. (See page RT - 36)

2. CHECK CAB RESISTANCE

   CAUTION

   Never attempt to measure the circuit resistance of the airbag module(squib) even if you are using the specified tester.

   1) Connect the Dummy and the Dummy Adapter on CAB harness connector.
      ● Refer to "SPECIAL SERVICE TOOL" section in this SERVICE MANUAL for the SST No. of Dummy and Dummy Adapter.

   2) Measure resistance between the terminal 2(12) and 1(11) of SRSCM harness connector(B).

Specification (resistance) : 1.4 ~ 6.2 Ω

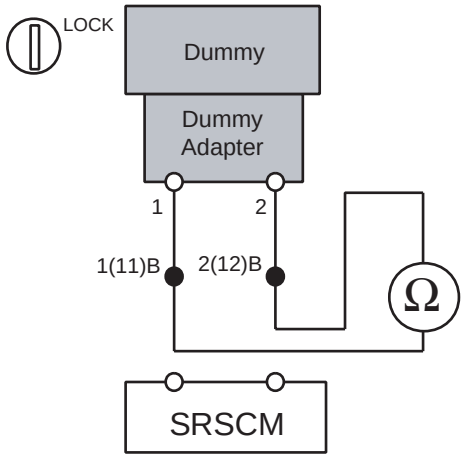

ERBF200O

   3) Is the measured resistance within specification?

   YES

   ▶ Replace the Curtain Airbag(CAB) module.

   NO

   ▶ Check open circuit.

3. CHECK OPEN CIRCUIT

1) Measure resistance between the terminal 2 of CAB harness connector and the terminal 2(12) of SRSCM harness connector(B).

2) Measure resistance between the terminal 1 of CAB harness connector and the terminal 1(11) of SRSCM harness connector(B).

Specification (resistance) : below 1 Ω

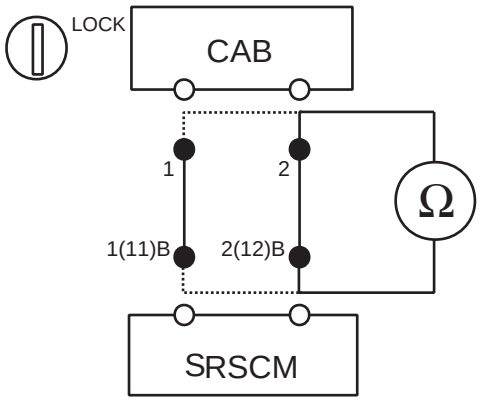

ERBF200P

3) Is the measured resistance within specification?

YES

▶Check short circuit.

NO

▶Repair or replace the wiring harness between the CAB and the SRSCM.

4. CHECK SHORT CIRCUIT

1) Measure resistance between the terminal 1 and 2 of CAB harness connector.

Specification (resistance) : infinite

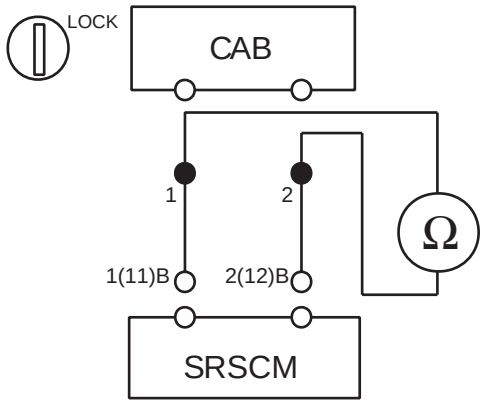

ERBF200Q

2) Is the measured resistance within specification?

YES

▶ Go to next step.

NO

▶ Repair or replace the wiring harness between the CAB and the SRSCM.

5. CLEAR THE DTC AND CHECK THE VEHICLE AGAIN
Refer to the DESCRIPTION in this TROUBLESHOOTING section. (See page RT - 36)

DTC B1475 CURTAIN AIRBAG [DRIVER] CIRCUIT SHORT TO GROUND
DTC B1479 CURTAIN AIRBAG [PASSENGER] CIRCUIT SHORT TO GROUND

DTC DESCRIPTION EF4CB9A5

The CAB squib circuit consists of the SRSCM and two Curtain Airbags (CAB). It causes the SRS to deploy when the SRS deployment conditions are satisfied. The above DTC is recorded when short to ground is detected in the CAB squib circuit.

DTC DETECTING CONDITION EAAE5911

DTC	Condition	Probable cause
B1475 B1479	• Short to ground between CAB and SRSCM • Curtain Airbag (CAB) Malfunction • SRSCM Malfunction	• Short to ground circuit on wiring harness • Curtain Airbag (CAB) squib • SRSCM

SCHEMATIC DIAGRAM E6EFB078

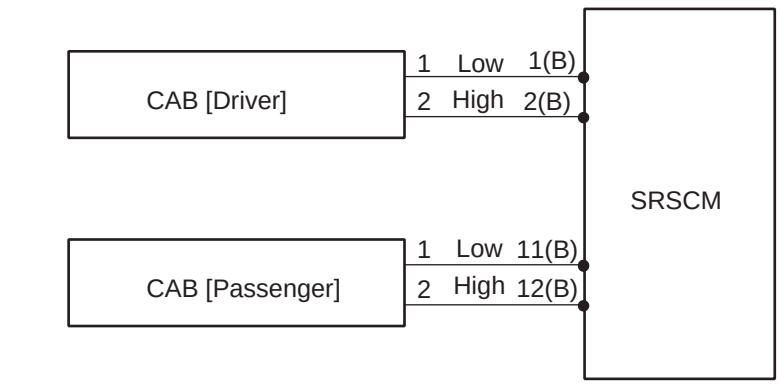

CAB [Driver]

Terminal	Connected to	Function
1	SRSCM Terminal 1(B)	CAB Low
2	SRSCM Terminal 2(B)	CAB High

CAB [Passenger]

Terminal	Connected to	Function
1	SRSCM Terminal 11(B)	CAB Low
2	SRSCM Terminal 12(B)	CAB High

[HARNESS CONNECTOR]

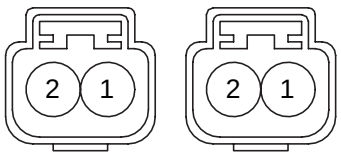

CAB[Driver] CAB[Passenger]

6	5	4	3	2	1
12	11	10	9	8	7
18	17	16	15	14	13
24	23	22	21	20	19

CONNECTOR A

10	9	8	7	6	5	4	3	●	●
20	19	18	17	16	15	14	13	●	●
30	29	28	27	26	25	24	23	22	21
40	39	38	37	36	35	34	33	32	31

CONNECTOR B

Shorting Bar

SRSCM

SCMRT6180L

TERMINAL & CONNECTOR INSPECTION E7200741

Refer to the DESCRIPTION in this TROUBLESHOOTING section. (See page RT - 36)

INSPECTION PROCEDURE E3A2F149

1. PREPARATION
   Refer to the DESCRIPTION in this TROUBLESHOOTING section. (See page RT - 36)

2. CHECK SHORT TO GROUND

1) Measure resistance between the terminal 2 of CAB harness connector and chassis ground.

Specification (resistance) : infinite

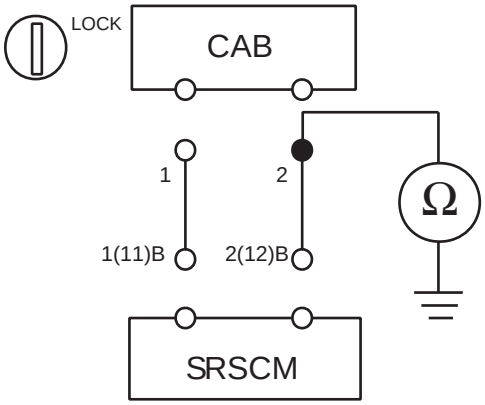

ERBF200R

2) Is the measured resistance within specification?

YES

▶ Check the CAB Module..

NO

▶ Repair or replace the wiring harness between the CAB and the SRSCM.

3. CHECK THE CAB MODULE

1) Replace the Curtain Airbag(CAB) with a new one.
● Refer to "Curtain Airbag(CAB)" section in this SERVICE MANUAL.

2) Install the DAB module and connect the DAB connector.

3) Connect the connectors of the PAB, SAB, CAB, BPT, FIS and SIS.

4) Connect the SRSCM connector.

5) Connect the battery negative cable to the battery.

6) Connect a Hi-Scan(Pro) to the data link connector.

7) Turn the ignition switch to ON and check the vehicle again.
Does Hi-Scan (Pro) indicate any DTC related to Curtain Airbag(CAB)?

YES

▶ Go to next step.

NO

▶ Replace CAB module.

4. CLEAR THE DTC AND CHECK THE VEHICLE AGAIN
Refer to the DESCRIPTION in this TROUBLESHOOTING section. (See page RT - 36)

DTC B1476 CURTAIN AIRBAG [DRIVER] CIRCUIT SHORT TO BATTERY
DTC B1480 CURTAIN AIRBAG [PASSENGER] CIRCUIT SHORT TO BATTERY

DTC DESCRIPTION E8242B75

The CAB squib circuit consists of the SRSCM and CAB. It causes the SRS to deploy when the SRS deployment conditions are satisfied. The above DTC is recorded when short to battery is detected in the CAB squib circuit.

DTC DETECTING CONDITION EC02CD65

DTC	Condition	Probable cause
B1476 B1480	• Short to battery between CAB and SRSCM • Curtain Airbag (CAB) Malfunction • SRSCM Malfunction	• Short to battery line circuit on wiring harness • Curtain Airbag (CAB) squib • SRSCM

SCHEMATIC DIAGRAM ED9E23C3

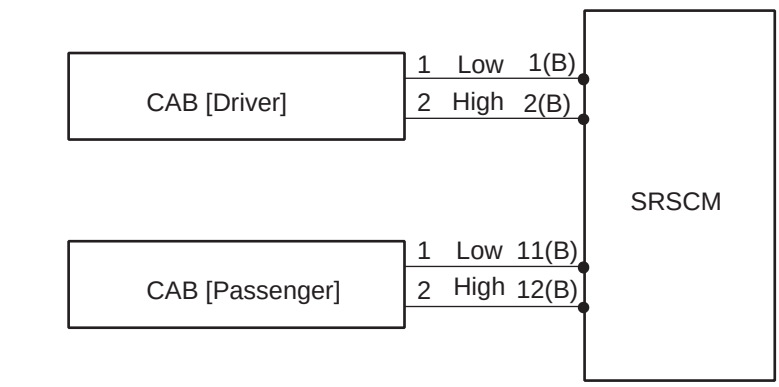

CAB [Driver]

Terminal	Connected to	Function
1	SRSCM Terminal 1(B)	CAB Low
2	SRSCM Terminal 2(B)	CAB High

CAB [Passenger]

Terminal	Connected to	Function
1	SRSCM Terminal 11(B)	CAB Low
2	SRSCM Terminal 12(B)	CAB High

[HARNESS CONNECTOR]

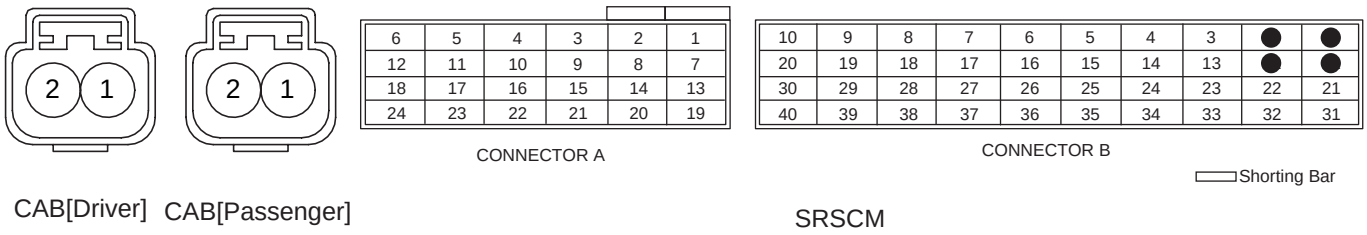

SCMRT6180L

TERMINAL & CONNECTOR INSPECTION E7691A8D

Refer to the DESCRIPTION in this TROUBLESHOOTING section. (See page RT - 36)

INSPECTION PROCEDURE E8312668

1. PREPARATION
   Refer to the DESCRIPTION in this TROUBLESHOOTING section. (See page RT - 36)

2. CHECK SHORT TO BATTERY LINE

   1) Connect the battery negative cable to the battery.

   2) Turn the ignition switch to ON.

   3) Measure voltage between the terminal 2 of CAB harness connector and chassis ground.

Specification (voltage) : Approximately 0 V

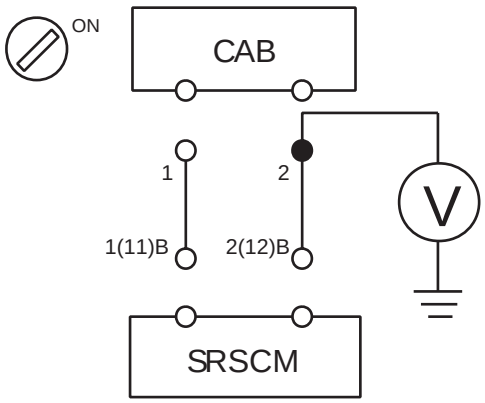

ERBF200S

   4) Is the measured voltage within specification?

   YES

   ▶ Check the CAB Module.

   NO

   ▶ Repair the short to battery line circuit on wiring harness between the CAB and the SRSCM.

3. CHECK THE CAB MODULE

   1) Replace the Curtain Airbag(CAB) with a new one.
      ● Refer to "Curtain Airbag(CAB)" section in this SERVICE MANUAL.

   2) Install the DAB module and connect the DAB connector.

   3) Connect the connectors of the PAB, SAB, CAB, BPT, FIS and SIS.

   4) Connect the SRSCM connector.

   5) Connect the battery negative cable to the battery.

   6) Connect a Hi-Scan(Pro) to the data link connector.

7) Turn the ignition switch to ON and check the vehicle again.
Does Hi-Scan (Pro) indicate any DTC related to Curtain Airbag(CAB)?

YES

▶ Go to next step.

NO

▶ Replace CAB module.

4. CLEAR THE DTC AND CHECK THE VEHICLE AGAIN
Refer to the DESCRIPTION in this TROUBLESHOOTING section. (See page RT - 36)

DTC B1527 PASSENGER AIRBAG DEACTIVATION SWITCH OPEN OR SHORT TO BATTERY

DTC DESCRIPTION E43745D9

The deactivation system for the passenger airbag consists of the SRSCM and the Passenger Airbag Deactivation(PAD) switch. The above DTC is recorded when PAD switch open or short to battery is detected in the PAD circuit.

DTC DETECTING CONDITION E9D133AD

DTC	Condition	Probable cause
B1527	• Short to battery line between PAD switch and SRSCM • SRSCM malfunction • PAD switch malfunction	• PAD switch • Wiring harness • SRSCM

SCHEMATIC DIAGRAM E304422C

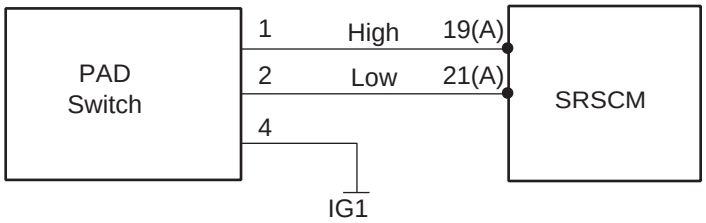

[PAD Switch]

Terminal	Connected to	Function
1	SRSCM Terminal 19(A)	PAD SW High
2	SRSCM Terminal 21(A)	PAD SW Low
4	IG1	Battery Voltage

[HARNESS CONNECTOR]

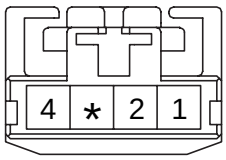

PAD SWITCH

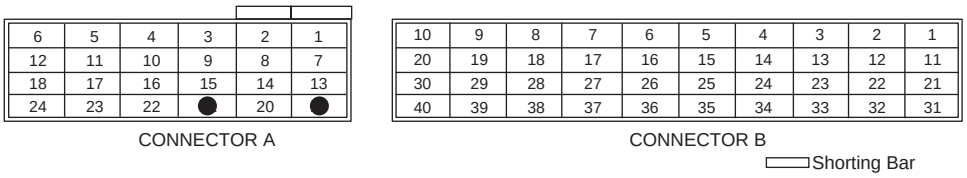

SRSCM

ERBF501T

SPECIFICATION EDC39A07

PAD Switch Status	Resistance (Ω)	Related DTC
Short to Battery	R > 1,114	B1527
ON (PAB Enabled)	728 ~ 1,567	
Defect	502 ~ 1,024	B1529
OFF (PAB Disabled)	301 ~ 706	
Short to Ground	R < 424	B1528

TERMINAL & CONNECTOR INSPECTION E83AEDAD

Refer to the DESCRIPTION in this TROUBLESHOOTING section. (See page RT - 36)

INSPECTION PROCEDURE E13F2133

1. PREPARATION
   Refer to the DESCRIPTION in this TROUBLESHOOTING section. (See page RT - 36)

2. CHECK OPEN CIRCUIT

   1) Disconnect the connector of the PAD switch.

   2) Measure resistance between the terminal 19 of the SRSCM harness connector(A) and 1 of PAD switch harness connector.

   3) Measure resistance between the terminal 21 of the SRSCM harness connector(A) and 2 of PAD switch harness connector.

Specification (resistance) : below 1 Ω

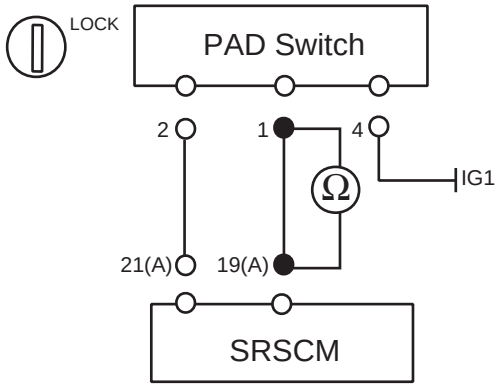

ERBF500Z

   4) Is the measured resistance within specification?

   YES

   ▶ Check short to battery line.

   NO

   ▶ Replace the harness between the SRSCM and the PAD switch.

3. CHECK SHORT TO BATTERY LINE

   1) Connect the battery negative cable to the battery.

   2) Turn the ignition switch to ON.

   3) Turn the ignition switch to LOCK, and wait for 30 seconds.

   4) Measure voltage between the terminal 1 of PAD switch harness connector and chassis ground.

Specification (voltage) : Approximately 0 V

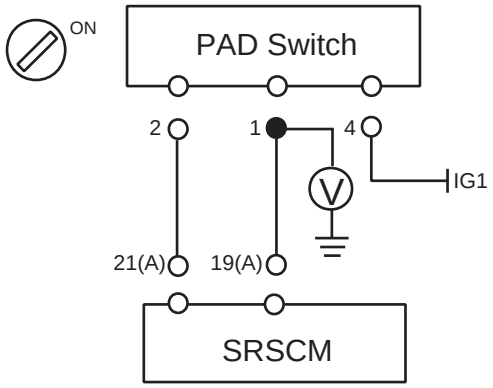

ERBF503A

5) Is the measured voltage within specification?

YES

▶ Go to next step.

NO

▶ Repair or replace the wiring harness between the PAD switch and the SRSCM.

4. CHECK THE PAD SWITCH

1) Connect the SRSCM connector.

2) Connect the PAD switch.

3) Connect the battery negative cable to the battery.

4) Turn the ignition switch to ON.

5) Measure resistance between the terminal 19 of the SRSCM harness connector(A) and 1 of PAD switch harness connector.

Specification (resistance : PAD switch ON (Enabled positon) : 728 ~ 1,567 Ω PAD switch OFF (Disabled positon) : 301 ~ 706 Ω

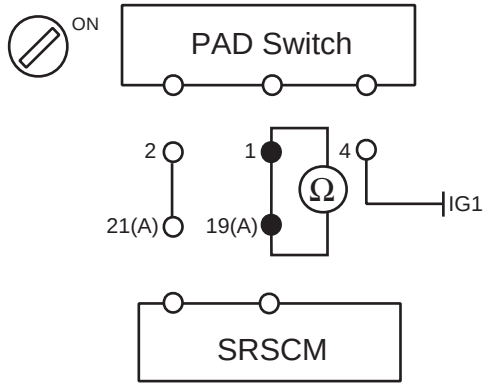

ERBF504B

6) Is the measured resistance within specification?

YES

▶ Go to next step.

NO

▶ Replace the PAD switch.

5. CLEAR THE DTC AND CHECK THE VEHICLE AGAIN
Refer to the DESCRIPTION in this TROUBLESHOOTING section. (See page RT - 36)

DTC B1528 PASSENGER AIRBAG DEACTIVATION SWITCH SHORT OR SHORT TO GROUND

DTC DESCRIPTION E8FDD9B3

The deactivation system for the passenger airbag consists of the SRSCM and the Passenger Airbag Deactivation(PAD) switch. The above DTC is recorded when PAD switch short or short to ground is detected in the PAD system circuit.

DTC DETECTING CONDITION E13549DA

DTC	Condition	Probable cause
B1528	• Short to ground between PAD switch and SRSCM • PAD switch malfunction • SRSCM malfunction	• PAD switch • Wiring harness • SRSCM

SCHEMATIC DIAGRAM E1C1B705

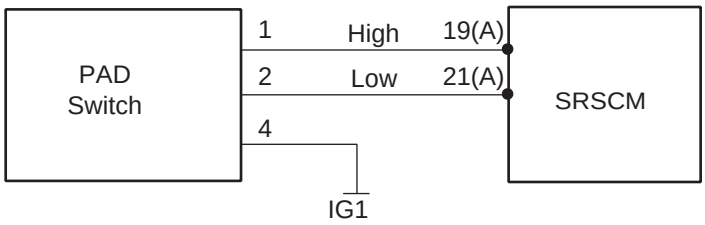

[PAD Switch]

Terminal	Connected to	Function
1	SRSCM Terminal 19(A)	PAD SW High
2	SRSCM Terminal 21(A)	PAD SW Low
4	IG1	Battery Voltage

[HARNESS CONNECTOR]

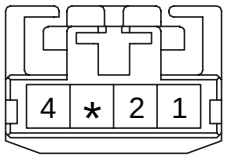

PAD SWITCH

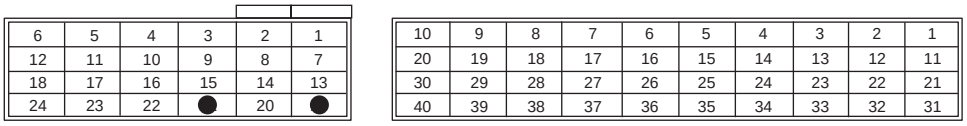

CONNECTOR A CONNECTOR B

Shorting Bar

SRSCM

ERBF501T

SPECIFICATION EB1FB32A

PAD Switch Status	Resistance (Ω)	Related DTC
Short to Battery	R > 1,114	B1527
ON (PAB Enabled)	728 ~ 1,567	
Defect	502 ~ 1,024	B1529
OFF (PAB Disabled)	301 ~ 706	
Short to Ground	R < 424	B1528

TERMINAL & CONNECTOR INSPECTION E0AC4EF2

Refer to the DESCRIPTION in this TROUBLESHOOTING section. (See page RT - 36)

INSPECTION PROCEDURE EA9149BD

1. PREPARATION
   Refer to the DESCRIPTION in this TROUBLESHOOTING section. (See page RT - 36)

2. CHECK SHORT TO GROUND

   1) Disconnect the connector of the PAD switch.

   2) Measure resistance between the terminal 1 of PAD switch harness connector and chassis ground.

Specification (resistance) : infinite

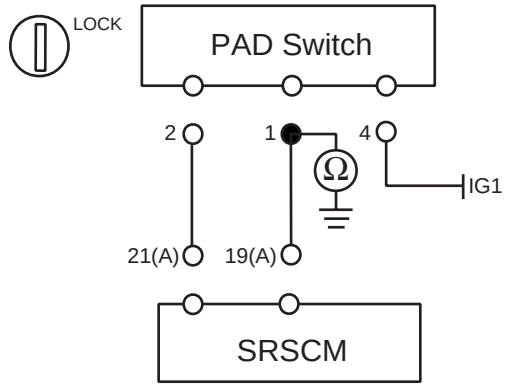

ERBF502C

   3) Is the measured resistance within specification?

   YES

   ▶ Check short circuit.

   NO

   ▶ Replace the harness between the SRSCM and the PAD switch.

3. CHECK SHORT CIRCUIT

   1) Measure resistance between 1 and 2 of PAD switch harness connector.

   2) Measure resistance between 1 and 4 of PAD switch harness connector.

Specification (resistance) : infinite

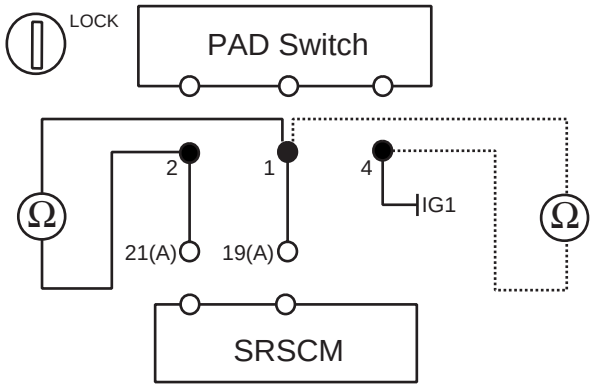

ERBF501D

3) Is the measured resistance within specification?

YES

▶ Go to next step.

NO

▶ Repair or replace the wiring harness between the PAD switch and the SRSCM.

4. CHECK THE PAD SWITCH

1) Connect the SRSCM connector.

2) Connect the PAD switch.

3) Connect the battery negative cable to the battery.

4) Turn the ignition switch to ON.

5) Measure resistance between the terminal 19 of the SRSCM harness connector(A) and 1 of PAD switch harness connector.

Specification (resistance :
PAD switch ON (Enabled positon) : 728 ~ 1,567 Ω
PAD switch OFF (Disabled positon) : 301 ~ 706 Ω

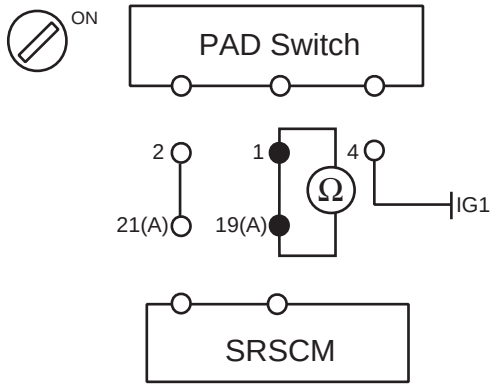

ERBF501E

6) Is the measured resistance within specification?

YES

▶ Go to next step.

NO

▶ Replace the PAD switch.

5. CLEAR THE DTC AND CHECK THE VEHICLE AGAIN
Refer to the DESCRIPTION in this TROUBLESHOOTING section. (See page RT - 36)

DTC B1529 PASSENGER AIRBAG DEACTIVATION SWITCH DEFECT
DTC B1530 PASSENGER AIRBAG DEACTIVATION SWITCH INSTABILITY

DTC DESCRIPTION E5916DC3

The deactivation system for the passenger airbag consists of the SRSCM and the Passenger Airbag Deactivation(PAD) switch. The above DTC is recorded when the defect or instability of PAD switch is detected in the PAD system circuit.

DTC DETECTING CONDITION ED364FE5

DTC	Condition	Probable cause
B1529 B1530	• PAD switch malfunction • SRSCM malfunction	• PAD switch • Wiring harness • SRSCM

SCHEMATIC DIAGRAM E2DB86D8

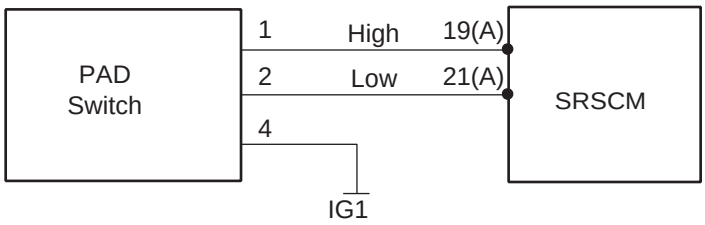

[PAD Switch]

Terminal	Connected to	Function
1	SRSCM Terminal 19(A)	PAD SW High
2	SRSCM Terminal 21(A)	PAD SW Low
4	IG1	Battery Voltage

[HARNESS CONNECTOR]

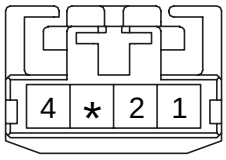

PAD SWITCH

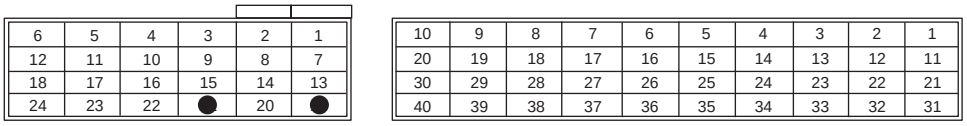

CONNECTOR A

CONNECTOR B

Shorting Bar

SRSCM

ERBF501T

SPECIFICATION E25793DB

PAD Switch Status	Resistance (Ω)	Related DTC
Short to Battery	R > 1,114	B1527
ON (PAB Enabled)	728 ~ 1,567	
Defect	502 ~ 1,024	B1529
OFF (PAB Disabled)	301 ~ 706	
Short to Ground	R < 424	B1528

TERMINAL & CONNECTOR INSPECTION EFC94B40

Refer to the DESCRIPTION in this TROUBLESHOOTING section. (See page RT - 36)

INSPECTION PROCEDURE E64B6D4E

1. PREPARATION
   Refer to the DESCRIPTION in this TROUBLESHOOTING section. (See page RT - 36)

2. CHECK POWER SUPPLY

   1) Connect the battery negative cable to the battery.

   2) Turn the ignition switch to ON.

   3) Measure voltage between the terminal and 4 of PAD switch harness connector and chassis ground.

Specification (voltage) : 8.38 ~ 17.0 V

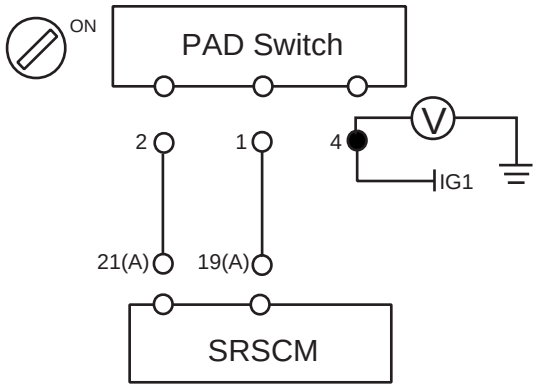

ERBF501F

   4) Is the measured voltage within specification?

   YES

   ▶ Check ground circuit.

   NO

   ▶ Replace the harness between the battery line and the PAD switch.

3. CHECK GROUND CIRCUIT

   1) Turn the ignition switch to OFF.

   2) Disconnect the battery negative cable from the battery.

   3) Disconnect the connector of the PAD switch.

   4) Measure resistance between the terminal 2 of PAD switch harness connector and chassis ground.

Specification (resistance) : 0 Ω

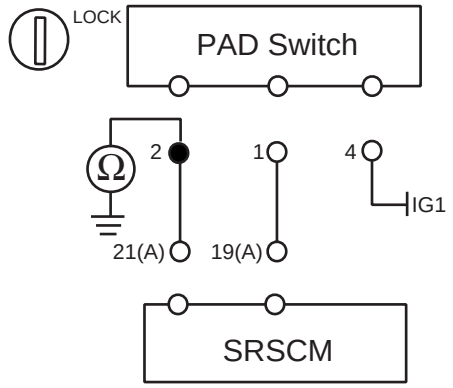

ERBF501G

5) Is the measured resistance within specification?

YES

▶ Go to next step.

NO

▶ Repair or replace the wiring harness between the PAD switch and the chassis ground.

4. CHECK THE PAD SWITCH

1) Connect the SRSCM connector.

2) Connect the PAD switch.

3) Connect the battery negative cable to the battery.

4) Turn the ignition switch to ON.

5) Measure resistance between the terminal 19 of the SRSCM harness connector(A) and 1 of PAD switch harness connector.

Specification (resistance : PAD switch ON (Enabled positon) : 728 ~ 1,567 Ω PAD switch OFF (Disabled positon) : 301 ~ 706 Ω

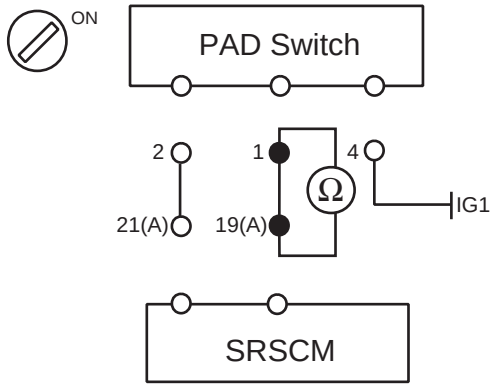

ERBF501E

6) Is the measured resistance within specification?

YES

▶ Go to next step.

NO

▶ Replace the PAD switch.

5. CLEAR THE DTC AND CHECK THE VEHICLE AGAIN
Refer to the DESCRIPTION in this TROUBLESHOOTING section. (See page RT - 36)

DTC B1620 SUPPLEMENTAL RESTRAINT SYSTEM CONTROL MODULE INTERNAL FAULT (REPLACE SRSCM)

DTC DESCRIPTION E1635E15

The Supplemental Restraint System Control Module (SRSCM) runs diagnostics to monitor the condition of its internal circuits and all external components in the restraint system. If a fault is detected in the electronic accelerometer or in the microprocessor, the SRSCM will inhibit deployment to minimize the risk of inadvertent deployments.
Once an internal fault is qualified, the internal fault is latched and warning lamp will be turned on. If an internal fault is qulified, the SRSCM must be replaced. The Hi-Scan tool can't clear an internal fault. All internal faults are DTC B1620.

DTC DETECTING CONDITION E3D215EF

DTC	Condition	Probable cause
B1620	• SRSCM internal fault : acceleration sensor, microcomputer power supply, watchdog etc	• SRSCM

INSPECTION PROCEDURE EC7B75FE

If the above mentioned DTC is confirmed it can't be cleared by Hi-Scan tool, the SRSCM should be replaced.

DTC B1650 CRASH RECORDED - FRONTAL (REPLACE SRSCM)
DTC B1651 CRASH RECORDED - DRIVER SIDE (REPLACE SRSCM)
DTC B1652 CRASH RECORDED - PASSENGER SIDE (REPLACE SRSCM)
DTC B1657 CRASH RECORDED - BELT PRETENSIONER ONLY
DTC B1658 BELT PRETENSIONER 6 TIMES DEPLOYMENT (REPLACE SRSCM)

DTC DESCRIPTION ECC9F31F

When a deployment of any restraint system for seat belt pretensioner and frontal and side air bags occurs, the crash output is activated. The purpose of this output is to signal BCM (Body Control Module) in the vehicle to unlock the vehicle doors. If a crash output is in progress, a second crash output signal will not be sent unless the first one is completed. The SRSCM doesn't perform diagnostics on the crash output function. After a frontal or side crash event is sensed and algorithm makes firing decision, above mentioned crash record is stored after squib deployment.

DTC DETECTING CONDITION E73A47D6

DTC	Condition	Probable cause
B1650 B1651 B1652 B1657 B1658	• Frontal crash • Side crash • Seat belt pretensioner only deployed	• SRSCM • Front Impact Sensor • Side Impact Sensor • Seat Belt Pretensioner

SCHEMATIC DIAGRAM E093E564

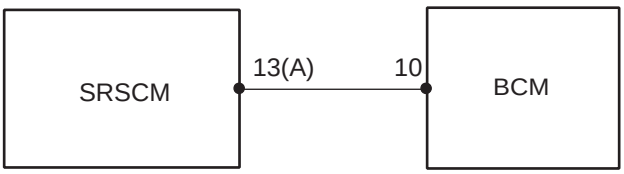

Terminal	Connected to	Function
SRSCM 13(A)	BCM 10	Crash output

[HARNESS CONNECTOR]

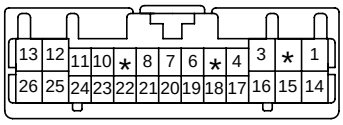

BCM

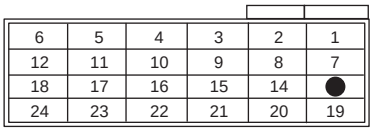

CONNECTOR A

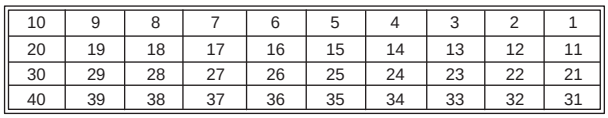

CONNECTOR B

Shorting Bar

SRSCM

SCMRT6190L

INSPECTION PROCEDURE EFDF2513

If the above mentioned DTC is confirmed it can't be cleared by Hi-Scan tool except for the B1657, and the SRSCM should be replaced. However, for the DTC B1657, Belt pretensioner only deployment, it can be erased for 5 times and the SRSCM can be reusable. If the deployment of Belt pretensioner reaches to 6 times, the SRSCM will set DTC B1658 and the SRSCM should be replaced accordingly.

DTC B2500 SRS WARNING LAMP FAILURE

DTC DESCRIPTION E94AAE61

The SRS warning lamp is located in the cluster. When the airbag system is normal, the SRS warning lamp turns on for approx. 6 seconds after the ignition switch is turned to ON, and then turns off automatically. If there is a malfunction in the airbag system, the SRS warning lamp lights up to inform the driver of the abnormality. The SRSCM shall measure the voltage at the SRS warning lamp output pin, both when the lamp is on and when the lamp is off, to detect whether the commanded state matches the actual state.

DTC DETECTING CONDITION EDEB4A4B

DTC	Condition	Probable cause
B2500	• Airbag fuse • Warning Lamp Bulb • Open between warning lamp and SRSCM • Short to ground or battery line between the warning lamp and SRSCM • SRSCM Malfunction	• Fuse • Warning lamp bulb • Wiring Harness • SRSCM

SCHEMATIC DIAGRAM E40E535F

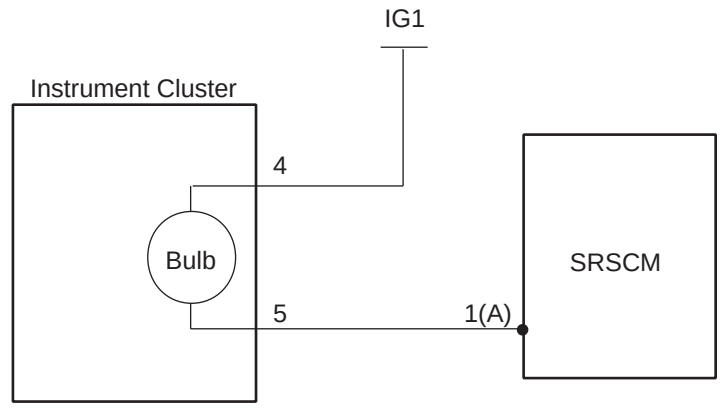

[Instrument Cluster]

Terminal	Connected to	Function
4	IG1	Battery Voltage
5	SRSCM Terminal 1(A)	Lamp Control

[HARNESS CONNECTOR]

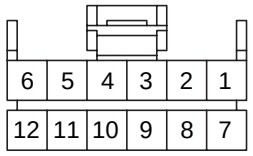

INSTRUMENT CLUSTER

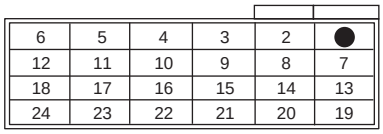

CONNECTOR A

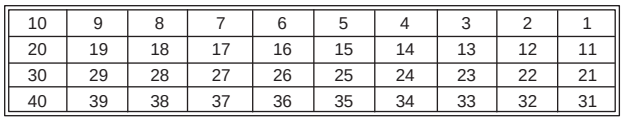

CONNECTOR B

Shorting Bar

SRSCM

SCMRT6200L

TERMINAL & CONNECTOR INSPECTION E7B1FDA3

Refer to the DESCRIPTION in this TROUBLESHOOTING section. (See page RT - 36)

INSPECTION PROCEDURE EDF952B4

1. PREPARATION
   Refer to the DESCRIPTION in this TROUBLESHOOTING section. (See page RT - 36)

2. CHECK THE FUSE

   1) Remove the airbag fuse and the airbag warning lamp fuse from junction box.

   2) Inspect the fuses. Are the fuses normal?

   YES

   ▶ Check the warning lamp bulb.

   NO

   ▶ Repair or replace the fuses.

3. CHECK THE WARNING LAMP BULB

   1) Remove the bulb from the instrument cluster.

   2) Inspect the bulb. Is the bulb normal?

   YES

   ▶ Check source voltage.

   NO

   ▶ Repair or replace the bulb.

4. CHECK SOURCE VOLTAGE

   1) Connect the battery negative cable to the battery.

   2) Turn the ignition switch to ON.

   3) Measure voltage between the terminal 2 of the Instrument Cluster harness connector and chassis ground.

Specification (voltage) : 8.38 ~ 17.0 V

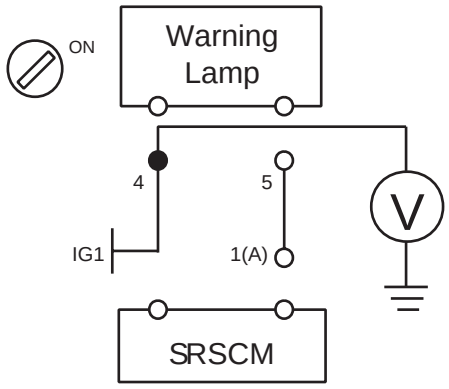

SCMRT6201L

   4) Is the measured voltage within specification?

YES

▶ Check short to battery line.

NO

▶ Repair or replace the wiring harness between ignition switch and the Warning Lamp.

5. CHECK SHORT TO BATTERY LINE

1) Measure voltage between the terminal 5 of the Instrument Cluster harness connector and chassis ground.

Specification (voltage) : Approximately 0 V

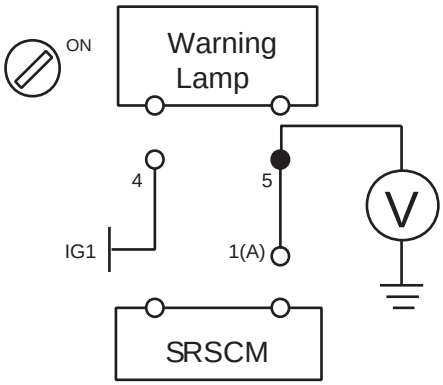

SCMRT6202L

2) Is the measured voltage within specification?

YES

▶ Check short or short to ground.

NO

▶ Repair the short to battery line circuit on wiring harness between the SRSCM and the Warning Lamp.

6. CHECK SHORT OR SHORT TO GROUND

1) Turn the ignition switch to LOCK.

2) Disconnect the battery negative cable from the battery.

3) Measure resistance between the terminal 5 of the Instrument Cluster harness connector and chassis ground.

4) Measure resistance between the terminal 4 and 5 of the Instrument Cluster harness connector.

Specification (resistance) : infinite

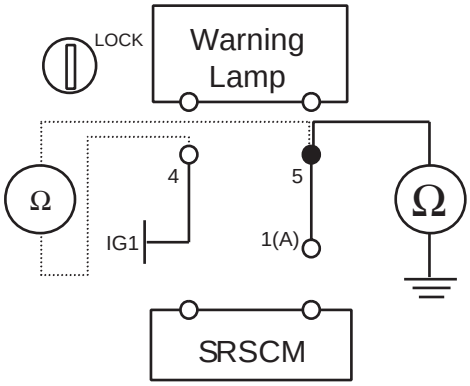

SCMRT6203L

5) Is the measured resistance within specification?

YES

▶ Check open circuit.

NO

▶ Repair the short or short to ground circuit on wiring harness between the SRSCM and the Warning Lamp.

7. CHECK OPEN CIRCUIT

1) Measure resistance between the terminal 5 of the Instrument Cluster connector and the terminal 1 of SRSCM harness connector(A).

Specification (resistance) : below 1 Ω

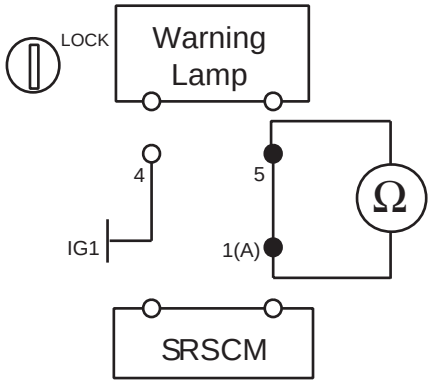

SCMRT6204L

2) Is the measured resistance within specification?

YES

▶ Go to next step.

NO

▶ Repair the open circuit on wiring harness between the SRSCM and the Warning Lamp.

8. CLEAR THE DTC AND CHECK THE VEHICLE AGAIN
Refer to the DESCRIPTION in this TROUBLESHOOTING section. (See page RT - 36)

DTC B2505 PASSENGER AIRBAG DISABLE LAMP FAILURE

DTC DESCRIPTION EB37F5CA

The SRSCM shall detect and record the following situations. And a single fault code shall be assigned as PAD Lamp Fault for all PAD lamp fault conditions. This fault code shall be set whenever either of the fault conditions is detected. If both fault conditions are not detected, the fault code shall not be detected.

1. The bulb is short, or there is a short to battery condition on the PAD lamp input connection to the SRSCM. This condition is only detectable while the PAD lamp is commanded ON. If a short to battery condition is detected, the PAD lamp shall be commanded OFF for 15 seconds to protect the circuit.

2. The bulb is open, or there is a short to ground condition. This condition is only detectable while the PAD lamp is commanded OFF. If the PAD lamp is ON and a short to ground condition is present, the SRSCM shall command the PAD lamp OFF for a maximum of 1ms during each diagnostic cycle.

DTC DETECTING CONDITION EE99B95B

DTC	Condition	Probable cause
B2505	• PAD lamp bulb open or short • Open between PAD lamp and SRSCM • Short to ground or battery line between PAD lamp and SRSCM • SRSCM malfunction	• Fuse • PAD lamp bulb • Wiring Harness • SRSCM

SCHEMATIC DIAGRAM E4BC358D

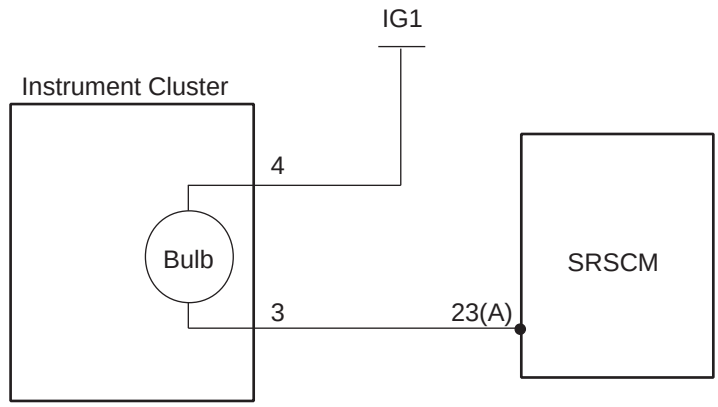

[Instrument Cluster]

Terminal	Connected to	Function
4	IG1	Battery Voltage
3	SRSCM Terminal 23(A)	Lamp Control

[HARNESS CONNECTOR]

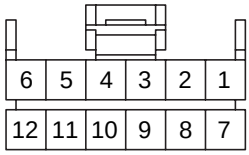

INSTRUMENT CLUSTER

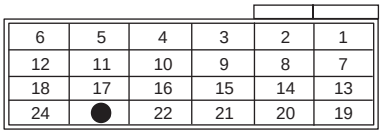

CONNECTOR A

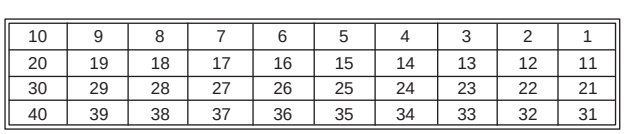

CONNECTOR B

Shorting Bar

SRSCM

SCMRT6210L

TERMINAL & CONNECTOR INSPECTION E11FDFA8

Refer to the DESCRIPTION in this TROUBLESHOOTING section. (See page RT - 36)

INSPECTION PROCEDURE E83DF308

1. PREPARATION
   Refer to the DESCRIPTION in this TROUBLESHOOTING section. (See page RT - 36)

2. CHECK THE FUSE

   1) Remove the airbag fuse and the PAD lamp fuse from junction box.

   2) Inspect the fuses. Are the fuses normal?

   YES

   ▶ Check the PAD lamp bulb.

   NO

   ▶ Repair or replace the fuses.

3. CHECK THE PAD LAMP BULB

   1) Remove the bulb from the instrument cluster.

   2) Inspect the bulb. Is the bulb normal?

   YES

   ▶ Check source voltage.

   NO

   ▶ Repair or replace the bulb.

4. CHECK SOURCE VOLTAGE

   1) Connect the battery negative cable to the battery.

   2) Turn the ignition switch to ON.

   3) Measure voltage between the terminal 4 of the Instrument Cluster harness connector and chassis ground.

Specification (voltage) : 8.38 ~ 17.0 V

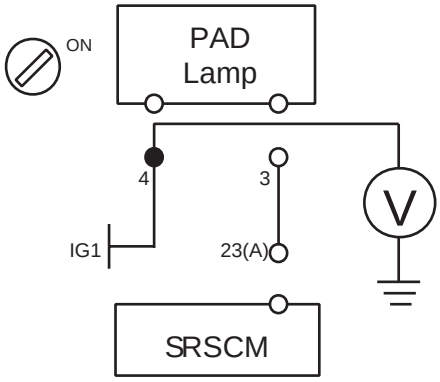

SCMRT6211L

4) Is the measured voltage within specification?

YES

▶ Check short to battery line.

NO

▶ Repair or replace the wiring harness between ignition switch and the PAD Lamp.

5. CHECK SHORT TO BATTERY LINE

1) Measure voltage between the terminal 3 of the Instrument Cluster harness connector and chassis ground.

Specification (voltage) : Approximately 0 V

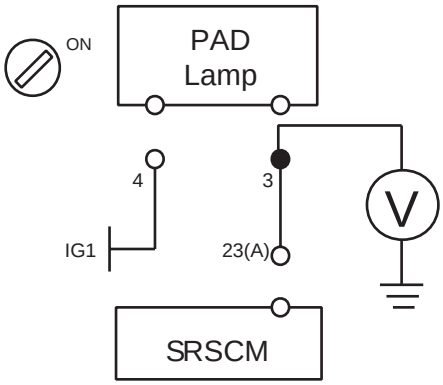

SCMRT6212L

2) Is the measured voltage within specification?

YES

▶ Check short or short to ground.

NO

▶ Repair the short to battery line circuit on wiring harness between the SRSCM and the PAD Lamp.

6. CHECK SHORT OR SHORT TO GROUND

1) Turn the ignition switch to LOCK.

2) Disconnect the battery negative cable from the battery.

3) Measure resistance between the terminal 3 of the Instrument Cluster harness connector and chassis ground.

4) Measure resistance between the terminal 4 and 3 of the Instrument Cluster harness connector.

Specification (resistance) : infinite

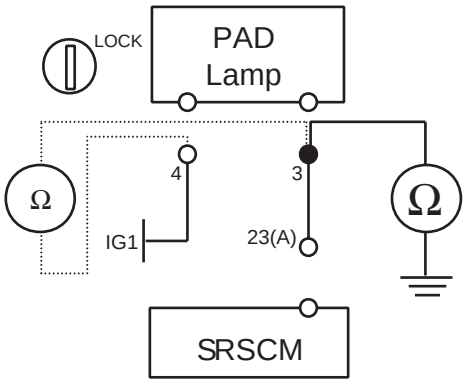

SCMRT6213L

5) Is the measured resistance within specification?

YES

▶ Check open circuit.

NO

▶ Repair the short or short to ground circuit on wiring harness between the SRSCM and the PAD Lamp.

7. CHECK OPEN CIRCUIT

1) Measure resistance between the terminal 3 of the Instrument Cluster connector and the terminal 23 of SRSCM harness connector(A).

Specification (resistance) : below 1 Ω

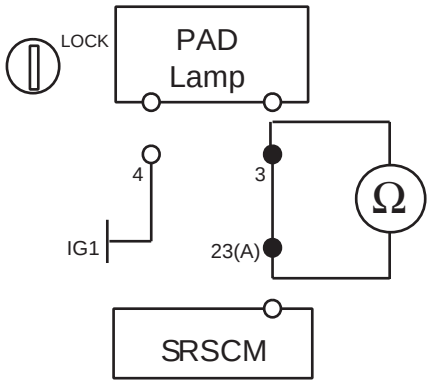

SCMRT6214L

2) Is the measured resistance within specification?

YES

▶ Go to next step.

NO

▶ Repair the open circuit on wiring harness between the SRSCM and the PAD Lamp.

8. CLEAR THE DTC AND CHECK THE VEHICLE AGAIN
Refer to the DESCRIPTION in this TROUBLESHOOTING section. (See page RT - 36)

AIR BAG MODULE DISPOSAL

AIRBAG DISPOSAL E50F62AD

SPECIAL TOOL REQUIRED

Deployment tool 0957A-34100A

Before scrapping any airbags or side airbags (including those in a whole vehicle to be scrapped), the airbags or side airbags must be deployed. If the vehicle is still within the warranty period, before deploying the airbags or side airbags, the Technical Manager must give approval and/or special instruction. Only after the airbags or side airbags have been deployed (as the result of vehicle collision, for example), can they be scrapped.
If the airbags or side airbags appear intact (not deployed), treat them with extreme caution. Follow this procedure.

DEPLOYING AIRBAGS IN THE VEHICLE

If an SRS equipped vehicle is to be entirely scrapped, its airbags or side airbags should be deployed while still in the vehicle. The airbags or side airbags should not be considered as salvageable parts and should never be installed in another vehicle.

1. Turn the ignition switch OFF, and disconnect the battery negative cable and wait at least three minutes.
2. Confirm that each airbag or side airbag is securely mounted.
3. Confirm that the special tool is functioning properly by following the check procedure.

DRIVER'S AIRBAG :

1. Remove the driver's airbag and install the SST(0957A-3F100).
2. Install the driver's airbag on the steering wheel.

FRONT PASSENGER'S AIRBAG :

1. Remove the glove box, then disconnect the 2P connector between the front passenger's airbag and SRS main harness.
2. Install the SST(0957A-3F100).

SIDE AIRBAG :

1. Disconnect the 2P connector between the side airbag and side wire harness.
2. Install the SST (0957A-3F100).

CURTAIN AIRBAG :

1. Disconnect the 2P connector between the curtain airbag and wire harness.
2. Install the SST(0957A-3F100).

SEAT BELT PRETENSIONER :

1. Disconnect the 2P connector from the seat belt pretensioner.
2. Install the SST(0957A-38500).
3. Place the deployment tool at least thirty feet (10 meters) away from the airbag.
4. Connect a 12 volt battery to the tool.
5. Push the tool's deployment switch. The airbag should deploy (deployment is both highly audible and visible: a loud noise and rapid inflation of the bag, followed by slow deflection)
6. Dispose of the complete airbag. No part of it can be reused. Place it in a sturdy plastic bag and seal it securely.

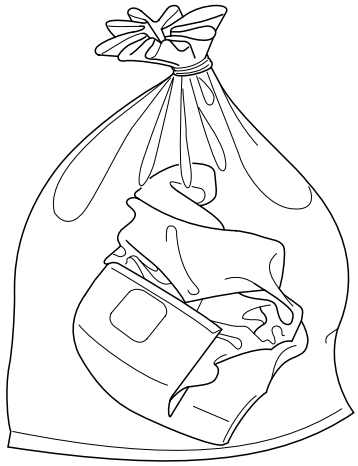

ERKD002U

DEPLOYING THE AIRBAG OUT OF THE VEHICLE

If an intact airbag has been removed from a scrapped vehicle, or has been found defective or damage during transit, storage or service, it should be deployed as follows :

1. Confirm that the special tool is functioning properly by following the check procedure.

2. Position the airbag face up, outdoors on flat ground at least thirty feet (10meters) from any obstacles or people.

DISPOSAL OF DAMAGED AIRBAG

1. If installed in a vehicle, follow the removal procedure of driver's airbag front passenger's and side airbag.

2. In all cases, make a short circuit by twisting together the two airbag inflator wires.

3. Package the airbag in exactly the same packing that the new replacement part come in.