2004 MANUAL TRANSMISSIONS

Overhaul - ASU5 6-Speed

SPECIAL TOOLS

Ref.No.	Tool Number	Description	Qty
*①	07GAJ-PG20110	Mainshaft Holder	1
*②	07GAJ-PG20130	Mainshaft Base	1
③	07JAD-PL90100	Oil Seal Driver	1
④	07NAD-P20A100	Oil Seal Driver Attachment	1
⑤	07SAZ-001000A	Backprobe Set	2
**⑥	07736-A01000B	Adjustable Bearing Puller, 20—40 mm	1
⑦	07746-0010300	Attachment, 42 x 47 mm	1
⑧	07746-0030100	Driver, 40 mm I.D.	1
⑨	07746-0030300	Driver, 30 mm I.D.	1
⑩	07749-0010000	Driver	1

* Part of Mainshaft Inspection Tool Set, 07GAJ-PG20102.
** Must be used with commercially available 3/8"—16 Slide Hammer.

G01823149

Fig. 1: Identifying Special Tools (1 Of 2)

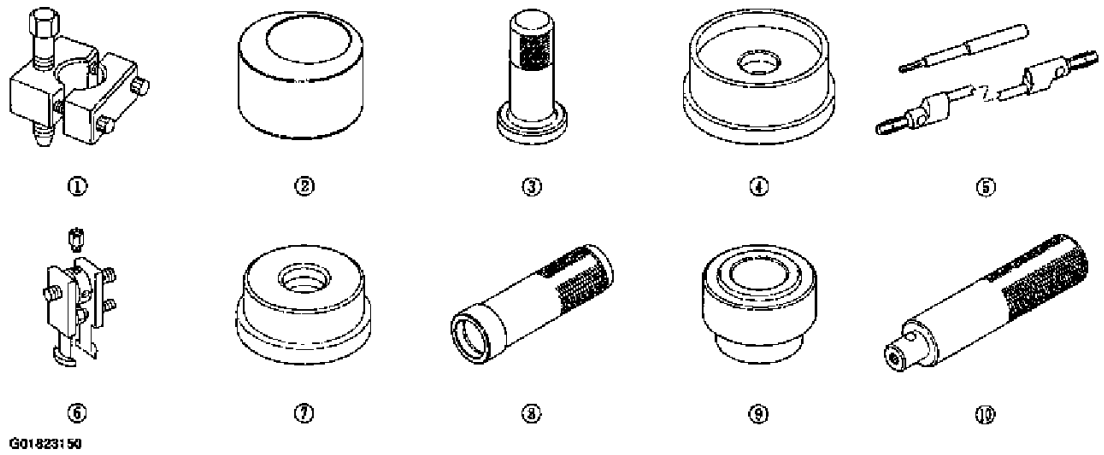

Fig. 2: Identifying Special Tools (2 Of 2)

SERVICE PRECAUTIONS

CLUTCH HOUSING & TRANSMISSION HOUSING

The clutch housing and transmission housing are made of magnesium. When steel and magnesium are in contact with one another, there is a possibility of galvanic corrosion (a corrosion that happens between different types of metals). To prevent this from happening, special bolts and washers are used. Be sure to use only these special bolts and washers in the areas indicated, do not substitute them with regular bolts and washers.

Replace the clutch housing, transmission housing, and the special bolts and washers if galvanic corrosion has

cardiagn.com

occurred to these parts.

Transmission 8 mm housing bolts are left-hand threads.

REVERSE LOCKOUT SYSTEM

GENERAL TROUBLESHOOTING INFORMATION

How to Troubleshoot Circuits at the ECM

Special Tools Required: Backprobe set 07SAZ-001000A (2 required)

1. Pull back the carpet from the passenger's and driver's side of the center console to expose the ECM.
2. Connect the backprobe adapters (A) to the stacking patch cords (B), and connect the cords to a digital multimeter (C).

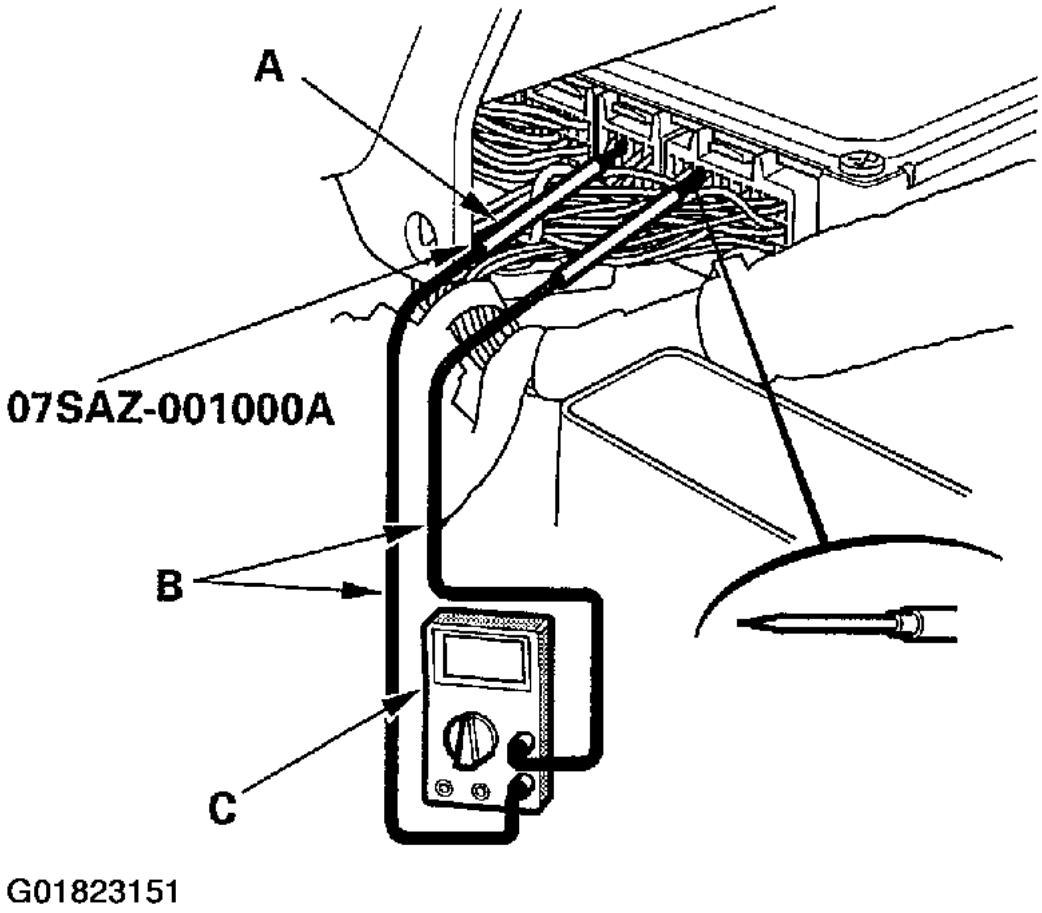

cardiagn.com

Fig. 3: Connecting The Backprobe Adapters To The Stacking Patch Cords & Connecting The Cords To A Digital Multimeter

3. Using the wire insulation as a guide for the contoured tip of the backprobe adapter, gently slide the tip into the connector from the wire side until it touches the end of the wire terminal.

COMPONENT LOCATION INDEX

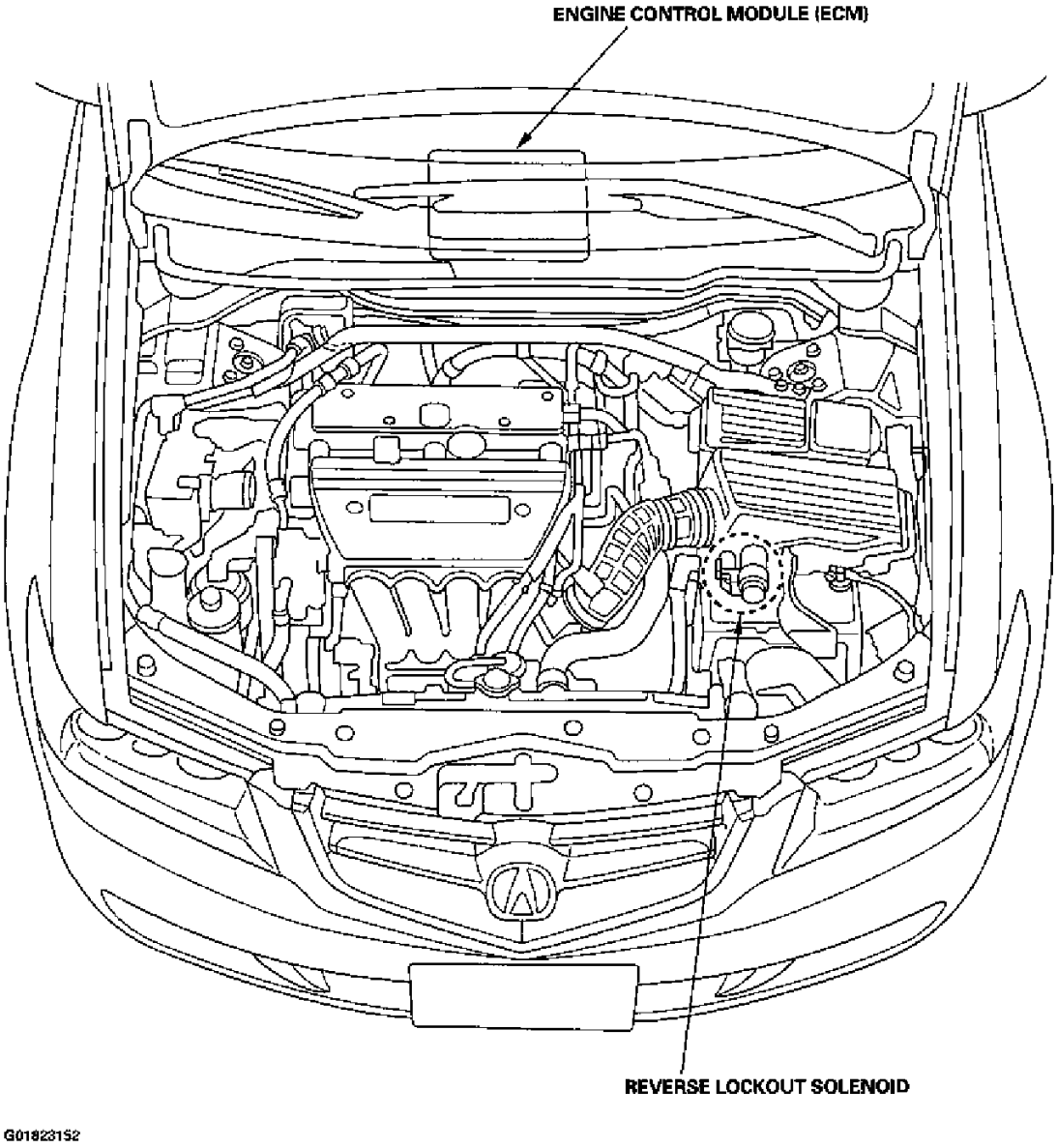

Fig. 4: Locating Reverse Lockout System Components

SYSTEM DESCRIPTION

cardiagn.com

At a vehicle speed of 12 mph (20 km/h) or more, a signal from the vehicle speed sensor (VSS) activates the reverse lockout solenoid, which pushes the select lock cam B into the locked position. As a result, the select lever cannot rotate to the reverse select position, making it impossible to engage reverse gear. At a vehicle speed of 9 mph (15 km/h) or less, the signal from the VSS is interrupted which turns off the reverse lockout solenoid. The select lock return spring pulls the select lock cam B back, enabling the select lever to move freely so that reverse gear can be selected.

Vehicle speed	Inhibitor	Reverse selection
Above 12 mph (20 km/h)	ON	Not allowed
Below 9 mph (15 km/h)	OFF	OK
IG-S/W OFF	OFF	OK

G01823153

Fig. 5: Reverse Lockout Solenoid Operation

cardiagn.com

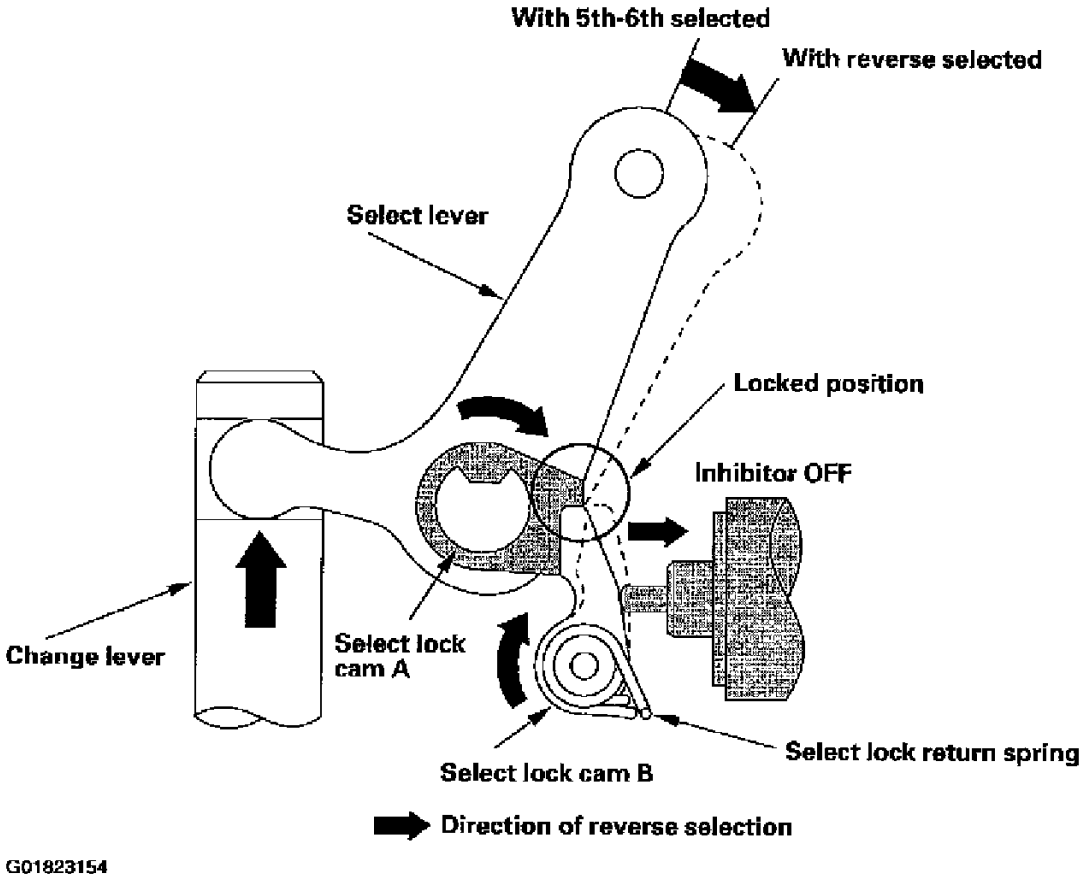

Fig. 6: Reverse Lockout Solenoid Components

CIRCUIT DIAGRAM

cardiagn.com

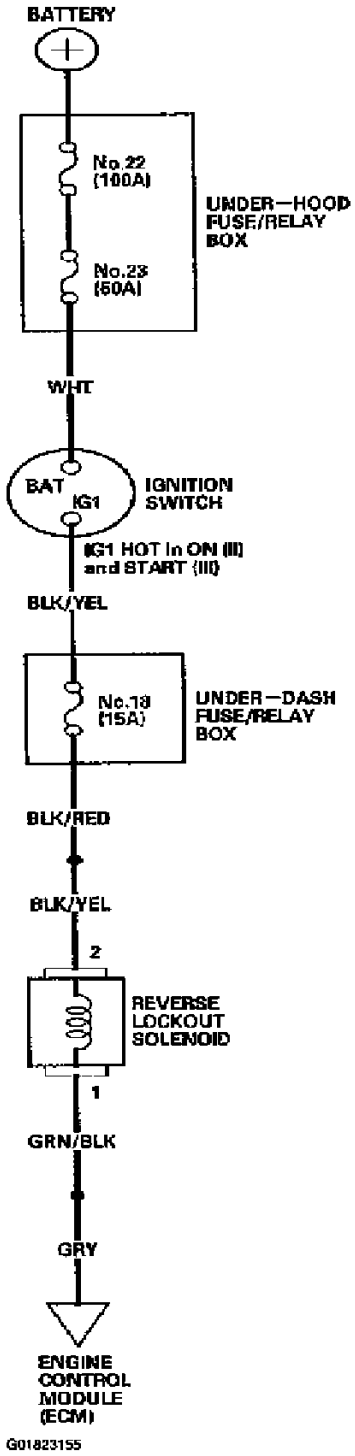

Fig. 7: Reverse Lockout System Wiring Diagram

CIRCUIT TROUBLESHOOTING

1. Check the No. 18 (15A) fuse in the under-dash fuse/relay box.

cardiagn.com

Is the fuse OK?

YES: Go to step 2.

NO: Replace the fuse, and recheck.

2. Start the engine and check the malfunction indicator lamp (MIL).

Does the MIL come on?

YES: Troubleshoot the DTC (see **GENERAL TROUBLESHOOTING INFORMATION**), and recheck.

NO: Go to step 3.

3. Turn the ignition switch OFF.
4. Shift into reverse gear.

Can the transmission be shifted into reverse gear?

YES: Go to step 5.

NO: Repair the transmission and recheck.

5. Turn the ignition switch ON (II). With the vehicle moving slowly (vehicle speed below 9 mph (15 km/h), shift the transmission into reverse gear.

Can the transmission be shifted into reverse gear?

YES: Go to step 6.

NO: Go to step 7 .

6. Raise the front wheels and block the rear wheels, run the vehicle to a speed above 12 mph (20 km/h).

Can the transmission be shifted into reverse gear?

YES: Go to step 7.

NO: Intermittent failure, system is OK at this time.

7. Turn the ignition switch OFF.
8. Disconnect the reverse lockout solenoid 2P connector.
9. Turn the ignition switch ON (II).
10. Measure the voltage between the reverse lockout solenoid 2P connector terminal No. 2 and body ground.

Is there battery voltage?

YES: Go to step 11.

NO: Check for loose or poor connections at connector. If the connections are OK, repair open in the wire between No. 18 (15A) fuse in the underdash fuse/relay box and the reverse lockout solenoid.

cardiagn.com

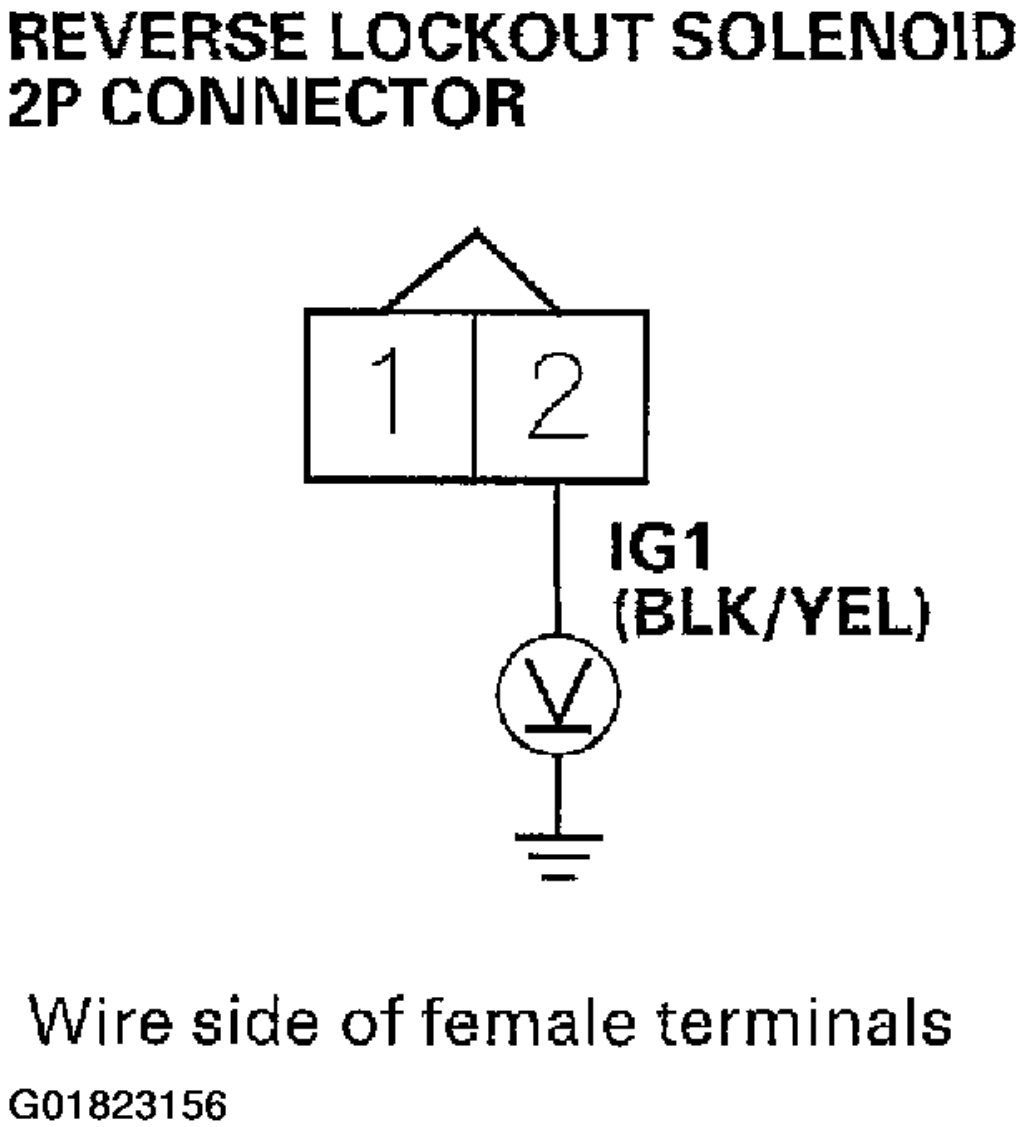

Fig. 8: Measuring Voltage Between The Reverse Lockout Solenoid 2P Connector Terminal No. 2 & Body Ground

11. Turn the ignition switch OFF.
12. Remove the reverse lockout solenoid (see **REVERSE LOCKOUT SOLENOID DISASSEMBLY/REASSEMBLY**).
13. Connect the No. 2 terminal of the reverse lockout solenoid to the battery positive terminal, and connect the No. 1 to the battery negative terminal. Check that the reverse lockout solenoid operates.

    Does the reverse lockout solenoid operate properly?

cardiagn.com

YES: Go to step 14.

NO: Replace the reverse lockout solenoid.

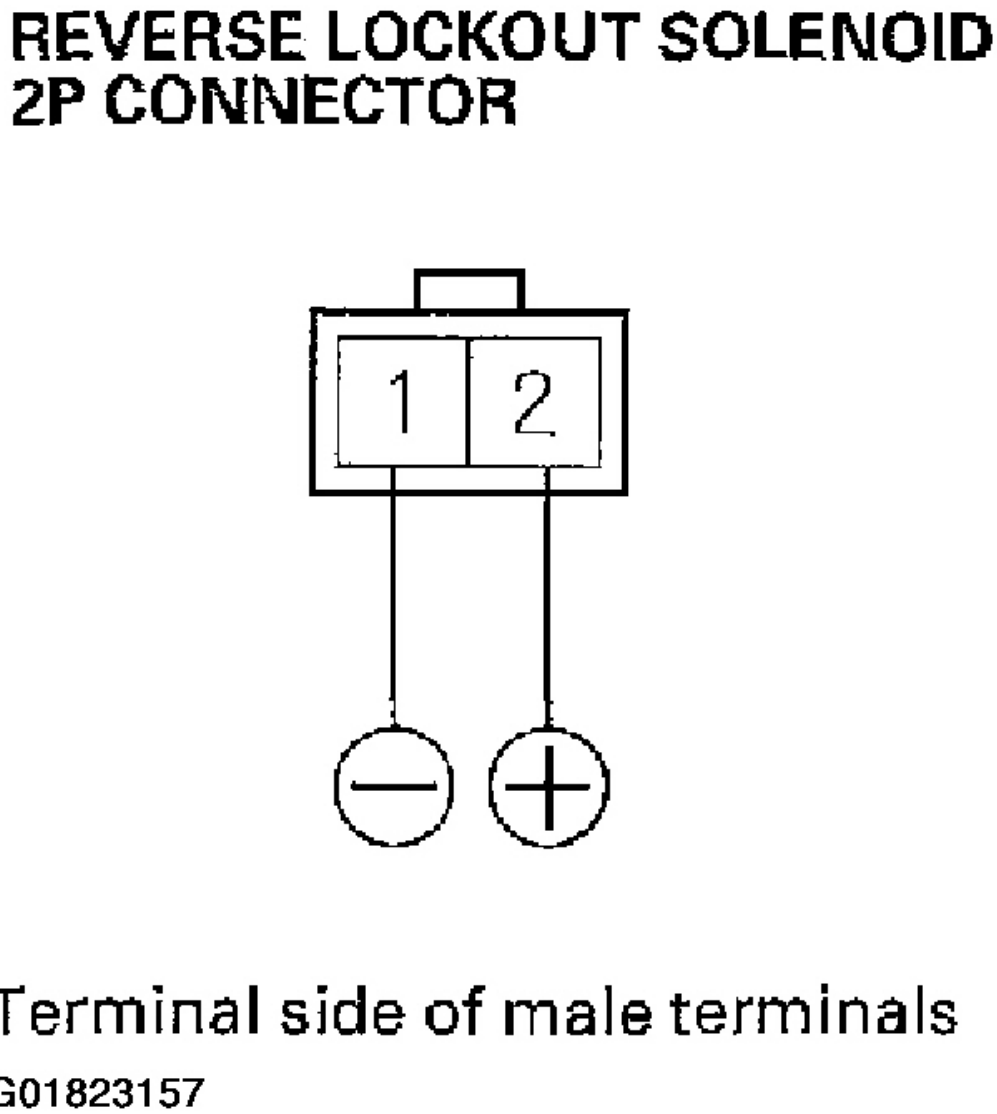

Fig. 9: Connecting The No. 2 Terminal Of The Reverse Lockout Solenoid To The Battery Positive Terminal & The No. 1 To The Battery Negative Terminal

14. Reinstall the reverse lockout solenoid and reconnect the solenoid 2P connector.
15. Turn the ignition switch ON (II).
16. Measure the voltage between ECM connector B2 and body ground.

cardiagn.com

Is there battery voltage?

YES: Check for loose connectors at ECM connector B (31P). If necessary, update the ECM if it does not have the latest software, or substitute a known-good ECM, then recheck (see **HOW TO SUBSTITUTE THE ECM/PCM**). If the symptom/indication goes away with a known-good ECM, replace the original ECM.

NO: Repair open in the wire between reverse lockout solenoid and ECM (B2).

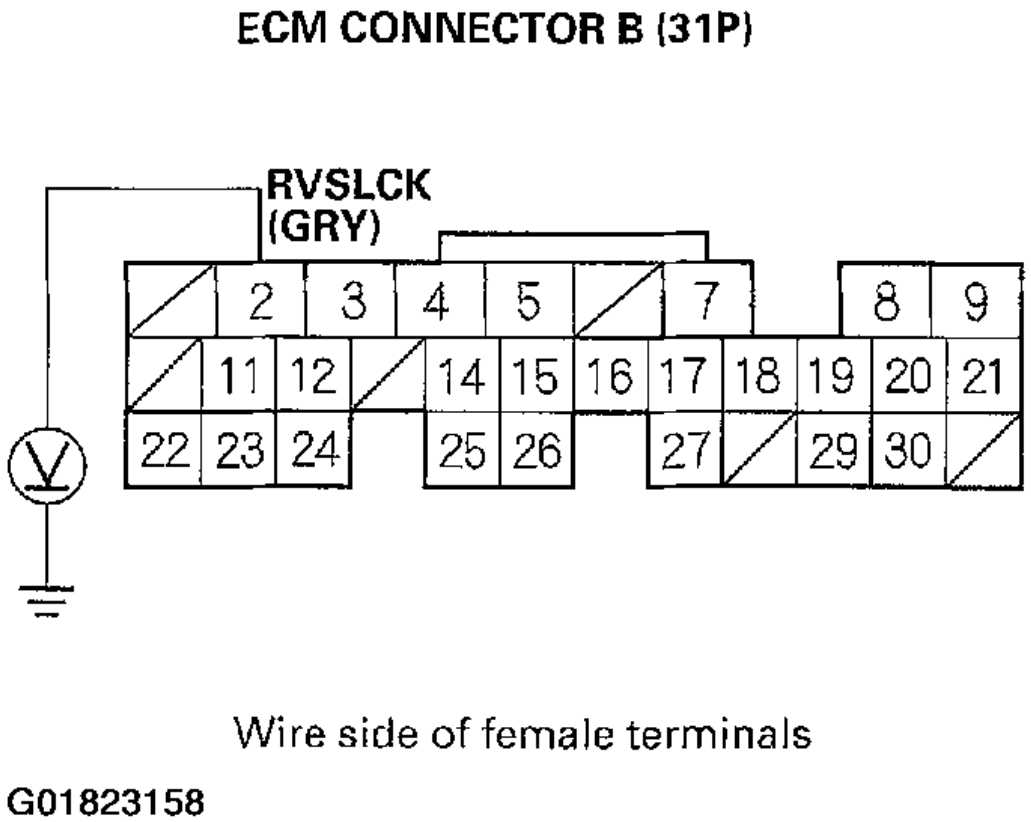

Fig. 10: Measuring The Voltage Between ECM Connector B2 & Body Ground

REVERSE LOCKOUT SOLENOID TEST

1. Remove the reverse lockout solenoid (see **REVERSE LOCKOUT SOLENOID DISASSEMBLY/REASSEMBLY**).
2. Connect battery positive terminal to the No. 2 terminal of the reverse lockout solenoid 2P connector, and connect the battery negative terminal to the No. 1 terminal.

cardiagn.com

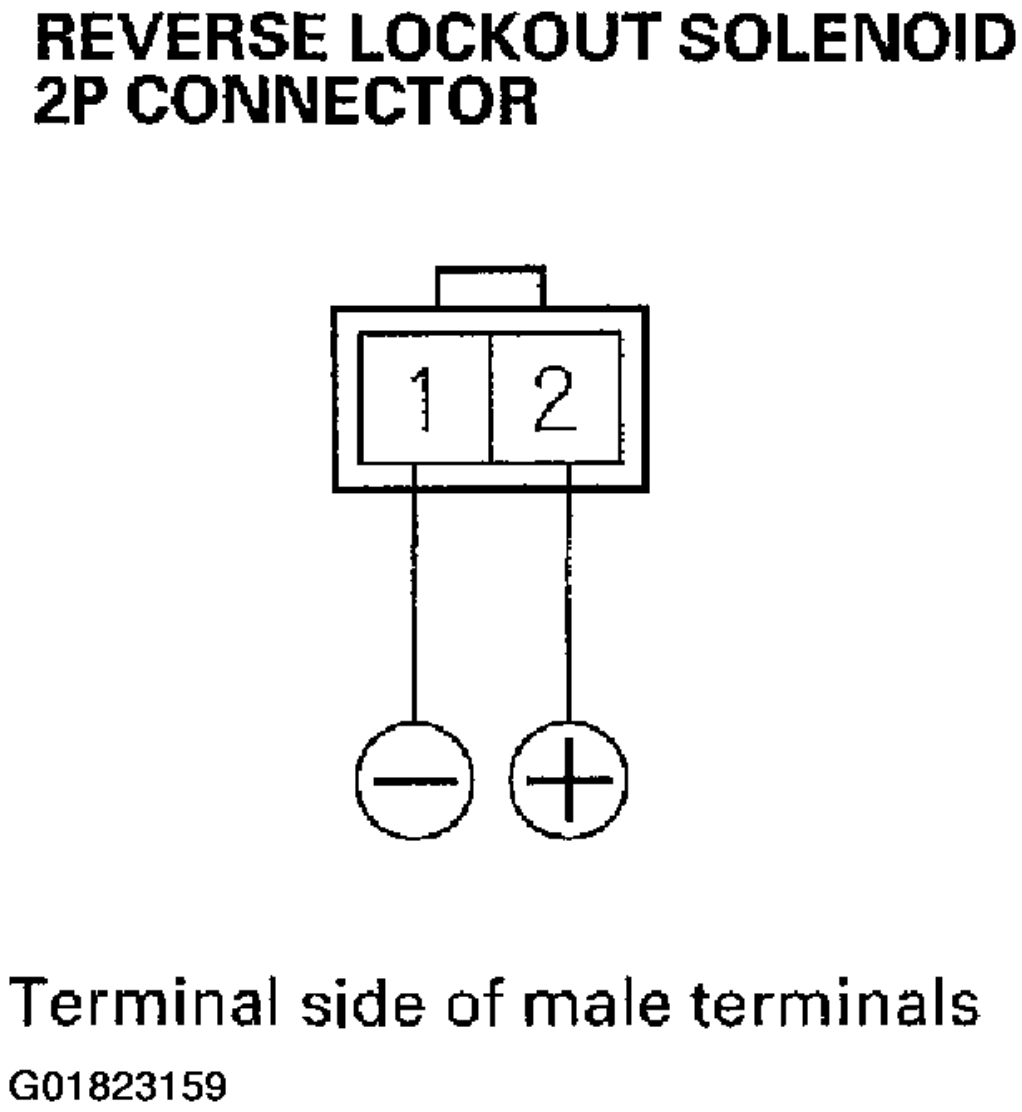

Fig. 11: Connecting The No. 2 Terminal Of The Reverse Lockout Solenoid To The Battery Positive Terminal & The No. 1 To The Battery Negative Terminal

3. Check that the reverse lockout solenoid operates.
4. If the reverse lockout solenoid does not work, replace it.

REVERSE LOCKOUT SOLENOID DISASSEMBLY/REASSEMBLY

1. Make sure you have the anti-theft codes for the radio and the navigation system, then write down the frequencies for the radio's preset buttons. Disconnect the negative (-) cable first, then the positive (+)

cardiagn.com

cable from the battery. Remove the battery.

2. Remove the air cleaner housing (see **AIR CLEANER REMOVAL/INSTALLATION**).
3. Remove the battery base (see step 6 of **ENGINE REMOVAL**).
4. Carefully remove the shift cable, select cable, and cable bracket together so as not to bend the cables (see step 6 of **TRANSMISSION REMOVAL**).
5. Disconnect the countershaft speed sensor connector, back-up light switch connector, and reverse lockout solenoid connector (see step 7 of **TRANSMISSION REMOVAL**).
6. Remove the bolts (A) and reverse lockout solenoid (B).

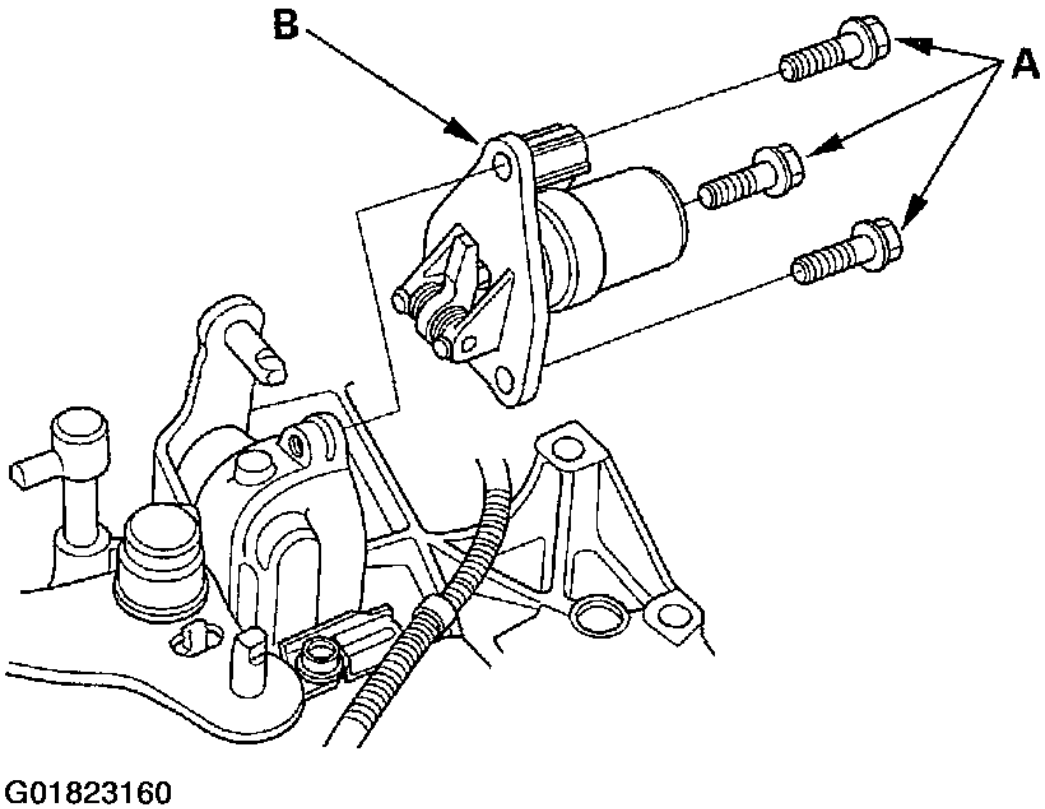

Fig. 12: Removing The Bolts & Reverse Lockout Solenoid

7. Remove the roller (A), the select lock return spring (C), and the select lock cam B.

cardiagn.com

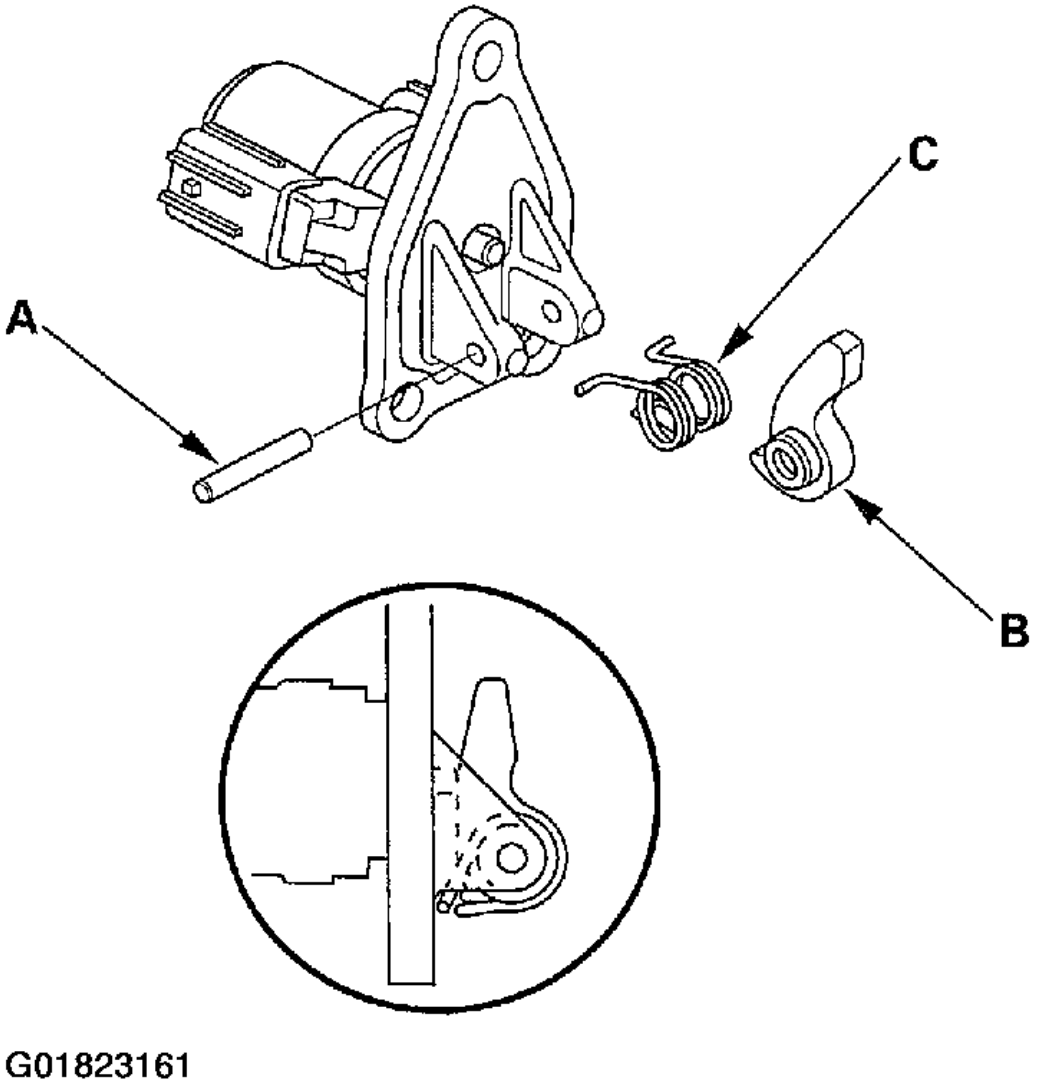

Fig. 13: Removing The Roller, The Select Lock Return Spring & The Select Lock Cam B

8. Install in the reverse order of removal.
9. Remove any dirt and oil from the sealing surface. Apply liquid gasket (P/N 08718-0001) to the sealing surface.

NOTE: **If 4 minutes have passed after applying liquid gasket, reapply it and assemble the housings. Allow it to cure at least 20 minutes after assembly before filling the transmission with oil.**

10. Install the reverse lockout solenoid.

cardiagn.com

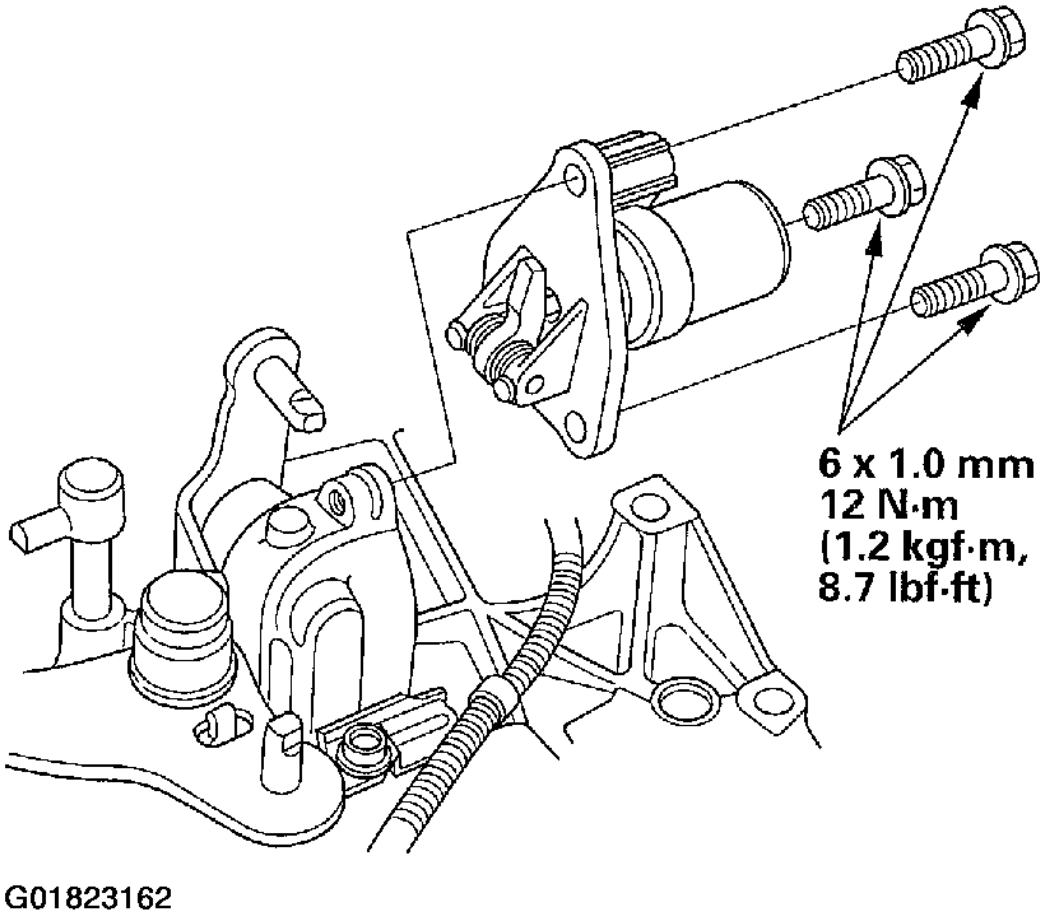

Fig. 14: Installing The Reverse Lockout Solenoid

11. Connect the reverse lockout solenoid connector, back-up light switch connector, and countershaft speed sensor connector (see step 32 of **TRANSMISSION INSTALLATION**).
12. Install the cable bracket, select cable, and shift cable (see step 33 of **TRANSMISSION INSTALLATION**).
13. Install the battery base (see step 43 of **ENGINE INSTALLATION**).
14. Install the air cleaner housing (see **AIR CLEANER REMOVAL/INSTALLATION**).
15. Install the battery. Connect the positive (+) cable first, then the negative (-) cable to the battery.
16. Enter the anti-theft codes for the radio and navigation system, then enter the customer's radio station presets.

MANUAL TRANSMISSION

TRANSMISSION FLUID INSPECTION & REPLACEMENT

cardiagn.com

1. Park the vehicle on level ground, and turn the engine OFF.
2. Remove the splash shield (see step 18 of **TRANSMISSION REMOVAL**).
3. Remove the oil filler plug (A) and washer (B), check the condition of the fluid, and make sure it is at the proper level (C).

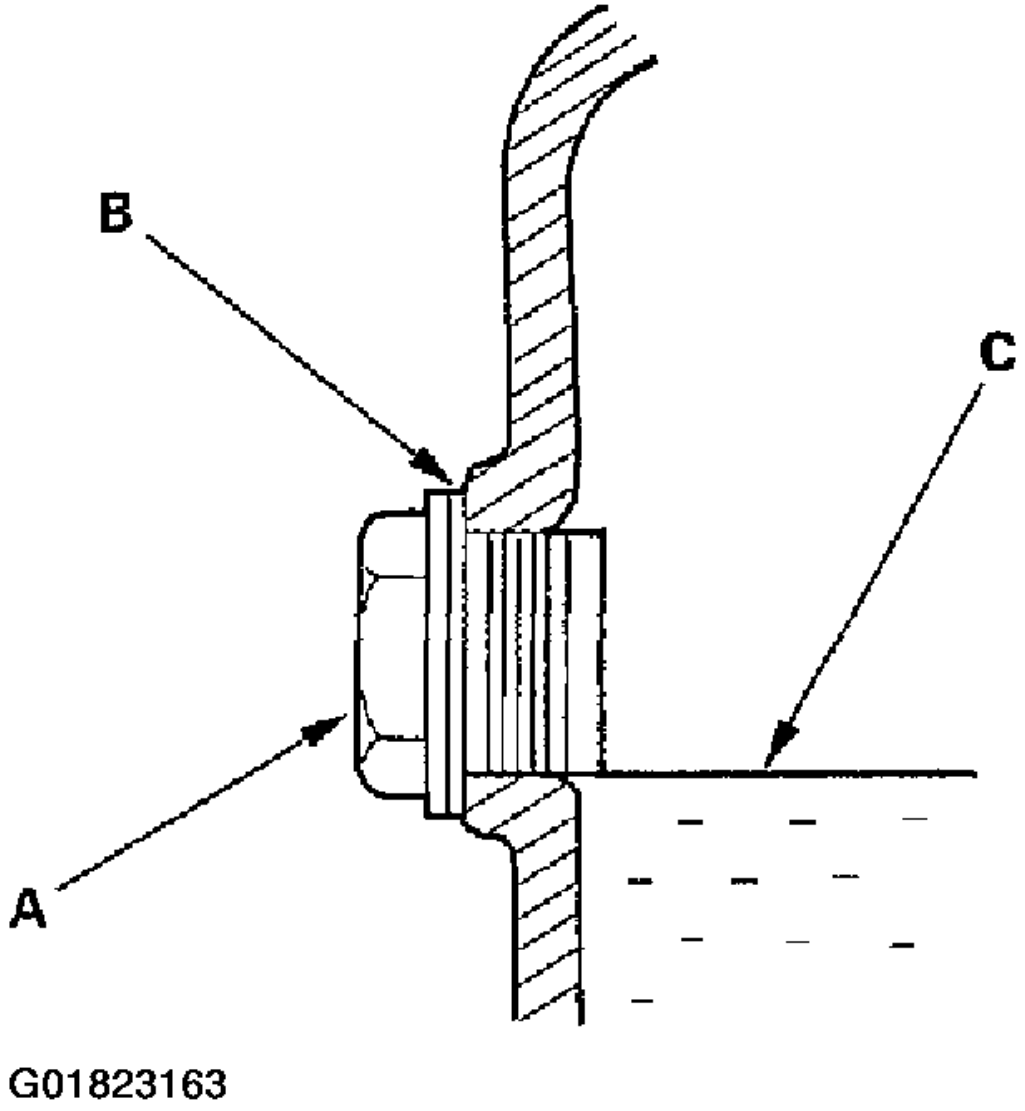

Fig. 15: Removing The Oil Filler Plug And Washer & Checking Level

4. If the fluid is dirty, remove the drain plug (D) and drain it.

cardiagn.com

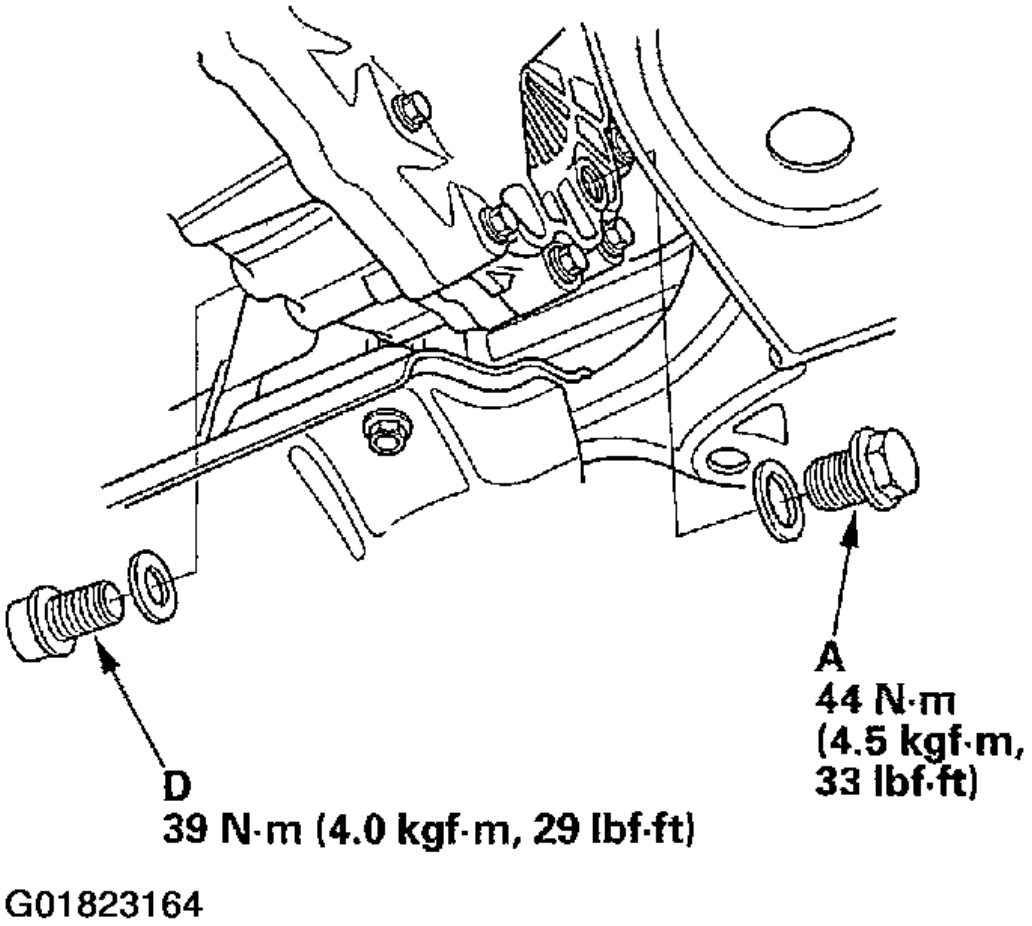

Fig. 16: Removing The Drain Plug & Draining Transmission Fluid

5. Install the drain plug with a new drain plug washer (P/N 90403-RAR-M000), and refill the transmission fluid to the proper level.

   Fluid Capacity:

   2.0 L (2.1 US qt) at fluid change

   2.2 L (2.3 US qt) at overhaul

   Always use Honda Manual Transmission Fluid (MTF). Using motor oil can cause stiffer shifting because it does not contain the proper additives.

6. Install the oil filler plug with a new filler plug washer (P/N 90404-RAR-M000).
7. Install the splash shield (see step 25 of **TRANSMISSION INSTALLATION**).

BACK-UP LIGHT SWITCH TEST

cardiagn.com

1. Disconnect the back-up light switch connector.

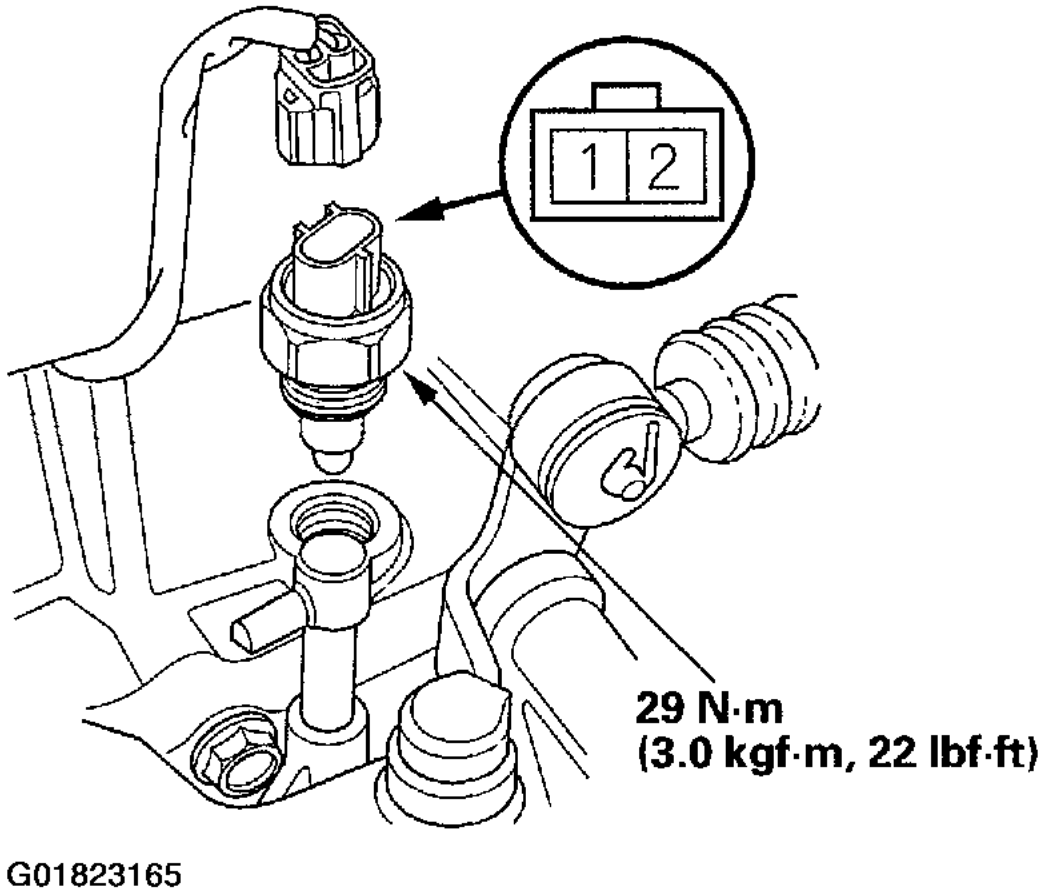

Fig. 17: Disconnecting The Back-Up Light Switch Connector

2. Check for continuity between the No. 1 and No. 2 terminals of the back-up light switch. There should be continuity when the shift lever is in reverse.
3. If necessary, replace the back-up light switch. Apply liquid gasket (P/N 08718-001) (A) to the threads of the switch, and a 2 mm (0.079 in.) bead around the contact surface. Install the back-up light switch on the clutch housing.

NOTE: If 4 minutes have passed after applying liquid gasket, reapply it.

cardiagn.com

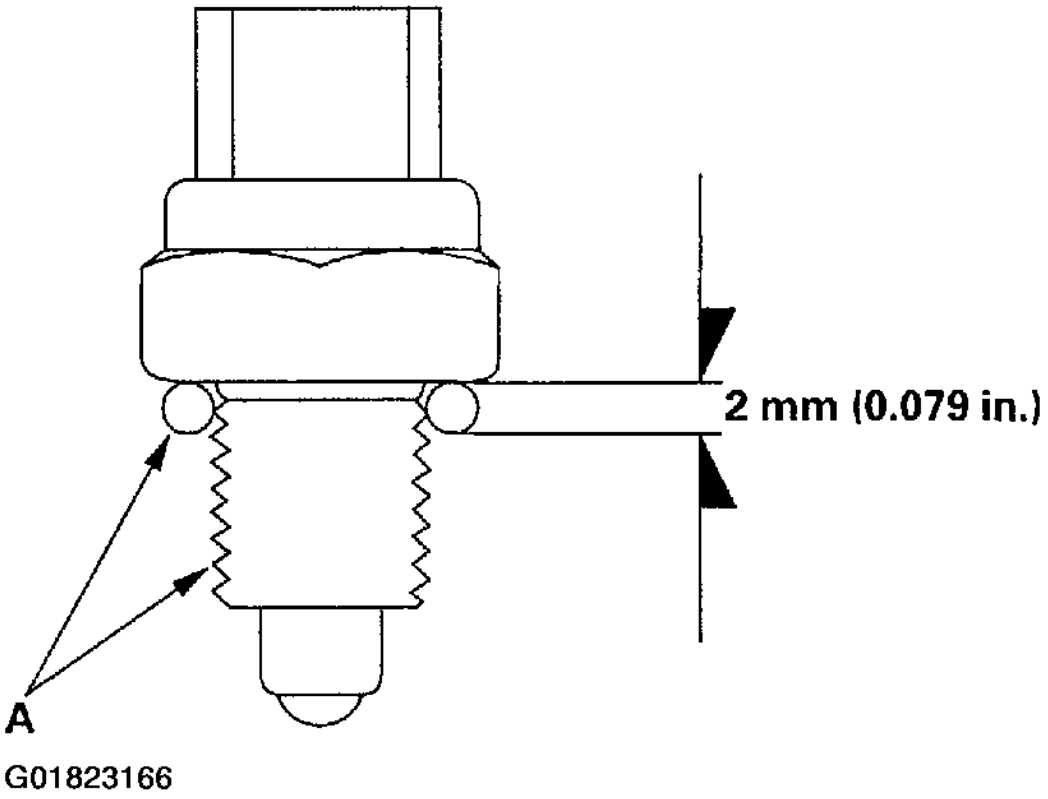

Fig. 18: Applying Liquid Gasket To The Threads Of The Switch

TRANSMISSION REMOVAL & INSTALLATION

See **TRANSMISSION REMOVAL & INSTALLATION** .

TRANSMISSION DISASSEMBLY

Exploded View - Clutch Housing

cardiagn.com

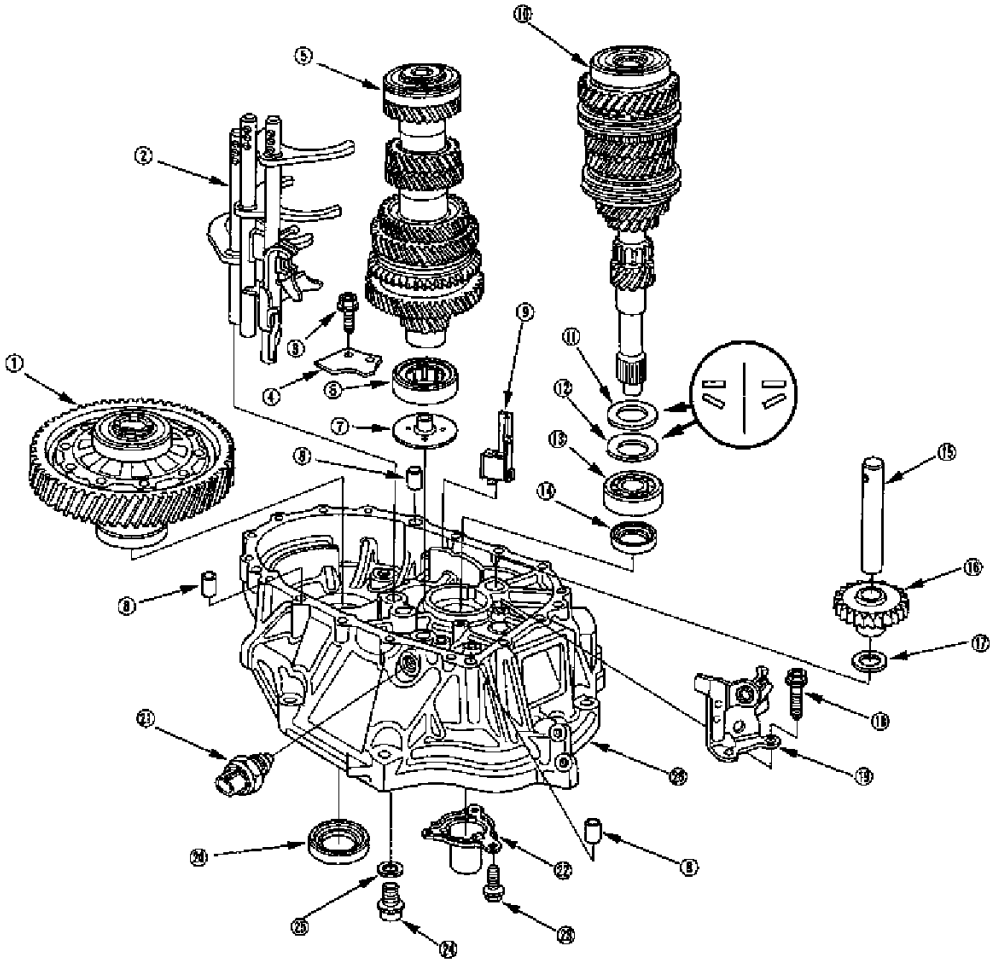

① DIFFERENTIAL ASSEMBLY
② SHIFT FORK ASSEMBLY
③ 8 mm FLANGE BOLT
12.5 N·m (1.25 kgf·m, 9.0 lbf·ft)
④ BEARING SET PLATE
⑤ COUNTERSHAFT ASSEMBLY
⑥ NEEDLE BEARING
⑦ OIL GUIDE PLATE C
⑧ 14 x 20 mm DOWEL PIN
⑨ MAGNET
⑩ MAINSHAFT ASSEMBLY
⑪ 28 mm WASHER
⑫ 28 mm SPRING WASHER
⑬ BALL BEARING
⑭ 28 x 43 x 7 mm OIL SEAL
Replace.
⑮ REVERSE GEAR SHAFT
⑯ REVERSE IDLER GEAR
⑰ 20 x 36 x 2 mm THRUST WASHER
⑱ 6 mm SPECIAL BOLT
15 N·m (1.5 kgf·m, 11 lbf·ft)
⑲ REVERSE SHIFT FORK ASSEMBLY
⑳ 35 x 58 x 8 mm OIL SEAL
Replace.
㉑ BACK-UP LIGHT SWITCH
29 N·m (3.0 kgf·m, 22 lbf·ft)
㉒ RELEASE BEARING GUIDE
㉓ 6 mm FLANGE BOLT
15 N·m (1.5 kgf·m, 10.8 lbf·ft)
㉔ DRAIN PLUG
39 N·m (4.0 kgf·m, 29 lbf·ft)
㉕ DRAIN PLUG WASHER
Replace.
㉖ CLUTCH HOUSING

G01823226

Fig. 19: Exploded View Of Clutch Housing Components

Exploded View - Transmission Housing

cardiagn.com

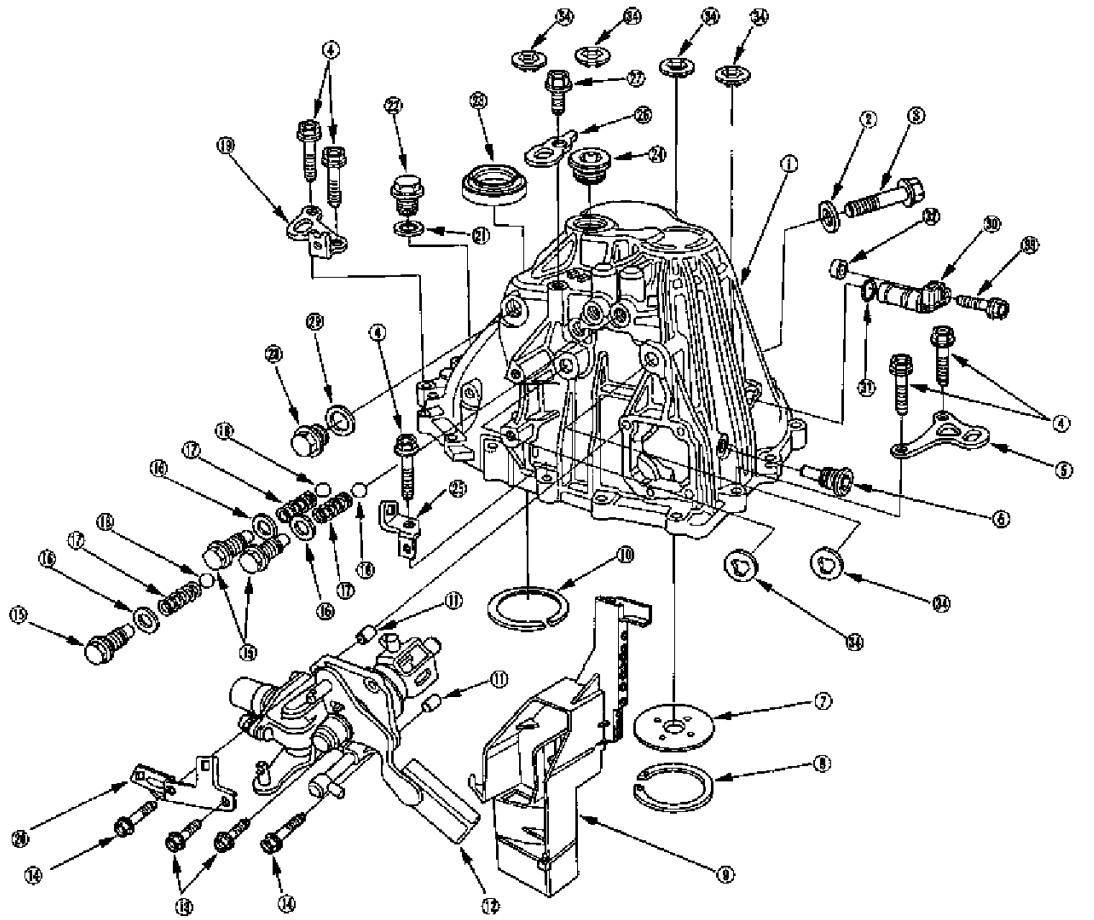

① TRANSMISSION HOUSING
② 10 mm WASHER
Replace.
③ 10 mm FLANGE BOLT
44 N·m (4.5 kgf·m, 33 lbf·ft)
④ 8 mm SPECIAL BOLT (LEFTHAND THREAD)
24 N·m (2.4 kgf·m, 17.4 lbf·ft)
⑤ TRANSMISSION HANGER A
⑥ INTERLOCK BOLT
39 N·m (4.0 kgf·m, 29 lbf·ft)
⑦ OIL GUIDE PLATE M
⑧ 72 mm SHIM
⑨ OIL GUTTER PLATE
⑩ 80 mm SHIM
⑪ 8 x 14 mm DOWEL PIN
⑫ CHANGE LEVER ASSEMBLY
⑬ 6 x 30 mm FLANGE BOLT
12 N·m (1.2 kgf·m, 8.7 lbf·ft)
⑭ 6 x 20 mm FLANGE BOLT
12 N·m (1.2 kgf·m, 8.7 lbf·ft)
⑮ DETENT BOLT
22 N·m (2.2 kgf·m, 16 lbf·ft)
⑯ 12 mm WASHER
Replace.
⑰ SPRING
⑱ STEEL BALL
⑲ TRANSMISSION HANGER B
⑳ HARNESS BRACKET A
㉑ FILLER PLUG WASHER
Replace.
㉒ FILLER PLUG
44 N·m (4.5 kgf·m, 33 lbf·ft)
㉓ 40 x 56 x 8 mm OIL SEAL
Replace.
㉔ 32 mm SEALING CAP
34 N·m (3.5 kgf·m, 25 lbf·ft)
㉕ HARNESS BRACKET B
㉖ TRANSMISSION HANGER
㉗ 10 mm FLANGE BOLT
44 N·m (4.5 kgf·m, 33 lbf·ft)
㉘ 20 mm BOLT
44 N·m (4.5 kgf·m, 33 lbf·ft)
㉙ 20 mm WASHER
Replace.
㉚ COUNTERSHAFT SPEED SENSOR
㉛ O-RING
Replace.
㉜ PLAIN WASHER
㉝ 6 mm FLANGE BOLT
12 N·m (1.2 kgf·m, 8.7 lbf·ft)
㉞ MOUNT BRACKET COLLAR

Service Precaution: Transmission housing 8 mm bolts are lefthand thread.

G01823227

Fig. 20: Exploded View Of Transmission Housing Components

NOTE: **Place the clutch housing on two pieces of wood thick enough to keep the mainshaft from hitting the workbench.**

1. Remove the detent bolts (A), springs, steel balls and back-up light switch (B).

cardiagn.com

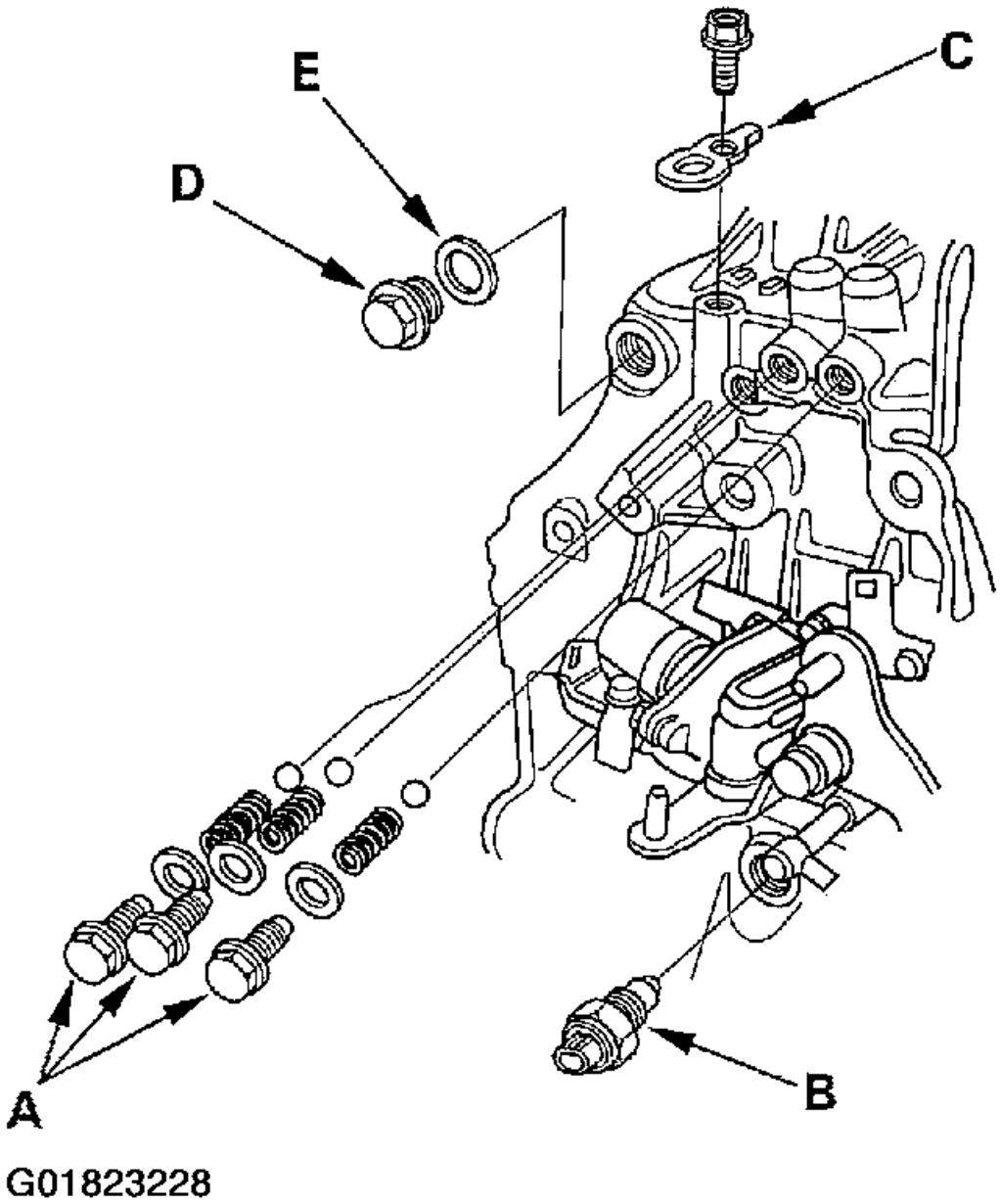

Fig. 21: Removing The Detent Bolts, Springs, Steel Balls & Back-Up Light

2. Remove the transmission hanger (C), 20 mm bolt (D), and 20 mm washer (E)
3. Remove the interlock bolt (B), change lever assembly (C), 8 x 14 mm dowel pins (D), and harness bracket A.

cardiagn.com

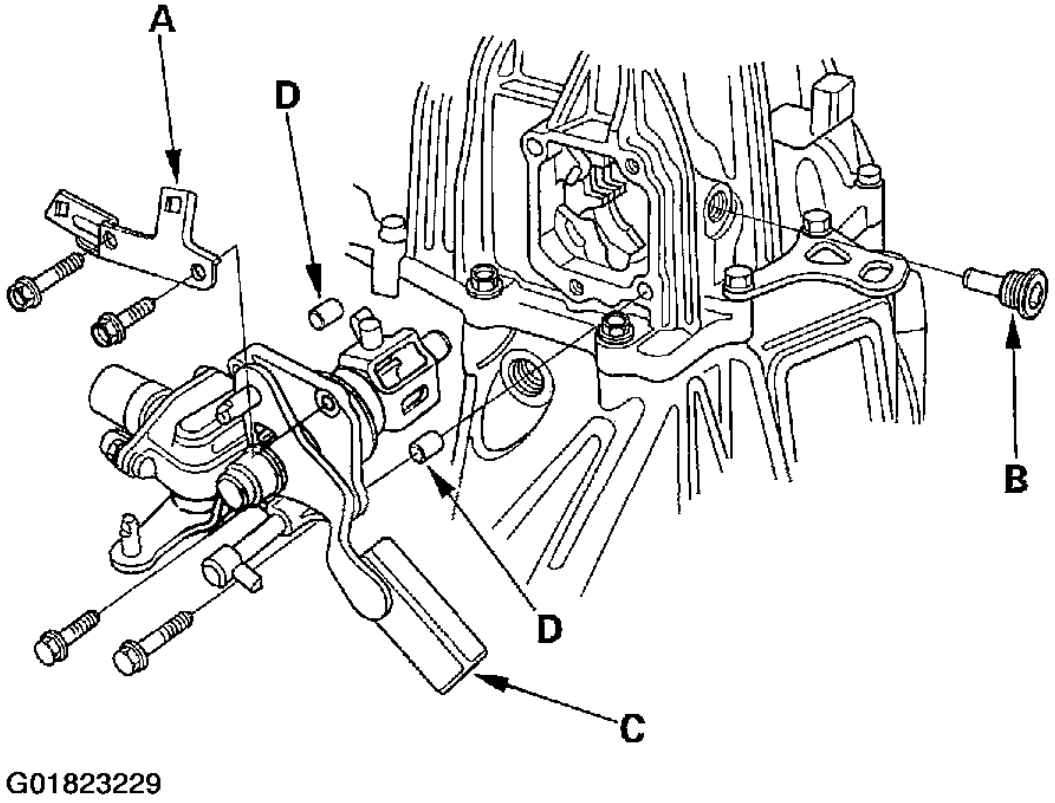

Fig. 22: Removing The Interlock Bolt, Change Lever Assembly, 8 X 14 Mm Dowel Pins & Harness Bracket A

4. Remove the filler plug (A), 10 mm flange bolt (B), mount bracket collar (C).

cardiagn.com

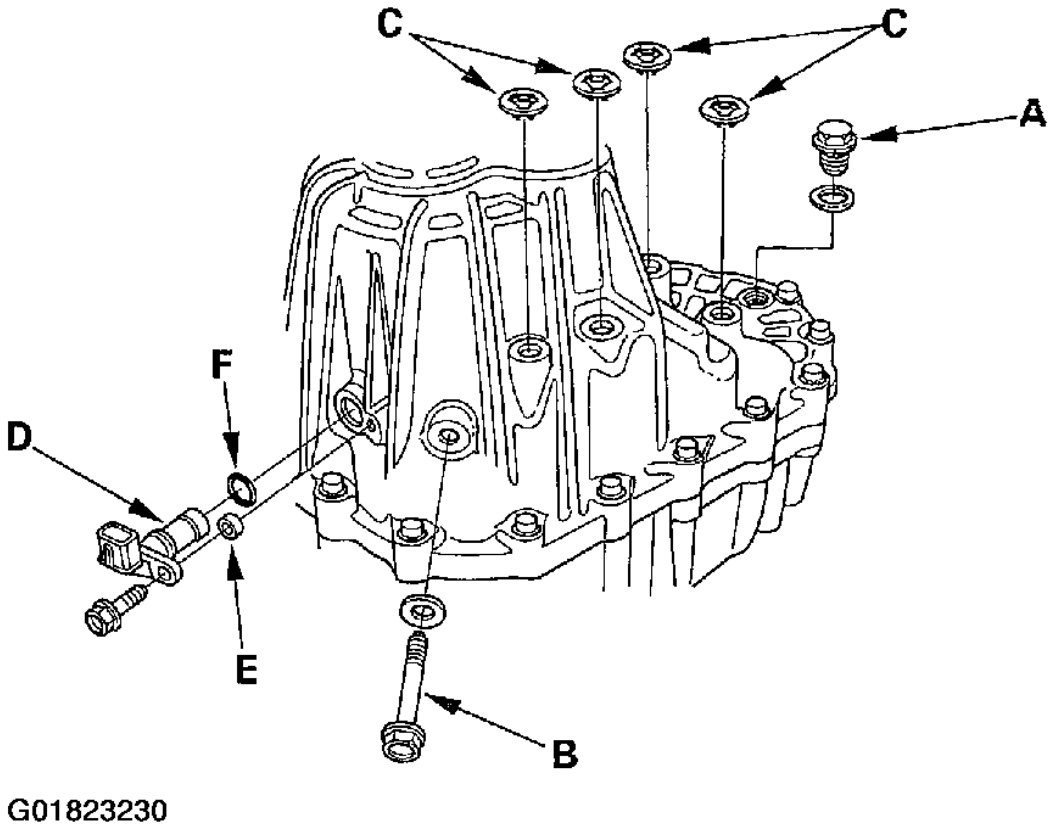

Fig. 23: Removing The Filler Plug, 10 Mm Flange Bolt, Mount Bracket Collar

5. Remove the countershaft speed sensor (D), plain washer (E), and O-ring (F).
6. Remove the 8 mm special bolts (left-hand threads and black color) in a crisscross pattern in several steps.
7. Remove transmission hanger A, transmission hanger B, harness bracket B (C), and mount bracket collar (D).

NOTE: All 8 mm transmission housing bolts are left-hand thread.

cardiagn.com

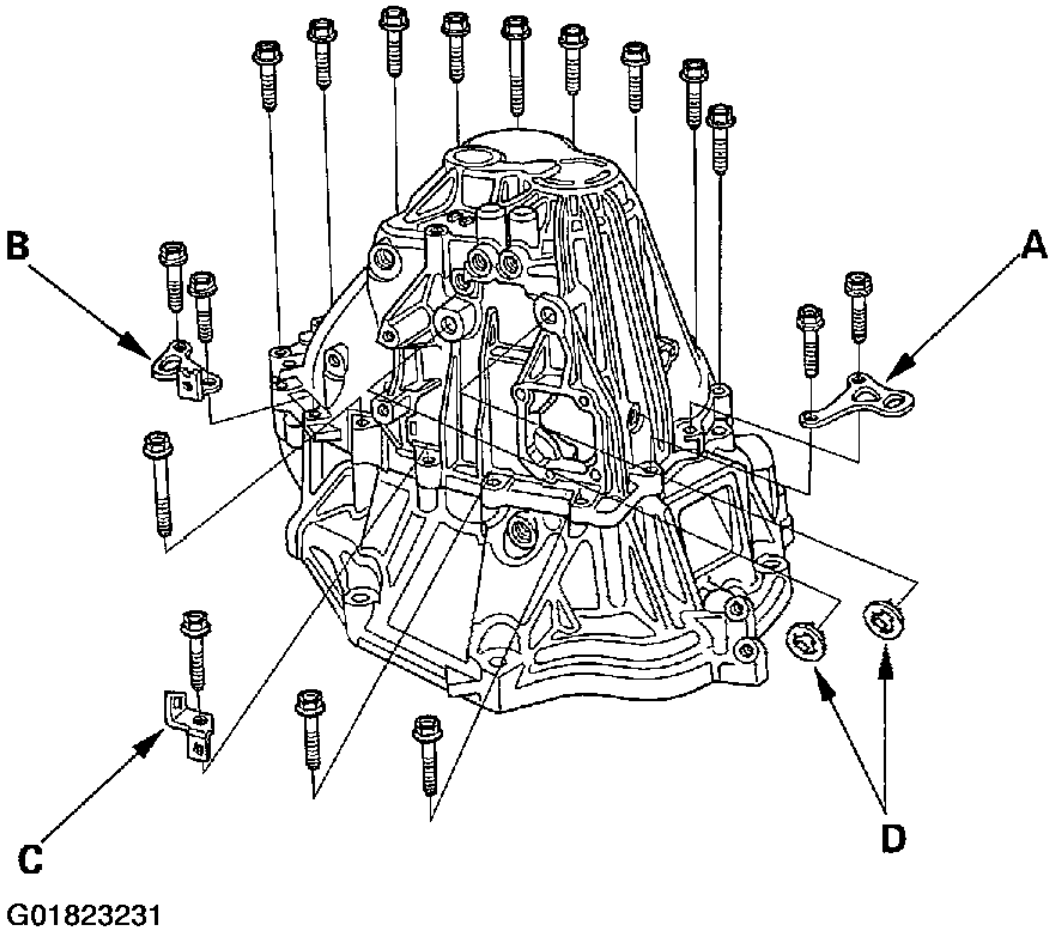

Fig. 24: Removing The 8 mm Special Left-Hand Thread Bolts, Transmission Hanger A, Transmission Hanger B, Harness Bracket B & Mount Bracket Collar

8. Remove the 32 mm sealing cap (A).

cardiagn.com

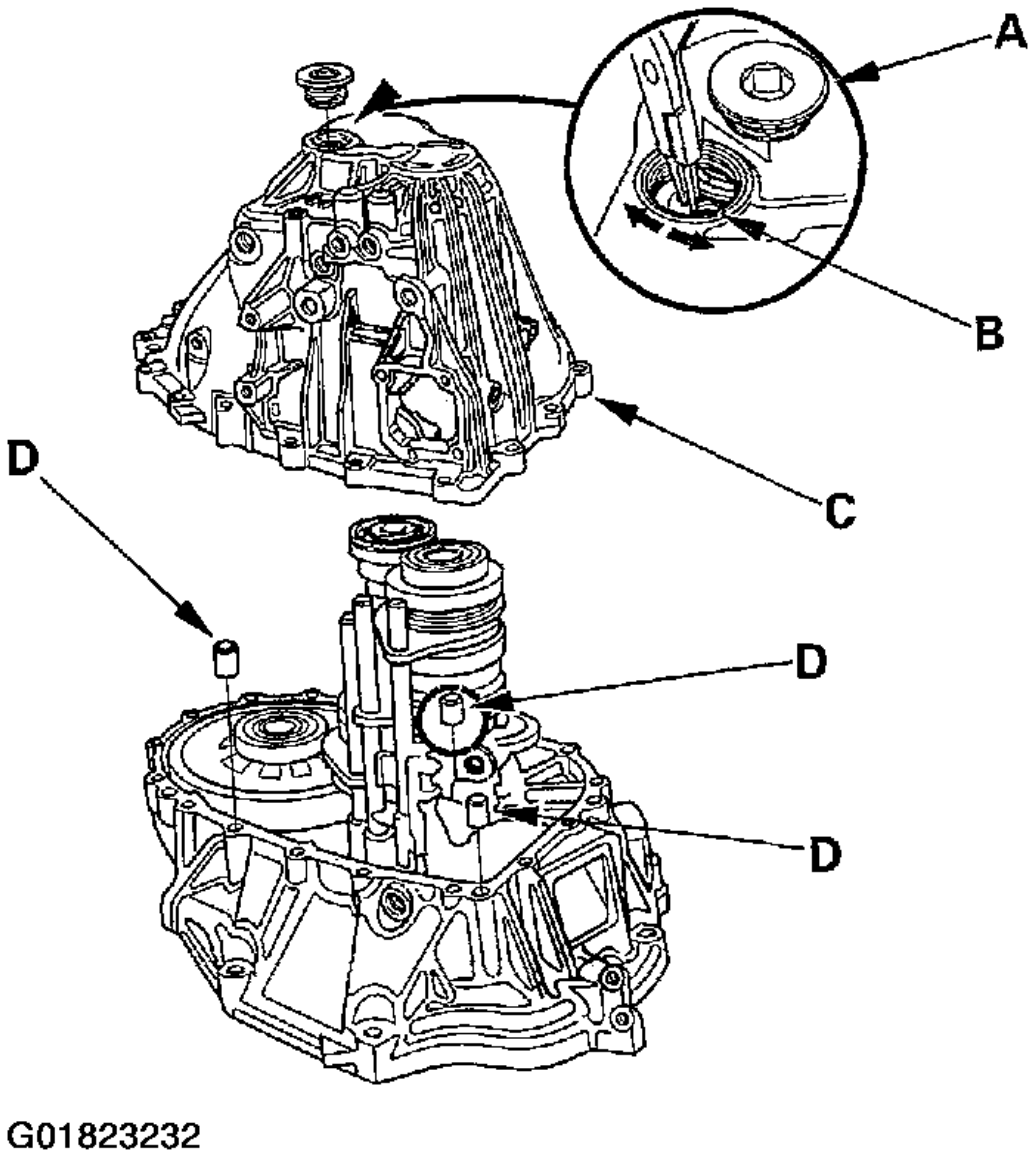

Fig. 25: Removing The 32 mm Sealing Cap

9. Expand the 72 mm snap ring (B) on the countershaft ball bearing, and remove if from the groove with snap ring pliers.
10. Remove the transmission housing (C) and 14 x 20 mm dowel pins (D).
11. Remove the reverse idler gear (A), reverse gear shaft (B), and 20 x 36 x 2 mm thrust washer (C).

cardiagn.com

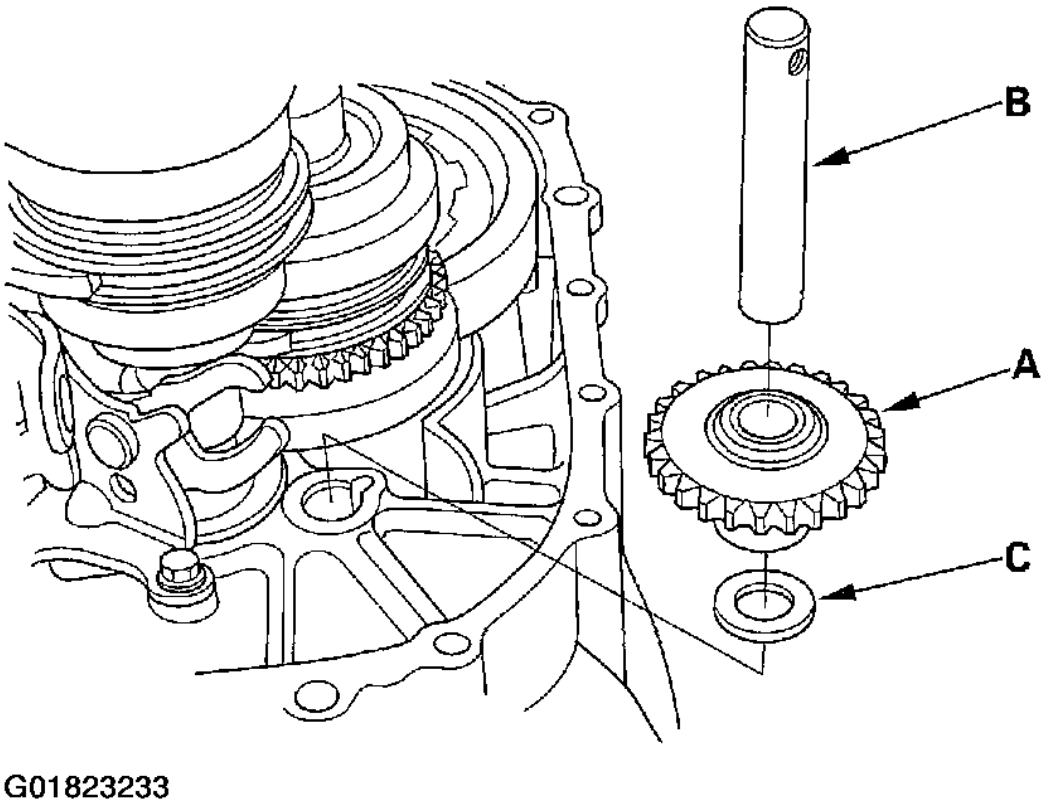

Fig. 26: Removing The Reverse Idler Gear, Reverse Gear Shaft & 20 X 36 X 2 mm Thrust Washer

12. Remove the reverse shift fork.

cardiagn.com

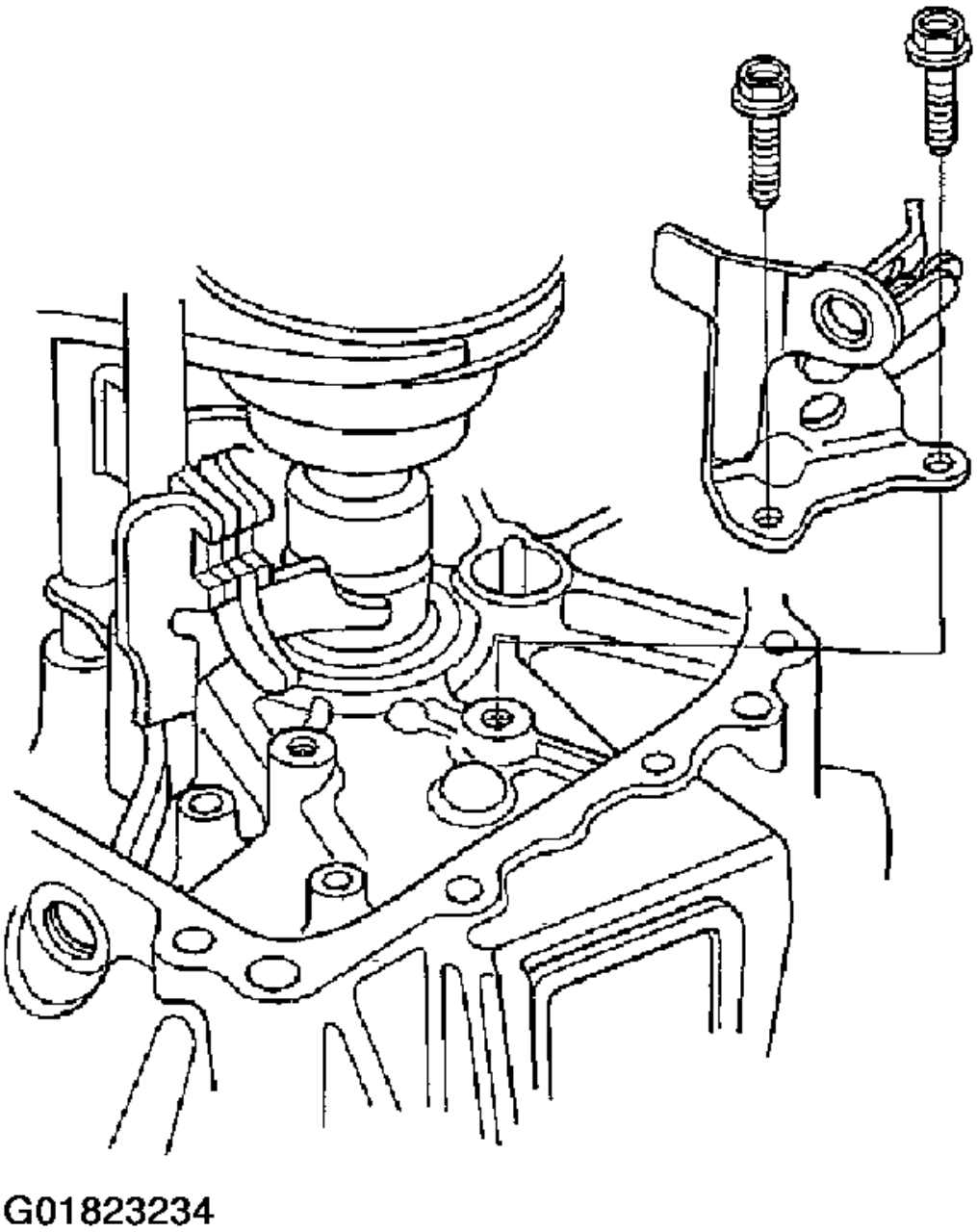

Fig. 27: Removing The Reverse Shift Fork

13. Apply tape to the mainshaft splines to protect the seal, then remove the mainshaft assembly (A) and countershaft assembly (B) with the shift forks (C) from the clutch housing (D).

cardiagn.com

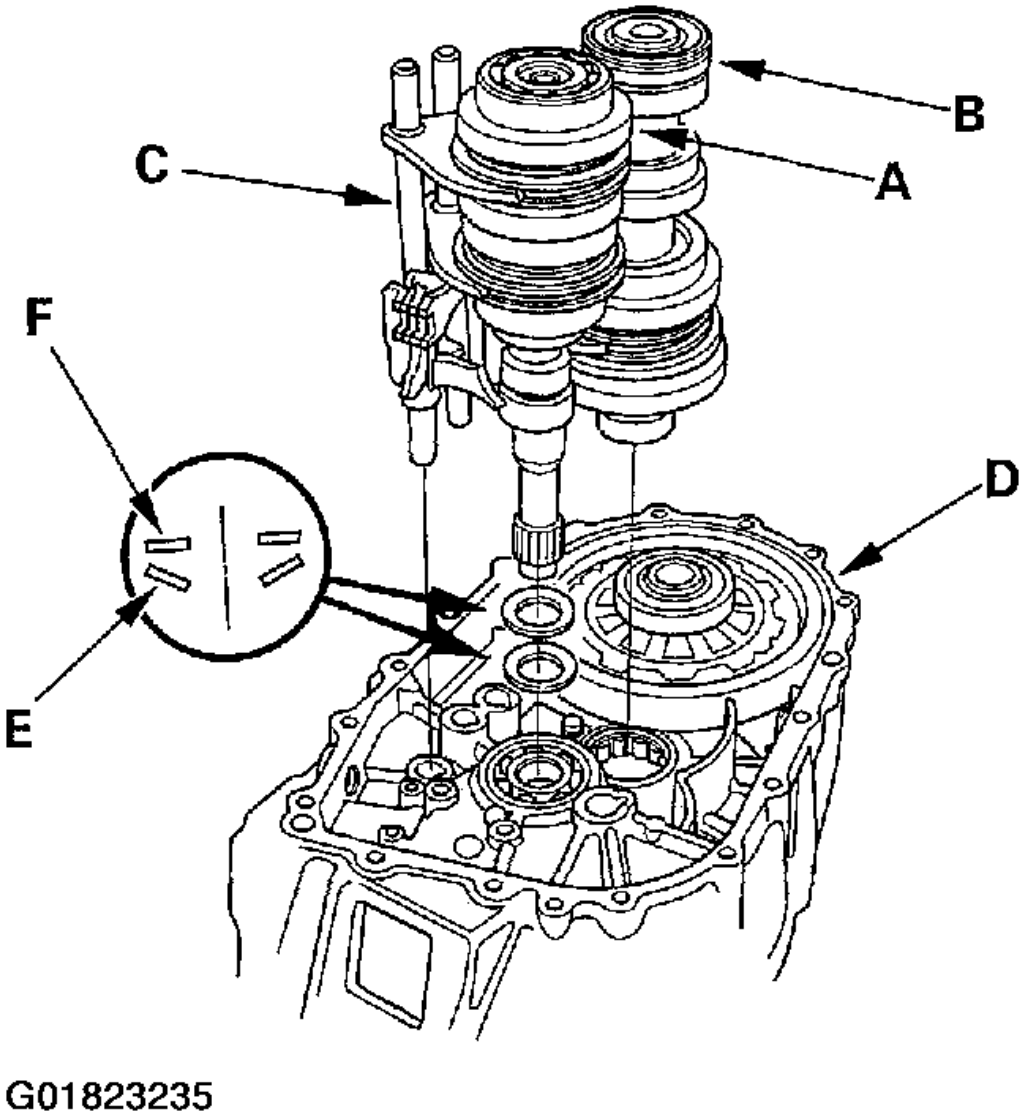

Fig. 28: Removing The Mainshaft Assembly & Countershaft Assembly With The Shift Forks From The Clutch Housing

14. Remove the 28 mm spring washer (E) and 28 mm washer (F).
15. Remove the differential assembly (A) and magnet (B).

cardiagn.com

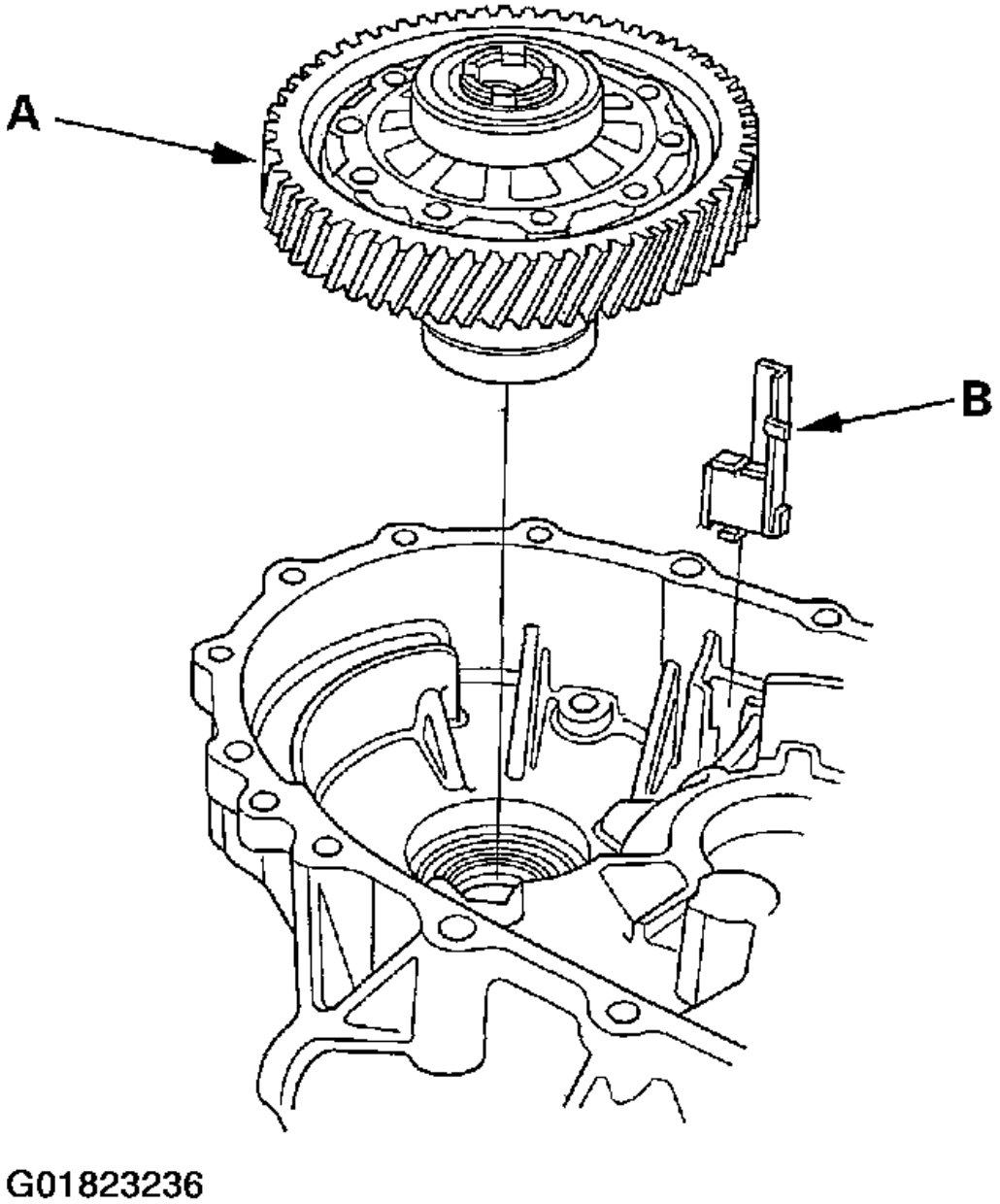

Fig. 29: Removing The Differential Assembly & Magnet

16. Remove the oil gutter plate (A), 72 mm shim (B), and oil guide plate M.

cardiagn.com

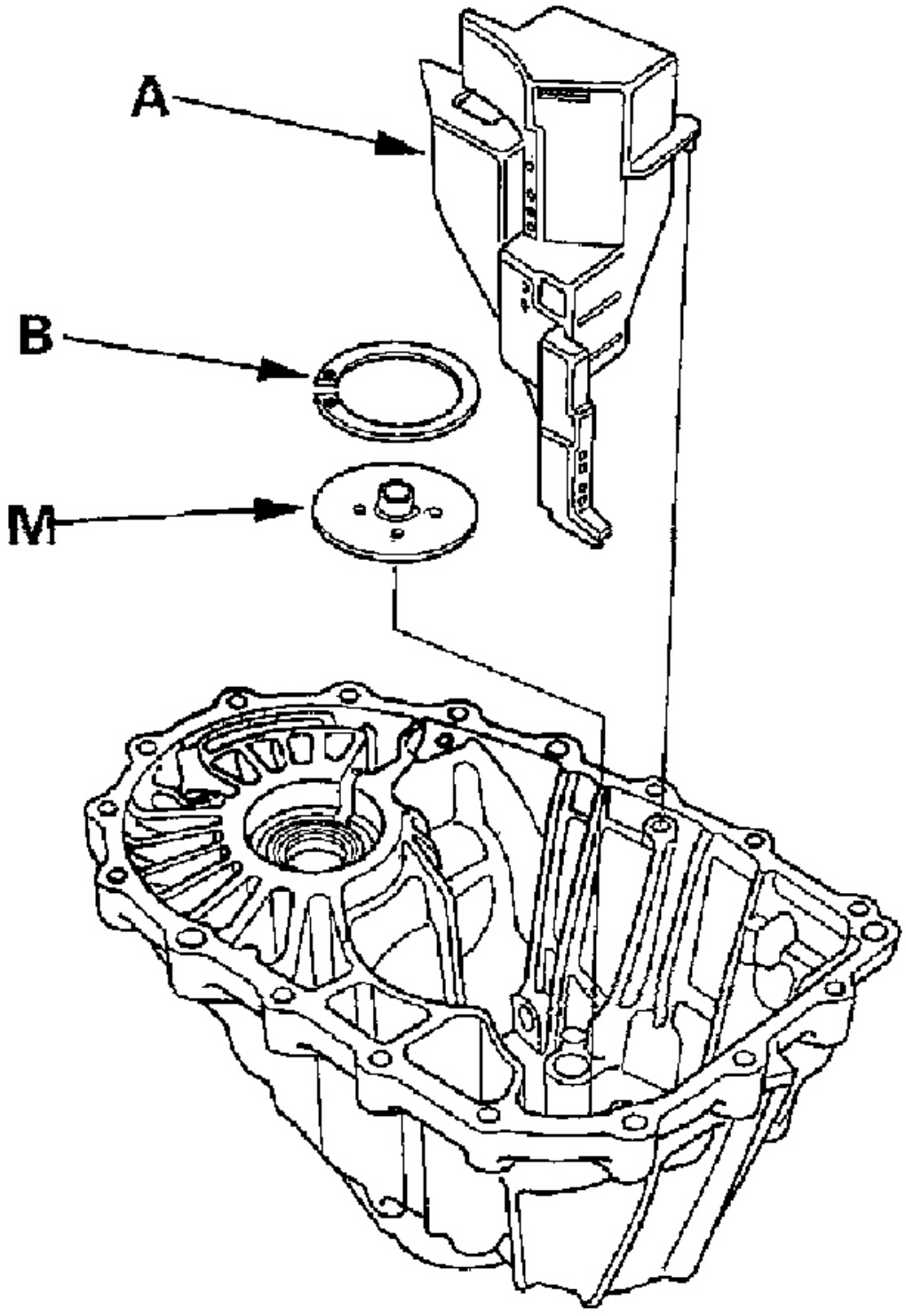

G01823237

cardiagn.com

Fig. 30: Removing The Oil Gutter Plate, 72 mm Shim & Oil Guide Plate M

17. Remove the drain plug (A), drain plug washer (B), and release bearing guide (C).

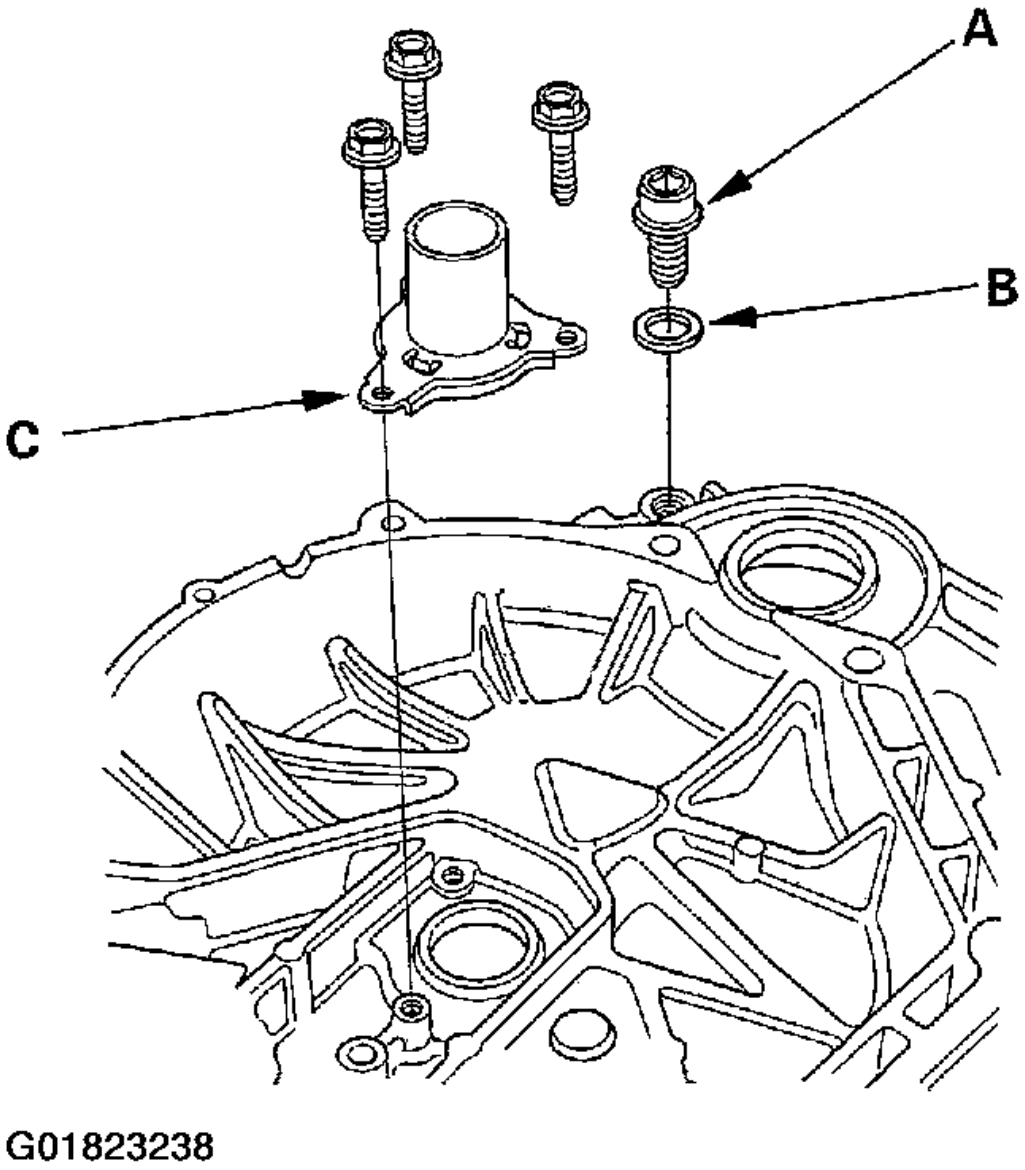

Fig. 31: Removing The Drain Plug, Drain Plug Washer & Release Bearing Guide

REVERSE SHIFT FORK CLEARANCE INSPECTION

1. Measure the clearance between the reverse idler gear (A) and the reverse shift fork (B) with a feeler

cardiagn.com

gauge (C). If the clearance is more than the service limit, go to step 2.

Standard: 0.20-0.59 mm (0.007-0.024 in.)

Service Limit: 1.3 mm (0.051 in.)

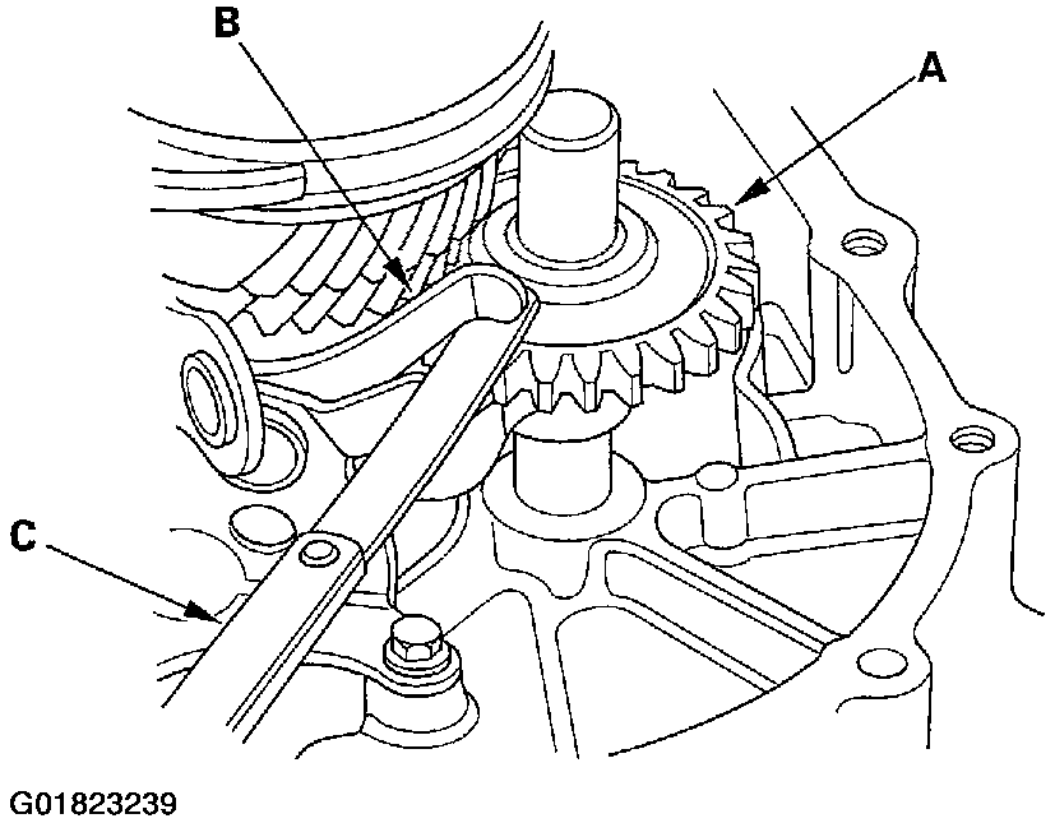

Fig. 32: Measuring The Clearance Between The Reverse Idler Gear & The Reverse Shift Fork With A Feeler Gauge

2. Measure the width of the reverse shift fork.

   Standard: 13.4-13.7 mm (0.527-0.539 in.)

   - If the width is not within the standard, replace the reverse shift fork.
   - If the width is within the standard, replace the reverse gear.

cardiagn.com

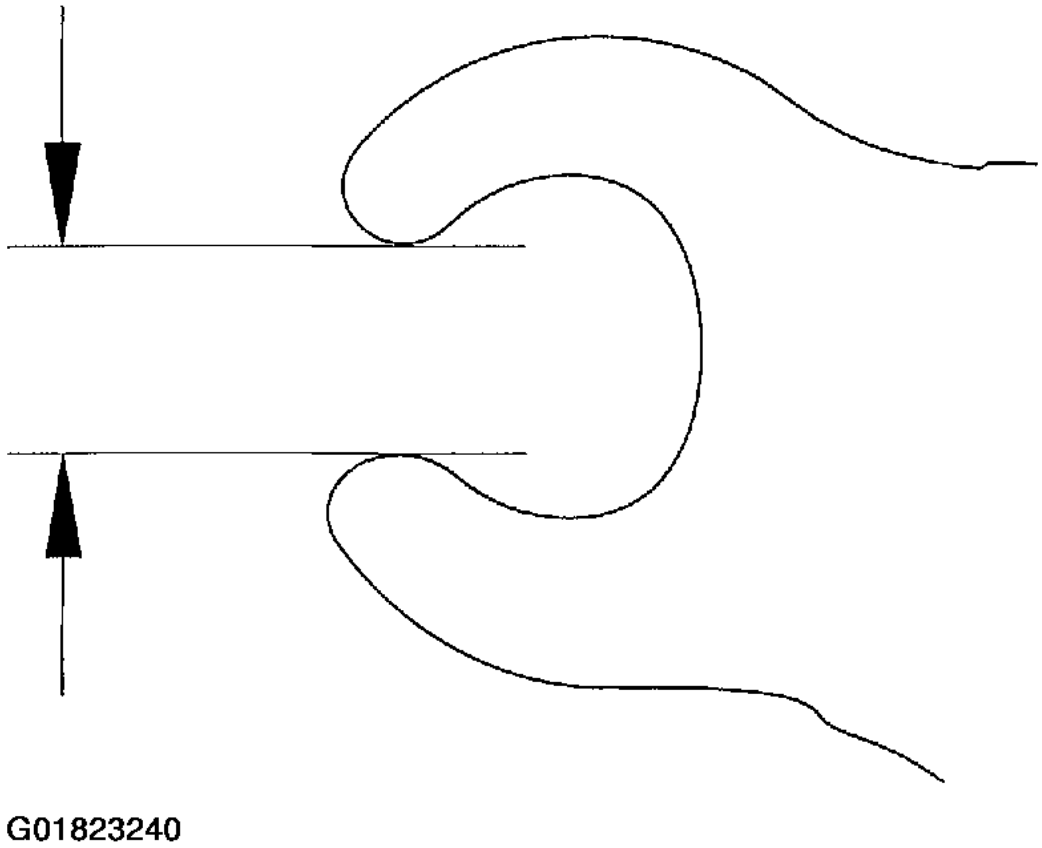

Fig. 33: Measuring The Width Of The Reverse Shift Fork

cardiagn.com

CHANGE LEVER CLEARANCE INSPECTION

1. Measure the clearance between change lever (A) and the select lever (B) with a feeler gauge (C). If the clearance is more than the service limit, go to step 2.

   Standard: 0.05-0.25 mm (0.002-0.010 in.)

   Service Limit: 0.5 mm (0.020 in.)

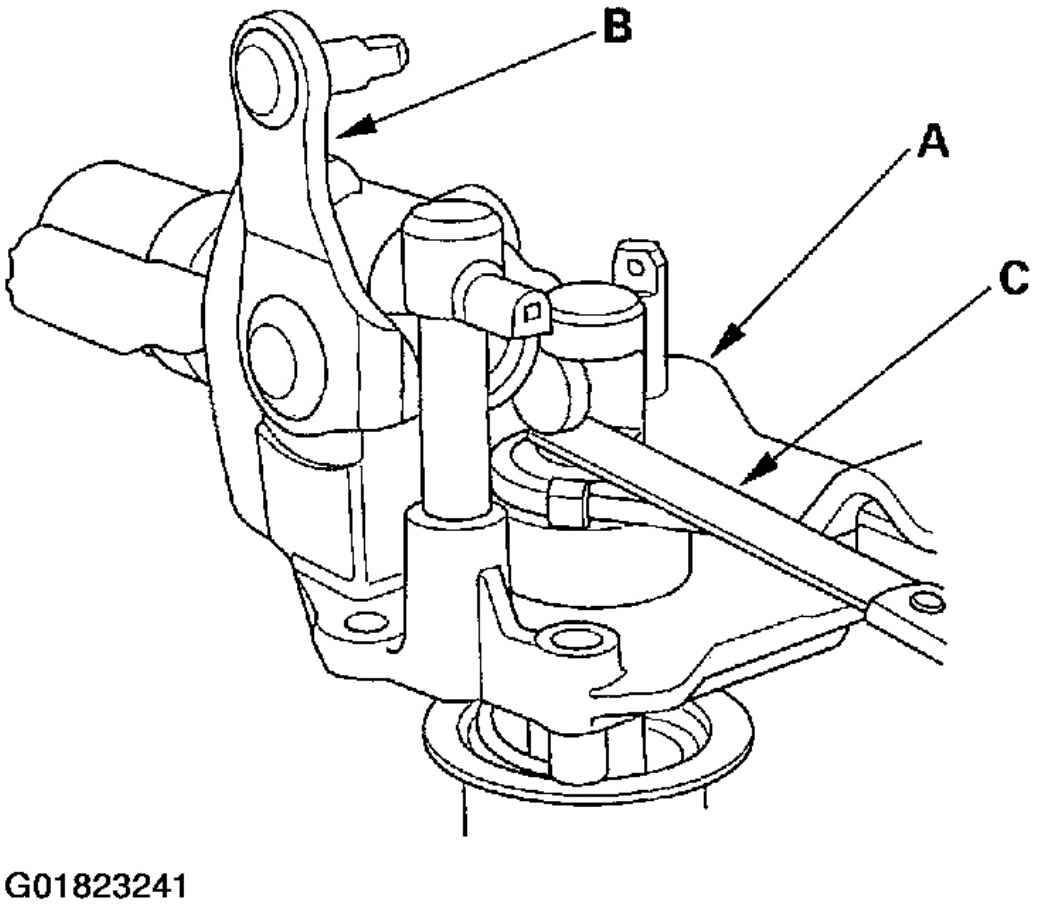

Fig. 34: Measuring The Clearance Between Change Lever & The Select Lever With A Feeler Gauge

2. Measure the groove of the change lever.

   Standard: 15.00-15.10 mm (0.591-0.594 in.)

   - If the groove is not within the standard, replace the change lever.
   - If the groove is within the standard, replace the select lever.

cardiagn.com

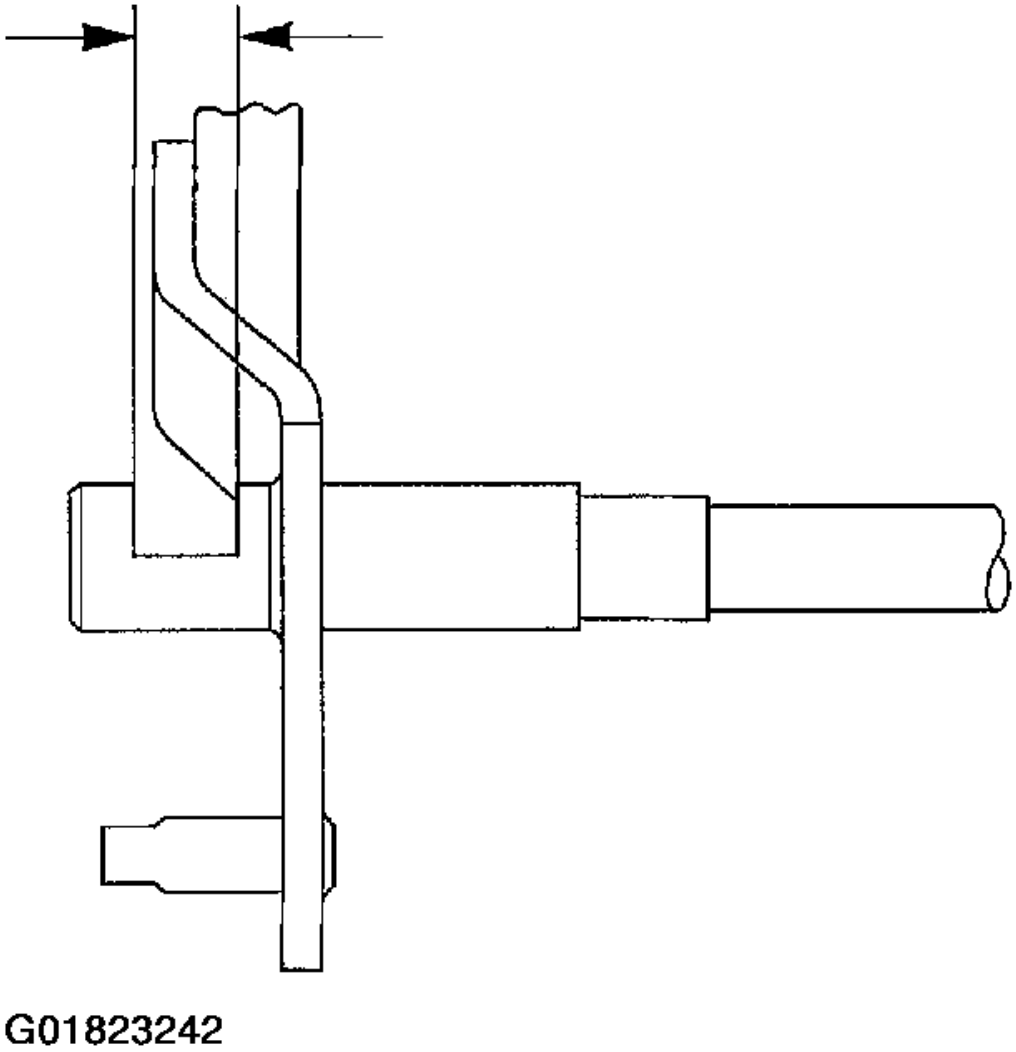

Fig. 35: Measuring The Groove Of The Change Lever

CHANGE LEVER ASSEMBLY DISASSEMBLY/REASSEMBLY

NOTE:

- **If 5 minutes have passed after applying liquid gasket, reapply it and assembly the shift arm cover.**
- **Prior to reassembling, clean all parts in solvent, dry them, and apply grease to the contact surfaces as shown.**

cardiagn.com

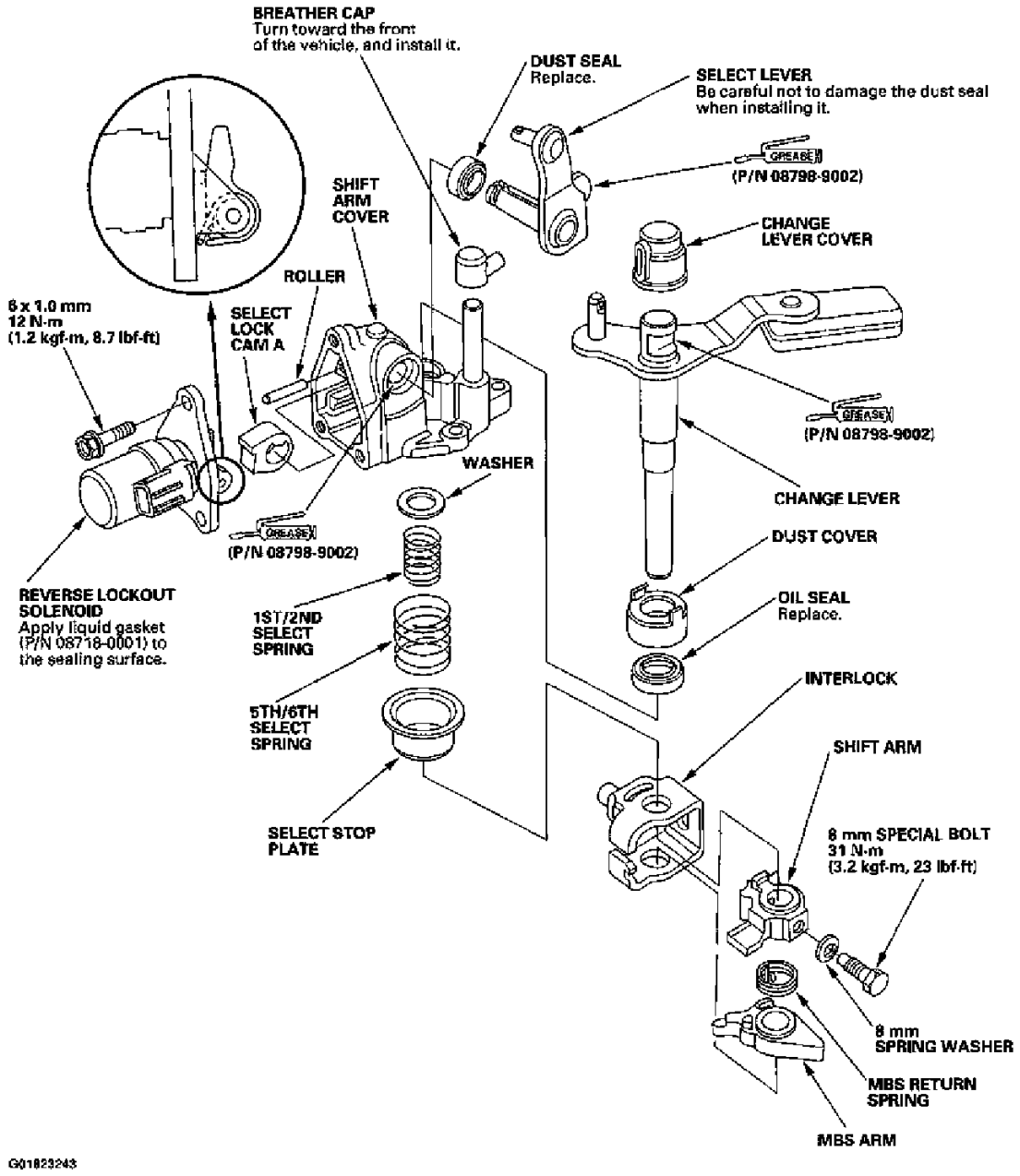

Fig. 36: Exploded View Of Change Lever Assembly Components

SHIFT FORK CLEARANCE INSPECTION

NOTE: The synchro sleeve and synchro hub should be replaced as a set.

1. Measure the clearance between each shift fork (A) and its matching synchro sleeve (B). If the clearance exceeds the service limit, go to step 2.

   Standard: 0.35-0.65 mm (0.014-0.026 in.)

cardiagn.com

Service Limit: 1.0 mm (0.039 in.)

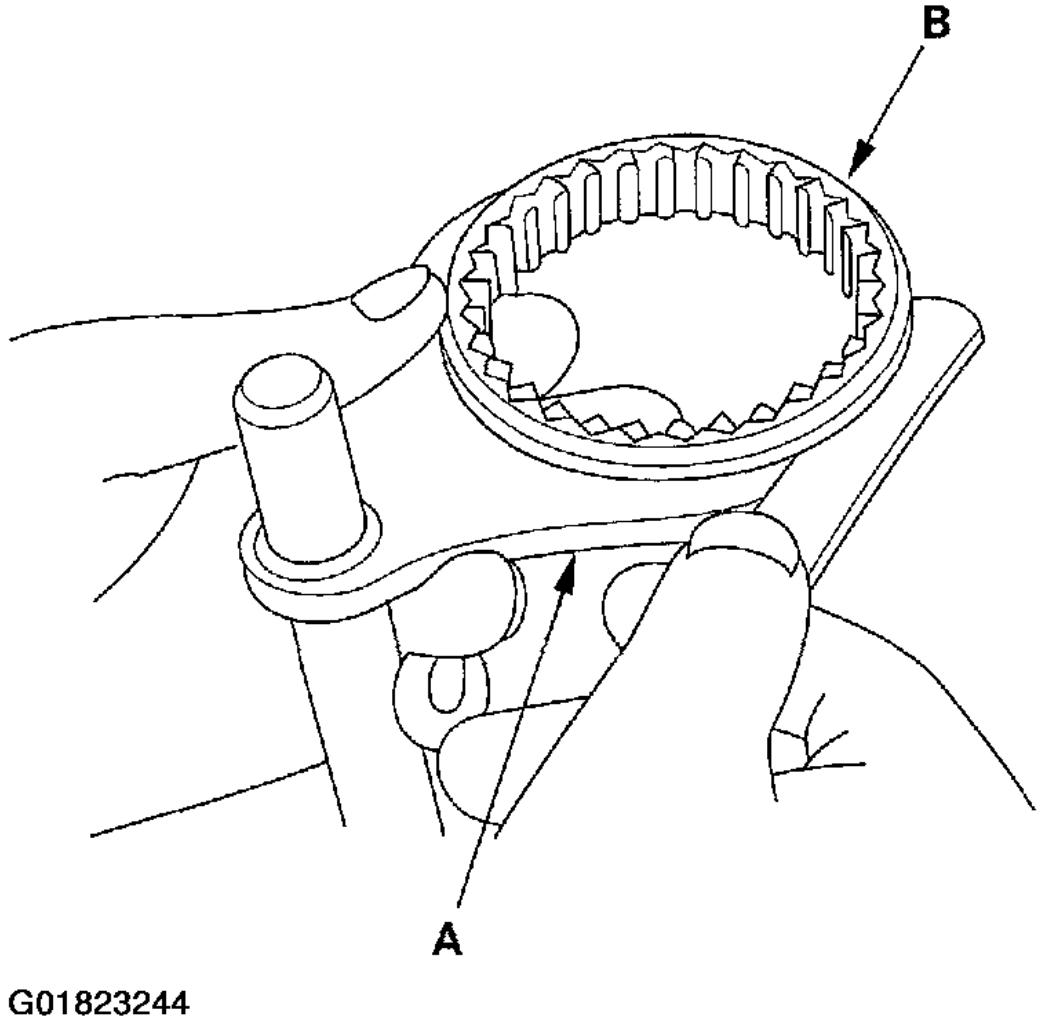

Fig. 37: Measuring The Clearance Between Each Shift Fork & Its Matching Synchro Sleeve

2. Measure the thickness of the shift fork fingers.

   Standard: 7.4-7.6 mm (0.29-0.30 in.)

   - If the thickness is not within the standard, replace the shift fork.
   - If the thickness is within the standard, replace the synchro sleeve.
   - If one arm of the shift fork shows more wear than others, the fork may be bent and needs to be replaced.

cardiagn.com

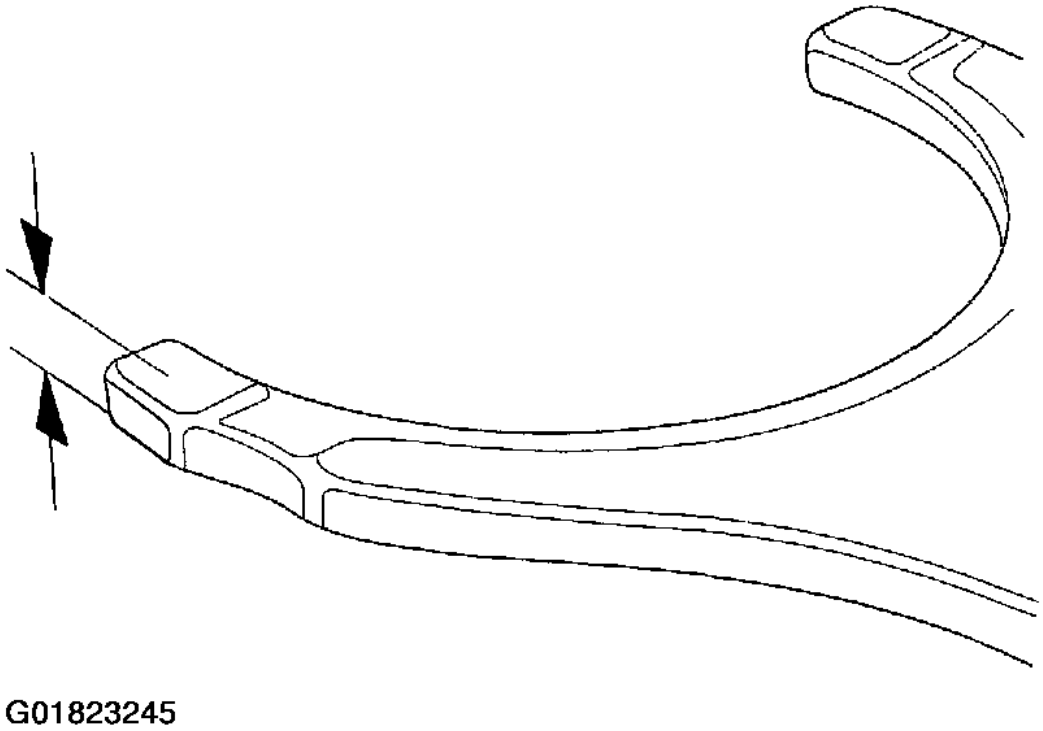

Fig. 38: Measuring The Thickness Of The Shift Fork Fingers

3. Measure the clearance between the shift fork (A) and the shift arm (B). If the clearance exceeds the service limit, go to step 4.

   Standard: 0.2-0.5 mm (0.008-0.020 in.)

   Service Limit: 0.62 mm (0.024 in.)

cardiagn.com

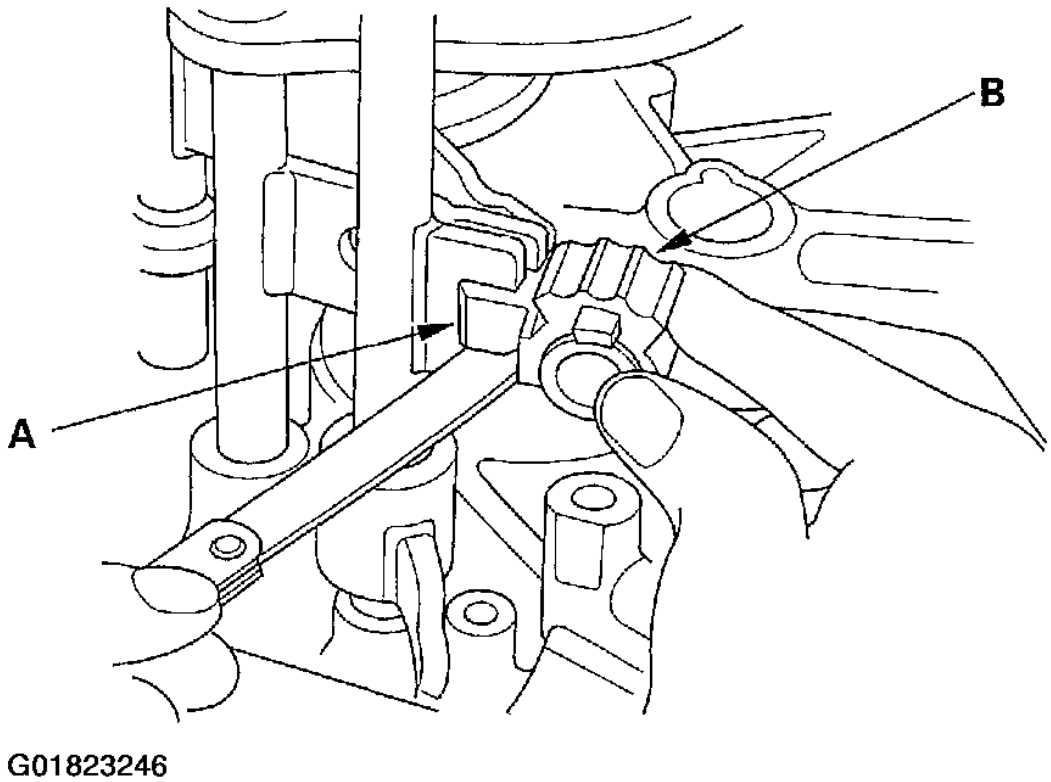

Fig. 39: Measuring The Clearance Between The Shift Fork & The Shift Arm

4. Measure the width of the shift arm.

   Standard: 16.9-17.0 mm (0.665-0.669 in.)

   - If the width is not within the standard, replace the shift arm.
   - If the width is within the standard, replace the shift fork or shift piece.

cardiagn.com

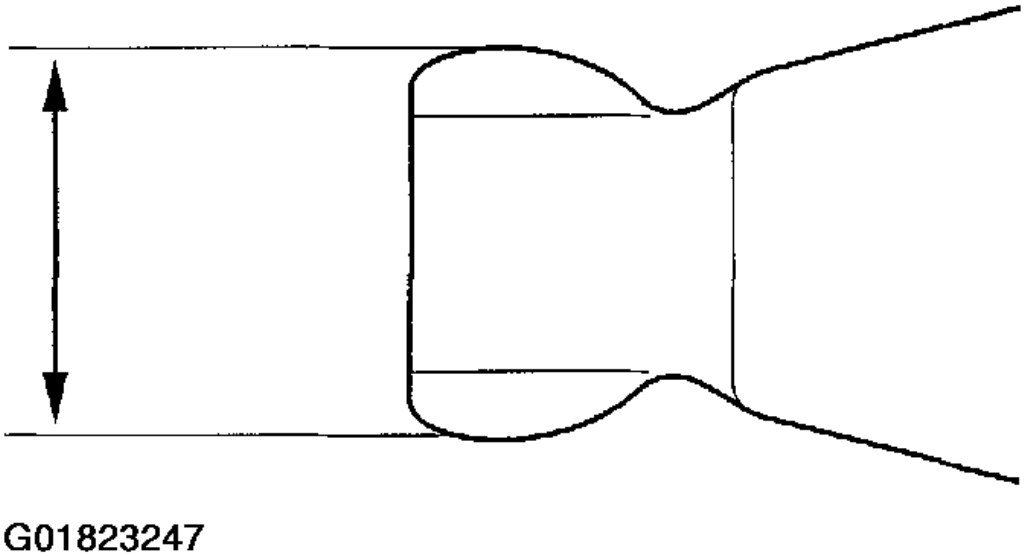

Fig. 40: Measuring The Width Of The Shift Arm

SHIFT FORK DISASSEMBLY/REASSEMBLY

Prior to reassembling, clean all the parts in solvent, dry them, and apply lubricant to all contact surfaces.

cardiagn.com

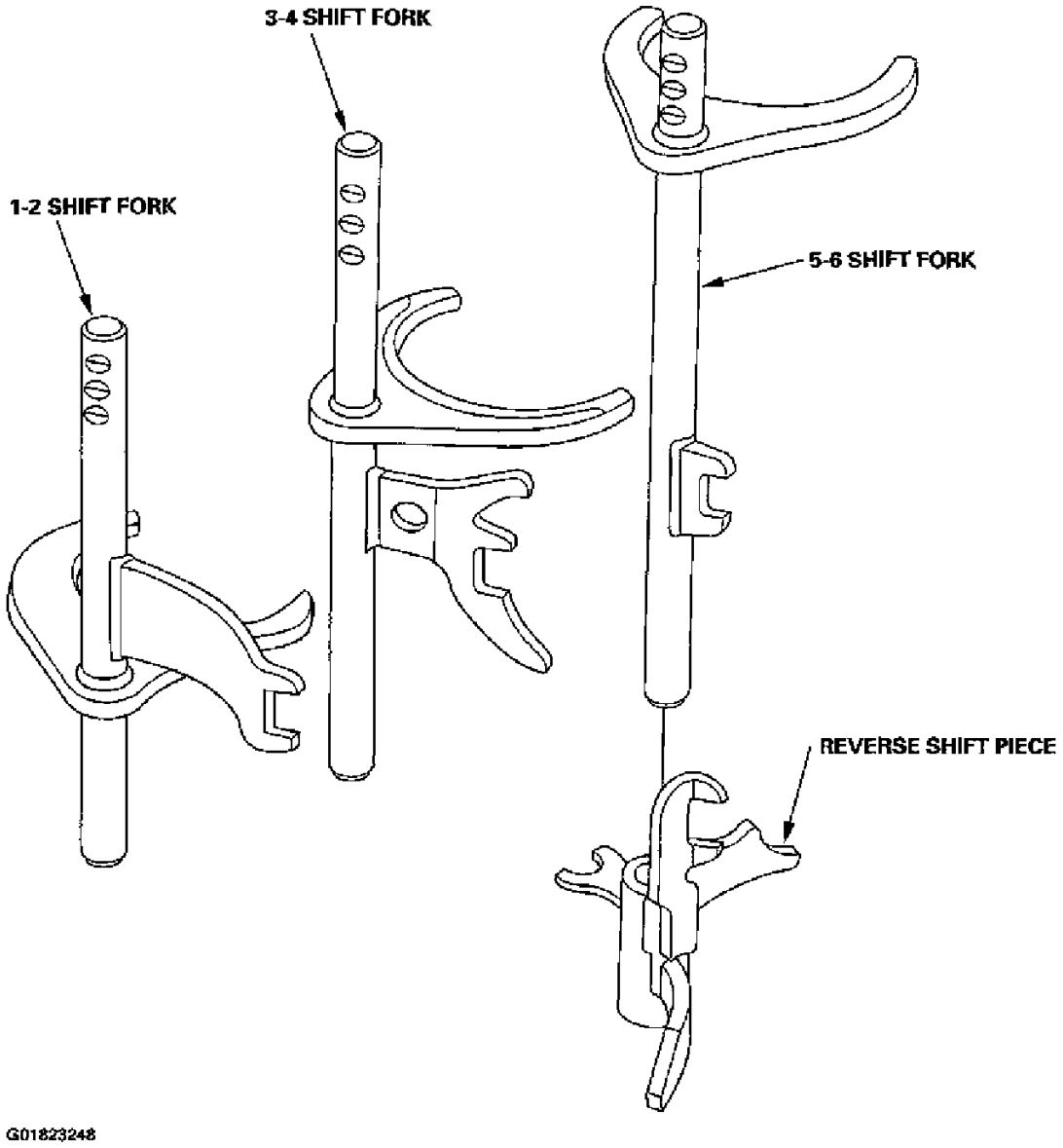

Fig. 41: Identifying Shift Fork Components

MAINSHAFT ASSEMBLY CLEARANCE INSPECTION

NOTE: If replacement is required, always replace the synchro sleeve and hub as a set.

1. Support the bearing inner race with an appropriate sized socket (A), and push down on the mainshaft (B).

cardiagn.com

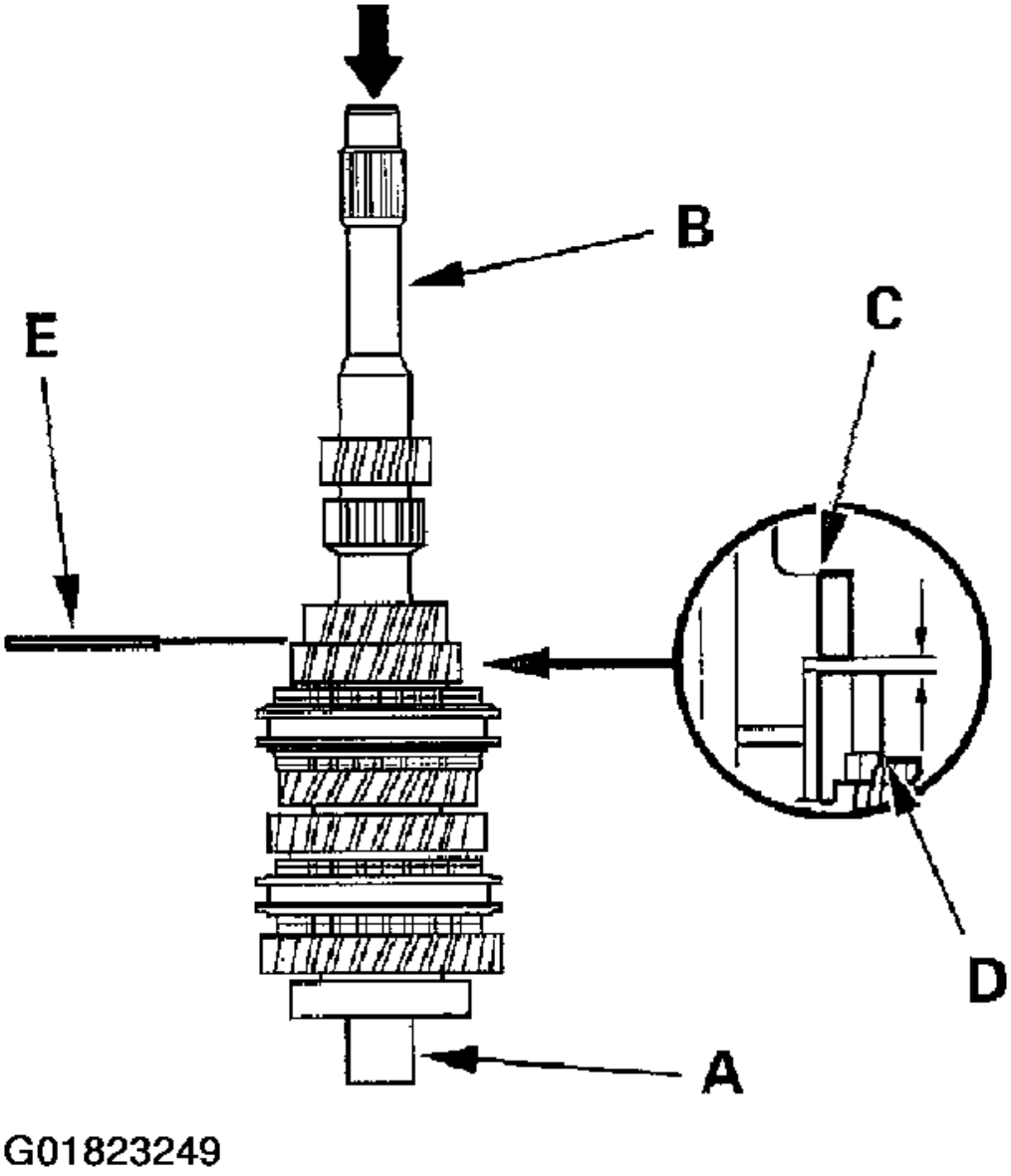

Fig. 42: Inspecting Mainshaft Assembly Clearance

2. Measure the clearance between 2nd (C) and 3rd (D) gears with a feeler gauge (E).
   Standard: 0.06-0.16 mm (0.002-0.006 in.)
   Service Limit: 0.25 mm (0.010 in.)
   - If the clearance is more than the service limit, go to step 3.
   - If the clearance is within the service limit, go to step 4 .

cardiagn.com

3. Measure the thickness of 3rd gear.

   Standard: 23.92-23.97 mm (0.941-0.944 in.)

   Service Limit: 23.80 mm (0.937 in.)

   - If the thickness is less than the service limit, replace 3rd gear.
   - If the thickness is within the service limit, replace the 3rd/4th synchro hub.

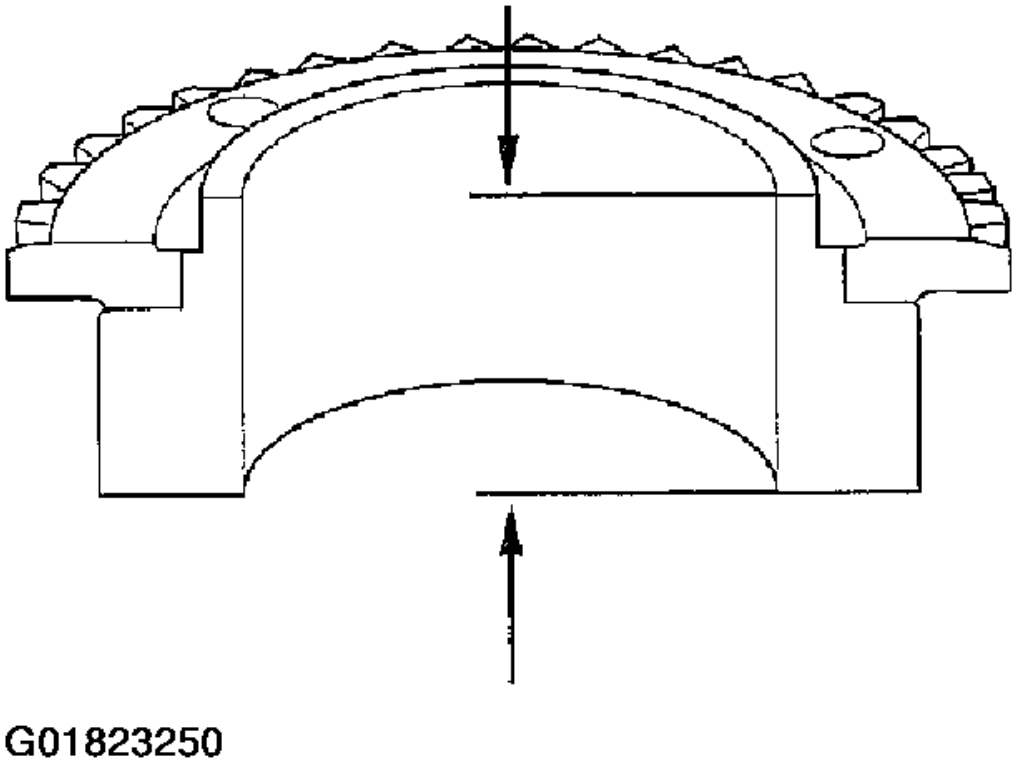

Fig. 43: Measuring The Thickness Of 3rd Gear

4. Measure the clearance between 4th gear (A) and the distance collar (B) with a dial indicator (C). If the clearance is more than the service limit, go to step 5.

   Standard: 0.06-0.16 mm (0.002-0.006 in.)

   Service Limit: 0.25 mm (0.010 in.)

cardiagn.com

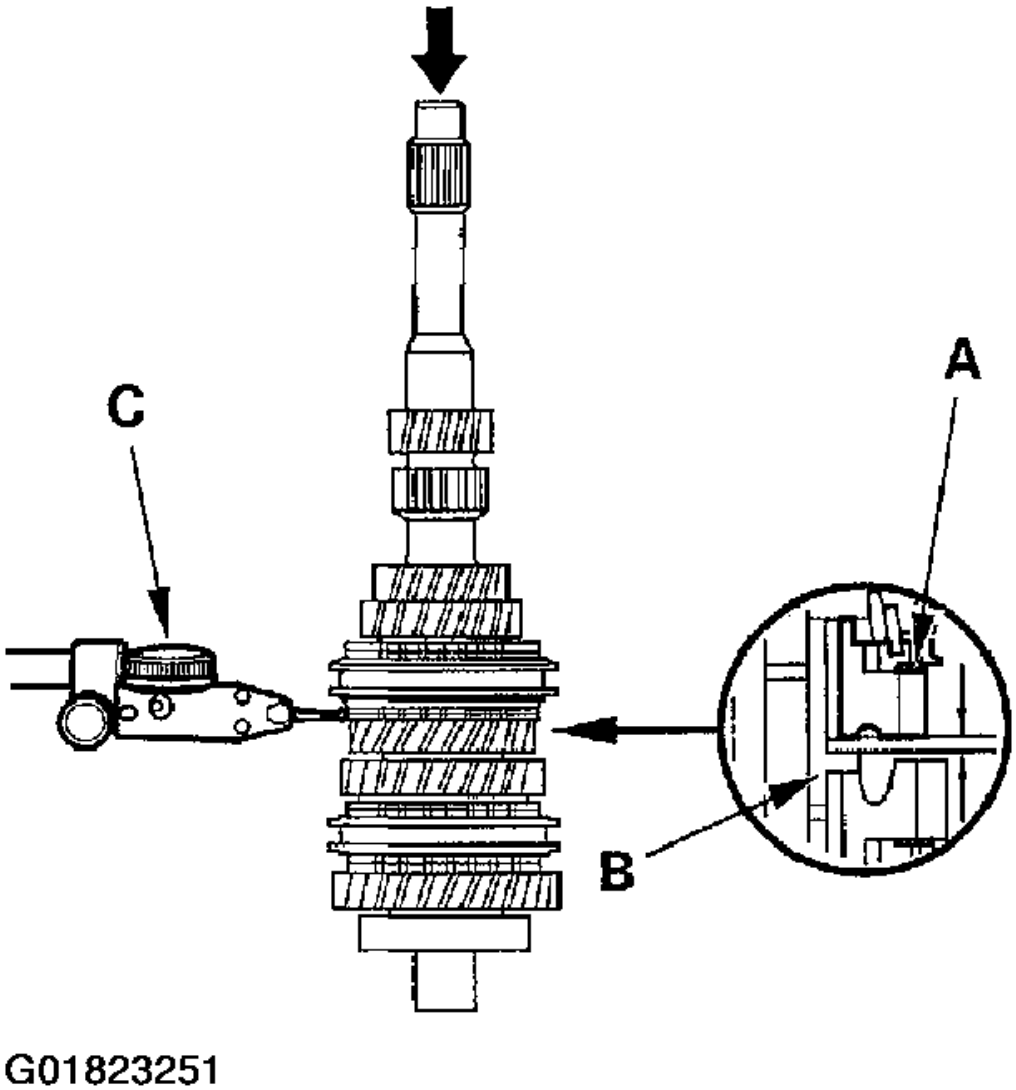

Fig. 44: Measuring The Clearance Between 4th Gear & The Distance Collar

5. Measure distance 1 on the distance collar.

   Standard: 24.03-24.08 mm (0.946-0.948 in.)

   - If distance 1 is not within the standard, replace the distance collar.
   - If distance 1 is within the standard, go to step 6.

cardiagn.com

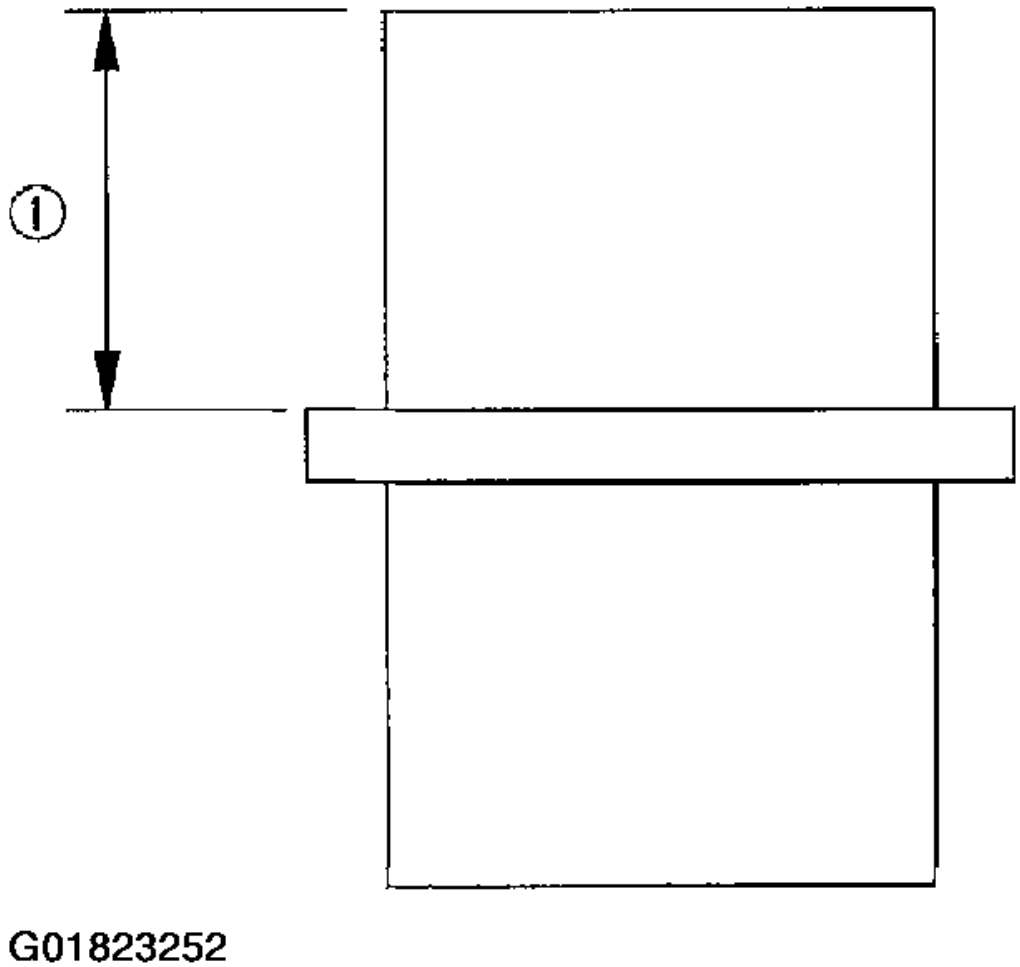

Fig. 45: Measuring Distance 1 On The Distance Collar

6. Measure the thickness of 4th gear.

   Standard: 23.92-23.97 mm (0.941-0.944 in.)

   Service Limit: 23.80 mm (0.937 in.)

   - If the thickness is less than the service limit replace 4th gear.
   - If the thickness is within the service limit, replace the 3rd/4th synchro hub.

cardiagn.com

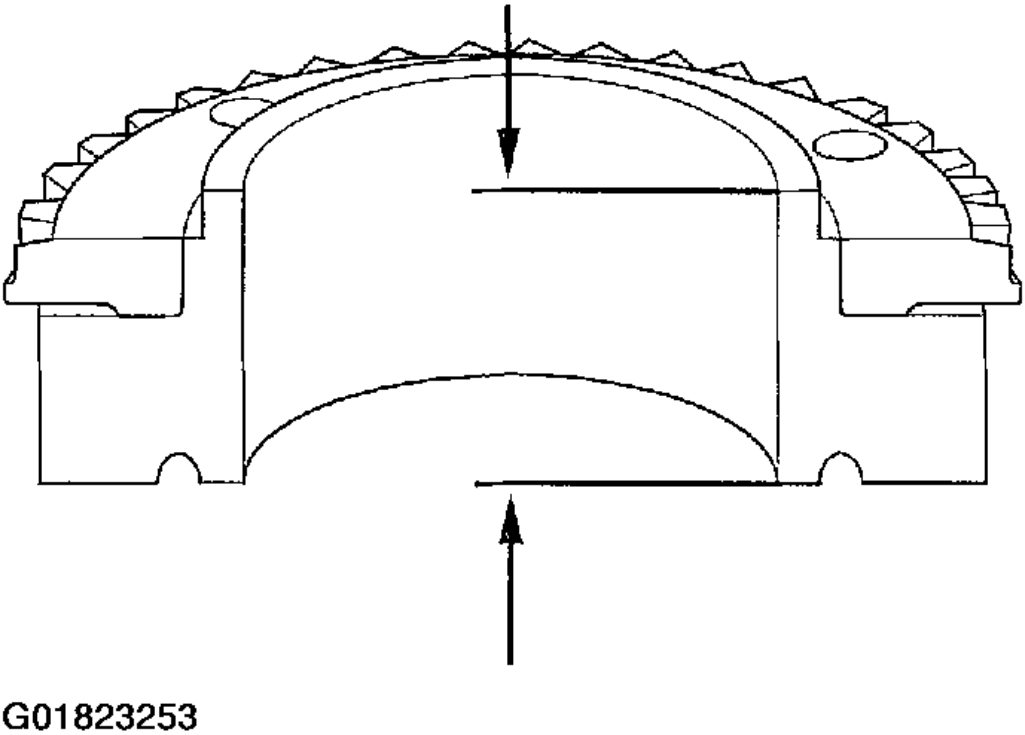

Fig. 46: Measuring The Thickness Of 4th Gear

7. Measure the clearance between the distance collar (A) and 5th gear (B) with a dial indicator (C). If the clearance is more than the service limit, go to step 8.

   Standard: 0.06-0.16 mm (0.002-0.006 in.)

   Service Limit: 0.25 mm (0.010 in.)

cardiagn.com

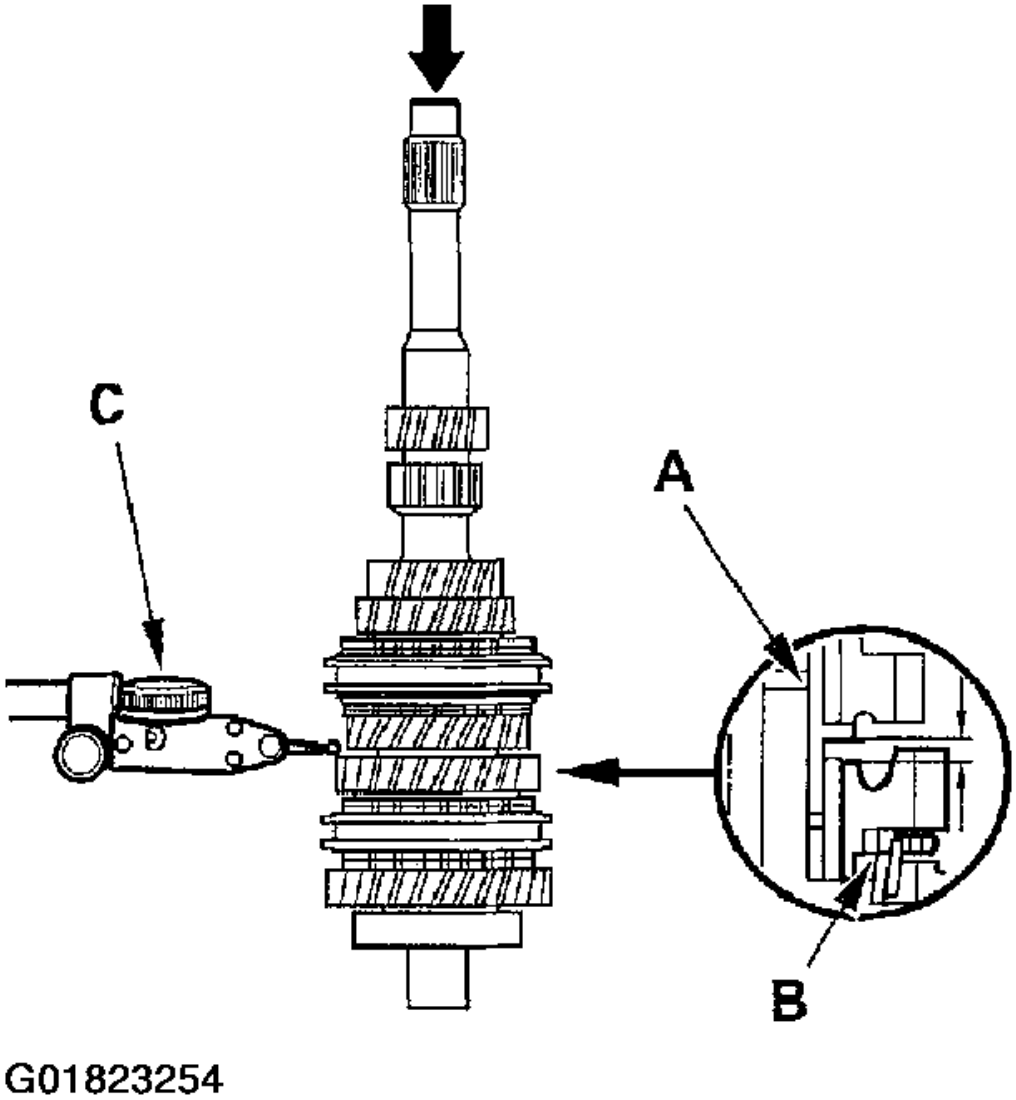

Fig. 47: Measuring The Clearance Between The Distance Collar & 5th Gear

8. Measure distance 2 on the distance collar.

   Standard: 24.03-24.08 mm (0.946-0.948 in.)

   - If distance 2 is not within the standard, replace the distance collar.
   - If distance 2 is within the standard, go to step 9.

cardiagn.com

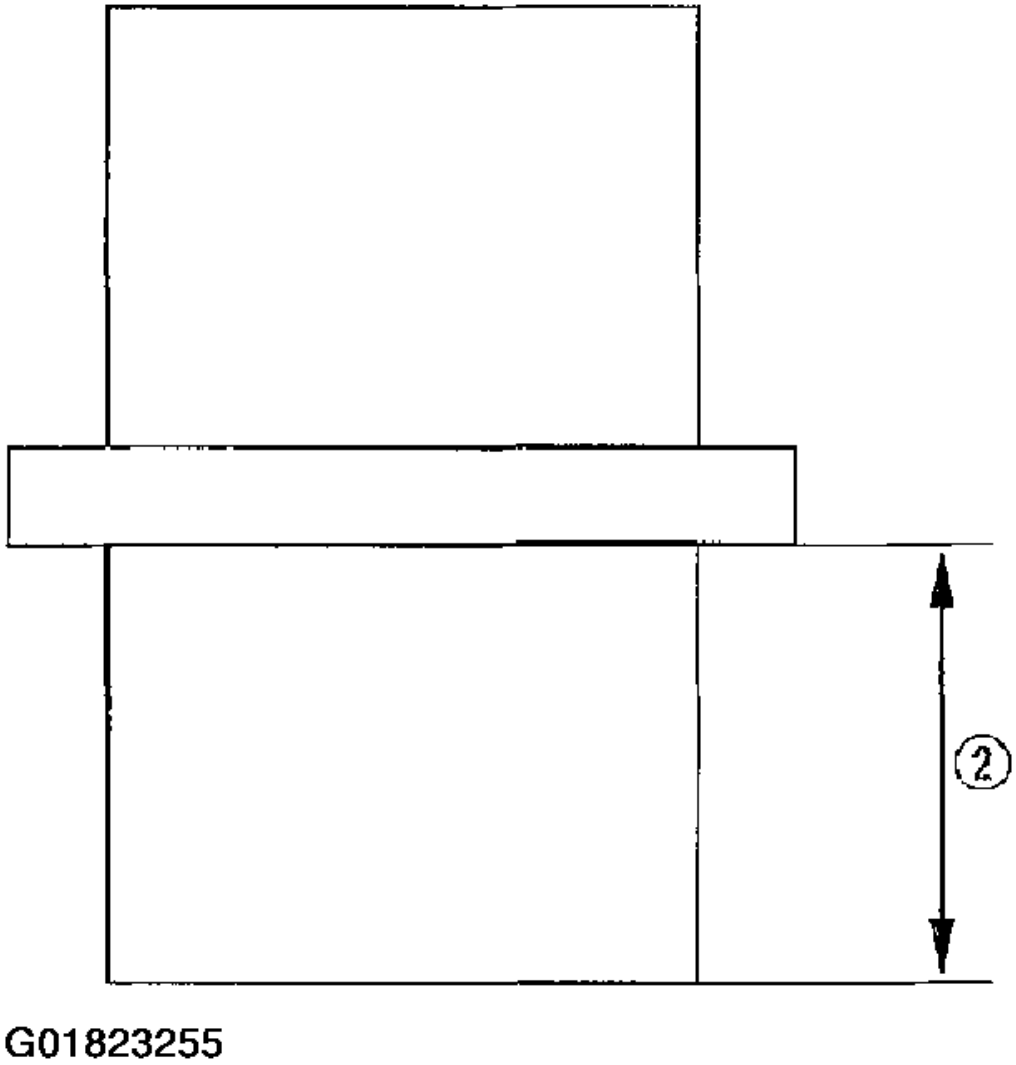

Fig. 48: Measuring Distance 2 On The Distance Collar

9. Measure the thickness of 5th gear.

   Standard: 23.92-23.97 mm (0.941-0.944 in.)

   Service Limit: 23.80 mm (0.937 in.)

   - If the thickness is less than the service limit, replace 5th gear.
   - If the thickness is within the service limit, replace the 5th/6th synchro hub.

cardiagn.com

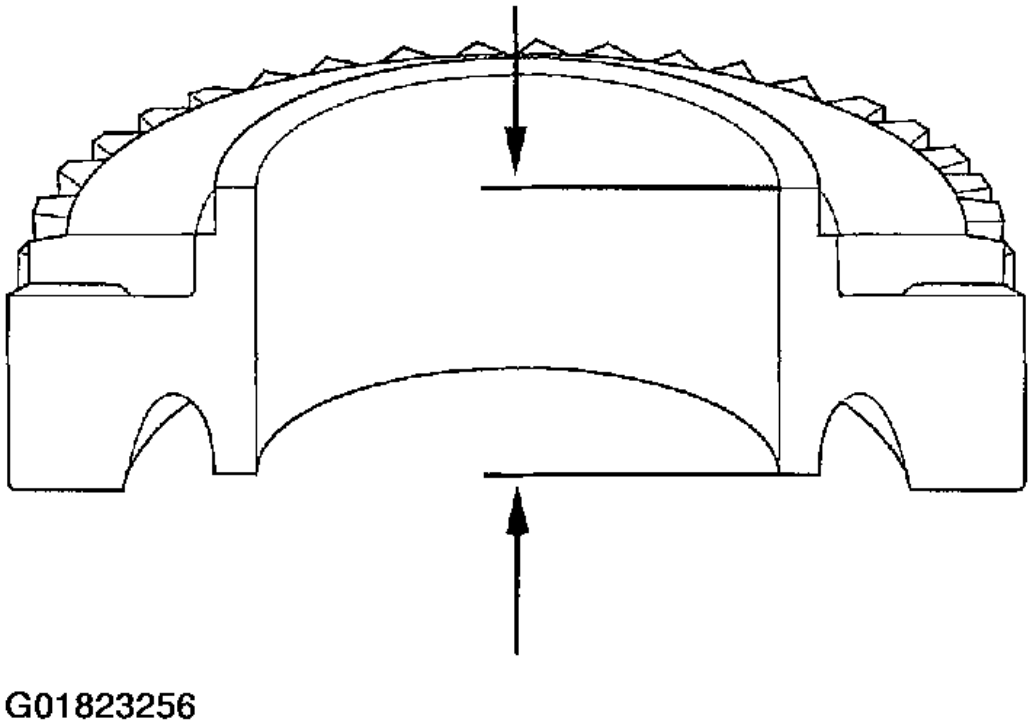

Fig. 49: Measuring The Thickness Of 5th Gear

10. Measure the clearance between the 6th gear (A) and angular ball bearing (B) with a feeler gauge (C). If the clearance is more than the service limit, go to step 11.

    Standard: 0.06-0.16 mm (0.002-0.006 in.)

    Service Limit: 0.25 mm (0.010 in.)

cardiagn.com

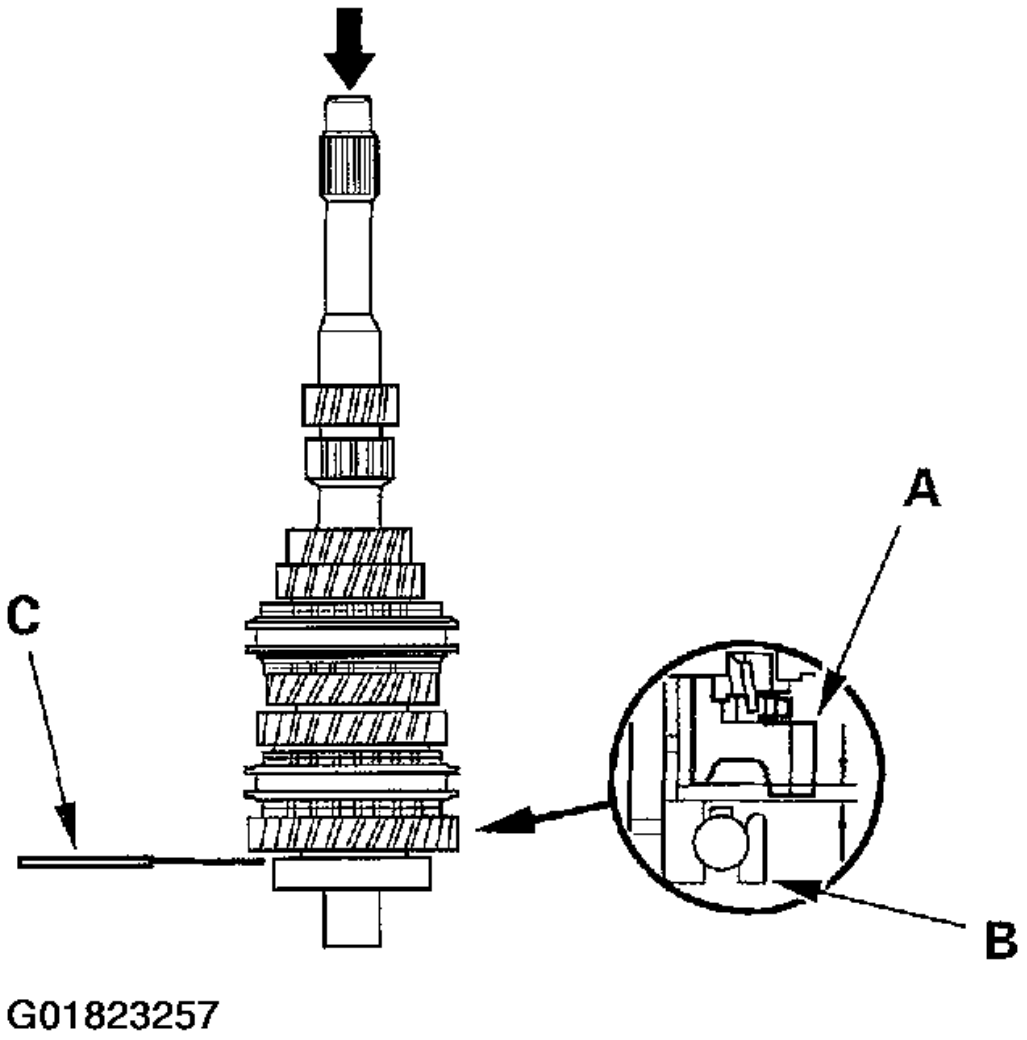

Fig. 50: Measuring The Clearance Between The 6th Gear & Angular Ball Bearing

11. Measure the thickness of the distance collar.

    Standard: 24.03-24.08 mm (0.946-0.948 in.)

    - If the thickness is not within the standard, replace the distance collar.
    - If the thickness is within the standard, go to step 12.

cardiagn.com

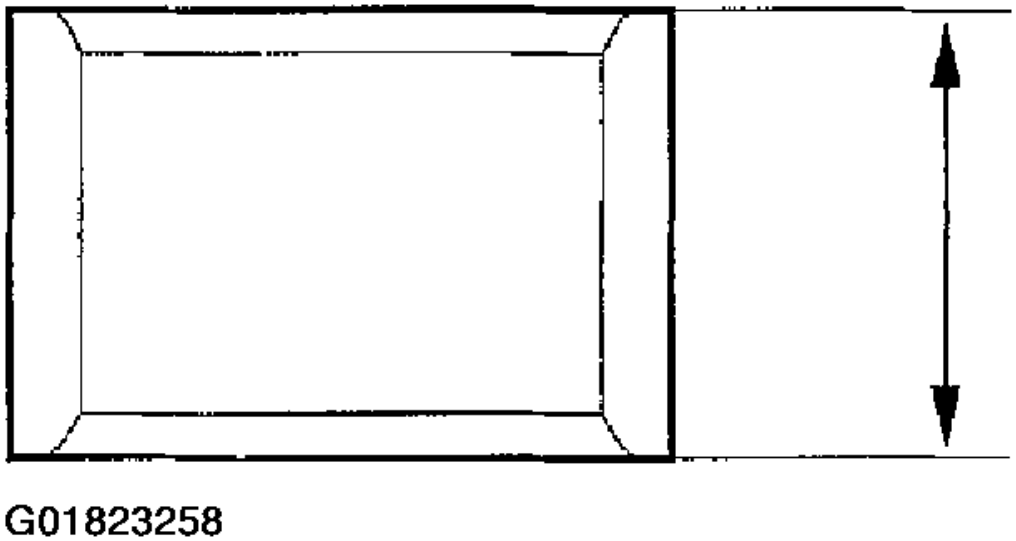

Fig. 51: Measuring The Thickness Of The Distance Collar

12. Measure the thickness of 6th gear.

    Standard: 23.92-23.97 mm (0.941-0.944 in.)

    Service Limit: 23.80 mm (0.937 in.)

    - If the thickness is less than the service limit, replace 6th gear.
    - If the thickness is within the service limit, replace the 5th/6th synchro hub.

cardiagn.com

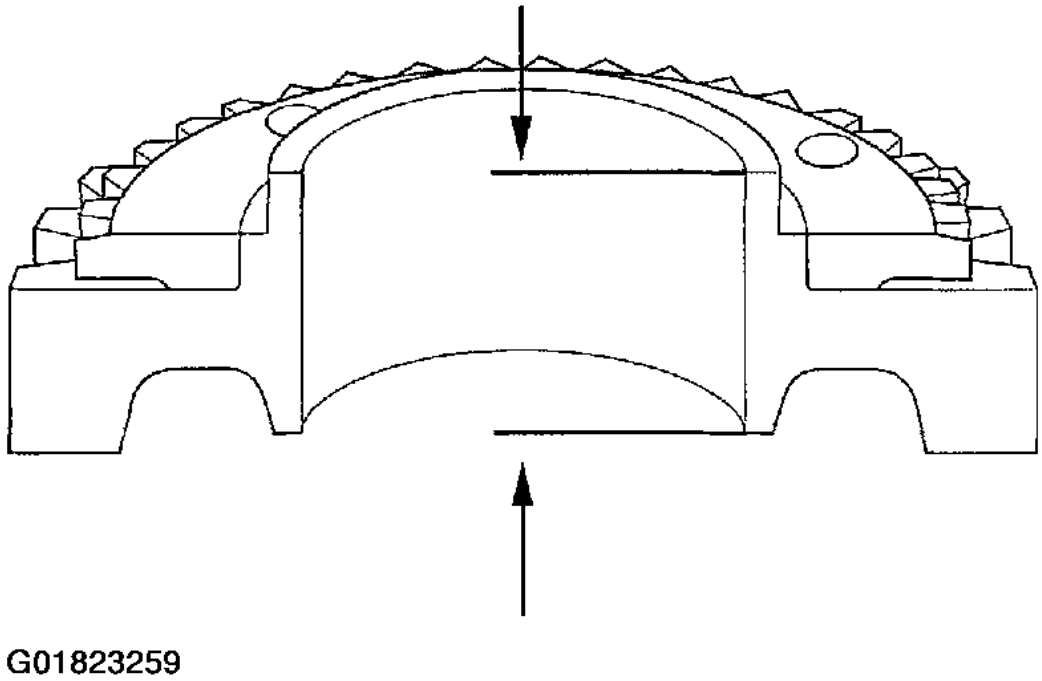

Fig. 52: Measuring The Thickness Of 6th Gear

MAINSHAFT DISASSEMBLY

1. Remove the angular ball bearing (A) using a commercially available bearing separator (B) and bearing puller (C).

cardiagn.com

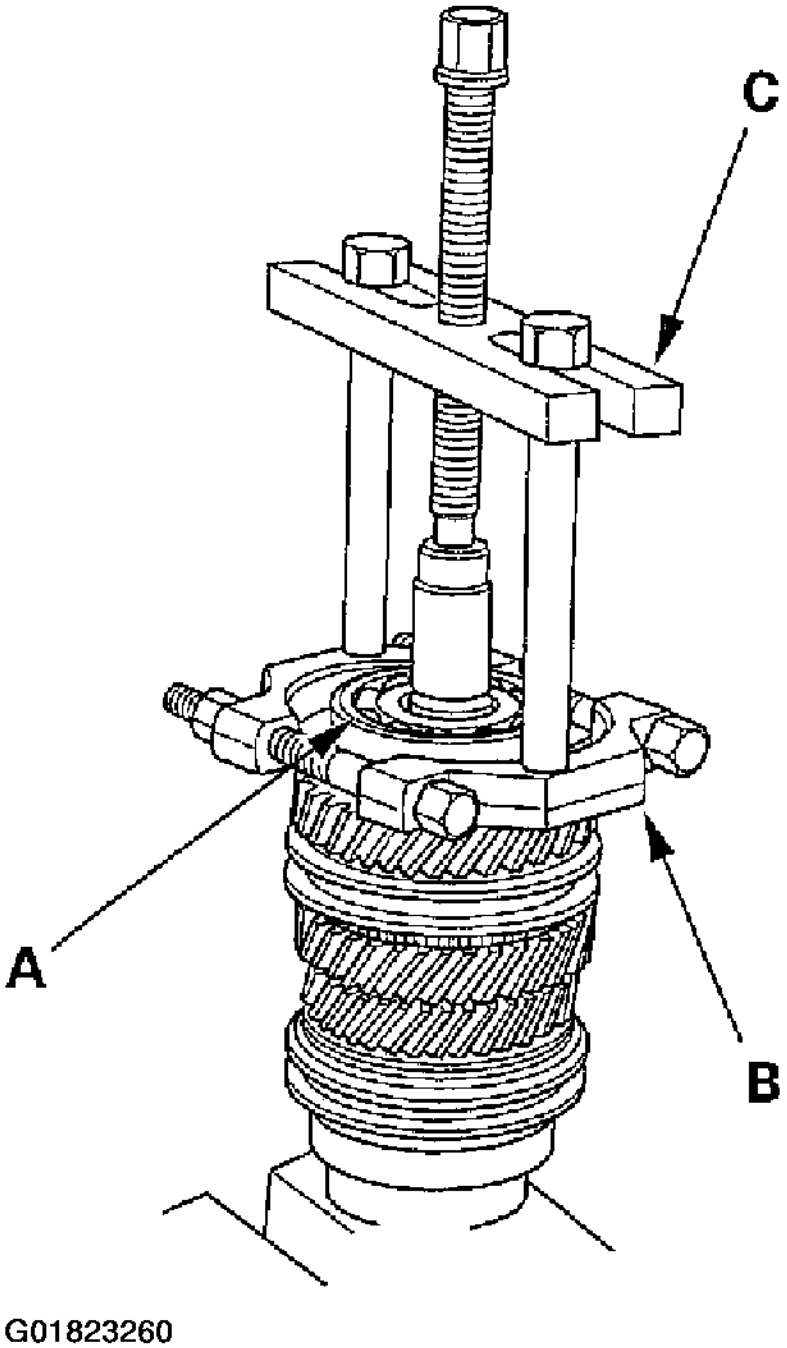

Fig. 53: Removing The Angular Ball Bearing Using A Commercially Available Bearing Separator & Bearing Puller

2. Support 5th gear (A) on steel blocks, and press the mainshaft out of the 5th/6th synchro hub (B). Use of a jaw-type puller can damage the gear teeth.

cardiagn.com

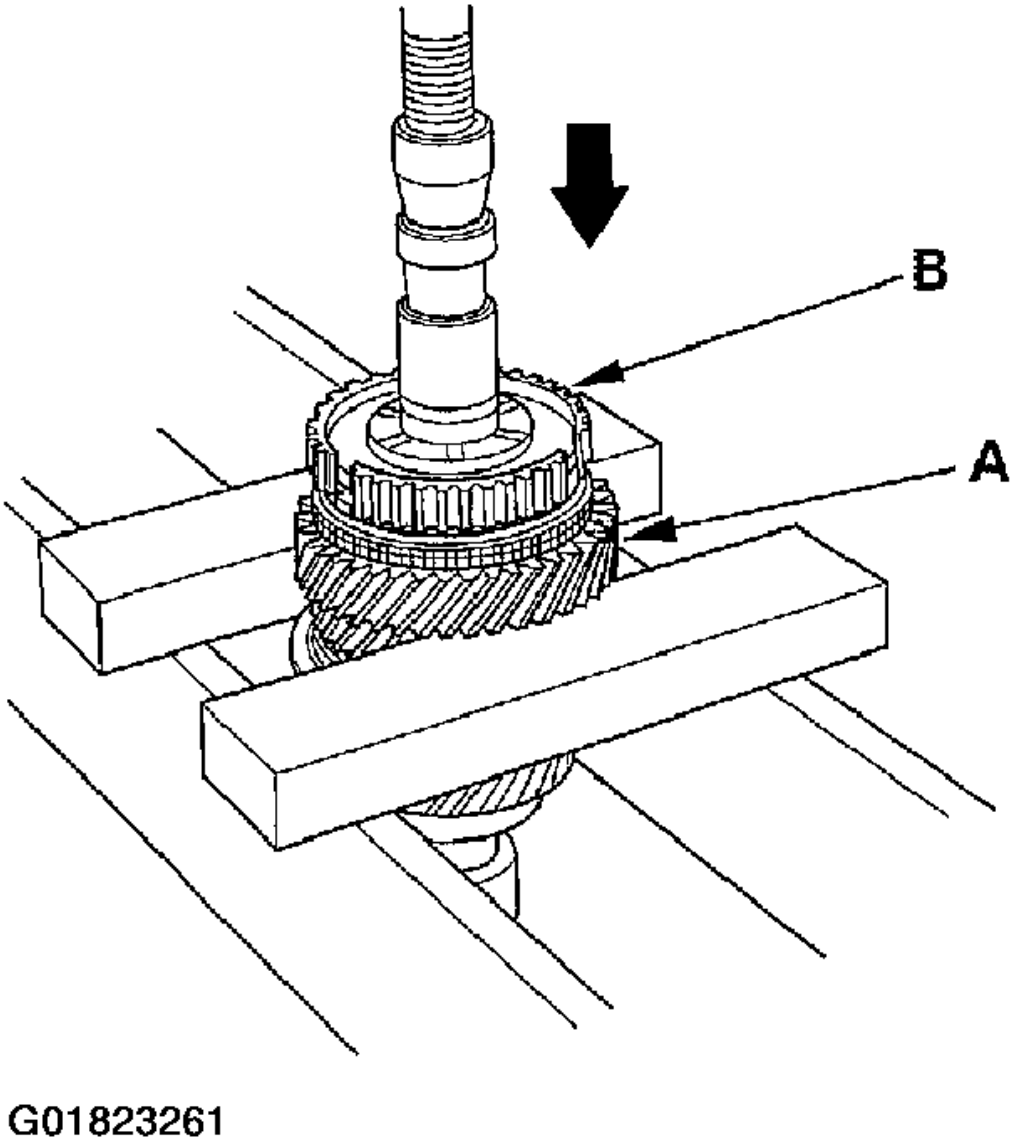

Fig. 54: Supporting 5th Gear On Steel Blocks & Pressing The Mainshaft Out Of The 5th/6th Synchro Hub

3. Support the 3rd gear (A) on steel blocks, and press the mainshaft out of the 3rd/4th synchro hub (B). Use of a jaw-type puller can damage the gear teeth.

cardiagn.com

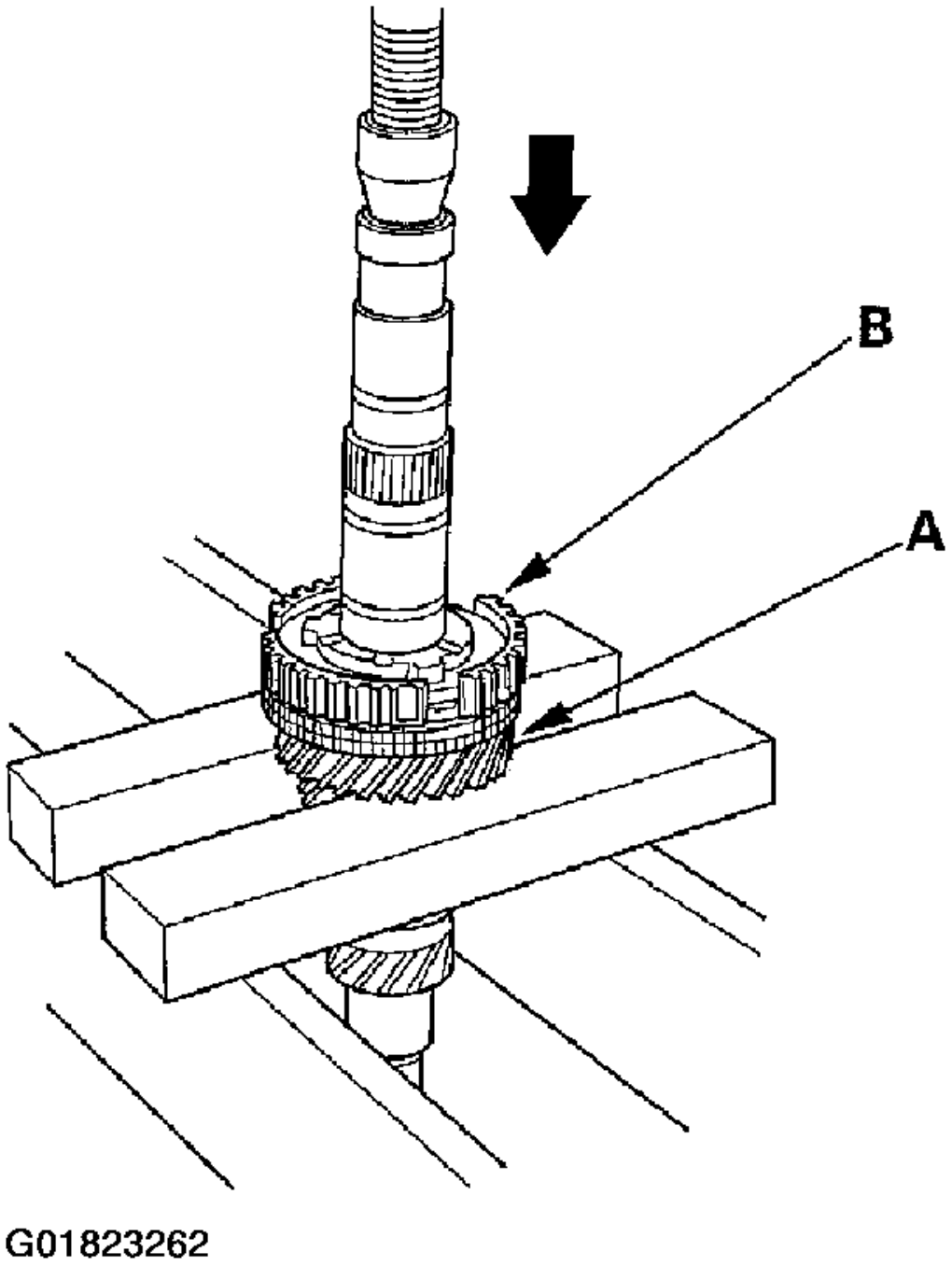

Fig. 55: Supporting The 3rd Gear On Steel Blocks & Pressing The Mainshaft Out Of The 3rd/4th Synchro Hub

cardiagn.com

MAINSHAFT INSPECTION

1. Inspect the gear and bearing surfaces for wear and damage, then measure the mainshaft at points A, B, C, D, and E. If any part of the mainshaft is less than the service limit, replace it.

   Standard:

   A Ball Bearing Surface (Transmission Housing Side): 27.987-28.000 mm (1.1019-1.1024 in.)

   B Distance Collar Surface: 31.984-32.000 mm (1.2594-1.2598 in.)

   C Needle Bearing Surface: 38.984-39.000 mm (1.5348-1.5354 in.)

   D Ball Bearing Surface (Clutch Housing Side): 27.977-27.990 mm (1.1015-1.1020 in.)

   E Bushing Surface: 20.80-20.85 mm (0.819-0.821 in.)

   Service Limit:

   A: 27.93 mm (1.100 in.)

   B: 31.93 mm (1.257 in.)

   C: 38.93 mm (1.533 in.)

   D: 27.92 mm (1.099 in.)

   E: 20.75 mm (0.817 in.)

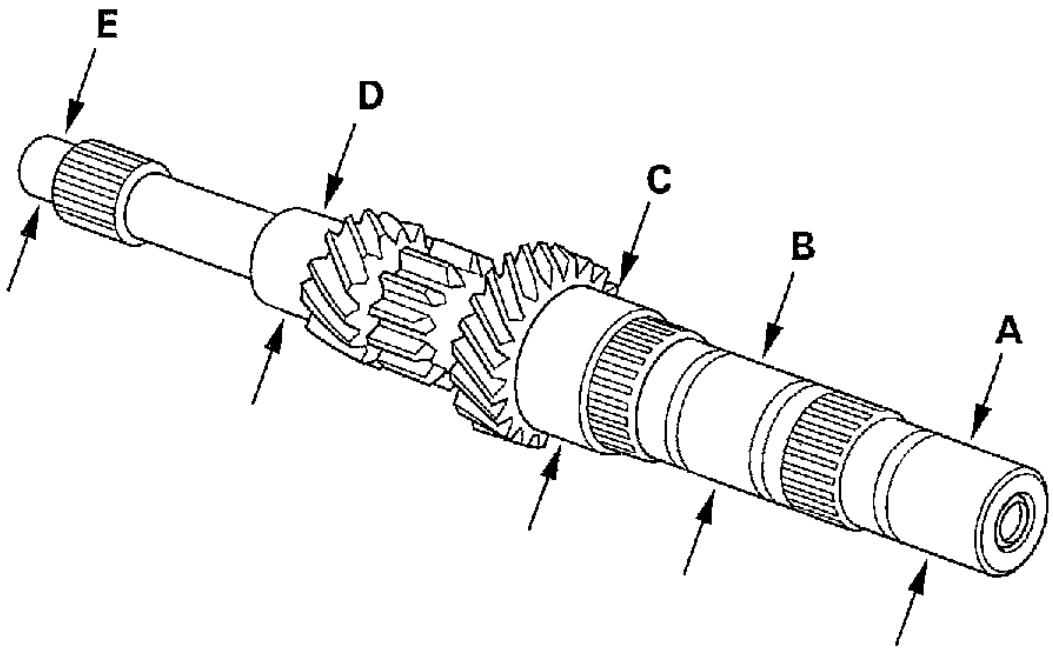

Fig. 56: Inspecting Mainshaft Surfaces

cardiagn.com

2. Inspect the runout by supporting both ends of the mainshaft. Then rotate the mainshaft two complete turns while measuring with a dial gauge. If the runout is more than the service limit, replace the mainshaft.

   Standard: 0.02 mm (0.001 in.) Max.

   Service Limit: 0.05 mm (0.002 in.)

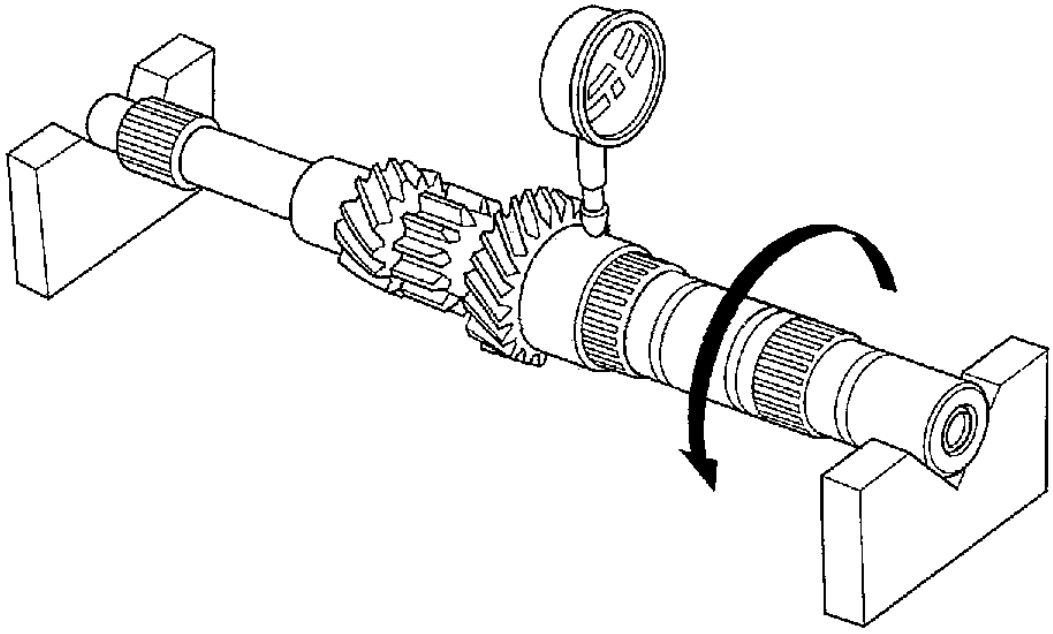

Fig. 57: Inspecting Mainshaft Runout

MAINSHAFT REASSEMBLY

Exploded View

cardiagn.com

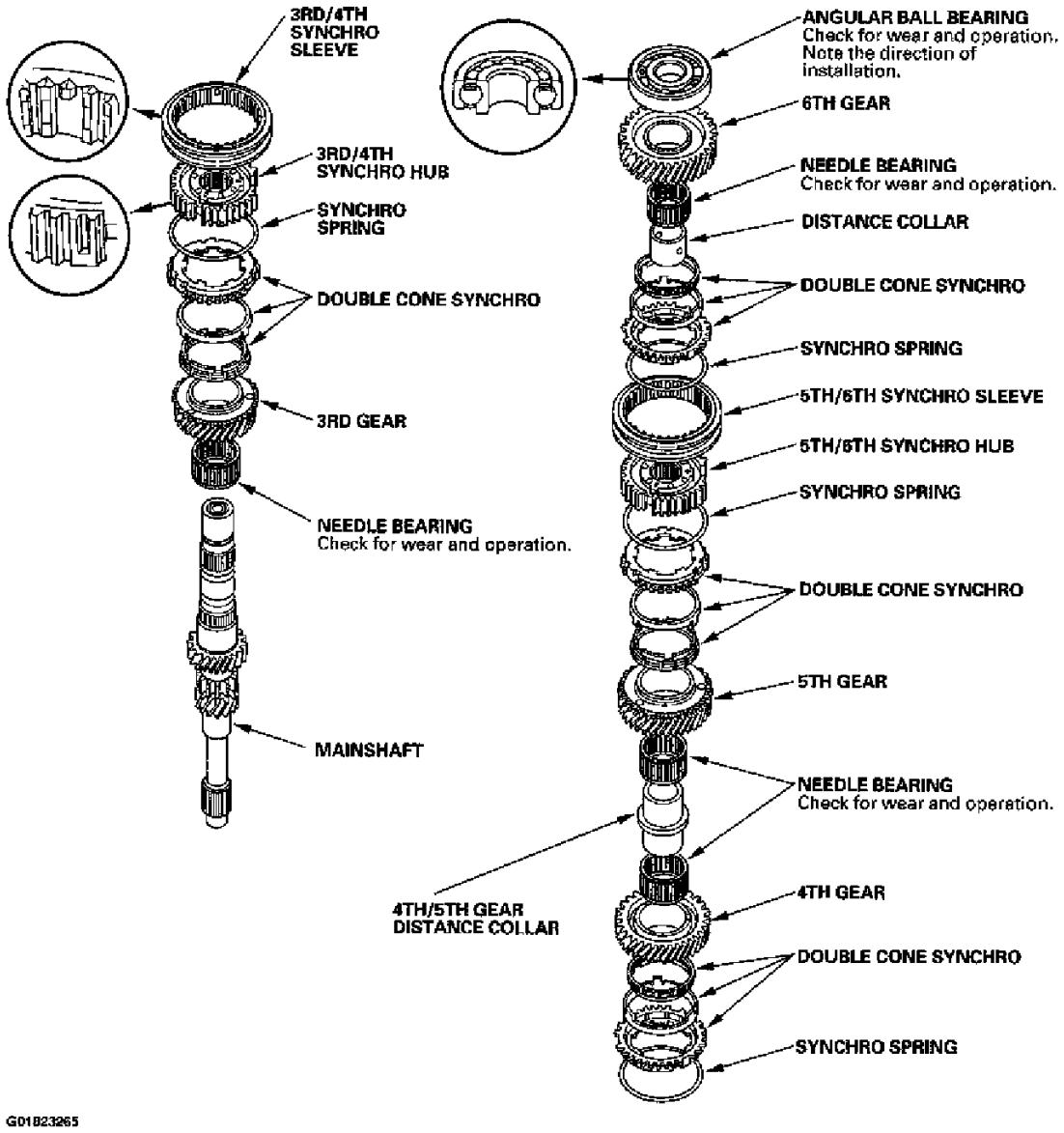

Fig. 58: Exploded View Of Mainshaft Assembly Components

Special Tools Required:

- Driver, 40 mm I.D. 07746-0030100
- Attachment, 30 mm I.D. 07746-0030300

NOTE: Refer to the Exploded View as needed during this procedure.

1. Clean all the parts in solvent, dry them, and apply lubricant to all contact surfaces except the 3rd/4th and 5th/6th synchro hubs.
2. Install the needle bearing and 3rd gear on the mainshaft.

cardiagn.com

3. Install the double cone synchro assembly (A) by aligning the synchro cone fingers (B) with the holes in 3rd gear (C), then install the synchro spring (D).

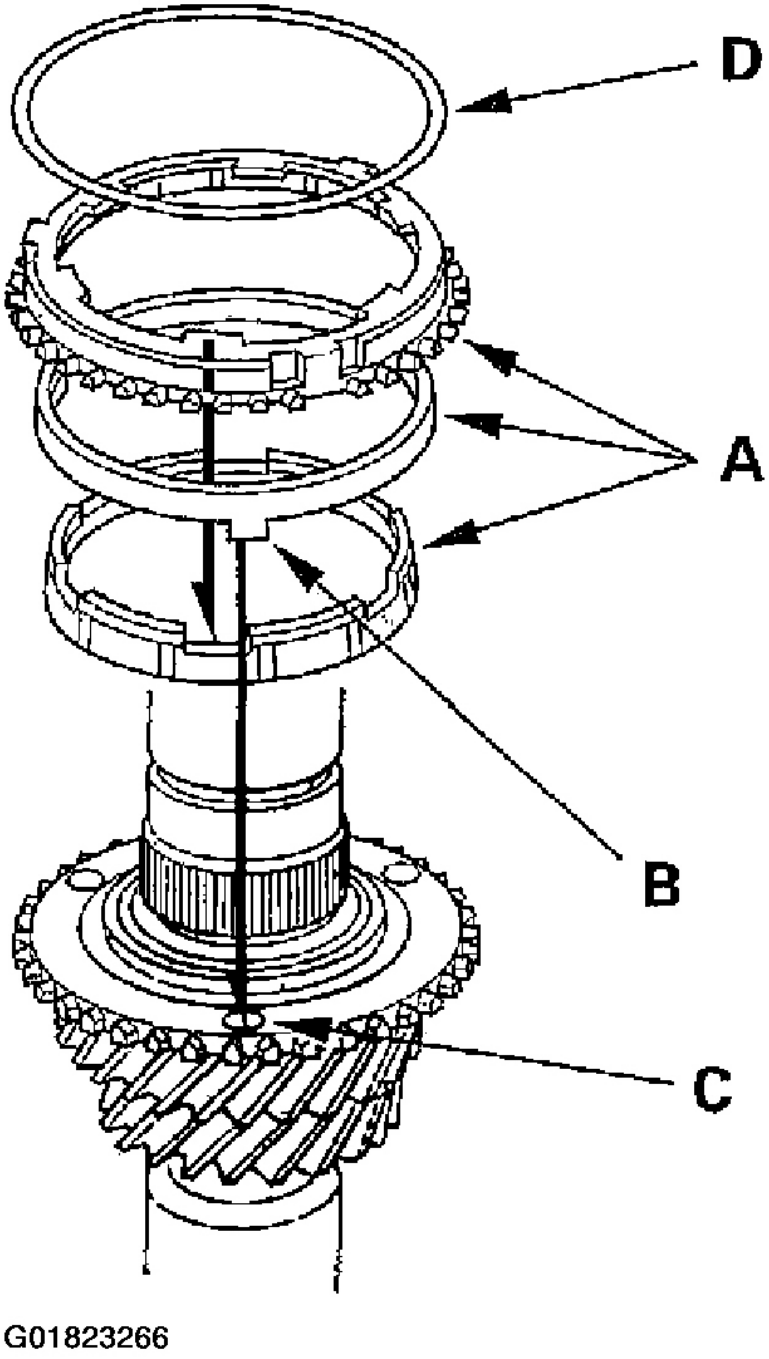

Fig. 59: Installing The Double Cone Synchro Assembly

cardiagn.com

4. Install the 3rd/4th synchro hub (A) by aligning the synchro cone fingers (B) with the grooves in 3rd/4th synchro hub (C).

cardiagn.com

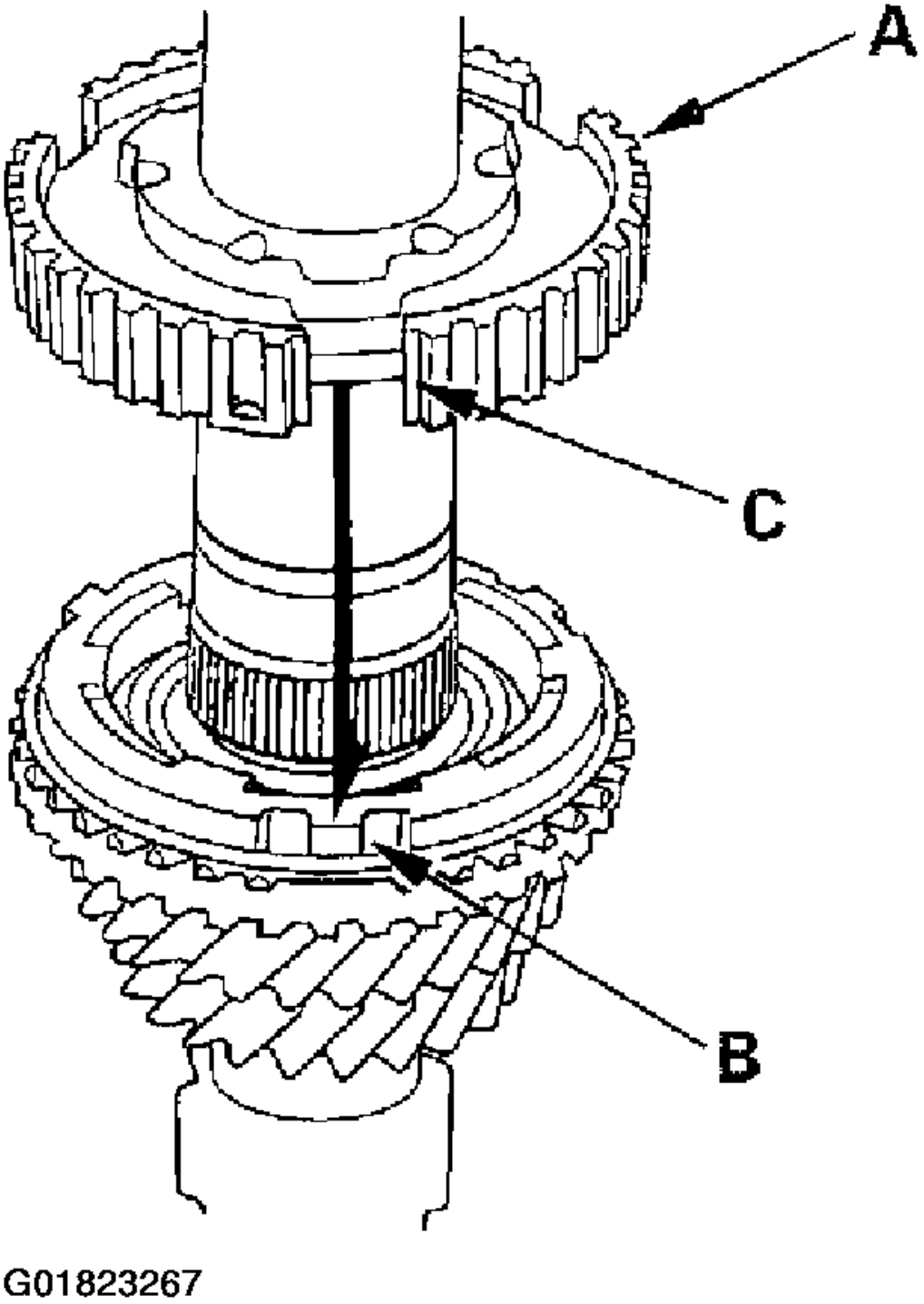

Fig. 60: Aligning The 3rd/4th Synchro Hub

cardiagn.com

5. Install the 3rd/4th synchro hub (A) using the special tool.

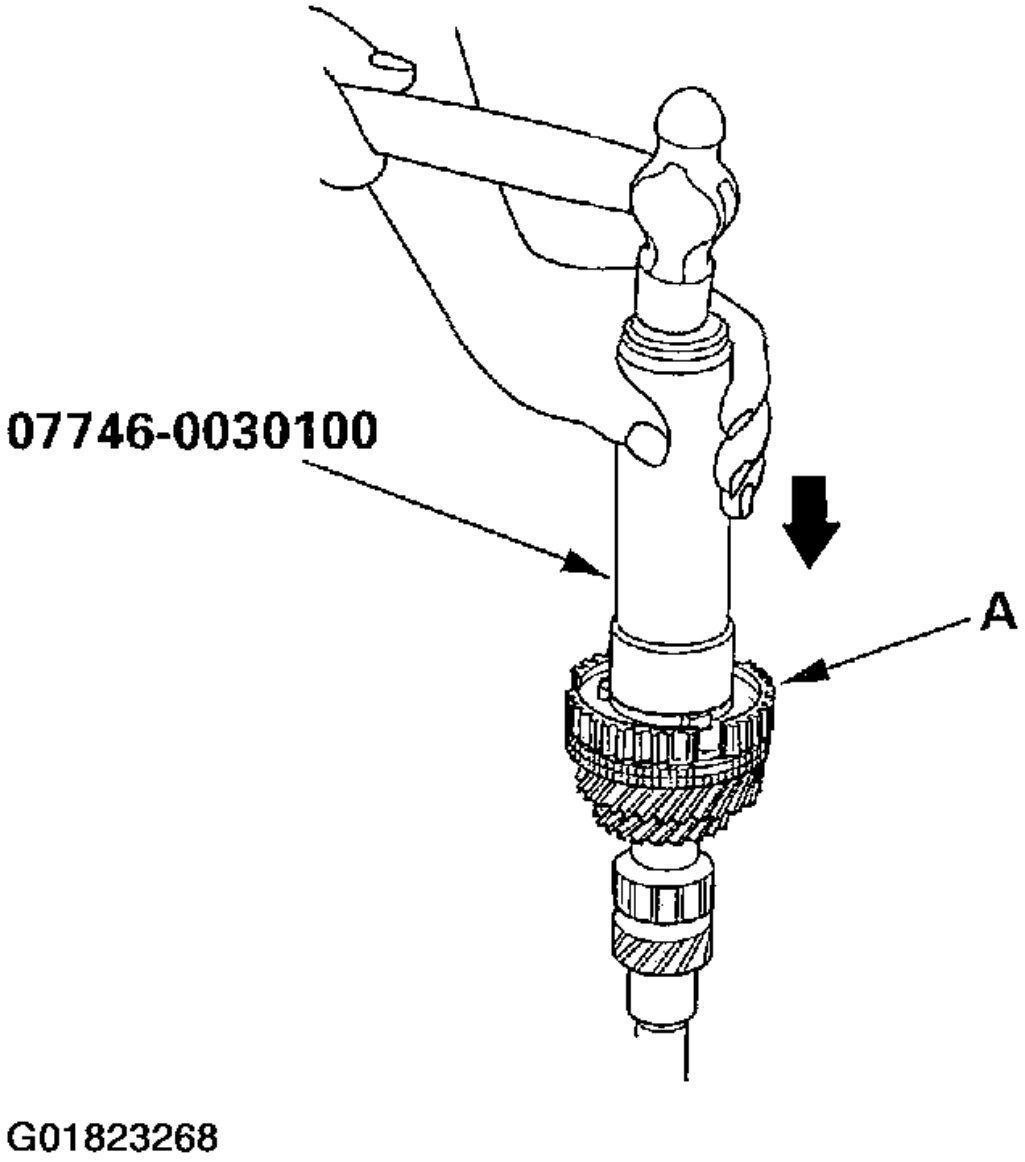

Fig. 61: Installing The 3rd/4th Synchro Hub

6. Install the 3rd/4th synchro sleeve (A) by aligning the stops (B) with the 3rd/4th synchro sleeve and hub. After installing, check the operation of the 3rd/4th synchro hub set.

cardiagn.com

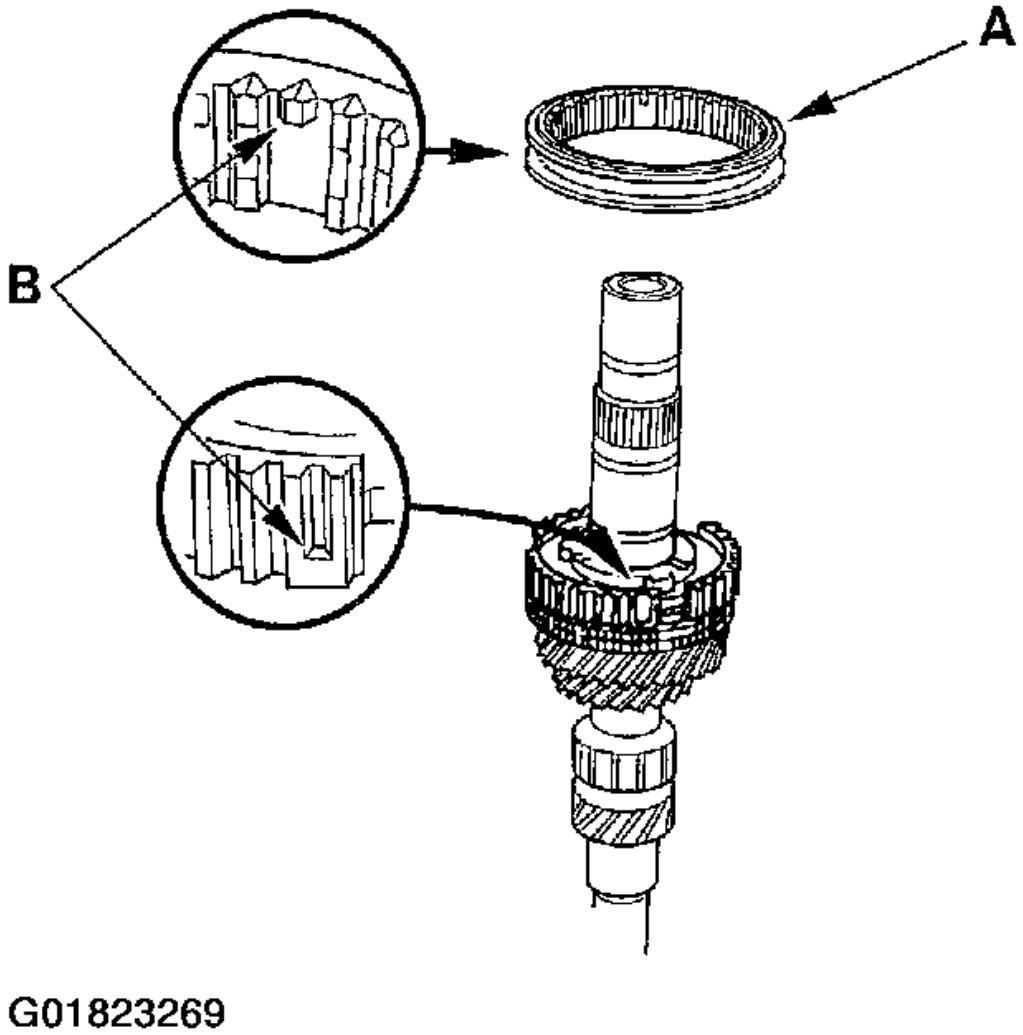

Fig. 62: Installing The 3rd/4th Synchro Sleeve

7. Install the synchro spring (A).

cardiagn.com

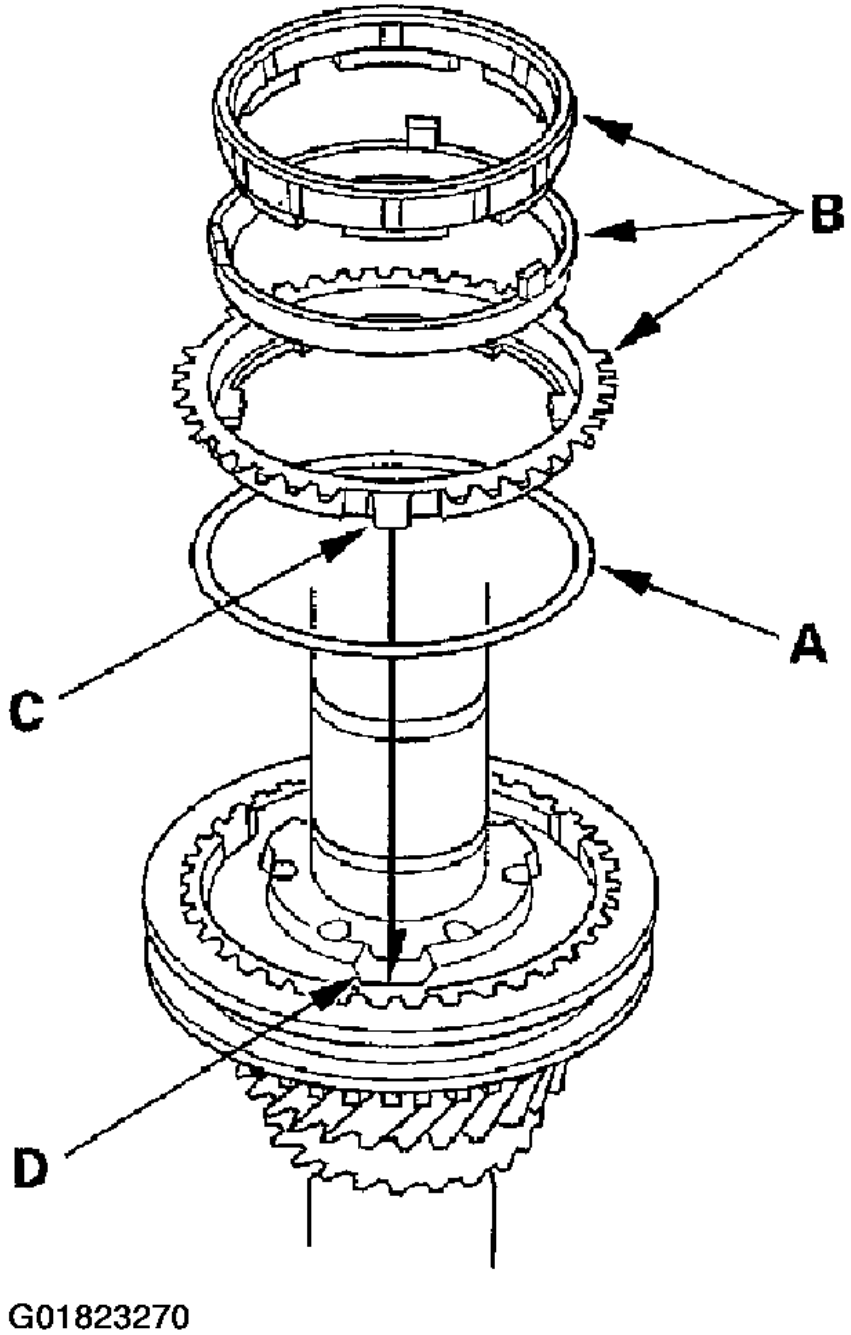

Fig. 63: Installing The Synchro Spring

8. Install the double cone synchro assembly (B) by aligning the synchro cone fingers (C) with the grooves in the 3rd/4th synchro hub (D).

cardiagn.com

9. Install 4th gear (A) by aligning the synchro cone fingers (B) with holes in 4th gear (C).

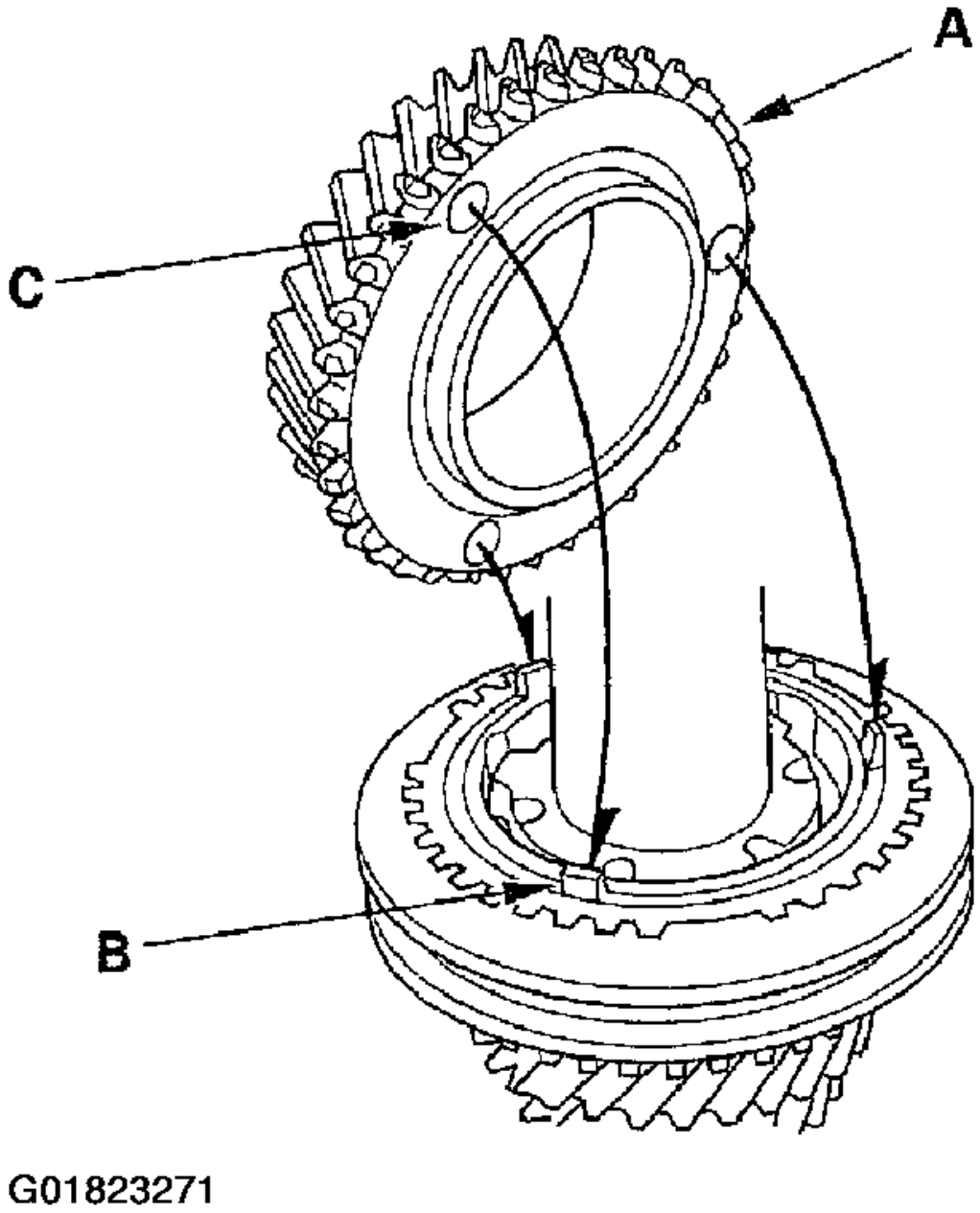

Fig. 64: Installing 4th Gear

10. Install the needle bearings, distance collar, and 5th gear.

cardiagn.com

11. Install the double cone synchro assembly (A) by aligning the synchro cone fingers (B) with the holes in 5th gear (C), then install the synchro spring (D).

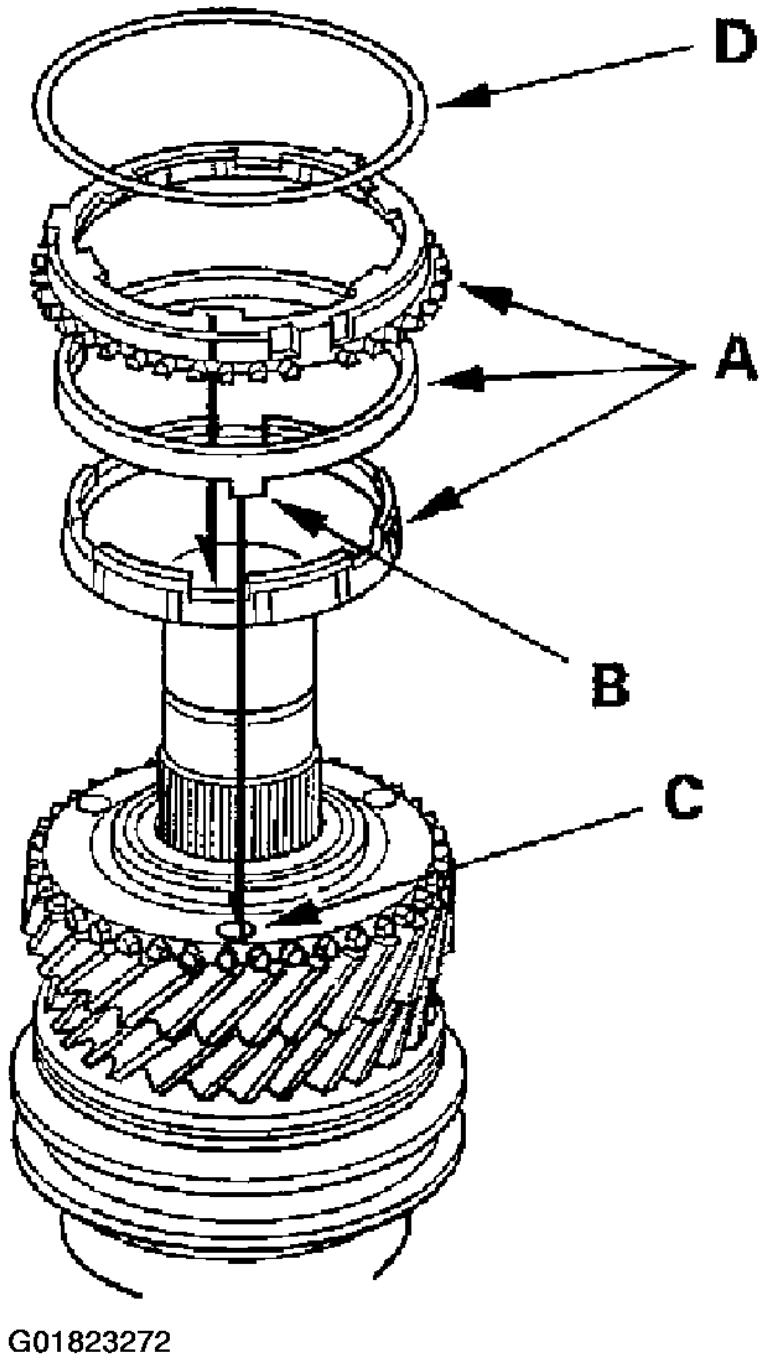

Fig. 65: Installing The Double Cone Synchro Assembly

cardiagn.com

12. Install the 5th/6th synchro hub (A) by aligning the synchro cone fingers (B) with the grooves in the 5th/6th synchro hub (C).

cardiagn.com

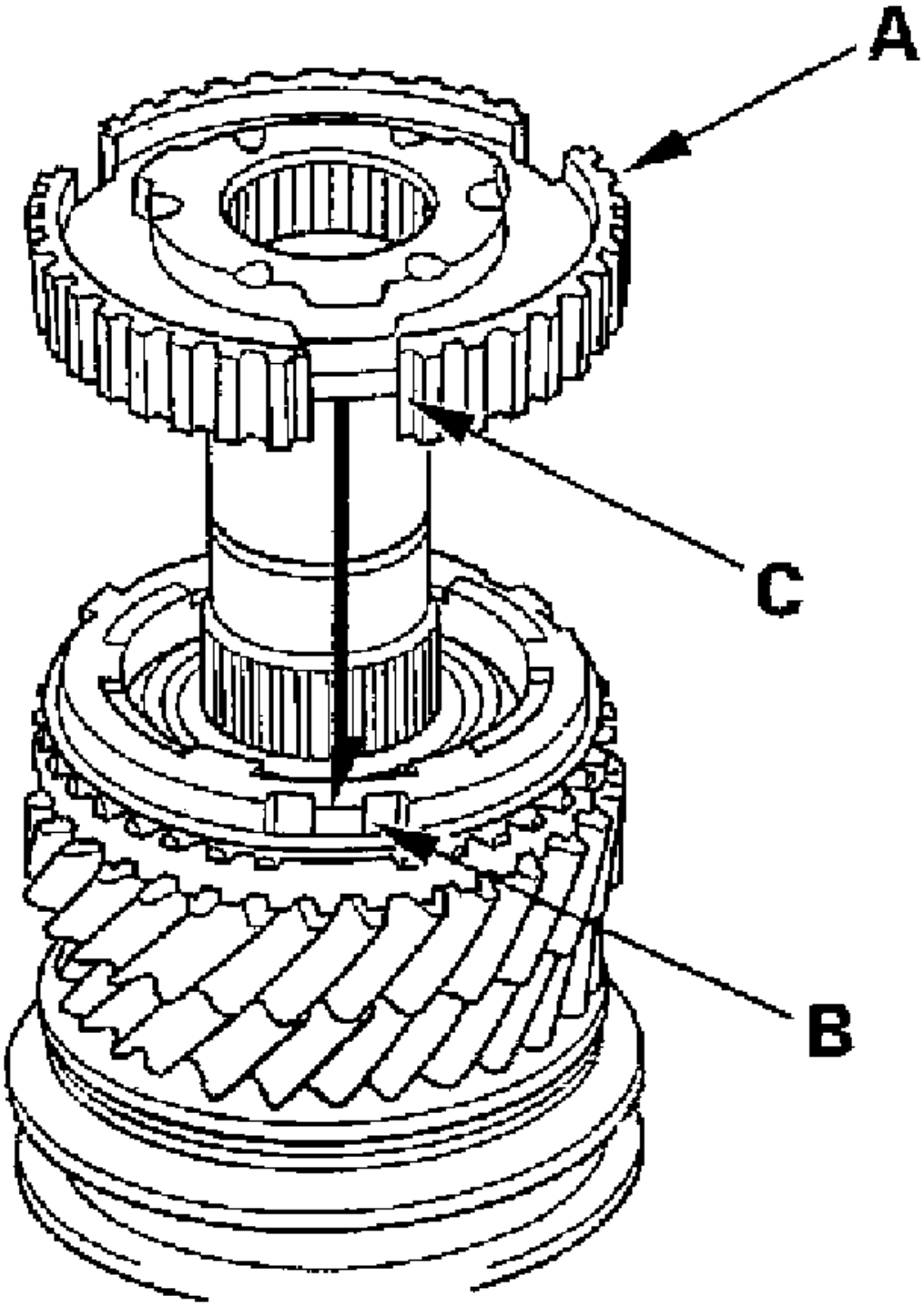

G01823273

cardiagn.com

Fig. 66: Aligning The 5th/6th Synchro Hub

13. Install the 5th/6th synchro hub (A) using the special tools.

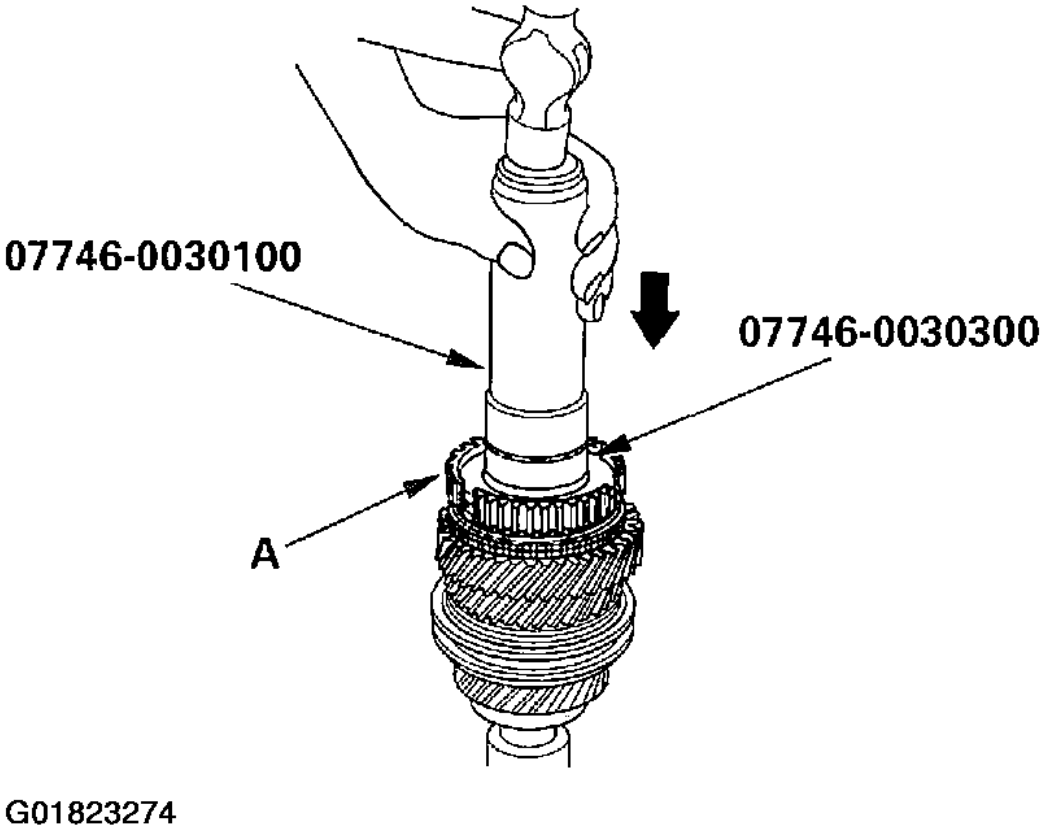

Fig. 67: Installing The 5th/6th Synchro Hub

14. Install the 5th/6th synchro sleeve.
15. Install the synchro spring (A).

cardiagn.com

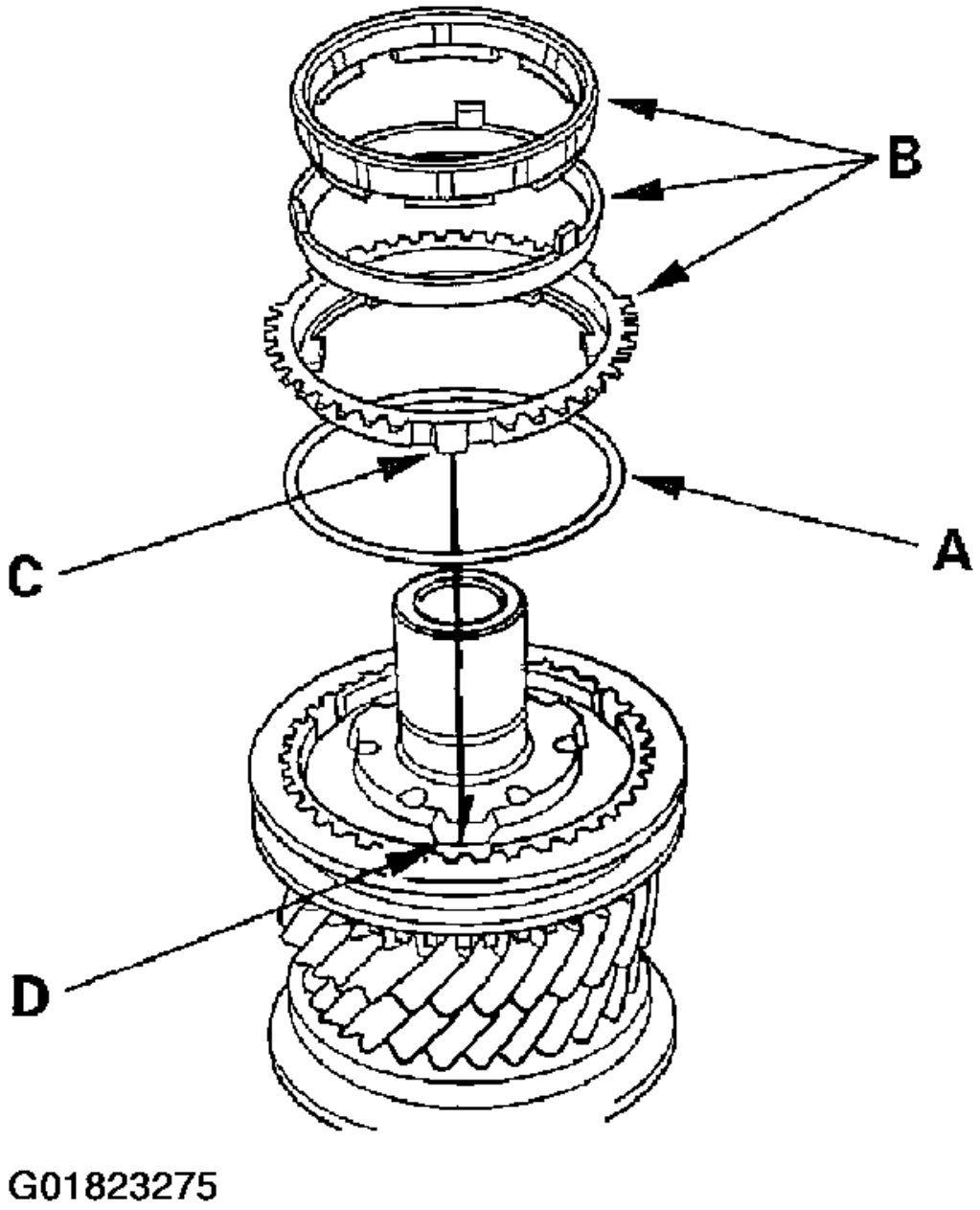

Fig. 68: Installing The Synchro Spring

16. Install the double cone synchro assembly (B) by aligning the synchro cone fingers (C) with the grooves in the 5th/6th synchro hub (D).
17. Install the distance collar and the needle bearing.

cardiagn.com

18. Install the 6th gear (A) by aligning the synchro cone fingers (B) with the holes in the 6th gear (C).

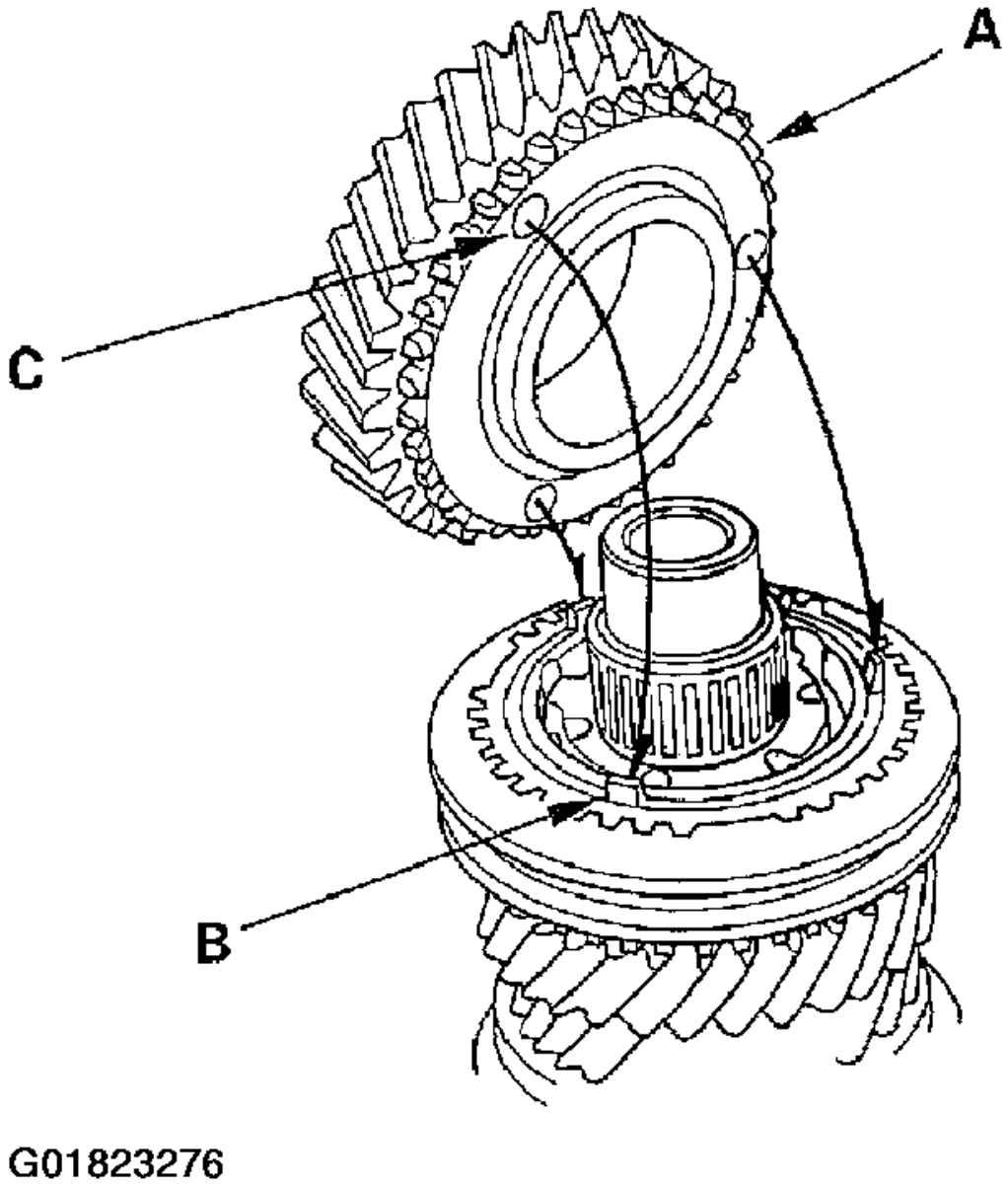

Fig. 69: Installing The 6th Gear

19. Install the NEW ball bearing (A) using the special tools and press (B).

cardiagn.com

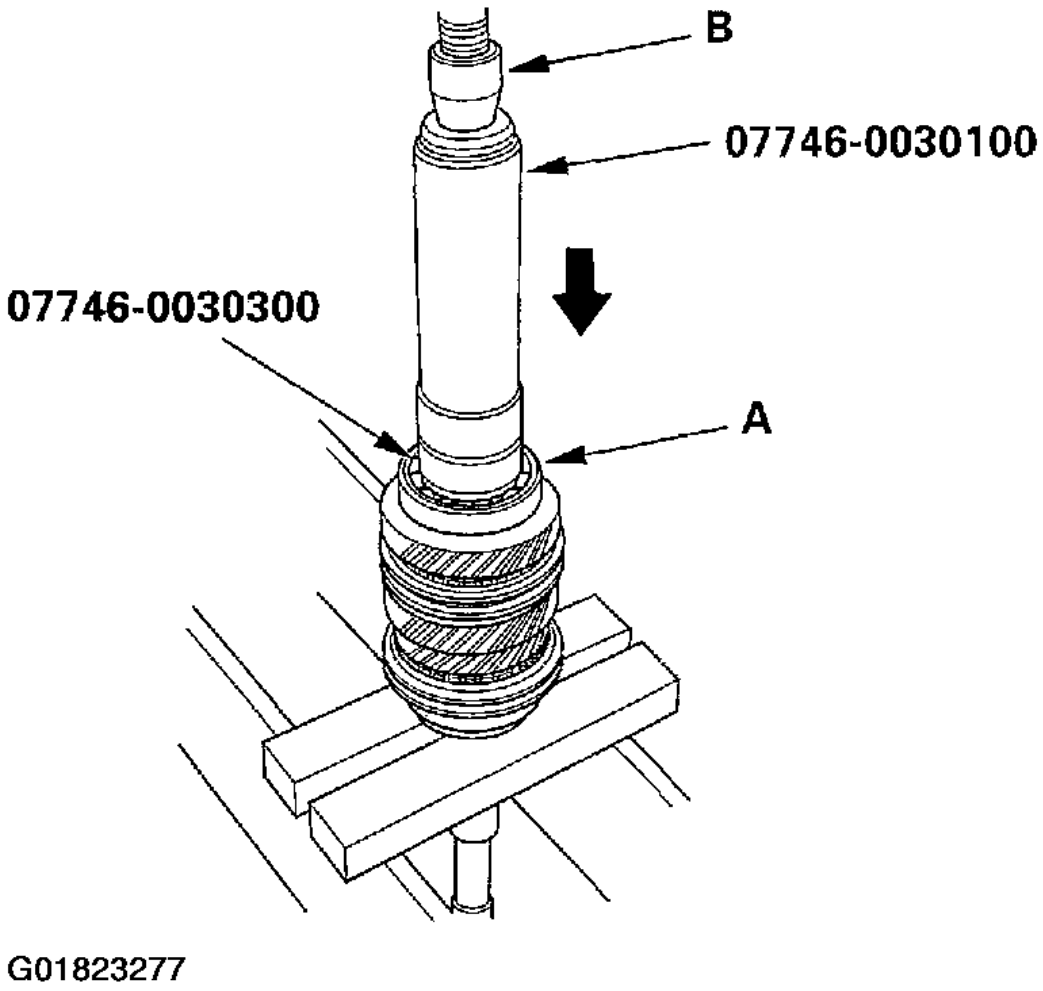

Fig. 70: Installing The NEW Ball Bearing

COUNTERSHAFT ASSEMBLY CLEARANCE INSPECTION

1. Measure the clearance between the 1st gear (A) and the distance collar (B) with a feeler gauge (C). If the clearance is more than the service limit, go to step 2.

   Standard: 0.06-0.16 mm (0.002-0.006 in.)

   Service Limit: 0.25 mm (0.010 in.)

cardiagn.com

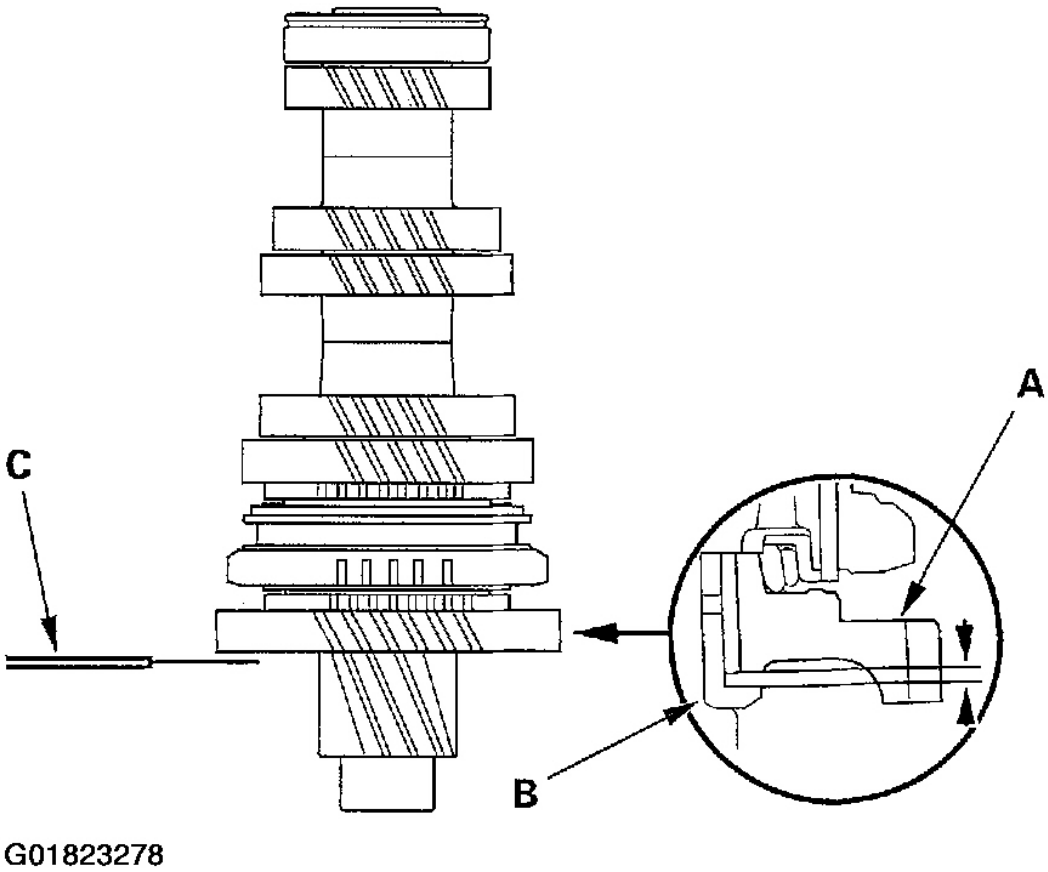

Fig. 71: Measuring The Clearance Between The 1st Gear & The Distance Collar

2. Measure the thickness of the distance collar.

   Standard: 23.03-23.08 mm (0.907-0.909 in.)

   - If the thickness is not within than the standard, replace the distance collar.
   - If the thickness is within the standard, go to step 3.

cardiagn.com

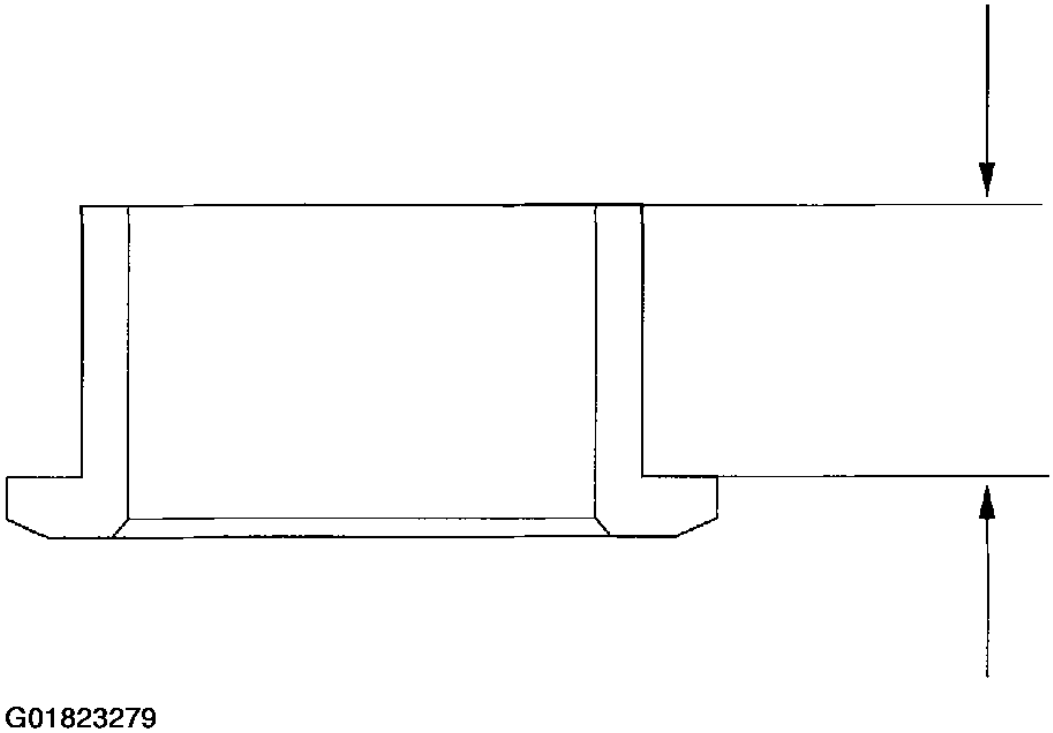

Fig. 72: Measuring The Thickness Of The Distance Collar

3. Measure the thickness of the 1st gear.

   Standard: 22.92-22.97 mm (0.902-0.904 in.)

   Service Limit: 22.87 mm (0.900 in.)

   - If the thickness is less than the service limit, replace 1st gear.
   - If the thickness is within the service limit, replace the 1st/2nd synchro hub.

cardiagn.com

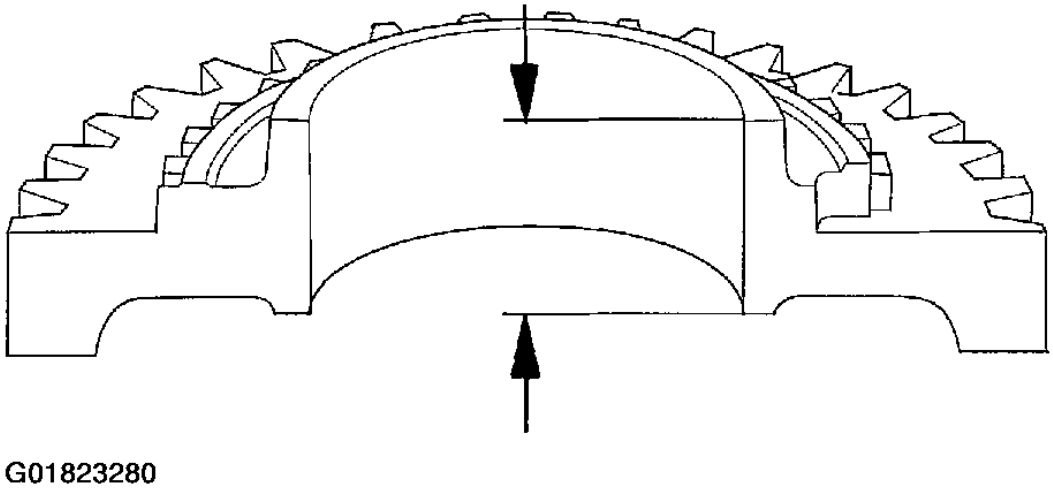

Fig. 73: Measuring The Thickness Of The 1st Gear

4. Measure the clearance between the 2nd gear (A) and 3rd gear (B) with a feeler gauge (C). If the clearance is more than the service limit, go to step 5.

   Standard: 0.06-0.16 mm (0.002-0.006 in.)

   Service Limit: 0.25 mm (0.010 in.)

cardiagn.com

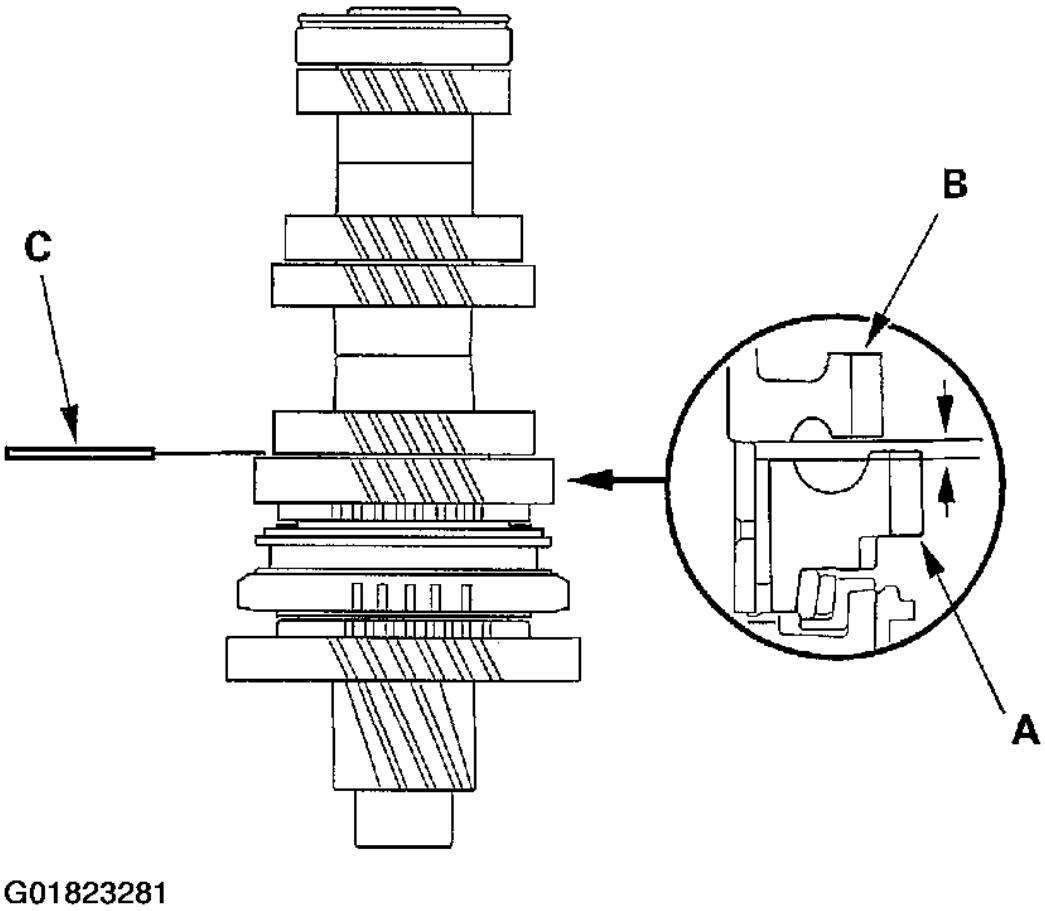

Fig. 74: Measuring The Clearance Between The 2nd Gear & 3rd Gear

5. Measure the thickness of the distance collar.

   Standard: 28.03-28.08 mm (1.104-1.106 in.)

   - If the thickness is not within the standard, replace the distance collar.
   - If the thickness is within the standard, go to step 6.

cardiagn.com

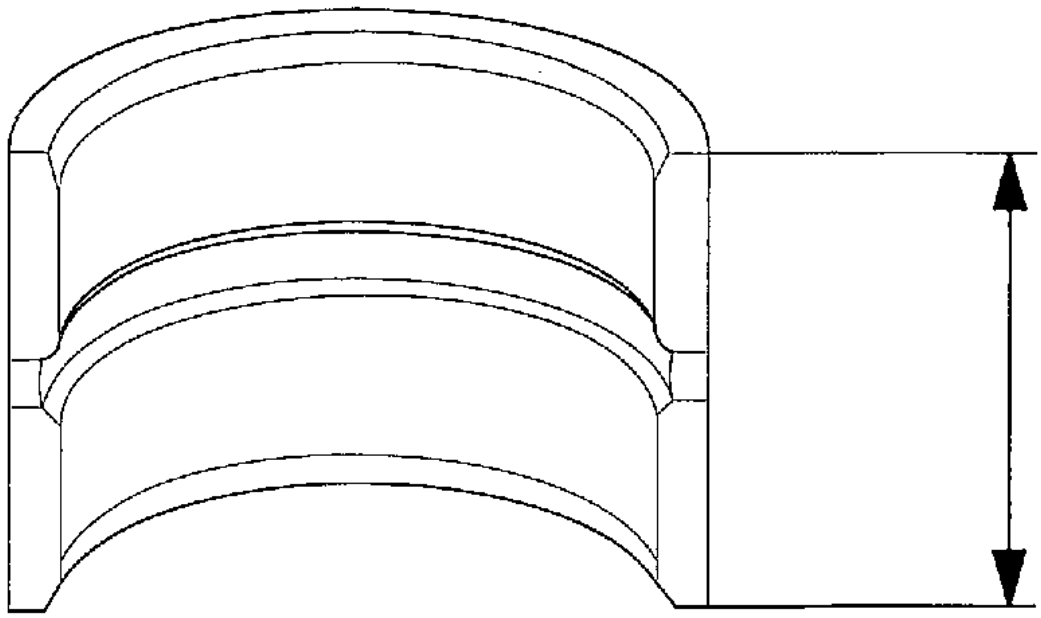

G01823282

Fig. 75: Measuring The Thickness Of The Distance Collar

6. Measure the thickness of the 2nd gear.

   Standard: 27.92-27.97 mm (1.099-1.101 in.)

   Service Limit: 27.87 mm (1.097 in.)

   - If the thickness is less than the service limit, replace 2nd gear.
   - If the thickness is within the service limit, replace the 1st/2nd synchro hub.

cardiagn.com

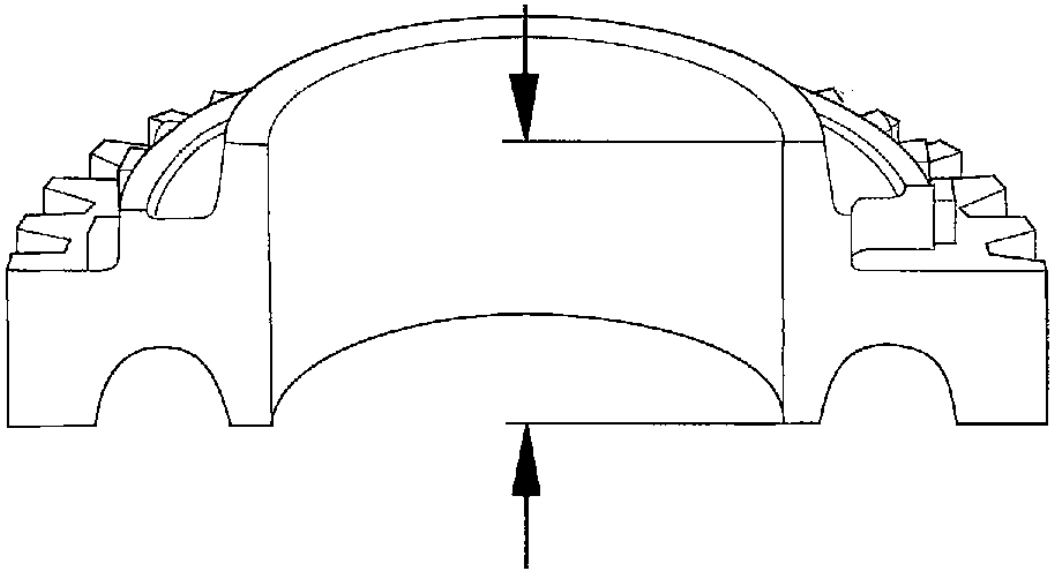

Fig. 76: Measuring The Thickness Of The 2nd Gear

COUNTERSHAFT DISASSEMBLY

1. Securely clamp the countershaft assembly in a bench vise with wood blocks.

cardiagn.com

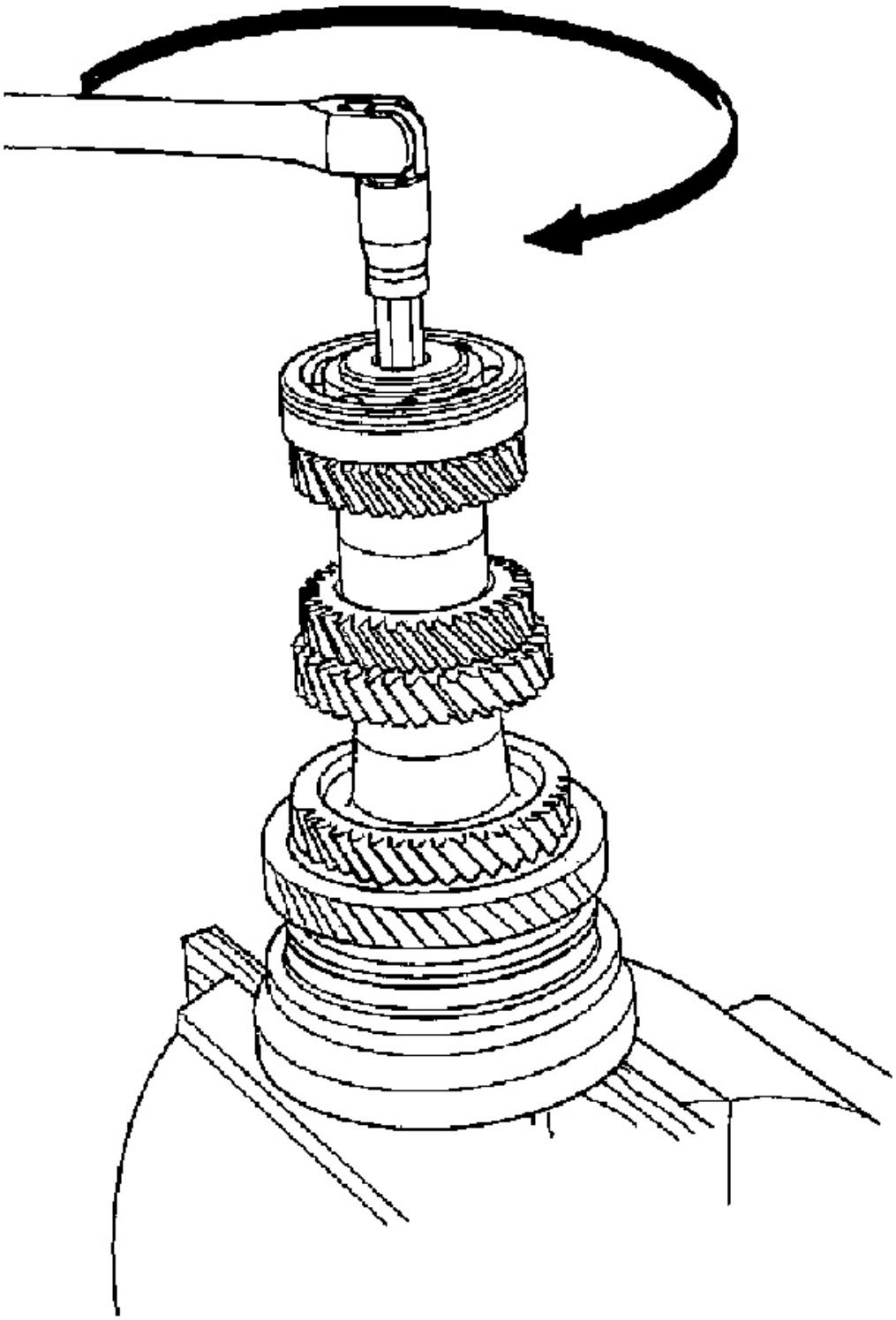

G01823284

cardiagn.com

Fig. 77: Clamping The Countershaft Assembly In A Bench Vise With Wood Blocks

2. Remove the special bolt (left-hand threads).
3. Support the 6th gear (A) on steel blocks (B), then use a press (C) and an attachment (D) to press the countershaft out of the ball bearing.

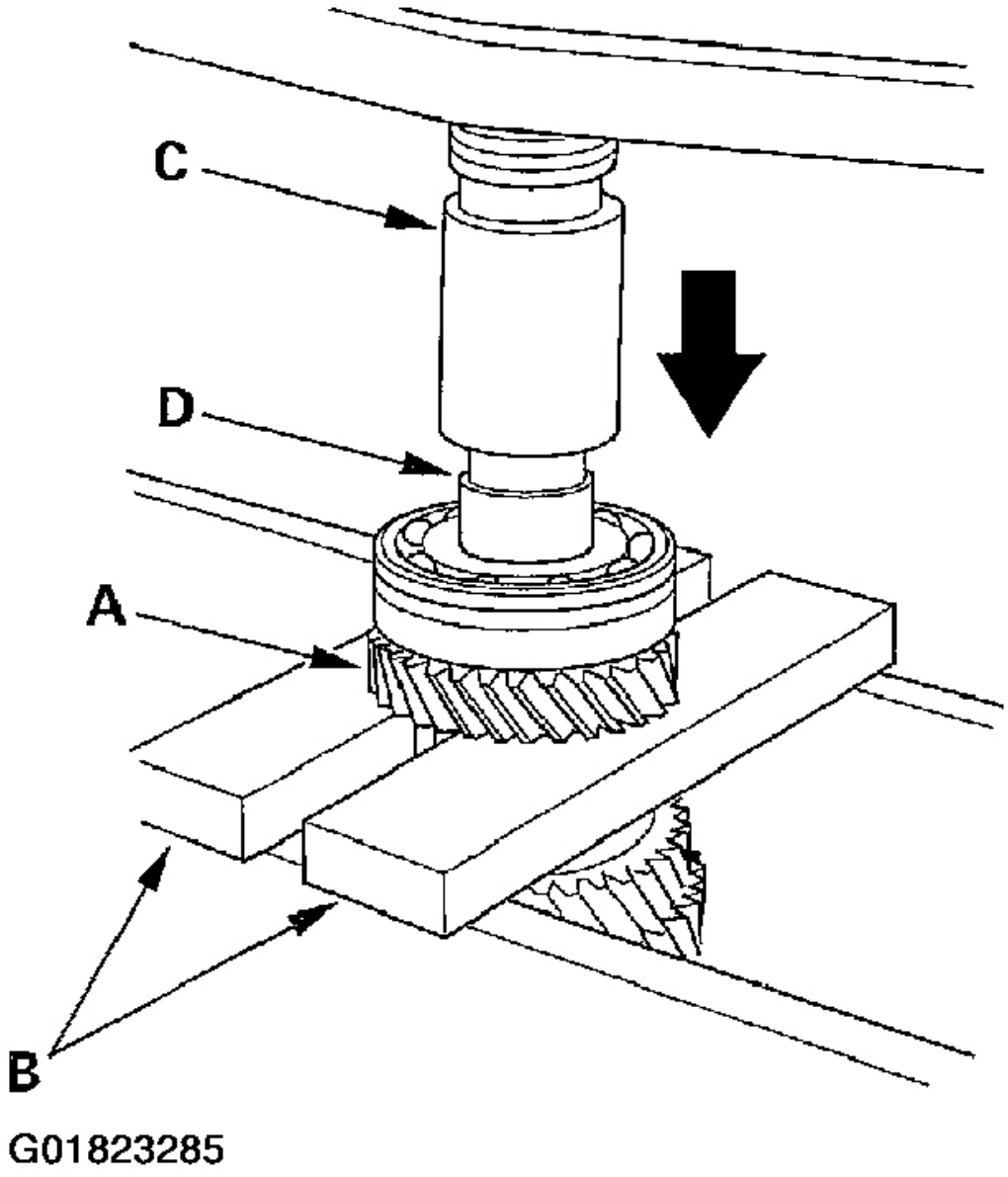

Fig. 78: Pressing The Countershaft Out Of The Ball Bearing

cardiagn.com

4. Remove the 35 mm shim.
5. Support 4th gear (A) on steel blocks (B), then use a press (C) and an attachment (D) to press the countershaft (E) out of the 5th gear.

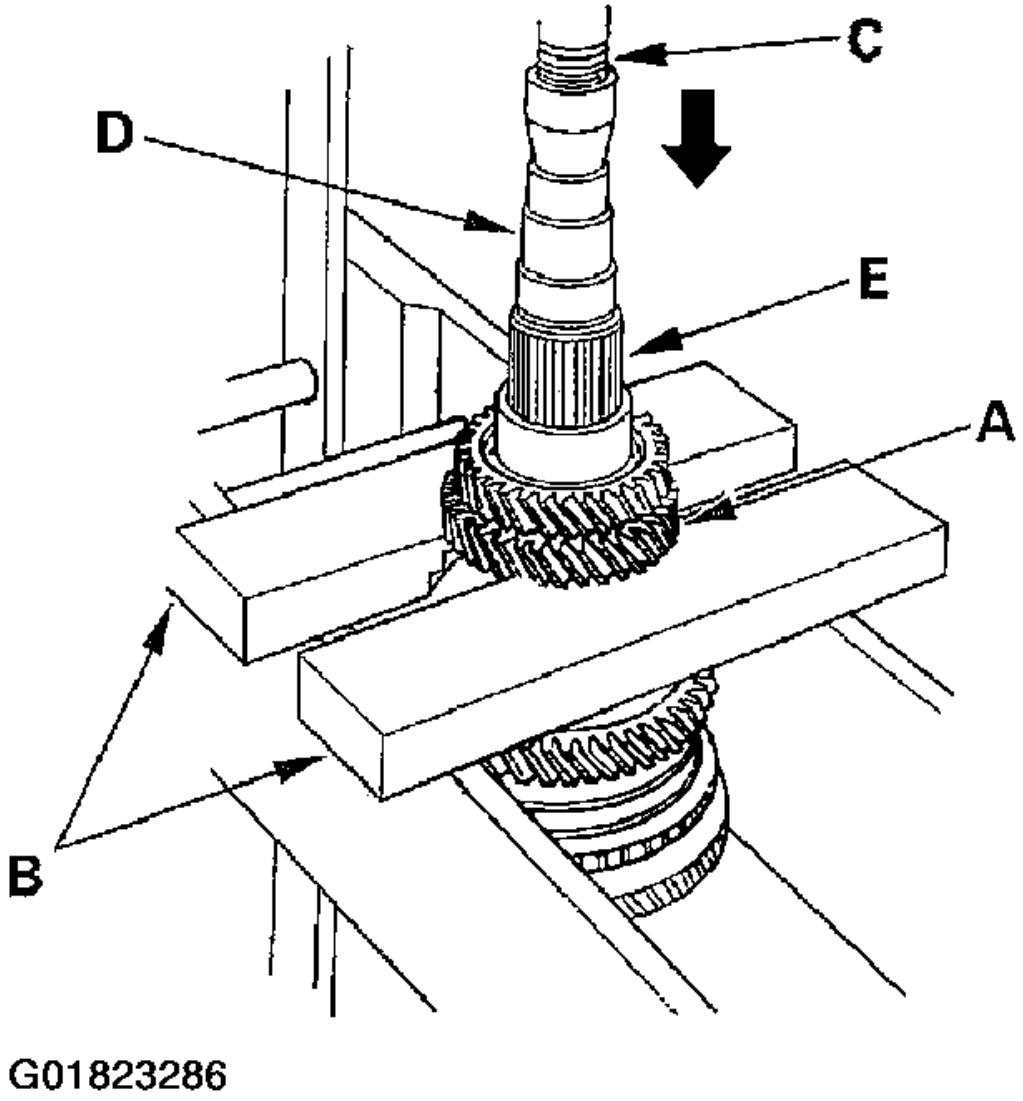

Fig. 79: Pressing The Countershaft Out Of The 5th Gear

6. Support 2nd gear (A) on steel blocks (B), then use a press (C) and an attachment (D) to press the countershaft (E) out of 3rd gear.

cardiagn.com

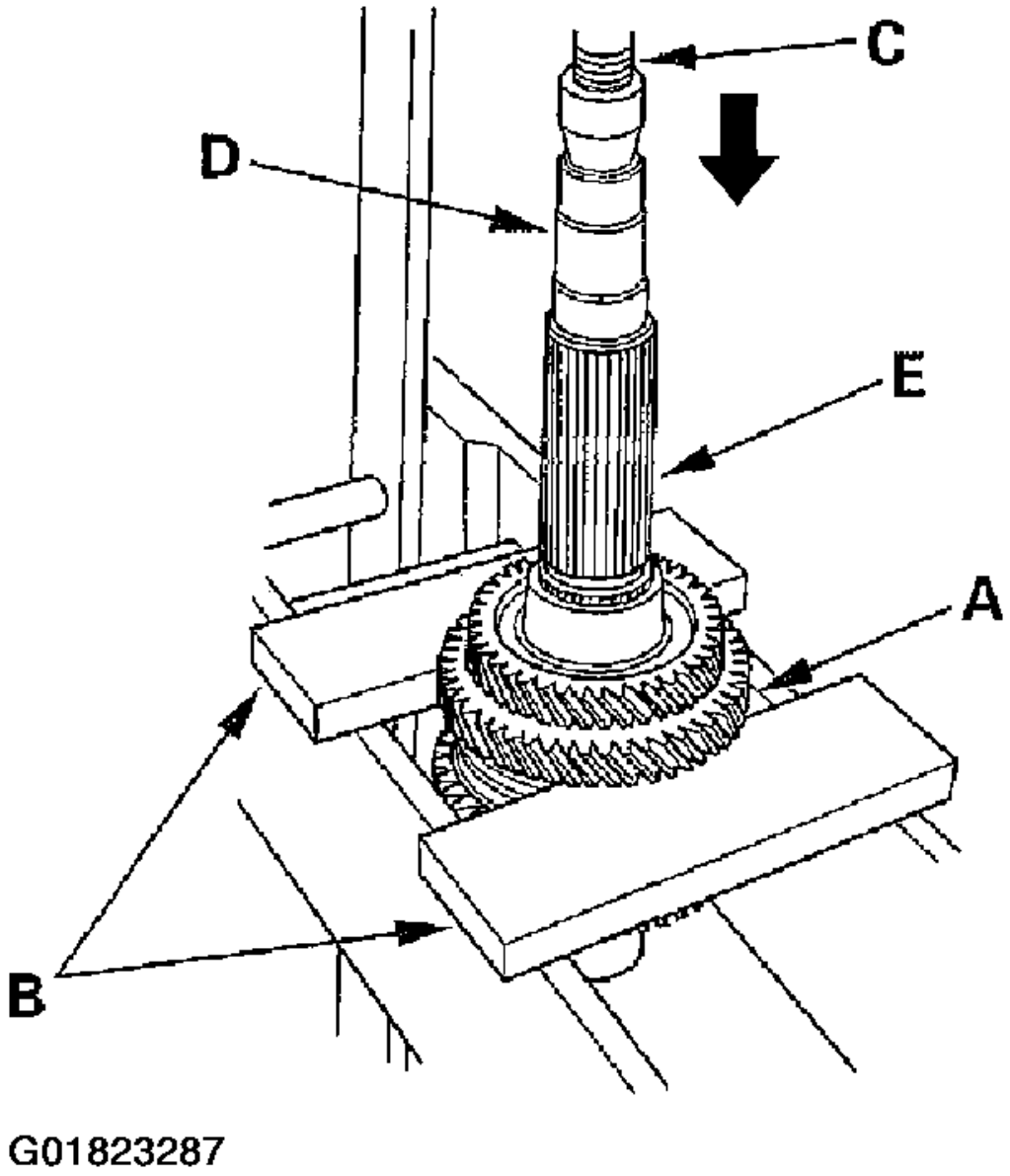

Fig. 80: Pressing The Countershaft Out Of The 3rd Gear

COUNTERSHAFT INSPECTION

1. Inspect the gear and bearing surfaces for wear and damage, then measure the countershaft at points A, B, and C. If any part of the countershaft is less than the service limit, replace it.

   Standard:

cardiagn.com

A Ball Bearing Surface (Transmission Housing Side): 30.020-30.033 mm (1.1819-1.1824 in.)

B Distance Collar Surface: 39.937-39.950 mm (1.5723-1.5728 in.)

C Needle Bearing Surface (Clutch Housing Side): 35.000-35.015 mm (1.3779-1.3785 in.)

Service Limit:

A: 29.97 mm (1.180 in.)

B: 39.883 mm (1.5702 in.)

C: 34.95 mm (1.376 in.)

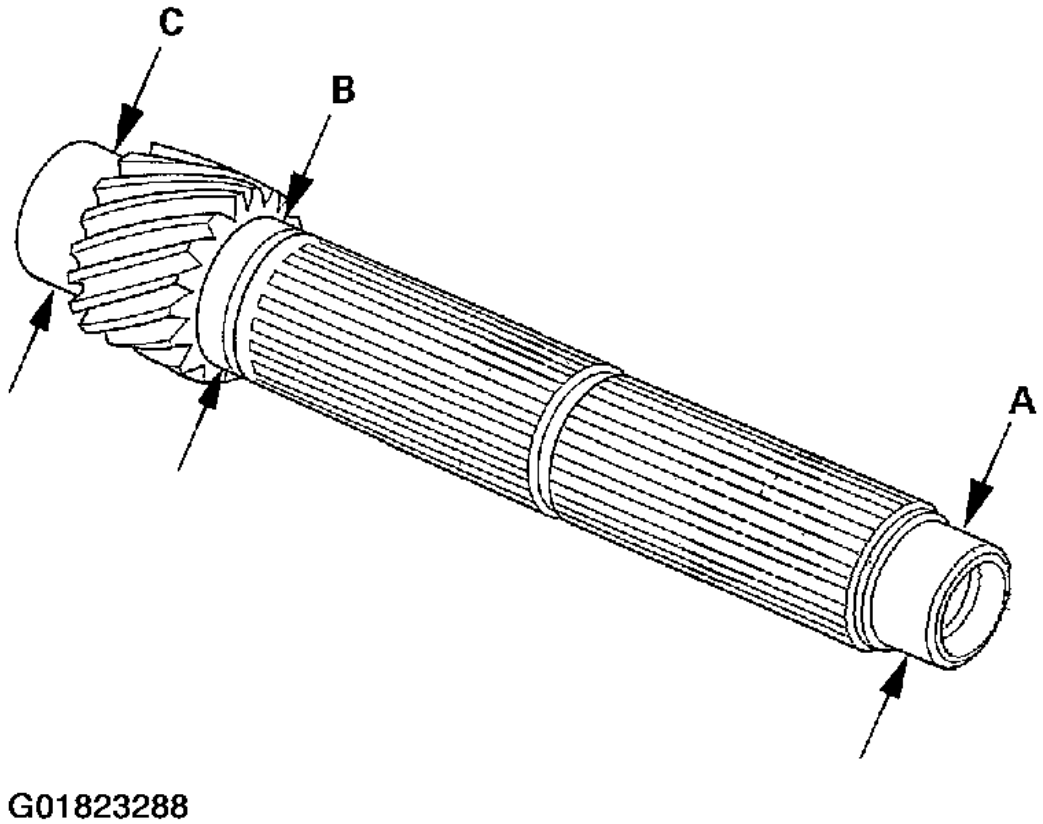

Fig. 81: Inspecting Countershaft Surfaces

2. Inspect the runout by supporting both ends of the countershaft. Then rotate the countershaft two complete turns while measuring with a dial gauge. If the runout exceeds the service limit, replace the countershaft.

   Standard: 0.02 mm (0.001 in.) Max.

   Service Limit: 0.05 mm (0.002 in.)

cardiagn.com

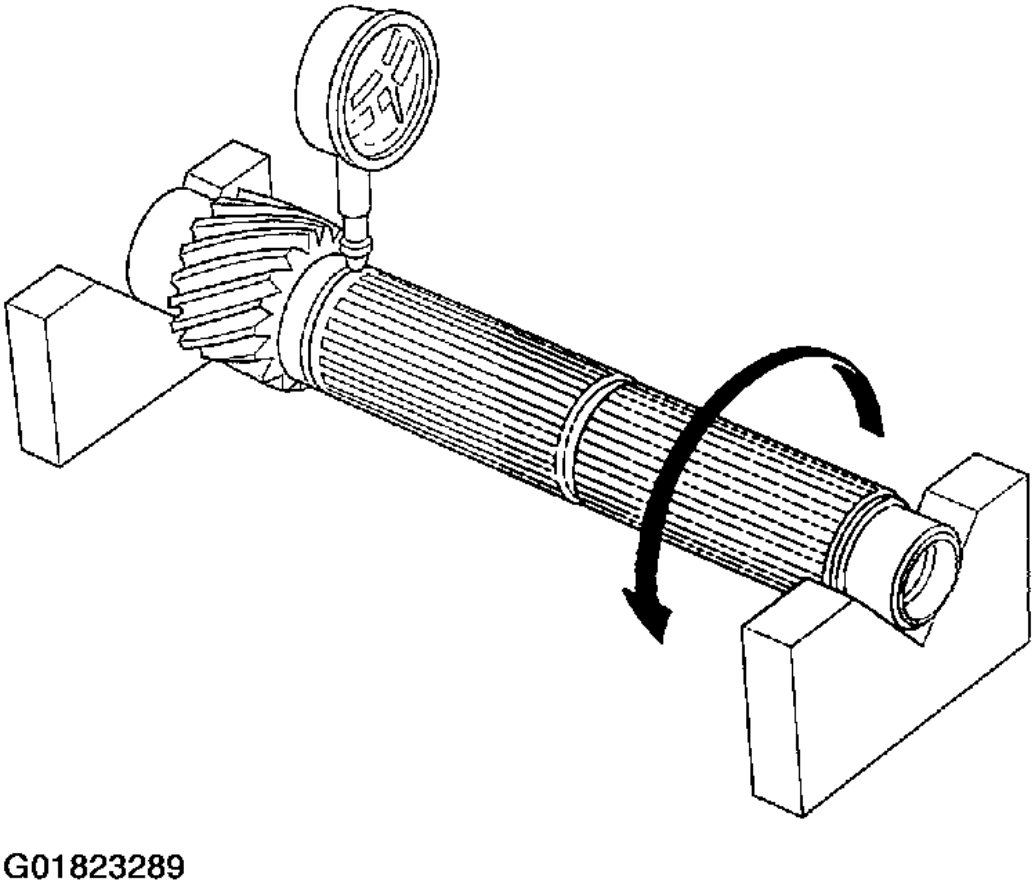

Fig. 82: Inspecting Countershaft Runout

COUNTERSHAFT REASSEMBLY

Exploded View

cardiagn.com

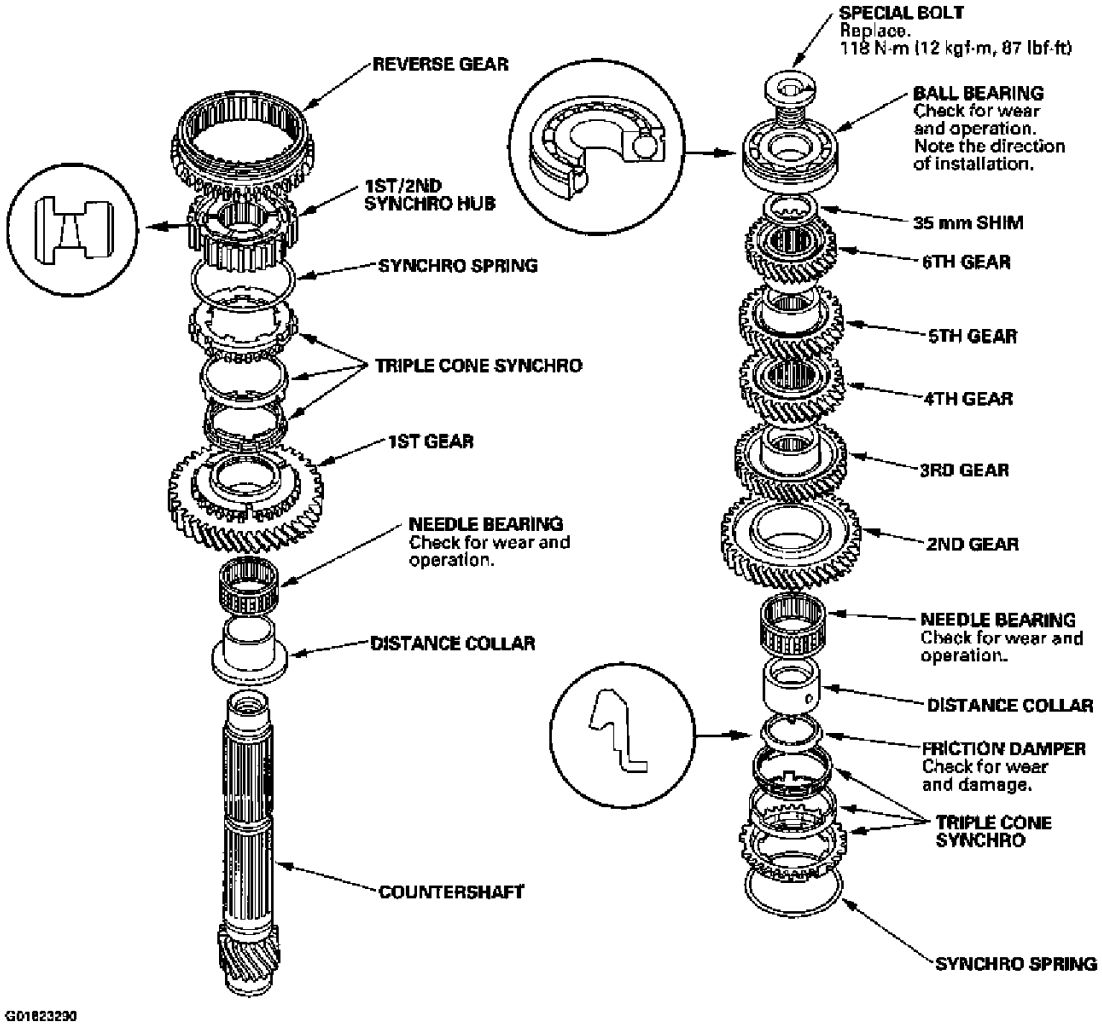

Fig. 83: Exploded View Of Countershaft Components

Special Tools Required:

- Driver, 40 mm I.D 07746-0030100
- Attachment, 30 mm 07746-0030300

NOTE: Refer to the Exploded View as needed during this procedure.

1. Clean all parts in solvent, dry them, and apply lubricant to all contact surfaces.
2. Install the distance collar and needle bearing onto the countershaft.
3. Install the triple cone synchro assembly (A) by aligning the synchro cone fingers (B) with 1st gear grooves (C), then install the synchro spring (D).

cardiagn.com

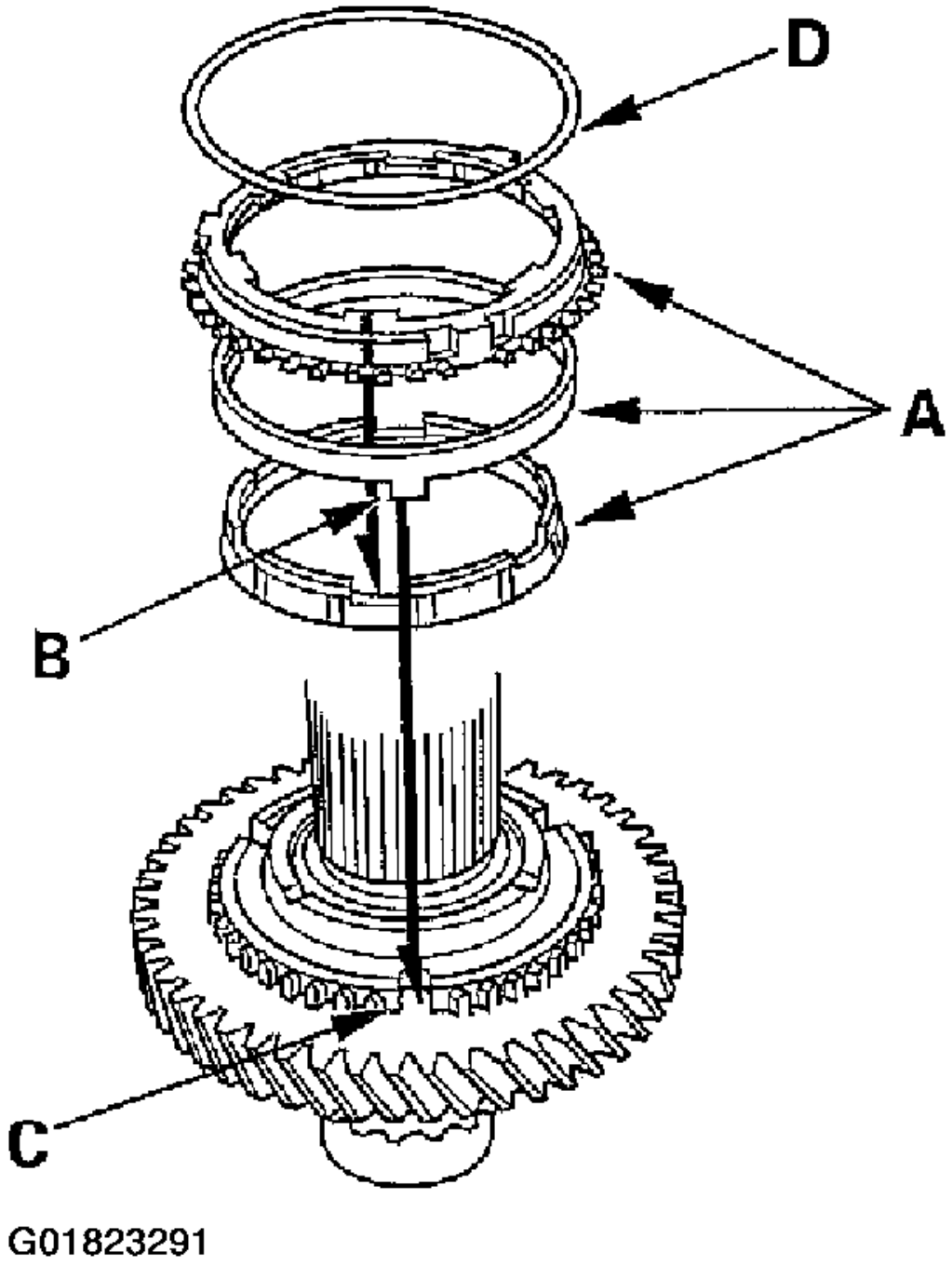

Fig. 84: Installing The Triple Cone Synchro Assembly

4. Install the 1st/2nd synchro hub (A) by aligning the synchro cone fingers (B) with the 1st/2nd synchro hub

cardiagn.com

grooves (C).

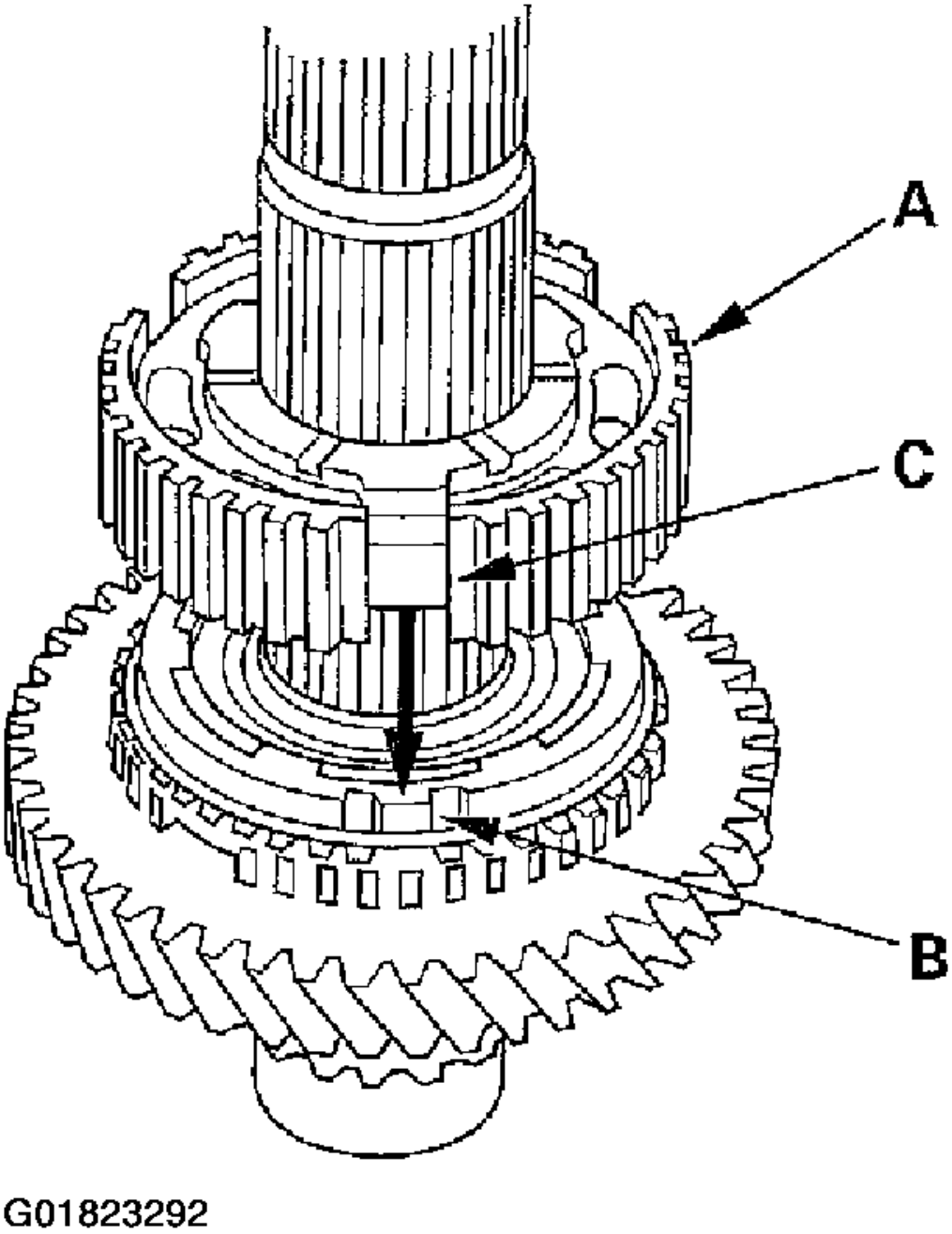

Fig. 85: Installing The 1st/2nd Synchro Hub

cardiagn.com

5. Install the reverse gear.
6. Install the synchro spring (A).

cardiagn.com

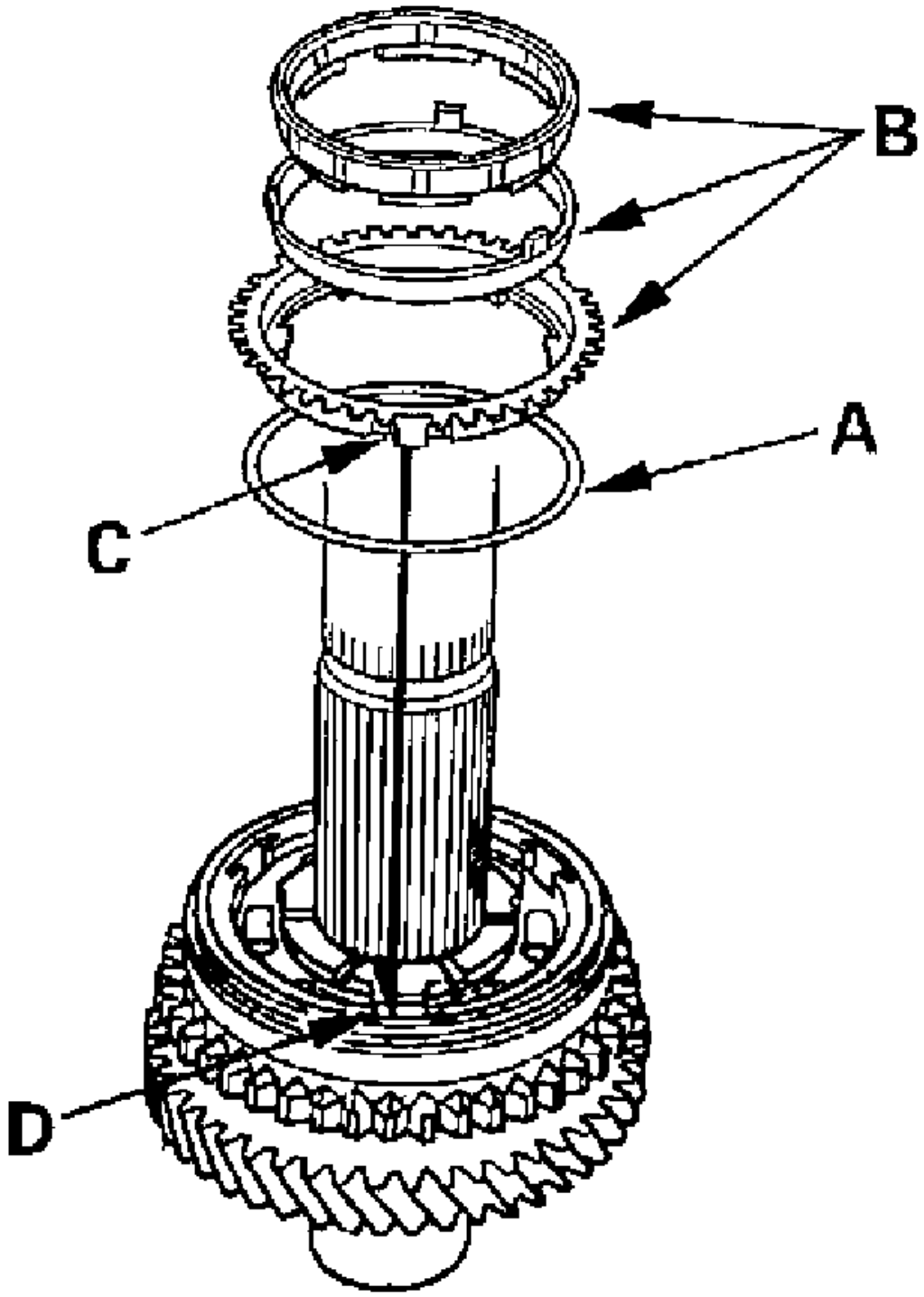

G01823293

cardiagn.com

Fig. 86: Installing The Synchro Spring

7. Install the triple cone synchro assembly (B) by aligning the synchro cone fingers (C) with the 1st/2nd synchro hub grooves (D).
8. Install the distance collar (A) and friction damper (B) by aligning the friction damper fingers (C) with the 1st/2nd synchro hub grooves (D).

cardiagn.com

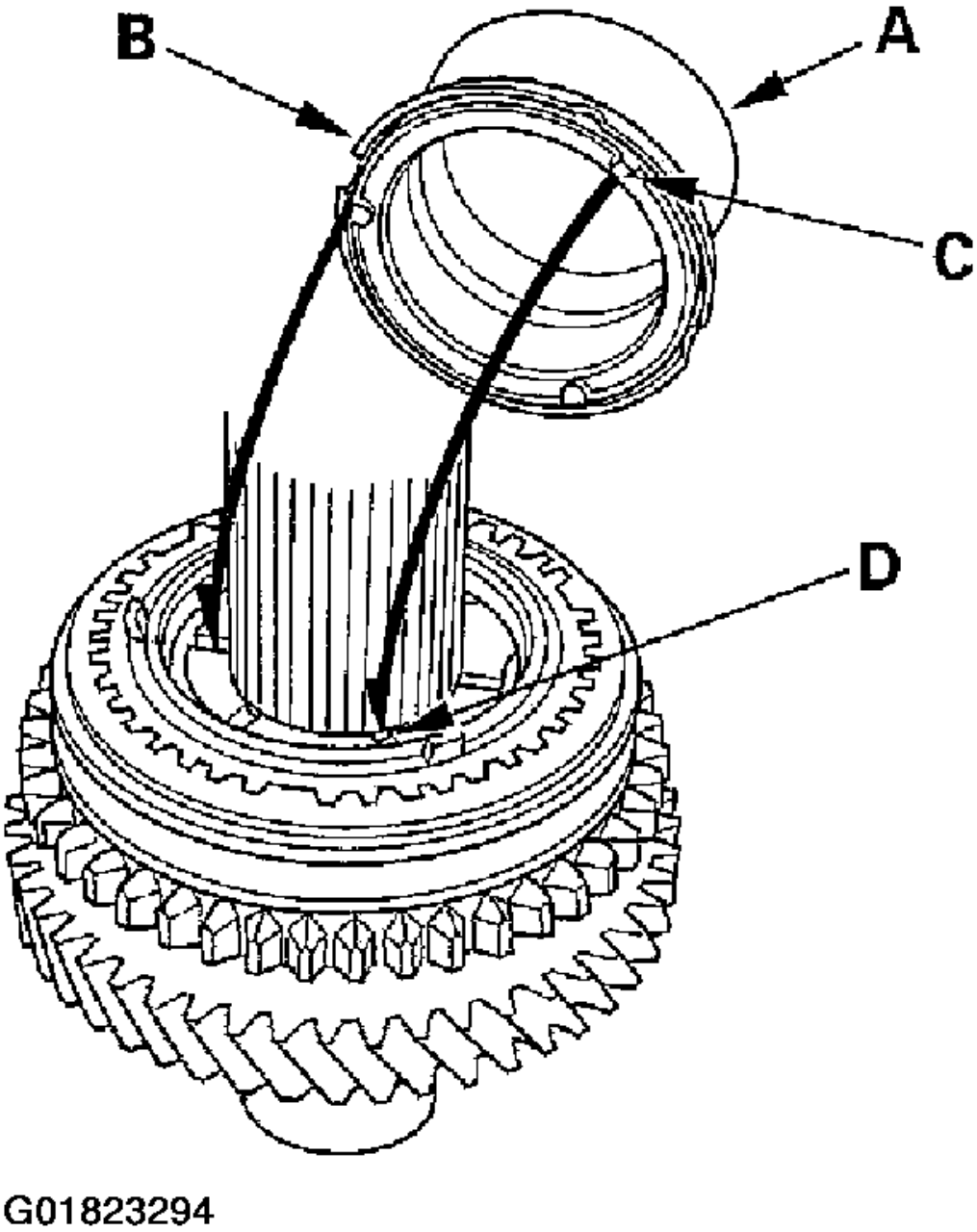

Fig. 87: Installing The Distance Collar & Friction Damper

9. Install the needle bearing.
10. Install the 2nd gear (A) by aligning the synchro cone fingers (B) with the 2nd gear grooves (C).

cardiagn.com

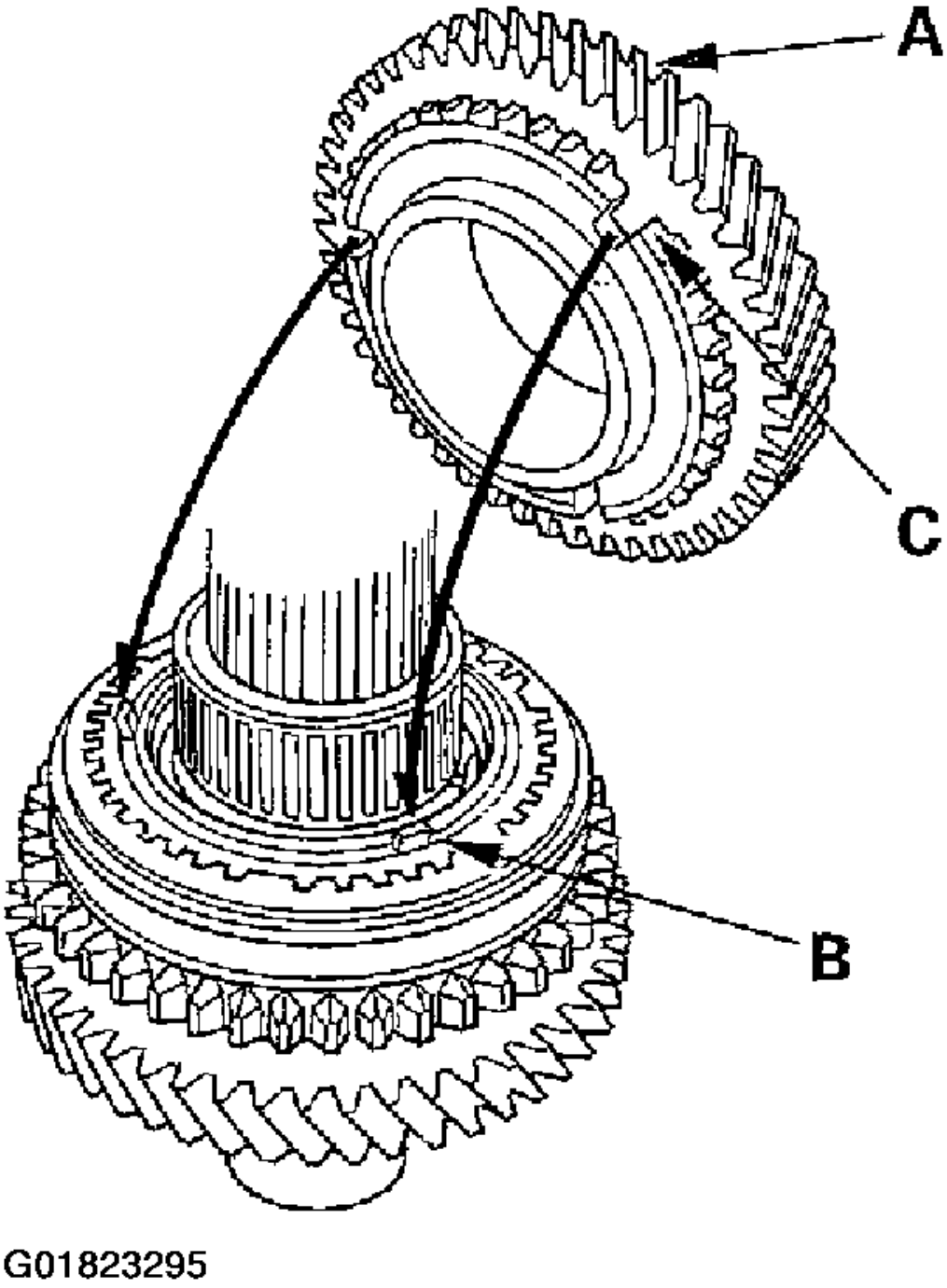

Fig. 88: Installing The 2nd Gear

cardiagn.com

11. Support the countershaft (A) on the steel blocks, then install 3rd gear (B) using the special tool and a press (C). Do not exceed the maximum pressure.

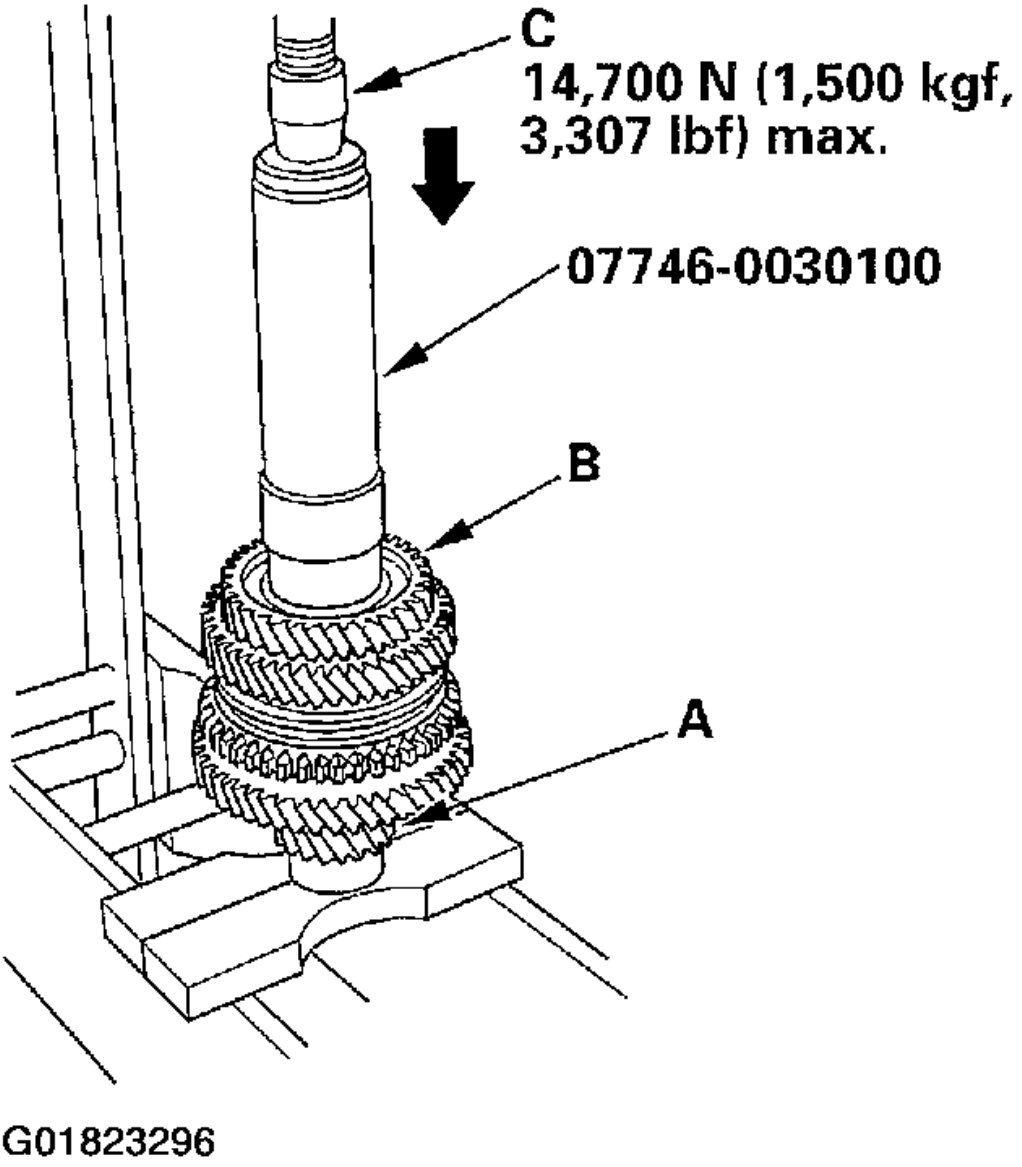

Fig. 89: Installing The 3rd Gear

12. Install the 4th gear (A) using the special tool and a press (B). Do not exceed the maximum pressure.

cardiagn.com

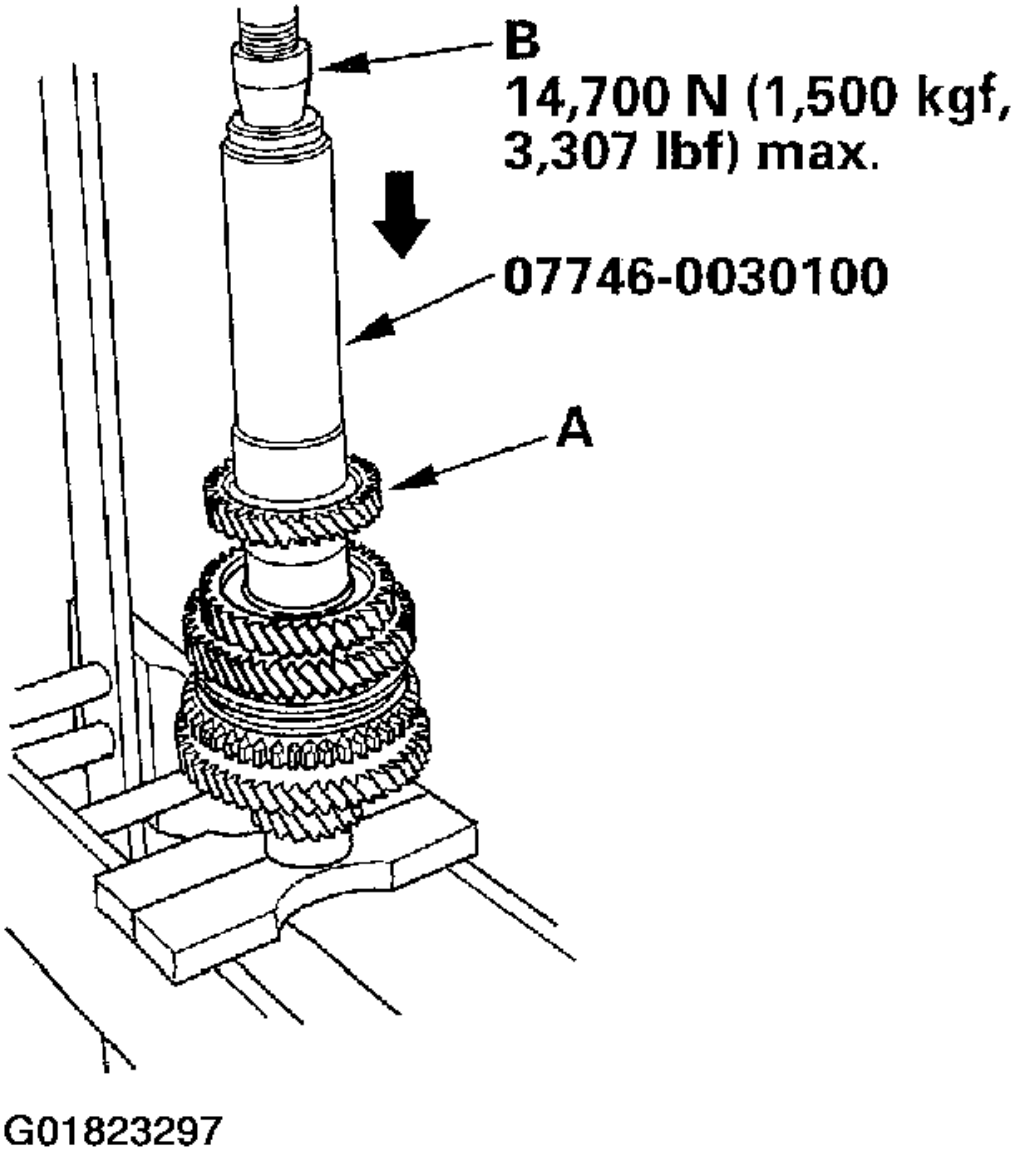

Fig. 90: Installing The 4th Gear

13. Install the 5th gear (A) using the special tool and a press (B). Do not exceed the maximum pressure.

cardiagn.com

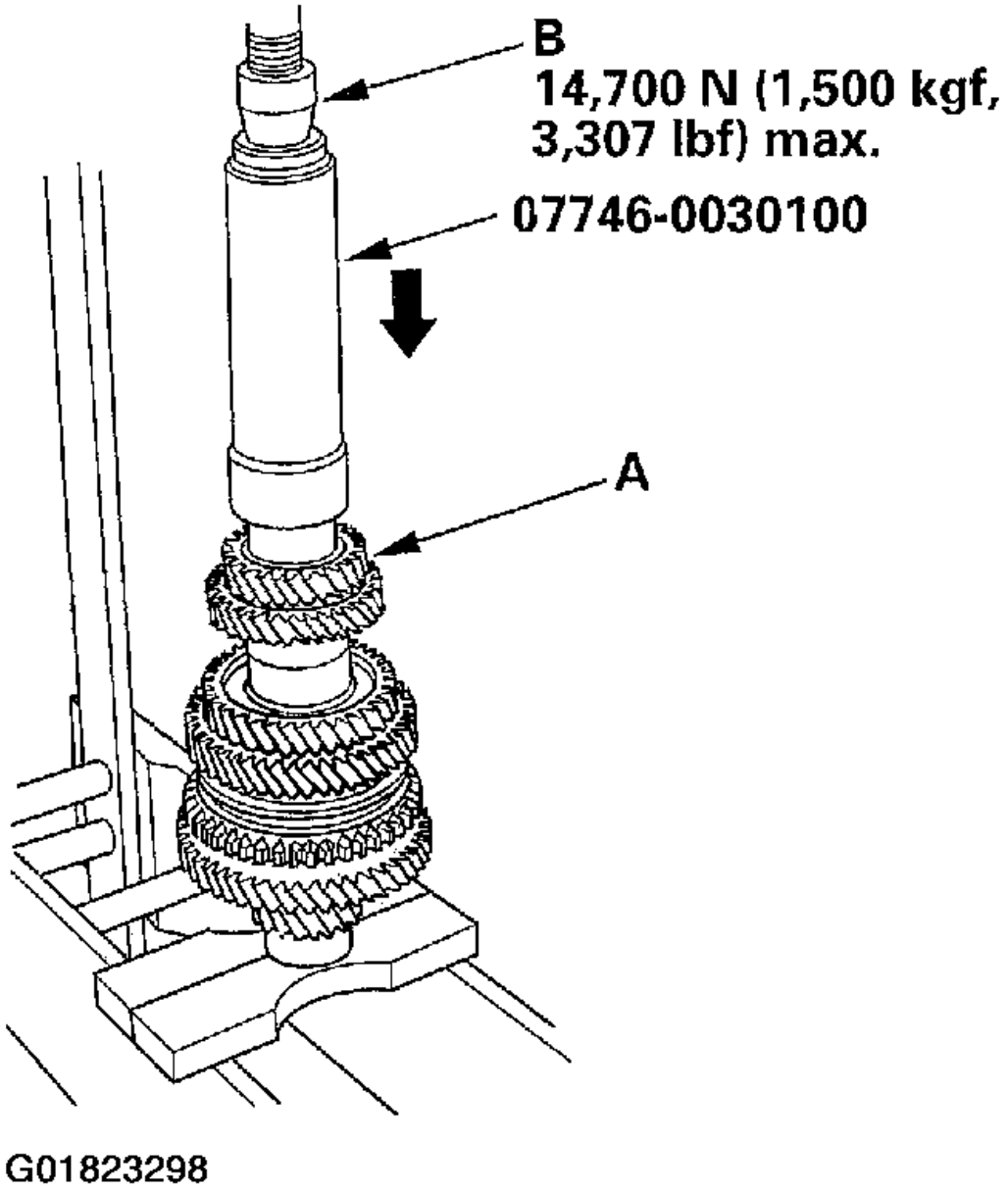

Fig. 91: Installing The 5th Gear

14. Install 6th gear (A) using a special tools and a press (B). Do not exceed the maximum pressure.

cardiagn.com

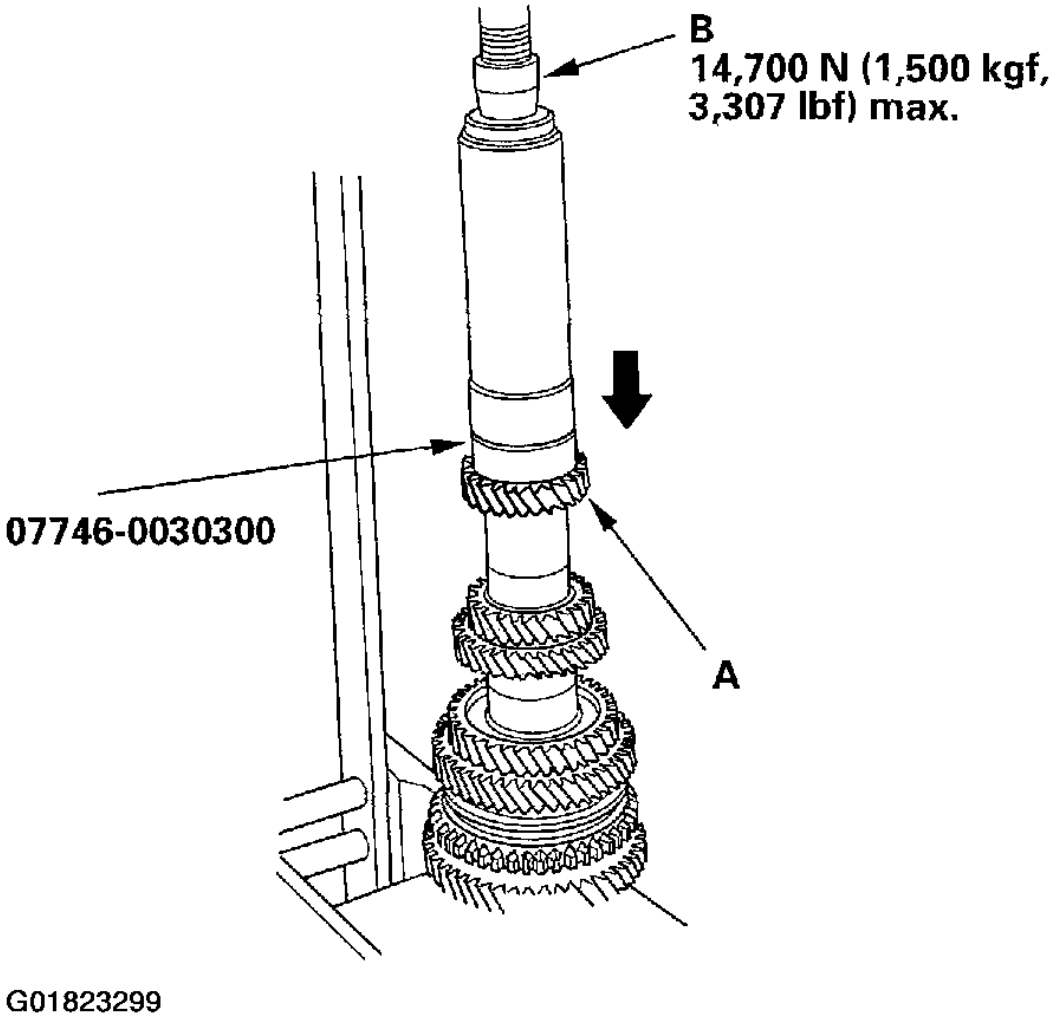

Fig. 92: Installing The 6th Gear

15. Install the 35 mm shim and the old ball bearing (A) using a special tools and a press (B).

cardiagn.com

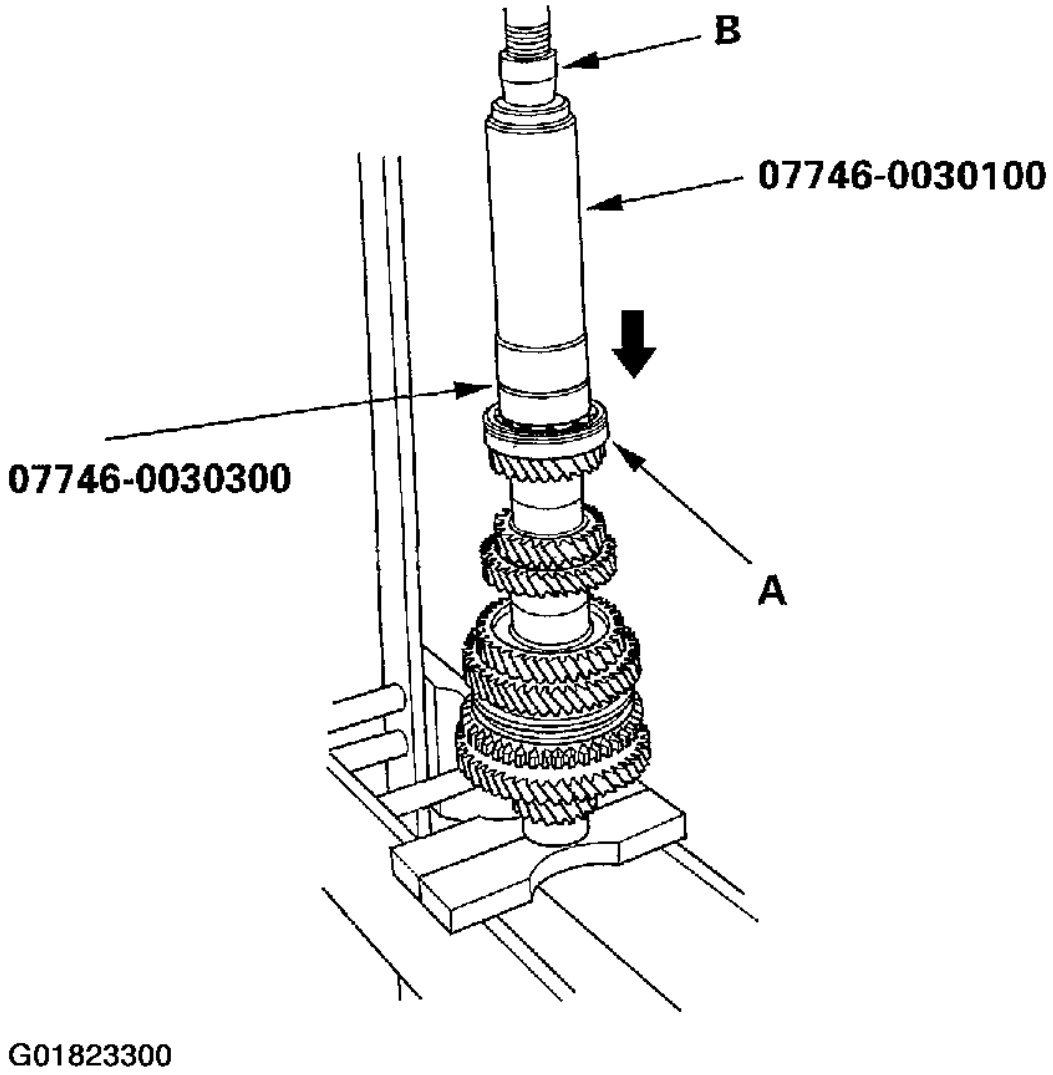

Fig. 93: Installing The 35 mm Shim & The OLD Ball Bearing

16. Measure the clearance between the old bearing (A) and the 35 mm shim (B) with a feeler gauge (C).
    Standard: 0.04-0.10 mm (0.0016-0.0039 in.)

cardiagn.com

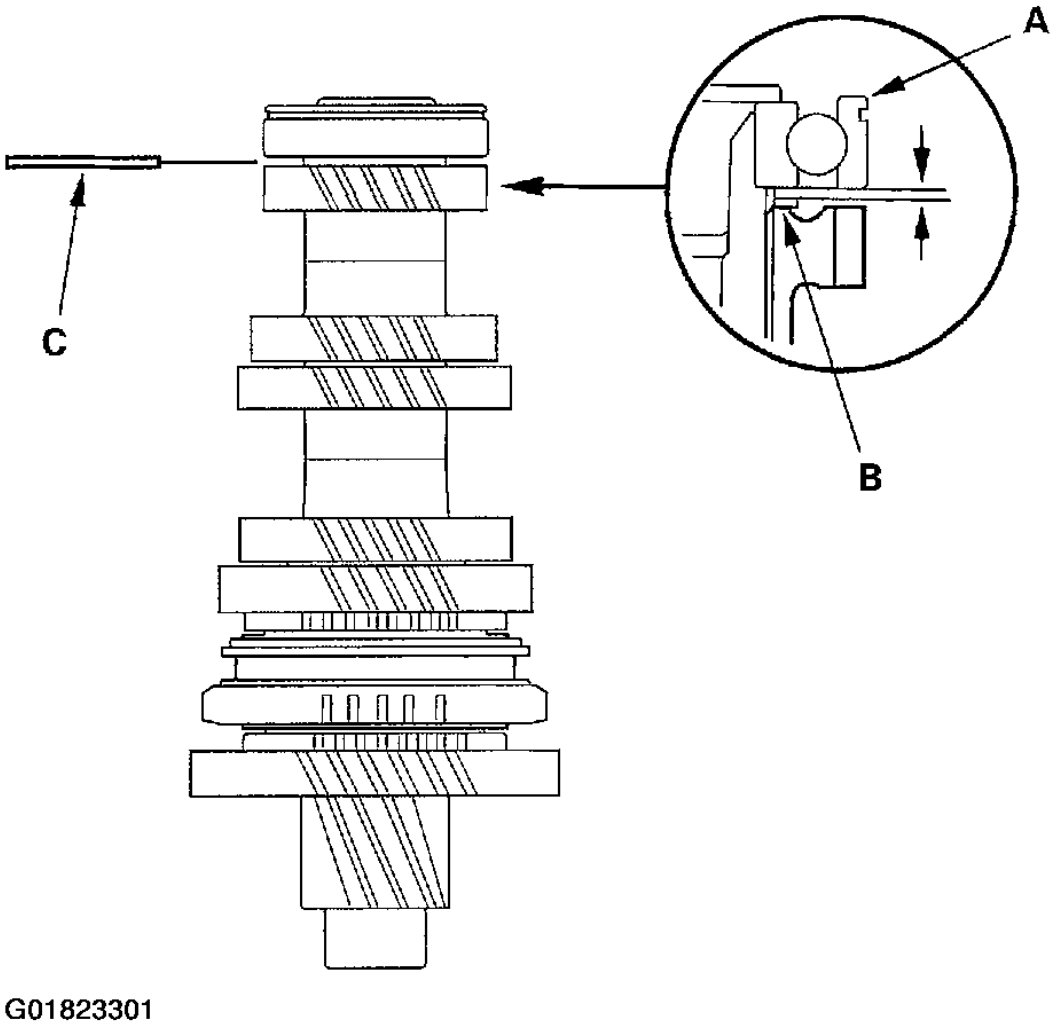

Fig. 94: Measuring The Clearance Between The OLD Bearing & The 35 mm Shim

17. If the clearance is more than the standard, select a new shim from the following table. See **Fig. 95** . If the clearance measured in step 16 is within the standard, replace only the ball bearing.

cardiagn.com

	Part Number	Thickness
A	23981-PPP-000	0.87 mm (0.034 in.)
AA	23981-PPP-900	0.91 mm (0.036 in.)
B	23982-PPP-000	0.95 mm (0.037 in.)
AB	23982-PPP-900	0.99 mm (0.039 in.)
C	23983-PPP-000	1.03 mm (0.041 in.)
AC	23983-PPP-900	1.07 mm (0.042 in.)
D	23984-PPP-000	1.11 mm (0.044 in.)
AD	23984-PPP-900	1.15 mm (0.045 in.)
E	23985-PPP-000	1.19 mm (0.047 in.)
AE	23985-PPP-900	1.23 mm (0.048 in.)
F	23986-PPP-000	1.27 mm (0.050 in.)
AF	23986-PPP-900	1.31 mm (0.052 in.)
G	23987-PPP-000	1.35 mm (0.053 in.)
AG	23987-PPP-900	1.39 mm (0.055 in.)
H	23988-PPP-000	1.43 mm (0.056 in.)
AH	23988-PPP-900	1.47 mm (0.058 in.)
J	23989-PPP-000	1.51 mm (0.060 in.)
AJ	23989-PPP-900	1.55 mm (0.061 in.)
K	23990-PPP-000	1.59 mm (0.063 in.)
AK	23990-PPP-900	1.63 mm (0.064 in.)
L	23991-PPP-000	1.67 mm (0.066 in.)
AL	23991-PPP-900	1.71 mm (0.067 in.)
M	23992-PPP-000	1.75 mm (0.069 in.)
AM	23992-PPP-900	1.79 mm (0.070 in.)
N	23993-PPP-000	1.83 mm (0.072 in.)
AN	23993-PPP-900	1.87 mm (0.074 in.)
P	23994-PPP-000	1.91 mm (0.075 in.)
AP	23994-PPP-900	1.95 mm (0.077 in.)
Q	23995-PPP-000	1.99 mm (0.078 in.)

G01823302

Fig. 95: 35 mm Shim Table

18. Support the 6th gear (A) on steel blocks (B), then use a press (C) and an attachment (D) to press the countershaft out of the ball bearing.

cardiagn.com

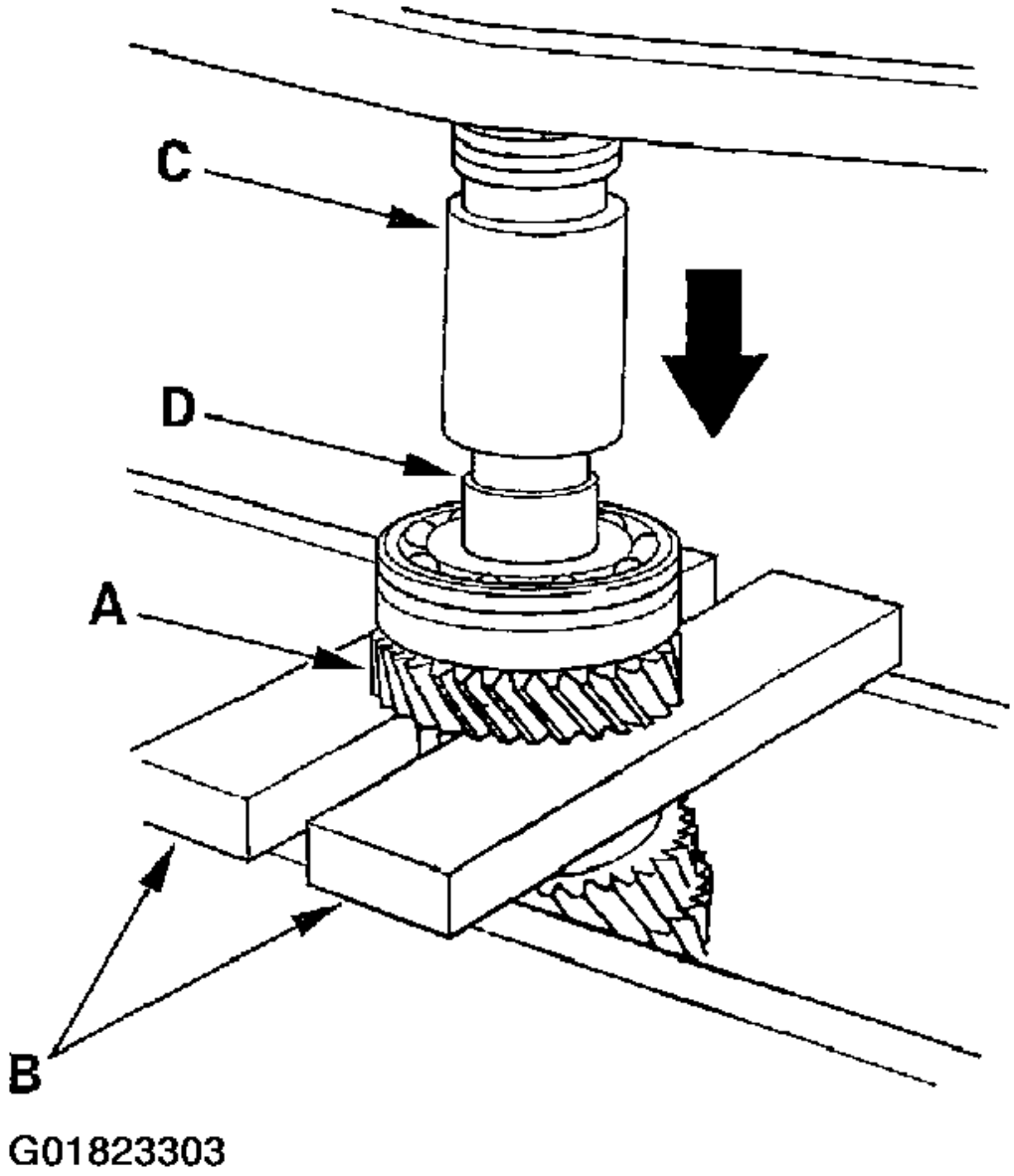

Fig. 96: Pressing The Countershaft Out Of The Ball Bearing

19. If necessary, install the 35 mm shim selected in step 17, then recheck the clearance.
20. Install 6th gear (A) using a special tools and a press (B). Do not exceed the maximum pressure.

cardiagn.com

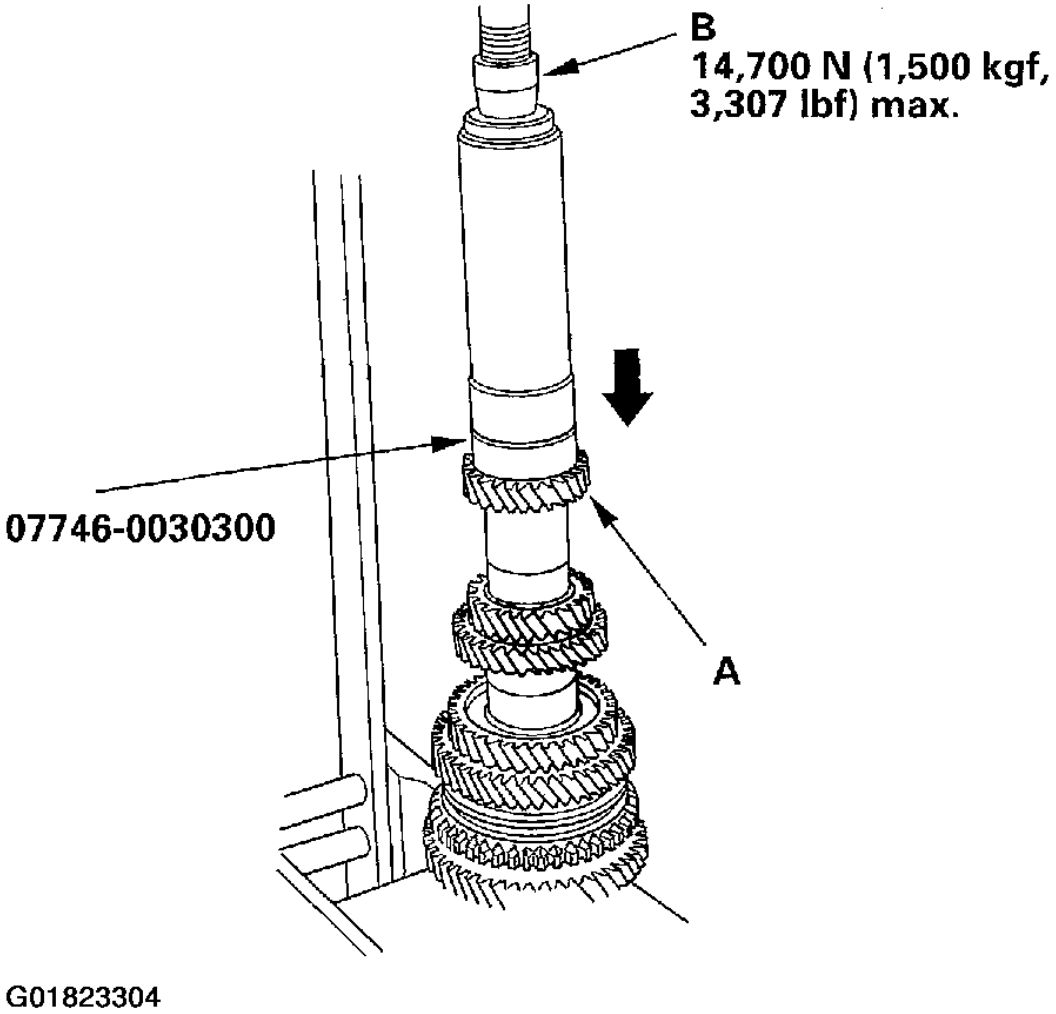

Fig. 97: Installing The 6th Gear

21. Install the new ball bearing (A) using a special tools and a press (B).

cardiagn.com

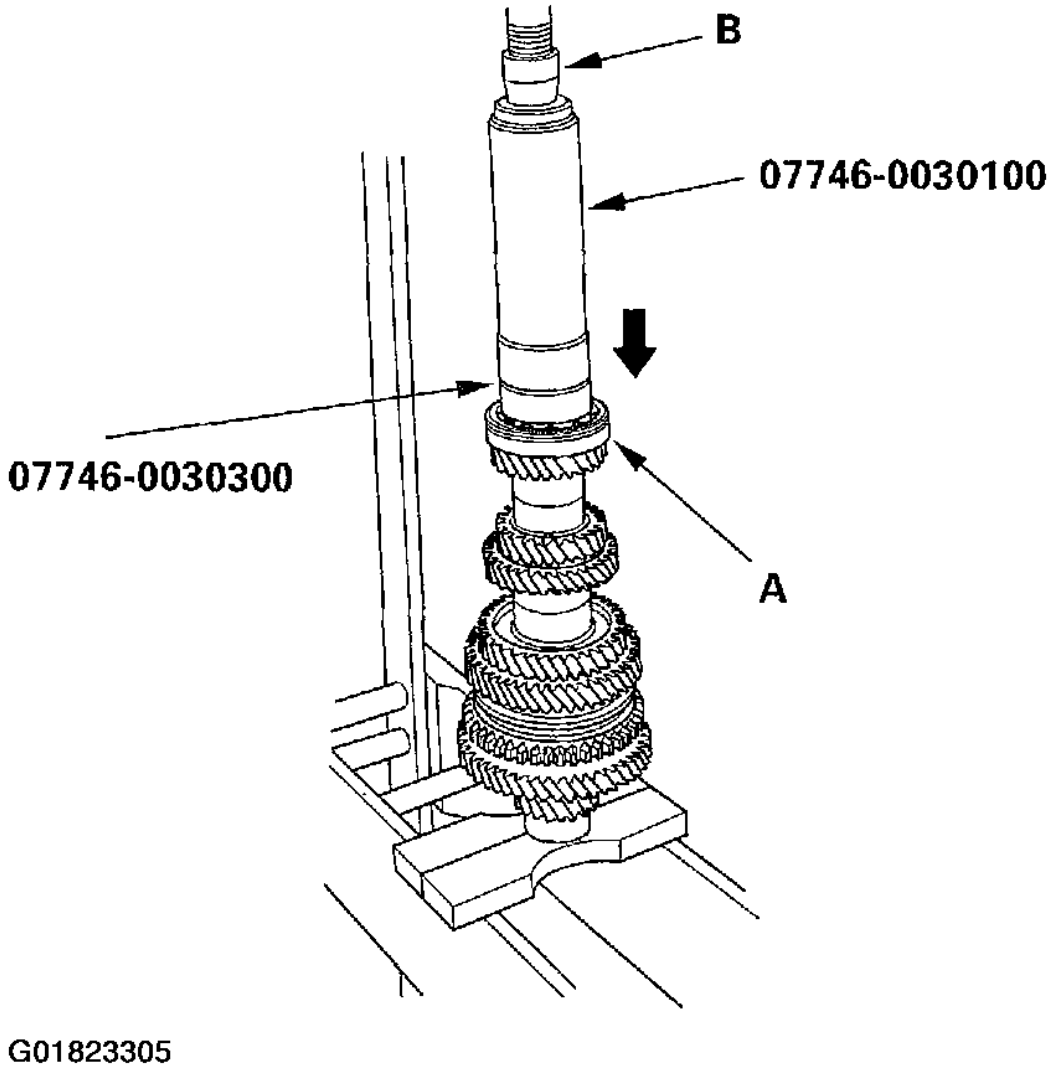

Fig. 98: Installing The NEW Ball Bearing

22. Securely clamp the countershaft assembly in a bench vise with wood blocks (A).

cardiagn.com

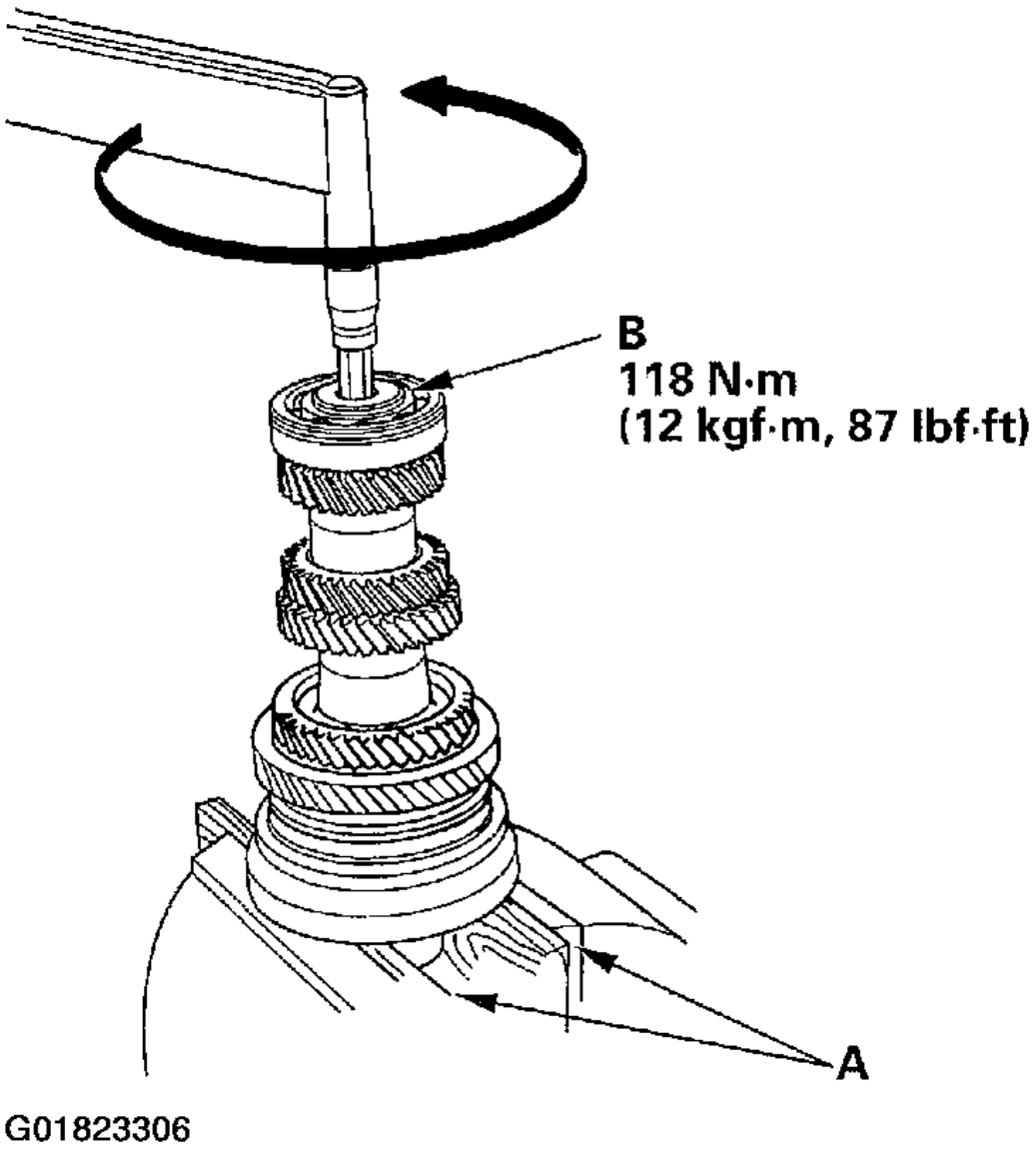

Fig. 99: Clamping The Countershaft Assembly In A Bench Vise With Wood Blocks

23. Tighten the new special bolt (B) (left-hand threads).

SYNCHRO SLEEVE & HUB INSPECTION & REASSEMBLY

1. Inspect gear teeth on all synchro hubs and synchro sleeves for wear (rounded off corners).
2. Install each synchro hub (A) in its mating synchro sleeve (B), and check for free movement. Be sure to match the three sets of longer teeth (C) (120 degrees apart) on the synchro sleeve with the three sets of deeper grooves (D) in the synchro hub. Do not install the synchro sleeve with its longer teeth in the

cardiagn.com

1st/2nd synchro hub slots (E) because it will damage the spring ring.

NOTE: **If replacement is required, always replace the synchro sleeve and synchro hub as a set.**

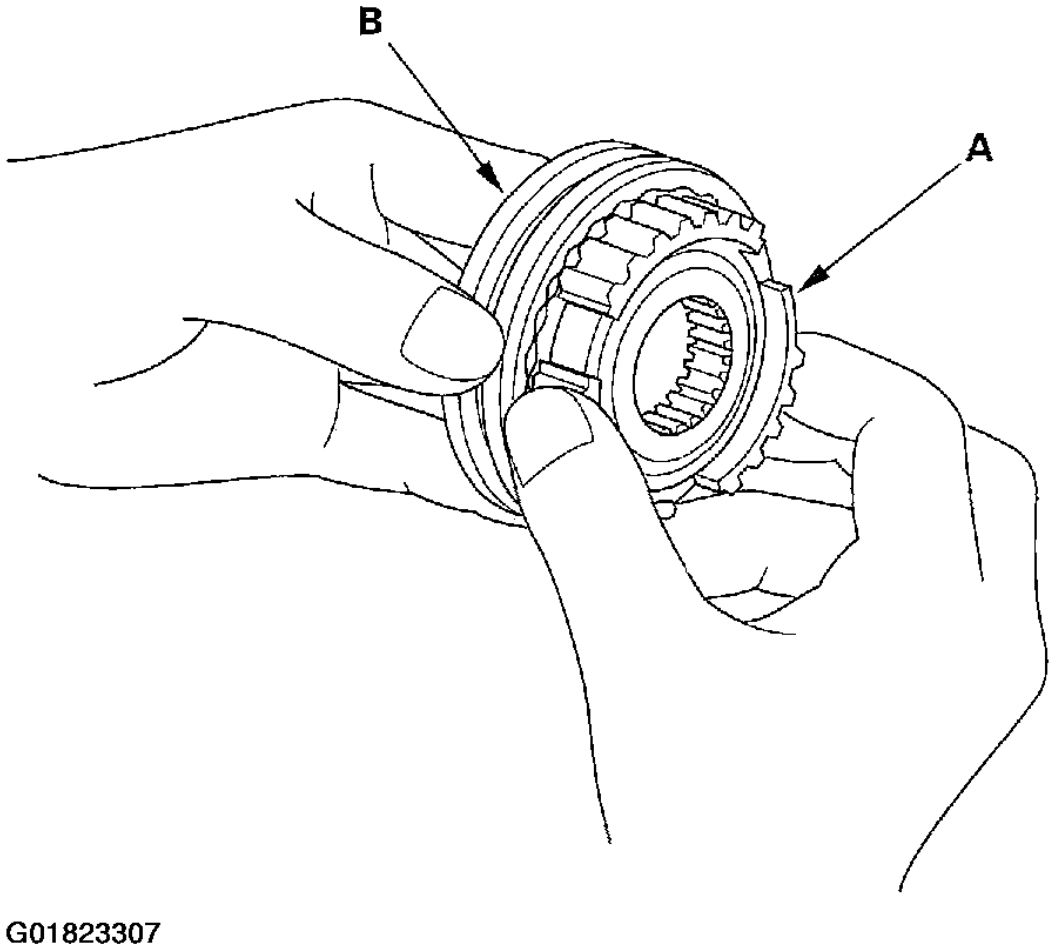

Fig. 100: Installing Each Synchro Hub In Its Mating Synchro Sleeve

cardiagn.com

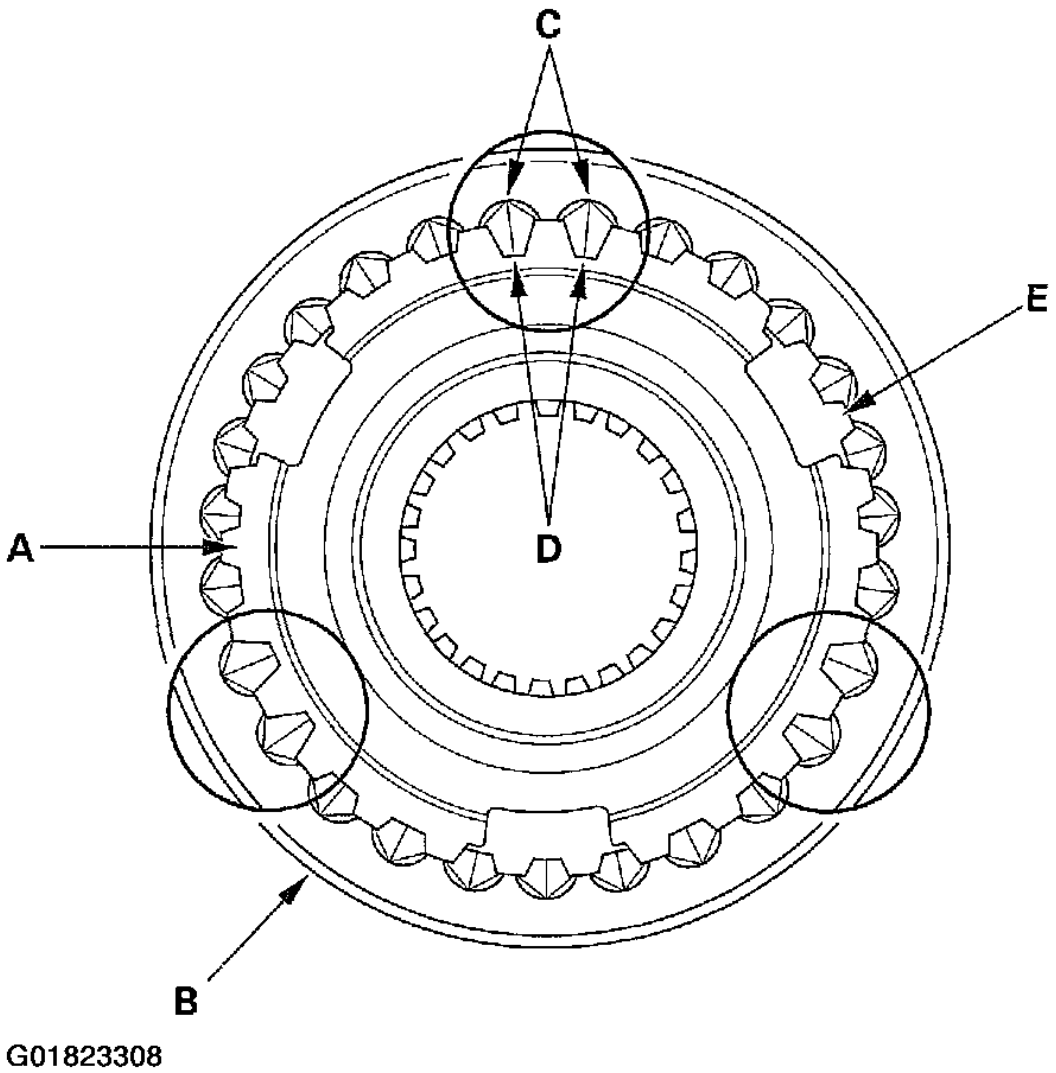

Fig. 101: Matching The Three Sets Of Longer Teeth On The Synchro Sleeve With The Three Sets Of Deeper Grooves In The Synchro Hub

SYNCHRO RING & GEAR INSPECTION

1. Inspect the inside of each synchro ring (A) for wear. Inspect the teeth (B) on each synchro ring for wear (rounded off).

cardiagn.com

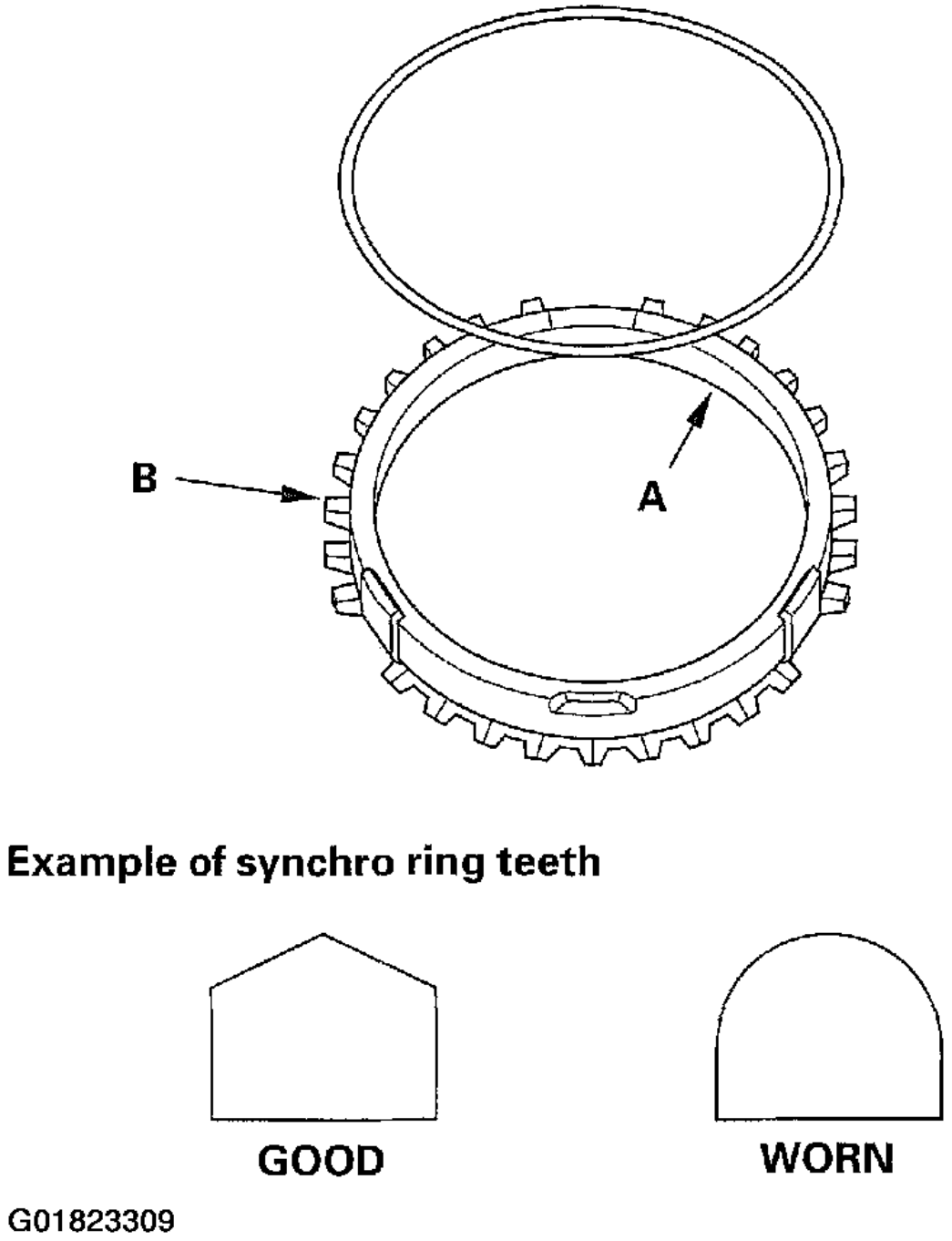

Fig. 102: Inspecting Synchro Ring & Gear

2. Inspect the teeth (C) on each synchro sleeve and matching teeth on each gear for wear (rounded off).

cardiagn.com

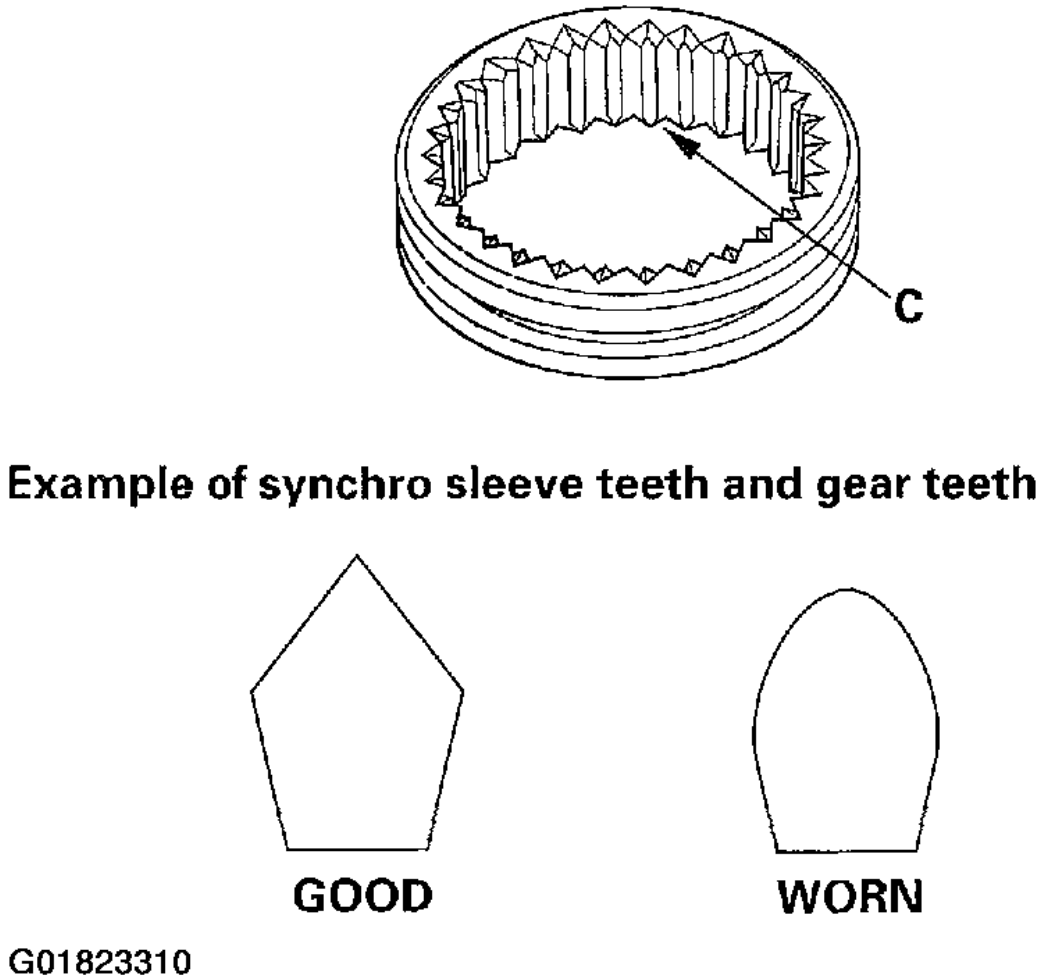

Fig. 103: Inspecting Synchro Sleeve & Teeth

3. Inspect the thrust surface (D) on each gear hub for wear.

cardiagn.com

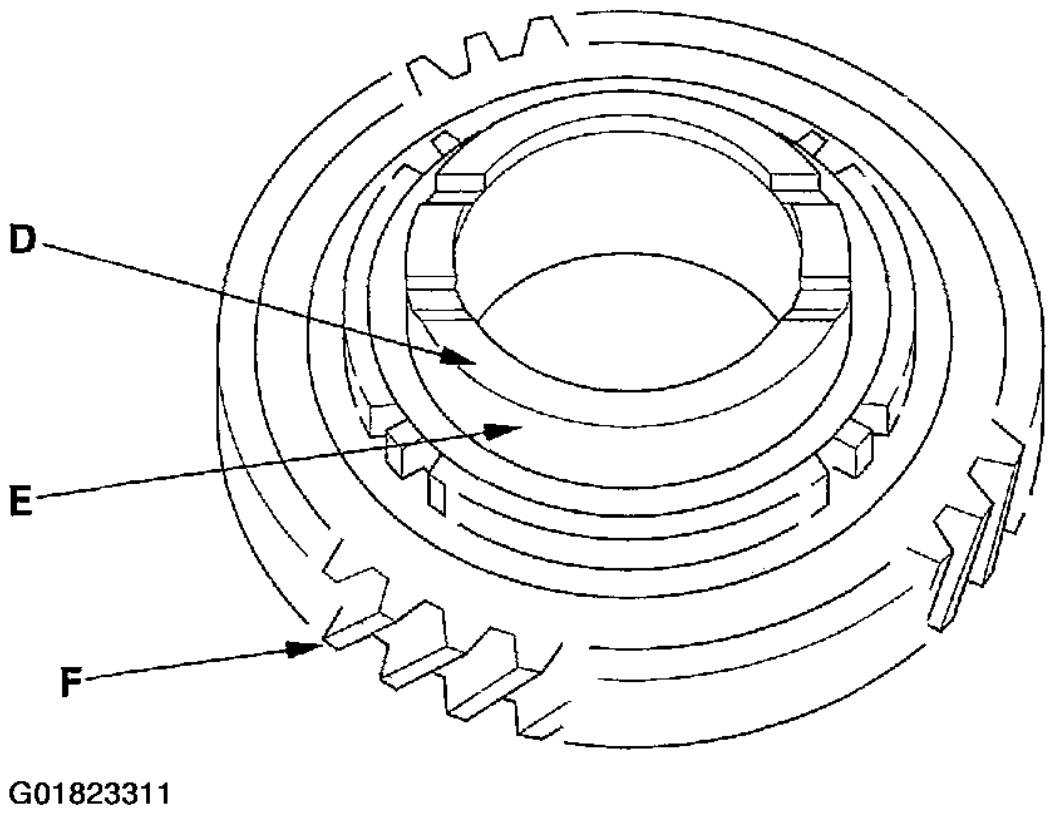

Fig. 104: Inspecting The Gear Hub Thrust Surface

4. Inspect the cone surface (E) on each gear hub for wear and roughness.
5. Inspect the teeth on all gears (F) for uneven wear, scoring, galling, and cracks.
6. Coat the cone surface of each gear (E) with oil, and place its synchro ring on it. Rotate the synchro ring, making sure that it does not slip.
7. Measure the clearance between each gear (A) and its synchro ring (B) all around the gear. Hold the synchro ring against the gear evenly while measuring the clearance. If the clearance is less than the service limit, replace the synchro ring and gear.

Double Cone Synchro & Triple Cone Synchro-To-Gear Clearance:

Standard:

1: Outer Synchro Ring (B) To Synchro Cone (C) 0.70-1.19 mm (0.028-0.047 in.)

2: Synchro Cone (C) To Gear (A) 0.50-1.04 mm (0.020-0.041 in.)

3: Outer Synchro Ring (B) To Gear (A) 0.95-1.68 mm (0.037-0.066 in.)

Service Limit:

1: 0.3 mm (0.012 in.)

2: 0.3 mm (0.012 in.)

cardiagn.com

3: 0.6 mm (0.024 in.)

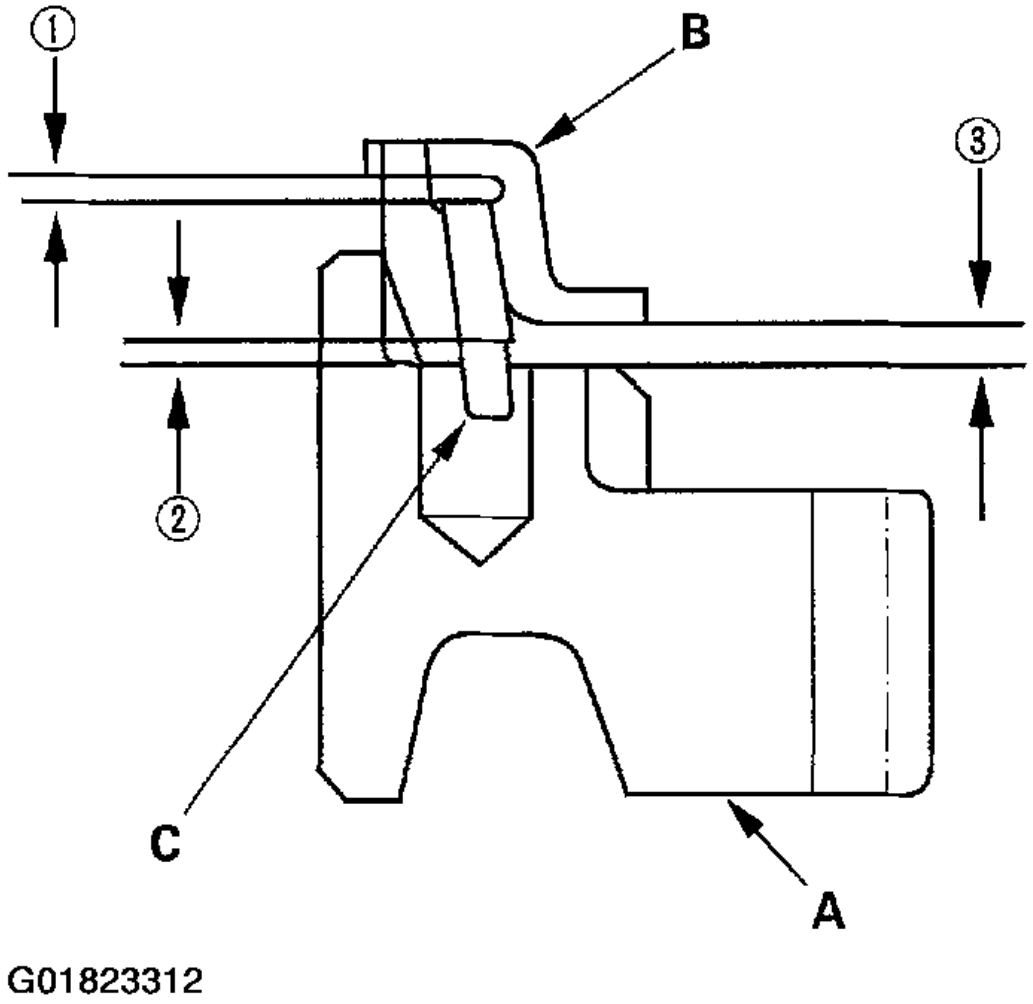

Fig. 105: Measuring The Double Cone Synchro & Triple Cone Synchro-To-Gear Clearance

cardiagn.com

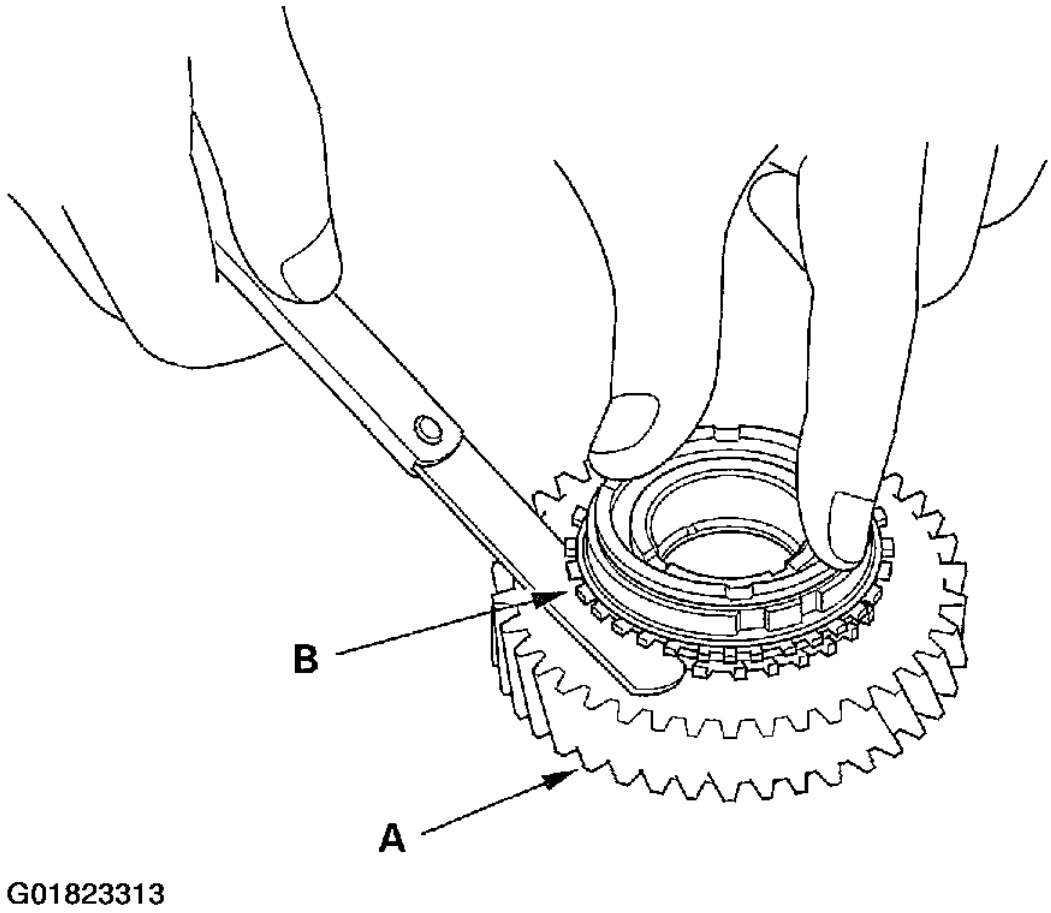

Fig. 106: Measuring The Clearance Between Each Gear & Its Synchro Ring All Around The Gear

MAINSHAFT BEARING & OIL SEAL REPLACEMENT

Special Tools Required:

- Oil seal driver 07JAD-PL90100
- Adjustable bearing puller, 20-40 mm 07736-A01000B
- Attachment, 42 x 47 mm 07746-0010300
- Driver 07749-0010000
- Slide hammer, commercially available

1. Remove the differential assembly.
2. Remove the ball bearing (A) from the clutch housing (B) using the special tool and a commercially available 3/8"-16 slide hammer (C).

cardiagn.com

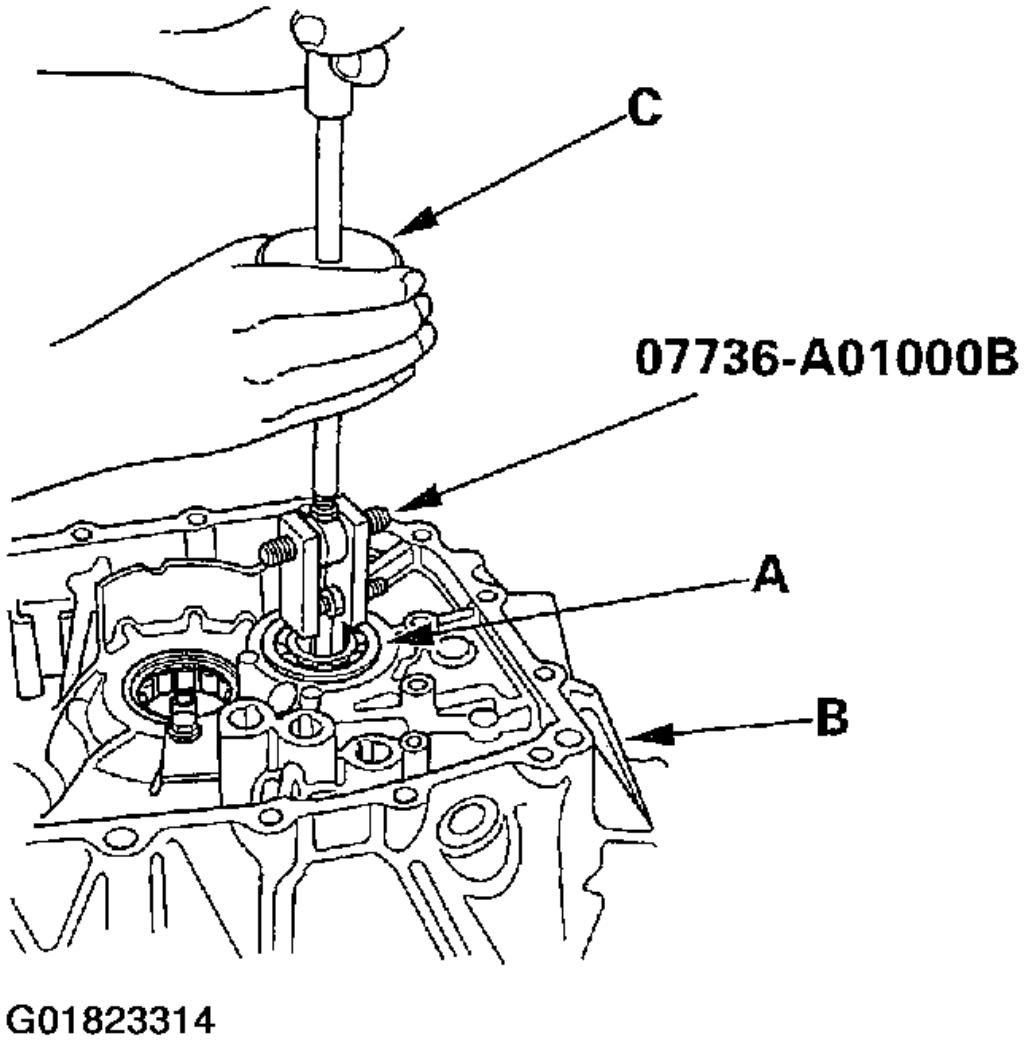

Fig. 107: Removing The Ball Bearing From The Clutch Housing

3. Remove the oil seal (A) from the clutch side. Be careful when removing the seal so the clutch housing is not damaged.

cardiagn.com

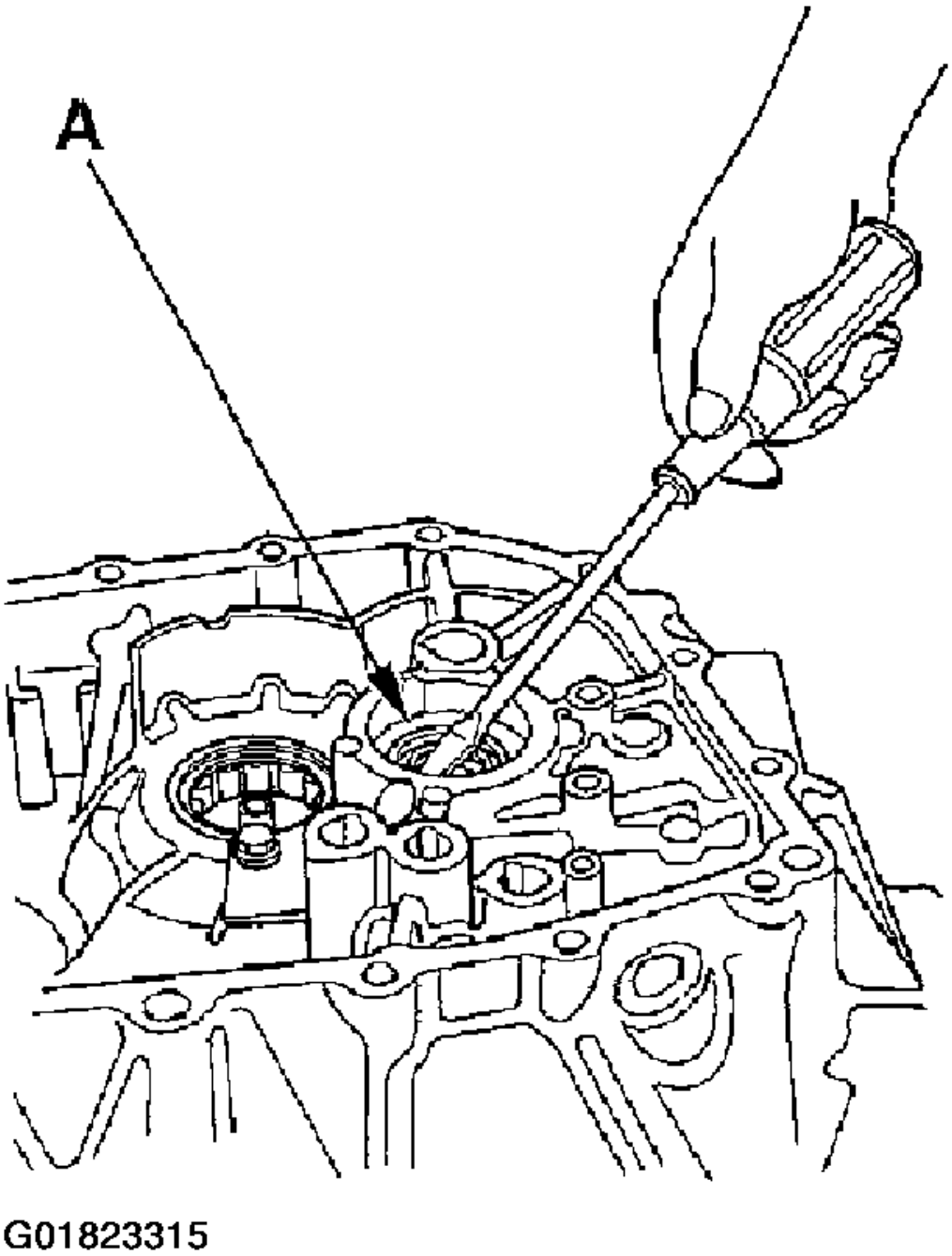

Fig. 108: Removing The Oil Seal From The Clutch Side

4. Drive the new oil seal in from the transmission side using the special tools.

cardiagn.com

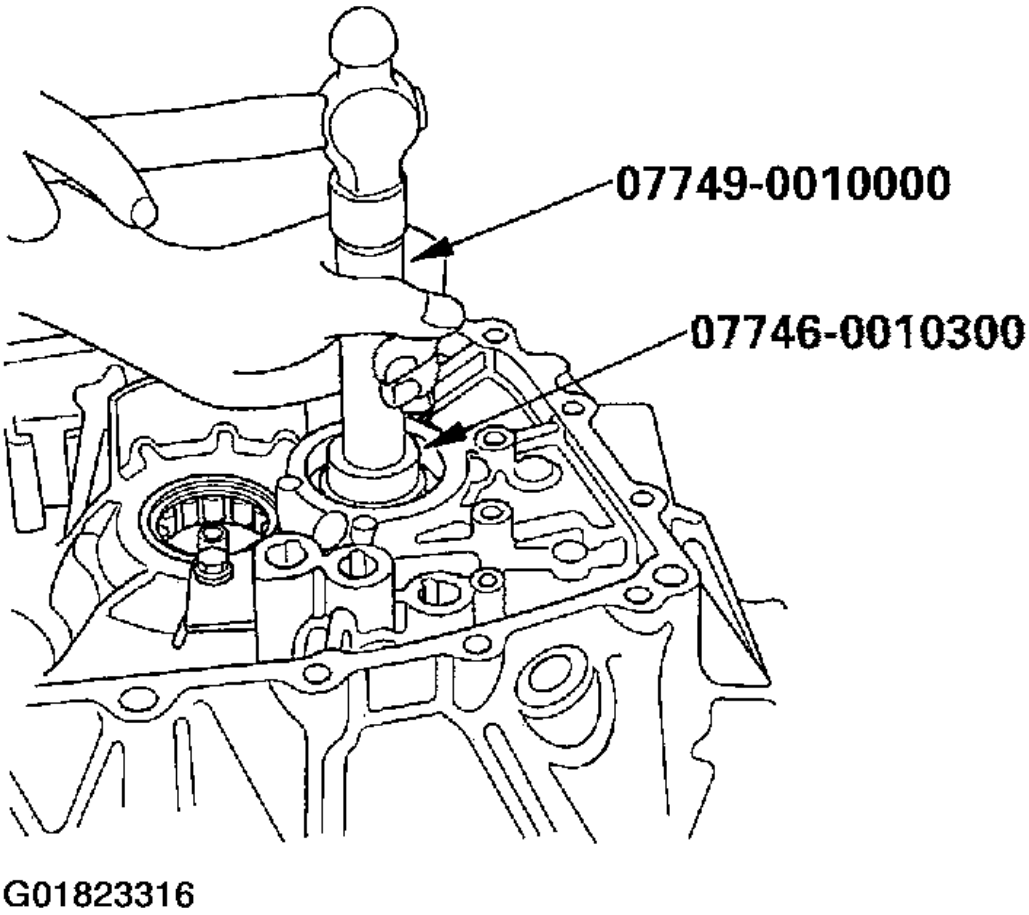

Fig. 109: Driving The New Oil Seal In

5. Drive the new ball bearing (A) in from the transmission side using the special tools.

cardiagn.com

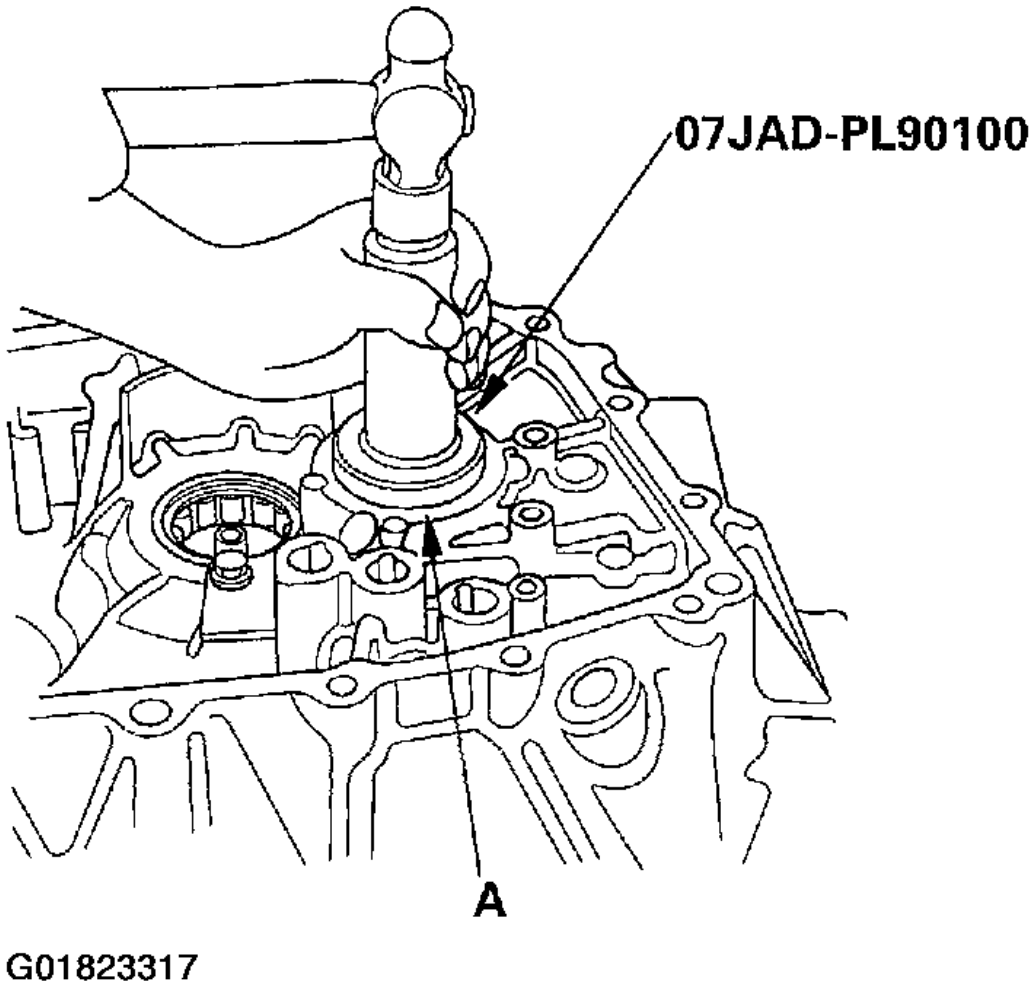

Fig. 110: Driving The New Ball Bearing In

COUNTERSHAFT BEARING REPLACEMENT

Special Tools Required:

- Oil seal driver 07JAD-PL90100
- Adjustable bearing puller, 20-40 mm 07736-A01000B
- Slide hammer, commercially available

1. Remove the bearing set plate (A) from the clutch housing (B).

cardiagn.com

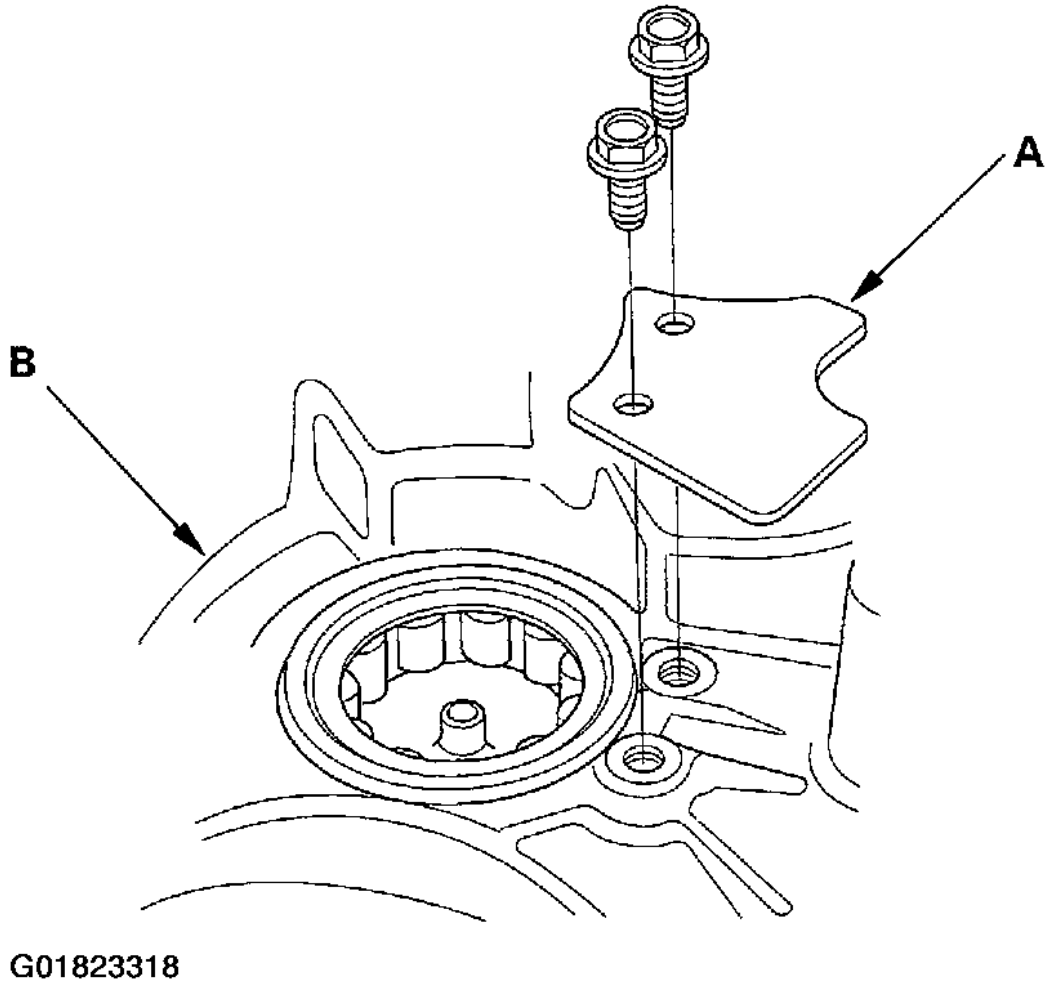

Fig. 111: Removing The Bearing Set Plate From The Clutch Housing

2. Remove the needle bearing (A) using the special tool and a commercially available 3/8"-16 slide hammer (B), then remove the oil guide plate C.

cardiagn.com

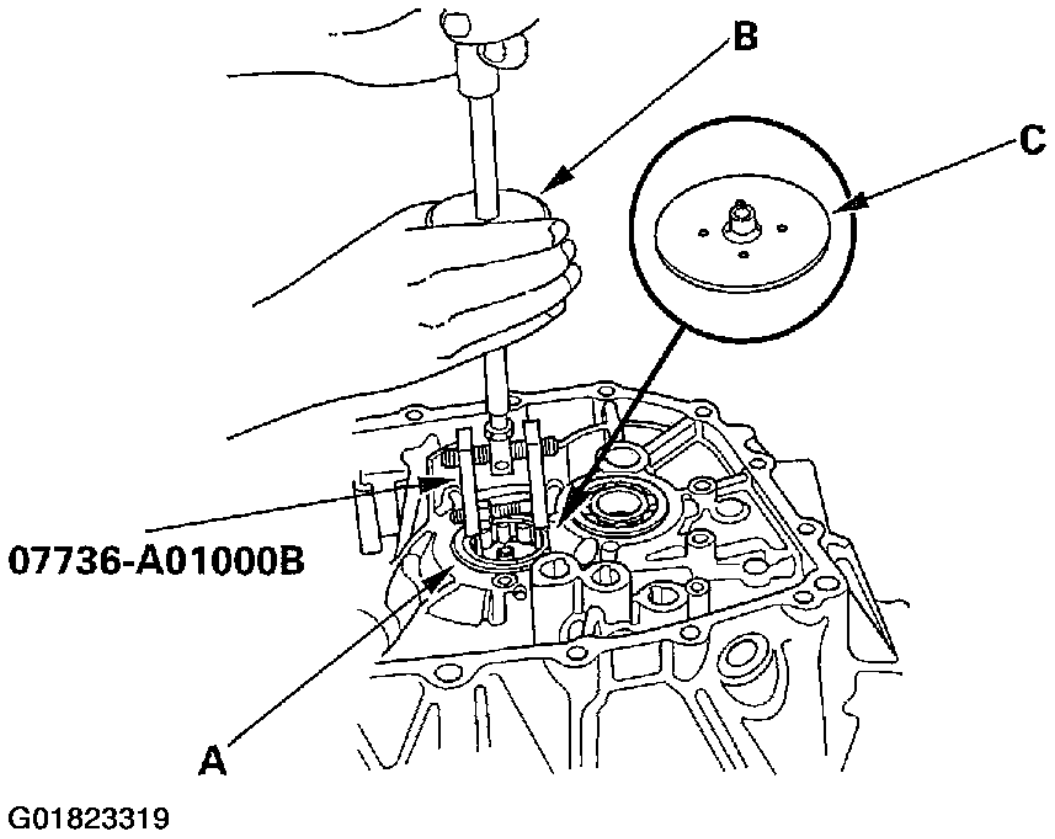

Fig. 112: Removing The Needle Bearing

3. Position the oil guide plate C and new needle bearing (A) in the bore of the clutch housing (B).

cardiagn.com

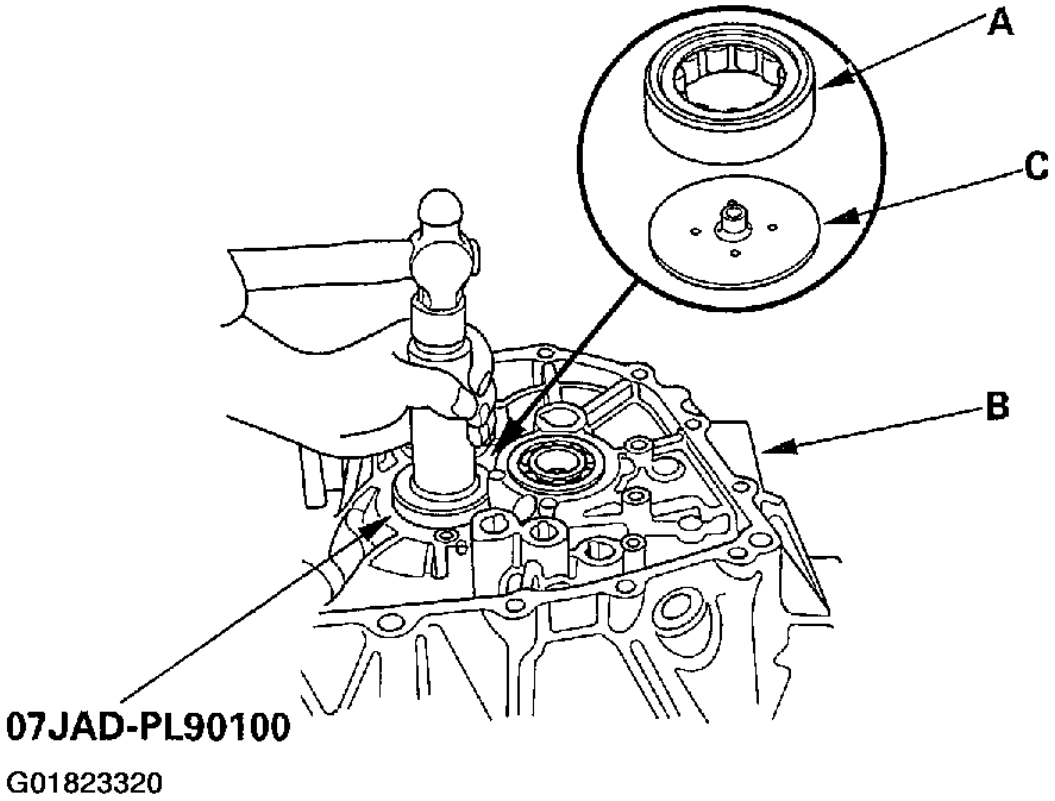

Fig. 113: Positioning The Oil Guide Plate C & New Needle Bearing In The Bore Of The Clutch Housing

4. Install the needle bearing using the special tools.
5. Install the bearing set plate (A) with bolts (B).

cardiagn.com

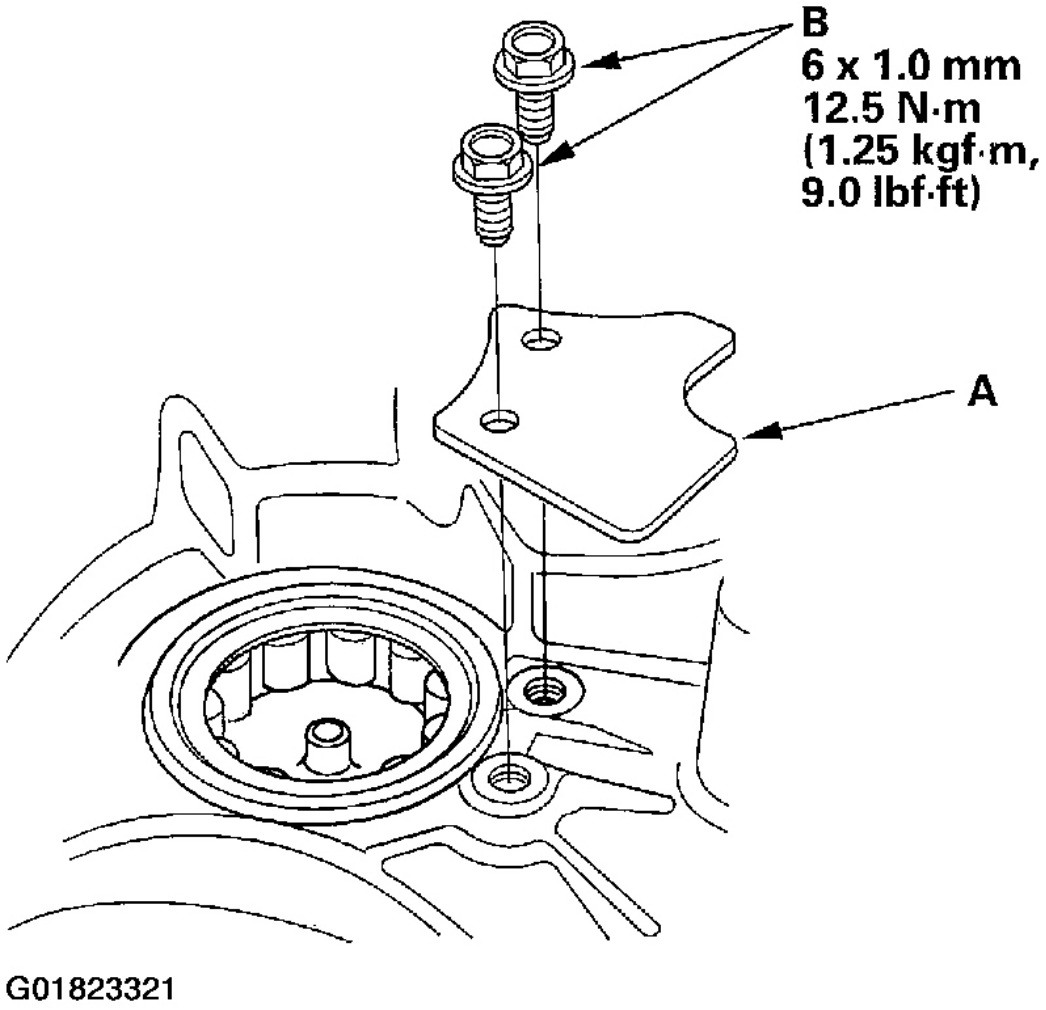

Fig. 114: Installing The Bearing Set Plate With Bolts

MAINSHAFT THRUST CLEARANCE ADJUSTMENT

Special Tools Required:

- Mainshaft holder 07GAJ-PG20110
- Mainshaft base 07GAJ-PG20130

1. Remove the 72 mm shim (A) and oil guide plate M from the transmission housing (B).

cardiagn.com

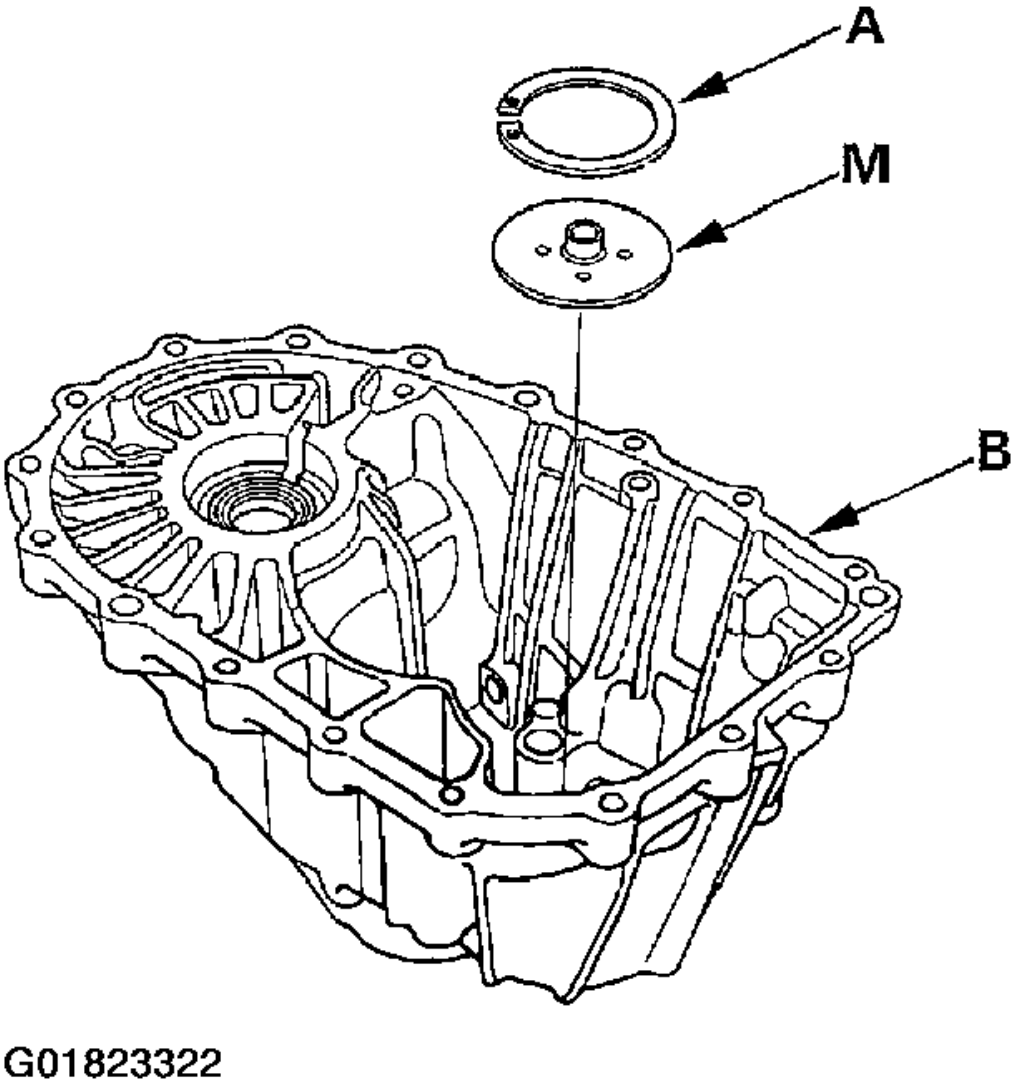

Fig. 115: Removing The 72 mm Shim & Oil Guide Plate M From The Transmission Housing

2. Install the 3rd/4th synchro hub (A), the distance collar (B), the 5th/6th synchro hub (C), distance collar (D), and ball bearing (E) on the mainshaft (F), then install the assembled mainshaft in the transmission housing (G).

cardiagn.com

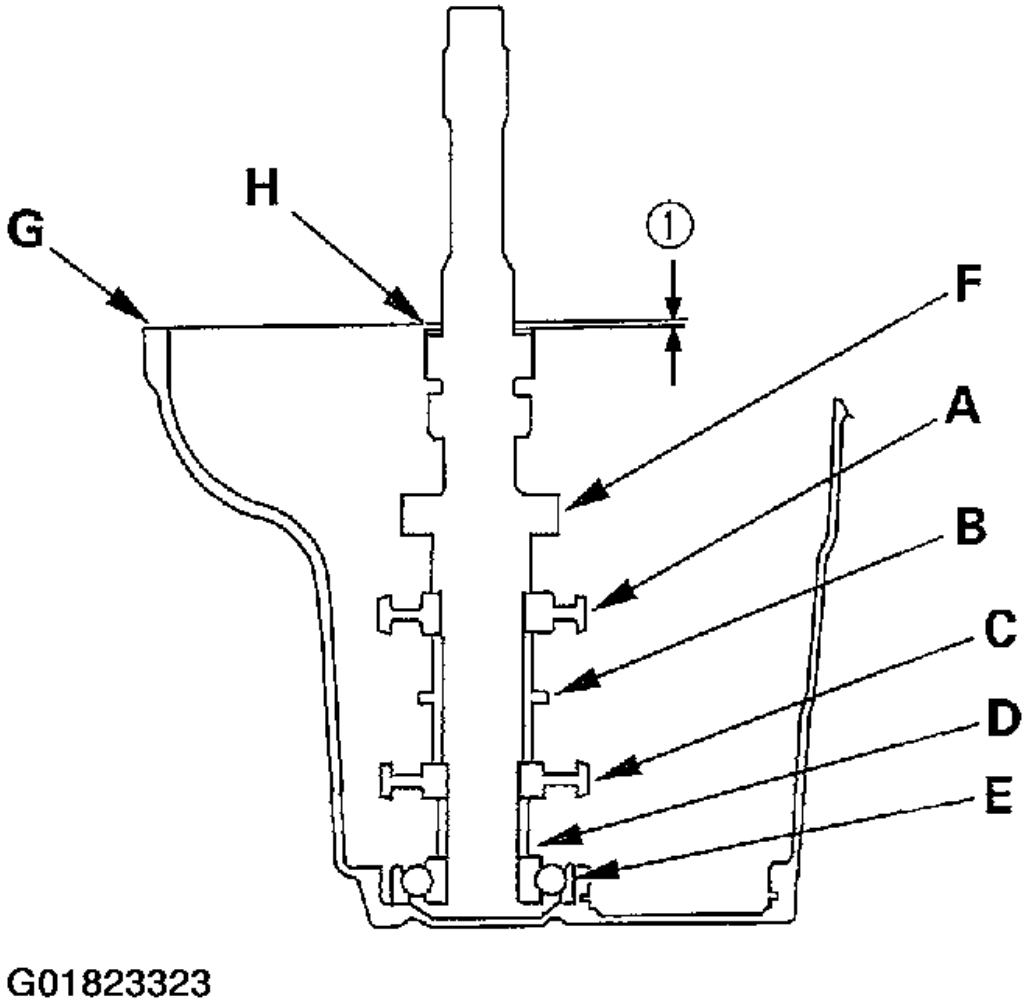

Fig. 116: Installing The 3rd/4th Synchro Hub, The Distance Collar, The 5th/6th Synchro Hub, Distance Collar & Ball Bearing On The Mainshaft

3. Install the washer (H) on the mainshaft.
4. Measure distance 1 between the end of the transmission housing and washer with a straight edge and vernier caliper. Measure at three locations and average the reading.
5. Measure distance 2 between the end of the clutch housing (A) and bearing inner race (B) with a straight edge and depth gauge. Measure at three locations and average the readings.

Shim Selection Formula:

cardiagn.com

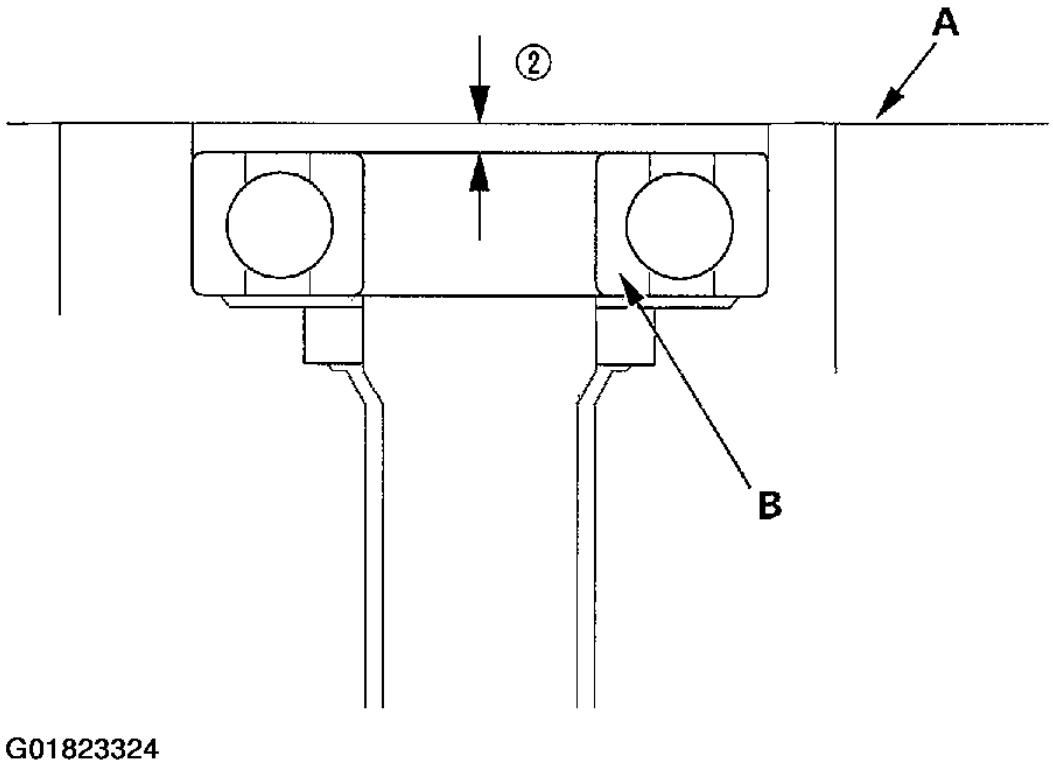

Fig. 117: Measuring Distance 2 Between The End Of The Clutch Housing & Bearing Inner Race With A Straight Edge & Depth Gauge

6. Select the proper 72 mm shim from the chart. See **Fig. 118** . Follow the example below, and use the measurements you made in steps 4 and 5:

   (Basic Formula)

   1 + 2 - (0.8 + 0.11) = shim thickness (maximum)

   1 + 2 - (0.8 + 0.17) = shim thickness (minimum)

   Add Distance 2 (Step 5) To Distance 1 (Step 4).

   0.8 mm (0.031 in): Spring washer, a dimension in the installation.

   0.11 mm (0.004 in): Minimum thrust clearance.

   0.17 mm (0.007 in): Maximum thrust clearance.

   For Example:

   2.32 + 0.15 - (0.8 + 0.11) = 1.56 mm (0.061 in.)

   2.32 + 0.15 - (0.8 + 0.17) = 1.50 mm (0.059 in.)

   Take the middle value of the minimum value and the maximum value, and select the 1.53 mm (0.060 in.) shim.

cardiagn.com

	Part Number	Thickness
A	23931-P21-000	0.60 mm (0.024 in.)
B	23932-P21-000	0.63 mm (0.025 in.)
C	23933-P21-000	0.66 mm (0.026 in.)
D	23934-P21-000	0.69 mm (0.027 in.)
E	23935-P21-000	0.72 mm (0.028 in.)
F	23936-P21-000	0.75 mm (0.030 in.)
G	23937-P21-000	0.78 mm (0.031 in.)
H	23938-P21-000	0.81 mm (0.032 in.)
I	23939-P21-000	0.84 mm (0.033 in.)
J	23940-P21-000	0.87 mm (0.034 in.)
K	23941-P21-000	0.90 mm (0.035 in.)
L	23942-P21-000	0.93 mm (0.037 in.)
M	23943-P21-000	0.96 mm (0.038 in.)
N	23944-P21-000	0.99 mm (0.039 in.)
O	23945-P21-000	1.02 mm (0.040 in.)
P	23946-P21-000	1.05 mm (0.041 in.)
Q	23947-P21-000	1.08 mm (0.043 in.)
R	23948-P21-000	1.11 mm (0.044 in.)
S	23949-P21-000	1.14 mm (0.045 in.)
T	23950-P21-000	1.17 mm (0.046 in.)
U	23951-P21-000	1.20 mm (0.047 in.)
V	23952-P21-000	1.23 mm (0.048 in.)
W	23953-P21-000	1.26 mm (0.050 in.)
X	23954-P21-000	1.29 mm (0.051 in.)
Y	23955-P21-000	1.32 mm (0.052 in.)
Z	23956-P21-000	1.35 mm (0.053 in.)
AA	23957-P21-000	1.38 mm (0.054 in.)
AB	23958-P21-000	1.41 mm (0.056 in.)
AC	23959-P21-000	1.44 mm (0.057 in.)
AD	23960-P21-000	1.47 mm (0.058 in.)
AE	23961-P21-000	1.50 mm (0.059 in.)
AF	23962-P21-000	1.53 mm (0.060 in.)
AG	23963-P21-000	1.56 mm (0.061 in.)
AH	23964-P21-000	1.59 mm (0.063 in.)
AI	23965-P21-000	1.62 mm (0.064 in.)
AJ	23966-P21-000	1.65 mm (0.065 in.)
AK	23967-P21-000	1.68 mm (0.066 in.)
AL	23968-P21-000	1.71 mm (0.067 in.)
AM	23969-P21-000	1.74 mm (0.069 in.)
AN	23970-P21-000	1.77 mm (0.070 in.)
AO	23971-P21-000	1.80 mm (0.071 in.)

G01823325

Fig. 118: 72 mm Shim Table

7. Install the 72 mm shim (A) selected and oil guide plate M in the transmission housing (B).

cardiagn.com

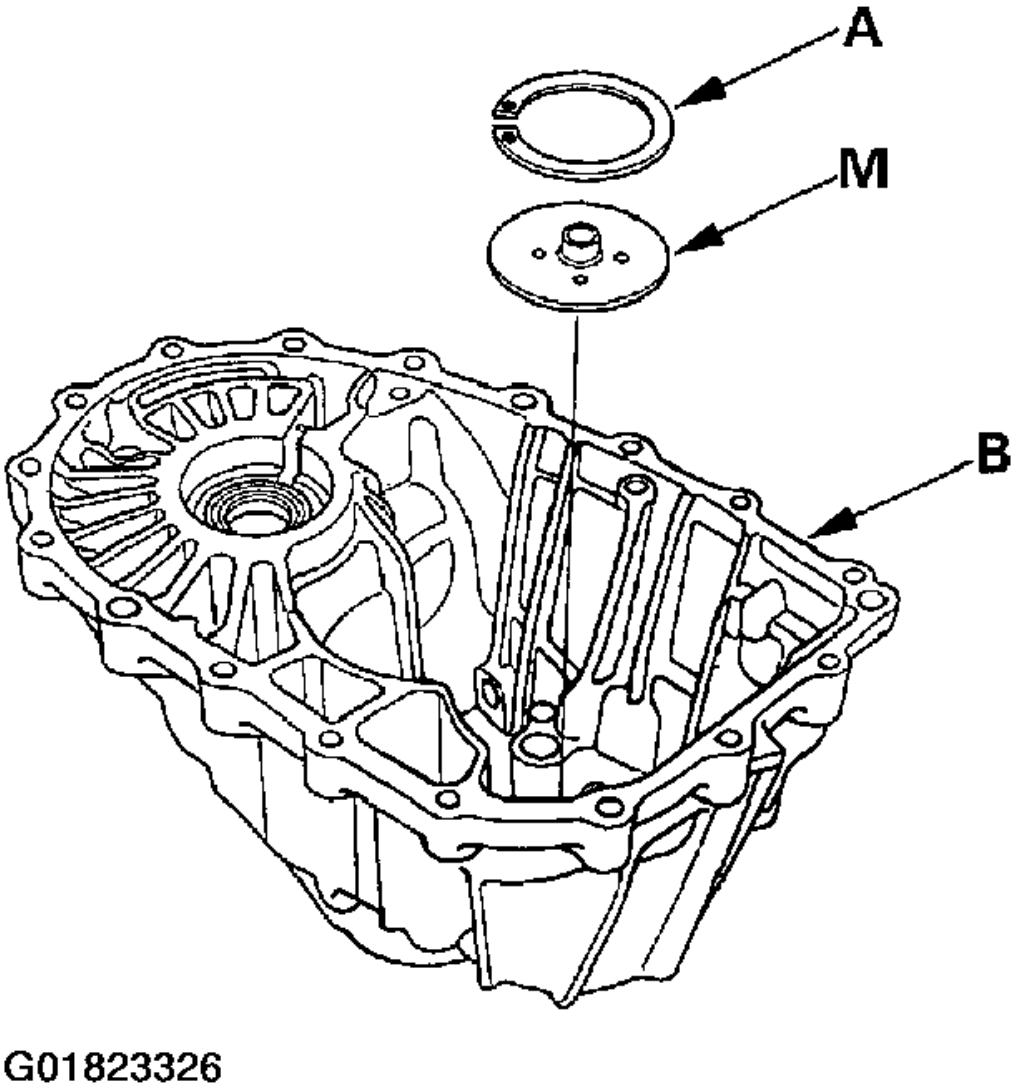

Fig. 119: Install The 72 mm Shim & Oil Guide Plate M In The Transmission Housing

8. Thoroughly clean the spring washer (A) and washer (B) before installing them on the clutch housing side ball bearing (C). Note the installation direction of the spring washer.

cardiagn.com

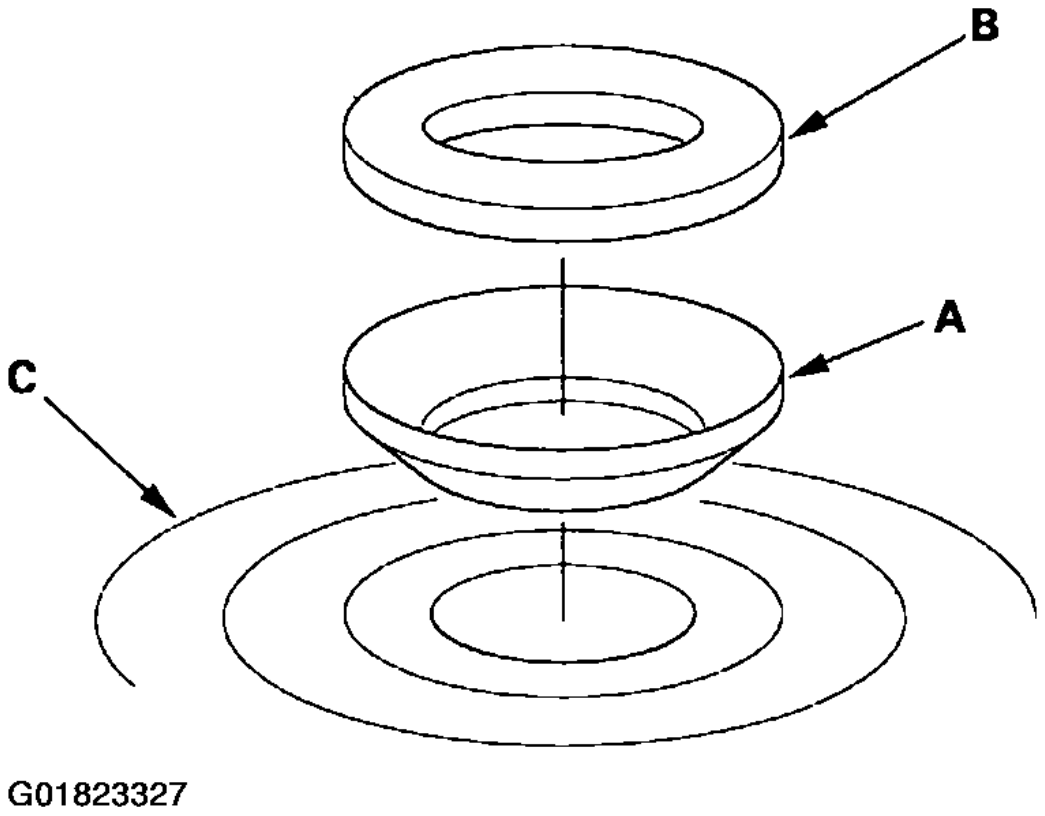

Fig. 120: Installing Spring Washer & Washer On The Clutch Housing Side Ball Bearing

9. Install the mainshaft in the clutch housing.
10. Place the transmission housing over the mainshaft and onto the clutch housing.
11. Tighten the clutch and transmission housings with several 8 mm special bolts (left-hand threads).

NOTE:

- **It is not necessary to use sealing agent between the housings.**
- **The 8 mm special bolts are left-hand thread.**

12. Lightly tap on the mainshaft with a plastic hammer.
13. Attach the special tool to the mainshaft as follows:
    - Back-out the mainshaft holder bolt (A) and loosen the two hex bolts (B).
    - Fit the holder over the mainshaft so its lip is towards the transmission.
    - Align the mainshaft holder lip around the groove at the inside of the mainshaft splines, then tighten the hex bolts.

cardiagn.com

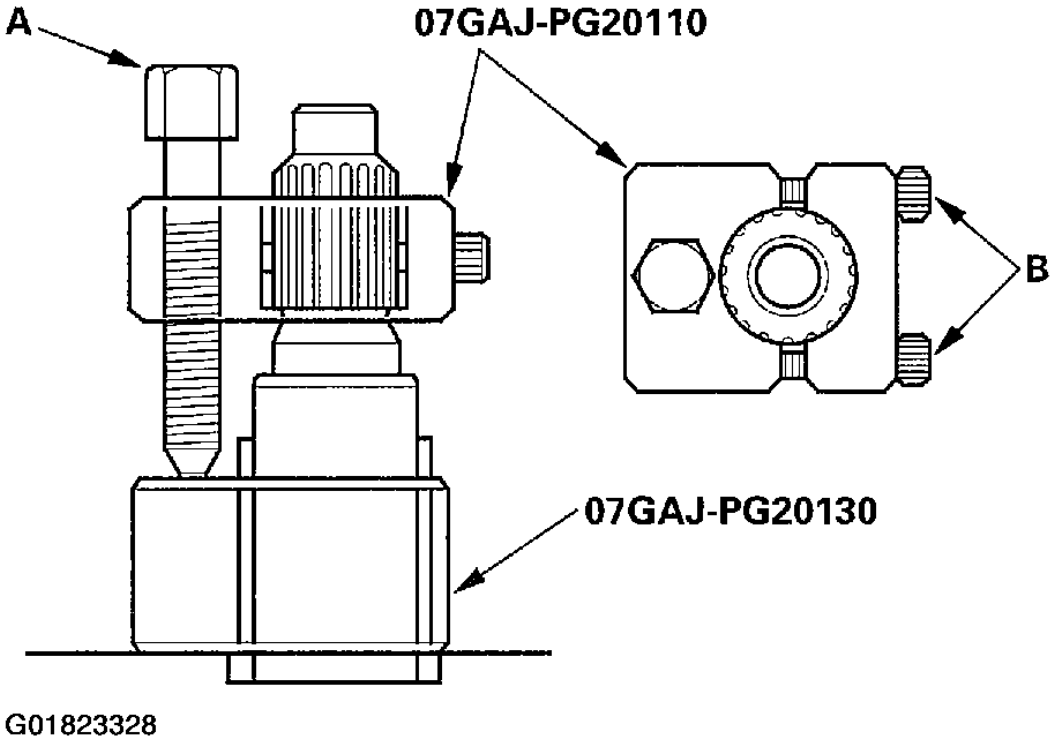

Fig. 121: Attaching The Special Tool To The Mainshaft

14. Seat the mainshaft fully by tapping its end with a plastic hammer.
15. Thread the mainshaft holder bolt in until it just contacts the wide surface of the mainshaft base.
16. Zero a dial gauge (A) on the end of the mainshaft.

cardiagn.com

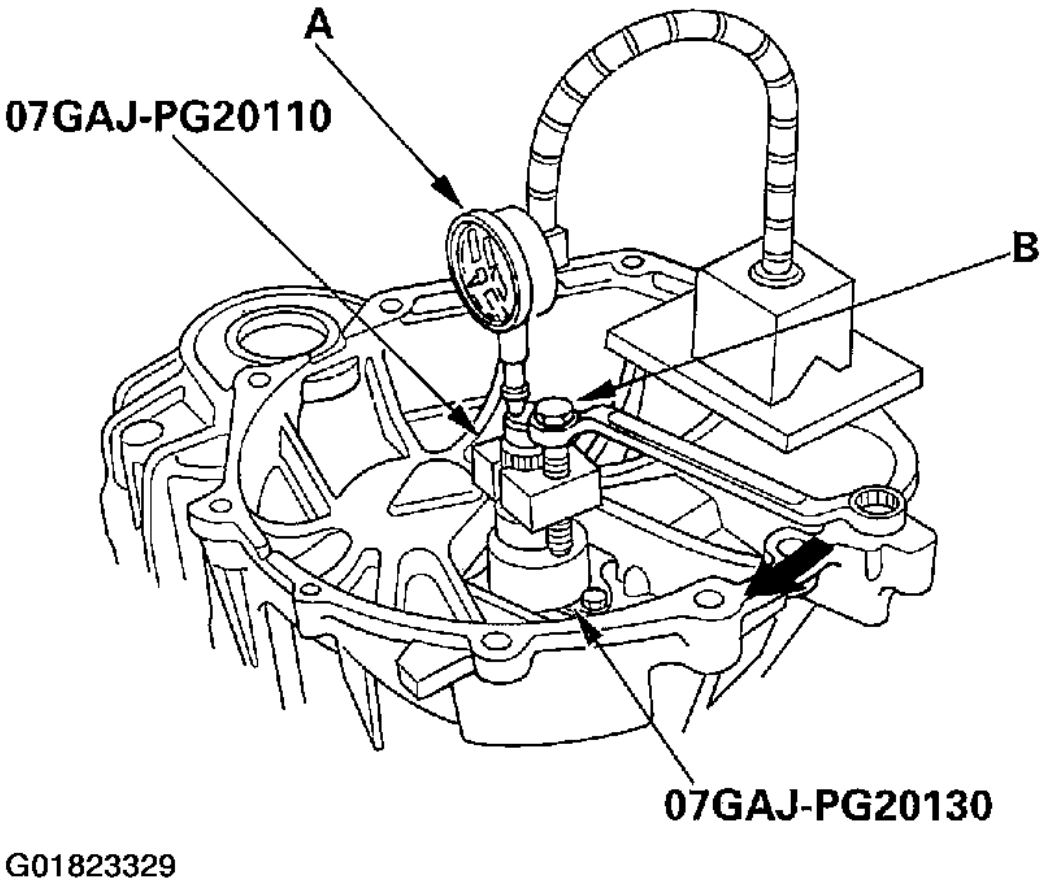

Fig. 122: Zeroing A Dial Gauge On The End Of The Mainshaft

17. Turn the mainshaft holder bolt (B) clockwise; stop turning when the dial gauge (A) has reached its maximum movement. The reading on the dial gauge is the amount of mainshaft end play.

NOTE: **Do not turn the mainshaft holder bolt more than 60 degrees after the needle of the dial gauge stops moving. Applying more pressure with the mainshaft holder bolt may damage the transmission.**

18. If the reading is within the standard, the clearance is correct. If the reading is not within the standard, recheck the shim thickness.

    Standard: 0.11-0.17 mm (0.004-0.007 in.)

TRANSMISSION REASSEMBLY

NOTE: **Prior to reassembling, clean all the parts in solvent, dry them, and apply lubricant to any contact surfaces.**

cardiagn.com

1. Install the release bearing guide (A), new drain plug washer (B), and drain plug (C).

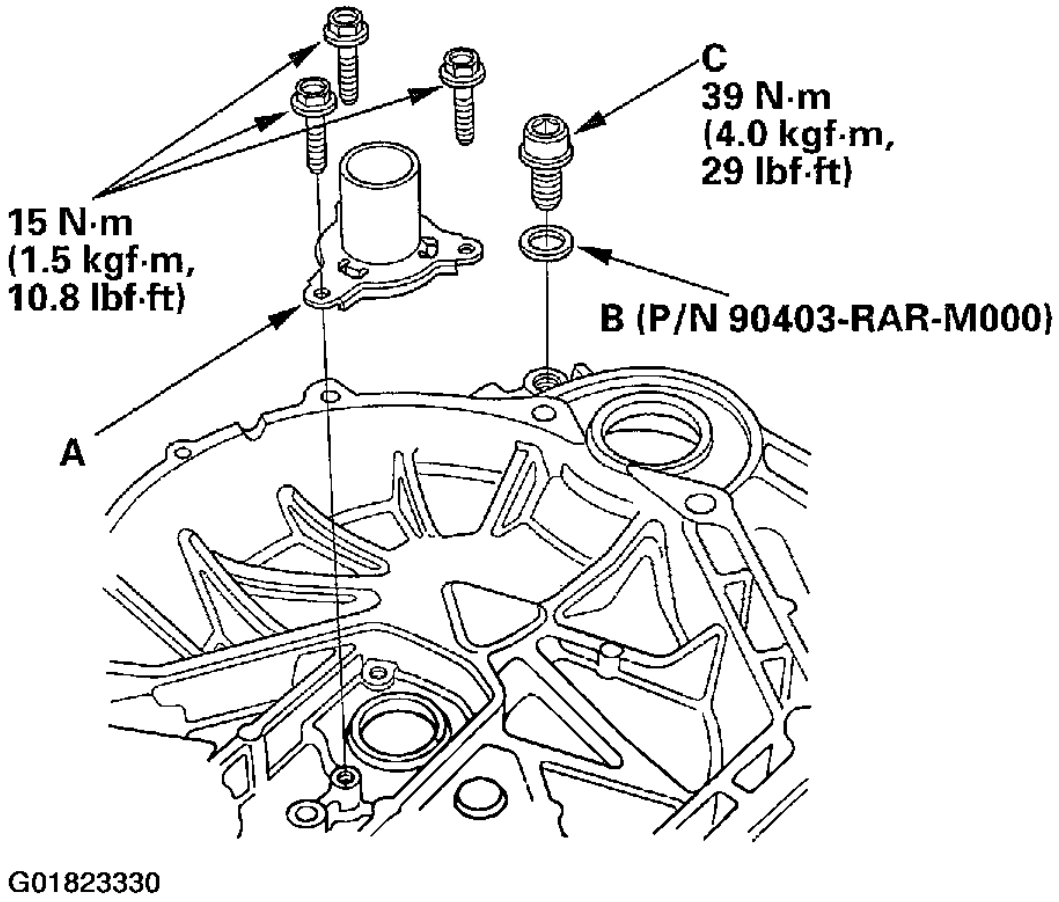

Fig. 123: Installing The Release Bearing Guide, New Drain Plug Washer & Drain Plug

2. Install the magnet (A) and differential assembly (B).

cardiagn.com

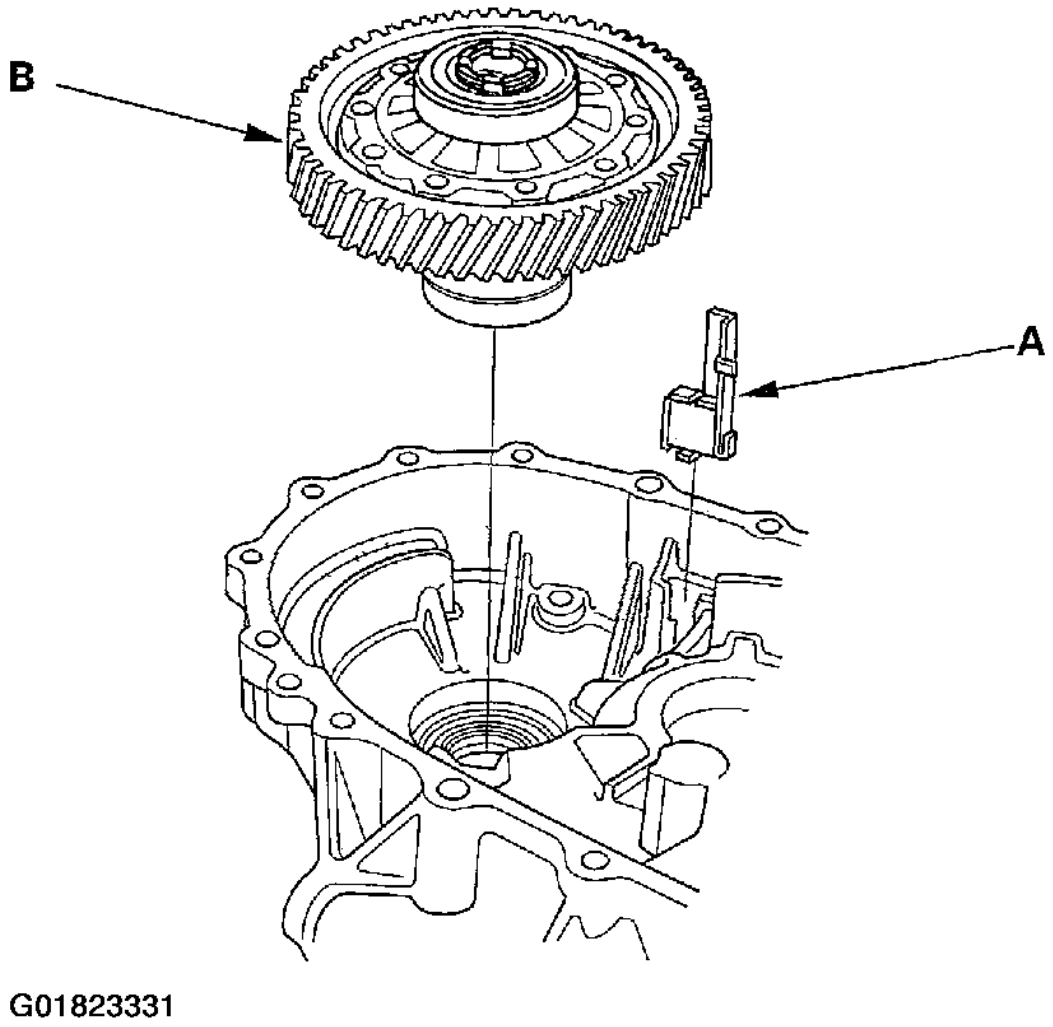

Fig. 124: Installing The Magnet & Differential Assembly

3. Install the 28 mm spring washer (A) and 28 mm washer (B) over the ball bearing (C). Note the installation direction of the spring washer (A).

cardiagn.com

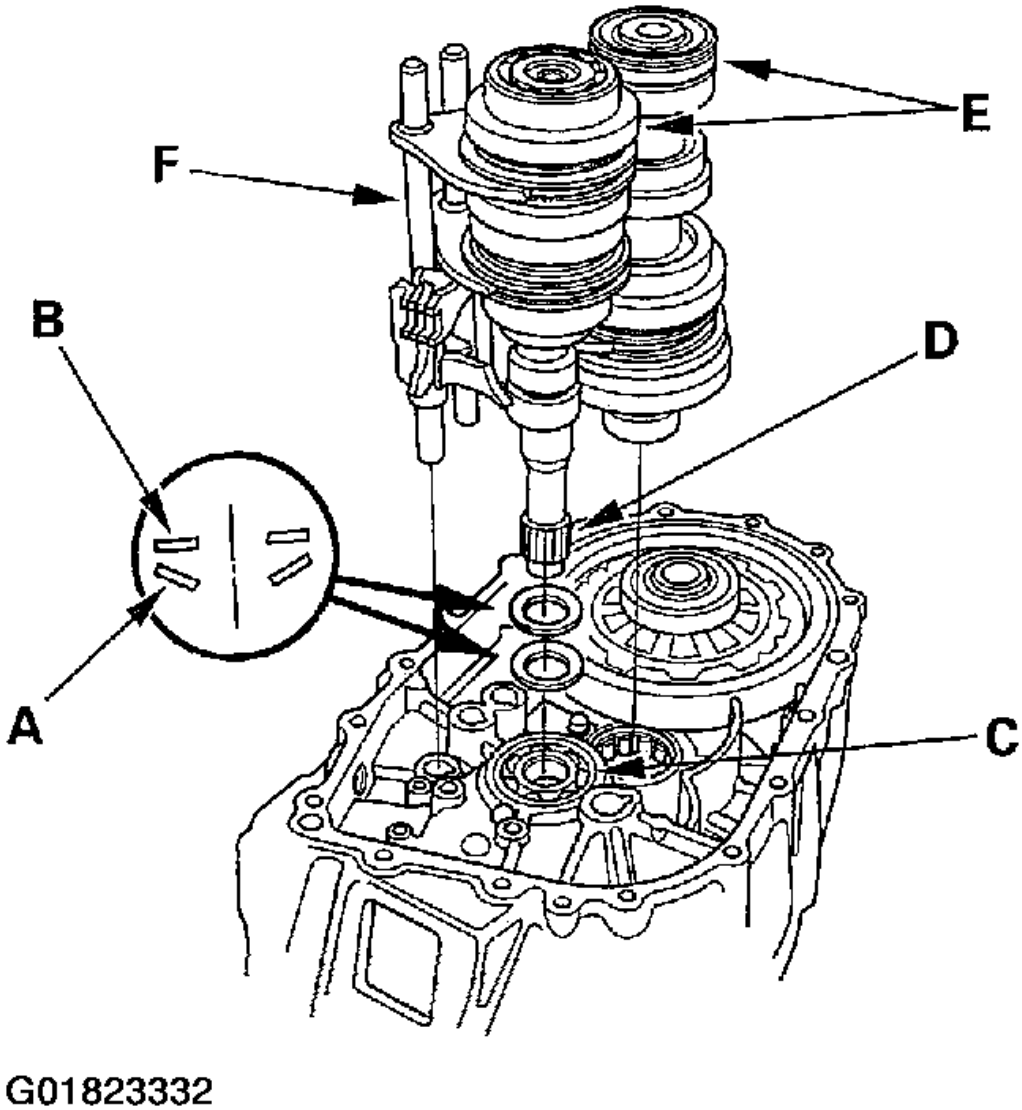

Fig. 125: Installing The 28 mm Spring Washer & 28 mm Washer Over The Ball Bearing

4. Apply vinyl tape the mainshaft splines (D) to protect the seal. Install the mainshaft and countershaft (E) into the shift forks (F), and install them as an assembly.
5. Install the reverse shift fork.

cardiagn.com

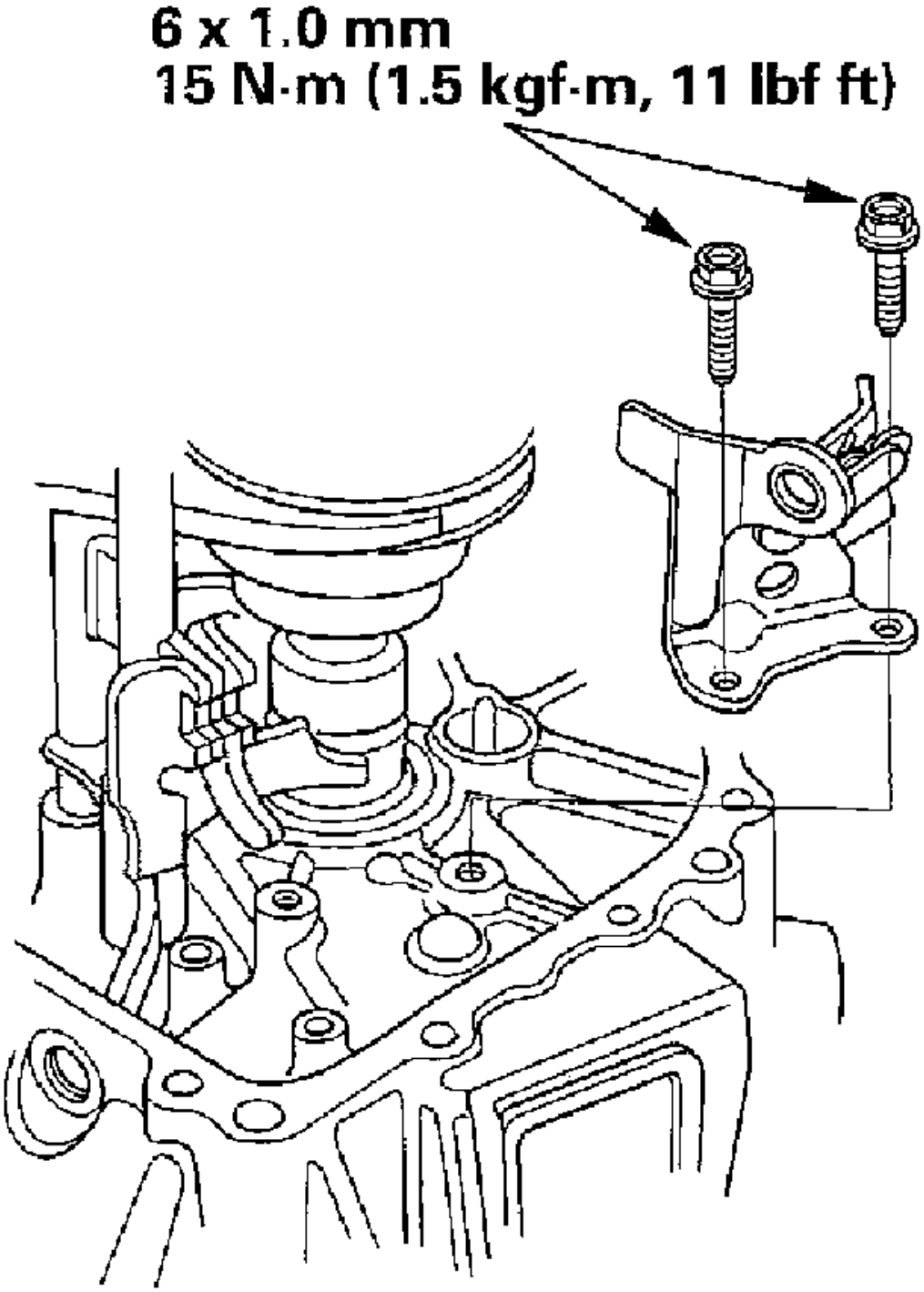

G01823333

cardiagn.com

Fig. 126: Installing The Reverse Shift Fork

6. Install the 20 x 36 x 2 mm thrust washer (A), reverse idler gear (B), and reverse gear shaft (C) by aligning the mark (D) with reverse gear shaft hole (E).

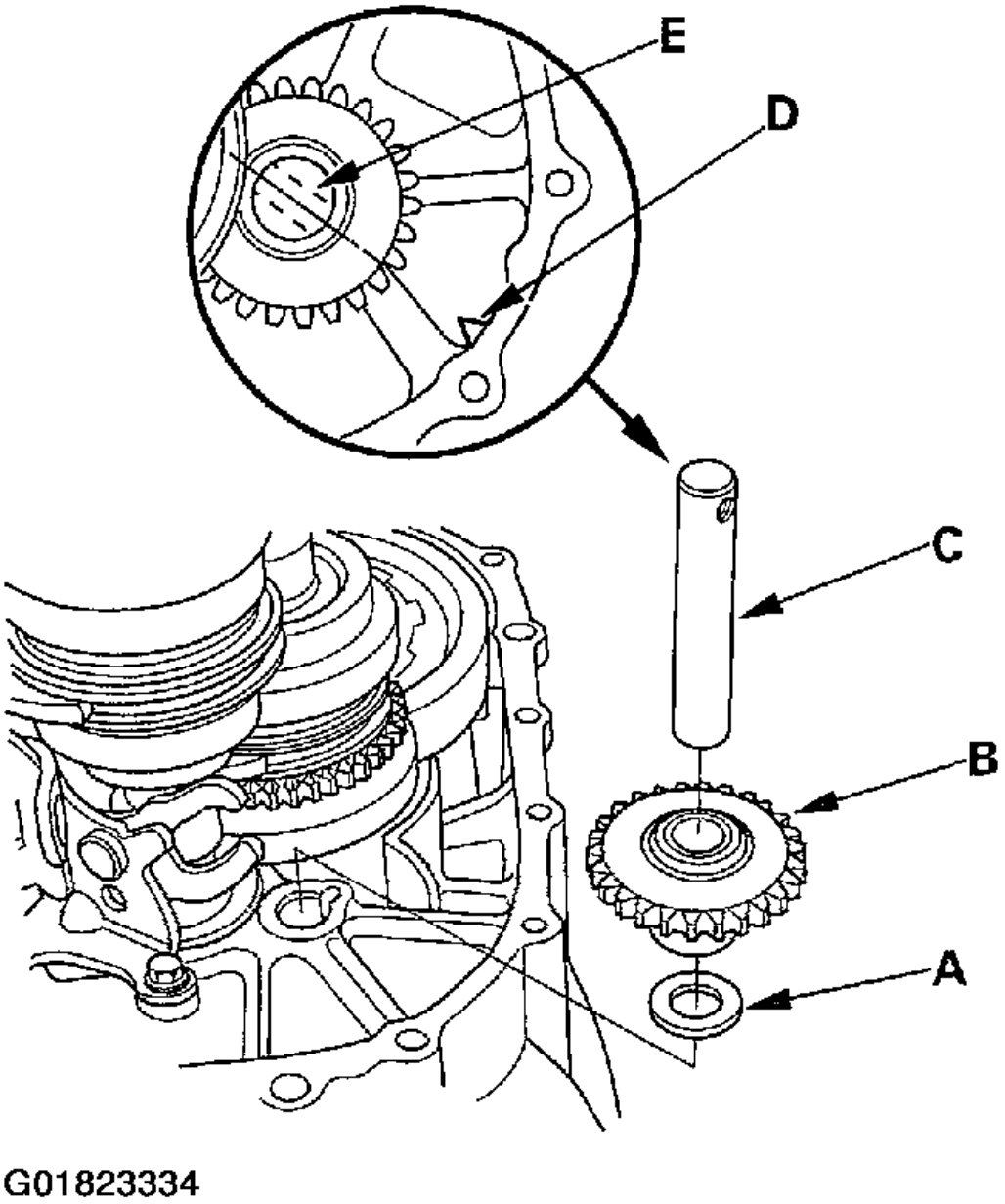

Fig. 127: Installing The 20 X 36 X 2 mm Thrust Washer, Reverse Idler Gear & Reverse Gear Shaft

cardiagn.com

7. Select the proper size 72 mm shim (A) according to the measurements made during the Mainshaft Thrust Clearance Adjustment (see **MAINSHAFT THRUST CLEARANCE ADJUSTMENT**). Install the oil gutter plate (B), oil guide plate M, and 72 mm shim into the transmission housing (C).

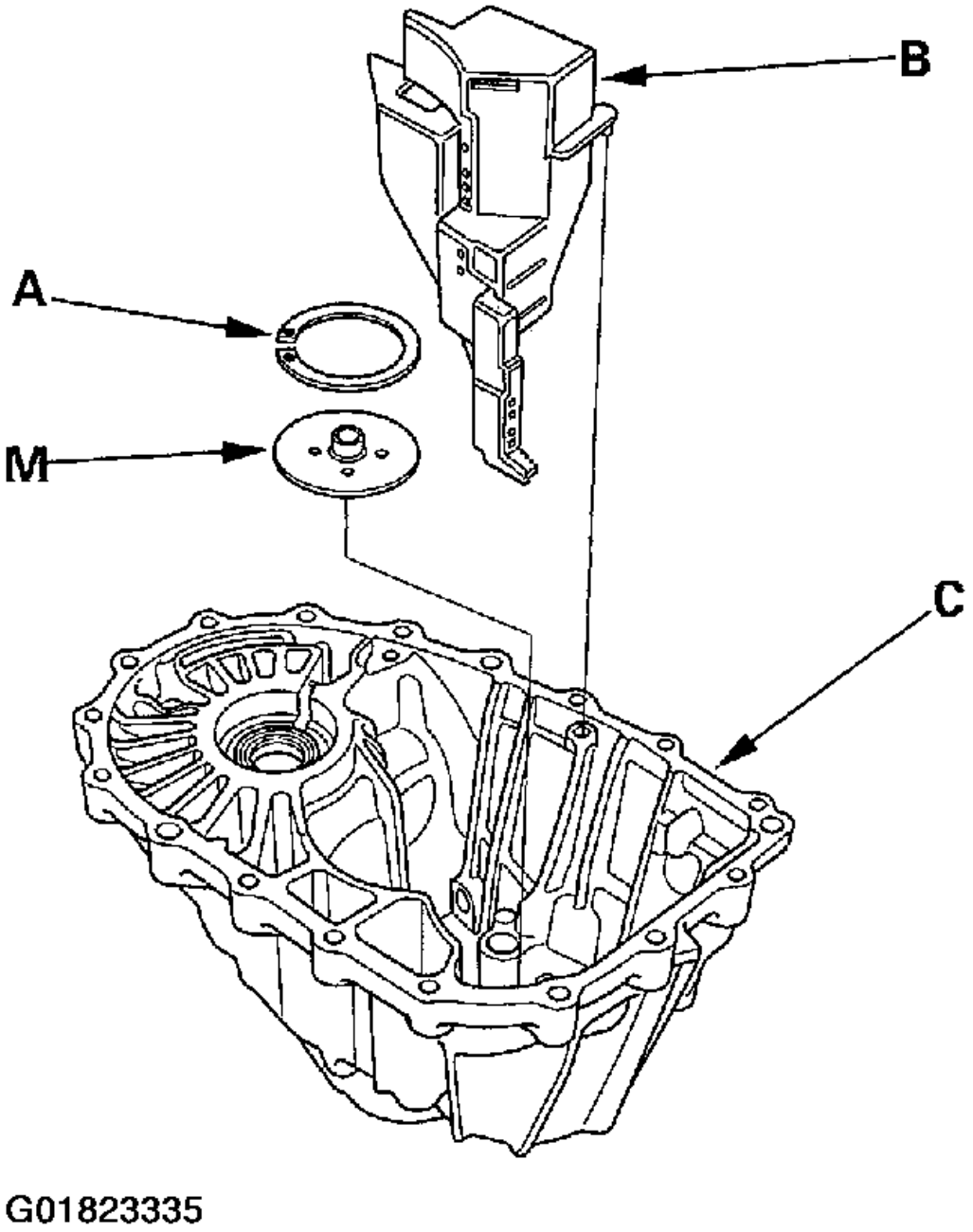

Fig. 128: Installing The Oil Gutter Plate, Oil Guide Plate M & 72 mm Shim Into The Transmission

cardiagn.com

Housing

8. Remove any dirt or oil from the transmission housing sealing surface. Apply liquid gasket (P/N 08718-0001) to the sealing surface. Be sure to seal the entire circumference of the bolt holes to prevent oil leakage.

NOTE: **If 4 minutes have passed after applying liquid gasket, reapply it and assemble the housings. Allow it to cure at least 20 minutes after assembly before filling the transmission with oil.**

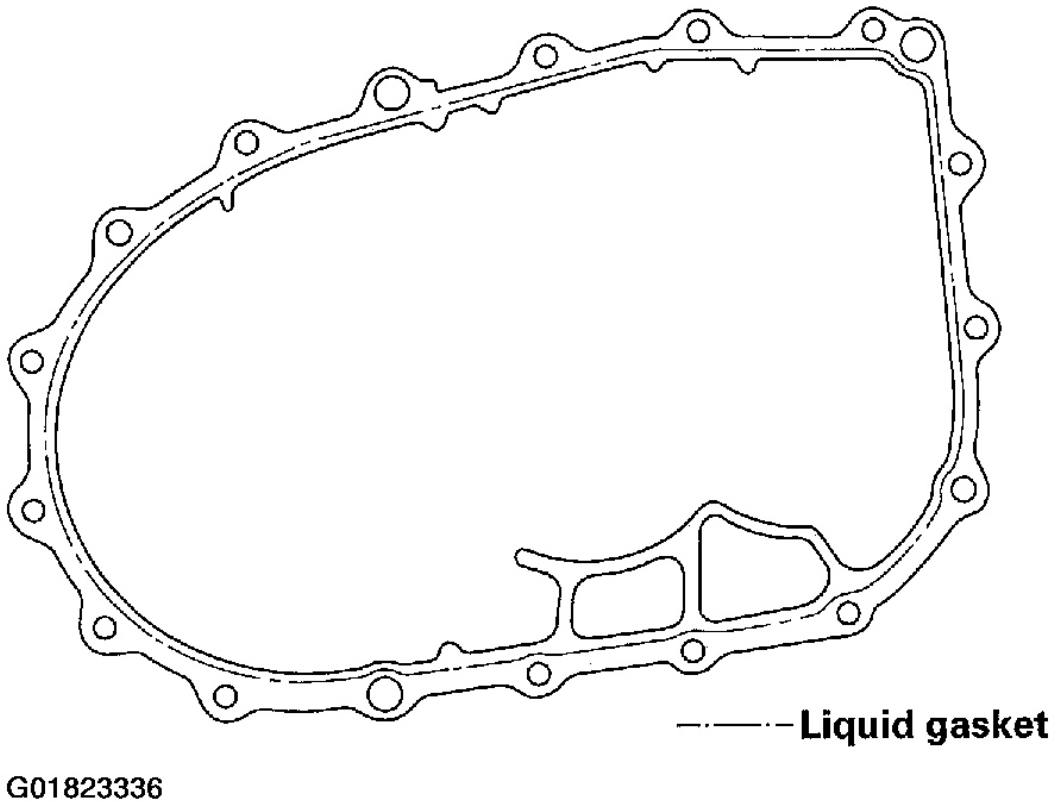

Fig. 129: Applying Liquid Gasket To The Sealing Surface

9. Install the 14 x 20 mm dowel pins (A).

cardiagn.com

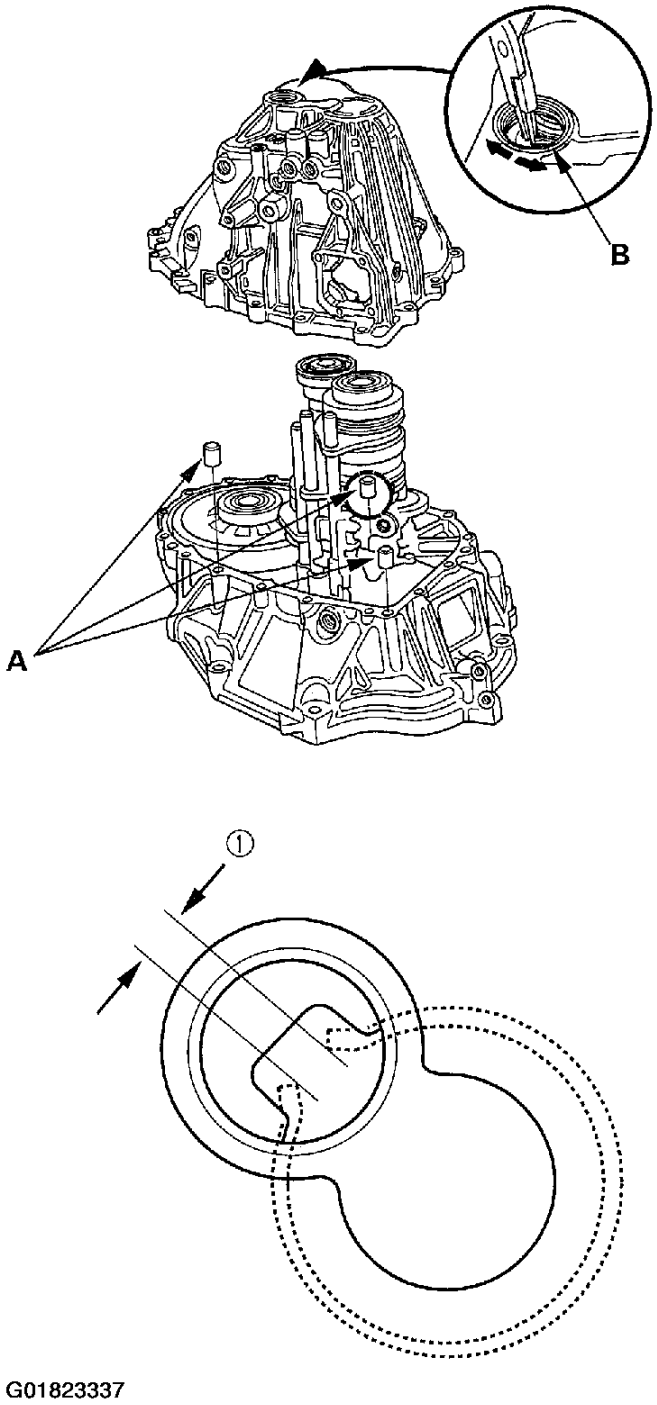

Fig. 130: Installing The 14 x 20 mm Dowel Pins

10. Place the transmission housing over the clutch housing, being careful to line up the shafts.
11. Lower the transmission housing the rest of the way as you expand the 72 mm snap ring (B). Release the snap ring so it seats in the groove of the countershaft bearing.

cardiagn.com

12. Check that the 52 mm snap ring is securely seated in the groove of the countershaft bearing.

    Dimension 1 As Installed: 3.3-6.0 mm (0.13-0.24 in.)

13. Apply liquid gasket (P/N 08718-0001) (A) to the threads, and a 2 mm (0.079 in.) bead around the contact surface. Install the 32 mm sealing cap on the transmission housing.

NOTE: **If 4 minutes have passed after applying liquid gasket, reapply it.**

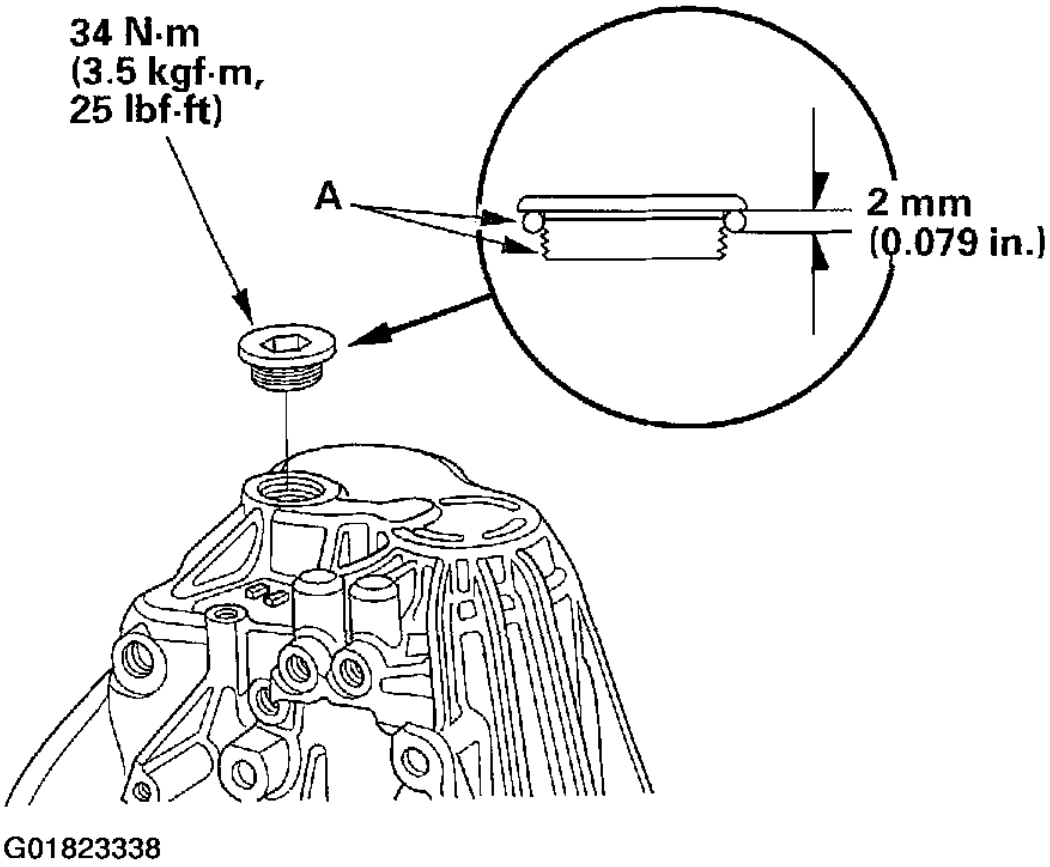

Fig. 131: Apply Liquid Gasket To The Threads & A 2 mm (0.079 in.) Bead Around The Contact Surface

14. Install the transmission hangers A and B, harness bracket B (C), mount bracket collar (D), and 8 mm special bolts (left-hand threads) finger-tight.

cardiagn.com

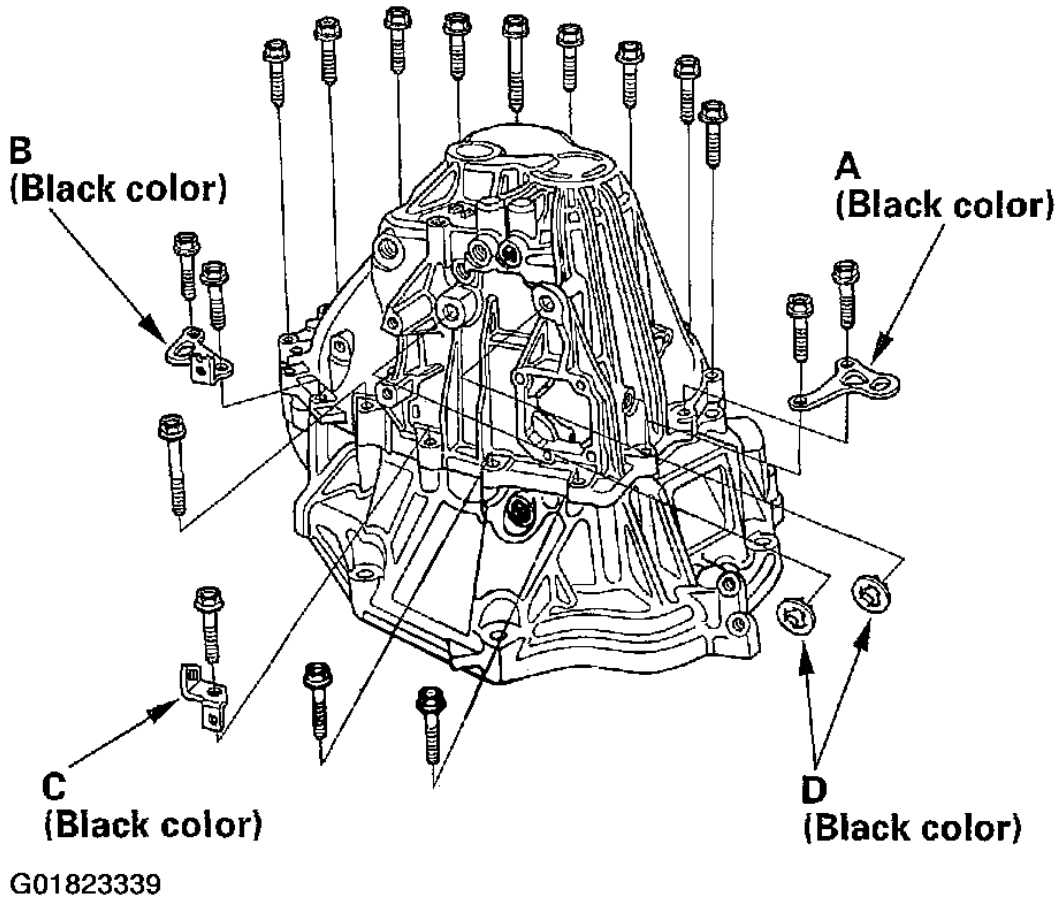

Fig. 132: Installing The Transmission Hangers A & B, Harness Bracket B, Mount Bracket Collar & 8 mm Special Left-Hand Thread Bolts

15. Tighten the 8 mm special bolts (left-hand threads) in a crisscross pattern in several steps.

NOTE: The 8 mm special bolts are left-hand thread.

cardiagn.com

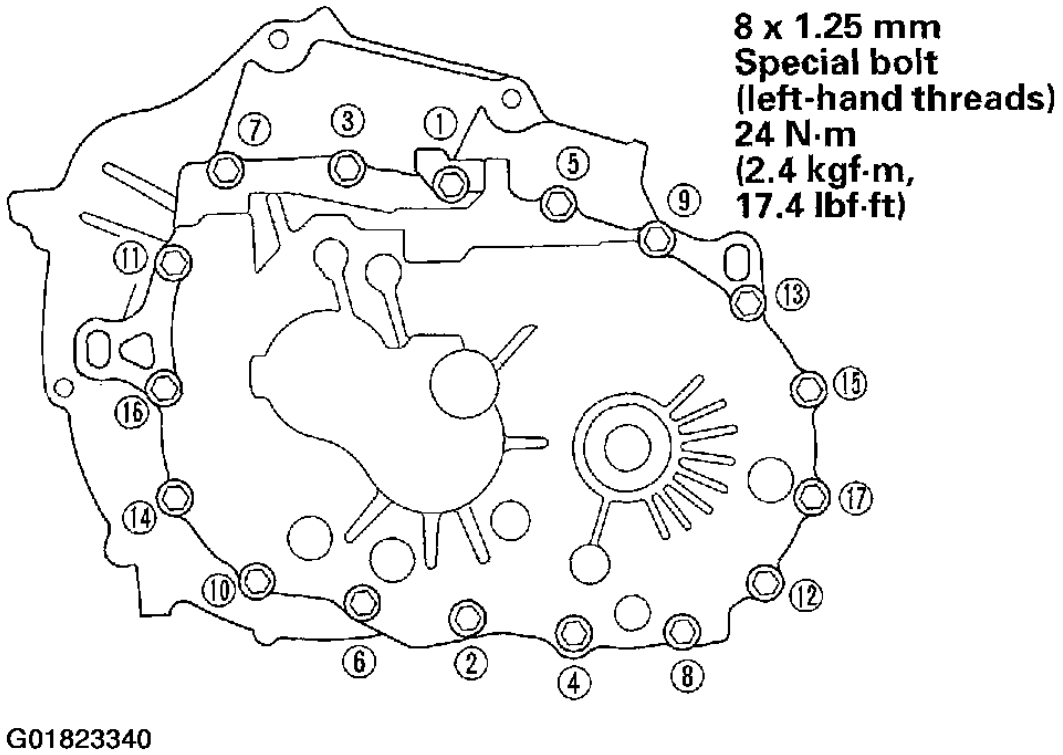

Fig. 133: Tightening Sequence Of 8 mm Special Left-Hand Thread Bolts

16. Remove any dirt or oil from the shift lever cover sealing surface. Apply liquid gasket (P/N 08718-0001) to the sealing surface.

NOTE: **If 4 minutes have passed after applying liquid gasket, reapply it and assemble the housings. Allow it to cure at least 20 minutes after assembly before filling the transmission with oil.**

cardiagn.com

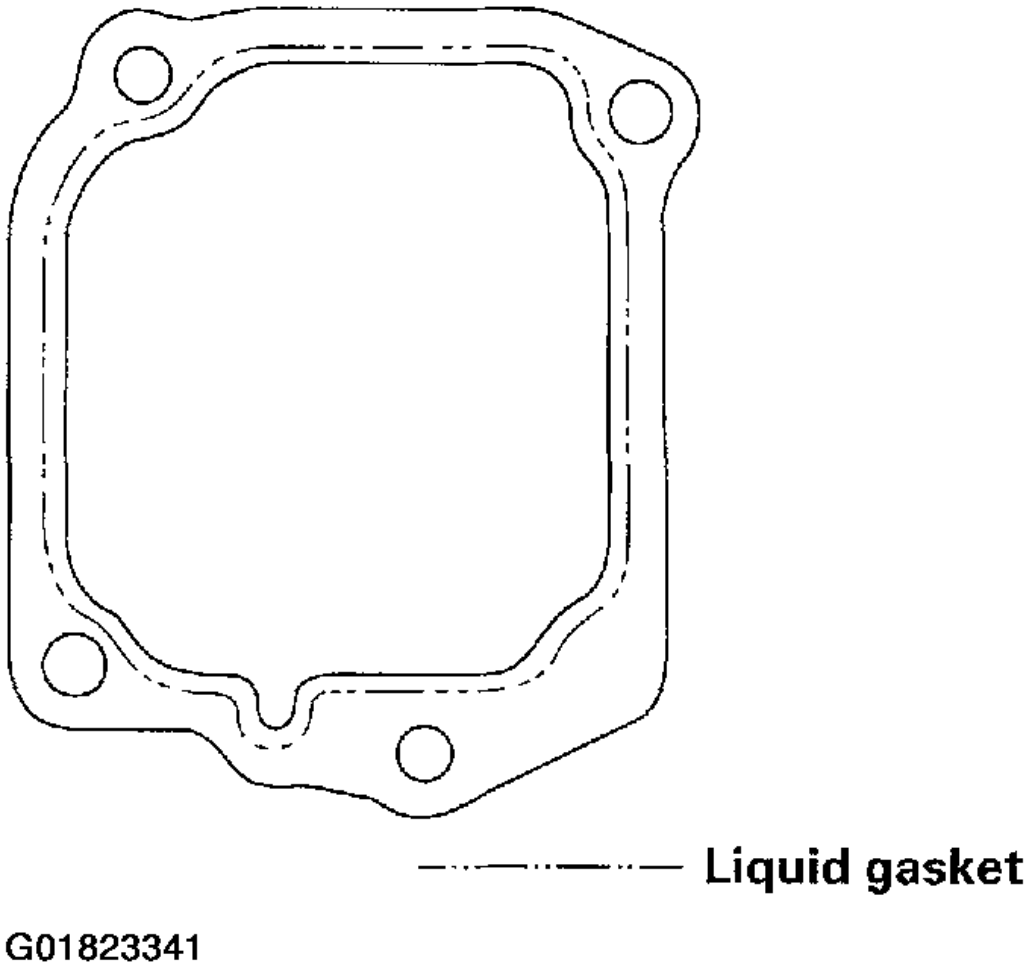

Fig. 134: Applying Liquid Gasket

17. Apply liquid gasket (P/N 08718-0001) (A) to the threads of the interlock bolts (D), and a 2 mm (0.079 in.) bead around the contact surface.

NOTE: If 4 minutes have passed after applying liquid gasket, reapply it.

cardiagn.com

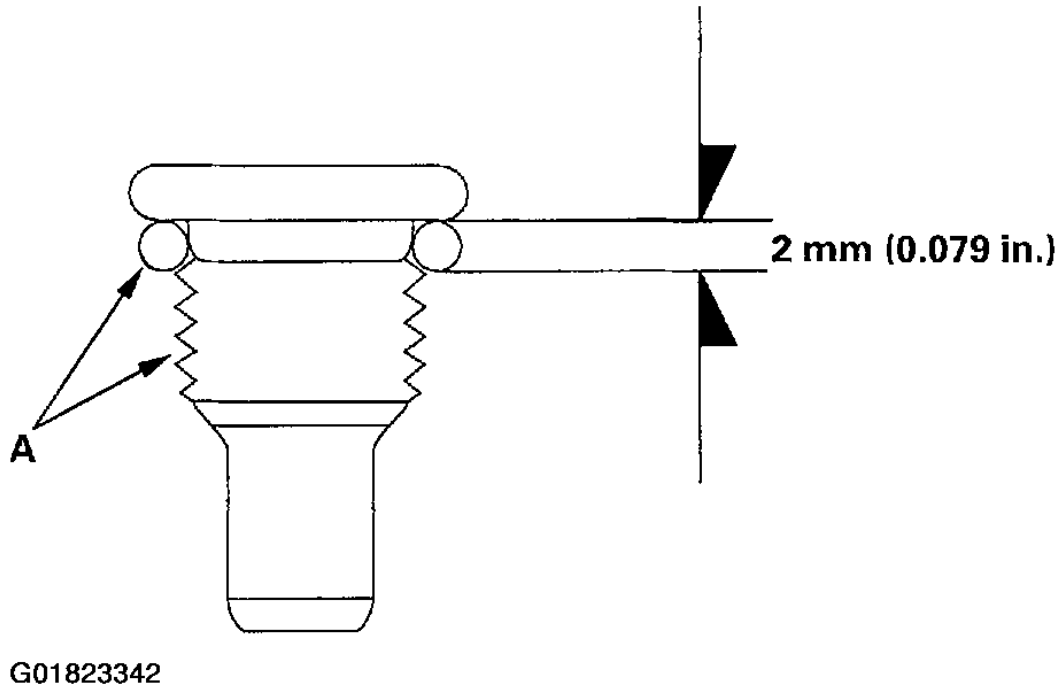

Fig. 135: Applying Liquid Gasket To The Threads & A 2 mm (0.079 in.) Bead Around The Contact Surface

18. Install the 8 x 14 mm dowel pins (B), change lever assembly (C), and harness bracket A.

cardiagn.com

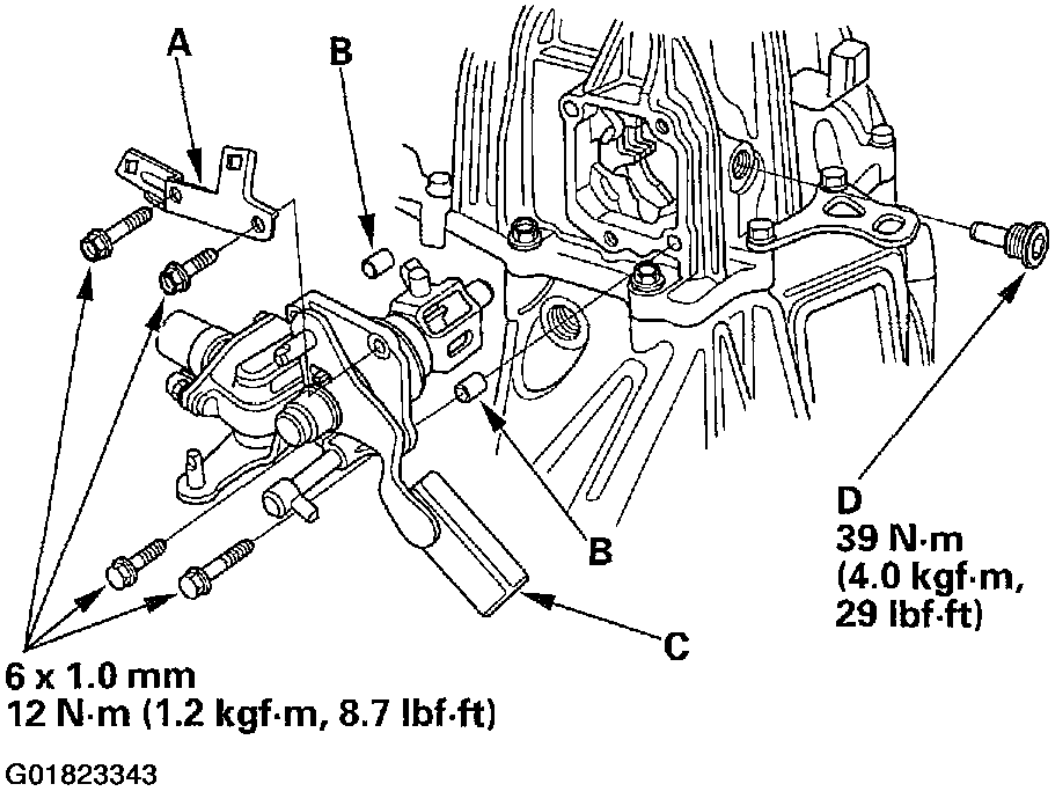

Fig. 136: Installing The 8 X 14 mm Dowel Pins, Change Lever Assembly & Harness Bracket A

19. Install the interlock bolt (D) on the transmission housing.
20. Install the mount bracket collar (A), new filler plug washer (B), filler plug (C), new 10 mm washer (D), and 10 mm flange bolt (E).

cardiagn.com

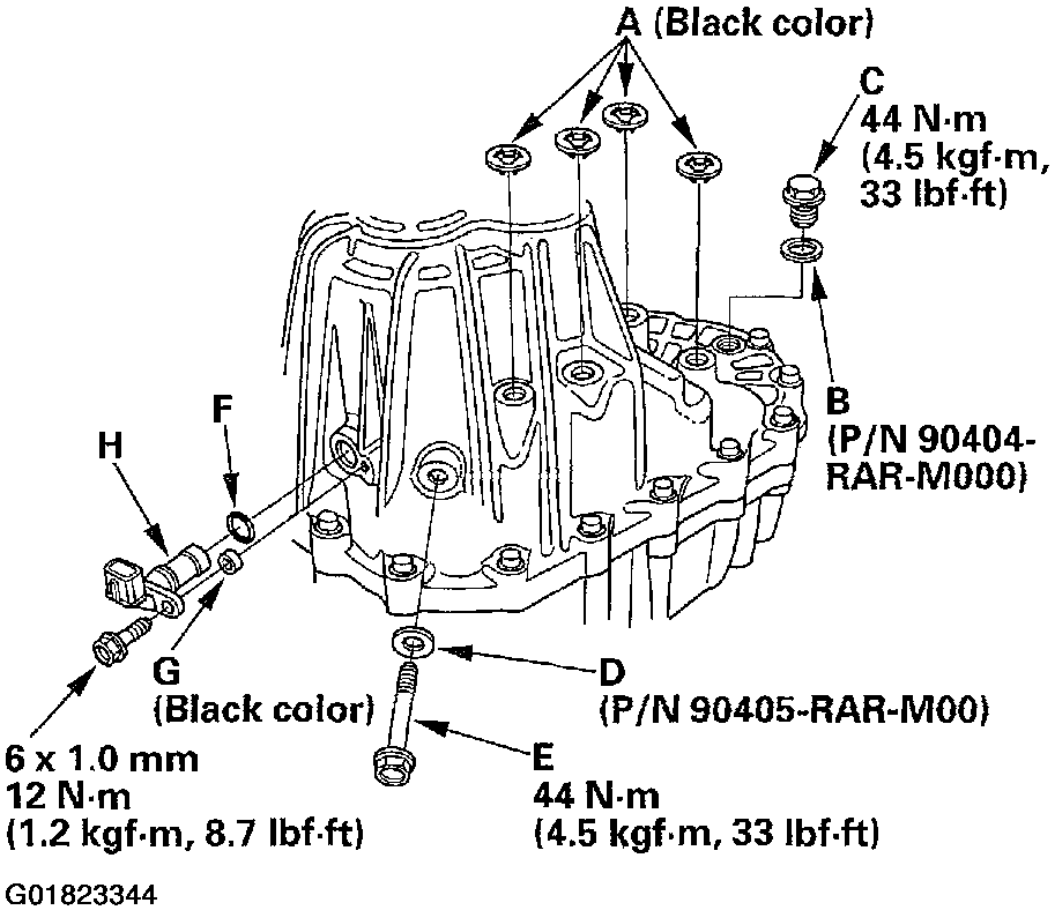

Fig. 137: Installing The Mount Bracket Collar, New Filler Plug Washer, Filler Plug, New 10 mm Washer & 10 mm Flange Bolt

21. Install the new O-ring (F), plain washer (G), and the countershaft speed sensor (H).
22. Apply liquid gasket (P/N 08718-0001) (A) to the threads of the switch, and a 2 mm (0.079 in.) bead around the contact surface.

NOTE: **If 4 minutes have passed after applying liquid gasket, reapply it.**

cardiagn.com

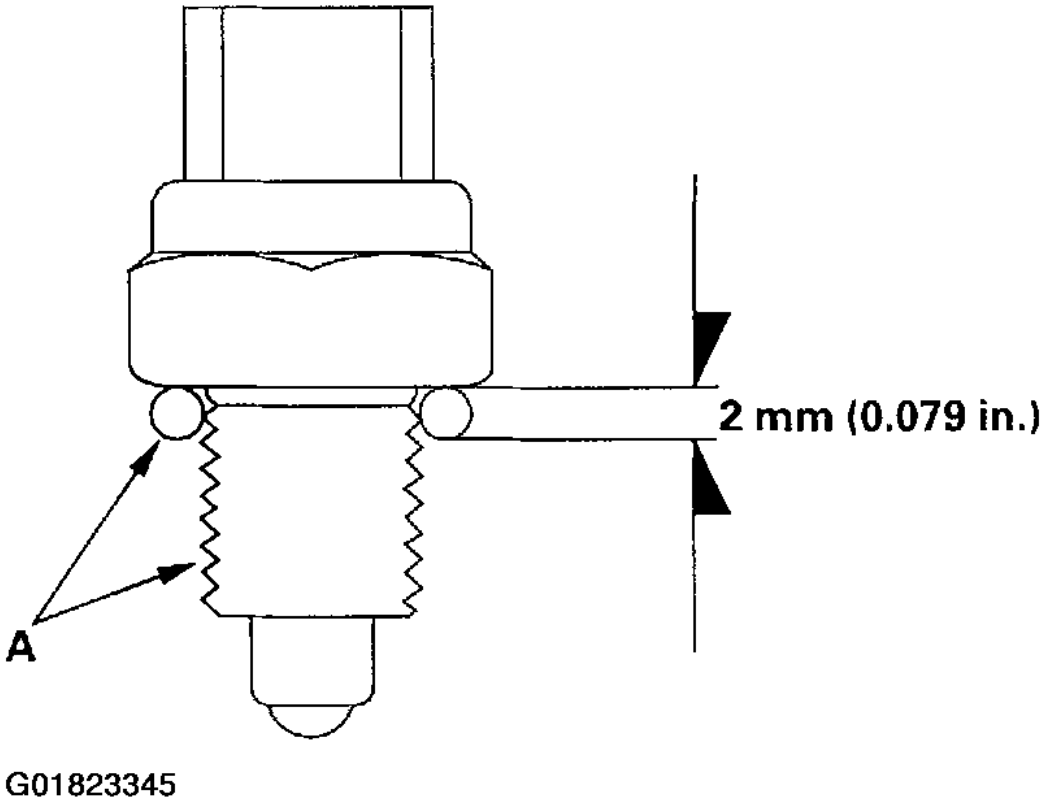

Fig. 138: Applying Liquid Gasket To The Threads & A 2 mm (0.079 in.) Bead Around The Contact Surface

23. Install the detent bolts, spring, and steel balls (A) with new 12 mm washers (B).

cardiagn.com

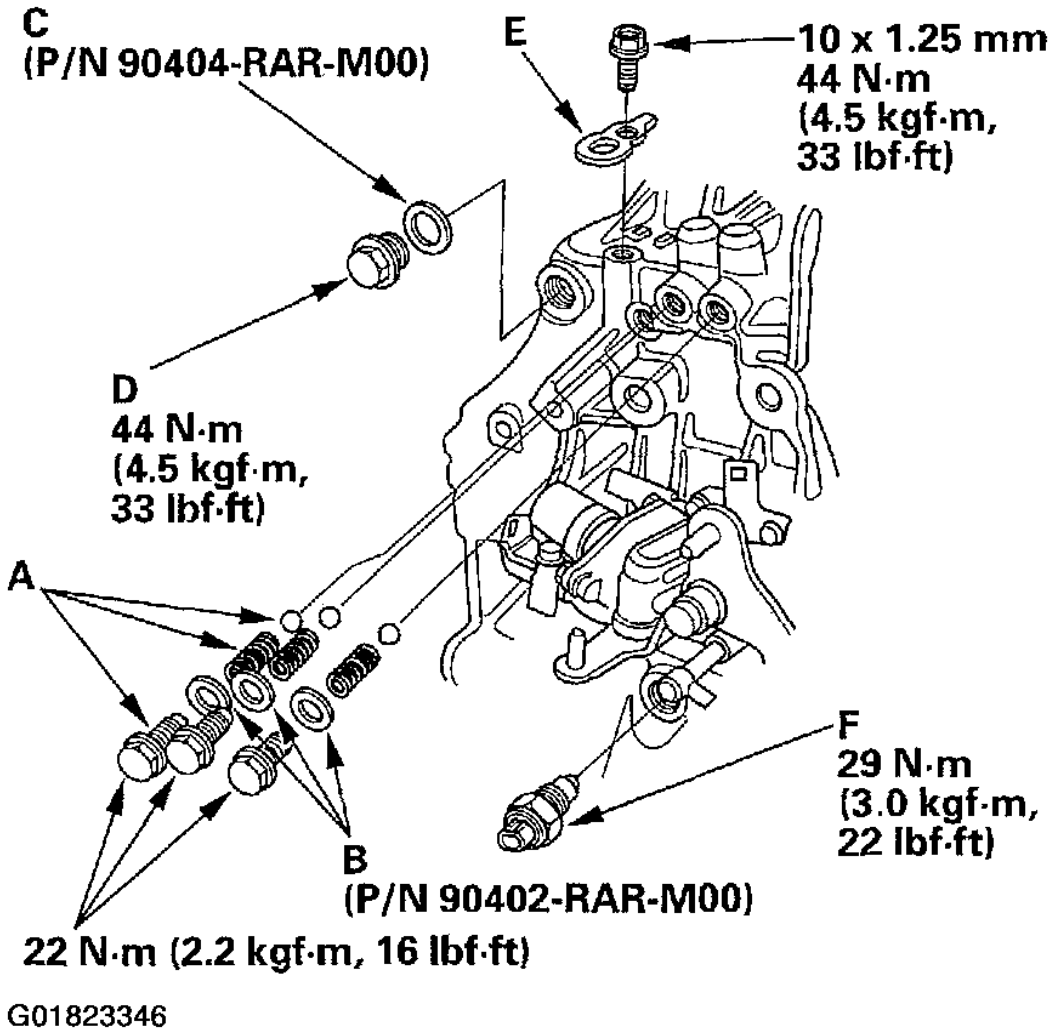

Fig. 139: Installing The Detent Bolts, Spring & Steel Balls With New 12 mm Washers

24. Install the new 20 mm washer (C), 20 mm bolt (D), and transmission hanger (E).
25. Install the back-up light switch (F) on the transmission housing.

GEARSHIFT MECHANISM REPLACEMENT

cardiagn.com

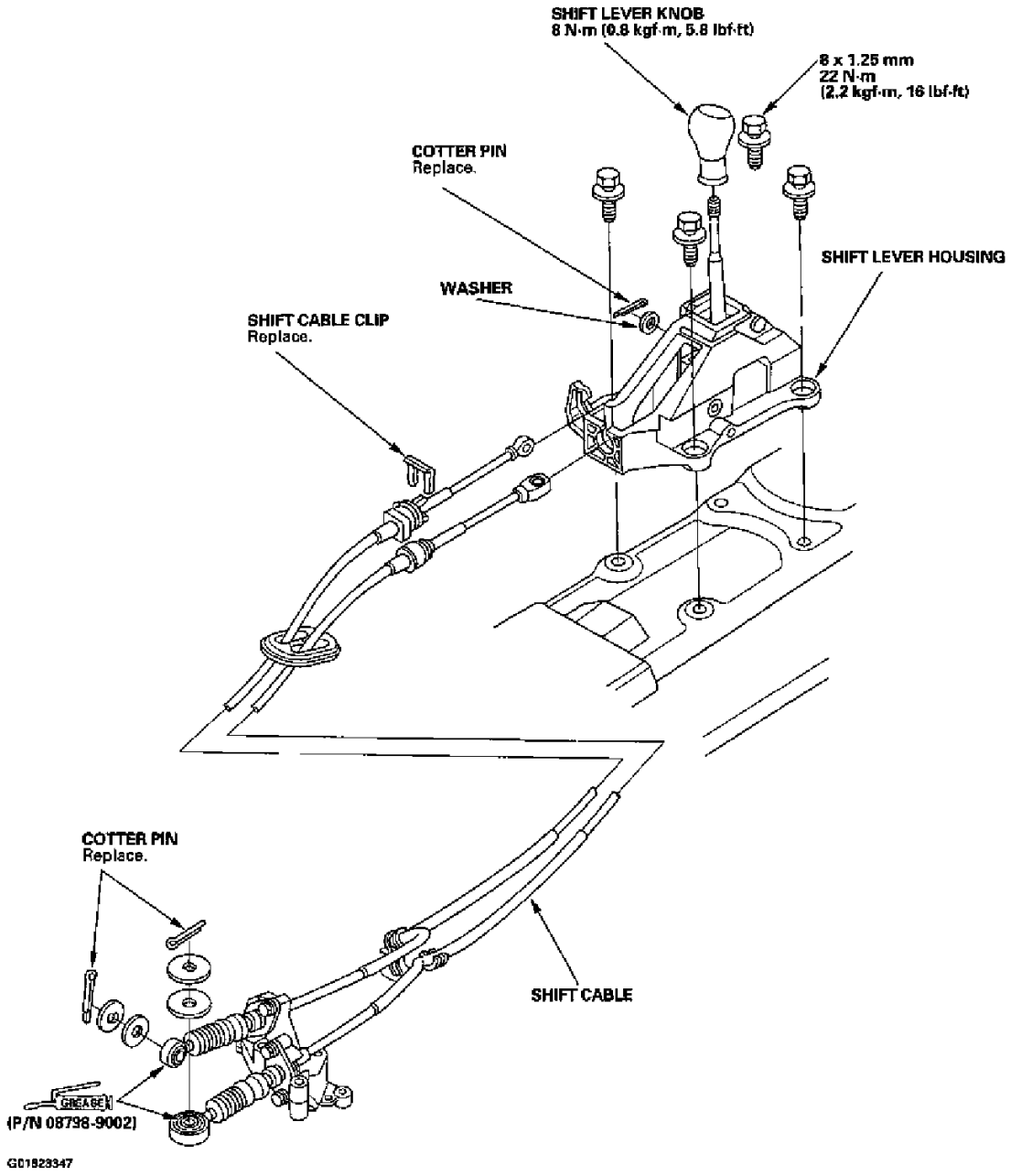

Fig. 140: Exploded View Of Gearshift Mechanism Components

M/T DIFFERENTIAL

COMPONENT LOCATION INDEX

cardiagn.com

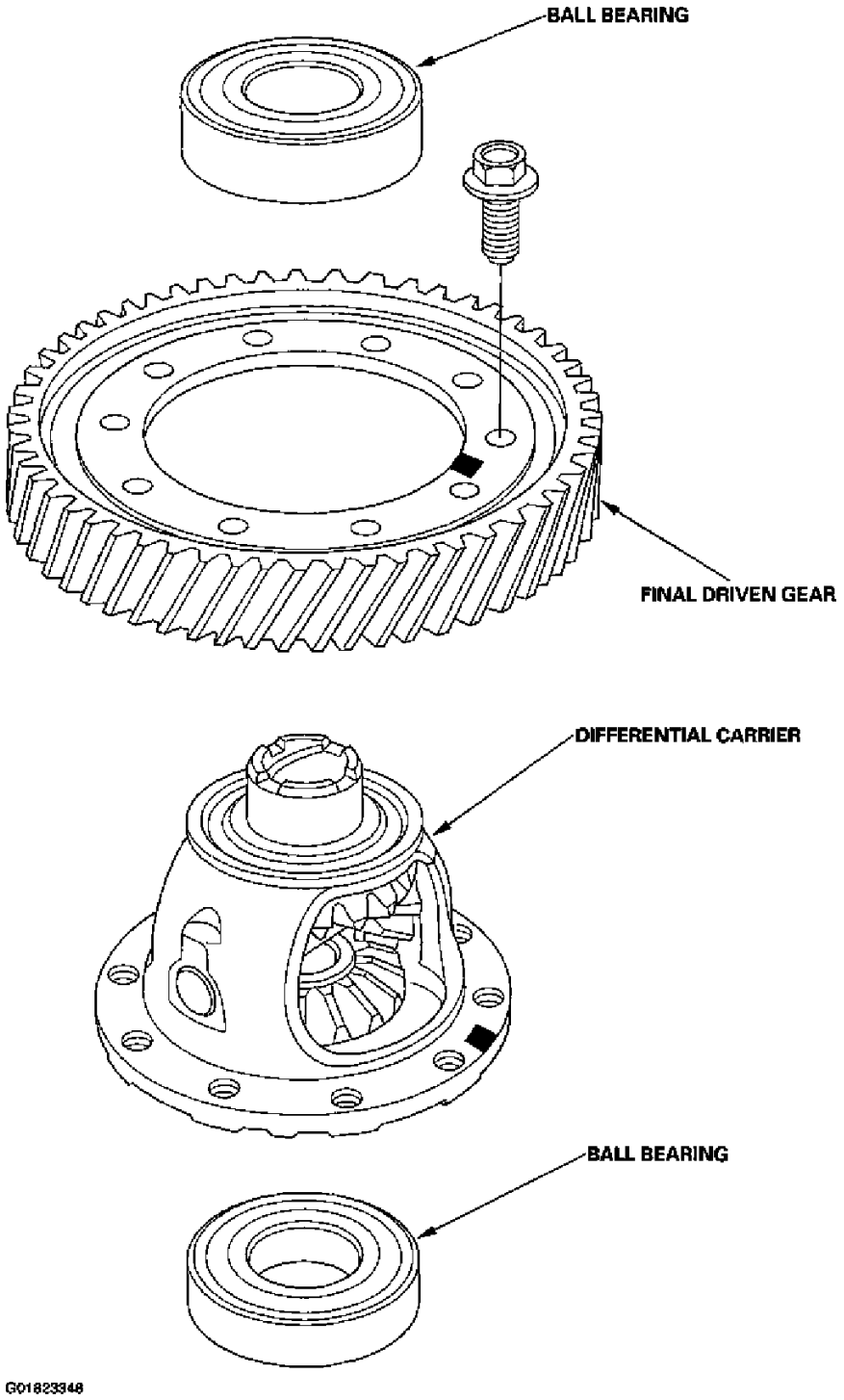

Fig. 141: Locating M/T Differential Components

BACKLASH INSPECTION

1. Place the differential assembly on V-blocks (A), and install both axles.

cardiagn.com

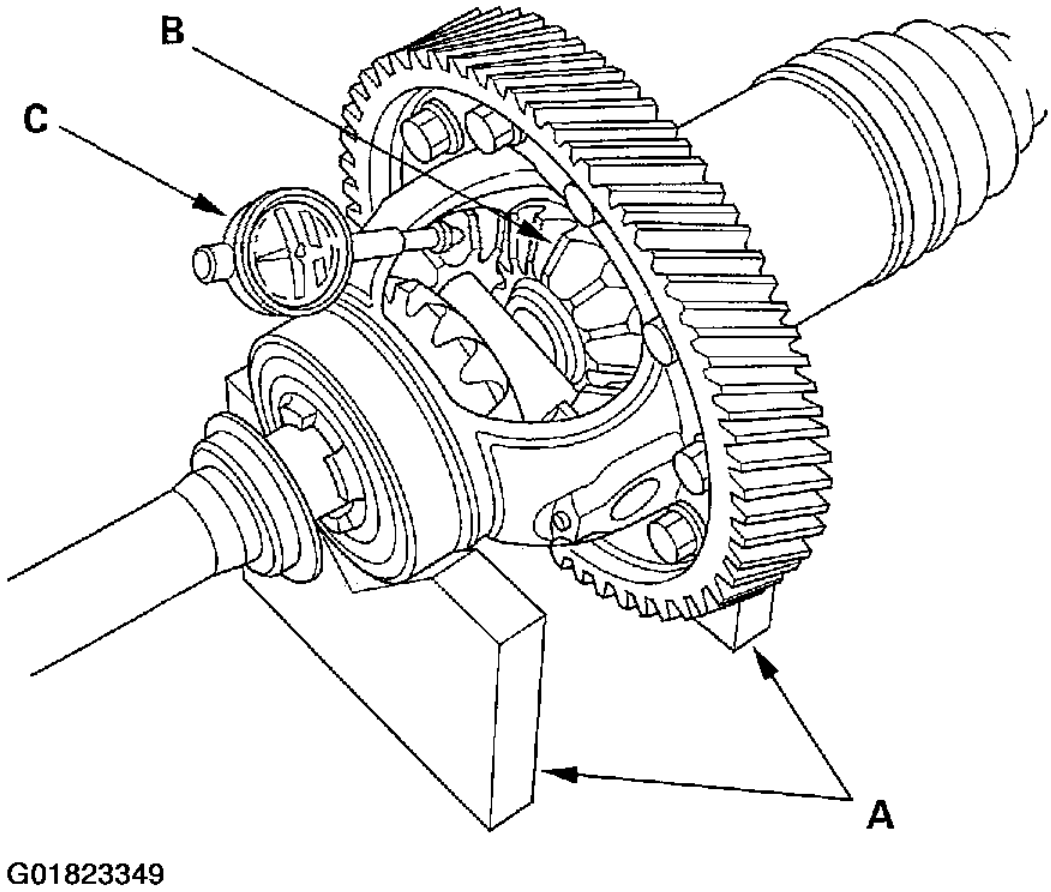

Fig. 142: Inspecting Backlash

2. Measure the backlash of both pinion gears (B) with a dial indicator (C). If the backlash is not within the standard, replace the differential carrier.

   Standard (New): 0.05-0.15 mm (0.002-0.006 in.)

DIFFERENTIAL CARRIER, FINAL DRIVEN GEAR REPLACEMENT

1. Remove the bolts (left-hand threads) in a crisscross pattern in several steps, then remove the final driven gear (A) from the differential carrier (B).

cardiagn.com

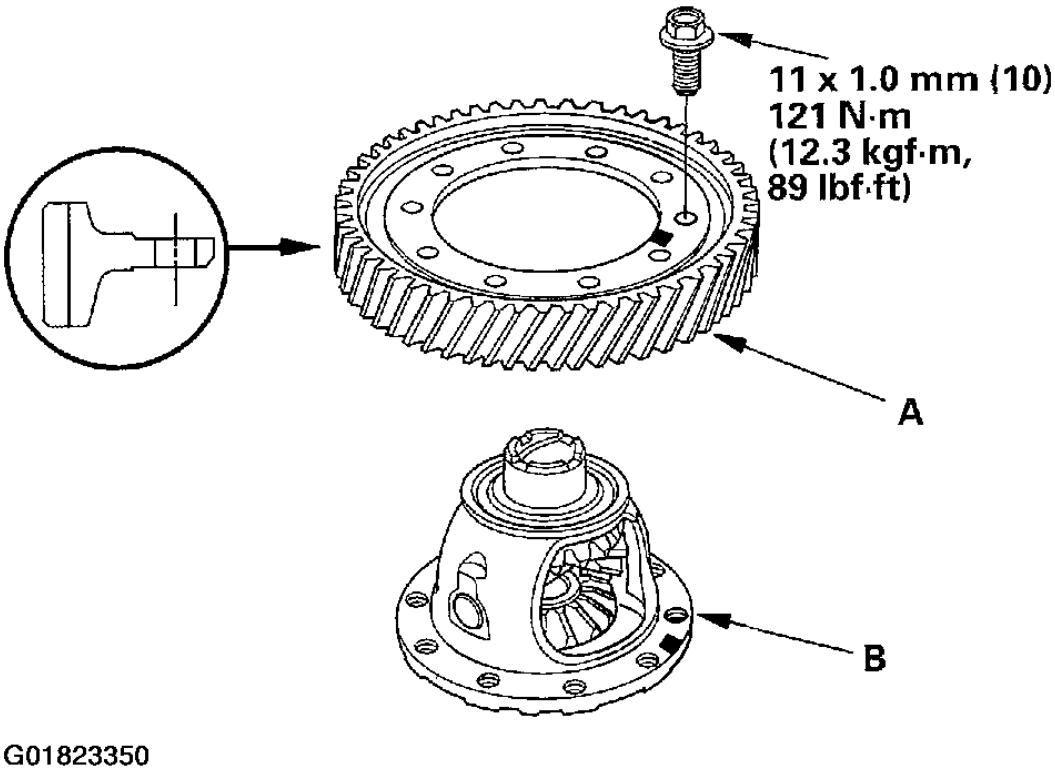

Fig. 143: Removing The Final Driven Gear From The Differential Carrier (Left-Hand Thread Bolts)

2. Install the final driven gear with the chamfer on the inside diameter facing the carrier. Tighten the bolts in a crisscross pattern in several steps.

CARRIER BEARING REPLACEMENT

Special Tools Required: Driver, 40 mm I.D. 07746-0030100

1. Check the carrier bearings for wear and rough rotation. If they rotate smoothly and their rollers show no signs of wear, the bearings are OK.
2. Remove the carrier bearing (A) with a commercially available bearing puller (B).

cardiagn.com

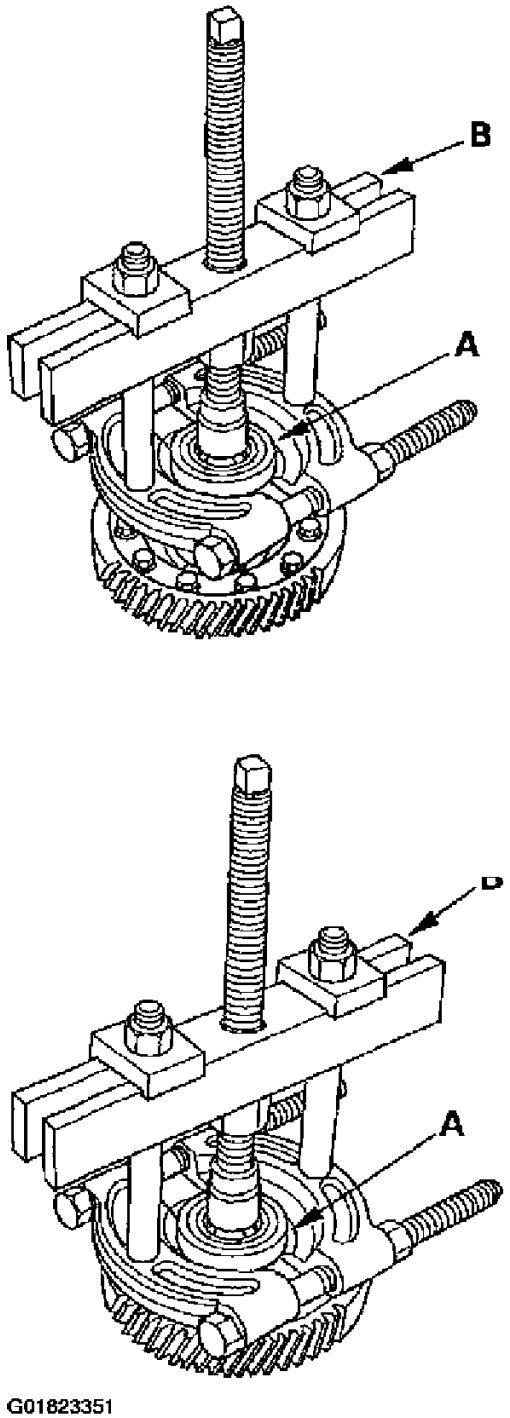

Fig. 144: Removing The Carrier Bearing

3. Install the new bearings (A) with the special tool and a press. Press each bearing on until it bottoms. There should be no clearance between the bearings and the carrier.

cardiagn.com

NOTE: **Place the seal part of the bearing (B) towards the outside of the differential, then install it.**

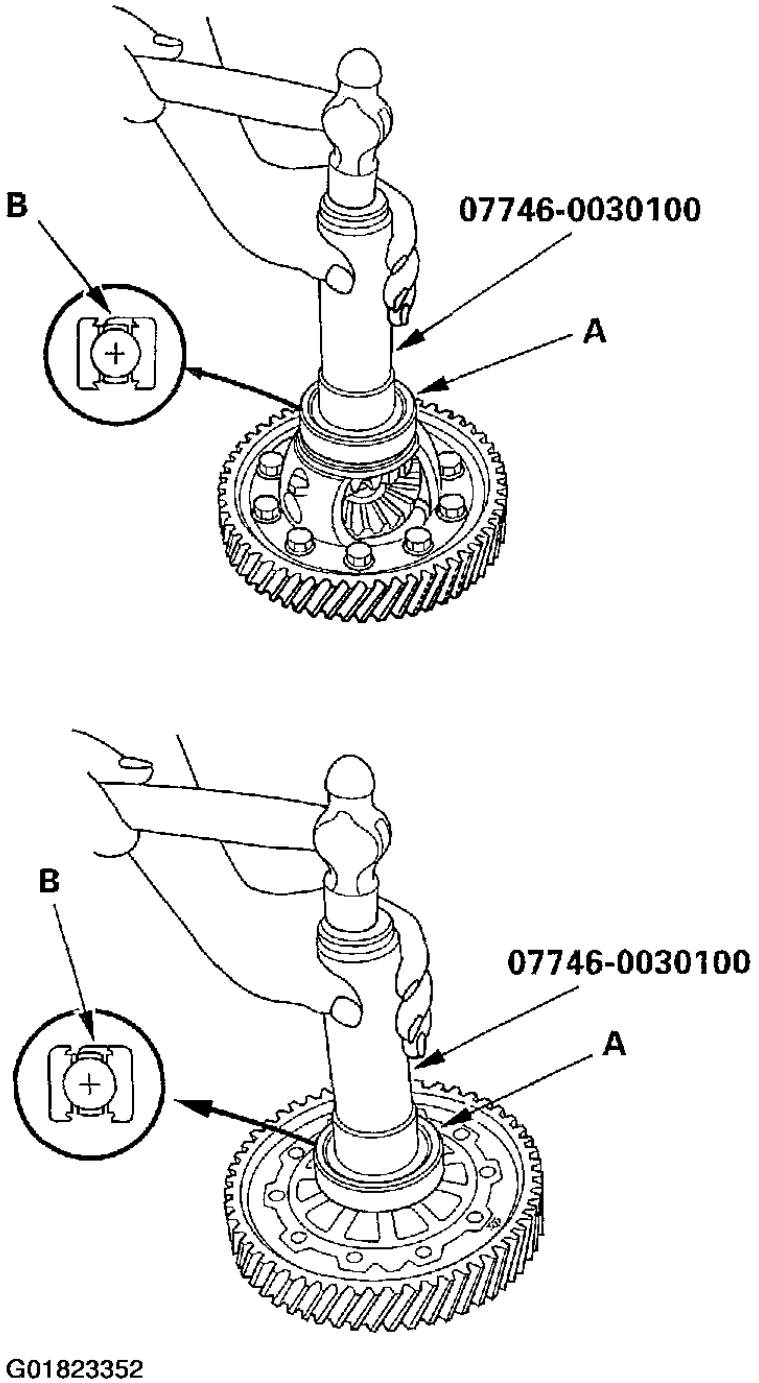

Fig. 145: Installing The New Bearings

cardiagn.com

OIL SEAL REPLACEMENT

Special Tools Required:

- Driver 07749-0010000
- Oil seal driver attachment 07NAD-P20A100

1. Remove the differential assembly.
2. Remove the oil seal (A) from the transmission housing (B).

cardiagn.com

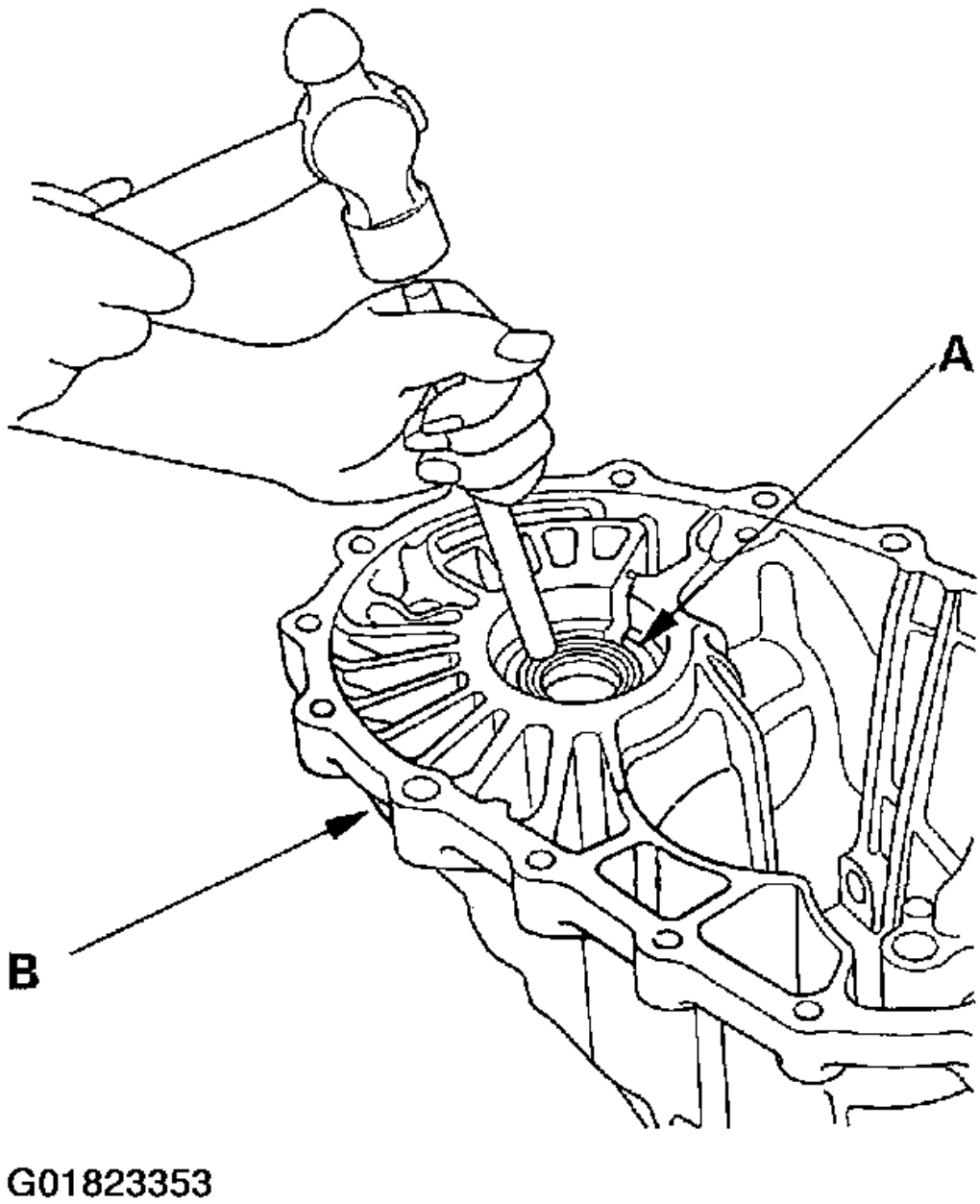

Fig. 146: Removing The Oil Seal From The Transmission Housing

3. Remove the oil seal (A) from the clutch housing (B).

cardiagn.com

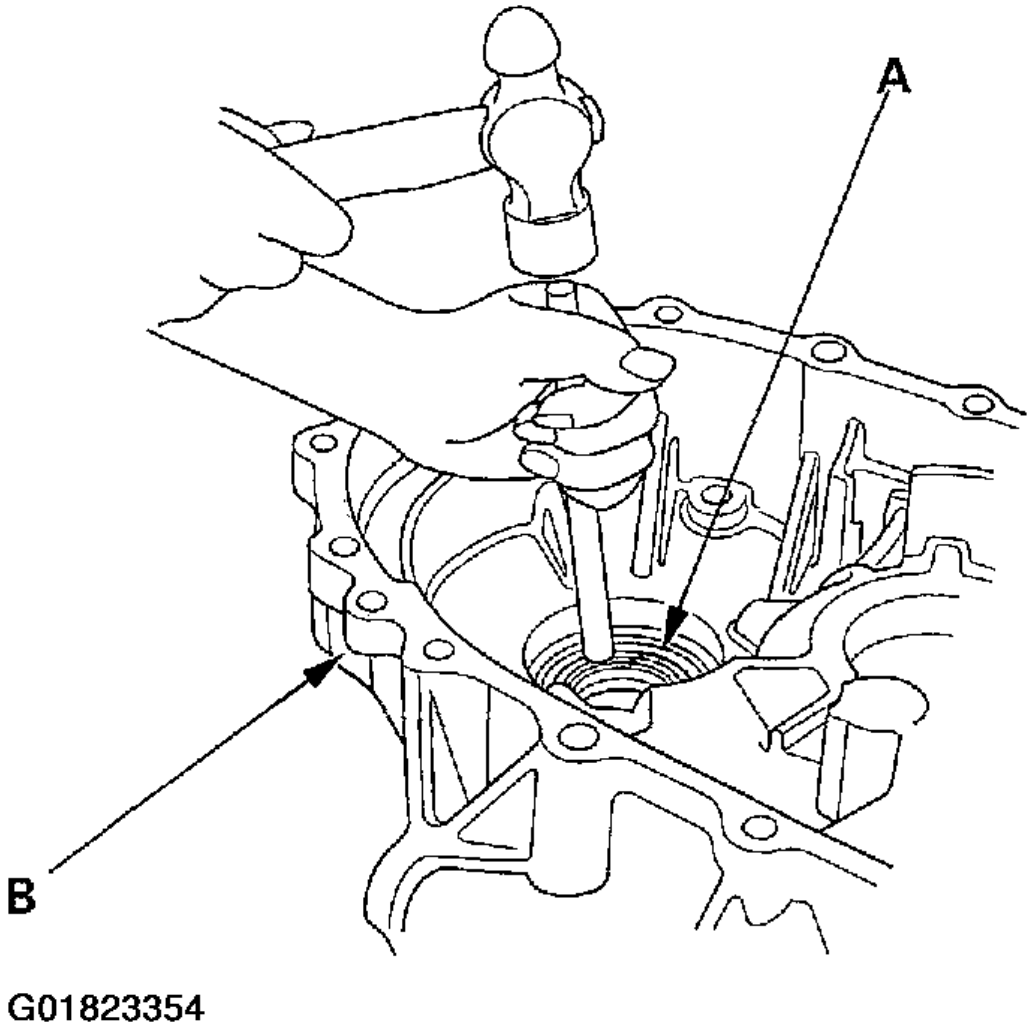

Fig. 147: Removing The Oil Seal From The Clutch Housing

4. Install the new oil seal in the transmission housing with the special tools.

cardiagn.com

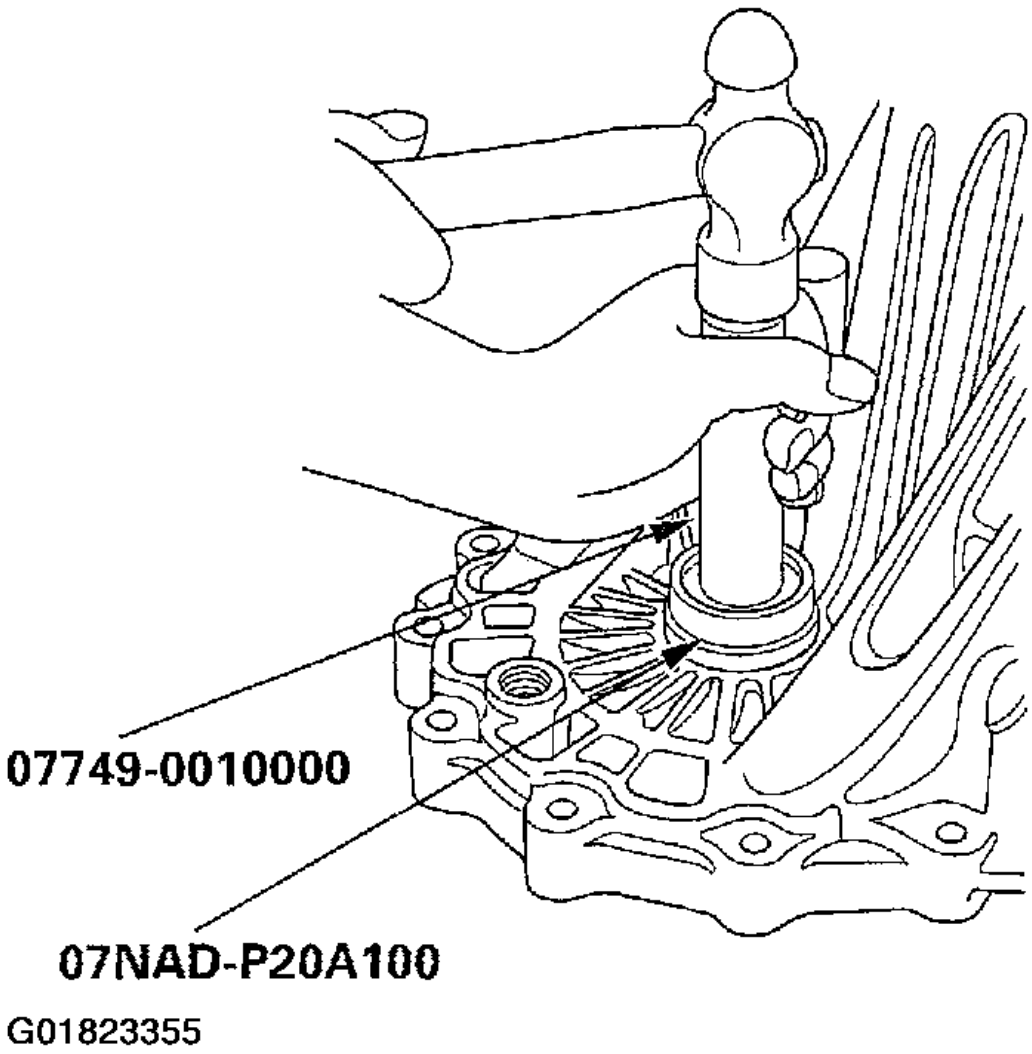

Fig. 148: Installing The New Oil Seal In The Transmission Housing

5. Install the new oil seal in the clutch housing with the special tools.

cardiagn.com

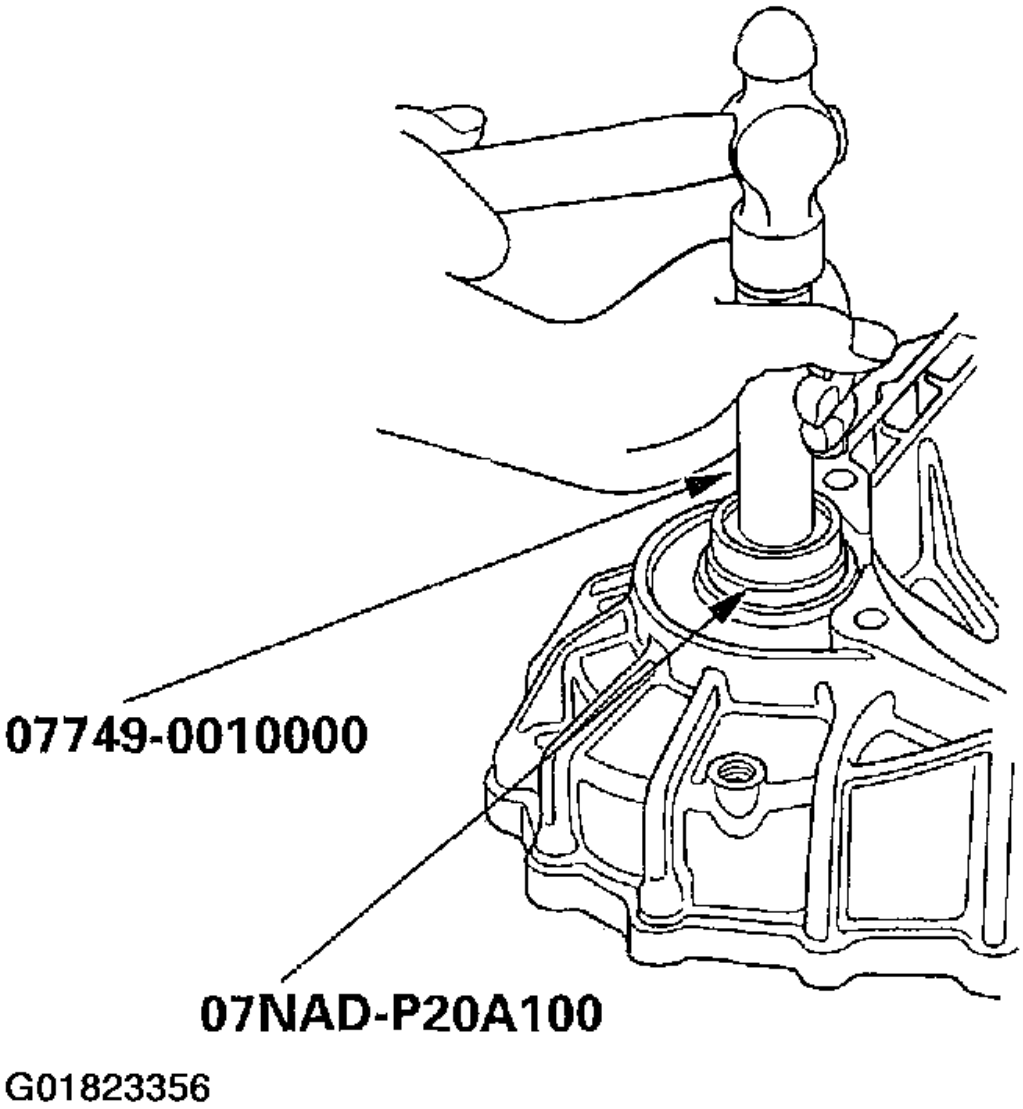

Fig. 149: Installing The New Oil Seal In The Clutch Housing

DIFFERENTIAL THRUST CLEARANCE ADJUSTMENT

Special Tools Required: Driver, 40 mm I.D. 07746-0030100

1. If you removed the 80 mm shim from the transmission housing, reinstall the same sized shim.

cardiagn.com

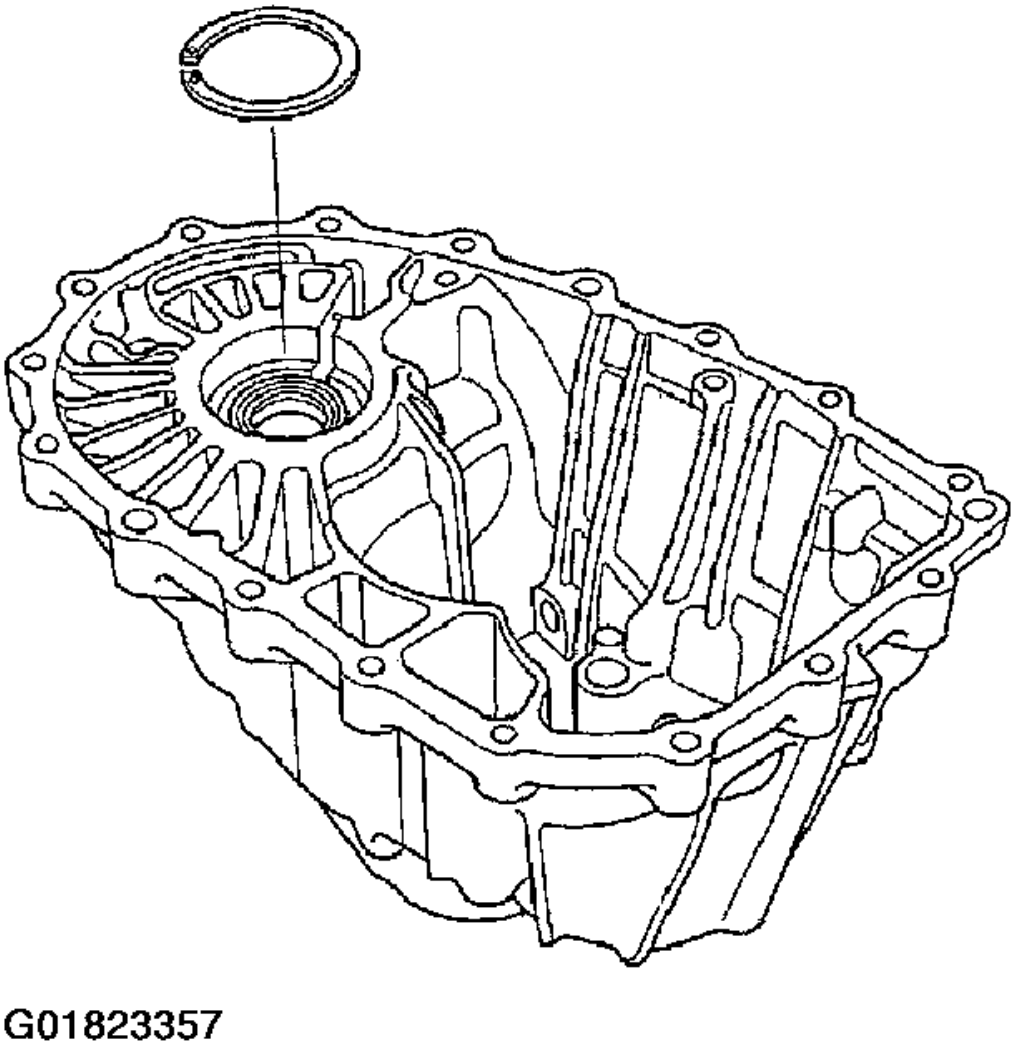

Fig. 150: Installing 80 mm Shim In The Transmission Housing

2. Install the differential assembly into the clutch housing.

cardiagn.com

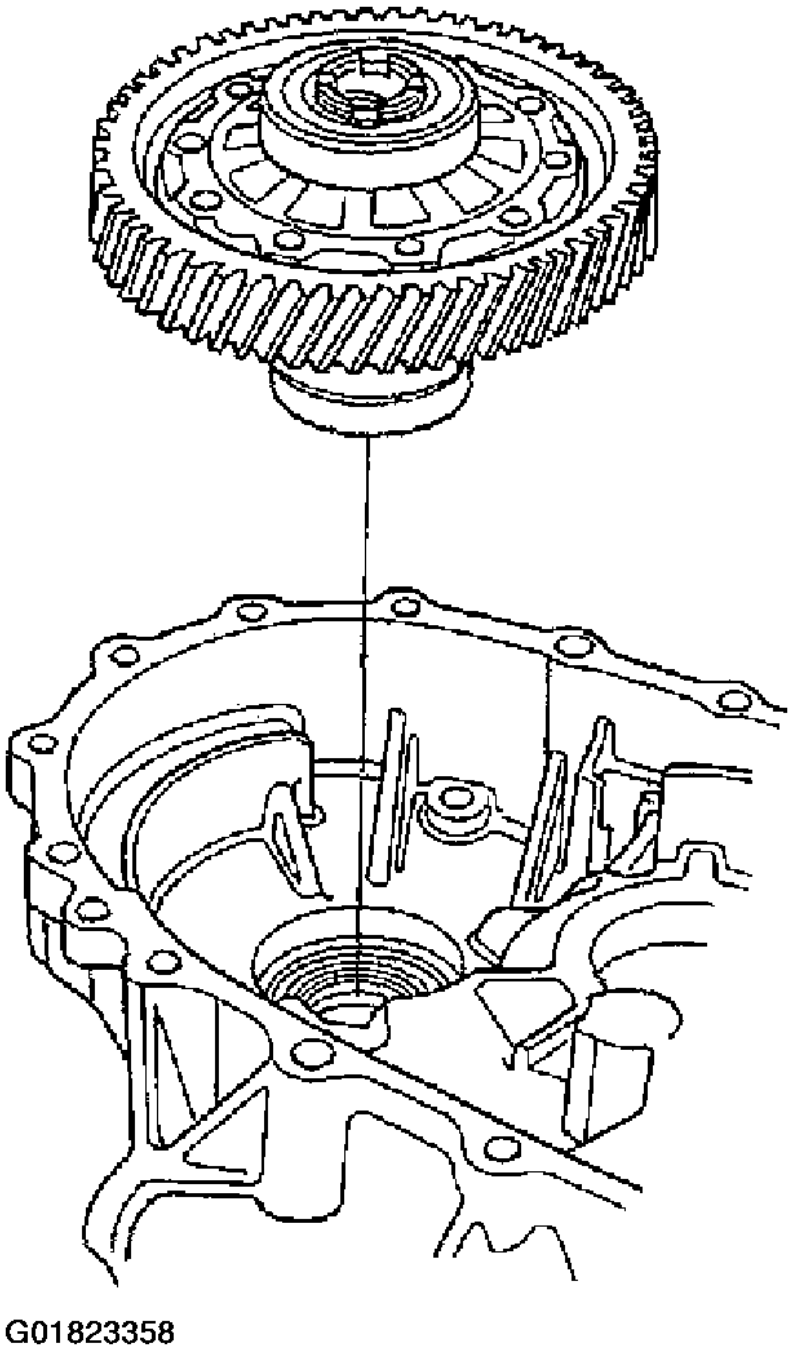

Fig. 151: Installing The Differential Assembly Into The Clutch Housing

3. Install the transmission housing onto the clutch housing, then tighten the 8 mm special bolts (left-hand threads) in a crisscross pattern in several steps (see step 15 of **TRANSMISSION REASSEMBLY**).

8 x 1.25 mm Special Bolt (Left-Hand Thread) Torque: 24 N.m (2.4 kgf.m, 17.4 lbf.ft)

cardiagn.com

4. Use the special tool to bottom the differential assembly in the clutch housing.

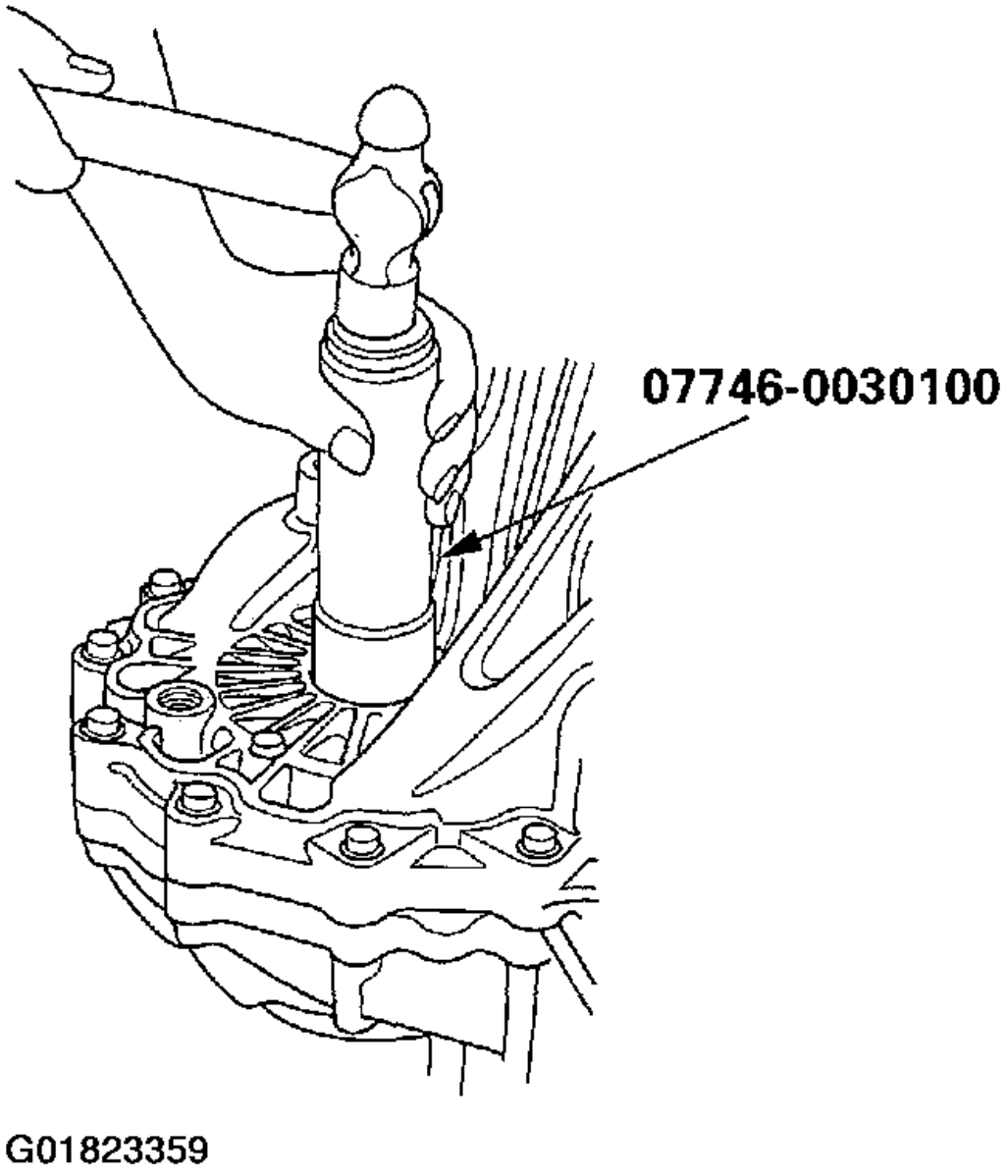

Fig. 152: Bottoming The Differential Assembly In The Clutch Housing

5. Measure clearance between 80 mm shim and bearing outer race in transmission housing.
   Standard: 0-0.10 mm (0-0.0039 in.)

cardiagn.com

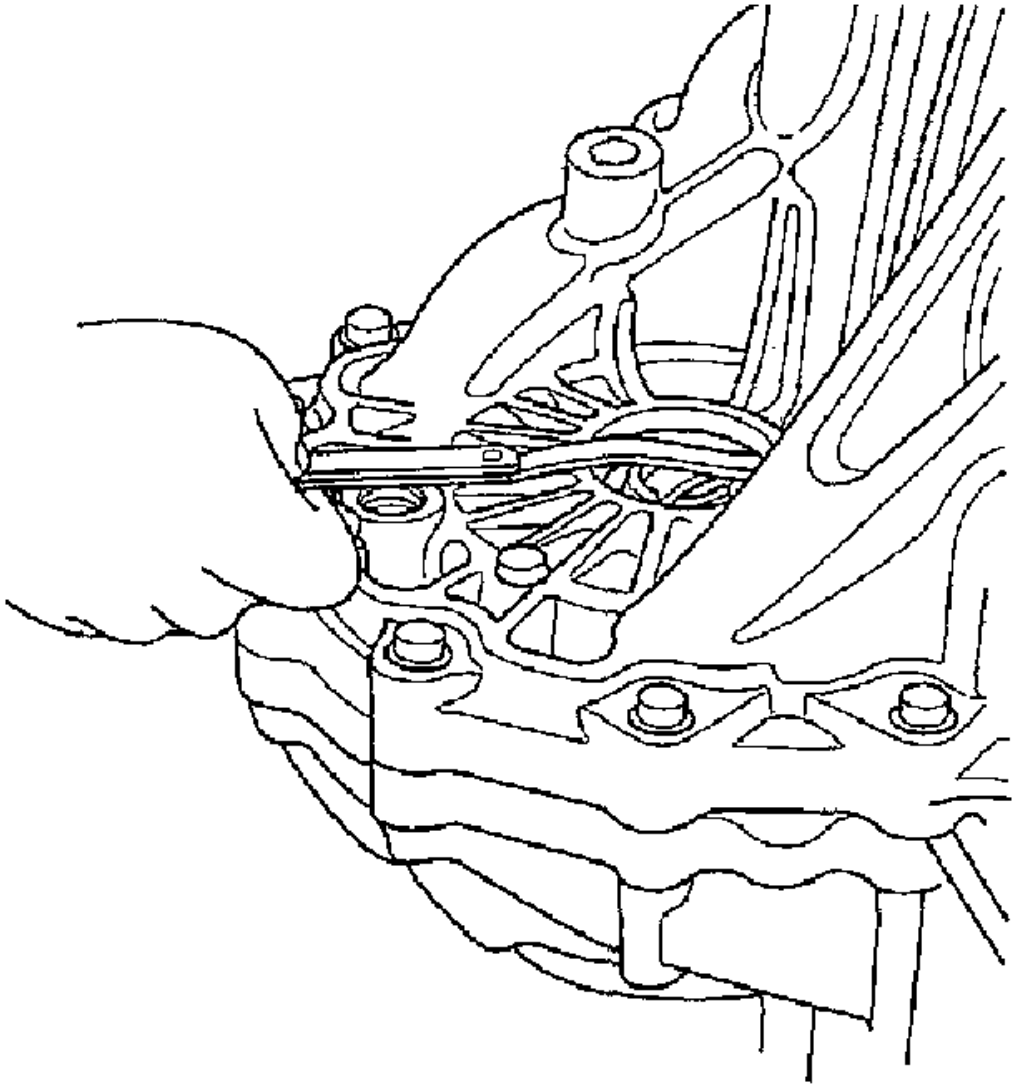

Fig. 153: Measuring Clearance Between 80 mm Shim & Bearing Outer Race In Transmission Housing

6. If the clearance is more than the standard, select a new shim from the following table. If the clearance measured in step 5 is within the standard, go to step 9 .

cardiagn.com

	Part Number	Thickness
A	41441-PL3-B00	1.0 mm (0.039 in.)
B	41442-PL3-B00	1.1 mm (0.043 in.)
C	41443-PL3-B00	1.2 mm (0.047 in.)
D	41444-PL3-B00	1.3 mm (0.051 in.)
E	41445-PL3-B00	1.4 mm (0.055 in.)
F	41446-PL3-B00	1.5 mm (0.059 in.)
G	41447-PL3-B00	1.6 mm (0.063 in.)
H	41448-PL3-B00	1.7 mm (0.067 in.)
J	41449-PL3-B00	1.8 mm (0.071 in.)
K	41450-PL3-B00	1.05 mm (0.041 in.)
L	41451-PL3-B00	1.15 mm (0.045 in.)
M	41452-PL3-B00	1.25 mm (0.049 in.)
N	41453-PL3-B00	1.35 mm (0.053 in.)
P	41454-PL3-B00	1.45 mm (0.057 in.)
Q	41455-PL3-B00	1.55 mm (0.061 in.)
R	41456-PL3-B00	1.65 mm (0.065 in.)
S	41457-PL3-B00	1.75 mm (0.069 in.)

G01823361

Fig. 154: 80 mm Shim Table

7. Remove the bolts and transmission housing.
8. Replace the thrust shim selected in step 6, then recheck the clearance.
9. Reinstall the transmission.

cardiagn.com